DEPARTMENT OF THE AIR FORCE
377TH AIR BASE WING (AFGSC)

ENTERED

DEC 23 2019

Colonel David S. Miller
Commander
377th Air Base Wing
2000 Wyoming Blvd SE
Kirtland AFB NM 87117

RECEIVED
DEC 24 2019
NMED Hazardous Waste Bureau

Ms. Michelle Hunter
Ground Water Quality Bureau (GWQB)
New Mexico Environment Department (NMED)
1190 S. Saint Francis Drive
Santa Fe NM 87502

Dear Ms. Hunter

Attached, please find the *Work Plan for Installation of Class V Underground Injection Control Well KAFB-106IN2, Bulk Fuels Facility, Solid Waste Management Unit ST-106/SS-111,* Kirtland Air Force Base, New Mexico, dated December 2019. The work plan summarizes the work tasks associated with the installation of a Class V underground injection control (UIC) well. Current disposition methods for the treated water from the Groundwater Treatment System are irrigating the on-base golf course or returning the water via Class V UIC well KAFB-7 to the regional aquifer under Discharge Permit-1839. The Air Force is implementing an Interim Measure (IM) to remediate a dissolved phase ethylene dibromide plume. It is imperative that the Air Force has redundant means for the disposition of the treated effluent to ensure the uninterrupted operation of the Interim Measure. This second-Class V UIC well will provide needed redundancy for the disposition of the treated groundwater.

If you have any questions or concerns, please contact Mr. Scott Clark at commercial line (505) 846-9017 or email scott.clark@us.af.mil; or Mr. Sheen Kottkamp at commercial line (505) 846-7674 or email sheen.kottkamp.1@us.af.mil.

Sincerely

~~DAVID~~ S. MILLER, Colonel, USAF
Commander

Attachment:
Work Plan for Installation of Class V Underground Injection Control Well KAFB-106IN2, BFF, SWMU ST-106/SS-111, Kirtland Air Force Base, New Mexico, dated December; 2 Hard Copies/2 CDs.

cc:
NMED-OOTS (Pruett, McQuillan), letter and CD
NMED HWB (Cobrain), letter and CD
NMED Resource Protection Division (Stringer), letter and CD
EPA Region 6 (King, Ellinger), letter and CD
COA (Ziegler), letter and CD
ABCWUA (Agnew), letter and CD
SAF-IEE (Lynnes), electronic only
AFCEC/CZ (Renaghan, Clark, Kottkamp, Segura, Fitzner), electronic only
USACE-ABQ District Office (Moayyad, Phaneuf, Dreeland, Cordova, Kunkel), electronic only
Public Info Repository, Administrative Record/Information Repository (AR/IR) and File

KAFB4926

KIRTLAND AIR FORCE BASE
ALBUQUERQUE, NEW MEXICO

WORK PLAN FOR INSTALLATION OF CLASS V UNDERGROUND INJECTION CONTROL WELL KAFB-106IN2
BULK FUELS FACILITY
SOLID WASTE MANAGEMENT UNIT ST-106/SS-111

DECEMBER 2019

377 MSG/CEI
2050 Wyoming Boulevard SE
Kirtland Air Force Base, New Mexico 87117-527

KIRTLAND AIR FORCE BASE
ALBUQUERQUE, NEW MEXICO

WORK PLAN FOR INSTALLATION OF CLASS V UNDERGROUND INJECTION CONTROL WELL KAFB-106IN2 BULK FUELS FACILITY SOLID WASTE MANAGEMENT UNIT ST-106/SS-111

DECEMBER 2019

Prepared for

Kirtland Air Force Base
2050 Wyoming Boulevard SE
Kirtland Air Force Base, New Mexico 87117-5270

Prepared by

EA Engineering, Science, and Technology, Inc., PBC
320 Gold Avenue SW, Suite 1300
Albuquerque, New Mexico 87102
Contract No. W9128F-13-D-0006/Delivery Order DM02

REPORT DOCUMENTATION PAGE

Form Approved
OMB No. 0704-0188

Public reporting burden for this collection of information is estimated to average 1 hour per response, including the time for reviewing instructions, searching existing data sources, gathering and maintaining the data needed, and completing and reviewing this collection of information. Send comments regarding this burden estimate or any other aspect of this collection of information, including suggestions for reducing this burden to Department of Defense, Washington Headquarters Services, Directorate for Information Operations and Reports (0704-0188), 1215 Jefferson Davis Highway, Suite 1204, Arlington, VA 22202-4302. Respondents should be aware that notwithstanding any other provision of law, no person will be subject to any penalty for failing to comply with a collection of information if it does not display a currently valid OMB control number. **PLEASE DO NOT RETURN YOUR FORM TO THE ABOVE ADDRESS.**

1. REPORT DATE *(DD-MM-YYYY)*	**2. REPORT TYPE**	**3. DATES COVERED** *(From - To)*
12-06-2019	Final	SEP 2019 – DEC 2020

4. TITLE AND SUBTITLE
Work Plan for Installation of Class V Underground Injection Control Well KAFB-106IN2
Bulk Fuels Facility, Solid Waste Management Unit ST-106/SS-111
Kirtland Air Force Base, New Mexico

5a. CONTRACT NUMBER
W9128F-13-D-0006

5b. GRANT NUMBER

5c. PROGRAM ELEMENT NUMBER

6. AUTHOR(S)
EA Engineering, Science, and Technology, Inc., PBC

5d. PROJECT NUMBER
62735DM02

5e. TASK NUMBER
DM02

5f. WORK UNIT NUMBER
Not applicable

7. PERFORMING ORGANIZATION NAME(S) AND ADDRESS(ES)
EA Engineering, Science, and Technology, Inc., PBC
320 Gold Avenue SW, Suite 1300
Albuquerque, New Mexico 87102

8. PERFORMING ORGANIZATION REPORT NUMBER
Not assigned

9. SPONSORING / MONITORING AGENCY NAME(S) AND ADDRESS(ES)
U.S. Army Corps of Engineers–Albuquerque District
4101 Jefferson Plaza NE
Albuquerque, New Mexico 87109-3435

10. SPONSOR/MONITOR'S ACRONYM(S)

11. SPONSOR/MONITOR'S REPORT NUMBER(S)

12. DISTRIBUTION / AVAILABILITY STATEMENT

13. SUPPLEMENTARY NOTES

14. ABSTRACT
This Work Plan describes the installation, development, and testing for a Class V underground injection control well pursuant to Discharge Permit DP-1839. The injection control well will be used for the disposition of treated groundwater from the ethylene dibromide groundwater pump and treat interim measure associated with the Bulk Fuels Facility release (Solid Waste Management Unit ST-106/SS-111) at Kirtland Air Force Base, New Mexico.

15. SUBJECT TERMS
Work Plan, Kirtland AFB, Bulk Fuels Facility, Class V underground injection control well installation, Solid Waste Management Unit ST-106/SS-111

16. SECURITY CLASSIFICATION OF:			**17. LIMITATION OF ABSTRACT**	**18. NUMBER OF PAGES**	**19a. NAME OF RESPONSIBLE PERSON**
a. REPORT UNCLASSIFIED	**b. ABSTRACT** UNCLASSIFIED	**c. THIS PAGE** UNCLASSIFIED	ABSTRACT	4982	Scott Clark
					19b. TELEPHONE NUMBER *(include area code)* 505-846-9017

Standard Form 298
(Rev. 8-98) **Prescribed by ANSI Std. Z39.18**

40 CFR 270.11
DOCUMENT CERTIFICATION
DECEMBER 2019

I certify under penalty of law that this document and all attachments were prepared under my direction or supervision according to a system designed to assure that qualified personnel properly gather and evaluate the information submitted. Based on my inquiry of the person or persons who manage the system, or those persons directly responsible for gathering the information, the information submitted is, to the best of my knowledge and belief, true, accurate, and complete. I am aware that there are significant penalties for submitting false information, including the possibility of fines and imprisonment for knowing violations.

DAVID S. MILLER, Colonel, U.S. Air Force
Commander, 377th Air Base Wing

12.23.19
Date

This document has been approved for public release.

KIRTLAND AIR FORCE BASE
377th Air Base Wing Public Affairs

16 DEC 19
Date

PREFACE

This Work Plan is prepared by EA Engineering, Science, and Technology, Inc., PBC for Kirtland Air Force Base (AFB), under the U.S. Army Corps of Engineers Contract Number W9128F-13-D-0006, Delivery Order DM02. This Work Plan pertains to the installation of a new Class V underground injection control (UIC) well under existing discharge permit (DP)-1839. The Class V UIC well will be used for the disposition of treated groundwater from the ethylene dibromide groundwater pump and treat interim measure associated with the Kirtland AFB Bulk Fuels Facility (Solid Waste Management Unit ST-106/SS-111). The site is located in Albuquerque, New Mexico. This Work Plan was drafted in accordance with Condition 10 of DP-1839.

The objective of the Work Plan is to describe the installation, development, and testing of a new groundwater injection well.

CONTENTS

Section **Page**

EXECUTIVE SUMMARY ES-1

1. INTRODUCTION 1-1

1.1 Scope of Activities 1-1
1.2 Work Plan Organization 1-1

2. BACKGROUND INFORMATION 2-1

2.1 Site Description 2-1
2.2 Site History 2-1
2.3 Regulatory Requirements 2-1

2.3.1 Groundwater Discharge Permit DP-1839 2-2
2.3.2 Resource Conservation and Recovery Act Permit 2-13
2.3.3 New Mexico Office of the State Engineer Permits 2-13

3. SITE-SPECIFIC ACTIVITIES 3-1

3.1 Drilling Preparation and Mobilization 3-1

3.1.1 Permitting and Drilling Preparation 3-1
3.1.2 Site Security 3-2
3.1.3 Barricading/Traffic Control 3-2
3.1.4 Mobilization 3-2

3.2 Drilling and Well Construction 3-2

3.2.1 Data Collection Summary 3-2
3.2.2 Surface Casing 3-2
3.2.3 Drilling 3-3
3.2.4 Drilling Mud Management 3-3
3.2.5 Lithologic Logging 3-3
3.2.6 Geophysical Logging 3-3
3.2.7 Sampling and Analysis 3-4
3.2.8 Well Construction 3-4
3.2.9 Wellhead Completion 3-5

3.3 Well Development and Testing 3-5

3.3.1 Initial Well Development 3-5
3.3.2 Final Well Development and Test Pumping 3-6
3.3.3 Video Inspection 3-6

3.4 Piping and Valve Installation 3-6
3.5 Electrical and Well Controls 3-7
3.6 Surveying 3-7
3.7 Reporting 3-7

3.7.1 Well Completion Report 3-7

3.7.2 Class V Underground Injection Control Well Monitoring 3-7
4. WASTE MANAGEMENT 4-1
4.1 Construction Solid Waste 4-1
4.2 Drilling Cuttings and Mud Investigation-Derived Waste 4-1
4.3 Development and Test Pumping Fluid Management 4-2
5. REFERENCES 5-1

FIGURES

1-1 Site Location Map

1-2 Proposed Class V Underground Injection Control Well KAFB-106IN2 Location

2-1 Regional Aquifer 2016/2017 Nitrate Concentration Map

2-2 Location of Nearest Extraction Wells to Proposed Class V Underground Injection Control Well KAFB-106IN2

2-3 Fall 2018 Regional Aquifer Potentiometric Surface Map of Area Surrounding Proposed Class V Underground Injection Control Well KAFB-106IN2

2-4 Conceptual Conveyance Line Tie-In Location

3-1 Conceptual Drill Site Layout

3-2 Kirtland AFB Class V Underground Injection Control Well Design

4-1 Kirtland AFB BFF Zia Park Non-Hazardous IDW Yard

TABLES

2-1 Discharge Permit DP-1839 Terms and Conditions Cross Reference Guide

2-2 Monthly Groundwater Treatment System Performance Analytical Results for Train 1, Q2 2019

2-3 Monthly Groundwater Treatment System Performance Analytical Results for Train 2, Q2 2019

2-4 Regional Aquifer Groundwater Elevations near the Proposed Class V Underground Injection Control Well KAFB-106IN2

2-5 Inorganic Groundwater Quality Data for Regional Aquifer Wells near Proposed Class V Underground Injection Control Well KAFB-106IN2

2-6 Organic Groundwater Quality Data for Regional Aquifer Wells near Proposed Class V Underground Injection Control Well KAFB-106IN2

3-1 Field Data Collection Summary for the Installation of Class V Underground Injection Control Well KAFB-106IN2

3-2 Analytes and Laboratory Analytical Methods for Groundwater Quality Sample Class V Underground Injection Control Well KAFB-106IN2

4-1 Summary of Investigation-Derived Waste Sampling

APPENDICES

A Project Permits

B 2018 Groundwater Treatment System Operations and Maintenance Plan (Provided on CD)

C Standard Operating Procedure for Effluent Conveyance Line Integrity Testing of the Groundwater Treatment System

D Project Schedule

E Field Forms

ACRONYMS AND ABBREVIATIONS

AFB	Air Force Base
BFF	Bulk Fuels Facility
bgs	below ground surface
C&D	Construction and demolition
DP	Discharge Permit
EA	EA Engineering, Science, and Technology, Inc., PBC
EDB	ethylene dibromide (1,2-dibromoethane)
EPA	U.S. Environmental Protection Agency
ft	foot (feet)
GWM	Groundwater monitoring
GWQB	Groundwater Quality Bureau
GWTS	groundwater treatment system
HWB	Hazardous Waste Bureau
IDW	investigation-derived waste
in.	Inch(es)
NMAC	New Mexico Administrative Code
NMSA	New Mexico Statutes Annotated
NMED	New Mexico Environment Department
No.	Number
O&M	operations and maintenance
Q2	Second quarter
RCRA	Resource Conservation and Recovery Act
SWMU	Solid Waste Management Unit
UIC	underground injection control
USACE	U.S. Army Corps of Engineers

EXECUTIVE SUMMARY

Kirtland Air Force Base (AFB) is implementing corrective action activities to address historical releases of fuel from the former Bulk Fuels Facility. These corrective action activities are being performed pursuant to the corrective action provisions in Part 6 of Kirtland AFB's Resource Conservation and Recovery Act (RCRA) Hazardous Waste Treatment Facility Operating Permit (Permit Number NM9570024423 [RCRA Permit]) (New Mexico Environment Department, 2010). The Air Force is implementing an Interim Measure to remediate a dissolved-phase ethylene dibromide plume. Impacted groundwater is pumped from four extraction wells through underground piping to an on-Base groundwater treatment system (GWTS), which uses granular activated carbon to treat the groundwater to the New Mexico Water Quality Control Commission groundwater standard or the federal Environmental Protection Agency maximum contaminant level, whichever is more stringent.

The treated effluent is pumped to either Class V underground injection control (UIC) well KAFB-7 or to the Kirtland AFB golf course main pond. The operation of KAFB-7 is subject to the conditions in Groundwater Discharge Permit (DP)-1839 (New Mexico Environment Department, 2017).

This Work Plan addresses the installation of a new Class V UIC well under DP-1839. Condition 8 of DP-1839 allows the Air Force to install and operate up to five Class V UIC wells within the Designated UIC Area identified in Condition 4. Condition 10 details the minimum work plan requirements. The proposed Class V UIC Well KAFB-106IN2 will be located within the Designated UIC Area approximately 2,900 feet east-southeast of the existing UIC well KAFB-7. The well will be designed to accept up to 800 gallons per minute of post-treatment water from the GWTS for injection into the regional aquifer. The well location is within 100 feet of the existing effluent conveyance line to the golf course. Because Condition 10 of DP-1839 requires that this Work Plan also satisfy the requirements of the Corrective Action provisions in Part 6 of Kirtland AFB's RCRA Permit, this Work Plan includes a cross-walk table that identifies how the Work Plan meets requirements under both DP-1839 and the RCRA Permit.

1. INTRODUCTION

EA Engineering, Science, and Technology, Inc., PBC (EA) was contracted under U.S. Army Corps of Engineers (USACE) Contract Number (No.) W9128F-13-D-0006, Delivery Order DM02 to install a new Class V underground injection control (UIC) well for the U.S. Air Force at Kirtland Air Force Base (AFB). The new UIC well will be associated with the management of remediated groundwater treated at the groundwater treatment system (GWTS). The GWTS is associated with the remediation of Solid Waste Management Unit (SWMU) ST-106/SS-111, at Kirtland AFB, New Mexico. SWMU ST-106/SS-111 is known as the Bulk Fuels Facility (BFF) site. The BFF site is located in Albuquerque, New Mexico (Figure 1-1). The location of proposed Class V UIC well KAFB-106IN2 is shown on Figure 1-2.

Kirtland AFB is implementing corrective action activities to address historical releases of fuel from the former BFF. These corrective action activities are being performed pursuant to the corrective action provisions in Part 6 of Kirtland AFB's Resource Conservation and Recovery Act (RCRA) Hazardous Waste Treatment Facility Operating Permit (Permit No. NM9570024423 [RCRA Permit]) (New Mexico Environment Department [NMED], 2010). The Air Force is implementing an Interim Measure to remediate a dissolved-phase ethylene dibromide (EDB) plume. Impacted groundwater is pumped from four extraction wells through underground piping to an on-Base GWTS, which uses granular activated carbon to treat the groundwater to the New Mexico Water Quality Control Commission groundwater standard or the federal U.S. Environmental Protection Agency (EPA) maximum contaminant level, whichever is more stringent.

The treated effluent is pumped to either Class V UIC well KAFB-7 or to the Kirtland AFB golf course main pond. The operation of KAFB-7 is subject to the conditions in Groundwater Discharge Permit (DP)-1839 (NMED, 2017).

1.1 Scope of Activities

This Work Plan covers activities required to meet the performance objectives associated with the installation of a new groundwater Class V UIC well (KAFB-106IN2) under existing DP-1839. This Work Plan was prepared in accordance with DP-1839, the corrective action provisions of Part 6 of the RCRA Permit (NMED, 2010) for Kirtland AFB and applicable federal, state, and local laws and regulations.

1.2 Work Plan Organization

The Work Plan is divided into the following sections:

- ***Section 1***—Presents an introduction to the plan and the scope of activities and organization of the Work Plan.
- ***Section 2***—Presents the site description, operational history, and a detailed discussion of the DP-1839 compliance and other regulatory requirements.
- ***Section 3***—Summarizes the project tasks with sufficient detail on how the objectives will be accomplished.
- ***Section 4***—Presents information on the management and disposal of the waste generated during this project.

- ***Section 5***—Provides references cited in the Work Plan.

Figures and tables follow the main body of the Work Plan. Appendices provided at the end of this Work Plan include the following:

- ***Appendix A***—Project Permits.
- ***Appendix B***—2018 GWTS Operations and Maintenance (O&M) Plan (on CD).
- ***Appendix C***—Standard Operating Procedure for Effluent Conveyance Line Integrity Testing of the GWTS.
- ***Appendix D***—Project Schedule.
- ***Appendix E***—Field Forms.

2. BACKGROUND INFORMATION

2.1 Site Description

Kirtland AFB is located in Bernalillo County, in central New Mexico, southeast of and adjacent to the City of Albuquerque and the Albuquerque International Sunport (Figure 1-1). The approximate area of the Base is 52,287 acres. The BFF site is located in the northwestern portion of Kirtland AFB. The proposed Class V UIC well KAFB-106IN2 is located in an undeveloped portion of Kirtland AFB, southeast of the main east-west airport runway (Figure 1-2).

Groundwater conditions in the vicinity of the proposed UIC well location include a regional and a perched aquifer. The regional aquifer is found at depths of approximately 500 feet (ft) below ground surface (bgs). The nearest regional aquifer monitoring well to the proposed UIC well location is approximately 175 ft to the north-northeast (monitoring well KAFB-2628). In 2018, the depth to water at the monitoring well was 499 ft bgs. The perched groundwater system is a zone of variable saturation above the regional aquifer and separated from the region aquifer by an unsaturated interval. The depth to perched groundwater ranges from 200 to 415 ft bgs.

The perched aquifer is identified near the proposed UIC well location. The nearest well with groundwater in the perched aquifer is located approximately 1,350 ft to the south in ST-105 monitoring well KAFB-0506 (Figure 1-2). Depth to the perched aquifer at this well is approximately 210 ft bgs. However, three ST-105 wells (KAFB-2627, KAFB-2524, and KAFB-2623) located 250, 800, and 600 ft from the proposed UIC well location, respectively, are dry wells at the depth of the perched aquifer as of 2018. Based on this, it is likely the perched aquifer is not present at the proposed UIC well location.

2.2 Site History

The Air Force is implementing an Interim Measure under Part 6.2.2.2.12 of the RCRA Permit (NMED, 2010) to collapse and treat the dissolved-phase EDB plume north of Ridgecrest Drive. The pump and treat system currently consist of four extraction wells and a granular activated carbon GWTS. The GWTS currently consists of a groundwater collection system comprised of four off-Base extraction wells that pump water through underground pipes to the on-Base treatment plant. The GWTS consists of two granular activated carbon treatment trains. The treatment trains consist of prefiltering through bag and sand filters prior to removal of EDB by granular activated carbon.

The GWTS is currently treating an average of 550 gallons per minute, but is designed to treat up to 800 gallons per minute. Current disposition methods for the treated water are irrigating the on-Base golf course or returning the water via Class V injection well KAFB-7 to the regional aquifer under DP-1839. It is imperative that the Air Force has redundant means for the disposition of the treated effluent to ensure the uninterrupted operation of this Interim Measure. This second Class V injection well will provide needed redundancy for the disposition of the treated groundwater. The Air Force has also obtained a National Pollutant Discharge Elimination System permit from EPA (Permit No. NM0031216), which serves as a temporary backup to the existing disposition methods.

2.3 Regulatory Requirements

NMED's Hazardous Waste Bureau (HWB) and Ground Water Quality Bureau (GWQB) both provide regulatory oversight at the BFF project site. The HWB regulates the evaluation and remediation of the KAFB BFF dissolved-phase plume and the associated GWTS. The GWQB regulates the procedures that

ensure treated groundwater discharged from the GWTS to UIC well(s) that meet DP-1839 requirements (NMED, 2017). NMED's HWB and GWQB coordinate their reviews of the DP-1839 documents (i.e., this Work Plan) to ensure there is no conflict with any agency response.

Condition 8 of DP-1839 allows the Air Force to install and operate up to five Class V UIC wells within the Designated UIC Area identified in Condition 4. Condition 10 details the minimum work plan requirements. Because Condition 10 of DP-1839 requires that this Work Plan also satisfy the requirements of the Corrective Action provisions in Part 6 of Kirtland AFB's RCRA Permit, Section 2.3.2 of this Work Plan summarizes how the Work Plan meets requirements under the RCRA Permit (NMED, 2010).

Permits allowing for the drilling and use of the Class V UIC wells have been obtained from the New Mexico Office of the State Engineer and are included in Appendix A. Appendix A provides current project permits associated with this Work Plan.

2.3.1 Groundwater Discharge Permit DP-1839

The GWQB issued DP-1839 to Kirtland AFB on April 28, 2017 (NMED, 2017). DP-1839 allows the installation and operation of KAFB-7 and up to four additional wells within the Kirtland AFB facility boundary for injection into the regional aquifer. It authorizes the discharge of a maximum of 1,440,000 gallons per day (the current maximum design throughput capacity of the GWTS is 1,152,200 gallons per day).

This Work Plan, in conjunction with the GWTS O&M Plan, satisfies the 41 conditions listed in the Operational Plan Section of DP-1839 (NMED, 2017). Condition 10 of the permit requires the preparation of this Work Plan and the inclusion of specific technical information and evaluations. This section provides detailed information to specifically address requirements outlined in Conditions 1-24 including details for Condition 10 of DP-1839 following the outline presented in the permit. Table 2-1 is an annotated, cross reference guide for all permit terms and conditions found in DP-1839. The following subsections discuss DP-1839 Condition-specific requirements.

2.3.1.1 Conditions 1 and 2

DP-1839 Condition 1 states: The Permittee shall implement the following operational plan to ensure compliance with Title 20, Chapter 6, Parts 2 and 4 New Mexico Administrative Code (NMAC). Condition 2 states: The Permittee shall operate in a manner such that standards and requirements of Sections 20.6.2.3101 and 20.6.2.3103 NMAC are not violated. [20.6.2.3101 NMAC, 20.6.2.3103 NMAC, 20.6.2.3109(C) NMAC], and [20.6.2.3109.C NMAC]

Conditions 1 and 2 are met through proper operation of the GWTS. The GWTS has been designed to treat groundwater to meet the New Mexico Water Quality Control Commission water quality standards (20.6.2.3103 and 20.6.2.4103 NMAC) and the drinking water maximum contaminant levels adopted by EPA under the Federal Safe Drinking Water Act (42 U.S. Code § 300f to 300j-26). GWTS effluent must comply with any applicable permit or regulatory requirements. The Sampling and Analysis Plan (Appendix L of the O&M Plan) contains the necessary reporting requirements, while Appendix K – Contingency Plan and the DP-1839 Contingency Plan (Appendix A of the O&M Plan) provides corrective actions to be enacted in the event of an exceedance of the discharge criteria. Tables 2-2 and 2-3 provide GWTS performance analytical results for both treatment trains in the second quarter (Q2) of 2019, applicable to conditions in DP-1839.

2.3.1.2 Condition 3

DP-1839 Condition 3 states: The Permittee shall ensure that the most recent versions of all Work Plans associated with the GWTS, the effluent conveyance pipeline, and the UIC well(s) are consistent with the requirements of this Discharge Permit. [20.6.2.3101 NMAC, 20.6.2.3103 NMAC, 20.6.2.3109(C) NMAC].

This UIC Work Plan is written to be consistent with the requirements of DP-1839. Technical information regarding Condition 10 in DP-1839 is provided in Section 2.3.1.8 of this Work Plan.

2.3.1.3 Condition 4

DP-1839 Condition 4 states: The Permittee shall ensure all discharges associated with this Discharge Permit are located within the Designated UIC Area within Section 01 of Township 9N Range 3E; Sections 05, 06, 07, 08, and 09 of Township 9N Range 4E; and Section 31 of Township 10N Range 4E (Appendix B). [20.6.2.3101 NMAC, 20.6.2.3103 NMAC, and 20.6.2.3109(C) NMAC]

The proposed Class V UIC well is located within the Designated UIC Area (Figure 1-2). The proposed Class V UIC well KAFB-106IN2 is located in an undeveloped portion of KAFB, southeast of the main east-west airport runway at Latitude 35° 2' 24.57"N, Longitude 106°33' 38.54"W. It is located within Section 6, Township 9 North, Range 4 East. Relative to local streets, the location is approximately 1,900 ft south of Hardin Street and between Pennsylvania Street and Ordnance Street as shown in Figure 1-2.

2.3.1.4 Condition 5

DP-1839 Condition 5 states: The Permittee shall ensure that proposed UIC well locations (Appendix B) and associated discharges are consistent with the most recent approved Stage 2 Abatement Plan for SWMU ST-105. [20.6.2.3101 NMAC, 20.6.2.3103 NMAC, 20.6.2.3109(C) NMAC]

Figure 2-1 indicates the proposed UIC well is not within the ST-105 perched water aquifer and the injection screen interval is not within published limits of the regional aquifer nitrate groundwater plume.

2.3.1.5 Conditions 6 and 7

Discharge water quality will meet the requirements of the DP-1839 Operational Plan Condition 6, which states: Discharged groundwater effluent is less than or equal to the effluent standards for all constituents referenced in 20.6.2.3103 NMAC and the Permittee shall ensure the GWTS influent chemistry is consistent with the design basis of the GWTS. Condition 7 that states: The Permittee shall ensure that GWTS influent chemistry is consistent with the design basis of the GWTS. [20.6.2.3109(C) NMAC, 20.7.10.100 NMAC].

The Sampling and Analysis Plan (Appendix L of the GWTS O&M Plan (Appendix B of this Work Plan) contains the procedure for effluent sampling of the GWTS. Influent and effluent laboratory analytical results are reported in Section 5.0 of each quarterly groundwater monitoring (GWM) report. Tables 2-2 and 2-3 provide the GWTS influent and effluent results from the Q2 2019 GWM Quarterly Report.

Appendix L of the GWTS O&M Plan (Appendix B of this Work Plan) contains the procedure for effluent sampling of the GWTS. Influent and effluent laboratory analytical results are reported in Section 5.0 of

each quarterly GWM report. Tables 2-2 and 2-3 provide the GWTS influent and effluent results from the Q2 2019 GWM Quarterly Report.

2.3.1.6 Condition 8

DP-1839 Condition 8 states: The Permittee is authorized to install and operate not more than five UIC wells. Authorized UIC wells are listed in Table 1. [20.6.2.3109(C) NMAC, 20.7.10.100 NMAC]

The GWQB issued DP-1839 to Kirtland AFB on April 28, 2017. DP-1839 allows the installation and operation of KAFB-7 and up to four additional wells within the Kirtland AFB facility boundary for injection into the regional aquifer. This UIC Work Plan is proposing the installation of one additional UIC well for a total of two wells.

2.3.1.7 Condition 9

DP-1839 Condition 9 states: The Permittee shall ensure that the total discharge from the facility via UIC wells does not exceed 1,440,000 gallons per day. [20.6.2.3109(C) NMAC, 20.7.10.100 NMAC]

The maximum discharge limit under DP-1839 is 1,440,000 gallons/day of treated effluent via a maximum of five UIC wells to the groundwater aquifer. The maximum flow-through volume of water through the GWTS is 800 gallons per minute. Based on this, the maximum daily discharge will be 1,152,000 gallons.

2.3.1.8 Condition 10

DP-1839 Condition 10 states: Prior to the installation of a new UIC well, the Permittee shall submit a Work Plan for NMED approval that satisfies the requirements of this Discharge Permit and the corrective action provisions of Part 6 of the RCRA Permit (NMED, 2010). This Work Plan shall, at a minimum, include the following information unless the Permittee can demonstrate to NMED that an item is not applicable or appropriate under the proposed activity or if an item has been provided separately under another submission. The following discusses the requirements of Condition 10a through 10m.

The NMED GWQB issued Kirtland AFB DP-1839 on April 28, 2017. This section provides information that specifically addresses elements outlined in Condition 10 to ensure continued compliance with DP-1839. The header title of each of the following sections refers to the specific requirement paragraph in Condition 10.

Statement of Purpose and Need (Condition 10a)

Treated water from the GWTS is currently discharged either to the on-Base golf course or the gravity-fed injection well KAFB-7. Water that is discharged to the golf course is limited to those times when the golf course requires watering, primarily during the summer months. During those times when the water cannot be directed to the golf course, water is discharged to the aquifer through injection well KAFB-7. Injection well KAFB-7 is a retrofitted groundwater production well. This well has experienced biofouling and the age and current condition of the well make it impossible to implement standard rehabilitation techniques. The new injection well will provide an additional option for the disposal of treated groundwater. Figure 1-2 is a location map for the proposed Class V UIC well.

The Air Force only intends to use the recently issued NPDES Permit as a backup option in the event that the two primary disposition methods cannot manage part or all of the volume. This intent is reflected in the NPDES Permit issued by EPA.

Groundwater Wells to Be Added to Monitor Class V Underground Injection Control Well Performance (Condition 10b)

Monitoring wells KAFB-0505, KAFB-0508, and KAFB-0507R are currently being monitored annually to assess the performance of injection well, KAFB-7. Monitoring wells that are completed in the regional aquifer that will be added for monitoring the new UIC well will include KAFB-2628 (located approximately 250 ft to the northeast of the proposed UIC well) and KAFB-2629 (located approximately 1,850 ft south of the proposed UIC well). KAFB-2628 was chosen due to its close proximity to the new injection well location. KAFB-2629 was selected as a more distant data point to the south of the injection well that will support modeling data.

Map of the Proposed Class V UIC Well and Associated Monitoring Wells (Condition 10c)

Figure 1-2 provides the locations of the proposed new Class V and monitoring wells.

Geographic Coordinates of the Location of the Proposed Class V Underground Injection Control Well (Condition 10d)

The proposed UIC well is located at Latitude 35° 2' 24.57"N, Longitude 106°33' 38.54"W. It is located within Section 6, Township 9 North, Range 4 East (Figure 1-2).

Location of the Nearest Production Well (Condition 10e)

The nearest groundwater production wells are KAFB-4 and KAFB-20, which are located approximately 1,850 ft south and 3,450 ft to the northeast, respectively, of the proposed UIC well (Figure 2-2). Due to their distance from the proposed Class V injection well, neither of these production wells are anticipated to be impacted by injection operations.

Treated Effluent Conveyance System Structural Integrity Demonstration (Condition 10f)

Structural integrity testing for the GWTS effluent conveyance line will be performed in accordance with the Standard Operating Procedure for Effluent Conveyance Line Integrity Testing of the Groundwater Treatment System (USACE, 2018a) (Appendix C). Integrity testing of all newly installed conveyance piping from the effluent line to the injection wellhead will be performed in accordance with manufacturer's specifications and in accordance with ASTM International F2164 Standard Practice for Field Leak Testing of Polyethylene and Cross-linked Polyethylene Pressure Piping Systems Using Hydrostatic Pressure as recommended by Handbook of Polyethylene Pipe Installation. All butt-welded joint tests of high-density polyethylene joints will be performed in accordance with industry standards.

Data Showing Groundwater Depth and Quality at the Proposed Class V Injection Well Location (Condition 10g)

The regional aquifer in the vicinity of the proposed UIC well location is approximately 500 ft bgs. The nearest data point to the proposed UIC well is approximately 175 ft to the north-northeast (Monitoring well KAFB-2628) had a water level at 499 ft bgs in 2018. Figure 2-3 provides a potentiometric surface map for the regional aquifer in the area of the proposed UIC well. Table 2-4 provides water level data from wells in the regional aquifer for this area. Figure 1-2 shows the location of these wells.

The perched aquifer is identified near the proposed UIC well location. The nearest well with groundwater in the perched aquifer is located approximately 1,350 ft to the south in ST-105 monitoring well KAFB-0506 (Figure 1-2). Depth to the perched aquifer at this well is approximately 210 ft bgs. However, three ST-105 wells (KAFB-2627, KAFB-2524, and KAFB-2623) located 250, 800, and 600 ft from the proposed UIC well location, respectively, are dry wells at the depth of the perched aquifer as of 2018. Based on this, it is likely the perched aquifer is not present at the proposed UIC well location.

The UIC well will be constructed to inject water into the regional aquifer. Water quality for the regional aquifer has been determined from several wells in the vicinity of the proposed UIC well location. Tables 2-5 and 2-6 provide recent analytical data for inorganic and organic analyses, respectively, from wells near the proposed UIC well location.

Groundwater Flow Modeling (Condition 10h)

Groundwater flow modeling will be used to determine the probable changes in groundwater flow directions and velocities resulting from injected water, and the potential alterations these changes will make on the extent and mobility of known, nearby groundwater contaminant plumes. The magnitude of mounding associated with injection is dependent upon the: (1) permeability of the material the water is injected into, (2) volume/rate of the injection, and (3) pre-injection groundwater gradient representing the existing aquifer stresses. Continued flow and stage modeling will utilize the FEFLOW model currently used to fulfill the DP-1839 requirements for injection well KAFB-7.

Depth to groundwater will be measured in monitoring well KAFB-2628, which is approximately 175 ft to the north-northeast on a monthly basis to evaluate the potential for groundwater mounding due to UIC KAFB-IN2. The collected data will be used to calibrate the model output.

The prediction of the effects of injection on groundwater flow direction at the discharge location will be performed using a modified version of an existing model used on the BFF project. The existing model, used for performance assessment of an interim measure extraction system northwest of the discharge location, is a three-dimensional, finite element groundwater flow model developed using the FEFLOW software. Currently, this model simulates groundwater flow through the entire saturated thickness of the unconfined aquifer just north of the discharge location. The model represents all known extractions and injections within the domain and assumes a homogeneous aquifer with respect to permeability.

This model is scheduled for revisions that include the conversion to a heterogeneous representation of permeability based on available lithology logs and electric resistivity logs. Revisions will also include the expansion of the model domain, which will incorporate the proposed discharge location by a minimum distance of 4,500 ft in any direction. Once revised, the groundwater flow model will: (1) include the entire saturated thickness of the unconfined aquifer surrounding the discharge location, (2) include surrounding aquifer extraction at Base water production well KAFB-4 and nearby aquifer injection at KAFB-7, and (3) be calibrated to groundwater elevation measurements from all available wells surrounding the discharge location.

The effects of injection on groundwater flow direction at the discharge location will be determined through comparison of model simulations with and without the proposed injection. The extent of mounding associated with injection will be quantified by subtracting the simulated “no-injection” potentiometric surface from the simulated “with-injection” potentiometric surface. The effect on flow direction will be estimated by comparing three-dimensional particle tracks from each simulation. The effect of flow direction changes on surrounding contaminant plumes will be performed through comparison of particle tracks with existing plume delineations. Two-dimensional representations of the

results of these analyses will be presented in a series of figures showing the extent and magnitude of mounding, particle tracks, and the extent of existing contaminant plumes.

Geochemical Modeling (Condition 10i)

Geochemical modeling will be used to determine the potential for deleterious chemical reactions in the UIC well and aquifer mixing zone. Data input for the geochemical model will include existing groundwater data (including Tables 2-5 and 2-6), new data collected from Class V UIC well KAFB-106IN2 consisting of analytes listed in Table 5 of DP-1839, and effluent water chemistry from the GWTS performance sampling. The water chemistries of the injected water and receiving water will be mixed in proportion to the active pore volume of the immediate injection zone where mixing and reactions may be taking place. The mixing proportions will depend upon the hydraulic properties of the aquifer and injection rates. These will be determined during well construction and aquifer pump tests. The mathematical methodology selected to simulate mixing and reaction may vary depending upon the well configuration and performance. For example, mixing may be performed in batch mode with instantaneous mixing or as a titration type of algorithm.

Several geochemical modeling computer codes are available for this project. A detailed description of geochemical modeling and code summaries is available in Nordstrom and Nicholson (2017). In the most sophisticated modeling approach available for computer simulation, flow and reaction equations can be solved simultaneously using a numerical model of the well and affected aquifer volume. This more sophisticated approach may be necessary to simulate the effect of treated water injection on the nitrate plume per condition (10j). The geochemical computer modeling software Geochemist's Workbench (Bethke and Yekel, 2016) is appropriate for this task because of its versatility and has been used to simulate UIC disposal well flow and reaction for other projects. As the well construction advances and new information is obtained regarding the aquifer, aquifer matrix properties, and groundwater chemistry (period of 6 months), the Air Force will request a meeting with NMED to discuss if the modeling approach and software need to be revised.

Proposed Class V Underground Injection Control Well Impacts on ST-105 (Condition 10j)

There is no anticipated impact to the perched water aquifer under study in ST-105. Monitoring wells near the proposed location of UIC KAFB-106IN2 are dry at the depths of the perched aquifer. In addition, the UIC well construction will have blank steel casing with annular cement grout emplaced throughout the entire interval of the perched aquifer. This will prevent the UIC well from having hydraulic influence in the perched water interval.

Figure 2-1 presents a contour map of the regional groundwater aquifer nitrate plume and the extent of the perched water aquifer as published in the ST-105 Long-Term Monitoring Report (Kirtland AFB, 2019). The proposed location of the UIC well KAFB-106IN2 indicates the UIC well is outside the boundary of the regional aquifer nitrate plume.

The current UIC well (KAFB-7) is located outside the northern edge of the Site ST 105 nitrate plume. Currently, KAFB-7 does not show any long-term effects on the regional or perched nitrate plumes as there are no perturbations to the nitrate isoconcentration contours away from the center of the plumes (Kirtland AFB, 2019). In other words, the isoconcentration contours appear to reflect typical plume geometry and shape assuming a point or central source. If plume dilution or flow directions are altered by an injection well, one would expect the isocontours to be affected. The proposed location of the replacement UIC well (KAFB-106IN2) is approximately 2,900 ft east-southeast of KAFB-7 and near

monitoring well KAFB-2628. This location appears to be outside of the regional nitrate plume (i.e., <10 milligrams per liter); therefore, minimal, if any, effects on the nitrate plume are expected.

Two-dimensional geochemical modeling will be used to simulate potential impacts on the nitrate plumes. Several scenarios will be simulated to determine the effect of injection on nitrate concentrations under expected well operating conditions. The final set of model input parameters for these simulations will be determined by the project team and confirmed by the Kirtland AFB project manager, but will generally include:

- Average nitrate concentration and water quality base case
- Average injection rate, duration, and pressure base case
- Maximum nitrate concentration and water quality case
- Maximum injection rate, duration, and pressure case
- Minimum nitrate concentration and water quality case
- Minimum injection rate, duration, and pressure case.

The model calibrations and simulation outputs will be thoroughly documented with attending model input parameters, and nitrate and contaminant of concern concentrations, with respect to DP-1839 Table 5, will be tabulated as a function of time for the injection point and at key existing monitoring stations. Output will be rendered as color contour or color gradient maps that will depict the before and after nitrate plume configurations. The simulations will start at the onset of injection into the new UIC well and continue until a new steady state condition is reached with respect to both flow and contaminant transport, or until the injection period is terminated in accordance with planned disposal well operations.

The current injection well (KAFB-7) is only operated when the golf course pond disposal option is not available in the winter. Therefore, the maximum anticipated injection period is a few months. However, a continuous injection simulation scenario will be run with the model as a contingency for permanent loss of the golf course option. The model domain will be set so that the boundaries will be beyond the zone of local influence created by the new UIC well under maximum injection rate, pressure, and duration.

Maximum Estimated Monthly Discharge Volume (Condition 10k)

The maximum flow-through volume of water through the GWTS is 800 gallons per minute. Based on this, the maximum daily discharge will be 1,152,000 gallons and the maximum monthly discharge volume (assuming 31-day month) to the proposed injection well is 35,712,000 gallons.

Project Schedule (Condition 10l)

Appendix D provides the project schedule.

Necessary Changes to the Discharge Permit's Language (Condition 10m)

There are no necessary changes to the discharge permit's language.

2.3.1.9 Condition 11

DP-1839 Condition 11 states: Prior to discharging to a newly installed UIC well, the Permittee shall submit written notification to NMED stating the date that the discharge is to commence. [20.6.2.3107(A) NMAC]

Upon approval and subsequent implementation of this Work Plan, all notification requirements to NMED under DP-1839 will be met. This includes:

- Condition 10: Pre-notification of discharge to NMED prior to start of operations
- Condition 16: Pre-notification to NMED that GWTS effluent meets discharge standards.

2.3.1.10 Condition 12

DP-1839 Condition 12 states: The Permittee shall ensure that the GWTS is secured to control access by the general public. [20.6.2.3109(B) and (C) NMAC, New Mexico Statutes Annotated (NMSA) 1978, §74-6-5(D)].

Section 1.2 of the GWTS O&M Plan discusses overall the overall operation of the GWTS. The GWTS is installed in Building 19150 located off Ridgecrest Drive on Kirtland AFB in the former Zia Park housing neighborhood. The building is kept locked when authorized personnel are not present.

2.3.1.11 Condition 13

DP-1839 Condition 13 states: The Permittee shall maintain signs in English and Spanish (unless otherwise prohibited by KAFB policy) at appropriate locations indicating that the GWTS effluent is non-potable. Signs shall be posted at the UIC wellheads, at the GWTS, and any associated UIC well related infrastructure. [20.6.2.3109(B) and (C) NMAC, NMSA 1978, § 74-6-S(D)].

Injection well KAFB-7, the GWTS, and associated wellheads have current signage indicating the GWTS effluent water is non-potable. The well head for the new UIC well (KAFB-106IN2) will also have the appropriate signage.

2.3.1.12 Condition 14

DP-1839 Condition 14 states: The Permittee shall ensure that the UIC well(s) include monitoring devices, i.e., water level and pressure head transducers, to prevent overfilling of the well.
The Permittee shall measure the volume of treated effluent discharged to each UIC well and maintain a record of these volumes. [20.6.2.3107 and 20.6.2.3109(C)(3)(c)(i) NMAC].

The Class V UIC well will be connected to the 12-inch (in.) inner diameter high-density polyethylene GWTS effluent pipeline via 6-in. inner diameter carbon steel or high-density polyethylene pipe. Figure 2-4 provides an approximate location of the GWTS tie-in line. A 12-in. tee connected to a 12- × 6-in. reducer will be placed within the GWTS effluent pipeline. Gate valves will be placed a minimum of 10 ft upstream and downstream (total of two valves) of the tee. A third gate valve will be placed between the tee and the UIC well. Gate valves will meet American Water Works Association standard C509 or C515.

The 6-in. pipeline to the UIC well will be placed approximately 4 ft bgs. The pipeline will surface near the UIC well and extend to approximately 3 ft above ground surface to accommodate additional valves, equipment, and instrumentation. The equipment will include air relief valves, sample port, magnetic totalizing flowmeter, pressure transmitters, and ball valve with electronic actuator. Aboveground piping and equipment will be protected from freezing weather conditions with heat tape and insulation.

The UIC wellhead piping and instrumentation will be supported by a concrete pad. The pad will be appropriately sized and reinforced to sufficiently support the equipment and piping.

Electrical service will be brought to the wellhead through underground conduit from a nearby electrical power drop. Electrical work will be performed by a licensed electrician in compliance with the National Electrical Code, National Electrical Safety Code, and Kirtland AFB Requirements.

The electrical conduit will be placed a minimum of 18 in. bgs and be traceable for future utility locates. Electrical service will include a 120/240-volt alternating current circuit for the programmable logic controller and control panel, a 120-volt alternating current dedicated heat tape circuit, and a second 120-volt alternating current circuit.

Wellhead instrumentation will include the following: a magnetic totalizing flowmeter, well head pressure transmitter, remotely actuated butterfly valve, and water level sensor capable of fitting into a 1.5-in. drop tube and withstanding pressure from a minimum of 100 ft of water above the sensor.

2.3.1.13 Condition 15

DP-1839 Condition 15 states: The Permittee shall ensure the treated effluent conveyance system, i.e., piping, between the GWTS and the UIC well(s) does not leak and shall report any such leakage to the NMED GWQB in accordance with 20.6.2.1203(A) NMAC and copy the NMED HWB.

Within 1 year of the effective date of this Discharge Permit, the Permittee shall demonstrate the structural integrity of the treated effluent conveyance system between the GWTS and KAFB-7. Prior to testing, the Permittee shall propose for NMED approval the test method to be used. The results of the mechanical integrity testing shall be submitted to NMED within 60 days of test completion.

The Permittee shall integrity test the treated effluent conveyance system between GWTS and the UIC well(s) prior to submitting a permit renewal application. [20.6.2.3106(C) NMAC, 20.6.2.3107(A) NMAC]

Appendix C contains the standard operating procedure for effluent line integrity testing.

2.3.1.14 Condition 16

DP-1839 Condition 16 states: Prior to an initial discharge from the GWTS of treated effluent associated with a new extraction well, the Permittee shall submit documentation to NMED demonstrating that the treated effluent is at or below the effluent standards specified for the contaminants of concern listed in Table 2. [20.6.2.1202(A) and (C) NMAC, 20.6.2.3109(C) NMAC, NMSA 1978, §§ 61-23-1 through 61-23-32].

The treated effluent is currently below effluent standards specified for the contaminants of concern (Tables 2-2 and 2-3 of this Work Plan). Notification will be made per DP-1839 Condition 11. Effluent standards will be met per Appendix L – Sampling and Analysis Plan in the GWTS O&M Plan (Appendix B of this Work Olan).

2.3.1.15 Condition 17

DP-1839 Condition 17 states: The Permittee shall conduct the monitoring, operations, and reporting listed below. Unless otherwise specified, all periodic monitoring results or general information obtained shall be reported in the forthcoming quarterly report. [20.6.2.3107 NMAC].

The treated effluent is currently below effluent standards specified for the contaminants of concern (Tables 2-2 and 2-3 of this Work Plan). Notification will be made per DP-1839 Condition 11. Effluent standards will be met per Appendix L – Sampling and Analysis Plan in the GWTS O&M Plan (Appendix B of this Work Plan).

2.3.1.16 Condition 18

DP-1839 Condition 18 states: Unless otherwise approved by NMED, the Permittee shall conduct sampling in accordance with standard industry practice. Sampling in accordance with the most current version of the GWTS Sampling and Analysis Plan (Appendix L of the O&M Plan), which includes sampling locations, procedures, field measurements, quality control samples, handling and custody, analytical methods, quality control, analytical validation, and reporting requirements, satisfies this Condition. [20.6.2.3107(B) NMAC].

Refer to Section 5.1 of the GWTS O&M Plan (Appendix B). Results of the GWTS performance sampling are provided in the quarterly and annual GWM reports.

2.3.1.17 Condition 19

DP-1839 Condition 19 states: The Permittee shall submit quarterly and annual reports to NMED pursuant to the most recent NMED HWB approved Work Plans. The Permittee shall identify the portions of these reports pertaining to this Discharge Permit with a table in the reports that identifies those portions. Quarterly reports shall be submitted as specified below unless otherwise authorized by NMED:

- 1 January through 31 March – due by 30 June
- 1 April through 30 June – due by 30 September
- 1 July through 30 September – due by 31 December
- 1 October through 31 December – due by 31 March.

Annual reporting requirements for the previous year (i.e., 1 January through 31 December, shall be reported in the 31 March quarterly report. [20.6.2.3107(A) NMAC].

Refer to Section 5.1 of the GWTS O&M Plan (Appendix B). Results of the GWTS performance sampling are provided in the quarterly and annual GWM reports

2.3.1.18 Condition 20

DP-1839 Condition 20 states: The Permittee shall monitor the concentration of all contaminants of concern listed on Table 2 in GWTS treated effluent. Associated sampling and analysis shall be performed monthly at a minimum.

When groundwater from a new extraction well is first introduced to the GWTS, contaminant of concern monitoring of the GWTS treated effluent shall occur daily for the first week of treatment, weekly for the first month of treatment, and monthly thereafter. If alterations to, or conditions at, the GWTS result in a potential impact to effluent quality, the Permittee will repeat this sampling sequence as directed by NMED.

A representative sample of GWTS influent and effluent shall be analyzed annually for the constituents identified in Table 3-Annual Monitoring Constituent List of DP-1839. A representative sample of GWTS influent and effluent shall be analyzed every 5 years for the constituents identified in Table 4. Any newly

identified constituents detected during the 5 years sampling events will be added to the annual sampling constituent list in Table 3 –Annual Monitoring Constituent List of DP-1839.

All analysis of GWTS influent and effluent shall utilize analytical methods with detection limits that are sufficiently low to allow comparison to the standards included in the above referenced state and federal regulations. All sampling, analysis, and reporting shall comply with the most recent approved Work Plans. [20.6.2.3107(A) NMAC and 20.6.2.3107(B) NMAC]

Refer to Appendix L – Sampling and Analysis Plan of the O&M Plan (Appendix B of this Work Plan). Results of GWTS performance sampling are provided in the quarterly and annual GWM reports.

2.3.1.19 Condition 21

DP-1839 Condition 21 states: The Permittee shall report the volume of treated GWTS effluent discharged to each UIC well each quarter. This report shall include the following:

a. Monthly average, maximum, and minimum values for flow rate and volume of treated effluent transferred to each UIC well.

b. The totalized monthly volume of treated effluent transferred to all UIC wells.

c. Monthly average, maximum, and minimum head values of injection water for each UIC well. The Permittee shall monitor the GWTS effluent volume utilizing an effluent flowmeter installed on the effluent pump skid after the granular activated carbon units. Each UIC well shall have a dedicated flowmeter. Flowmeters shall be inspected and calibrated in accordance with the associated manufacturer's recommendations. [20.6.2.3107 NMAC]

Refer to Section 5.1 of the GWTS O&M Plan (Appendix B). Results of the GWTS performance sampling are provided in the quarterly GWM reports.

2.3.1.20 Condition 22

DP-1839 Condition 22 states: The Permittee shall include the following results and general information in quarterly reports to NMED:

a. Any mechanical integrity conducted on either the GWTS or a UIC well

b. Any replacement of granular activated carbon media and the associated data that initiated the decision to replace the media

c. Any UIC well rehabilitation conducted

d. Any malfunction, repair, or replacement of a flowmeter
e. Any additional operational changes with the potential to affect the discharge. [20.6.2.3107 NMAC]

Refer to Section 5.1 of the GWTS O&M Plan (Appendix B) – Results of the GWTS performance sampling, maintenance, well rehabilitation or problems are provided in the quarterly GWM reports

2.3.1.21 Condition 23

DP-1839 Condition 23 states: The Permittee shall monitor the groundwater wells in the vicinity of KAFB-7 and in the vicinity of any newly installed UIC well(s) to determine any change to aquifer chemistry that may be the result of injection. This monitoring shall be performed annually, shall conform to the procedures of the most current approved Work Plan, and shall measure the contaminants of concern listed in Table 2. This chemistry will be reported in the Annual Report for BFF. ST-105 Annual Report includes elevation contour mapping and analytical parameters identified in the Stage 2 Abatement Plan. The Permittee shall develop a groundwater elevation contour map depicting the groundwater flow direction in the vicinity of each UIC well and report it in the ST-105 Annual Report.

If the chemical quality of the treated groundwater being injected changes over time, NMED may require the Permittee to repeat geochemical modeling (numeric or analytical) to predict the interaction between the treated effluent and receiving groundwater. [20.6.2.3107 NMAC].

Condition 10b (Section 2.3.1.8,) provides a list of proposed GWM wells associated with the new UIC well, KAFB-106IN2.

2.3.1.22 Condition 24

DP-1839 Condition 24 states: The Permittee shall post all reports required by this Discharge Permit on KAFB's most current web site (e.g., https://kirtlandafb.tlisolutions.com/main.aspx.) [20.6.2.3107(A) NMAC].

Reports pertaining to the operation of the injection well are contained in Section 5 of the relevant quarterly GWM report. These reports are posted on the Air Force Administrative Records Website found at: http://afcec.publicadmin-record.us.af.mil.

2.3.2 Resource Conservation and Recovery Act Permit

The RCRA Permit, Section 6.2.4, requires submittal of this Work Plan to the NMED HWB (NMED, 2010). In addition, the RCRA Permit requires the following:

- Maintenance of a health and safety plan (Section 6.1.10). The safety requirements for the field implementation of this project are addressed in the companion document (Accident Prevention Plan for the Kirtland AFB BFF Expansion of the GWTS and Vadose Zone Treatability Studies Revision 7) that also contains the Site Safety and Health Plans (USACE, 2018b). This plan has been reviewed and approved by USACE and Kirtland AFB. All field personnel associated with the project will be required to read and understand the elements of the Accident Prevention Plan, and the document will be available at the project location.

- Laboratory quality assurance/quality control procedures (Section 6.5.18). Laboratory quality assurance/quality control procedures will be performed in accordance with the Appendix L of the GWTS O&M Plan (Kirtland AFB, 2018) (Appendix B).

2.3.3 New Mexico Office of the State Engineer Permits

The following permits have been received from the New Mexico Office of the State Engineer:

- Permit to Drill Wells with No Water Right (WR-07)

- Emergency Request to Drill and Use Supplemental Well (RG-1579, POD 376).

The Permit to Drill Wells with No Water Right allows for the drilling, installation, and operation of the Class V UIC well. Testing of this well will be performed prior to its use to make sure that it meets operational requirements. The approved Request to Drill and Use Supplemental Well (RG-1579, POD 376) allows for use of the well for the purpose of injecting treated groundwater from the GWTS. These permits are included in Appendix A and referenced as required permits in Section 3.1.1 below.

3. SITE-SPECIFIC ACTIVITIES

The installation of Class V UIC well KAFB-106IN2 will be performed using an experienced drilling contractor that is licensed in the State of New Mexico. A competent, qualified Field Geologist will oversee the management of the drilling and well construction operations and generate a detailed lithologic log from drill cuttings during the drilling operation. A competent, qualified Field Engineer will oversee the connection of the UIC well to the discharge line as well as installation of well valves, flowmeters, and other required equipment. A dedicated Health and Safety Officer will be onsite to ensure site construction activities are performed in a safe manner consistent with Occupational Safety and Health Administration requirements. Figure 3-1 displays a conceptual drill site layout. Field forms that will be utilized for this project are presented in Appendix E.

Appendix D provides a generalized task/duration schedule and estimated calendar timeframes for onsite activities associated with the construction of UIC Well KAFB-106IN2. This schedule does not take into account any potential security delays, either locally or Base-wide, that could impact the project. A detailed project schedule with specific dates will be generated upon approval of this Work Plan by NMED. Work will not be scheduled until project permits and this Work Plan have been received and approved.

The installation of the new Class V UIC well under this Work Plan will include the following activities:

- Mobilization and preparation for drilling
- Well drilling and construction
- Well development and testing
- Wellhead completion
- Surveying
- Investigation-derived waste (IDW) management
- Trenching for conveyance line
- Conveyance line construction
- Conveyance line tie-in.

3.1 Drilling Preparation and Mobilization

3.1.1 Permitting and Drilling Preparation

The NMED GWQB has issued DP-1839 to Kirtland AFB for a Class V UIC well (NMED, 2017). Kirtland AFB has obtained a permit from the Office of the State Engineer for the drilling of an exploratory well with no water rights (Appendix A). This permit will allow the drilling and installation of the UIC well. In addition, Kirtland AFB has submitted an Application for Permit to Change an Existing Right to the Office of the State Engineer (RG-1579 POD 376). This permit allows for the injection of treated water into the regional aquifer. Both New Mexico Office of the State Engineer permits have been approved and received.

The list of anticipated permits and plans applicable to this project includes:

- Stormwater Pollution Prevention Plan: Project-specific plan generated for the well construction site activities

- NMED GWQB Notice of Intent to Discharge

- Kirtland AFB AF103 Utilities Clearance Request ("Dig Permit")
- Kirtland AFB Hot Work Permit.

3.1.2 Site Security

Because the well site location is located within Kirtland AFB (Figure 1-2) temporary site fencing for security is not necessary. The borehole and well will be covered and secured against tampering at the completion of each work shift. Any excavations (i.e., development water pit) will be protected from entry using temporary fencing.

3.1.3 Barricading/Traffic Control

The site is not located on active roads, shoulders, or within a heavily trafficked area (foot or bike path). Consequently, traffic control will not be necessary. The work areas will be protected from pedestrian and vehicular access using vertical traffic panels and caution tape.

3.1.4 Mobilization

Mobilization and drilling preparation will consist of temporarily moving the necessary drilling equipment and materials to the laydown area at the well site at Kirtland AFB. The site will then be organized and set up per the drilling contractor's preferences. Figure 3-1 provides a conceptual drill site layout for this well construction project. The site will have entry and exit paths and barricading will be set up to clearly mark the construction work area, provide site visibility to area traffic, and prevent pedestrian traffic into the work area. Best management practices will be put in place to minimize erosion in accordance with the Stormwater Pollution Prevention Plan.

3.2 Drilling and Well Construction

Well construction specifications discussed in this section are considered preliminary until all permit and technical reviews are finalized. A generalized well construction diagram is provided in Figure 3-2. The drilling contractor will be consulted on the preliminary design of the well and their expertise will be taken into consideration concerning specific well design criteria (i.e., borehole and well casing diameters). Specifications presented are consistent with those presented in the Exploratory Well Permit RG-01579.

3.2.1 Data Collection Summary

Field measurements collected during well drilling operation will be consistent with "clean" construction operations. Consequently, field monitoring of soil cuttings for organic vapors or monitoring for hazardous atmospheres at the drill rig will not be performed. Table 3-1 provides a summary of the data collection that will be performed during site activities.

3.2.2 Surface Casing

A 24-in. diameter low-carbon steel surface casing will be installed within a 30-in. diameter borehole. The surface casing will be installed to a depth of approximately 40 ft bgs. Cement grout will be placed by tremie pipe. The grout will be allowed to cure until it is of sufficient strength to continue drilling activities.

3.2.3 Drilling

An appropriately sized diameter pilot borehole will be advanced to a depth of approximately 920 ft bgs using reverse circulation mud rotary drilling. Borehole geophysical logs will be run in the pilot hole to obtain hydrogeologic data of the penetrated formations. The actual well construction will be based upon the results of the geologic and geophysical data. Upon agreement on the final depth and well construction, the pilot hole will be reamed to an appropriate diameter to the final depth using reverse circulation mud rotary drilling.

3.2.4 Drilling Mud Management

Mud-based drilling fluids will be used to facilitate cuttings returns. Drilling fluids will be recirculated using a portable mud circulation and cuttings segregation system (shale shaker). A mud engineer will monitor drilling mud viscosity, weight, and other parameters as appropriate. Drill cuttings will be collected and placed at the site for future disposition.

3.2.5 Lithologic Logging

During drilling, a soil sample will be collected at approximately every 10 ft of depth. The soil sample will be described on a boring log form. This form and additional field forms to be utilized are provided in Appendix E. Soil logging will be performed in accordance with ASTM International D5434 and will include the following, when applicable:

- A general description of the drilling equipment used that includes such information as bit type and diameter, pump type, rig manufacturer, and model.
- Date and time of start and completion of boring.
- Name of contractor, driller, and drill site geologist.
- Size and length of casing used.
- Soil classification in accordance with the Unified Soil Classification System, color, relative density and consistency, soil components, soil moisture, stratification, hardness, grain size and size distribution, and odor.
- Mineralogical content of the sample (for correlation).
- Observations during drilling will be noted (i.e., bit chatter, rod binding, rod drops, and flowing or heaving sands). Drilling fluid observations such as lack of returns, interval over which they occur, and the quantity lost will be recorded.

3.2.6 Geophysical Logging

Downhole geophysical logs will be run in the pilot hole to total depth in order to obtain detailed physical readings of the geologic formations for lithology, porosity, and borehole quality. A standard geophysical logging suite to be run will include temperature, electrical resistivity, natural gamma, sonic, neutron, caliper, and borehole deviation.

3.2.7 Sampling and Analysis

One post-development groundwater sample with appropriate quality control samples will be collected. The sample will be collected during pump test activities through an access port positioned on the aboveground pipe run that includes temporary flow valves and flowmeter. Field measurements will consist of temperature, turbidity, pH, and specific conductance. Laboratory samples will be collected for a variety of organic and inorganic analyses for water chemistry evaluation. Table 3-2 provides a list of analytes and the corresponding laboratory analytical method. The sample will be delivered to Eurofins Lancaster Laboratories Environmental, LLC in Lancaster, Pennsylvania for analysis and Level 4 reporting.

3.2.8 Well Construction

Figure 3-2 provides a generalized well design for Class V UIC well KAFB-106IN2. The location and general specifications of the well have been approved by the Office of the State Engineer File No. RG-01579, POD 376. Actual depths and lengths of well materials will be determined after analysis of the drill cuttings and geophysical logs. Depths presented herein are preliminary target depths and subject to change.

The UIC well will be constructed to inject water entirely into the regional aquifer. The perched aquifer zone, whether saturated or not, will be blanked off with the steel well casing and the annulus will be grouted to prevent water loss or gain.

Well construction will consist of high strength, low alloy steel casing with an outside diameter of 12.75 in. and inner diameter of 12.125 in. The blank casing will be set to a depth of approximately 600 ft bgs. A dielectric coupling (or equivalent) will be installed between the well screen and casing to minimize galvanic corrosion. A 12.75-in. outer diameter Type 304 stainless steel louvered well screen will be installed below the dielectric coupling. The preliminary screen design is for 60-slot screen; however, this is subject to change based on actual lithologic conditions observed from drilling and geophysical data. Depending on final well design, up to 300 ft of well screen will be installed. A 5-ft long stainless-steel well sump will be installed below the well screen. Pipe will either be butt-welded together or use of a slip-collar welded directly to the pipe. All welds will be performed by a certified welder in accordance with applicable American National Standards Institute/American Welding Society standards and visually inspected. A copy of the welder's certification will be maintained onsite and kept in the project record.

An appropriately sized diameter steel gravel feed tube will be installed within the borehole annulus to a depth near 600 ft bgs. A silica sand gravel pack with an 8/12 gradation will be placed around the louvered screen interval. An approximate thickness of 350 ft of gravel pack will be set from the bottom of the borehole to 30 ft above the top of the screen. An approximate 30-ft thick layer of pea gravel will be placed above the gravel pack followed by an approximate 40-ft thick bentonite chip seal. Silica sand (12/20 gradation) may be mixed with the chips to assist with placement of the bentonite seal. Cement grout will be placed in the remaining annulus to near ground surface. Annular materials will be placed using a tremie pipe.

Internal to the well casing, a steel threaded and coupled gauge line (transducer pipe) will be installed from the top of the well casing to a depth consistent with the injection drop pipe depth. The injection pipe will be constructed in the well casing using an appropriately sized diameter threaded and coupled mild steel pipe. The bottom of the injection pipe will be approximately 100 ft below static water level. Centralizers will be installed on the injection pipe.

The well casing string will be held in place using a steel landing clamp that will be attached to the surface casing. The gauge line and injection pipe will be held in place with a steel plate placed on top of the well casing.

3.2.9 Wellhead Completion

A concrete sealing cube will be formed around the wellhead. The dimensions of the sealing cube will be 3 ft on each side and extend at least 2 ft above ground surface to fully encase the well casing. The concrete cube will be sufficiently reinforced with rebar. Signs will be posted at the wellhead that will state the GWTS effluent is non-potable. The signs will be posted in both English and Spanish.

3.3 Well Development and Testing

3.3.1 Initial Well Development

Well development will begin by recirculating fresh water into the well to remove as much drilling mud as possible while swabbing and bailing and/or airlift development. Water will be circulated in the well until clear water is returned. Following well flushing, a surge block will be introduced, and the entire screen surged. The well screen will be surged in 10-ft intervals with strokes repeated for 5-minute intervals. A phosphate-free mud dispersant such as Aqua-Clear PFD or approved equal may be added during the surging to facilitate drilling mud removal. The following well development steps will be performed:

- Airlift pumping and swabbing will be completed from the bottom of the well to the top of the well screen. The airlift pumping device will consist of a 30-ft long pipe with appropriate diameter double-disc rubber washers, which fit tightly to the inside of the well screen. The compressor equipment will be capable of producing adequate air flow to lift water and sediment from the lower section of the well with a maximum airline placement depth of 850 ft bgs within the development tool. Airlifting will proceed until the produced water is free of suspended sediment, as approved by EA.

- The well will be swabbed from the top to the bottom and back to the top of the screen interval using a surge block. The screen will be surged in 10-ft intervals with strokes repeated for 5 minutes in each interval. Following the surging cycle, the well will be bailed to remove accumulated sand and silt with a high capacity bailer and repeated until the discharge is acceptable to EA based on an evaluation of sand content. The sand content goal will be 2 milliliters of sediment per liter of water or less as measured with an Imhoff cone. This process may need to be repeated after each cycle of swabbing and jetting development.

- Next, a temporary pump will be installed (without check valves) and used to remove silt loosened during surging and settling of the filter pack. This pumping will be accomplished by lowering the pump across the screen in 10-ft intervals and pumping each interval for about 10 minutes followed by a 5-minute shutdown period. The pump will be capable of producing 300 gallons per minute from a pumping level of approximately 700 ft bgs. The pump will be placed approximately 10 ft above the bottom of the screen and pumped for 30 minutes at the highest sustainable discharge rate while field water quality parameters are measured by EA. The turbidity goal is less than 100 nephelometric turbidity units at this stage of well development.

- Following initial pumping, a jetting device will be installed with multiple jets capable of injecting water at approximately 140 ft per second. Each 10-ft increment of the well screen will be jetted for approximately 10 minutes as the pump is gently raised and lowered with rotation. Water used in jetting will be clean water from the well.

Based on field observations, the development program will be modified as needed to achieve well development goals.

3.3.2 Final Well Development and Test Pumping

A temporary pump capable of producing a discharge rate of 150 gallons per minute minimum and 1,000 gallons per minute maximum (under a total dynamic head requirement of 750 ft) will be installed to an appropriate depth based on lithologic and geophysical logs. At the surface, a flowmeter, sampling port, gate valve, and sand separator (Rossum sand tester) will be installed in-line with the discharge hose. The well will be pumped for development until the specific capacity does not increase by more than 10 percent in a 2-hour period.

Test pumping will consist of a 400-minute step-drawdown test (four 100-minute steps) and a 16-hour constant-rate test. Water level data will be collected using a downhole transducer and verified with manual measurements. Recovery periods will be allowed between final development, step-drawdown test, and constant-rate test. Recovery will be considered complete when the water table rebounds to within 10 percent of pre-pumping levels. The constant-rate test will be performed at near the maximum sustainable capacity of the well and held constant for the entire time period (16 hours).

3.3.3 Video Inspection

Following the pumping tests, a downhole video will be made to document the construction of the well. The video camera used will have down-directed and side-scan capabilities. The camera depth (in ft bgs) will be displayed on the video. A flocculent may be added to the well prior to the video in order to maximize the clarity of the video through the water table. An Notice of Intent will be submitted to NMED, and approval received, prior to use for any additives or chemicals used in this well. A copy of the video will be provided to NMED.

3.4 Piping and Valve Installation

The Class V UIC well will be connected to the 12-in. inner diameter high-density polyethylene GWTS effluent pipeline via 6-in. inner diameter carbon steel or high-density polyethylene pipe. Figure 2-4 provides an approximate location of the GWTS tie-in line. A 12-in. tee connected to a 12- × 6-in. reducer will be placed within the GWTS effluent pipeline. Gate valves will be placed a minimum of 10 ft upstream and downstream (total of two valves) of the tee. A third gate valve will be placed between the tee and the UIC well. Gate valves will meet American Water Works Association standard C509 or C515.

The 6-in. pipeline to the UIC well will be placed approximately 4 ft bgs. The pipeline will surface near the UIC well and extend to approximately 3 ft above ground surface to accommodate additional valves, equipment, and instrumentation. The equipment will include air relief valves, sample port, magnetic totalizing flowmeter, pressure transmitters, and ball valve with electronic actuator. Aboveground piping and equipment will be protected from freezing weather conditions with heat tape and insulation.

The UIC wellhead piping and instrumentation will be supported by a concrete pad. The pad will be appropriately sized and reinforced to sufficiently support the equipment and piping.

3.5 Electrical and Well Controls

Electrical service will be brought to the wellhead through underground conduit from a nearby electrical power drop. Electrical work will be performed by a licensed electrician in compliance with the National Electrical Code, National Electrical Safety Code, and Kirtland AFB Requirements.

The electrical conduit will be placed a minimum of 18 in. bgs and be traceable for future utility locates. Electrical service will include a 120/240-volt alternating current circuit for the programmable logic controller and control panel, a 120-volt alternating current dedicated heat tape circuit, and a second 120-volt alternating current circuit.

Wellhead instrumentation will include the following: a magnetic totalizing flowmeter, well head pressure transmitter, remotely actuated butterfly valve, and water level sensor capable of fitting into a 1.5-in. drop tube and withstanding pressure from a minimum of 100 ft of water above the sensor.

3.6 Surveying

An as-built survey of the well, piping, and electrical conduit will be provided by a registered land surveyor. The land surveyor will be registered in the State of New Mexico. The as-built survey will include the below grade electrical conduit, carbon steel piping, and connection with GWTS conveyance line. Aboveground survey measurements will be taken on the concrete pad, top of well casing, and entry location of steel pipe into the subsurface.

3.7 Reporting

3.7.1 Well Completion Report

A well completion report will be generated at the completion of the construction project. The report will include:

- Summary of the well construction project
- Final as-built construction drawings
- Final geologic log for the borehole
- Well development procedures and summary
- Results and analysis of the aquifer test
- Waste management summary
- Field data forms and laboratory data reports
- Final site restoration and photo documentation.

A schedule for the submittal of the report will be included with the project schedule pending approval of this Work Plan.

3.7.2 Class V Underground Injection Control Well Monitoring

Monitoring of the newly installed Class V UIC well will be performed in accordance with the approved O&M Plan (Kirtland AFB, 2016) and DP-1839 Conditions 19 through 23 (Table 2-1) (NMED, 2017). These data are currently being collected for UIC well KAFB-7. The information is included in the currently submitted quarterly GWM reports that are provided following the schedule set in Condition 19

of DP-1839. Data for well KAFB-106IN2 will be collected and included in the same monitoring schedule as KAFB-7.

4. WASTE MANAGEMENT

IDW generated from the construction activities associated with KAFB-106IN2 is expected to be non-hazardous liquids and solids. No hazardous IDW is anticipated for this project.

The non-hazardous IDW will consist of the following:

- Construction solid waste
- Drilling cuttings
- Drilling mud
- Well development and test pumping water.

Waste volumes will be minimized through engineering and efficient drilling practices. Non-hazardous IDW (drill cuttings, mud) will initially be stored at the drill site. Figure 3-1 presents a conceptual site layout for the drill site showing a temporary IDW storage and fluid management areas. Figure 4-1 is a location map for the Zia Park non-hazardous IDW storage area that will be utilized as a temporary storage area for associated drilling waste including wet cuttings in roll-off bins or small volumes of oils/fluids requiring off-Base disposal.

4.1 Construction Solid Waste

Construction solid waste consists of a variety of non-hazardous, municipal type waste such as routine trash, plastic or paper bags, sheeting, disposable water bottles, cardboard, empty containers, etc. Standard municipal type waste will be placed in heavy trash bags and held onsite prior to delivery to a Kirtland AFB trash dumpster. Recyclable items (i.e., cardboard boxes) will be flattened and taken to a Kirtland AFB recycling roll-off on-Base. Solid waste volumes are not anticipated to be significant enough to require a dedicated roll-off bin at the drill site.

Drilling-related waste includes used fluids and lubricants (oils/coolants), filters, excess plastic or metal pipe, etc. All drilling-related wastes will be removed by the drilling contractor for reuse, recycle, or disposal.

4.2 Drilling Cuttings and Mud Investigation-Derived Waste

Drill cuttings and drilling fluids will be properly managed at the site. All equipment needed to move, transfer, contain, and store IDW will be provided and maintained onsite.

Drill cuttings that accumulate at the shale shaker will be transferred to a lined, accumulation area where excess liquids can be allowed to drain. Drill cuttings will be sampled for the full analytical suite set forth by the Kirtland AFB construction and demolition (C&D) landfill waste acceptance criteria (U.S. Air Force, 2009). Cuttings meeting the acceptance criteria for the Kirtland AFB C&D landfill will be used for site restoration backfill. Acceptable drill cuttings will be processed with dry excavation spoils sourced from the excavation of the fluid management pit and used for development water pit or site restoration at the end of the project.

In the event there is excess dry soil/drill cuttings that require disposal, the Kirtland AFB C&D landfill will be utilized. Table 4-1 presents the required analytical suite set forth by the Kirtland AFB C&D landfill waste acceptance criteria (U.S. Air Force, 2009). Soil characterization will be performed by collecting representative, five-point composite IDW samples of the excess soil piles to generate a waste

profile for Kirtland AFB approval. Only drill cuttings with low moisture content that meet landfill acceptance criteria will be disposed of at the Kirtland AFB C&D landfill.

For drill cuttings being disposed at the Kirtland C&D landfill, once the analytical results for drilling cuttings are received and reviewed, a Request for Disposal letter will be provided to Kirtland AFB for approval to dispose of the contents of each soil pile or bin. All documentation regarding waste characterization and disposal of drill cuttings will be provided in the appendices of the well installation report.

Drilling mud will be transferred to steel, 21,000-gallon capacity tanks (Baker tanks) for post-drilling storage. It is anticipated that offsite disposal of the heavy mud will be necessary. The mud will be sampled by collecting a grab sample from each tank. Samples will be analyzed for a suite specified by the waste disposal facility. It is anticipated that the minimum analytical suite will consist of benzene, toluene, ethylbenzene, and total xylenes; RCRA metals; and corrosivity/pH. All waste characterization samples will be delivered to Hall Environmental Analysis Laboratory in Albuquerque, New Mexico for analysis.

No hazardous waste or special waste is anticipated to be generated as a waste stream during this project.

4.3 Development and Test Pumping Fluid Management

Water generated during well development activities will be routed to the temporary fluid management pit adjacent to the UIC well site (Figure 3-1). Prior to discharge of any water/wastewater during this project, a Notice of Intent will be filed with the NMED GWQB. Any discharge of wastewater will be performed in accordance with this Notice of Intent. The development pit will be designed as a simple, unlined excavation of sufficient volume to manage all of the well development fluids.

Water/mud pumped into the pit will be allowed to infiltrate into the soil and evaporate. The fluid management pit will have an earthen berm around the pit perimeter. A temporary fence will be placed around the pit to prevent unauthorized entry. Upon completion of liquid infiltration/evapotranspiration, the pit will be reclaimed using processed excavation soil and drill cuttings. Any excess, dry, drill cuttings will be disposed of at the Kirtland AFB C&D landfill.

Test water generated during the well development, step test, and pump test water with turbidity less than 100 nephelometric turbidity units will be routed directly into the GWTS conveyance line for discharge into the Kirtland AFB golf course irrigation ponds. The existing conveyance line located within 100 ft of the UIC well location will be tapped into with engineered piping and valves to properly control flows from the pump test water into the conveyance line (Figure 2-4). Later, this tap will be used to transfer water from the GWTS to the UIC well. Appendix C provides information on the integrity testing of the tap and pipeline. Coordination between the GWTS operational personnel, Kirtland AFB golf course operators, and EA will be performed in advance so all parties are prepared for the test.

5. REFERENCES

Bethke, C.M. and S. Yekel. 2016. *GWB Reaction Modeling Guide*. Aqueous Solutions, LLC. 142 pp.

Kirtland Air Force Base (AFB). 2016. *Operations and Maintenance Plan, Groundwater Treatment System, Bulk Fuels Facility, Solid Waste Management Unit ST-106/SS-111*. Kirtland Air Force Base, Albuquerque, New Mexico. Prepared by EA Engineering, Science, and Technology, Inc., PBC for USACE–Albuquerque District.

Kirtland AFB. 2018. *Operations and Maintenance Plan, Groundwater Treatment System, Bulk Fuels Facility, Solid Waste Management Unit ST-106/SS-111*. Kirtland Air Force Base, Albuquerque, New Mexico. Prepared by EA Engineering, Science, and Technology, Inc., PBC for USACE–Albuquerque District.

Kirtland AFB. 2019. *Final Fiscal Year 2017 Long-Term Monitoring Report, ST-105—Nitrate Impacted Groundwater, Kirtland Air Force Base, New Mexico*. January.

New Mexico Environment Department (NMED). 2010. *Hazardous Waste Treatment Facility Operating Permit, EPA ID No. NM9570024423*, Issued to U.S. Air Force for the Open Detonation Unit Located at Kirtland Air Force Base, Bernalillo County, New Mexico, by the NMED Hazardous Waste Bureau. July.

NMED. 2017. Discharge Permit Issuance DP-1839, Kirtland Air Force Base, Bernalillo County, New Mexico by the New Mexico Environment Department Groundwater Quality Bureau. April.

Nordstrom, D.K. and A. Nicholson. 2017. *Geochemical Modeling for Mine Site Characterization and Remediation. Volume 4*. Management Technologies of Metal Mining Influenced Water. Society of Mining, Metallurgy and Exploration (SME). Englewood Colorado, USA. 159 p.

U.S. Air Force. 2009. *Memorandum on Kirtland AFB Landfill Acceptance of Soil and Debris from Restoration Sites and/or Monitoring Well Installation.* January.

U.S. Army Corps of Engineers (USACE). 2018a. *Standard Operating Procedure for Effluent Conveyance Line Integrity Testing of the Groundwater Treatment System. Revision 0*. March.

USACE. 2018b. *Accident Prevention Plan for the Base Bulk Fuels Facility Expansion of the Dissolved Phase Plume Groundwater Treatment System Design and the Vadose Zone Treatability Studies, Revision 7*. Kirtland Air Force Base, New Mexico. Prepared by EA Engineering, Science, and Technology, Inc., PBC for USACE–Albuquerque District. December.

FIGURES

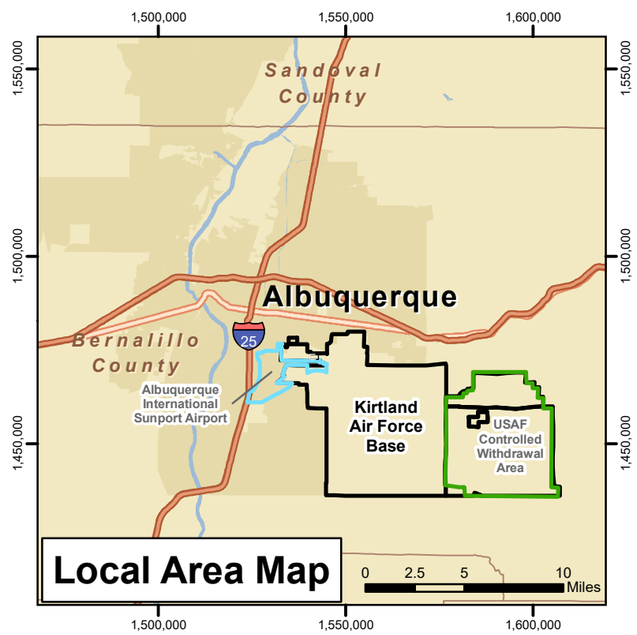

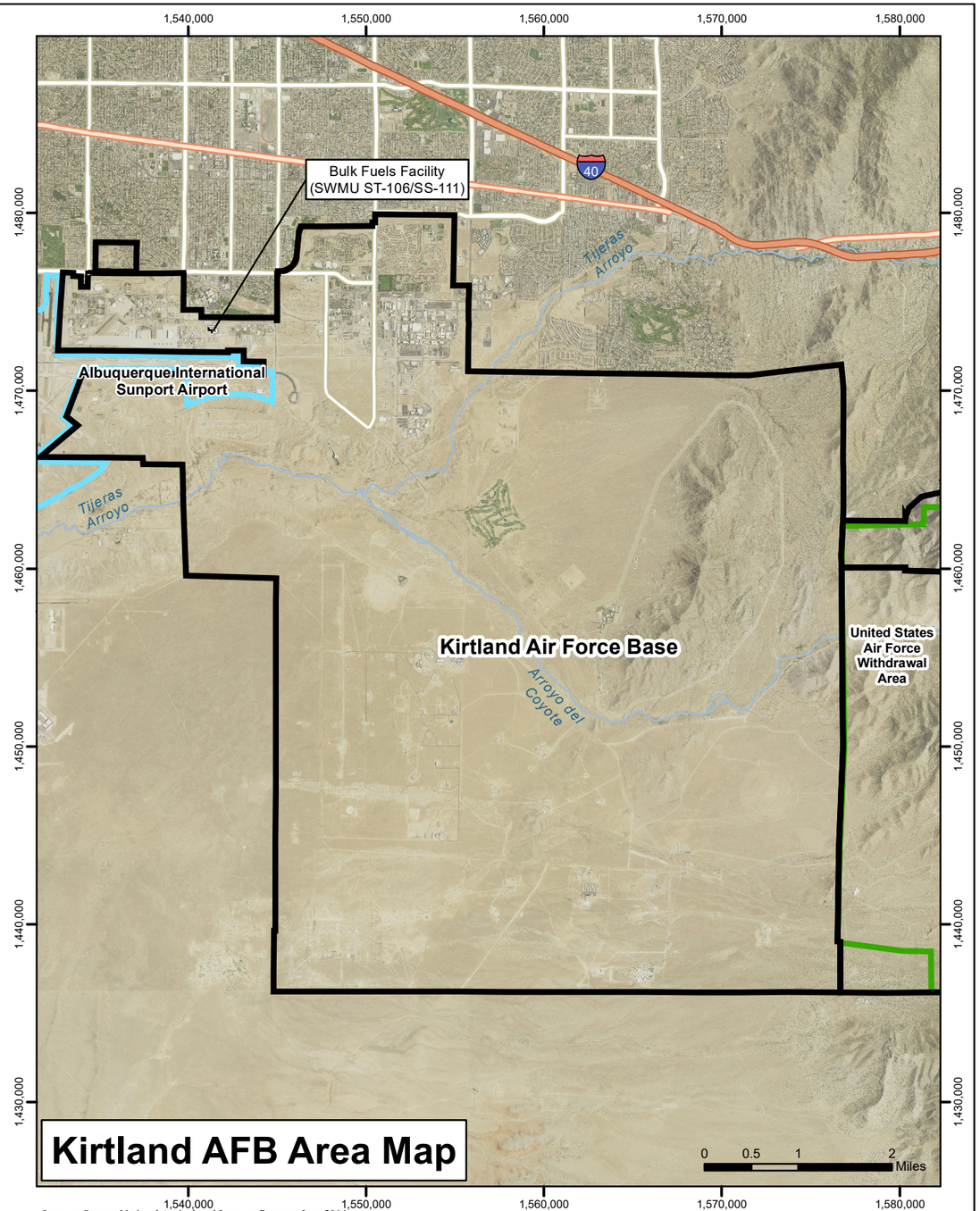

Imagery Source: National Agricultural Imagery Program June 2014

Legend

- Kirtland Air Force Base Installation Boundary
- Albuquerque International Sunport Airport
- United States Air Force Withdrawal Area
- Major Highways
- Highways
- Major Roads
- Rivers

N

Projection: NAD83 State Plane New Mexico Central FIPS3002 Feet

WORK PLAN FOR INSTALLATION OF CLASS V
UNDERGROUND INJECTION CONTROL WELL KAFB-106IN2
BULK FUELS FACILITY
SOLID WASTE MANAGEMENT UNIT ST-106/SS-111
KIRTLAND AIR FORCE BASE, NEW MEXICO

FIGURE 1-1

SITE LOCATION MAP

P:\Projects\Kirtland\Figures\KAFB-106IN2 Work Plan\1-1_KAFB106IN2_SITE_LOCATION_MAP.mxd 12/12/2019 EA ecarpio

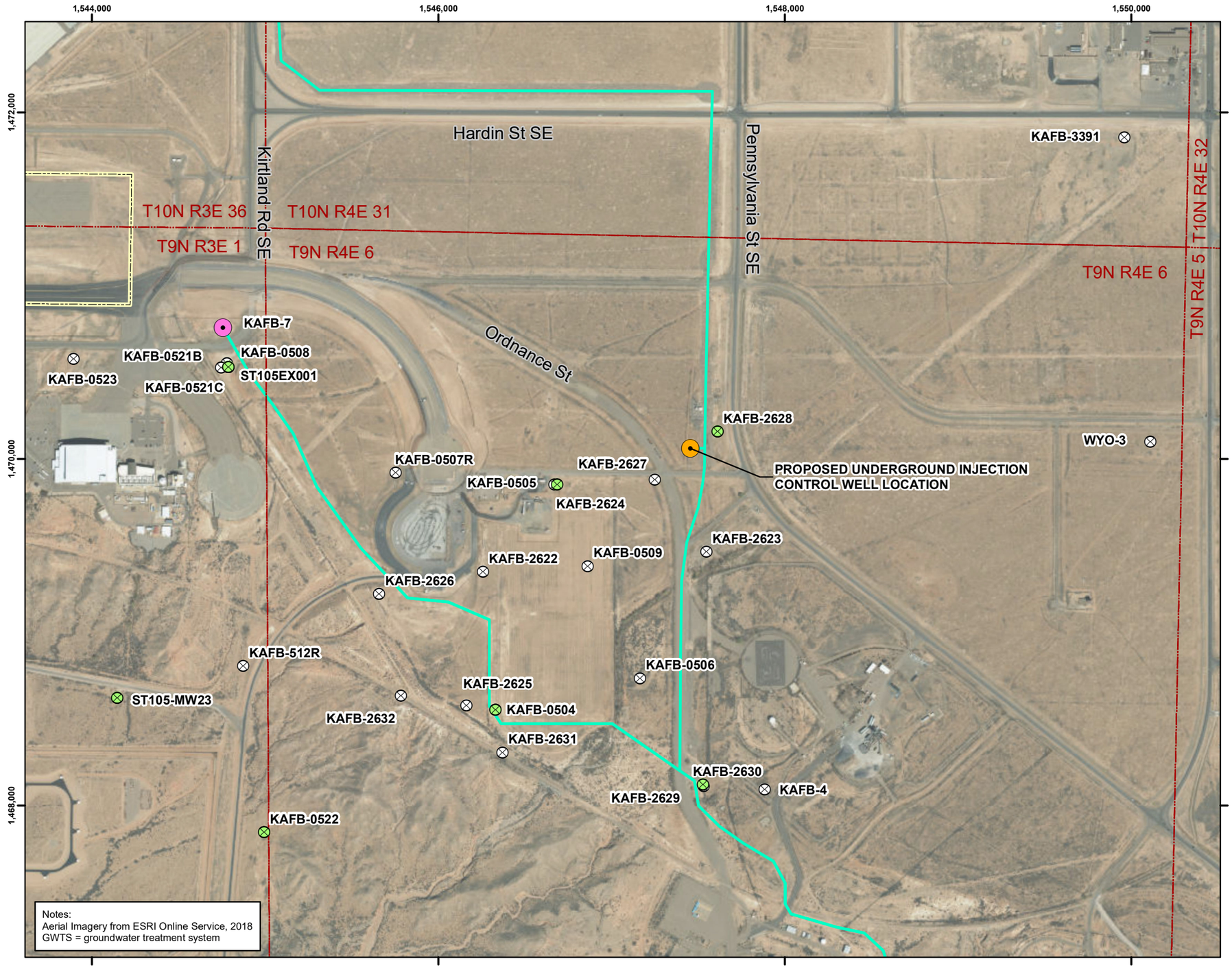

Legend

- Regional Aquifer Groundwater Monitoring Wells
- Groundwater Monitoring Well
- Proposed Underground Injection Control Well Location
- Current Injection Well
- GWTS Effluent Piping
- Installation Fence Boundary
- County Index (Township, Range, Section)

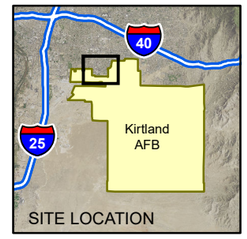

N

0 300 600 1,200

Feet

Projection: NAD83 State Plane New Mexico Central FIPS3002 Feet

WORK PLAN FOR INSTALLATION OF CLASS V
UNDERGROUND INJECTION CONTROL WELL KAFB-106IN2
BULK FUELS FACILITY
SOLID WASTE MANAGEMENT UNIT ST-106/SS-111
KIRTLAND AIR FORCE BASE, NEW MEXICO

FIGURE 1-2

PROPOSED CLASS V UNDERGROUND INJECTION CONTROL WELL KAFB-106IN2 LOCATION

P:\Projects\Kirtland\Figures\KAFB-106IN2 Work Plan\1-2_KAFB106IN2_PROPOSED_WELL_LOCATION.mxd 12/13/2019 EA ecarpio

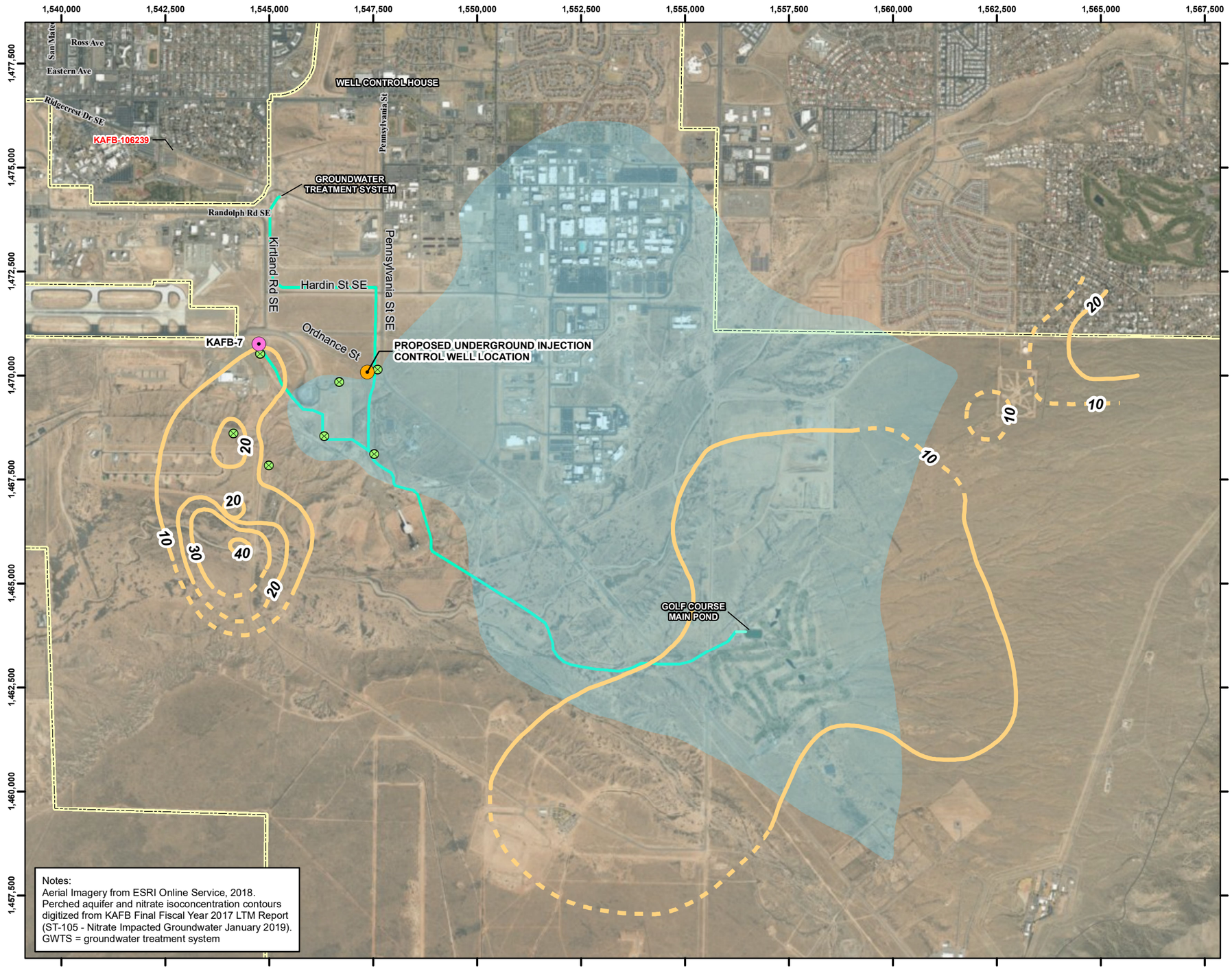

P:\Projects\Kirtland\Figures\KAFB-106IN2 Work Plan\2-3_KAFB106IN2_PROPOSED_WELL_LOCATION_SOW.mxd 12/12/2019 EA ecarpio

Legend

- Regional Aquifer Groundwater Monitoring Wells
- Groundwater Monitoring Well
- Proposed Underground Injection Control Well KAFB-106IN2
- Current Injection Well
- GWTS Effluent Piping
- Installation Fence Boundary
- Nitrate Isoconcentration (mg/L) (dashed where inferred)
- Extent of Perched Groundwater Zone, Modified from Van Hart, 2003

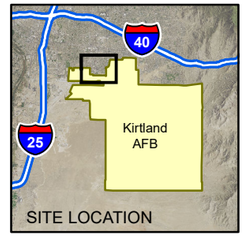

N

0 1,250 2,500 5,000

Feet

Projection: NAD83 State Plane New Mexico Central FIPS3002 Feet

WORK PLAN FOR INSTALLATION OF CLASS V
UNDERGROUND INJECTION CONTROL WELL KAFB-106IN2
BULK FUELS FACILITY
SOLID WASTE MANAGEMENT UNIT ST-106/SS-111
KIRTLAND AIR FORCE BASE, NEW MEXICO

FIGURE 2-1

REGIONAL AQUIFER 2016/2017
NITRATE CONCENTRATION MAP
(FROM KAFB, 2019)

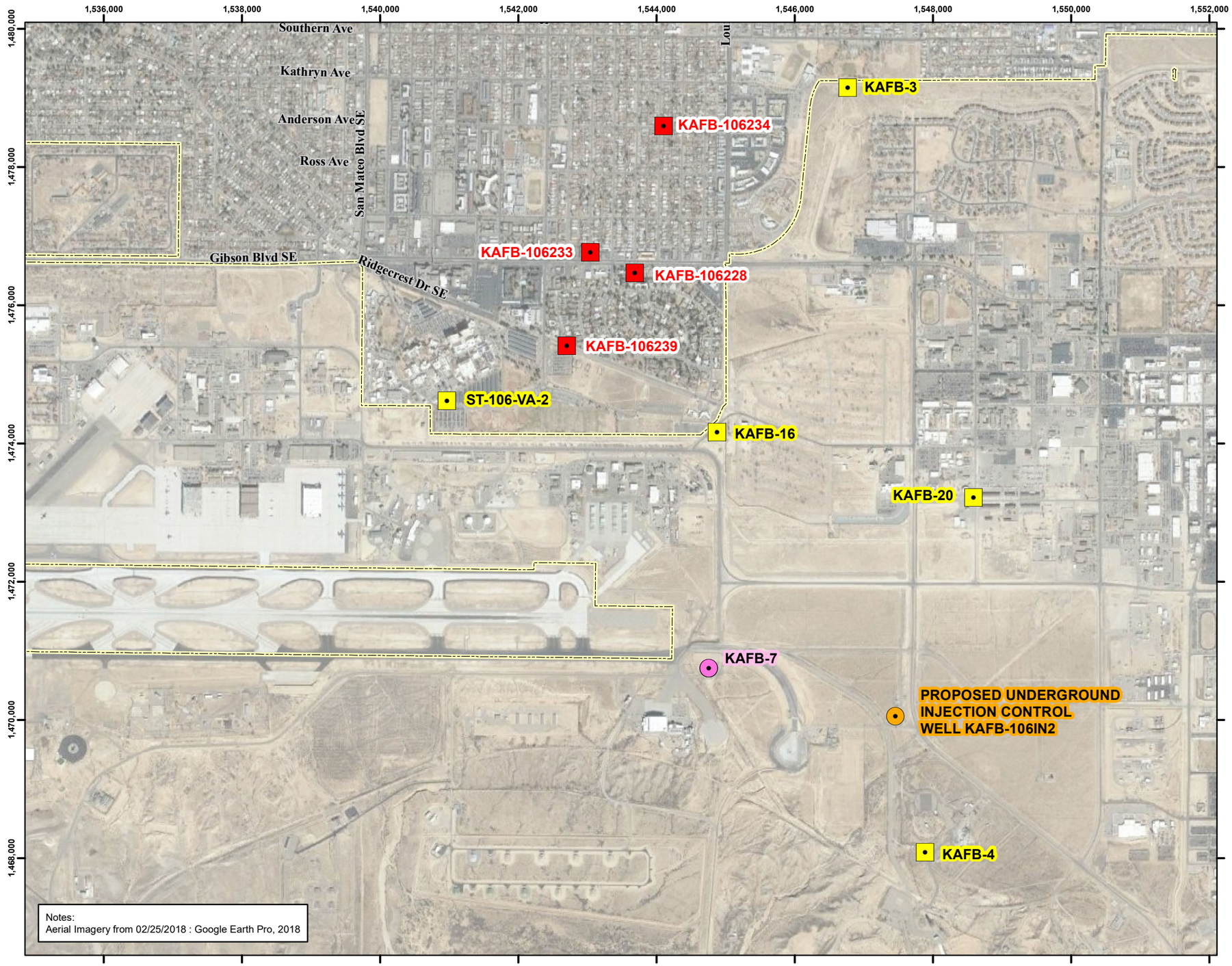

P:\Projects\Kirtland\Figures\KAFB-106IN2 Work Plan\2-1_KAFB106IN2_NEAREST_EXTRACTION_WELLS.mxd 12/12/2019 EA ecarpio

Legend

- Extraction Well
- Drinking Water Supply Well
- Current Injection Well
- Proposed Underground Injection Control Well KAFB-106IN2
- Installation Fence Boundary

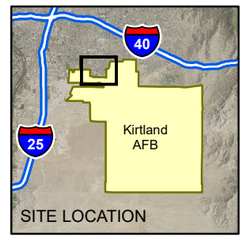

N

0 750 1,500 3,000

Feet

Projection: NAD83 State Plane New Mexico Central FIPS3002 Feet

WORK PLAN FOR INSTALLATION OF CLASS V
UNDERGROUND INJECTION CONTROL WELL KAFB-106IN2
BULK FUELS FACILITY
SOLID WASTE MANAGEMENT UNIT ST-106/SS-111
KIRTLAND AIR FORCE BASE, NEW MEXICO

FIGURE 2-2

LOCATION OF NEAREST EXTRACTION WELLS TO PROPOSED CLASS V UNDERGROUND INJECTION CONTROL WELL KAFB-106IN2

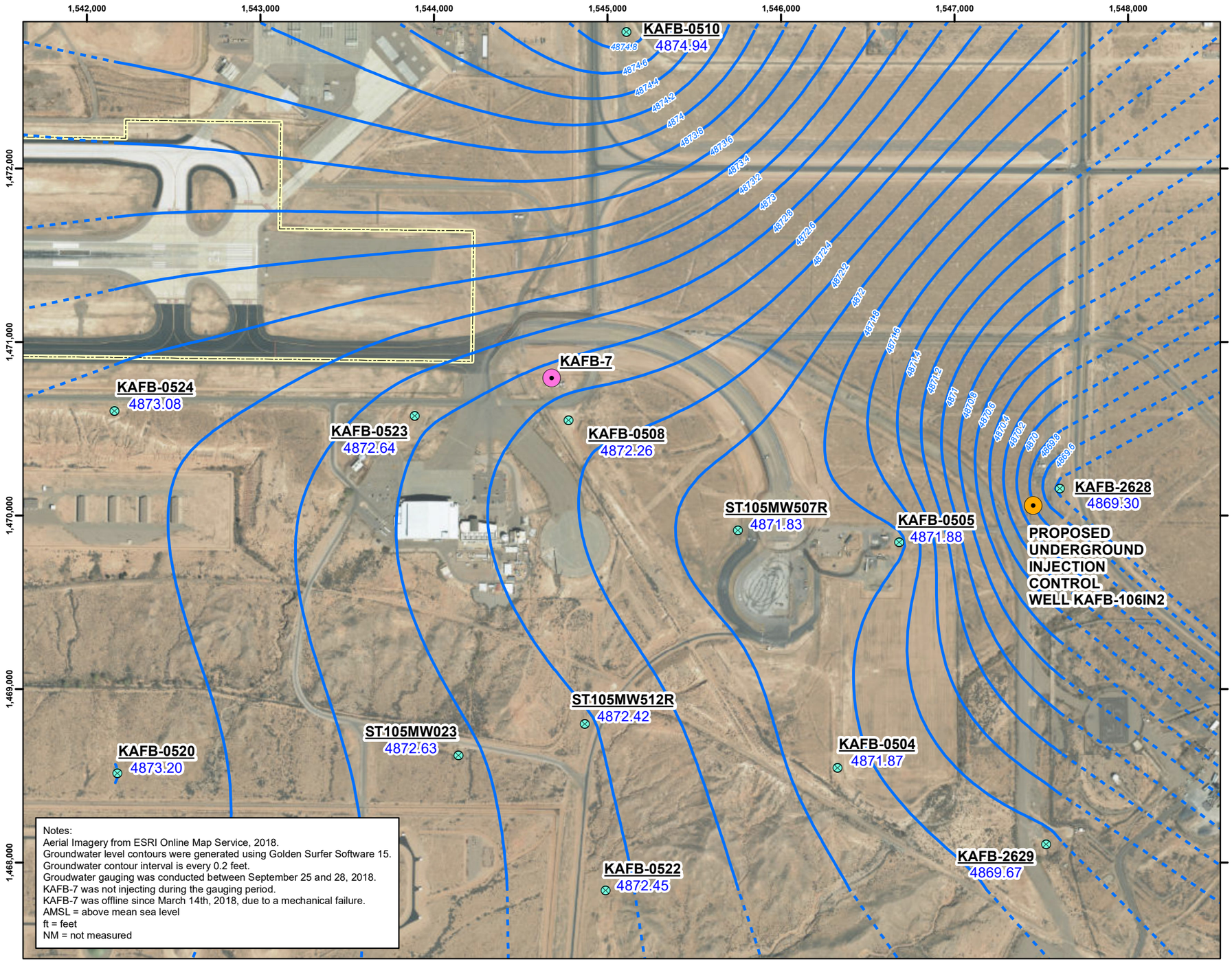

Legend

- Proposed Underground Injection Control Well KAFB106IN2
- Injection Well KAFB-7
- ST105 Groundwater Monitoring Well
- Groundwater Level Contour (ft AMSL)
- Inferred Groundwater Level Contour (ft AMSL)
- Installation Fence Boundary

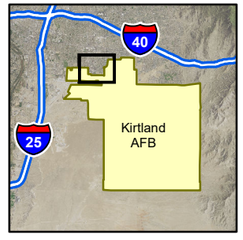

N

0 300 600 1,200

Feet

Projection: NAD83 State Plane New Mexico Central FIPS3002 Feet

WORK PLAN FOR INSTALLATION OF CLASS V
UNDERGROUND INJECTION CONTROL WELL KAFB-106IN2
BULK FUELS FACILITY
SOLID WASTE MANAGEMENT UNIT ST-106/SS-111
KIRTLAND AIR FORCE BASE, NEW MEXICO

FIGURE 2-3

FALL 2018 REGIONAL AQUIFER POTENTIOMETRIC SURFACE MAP OF AREA SURROUNDING PROPOSED CLASS V UNDERGROUND INJECTION CONTROL WELL KAFB-106IN2

P:\Projects\Kirtland\Figures\KAFB-106IN2 Work Plan\2-2_KAFB106IN2_POTENTIOMETRIC_SURFACE.mxd 12/12/2019 EA ecarpio

Legend

- Regional Aquifer Groundwater Monitoring Wells
- Groundwater Monitoring Well
- Proposed Underground Injection Control Well KAFB-106IN2
- Current Injection Well
- GWTS_Effluent_Piping
- Conceptual Tie-in Line Location
- Gate Valve

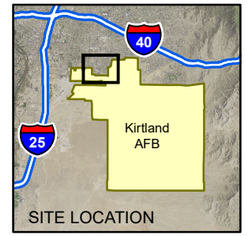

N

0 20 40 80

Feet

Projection: NAD83 State Plane New Mexico Central FIPS3002 Feet

WORK PLAN FOR INSTALLATION OF CLASS V
UNDERGROUND INJECTION CONTROL WELL KAFB-106IN2
BULK FUELS FACILITY
SOLID WASTE MANAGEMENT UNIT ST-106/SS-111
KIRTLAND AIR FORCE BASE, NEW MEXICO

FIGURE 2-4

CONCEPTUAL CONVEYANCE LINE
TIE-IN LOCATION

P:\Projects\Kirtland\Figures\KAFB-106IN2 Work Plan\3-3_KAFB106IN2_PROPOSED_WELL_LOCATION_ZOOM.mxd 12/12/2019 EA ecarpio

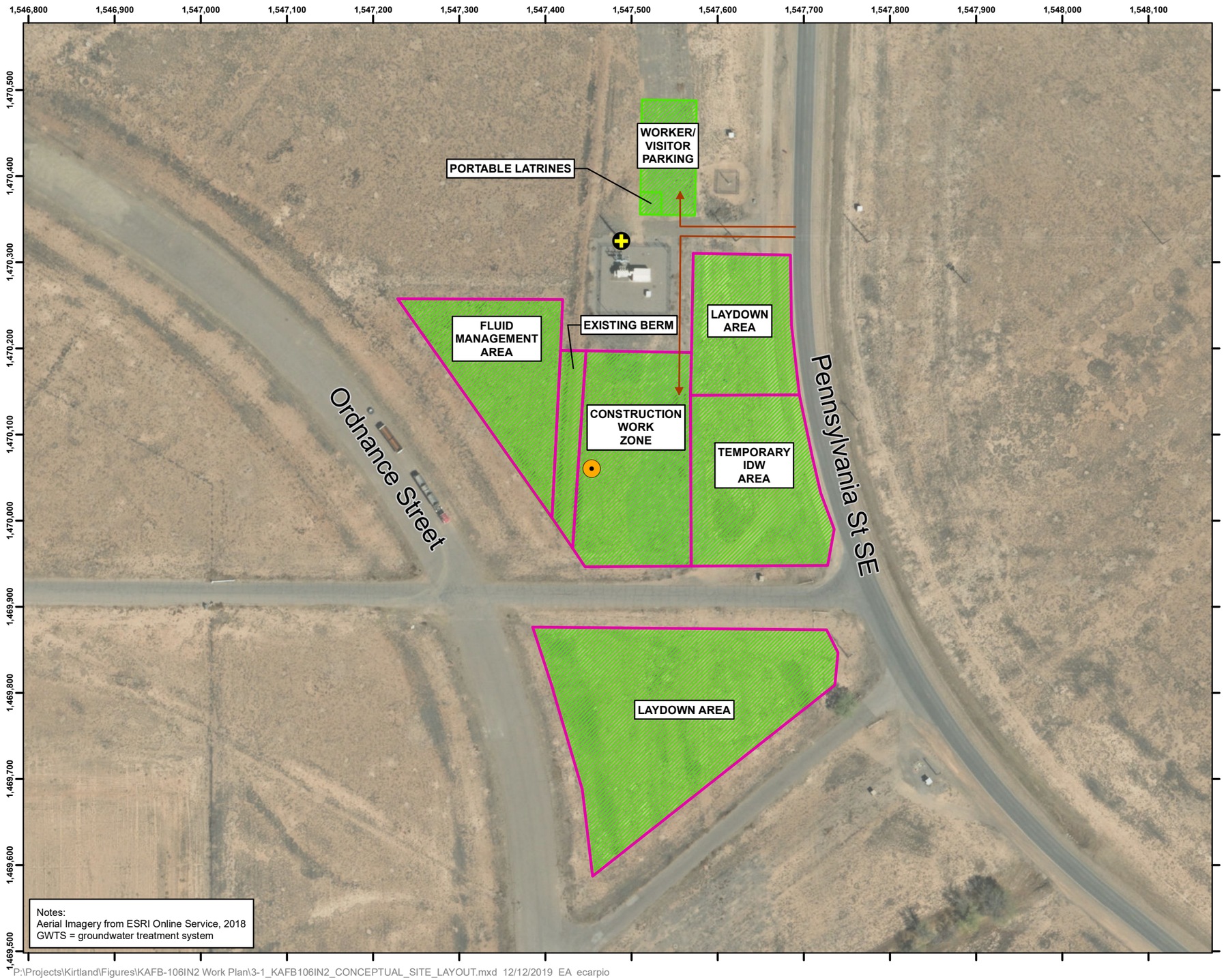

Legend

- Proposed Underground Injection Control Well KAFB-106IN2
- Electrical Service Drop
- Ingress/Egress
- Conceptual Site Layout
- Approximate Area of Disturbance

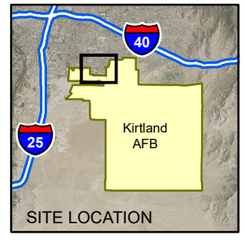

N

0 60 120 240

Feet

Projection: NAD83 State Plane New Mexico Central FIPS3002 Feet

WORK PLAN FOR INSTALLATION OF CLASS V
UNDERGROUND INJECTION CONTROL WELL KAFB-106IN2
BULK FUELS FACILITY
SOLID WASTE MANAGEMENT UNIT ST-106/SS-111
KIRTLAND AIR FORCE BASE, NEW MEXICO

FIGURE 3-1

CONCEPTUAL DRILL SITE LAYOUT

P:\Projects\Kirtland\Figures\KAFB-106IN2 Work Plan\3-1_KAFB106IN2_CONCEPTUAL_SITE_LAYOUT.mxd 12/12/2019 EA ecarpio

FIGURE 3-2 - KIRTLAND AIR FORCE BASE CLASS V UNDERGROUND INJECTION CONTROL WELL DESIGN

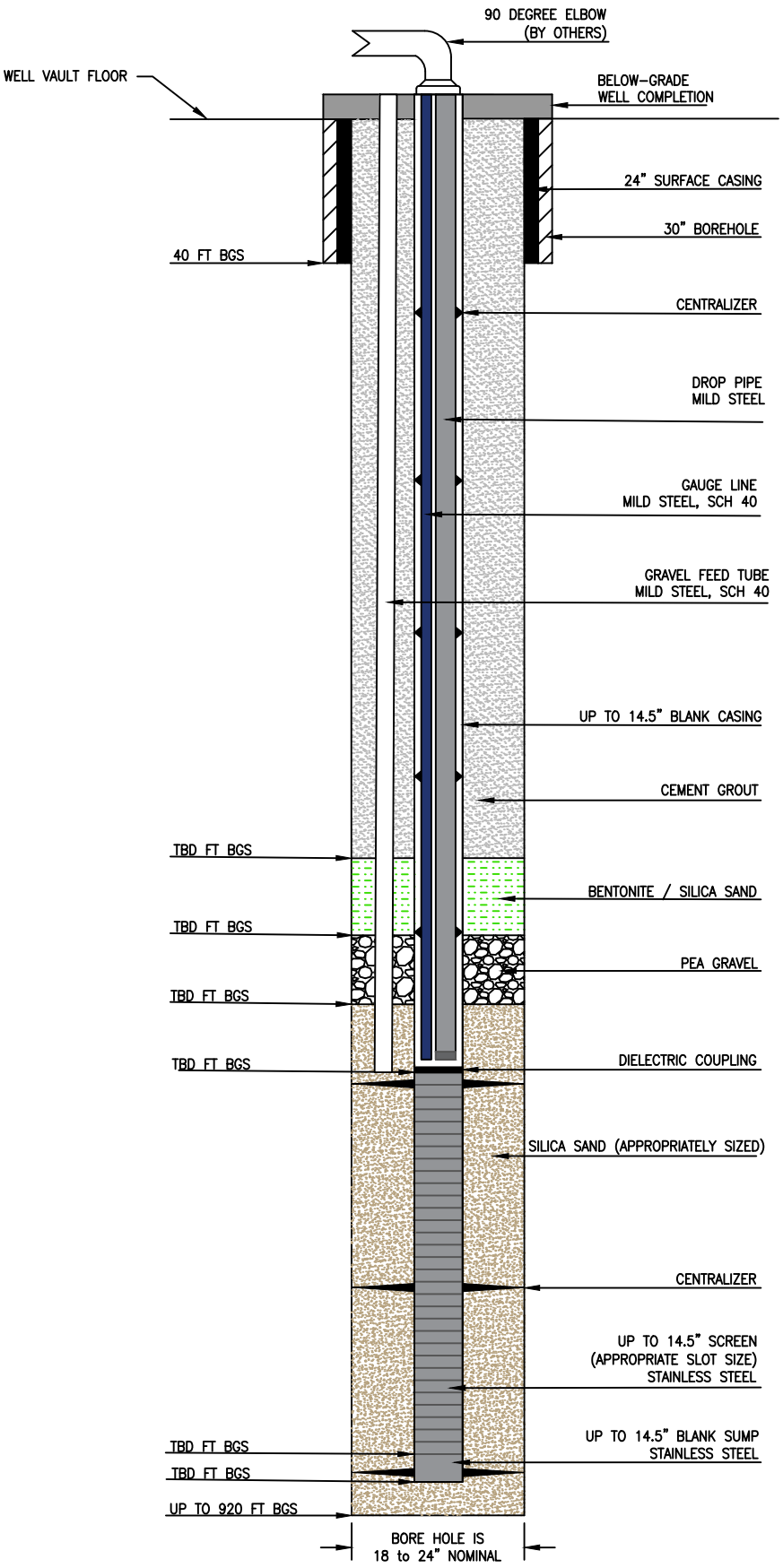

NOTE:
GPM = GALLON PER MINUTE
HSLA = HIGH STRENGTH LOW ALLOY
TBD = TO BE DETERMINED

NOT TO SCALE
BGS=BELOW GROUND SURFACE
FT=FEET

CAD FILE: P:\Projects\Kirtland\Figures\KAFB-106IN2 Work Plan\CAD\Figure 3-2 KAFB Injection Well_071819.dwg PLOT DATE/TIME: 12/12/2019 - 8:13am

EA ENGINEERING, SCIENCE, AND TECHNOLOGY, INC., PBC
320 Gold Avenue, SW Suite 1300
Albuquerque, NM 87102
Phone: (505) 224-9013
Fax: (505) 224-9016

KIRTLAND AIR FORCE BASE		INSTALLATION START DATE/TIME: TBD	INSTALLATION END DATE/TIME: TBD
PROJECT NO.: 62735DM02	WELL ID: KAFB106IN2	GEOLOGIST: TBD	DRILLER: TBD

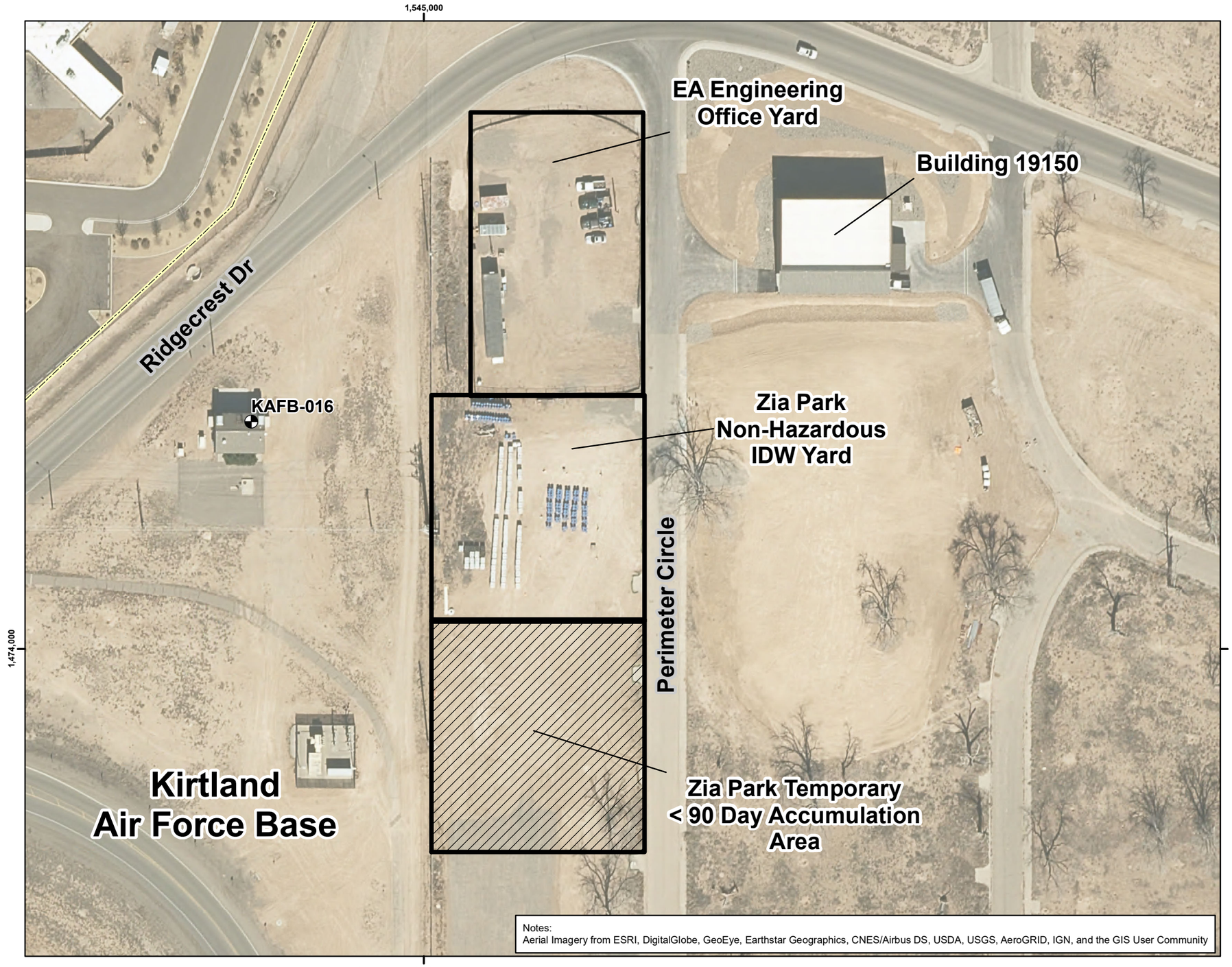

P:\Projects\Kirtland\Figures\KAFB-106IN2 Work Plan\4-1_KAFB106IN2_NONHAZARDOUS_IDW.mxd 12/12/2019 EA ecarpio

Legend

- Drinking Water Supply Well
- Kirtland Air Force Base

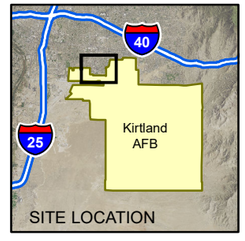

N

0 37.5 75 150

Feet

1 inch = 75 feet

Projection: NAD83 State Plane New Mexico Central FIPS3002 Feet

WORK PLAN FOR INSTALLATION OF CLASS V
UNDERGROUND INJECTION CONTROL WELL KAFB-106IN2
BULK FUELS FACILITY
SOLID WASTE MANAGEMENT UNIT ST-106/SS-111
KIRTLAND AIR FORCE BASE, NEW MEXICO

FIGURE 4-1

KIRTLAND AFB BFF
ZIA PARK
NON-HAZARDOUS IDW YARD

TABLES

Table 2-1
Discharge Permit DP-1839 Terms and Conditions Cross Reference Guide

Condition or Requirement No.	Terms and Conditions	Reference Location
Discharge Permit, DP-1839		
A. Operational Plan		
1	The Permittee shall implement the following operational plan to ensure compliance with Title 20, Chapter 6, Parts 2 and 4 NMAC. [20.6.2.3109.C NMAC]	Conditions 1 and 2 are met through proper operation of the GWTS. The GWTS has been designed to treat groundwater to meet the New Mexico Water Quality Control Commission water quality standards (20.6.2.3103 and 20.6.2.4103 NMAC) and the drinking water maximum contaminant levels adopted by the U.S. Environmental Protection Agency under the Federal Safe Drinking Water Act (42 U.S. Code § 300f to 300j-26). GWTS effluent must comply with any applicable permit or regulatory requirements. The Sampling and Analysis Plan (Appendix L of the O&M Plan) contains the necessary reporting requirements, while Appendix K – Contingency Plan and the DP-1839 Contingency Plan (Appendix A of the O&M plan) provides corrective actions to be enacted in the event of an exceedance of the discharge criteria. Tables 2-2 and 2-3 provide GWTS performance results for Q2 2019. Appendix B of this work plan contains the GWTS O&M plan (2016).
2	The Permittee shall operate in a manner such that standards and requirements of Sections 20.6.2.3101 and 20.6.2.3103 NMAC are not violated. [20.6.2.3101 NMAC,20.6.2.3103 NMAC, 20.6.2.3109(C) NMAC]	See above
3	The Permittee shall ensure that the most recent versions of all Work Plans associated with the GWTS, the effluent conveyance pipeline, and the UIC well(s) are consistent with the requirements of this Discharge Permit. [20.6.2.3101 NMAC,20.6.2.3103 NMAC, 20.6.2.3109(C) NMAC]	This UIC work plan is written to be consistent with the requirements of DP-1839. Extensive technical information regarding Condition 10 in DP-1839 is provided in Section 2.3.1.8 of this work plan.
4	The Permittee shall ensure all discharges associated with this Discharge Permit are located within the Designated UIC Area within Section 01 of T9N R3E; Sections 05, 06, 07, 08, and 09 of T9N R4E; and Section 31 of T10N R4E (see Appendix B). [20.6.2.3101 NMAC, 20.6.2.3103 NMAC, 20.6.2.3109(C) NMAC]	The proposed UIC well is located within the Designated UIC Area (Figure 1-2). Well location coordinates are described in Section 2.3.1.3 of this work plan.
5	The Permittee shall ensure that proposed UIC well locations (see Appendix B) and associated discharges are consistent with the most recent approved Stage 2 Abatement Plan for SWMU ST-105. [20.6.2.3101 NMAC, 20.6.2.3103 NMAC, 20.6.2.3109(C) NMAC]	Workplan Section 2.3.1.4 and Figure 2-3 indicate the proposed UIC well is not within the ST-105 perched water aquifer and the injection screen interval is not within published limits of the regional aquifer nitrate groundwater plume.
6	The Permittee shall ensure that discharged groundwater effluent is less than or equal to the effluent standards for all constituents referenced in 20.6.2.3103 NMAC. The term "effluent standard" is used in this Discharge Permit to refer to the New Mexico Water Quality Control Commission (WQCC) groundwater standard or the federal U.S. Environmental Protection Agency (EPA) maximum contaminant level (MCL); whichever is more stringent. [20.6.2.3109(C) NMAC, 20.7.10.100 NMAC]	The Sampling and Analysis Plan (Appendix L of the GWTS O&M plan located in Appendix B of this Work Plan) contains the procedure for effluent sampling of the GWTS. Influent and effluent laboratory analytical results are reported in Section 5.0 of each quarterly groundwater monitoring report. Tables 2-2 and 2-3 provide the GWTS influent and effluent results from the Q2 2019 GWM Quarterly Report.
7	The Permittee shall ensure that GWTS influent chemistry is consistent with the design basis of the GWTS. [20.6.2.3109(C) NMAC, 20.7.10.100 NMAC]	Appendix L of the GWTS O&M plan located in Appendix B of this Work Plan contains the procedure for effluent sampling of the GWTS. Influent and effluent laboratory analytical results are reported in Section 5.0 of each quarterly groundwater monitoring report. Tables 2-2 and 2-3 provide the GWTS influent and effluent results from the Q2 2019 GWM Quarterly Report.
8	The Permittee is authorized to install and operate not more than five UIC wells. Authorized UIC wells are listed in Table 1. [20.6.2.3109(C) NMAC, 20.7.10.100 NMAC]	This UIC workplan is proposing the installation of one additional UIC well for a total of two wells.
9	The Permittee shall ensure that the total discharge from the facility via UIC wells does not exceed 1,440,000 gpd. [20.6.2.3109(C) NMAC, 20.7.10.100 NMAC]	Maximum discharge from the GWTS is 800 gpm (1,152,000 gpd). Refer to Section 2.3.1.7 of this Work plan.

Table 2-1
Discharge Permit DP-1839 Terms and Conditions Cross Reference Guide

Condition or Requirement No.	Terms and Conditions	Reference Location
10	Prior to the installation of a new UIC well, the Permittee shall submit a Work Plan for NMED approval that satisfies the requirements of this Discharge Permit and the corrective action provisions at Part 6 of the RCRA Permit. This Work Plan shall, at a minimum, include the following information unless the Permittee can demonstrate to NMED that an item is not applicable or appropriate under the proposed activity or if an item has been provided separately under another submission: a. A statement of purpose and need for the additional UIC well(s); b. A list of groundwater monitoring wells which may be added to the monitoring program to effectively monitor performance of the new UIC well(s); c. A map showing the location of the proposed UIC well(s) and the location of all associated monitoring well(s); d. The geographic coordinates of the location of the UIC well(s) including township/range and section; e. A map showing the location of the nearest production well; f. A proposal of how the structural integrity of the treated effluent conveyance system between the GWTS and the new well will be demonstrated; g. Existing data showing the depth to water and general groundwater quality at the proposed new UIC well discharge location; h. A detailed description of groundwater flow modeling (numeric or analytical) predicting the effect of injection on the groundwater flow direction at the discharge location; i. A detailed description of geochemical modeling (numeric or analytical) evaluating the interaction between the treated effluent and receiving groundwater. Prior to any such geochemical modeling the treated effluent and receiving groundwater shall be tested for the analytes listed in Table 5 unless the Permittee can demonstrate that testing for a particular analyte is unnecessary; j. A detailed description of the impact that the proposed injection will have on any known groundwater contaminant plumes, e.g., the nitrate plume(s) addressed in the Site ST-105 Stage 2 Abatement Plan for Nitrate Contaminated Water; k. Maximum estimated monthly discharge volume to the UIC well(s); l. Project schedule, including the date the discharge is to commence and the anticipated duration; and m. Necessary changes to this Discharge Permit's language should the proposal be approved, e.g., the listing of authorized injection wells and associated monitoring wells in Table 1. These Work Plans shall be submitted for NMED approval at least 90 days prior to the scheduled installation of any UIC well. Proposed changes to this Discharge Permit constituting a "permit modification" as defined at 20.6.2.7.P NMAC shall not be submitted as a Work Plan, but shall instead be submitted as a discharge permit modification request as specified at 20.6.2.3109.G NMAC. A proposal to locate a discharge at a location outside the areas specified in Permit Condition #4 shall be considered a permit modification. A proposal to locate a UIC well at a location within the Designated UIC Area shall not be considered a permit modification unless the discharge quality or quantity is modified from that permitted herein. The Permittee shall post the approved Work Plan to the appropriate web site, i.e., KAFB/Environment/Kirtland AFB Fuel Plume Project Documents. [20.6.2.7(P) NMAC, 20.6.2.3107(A) NMAC, 20.6.2.3109(G) NMAC, 20.6.2.5003 NMAC]	See Section 2.3.1.8 of this work plan for details addressing Condition 10 requirements.
11	Prior to discharging to a newly installed UIC well, the Permittee shall submit written notification to NMED stating the date that the discharge is to commence. [20.6.2.3107(A) NMAC]	NMED notifications will be made per Section 2.3.1.9 of this work plan.
12	The Permittee shall ensure that the GWTS is secured to control access by the general public. [20.6.2.3109(B) and (C) NMAC, NMSA 1978, §74-6-5(D)]	GWTS O&M Plan Section 1.2 - Overall System Description
13	The Permittee shall maintain signs in English and Spanish (unless otherwise prohibited by KAFB policy) at appropriate locations indicating that the GWTS effluent is non-potable. Signs shall be posted at the UIC wellheads, at the GWTS, and any associated UIC well related infrastructure. [20.6.2.3109(B) and (C) NMAC, NMSA 1978, § 74-6-S(D)]	See Section 2.3.1.11 of this Work Plan. Injection well KAFB-7, the GWTS, and associated wellheads have current signage indicating the GWTS effluent is non-potable. The well head for the new injection well (KAFB-106IN2) will also have the appropriate signage.
14	The Permittee shall ensure that the UIC well(s) include monitoring devices, i.e., water level and pressure head transducers, to prevent overfilling of the well. The Permittee shall measure the volume of treated effluent discharged to each UIC well and maintain a record of these volumes. [20.6.2.3107 and 20.6.2.3109(C)(3)(c)(i) NMAC]	Refer to Sections 2.3.1.12 of this work plan. Refer to Section 5.1 of the GWTS O&M plan (Appendix B of this work plan) for record keeping.

Table 2-1
Discharge Permit DP-1839 Terms and Conditions Cross Reference Guide

Condition or Requirement No.	Terms and Conditions	Reference Location
15	The Permittee shall ensure the treated effluent conveyance system, i.e., piping, between the GWTS and the UIC well(s) does not leak and shall report any such leakage to the NMED GWQB in accordance with 20.6.2.1203(A) NMAC and copy the NMED HWB. Within one year of the effective date of this Discharge Permit, the Permittee shall demonstrate the structural integrity of the treated effluent conveyance system between the GWTS and KAFB-7. Prior to testing, the Permittee shall propose for NMED approval the test method to be used. The results of the mechanical integrity testing shall be submitted to NMED within 60 days of test completion. The Permittee shall integrity test the treated effluent conveyance system between GWTS and the UIC well(s) prior to submitting a permit renewal application. [20.6.2.3106(C) NMAC, 20.6.2.3107(A) NMAC]	Refer to this work plan Appendix C for the effluent line integrity testing procedure.
16	Prior to an initial discharge from the GWTS of treated effluent associated with a new extraction well, the Permittee shall submit documentation to NMED demonstrating that the treated effluent is at or below the effluent standards specified for the contaminants of concern listed in Table 2. [20.6.2.1202(A) and (C) NMAC, 20.6.2.3109(C) NMAC, NMSA 1978, §§ 61-23-1 through 61-23-32]	The treated effluent is currently below effluent standards specified for the contaminants of concern (Tables 2-2 and 2-3 of this work plan). Notification will be made per Section 2.3.1.14 of this workplan. Effluent standards will be met per Appendix L - Sampling and Analysis Plan in the GWTS O&M plan (Appendix B of this work plan).
B. Monitoring, Reporting, and Other Requirements		
17	The Permittee shall conduct the monitoring, operations, and reporting listed below. Unless otherwise specified, all periodic monitoring results or general information obtained shall be reported in the forthcoming quarterly report. [20.6.2.3107 NMAC]	Refer to Section 5.1 of the GWTS O&M plan (Appendix B) – Results of the GWTS performance sampling are provided in the quarterly groundwater monitoring reports
18	Unless otherwise approved by NMED, the Permittee shall conduct sampling in accordance with standard industry practice. Sampling in accordance with the most current version of the GWTS Sampling and Analysis Plan (Appendix L of the O&M Plan), which includes sampling locations, procedures, field measurements, quality control samples, handling and custody, analytical methods, quality control, analytical validation, and reporting requirements, satisfies this Condition. [20.6.2.3107(B) NMAC]	Refer to Appendix L- Sampling and Analysis Plan of the O&M Plan (Appendix B of this work plan). Results of GWTS performance sampling are provided in the quarterly GWM reports.
19	The Permittee shall submit quarterly and annual reports to NMED pursuant to the most recent NMED HWB approved Work Plans. The Permittee shall identify the portions of these reports pertaining to this Discharge Permit with a table in the reports that identifies those portions. Quarterly reports shall be submitted as specified below unless otherwise authorized by NMED: • January 1st through March 31st - due by June 30th • April 1st through June 30th_ due by September 30th • July 1st through September 30th_ due by December 31st • October 1st through December 31st - due by March 31st Annual reporting requirements for the previous year, i.e., January 1st through December 31st, shall be reported in the March 31st quarterly report. [20.6.2.3107(A) NMAC]	Refer to Section 5.1 of the GWTS O&M plan (Appendix B)– Results of the GWTS performance sampling are provided in the quarterly GWM reports
20	The Permittee shall monitor the concentration of all contaminants of concern listed on Table 2 in GWTS treated effluent. Associated sampling and analysis shall be performed monthly at a minimum. When groundwater from a new extraction well is first introduced to the GWTS, contaminant of concern monitoring of the GWTS treated effluent shall occur daily for the first week of treatment, weekly for the first month of treatment, and monthly thereafter. If alterations to, or conditions at, the GWTS result in a potential impact to effluent quality, the Permittee will repeat this sampling sequence as directed by NMED. A representative sample of GWTS influent and effluent shall be analyzed annually for the constituents identified in Table 3. A representative sample of GWTS influent and effluent shall be analyzed every five years for the constituents identified in Table 4. The first analysis of the five-year constituent list shall occur in July 2017. Any newly identified constituents detected during the five-years sampling events will be added to the annual sampling constituent list in Table 3. All analysis of GWTS influent and effluent shall utilize analytical methods with detection limits that are sufficiently low to allow comparison to the standards included in the above referenced state and federal regulations. All sampling, analysis, and reporting shall comply with the most recent approved Work Plans. [20.6.2.3107(A) NMAC and 20.6.2.3107(B) NMAC]	Refer to Appendix L- Sampling and Analysis Plan of the O&M Plan. (Appendix B of this work plan). Results of GWTS performance sampling are provided in the quarterly GWM reports.
21	The Permittee shall report the volume of treated GWTS effluent discharged to each UIC well each quarter. This report shall include the following: a. Monthly average, maximum, and minimum values for flow rate and volume of treated effluent transferred to each UIC well; b. The totalized monthly volume of treated effluent transferred to all UIC wells; and c. Monthly average, maximum, and minimum head values of injection water for each UIC well. The Permittee shall monitor the GWTS effluent volume utilizing an effluent flow meter installed on the effluent pump skid after the GAC units. Each UIC well shall have a dedicated flow meter. Flow meters shall be inspected and calibrated in accordance with the associated manufacturer's recommendations. [20.6.2.3107 NMAC]	Refer to Section 5.1 of the GWTS O&M plan (Appendix B)– Results of the GWTS performance sampling are provided in the quarterly GWM reports

Table 2-1
Discharge Permit DP-1839 Terms and Conditions Cross Reference Guide

Condition or Requirement No.	Terms and Conditions	Reference Location
22	The Permittee shall include the following results and general information in quarterly reports to NMED: a. Any mechanical integrity conducted on either the GWTS or a UIC well; b. Any replacement of GAC media and the associated data that initiated the decision to replace the media; c. Any UIC well rehabilitation conducted; d. Any malfunction, repair, or replacement of a flow meter; and e. Any additional operational changes with the potential to affect the discharge. [20.6.2.3107 NMAC]	Refer to Section 5.1 of the GWTS O&M plan (Appendix B)– Results of the GWTS performance sampling, maintenance, well rehabilitation or problems are provided in the quarterly GWM reports
23	The Permittee shall monitor the groundwater wells in the vicinity of KAFB-7 and in the vicinity of any newly installed UIC well(s) to determine any change to aquifer chemistry that may be the result of injection. This monitoring shall be performed annually, shall conform to the procedures of the most current approved Work Plan, and shall measure the contaminants of concern listed in Table 2. This chemistry will be reported in the Annual Report for BFF. ST-105 Annual Report includes elevation contour mapping and analytical parameters identified in the Stage 2 Abatement Plan. The Permittee shall develop a groundwater elevation contour map depicting the groundwater flow direction in the vicinity of each UIC well and report it in the ST-105 Annual Report. If the chemical quality of the treated groundwater being injected changes over time, NMED may require the Permittee to repeat geochemical modeling (numeric or analytical) to predict the interaction between the treated effluent and receiving groundwater. [20.6.2.3107 NMAC]	Section 2.3.1.21 of this work plan provides a list of proposed groundwater monitoring wells associated with the new UIC well, KAFB-106IN2.
24	The Permittee shall post all reports required by this Discharge Permit on KAFB's most current web site (e.g., https://kirtlandafb.tlisolutions.com/main.aspx.) [20.6.2.3107(A) NMAC]	Reports pertaining to the operation of the injection well are contained in Section 5 of the relevant quarterly groundwater monitoring report. These reports are posted on the Air Force Administrative Records Website found at: http://afcec.publicadmin-record.us.af.mil.

Table 2-1
Discharge Permit DP-1839 Terms and Conditions Cross Reference Guide

AFB = Air Force Base
BFF = Bulk Fuels Facility
EPA = U.S. Environmental Protection Agency
GAC = granular activated carbon
gpd = gallon per day
GWM = groundwater monitoring
GWQB = Groundwater Quality Bureau
GWTS = groundwater treatment system
HWB = Hazardous Waste Bureau
KAFB = Kirtland Air Force Base
LNAPL = light non aqueous phase liquid
MCL = maximum contaminant level
NA = not applicable
NM = New Mexico
NMAC = New Mexico Administrative Code
NMED = New Mexico Environment Department
NMPM = New Mexico Principal Meridian
NMSA = New Mexico Statutes Annotated
O&M = operations and maintenance
Q2 = second quarter
RCRA = Resource Conservation and Recover Act
SWMU = solid waste management unit
USC = United States Code
VA = Veterans Administration
WQA = Water Quality Act
WQCC = Water Quality Control Commission

Table 2-2
Monthly Groundwater Treatment System Performance Analytical Results for Train 1, Q2 2019

			Well Location ID:		GWTS-BFF-INF1			GWTS-BFF-GAC1			GWTS-BFF-EFF1			GWTS-BFF-EFF1			GWTS-BFF-INF1			GWTS-BFF-GAC1		
			Field Sample ID:		GWTS-INF1-040419			GWTS-GAC1-040419			GWTS-EFF1-040419			GWTS-EFF1DUP-040419			GWTS-INF1-050119			GWTS-GAC1-050119		
			Sample Date:		4/4/2019			4/4/2019			4/4/2019			4/4/2019			5/1/2019			5/1/2019		
			Sample Type:		REG			REG			REG			Field Duplicate			REG			REG		
Parameter	**Analytical Method**	**Analyte**	**NMAC NMWQCC [a]**	**Project Screening Level[b]**	**Result**	**Val Qual**	**LOD**	**Result**	**Val Qual**	**LOD**	**Result**	**Val Qual**	**LOD**	**Result**	**Val Qual**	**LOD**	**Result**	**Val Qual**	**LOD**	**Result**	**Val Qual**	**LOD**
EDB	Method SW8011 (µg/L)	1,2-Dibromoethane	0.1	0.05	0.022	J	0.019	0.026	J	0.019	0.015	J	0.019	0.014	J	0.019	0.016	J	0.019	0.02	J	0.019
VOCs	Method SW8260C (µg/L)	Benzene	5	5	ND	U	0.5	ND	U	0.5	ND	U	0.5	ND	U	0.5	ND	U	0.5	ND	U	0.5
		Ethylbenzene	700	700	ND	U	0.8	ND	U	0.8	ND	U	0.8	ND	U	0.8	ND	U	0.8	ND	U	0.8
		Toluene	1,000	1,000	ND	U	0.5	ND	U	0.5	ND	U	0.1	ND	U	0.5	ND	U	0.5	ND	U	0.5
		Xylenes, Total	620	620	ND	U	2	ND	U	2	ND	U	0.0025	ND	U	2	ND	U	2	ND	U	2
Dissolved Metals	Method SW6010C (mg/L)	Iron, dissolved	1.0	1.0	ND	U	0.1	ND	U	0.1	ND	U	0.5	ND	U	0.1	0.293	--	0.1	ND	U	0.1
		Manganese, dissolved	0.2	0.2	0.0028	J	0.0025	ND	U	0.0025	ND	U	2	ND	U	0.0025	0.0032	J	0.0025	ND	U	0.0025
Field Parameters		Temperature (°C)	NS	NS	19.9			19.8			19.8						19.9			19.9		
		Spec Cond (µS/cm)	NS	NS	418.1			417.1			416.6						456.9			455.6		
		pH (S.U.)	NS	NS	7.8			7.52			7.43						7.59			7.2		
		ORP (mV)	NS	NS	699.4			155.3			467.2						78.7			77.9		
		DO (mg/L)	NS	NS	6.91			3.73			7.13						5.8			3.36		

Table 2-2
Monthly Groundwater Treatment System Performance Analytical Results for Train 1, Q2 2019

			Well Location ID:		GWTS-BFF-EFF1			GWTS-BFF-EFF2			GWTS-BFF-INF1			GWTS-BFF-GAC1			GWTS-BFF-EFF1			GWTS-BFF-EFF1		
			Field Sample ID:		GWTS-EFF1-050119			GWTS-EFF2DUP-050119			GWTS-INF1-060619			GWTS-GAC1-060619			GWTS-EFF1-060619			GWTS-EFF1DUP-060619		
			Sample Date:		5/1/2019			5/1/2019			6/6/2019			6/6/2019			6/6/2019			6/6/2019		
			Sample Type:		REG			Field Duplicate			REG			REG			REG			Field Duplicate		
Parameter	**Analytical Method**	**Analyte**	**NMAC NMWQCC [a]**	**Project Screening Level[b]**	**Result**	**Val Qual**	**LOD**	**Result**	**Val Qual**	**LOD**	**Result**	**Val Qual**	**LOD**	**Result**	**Val Qual**	**LOD**	**Result**	**Val Qual**	**LOD**	**Result**	**Val Qual**	**LOD**
EDB	Method SW8011 (µg/L)	1,2-Dibromoethane	0.1	0.05	ND	U	0.019	ND	U	0.019	0.015	J	0.019	0.02	J	0.019	ND	U	0.019	ND	U	0.019
VOCs	Method SW8260C (µg/L)	Benzene	5	5	ND	U	0.5	ND	U	0.5	ND	U	0.5	ND	U	0.5	ND	U	0.5	ND	U	0.5
		Ethylbenzene	700	700	ND	U	0.8	ND	U	0.8	ND	U	0.8	ND	U	0.8	ND	U	0.8	ND	U	0.8
		Toluene	1,000	1,000	ND	U	0.1	ND	U	0.5	ND	U	0.5	ND	U	0.5	ND	U	0.1	ND	U	0.5
		Xylenes, Total	620	620	ND	U	0.0025	ND	U	2	ND	U	2	ND	U	2	ND	U	0.0025	ND	U	2
Dissolved Metals	Method SW6010C (mg/L)	Iron, dissolved	1.0	1.0	ND	U	0.5	ND	U	0.1	ND	U	0.1	ND	U	0.1	ND	U	0.5	ND	U	0.1
		Manganese, dissolved	0.2	0.2	ND	U	2	ND	U	0.0025	ND	U	0.0025	ND	U	0.0025	ND	U	2	ND	U	0.0025
Field Parameters		Temperature (°C)	NS	NS	19.9						19.5			19.5			19.6					
		Spec Cond (µS/cm)	NS	NS	455						535.3			534.7			536.8					
		pH (S.U.)	NS	NS	7.12						7.87			7.55			7.52					
		ORP (mV)	NS	NS	85.7						7			5.1			41.2					
		DO (mg/L)	NS	NS	5.63						5.1			3.36			4.68					

Table 2-2
Monthly Groundwater Treatment System Performance Analytical Results for Train 1, Q2 2019

[a] NMWQCC numeric standards per the New Mexico Administrative Code Title 20.6.2.3101A, Standards for Groundwater of 10,000 mg/L Total Dissolved Solids Concentration or Less (NMAC 2018).

[b] The project screening level was selected to satisfy the requirements of the Kirtland AFB Hazardous Waste Permit Number NM9570024423 as the lowest of (1) NMWQCC numeric standard or (2) EPA MCL. If no NMQWCC numeric standard or MCL exists for any analyte, then the project screening level will be the EPA RSL.

µg/L = microgram per liter
µS/cm = microSiemens per centimeter
ºC = degree Celsius
BFF = Bulk Fuels Facility
EDB = ethylene dibromide (1,2-dibromoethane)
EFF = effluent
EPA = U.S. Environmental Protection Agency
ft = foot/feet
GAC = granular activated carbon
GWTS = groundwater treatment system
ID = identification
INF = influent
LOD = limit of detection
MCL = maximum contaminant level
mg/L= milligram per liter
mV = millivolt
ND = nondetect
NMAC = New Mexico Administrative Code
NMWQCC = New Mexico Water Quality Control Commission
ORP = oxidation reduction potential
REG = normal field sample
RSL = regional screening level
Spec Cond = specific conductivity
S.U. = standard unit
Val Qual = validation qualifier
VOC = volatile organic compound
Shading = detected concentrations above the detection limit
Bold/Shading = reported concentrations exceed the project screening level
Val Quals based on independent data validation.
J = Qualifier denotes the analyte was positively identified, but the associated numerical value is estimated.
U = Qualifier denotes the analyte was analyzed but not detected above the detection limit. The value associated with the U-qualifier is the LOD.
-- = Validation qualifier not assigned.

Table 2-3
Monthly Groundwater Treatment System Performance Analytical Results for Train 2, Q2 2019

			Well Location ID:		GWTS-BFF-INF2			GWTS-BFF-GAC2			GWTS-BFF-EFF2			GWTS-BFF-INF2			GWTS-BFF-GAC2		
			Field Sample ID:		GWTS-INF2-040419			GWTS-GAC2-040419			GWTS-EFF2-040419			GWTS-INF2-050119			GWTS-GAC2-050119		
			Sample Date:		4/4/2019			4/4/2019			4/4/2019			5/1/2019			5/1/2019		
			Sample Type:		REG			REG			REG			REG			REG		
Parameter	**Analytical Method**	**Analyte**	**NMAC NMWQCC[a]**	**Project Screening Level[b]**	**Result**	**Val Qual**	**LOD**	**Result**	**Val Qual**	**LOD**	**Result**	**Val Qual**	**LOD**	**Result**	**Val Qual**	**LOD**	**Result**	**Val Qual**	**LOD**
EDB	Method SW8011 (µg/L)	1,2-Dibromoethane	0.1	0.05	ND	U	0.019	0.018	J	0.019	ND	U	0.019	0.028	J	0.019	0.014	J	0.019
VOCs	Method SW8260C (µg/L)	Benzene	5	5	ND	U	0.5	ND	U	0.5	ND	U	0.5	ND	U	0.5	ND	U	0.5
		Ethylbenzene	700	700	ND	U	0.8	ND	U	0.8	ND	U	0.8	ND	U	0.8	ND	U	0.8
		Toluene	1,000	1,000	ND	U	0.5	ND	U	0.5	ND	U	0.5	ND	U	0.5	ND	U	0.5
		Xylenes, Total	620	620	ND	U	2	ND	U	2	ND	U	2	ND	U	2	ND	U	2
Dissolved Metals	Method SW6010C (mg/L)	Iron, dissolved	1.0	1.0	ND	U	0.1	ND	U	0.1	ND	U	0.1	ND	U	0.1	ND	U	0.1
		Manganese, dissolved	0.2	0.2	0.0304	--	0.0025	ND	U	0.0025	ND	U	0.0025	0.0348	--	0.0025	ND	U	0.0025
Field Parameters		Temperature (°C)	NS	NS	19.9			19.7			19.8			20.1			20.1		
		Spec Cond (µS/cm)	NS	NS	332.9			331.8			331.1			361.7			359.8		
		pH (S.U.)	NS	NS	7.97			7.46			7.42			7.54			7.11		
		ORP (mV)	NS	NS	410.6			153.5			129.9			74			75.5		
		DO (mg/L)	NS	NS	6.23			1.24			4.97			6.79			1.21		

Table 2-3
Monthly Groundwater Treatment System Performance Analytical Results for Train 2, Q2 2019

			Well Location ID:		GWTS-BFF-EFF2			GWTS-BFF-EFF2			GWTS-BFF-INF2			GWTS-BFF-GAC2			GWTS-BFF-EFF2		
			Field Sample ID:		GWTS-EFF2-050119			GWTS-EFF2DUP-050119			GWTS-INF2-060619			GWTS-GAC2-060619			GWTS-EFF2-060619		
			Sample Date:		5/1/2019			5/1/2019			6/6/2019			6/6/2019			6/6/2019		
			Sample Type:		REG			Field Duplicate			REG			REG			REG		
Parameter	**Analytical Method**	**Analyte**	**NMAC NMWQCC[a]**	**Project Screening Level[b]**	**Result**	**Val Qual**	**LOD**	**Result**	**Val Qual**	**LOD**	**Result**	**Val Qual**	**LOD**	**Result**	**Val Qual**	**LOD**	**Result**	**Val Qual**	**LOD**
EDB	Method SW8011 (µg/L)	1,2-Dibromoethane	0.1	0.05	ND	U	0.019	ND	U	0.019	0.029	--	0.019	0.011	J	0.019	ND	U	0.019
VOCs	Method SW8260C (µg/L)	Benzene	5	5	ND	U	0.5	ND	U	0.5	ND	U	0.5	ND	U	0.5	ND	U	0.5
		Ethylbenzene	700	700	ND	U	0.8	ND	U	0.8	ND	U	0.8	ND	U	0.8	ND	U	0.8
		Toluene	1,000	1,000	ND	U	0.5	ND	U	0.5	ND	U	0.5	ND	U	0.5	ND	U	0.5
		Xylenes, Total	620	620	ND	U	2	ND	U	2	ND	U	2	ND	U	2	ND	U	2
Dissolved Metals	Method SW6010C (mg/L)	Iron, dissolved	1.0	1.0	ND	U	0.1	ND	U	0.1	ND	U	0.1	ND	U	0.1	ND	J	0.1
		Manganese, dissolved	0.2	0.2	ND	U	0.0025	ND	U	0.0025	0.0407	--	0.0025	ND	U	0.0025	ND	U	0.0025
Field Parameters		Temperature (°C)	NS	NS	20.1			20.1			19.6			19.8			19.7		
		Spec Cond (µS/cm)	NS	NS	359.9			359.9			430.4			429.7			427		
		pH (S.U.)	NS	NS	6.99			6.99			7.83			7.41			7.33		
		ORP (mV)	NS	NS	125.8			125.8			33.6			31.4			51		
		DO (mg/L)	NS	NS	4.89			4.89			4.73			0.97			3.85		

Table 2-3
Monthly Groundwater Treatment System Performance Analytical Results for Train 2, Q2 2019

[a] NMWQCC numeric standards per the New Mexico Administrative Code Title 20.6.2.3101A, Standards for Groundwater of 10,000 mg/L Total Dissolved Solids Concentration or Less (NMAC 2018).

[b] The project screening level was selected to satisfy the requirements of the Kirtland AFB Hazardous Waste Permit Number NM9570024423 as the lowest of (1) NMWQCC numeric standard or (2) EPA MCL. If no NMQWCC numeric standard or MCL exists for any analyte, then the project screening level will be the EPA RSL.

µg/L = microgram per liter
µS/cm = microSiemens per centimeter
ºC = degree Celsius
BFF = Bulk Fuels Facility
EDB = ethylene dibromide (1,2-dibromoethane)
EFF = effluent
EPA = U.S. Environmental Protection Agency
ft = foot/feet
GAC = granular activated carbon
GWTS = groundwater treatment system
ID = identification
INF = influent
LOD = limit of detection
MCL = maximum contaminant level
mg/L= milligram per liter
mV = millivolt
ND = nondetect
NMAC = New Mexico Administrative Code
NMWQCC = New Mexico Water Quality Control Commission
ORP = oxidation reduction potential
REG = normal field sample
RSL = regional screening level
Spec Cond = specific conductivity
S.U. = standard unit
Val Qual = validation qualifier
VOC = volatile organic compound
Shading = detected concentrations above the detection limit
Bold/Shading = reported concentrations exceed the project screening level
Val Quals based on independent data validation.
J = Qualifier denotes the analyte was positively identified, but the associated numerical value is estimated.
U = Qualifier denotes the analyte was analyzed but not detected above the detection limit. The value associated with the U-qualifier is the LOD.
-- = Validation qualifier not assigned.

Table 2-4

Regional Aquifer Groundwater Elevations near the Proposed Class V Underground Injection Control Well KAFB-106IN2**

Well Location ID	Aquifer	Depth to Water Fall 2017 (ft TOC)	Depth to Water Fall 2018 (ft MRP)	Change (ft)	Easting[a]	Northing[a]	MRP Elevation[a]	GW Elevation Fall 2018
KAFB-0504	Regional	486.53	485.14	1.39	471321.473	447614.638	5357.012	4871.872
KAFB-0505	Regional	492.88	491.77	1.11	471429.681	448010.794	5363.65	4871.88
KAFB-0508	Regional	481.63	481.35	0.28	470848.63	448224.851	5353.617	4872.267
KAFB-0522	Regional	398.79	397.61	1.18	470914.068	447399.31	5270.063118	4872.453118
KAFB-2628	Regional	498.99	498.67	0.32	471711.962	448104.66	5367.979	4869.309
KAFB-2629	Regional	492.04	489.98	2.06	471687.66	447480.245	5361.657	4871.677
KAFB-7	Regional	NA	474.41*	NA	470841.356	448287.494	5353.507	4879.09*
ST105-MW023	Regional	404.83	403.64	1.19	470655.738	447635.677	5276.279	4872.639

[a] Survey conducted by U.S. Geological Survey on January 18, 2018.

* Estimated elevation from transducer data (July 2019).

** Data obtained by AECOM from Solid Waste Management Unit-ST-105 database.

ft = foot/feet

GW = groundwater

ID = identification

MRP = measurement reference point

NA = not available/applicable

TOC = top of casing (pen mark)

Table 2-5
Inorganic Groundwater Quality Data for Regional Aquifer Wells near Proposed Class V Underground Injection Well KAFB-106IN2*

		Well Location ID:	KAFB-0505			KAFB-0505			KAFB-0505			KAFB-0508-MW			KAFB-0508-MW			KAFB-0508-MW		
		Field Sample ID:	GW0505-184			KAFB-505			KAFB-0505			GW0508-184			GW0508-584			KAFB-0508		
		Sample Date:	11/5/2018			11/5/2018			1/21/2019			11/5/2018			11/5/2018			11/5/2018		
		Sample Type:	REG			REG			REG			REG			Field Duplicate			REG		
Parameter	**Analytical Method**	**Analyte**	**Result**	**Val Qual**	**LOD**	**Result**	**Val Qual**	**LOD**	**Result**	**Val Qual**	**LOD**	**Result**	**Val Qual**	**LOD**	**Result**	**Val Qual**	**LOD**	**Result**	**Val Qual**	**LOD**
Metals, Dissolved	Method SW6010C, SW6020A (µg/L)	Aluminum	ND	U	0.226	ND	U	300	--	--	--	ND	U	0.226	ND	U	0.226	ND	U	300
		Antimony	--	--	--	ND	U	6	--	--	--	--	--	--	--	--	--	ND	U	6
		Arsenic	ND	U	0.0016	0.00043	F	5	--	--	--	0.001	J	0.0016	0.001	J	0.0016	0.00089	F	5
		Barium	0.076	--	0.0025	--	--	--	--	--	--	0.111	--	0.0025	0.109	--	0.0025	--	--	--
		Barium	--	--	--	0.075	--	3	--	--	--	--	--	--	--	--	--	0.11	--	3
		Beryllium	--	--	--	ND	U	1	--	--	--	--	--	--	--	--	--	ND	U	1
		Boron	--	--	--	0.033	F	100	--	--	--	--	--	--	--	--	--	0.022	F	100
		Cadmium	--	--	--	ND	U	1	--	--	--	--	--	--	--	--	--	ND	U	1
		Calcium	73.7	--	0.1	76	--	1,000	--	--	--	48.4	--	0.1	47.3	--	0.1	51	--	1,000
		Chromium	--	--	--	0.00078	F	10	--	--	--	--	--	--	--	--	--	0.0016	F	10
		Cobalt	--	--	--	0.00046	F	1	--	--	--	--	--	--	--	--	--	ND	U	1
		Copper	--	--	--	ND	U	2	--	--	--	--	--	--	--	--	--	ND	U	2
		Iron	ND	U	0.1	ND	UJ	100	--	--	--	ND	U	0.1	ND	U	0.1	ND	UJ	100
		Lead	--	--	--	ND	U	3	--	--	--	--	--	--	--	--	--	ND	U	3
		Lithium	--	--	--	0.014	F	20	--	--	--	--	--	--	--	--	--	0.011	F	20
		Magnesium	12.4	--	0.05	14	--	500	--	--	--	7.17	--	0.05	7	--	0.05	7.8	--	500
		Manganese	ND	U	0.0025	--	--	--	--	--	--	ND	U	0.0025	ND	U	0.0025	--	--	--
		Manganese	--	--	--	ND	U	3.5	--	--	--	--	--	--	--	--	--	ND	U	3.5
		Nickel	--	--	--	0.00056	F	3	--	--	--	--	--	--	--	--	--	0.00064	F	3
		Potassium	2.39	--	0.375	2.7	F	3,000	--	--	--	1.97	--	0.375	1.92	--	0.375	2.3	F	3,000
		Selenium	--	--	--	0.0019	F	5	--	--	--	--	--	--	--	--	--	0.0018	F	5
		Silver	--	--	--	ND	U	5	--	--	--	--	--	--	--	--	--	ND	U	5
		Sodium	26.4	--	0.5	29	--	5,000	--	--	--	22.5	--	0.5	21.9	--	0.5	25	--	5,000
		Strontium	0.501	--	0.001	--	--	--	--	--	--	0.324	--	0.001	0.318	--	0.001	--	--	--
		Thallium	--	--	--	ND	U	1	--	--	--	--	--	--	--	--	--	ND	U	1
		Vanadium	--	--	--	0.0042	F	6	--	--	--	--	--	--	--	--	--	0.0054	F	6
		Zinc	--	--	--	ND	U	20	--	--	--	--	--	--	--	--	--	ND	U	20
Alkalinity	Method SM2320B (mg/L)	Alkalinity, Total (As Caco3)	--	--	--	160,000	--	5,000	--	--	--	--	--	--	--	--	--	110,000	--	5,000
Anions	Method SW9056A (µg/L)	Bromide	--	--	--	ND	U	500	180	F	200	--	--	--	--	--	--	ND	U	500
		Chloride	--	--	--	14,000	--	3,000	15,000	--	500	--	--	--	--	--	--	26,000	--	3,000
		Fluoride	--	--	--	370	F	1,000	390	F	100	--	--	--	--	--	--	410	F	1,000
		Sulfate	--	--	--	90,000	--	5,000	93,000	--	500	--	--	--	--	--	--	48,000	--	5,000
	Method E350.1 (µg/L)	Nitrogen (Ammonia As N)	--	--	--	ND	U	100	ND	UJ	50	--	--	--	--	--	--	ND	U	100
	Method E351.2 (mg/l)	Total Kjeldahl Nitrogen	--	--	--	5,800	--	200	6,800	--	100	--	--	--	--	--	--	1,200	J	100
	Method E353.2 (µg/L)	Nitrogen As Nitrate + Nitrite	--	--	--	0.86075	FJ	1	--	--	--	--	--	--	--	--	--	ND	U	1
Carbon	Method SW9060A (µg/L)	Dissolved Organic Carbon	--	--	--	ND	U	1,000	--	--	--	--	--	--	--	--	--	ND	U	1,000
		Total Carbon	--	--	--	ND	U	1,000	--	--	--	--	--	--	--	--	--	ND	U	1,000
Other	Method A2540C (µg/L)	Total Dissolved Solids	--	--	--	380,000	--	10,000	380,000	J	10,000	--	--	--	--	--	--	260,000	J	10,000
	Method SM4500SIO2C (mg/L)	Silica	32	--	3	--	--	--	--	--	--	34.6	--	3	34.5	--	3	--	--	--
Field Parameters		DO (mg/L)	--	--	--	6	--	0	--	--	--	--	--	--	--	--	--	8.64	--	0
		ORP (mV)	--	--	--	204	--	0	--	--	--	--	--	--	--	--	--	211	--	0
		pH (S.U.)	--	--	--	6.73	--	0	--	--	--	--	--	--	--	--	--	7.02	--	0
		Spec Cond (µS/cm)	--	--	--	0.517	--	0	--	--	--	--	--	--	--	--	--	0.345	--	0
		Temperature (°C)	--	--	--	19.53	--	0	--	--	--	--	--	--	--	--	--	19.16	--	0
		Turbidity (ntu)	--	--	--	0	--	0	--	--	--	--	--	--	--	--	--	0	--	0

Table 2-5
Inorganic Groundwater Quality Data for Regional Aquifer Wells near Proposed Class V Underground Injection Well KAFB-106IN2*

		Well Location ID:	KAFB-0522			KAFB-2628			KAFB-2628			KAFB-2629			ST105MW507R			ST105MW507R		
		Field Sample ID:	KAFB-0522			KAFB-2628			KAFB-2628-FD			KAFB-2629			GW0507R-184			KAFB-507R		
		Sample Date:	10/19/2018			1/23/2019			1/23/2019			1/25/2019			11/5/2018			11/5/2018		
		Sample Type:	REG			REG			Field Duplicate			REG			REG			REG		
Parameter	**Analytical Method**	**Analyte**	**Result**	**Val Qual**	**LOD**	**Result**	**Val Qual**	**LOD**	**Result**	**Val Qual**	**LOD**	**Result**	**Val Qual**	**LOD**	**Result**	**Val Qual**	**LOD**	**Result**	**Val Qual**	**LOD**
Metals, Dissolved	Method SW6010C, SW6020A (µg/L)	Aluminum	ND	U	70	--	--	--	--	--	--	--	--	--	ND	U	0.226	ND	U	300
		Antimony	ND	U	1	--	--	--	--	--	--	--	--	--	--	--	--	0.00059	F	6
		Arsenic	0.00052	F	1	--	--	--	--	--	--	--	--	--	ND	U	0.0016	0.00049	F	5
		Barium	--	--	--	--	--	--	--	--	--	--	--	--	0.0635	--	0.0025	--	--	--
		Barium	0.055	--	0.95	--	--	--	--	--	--	--	--	--	--	--	--	0.064	--	3
		Beryllium	ND	U	0.3	--	--	--	--	--	--	--	--	--	--	--	--	ND	U	1
		Boron	0.029	F	15	--	--	--	--	--	--	--	--	--	--	--	--	0.03	F	100
		Cadmium	ND	U	1	--	--	--	--	--	--	--	--	--	--	--	--	ND	U	1
		Calcium	59	--	140	--	--	--	--	--	--	--	--	--	69.5	--	0.1	75	--	1,000
		Chromium	0.002	F	1.8	--	--	--	--	--	--	--	--	--	--	--	--	0.0018	F	10
		Cobalt	ND	U	0.2	--	--	--	--	--	--	--	--	--	--	--	--	ND	U	1
		Copper	ND	U	1.8	--	--	--	--	--	--	--	--	--	--	--	--	ND	U	2
		Iron	ND	UJ	85	--	--	--	--	--	--	--	--	--	ND	U	0.1	ND	UJ	100
		Lead	ND	U	0.7	--	--	--	--	--	--	--	--	--	--	--	--	ND	U	3
		Lithium	0.012	F	20	--	--	--	--	--	--	--	--	--	--	--	--	0.014	F	20
		Magnesium	9.3	--	40	--	--	--	--	--	--	--	--	--	10.8	--	0.05	12	--	500
		Manganese	--	--	--	--	--	--	--	--	--	--	--	--	ND	U	0.0025	--	--	--
		Manganese	ND	U	0.95	--	--	--	--	--	--	--	--	--	--	--	--	ND	U	3.5
		Nickel	ND	U	1	--	--	--	--	--	--	--	--	--	--	--	--	ND	U	3
		Potassium	2.3	F	940	--	--	--	--	--	--	--	--	--	2.2	--	0.375	2.6	F	3,000
		Selenium	0.0013	F	2	--	--	--	--	--	--	--	--	--	--	--	--	0.0022	F	5
		Silver	ND	U	0.1	--	--	--	--	--	--	--	--	--	--	--	--	ND	U	5
		Sodium	25	--	350	--	--	--	--	--	--	--	--	--	27.3	--	0.5	31	--	5,000
		Strontium	--	--	--	--	--	--	--	--	--	--	--	--	0.442	--	0.001	--	--	--
		Thallium	ND	U	0.2	--	--	--	--	--	--	--	--	--	--	--	--	ND	U	1
		Vanadium	0.0034	F	2	--	--	--	--	--	--	--	--	--	--	--	--	ND	U	6
		Zinc	ND	U	8	--	--	--	--	--	--	--	--	--	--	--	--	ND	U	20
Alkalinity	Method SM2320B (mg/L)	Alkalinity, Total (As Caco3)	140,000	--	5,000	--	--	--	--	--	--	--	--	--	--	--	--	140,000	--	5,000
Anions	Method SW9056A (µg/L)	Bromide	ND	U	200	170	F	200	150	F	200	170	F	200	--	--	--	ND	U	500
		Chloride	10,000	--	500	16,000	J	500	14,000	J	500	17,000	J	500	--	--	--	14,000	--	3,000
		Fluoride	250	F	100	340	F	100	330	F	100	ND	U	430	--	--	--	290	F	1,000
		Sulfate	57,000	--	500	88,000	--	500	86,000	--	500	95,000	--	500	--	--	--	76,000	--	5,000
	Method E350.1 (µg/L)	Nitrogen (Ammonia As N)	ND	U	50	ND	U	50	ND	U	50	ND	U	50	--	--	--	ND	U	100
	Method E351.2 (mg/l)	Total Kjeldahl Nitrogen	7,700	J	50	3,800	J	50	3,700	J	50	3,500	--	50	--	--	--	12,000	--	200
	Method E353.2 (µg/L)	Nitrogen As Nitrate + Nitrite	ND	U	1	--	--	--	--	--	--	--	--	--	--	--	--	0.67662	J	1
Carbon	Method SW9060A (µg/L)	Dissolved Organic Carbon	ND	U	630	--	--	--	--	--	--	--	--	--	--	--	--	ND	U	1,000
		Total Carbon	ND	U	610	--	--	--	--	--	--	--	--	--	--	--	--	ND	U	1,000
Other	Method A2540C (µg/L)	Total Dissolved Solids	300,000	--	10,000	370,000	--	10,000	370,000	--	10,000	370,000	J	10,000	--	--	--	370,000	J	10,000
	Method SM4500SIO2C (mg/L)	Silica	--	--	--	--	--	--	--	--	--	--	--	--	30.5	--	3	--	--	--
Field Parameters		DO (mg/L)	10.77	--	0	--	--	--	--	--	--	--	--	--	--	--	--	10	--	0
		ORP (mV)	252	--	0	--	--	--	--	--	--	--	--	--	--	--	--	257	--	0
		pH (S.U.)	7.17	--	0	--	--	--	--	--	--	--	--	--	--	--	--	6.56	--	0
		Spec Cond (µS/cm)	0.435	--	0	--	--	--	--	--	--	--	--	--	--	--	--	0.477	--	0
		Temperature (°C)	19.07	--	0	--	--	--	--	--	--	--	--	--	--	--	--	19.14	--	0
		Turbidity (ntu)	0	--	0	--	--	--	--	--	--	--	--	--	--	--	--	0	--	0

Table 2-5
Inorganic Groundwater Quality Data for Regional Aquifer Wells near Proposed Class V Underground Injection Well KAFB-106IN2*

* Data obtained from Solid Waste Management Unit ST-105 ERPIMS database.
µg/L = microgram per liter
µS/cm = microSiemens per centimeter
ºC = degree Celsius
BFF = Bulk Fuels Facility
EDB = ethylene dibromide (1,2-dibromoethane)
ID = identification
KAFB = Kirtland Air Force Base
LOD = limit of detection
mg/L= milligram per liter
mV = millivolt
ND = nondetect
ntu = nephelometric turbidity unit
ORP = oxidation reduction potential
REG = normal field sample
Spec Cond = specific conductivity
S.U. = standard unit
Val Qual = validation qualifier
VOC = volatile organic compound
Val Quals = validation qualifiers are based on independent data validation.
F = Qualifier denotes the results are less than the limit of quantitation.
J = Qualifier denotes the analyte was positively identified, but the associated numerical value is estimated.
U = Qualifier denotes the analyte was analyzed but not detected above the detection limit. The value associated with the U-qualifier is the LOD.

Table 2-6
Organic Groundwater Quality Data for Regional Aquifer Wells near Proposed Class V Underground Injection Control Well KAFB-106IN2*

		Well Location ID:	KAFB-0505			KAFB-0505			KAFB-0508-MW			KAFB-0508-MW		
		Field Sample ID:	GW0505-184			KAFB-0505			GW0508-184			GW0508-584		
		Sample Date:	11/5/2018			1/21/2019			11/5/2018			11/5/2018		
		Sample Type:	REG			REG			REG			Field Duplicate		
Parameter	**Analytical Method**	**Analyte**	**Result**	**Val Qual**	**LOD**	**Result**	**Val Qual**	**LOD**	**Result**	**Val Qual**	**LOD**	**Result**	**Val Qual**	**LOD**
EDB	Method SW8011 (µg/L)	1,2-Dibromoethane	ND	U	0.019	--	--	--	ND	U	0.019	ND	U	0.019
VOCs	Method SW8260B/C (µg/L)	1,1,1-Trichloroethane	--	--	--	ND	U	0.4	--	--	--	--	--	--
		1,1,2,2-Tetrachloroethane	--	--	--	ND	U	0.8	--	--	--	--	--	--
		1,1,2-Trichloroethane	--	--	--	ND	U	0.8	--	--	--	--	--	--
		1,1-Dichloroethane	--	--	--	ND	U	0.8	--	--	--	--	--	--
		1,1-Dichloroethene	--	--	--	ND	U	0.8	--	--	--	--	--	--
		1,2-Dichlorobenzene	--	--	--	ND	U	0.4	--	--	--	--	--	--
		1,2-Dichloroethane	--	--	--	ND	U	0.4	--	--	--	--	--	--
		1,2-Dichloropropane	--	--	--	ND	U	0.4	--	--	--	--	--	--
		1,3-Dichlorobenzene	--	--	--	ND	U	0.4	--	--	--	--	--	--
		1,4-Dichlorobenzene	--	--	--	ND	U	0.4	--	--	--	--	--	--
		2-Butanone	--	--	--	ND	U	4	--	--	--	--	--	--
		4-Methyl-2-Pentanone	--	--	--	ND	U	3.2	--	--	--	--	--	--
		Acetone	--	--	--	ND	U	6.4	--	--	--	--	--	--
		Benzene	ND	U	0.5	ND	U	0.4	ND	U	0.5	ND	U	0.5
		Bromodichloromethane	--	--	--	ND	U	0.4	--	--	--	--	--	--
		Bromoform	--	--	--	ND	U	0.4	--	--	--	--	--	--
		Bromomethane	--	--	--	ND	U	0.8	--	--	--	--	--	--
		Carbon Tetrachloride	--	--	--	ND	U	0.4	--	--	--	--	--	--
		Chlorobenzene	--	--	--	ND	U	0.4	--	--	--	--	--	--
		Chloroethane	--	--	--	ND	U	1.6	--	--	--	--	--	--
		Chloroform	--	--	--	ND	U	0.4	--	--	--	--	--	--
		Chloromethane	--	--	--	ND	U	0.8	--	--	--	--	--	--
		Cis-1,2-Dichloroethene	--	--	--	ND	U	0.4	--	--	--	--	--	--
		Cis-1,3-Dichloropropene	--	--	--	ND	U	0.4	--	--	--	--	--	--
		Dibromochloromethane	--	--	--	ND	U	0.4	--	--	--	--	--	--
		Ethylbenzene	ND	U	0.8	ND	U	0.4	ND	U	0.8	ND	U	0.8
		Methylene Chloride	--	--	--	ND	U	0.8	--	--	--	--	--	--
		Styrene	--	--	--	ND	U	0.4	--	--	--	--	--	--
		Tetrachloroethene	--	--	--	ND	U	0.4	--	--	--	--	--	--
		Toluene	ND	U	0.5	ND	U	0.4	ND	U	0.5	ND	U	0.5
		Trans-1,2-Dichloroethene	--	--	--	ND	U	0.4	--	--	--	--	--	--
		Trans-1,3-Dichloropropene	--	--	--	ND	U	0.4	--	--	--	--	--	--
		Trichloroethene	--	--	--	ND	U	0.4	--	--	--	--	--	--
		Vinyl Chloride	--	--	--	ND	U	0.2	--	--	--	--	--	--
		Xylenes, Total	ND	U	2	ND	U	0.8	--	--	--	--	--	--

Table 2-6
Organic Groundwater Quality Data for Regional Aquifer Wells near Proposed Class V Underground Injection Control Well KAFB-106IN2*

		Well Location ID:	KAFB-2628			KAFB-2628			KAFB-2629			ST105MW507R		
		Field Sample ID:	KAFB-2628			KAFB-2628-FD			KAFB-2629			GW0507R-184		
		Sample Date:	1/23/2019			1/23/2019			1/25/2019			11/5/2018		
		Sample Type:	REG			Field Duplicate			REG			REG		
Parameter	**Analytical Method**	**Analyte**	**Result**	**Val Qual**	**LOD**	**Result**	**Val Qual**	**LOD**	**Result**	**Val Qual**	**LOD**	**Result**	**Val Qual**	**LOD**
EDB	Method SW8011 (µg/L)	1,2-Dibromoethane	--	--	--	--	--	--	--	--	--	ND	U	0.019
VOCs	Method SW8260B/C (µg/L)	1,1,1-Trichloroethane	ND	U	0.4	ND	U	0.4	ND	U	0.4	--	--	--
		1,1,2,2-Tetrachloroethane	ND	U	0.8	ND	U	0.8	ND	U	0.8	--	--	--
		1,1,2-Trichloroethane	ND	U	0.8	ND	U	0.8	ND	U	0.8	--	--	--
		1,1-Dichloroethane	ND	U	0.8	ND	U	0.8	ND	U	0.8	--	--	--
		1,1-Dichloroethene	ND	U	0.8	ND	U	0.8	ND	U	0.8	--	--	--
		1,2-Dichlorobenzene	ND	U	0.4	ND	U	0.4	ND	U	0.4	--	--	--
		1,2-Dichloroethane	ND	U	0.4	ND	U	0.4	ND	U	0.4	--	--	--
		1,2-Dichloropropane	ND	U	0.4	ND	U	0.4	ND	U	0.4	--	--	--
		1,3-Dichlorobenzene	ND	U	0.4	ND	U	0.4	ND	U	0.4	--	--	--
		1,4-Dichlorobenzene	ND	U	0.4	ND	U	0.4	ND	U	0.4	--	--	--
		2-Butanone	ND	U	4	ND	U	4	ND	U	4	--	--	--
		4-Methyl-2-Pentanone	ND	U	3.2	ND	U	3.2	ND	U	3.2	--	--	--
		Acetone	ND	U	6.4	ND	U	6.4	ND	U	6.4	--	--	--
		Benzene	ND	U	0.4	ND	U	0.4	ND	U	0.4	ND	U	0.5
		Bromodichloromethane	ND	U	0.4	ND	U	0.4	ND	U	0.4	--	--	--
		Bromoform	ND	U	0.4	ND	U	0.4	ND	UJ	0.4	--	--	--
		Bromomethane	ND	U	0.8	ND	U	0.8	ND	U	0.8	--	--	--
		Carbon Tetrachloride	ND	U	0.4	ND	U	0.4	ND	U	0.4	--	--	--
		Chlorobenzene	ND	U	0.4	ND	U	0.4	ND	U	0.4	--	--	--
		Chloroethane	ND	U	1.6	ND	U	1.6	ND	U	1.6	--	--	--
		Chloroform	ND	U	0.4	ND	U	0.4	ND	U	0.4	--	--	--
		Chloromethane	ND	U	0.8	ND	U	0.8	ND	U	0.8	--	--	--
		Cis-1,2-Dichloroethene	ND	U	0.4	ND	U	0.4	ND	U	0.4	--	--	--
		Cis-1,3-Dichloropropene	ND	U	0.4	ND	U	0.4	ND	U	0.4	--	--	--
		Dibromochloromethane	ND	U	0.4	ND	U	0.4	ND	U	0.4	--	--	--
		Ethylbenzene	ND	U	0.4	ND	U	0.4	ND	U	0.4	ND	U	0.8
		Methylene Chloride	ND	U	0.8	ND	U	0.8	ND	U	0.8	--	--	--
		Styrene	ND	U	0.4	ND	U	0.4	ND	U	0.4	--	--	--
		Tetrachloroethene	ND	U	0.4	ND	U	0.4	ND	U	0.4	--	--	--
		Toluene	ND	U	0.4	ND	U	0.4	ND	U	0.4	ND	U	0.5
		Trans-1,2-Dichloroethene	ND	U	0.4	ND	U	0.4	ND	U	0.4	--	--	--
		Trans-1,3-Dichloropropene	ND	U	0.4	ND	U	0.4	ND	U	0.4	--	--	--
		Trichloroethene	ND	U	0.4	ND	U	0.4	ND	U	0.4	--	--	--
		Vinyl Chloride	ND	U	0.2	ND	U	0.2	ND	U	0.2	--	--	--
		Xylenes, Total	ND	U	0.8	ND	U	0.8	ND	U	0.8	ND	U	2

Table 2-6
Organic Groundwater Quality Data for Regional Aquifer Wells near Proposed Class V Underground Injection Control Well KAFB-106IN2*

'-- = Compound not analyzed for and/or validation qualifier not assigned.
*= Data obtained from SWMU ST-105 ERPIMS database
µg/L = microgram per liter
µS/cm = microSiemens per centimeter
ºC = degree Celsius
BFF = Bulk Fuels Facility
EDB = ethylene dibromide (1,2-dibromoethane)
ID = identification
KAFB = Kirtland Air Force Base
LOD = limit of detection
mg/L= milligram per liter
mV = millivolt
ND = nondetect
ntu = nephelometric turbidity unit
ORP = oxidation reduction potential
REG = normal field sample
Spec Cond = specific conductivity
S.U. = standard unit
Val Qual = validation qualifier
VOC = volatile organic compound
Val Quals = validation qualifiers are based on independent data validation.
F = Qualifier denotes the results are less than the limit of quantitation.
J = Qualifier denotes the analyte was positively identified, but the associated numerical value is estimated.
U = Qualifier denotes the analyte was analyzed but not detected above the detection limit. The value associated with the U-qualifier is the LOD.

Table 3-1
Field Data Collection Summary
for the Installation of Class V Underground Injection Control Well KAFB-106IN2

Activity	Data Type	Details	Responsible Party
Drilling	Rig and Mud Parameters	Equipment specifications, drilling rates and bit weight, mud and fluid volumes and properties, material types/inventory, material pipe tallies, construction details, pumping/discharge rates.	Driller
	Geologic Evaluation	Lithologic Log.	Site Geologist
	Geophysical Logs	Temperature, electrical resistivity, natural gamma, sonic, neutron, caliper and borehole deviation.	Geophysical Contractor
	Video Inspection	Closed-circuit color video inspection of the entire well. The camera equipment shall have a wide-angle (fish-eye) lens directed downward, and right-angle (side-scan) capability. Record camera depth, in feet below ground surface.	Downhole Video Contractor
Well Development	Fluid Management	Pumping rates and discharge volume/rate.	Driller
	Discharge Water Physical Parameters	Turbidity, temperature, pH, specific conductance, pump/sample depths.	Site Geologist
Post Well Development	Aquifer Water Quality*	Baseline water chemistry ion concentrations, pH, total dissolved solids, and alkalinity/buffering capacity, ethylene dibromide, volatile organics, nitrate/nitrite, Resource Conservation and Recovery Act metals, and dissolved iron and manganese.	Site Geologist
Waste Management	Characterization	Analytical sampling of drill cuttings and mud to meet disposal facility acceptance criteria. See Section 4.	Site Geologist

* Field and laboratory control will follow Operations and Maintenance Plan (U.S. Army Corps of Engineers, 2016) and Eurofins laboratory contract requirement

Table 3-2
Analytes and Laboratory Analytical Methods for Groundwater Quality Sample
Class V Underground Injection Control Well KAFB-106IN2

Analyte	Analytical Method
Baseline Ions	E300.0
pH	SW9040C
Total Dissolved Solids	SM2540C
Alkalinity/buffering capacity	SM2320B
Ethylene Dibromide	SW8011
Volatile Organics	SW8260C
Resource Conservation and Recovery Act Metals	SW6010
Nitrate/Nitrite	E353.2
Dissolved Iron and Manganese	SW6010C

Table 4-1
Summary of Investigation-Derived Waste Sampling

Analytical Method	Constituent	Frequency	Sample Location
Drilling Mud and Water Investigation-Derived Waste from Drilling and Well Testing Activities			
EPA Method SW6010C/7470A	RCRA Metals and Mercury	One per tank	Access Port
EPA Method SW8015/80158B[a]	BTEX	One per tank	Access Port
40 CFRPart 261[b]	Corrosivity/pH	One per tank	Access Port
Soil Investigation-Derived Waste from Installation of Injection Wells [c]			
40 CFRPart 261[b]	Ignitability	One per roll-off	5-point composite
40 CFRPart 261[b]	Corrosivity/pH	One per roll-off	5-point composite
40 CFRPart 261[b]	Reactivity	One per roll-off	5-point composite
EPA Method SW1311/8260C[b]	TCLP VOCs	One per roll-off	5-point composite
EPA Method SW131-1/8270D[a]	TCLP SVOCs	One per roll-off	5-point composite
EPA Method SW1311/SW6010C/7470A[a]	TCLP RCRA Metals	One per roll-off	5-point composite
EPA Method SW1311/8151A[a]	TCLP Herbicides	One per roll-off	5-point composite
EPA Method SW1311/8081B[a]	TCLP Pesticides	One per roll-off	5-point composite

a. Analytical method per EPA SW-846 Test Methods for Evaluating Solid Waste, Third Edition and Updates, 1986.

b. Analytical methods per Code of FederalRegulations Title 40, Chapter I, Subchapter I, Part 261, Identification and Listing of Hazardous Waste, Subpart C. Updated as of October 22, 2015.

c. Analytical suite required for disposal at the Kirtland Air Force Base Construction and Demolition Landfill only.

BTEX = benzene, toluene, ethylene, and total xylenes

CFR = Code of Federal Regulations

EDB = ethylene dibromide (aka 1,2-dibromoethane)

EPA = U.S.Environmental Protection Agency

RCRA = Resource Conservation and Recovery Act

SVOC = semivolatlle organic compound

SW = EPA SW-846-Test Methods for Evaluating Solid Waste, 3rd Edition, 1986 and Updates

TCLP = Toxicity Characteristic Leaching Procedure

VOC = volatile organic compound

APPENDIX A

PROJECT PERMITS

DISCHARGE PERMIT DP-1839

NEW MEXICO
ENVIRONMENT DEPARTMENT

Ground Water Quality Bureau
1190 South St. Francis Drive (87505)
P.O. Box 5469, Santa Fe, New Mexico 87502-5469
Phone (505) 827-2900 Fax (505) 827-2965
www.env.nm.gov

SUSANA MARTINEZ
Governor

JOHN A. SANCHEZ
Lieutenant Governor

BUTCH TONGATE
Cabinet Secretary

J.C. BORREGO
Deputy Secretary

CERTIFIED MAIL – RETURN RECEIPT REQUESTED

April 28, 2017

Colonel Eric H. Froelich, Commander
337 ABW/CC
2000 Wyoming Blvd SE
Kirtland AFB, NM 87117-5606

RE: Discharge Permit Issuance, DP-1839, Kirtland Air Force Base

Dear Col. Froelich:

The New Mexico Environment Department (NMED) issues the enclosed Discharge Permit, DP-1839, to Kirtland Air Force Base (Permittee) pursuant to the New Mexico Water Quality Act (WQA), NMSA 1978 §§74-6-1 through 74-6-17, and the New Mexico Ground and Surface Water Protection Regulations, 20.6.2 NMAC, under the authority of the New Mexico Water Quality Control Commission (WQCC).

The Discharge Permit contains terms and conditions that shall be complied with by the Permittee and are enforceable by NMED pursuant to Section 20.6.2.3104 NMAC, WQA, NMSA 1978 §74-6-5 and §74-6-10. Please be aware that this Discharge Permit may contain conditions that require the Permittee to implement operational, monitoring or closure actions by a specified deadline. Such conditions are listed at the beginning of the operational, monitoring and closure plans of this Discharge Permit.

Issuance of this Discharge Permit does not relieve the Permittee of the responsibility to comply with the WQA, WQCC Regulations, and any other applicable federal, state, and/or local laws, regulations, zoning requirements, and nuisance ordinances.

Pursuant to Paragraph (4) of 20.6.2.3109.H NMAC, the term of the Discharge Permit shall be five years from the effective date. The term of this Discharge Permit will end on April 28, 2022.

NMED requests that the Permittee submit an application for renewal (or renewal and modification) at least 180 days prior to the date the Discharge Permit term ends.

An invoice for the Discharge Permit Fee of $1,600.00 is being sent under separate cover. Payment of the Discharge Permit Fee must be received by NMED within 30 days of the date the Discharge Permit is issued.

If you have any questions, please contact Steve Pullen at (505) 827-2962. Thank you for your cooperation during this Discharge Permit review.

Sincerely,

Michelle Hunter, Chief
Ground Water Quality Bureau

MH:sdp

Encs: Discharge Permit, DP-1839

cc (electronic w/enclosure):
J. Kieling, NMED-HWB
D. Agnew, NMED-GWQB
S. Pullen, NMED-GWQB
L. King, EPA-Region 6 (6PD-N)
S. Clark, AFCEC-CZOW
K. Lynnes, KAFB
A. Bodour, KAFB-AFCEC
T. Simpler, USACE

file:
Read File
DP1839 File

GROUND WATER DISCHARGE PERMIT
Kirtland Air Force Base
Underground Injection Control Wells
DP-1839

I. INTRODUCTION

The New Mexico Environment Department (NMED) Ground Water Quality Bureau (GWQB) issues this Discharge Permit (DP-1839) for discharges via Class V underground injection control (UIC) well(s) to Kirtland Air Force Base (KAFB or Permittee) pursuant to the New Mexico Water Quality Act (WQA), New Mexico Statutes Annotated (NMSA) 1978 §§74-6-1 through 74-6-17, and the New Mexico Water Quality Control Commission (WQCC) Regulations, 20.6.2 New Mexico Administrative Code (NMAC).

The discharge that is covered by this Discharge Permit is limited to groundwater associated with the KAFB's Bulk Fuel Facility (BFF) corrective action. The groundwater is specifically the dissolved-phase portion of the contaminant plume within the regional aquifer that is elevated above the standards of 20.6.2.3103 NMAC and investigation derived waste (IDW) that meets the design parameters of the treatment system. This groundwater is being treated as an interim measure implemented pursuant to the corrective action provisions in Part 6 of KAFB's Hazardous Waste Treatment Facility Operating Permit (HWTF Permit No. NM9570024423 – "RCRA Permit").

The NMED GWQB's purpose in issuing this Discharge Permit, and in imposing the requirements and conditions specified herein, is to control the discharge of water contaminants so as to protect groundwater for present and potential future use as domestic and agricultural water supply and other uses and to protect public health. In issuing this Discharge Permit, NMED has determined that the requirements of Subsection C of 20.6.2.3109 NMAC have been or will be met. Pursuant with Section 20.6.2.3104 NMAC, it is the responsibility of the Permittee to comply with the terms and conditions of this Discharge Permit; failure to do so may result in an enforcement action(s) by NMED (20.6.2.1220 NMAC).

The NMED's Hazardous Waste Bureau (HWB) and GWQB both provide regulatory oversight at the BFF project site. The HWB regulates the evaluation and remediation of the KAFB BFF dissolved-phase plume and the associated groundwater treatment system (GWTS). The GWQB regulates the procedures that ensure treated groundwater discharged from the GWTS to UIC well(s) meet Discharge Permit requirements. This Discharge Permit is not intended to conflict or supersede the remedial actions selected for the BFF under the Resource Conservation and Recovery Act (RCRA), any implementing agreements, or the corrective action provisions of the RCRA Permit.

In the event that an associated comprehensive Work Plan or report is submitted to the NMED, NMED's HWB and GWQB will coordinate review of the comprehensive documents to ensure there is no conflict with any agency response. Associated documents will be submitted to the apparent lead bureau, copied to the other bureau, and NMED will determine which bureau will respond.

The activities which produce the discharge, the location of the discharge, and the quantity, quality, and flow characteristics of the discharge are described as follows.

The constituents of concern (CoC) within the dissolved-phase portion of the contaminant plume have been extensively investigated at the KAFB BFF under the RCRA Permit and have been narrowed to seven CoCs based on groundwater monitoring of the dissolved-phase portion of the contaminant plume within the regional aquifer. These seven CoCs have been identified as being present in untreated groundwater at concentrations potentially exceeding their respective regulatory action levels, and include ethylene dibromide (EDB), benzene, toluene, ethylbenzene, total xylenes, dissolved iron, and dissolved manganese. The CoCs and their respective effluent standards are listed in Table 2. The term "effluent standard" is used in this Discharge Permit to refer to the New Mexico Water Quality Control Commission (WQCC) groundwater standard or the federal Environmental Protection Agency (EPA) maximum contaminant level (MCL); whichever is more stringent.

Under the RCRA interim measure, contaminated groundwater is pumped from extraction wells and distributed through a piping system to a GWTS. Contaminated groundwater may also originate from groundwater monitoring or newly installed extraction wells within the dissolved-phase portion of the contaminant plume undergoing development, testing, or sampling. This liquid IDW will be transported by truck to the GWTS and added to the influent stream for treatment. This work is being completed in accordance with Work Plans approved by the NMED HWB.

The GWTS consists of a series of lead-lag granulated activated carbon (GAC) treatment vessels designed to adsorb the groundwater organic CoCs, thus reducing contaminant concentrations to at or below the effluent standards cited in Permit Condition #6 and identified in Permit Table #2. Adherence to the numeric standards will be assured by sampling the associated fluids at numerous stages of plume delineation, extraction, and treatment. Sampling associated with treatment is conducted at the influent to the GWTS, between the lead-lag GAC tanks, and at the effluent port prior to discharge to the UIC well(s). Samples collected between the lead-lag GAC tanks will notify operators when breakthrough is beginning to occur and replacement of the lead GAC tank is needed. The treatment capacity of the GWTS will be doubled in 2017 by adding a second treatment train to support the increased volume (not to exceed the permitted volume) that will be produced as additional extraction wells are installed and begin operation. Additional design changes are also planned to add additional pre-treatment and to optimize operations. This expansion/optimization of the treatment system will include two additional lead-lag GAC tanks, sand filters, and/or equipment and piping upgrades to the GWTS.

Treated effluent will be conveyed to UIC wells as defined by 20.6.2.5002.B(5)(d)(i) NMAC, including the well identified as KAFB-7 and up to four additional wells, for injection into the regional aquifer within the KAFB facility boundary. This Discharge Permit authorizes the discharge of a maximum of 1,440,000 gallons per day (gpd) via the NMED approved UIC well(s). Treated effluent is pumped from the GWTS through single-walled piping and distributed to the UIC well(s). Appendix A includes the specifics of a typical UIC well design. Final design plans will be submitted for NMED approval prior to mobilization for drilling and installation of new UIC well(s). Total discharge volume will be metered at the GWTS effluent port and at the UIC

well(s). The combined treated effluent rate of discharge employed by the Permittee will not exceed 1,000 gallons per minute (gpm), which is the maximum design treatment rate of the GWTS.

Monitoring of the extraction, treatment, and injection systems will be performed to ensure proper system operation using an automated monitoring system with a centrally located programmable logic controller (PLC) or an equivalent system. The PLC allows the operator to evaluate and control operations to maintain GWTS efficiency and effectiveness in treating the CoCs, and ensure proper discharge to the UIC well(s). Incoming data includes flowrates, pressures (*i.e.*, hydraulic head), liquid levels, groundwater levels, pump status, and alarms from the system sites. The treated effluent pumped to the UIC well(s) will be controlled via monitoring devices (*i.e.*, water level transducers and pressure head gauges) to prevent overfilling of the UIC well(s), to keep the down-hole discharge injection pipe(s) filled, and to prevent cascading of the effluent water into the UIC well(s). Effluent water will enter the UIC well casing and gravity flow through the well screen into the formation. The PLC will be programmed to alarm the operator in the event that the water level within the UIC well casing reaches the high-level set point.

The discharge, including all activities associated with the extraction and treatment of contaminated groundwater, and all associated procedures to maintain regulatory compliance with the RCRA Permit, are described in the Permittee's *Operation and Maintenance Plan* (O&M Plan). The O&M Plan is a HWB approved document that provides the procedures for management of the contaminated groundwater extraction and conveyance systems, the GWTS, and the sampling and quality assurance requirements. The O&M Plan also complies with the requirements in this Discharge Permit.

A Contingency Plan, which describes the actions that the Permittee will take in the event of a failure of the system that generates and discharges the treated effluent to a UIC well(s), is attached to this Discharge Permit at Appendix C.

KAFB is located southeast of Albuquerque in Bernalillo County. The discharge authorized by this Discharge Permit is located within the Designated UIC Area in Section 01 of T9N R3E, Sections 05, 06, 07, 08, and 09 of T9N R4E, and Section 31 of T10N R4E in the southern portion of the facility proximal to the groundwater monitoring wells associated with the existing nitrate plume (SWMU ST-105). Permit Appendix B identifies the Designated UIC Area and the current footprint of the 10 milligrams per liter (mg/L) nitrate plume within the regional aquifer. Additional UIC wells and associated infrastructure installed within the Designated UIC Area are subject to the conditions of this Discharge Permit and would not require a permit modification in accordance with 20.6.2.7(P) NMAC.

The nitrate plume is being remediated under the *Site ST-105 Stage 2 Abatement Plan for Nitrate Contaminated Water* (Abatement Plan) dated October 2007, which was approved by the GWQB Remediation Oversight Section in correspondence dated September 26, 2008. The most current version of the approved Abatement Plan may be viewed at the GWQB's web site at https://www.env.nm.gov/gwb/RemediationOversight.htm.

The regional groundwater beneath the SWMU ST-105 where KAFB-7 and the proposed UIC well(s) are located ranges from a depth of 202 to 709 feet (ft) below ground surface (bgs) with an average of 434 ft bgs and has a total dissolved solids (TDS) concentration ranging from 160 to 1200 mg/L with an average of 345 mg/L.

The application consists of the *Discharge Permit Application* (Application) submitted by the Permittee on December 4, 2015, a revised Application submitted by the Permittee on September 28, 2016, and additional information submitted as requested by NMED. The discharge shall be managed in accordance with all conditions and requirements of this Discharge Permit.

Pursuant to Section 20.6.2.3109 NMAC, NMED reserves the right to require a discharge permit modification in the event NMED determines that the requirements of 20.6.2 NMAC are being or may be violated or the standards of Section 20.6.2.3103 NMAC are being or may be violated. This may include a determination that structural controls and/or management practices approved under this Discharge Permit are not protective of groundwater quality and that more stringent requirements to protect groundwater quality may be required by NMED. Though conformance with this Discharge Permit and the RCRA Permit would result in a very low probability of there being a discharge causing groundwater contamination above applicable standards, NMED reserves the right to require remediation of such a discharge.

Issuance of this Discharge Permit does not relieve the Permittee of the responsibility to comply with the WQA, WQCC Regulations, and any other applicable federal, state, and/or local laws, regulations, zoning requirements, and nuisance ordinances.

The following acronyms and abbreviations may be used in this Discharge Permit:

Abbreviation	Explanation	Abbreviation	Explanation
bgs	below ground surface	MCL	maximum contaminant level
BFF	Bulk Fuels Facility	mg/L	milligrams per liter
CFR	Code of Federal Regulations	mL	milliliters
CoCs	constituents of concern	NMAC	New Mexico Administrative Code
DP	Discharge Permit	NMED	New Mexico Environment Department
EDB	ethylene dibromide	NMSA	New Mexico Statutes Annotated
EPA	United States Environmental Protection Agency	NO_3-N	nitrate-nitrogen
GAC	granulated activated carbon	O&M Plan	Operation and Maintenance Plan
gpd	gallons per day	PLC	programmable logic controller
gpm	gallons per minute	RCRA	Resource Conservation and Recovery Act
GWTS	groundwater treatment system	SWMU	solid waste management unit
GWQB	Ground Water Quality Bureau	TDS	total dissolved solids
ft	feet	total nitrogen	= TKN + NO_3-N
HWB	Hazardous Waste Bureau	UIC	underground injection control
HWTF	Hazardous Waste Treatment Facility	VOC	volatile organic carbon
IDW	investigation derived waste	WQA	New Mexico Water Quality Act
KAFB	Kirtland Air Force Base	WQCC	Water Quality Control Commission

II. FINDINGS

In issuing this Discharge Permit, NMED finds the following:

1. The Permittee is discharging effluent treated to at or below regulatory standards from the facility so that such effluent may move directly or indirectly into groundwater within the meaning of Section 20.6.2.3104 NMAC.

2. The Permittee is discharging effluent from the facility so that such effluent may move into groundwater of the State of New Mexico which has an existing concentration of 10,000 mg/L or less of TDS within the meaning of 20.6.2.3101(A) NMAC.

3. The discharge from the facility is not subject to any of the exemptions of Section 20.6.2.3105 NMAC.

4. The Permittee is operating UIC recharge well(s) within the meaning of 20.6.2.5002(A)(1) and 20.6.2.5002(B)(5)(d)(i) NMAC which is subject to the prohibitions listed under 20.6.2.5004(A)(4) NMAC.

III. AUTHORIZATION TO DISCHARGE

Pursuant to 20.6.2.3104 NMAC, it is the responsibility of the Permittee to ensure that discharges authorized by this Discharge Permit are consistent with the terms and conditions herein.

The Permittee is authorized to discharge up to 1,440,000 gpd of treated effluent via a maximum of five UIC wells to the groundwater aquifer within the Designated UIC Area in Section 01 of T9N R3E (KAFB-7), Sections 05, 06, 07, 08, and 09 of T9N R4E, and Section 31 of T10N R4E, Bernalillo County, NM. The Designated UIC Area is identified in Appendix B. UIC wells currently authorized by this Discharge Permit are identified in Table 1. Up to four additional UIC wells may be proposed pursuant to Permit Condition #11 of this Discharge Permit.

[20.6.2.3104 NMAC, 20.6.2.3106(C) NMAC, 20.6.2.3109(C) NMAC]

IV. CONDITIONS

The following conditions shall be complied with by the Permittee and are enforceable by NMED. Any reference in this Discharge Permit to communication with NMED shall be inferred to mean communication with the Bureau Chiefs of the GWQB and the HWB. The Permittee is authorized to discharge treated effluent subject to the following conditions.

A. OPERATIONAL PLAN

#	**Terms and Conditions**
1.	The Permittee shall implement the following operational plan to ensure compliance with Title 20, Chapter 6, Parts 2 and 4 NMAC. [20.6.2.3109.C NMAC]
2.	The Permittee shall operate in a manner such that standards and requirements of Sections 20.6.2.3101 and 20.6.2.3103 NMAC are not violated. [20.6.2.3101 NMAC, 20.6.2.3103 NMAC, 20.6.2.3109(C) NMAC]
3.	The Permittee shall ensure that the most recent versions of all Work Plans associated with the GWTS, the effluent conveyance pipeline, and the UIC well(s) are consistent with the requirements of this Discharge Permit. [20.6.2.3101 NMAC, 20.6.2.3103 NMAC, 20.6.2.3109(C) NMAC]
4.	The Permittee shall ensure all discharges associated with this Discharge Permit are located within the Designated UIC Area within Section 01 of T9N R3E, Sections 05, 06, 07, 08, and 09 of T9N R4E, and Section 31 of T10N R4E (See Appendix B). [20.6.2.3101 NMAC, 20.6.2.3103 NMAC, 20.6.2.3109(C) NMAC]
5.	The Permittee shall ensure that proposed UIC well locations (see Appendix B) and associated discharges are consistent with the most recent approved Stage 2 Abatement Plan for SWMU ST-105. [20.6.2.3101 NMAC, 20.6.2.3103 NMAC, 20.6.2.3109(C) NMAC]
6.	The Permittee shall ensure that discharged groundwater effluent is less than or equal to the effluent standards for all constituents referenced in 20.6.2.3103 NMAC. The term "effluent standard" is used in this Discharge Permit to refer to the New Mexico Water Quality Control Commission (WQCC) groundwater standard or the federal Environmental Protection Agency (EPA) maximum contaminant level (MCL); whichever is more stringent.

#	**Terms and Conditions**
	[20.6.2.3109(C) NMAC, 20.7.10.100 NMAC]
7.	The Permittee shall ensure that GWTS influent chemistry is consistent with the design basis of the GWTS. [20.6.2.3109(C) NMAC, 20.7.10.100 NMAC]
8.	The Permittee is authorized to install and operate not more than five UIC wells. Authorized UIC wells are listed in Table 1. [20.6.2.3109(C) NMAC, 20.7.10.100 NMAC]
9.	The Permittee shall ensure that the total discharge from the facility via UIC wells does not exceed 1,440,000 gpd. [20.6.2.3109(C) NMAC, 20.7.10.100 NMAC]
10.	Prior to the installation of a new UIC well, the Permittee shall submit a Work Plan for NMED approval that satisfies the requirements of this Discharge Permit and the corrective action provisions at Part 6 of the RCRA Permit. This Work Plan shall, at a minimum, include the following information unless the Permittee can demonstrate to NMED that an item is not applicable or appropriate under the proposed activity or if an item has been provided separately under another submission: a. A statement of purpose and need for the additional UIC well(s); b. A list of groundwater monitoring wells which may be added to the monitoring program to effectively monitor performance of the new UIC well(s); c. A map showing the location of the proposed UIC well(s) and the location of all associated monitoring well(s); d. The geographic coordinates of the location of the UIC well(s) including township/range and section; e. A map showing the location of the nearest production well; f. A proposal of how the structural integrity of the treated effluent conveyance system between the GWTS and the new well will be demonstrated; g. Existing data showing the depth to water and general groundwater quality at the proposed new UIC well discharge location; h. A detailed description of groundwater flow modeling (numeric or analytical) predicting the effect of injection on the groundwater flow direction at the discharge location; i. A detailed description of geochemical modeling (numeric or analytical) evaluating the interaction between the treated effluent and receiving groundwater. Prior to any such geochemical modeling the treated effluent and receiving groundwater shall be

#	**Terms and Conditions**
	tested for the analytes listed in Table 5 unless the Permittee can demonstrate that testing for a particular analyte is unnecessary; j. A detailed description of the impact that the proposed injection will have on any known groundwater contaminant plumes, e.g., the nitrate plume(s) addressed in the Site ST-105 Stage 2 Abatement Plan for Nitrate Contaminated Water; k. Maximum estimated monthly discharge volume to the UIC well(s); l. Project schedule, including the date the discharge is to commence and the anticipated duration; and m. Necessary changes to this Discharge Permit's language should the proposal be approved, *e.g.*, the listing of authorized injection wells and associated monitoring wells in Table 1. These Work Plans shall be submitted for NMED approval at least 90 days prior to the scheduled installation of any UIC well. Proposed changes to this Discharge Permit constituting a "permit modification" as defined at 20.6.2.7.P NMAC shall not be submitted as a Work Plan, but shall instead be submitted as a discharge permit modification request as specified at 20.6.2.3109.G NMAC. A proposal to locate a discharge at a location outside the areas specified in Permit Condition #4 shall be considered a permit modification. A proposal to locate a UIC well at a location within the Designated UIC Area shall not be considered a permit modification unless the discharge quality or quantity is modified from that permitted herein. The Permittee shall post the approved Work Plan to the appropriate web site, *i.e.*, KAFB/Environment/Kirtland AFB Fuel Plume Project Documents. [20.6.2.7(P) NMAC, 20.6.2.3107(A) NMAC, 20.6.2.3109(G) NMAC, 20.6.2.5003 NMAC]
11.	Prior to discharging to a newly installed UIC well, the Permittee shall submit written notification to NMED stating the date that the discharge is to commence. [20.6.2.3107(A) NMAC]
12.	The Permittee shall ensure that the GWTS is secured to control access by the general public. [20.6.2.3109(B) and(C) NMAC, NMSA 1978, §74-6-5(D)]
13.	The Permittee shall maintain signs in English and Spanish (unless otherwise prohibited by KAFB policy) at appropriate locations indicating that the GWTS effluent is non-potable. Signs shall be posted at the UIC wellheads, at the GWTS, and any associated UIC well-related infrastructure.

#	**Terms and Conditions**
	[20.6.2.3109(B) and(C) NMAC, NMSA 1978, § 74-6-5(D)]
14.	The Permittee shall ensure that the UIC well(s) include monitoring devices, *i.e.,* water level and pressure head transducers, to prevent overfilling of the well. The Permittee shall measure the volume of treated effluent discharged to each UIC well and maintain a record of these volumes. [20.6.2.3107 and 20.6.2.3109(C)(3)(c)(i) NMAC]
15.	The Permittee shall ensure the treated effluent conveyance system, *i.e.*, piping, between the GWTS and the UIC well(s) does not leak and shall report any such leakage to the NMED GWQB in accordance with 20.6.2.1203(A) NMAC and copy the NMED HWB. Within one year of the effective date of this Discharge Permit, the Permittee shall demonstrate the structural integrity of the treated effluent conveyance system between the GWTS and KAFB-7. Prior to testing, the Permittee shall propose for NMED approval the test method to be used. The results of the mechanical integrity testing shall be submitted to NMED within 60 days of test completion. The Permittee shall integrity test the treated effluent conveyance system between GWTS and the UIC well(s) prior to submitting a permit renewal application. [20.6.2.3106(C) NMAC, 20.6.2.3107(A) NMAC]
16.	Prior to an initial discharge from the GWTS of treated effluent associated with a new extraction well, the Permittee shall submit documentation to NMED demonstrating that the treated effluent is at or below the effluent standards specified for the CoCs listed in Table 2. [20.6.2.1202(A) and (C) NMAC, 20.6.2.3109(C) NMAC, NMSA 1978, §§ 61-23-1 through 61-23-32]

B. MONITORING, REPORTING, AND OTHER REQUIREMENTS

#	**Terms and Conditions**
17.	The Permittee shall conduct the monitoring, operations, and reporting listed below. Unless otherwise specified, all periodic monitoring results or general information obtained shall be reported in the forthcoming quarterly report. [20.6.2.3107 NMAC]

#	**Terms and Conditions**
18.	Unless otherwise approved by NMED, the Permittee shall conduct sampling in accordance with standard industry practice. Sampling in accordance with the most current version of the GWTS Sampling and Analysis Plan (Appendix L of the O&M Plan), which includes sampling locations, procedures, field measurements, quality control samples, handling and custody, analytical methods, quality control, analytical validation, and reporting requirements, satisfies this Condition. [20.6.2.3107(B) NMAC]
19.	The Permittee shall submit quarterly and annual reports to NMED pursuant to the most recent NMED HWB approved Work Plans. The Permittee shall identify the portions of these reports pertaining to this Discharge Permit with a table in the reports that identifies those portions. Quarterly reports shall be submitted as specified below unless otherwise authorized by NMED: • January 1st through March 31st – due by June 30th • April 1st through June 30th – due by September 30th • July 1st through September 30th – due by December 31st • October 1st through December 31st – due by March 31st Annual reporting requirements for the previous year, i.e., January 1st through December 31st, shall be reported in the March 31st quarterly report. [20.6.2.3107(A) NMAC]
20.	The Permittee shall monitor the concentration of all CoCs listed on Table 2 in GWTS treated effluent. Associated sampling and analysis shall be performed monthly at a minimum. When groundwater from a new extraction well is first introduced to the GWTS, CoC monitoring of the GWTS treated effluent shall occur daily for the first week of treatment, weekly for the first month of treatment, and monthly thereafter. If alterations to, or conditions at, the GWTS result in a potential impact to effluent quality, the Permittee will repeat this sampling sequence as directed by NMED. A representative sample of GWTS influent and effluent shall be analyzed annually for the constituents identified in Table 3. A representative sample of GWTS influent and effluent shall be analyzed every five years for the constituents identified in Table 4. The first analysis of the five-year constituent list shall occur in July 2017. Any newly identified constituents detected during the five-years sampling events will be added to the annual sampling constituent list in Table 3.

#	**Terms and Conditions**
	All analysis of GWTS influent and effluent shall utilize analytical methods with detection limits that are sufficiently low to allow comparison to the standards included in the above referenced state and federal regulations. All sampling, analysis, and reporting shall comply with the most recent approved Work Plans. [20.6.2.3107(A) NMAC and 20.6.2.3107(B) NMAC]
21.	The Permittee shall report the volume of treated GWTS effluent discharged to each UIC well each quarter. This report shall include the following: a. Monthly average, maximum, and minimum values for flow rate and volume of treated effluent transferred to each UIC well; b. The totalized monthly volume of treated effluent transferred to all UIC wells; and c. Monthly average, maximum, and minimum head values of injection water for each UIC well. The Permittee shall monitor the GWTS effluent volume utilizing an effluent flow meter installed on the effluent pump skid after the GAC units. Each UIC well shall have a dedicated flow meter. Flow meters shall be inspected and calibrated in accordance with the associated manufacturer's recommendations. [20.6.2.3107 NMAC]
22.	The Permittee shall include the following results and general information in quarterly reports to NMED: a. Any mechanical integrity conducted on either the GWTS or a UIC well; b. Any replacement of GAC media and the associated data that initiated the decision to replace the media; c. Any UIC well rehabilitation conducted; d. Any malfunction, repair, or replacement of a flow meter; and e. Any additional operational changes with the potential to affect the discharge. [20.6.2.3107 NMAC]
23.	The Permittee shall monitor the groundwater wells in the vicinity of KAFB-7 and in the vicinity of any newly installed UIC well(s) to determine any change to aquifer chemistry that may be the result of injection. This monitoring shall be performed annually, shall conform to the procedures of the most current approved Work Plan, and shall measure the CoCs listed in Table 2. This chemistry will be reported in the Annual Report for BFF. ST-105 Annual Report includes elevation contour mapping and analytical parameters identified in the Stage 2 Abatement Plan.

#	Terms and Conditions
	The Permittee shall develop a groundwater elevation contour map depicting the groundwater flow direction in the vicinity of each UIC well and report it in the ST-105 Annual Report. If the chemical quality of the treated groundwater being injected changes over time, NMED may require the Permittee to repeat geochemical modeling (numeric or analytical) to predict the interaction between the treated effluent and receiving groundwater. [20.6.2.3107 NMAC]
24.	The Permittee shall post all reports required by this Discharge Permit on KAFB's most current web site (e.g., https://kirtlandafb.tlisolutions.com/main.aspx.) [20.6.2.3107(A) NMAC]

C. CONTINGENCY PLAN

#	Terms and Conditions
25.	If the automated monitoring system records a system alarm indicating a threat condition to a UIC well, and that threat condition is confirmed, at a minimum the affected UIC well will be taken off-line. If the alarm condition is confirmed during the response investigation, the UIC well(s) will be taken off-line and the discharge to the UIC well(s) will not be resumed until the problem is identified and corrected. [20.6.2.3107(A) NMAC]
26.	In accordance with this Discharge Permit, if the discharge to a UIC well exceeds effluent standards, the Permittee shall enact the Contingency Plan (Appendix C). The Permittee may be required to remediate water pollution in accordance with the corrective action provisions in Part 6 of the RCRA Permit except as provided in 20.6.2.4105(B) NMAC. [20.6.2.3107(A) NMAC, 20.6.2.3109(E) NMAC, 20.6.2.4105(A)(2) and (3) NMAC]
27.	In the event that a release or a spill occurs that is not authorized under this Discharge Permit, the Permittee shall notify the NMED GWQB in accordance with 20.6.2.1203(A) NMAC, shall include any additional reporting requirements specified at RCRA Permit Section 1.27, and shall copy the NMED HWB. The Permittee shall also take measures to mitigate damage from the unauthorized discharge and initiate corrective actions specified in the Contingency Plan (Appendix C). The Permittee may be required to remediate water pollution in accordance with the corrective action provisions in Part 6 of the RCRA Permit except as provided in 20.6.2.4105(B) NMAC.

#	**Terms and Conditions**
	Nothing in this condition shall be construed as relieving the Permittee of the obligation to comply with all requirements of Section 20.6.2.1203 NMAC. [20.6.2.1203 NMAC, 20.6.2.4105(A)(2) and (3) NMAC]
28.	In the event that information indicates that a UIC well referenced at Table 1 is not constructed in a manner consistent with its intended use or is not completed in a manner that is protective of groundwater quality, the Permittee shall submit a Work Plan to the NMED with a proposal for well rehabilitation, abandonment only, or abandonment and replacement. This Work Plan shall include a project schedule and shall be submitted for NMED approval within 120 days following confirmation of the above referenced problems. The Permittee may propose an alternate use for the well. The UIC well requiring replacement shall be properly plugged and abandoned in accordance with Part 6.5.17.10.9 of the RCRA permit. [20.6.2.3107(A) NMAC, 20.6.2.5005 NMAC]
29.	In the event that NMED or the Permittee identifies any failures of the Application or this Discharge Permit not specifically noted herein, NMED may require the Permittee to submit a corrective action plan and a schedule for completion of corrective actions to address the failures. Additionally, NMED may require a modification to this Discharge Permit to achieve compliance with 20.6.2 NMAC. [20.6.2.3107(A) NMAC, 20.6.2.3109(E) NMAC]

D. CLOSURE PLAN

#	**Terms and Conditions**
30.	Upon permanent cessation of discharge to a UIC well(s), the Permittee shall perform the following closure measures upon NMED approval, unless UIC well(s) and/or conveyance pipelines are needed for another use: a) Cap, plug, or remove all conveyance pipelines to prevent the discharge of GWTS treated effluent to all UIC well(s); b) Abandon UIC well(s) in accordance with Part 6.5.17.10.9 of the RCRA permit, which reference OSE regulation 19.27.4.30 and 31 NMAC and associated well abandonment guidance; and c) Appropriately dispose of any wastes associated with UIC well plugging and abandonment. The Permittee may, instead of abandoning a UIC well, propose an alternate use for the well.

	Upon cessation of the closure measures, the Permittee shall perform the following post-closure measures: a) Continue monitoring CoCs in groundwater for at least two years, or as appropriate and in concurrence with NMED; and b) Enact the release notification requirements of the Contingency Plan if groundwater standards are exceeded. The Permittee may be required to remediate water pollution in accordance with the corrective action provisions in Part 6 of the RCRA Permit except as provided in 20.6.2.4105(B) NMAC. When all post-closure requirements have been met, the Permittee may request to terminate the Discharge Permit. [20.6.2.3107 (A)11 NMAC]

E. GENERAL TERMS AND CONDITIONS

#	Terms and Conditions
31.	The Permittee shall maintain a written record of the following information: a) Information and data used to complete the Application for this Discharge Permit; b) Records of any releases or spills not authorized under this Discharge Permit and reports submitted pursuant to 20.6.2.1203 NMAC; c) Records of the operation, maintenance, and repair of all facilities/equipment used to treat, store, or inject the treated groundwater; d) Facility record drawings (plans and specifications) showing the actual construction of the facility and that the construction complies with all applicable statutes, regulations, and codes including applicable Department of Defense Engineering Standards; e) Copies of quarterly reports completed and/or submitted to NMED pursuant to this Discharge Permit; f) The volume of treated water discharged pursuant to this Discharge Permit; g) Groundwater quality and injected water quality data collected pursuant to this Discharge Permit; h) Copies of construction records and well logs for all groundwater monitoring wells required to be sampled pursuant to this Discharge Permit; i) Records of the maintenance, repair, replacement, or calibration of any monitoring equipment or flow measurement devices required by this Discharge Permit; and j) Data and information related to field measurements, sampling, and analysis conducted pursuant to this Discharge Permit. The following information shall be recorded and made available to NMED upon request: i) The dates, location, and times of sampling or field measurements; ii) The sample analysis date of each sample; iii) The name and address of the laboratory, and the name of the signatory authority for the laboratory analysis;

#	**Terms and Conditions**
	iv) The analytical technique or method used to analyze each sample or collect each field measurement; v) The results of each analysis or field measurement; vi) The results of any split, spiked, duplicate or repeat sample; and vii) A copy of the laboratory analysis chain-of-custody as well as a description of the quality assurance and quality control procedures used. The written record shall be maintained by the Permittee so that it is accessible within a reasonable time period during or following a facility inspection by NMED through the post-closure period and shall be made available to NMED upon request. [20.6.2.3107(A) and (C) NMAC]
32.	The Permittee shall allow NMED representatives to inspect the facility and its operations which are subject to this Discharge Permit and the WQCC regulations. NMED representatives may, upon presentation of proper credentials, enter at reasonable times upon or through any premises in which a water contaminant source is located or in which any records are located regarding this discharge permit or related discharges required to be maintained by regulations of the federal government or the WQCC. The Permittee shall allow NMED representatives to have access to any copy of the records, and to perform assessments, sampling, or monitoring during an inspection for the purpose of evaluating compliance with this Discharge Permit and the WQCC regulations. Nothing in this Discharge Permit shall be construed as limiting in any way the inspection and entry authority of NMED under the WQA, the WQCC Regulations, or any other local, state, or federal regulations. [20.6.2.3107(D) NMAC, NMSA 1978, §§ 74-6-9(B) and 74-6-9(E)]
33.	The Permittee shall, upon NMED's request, allow for NMED's duplication of records required by this Discharge Permit and/or furnish to NMED electronic copies of such records. [20.6.2.3107(D) NMAC]
34.	In the event the Permittee proposes a change to the facility or the facility's discharge that would result in a change in the volume discharged; the location of the discharge; or in the amount or character of water contaminants received, treated, or discharged by the facility that differs from the terms and conditions in this Discharge Permit, the Permittee shall notify NMED prior to implementing such changes. The Permittee shall obtain approval (which may require modification of this Discharge Permit) by NMED prior to implementing such changes.

#	**Terms and Conditions**
	[20.6.2.7(P) NMAC, 20.6.2.3107(C) NMAC, 20.6.2.3109(E) and (G) NMAC]
35.	In the event the Permittee proposes to construct or change an existing system such that the quantity or quality of the discharge will change substantially from that authorized by this Discharge Permit, the Permittee shall submit construction plans and specifications to NMED for the proposed system or process unit prior to the commencement of construction. In the event the Permittee implements changes to an existing system authorized by this Discharge Permit which will result in only a minor effect on the quality of the discharge, the Permittee shall report such changes (including the submission of record drawings, where applicable) in the next quarterly report to NMED. [20.6.2.1202(A) and (C) NMAC, NMSA 1978, §§ 61-23-1 through 61-23-32]
36.	Any violation of the requirements and conditions of this Discharge Permit, including any failure to allow properly credentialed NMED staff to enter and inspect records or facilities, or any refusal or failure to provide NMED with records or information required to be maintained by this Discharge Permit or related regulation may subject the Permittee to a civil enforcement action. Pursuant to WQA 74-6-10(A) and (B), such action may include a compliance order requiring compliance immediately or in a specified time, assessing a civil penalty, modifying or terminating the Discharge Permit, or any combination of the foregoing; or an action in district court seeking injunctive relief, civil penalties, or both. Pursuant to WQA 74-6-10(C) and 74-6-10.1, civil penalties of up to $15,000 per day of noncompliance may be assessed for each violation of the WQA 74-6-5, the WQCC Regulations, or this Discharge Permit, and civil penalties of up to $10,000 per day of noncompliance may be assessed for each violation of any other provision of the WQA, or any regulation, standard, or order adopted pursuant to such other provision. In any action to enforce this Discharge Permit, the Permittee waives any objection to the admissibility as evidence of any data generated pursuant to this Discharge Permit. [20.6.2.1220 NMAC, NMSA 1978, §§ 74-6-10 and 74-6-10.1]
37.	No person shall: 1) make any false material statement, representation, certification, or omission of material fact in an application, record, report, plan, or other document filed, submitted, or required to be maintained under the WQA; 2) falsify, tamper with, or render inaccurate any monitoring device, method, or record required to be maintained under the WQA; or 3) fail to monitor, sample, or report as required by a permit issued pursuant to a state or federal law or regulation.

#	**Terms and Conditions**
	Any person who knowingly violates or knowingly causes or allows another person to violate the requirements of this condition is guilty of a fourth degree felony and shall be sentenced in accordance with the provisions of NMSA 1978, § 31-18-15. Any person who is convicted of a second or subsequent violation of the requirements of this condition is guilty of a third degree felony and shall be sentenced in accordance with the provisions of NMSA 1978, § 31-18-15. Any person who knowingly violates the requirements of this condition or knowingly causes another person to violate the requirements of this condition and thereby causes a substantial adverse environmental impact is guilty of a third degree felony and shall be sentenced in accordance with the provisions of NMSA 1978, § 31-18-15. Any person who knowingly violates the requirements of this condition and knows at the time of the violation that he is creating a substantial danger of death or serious bodily injury to any other person is guilty of a second degree felony and shall be sentenced in accordance with the provisions of NMSA 1978, § 31-18-15. [20.6.2.1220 NMAC, NMSA 1978, §§ 74-6-10.2(A) through 74-6-10.2.F]
38.	Nothing in this Discharge Permit shall be construed in any way as relieving the Permittee of the obligation to comply with all applicable federal, state, and local laws, regulations, permits, or orders. [NMSA 1978, § 74-6-5.L]
39.	The Permittee may file a petition for review before the WQCC on this Discharge Permit. Such petition shall be in writing to the WQCC within thirty days of the receipt of postal notice of this Discharge Permit and shall include a statement of the issues to be raised and the relief sought. Unless a timely petition for review is made, the decision of NMED shall be final and not subject to judicial review. [20.6.2.3112 NMAC, NMSA 1978, § 74-6-5.O]
40.	Prior to the transfer of any ownership, control, or possession of this facility or any portion thereof, the Permittee shall: 1) notify the proposed transferee in writing of the existence of this Discharge Permit; 2) include a copy of this Discharge Permit with the notice; and 3) Deliver or send by certified mail to NMED a copy of the notification and proof that such notification has been received by the proposed transferee. Until both ownership and possession of the facility have been transferred to the transferee, the Permittee shall continue to be responsible for any discharge from the facility. [20.6.2.3111 NMAC]

#	**Terms and Conditions**
41.	Payment of permit fees is due at the time of Discharge Permit approval. Permit fees shall be paid in a single payment or shall be paid in equal installments on a yearly basis over the term of the Discharge Permit. Single payments shall be remitted to NMED no later than 30 days after the Discharge Permit effective date. Initial installment payments shall be remitted to NMED no later than 30 days after the Discharge Permit effective date; subsequent installment payments shall be remitted to NMED no later than the anniversary of the Discharge Permit effective date. Permit fees are associated with issuance of this Discharge Permit. Nothing in this Discharge Permit shall be construed as relieving the Permittee of the obligation to pay all permit fees assessed by NMED. A Permittee that ceases discharging or does not commence discharging from the facility during the term of the Discharge Permit shall pay all permit fees assessed by NMED. An approved discharge permit shall be suspended or terminated if the facility fails to remit an installment payment by its due date. [20.6.2.3114(F) NMAC, NMSA 1978, § 74-6-5(K)]

TABLE 1 - Authorized Underground Injection Control Wells

Well Identifier	Well Location	Associated Monitoring Wells
KAFB-7	Latitude 35° 02' 31.41" N Longitude 106° 34' 10.79" W Section 01 of T9N R3E	KAFB-0505, KAFB-0507, KAFB-0508

TABLE 2 - Constituents of Concern (CoCs)

(Constituents measured in the dissolved-phase portion of BFF plume at concentrations exceeding effluent standards.)

Constituent	Effluent Standards
Ethylene dibromide (EDB)	0.05 µg/L
Benzene	5.0 µg/L
Ethylbenzene	700 µg/L
Toluene	750 µg/L
Total xylenes	620 µg/L
Iron	1,000 µg/L
Manganese	200 µg/L

TABLE 3 - Annual Monitoring Constituent List

(Constituents having 20.6.2.3103 NMAC Human Health Standards and Federal Drinking Water Primary Maximum Contaminant Levels (MCLs) that have ever been detected within KAFB BFF site wells. Permittee may petition NMED to change a constituent monitoring frequency from annual to once every five years, i.e., move to Table 4, if after eight consecutive quarters of monitoring the constituent is not detected in any BFF site wells.)

Category	Constituent
Anions	
	chloride
	nitrogen (nitrate-nitrite)
	sulfate
Organic compounds	
	1,1,2,2-tetrachloroethane
	1,1,2,2-tetrachloroethylene (PCE)
	1,1,2-trichloroethane
	1,1,2-trichloroethylene (TCE)
	1,2-dichloroethane (EDC)
	1,1-dichloroethane
	1,2-dibromomethane
	bis(2-ethylhexyl) phthalate
	Chloroform
	cis-1,2-dichloroethylene
	Dibromochloromethane
	Methylene chloride
	Naphthalenes
	Phenols
	Pyrene

TABLE 4 – Five-year Monitoring Constituent List

(Constituents with 20.6.2.3103 NMAC action levels and Federal Drinking Water maximum contaminant levels (MCLs) – this list is not meant to be redundant with Table 3)

Category	Constituent
Anion	
	Fluoride
Metals	
	Aluminum
	Antimony
	Arsenic
	Barium
	Beryllium
	Cadmium
	Chromium
	Copper
	Cyanide (as free Cyanide)
	Lead
	Manganese
	Mercury (total)
	Selenium
	Silver
	Thallium
	Uranium
	Zinc
Organic compounds	
	Dichloromethane
	Methyl tertiary butyl ether (MTBE)

TABLE 5 – Geochemical Modeling Analyte List

Analyte
Calcium
Magnesium
Sodium
Potassium
Chloride
Sulfate
Total Carbonate Alkalinity
Silica
Iron
Manganese
Dissolved Organic Carbon
Aluminum
Arsenic
Barium
Nitrate-Nitrite(N)
Strontium
Temperature (°C)
pH
ORP (mV), Eh (mV)
DO
Charge Balance (%)

PERMIT TERM & SIGNATURE

EFFECTIVE DATE: April 28, 2017
EXPIRATION DATE: April 28, 2022

[Subsection H of 20.6.2.3109 NMAC, NMSA 1978, § 74-6-5.I]

Michelle Hunter, Chief
Ground Water Quality Bureau
New Mexico Environment Department

Appendix A

Injection Well Configuration (KAFB-7)

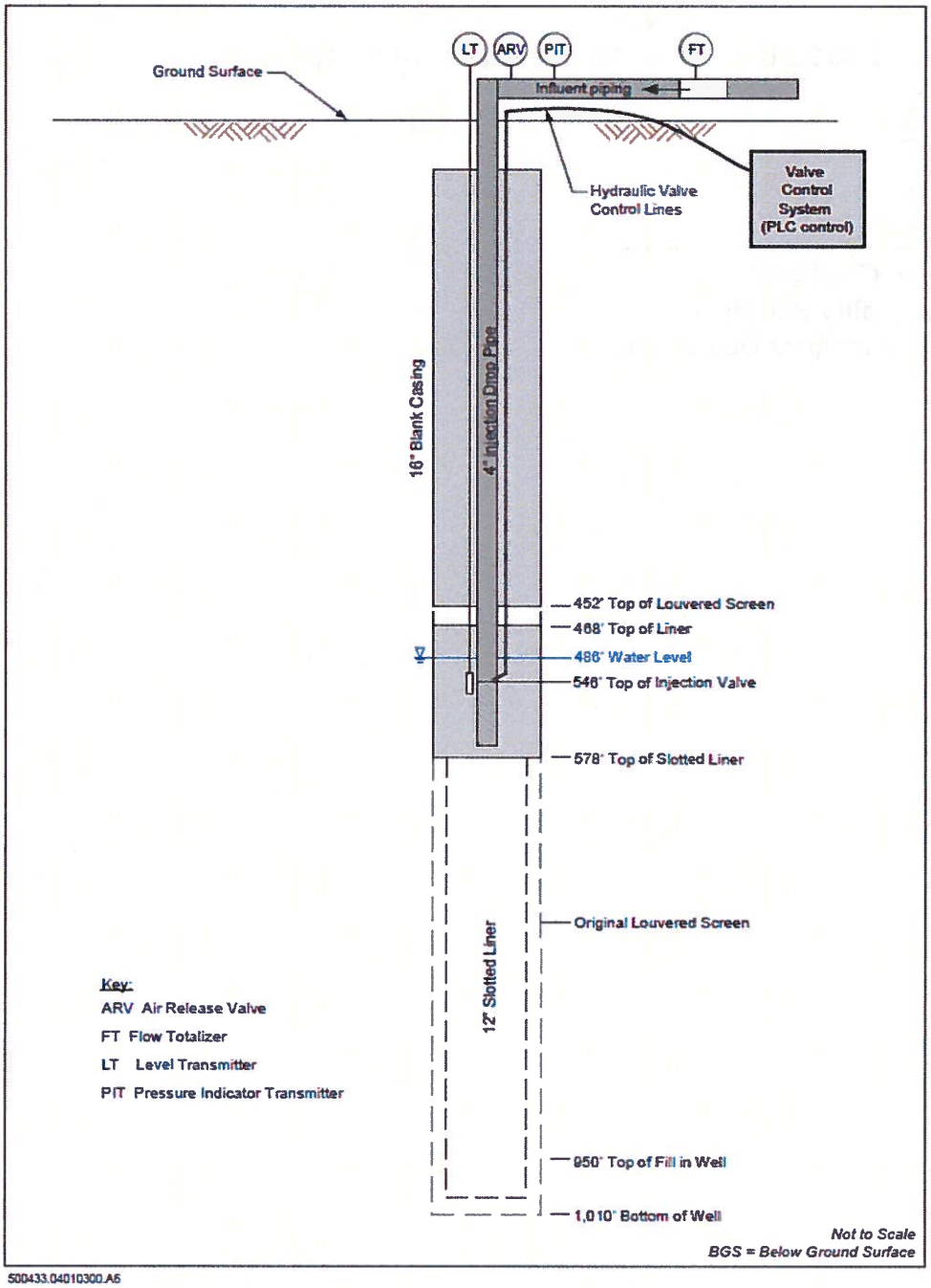

Appendix B

Designated UIC Area and Nitrate Plume

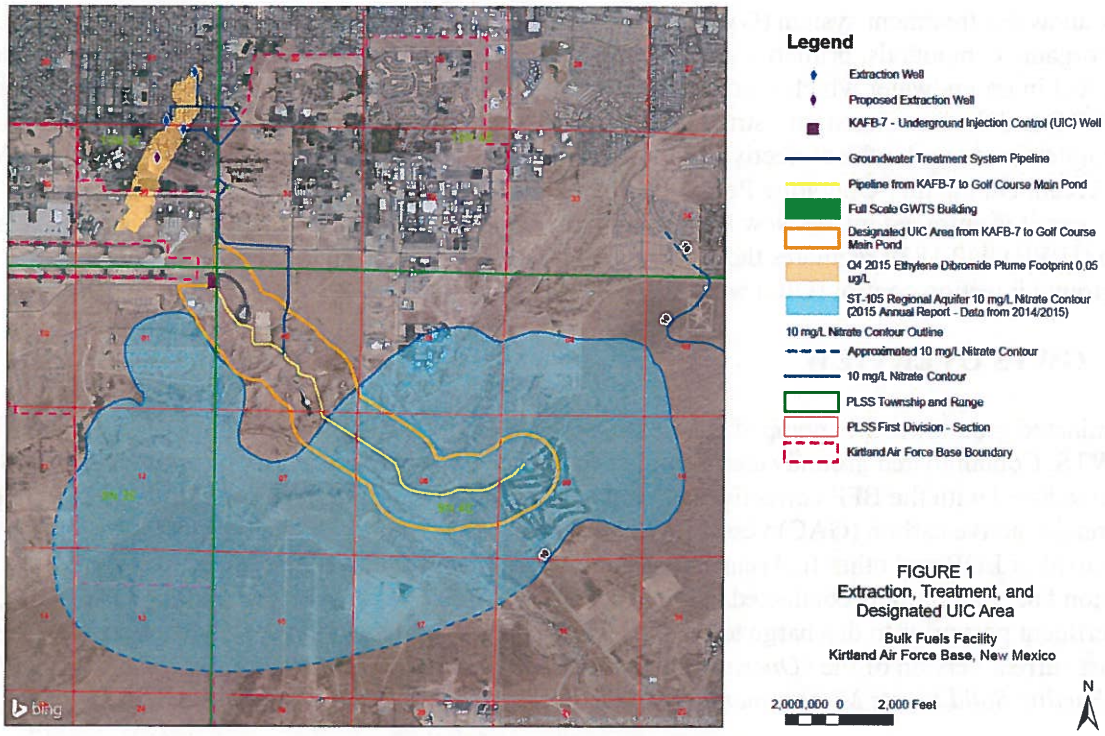

FIGURE 1
Extraction, Treatment, and Designated UIC Area
Bulk Fuels Facility
Kirtland Air Force Base, New Mexico

Appendix C

Contingency Plan

This Contingency Plan (Plan) has been developed for DP-1839 pursuant to 20.6.2.3107(A)(10) NMAC to cope with a failure of the Discharge Permit or system. This Plan describes the actions that Kirtland Air Force Base (AFB) will take in the event of a failure of Discharge Permit 1839 (DP-1839) or the systems that generates and discharges the treated effluent that is the subject of DP-1839. The provisions of this Plan will be carried out immediately whenever there is a release which could threaten human health or the environment.

1.0 BACKGROUND

The groundwater treatment system (GWTS) treats groundwater that contains low concentrations of fuel-related organic compounds, primarily ethylene dibromide (EDB), from a historic leak of aviation gasoline and jet fuel in groundwater which is conveyed to the GWTS from the extraction well network off-base. The GWTS and the associated infrastructure are part of an interim measure pump and treat system that is being implemented under the corrective action provisions in Part 6.2.2.2.12 of Kirtland AFB's Hazardous Waste Treatment Facility Operating Permit (HWTF Permit No. NM9570024423 –"RCRA Permit"). The RCRA permit is enforced by the New Mexico Environment Department's (NMED's) Hazardous Waste Bureau (HWB). DP-1839 regulates the discharge of treated effluent from the GWTS to one or more underground injection control (UIC) wells.

2.0 GWTS OVERVIEW

Contaminated groundwater is pumped from extraction wells and distributed through a piping system to the GWTS. Contaminated groundwater may also originate from groundwater monitoring or extraction wells associated with the BFF corrective action that are undergoing development, testing, or sampling. The granular active carbon (GAC) vessels are arranged in series to provide the contact time required for the removal of EDB and other fuel related organic compounds to achieve the effluent standards in Condition #6. Sampling is conducted at the influent to the GWTS, between the lead-lag GAC tanks, and at the effluent port prior to discharge to the UIC well(s) in accordance with the frequencies established in the most current version of the "*Operations and Maintenance Plan Groundwater Treatment System Bulk Fuels Facility Solid Waste Management Unit ST-106/SS-111*" that has been approved by the NMED HWB.

To ensure that the treated effluent meets all applicable effluent standards in DP-1839, Kirtland AFB has conservatively defined breakthrough as contaminant removal of equal to 90% of the applicable effluent standard as measured between the GAC vessels. If contaminant breakthrough occurs in the lead GAC vessel, the vessels are switched in the lead-lag position and GAC change-out is scheduled. Sampling frequency is increased for any GWTS system change (i.e., new extraction wells added to system).

Samples are collected from the GTWS effluent pipe on a monthly basis. Sampling frequency is increased for any GWTS system change (i.e., new extraction wells added to system). In the unlikely event that the GWTS cannot achieve all applicable effluent standards, the affected treatment train will be shut-down until system modifications can be approved and implemented.

The GWTS is designed and instrumented to efficiently operate 24-hours per day with minimal operator attention. A control system and operator interface panel is installed to allow remote control of the GWTS

and the extraction and injection well network. The control system includes telemetry and web access to alert operators of off-hour alarm conditions. Subcontractor staff are scheduled for on-call responses on weekends and after hours for any emergency response if alarm conditions warrant.

3.0 CONTINGENCY PLAN OVERVIEW

In the event of a spill, leak or unplanned release to the environment associated with the treated effluent from the GWTS or the treated effluent conveyance system, Kirtland AFB will assess possible hazards to human health and/or the environment and will implement this Plan. Possible failures of DP-1839 or the treatment system include the following:

- Treated effluent exceeds one of more of the effluent standards in Condition # 6.
- A leak from the treated effluent conveyance system.
- UIC well is not constructed in a manner consistent with its intended use or completed in a manner that is protective of groundwater.
- The automated monitoring system records a system alarm that indicates a possible threat to a UIC well.

The Permittee's planned response to each of these possible contingencies is described below.

3.1 Treated effluent exceeds one or more effluent standards

As discussed above, the GWTS is operated very conservatively to ensure that effluent standards are never exceeded between the two lead-lag GAC vessels. This is done to ensure that there will be no effluent standard exceedances at the effluent discharge point. In the unlikely event that treated effluent that exceeds one or more effluent standards is discharged to a permitted UIC well, the Permittee will submit a "Notification of Discharge-Removal" to the NMED Groundwater Quality Bureau (GWQB) pursuant to 20.6.2.1203(A) NMAC as required in Condition # 27. The Permittee will copy the NMED HWB on the initial and all subsequent release reports.

In the event of such an exceedance, one or both treatment trains at the GWTS will be promptly shut-down as necessary until system modifications can be approved by the NMED HWB and implemented. If the exceedance is related to concentrations of one or more contaminants in the influent, the Permittees will submit a work plan to the NMED HWB to sample one or more extraction wells. If necessary, an extraction well with an exceedance will be taken off line until the problem is addressed and the NMED HWB authorizes the well to begin pumping again. If plant adjustments are necessary, the Permittee will make the necessary changes. If the required corrective actions are considered to be outside the scope of work for plant operations, one or both treatment trains at the GWTS will be shut down and Kirtland AFB will submit a corrective action plan to the NMED HWB and copy the GWQB. One or both treatment trains at the GWTS will remain shut down pending the approval of the corrective action plan from the NMED HWB.

Following the necessary changes, the effluent groundwater will be re-tested, and the GWTS monitoring frequency will be increased as required in Discharge Permit (i.e., daily for the first week and weekly for three additional weeks). After 4 consecutive weeks of analytical results below the applicable effluent standards, monitoring will return to a monthly frequency.

If necessary, Kirtland AFB will sample groundwater associated with the affected UIC well(s) for all relevant constituents and will provide the data to the NMED HWB and GWQB. Any groundwater

corrective actions will be implemented pursuant to Part 6.2.2 of the RCRA Permit. The Permittee will copy the NMED GWQB on all documents related to the corrective action required in Condition # 26.

3.2 Leak from treated effluent conveyance system

As discussed above, the treated effluent meets all applicable effluent standards in Condition #6. In the event there is a leak from the treated effluent conveyance system that transports the treated effluent to a UIC well, the Permittee will conservatively submit a "Notification of Discharge-Removal" to the NMED GWQB pursuant to 20.6.2.1203(A) NMAC, which includes an estimate of the volumes released, the location of the release and the likely cause of the failure. The Permittee will copy the NMED HWB on the initial and all subsequent release reports.

If necessary, corrective actions will be implemented pursuant to Part 6.2.2 of the RCRA Permit. The Permittee will copy the NMED GWQB on all documents related to the corrective action as required in Condition # 27.

3.3 UIC well is not constructed in a manner consistent with its intended use or not completed in a manner that is protective of groundwater

The design of any new UIC well installed under DP-1839 is subject to approval in accordance with Condition #10. In the unlikely event that a well is not constructed or completed to meet the approved specifications and a design change has not been approved by NMED, the Permittee will submit a work plan to NMED with a proposal for well rehabilitation, abandonment only or abandonment and replacement as detailed in Condition #28.

3.4 The automated monitoring system records a system alarm that indicates a possible threat to a UIC well

Alarms may be activated in the UIC well either due to pressure reading in the discharge pipe or a fluid level in the well casing outside of the operating parameters. Both alarms automatically shut-down the GWTS. Operators will be notified immediately by email of the alarm condition, and proceed to investigate the alarms through the human machine interface (HMI) at the site or remote access after-hours to determine if the alarm represents actual field conditions. Corrective action and subsequent reporting will depend on the condition causing the alarm condition.

4.0 RELEASE NOTIFICATION REQUIREMENTS

4.1 External Notification Procedures

In the event of a spill, leak or unplanned release to the environment associated with the treated effluent from the GWTS or the treated effluent conveyance system, Kirtland AFB will follow the release reporting requirements in 20.6.2.1203(A) NMAC. These requirements are fundamentally equivalent to the "Twenty-Four Hour and Subsequent Reporting" requirements in Part 1.27 of the RCRA Permit. The NMED HWB will be copied on all notifications and any subsequent reports.

4.2 Internal Notification Procedures

GWTS Operators/Contractor staff notify the Chief of Environmental Restoration Program at Kirtland AFB by telephone and by email immediately following any accidental releases of untreated/treated water

at the GWTS, immediately upon having knowledge of a non-compliance event (i.e., sampling results), or if the GWTS operation has to be shut down continuously for more than 24 hours (may include normal maintenance, equipment repairs, or alarm investigations).

NEW MEXICO OFFICE OF THE STATE ENGINEER
PERMIT TO DRILL A WELL WITH NO WATER RIGHT

STATE OF NEW MEXICO
OFFICE OF THE STATE ENGINEER

DISTRICT I

JOHN R. D'ANTONIO, JR., P.E.
STATE ENGINEER

5550 San Antonio Dr. NE
Albuquerque, NM 87109-4127
(505) 383-4000

July 3, 2019

Permit No: RG-1579 POD 376

Kirtland Air Force Base
C/o Bernard Bockisch, PMP
320 Gold Avenue SW, Suite 1300
Albuquerque, NM 87102

Greetings:

Your copy of Permit to Drill an Exploratory Well, which has been approved in accordance with the attached Conditions of Approval, is enclosed. If you have any questions, please don't hesitate to contact me.

Sincerely,

Jeffrey Falance
Water Resource Professional I

Enclosures

WR-07 Application for Permit to Drill A Well With No Water Right

HC1-59128 $5.00

STATE ENGINEERS OFFICE
ALBUQUERQUE, NEW MEXICO
2019 JUN 26 PM 2:34

File No. RG-01579

NEW MEXICO OFFICE OF THE STATE ENGINEER

WR-07 APPLICATION FOR PERMIT TO DRILL

A WELL WITH NO WATER RIGHT

(check applicable box):

HC1-59128
$5.00

For fees, see State Engineer website: http://www.ose.state.nm.us/

Purpose:	☒ Pollution Control And/Or Recovery	☐ Ground Source Heat Pump
☒ Exploratory Well (Pump test)	☐ Construction Site/Public Works Dewatering	☐ Other(Describe):
☐ Monitoring Well	☐ Mine Dewatering	

A separate permit will be required to apply water to beneficial use regardless if use is consumptive or nonconsumptive.

☐ Temporary Request - Requested Start Date: Requested End Date:

Plugging Plan of Operations Submitted? ☐ Yes ☒ No

1. APPLICANT(S)

Name: Kirtland Air Force Base	Name: N/A
Contact or Agent: check here if Agent ☐ Scott Clark, Chief Env. Restoration	Contact or Agent: check here if Agent ☐ N/A
Mailing Address: AFCEC/CZO, Kirtland IST, 2050 Wyoming Blvd. SE	Mailing Address: N/A
City: Albuquerque	City: N/A
State: NM Zip Code: 87117-5270	State: N/A Zip Code: N/A
Phone: N/A ☐ Home ☐ Cell Phone (Work): 505.846.9017	Phone: N/A ☐ Home ☐ Cell Phone (Work):
E-mail (optional): scott.clark@us.af.mil	E-mail (optional):

STATE ENGINEERS OFFICE
ALBUQUERQUE, NEW MEXICO
2019 JAN 25 PM 2:34

FOR OSE INTERNAL USE Application for Permit, Form WR-07, Rev 11/17/16

File No.: RG-1579	Trn. No.:	Receipt No.:
Trans Description (optional): POD ~~376~~ JF 376		
Sub-Basin:	PCW/LOG Due Date:	

2. **WELL(S)** Describe the well(s) applicable to this application.

Location Required: Coordinate location must be reported in NM State Plane (NAD 83), UTM (NAD 83), or Latitude/Longitude (Lat/Long - WGS84).
District II (Roswell) and District VII (Cimarron) customers, provide a PLSS location in addition to above.

☒ NM State Plane (NAD83) (Feet)
☐ NM West Zone
☐ NM East Zone
☒ NM Central Zone

☐ UTM (NAD83) (Meters)
☐ Zone 12N
☐ Zone 13N

☐ Lat/Long (WGS84) (to the nearest 1/10th of second)

Well Number (if known):	X or Easting or Longitude:	Y or Northing or Latitude:	Provide if known: -Public Land Survey System (PLSS) (*Quarters or Halves , Section, Township, Range*) OR - Hydrographic Survey Map & Tract; OR - Lot, Block & Subdivision; OR - Land Grant Name
KAFB-106IN2	1547415 (approx.)	1470053 (approx.)	NE1/4,NW1/4, Section 6, Township 9N, Range 4E

NOTE: If more well locations need to be described, complete form WR-08 (Attachment 1 – POD Descriptions)
Additional well descriptions are attached: ☐ **Yes** ☒ **No** **If yes, how many**_____

Other description relating well to common landmarks, streets, or other:

See attached Figure 1, Exploratory Well Location Map (Final well location survey data will be provided to NMOSE upon completion).

Well is on land owned by: Kirtland Air Force Base

Well Information: NOTE: If more than one (1) well needs to be described, provide attachment. Attached? ☐ **Yes** ☒ **No**
If yes, how many_____

Approximate depth of well (feet): up to 920 ft bgs	Outside diameter of well casing (inches): up to 14.5-inch
Driller Name: To be determined.	Driller License Number: To be determined

STATE ENGINEER'S OFFICE
ALBUQUERQUE, NEW MEXICO
2019 JUN 26 PM 2:34

3. ADDITIONAL STATEMENTS OR EXPLANATIONS

The purpose of this well is to test aquifer conditions for suitability for clean water injection. The exploratory well may be used in the future as an injection well for the conservation of groundwater treated at the Kirtland AFB Bulk Fuels Facility (BFF) Groundwater Treatment System (GWTS). The GWTS treats groundwater extracted from an area historically impacted by releases from the BFF. The proposed exploratory well location is provided as Figure 1. The final well location will be located within the designated section. The proposed construction of the exploratory well is provided in Figure 2. A Pollution Control and/or Recovery Plan Summary is presented as Table 1. A Well Construction Plan is included as Attachment 1. Final well construction specifications are subject to pending regulatory approval.

4. SPECIFIC REQUIREMENTS: The applicant must include the following, as applicable to each well type. Please check the appropriate boxes, to indicate the information has been included and/or attached to this application:

Exploratory:	**Pollution Control and/or Recovery:**	**Construction Dewatering:**	**Mine De-Watering:**
■ Include a description of any proposed pump test, if applicable.	■ Include a plan for pollution control/recovery, that includes the following: ■ A description of the need for the pollution control or recovery operation. ■ The estimated maximum period of time for completion of the operation. ■ The annual diversion amount. ■ The annual consumptive use amount. ■ The maximum amount of water to be diverted and injected for the duration of the operation. ■ The method and place of discharge.	☐ Include a description of the proposed dewatering operation, ☐ The estimated duration of the operation, ☐ The maximum amount of water to be diverted, ☐ A description of the need for the dewatering operation, and, ☐ A description of how the diverted water will be disposed of.	☐ Include a plan for pollution control/recovery, that includes the following: ☐ A description of the need for mine dewatering. ☐ The estimated maximum period of time for completion of the operation. ☐ The source(s) of the water to be diverted. ☐ The geohydrologic characteristics of the aquifer(s). ☐ The maximum amount of water to be diverted per annum. ☐ The maximum amount of water to be diverted for the duration of the operation. ☐ The quality of the water. ☐ The method of measurement of water diverted. ☐ The recharge of water to the aquifer. ☐ Description of the estimated area of hydrologic effect of the project. ☐ The method and place of discharge. ☐ An estimation of the effects on surface water rights and underground water rights from the mine dewatering project. ☐ A description of the methods employed to estimate effects on surface water rights and underground water rights. ☐ Information on existing wells, rivers, springs, and wetlands within the area of hydrologic effect.
Monitoring: ☐ Include the reason for the monitoring well, and, ☐ The duration of the planned monitoring.	■ The method of measurement of water produced and discharged. ■ The source of water to be injected. ■ The method of measurement of water injected. ■ The characteristics of the aquifer. ■ The method of determining the resulting annual consumptive use of water and depletion from any related stream system. ■ Proof of any permit required from the New Mexico Environment Department. ☐ An access agreement if the applicant is not the owner of the land on which the pollution plume control or recovery well is to be located.	**Ground Source Heat Pump:** ☐ Include a description of the geothermal heat exchange project, ☐ The number of boreholes for the completed project and required depths. ☐ The time frame for constructing the geothermal heat exchange project, and, ☐ The duration of the project. ☐ Preliminary surveys, design data, and additional information shall be included to provide all essential facts relating to the request.	

ACKNOWLEDGEMENT

I, We (name of applicant(s)), RICHARD W. GIBBS, COLONEL, USAF, 377 ABW COMMANDER
Print Name(s)

affirm that the foregoing statements are true to the best of (my, our) knowledge and belief.

Richard W. Gibbs
Applicant Signature

Applicant Signature

STATE ENGINEERS OFFICE
ALBUQUERQUE, NEW MEXICO
2019 JUN 26 PM 2:34

ACTION OF THE STATE ENGINEER

This application is:

☒ approved ☐ partially approved ☐ denied

provided it is not exercised to the detriment of any others having existing rights, and is not contrary to the conservation of water in New Mexico nor detrimental to the public welfare and further subject to the attached conditions of approval.

Witness my hand and seal this 3rd day of July 20 19, for the State Engineer,

JOHN R. D'ANTONIO, JR. P.E.
STATE ENGINEER
, State Engineer

By: Jeff Fal
Signature

Jeffrey Falance
Print

Title: Water Resource Professional I
Print

FOR OSE INTERNAL USE

Application for Permit, Form WR-07

File No.:	Trn No.:

NEW MEXICO OFFICE OF THE STATE ENGINEER
PERMIT TO DRILL EXPLORATORY AND
POLLUTION CONTROL AND/OR RECOVERY WELL
CONDITIONS OF APPROVAL

This Application is approved provided it is not exercised to the detriment of any others having existing rights, and is not contrary to the conservation of water in New Mexico nor detrimental to the public welfare of the state; and further subject to the following conditions of approval:

Permittee: Kirtland Air Force Base
AFCEC/CZO, Kirtland IST, 2050 Wyoming Blvd, SE
Albuquerque, NM 87117-5270

Permit Number: RG-1579 POD 376

Exploratory Well/Point of Diversion (POD):

OSE POD No.	Other Well ID No.	NAD 83 State Plane Central Zone (feet)
RG-1579 POD376	KAFB-106IN2	X: 1547415 (approx.) Y: 1470053 (approx.)

1. No water shall be appropriated and beneficially used under this permit.

2. Water shall be used from well RG-1579 POD376 for exploratory and pollution control and/or recovery purposes only, unless and until a permit for a specific use has been issued by the State Engineer.

3. The well shall be drilled by a driller licensed in the State of New Mexico in accordance with Section 72-12-12 NMSA and the well shall be constructed in accordance with 19.27.4 NMAC.

4. No water shall be diverted from the well except for testing purposes which shall not exceed ten (10) cumulative days, and the well shall be plugged or capped in accordance with Subsection C of 19.27.4.30 NMAC, unless a permit to use water from the well is acquired from the Office of the State Engineer.

5. Test data shall be filed not later than twenty (20) days after completion of the aquifer/pump test(s).

6. If artesian water is encountered, the Permittee and driller shall comply with Subsection C of 19.27.4.31 NMAC, and an artesian plan of operations shall be submitted to the State Engineer.

7. The well shall be drilled and completed within one year of issuance of this permit. A Well Record shall be filed no later than thirty (30) days after completion of well in accordance with Subsection N of 19.27.4.29 NMAC (i.e. due by August 3, 2020).

NEW MEXICO OFFICE OF THE STATE ENGINEER
PERMIT TO DRILL EXPLORATORY AND
POLLUTION CONTROL AND/OR RECOVERY WELL
CONDITIONS OF APPROVAL

8. Pursuant to Section 72-8-1 NMSA, the permittee shall allow the State Engineer and his representatives entry upon private property for the performance of their respective duties.

9. The State Engineer retains jurisdiction over this permit.

Witness my hand and seal this 3rd day of July 2019.

John R. D'Antonio, Jr., P.E., State Engineer

By: _____ Jeffrey Falance, Water Resource Professional I

NEW MEXICO OFFICE OF THE STATE ENGINEER EMERGENCY AUTHORIZATION REQUEST TO DRILL AND USE SUPPLEMENTAL WELL NO. RG-1579

STATE OF NEW MEXICO
OFFICE OF THE STATE ENGINEER
DISTRICT I

John R. D'Anotonio, Jr., P.E.
State Engineer

5550 San Antonio Drive NE
Albuquerque, NM 87109-4127
(505) 383-4000

September 3, 2019

Re: Emergency Authorization Request to Drill and Use Supplemental Well No. RG-1579 POD 376

Kirtland Airforce Base
C/o EA Engineering
Attn: Bernard Bockisch
320 Gold Avenue SW, Suite 1300
Albuquerque, NM 87102

Greetings:

On August 26, 2019, the Office of the State Engineer received your Application to Change an Existing Water Right, which was accompanied by an affidavit requesting emergency authorization to drill supplemental well RG-1579 POD 376 (KAFB106IN2) in accordance with Section 72-12-24, NMSA, further indicating that an emergency situation exists in which a delay caused by publication and hearing could result in serious economic loss. We have evaluated the request for emergency authorization and found that the request is in accord with the statutory requirements. This office has no objection to the drilling and use of supplemental well RG-1579 POD 376, provided the following conditions are observed:

1. Well No. RG-1579 POD 376 may be drilled to a depth of no more than 920 feet, and cased with up to 14.5" of casing, at a point described as where X=1547415 feet and Y=1470053 feet, further described as the NE1/4 NW1/4 of Section 6, Township 9 North, Range 4 East, NMPM.

2. Well No. RG-1579 POD 376 shall be drilled in the same aquifer(s) as the existing injection well, RG-1587, **but in no case shall exceed the bottom of the Basin Fill formation**.

3. Well RG-1579 POD 376 shall be drilled by a well driller licensed in the State of New Mexico. The well driller shall file a complete Well Record with the Office of the State Engineer in the District 1 Albuquerque Office, no later than thirty (30) days after completion of the drilling project, in accordance with Subsection N of 19.27.4.29 NMAC.

4. The permit holder has the final responsibility to ensure the well driller files a complete Well Record and any subsequent test data with the Office of the State Engineer in a timely manner.

5. Well No. RG-1579 POD 376 remains subject to all of the Conditions of Approval appurtenant to Permit No. RG-1587, approved on December 10, 2015, for the combined diversion of water from Well No. RG-1579 POD 376 not to exceed 4,500 acre-feet per annum (afa).

6. Well No. RG-1579 POD 376 shall be equipped with a totalizing meter, or meters, of a type and at a location(s) approved by and installed in a manner acceptable to the State Engineer. Records of the total amount of water diverted from Well No. RG-1579 POD 376 shall be submitted to the District 1 Office via mail, e-mail, or facsimile on or before the 10th day of January, April, July and October for the preceding three calendar months, i.e. *quarterly*.

7. The Emergency Authorization shall expire on September 3, 2020 or when the State Engineer renders his final decision on pending Application RG-1579 POD 376-POD 379, or upon violation of a condition, whichever comes first.

8. The Emergency Authorization holder shall utilize the highest and best technology available to ensure conservation of water to the maximum extent practical.

9. Pursuant to Section 72-8-1 NMSA, the Emergency Authorization holder shall allow the state engineer and his representatives entry upon private property for the performance of their respective duties, including access to the wells for meter readings and water level measurements.

10. The State Engineer has jurisdiction in the matter of this Emergency Authorization.

The issuance of this acknowledgement letter does not obligate favorable consideration of the pending application by the State Engineer.

Sincerely,

Jeffrey Falance
Water Resource Professional I

NOTICE is hereby given that on August 26, 2019 Kirtland Air Force Base, contact Scott Clark, Chief Environmental Restoration, AFCEC/CZO, Kirtland AFB IST, 2050 Wyoming Blvd. SE, Albuquerque, New Mexico, 87117-5270 filed Application No. RG-1579 for a Permit for Additional Groundwater Point of Diversion with the STATE ENGINEER in the Rio Grande Underground Water Basin in the State of New Mexico.

Bernalillo is the County affected by the diversion and in which the water has been or will be put to beneficial use.

This notice is ordered to be published in The Albuquerque Journal.

The applicant proposes to add additional points of diversion RG-1579 POD 376 located at X= 1,547,415 feet, Y= 1,470,053 feet, NMSPCS, Central Zone, NAD 83; along with RG-1579 POD 377, RG-1579 POD 378, and RG-1579 POD 379 at locations to be determined, within the Underground Injection Area on land owned by Kirtland Air Force Base, to be supplemental to existing permitted well RG-1587, located at a point where X=1,544,731.13 feet and Y=1,470,756.22 feet, NMSPCS, Central Zone, NAD 83, on land owned by the Kirtland Air Force Base. All wells are to be drilled to a depth of approximately 905 feet, with a casing diameter of 14.5 inches, for the continued partial diversion and consumptive use of up to 4,500 acre-feet per annum, for pollution control and recovery, specifically for the extraction of groundwater for remediation and for the return injection of up to 2,000 acre-feet per annum of treated groundwater diverted from permitted and proposed wells. Well RG-1579 POD 376 will be generally located on Kirtland AFB just southwest of Pennsylvania St. SE and Ordnance Street, in NW¼ NW¼, Section 6 Township 9 North, Range 4 East, NMPM, Bernalillo County, New Mexico.

No new appropriation of water above the applicants' right to divert up to 4,500 acre-feet per annum under permit RG-1587 is requested by this Application, and the applicant seeks to continue to divert groundwater for remediation purposes. The four wells to be permitted under RG-1579 are proposed to serve as injection wells for treated groundwater associated with the remediation of the bulk fuel spill as part of Kirtland Air Force Base's Ground Water Treatment System, by injecting 1,472 acre-feet from wells RG-1579 through RG-1589. The extracted groundwater will be treated and discharged into either the Golf Course Main Pond for irrigation of the Tijeras Arroyo Golf Course, into infiltration galleries located adjacent to the golf course, or into the proposed injection wells on land owned by Kirtland Air Force Base.

To view the application and supporting documentation contact the State Engineer District Office to arrange a date and time for an appointment located at 5550 San Antonio Drive NE, Albuquerque, NM 87109-4127.

Any person, firm or corporation or other entity having standing to file objections or protests shall do so in writing (objection must be legible, signed, and include the writer's complete name, phone number and mailing address). The objection to the approval of the application must be based on: (1) Impairment; if impairment, you must specifically identify your water rights; and/or (2) Public Welfare/ Conservation of Water; if public welfare or conservation of water within the state of New Mexico, you must show how you will be substantially and specifically affected. The written protest must be filed, in triplicate, with the State Engineer, 5550 San Antonio Drive NE, Albuquerque, NM 87109-4127, by December 6, 2019. Facsimiles (faxes) will be accepted as a valid protest if the hard copy is hand-delivered or mailed and postmarked within 24-hours of the facsimile. Mailing postmark will be used to validate the 24-hour period. Protests can be faxed to the Office of the State Engineer, (505) 383-4030. If no valid protest or objection is filed, the State Engineer will evaluate the application in accordance with the provisions of Chapter 72 NMSA 1978.

Journal: October 4, 11, 18, 2019

AFFIDAVIT OF PUBLICATION

STATE OF NEW MEXICO

County of Bernalillo SS

Elise Rodriguez , the undersigned, on oath states that she is an authorized Representative of The Albuquerque Journal, and that this newspaper is duly qualified to publish legal notices or advertisements within the meaning of Section 3, Chapter 167, Session Laws of 1937, and that payment therefore has been made of assessed as court cost; that the notice, copy of which hereto attached, was published in said paper in the regular daily edition, for 3 time(s) on the following date(s):

10/04/2019, 10/11/2019, 10/18/2019

OFFICIAL SEAL
Susan Ramirez
NOTARY PUBLIC - STATE OF NEW MEXICO
My Commission Expires: 2/15/2023

Sworn and subscribed before me, a Notary Public, in and for the County of Bernalillo and State of New Mexico this 18 day of October of 2019

PRICE $398.58

Statement to come at the end of month.

ACCOUNT NUMBER 1065858

APPENDIX B

2018 GROUNDWATER TREATMENT SYSTEM OPERATIONS AND MAINTENANCE PLAN

(PROVIDED ON CD)

APPENDIX A

Permits and Agreements

LIST OF PERMITS AND AGREEMENTS

A-1 Regulatory Approvals and Permits

Groundwater Treatment System Design Approvals

New Mexico Environment Department Permits
- Hazardous Waste Treatment Facility Operating Permit EPA ID No. NM9570024423
- DP-1770 Modification Application and Termination
- Discharge Permit Issuance, DP-1839, Kirtland Air Force Base

State of New Mexico Office of the State Engineer Permits
- RG-1587
- RG-1579 POD 292
- RG-1579 POD 309 and 310
- RG-1579 POD 319

A-2 Access Agreements

Right of Entry Agreements
- Christ United Methodist Church License to Kirtland Air Force Base
- Permit Amendment No. 2 to the New Mexico Veterans Administration Health Care System
- Gibson Medical Center License to Kirtland Air Force Base
- License Agreement between the City of Albuquerque and Kirtland Air Force Base

APPENDIX A-1

Regulatory Permits

GROUNDWATER TREATMENT SYSTEM DESIGN APPROVALS

NEW MEXICO
ENVIRONMENT DEPARTMENT

SUSANA MARTINEZ
Governor
JOHN A. SANCHEZ
Lieutenant Governor

Harold Runnels Building
1190 Saint Francis Drive (87505)
P.O. Box 5469, Santa Fe, NM 87502-5469
Phone (505) 827-0419 Fax (505) 827-0310
www.nmenv.state.nm.us

RYAN FLYNN
Cabinet Secretary
BUTCH TONGATE
Deputy Secretary

CERTIFIED MAIL - RETURN RECEIPT REQUESTED

June 30, 2015

Colonel Eric H. Froehlich
Base Commander
377 ABW/CC
2000 Wyoming Blvd. SE
Kirtland AFB, NM 87117-5606

John Pike
Director, Environmental Management Services
377 MSG
2050 Wyoming Blvd. SE, Suite 116
Kirtland AFB, NM 87117-5270

RE: REVISED BASIS OF DESIGN – MID-PLUME PUMP AND TREAT SYSTEM, BULK FUELS FACILITY SPILL
SOLID WASTE MANAGEMENT UNITS ST-106 AND SS-111
KIRTLAND AIR FORCE BASE
EPA ID# NM9570024423
HWB-KAFB-15-MISC

Dear Colonel Froehlich and Mr. Pike:

The New Mexico Environment Department (NMED) is in receipt of the Kirtland Air Force Base (the Permittee) *Revised Final Basis of Design (BOD) – Mid-Plume Pump and Treat System*, dated June 12, 2015. The revised BOD addresses the issues identified in NMED's conditional BOD approval letter of April 24, 2015.

The Permittee's revised final BOD is hereby approved with the following condition:

1. The Permittee shall submit, upon completion of construction, photographic documentation that a backflow preventer or other means to prevent backflow of treated water from the force main line into well KAFB-7 has been installed.

NMED technical staff will assist you and your contractor in any way possible to achieve this interim measure.

If you have any questions, please contact me at 505-827-2855.

Sincerely,

Kathryn Roberts
Director
Resource Protection Division

KR/DM

cc: Col. T. Haught, KAFB
D. Wilson, KAFB
M.L. Leonard, AEHD
F. Shean, ABCWUA
L. King, EPA-Region 6 (6PD-N)
J. Kieling, NMED-HWB

File: KAFB 2015 Bulk Fuels Facility Spill Library and Reading File

NEW MEXICO
ENVIRONMENT DEPARTMENT

Hazardous Waste Bureau
2905 Rodeo Park Drive East, Building 1
Santa Fe, NM 87505-6303
Phone (505) 476-6000 Fax (505) 476-6030
www.env.nm.gov

SUSANA MARTINEZ
Governor
JOHN A. SANCHEZ
Lt. Governor

RYAN FLYNN
Cabinet Secretary
BUTCH TONGATE
Deputy Secretary

ENTERED

CERTIFIED MAIL – RETURN RECEIPT REQUESTED

December 16, 2015

Colonel Eric H. Froehlich
Base Commander
377 ABW/CC
2000 Wyoming Blvd.SE
Kirtland AFB, NM 87117-5606

John Pike
Director, Environmental Management Services
377 MSG
2050 Wyoming Blvd. SE, Suite 116
Kirtland AFB, NM 87117-5270

Re: KIRTLAND AIR FORCE BASE BULK FUEL FACILITY MID-PLUME PUMP AND TREAT SYSTEM BASIS OF DESIGN – ADDENDUM #1
BULK FUELS FACILITY SPILL
SOLID WASTE MANAGEMENT UNITS ST-106 AND SS-111
KIRTLAND AIR FORCE BASE
EPA ID#NM9570024423, HWB-KAFB-13-MISC

Dear Colonel Froehlich and Mr. Pike:

The New Mexico Environment Department (NMED) has received the Kirtland Air Force Base (AFB) (Permittee) *Kirtland Air Force Base Bulk Fuel Facility Mid-Plume Pump and Treat System Basis of Design – Addendum #1* dated December 13, 2015. The Mid-Plume Pump and Treat Basis of Design Addendum #1 proposes:

- The addition of a pH adjustment system to the groundwater treatment system (GWTS) in order to control the pH of treated water.
- The pH adjustment system will include the addition of National Sanitary Foundation (NSF) certified 20° Baume hydrochloric acid (32% HCl) solution to the effluent water at a rate of 2 gallons per day (or 306 milliliters per hour).
- Twice daily measurement of effluent pH, or more frequently if required, in order to monitor and adjust the HCl addition rate.

The acid addition pump will only operate if the discharge pumps are running. The GWTS has been designed to automatically shut down the discharge pump, and therefore the pH adjustment

KAFB4362

system, if any part of the treatment system shuts down. This provides a safe-guard against the addition of acid when any part of the GWTS is not operational. The Permittee anticipates the need to adjust pH because new GAC units typically increase the pH of treated water by about 1 unit for a temporary period after system startup. The Permittee estimates that the pH adjustment system will not be required after two weeks of operation at 100 gallons per minute (gpm). It is noted that additional pH adjustment may be required when operational extraction rates increase above 100 gpm.

The Mid-Plume Pump and Treat System Basis of Design – Addendum #1 is hereby approved.

Should you have any questions regarding this letter please contact Diane Agnew of my staff at (505) 222-9555.

Sincerely,

Kathryn Roberts
Director
Resource Protection Division

KR/DA

Cc: Col. T. Haught, KAFB
K. Lynnes, KAFB
A. Bodour, KAFB-AFCEC
L. Bitner, KAFB
M.L. Leonard, AEHD
F. Shean, ABCWUA
L. King, EPA-Region 6 (6PD-N)
J. Kieling, NMED-HWB
D. McQuillan, NMED
D. Agnew, NMED-HWB
S. Huddleson, NMED-GWQB
S. Reuter, NMED-PSTB

File: KAFB 2015 Bulk Fuels Facility Spill

ENTERED

NEW MEXICO
ENVIRONMENT DEPARTMENT

Hazardous Waste Bureau
2905 Rodeo Park Drive East, Building 1
Santa Fe, NM 87505-6303
Phone (505) 476-6000 Fax (505) 476-6030
www.nmenv.state.nm.us

SUSANA MARTINEZ
Governor
JOHN A. SANCHEZ
Lt. Governor

RYAN FLYNN
Cabinet Secretary
BUTCH TONGATE
Deputy Secretary

CERTIFIED MAIL – RETURN RECEIPT REQUESTED

March 25, 2016

Colonel Eric H. Froehlich
Base Commander
377 ABW/CC
2000 Wyoming Blvd.SE
Kirtland AFB, NM 87117-5606

John Pike
Director, Environmental Management Services
377 MSG
2050 Wyoming Blvd. SE, Suite 116
Kirtland AFB, NM 87117-5270

Re: BULK FUELS FACILITY EXPANSION OF THE DISSOLVED-PHASE PLUME GROUNDWATER TREATMENT SYSTEM DESIGN
SOLID WASTE MANAGEMENT UNITS ST-106 AND SS-111
KIRTLAND AIR FORCE BASE
EPA ID#NM9570024423, HWB-KAFB-13-MISC

Dear Colonel Froehlich and Mr. Pike:

The New Mexico Environment Department (NMED) is in receipt of the Kirtland Air Force Base (KAFB) (the Permittee) *Work Plan for Bulk Fuels Facility Expansion of the Dissolved-Phase Plume Groundwater Treatment System Design* (Work Plan), dated January 19, 2016. The work plan addresses activities to be performed at the Bulk Fuels Facility site, including:

- Installation of extraction well(s);
- Installation of observation and groundwater monitoring wells;
- Installation of well vaults and conveyance lines associated with new extraction well(s);
- Expansion of the existing Groundwater Treatment System (GWTS);
- Installation of regional injection well(s);
- Operation and maintenance of the GWTS; and
- Performance of groundwater monitoring.

Future revisions and updates of this Work Plan are anticipated to provide the required information on groundwater monitoring well design and installation; extraction well design and

KAFB4404

installation; vault and conveyance line construction and installation; expansion of the groundwater treatment system (GWTS) and installation; and injection well location, design, and installation. The work plan tasks, procedures, and quality control are hereby approved with the following conditions:

1. Section 3.1.5 references depths below ground surface for the tops of screens in the data gap groundwater monitoring wells. Screens should be placed relative to the depth to groundwater, and not a standard depth below ground surface, so that wells adequately screen the shallow, intermediate, and deep intervals represented by other wells in the monitoring network.
2. Aquifer testing of the new extraction well(s) is required in order to continue refinement of the site conceptual model and understanding of aquifer characteristics. The Permittee must submit a separate work plan outlining aquifer testing procedures and analysis for NMED review and approval. This work plan must be submitted a minimum of 60 days prior to the planned start of aquifer testing.
3. The Work Plan needs to be updated to provide a discussion of procedures and decision making criteria that will be followed to determine if/when additional treatment equipment is necessary to augment the current GWTS. This discussion should specifically address manganese and iron. If changes to the GWTS are required, those changes shall be documented in revisions and updates to this Work Plan, submitted to the NMED for review and approval.
4. In addition to the design and installation of injection wells and the associated conveyance line, future revisions to this Work Plan shall also include design information on the effluent manifold to be used to distribute treated groundwater to the golf course and multiple injection wells (Section 3.1.8). Additionally, future revisions shall include the engineering detail on the Golf Course Tie-In Connection referenced in Section 3.1.8.2.
5. The NMED understands that the Air Force would like to use the treated water generated by the GWTS for dust suppression on base. The Air Force shall revise the subject Work Plan to describe the dust suppression mechanisms and application areas
6. Proposal of long-term monitoring, system optimization, and exit strategy are not appropriate for an interim measure and should be completed as part of the Corrective Measures Evaluation and Corrective Measures Implementation phases of the corrective action process. The Final Report referenced in Section 3.1.9 of the Work Plan should meet the permit requirements for an Interim Measure Report (Permit Section 6.2.2.2.12.5).
7. Groundwater monitoring well water levels must be gaged on a quarterly basis and not on a semi-annual basis. This information is vital to understanding changing aquifer conditions and to evaluating performance of the dissolved-phase plume collapse interim measure.
8. Section 3.1.10 (and other sections, as appropriate) will ultimately, if not now, need to address the following items, as discussed on February 17, 2016:
    a. Discussion of discharge of treated water (e.g., land application, injection);
    b. Reference to the measurement and reporting of effluent volumes and discharge locations; and
    c. Discussion of aquifer monitoring activities associated with injection.

9. Table 3-6 shall be revised to include discharge permit DP-1839 as a regulatory driver for injection of treated groundwater.
10. Section 3.1.11.2 states that production wells will be sampled on a semiannual basis. Production wells must continue to be sampled on a monthly basis for EDB, benzene, toluene, ethylbenzene, and xylene.
11. Section 3.1.11.3 does not reflect the approved optimization of periodic monitoring. The Permittee should follow reporting requirements proposed in the *Technical Memorandum: Requested Optimization of Monitoring and Reporting, Second Phase, Bulk Fuels Facility Spill Site,* dated December 9, 2015 and approved on January 20, 2016.
12. Section 3.2.16 needs to be revised to clarify "periodic sampling" of extraction wells and to indicate that the sampling will comply with Ground Water Quality Bureau (GWQB) permit requirements.
13. The U.S. Geological Survey (USGS) is currently conducting a base-wide survey of groundwater monitoring wells. As part of the USGS survey, it is NMED understands that the USGS will develop a standard operating procedure (SOP) for the surveying of monitoring wells for KAFB. The NMED requests that the Permittee consider incorporation of the SOP into the survey procedures outlined in Section 3.2.20 of the work plan.
14. Mineralogy can be an indicator of depositional environment and a way to correlating geologic units across monitoring wells. The NMED requests that the Permittee consider including mineralogy in the geologist boring logs during groundwater monitoring well, observation well, and extraction well drilling and logging.
15. The NMED requests that the Permittee review and revise, as necessary, the investigation derived waste (IDW) categories in Section 8.1 of the work plan to better clarify the categories of waste anticipated and to better align them with the GWQB decision flow chart for disposal of IDW water. For example, based on technical discussions the NMED understands that the nonhazardous water category encompasses the following:
    a. IDW water that is nondetect for all constituents;
    b. IDW water that has detections of constituents that are below the New Mexico Water Quality Control Commission (NMWQCC) standards and/or U.S. Environmental Protection Agency (EPA) maximum contaminant levels (MCLs); and
    c. IDW water that has constituent concentrations greater than NMWQCC standards and/or EPA MCLs but are not characteristic hazardous waste.

    As written, the text in Section 8.1 does not clearly indicate these three scenarios for IDW water and the plan for disposition.
16. The nonhazardous IDW water may be treated at the GWTS for discharge, as discussed in Section 8.1.1 provided that the Permittee obtain the necessary permissions from the NMED GWQB.
17. Figure 1-1 in the Quality Assurance Project Plan shows two injection well target areas near the Golf Course. The NMED has not received sufficient data to approve these areas for injection and requires that the figure be updated to remove them.

The NMED understands that the Air Force intends for this Work Plan to be a single source for details related to work conducted under the dissolved-phase plume collapse interim measure. As

such, this Work Plan shall be updated, as necessary, to reflect changes resulting from new or modified permitting requirements; revisions to GWTS monitoring and contingency plans; and modifications to scope and detail of identified tasks. Future revisions to the work plan are subject to NMED review and approval. Please submit a revised Work Plan that addresses the conditions identified in this approval.

Should you have any questions regarding this letter please contact Ms. Diane Agnew at (505) 222-9555.

Sincerely,

Kathryn Roberts
Director
Resource Protection Division

KR/DM

cc: Col. T. Haught, KAFB
M.L. Leonard, AEHD
F. Shean, ABCWUA
L. King, EPA-Region 6 (6PD-N)
K. Kieling, NMED-HWB
D. McQuillan, NMED KAFB Fuel Spill Cleanup Team Leader
S. Pullen, GWQB

File: KAFB 2015 Bulk Fuels Facility Spill Library and Reading

NEW MEXICO ENVIRONMENT DEPARTMENT PERMITS

HAZARDOUS WASTE TREATMENT
FACILITY OPERATING PERMIT
EPA ID No. NM9570024423

issued to

UNITED STATES AIR FORCE

for the

OPEN DETONATION UNIT

located at

KIRTLAND AIR FORCE BASE
BERNALILLO COUNTY, NEW MEXICO

issued by the

NEW MEXICO ENVIRONMENT DEPARTMENT
HAZARDOUS WASTE BUREAU
2905 RODEO PARK DRIVE EAST, BUILDING 1
SANTA FE, NEW MEXICO, 87505

July 2010

TABLE OF CONTENTS

PERMIT PART 1: GENERAL PERMIT REQUIREMENTS 13

1.0 INTRODUCTION 13
1.1. LEGAL AUTHORITY 13
1.2. ENFORCEMENT 13
1.3. PERMITTED ACTIVITY 13
1.4. COMPLIANCE WITH PERMIT 14
1.5. EFFECT OF INACCURACIES IN PERMIT APPLICATION 14
1.6. PERMIT CITATIONS 14
1.7. SEVERABILITY 15
1.8. DEFINITIONS 15
1.9. THE COMPLETE PERMIT 17
1.10. TERM OF THE PERMIT 17
1.11. ALTERNATIVE ASSESSMENT FOR WASTE TREATMENT 17
1.12. PERMIT ACTIONS 18
1.12.1. Permit Modification, Suspension, Revocation, and Termination 18
1.12.2. Unclassified Permit Modifications 18
1.13. TRANSFER OF LAND OWNERSHIP 18
1.14. PERMIT RENEWAL 19
1.15. CONTINUATION OF EXPIRING PERMIT 19
1.16. TRANSFER OF PERMIT 19
1.17. PERMIT REVIEW 20
1.18. NEED TO HALT OR REDUCE ACTIVITY NOT A DEFENSE 20
1.19. DUTY TO MITIGATE 20
1.20. PROPER OPERATION AND MAINTENANCE 20
1.21. DUTY TO PROVIDE INFORMATION 20
1.22. INSPECTION AND ENTRY 21
1.23. MONITORING AND RECORDS 21
1.23.1. Representative Sampling 21
1.23.1.1. Monitoring Records Contents 21
1.23.2. Operating Record 22
1.24. REPORTING PLANNED CHANGES 23
1.25. REPORTING ANTICIPATED NONCOMPLIANCE 23
1.26. CERTIFICATION OF CONSTRUCTION OR MODIFICATION 24
1.27. TWENTY-FOUR HOUR AND SUBSEQUENT REPORTING 24
1.28. REPORTS REQUIRED BY THE CONTINGENCY PLAN 25
1.29. CORRECTIVE ACTION 25
1.30. ADMISSIBILITY OF DATA 25
1.31. OTHER NONCOMPLIANCE 25
1.32. SIGNATORY AND CERTIFICATION REQUIREMENTS 25
1.33. MONITORING REPORTS 25
1.34. COMPLIANCE SCHEDULES 26
1.35. INFORMATION REPOSITORY 26
1.36. REPORTS, NOTIFICATIONS, AND INFORMATION SUBMITTALS TO THE DEPARTMENT 26
1.37. POINTS OF CONTACT FOR THE FACILITY 26
1.38. WORK PLANS AND OTHER DELIVERABLE DOCUMENTS 27
1.39. CONFIDENTIAL INFORMATION 27

PERMIT PART 2: GENERAL FACILITY REQUIREMENTS....30

2.0 INTRODUCTION....30
2.1. SECURITY....30
2.2. INSPECTIONS....30
2.3. PERSONNEL TRAINING....31
2.4. PREPAREDNESS AND PREVENTION....31
2.4.1. Required Equipment....31
2.4.2. Testing and Maintenance of Equipment....32
2.4.3. Required Aisle Space....32
2.4.4. Arrangements with Local Authorities....32
2.4.5. Preventive Procedures, Structures, and Equipment....32
2.5. CONTINGENCY PLAN....33
2.5.1. Implementation of the Plan....33
2.5.2. Copies of the Plan....34
2.5.3. Amendments to the Plan....34
2.5.4. Emergency Coordinator....34
2.6. WASTE CHARACTERIZATION....34
2.6.1. General Requirements....34
2.6.2. Characterization of Waste by Acceptable Knowledge....34
2.6.3. Characterization by Sampling and Analysis....35
2.6.3.1. Sampling....35
2.6.3.2. Laboratory Analysis....35
2.6.3.3. Quality Assurance/Quality Control (QA/QC)....36
2.6.4. Re-evaluation of Characterization Information....36
2.6.5. Characterization of Specific Wastes....37
2.6.5.1. Waste Received From Off-Site....37
2.6.5.2. Waste to Be Shipped Off-Site....37
2.6.5.3. Remediation Waste....37
2.6.5.4. Additional Characterization Requirements for Containerized Waste....38
2.6.6. Records of Waste Characterization....38
2.7. WASTE MANAGEMENT....38
2.7.1. Authorized Wastes and Waste Sources....38
2.7.1.1. Permitted Waste....38
2.7.1.2. Prohibited Waste....38
2.7.1.3. Waste from Foreign Sources....38
2.7.1.4. Waste from Off-site Sources....38
2.7.1.5. Incompatible Wastes....39
2.7.2. Provisions for Complying with LDR Requirements....39
2.7.2.1. Generator Requirements....39
2.7.2.2. Treatment Facility Requirements....40
2.8. WASTE MINIMIZATION....40
2.9. IMPERMISSIBLE DILUTION....41
2.10. DUST SUPPRESSION....41
2.11. IGNITABLE AND REACTIVE WASTES....41
2.12. AIR EMISSIONS FROM THE OD UNIT....42
2.13. OFF-SITE SHIPMENTS....42
2.14. STORAGE OF RESTRICTED WASTE....42
2.15. MANIFEST SYSTEM....42
2.16. BIENNIAL REPORT....42
2.17. LIABILITY INSURANCE REQUIREMENTS....43
2.18. INCAPACITY OF OWNERS OR OPERATORS, GUARANTORS, OR FINANCIAL INSTITUTIONS....43
2.19. DISCLOSURE STATEMENT....43
2.20. ADDITIONAL REPORTS....43

PERMIT PART 3: OPEN DETONATION UNIT 46

3.0 INTRODUCTION 46
3.1. AUTHORIZED WASTE AND MAXIMUM QUANTITY OF WASTE 46
3.2. DESIGN, CONSTRUCTION, OPERATION, AND MAINTENANCE 46
3.2.1. General Requirements 46
3.2.2. Run-Off and Run-On Controls 46
3.2.3. Restrictions on Operations 46
3.2.3.1. Hours of Operation 46
3.2.3.2. Weather Conditions 47
3.2.3.3. Range Fire 47
3.2.3.4. Other Restrictions 47
3.2.4. Operation Safety 47
3.2.4.1. Personnel Safety 47
3.2.4.2. Safety Precautions 48
3.2.5. Maintenance 48
3.2.5.1. Accumulated Precipitation 48
3.2.5.2. Untreated Waste (Kick-Out) and Treatment Residues 48
3.3. AIR MONITORING 48
3.4. SOIL MONITORING AND Human Risk Screening 48
3.5. GROUNDWATER MONITORING 49
3.5.1. Installation of Monitoring Wells 49
3.5.2. Sampling and Analysis 49
3.6. ORGANIC AIR EMISSIONS REQUIREMENTS 50
3.6.1. Additional Waste Characterization Requirements for Air Emissions 51
3.6.2. Equipment Containing or Contacting Hazardous Waste 51
3.7. PRE-TREATMENT PREPARATION 51
3.8. TRANSPORTATION OF WASTE TO THE OD UNIT AND CONTAINER SPECIFICATIONS 51
3.9. WASTE STAGING 52
3.10. WASTE TREATMENT 52
3.11. POST TREATMENT 52

PERMIT PART 4: CLOSURE 53

4.0 GENERAL CLOSURE REQUIREMENTS 53
4.1. SUBMITTAL OF REVISED CLOSURE PLAN 53
4.2. Clean Closure 53
4.3. NOTIFICATION OF CLOSURE 54
4.4. TIME ALLOWED FOR CLOSURE 54
4.5. DISPOSAL/DECONTAMINATION OF EQUIPMENT, STRUCTURES, AND SOILS 55
4.6. MANAGEMENT OF REMEDIATION WASTE 55
4.7. CERTIFICATION OF CLOSURE 55
4.8. FINANCIAL RESPONSIBILITY 55
4.8.1. Cost Estimate for Closure 55
4.8.2. Financial Assurance for Closure 55

PERMIT PART 5: POST CLOSURE 56

5.0 POST-CLOSURE CARE 56

PERMIT PART 6: CORRECTIVE ACTION 57

6.0 INTRODUCTION 57
6.1. GENERAL PROVISIONS 57
6.1.1. Offsite Access 57
6.1.2. Field Activities 57
6.1.3. Record Preservation 57
6.1.4. Releases Beyond Facility Boundary 57

6.1.5. Work Plans and Other Deliverable Documents 58
6.1.6. Quarterly Progress Reports 58
6.1.7. Lists of SWMUs and AOCs and Annual Reporting of Outdoor Activities 58
6.1.8. Newly discovered SWMUs, AOCs, and Releases 58
6.1.9. Determination of Corrective Action Complete (No Further Action) 59
6.1.10. Health and Safety Plan 60
6.1.11. Community Relations Plan 61
6.1.12. Land Transfer 61
6.1.13. Abandoned Septic Systems 62
6.2. SPECIAL REQUIREMENTS 62
6.2.1. Special Information Submittals 62
6.2.1.1. General Facility Information 62
6.2.1.2. Potential Human Receptors Information 62
6.2.1.3. Information on Surface Water 62
6.2.2. Corrective Action Procedures 63
6.2.2.1. Site Investigations 63
6.2.2.1.1. Investigation Work Plans 63
6.2.2.1.2. Investigation Reports 63
6.2.2.2. Corrective Measures 64
6.2.2.2.1. General 64
6.2.2.2.2. CME Work Plans 64
6.2.2.2.3. CME Reports 64
6.2.2.2.4. Cleanup Standards 64
6.2.2.2.5. Remedy Evaluation Criteria 64
6.2.2.2.6. Remedy Selection 66
6.2.2.2.7. CMI Work Plans 66
6.2.2.2.8. Corrective Measures Implementation 66
6.2.2.2.9. Progress Reports 66
6.2.2.2.10. CMI Reports 67
6.2.2.2.11. Accelerated Cleanup Process 67
6.2.2.2.12. Interim Measures 68
6.2.3. Cleanup Levels 69
6.2.3.1. Cleanup Levels for Contaminants in Groundwater (other than Perchlorate) 69
6.2.3.2. Cleanup Levels for Perchlorate in Groundwater 69
6.2.3.3. Cleanup Levels for Soil Contaminants (Other than PCBs and Lead) 69
6.2.3.4. Cleanup Levels for Polychlorinated Biphenyls (PCBs) in Soil 70
6.2.3.5. Cleanup Levels for Lead in Soil 70
6.2.3.6. Cleanup Levels for Surface Water 70
6.2.3.7. Ecological Risk Evaluation and Cleanup Levels 70
6.2.3.8. Requests for Variance from Cleanup Levels 70
6.2.4. Reporting Requirements 71
6.2.4.1. Quarterly Reporting 71
6.2.4.2. Investigation Work Plans 71
6.2.4.3. Investigation Reports 72
6.2.4.4. Periodic Monitoring Reports 73
6.2.4.5. Risk Assessment Reports 73
6.2.4.6. CME Work Plans 75
6.2.4.7. CME Reports 75
6.2.4.8. CMI Work Plans 77
6.2.4.9. CMI Work Plan Progress Reports 77
6.2.4.10. CMI Reports 77
6.2.4.11. Certification 78
6.3. COMPLIANCE SCHEDULE TABLES 78
6.4. SPECIAL REQUIREMENTS FOR INFORMATION SUBMITTALS AND CORRECTIVE MEASURES 78
6.4.1. Special Investigation Requirements 78
6.4.1.1. Landfills to Be Closed with Waste Left in Place 78
6.4.1.2. Military Munitions Ranges 78

6.4.1.3. Areas with Groundwater Contamination ... 79
6.4.1.4. Perchlorate Screening in Groundwater ... 80
6.4.1.5. Sanitary Sewer Line at LF-002 (SWMU 6-2) ... 80
6.5. TECHNICAL REQUIREMENTS ... 80
6.5.1. Standard Operating Procedures ... 81
6.5.2. Documentation of Field Activities ... 81
6.5.3. Decontamination Procedures ... 82
6.5.4. Field Equipment Calibration Procedures ... 82
6.5.5. Sample Handling, Shipping, and Custody Requirements ... 82
6.5.5.1. Sample Handling ... 82
6.5.5.2. Sample Shipment Procedures ... 83
6.5.5.3. Sample Custody ... 83
6.5.5.4. Sample Labels ... 84
6.5.6. In-Situ Testing and Other Tests ... 85
6.5.7. Collection and Management of Investigation Derived Waste ... 85
6.5.8. Surveying Sample, Well, and Site Feature Locations ... 85
6.5.9. Requirements for Exploratory and Well Installation Borings and Exploratory Excavations ... 86
6.5.10. Requirements for Geophysical Surveys ... 87
6.5.11. Requirements for Deep Subsurface Soil, Rock, and Sediment Sampling ... 88
6.5.12. Surface and Shallow Subsurface Soil and Sediment Sampling Procedures ... 89
6.5.13. Field Screening of Soil, Rock, and Sediment Samples ... 89
6.5.14. Field Quality Control for Soil, Rock, and Sediment Sampling ... 90
6.5.15. Logging of Soil, Rock, and Sediment Samples ... 90
6.5.16. Requirements for Soil-Vapor Monitoring ... 91
6.5.17. Technical Requirements for Groundwater Investigations ... 92
6.5.17.1. Objectives ... 92
6.5.17.2. Groundwater Levels ... 93
6.5.17.3. Groundwater Sampling ... 93
6.5.17.4. Well Purging ... 94
6.5.17.5. Groundwater Sample Collection ... 95
6.5.17.6. Field QC for Groundwater Sampling ... 95
6.5.17.7. Periodic Monitoring Report ... 96
6.5.17.8. Springs ... 96
6.5.17.9. Surface Water ... 96
6.5.17.10. Groundwater Monitoring Well Construction Requirements ... 96
6.5.17.10.1. Drilling Methods ... 97
6.5.17.10.2. Monitoring Wells and Piezometers Construction ... 98
6.5.17.10.3. Well and Piezometer Construction Materials ... 98
6.5.17.10.4. Design and Construction of Screens and Filter Packs ... 99
6.5.17.10.5. Design and Construction of Annular Seals ... 99
6.5.17.10.6. Well and Piezometer Development Methods ... 100
6.5.17.10.7. Surface Completion Methods ... 100
6.5.17.10.8. Well and Piezometer Completion Reports ... 101
6.5.17.10.9. Well or Piezometer Abandonment ... 101
6.5.17.10.10. Well and Piezometer Construction Diagrams, Logs, and Boring Logs ... 102
6.5.18. Laboratory Analyses Requirements for all Environmental Media ... 103
6.5.18.1. Laboratory QA/QC Requirements ... 103
6.5.18.1.1. Quality Assurance ... 103
6.5.18.1.2. Equipment Calibration Procedures and Frequency ... 104
6.5.18.1.3. Laboratory QC Samples ... 104
6.5.18.2. Laboratory Deliverables ... 104
6.5.18.3. Review of Field and Laboratory QC Data for all Media ... 106
6.5.18.3.1. General QC Review Process ... 106
6.5.18.3.2. Review of Laboratory Reporting, Documentation, Data Reduction, and Corrective Action Process 107

PERMIT ATTACHMENT A: GENERAL FACILITY INFORMATION ... 110
1.0 INTRODUCTION ... 110

1.1. GENERAL DESCRIPTION OF THE FACILITY AND THE EOD RANGE 110
1.2. PURPOSE Of The OD Treatment Unit 110
1.3. ROUTES OF TRAVEL 111
1.4. SECURITY 111
1.4.1. Introduction 111
1.4.2. Barriers and Means to Control Entry 111

PERMIT ATTACHMENT B: LIST OF AUTHORIZED HAZARDOUS WASTES 113

1.0 INTRODUCTION 113

PERMIT ATTACHMENT C: WASTE ANALYSIS PLAN 119

1.0 INTRODUCTION 119
1.1. HAZARDOUS WASTES TREATED AT THE OD UNIT 119
1.2. WASTE ANALYSIS PARAMETERS 119
1.3. WASTE CHARACTERIZATION PROCEDURES 120
1.3.1. Characterization Strategy 120
1.3.1.1. Wastes to be Treated 120
1.3.1.2. Verification 120
1.3.1.3. Phase 1 Verification 120
1.3.1.4. Phase 2 Verification 121
1.3.2. Sampling and Analysis Of Waste 121
1.3.2.1. Sampling Equipment 121
1.3.2.2. Equipment Decontamination 121
1.3.2.3. Sample Preservation and Storage 121
1.3.2.4. Quality Assurance/Quality Control 122
1.4. ANALYTICAL LABORATORY AND TESTING/ANALYTICAL METHODS SELECTION 122
1.5. WASTE RE-EVALUATION FREQUENCIES 122

PERMIT ATTACHMENT D: ANNUAL SOIL SAMPLING AND ANALYSIS PLAN 125

1.0 INTRODUCTION 125
1.1. SAMPLING PROCEDURES 125
1.1.1. Sampling Schedule and Frequency 125
1.1.2. Sampling Strategy and Analytical Parameters 125
1.1.3. Sample Collection 126
1.1.3.1. Sample Containers and Preservatives 126
1.1.3.2. Sample Identification 126
1.1.3.3. Sample Handling, Documentation, and Custody Procedures 127
1.1.3.4. Sample Shipping 127
1.2. INVESTIGATION-DERIVED WASTE 127
1.3. QUALITY ASSURANCE/QUALITY CONTROL PROGRAM 128
1.3.1. Quality Control Targets 128
1.3.2. Field Quality Control 128
1.4. LABORATORY ANALYSIS 128
1.5. DATA VALIDATION 128
1.6. HUMAN RISK SCREENING 128
1.7. REPORTING 129

PERMIT ATTACHMENT E: INSPECTION PLAN 138

1.0 INTRODUCTION 138
1.1. INSPECTION SCHEDULE 138
1.2. SCOPE OF INSPECTIONS 138
1.3. FREQUENCY OF INSPECTIONS 138

PERMIT ATTACHMENT F: CONTINGENCY PLAN 140

1.0 INTRODUCTION 140
1.1. PURPOSE AND IMPLEMENTATION 140
1.2. DISTRIBUTION 140
1.3. CHARACTERISTICS OF WASTES MANAGED AT THE OD UNIT 140
1.4. SUPPORT AGREEMENTS WITH OUTSIDE FACILITIES 140
1.5. EMERGENCY COORDINATOR 141
1.6. RESPONSE PROCEDURES 141
1.6.1. Spills 142
1.6.2. Personnel Exposure 142
1.6.3. Explosion and/or Fire Involving Ordnance 142
1.6.4. Natural Disasters 142
1.6.5. Evacuation 142
1.6.5.1. Evacuation Procedure 143
1.6.5.2. Evacuation Route 143
1.7. EMERGENCY EQUIPMENT 143
1.8. EMERGENCY AND INCIDENT RECOVERY PROCEDURES 143
1.8.1. Post-Emergency Inspections and Activities 143
1.8.2. Post-Emergency or Incident Reports 144
1.8.3. Emergency/Incident Response Evaluation 144

PERMIT ATTACHMENT G: PERSONNEL TRAINING PLAN 148

1.0 INTRODUCTION 148
1.1. TRAINING PROGRAM 148
1.1.1. Job Title/Job Description 148
1.1.2. Relevance of Training to Job Position 148
1.1.3. Training Content, Frequency, and Techniques 148
1.2. TRAINING DIRECTOR 149
1.3. IMPLEMENTATION OF TRAINING PROGRAM 149

PERMIT ATTACHMENT H: CLOSURE PLAN 151

1.0 INTRODUCTION 151
1.1. GENERAL CLOSURE INFORMATION 151
1.1.1. Closure Performance Standard 151
1.1.2. Final Closure Activities 151
1.1.3. Maximum Extent of Operations 152
1.1.4. Schedule for Closure 152
1.2. CLOSURE REPORT 152
1.3. CLOSURE PROCEDURES 152
1.4. SAMPLING, DECONTAMINATION PROCEDURES, AND PPE 153
1.4.1. Soil Sampling 154
1.4.2. Liquid Sampling 154
1.4.3. Sample Containers and Preservatives 154
1.4.4. Sample Handling and Documentation 154
1.4.5. Sample Shipping 156
1.4.6. Sample Analysis 156
1.4.7. Quality Assurance (QA)/Quality Control (QC) 156
1.5. MANAGEMENT OF WASTE FROM CLOSURE ACTIVITIES 157
1.5.1. Waste Management 157
1.5.2. Waste Characterization 158
1.5.3. Waste Disposal 158
1.6. GROUNDWATER MONITORING WELLS 158

PERMIT ATTACHMENT I: COMPLIANCE SCHEDULES 169

1.0 INTRODUCTION 169

PERMIT ATTACHMENT J: LIST OF HAZARDOUS WASTE MANAGEMENT UNITS 176
1.0 INTRODUCTION 176
PERMIT ATTACHMENT K: LIST OF SWMUS AND AOCS FOR WHICH CORRECTIVE ACTION IS COMPLETE 177
1.0 INTRODUCTION 177
PERMIT ATTACHMENT L (RESERVED) 182

FIGURES

Figure **Page**

Permit Parts

1-1 Facility Location Map……..…...29
1-2 Open Detonation Unit, View from Southeast…….……30
2-1 Location of OD Unit at EOD Range…….……..46

Permit Attachments

D-1 OD Unit Single Crater Example Sampling Locations…….…….……137
D-2 OD Unit Multiple Crater Example Sampling Grid…….…….……138
F-1 EOD Range Evacuation Route..…….…….…..……148

Plates

1 Locations of SWMUs and AOCs on KAFB

TABLES

Table **Page**

Permit Parts

2-1 Off-Site Generators ……..…….…….…….…….…….…….....45
3-1 Groundwater Monitoring Parameters……...……51
6-1 Groundwater General Chemistry Parameters……...……95

Permit Attachments

B-1 List of Hazardous Wastes Authorized to be Treated at the OD Unit ……..……...…...115
C-1 Sample Containers, Preservation Methods, and Holding Times for Analysis of Waste….....125
D-1 Analytical Parameters and Methods, Container Types, Preservation Methods, and Holding Times for Soil Samples……...….....132
D-2 Field Quality Control Samples…..……...….....133
D-3 Background Concentrations of Naturally Occurring Metals in Soil at Kirtland Air Force Base…….....…..134
D-4 List of Analytical Parameters and Industrial Soil Screening Levels….…….....…...135

E-1 Inspection Schedule for the ODUnit…….....…….…….....……140

F-1 Emergency Coordinator Contact Information for the OD Unit……..…….....…..…146
F-2 Type and Location of Emergency Equipment Available for Use at the OD Unit ……..….....……...147

G-1 Training Program for the OD Unit …….....……..……..…….151

H-1 Closure Schedule……..…….....….161

H-2 Maximum Detection Limits and Analytical Methods for Analysis of Metals..…….....…….....162

H-3 Maximum Detection Limits and Analytical Methods for Analysis of VOCs and SVOCs…….....…163

H-4 Maximum Detection Limits and Analytical Methods for Analysis of High Explosives and Other Compounds..…….……166

H-5 Sample Containers, Preservation Methods, and Holding Times for Soil Samples….....…167

H-6 Sample Containers, Preservation Methods, and Holding Times for Liquid Samples.....….....168

H-7 Field Quality Control Samples…….....…169

I-1 General Submittals…….……..……171

I-2 Submittal Requirements for Corrective Action……172

I-3 SWMUs and AOCs Requiring Corrective Action……...…174

J-1 Hazardous Waste Management Units…….…….....177

K-1 SWMUs and AOCs for which Corrective Action is Complete without Controls (Granted No Further Action Status)…….…….....178

ACRONYMS AND ABBREVIATIONS

ACM	accelerated corrective measure
AK	acceptable knowledge
AOC	area of concern
ARCH	air rotary casing hammer
ASTM	American Society for Testing and Materials
CAC	Corrective Action Complete
CERCLA	Comprehensive Environmental Response, Compensation, and Liability Act
C.F.R.	Code of Federal Regulations
CMI	corrective measures implementation
CME	corrective measures evaluation
DQOs	data quality objectives
DOT	United States Department of Transportation
EC	Emergency Coordinator
ECO-SSLs	Ecological Soil Screening Levels (EPA)
EOD	explosive ordnance disposal
EPA	U.S. Environmental Protection Agency
GC/ECD	gas chromatograph/electron-capture device
GC/MS	gas chromatograph/mass spectrometry
HE	high explosive(s)
HI	hazard index
HWA	New Mexico Hazardous Waste Act
HWB	Hazardous Waste Bureau
HWMR	New Mexico Hazardous Waste Management Regulations
HQ	hazard quotient
ICP	inductively coupled plasma
IDW	investigation derived waste
KAFB	Kirtland Air Force Base
KCP	KAFB Command Post
kg	kilogram
LDR	land disposal restrictions
m^3	cubic meters
MCL	maximum contaminant level
mg	milligram
mg/kg	milligram per kilogram
mg/L	milligram per liter

mL	milliliter
MS/MSD	matrix spike/matrix spike duplicate
NMAC	New Mexico Administrative Code
NMED	New Mexico Environment Department
NMSA	New Mexico Statutes Annotated
OD	open detonation
PCBs	polychlorinated biphenyls
PPE	personal protective equipment
QA	quality assurance
QAPP	quality assurance program plan
QC	quality control
RCRA	Resource Conservation and Recovery Act
RFI	RCRA facility investigation
RPD	relative percent difference
RSL	regional screening level
SAP	sampling and analysis plan
SAR	SWMU Assessment Report
SSAP	Soil Sampling and Analysis Plan
SSL	soil screening levels
SVOC	semi-volatile organic compound
SWMU	solid waste management unit
TAG	Tijeras Arroyo Groundwater
TKN	total Kjeldahl nitrogen
TSDF	treatment, storage and disposal facility
UCL	upper confidence limit of the mean
ug	microgram
ug/L	microgram per liter
UHC	underlying hazardous constituent
U.S.C.	United States Code
UXO	unexploded ordnance
VOC	volatile organic compound
WQCC	New Mexico Water Quality Control Commission
XRF	x-ray fluorescence

PERMIT PART 1: GENERAL PERMIT REQUIREMENTS

1.0 INTRODUCTION

This Permit Part (1) contains general requirements pertaining to hazardous waste management and treatment at the Open Detonation (OD) Unit and corrective action at the Kirtland Air Force Base (KAFB) Facility (see Figures 1-1 and 1-2, of this Permit Part, for a map view of the Facility and an aerial view of the OD Unit), as permitted under the New Mexico Hazardous Waste Act (HWA), New Mexico Statutes Annotated (NMSA) 1978, §§ 74-4-1 to 74-4-14.

1.1. LEGAL AUTHORITY

Pursuant to § 74-4-10 of the HWA, the New Mexico Environment Department (the Department) issues this Permit to the U.S. Air Force, hereafter referred to as the Permittee, the owner and operator of the OD Unit, with U.S. Environmental Protection Agency (EPA) ID Number NMD9570024423, located in Bernalillo County, New Mexico.

Section 6001 of the Resource Conservation and Recovery Act (RCRA) provides, in part, that "each department, agency, and instrumentality of the executive branch of the Federal Government (1) having jurisdiction over any solid waste management facility or disposal site, or (2) engaged in any activity resulting, or which may result, in the disposal or management of solid waste or hazardous waste shall be subject to, and comply with, all Federal, State, interstate, and local requirements, both substantive and procedural, respecting control and abatement of solid waste or hazardous waste disposal and management in the same manner, and to the same extent, as any person is subject to such requirements." [42 U.S.C. § 6961].

1.2. ENFORCEMENT

Any violation of any requirement of this Permit may subject the Permittee, and its officers, employees, successors, and assigns, to a compliance order under § 74-4-10 of the HWA or § 3008(a) of RCRA, 42 U.S.C. § 6928(a); to an injunction under § 74-4-10 of the HWA, § 3008(a) of RCRA, 42 U.S.C. § 6928(a), or § 7002(a) of RCRA, 42 U.S.C. § 6972(a); to civil penalties under § 74-4-10 of the HWA, § 3008(a) and (g) of RCRA, 42 U.S.C. § 6928(a) and (g), or § 7002(a) of RCRA, 42 U.S.C. § 6972(a); to criminal penalties under § 74-4-11 of the HWA or § 3008(d), (e), and (f) of RCRA, 42 U.S.C. § 6928(d), (e), and (f); or to some combination of the foregoing. The list of authorities in this Permit Section (1.2) is not exhaustive, and the Department reserves the right to take any action authorized by the law to enforce the requirements of this Permit.

1.3. PERMITTED ACTIVITY

This Permit authorizes the Permittee to treat hazardous wastes at the OD Unit, and establishes the general and specific standards for these activities, as required by the HWA and the Hazardous Waste Management Regulations (HWMR) 20.4.1 New Mexico Administrative Code (NMAC). The OD Unit is classified as a miscellaneous unit under 40 C.F.R. Part 264 Subpart X. This Permit also establishes standards for closure and sets forth the requirements for corrective action to address releases of hazardous waste and hazardous constituents into the environment pursuant to the HWA and the HWMR.

The Permittee shall not treat, without a permit, hazardous wastes at any other location at this Facility, except as provided in 40 C.F.R. § 270.1(c)(2).

The Permittee shall not store for more than 90 days any hazardous waste at any location at this Facility except as provided in 40 C.F.R. § 262.34(b).

This Permit does not authorize the treatment of firearms or contraband that are not reactive or ignitable hazardous waste.

1.4. COMPLIANCE WITH PERMIT

Compliance with this Permit during its term constitutes compliance, for purposes of enforcement, with 40 C.F.R. Parts 264 and 268, only for those management practices specifically authorized by this Permit. The Permittee must also comply with 40 C.F.R. Parts 260 through 273 to the extent the requirements of those sections are applicable. The Permittee must also comply with all applicable self-implementing provisions imposed by statute or rule. Compliance with this Permit shall not constitute a defense to any order issued or any action brought under HWA, NMSA 1978, § 74-4-10(E), § 74-4-10.1, or § 74-4-13; RCRA § 3008(a), § 3008(h), § 3013,
§ 7002, or § 7003; the Comprehensive Environmental Response, Compensation, and Liability Act of 1980 (CERCLA), 42 U.S.C. §§ 9601 to 9675, or any other law providing for protection of public health or the environment.

This Permit does not convey any property rights of any sort or any exclusive privilege, nor does this Permit authorize any injury to persons or property, any invasion of other private rights, or any infringement of State or local laws or regulations in accordance with 40 C.F.R. § 270.4(b) and (c) and § 270.30(g).

1.5. EFFECT OF INACCURACIES IN PERMIT APPLICATION

This Permit is based on the information submitted in the Part B Permit application dated December 2005 and subsequent information, referred to as the Application. Any inaccuracies found in the Application may be grounds for the termination, revocation and reissuance, or modification of this Permit pursuant to 40 C.F.R. § 270.43(a)(2). Where and when the Permittee becomes aware that it failed to submit any relevant facts in the Application, or submitted incorrect information in the Application or in any report to the Department, it shall promptly submit such facts or corrected information pursuant to 40 C.F.R. § 270.30(l)(11).

1.6. PERMIT CITATIONS

Whenever the Permit cites a provision of 20.4.1 NMAC or 40 C.F.R. or Part or Section of this Permit, the Permit shall be deemed to incorporate the citation by reference, including all subordinate provisions of the cited provision, and make binding the full text of the cited provision.

Hazardous waste management regulations are frequently cited throughout this Permit. The Federal hazardous waste management regulations, 40 C.F.R. Parts 260 through 273, are generally cited rather than the New Mexico Hazardous Waste Management Regulations, 20.4.1 NMAC. The Federal regulations are cited because only the Federal regulations set forth the

detailed regulatory requirements; the State regulations incorporate by reference, with certain exceptions, the Federal regulations in their entirety. Citing only the federal regulations also serves to avoid encumbering each citation with references to two sets of regulations. However, it is the State regulations that are legally applicable and enforceable. Therefore, for the purpose of this Permit, and enforcement of its terms and requirements, all references to provisions of Federal regulations that have been incorporated into the State regulations shall be deemed to include the State incorporation of those provisions.

1.7. SEVERABILITY

The provisions of the Permit are severable, and if any provision of this Permit, or any application of any provision of this Permit to any circumstance is held invalid, the application of such provision to other circumstances and the remainder of this Permit shall not be affected thereby.

1.8. DEFINITIONS

For purposes of this Permit, terms used herein shall have the same meanings as those in HWA, RCRA, and their implementing regulations, unless this Permit specifically provides otherwise. Where a term is not defined in HWA, RCRA, pursuant regulations, or this Permit, the meaning associated with such a term shall be defined by a standard dictionary reference or the generally accepted scientific or industrial meaning of the term.

"Area of Concern" (AOC) means any area of the Facility under the control or ownership of the Permittee, which is not a solid waste management unit where a release of a hazardous waste or hazardous constituent has occurred, or is suspected to have occurred regardless of the frequency or duration of the release. An area of concern includes areas and structures at which releases of hazardous waste or hazardous constituents were not fully remediated, including one time and accidental events.

"Corrective Measures" means all corrective action necessary to protect human health and the environment for all releases of hazardous waste or hazardous constituents from any Solid Waste Management Unit or AOC at the Facility, regardless of the time at which waste was placed in the unit, as required under § 74-4-4.2(B) of the HWA and 40 C.F.R. § 264.101. Corrective Measures may address releases to air, soil, sediment, surface water, or groundwater.

"Days" refers to calendar days unless specified otherwise in this Permit.

"Department" means the New Mexico Environment Department and any successor agencies.

"EOD" means Explosives Ordnance Disposal

"**EPA**" means the United States Environmental Protection Agency and any successor agencies.

"Extent of contamination" means the horizontal and vertical area in which the concentrations of waste or hazardous constituents in the environmental media being investigated are above detection limits or background concentrations indicative of the region, whichever is appropriate, as determined by the Department.

"Facility" or "KAFB" means Kirtland Air Force Base, including all contiguous land, structures, other appurtenances, and improvements on the land. For the purpose of implementing corrective action under 40 C.F.R. § 264.101, RCRA § 3008(h), or the HWA, NMSA 1978, § 74-4-10(E),

the Facility includes all contiguous property under the control of the owner or operator seeking a permit under the HWA.

"Hazardous constituent" means any constituent identified in Appendix VIII of 40 C.F.R. Part 261, or any constituent identified in Appendix IX of 40 C.F.R. Part 264, incorporated by 20.4.1 NMAC.

"Hazardous waste" means a solid waste that is not excluded from regulation under 40 C.F.R. § 261.4(b), and that either is listed in 40 C.F.R. Part 261, Subpart D, exhibits any of the characteristics identified in 40 C.F.R. Part 261, Subpart C, or is a mixture of solid waste and one or more wastes listed in 40 C.F.R. Part 261, Subpart D. However, for purposes of corrective action, "hazardous waste" shall have the meaning set forth in the HWA, § 74-4-3(K).

"**Hazardous waste regulations**" or "**Hazardous Waste Management Regulations**" means the New Mexico Hazardous Waste Management Regulations, 20.4.1 NMAC and all provisions of 40 C.F.R. Parts 260 through 273 incorporated therein.

"**Interim measures**" means actions necessary to minimize or prevent the further migration of contaminants and limit actual or potential human and environmental exposure to contaminants while long-term corrective action remedies are evaluated and, if necessary, implemented.

"NMED" means New Mexico Environment Department.

"Off-site source" means a generator of Hazardous Waste located within the United States but outside the Permittee's Facility.

"**Open Detonation**" means the treatment of ignitable or reactive hazardous waste in accordance with the requirements of this Permit. Treatment by open detonation is accomplished by the detonation of hazardous waste in open pits using a counter charge to initiate the explosion.

"**Permit**" means this Permit, issued to the Permittee for the Facility, pursuant to the HWA and the New Mexico Hazardous Waste Management Regulations to conduct corrective action and to operate the OD Unit at the Facility, EPA ID No. NM9570024423, as it may be modified or amended.

"**Permittee**" means U.S. Air Force, a part of the U.S. Department of Defense, which is a Department in the U.S. Government, and any successor.

"**RCRA**" means the Resource Conservation and Recovery Act of 1980, as amended, 42 U.S.C. §§ 6901 to 6992k.

"**Release**" means any spilling, leaking, pouring, emitting, emptying, discharging, injecting, pumping, escaping, leaching, dumping, or disposing of any hazardous waste or hazardous constituents into the environment (including the abandonment or discarding of barrels, containers, and other closed receptacles containing hazardous waste or hazardous constituents).

"Remediation waste" means all solid and hazardous wastes, and all media (including groundwater, surface water, soil, and sediment) and debris, which contain listed hazardous wastes or which exhibit a hazardous waste characteristic, that are managed for the purpose of implementing corrective action requirements. Remediation wastes may originate from releases that extend beyond the Facility boundaries.

"Secretary" means the Secretary of the New Mexico Environment Department or his designee or authorized representative.

"**Solid waste**" means a solid waste as defined in the HWA, § 74-4-3(O).

"Solid waste management unit" (**SWMU**) means any discernible unit at which solid wastes have been placed at any time, irrespective of whether the unit was intended for the management of solid or hazardous waste. Such units include any area at the Facility at which solid wastes have been routinely and systematically released.

1.9. THE COMPLETE PERMIT

The complete Permit consists of the regulations incorporated by reference into this Permit (see Permit Section 1.6), the Permit requirements in Permit Parts 1 through 6, and Permit Attachments A through L:

Part 1 - General Permit Requirements
Part 2 - General Facility Requirements
Part 3 - Open Detonation Unit
Part 4 - Closure
Part 5 - Post Closure
Part 6 - Corrective Action
Attachment A - General Facility Information
Attachment B - List of Authorized Hazardous Wastes
Attachment C - Waste Analysis Plan
Attachment D - Annual Soil Sampling and Analysis Plan
Attachment E - Inspection Plan
Attachment F - Contingency Plan
Attachment G - Personnel Training Plan
Attachment H - Closure Plan
Attachment I - Compliance Schedules
Attachment J - List of Hazardous Waste Management Units
Attachment K - List of SWMUs and AOCs for which Corrective Action is Complete
Attachment L - Reserved for Groundwater Sampling and Analysis Plan

1.10. TERM OF THE PERMIT

This Permit shall be effective for a fixed period of 3 years in accordance with 40 C.F.R. § 270.50(a), subject to Permit Sections 1.5, 1.12 and 1.15.

1.11. ALTERNATIVE ASSESSMENT FOR WASTE TREATMENT

The Permittee shall submit an alternative treatment assessment report to the Department no later than the first anniversary of the effective date of this Permit. The report shall document the

Permittee's evaluation of the range of possible treatment technologies for waste that is authorized for treatment by open detonation under this Permit. The assessment report shall include identification and discussion of the alternative treatment technologies and for the technologies presented models of air emissions, contaminant dispersal, and risk to human and ecological receptors. Each alternative treatment technology, including open detonation, shall be evaluated for cost and the technology's ability to protect human health and the environment to include, but not be limited to the:

1. Ability of the technology to reduce or control emissions,
2. Ability of the technology to monitor emissions,
3. Ability of the technology to control noise, and
4. Ability of the technology to control ground vibrations.

The purpose of the alternative treatment assessment shall be to phase out open detonation of hazardous waste at the Facility as soon as practicable.

1.12. PERMIT ACTIONS

1.12.1. Permit Modification, Suspension, Revocation, and Termination

1. This Permit may be modified, suspended, revoked or terminated for cause in accordance with the provisions of HWA, NMSA 1978, § 74-4-4.2 and 40 C.F.R. §§ 270.41 through 270.43. The filing of a request by the Permittee for a Permit modification or the notification of planned changes or anticipated noncompliance or, if suspension, or revocation is ordered by the Department, shall not stay any Permit requirement, in accordance with 40 C.F.R. § 270.30(f).
2. If at any time for any of the reasons specified in 40 C.F.R. § 270.41, the Department determines that modification of this Permit is necessary, the Department may initiate a Permit modification or require the Permittee to request a Permit modification.
3. The Permittee may request permit modifications in accordance with 40 C.F.R. § 270.42. All applicable requirements specified in 40 C.F.R. § 270.42 and 20.4.1.900 NMAC shall be followed.
4. Modifications to the Permit do not constitute a reissuance of the Permit.

1.12.2. Unclassified Permit Modifications

Unless a permit modification is explicitly listed in Appendix I of 40 C.F.R. 270.42 as a Class 1 or 2 permit modification, the Permittee shall not submit the proposed permit modification as a Class 1 or 2 permit modification. The Permittee may only submit such a permit modification request as a Class 3 modification, or may request a determination from the Department that the proposed permit modification be reviewed and approved as a Class 1 or 2 modification pursuant to the requirements specified in 40 C.F.R. 270.42(d)(1).

1.13. TRANSFER OF LAND OWNERSHIP

The Permittee shall submit a permit modification request, in compliance with all requirements of 40 C.F.R. § 270.42, at least 180 calendar days prior to the proposed effective date of transfer of

ownership of any land which is part of the Facility (see also Permit Section 6.1.12). The permit modification request may be submitted as a Class 3 permit modification, or the Permittee may request a determination that the modification is a Class 1 or 2 pursuant to the requirements of 40 C.F.R. § 270.42(d). In addition to the requirements of 40 C.F.R. § 270.42, a permit modification request for transfer of land that is part of the Facility shall:

1. Identify the boundaries of the land proposed for transfer;
2. Describe the location and identity of any existing or prior SWMU, AOC, or hazardous waste management unit on the land proposed for transfer;
3. Describe any known or suspected presence of hazardous waste or hazardous constituents in soil, groundwater, or any other media at any depth within the boundaries of the land proposed for transfer;
4. Describe the status of any past, present, or planned investigations or remediation of any release of hazardous waste or hazardous constituents within the boundaries of the land proposed for transfer;
5. Include a revised map of the Facility;
6. Propose and describe all provisions necessary to ensure that the Permittee can meet the corrective action obligations, the HWA, and the Hazardous Waste Management Regulations (e.g., covenants, deed restrictions, proposed replacement of monitoring wells or enforceable agreements for access to monitoring wells on transferred land) [40 C.F.R. § 264.101; 40 C.F.R. §§ 270.30(l)(1), 270.32(b) and 270.42; and 20.4.1.901 NMAC]; and
7. Describe all measures taken to comply with § 120(h) of CERCLA, 42 U.S.C. § 9620(h).

1.14. PERMIT RENEWAL

If the Permittee wishes to continue the activities authorized by this Permit after the expiration date of this Permit, in accordance with 40 C.F.R. § 270.30(b), the Permittee must apply for and obtain a new permit. The Permittee may request renewal of this Permit by submitting an application for a new permit at least 180 calendar days before the expiration date of this Permit as required by 40 C.F.R. § 270.10(h).

1.15. CONTINUATION OF EXPIRING PERMIT

Pursuant to 40 C.F.R. § 270.51, if the Permittee has submitted a timely and complete application for renewal of this Permit as specified in 40 C.F.R. §§ 270.10, 270.11, 270.12 (as applicable), and §§ 270.13 through 270.29 (as applicable), this Permit shall remain in effect until the effective date of the new permit if, through no fault of the Permittee, the Department has not issued a new permit on or before the expiration date of this Permit. [40 C.F.R. § 270.51].

1.16. TRANSFER OF PERMIT

The Permittee may only transfer this Permit after providing notice to and receiving approval from the Department. The prospective new owner or operator must file a disclosure statement with the Department as specified at HWA, NMSA 1978, § 74-4-4.7. The Department may require modification or revocation and reissuance of this Permit in accordance with 40 C.F.R.

§ 270.40(b) and § 270.41(b)(2).

Before transferring ownership or operation of the Facility or any SWMUs or AOCs during its operating life, the Permittee shall notify the new owner or operator in writing of the requirements of 40 C.F.R. Part 264, and Part 270, and the HWA, pursuant to 40 C.F.R. § 264.12(c), and 40 C.F.R. § 270.30(l)(3), and shall provide the Department with a copy of this notice.

1.17. PERMIT REVIEW

The Department may review this Permit at any time after the effective date of Permit issuance, and may modify this Permit as necessary pursuant to § 74-4-4.2 of the HWA and 40 C.F.R. §§ 270.41, 270.50(b), and 270.50(d). Such modification shall not extend the effective term of this Permit as specified in requirements of Permit Section 1.10.

1.18. NEED TO HALT OR REDUCE ACTIVITY NOT A DEFENSE

It shall not be a defense for the Permittee in an enforcement action that it would have been necessary for the Permittee to halt or reduce the permitted activities in order to maintain compliance with the terms of this Permit. [40 C.F.R. § 270.30(c)].

1.19. DUTY TO MITIGATE

In the event of noncompliance with this Permit, the Permittee shall take all reasonable steps to minimize releases to the environment, and shall carry out such measures as are reasonable to prevent significant adverse impacts on human health or the environment. [40 C.F.R. § 270.30(d)].

1.20. PROPER OPERATION AND MAINTENANCE

The Permittee shall at all times properly operate and maintain all facilities and systems of treatment and control (and related appurtenances) which are installed or used by the Permittee to achieve compliance with the requirements of this Permit. Proper operation and maintenance includes effective performance, adequate funding, adequate operator staffing and training, and adequate laboratory and process controls, including appropriate quality assurance/quality control procedures. This requirement includes the operation of back-up or auxiliary facilities or similar systems when necessary to achieve compliance with the requirements of this Permit. [40 C.F.R. § 270.30(e)].

1.21. DUTY TO PROVIDE INFORMATION

The Permittee shall furnish to the Department, within a reasonable time as specified by the Department, any relevant information which the Department may request to determine whether cause exists for modifying, revoking, reissuing, or terminating this Permit, or to determine compliance with this Permit. The Permittee shall also furnish to the Department, upon request, copies of records required to be kept by this Permit. [40 C.F.R. § 264.74(a), and 40 C.F.R. § 270.30(h)].

The Permit requirements of this Section (1.21) shall not be construed to limit, in any manner, the Department's authority under the HWA, NMSA 1978, § 74-4-4.3, or RCRA § 3007(a), 40 C.F.R. § 270.30(i), or any other applicable law or regulation.

1.22. INSPECTION AND ENTRY

In accordance with 40 C.F.R. § 270.30(i), the Permittee shall allow the Department, or authorized representatives, upon the presentation of credentials and other documents as may be required by law, to:

1. Enter at reasonable times into the Permittee's premises where the regulated facility or activity is located or conducted, or where records must be kept under the requirements of this Permit;
2. Have access to and copy, at reasonable times, any records that must be kept under the requirements of this Permit;
3. Inspect at reasonable times the Facility, equipment (including monitoring and control equipment), practices, or operations regulated or required under this Permit; and
4. Sample or monitor at reasonable times, for the purposes of assuring Permit compliance or as otherwise authorized by RCRA or HWA, any substances or parameters at any location, including waste, air, soil, sediment, surface water, and groundwater at the Facility.

The Permit requirements of this Section (1.22) shall not be construed to limit, in any manner, the Department's authority under the HWA, NMSA 1978, § 74-4-4.3, or RCRA, § 3007(a), 40 C.F.R. § 270.30(i), or any other applicable law or regulation.

1.23. MONITORING AND RECORDS

1.23.1. Representative Sampling

The Permittee shall take representative samples and measurements in accordance with the procedures in this Permit and 40 C.F.R. § 264.13(a)(1). All samples and measurements taken by the Permittee under any requirement in this Permit shall be representative of the waste, media, equipment or structure being sampled. This includes, but is not limited to, sampling and analysis of waste, treatment residues, soil, groundwater, spills, and includes sampling of media for purposes of conducting corrective action pursuant to Part 6 of this Permit. To obtain a representative sample of a waste stream the Permittee shall use an appropriate method from Appendix I of 40 C.F.R. Part 261 or an equivalent method approved by the Department. Laboratory methods must be those specified in the current edition of the EPA publication *Test Methods for Evaluating Solid Waste Physical/Chemical Methods SW-846*, or an equivalent method, as specified in the *Waste Analysis Plan* in Permit Attachment C. [40 C.F.R. § 270.30(j)(1)]. At a minimum, these analyses shall contain all of the information which must be known to treat, store, or dispose of the wastes properly. [40 C.F.R § 264.73(b)].

1.23.1.1. Monitoring Records Contents

Monitoring records, including those required for corrective action under Part 6 of this Permit, shall contain:

1. The dates, exact place, and times of sampling or measurements;
2. The names of the individuals who performed the sampling or measurements;
3. The name and address of the laboratory that performed the analysis;

4. The date on which analyses were performed;
5. The analytical techniques or methods used;
6. The results of such analyses including units of measurement;
7. Calibration data;
8. Quality control data;
9. Detection limits;
10. Data qualifiers; and
11. Data validation results.

[40 C.F.R. § 270.30(j)(3)].

1.23.2. Operating Record

The Permittee shall maintain a written Operating Record at the EOD Shop and the EM Branch Office as required by 40 C.F.R. § 264.73. The Permittee shall maintain all records in the Operating Record until completion of closure and, if necessary, post closure care, unless specified otherwise in this Permit. The retention period for all records is extended automatically during the course of any unresolved enforcement action regarding the Facility, or as may be requested by the Department, as required by 40 C.F.R. § 264.74(b). The Permittee shall make the Operating Record available at all reasonable times for inspection by any officer, employee, or authorized representative of the Department or EPA, upon request, or shall furnish copies of documents within the record, as required by 40 C.F.R. § 264.74.

The following operating records and documents shall be maintained at the Facility EOD Shop:

1. A current copy of this Permit including the closure plan (Permit Attachment H);
2. A written Operating Record that describes:
    a. The type and quantity of each hazardous waste received and treated at the OD Unit, and the date the hazardous waste was treated,
    b. The location of hazardous waste at the OD Unit,
    c. The method(s) of treatment of hazardous waste,
    d. Training records for EOD personnel,
    e. Written inspection log and schedule;
3. Training records for former EOD employees (maintained for a minimum of three years from the date the employee last worked at the OD Unit);
4. Current training records (including refresher seminars) for current EOD employees;
5. Inspection logs for the last three years;
6. A copy of the Contingency Plan;
7. A copy of the Waste Analysis Plan;
8. The name(s), address(es), and telephone number(s) of the Emergency Coordinator(s) and all such information for persons designated as alternate Emergency Coordinators;
9. A list of all equipment listed in Permit Attachment F, as required by 40 C.F.R. Part 264, Subpart C; and

10. A current file of pertinent material safety data sheets and records of all wastes that have been treated at the OD Unit.

The following operating records and documents shall be maintained at the Facility EM Branch Office:

1. Treatment facility notices and certifications;
2. Storage facility notices and certifications;
3. Air emissions records;
4. Correspondence and other documents from government agencies;
5. Notices to off-site generators;
6. Waste minimization certification.
7. Manifest documents for hazardous waste shipped off-site;
8. A copy of the Hazardous Waste Biennial Report;
9. Copies of unmanifested waste reports;
10. Copy of the Contingency Plan for the OD Unit and any revisions to the plan;
11. Waste characterization information and data;
12. A copy of the Waste Analysis Plan;
13. Reports of any incidents that required activation of the Contingency Plan;
14. Records of soil and groundwater monitoring, testing, analytical data, and any corrective actions taken to prevent or mitigate releases of hazardous waste or hazardous constituents to the environment;
15. All documents related to corrective action including, but not limited to, work plans, reports, and sampling and analysis plans;
16. The Permit Application;
17. Inspection Plan set forth in Permit Attachment E;
18. Closure Plan set forth in Permit Attachment H, as required by 40 C.F.R. § 264.112(a), and this Permit; and
19. All monitoring information, including all calibration and maintenance records and all original strip chart recordings for continuous monitoring instrumentation;

A current copy of the Contingency Plan shall also be maintained at the EOD Range personnel bunker, and the KAFB Command Post.

1.24. REPORTING PLANNED CHANGES

The Permittee shall give advance notice to the Department as soon as possible, but no less than one week in advance of any planned physical alterations or additions to the OD Unit. [40 C.F.R. § 270.30(l)(1)]. Some alterations or additions may be subject to the requirements of Permit Section 1.12.

1.25. REPORTING ANTICIPATED NONCOMPLIANCE

The Permittee shall give advance notice to the Department as soon as possible, but no less than

one week in advance of any planned physical alterations or additions to the OD Unit or of any activities, which may result in noncompliance with the requirements of this Permit. [40 C.F.R. § 270.30(l)(2)]. Some alterations or additions may be subject to the requirements of Permit Section 1.12.

1.26. CERTIFICATION OF CONSTRUCTION OR MODIFICATION

If the OD Unit is modified, the Permittee shall not treat or analyze hazardous waste in the modified portion of the OD Unit, except as provided in 40 C.F.R. § 270.42, unless the following requirements have been satisfied:

1. The Permittee has submitted to the Department, by certified mail or hand delivery, a letter signed by the Permittee and an independent professional engineer registered in New Mexico stating that the modification meets the requirements of this Permit; and
2. The Department has:
    a. Inspected the modified or newly constructed portion of the OD Unit and finds it meets the requirements of this Permit; or
    b. Waived the inspection or, within 15 calendar days from the date of receipt of the letter required by paragraph 1, has not notified the Permittee of its intent to inspect.

[40 C.F.R. § 270.30(1)(2)].

1.27. TWENTY-FOUR HOUR AND SUBSEQUENT REPORTING

1. **Oral Report** - The Permittee shall report to the Department any noncompliance which may endanger human health or the environment. Any such information shall be reported orally within 24 hours from the time the Permittee becomes aware of the circumstances. The oral report shall include:
    a. Information concerning release of any hazardous waste or constituents that may cause an endangerment to public drinking water supplies; and
    b. Any information about a release or discharge of hazardous waste or hazardous constituent or of a fire or explosion which could threaten the environment or human health including:
        i. A description of the noncompliance and its cause;
        ii. The name, address, and telephone number of the owner, operator, and name of responsible official;
        iii. The name, address, and telephone number of the Facility;
        iv. The period of the occurrence including exact date and time and, if the noncompliance has not been corrected, the anticipated time it is expected to continue;
        v. The name and quantity of materials involved;
        vi. The extent of injuries, if any;

vii. An assessment of actual or potential hazards to the environment and human health at and outside the Facility, where this is applicable;

viii. The estimated quantity and disposition of recovered material that resulted from the incident; and

ix. The steps taken or planned to reduce, eliminate, and prevent recurrence of the noncompliance.

[40 C.F.R. § 270.30(l)(6)(i and ii)].

2. **Non-Compliance Written Report** - The Permittee shall also submit a written report within five calendar days from the time the Permittee becomes aware of the circumstance of any noncompliance. The written report shall contain the information required for an oral report under this Permit Section (1.27).

The Department may extend the time for submitting the written report up to 15 calendar days upon written request by the Permittee prior to the end of the five calendar days allowed under Permit Section 1.27.2. [40 C.F.R. § 270.30(l)(6)(iii)].

1.28. REPORTS REQUIRED BY THE CONTINGENCY PLAN

If any incident requires implementation of the Contingency Plan provided in Permit Attachment F, the Permittee shall comply with the reporting requirements of 40 C.F.R. § 264.56(d).

1.29. CORRECTIVE ACTION

Corrective action required pursuant to 40 C.F.R. § 264.101, shall continue under this Permit for any period necessary to comply with the requirements specified in Part 6 of this Permit.

1.30. ADMISSIBILITY OF DATA

The Permittee waives any objection to the admissibility as evidence of any data required by this Permit in any administrative or judicial action to enforce a condition of this Permit.

1.31. OTHER NONCOMPLIANCE

The Permittee shall report all instances of noncompliance not otherwise required to be reported under this Permit at the time monitoring reports are submitted. The reports shall contain the information listed in Permit Section 1.27.1. [40 C.F.R. § 270.30(l)(10)].

1.32. SIGNATORY AND CERTIFICATION REQUIREMENTS

The Permittee shall sign and certify all applications, reports, or other information submitted to the Department or required by this Permit, in accordance with 40 C.F.R. § 270.11(a)(3).

The Permittee shall provide, upon request by the Department, notification and certification statements associated with the treatment of hazardous wastes in compliance with 40 C.F.R. § 268.7 and § 268.9.

1.33. MONITORING REPORTS

The Permittee shall submit Monitoring Reports to the Department as specified in the

requirements of Permit Sections 1.23 and 1.36. [40 C.F.R. § 270.30(l)(4)].

1.34. COMPLIANCE SCHEDULES

Reports of compliance or noncompliance with this Permit, any progress reports on activities conducted under this Permit, and interim and final requirements contained in any compliance schedule of this Permit shall be submitted to the Department no later than 14 calendar days following each schedule date set forth in this Permit. [40 C.F.R. § 270.30(l)(5)].

1.35. INFORMATION REPOSITORY

Upon written notification, the Department may require the Permittee to establish and maintain an information repository at any time, based on the factors set forth in 40 C.F.R. § 124.33(b) and 40 C.F.R. § 270.30(m). The information repository shall be governed by the provisions in 40 C.F.R. § 124.33(c).

1.36. REPORTS, NOTIFICATIONS, AND INFORMATION SUBMITTALS TO THE DEPARTMENT

The Permittee shall submit to the Department by certified mail or hand delivery all reports, notifications, or other submittals that are required by this Permit to be sent or given to the Department, at the following address:

Chief
Hazardous Waste Bureau
New Mexico Environment Department
2905 Rodeo Park Drive East, Building 1
Santa Fe, New Mexico 87505-6303

Telephone Number: (505) 476-6000
Facsimile Number: (505) 476-6030

Two hard (paper) copies and one electronic copy of these plans, reports, notifications, or other submissions shall be submitted to the Department.

1.37. POINTS OF CONTACT FOR THE FACILITY

Points of contact for the Facility during the term of the Permit are identified below.

Base Commander
377 ABW/CC
2000 Wyoming Blvd. SE
Kirtland AFB, NM 87117-5606

and

Director
Environmental Management
377 MSG/CEANR
2050 Wyoming Blvd. SE

Kirtland AFB, NM 87117-5270

All reports required by the permit shall be signed by a principal executive officer or their duly authorized representatives in accordance with 40 C.F.R. § 270.11(b).

The Permittee shall inform the Department in writing of changes in its principal executive officers (or their duly authorized representatives) within 30 days of the changes, and Emergency Coordinators and their telephone numbers and addresses within 15 calendar days of the changes. Changes to the principal executive officers (or their duly authorized representatives) are not permit modifications. Changes in name, address, or phone number for Emergency Coordinators are Class 1 permit modifications under 40 C.F.R § 270.42.

1.38. WORK PLANS AND OTHER DELIVERABLE DOCUMENTS

All documents that the Permittee prepares under the terms of this Permit and submits to the Department that are subject to the requirements of 20.4.2 NMAC shall be subject to the procedures set forth therein. Documents requiring Department approval that are not subject to the requirements of 20.4.2 NMAC may be reviewed and approved, approved with modifications or directions, disapproved, denied, or rejected by the Department.

Upon the Department's written approval, all submittals and associated schedules shall become enforceable under this Permit in accordance with the terms of the Department's written approval, and such documents as approved, shall control over any contrary or conflicting requirements of this Permit.

This provision does not affect any public process that is otherwise required by this Permit, the HWA, or its implementing regulations.

Failure to submit any of the work plans, schedules, reports, and other deliverable documents that the Permittee is required to prepare under this Permit in substantial compliance with this Permit, and according to the schedules or deadlines in this Permit, may subject the Permittee to enforcement action under § 74-4-10 of the HWA, or other applicable provisions of law, which may include fines, civil penalties, or suspension or revocation of the Permit.

Any noncompliance with approved plans and schedules shall be noncompliance with this Permit. The Department may grant extensions of written requests for due dates for submittals of reports and other deliverables, provided that the Permittee includes a written justification showing good cause and a proposed schedule for submittal.

1.39. CONFIDENTIAL INFORMATION

The Permittees may claim that any information required by this Permit or otherwise submitted to the Department is confidential pursuant to the provisions of §§ 74-4-4.3(D) and (F) of the HWA and 40 CFR §§ 260.2 and 270.12.

Figure 1-1

Figure 1-2

PERMIT PART 2: GENERAL FACILITY REQUIREMENTS

2.0 INTRODUCTION

Permit Part 2 contains general requirements applicable to the Facility.

2.1. SECURITY

In order to prevent the unknowing entry and to minimize the possibility of unauthorized entry of persons into the OD Unit, the Permittee shall comply with the security provisions and procedures described in this Permit Section (2.1), and in Permit Attachment A, and as required by 40 C.F.R. § 264.14.

The entrance gate to the EOD Range (see Figure 2-1, this Permit Part) shall be locked except when EOD personnel enter the area for inspections or for treatment operations, or for purposes of conducting repairs or maintenance to the OD Unit, or for conducting military training.

Warning signs shall be posted at the entrance gate and at a maximum spacing of 300-foot intervals along the fence. The signs shall be legible from a distance of 25 feet and shall be large enough to be seen from any approach toward the EOD Range. The warning signs shall state “Danger--Explosive Disposal Range--Keep Out” in English and Spanish. A sign indicating "No Smoking" in English and Spanish shall be placed conspicuously at the entrance to the EOD Range.

During treatment operations, the gate shall remain open in case emergency vehicle access is required; however, unauthorized entry must be prevented.

2.2. INSPECTIONS

The Permittee shall inspect the OD Unit for malfunctions and deterioration, operator errors, and discharges which may cause a release of hazardous waste or hazardous constituents into the environment or a threat to human health, as required by 40 C.F.R. § 264.15, and according to the Inspection Plan (Permit Attachment E). The Permittee shall remedy any such deterioration or malfunction, operator error, or discharge, as required by 40 C.F.R. § 264.15(c). Inspections shall be conducted often enough to identify problems in time to correct them before they harm human health or the environment. The Permittee shall maintain records of all such inspections in the Operating Record, as required by 40 C.F.R. § 264.15(d).

Pursuant to the miscellaneous unit requirements found in 40 C.F.R. Part 264 Subpart X, inspections must meet the inspection requirements in 40 C.F.R. § 264.15 and the equipment testing and maintenance requirements in 40 C.F.R. § 264.33, as well as any additional requirements needed to protect human health and the environment. The OD Unit inspection procedures for communication and fire-protection equipment shall include provisions for equipment testing and maintenance to ensure that the equipment will function properly in an emergency.

If an inspection of the OD Unit reveals that a non-emergency problem has developed, remedial action, including repairs, maintenance, and replacement, shall be completed as soon as practicable to protect human health and the environment and to preclude further damage and to reduce the need for emergency repairs. If a hazard appears imminent or if a hazardous situation

already exists, operations at the OD Unit shall stop, and remedial action shall be initiated immediately. These measures to implement remedial actions shall satisfy the requirements of 40 C.F.R. § 264.15(c). Any remedial action taken pursuant to an inspection shall be noted on the inspection log in accordance with 40 C.F.R. § 264.15(d).

In accordance with 40 C.F.R. § 264.15(b)(1), a written schedule shall be followed at the OD Unit to routinely inspect for problems or potential problems with safety and emergency equipment, security devices, and operating and other equipment for preventing, detecting, or responding to hazards to the environment or human health. The Permittee shall use an inspection log based on the schedule shown in Table E-1 to document inspection of all items listed on Table E-1**.** The inspection logs shall include the date and time of the inspection, the name of the inspector, a notation of the observations made, and the date and nature of any repairs or other remedial actions taken.

2.3. PERSONNEL TRAINING

The Permittee shall follow the personnel training procedures specified in Permit Attachment G. [40 C.F.R. § 264.16].

The Permittee shall comply with 40 C.F.R. § 264.16(d) by maintaining the following documentation at the Facility: a job title for each position and the name of each employee filling each position; a written description for each position including the requisite skill, education, or other qualifications, and duties; and a written description of introductory and continuing training for each person filling each position.

2.4. PREPAREDNESS AND PREVENTION

2.4.1. Required Equipment

As required by 40 C.F.R. § 264.32, the OD Unit shall be equipped with or personnel shall have access to adequate emergency equipment, which includes an internal communication equipment or alarm system, telephone or two-way radio, fire extinguishers, and fire control, spill control, and decontamination equipment. The emergency equipment available for use at the OD Unit is summarized in Tables F-2 and F-3 in the Contingency Plan under Permit Attachment F.

An internal communications or alarm system capable of providing immediate emergency instructions (voice or signal) to Facility personnel shall be available on-site. In addition, a telephone or two-way radio capable of summoning emergency assistance shall also be available on-site. Treatment activities at the OD Unit shall be conducted only after notifying the KAFB Command Post (KCP).

All vehicles used at the OD Unit shall carry a portable fire extinguisher and a shovel. At least two portable fire extinguishers and at least two shovels shall also be kept at the EOD personnel bunker for response to fires or spills.

Appropriate personal protective equipment shall be available for use at the OD Unit to clean up spills should any occur.

Eyewash solutions shall be included in the first-aid kits carried in the vehicles used at the OD Unit.

The KAFB Fire Department shall be on call during treatment operations to provide fire fighters, tanker trucks equipped with water at adequate volume and pressure to extinguish fires at the OD Unit, and other fire-fighting equipment, if any fires should occur.

2.4.2. Testing and Maintenance of Equipment

The Permittee shall test and maintain the equipment specified in the Contingency Plan in Permit Attachment F, as necessary, to assure its proper operation in time of emergency, as required by 40 C.F.R. § 264.33.

All communications systems, fire protection equipment, and decontamination equipment associated with the OD Unit shall, at a minimum, be tested and maintained according to the inspection schedule set forth in Permit Attachment E. Damaged or defective emergency equipment, communications equipment, fire protection equipment, and decontamination equipment shall be repaired or replaced immediately upon discovery.

2.4.3. Required Aisle Space

At a minimum, the Permittee shall maintain enough aisle space to allow the unobstructed movement of personnel, fire protection equipment, spill control equipment, and decontamination equipment to any area of the OD Unit, as required by 40 C.F.R. § 264.35.

2.4.4. Arrangements with Local Authorities

The Permittee shall attempt to enter into coordination agreements for emergency response, i.e., medical, ambulance, and fire protection services, with the City of Albuquerque Fire Department, the Bernalillo County Fire Department, the Albuquerque Police Department, and Albuquerque Regional Medical Center, as described in the Contingency Plan (Permit Attachment F), and as required by 40 C.F.R. § 264.37. Copies of all such agreements and documentation showing any unsuccessful attempts to enter into such an agreement shall be maintained at the Facility EM Branch Office as part of the Operating Record.

The Permittee shall provide the Chiefs of the City of Albuquerque Fire Department (AFD) and the Bernalillo County Fire Department (BCFD) with information that would ensure that emergency response personnel are at all times familiar with the potential hazards in performing their duties associated with the hazardous wastes at OD Unit. This information shall at a minimum include:

1. Waste types, *e.g*., ignitable, reactive, corrosive;
2. Waste names that identify principle hazardous chemical constituents;
3. Approximate quantities of each waste type; and
4. General location of wastes types.

The Permittee shall annually sign a certification stating that the AFD and BCFD have been provided with this information. These certification statements shall be maintained in the Facility EOD Shop as part of the Operating Record.

2.4.5. Preventive Procedures, Structures, and Equipment

Descriptions of the preventive procedures, structures, and equipment at the OD Unit are

presented below. Adherence to the procedures and proper use of the structures and equipment shall be done to prevent hazards associated with unloading operations, prevent runoff from escaping hazardous waste management areas, prevent contamination of water supplies, mitigate the effects of equipment failures and power outages, prevent undue exposure of personnel to hazardous waste, prevent releases of hazardous wastes or hazardous constituents to soil, sediment, surface water, and groundwater, and prevent unacceptable releases of contaminants to the atmosphere.

Only properly trained personnel shall transport waste to the OD Unit for treatment. Unloading of the waste may be performed only by EOD Technicians/Specialists either manually or with appropriate heavy equipment, such as forklifts. At the OD Unit, vehicles shall park adjacent to the pit where the waste is to be treated, and the waste shall then be unloaded and placed into the pit. Additionally, personnel involved in waste management at the OD Unit shall be knowledgeable about the physical and chemical properties of the waste managed and shall take all precautions, as necessary, to ensure that wastes are managed safely.

Engineering and operational controls shall ensure that run-on and run-off are minimized to protect human health and the environment. A two-foot high earthen berm shall surround the OD Unit to prevent run-off from the OD Unit from flowing to other areas outside of the treatment area.

Because no electrical power is supplied to the EOD Range, equipment used at the OD Unit for unloading or placement of wastes (i.e., forklifts) is self-contained. If such heavy equipment experiences failure, the equipment shall be repaired or replacement equipment shall be obtained immediately.

Personnel exposure shall be minimized by restricting the handling of hazardous waste. EOD Technicians/Specialists shall wear appropriate protective clothing, which may include safety glasses. In case of exposure to the hazardous waste, first aid equipment, which includes eyewash solutions, shall be readily available.

Operations at the OD Unit shall be conducted in a manner to prevent any releases that may have adverse effects on human health or the environment due to migration of waste constituents in the air as required under 40 C.F. R. § 264.601(c). Treatment at the OD Unit shall be performed under the requirements in the applicable permit obtained from the City of Albuquerque Environmental Health Department Air Pollution Control Division and under the requirements of this Permit.

The Permittee shall clear and keep clear, at all times, all combustible materials, including wood, grass, brush, and trees located within 200 feet of the OD Unit. The cleared area shall be bladed routinely to minimize fire danger, and a series of at least three concentric firebreaks (at least 20-feet wide each) shall be maintained.

2.5. CONTINGENCY PLAN

2.5.1. Implementation of the Plan

The Permittee shall immediately implement the Contingency Plan contained in Permit Attachment F, whenever there is a release of hazardous waste or hazardous constituents or there is a fire or explosion that could threaten human health or the environment, as required by

40 C.F.R. § 264.51(b).

2.5.2. Copies of the Plan

The Permittee shall maintain copies of the current Contingency Plan and all revisions and amendments to the plan at the EOD Shop and at the EOD Range bunker as required by 40 C.F.R. § 264.53(a). The Permittee shall provide copies of the current Contingency Plan and all revisions and amendments to the plan to the Department and to each entity with which the Permittee has an emergency agreement pursuant to the Permit requirements of Permit Section 2.4.4, as required by
40 C.F.R. § 264.53(b).

2.5.3. Amendments to the Plan

The Permittee shall review at least annually and immediately amend, if necessary, the Contingency Plan, as required by 40 C.F.R. § 264.54.

2.5.4. Emergency Coordinator

Either the Emergency Coordinator (EC) or an alternate EC, as specified in Permit Attachment F, shall be available at all times in case of an emergency. The EC and alternate EC shall be thoroughly familiar with the Contingency Plan and shall have the authority to commit the resources needed to implement the Contingency Plan. [40 C.F.R. § 264.55]. In the event of an imminent or actual emergency, the EC shall activate the internal emergency alarm or emergency communication device, notify the appropriate State or local government agencies and implement other procedures, as required by 40 C.F.R. § 264.56, and as described in Permit Attachment F (*Contingency Plan*).

The Permittee shall submit to the Department a revised Table F-1, Permit Attachment F, within 30 days of the issuance of this Permit. The revised table shall contain the following emergency coordinator contact information in compliance with 40 C.F.R. 264.52(d): names, office addresses, and the home and office telephone numbers of all persons qualified to act as an EC. When more than one person is listed, one must be named as the primary EC and the others must be listed in the order in which they will assume responsibility as alternates. The Permittee shall not treat any hazardous waste at the OD Unit until this Permit requirement is fully satisfied as determined by the Department.

2.6. WASTE CHARACTERIZATION

2.6.1. General Requirements

The Permittee shall not treat any hazardous waste at the OD Unit unless the hazardous waste has been characterized pursuant to the requirements of this Permit. [40 C.F.R. Part 264 and 40 C.F.R. Part 268]. The Permittee shall characterize waste as required under the Permit requirements of Permit Section 2.6.3 by sampling and analysis or by use of acceptable knowledge (AK) of the process that generated the waste, as appropriate.

2.6.2. Characterization of Waste by Acceptable Knowledge

"Acceptable Knowledge" means generator knowledge of the process that generated a waste,

including but not limited to process knowledge, waste analysis data from generators of similar wastes, and facility records of analysis that is used by a generator to characterize wastes.

Acceptable knowledge may be used as the sole method to characterize waste only when the waste is generated from a process that is consistent and well-documented. Documentation of the process must include information that meets all characterization requirements of this Permit, including the requirement to determine the status of the waste for the purposes of the RCRA Land Disposal Restrictions (LDRs) as specified in the Permit requirements of Permit Section 2.6.3.2.

The Permittee shall maintain documentation used to support acceptable knowledge of a waste stream in the Operating Record in accordance with 40 C.F.R. § 268.7(a)(6) and 40 C.F.R. § 264.73(b)(3). This documentation must be readily retrievable upon request during a Department or United States Environmental Protection Agency (EPA) inspection, and must be maintained in the Operating Record for a minimum of three years from the date the waste was last managed at the Facility. For each waste stream characterized by acceptable knowledge, the Permittee shall maintain in the Operating Record, at a minimum, the following process knowledge information.

1. The location where the waste stream is generated,
2. The waste stream volume and time period of generation,
3. A description of the waste generating process, and
4. All material inputs or other information that identifies the chemical content, physical properties and physical form of the waste stream.

2.6.3. Characterization by Sampling and Analysis

2.6.3.1. Sampling

The Permittee shall establish and utilize a Sampling and Analysis Plan (SAP) for each waste stream for which sampling is required. The SAP shall identify the appropriate sampling methods to characterize the waste stream in accordance with the requirements of Permit Section 2.6.1. The Permittee shall maintain the SAP and all documents showing compliance with the SAP, in the Operating Record for a minimum of three years from the date the waste was last managed at the Facility.

The SAP shall identify the sample container types, preservation techniques, and holding times for each waste sampled. The SAP must conform to the most recent version of EPA's publication *Test Methods for Evaluating Solid Waste, Physical/Chemical Methods, (Publication SW-846) Chapter 9, Sampling Plan.* The SAP must ensure collection of a representative sample of waste by means that preserve its original physical form and composition, and the SAP shall ensure that sample collection meets the quality assurance objectives required in Section 1.3 of Permit Attachment D. The number of samples of each waste shall be sufficient to demonstrate that the Upper Confidence Limit of the mean (UCL), based on at least a 95% confidence level, is less than the applicable regulatory threshold.

2.6.3.2. Laboratory Analysis

The SAP shall identify the appropriate laboratory analytical methods to characterize the waste

stream in accordance with the Permit requirements of Permit Section 2.6.1. The Permittee shall perform or obtain laboratory analysis of wastes in accordance with the requirements of this Permit, and the *Waste Analysis Plan* (WAP) contained in Permit Attachment C. The SAP shall include the appropriate laboratory analytical methods, detection limits, and reporting limits. The Permittee shall maintain the SAP in the Operating Record.

To use any alternative analytical method, the Permittee must submit to the Department a petition for approval of such method in accordance with 40 C.F.R. § 260.21.

If the Permittee uses an independent contract laboratory to perform analyses, the Permittee shall inform the laboratory in writing that it must operate under the waste analysis requirements set forth in this Permit.

When using laboratory analysis as part of a hazardous waste determination, the Permittee shall require the laboratory to report concentrations of *all* hazardous constituents that the analytical test method is capable of measuring as identified in analytical method specific tables in the most current version of the EPA's *Test Method for Evaluating Solid Wastes (SW-846), Chapter 2*. When using laboratory analysis to demonstrate that the waste meets its applicable Land Disposal Restriction (LDR) treatment standard concentrations (specified at 40 C.F.R. § 268.40), the Permittee shall demonstrate that the analytical method detection limit is not higher than the treatment standard for each hazardous constituent that can reasonably be expected to be present.

2.6.3.3. Quality Assurance/Quality Control (QA/QC)

The Permittee shall perform and record all waste characterization QA/QC procedures in accordance with SW-846 for the data used to support waste characterizations required under this Permit. The precision, accuracy, completeness, comparability, and representativeness of the analytical data shall be addressed. The Permittee shall maintain a record of all QA/QC determinations in a manner traceable to specific wastes in the Operating Record.

When performing waste sampling required under this Permit, the Permittee shall use the applicable sample collection QA/QC procedures specified in EPA's *Field QA and QC Requirements Test Methods for Evaluating Solid Waste, Physical/Chemical Methods, (Publication SW-846), Chapter 1, Section 3.4,* including, but not limited to those dealing with equipment preparation and field equipment maintenance, calibration, and cleaning. The SAP shall identify and the Permittee shall collect the appropriate number of quality control samples associated with each waste sampled.

When performing laboratory analysis required under this Permit, method blanks, laboratory duplicates, and other laboratory control samples shall be analyzed to assess the quality of the data resulting from laboratory analytical programs. The results of both field and laboratory quality control data shall be reported to the Department with the results of waste characterization samples.

2.6.4. Re-evaluation of Characterization Information

The Permittee shall re-evaluate the characterization of routinely generated wastes to ensure that the characterization remains accurate and up to date for subsequent batches of waste, in compliance with 40 C.F.R. § 264.13(b)(4). The results of the re-evaluation shall be thoroughly documented and placed in the Operating Record.

The Permittee shall perform re-evaluation of a waste in accordance with these minimum requirements:

1. Re-evaluation shall be performed at least annually to verify the accuracy of initial characterization. For wastes originally characterized through sampling and analysis, re-evaluation shall be achieved using the same sampling and analysis methods used in the initial analysis unless otherwise required by the Department. For wastes characterized through acceptable knowledge of waste generation processes, re-evaluation may be achieved through a review of that information supporting acceptable knowledge.
2. Re-evaluation shall be performed whenever there is a change in waste-generating processes. Any information that indicates a change in the process that generates the waste and may affect the waste shall cause the waste to be re-characterized.
3. Re-evaluation shall be performed when the Permittee is notified by an off-site facility receiving hazardous waste from the Facility that the characterization of the waste received at the receiving facility does not match a pre-approved waste analysis certification or accompanying waste manifest or shipping paper. The Permittee shall notify the Department within 24 hours of its receipt of such a discrepancy notice.

2.6.5. Characterization of Specific Wastes

2.6.5.1. Waste Received From Off-Site

The Permittee shall obtain a detailed chemical and physical analysis of any hazardous waste received at the Facility from an off-site facility, in compliance with 40 C.F.R. § 264.13(c). This characterization may be in the form of documented acceptable knowledge if all applicable waste characterization requirements specified in this Permit are met and documented. This includes, but is not limited to, identification of underlying hazardous constituents.

The Permittee shall physically examine the shipment of waste from the off-site facility at the time of acceptance for correct documentation, including appropriate waste container identification and labeling. The Permittee shall not accept at the Facility a hazardous waste shipment from an off-site facility without Uniform Hazardous Waste Manifests and LDR Notification Forms, as applicable. If discrepancies are found for waste shipped to the Facility, the Permittee shall immediately return the waste to the generator.

2.6.5.2. Waste to Be Shipped Off-Site

Prior to shipping any hazardous waste off-site, the Permittee shall characterize the waste as necessary for treatment and disposal and to ensure proper packaging, labeling, marking, and placarding in accordance with the Department of Transportation regulations at 49 C.F.R. Parts 172, 173, 178, and 179.

2.6.5.3. Remediation Waste

The Permittee shall characterize remediation waste (as defined at 40 C.F.R. § 260.10) in compliance with all waste characterization requirements in this Permit. The characterization information shall be included in the Operating Record, shall be maintained as required under Permit Section 1.23.2, and include at a minimum: a hazardous waste determination, an identification of all applicable hazardous waste numbers, a LDR status determination, the origin

of the waste and how it was subsequently managed, the time and circumstances of the release that created the waste, and any investigation or other reports describing the release.

2.6.5.4. Additional Characterization Requirements for Containerized Waste

The Permittee shall characterize hazardous wastes placed inside containers, including over packed drums, to ensure that the wastes do not react dangerously with, decompose, or ignite sorbent material in the container, in compliance with 40 C.F.R. § 264.316(c), and to ensure that the wastes are not incompatible or reactive with one another, in compliance with 40 C.F.R. § 264.316(d) and § 264.316(e). The Permittee shall characterize laboratory packs, if they are intended to undergo the alternative treatment standards at 40 C.F.R. § 268.42(c), to determine whether they contain any prohibited hazardous wastes.

2.6.6. Records of Waste Characterization

The Permittee shall record and maintain in the Operating Record the results of waste analyses and waste determinations performed by acceptable knowledge, and sampling and analysis, as specified in this Permit Part (2) in compliance with 40 C.F.R. §§ 264.73(b)(3), (b)(7), (b)(10), (b)(15), and (b)(16), and copies of notices and certifications required in Permit Sections 2.7.2.1 and 2.7.2.2. The requirement to record and maintain in the Operating Record the results of waste analyses, waste determinations, and copies of notices and certifications applies to solid wastes even when the hazardous characteristic is removed prior to disposal, or when waste is excluded from the definition of hazardous or solid waste under 40 C.F.R. § 261.2 through § 261.6, or exempted from Subtitle C regulation, subsequent to the point of generation. [40 C.F.R. § 268.7(a)(8)].

2.7. WASTE MANAGEMENT

2.7.1. Authorized Wastes and Waste Sources

2.7.1.1. Permitted Waste

The Permittee shall not treat at the OD Unit any wastes not included in the *List of Authorized Hazardous Wastes* under Permit Attachment B.

2.7.1.2. Prohibited Waste

The Permittee shall not treat any radioactive or mixed waste, any waste containing polychlorinated biphenyls, or any other wastes not listed in the *List of Authorized Hazardous Wastes* contained in Permit Attachment B. The Permittee shall not treat hazardous wastes by any other means not authorized by this Permit.

2.7.1.3. Waste from Foreign Sources

The Permittee shall not accept hazardous wastes from a foreign source (a hazardous waste source outside the United States).

2.7.1.4. Waste from Off-site Sources

The Permittee shall receive from off-site sources only hazardous waste that are to be treated at the OD Unit and only if such receipt is in compliance with the requirements of this Permit. The

Permittee shall receive for treatment at the OD Unit only the hazardous wastes listed in Permit Attachment B (*List of Authorized Hazardous Wastes*) and only from the sources listed in Table 2-1 of this Permit Part.

2.7.1.5. Incompatible Wastes

Incompatible wastes shall not be managed at the OD Unit.

2.7.2. Provisions for Complying with LDR Requirements

The Permittee shall comply with the restrictions for land disposal at 40 C.F.R. Part 268.

The Permittee shall not arrange for the disposal at an off-site land disposal facility any hazardous waste restricted from land disposal under 40 C.F.R. Part 268, unless:

1. The waste meets treatment standards specified in 40 C.F.R. § 268.40, § 268.41, § 268.42, or § 268.43; or
2. A variance from the treatment standards has been granted pursuant to 40 C.F.R. § 268.44.

This Permit does not authorize land disposal of hazardous waste at any location at the Facility.

2.7.2.1. Generator Requirements

Generators of hazardous waste must determine, based on the characteristics of the waste at the point of generation, if the waste must be treated before it can be land disposed.

Generators are required to send a one-time written notice to the Facility for the treatment of hazardous waste at the OD Unit for each exact type of waste stream. This includes the Permittee as a "generator" of waste to be treated at the OD Unit. A copy of the one-time notice shall be maintained at the EM Branch Office. The notice shall include:

1. The applicable EPA Hazardous Waste Numbers and the manifest number of the initial shipment;
2. A statement that the waste is subject to LDRs;
3. The UHCs and their concentrations in the wastes, if any;
4. The applicable treatability group category (normally as a non-wastewater);
5. Waste code subdivisions based on waste-specific criteria, if appropriate; and
6. Waste analysis data, if appropriate.

For wastes that do not meet treatment standards, the one-time written notice shall include the generator paperwork requirements information referenced in 40 C.F.R. § 268.7(a)(2).

For wastes that meet treatment standards at the original point of generation, the one-time notice shall include the generator paperwork regulatory requirements information and the certification statement referenced in 40 C.F.R. § 268.7(a)(3).

All of the supporting data used to determine that a waste is restricted from land disposal, either based on acceptable knowledge of waste generation processes or on sampling and analysis of the waste, shall be retained at the EM Branch Office, as required in 40 C.F.R. § 268.7(a)(6).

2.7.2.2. Treatment Facility Requirements

Treatment residues generated at the OD Unit are subject to LDR requirements, as well as other applicable requirements in 40 C.F.R. Parts 261-263 and this Permit.

If an analysis indicates that a treatment residue does not fully meet the treatment standards for hazardous waste in 40 C.F.R. § 268.40 and universal treatment standards of 40 C.F.R. § 268.48, the residue shall be sent to an offsite facility for additional treatment, including any necessary treatment of UHCs to meet the applicable standards, and disposal. The Permittee must comply with the notice and certification requirements in accordance with 40 C.F.R. § 268.7(b)(5) as well as Permit Section 2.6.5.2 and any other applicable requirements of this Permit. Untreated waste that is a result of kick-out may be collected and retreated at the OD Unit.

If analysis indicates that a treatment residue meets the treatment standards, it shall be sent offsite for disposal. In accordance with 40 C.F.R. § 268.7(b)(3) and (4), a notification and certification signed by an authorized representative shall be submitted to the offsite treatment facility with the initial shipment of treatment residue.

If a waste is determined to be no longer hazardous, a one-time notification and certification shall be placed in the files at the EM Branch Office, as required by 40 C.F.R. § 268.9(d). The notification and certification shall be updated if the process or operation generating the waste changes and/or if the Subtitle D facility receiving the waste changes. The notification shall include:

1. The name and address of the Subtitle D facility receiving the waste shipment; and

2. A description of the waste (e.g., the treatment residue) as initially generated, including EPA Hazardous Waste Number(s), treatability group(s), and UHCs.

An authorized Facility representative shall sign the certification.

2.8. WASTE MINIMIZATION

The Permittee shall submit to the Department a report annually by December 1, for the year ending the previous September 30, certifying that the Permittee has a program in place to reduce the volume and toxicity of all hazardous wastes that are generated by the Facility to the degree determined to be economically practicable, and that the proposed method of treatment is the practicable method currently available to the Permittee which minimizes the present and future threat to human health and the environment [see 40 C.F.R. § 264.73(b)(9)]. This certified report must include these items:

1. Any written policy or statement that outlines goals, objectives, and methods for source reduction and recycling of hazardous waste at the Facility;
2. Any employee training or incentive programs designed to identify and implement source reduction and recycling opportunities for all hazardous wastes;
3. Any source reduction or recycling measures implemented in the last five years or planned for the near future;

4. An itemized list of the dollar amounts of capital expenditures (plant and equipment) and operating costs devoted to source reduction and recycling of hazardous waste;
5. A discussion of factors that have prevented implementation of source reduction or recycling;
6. Sources of information on source reduction or recycling received at the Facility (e.g., local government, trade associations and suppliers);
7. An investigation of additional waste minimization efforts that could be implemented at the Facility, which investigation shall analyze the potential for reducing the quantity and toxicity of each waste stream through production process change, production reformulation, recycling, and all other appropriate means, including an assessment of the technical feasibility, cost, and potential waste reduction for each option;
8. A flow chart or table detailing all hazardous wastes the Facility produces, by quantity and type, and by building or area, and program if consistent with security considerations; and
9. A demonstration of the need to use those processes which produce a particular hazardous waste due to a lack of alternative processes, available technology, or available materials that would produce less volume of hazardous waste.

The Permittee shall include the report in the Operating Record.

2.9. IMPERMISSIBLE DILUTION

The Permittee shall not dilute a restricted waste as a substitute for treatment. [40 C.F.R. § 268.3]. Impermissible dilution to avoid an applicable treatment standard includes, but is not limited to, the addition of solid waste to reduce a hazardous constituent's concentration, or an ineffective treatment method that does not destroy, remove, or permanently immobilize hazardous constituents. Aggregating or mixing wastes as part of a legitimate treatment process are not considered impermissible dilution for purposes of this Permit requirement.

2.10. DUST SUPPRESSION

The Permittee shall not use waste or used oil or any other material which is contaminated with dioxin, polychlorinated biphenyls (PCBs), or any other hazardous waste, other than a waste identified solely on the basis of ignitability, for dust suppression or road treatment. [40 C.F.R. § 266.23(b)].

2.11. IGNITABLE AND REACTIVE WASTES

The Permittee shall take precautions to prevent accidental ignition or reaction of ignitable or reactive wastes, as required by 40 C.F.R. § 264.17.

Ignitable or reactive wastes shall be located at least 50 feet from the boundary of the OD Unit at all times and shall be protected from any sources of ignition, such as open flames, or reaction with other wastes or products, and shall be separated and protected from welding activities, hot surfaces, frictional heat, and sources of sparks.

Only containers made of or lined with materials that will not react with and are otherwise compatible with the waste to be managed shall be used to contain waste.

2.12. AIR EMISSIONS FROM THE OD UNIT

The Permittee shall comply with all air emission limitations and air monitoring requirements for the OD Unit set forth in the air quality permit for the OD Unit issued by the City of Albuquerque Environmental Health Department and as required by Permit Section 3.3. The Permittee shall also comply with the applicable requirements of 40 C.F.R. Part 264, Subpart BB. The Permittee shall maintain all records relating to the air quality permit in the Operating Record for the Facility.

2.13. OFF-SITE SHIPMENTS

Prior to shipping any hazardous waste off-site, the Permittee shall comply with all applicable generator requirements at 40 C.F.R. Part 262, as required by 40 C.F.R. §§ 262.10(h) and 264.71(c).

2.14. STORAGE OF RESTRICTED WASTE

The Permittee shall comply with 40 C.F.R. Part 268, Subpart E for any storage of hazardous waste restricted from land disposal under 40 C.F.R. Part 268, Subpart C.

2.15. MANIFEST SYSTEM

The Permittee shall comply with the manifest requirements of 40 C.F.R. § 264.71 and § 264.72. With the exception of waste shipments from conditionally exempt small quantity generators, the Permittee shall not accept for treatment any hazardous waste from an off-site source without an accompanying manifest.

If the Permittee accepts any hazardous wastes for treatment from an off-site facility without an accompanying manifest, if required, or without an accompanying shipping paper as described in 40 C.F.R. § 264.76, the Permittee shall prepare and submit an Unmanifested Waste Report to the Department within 15 calendar days after receiving the waste. The report shall include the following.

1. EPA identification number, name, and address of the off-site facility;
2. The date the Facility received the waste;
3. EPA identification number, name, and address of the generator and transporter;
4. A description and the quantity of each unmanifested hazardous waste received;
5. The method of treatment for each hazardous waste;
6. The certification signed by an authorized representative of the Facility; and
7. An explanation of why the waste was unmanifested, if known.

2.16. BIENNIAL REPORT

The Permittee shall prepare and submit to the Department two copies of a biennial report by March 1 of each even numbered year, as required by 40 C.F.R. § 264.75. The report shall document Facility activities during the previous calendar year and shall include.

1. EPA identification number, name, and address of the Facility;
2. The calendar years covered by the report;

3. A description and the quantity of each hazardous waste type the Facility received or generated that year;
4. The method of treatment for each hazardous waste type;
5. A description of the efforts undertaken during the year to reduce the volume and toxicity of waste generated;
6. A description of the changes in volume and toxicity of waste actually achieved during the year in comparison to previous years to the extent such information is available for the years prior to 1984; and
7. Treatment notices and their certifications signed by responsible Facility representatives.

2.17. LIABILITY INSURANCE REQUIREMENTS

Pursuant to 40 C.F.R. § 264.140(c), as a Federal entity, the Permittee is exempt from the requirement to have and to maintain liability coverage for sudden and accidental occurrences as specified at 40 C.F.R. § 264.147(a).

2.18. INCAPACITY OF OWNERS OR OPERATORS, GUARANTORS, OR FINANCIAL INSTITUTIONS

Pursuant to 40 C.F.R. § 264.140(c), as a department of the federal government, the Permittee is exempt from the requirement to notify the Department of the commencement of bankruptcy as specified at 40 C.F.R. § 264.148.

2.19. DISCLOSURE STATEMENT

Pursuant to NMSA 1978, § 74-4-4.7(F)(1), as a department of the federal government, the Permittee is not required to file a disclosure statement.

2.20. ADDITIONAL REPORTS

In accordance with the requirements of 40 C.F.R. § 264.77, the Permittee shall also report the following to the Department.

1. Releases of hazardous waste, hazardous constituents or contaminants, or any fires at or within 0.25 mile of the OD Unit or any SWMU or AOC,
2. Manifest discrepancies that cannot be resolved within 15 calendar days after receiving the waste,
3. Occurrences, if any, when hazardous waste is transported to the OD Unit in a container in noncompliance with regulatory requirements and the requirements of this Permit,
4. Treatment unit closures (40 C.F.R. §§ 264.77(b) and 264.115).

Table 2-1 **Off-Site Generators**
New Mexico State Police
Albuquerque Police Department
Bernalillo County Sheriff's Office
Sandia National Laboratories/New Mexico
Kirtland Air Force Base
University of New Mexico
New Mexico Institute of Mining and Technology

Figure 2-1

PERMIT PART 3: OPEN DETONATION UNIT

3.0 INTRODUCTION

This Permit Part (3) contains requirements that set forth the authorized waste types and maximum quantities of hazardous waste allowed to be treated at the Open Detonation (OD) Unit. It also contains other requirements, including those related to the design, construction, and operation of the Unit, and soil and groundwater monitoring.

3.1. AUTHORIZED WASTE AND MAXIMUM QUANTITY OF WASTE

The Permittee shall not treat more than 1,500 lbs of wastes per treatment event, 18,000 lbs per calendar year, or 180,000 lbs for the term of the Permit. The Permittee shall not treat more than the above quantities, except in case of an emergency and only after authorization by the Department. The Permittee shall not treat any wastes that are not authorized under Permit Attachment B.

3.2. DESIGN, CONSTRUCTION, OPERATION, AND MAINTENANCE

3.2.1. General Requirements

The Permittee shall design, construct, operate, and maintain the OD Unit in accordance with the requirements of this Permit to minimize noise and the possibility of an accidental fire, explosion, or any sudden or nonsudden release of hazardous waste or hazardous constituents into air, soil, sediment, surface water, or groundwater which could threaten human health or the environment, as required by 40 C.F.R. §§ 264.31 and 264.601.

The Permittee shall mark the boundary of the OD Unit with signs or structures such that the boundary is clearly discernible.

3.2.2. Run-Off and Run-On Controls

The Permittee shall design, construct, operate, and maintain run-off control systems (protective berm) at the OD Unit to prevent precipitation run-off from leaving the Unit and the migration of hazardous waste or hazardous constituents off-Unit, as required by 40 C.F.R. § 264.601(b).

The Permittee shall design, construct, operate, and maintain run-on control systems (protective berm) at the OD Unit to prevent precipitation from entering the Unit as overland run-on, as required by 40 C.F.R. § 264.601(b).

3.2.3. Restrictions on Operations

3.2.3.1. Hours of Operation

The Permittee shall conduct treatment operations only between sunrise and sunset, except in an emergency [see 40 C.F.R. § 264.1(g)(8)(i)(D)]. If the Permittee conducts treatment operations in response to an emergency before sunrise or after sunset on a given day, the Permittee shall notify the Department of this fact in writing within 3 days of conducting such treatment.

3.2.3.2. Weather Conditions

Treatment operations shall not be conducted during adverse climatic conditions. Operations shall not be conducted if lightning is within 10 miles (16 kilometers) of the OD Unit, when the cloud ceiling is less than 1,000 feet or when visibility is less than five miles.

The Permittee shall not conduct treatment operations when wind speed exceeds 15 miles per hour (24 kilometers per hour).

The Permittee shall not conduct treatment operations when a thunderstorm is imminent or within 10 miles (16 kilometers) of the OD Unit, or during a snowstorm, a dust storm, or sandstorm.

3.2.3.3. Range Fire

The Permittee shall not conduct treatment operations when extreme fire hazard conditions exist or if a range fire has the potential to reach the boundary of the Explosive Ordnance Disposal (EOD) Range.

3.2.3.4. Other Restrictions

Wastes shall be treated promptly upon transport to and acceptance at the OD Unit.

The Permittee shall cease treatment operations immediately upon the discovery of an unsafe situation including but not limited to an aircraft in dangerous proximity to the EOD Range or loss of communication with the EOD Shop.

The Emergency Coordinator (EC) shall remain on site at the personnel bunker for the duration of the treatment operation.

Waste shall not be stored at the OD Unit and shall be present at the Unit only during a planned treatment operation.

If a treatment event at the OD Unit is aborted, the waste shall be immediately sent back to the generator.

The maximum extent of hazardous waste operations at the OD Unit shall be confined to the OD Unit.

3.2.4. Operation Safety

3.2.4.1. Personnel Safety

When escorted visitors are present to observe treatment operations, there shall be at least one EOD Technician or Specialist present for every three visitors.

The Permittee shall not conduct treatment operations if unauthorized personnel are within 1500 feet of the OD Unit. The Permittee shall ensure that at least two authorized persons are present during any treatment operation.

Following a treatment operation, no personnel shall enter the OD Unit until the explosive ordnance Team Chief/Range Safety Officer determines that it is safe to enter.

3.2.4.2. Safety Precautions

The Permittee shall conduct all treatment operations in accordance with all the safety precautions required by this Permit.

3.2.5. Maintenance

3.2.5.1. Accumulated Precipitation

The Permittee shall not allow standing water in any pit (crater). The Permittee shall remove any standing water within 24 hours after a precipitation event, or within 24 hours of when impassible access roads become passable should inclement weather preclude access to the OD Unit. The Permittee shall analyze any water removed from the OD Unit to determine whether it is a hazardous waste in accordance with the *Waste Analysis Plan* (Permit Attachment C), and shall manage it appropriately.

3.2.5.2. Untreated Waste (Kick-Out) and Treatment Residues

Within 24 hours after each treatment operation, the Permittee shall inspect the entire OD Unit area for untreated waste (kick-out) or treatment residues (such as shrapnel, metal fragments) originating from treatment operations. This inspection shall be conducted only after it has been determined that it is safe for the purpose of conducting inspections. Any untreated waste or treatment residues shall be placed in appropriate containers and managed as hazardous waste or solid waste, as appropriate. Kick-out and treatment residues shall not be stored at the OD Unit.

3.3. AIR MONITORING

The Permittee shall evaluate the potential impact of the air pollutants on human health before, during, and after treatment operations by screening and assessment, in compliance with 40 C.F.R. § 264.601(c)(5). The Permittee shall not proceed with a treatment event if meteorological conditions or ambient air quality conditions do not meet the requirements of the City of Albuquerque air quality permit for the OD Unit and the requirements of this Permit Part.

The Permittee shall specify in an annual sampling and analysis report on air quality the types and schedules of air monitoring required by the Albuquerque Environmental Health Department, and the instrumentation required. The Permittee shall submit this report to the Department and include in the report any air monitoring data from the previous calendar year, and estimated monthly emissions based on the amounts of waste treated. The report is due by March 31 of each calendar year.

3.4. SOIL MONITORING AND HUMAN RISK SCREENING

The Permittee shall conduct an annual soil sampling and analysis program in accordance with Permit Attachment D, and as required by 40 C.F.R. § 264.601(b).

In order to monitor soil contamination resulting from open detonation operations at the OD Unit, the Permittee shall implement the *Soil Sampling and Analysis Plan* (SSAP), which is described in Permit Attachment D.

3.5. GROUNDWATER MONITORING

The OD Unit is subject to the environmental performance standards of 40 C.F.R. § 264.601. Groundwater monitoring shall be conducted during the entire period of operations, including the period for closure, to ensure the protection of groundwater. Groundwater monitoring shall also be conducted during post-closure care, if post-closure care is required.

3.5.1. Installation of Monitoring Wells

The Permittee shall install at least one well upgradient at the boundary of the OD Unit, and at least three wells downgradient at the boundary of the Unit. Within 90 days after the effective date of this Permit, the Permittee shall submit to the Department for approval a proposed monitoring well installation plan as a Class 3 Permit Modification to this Permit, which, at a minimum, shall include well locations, drilling specifications, well construction specifications, well development procedures, and a schedule for implementation and completion of the well installations and submittal of a well completion report. Upon Department approval of the plan, the Permittee shall implement the monitoring well installation plan according to the approved schedule. Within 30 days of completion of well installation, the Permittee shall submit to the Department for approval a well completion report. The well completion report shall include the information required in Permit Section 6.5.17.10.8. The Department may require additional wells to be installed at the OD Unit if the Department determines that the number or function of the existing wells is insufficient.

All wells installed at the OD Unit must meet the general groundwater monitoring requirements of 40 C.F.R. §§ 264.97(a)(2), (b), and (c).

If any of the wells at the OD Unit cannot be sampled due to a declining water table or for any other reasons, the Permittee shall apply for a permit modification to modify this Permit to propose replacement wells.

3.5.2. Sampling and Analysis

Within 90 days after the effective date of this Permit, the Permittee shall submit to the Department for approval a proposed groundwater sampling and analysis plan as a Class 3 modification to this Permit. Upon approval, the groundwater sampling and analysis plan and the monitoring well installation plan of Permit Section 3.5.1 shall become Permit Attachment L (reserved).

The groundwater sampling and analysis plan shall require:

- That at least one sequence of samples be collected from each well at least semiannually.
- That samples of groundwater be collected from each of the monitoring wells and field and laboratory analysis of the samples be conducted for the parameters listed in Table 3-1 of this Permit Part (3).
- That the groundwater flow rate and direction in the uppermost aquifer be determined at least annually.
- That a report on the field and laboratory analytical data shall be submitted to the Department within 90 days after the samples have been collected.

- That a determination be made whether there is statistically significant evidence of contamination at each monitoring well after each sampling event.
- That the method used to make the statistical determination is identified.
- That the applicable groundwater investigation requirements of Permit Section 6.4.1.3 be met, including, but not limited to, the requirements for the collection and analysis of quality control samples, proper selection and use of sampling equipment, labeling, containers, preservatives, and analytical methods, use of chain-of-custody procedures, validation of analytical data, and reporting of data.

Table 3-1 Groundwater Monitoring Parameters
Volatile organic compounds
Semi-volatile organic compounds
Perchlorate
White Phosphorus
Explosives
Metals (all metals listed in Appendix IX to 40 C.F.R. Part 264, including antimony, arsenic, barium, beryllium, cadmium, chromium, cobalt, copper, lead, mercury, nickel, selenium, silver, thallium, tin, vanadium, and zinc)
Dioxins and Furans
General chemistry parameters in Table 6-1 of Permit Part 6, except phosphorus/phosphate, TKN, ferric/ferrous iron, dissolved CO_2, silicon, suspended sediment, stable isotopes

Upon Department approval of the plan, the Permittee shall implement the groundwater sampling and analysis plan according to the schedule in the plan. The schedule in the plan shall at a minimum set forth the time of sampling and when the data are to be reported to the Department.

If the Permittee or the Department determines that there is statistically significant evidence of contamination at any monitoring well, the Permittee shall notify the Department of this fact within 15 days of this discovery. The Department may itself make such a determination.

Should corrective action be required, the Permittee shall meet the requirements of Part 6 of this Permit, and shall implement corrective action as necessary to protect human health and the environment from all releases of hazardous waste or hazardous constituents.

If the Permittee determines that the monitoring program no longer satisfies the HWMR, the Permittee shall within 90 days submit to the Department an application for a Class 3 modification to this Permit to make any appropriate changes to the program.

3.6. ORGANIC AIR EMISSIONS REQUIREMENTS

This Permit Section contains requirements for air emissions.

3.6.1. Additional Waste Characterization Requirements for Air Emissions

The Permittee shall characterize hazardous waste to ensure compliance with applicable emission requirements of 40 C.F.R. Part 264, Subpart BB.

3.6.2. Equipment Containing or Contacting Hazardous Waste

Each piece of equipment that contains or contacts hazardous wastes with organic concentrations of at least 10 percent by weight shall be marked in such a manner that it can be distinguished readily from other pieces of equipment in accordance with 40 C.F.R. § 264.1050(d).

Pursuant to 40 C.F.R. § 264.1050(f), equipment that contains or contacts hazardous waste with an organic concentration of at least 10 percent by weight for less than 300 hours per calendar year is excluded from the requirements of 40 C.F.R. §§ 264.1052 through 264.1060 if it is identified, as required in 40 C.F.R. § 264.1064(g)(6). Such equipment shall be identified in writing in a log that shall be kept with the Operating Record in accordance with 40 C.F.R. § 264.1064(g)(6). The information required pursuant to 40 C.F.R. § 264.1064(k)(1), (2), (3) shall also be recorded in a log that is kept with the Operating Record.

The Permittee shall comply with all applicable requirements of 40 C.F.R. §§ 264.1052 through 264.1060 for any equipment that contains or contacts hazardous waste with an organic concentration of at least 10 percent by weight for 300 or more hours per calendar year. The log shall note the total time elapsed that any equipment contains or contacts hazardous waste with an organic concentration of at least 10 percent by weight.

3.7. PRE-TREATMENT PREPARATION

Prior to a treatment operation, upon arrival at the OD Unit, an inspection of the OD Unit shall be conducted. The range flag shall be raised. The Team Chief shall then identify the designated EC and brief other EOD team members and escorted visitors (if present) on the treatment operation to be performed, required safety precautions, emergency procedures, and instruct all those present to be watchful for unsafe conditions at all times.

3.8. TRANSPORTATION OF WASTE TO THE OD UNIT AND CONTAINER SPECIFICATIONS

Hazardous wastes shall be packaged for transport to the OD Unit in appropriate containers that provide protection equivalent to U.S. Department of Transportation (DOT)-authorized containers. Appropriate containers include:

- Reinforced ammunition containers;
- Strong fiberboard boxes; or
- Strong, cleated wooden boxes.

Waste to be treated shall be transported to the OD Unit only on the day of the planned treatment event. Waste containers shall be secured to the vehicle during transport. Vehicles transporting hazardous wastes for treatment shall bear the appropriate “Explosives” placard and/or other necessary placards at the front, on both sides, and at the rear of the vehicle. These signs may be covered or removed when the vehicle no longer carries the hazardous wastes. Each transport vehicle shall, at minimum, carry one ABC-type portable fire extinguisher that is in operational

condition. Each transport vehicle shall have equipment to communicate with the KAFB Command Post and the emergency coordinator.

3.9. WASTE STAGING

Hazardous wastes shall only be transported to the OD Unit and unloaded and staged for treatment by appropriately trained EOD personnel. Wastes shall be treated as soon as possible after arrival at the OD Unit, provided the requirements of this Permit are met.

Outer waste containers are to be removed, and the waste placed into a pit (crater) for treatment by qualified EOD personnel. Outer containers may be returned to the generator for reuse. Outer and inner containers shall be managed appropriately as waste if not reusable.

If waste is placed in the OD Unit for treatment and site conditions are deemed unsafe to treat the waste, the waste shall be immediately removed and sent back to the generator.

3.10. WASTE TREATMENT

Prior to the treatment of hazardous waste, the Team Chief shall ensure that the EOD Range is clear of unauthorized personnel, that aircraft are not approaching, and that unauthorized vehicles and persons are not within or in the vicinity of the EOD Range as required under Section 3.2.4.1 of this Permit Part. The Team Chief shall also ensure that all persons at the EOD Range have relocated to the personnel bunker. In addition, the Team Chief shall obtain wind-speed information at or near the personnel bunker. The Team Chief shall also ensure that treatment operations comply with all restrictions in this Permit, including Permit Section 3.2.3.

Treatment of waste in the OD Unit shall be performed using explosives to countercharge the hazardous waste. Ignition of the explosives shall be done from the personnel bunker.

3.11. POST TREATMENT

After a treatment operation, the Permittee shall comply with the requirements of Permit Section 3.2.5.2, Permit Section 2.2, Permit Section 2.6.5.2, and any other requirement of this Permit applicable to post-treatment of waste.

The EOD Team Chief or his designee shall be responsible for clearing any misfires, should one occur. In such an event, a second qualified person shall serve as a safety backup for the EOD Team Chief.

If complete destruction of hazardous wastes is not achieved at the OD Unit, these wastes shall be treated again or shall be removed for appropriate treatment and disposed of at an off-site facility.

PERMIT PART 4: CLOSURE

4.0 GENERAL CLOSURE REQUIREMENTS

After receipt of the last hazardous waste to be treated at the OD Unit, or if required to cease operations as specified in Permit Section 1.10 and Permit Section 4.4, the Permittee shall close the OD Unit following the procedures described in the *Closure Plan* (Permit Attachment H), this Permit, and as required by 40 C.F.R. § 264.111.

4.1. SUBMITTAL OF REVISED CLOSURE PLAN

The Permittee shall submit to the Department for approval a revised Closure Plan within 60 days after discovering that a revised Closure Plan is required in accordance with this Permit, or the regulations at 40 C.F.R. § 264.112(c), or within 60 days after receiving written notification by the Department whichever is earlier. The Permittee shall amend the Closure Plan whenever changes in circumstances necessitate a modification of the Closure Plan, as required by 40 C.F.R.
§ 264.112(c). The Permittee shall amend the Closure Plan for any other reasons set forth in 40 C.F.R. 264.112(c) or if there are changes in state law that affect the Closure Plan. The Permittee shall comply with all the requirements of 40 C.F.R. 264.112(c) in amending the Closure Plan.

When amending or revising the Closure Plan, the Permittee shall submit to the Department for approval detailed, and as necessary, updated procedures and methods describing the procedures and sampling methods to verify removal of all structures and equipment and removal of treatment residues and any hazardous or solid wastes. At a minimum, the Permittee shall include in the revised Closure Plan:

1. Unit history and description, identifying, at a minimum, the following:
    a. Constituents of concern, including all hazardous waste and hazardous constituents managed at the Unit, listed by category of constituent subject to the same sampling methods,
    b. Spills or other releases of hazardous waste and hazardous constituents during operation of the Unit, and
    c. Visible staining or other conditions indicating potential release locations;
2. Proposed procedures for removal of all structures and equipment;
3. Proposed sample locations;
4. Sample methods, equipment, and procedures;
5. Analytes and analytical methods;
6. Detection limits;
7. QA/QC procedures; and
8. Sample management and preservation procedures.

4.2. CLEAN CLOSURE

The Permittee shall close the OD Unit by removing all hazardous waste residues and hazardous constituents and all structures and equipment from the OD Unit (clean closure).

However, if the OD Unit cannot be clean closed as determined by the Department, post-closure care is required and the Closure Plan shall be amended. If post-closure care is required, closure of the OD Unit shall include the construction of a final cover to be placed over the ground surface occupied by the Unit and construction of drainage structures to minimize the infiltration and percolation of water into and beneath the final cover. The final cover shall be of a design equivalent to that which would be required for a hazardous waste landfill. If groundwater is contaminated or soil contamination poses a threat to groundwater, the Permittee shall also immediately implement corrective action to remediate the contamination or prevent the contamination threat pursuant to the requirements of Part 6 of this Permit.

If a cover is required because the OD Unit cannot be clean closed, the revised Closure Plan shall meet all of the applicable closure requirements of 40 C.F.R. §§ 264.111 through 264.116 and 264.310, including the applicable closure requirements for landfills. The revised Closure Plan shall also include, at minimum:

1. The results of performance modeling of the final cover;
2. A description of the design (including engineering drawings) and material specifications for construction of the final cover and drainage structures;
3. A description of how the closure performance standards under 40 C.F.R. §§ 264.111 and 264.310(a)(1) through (5) will be met by the design;
4. A construction quality-assurance plan;
5. A description of the construction procedures and equipment to be used;
6. A description of the qualifications of those responsible for the design and oversight of the construction of the cover and the drainage structures; and
7. A schedule to construct and complete the final cover and drainage structures.

The Permittee shall implement the revised Closure Plan within 90 days after approval by the Department and shall complete construction of the final cover and drainage structures by the deadlines in the approved Closure Plan. The Permittee shall also submit to the Department a request to extend the closure period in accordance with 40 C.F.R. § 264.113(b)(1) and (c)(2).

4.3. NOTIFICATION OF CLOSURE

The Permittee shall notify the Department in writing at least 45 calendar days prior to the date on which it expects to begin closure of the OD Unit, as required by 40 C.F.R. § 264.112(d).

4.4. TIME ALLOWED FOR CLOSURE

Within 90 calendar days after the final volume of hazardous waste is received at the OD Unit, the Permittee shall remove all treatment residues and all other hazardous and solid waste from the Unit. The waste shall be sent to an off-site permitted treatment or disposal facility, as applicable. The Permittee shall complete closure activities for the Unit within 180 days, as required by
40 C.F.R. § 264.113, following the schedule and requirements in the Closure Plan, Permit Attachment H, and as required by this Permit Part.

If this Permit is terminated, or if the Facility is otherwise ordered, by judicial decree or final order under the HWA or § 3008 of RCRA, to cease treating hazardous wastes or to close the OD Unit, then the Permittee shall close the Unit in accordance with the deadlines established in 40 C.F.R. § 264.113.

4.5. DISPOSAL/DECONTAMINATION OF EQUIPMENT, STRUCTURES, AND SOILS

The Permittee shall remove and dispose of all equipment and structures, and shall decontaminate soil, as specified in the Closure Plan, Permit Attachment H. [40 C.F.R. § 264.114].

4.6. MANAGEMENT OF REMEDIATION WASTE

By removing hazardous waste or hazardous constituents or contaminated media during closure activities, the Permittee becomes a generator of hazardous waste, and shall manage that waste in accordance with all applicable requirements of 40 C.F.R. Part 262.

4.7. CERTIFICATION OF CLOSURE

Within 60 calendar days from the date of completion of closure of the OD Unit, the Permittee shall submit to the Department a final closure report and written certification signed by the Permittee and an independent professional engineer registered in the State of New Mexico, that the OD Unit was closed as required by the procedures specified in the Closure Plan (Permit Attachment H) and this Permit. [40 C.F.R. § 264.115].

4.8. FINANCIAL RESPONSIBILITY

4.8.1. Cost Estimate for Closure

Pursuant to 40 C.F.R. § 264.140(c), as a department of the federal government, the Permittee is exempt from the requirement to provide a cost estimate for closure as specified at 40 C.F.R. § 264.142.

4.8.2. Financial Assurance for Closure

Pursuant to 40 C.F.R. § 264.140(c), as a department of the federal government, the Permittee is exempt from the requirement to submit a signed duplicate original of the closure financial assurance instrument as specified at 40 C.F.R. § 264.143.

PERMIT PART 5: POST CLOSURE

5.0 POST-CLOSURE CARE

The Department assumes that the OD Unit will be clean closed.

However, pursuant to 40 C.F.R. § 264.603, if any OD Unit operations release hazardous waste or hazardous constituents into soil, sediment, or groundwater that cannot be completely removed or decontaminated during closure (clean closed), then the OD Unit shall be subject to the requirements for closure and post-closure care for landfills in 40 C.F.R. §§ 264.117 through 120, and 264.310. The Permittee shall also meet the requirements of 40 C.F.R. § 264.601 during post-closure care for the OD Unit. The post-closure plan required under 40 C.F.R. § 264.118 must specify the procedures that will be used to satisfy these requirements.

PERMIT PART 6: CORRECTIVE ACTION

6.0 INTRODUCTION

Pursuant to § 3004(u) and (v) of RCRA, 42 U.S.C. § 6924(u) and (v); NMSA 1978, § 74-4-4.2(B) and 40 C.F.R. Part 264, Subparts F and G, the Permittee shall implement corrective action as necessary to protect human health and the environment from all releases of hazardous waste or hazardous constituents from operating or closed hazardous waste management units, and from any releases of hazardous waste or hazardous constituents from any Solid Waste Management Unit (SWMU) or Area of Concern (AOC) at the Facility.

6.1. GENERAL PROVISIONS

6.1.1. Offsite Access

To the extent any requirement of this Permit, including any work plan approved under this Permit, requires access to property not owned or controlled by the Permittee, the Permittee shall use its best efforts to obtain access from the present owners of such property to conduct required activities. In the event that access is not obtained when necessary, the Permittee shall immediately notify the Department in writing regarding its best efforts and its failure to obtain such access.

6.1.2. Field Activities

The Permittee shall notify the Department in writing of any field sampling or other field activities undertaken pursuant to any work plan or requirement of this Permit, and shall provide the Department the opportunity to collect split samples upon request by the Department. For such sampling or other field activities, the Permittee shall provide the Department with as much advance notice as is practicable, but no less than 15 days prior to the conduct of such sampling.

The Permittee shall notify the Department in writing a minimum of 15 days prior to the implementation of any work plan required under this Permit. Notification of sampling or other field activities may be made by email, fax, or letter.

6.1.3. Record Preservation

Until 10 years after the Permittee's receipt of the Department's written notice that corrective action has been completed for all SWMUs and AOCs listed on Table I-3 of Permit Attachment I, the Permittee shall maintain all records, documents, data, and other information that are required to be prepared under this Permit for corrective action.

6.1.4. Releases Beyond Facility Boundary

The Permittee shall notify the Department orally, within 24 hours of discovery, of any release of hazardous waste or hazardous constituent that has the potential to migrate beyond the Facility boundary or has migrated beyond the Facility boundary.

In the event that a hazardous waste or a hazardous constituent migrates beyond the Facility boundary, the Permittee shall implement corrective actions beyond the Facility property boundary as necessary to protect human health and the environment, unless the Permittee can

demonstrate to the Department that, despite the Permittee's best efforts, the Permittee is unable to obtain the necessary permission to undertake such actions. The Permittee is not relieved of any responsibility to clean up a release that has migrated beyond the Facility boundary where offsite access has been denied. On-site measures to address such releases will be determined on a case-by-case basis and will be subject to the approval of the Department.

6.1.5. Work Plans and Other Deliverable Documents

All work plans, schedules, reports, and other deliverable documents that the Permittee is required to prepare under this Part (6) shall be submitted to the Department for review and approval as detailed in Permit Section 1.38.

6.1.6. Quarterly Progress Reports

The Permittee shall submit to the Department quarterly reports summarizing all corrective action activities conducted pursuant to this Permit by January 31, April 30, July 31, and October 31 of each year. Each report shall summarize the corrective action activities for the quarter (i.e., 3 month time period) ending the month preceding the due date of the report. The content of these reports shall include the information specified in Permit Section 6.2.4.1.

6.1.7. Lists of SWMUs and AOCs and Annual Reporting of Outdoor Activities

Plate 1 is a map showing the locations of SWMUs and AOCs at the Facility. Corrective action is required for all SWMUs and AOCs identified in Table I-3 of Permit Attachment I. Table K-1 of Permit Attachment K contains a listing of all SWMUs and AOCs for which the Department has determined that corrective action is complete without controls.

Given the need to monitor current and future activities that could lead to creation of new SWMUs and AOCs, the Permittee shall submit to the Department an annual report containing a brief summary of outdoor testing and training activities. The report shall list the name, location, and a general description of the type or types of testing (e.g., firing site, explosives testing, drop testing, burn testing) and training conducted at each outdoor area. The first annual report shall be submitted to the Department within 90 days of the effective date of this Permit; subsequent reports shall be submitted annually thereafter by March 31 of each year.

6.1.8. Newly discovered SWMUs, AOCs, and Releases

The Permittee shall notify the Department orally, within 24 hours of discovery, of any newly identified SWMU or AOC. Within 15 days after the discovery of any newly identified or suspected SWMU or AOC, the Permittee shall notify the Department in writing of such discovery. The notification shall include, at a minimum, the location of the SWMU or AOC and all available information pertaining to the nature of any release of contaminants from the SWMU or AOC, including the contaminants that were released, the magnitude of the release, and the media affected by the release.

Within 90 days after submitting such written notification, the Permittee shall submit to the Department for approval a SWMU Assessment Report (SAR) for each newly identified or suspected SWMU or AOC. At a minimum, the report shall provide the following information, to the extent available:

1. Location of each newly identified or suspected SWMU or AOC on a topographic map of appropriate scale;
2. Designation of type and function of each newly identified or suspected SWMU or AOC;
3. General dimensions, capacities and structural description of each newly identified or suspected SWMU or AOC (including any available plans and drawings);
4. Dates of operation for each newly identified or suspected SWMU or AOC;
5. Identification of all wastes that have been managed at or in each newly identified or suspected SWMU or AOC, including any available data on hazardous constituents in the waste; and
6. All available information pertaining to any release of contaminants from each newly identified or suspected SWMU or AOC, including analytical data for groundwater, soil, sediment, rock, air, and surface water.

Based on the results of the report and any other relevant information, the Department will determine the need for further investigations at the SWMUs or AOCs covered in the report, including the need for an investigation report. The Department may also require corrective measures of the SWMU or AOC, based on a finding that releases of contaminants have occurred, are occurring, or are likely to occur.

Within 15 days after the discovery of any previously unknown release of a contaminant into soil, sediment, surface water, or groundwater, the Permittee shall notify the Department in writing of such discovery. Based on the results of the report and any other relevant information, the Department may determine that further investigation of the release of contaminants is needed, including the need for an Investigation Report. The Department may also require corrective measures, based on a finding that releases of contaminants have occurred, are occurring, or are likely to occur from the unit.

6.1.9. Determination of Corrective Action Complete (No Further Action)

Based on the results of an Investigation Report or other relevant information, the Permittee may submit a request to the Department for a Class 3 permit modification under 40 C.F.R. § 270.42(c) to terminate corrective action for a specific SWMU or AOC. This permit modification request must contain information demonstrating that there are no releases of hazardous waste including hazardous constituents from a particular SWMU or AOC at the Facility that pose a threat to human health or the environment, as well as any additional information required in 40 C.F.R. § 270.42(c).

A determination of Corrective Action Complete shall not preclude the Department from requiring continued or periodic monitoring of air, sediment, soil, groundwater, or surface water, when site-specific circumstances indicate that releases of hazardous waste or hazardous constituents may occur or have occurred, and it is necessary to protect human health or the environment.

A determination of Corrective Action Complete shall not preclude the Department from requiring further investigations, studies, or remediation at a later date, if new information or subsequent analysis indicates a release or likelihood of a release from a SWMU or AOC at the Facility that may pose a threat to human health or the environment. In such a case, the Department may initiate a modification to the Permit according to the requirements of Permit Section 1.12.1.

6.1.10. Health and Safety Plan

The Permittee shall maintain a Facility Health and Safety Plan, which shall include:

1. A description of the Facility including availability of resources such as roads, water supply, electricity and telephone service;
2. A description of the known hazards and evaluation of the risks associated with each activity conducted, including, but not limited to, on and off-site exposure to contaminants during implementation of interim or final corrective measures, site characterization, or monitoring activities;
3. A list of key personnel and alternates who are responsible for site safety, response operations, and protection of public health;
4. A delineation of the work area;
5. A description of levels of protection to be worn by personnel in the work area;
6. Procedures established to control site access;
7. Decontamination procedures for personnel and equipment;
8. Site emergency procedures;
9. Emergency medical care procedures for injuries and toxicological problems;
10. Requirements for an environmental field-monitoring program;
11. Routine and special training requirements for responders; and
12. Procedures for protecting workers from weather-related problems.

The Facility Health and Safety Plan shall be in accordance with:

1. National Institute of Occupational Safety and Health (NIOSH) Occupation Safety and Health Guidance Manual for Hazardous Waste Site Activities (1985);
2. EPA Order 1440.1 - Respiratory Protection;
3. EPA Order 1440.3 - Health and Safety Requirements for Employees engaged in Field Activities;
4. Facility Contingency Plans included in this Permit;
5. EPA Operating Safety Guide (1984);
6. Occupational Safety and Health Administration regulations, particularly 29 C.F.R. § 1910 and 1926;
7. State and local regulations; and
8. Other applicable EPA guidance.

6.1.11. Community Relations Plan

The Permittee shall maintain a plan for dissemination of information to the public regarding investigation and remediation activities and results. The plan shall:

1. Require the creation and maintenance of an active mailing list of interested parties, to be updated annually, including those on the official mailing list in accordance with 40 C.F.R. § 124.10;
2. Require informal meetings, including briefings and workshops as appropriate, with the public and local officials before and during the corrective action process, which shall be held at least twice every calendar year for as long as corrective action is required;
3. Require that news releases, fact sheets, work plan submittals, report submittals, and publicly available quarterly progress reports that explain the progress and conclusions of investigations and clean-ups be timely posted on the Permittee's website and timely provided to interested citizen groups and the public as requested;
4. Require the creation and maintenance of a public information repository and reading room;
5. Require that public tours and briefings be conducted to inform and to listen to public concerns, and to answer questions related to environmental monitoring, characterization, and remediation;
6. Require immediate written and, if possible, oral notification to affected parties of any discovered off-site release that could impact them; and
7. Require that interested community groups be notified of and be given opportunities to observe field data gathering activities conducted during the corrective action process (notices shall specify the time and need for any required safety and security training).

6.1.12. Land Transfer

In transferring land to another entity, the Permittee shall comply with the terms of § 120(h) of CERCLA, as amended, 42 U.S.C. § 9620(h), and as implemented in 40 C.F.R. Part 373. These provisions apply to any property owned by the Permittee on which any hazardous substance was stored for one year or more, known to have been released, or disposed of, subject to the limitations of 40 C.F.R. § 373.2. Consistent with CERCLA § 120(h)(3)(A), the Permittee shall include in any deed that transfers property, the information required by CERCLA § 120(h)(3)(A)(i), the covenant required by CERCLA § 120(h)(3)(A)(ii), and the access clause required by CERCLA § 120(h)(3)(A)(iii). The Permittee may defer the requirement of § 120(h)(3)(A)(ii)(I), consistent with the terms of CERCLA § 120(h)(3)(C).

For any deed transferring title from the Permittee that contains a restriction on future land use, the Permittee shall, within 90 days of transfer of the property, notify the Department of the transfer and identify for the Department the location of the property that is the subject of the transfer.

6.1.13. Abandoned Septic Systems

In addition to the corrective action specified in this Permit, the Permittee shall close all abandoned septic systems in accordance with the Department's Liquid Waste Disposal System Regulations 20.7.3.307 NMAC.

6.2. SPECIAL REQUIREMENTS

6.2.1. Special Information Submittals

6.2.1.1. General Facility Information

The Permittee shall submit in a report to the Department, within 90 days of the effective date of this Permit, the following information:

1. Maps and tables indicating the surveyed coordinates and locations of all existing springs, wells, and surface water gaging stations;
2. Water-level contour map of known radii-of-effects from pumping of municipal and Facility supply wells;
3. Water level data presented graphically and in tabular format; and
4. Maps showing the boundaries of all Facility SWMUs and AOCs.

This report is a one-time submittal, unless new information becomes available; in that case, the report shall be updated and resubmitted at least annually by March 31 of each year for each case that new information becomes available.

6.2.1.2. Potential Human Receptors Information

The Permittee shall, within 90 days of the effective date of this Permit, submit a report to the Department describing human populations that are susceptible to contaminant exposure from the Facility. At a minimum, the following information shall be gathered and reported:

1. Local uses and possible future uses of groundwater, including:
   a). Type of use (for example., potable, domestic, agricultural, residential, industrial, municipal) and
   b). Locations of all groundwater wells, names of owners or tenants at those locations, and current use of those wells within one mile of the Facility; and
2. Human use of or access to the Facility and adjacent lands, including but not limited to recreational, residential, commercial, and industrial.

This report is a one-time submittal, unless new information becomes available; in which case, the report shall be updated and resubmitted at least annually by March 31 of each year for each case that new information becomes available.

6.2.1.3. Information on Surface Water

The Permittee shall submit a report to the Department pertaining to surface water bodies at the Facility, within 90 days of the effective date of this Permit. The report shall at minimum include:

1. A description of each surface water body, including location (Coyote Springs and associated wetlands are examples of surface water at the Facility); and
2. A description of the chemistry of the surface waters, including pH, temperature, total dissolved solids, total suspended solids, alkalinity, conductivity, dissolved oxygen, total organic carbon, and any specific contaminant concentrations.

6.2.2. Corrective Action Procedures

The corrective action process for a given SWMU or AOC begins with a site investigation to characterize any releases of contaminants. If there has been a release of hazardous waste or hazardous constituents into the environment and corrective action is necessary to protect human health or the environment from the release, corrective measures shall be conducted at the contaminated site to remove or isolate the contaminants that pose the human health or environmental risk. Verification sampling is required to determine if cleanup levels have been successfully achieved.

6.2.2.1. Site Investigations

The Permittee shall conduct a site investigation for each SWMU and AOC listed on Table I-3 of Permit Attachment I. The Department may determine that further investigation is needed at any SWMU or AOC at the Facility. If the Department determines that such further investigation is needed, it will notify the Permittee in writing.

The Permittee shall perform the site investigations only in accordance with approved Investigation Work Plans.

6.2.2.1.1. Investigation Work Plans

The Permittee shall submit to the Department for approval an Investigation Work Plan, in the format and with the content described in Permit Section 6.2.4.2, for each SWMU and AOC needing further investigation, including those listed on Table I-3 of Permit Attachment I. An individual Investigation Work Plan may cover several SWMUs or AOCs. The Investigation Work Plans shall be submitted by the date specified in the Department's written notification or in accordance with the schedule in Table I-3 of Permit Attachment I. Additional characterization required by the Department that is not already covered in an approved Investigation Work Plan, or that is not addressed during implementation of field activities conducted under an existing approved Investigation Work Plan, shall be proposed in a supplemental Investigation Work Plan submitted to the Department for approval. The supplemental Investigation Work Plan may reference a prior approved Investigation Work Plan and any corresponding Investigation Report for background information.

6.2.2.1.2. Investigation Reports

The Permittee shall submit to the Department for approval an Investigation Report, in the format and with the content described in Permit Section 6.2.4.3, that presents the results of field activities, summarizes the data collected, and presents the recommendations and conclusions of each investigation conducted pursuant to an approved Investigation Work Plan. An individual Investigation Report may cover several SWMUs or AOCs.

6.2.2.2. Corrective Measures

6.2.2.2.1. General

The Department will require corrective measures if the Department determines, based on an Investigation Report or other relevant information available to the Department, that there has been a release of hazardous waste or hazardous constituents into the environment and that corrective action is necessary to protect human health or the environment from such a release. Upon making such a determination, the Department will notify the Permittee in writing.

6.2.2.2.2. CME Work Plans

If the Department requires corrective measures, the Permittee shall submit to the Department for approval a Corrective Measures Evaluation (CME) Work Plan, in the format and with the content described in Permit Section 6.2.4.6, within 90 days of notification by the Department that a CME Work Plan is required or by such other due date as is stated in the notification. The CME Work Plan shall contain a schedule to conduct the CME. Upon approval of the CME Work Plan by the Department, the Permittee shall implement the work plan.

The CME shall evaluate potential remedial alternatives and shall recommend a preferred remedy that will be protective of human health and the environment and that will attain the appropriate cleanup levels.

6.2.2.2.3. CME Reports

The Permittee shall submit a CME Report, in the format and with the content described in Permit Section 6.2.4.7, to the Department within 90 days of completion of the CME. When the Department determines that there are no deficiencies in the CME Report, the Department will seek and consider public comment prior to selecting a remedy.

In selecting a remedy, the Department may select a remedy for a particular SWMU or AOC that encompasses several separate actions. The use of the term “remedy” refers to all such actions.

6.2.2.2.4. Cleanup Standards

The Permittee shall evaluate corrective measures and propose a preferred remedy that is capable of achieving the cleanup levels outlined in Permit Section 6.2.3 including, as applicable, any approved alternate cleanup goals established by a risk assessment.

6.2.2.2.5. Remedy Evaluation Criteria

6.2.2.2.5.1. Threshold Criteria

The Permittee shall evaluate each of the remedy alternatives against the following threshold criteria. To be selected, the remedy alternative must:

1. Be protective of human health and the environment;
2. Attain media cleanup standards within a reasonable timeframe;
3. Control the source or sources of releases so as either to reduce to the extent practicable, or to eliminate, further releases of hazardous waste or hazardous constituents that may

pose a threat to human health and the environment; and

4. Comply with applicable standards for management of wastes.

6.2.2.2.5.2. Remedial Alternative Evaluation Criteria

The Permittee shall evaluate each of the remedial alternatives for the factors described in this Permit Section (6.2.2.2.5.2). These factors shall be balanced in proposing a preferred remedy.

Long-Term Reliability and Effectiveness

The remedy shall be evaluated for long-term reliability and effectiveness. This factor includes consideration of the magnitude of risks that will remain after implementation of the remedy; the extent of long-term monitoring, or other management that will be required after implementation of the remedy; the uncertainties associated with leaving wastes in place; and the potential for failure of the remedy. The Permittee shall give preference to a remedy that reduces risks with little long-term management and that has proven effective under similar conditions.

Reduction of Toxicity, Mobility, or Volume

The remedy shall be evaluated for its effectiveness in reducing the toxicity, mobility, and volume of hazardous wastes and hazardous constituents. The Permittee shall give preference to a remedy that will more completely, permanently, and promptly reduce the toxicity, mobility, and volume of hazardous wastes and hazardous constituents.

Short-Term Effectiveness

The remedy shall be evaluated for its short-term effectiveness in reducing the toxicity, mobility, and volume of hazardous wastes and hazardous constituents. This factor includes considerations of the short-term reduction in existing risks that the remedy would achieve; the time needed to achieve that reduction; and the short-term risks that might be posed to the community, workers, and the environment during implementation of the remedy. The Permittee shall give preference to a remedy that quickly reduces short-term risks, without creating significant additional risks.

Implementability

The remedy shall be evaluated for its implementability or the difficulty of implementing the remedy. This factor includes consideration of potential installation and construction difficulties; operation and maintenance difficulties; difficulties with cleanup technology; permitting and approval requirements; and the availability of necessary equipment, services, expertise, and waste storage and disposal capacity. The Permittee shall give preference to a remedy that can be implemented quickly and easily, and poses fewer and lesser difficulties.

Cost

The remedy shall be evaluated for its cost. This factor includes a consideration of both capital costs, and operation and maintenance costs. Capital costs shall include, without limitation, construction and installation costs; equipment costs; land development costs; and indirect costs including management costs, engineering costs, legal fees, permitting fees, startup and shakedown costs, and contingency allowances. Operation and maintenance costs shall include,

without limitation, operating labor and materials costs; maintenance labor and materials costs; replacement costs; utilities; monitoring and reporting costs; administrative costs; indirect costs; and contingency allowances. All costs shall be calculated based on their net present value. The Permittee shall give preference to a remedy that is less costly, but does not sacrifice protection of human health and the environment.

6.2.2.2.6. Remedy Selection

Upon deeming the CME Report to be complete, the Department will select a proposed remedy or remedies for the SWMU or AOC. The Department may propose a different remedy from that recommended by the Permittee in the CME Report. The Department will issue a Statement of Basis for the proposed remedy, and will receive public comment on the remedy. The public comment period will extend for at least 45 days from the date of the public notice of the Statement of Basis. As provided in 20.4.1.901(A)(5)(a) through (c) and 20.4.1.901(B)(5), the Department will provide an opportunity for a public hearing on the proposed remedy, at which all interested persons will be given a reasonable chance to submit data, views or arguments orally or in writing and to examine witnesses testifying at the hearing. The comment period will automatically be extended to the close of the public hearing, if a hearing is held. The public hearing will follow the requirements under 20.4.1.901.F NMAC. The Department will select a final remedy and issue a response to public comments to all commenters, after the end of the public comment period. In selecting a remedy, the Department will follow the public participation requirements applicable to remedy selection under 20.4.1.901 NMAC and 40 C.F.R. Part 270.

6.2.2.2.7. CMI Work Plans

Within 90 days after the Department's selection of a final remedy, or as otherwise specified by the Department in writing, the Permittee shall submit to the Department for approval a Corrective Measures Implementation (CMI) Work Plan describing the design, construction, operation, maintenance, and performance monitoring for the selected remedy, and a schedule for its implementation. The CMI Work Plan shall be submitted to the Department for review in accordance with the requirements in Permit Section 1.38. Upon approval of the work plan by the Department, the Permittee shall implement the work plan.

The CMI Work Plan shall, at a minimum, include the elements found in the format provided in Permit Section 6.2.4.8.

6.2.2.2.8. Corrective Measures Implementation

The Permittee shall implement the final remedy selected by the Department according to the approved CMI Work Plan and implementation schedule.

6.2.2.2.9. Progress Reports

The Permittee shall submit to the Department progress reports in accordance with the schedule approved in the CMI Work Plan. The progress reports shall, at a minimum, include the information specified in Permit Section 6.2.4.9.

6.2.2.2.10. CMI Reports

Within 90 days after completion of a remedy, the Permittee shall submit to the Department for approval a CMI Report. The CMI Report shall include the information specified in Permit Section 6.2.4.10.

6.2.2.2.11. Accelerated Cleanup Process

6.2.2.2.11.1. General

If the Permittee identifies a corrective measure that, if implemented voluntarily, will reduce risks to human health and the environment to levels acceptable to the Department, will reduce cost or will achieve cleanup of a SWMU or AOC ahead of schedule, the Permittee may implement the corrective measure as provided in this Permit Section, in lieu of the process established in Permit Section 6.2.2.2.12.4. The accelerated cleanup process shall be used only at sites to implement presumptive remedies at small-scale and relatively simple sites where groundwater contamination is not a component of the accelerated cleanup, where the remedy is considered likely to be the final remedy for the site, and where the field work will be accomplished within 180 days of the commencement of field activities.

6.2.2.2.11.2. ACM Work Plans

The Permittee shall submit to the Department for approval a proposed Accelerated Corrective Measures (ACM) Work Plan, which shall include the following:

1. A description of the proposed remedial action, including details of the unit or activity that is subject to the requirements of this Permit;
2. An explanation of how the proposed cleanup action is consistent with the overall corrective action objectives and requirements of this Permit;
3. The sampling and analytical methods and procedures for characterization and remediation verification; and schedule for implementation and reporting on the proposed cleanup action.

The Permittee shall obtain approval of an ACM Work Plan from the Department prior to implementation of the work. The Permittee shall prepare the ACM Work Plan in accordance with the requirements of this Permit Section (6.2.2.2.11.2), and shall include a proposed implementation schedule. In accordance with Permit Section 1.38, if the Department disapproves the ACM Work Plan, the Department will notify the Permittee in writing of the work plan deficiencies and will specify a due date for submittal of a revised ACM Work Plan.

6.2.2.2.11.3. ACM Implementation

The Permittee shall implement the accelerated cleanup measure according to the approved ACM Work Plan. Within 90 days of completion of the ACM, the Permittee shall submit to the Department for approval a CMI Report that is written in a format in accordance with Permit Section 6.2.4.10. If upon review, the Department identifies any deficiencies in the CMI Report, the Department will notify the Permittee in writing and will specify a due date for submittal of a revised CMI Report.

6.2.2.2.12. Interim Measures

6.2.2.2.12.1. General

The Department may require interim measures, if the Department determines that such measures are necessary, to reduce or prevent migration of hazardous wastes or hazardous constituents that have, or may result in, an unacceptable human or environmental receptor exposure to hazardous wastes or hazardous constituents while long-term corrective action remedies are being evaluated and implemented. Upon making such determination, the Department will notify the Permittee in writing. Alternatively, the Permittee may identify the need to implement interim measures and may submit an Interim Measures Work Plan in writing to the Department for approval. The Permittee may initiate emergency interim measures without prior approval of the Department pursuant to Permit Section 6.2.2.2.12.4.

6.2.2.2.12.2. Interim Measures Work Plans

Within 60 days after receiving notification from the Department that interim measures are required, or such other period as stated in the notification, the Permittee shall submit to the Department for approval an Interim Measures Work Plan. The Interim Measures Work Plan shall include the same elements as specified in Permit Section 6.2.4.8.

6.2.2.2.12.3. Interim Measures Implementation

The Permittee shall implement the interim measures in accordance with an approved Interim Measures Work Plan and implementation schedule unless the Permittee is implementing an emergency interim measures without prior Department approval in accordance with Permit Section 6.2.2.12.4.

6.2.2.2.12.4. Emergency Interim Measures

The Permittee may determine during implementation of site investigation activities that emergency interim measures are necessary to address an immediate threat of harm to human health or the environment. The Permittee shall notify the Department within three business days of discovery of the facts giving rise to the threat, and shall propose emergency interim measures to address the threat. If the Department approves the emergency interim measures in writing, the Permittee may implement the proposed emergency interim measures without submitting an Interim Measures Work Plan. If circumstances arise resulting in an immediate threat to human health or the environment such that initiation of emergency interim measures are necessary prior to obtaining written approval from the Department, the Permittee shall notify the Department within one business day of taking the emergency interim measure. The notification shall contain a description of the emergency situation, the types and quantities of contaminants involved, the emergency interim measures taken, and contact information for the emergency coordinator who handled the situation. The notification shall also include a written statement justifying the need to take the emergency action without prior written approval from the Department.

6.2.2.2.12.5. Interim Measures Reports

Within 60 days after completion of interim measures, or as otherwise specified in the implementation schedule contained in the approved Interim Measures Work Plan, the Permittee

shall submit to the Department for approval an Interim Measures Report summarizing the results of the interim measures, that shall include copies of the results of all field screening, monitoring, sampling, analyses, and other data generated as part of the interim measures implementation. The Interim Measures Report shall include the same elements as specified in Permit Section 6.2.4.10.

6.2.3. Cleanup Levels

The Permittee shall adhere to the requirements of this Permit Section (6.2.3) for implementing and completing cleanup of groundwater, surface water, and soil at all SWMUs and AOCs at the Facility. All proposed cleanup levels will be subject to the Department's review and approval.

6.2.3.1. Cleanup Levels for Contaminants in Groundwater (other than Perchlorate)

The cleanup levels for groundwater shall be the New Mexico Water Quality Control Commission (WQCC) water quality standards (20.6.2.3103 and 20.6.2.4103 NMAC) and the drinking water maximum contaminant levels (MCLs) adopted by EPA under the Federal Safe Drinking Water Act (42 U.S.C. §§ 300f to 300j-26). If both a WQCC standard and a Maximum Contaminant Level (MCL) have been established for a contaminant, then the most stringent of the two levels shall be the cleanup level for that contaminant.

If a WQCC standard or MCL has not been established for a contaminant, the EPA Regional Screening Level (RSL) (EPA, 2009) for tap water shall be used as the cleanup level. If an RSL for tap water does not exist for a contaminant, and toxicological information is available, the Permittee shall propose a cleanup level based on a residential scenario, a total target human health excess cancer risk level of 10^{-5}, and for non-carcinogenic contaminants a HQ of one (1.0).

6.2.3.2. Cleanup Levels for Perchlorate in Groundwater

As described in Permit Section 6.4.1.4, the Permittee shall determine the nature extent, and rate of migration of any perchlorate contamination in groundwater. If the New Mexico WQCC adopts a groundwater standard for perchlorate, or if EPA adopts a MCL for perchlorate, then the standard or MCL will become the cleanup level. Pending WQCC or EPA adoption of a groundwater standard or MCL, if perchlorate is detected in groundwater at a concentration greater than or equal to 4 ug/L, the Permittee shall, through a Corrective Measures Study, propose a cleanup level based on a risk assessment using a Hazards Index of 1.0 and a residential-use scenario. The proposed cleanup level shall be subject to approval by the Department.

6.2.3.3. Cleanup Levels for Soil Contaminants (Other than PCBs and Lead)

For contaminants in soil (other than PCBs and lead), the Permittee shall propose a cleanup level based on a total human health excess cancer risk level of 10^{-5}, and for noncarcinogenic contaminants a total HQ of one (1.0) for residential land use. Alternatively, the Permittee may propose cleanup levels using the screening levels and procedures listed in the Department's most current version of "*Technical Background Document for Development of Soil Screening Levels*" (as it may be updated) for a residential land use scenario.

6.2.3.4. Cleanup Levels for Polychlorinated Biphenyls (PCBs) in Soil

For PCB contamination in soil, the Permittee shall propose a cleanup level based on the Department's Position Paper "*Risk-based Remediation of Polychlorinated Biphenyls at RCRA Corrective Action Sites*" (March 2000), as it may be updated. The soil cleanup level for PCBs is either a default concentration of 1.00 milligram per kilogram (mg/kg) or a risk-based PCB concentration level established through performing a human-health risk assessment assuming a residential land use scenario.

6.2.3.5. Cleanup Levels for Lead in Soil

The lead concentration in soil shall not exceed 400 mg/kg.

6.2.3.6. Cleanup Levels for Surface Water

The Permittee shall comply with the surface water quality standards outlined in the Clean Water Act (33 U.S.C. §§ 1251 to 1387), the New Mexico WQCC Regulations (20.6.2 NMAC), and the State of New Mexico Standards for Interstate and Intrastate Surface Waters (20.6.4 NMAC), and the procedures for alternate abatement standards (20.6.2.4103 NMAC).

6.2.3.7. Ecological Risk Evaluation and Cleanup Levels

Ecological risk shall be evaluated for any SWMU or AOC where there has been a release of contaminants. The Permittee shall evaluate ecological risk and propose a cleanup level derived using the methods in the Department's most current version of *"Guidance for Assessing Ecological Risks Posed by Chemicals: Screening-Level Ecological Risk Assessment"* (March 2000, as it may be updated). The Permittee may use EPA's ECO-SSLs (EPA, 2005) with Department approval if a substance is not addressed in the Department's guidance on ecological risk.

6.2.3.8. Requests for Variance from Cleanup Levels

The Permittee may request a variance from a particular cleanup level. The nature of the request shall differ depending on whether a WQCC standard is involved. If a WQCC standard is involved, the Permittee may request an alternative abatement standard in accordance with the process specified in the WQCC Regulations at 20.6.2.4103.E and F NMAC.

For all other instances in which the Permittee requests a variance from a cleanup level, the Permittee shall submit a demonstration to the Department that achievement of the cleanup level is impracticable. In making such demonstration, the Permittee may propose consideration of such factors as technical or physical infeasibility of the project, ineffectiveness of proposed solutions, cost of the project, potential hazards to workers or to the public, and any other basis that may support a finding of project impracticability. In addition to demonstrating the basis for its impracticability request, the Permittee's written submittal shall propose the action to be taken by the Permittee if the Department approves the impracticability demonstration. Such action shall include, but is not limited to, completion of a site-specific risk assessment and identification of alternate clean-up levels. The proposed alternative cleanup level will be subject to the Department's review and approval.

6.2.4. Reporting Requirements

The purpose of this Permit Section (6.2.4) is to provide reporting requirements for corrective action activities required under this Permit. This Permit Section is not intended to provide reporting requirements for every potential type of activity conducted at the Facility; therefore, other formats or types of reports may be necessary or better suited for some activities. Described below are general reporting requirements and formats for Quarterly Reports, Investigation Work Plans, Investigation Reports, periodic monitoring reports, risk assessment reports, CME Work Plans, CME Reports, CMI Work Plans, CMI Work Plan Progress Reports, and CMI Reports. All Work Plans and Reports shall be prepared with technical and regulatory input from the Department. All Work Plans and Reports shall be submitted to the Department in the form of one electronic copy in a format acceptable to the Department and two paper copies.

6.2.4.1. Quarterly Reporting

Quarterly reports, as specified in Permit Section 6.1.6 shall include the following information:

1. A description of the work completed and an estimate of the percentage of total planned work completed;
2. Summaries of all findings, including summaries of laboratory data;
3. Summaries of all problems or potential problems encountered during the reporting period and actions taken to rectify problems;
4. Planned work for the next reporting period;
5. Summaries of contacts pertaining to corrective action with representatives of the local community, public interest groups, or State government during the reporting period;
6. Changes in key project personnel during the reporting period;
7. Summaries of any variances from approved investigation or remediation work plans; and
8. Brief summaries of any periodic monitoring reports prepared in accordance with the requirements in Permit Section 6.2.4.4.

6.2.4.2. Investigation Work Plans

The Permittee shall prepare an Investigation Work Plan using the format set forth below. All research, locations, depths and methods of exploration, field procedures, analytical requirements, data collection methods, and schedules shall be included in a work plan. Required sections for an Investigation Work Plan are:

1. Title Page and Signature Block (for the name, title, and organization of the preparer and the responsible Facility representative);
2. Executive Summary (Abstract);
3. Table of Contents;
4. Introduction;
5. Background Information;
6. Site Conditions;
7. Scope of Activities;
8. Investigation Methods;

9. Monitoring and Sampling;
10. Schedule;
11. Tables;
12. Figures; and
13. Appendices (e.g., Investigation–Derived Waste Management Plan).

The Permittee may insert figures and tables within the text sections of a work plan instead of in a separate section.

6.2.4.3. Investigation Reports

The Permittee shall prepare an Investigation Report using the format set forth below. This Permit Section (6.2.4.3) describes the minimum requirements for reporting. All data collected during investigation of a SWMU or AOC shall be included in the Investigation Report. Requirements for an RFI report are:

1. Title Page and Signature Block (for the name, title and organization of the preparer and the responsible Facility representative);
2. Executive Summary (Abstract);
3. Table of Contents;
4. Introduction;
5. Background Information;
6. Scope of Activities;
7. Field Investigation Results – Including, but not limited to (as applicable): surface conditions, subsurface conditions, monitoring well construction, boring or excavation abandonment, groundwater conditions, materials testing results, and pilot testing results;
8. Regulatory Criteria;
9. Site Contamination – Including as applicable, but not limited to: soil, rock and sediment sampling analytical results, soil, rock and sediment sample field screening results, groundwater sampling results, surface water sampling results, and subsurface vapor sampling results; and conclusions;
10. Conclusions and Recommendations;
11. Tables - An explanation shall be provided on each table for all abbreviations, symbols, acronyms, and qualifiers;
12. Figures - All map figures shall include an accurate bar scale and a north arrow, other types of figures shall include a bar scale, if appropriate, and an explanation shall be provided on each figure for all abbreviations, symbols, acronyms, and qualifiers; and,
13. Appendices - Including, as appropriate, field methods, boring/test pit logs and well construction diagrams, chemical analytical reports, and other appendices as required by the Department.

The Permittee may insert figures and tables within the text sections of an investigation report instead of in a separate section.

6.2.4.4. Periodic Monitoring Reports

The Permittee shall prepare a Periodic Monitoring Report using the format set forth below. The reports shall present the results of periodic or routine groundwater and remediation system monitoring at the Facility. All data collected during each monitoring and sampling event in the reporting period shall be included in a periodic monitoring report. In general, interpretation of data should be presented only in the background, conclusions, and recommendations sections of a report. The other text sections of a report should be reserved for presentation of facts and data without interpretation or qualifications. Requirements for a Periodic Monitoring Report are:

1. Title Page and Signature Block (for the name, title and organization of the preparer and the responsible Facility representative);
2. Executive Summary (Abstract);
3. Table of Contents;
4. Introduction;
5. Scope of Activities;
6. Regulatory Criteria;
7. Monitoring Results;
8. Conclusions and Recommendations;
9. Tables - An explanation shall be provided on each table for all abbreviations, symbols, acronyms, and qualifiers;
10. Figures - All map figures shall include an accurate bar scale and a north arrow; other types of figures shall include a bar scale, if appropriate, and an explanation shall be provided on each figure for all abbreviations, symbols, acronyms, and qualifiers; and,
11. Appendices - Including, as appropriate, field methods, boring/test pit logs and well construction diagrams, chemical analytical reports, and other appendices as required by the Department.

The Permittee may insert figures and tables within the text sections of a periodic monitoring report instead of in a separate section.

6.2.4.5. Risk Assessment Reports

The Permittee shall prepare a Risk Assessment Report using the format set forth below. Risk Assessment Reports may be appended to or combined with a CME Report or an Investigation Report to create a single document for a given SWMU or AOC. Human health and ecological risk assessments should be presented in separate sections, but the general risk assessment outline applicable to both sections is provided below. The conceptual site model shall be discussed in all risk assessments. Requirements for a Risk Assessment Report are:

1. Title Page and Signature Block (for the name, title and organization of the preparer and the responsible Facility representative);
2. Executive Summary (Abstract);
3. Table of Contents;
4. Introduction;

5. Background Information -- Including site description and sampling results;
6. Conceptual Site and Risk Exposure Models;
7. Risk Screening Results;
8. Conclusions and Recommendations;
9. Tables;
10. Figures; and
11. Appendices.

A section in the risk assessment report shall summarize the analytical results of sampling at the SWMU or AOC. It shall include a description of the history of releases of contaminants, the known and possible sources of contamination, the vertical and lateral extent of contamination present in each medium, and a discussion of any uncertainties that are associated with contaminant characterization. Sources that are no longer considered to be ongoing but represent the point of origination for contaminants transported to other locations shall be included. This section shall reference any pertinent figures, data summary tables, and references in other reports. References made to other reports shall include page number, table numbers, and figure numbers for the referenced information. Page numbers for references made to other reports may be presented in a formal reference section of a risk assessment report. Summaries of data for each contaminant shall include the maximum value detected, the detection limit, and the upper confidence limit of the mean (UCL) based on a 95% confidence level (if applicable to the data set) with a notation for the statistical method used to calculate the UCL. Background values used for comparison to inorganic constituents and discussion of how “non-detect” analytical results were handled in the statistical analysis of data shall also be included.

Another section in the report shall present the conceptual site and risk exposure models. It shall include information on the expected fate and transport of contaminants detected at the SWMU or AOC. The discussion of fate and transport shall address potential migration of each contaminant in each medium, potential breakdown products and their migration, and anticipated pathways of exposure for human or ecological receptors. Diagrammatic representations of the conceptual site and risk exposure models shall appear in the figures section of the document. For human health risk assessments, the conceptual site and risk exposure models shall include the current and foreseeable future land use (such as industrial or recreational) for all risk assessments. Cleanup levels for the Facility shall be based on a residential land-use scenario, even if the current use of the land is for other scenarios.

All values for exposure parameters and the source of those values shall be included in table format and presented in the Tables section of the document. Conceptual site and risk exposure models presented for ecological risk assessments shall identify assessment endpoints and measurement receptors for the SWMU or AOC. The discussion of the models shall explain how the measurement receptors are protective of the ecological receptors.

If risk screening is utilized, a section in the report shall present the actual screening values used for each contaminant for comparison to all applicable human health and ecological risk screening levels. Other regulatory levels that are applicable to screening the site, such as drinking water MCLs or WQCC standards shall also be included in this section.

For risk assessments a section of the report shall present risk values, HQs, and hazard indexes

(HI) for human health under projected future land use and residential scenarios and any site-specific scenarios. A similar section shall also present for each contaminant the HQ for each ecological receptor.

Finally, a section shall also be included in the report that contains a discussion of qualitative, semi-quantitative, and quantitative uncertainty in the risk assessment and provides estimates of the potential impact of the various uncertainties. Appendices may include the results of statistical analyses of data sets and comparisons of data, full sets of results of all sampling investigations at the site, or other data as appropriate.

6.2.4.6. CME Work Plans

The Permittee shall prepare a CME Work Plan using the format set forth below. Required sections for a CME Work Plan are:

1. Title Page and Signature Block (for the name, title, and organization of the preparer and the responsible Facility representative);
2. Executive Summary;
3. Table of Contents;
4. Introduction;
5. Background Information;
6. Identification of Potential Remedies;
7. Analysis of Potential Remedies;
8. Proposed Remedy;
9. Schedule to complete CME;
10. Estimated Cost to Conduct CME;
11. Qualifications of Personnel who will conduct the CME;
12. Tables;
13. Figures; and
14. Appendices.

The Permittee may insert figures and tables within the text sections of a CME Work Plan instead of in a separate section.

6.2.4.7. CME Reports

The Permittee shall prepare a CME Report using the format set forth below. Investigation summaries, site condition descriptions, corrective action goals, corrective action options, selection criteria, and schedules shall be included in the CME Report. At a minimum, detections of contaminants encountered during site investigations shall be presented in table format with an accompanying site map showing sample locations. The required format for CME Reports is:

1. Title Page and Signature Block (for the name, title and organization of the preparer and the responsible Facility representative);
2. Executive Summary (Abstract);
3. Table of Contents;

4. Introduction;
5. Background Information;
6. Site Conditions -- Including, as appropriate, surface, subsurface, and groundwater conditions;
7. Potential Receptors -- Including sources, pathways, and receptors;
8. Regulatory Criteria;
9. Identification of Corrective Measures Options;
10. Evaluation of Corrective Measures Options -- Including the required information in Permit Section 6.2.2.2.5.2;
11. Selection of a proposed preferred remedy;
12. Design Criteria to Meet Cleanup Objectives;
13. Schedule;
14. Tables;
15. Figures; and
16. Appendices.

The Permittee may insert figures and tables within the text sections of a CME Report instead of in a separate section.

A CME Report shall include the following information:

1. A description of the location, status, and current use of the site;
2. A description of the history of site operations, including an identification of hazardous and solid wastes managed at the site, and any releases of hazardous waste or hazardous constituents;
3. A description of site surface conditions;
4. A description of site subsurface conditions;
5. A description of on-site and any off-site contamination in all affected media;
6. An identification and description of all sources of contaminants;
7. An identification and description of contaminant migration pathways;
8. An identification and description of potential contaminant receptors;
9. An identification and description of applicable cleanup standards or other regulatory criteria;
10. An identification and description of remedial alternatives;
11. Remedial alternative pilot or bench scale testing results, if applicable;
12. A detailed evaluation and rating of each of the remedial alternatives, applying the criteria set forth in Permit Section 6.2.2.2.5.2;
13. An identification of a proposed preferred remedy;
14. Basic design criteria of the proposed preferred remedy; and
15. A schedule for implementation of the proposed preferred remedy.

6.2.4.8. CMI Work Plans

The Permittee shall prepare a CMI Work Plan using the format set forth below. The CMI Work Plan shall provide details on the design, construction, operation, maintenance, and performance monitoring for the selected remedy, and a schedule for implementation. The CMI Work Plan shall, at a minimum, include as necessary depending on the type of remedy to be implemented:

1. A description of the selected remedy;
2. A description of the remediation system objectives;
3. An identification and description of the qualifications of key persons, consultants, and contractors that will be implementing the remedy;
4. Detailed engineering design drawings and systems specifications for all elements of the remedy;
5. A construction quality assurance plan;
6. An operation and maintenance plan, if applicable;
7. The results of any remedy pilot tests, such as landfill cover test plots;
8. A schedule for submission to the Administrative Authority of periodic progress reports
9. A schedule for implementation of the remedy; and
10. A health and safety plan.

6.2.4.9. CMI Work Plan Progress Reports

The Permittee shall make progress reports on the execution of the CMI Work Plan to the Department, as described in this Permit Section (6.2.4.9). At a minimum, a progress report shall include the following information:

1. A description of the remedy work completed during the reporting period;
2. A summary of problems, potential problems, or delays encountered during the reporting period;
3. A description of actions taken to eliminate or mitigate the problems, potential problems, or delays;
4. A discussion of the remedial work projected for the next reporting period, including all sampling events;
5. Copies of the results of all monitoring, including sampling and laboratory analyses, and any other data generated during the reporting period; and
6. Copies of all waste disposal records generated during the reporting period.

6.2.4.10. CMI Reports

A CMI Report shall, at a minimum, include the following information.

1. A summary of the work completed;
2. A statement, signed by a registered professional engineer, that the remedy has been completed in accordance with the Department approved CMI Work Plan for the remedy;
3. As-built drawings and specifications signed and stamped by a registered professional engineer;

4. Copies of the results of all monitoring, including sampling and laboratory analyses, and other data generated during the remedy implementation, if not previously submitted in a progress report; and
5. Copies of all waste disposal records, if not previously submitted in a progress report.

6.2.4.11. Certification

Pursuant to 40 C.F.R. § 270.11(d)(1), all corrective action documents shall include a certification, signed by a responsible official of the Facility, stating:

> I certify under penalty of law that this document and all attachments were prepared under my direction or supervision according to a system designed to assure that qualified personnel properly gather and evaluate the information submitted. Based on my inquiry of the person or persons who manage the system, or those persons directly responsible for gathering the information, the information submitted is, to the best of my knowledge and belief, true, accurate, and complete. I am aware that there are significant penalties for submitting false information, including the possibility of fine and imprisonment for knowing violations.

6.3. COMPLIANCE SCHEDULE TABLES

The Permittee shall meet the specified compliance schedules for all actions and deliverables required by this Permit. Corrective action is required for all SWMUs and AOCs identified in Table I-3 of Permit Attachment I.

6.4. SPECIAL REQUIREMENTS FOR INFORMATION SUBMITTALS AND CORRECTIVE MEASURES

6.4.1. Special Investigation Requirements

6.4.1.1. Landfills to Be Closed with Waste Left in Place

For each landfill that the Permittee proposes to leave all or a portion of the contents of the landfill in place, the Permittee shall implement the corrective action procedures set forth in Permit Section 6.2.2. Within 180 days after the effective date of this Permit, the Permittee shall submit to the Department for approval in accordance with Permit Section 6.2.4.6 a CME Work Plan for each such landfill unless a CME Work Plan has been previously submitted to the Department for the landfill.

6.4.1.2. Military Munitions Ranges

The Permittee has conducted operations at areas that were used to research, develop, test, and evaluate military munitions and explosives, and other ordnance, or weapons systems, or to train military personnel in their use and handling. The Facility contains numerous military ranges where explosives are and were used for the purpose of conducting military exercises, munitions testing, research development, and demonstrations. These military ranges may include firing lines and positions, maneuver areas, firing lanes, test pads, impact areas, simulator sites, training

sites, research facilities, and buffer zones.

This Permit Section (6.4.1.2) applies to military munitions that meet the statutory definition of "solid waste" in NMSA 1978, 74-4-3(M), whether or not they also meet the regulatory definition of "solid waste" in 40 C.F.R. § 261.2.

Within 90 days of the effective date of this Permit, the Permittee shall submit to the Department for approval a Military Range Assessment Report that contains the following information:

1. A list of all active, inactive, and closed military ranges located on Facility property;
2. A list of any military ranges located on property that has been transferred from the Facility to another federal, private, or other entity;
3. An identification of those military ranges that are active, inactive, or closed;
4. For each inactive and closed military range, a description of the current use of the property;
5. Maps (or a map) that clearly illustrate the boundaries of all active, inactive, and closed military ranges, including transferred ranges, and the map must also illustrate any buffer zone around the ranges;
6. A qualitative assessment of the nature and extent of contamination at each active, inactive, and closed military range, including the potential risk to human health and the environment from the military munitions and other contamination;
7. A recommendation for further investigation necessary to fully characterize the nature and extent of the contamination on each of the active, inactive, and closed military ranges; and
8. A proposed schedule for implementation of the recommended investigation.

6.4.1.3. Areas with Groundwater Contamination

Groundwater contamination or the potential for groundwater contamination has been identified at the following areas:

1. Tijeras Arroyo Groundwater (TAG) Area – trichloroethylene (TCE) and nitrate;
2. Landfills #4, #5, and #6, LF-008 (SWMU 6-4)–potential for contamination by selenium and TCE;
3. Manzano Base Groundwater – TCE;
4. Sewage Lagoons and Golf Course Pond, WP-026 – TCE, nitrate;
5. Manzano Sewage Treatment Facility, WP-16 (SWMU 6-24) – potential for contamination;
6. Monitoring well WYO-4 area – TCE;
7. McCormick Ranch -- Nitrate;
8. Bulk Fuels Facility, ST-106 and SS-111 -- Fuel (JP-4, JP-8, and Aviation Gas) Contamination; and
9. EOD Hill – perchlorate contamination.

The Permittee shall complete an Investigation Work Plan, Investigation Report, or CME Report

for each of the nine areas of groundwater contamination in accordance with the compliance schedules in Table I-3 of Permit Attachment I. The Permittee shall complete a CME Report for each area of groundwater contamination that requires remediation, as determined by the Department. In addition, Permittee shall investigate other areas of the Facility, in addition to those listed above, where the Department determines that either groundwater is contaminated or there is potential for groundwater contamination.

6.4.1.4. Perchlorate Screening in Groundwater

Monitoring for perchlorate is required for eight consecutive quarters in groundwater monitoring wells installed at the Facility after the effective date of this Permit and in the following existing wells or their replacements: KAFB-1001 through KAFB-1007 (McCormick Ranch/Range wells), KAFB-1901 through KAFB-1904 (Lake Christian wells), and EOD Hill well. The Department reserves the right to include additional wells for perchlorate monitoring. The Permittee shall report all monitoring results on January 31, April 30, July 31, and October 31 of each year for at least 8 consecutive quarters to the Department, unless the Department agrees in writing to a longer reporting period.

The Permittee shall determine the nature, extent, and rate of migration of any perchlorate contamination in groundwater at the Facility and, if necessary, down gradient of the Facility. The detection limit for the monitoring of perchlorate in groundwater shall not exceed 1 ug/L.

If perchlorate is detected in a groundwater at a concentration greater than or equal to 1 ug/L in a groundwater monitoring well, monitoring of perchlorate in such well must continue at a frequency determined by the Department. The frequency shall not exceed one year.

6.4.1.5. Sanitary Sewer Line at LF-002 (SWMU 6-2)

The sanitary sewer line that passes through LF-002 shall be removed in accordance with the Department's instructions (letters from NMED to Carl Lanz: July 16, 2004; September 13, 2004; and March 10, 2005). Instead of removing the sanitary sewer line, the Permittee may abandon the sanitary sewer line in place, provided that the sewage within the line is completely drained when the line is abandoned. The sewer line shall be taken out of service within two years of the effective date of this Permit.

Within 180 days after the effective date of this Permit, the Permittee shall submit to the Department for approval - in accordance with Permit Section 6.2.2.2.7 - a CMI Work Plan with a schedule for removing or abandoning the sewer line. After completion of the work, the Permittee shall augment the CMI Report for LF-002 by describing the removal or abandonment of the sewer line.

6.5. TECHNICAL REQUIREMENTS

The methods used to conduct investigation, remediation, and monitoring activities shall be sufficient to fulfill the requirements of this Permit, and to provide accurate and representative data for the evaluation of site conditions, the nature, concentration, rate of migration, and extent of contamination, and for remedy selection and implementation, where necessary. The methods presented in this Permit are minimum requirements for environmental investigation and sampling, and are not intended to include all methods that may be necessary to fulfill the

requirements of this Permit. The methods for conducting investigations, corrective actions, and monitoring at the Facility must be determined based on the conditions and contaminants that exist at each SWMU or AOC.

The Permittee shall provide a description of investigation, sampling or analytical methods and procedures in documents submitted to the Department that includes sufficient detail to evaluate the quality of the acquired data. The Department must approve any proposed combinations of SWMUs and AOCs that are grouped for the purpose of site investigation, remediation, and/or monitoring activities.

6.5.1. Standard Operating Procedures

The Permittee may reference relevant Facility Standard Operating Procedures, provided that copies of these procedures are also submitted to the Department for review. If any requirement or procedure in a Standard Operating Procedure is found by the Department to be unacceptable for reasons including, but not limited to, that the requirement or procedure will or could prevent the acquisition of representative and reliable sampling results, the requirement or procedure shall be replaced by the Permittee with a different requirement or procedure that is acceptable to the Department.

6.5.2. Documentation of Field Activities

Daily field activities, including observations and field procedures, shall be recorded on appropriate forms. The original field forms shall be retained at the Facility and made available to the Department upon request. Completed forms shall be maintained in a bound and sequentially numbered field file (logbook) for reference. Indelible ink shall be used to record all field activities. Photographic documentation of field activities shall be performed, as appropriate. The daily record of field activities shall include, at minimum:

1. SWMU or AOC designation;
2. Date;
3. Time of personnel arrival and departure;
4. Field investigation team members who are present, including subcontractors and visitors;
5. Weather conditions;
6. Daily activities conducted and times of performance;
7. Observations;
8. Record of samples collected with sample designations and locations specified;
9. Photographic log;
10. Field monitoring data, including health and safety monitoring if conditions arise that threaten worker or public safety, or the environment;
11. Equipment used and calibration records, if appropriate;
12. List of additional data sheets and maps completed;
13. An inventory of the waste generated and the method of storage and/or disposal; and
14. Signature of personnel completing the field record.

6.5.3. Decontamination Procedures

The objective of the decontamination procedures described below is to minimize the potential for cross-contamination. A designated area shall be established for decontamination of drilling equipment, reusable sampling equipment, and well materials. Drilling rigs and other equipment shall be decontaminated prior to entering a SWMU or AOC. Drilling equipment or other exploration equipment that may come in contact with a borehole shall be decontaminated by steam cleaning, by hot-water pressure washing, or by another method approved by the Department prior to drilling each boring.

Sampling or measurement equipment, including but not limited to, stainless steel sampling tools, split-barrel or core samplers, well development or purging equipment, groundwater quality measurement instruments, and water level measurement instruments, shall be decontaminated in accordance with the following procedures or other methods approved by the Department before each sampling event:

1. Brush equipment with a wire or other suitable brush, if necessary or practicable, to remove large particulate matter;
2. Rinse with potable tap water;
3. Wash with non-phosphate detergent or other detergent approved by the Department (e.g., Fantastik™ and Liqui-Nox®) followed by a tap water rinse;
4. Rinse with 0.1 M nitric acid to remove trace metals, if necessary, followed by a tap water rinse;
5. Rinse with methanol to remove organic compounds, if necessary;
6. Rinse with potable tap water; and
7. Double rinse with deionized water.

All decontamination solutions shall be collected and stored temporarily as Investigation Derived Waste (IDW) as described in Permit Section 6.5.7. Decontamination procedures and the cleaning agents used shall be documented in the daily field log.

6.5.4. Field Equipment Calibration Procedures

Field equipment requiring calibration shall be calibrated before use in the field to known standards, in accordance with the manufacturers' recommended schedules and procedures. Calibration measurements shall be recorded in the daily field logs. If field equipment becomes inoperable, its use shall be discontinued until the necessary repairs are made. In the interim, a properly calibrated replacement instrument shall be used.

6.5.5. Sample Handling, Shipping, and Custody Requirements

The Permittee shall follow all procedures for sampling activities that are detailed in this Permit Section.

6.5.5.1. Sample Handling

At a minimum, the following procedures shall be used at all times when collecting samples during investigation, corrective action, and monitoring activities:

1. Neoprene, nitrile, or other protective gloves shall be worn when collecting samples. New disposable gloves shall be used to collect samples. If any glove is contaminated by touching the sampled material, or other material that could contaminate or dilute the sample, the glove shall be replaced before taking another sample;
2. All samples collected of each medium shall be transferred into clean containers with the exception of soil, rock, and sediment samples obtained in brass sleeves or in Encore™ samplers. Sample container volumes and preservation methods shall be in accordance with EPA SW-846 and established industry practices; and
3. Sample labels and documentation shall be completed for each sample following procedures included in the site-specific work plans that are to be approved by the Department. Immediately after the samples are collected, they shall be stored either in a cooler with ice or by other appropriate storage method until they are delivered to the analytical laboratory. Chain-of-custody procedures, as described in this Permit Section (6.5.5.1) and Section 1.3.2.4 of Permit Attachment C shall be followed for all samples collected. All samples shall be submitted to the laboratory in an appropriate timeframe that will allow the laboratory to conduct the specified analyses within the method holding times.

6.5.5.2. Sample Shipment Procedures

Shipment procedures shall include:

1. Individual sample containers shall be packed to prevent breakage, and transported in a sealed cooler with ice or other suitable coolant or as otherwise approved by the Department. Any drainage hole at the bottom of the cooler shall be sealed and secured to prevent leakage;
2. Each cooler or other container shall be delivered in a timely manner to the analytical laboratory;
3. Glass bottles shall be separated in the shipping container by cushioning material to prevent breakage;
4. Plastic containers shall be protected from possible puncture during shipping using cushioning material;
5. The chain-of-custody form and analytical request form shall be shipped inside the sealed storage container to be delivered to the laboratory; and
6. Chain-of-custody seals (signed and dated) shall be used to seal individual sample containers and the sample-shipping container in conformance with EPA guidance.

6.5.5.3. Sample Custody

All samples collected for analysis shall be recorded in the field report or data sheets. Chain-of-custody forms shall be completed prior to the transfer of samples off-site, and shall accompany the samples during shipment to the laboratory. Upon receipt of the samples at the laboratory, the custody seals will be broken by laboratory personnel, the chain-of-custody form shall be signed as received by the laboratory, and the conditions of the samples shall be recorded on the form. The original chain-of-custody form shall remain with the laboratory and copies shall be returned to the relinquishing party. The Permittee shall maintain copies of all chain-of-custody forms

generated as part of sampling activities. Copies of the chain-of-custody records (either paper copies or electronically scanned in PDF format) shall be included with final reports submitted to the Department.

A chain-of-custody form shall be used to track samples from collection through analysis to ensure the integrity of analytical results. A chain-of-custody form shall include:

1. Sample identification number;
2. Signature of sample collector;
3. Date and time of sample collection;
4. Location at which sample was collected;
5. Type of media sampled (e.g., soil);
6. Type of preservation;
7. Analysis required;
8. Signature of all persons that have had custody of the samples;
9. Dates and times of possession; and
10. Signature, date and time of breaking the custody seal.

An individual in custody of any sample must comply with the procedures identified in SW-846 Chapter Nine (EPA, 1986) and those included here.

6.5.5.4. Sample Labels

Sample labels or tags are necessary to prevent misidentification. Gummed paper labels or tags are adequate and shall include at a minimum:

1. Sample identification number;
2. Name or initial of collector;
3. Sample location;
4. Sample date and time;
5. Analytical method or parameter to be analyzed for (e.g., VOCs, SVOCs, metals);
6. Preservation method; and
7. Other remarks.

Labels shall be affixed to sample containers before sampling, and they shall be immediately completed with the above information after the samples are collected.

The Permittee shall adhere to the following field custody procedures:

1. When collecting samples, as few people as possible should handle them;
2. Sampling personnel are responsible for the care and custody of samples until they are transferred or properly dispatched to the laboratory in accordance with the procedures described herein; and
3. Sample tags or labels shall be completed for each sample using waterproof ink, or covered by transparent waterproof tape.

6.5.6. In-Situ Testing and Other Tests

In-situ permeability tests, remediation system pilot tests, stream flow tests, and other tests conducted to evaluate site, surface, and subsurface conditions shall be designed to accommodate specific site conditions and to achieve test objectives. The testing methods must be approved, in writing, by the Department prior to implementation. The tests shall be conducted in accordance with Department, EPA, United States Geological Survey, ASTM International (ASTM - http://www.astm.org/) or other methods generally accepted by industry that will allow information representative of site conditions to be obtained. Detailed logs of all relevant site conditions and measurements shall be made during the testing events. A summary of the general test results, including unexpected or unusual test results and equipment failures or testing limitations shall be reported to the Department. The summary shall be presented in a format acceptable to the Department and in general accordance with the report formats outlined in Permit Section 6.2.4.

6.5.7. Collection and Management of Investigation Derived Waste

IDW includes, but is not limited to, general refuse, drill cuttings, excess sample material, water (e.g., decontamination, development and purge), spent materials, and used disposable equipment generated during the course of investigation, corrective action, or monitoring activities. All IDW shall be properly characterized and disposed of in accordance with Permit Attachment C (Waste Analysis Plan) and all federal, state, and local laws and regulations for storage, labeling, handling, transport, and disposal of waste. The Permittee shall include a description of the anticipated IDW management process as part of any work plan submitted to the Department for approval.

All waste generated during sampling and decontamination activities shall be temporarily stored in containers appropriate for the waste.

6.5.8. Surveying Sample, Well, and Site Feature Locations

The horizontal and vertical coordinates of the top of each monitoring well casing and the ground surface elevation at each monitoring well location shall be determined by a registered New Mexico professional land surveyor or licensed Professional Engineer. Horizontal coordinates shall be measured in accordance with the State Plane Coordinate System (NMSA 1978, 47-1-49-56 [Repl. Pamp. 1993]). The surveys shall be conducted in accordance with 12.8.2 NMAC -- *Minimum Standards for Surveying in New Mexico*. Horizontal positions shall be measured to the nearest 0.1 foot, and vertical elevations shall be measured to the nearest 0.01 foot. The Permittee shall prepare site map(s), certified by a registered New Mexico professional land surveyor or licensed Professional Engineer, presenting all surveyed locations and elevations of wells and relevant site features and structures for submittal with all associated reports to the Department.

Site attributes (e.g., soil sample locations, sediment sample locations, springs, outfalls, pertinent structures, monitoring stations, as well as staked-out sampling grids), shall be located by using the global positioning system (GPS), an electronic total station with prism reflectors, transit with stadia rod or tape, or a combination of these surveying systems, or by a registered New Mexico Registered Land Surveyor or licensed Professional Engineer using the methods described in the paragraph above. Horizontal locations of site attributes shall be measured to the nearest 1.0-foot.

The Permittee shall provide the Department with a statement of accuracy for survey data upon request.

6.5.9. Requirements for Exploratory and Well Installation Borings and Exploratory Excavations

Borings shall be completed at locations specified in this Permit or as approved by the Department in Investigation Work Plans. The Department may require additional exploratory or well borings as needed to ensure protection of human health and the environment. Any additional boring locations will be determined, and approved, by the Department. The anticipated depths and locations of exploratory and well borings shall be specified in work plans submitted to the Department for approval prior to the start of the field activities.

Borings that are not completed as permanent groundwater or soil-vapor monitoring wells shall be properly abandoned. Borings completed as either groundwater monitoring or soil-vapor wells shall be completed in accordance with the requirements described in this Permit Section (6.5.9).

Exploratory and monitoring well borings shall be drilled using the most effective, proven, and practicable method for recovery of undisturbed samples and potential contaminants. The drilling method selected must be approved by the Department prior to the start of field activities. Based on the drilling conditions, the borings shall be completed using one of the following methods:

1. Hollow-stem auger;
2. Air rotary;
3. Mud rotary (generally will not be approved by the Department);
4. Percussion hammer;
5. Dual wall air rotary;
6. Direct Push Technology;
7. Cable tool;
8. Sonic; or
9. Air Rotary Casing Hammer (ARCH).

Hollow-stem auger or Direct Push Technology drilling methods are preferred if vapor-phase or volatile organic compound (VOC) contamination is known or suspected to be present. Air rotary, hollow stem auger, percussion hammer, dual wall air rotary, direct push technology, cable tool or sonic drilling are preferred for borings intersecting the saturated zone of any aquifer. The type of drilling fluids or additives used, if necessary, must be approved by the Department prior to the start of drilling activities. The use of drilling fluids, especially other than air and potable water, is discouraged.

All drilling equipment shall be in good working condition and capable of performing the assigned task. Drilling rigs and equipment shall be operated by properly trained, experienced, and responsible crews. The Permittee is responsible for ensuring that contaminants from another site or facility are not introduced into the SWMU or AOC under investigation due to equipment malfunction or poor equipment decontamination. Drilling equipment shall be properly decontaminated before initiation of drilling for each boring.

Exploratory borings shall be advanced to the depths specified or approved by the Department. The Permittee shall propose drilling depths in the site-specific work plans submitted for each subject area where subsurface investigations are needed. Unless otherwise specified in this Permit or approved by the Department in work plans, the borings shall be advanced to the following minimum depths (see also Permit Section 6.5.11):

1. In all borings, 25 feet below the deepest detected contamination;
2. Twenty-five feet below the base of disposal units;
3. Five feet below the base of shallow structures such as piping or building sumps, or other building structures; and
4. Depths specified by the Department based on regional, or on SWMU or AOC specific data needs.

The Permittee shall notify the Department as early as practicable if conditions arise or are encountered that do not allow the advancement of borings to the depths specified or approved by the Department so that alternative actions may be approved. Precautions shall be taken to prevent the migration of contaminants between geologic, hydrologic, or other identifiable zones during drilling and well installation activities. Contaminant zones shall be isolated from other zones encountered in the borings.

The drilling and sampling shall be conducted under the direction of a qualified engineer or geologist who shall maintain a detailed log of the materials and conditions encountered in each boring. Both sample information and visual observations of the cuttings and core samples shall be recorded on a boring log. Known site features and/or site survey grid markers shall be used as references to locate each boring prior to surveying the location. The boring locations shall be located to the nearest foot of their planned location, and locations shall be recorded on a scaled site map upon completion of each boring.

Trenching and other exploratory excavation methods shall follow the applicable general procedures outlined in this Permit. Methods proposed by the Permittee for exploratory excavation and sampling at any SWMU or AOC shall be included in a site-specific Investigation Work Plan submitted to the Department.

6.5.10. Requirements for Geophysical Surveys

Where necessary, the Permittee shall conduct geophysical surveys to locate underground utilities, pipelines, drums, debris, and other buried features, including buried waste, in the shallow subsurface. The methods used to conduct the surveys, such as magnetometer, ground penetrating radar, resistivity, or other methods, shall be selected based on the characteristics of the site and the possible or suspected underground features. Results of the surveys shall be included in Investigation Reports submitted to the Department.

The Department may require the Permittee to excavate test pits or trenches to identify targets located by geophysical surveys.

The Permittee shall conduct geophysical logging of boreholes using techniques such as acoustic televiewer, spinner flow, acoustic velocity/full wave form acoustic, density/porosity, gamma, neutron, single point resistance or electric (long/short normal or inductance) methods as required by the Department.

6.5.11. Requirements for Deep Subsurface Soil, Rock, and Sediment Sampling

Deep subsurface samples are those collected at depths that generally require the use of power equipment. Relatively undisturbed discrete soil and rock samples shall be obtained, where possible, during the advancement of each boring for the purpose of logging, field screening, and analytical testing. Generally, samples shall be collected at the following intervals and depths:

1. At five-foot intervals, ten-foot intervals, continuously, or as approved by the Department;
2. At the depth immediately below the base of the disposal unit or facility structure;
3. At the maximum depth of each boring or excavation;
4. At the depths of contacts or first encounter with geologic units of different lithology, structural or textural characteristics, or of relatively higher or lower permeability that are observed during drilling or excavating;
5. At depths where soil or rock types are more likely to sorb or retain contaminants as compared to surrounding lithologic units;
6. At the depth of the first encounter of any saturated zones;
7. At intervals suspected of being source or contaminated zones; and
8. At other intervals approved or required by the Department.

Additional samples may be obtained from any depth based on field observations. A split-barrel sampler lined with brass sleeves, a coring device, or other method approved by the Department shall be used to obtain samples during the drilling of each boring.

A split barrel sampler lined with brass sleeves is the preferred sampling method for borehole soil and sediment; a coring device is the preferred sampling method for rock sampling. The following procedures should be followed if a split barrel sampler is used. Upon recovery of the sample, the brass sleeves shall be removed from the split barrel sampler, and the open ends of the sleeves covered with Teflon tape or foil and sealed with plastic caps fastened to the sleeves with tape for shipment to an analytical laboratory. If brass sleeves are not used, a portion of the sample shall be placed in clean containers for laboratory analysis. The remaining portions of the sample shall be used for field screening and logging, as described in Permit Sections 6.5.13 and 6.5.15, respectively.

Discrete samples shall be collected for field screening and laboratory analyses. For analyses other than that for VOCs and semivolatile organic compounds (SVOCs), the Permittee may submit site-specific, alternative methods for homogenization of samples in the field to the Department for review and written approval.

Samples to be submitted for laboratory analyses shall be selected based upon: 1) the results of the field screening or mobile laboratory analyses; 2) the position of the sample relative to

groundwater, suspected releases, or site structures; 3) the sample location relative to former or altered site features or structures; 4) the stratigraphy encountered in the boring; and 5) the specific objectives and requirements of this Permit and the approved work plan for the SWMU or AOC under investigation. The proposed number of samples and analytical parameters shall be included as part of the site-specific work plan submitted to the Department for approval prior to the start of field investigation activities.

6.5.12. Surface and Shallow Subsurface Soil and Sediment Sampling Procedures

Surface soil samples are those collected at depths of 0 to 6 inches. Shallow subsurface samples are those collected at depths that do not require the use of power equipment. Surface and shallow subsurface soil and sediment samples shall be collected in accordance with the procedures described below.

Samples that are collected for analyses other than for VOCs or SVOCs shall be obtained using a hand-held stainless steel coring device, Shelby tube, thin-wall sampler, or other device approved by the Department. The samples shall be transferred to clean containers for submittal to the laboratory.

Samples obtained for VOC or SVOC analysis shall be collected using Shelby tubes, thin-wall samplers, or other device approved by the Department. The ends of the samplers shall be lined with Teflon tape or aluminum foil and sealed with plastic caps fastened to the sleeves with tape for shipment to the analytical laboratory.

6.5.13. Field Screening of Soil, Rock, and Sediment Samples

Samples shall be screened in the field for the presence of contaminants, if required by the Investigation Work Plan or other sampling and analysis plan. Field screening results shall be recorded on the exploratory boring and excavation logs or other field logs. Field screening results are used as a general guideline to determine the nature and extent of possible contamination. In addition, screening results shall be used to aid in the selection of soil, rock, sediment, and vapor-phase samples for laboratory analysis.

The primary screening methods to be used shall include:

1) Visual examination;
2) Headspace vapor screening for VOCs; and
3) Metals screening using X-ray fluorescence (XRF).

Additional screening for characteristics such as pH, high explosives, or for other specific compounds using field test kits shall be conducted where appropriate.

Headspace vapor screening shall target VOCs and shall be conducted by placing a soil, sediment, or rock sample in a plastic sample bag or a foil-sealed container, allowing head space for ambient air. The container shall be sealed and then shaken gently to expose the sample to the air trapped in the container. The sealed container shall be allowed to rest for a minimum of five minutes while vapor concentrations equilibrate. Vapor concentrations present within the headspace will then be measured by inserting the probe of the monitoring instrument into a small opening in the bag or through the foil. The maximum value and the ambient air temperature shall be recorded on the log for each sample. A photo-ionization detector equipped with a 10.6

or higher electron volt (eV) lamp, combustible gas indicator, or other instrument approved by the Department shall be used for VOC field screening. The limitations, precision, and calibration procedures of the monitoring instrument to be used for VOC field screening shall be included in the Investigation Work Plan prepared for each SWMU or AOC.

XRF shall target metals. XRF screening requires proper sample preparation and instrument calibration. Sample preparation and instrument calibration procedures shall be documented in the field logs. The methods and procedures for sample preparation and instrument calibration shall be approved by the Department prior to the start of field activities.

The Permittee shall record on the field logs all conditions capable of influencing the results of field screening. The Permittee shall submit to the Department a report detailing any conditions potentially influencing field screening results. This report shall be included in any report where the field screening results are presented.

At a minimum, the Permittee shall submit the samples with the greatest apparent degree of contamination, based on field observations and field screening, for laboratory analysis. In addition, the Permittee shall submit the samples with no or little apparent contamination, based on field screening, for laboratory analysis if the intention is to confirm that the base (or other depth interval) of a boring or other sample location is not contaminated.

6.5.14. Field Quality Control for Soil, Rock, and Sediment Sampling

The Permittee shall collect Quality Control (QC) samples to monitor the quality of sample collection and laboratory analysis.

Field duplicates shall consist of two samples either split from the same sample device or collected sequentially. Field duplicates shall be collected at a rate of at least 10 percent of the total number of environmental samples submitted for analysis. At a minimum, one duplicate sample shall always be collected and analyzed for the appropriate contaminants.

The Permittee shall prepare and analyze equipment blanks from all sampling apparatus at a frequency of at least five percent of the total number of samples submitted for analysis. Equipment blanks shall be generated by rinsing decontaminated sampling equipment with deionized water, and capturing the rinsate water in an appropriate sample container.

In the case of VOC analyses, the Permittee shall prepare and analyze field blanks at a frequency of at least one per day for each medium sampled at each SWMU, AOC, or other site.

Reagent blanks shall be prepared and analyzed if chemical analytical procedures requiring reagents are employed in the field as part of the investigation or monitoring program.

Each type of QC sample shall be submitted for laboratory analyses, and analyzed in the same batch that the environmental samples they represent.

6.5.15. Logging of Soil, Rock, and Sediment Samples

The physical characteristics of soil, rock, and sediment samples, such as mineralogy, ASTM soil classification, American Geological Institute rock classification, moisture content, texture, color, presence of stains or odors, field screening results, depth, location, method of sample collection, and other observations shall be recorded in a field log. Samples shall be visually inspected and

the soil, sediment, or rock type classified in general accordance with ASTM D2487 (Unified Soil Classification System) and ASTM D2488 (Standard Practice for Description and Identification of Soils), or American Geological Institute Methods for soil and rock classification or in other ways approved by the Department. Detailed logs shall be completed in the field by a qualified geologist. Additional information, such as the presence of water-bearing zones and any unusual or notable conditions encountered during drilling shall be recorded on the logs. Field boring logs, test pit logs, and field well construction diagrams shall be converted to a format acceptable for use in final reports submitted to the Department.

6.5.16. Requirements for Soil-Vapor Monitoring

Samples of subsurface vapors shall be collected from vapor monitoring points where required by the Department. The Permittee shall, as required by the Department, collect soil-vapor samples for field measurement of:

1. Percent oxygen;
2. Organic vapors (using a photo-ionization detector with a 10.6 eV lamp, a combustible vapor indicator or other method approved by the Department);
3. Percent carbon dioxide;
4. Static subsurface pressure; and
5. Other parameters, such as carbon monoxide and hydrogen sulfide.

The Permittee also shall collect soil-vapor samples for laboratory analysis of the following:

1. Percent moisture;
2. VOCs; and
3. Other analytes required by the Department.

When collecting soil-vapor samples for laboratory or field analysis, the Permittee shall continually monitor the concentrations of soil vapor from a given monitoring point with an appropriate field instrument (e.g., photoionization detector). The Permittee shall collect soil-vapor samples after the field instrument readings have stabilized and after the sampling tubing and soil-vapor monitoring well have been appropriately purged to remove all stagnant vapor. Soil-vapor samples for laboratory analysis shall be collected using SUMMA canisters[1] or other sample collection method approved by the Department. The samples shall be analyzed for VOC concentrations by EPA Method TO-15 (as it may be updated) or equivalent VOC analytical method approved by the Department.

In the field, soil-vapor measurements, the date and time of each measurement, and the type and

1 The term “SUMMA” Canister is a trademark that refers to electropolished, passivated stainless steel vacuum sampling devices, such as TO canisters, SilcoCans, MiniCans, etc, which are cleaned, evacuated, and used to collect whole-air samples for laboratory analysis

serial number of field instrument used shall be recorded in a field log book. The method used to obtain soil-vapor field measurements and samples must be approved by the Department in writing prior to the start of monitoring.

Soil vapor wells shall not be installed with the use of any fluids. Soil vapor wells may be completed by backfilling with native materials. If a soil vapor well is installed as a permanent monitoring point, the Permittee shall not sample the well before the expiration of the 24-hour equilibration period following completion of installation. Information on the design and construction of soil-vapor monitoring wells shall be recorded as for groundwater monitoring wells (Permit Section 6.5.17.10) as applicable.

Soil-vapor monitoring wells shall be designed and constructed in a manner that will yield high-quality samples. The design and depth of installation must be approved by the Department.

6.5.17. Technical Requirements for Groundwater Investigations

The Permittee shall conduct investigations of groundwater in accordance with Department approved work plans to fully characterize the nature, vertical and lateral extent, concentration, rate of migration, fate, and transport of groundwater contamination originating from the Facility to determine the need for, and scope of, corrective action. The investigation shall include an evaluation of the physical, biological, and chemical factors influencing the transport of hazardous constituents and other contaminants in groundwater. The Permittee shall implement the groundwater investigation requirements in accordance with the requirements set forth in this Permit Section (6.5.17) and in approved work plans. All data shall be collected according to Department, EPA and industry accepted methods and procedures, and in accordance with this Permit Section (6.5.17) and any other requirements of this Permit.

6.5.17.1. Objectives

The Permittee shall implement groundwater investigations to determine the following as required by the Department:

1. Nature, extent, rate of migration, and concentration of historical and current releases of contaminants to groundwater;
2. Fate and transport, including boundary conditions, of contaminants releases within groundwater;
3. The depth to groundwater, water table elevations, potentiometric surfaces, and any seasonal variations;
4. Groundwater flow directions and velocities;
5. Migration of groundwater across hydrostratigraphic and structural boundaries;
6. Watershed and regional water balance information for evaluating contaminant fate and transport including:
    - recharge and discharge locations, rates, and volumes,
    - evapotranspiration data,
    - stream-flow data;

7. Water supply well pumping influences, including data for wells not owned by the Permittee, if available;
8. Saturated and unsaturated hydraulic-conductivity ($K_{x,y,z}$), porosity, effective porosity, permeability, transmissivity, particle-size, storage coefficients, and estimated fracture/secondary porosity;
9. Contaminant concentrations in soil, rock, sediment, air, and vapor; and absorption coefficients (K_{ds});
10. Changes in groundwater chemistry and the causes;
11. Regional and perched aquifer boundaries;
12. Geologic, hydrostratigraphic, and structural relationships; and,
13. General water chemistry.

In selecting a site for a new well, the Permittee shall consider paleotopography, fracture density and orientation, source areas, contaminant characteristics, geologic structures, groundwater flow direction, and the known occurrences of groundwater. All existing and newly installed wells and piezometers shall be surveyed in accordance with the requirements described in Permit Section 6.5.8.

6.5.17.2. Groundwater Levels

The Permittee shall obtain groundwater levels in all wells from which the Permittee is collecting groundwater samples and from other wells as specified by the Department, the schedule for which shall be provided in the Investigation Work Plans or other work plans.

Groundwater levels shall be measured in monitoring wells at frequencies required by the Department and within 24 hours from the start of monitoring the water level in the first well, unless another time frame is specified in the work plan and approved by the Department. Groundwater levels also shall be obtained prior to purging for any sampling event. Measurement data and the date and time of each measurement shall be recorded on a field log. The depth to groundwater shall be measured to the nearest 0.01 foot. The depth to groundwater shall be recorded relative to the surveyed well casing rim or other surveyed datum, as appropriate.

6.5.17.3. Groundwater Sampling

Initial groundwater samples shall be obtained from newly-installed monitoring wells within 30 days after completion of well development. Subsequent groundwater monitoring and sampling shall be conducted at frequencies approved by the Department. All monitoring wells specified in a Department approved Investigation Work Plan shall be sampled within 21 calendar days from the start of the groundwater sampling event. The Permittee shall sample all groundwater in all wells as specified in a Department-approved Investigation Work Plan. Any requests for variances from the approved groundwater sampling plan or schedule shall be submitted to the Department in writing 90 days prior to the start of scheduled monitoring and sampling events.

Groundwater samples shall be collected from all saturated zones including from exploratory borings that are not intended to be completed as monitoring wells prior to abandonment of the borings.

In addition to other required analyses, water samples shall be analyzed in accordance with approved work plans for one or more of the following general chemistry parameters in Table 6-1 below. The Department will specify through approved work plans which parameters in Table 6-1 that the Permittee must analyze for in water samples.

TABLE 6-1.
Groundwater General Chemistry Parameters

nitrate/nitrite	sulfate	chloride	sodium
dissolved CO2	alkalinity	carbonate/bicarbonate	boron
fluoride	manganese	calcium	silicon
ferric/ferrous iron	ammonia	potassium	phosphorus/phosphate
strontium	lithium	magnesium	molybdenum
Total Kjeldahl Nitrogen (TKN)	total organic carbon	suspended sediment concentration*	
total dissolved solids	bromide	stable isotopes (as required by the Department)	
Other parameters indicating oxidation/reduction conditions			
Eh	pH	dissolved oxygen	specific conductivity
dissolved manganese		dissolved iron	
sulfide		alkalinity	
temperature			

*ASTM Method D3977-97 standard test for determining sediment concentration in water samples

6.5.17.4. Well Purging

All screened zones in each monitoring well shall be purged by removing groundwater prior to sampling in order to ensure that fresh formation water is sampled. Purge volumes shall be as required by the Department. Field parameters that shall be monitored while purging are: groundwater pH, specific conductance, dissolved oxygen concentrations, turbidity, redox potential, and temperature. Field parameters shall be recorded at intervals approved by the Department. Measuring instruments are to be approved by the Department and are to be specified in the Investigation Work Plan or other sampling and analysis plan. The volume of groundwater purged, the readings obtained at each interval, and the instruments used shall be recorded on the field monitoring log. Water samples shall be obtained from a well only after the measured values of purge water field parameters have stabilized to within 10 percent for three consecutive measurements and after purging at least 75 percent of one well-bore volume. A well-bore volume is herein defined as the volume of water in the saturated filter pack plus the volume of all standing water within the well screen and casing including the sump. The Permittee may submit to the Department for approval, a written request for a variance from the described method of well purging for individual wells no later than 90 days prior to scheduled

sampling activities.

6.5.17.5. Groundwater Sample Collection

Groundwater samples shall be obtained using methods approved by the Department within eight hours of the completion of well purging. Groundwater in monitoring wells with low recharge rates and that purge dry shall be sampled when the water level in the well has recovered sufficiently to collect the required samples. Sample collection methods shall be documented in field monitoring logs. The samples shall be transferred to appropriate clean containers. Sample handling and chain-of-custody procedures that shall be implemented are described in Permit Sections 6.5.5. Decontamination procedures shall be established and, implemented, for non-dedicated water sampling equipment as described in Permit Section 6.5.3.

Groundwater samples intended for metals analysis shall be submitted to the laboratory for analyses of total metals; the samples shall not be filtered in the field or laboratory, unless the Department requires analyses for dissolved metals concentrations. If dissolved metals concentrations are required by the Department, the Permittee shall obtain groundwater samples for dissolved metals analysis; said samples shall be filtered using disposable in-line filters with a 0.45 micron or other mesh size approved by the Department.

6.5.17.6. Field QC for Groundwater Sampling

Field duplicates, field blanks, equipment rinsate blanks, reagent blanks, and trip blanks (the latter required for VOC analyses only) shall be collected or prepared and analyzed for quality control purposes. The samples shall be managed as described in Permit Section 6.5.5.

Field duplicates shall consist of two samples collected sequentially. Field duplicate samples shall be collected and analyzed at a frequency of at least 10 percent of the total number of environmental samples submitted for analysis. At a minimum, one duplicate sample per sampling event shall always be collected and analyzed.

In the case of VOC analyses, field blanks shall be prepared and analyzed at a frequency of no less than one per day per SWMU or AOC. Field blanks shall be generated by filling sample containers in the field with deionized water and submitting the field blank, along with the groundwater samples, to an analytical laboratory.

Equipment blanks shall be prepared and analyzed at a rate of at least five percent of the total number of environmental samples submitted for analysis, but no less than one equipment blank per sampling day. Equipment blanks shall be generated by rinsing decontaminated sampling equipment with deionized water, and capturing the rinsate water in an appropriate clean container. The equipment blank then shall be submitted with the groundwater samples to the analytical laboratory for the same analyses as the environmental samples.

Reagent blanks may be required by the Department if chemical analyses requiring the use of chemical reagents are conducted in the field during water sampling activities. Reagent blanks shall be prepared and analyzed at a frequency of at least 10 percent of the total number of media samples, but no less than one per day per SWMU or AOC.

Trip blanks shall be prepared using deionized water. Trip blanks shall be managed exactly the same as environmental samples. Trip blanks shall accompany sampling personnel into the field

throughout sampling activities, and then shall be placed into a shipping container with environmental samples for shipment to the analytical laboratory. Trip blanks shall be analyzed at a frequency of one for each shipping container holding samples for VOC analysis.

6.5.17.7. Periodic Monitoring Report

The Permittee shall submit to the Department periodic monitoring reports providing the results of the monitoring and sampling of groundwater, surface water, and springs over the previous reporting period. The reports shall be prepared in accordance with Permit Section 6.2.4.4. The reports shall be submitted within 90 days after completion of the monitoring fieldwork or in accordance with the schedule set forth in the approved monitoring work plans.

6.5.17.8. Springs

The sampling and analysis requirements for groundwater found in this Permit shall also apply to springs. Additionally:

1. Springs shall be sampled as close to the point of discharge as possible and shall be sampled at the same locations during each sampling event. If field conditions change, the spring shall be sampled as close to the original location as possible, and the Permittee shall notify the Department in the periodic monitoring report that the sampling location for the spring has changed;
2. The sampling point for each spring shall be located in accordance with the survey methods described in Permit Section 6.5.8 or by other survey methods approved by the Department;
3. Spring water flow rates shall be measured. In addition, as required by the Department, pH, specific conductance, dissolved oxygen, turbidity, temperature, and oxidation-reduction potential of the spring water shall be measured during each sampling event;
4. Spring samples shall be submitted to an analytical laboratory for analyses of the general chemistry parameters listed in Permit Section 6.5.17.3, as required by the Department and in accordance with approved work plans; and
5. The Permittee shall perform the same field QC procedures as are described in Permit Section 6.5.17.6 and Section 1.3 of Permit Attachment D for groundwater.

6.5.17.9. Surface Water

Surface water samples shall be collected using methods approved by the Department. Samples shall be collected and placed into clean containers. Field parameters and the methods and instruments used to measure them shall be approved by the Department prior to conducting surface water sampling. The sampling and monitoring techniques used and the measurements obtained shall be recorded in field monitoring logs. Stream flow rates shall be measured in conjunction with surface water sampling events.

The Permittee shall perform the same field QC procedures as are detailed in Permit Section 6.5.17.6 and Section 1.3 of Permit Attachment D for groundwater.

6.5.17.10. Groundwater Monitoring Well Construction Requirements

Groundwater monitoring wells shall be designed and constructed in a manner that will yield high

quality samples, ensure that the well will last the duration of the project or other specified time period, and ensure that the well will not serve as a conduit for hazardous constituents to migrate between different stratigraphic units or aquifers. The design and construction of groundwater monitoring wells shall comply with the guidelines established in various RCRA guidance, including, but not limited to:

1. EPA, *RCRA Groundwater Monitoring Technical Enforcement Guidance Document*, OSWER-9950.1, September, 1986; and
2. Aller, L., Bennett, T.W., Hackett, G., Petty, R.J., Lehr, J.H., Sedoris, H., Nielsen, D.M., and Denne, J.E., *Handbook of Suggested Practices for the Design and Installation of Groundwater Monitoring Wells*, EPA 600/4-89/034, 1989.

All well construction and installation shall be conducted in accordance with this Permit Section (6.5.17.10) of this Part and in accordance with approved work plans. All monitoring and sampling shall be conducted in accordance with Permit Section 6.5.17 and in accordance with approved work plans.

The Department must approve in writing all drilling locations, monitoring well and piezometer construction and installation details, sampling depths, and abandonment activities prior to the start of these activities.

6.5.17.10.1. Drilling Methods

A variety of methods are available for drilling monitoring wells. While the selection of the drilling procedure is usually based on the site-specific geologic conditions, the following issues shall be considered:

1. Drilling shall be performed in a manner that minimizes impacts to the natural properties of the subsurface materials;
2. Drilling shall be performed in a manner that contamination and cross-contamination of groundwater and aquifer materials is avoided;
3. The drilling method shall allow for the collection of representative samples of rock, unconsolidated sediment, and soil;
4. The drilling method shall allow the Permittee to determine when the appropriate location for the screened interval(s) has been encountered;
5. The drilling method shall allow for the proper placement of a filter pack and annular sealant for each monitored zone, and the borehole diameter shall be at least four inches larger in diameter than the nominal diameter of the well casing and screen to allow adequate space for emplacement of the filter pack and annular sealants;
6. The drilling method shall also allow for the collection of representative groundwater samples, and drilling fluids, including air, shall be used only when minimal impact to the surrounding formation and groundwater can be ensured (in general the Department discourages the use of drilling mud and drilling additives for groundwater monitoring well installations); and,
7. Requirements specified in Permit Section 6.5.9.

Justification for the drilling method used must be provided in writing to the Department for approval prior to well installations.

6.5.17.10.2. Monitoring Wells and Piezometers Construction

The Permittee shall submit to the Department for approval work plans for construction of wells and piezometers that meet the following requirements:

1. If required by the Department, well and piezometer borings targeting the contact between alluvium and bedrock shall be advanced to a minimum depth of five feet below the alluvium-bedrock interface;
2. Samples of sediment, bedrock, soil, and soil vapor shall be collected as appropriate for hydraulic and soil property testing and for analysis to determine the presence of hazardous waste and constituents at depths or intervals approved by the Department;
3. Samples shall at a minimum be obtained from each boring between the ground surface and one foot below the ground surface (0.0-1.0 foot interval), at subsequent five-foot intervals, at any alluvium-bedrock contact, and at the maximum depth of each boring. For sites where drilling depths exceed 50 feet, the Permittee may propose for Department approval alternative sampling intervals in work plans;
4. Field screening and chemical analyses of collected samples shall be conducted in accordance with Permit Section 6.5.13 and in accordance with approved work plans;
5. Groundwater, soil, soil vapor, rock, and sediment samples collected during drilling activities shall be delivered to an analytical laboratory for the required analyses;
6. No borehole shall be left open or cased with temporary casing for longer than five days;
7. The Department may impose specific requirements for well construction, require borings to be extended to the regional aquifer, or require the drilling of additional borings that intersect perched saturated zones or the regional aquifer based on investigation results;
8. The proposed locations, depths and details of drilling, sampling, and well construction shall be described in work plans prepared in accordance with this Permit Section (6.5.17.10.2) and Permit Section 6.2.4.2 or other document approved by the Department prior to well installation;
9. Geophysical measurements shall be collected from the borings in accordance with Permit Section 6.5.10 and as required by the Department;
10. Where appropriate, the borings shall be monitored for the presence of vapor-phase hazardous constituents prior to well construction; and
11. Based on the results of subsurface soil-vapor monitoring, the Department may require that the Permittee construct the wells to accommodate subsurface soil-vapor monitoring in addition to groundwater monitoring and sampling.

6.5.17.10.3. Well and Piezometer Construction Materials

Well and piezometers construction materials shall be selected based on the goals and objectives of the proposed monitoring program and the geologic conditions at the site. When selecting

construction materials, the primary concern shall be selecting materials that will not contribute to or remove hazardous waste or constituents from groundwater samples. Other factors to be considered include the tensile strength, compressive strength, and collapse strength of the materials; the length of time the monitoring well or piezometer will be in service; and the material's resistance to chemical and microbiological corrosion.

6.5.17.10.4. Design and Construction of Screens and Filter Packs

Screens and filter packs shall be designed to allow accurate sampling of the saturated zone that the well is intended to sample, minimize the passage of formation materials (turbidity) into the well, and ensure sufficient structural integrity to prevent the collapse of the intake structure.

The filter pack shall be installed in a manner that prevents bridging and particle-size segregation. Filter packs shall be installed by the tremie pipe method. At least two inches of filter pack material shall be installed between the screen and the borehole wall, and two feet of filter pack material shall extend above the top of the screen. A minimum of six inches and a maximum of two feet of filter pack material shall also be placed under the bottom of the screen to provide a firm footing. The precise volume of filter pack material required shall be calculated and recorded before placement, and the actual volume used shall be determined and recorded during construction. Any significant discrepancy between the calculated and actual volume shall be explained. Prior to installing the filter pack annular seal, a one to two-foot layer of chemically inert fine sand shall be placed over the filter pack to prevent the intrusion of annular sealants into the filter pack. The use of pre-fabricated screens and filter packs shall be approved in advance of well installation by the Department.

6.5.17.10.5. Design and Construction of Annular Seals

The annular space between the casing and the borehole wall shall be properly sealed to prevent cross-contamination. The materials used for annular sealants shall be chemically inert with respect to the highest anticipated concentration of chemical constituents expected in the groundwater. The precise volume of annular sealant required shall be calculated and recorded before placement, and the actual volume shall be determined and recorded during construction. Any significant discrepancy between the calculated volume and the actual volume shall be explained.

During construction, an annular seal shall be placed on top of the filter pack. This seal shall normally consist of a high solids (10 to 30 percent) bentonite material in the form of bentonite pellets, granular bentonite, or bentonite chips. The seal shall be placed in the annulus through a tremie pipe. A tamping device shall be used to ensure that the seal is emplaced at the proper depth. The bentonite seal shall be placed above the filter pack with a minimum of two-foot vertical thickness. The bentonite seal shall be allowed to completely hydrate in conformance with the manufacturer's specifications prior to installing the overlying annular grout seal.

A grout seal shall be installed on top of the filter pack seal. The grout shall be placed into the annular space by the tremie pipe method, from the top of the filter pack annular seal to within a few feet of the ground surface; however, the grout shall be installed at intervals necessary to allow it time to cure and not damage the filter pack or filter pack annular seal during installation of the grout. The tremie pipe shall be equipped with a side discharge port (or bottom discharge for grouting at depths greater than 100 ft) to minimize damage to the filter pack or filter pack

annular seal during grout placement. The grout seal shall be allowed to cure for a minimum of 24 hours before the concrete surface pad is installed. All grouts shall be prepared in accordance with the manufacturer's specifications. High solids (30 percent) bentonite grouts shall have a minimum density of ten pounds per gallon (as measured by a mud balance) to ensure proper setup. Cement grouts shall be mixed using six and one-half to seven gallons of water per 94-pound bag of Type I Portland cement. Bentonite (five to 10 percent) may be added to delay the setting time and reduce the shrinkage of the grout.

6.5.17.10.6. Well and Piezometer Development Methods

All monitoring wells and piezometers shall be developed to create an effective filter pack around the screen, correct damage to the formation caused by drilling, remove residual drilling mud or other drilling additives, if present, and fine particles from the formation near the borehole, and assist in restoring the original water quality of the aquifer in the vicinity of the well or piezometer. Monitoring wells and piezometers shall be developed until the column of water in each well or piezometer is free of visible sediment, and the pH, temperature, turbidity, and specific conductance have stabilized to within 10%.

If a well or piezometer is pumped dry, the water level shall be allowed to sufficiently recover before the next development period is initiated.

Approval shall be obtained from the Department prior to introducing air, water, or other fluids into a well or piezometer for the purpose of development. If water is introduced to a borehole during drilling and completion, then at minimum the same volume of water shall be removed from the well or piezometer during development. In addition, the volume of water withdrawn from or introduced into a well or piezometer during development shall be recorded.

6.5.17.10.7. Surface Completion Methods

Monitoring wells and piezometers may be completed either as flush-mounted wells or piezometers, or as above-ground completions. A surface seal shall be installed over the grout seal and extended vertically up the well annulus to the land surface. The lower end of the surface seal shall extend a minimum of one foot below the frost line to prevent damage from frost heaving. The composition of the surface seal shall be neat cement or concrete. In above-ground completions wherein the well casing rises or sticks up above ground level, a three-foot square by four-inch thick concrete surface pad shall be installed around the well immediately after the protective casing is installed. The surface pad shall be sloped so that drainage will be off the pad and away from the protective casing. In addition, a minimum of one inch of the finished pad shall be below grade or ground elevation to prevent washing and undermining by soil erosion.

Protective casing with a locking cover shall be installed around the well or piezometer casing (stickup or riser) to prevent damage or unauthorized entry. The protective casing shall be anchored in the concrete surface pad below the frost line and extend at least several inches above the casing stickup. A weep hole shall be drilled into the protective casing just above the top of the concrete surface pad to prevent water from accumulating and freezing inside the protective casing. A cap shall be placed on the well riser to prevent the entry of foreign materials into the well or piezometer, and a lock shall be installed on the cover of the protective casing to provide security against tampering. If a well or piezometer is located in an area that receives vehicular

traffic, a minimum of three bumper guards consisting of steel pipes three to four inches in diameter and a minimum of five-feet in length shall be installed next to the concrete surface pad. The bumper guards shall be installed to a minimum depth of two feet below the ground surface in a concrete footing and extend a minimum of three feet above ground surface. The pipes that form the bumper guards shall be filled with concrete to provide additional strength, and shall be painted a bright color to make them readily visible.

If flush-mounted completions are required (e.g., in active roadway areas), a protective structure such as a traffic-rated utility vault or meter box shall be installed around the casing. In addition, measures should be taken to prevent the accumulation of surface water in the protective structure and around the well or piezometer intake. These measures shall include outfitting the protective structure with a steel lid or manhole cover that has a rubber seal or gasket, and ensuring that the bond between the cement surface seal and the protective structure is watertight. A lock shall be installed on the lid or cover of the protective structure to prevent unauthorized access to the well or piezometer.

6.5.17.10.8. Well and Piezometer Completion Reports

For each monitoring well or piezometer completed under this Permit, the Permittee shall submit to the Department a completion summary report within 30 days of completing installation which shall include a construction log and diagram, a boring log, and a development log. The construction log and diagram and the boring log shall contain at a minimum the information required under Permit Section 6.5.17.10.10.Well or piezometer development must be completed within 30 days of installation.

6.5.17.10.9. Well or Piezometer Abandonment

Wells and piezometers shall be abandoned when they are no longer required to address corrective action requirements or when they are damaged beyond repair; however, no well or piezometer shall be abandoned without prior approval by the Department. Well abandonment must comply with current State Engineer well abandonment guidance (19.27.4.30 and 31 NMAC)

For wells and piezometers with small diameter casing (i.e., two-inch or less), abandonment shall be accomplished by over drilling with a large diameter hollow-stem auger. After the well or piezometer has been over drilled, the casing and grout shall be removed from the ground with a drill rig, and the remaining filter pack shall be drilled out. The open borehole shall then be pressure-grouted via the tremie pipe method from the bottom of the borehole to the ground surface. After the grout has cured, the top two feet of the borehole shall be filled with concrete to insure a secure surface seal.

For larger-diameter wells (i.e. greater than 2-inch), the Permittee may attempt to remove the well casing or grout the well in place. To abandon a well or piezometer in place, a tremie pipe shall be placed at the lowest point in the well or piezometer (i.e., at the bottom of the screen or in the sump). The entire well or piezometer shall then be pressure grouted from the bottom upward to force grout out through the screen into the filter pack and up the inside of the casing, sealing off all breaks and holes in the casing. Once the well or piezometer is grouted, the casing shall be cut off even with the ground surface and covered with concrete.

6.5.17.10.10. Well and Piezometer Construction Diagrams, Logs, and Boring Logs

Information on the design, construction, and development of each monitoring well or piezometer shall be recorded. Construction and boring logs and diagrams shall include the following information:

1. Well, boring or piezometer name/number;
2. Date/time of construction;
3. Borehole diameter and casing diameter;
4. Surveyed location coordinates;
5. Total depth, expressed both as depth below ground surface and elevation above sea level;
6. Name of drilling contractor;
7. Casing length;
8. Casing materials;
9. Casing and screen joint type;
10. Screened intervals, expressed both as depth(s) below ground surface and elevation(s) above sea level;
11. Screen materials;
12. Screen slot size and design;
13. Filter-pack material and size;
14. Filter-pack volume (calculated and actual);
15. Filter-pack placement method;
16. Filter-pack interval(s), expressed both as depth(s) below ground surface and elevation(s) above sea level;
17. Annular sealant composition;
18. Annular sealant placement method;
19. Annular sealant volume (calculated and actual);
20. Annular sealant interval, expressed both as depth below ground surface and elevation above sea level;
21. Surface sealant composition;
22. Surface seal placement method;
23. Surface sealant volume (calculated and actual);
24. Surface sealant interval, expressed both as depth below ground surface and elevation above sea level;
25. Surface seal and well apron design and construction;
26. Development procedure and turbidity measurements;
27. Well development purge volume(s) and stabilization parameter measurements;
28. Type, design, and construction of protective casing;
29. Type of cap and lock;

30. Ground surface elevation above sea level;
31. Survey reference point elevation above sea level on well casing;
32. Top of casing elevation above sea level;
33. Top of protective steel casing elevation above sea level;
34. Drilling method(s); and
35. Types, quantities, and dates/times that additives were introduced, if any.

6.5.18. Laboratory Analyses Requirements for all Environmental Media

The Permittee shall submit all samples for laboratory analysis to laboratories within the EPA Contract Laboratory Program. The laboratories shall use the most recent EPA and industry-accepted extraction and analytical methods as the testing methods for each medium sampled.

The Permittee shall submit a list of analytes and analytical methods to the Department for review and written approval as part of each site-specific investigation, corrective action, or monitoring work plan. The analyte detection limit for each analytical method shall be less than applicable background or regulatory cleanup level as applicable. Analyses conducted with detection limits that are greater than applicable background or regulatory cleanup levels as applicable shall be considered data quality exceptions, and the reasons for use of the elevated detection limits shall be reported to the Department; results based on these data quality exceptions may not be accepted by the Department. All analytical data (including non-detects, estimated values, and detects) shall be included in the electronic copy of the Investigation Report or other report in Microsoft™ Excel format with any qualifiers as attached from the analytical laboratory. The Permittee shall not censor data based on detection limits, quantitation limits, or measurement uncertainty. The Permittee shall also report whether any dilution of the sample was needed prior to laboratory analysis, and the amount of dilution, if any. The Department will not accept J-coded (estimated) results for samples requiring dilution prior to laboratory analysis.

6.5.18.1. Laboratory QA/QC Requirements

The following requirements for laboratory QA/QC procedures shall be considered the minimum QA/QC standards for the laboratories employed by the Permittee. The Permittee shall provide to the Department the names of the contract analytical laboratories within 45 days of awarding a contract for analytical services to any contract laboratory. The Permittee shall maintain copies of laboratory QA/QC manuals in the Operating Record and they shall be subject to inspection by the Department.

6.5.18.1.1. Quality Assurance

The Permittee shall ensure that contract analytical laboratories maintain internal quality assurance programs in accordance with EPA and industry-accepted practices and procedures. At a minimum, the laboratories shall use a combination of standards, blanks, surrogates, duplicates, matrix spike/matrix spike duplicates (MS/MSD), and other laboratory control samples to assess data quality. The laboratories shall establish control limits for individual chemicals or groups of chemicals based on the long-term performance of the test methods. In addition, the laboratories shall establish internal QA/QC procedures that meet EPA's laboratory certification requirements. Specific procedures to be completed are identified in the following sections. If a laboratory is

unable or unwilling to meet the requirements of this Permit, the Permittee shall select a different laboratory that can and will meet the requirements.

6.5.18.1.2. Equipment Calibration Procedures and Frequency

The laboratories' equipment calibration procedures, calibration frequency, and calibration standards shall be in accordance with the EPA test method requirements and documented in quality assurance and standard operating procedures manuals. All instruments and equipment used by laboratories shall be operated, calibrated, and maintained according to manufacturers' guidelines and recommendations. Operation, calibration, and maintenance shall be performed by personnel who have been properly trained in these procedures. A routine schedule and record of instrument calibration and maintenance shall be kept on file at the laboratories.

6.5.18.1.3. Laboratory QC Samples

Analytical procedures shall be evaluated for quality by analyzing reagent blanks or method blanks, surrogates, MS/MSDs, and laboratory duplicates, as appropriate for each method. Laboratory QC samples and frequency of analysis are documented in EPA test methods. At a minimum, laboratories shall analyze laboratory blanks, MS/MSDs, and laboratory duplicates at a frequency of at least one in 20 for all batch runs requiring EPA test methods and at a frequency of at least one in 10 for non-EPA test methods. All laboratory quality control data reported with the Facility's sample analysis results must be related to the analysis of the Facility's samples.

6.5.18.2. Laboratory Deliverables

Laboratory analytical data packages shall be prepared in accordance with EPA-established Level III or IV analytical support protocols. The following shall be provided in the analytical laboratory reports submitted to the Permittee either electronically or in hard (paper) copy:

1. Transmittal letter, including information about the receipt of samples, the testing methods performed, any deviations from the required procedures, any problems encountered in the analysis of samples, any data quality exceptions and qualifiers, and any corrective actions taken by the laboratory relative to the quality of the data contained in the report;
2. Holding times and requirements;
3. Sample analytical results, including sampling date; date of sample extraction or preparation; date of sample analysis; dilution factors and test method identification; soil, rock, or sediment sample results in consistent units (such as mg/kg in dry-weight basis); water sample results in consistent units (such as milligrams/liter); soil-vapor sample results in consistent units (such as ug/m^3); and detection limits; results shall be reported for all samples, including field duplicates, blanks, and other QC samples;
4. Method blank results, including detection limits;
5. Surrogate recovery results and corresponding control limits for samples and method blanks (organic analyses only);
6. MS/MSD concentrations, percent recoveries, relative percent differences (RPDs), and corresponding control limits;
7. Laboratory duplicate results, including RPDs and corresponding control limits;

8. Sample chain-of-custody documentation;
9. Instrument calibration; and
10. Discussion of completeness.

The following data deliverables for organic compounds shall also be required from the laboratory:

1. A cover letter referencing the analytical procedure used and discussing any analytical problems, deviations, and modifications, including signature from authority representative certifying to the quality and authenticity of data as reported;
2. Data qualification in conformance with EPA protocol, and definition of data descriptor codes;
3. Reconstructed ion chromatograms for gas chromatograph/mass spectrometry (GC/MS) analyses for each sample and standard calibration;
4. Selected ion chromatograms and mass spectra of detected target analytes (GC/MS) for each sample and calibration with associated library/reference spectra;
5. Gas chromatograph/electron-capture device (GC/ECD) and/or gas chromatograph/flame ionization detector (GC/FID) chromatograms for each sample and standard calibration;
6. Raw data quantification reports for each sample and calibrations, including areas and retention times for analytes, surrogates, and internal standards;
7. A calibration data summary reporting calibration range used and a measure of linearity (include decafluorotriphenylphosphine and p-bromofluorobenzene spectra and compliance with tuning criteria for GC/MS);
8. Final extract volumes (and dilutions required), sample size, wet-to-dry weight ratios, and instrument practical detection/quantitation limit for each analyte;
9. Analyte concentrations with reporting units identified, including data qualification in conformance with the CLP Statement of Work, including definition of data descriptor codes; and
10. Report of tentatively identified compounds with comparison of mass spectra to library/reference spectra.

The following data deliverables for inorganic compounds shall also be required from the laboratory.

1. A cover letter referencing the procedure used and discussing any analytical problems, deviations, and modifications, including signature from authority representative certifying to the quality and authenticity of data as reported;
2. Results of all method QA/QC checks, including inductively coupled plasma (ICP) Interference Check Sample and ICP serial dilution results;
3. Raw data quantification report for each sample;
4. A calibration data summary reporting calibration range used and a measure of linearity, where appropriate; and
5. Final digestate volumes (and dilutions required), sample size, and wet-to-dry weight ratios.

The Permittee shall present summary tables of these data and Level II QC results to the Department in reports or other documents prepared in accordance with Permit Section 6.2.4. Raw analytical data, including calibration curves, instrument calibration data, data calculation work sheets, and other laboratory supporting data for samples from this project, shall be compiled and kept on file at the Facility for reference. The Permittee shall make all data available to the Department upon request.

6.5.18.3. Review of Field and Laboratory QC Data for all Media

6.5.18.3.1. General QC Review Process

The Permittee shall require the laboratory to notify the Permittee of data quality exceptions within three working days of discovery in order to allow for sample re-analysis, if possible. The Permittee shall contact the Department within three working days of receipt of the laboratory notification of data quality exceptions to discuss the implications to the sampling data, and to determine whether the data will still be considered acceptable or if sample re-analysis or resampling is necessary. The Permittee shall summarize the results of this discussion with Department personnel in a letter. The Permittee shall submit the letter to the Department by fax or electronic mail within five working days of the conclusion of the data quality discussion and shall mail the original signed copy of the letter to the Department within 10 days of the conclusion of the data quality discussion.

The Permittee shall evaluate all sample data, and all field and laboratory QC results for acceptability. Each group of samples shall be evaluated using data validation guidelines contained in EPA guidance documents, the latest version of SW-846, and industry-accepted methods and procedures. Additionally, the Permittee shall evaluate all data for compliance with the following parameters:

1. Representativeness -- the Permittee shall implement procedures to assure representative samples are collected and analyzed, such as repeated measurements of the same parameter at the same location over several distinct sampling events. The Permittee shall note any procedures or variations that may affect the collection or analysis of representative samples and shall qualify the data accordingly;
2. Comparability -- to assure comparability of data, the Permittee shall implement standard collection and analytical procedures, and shall report analytical results in appropriate units for comparison with other data (e.g., past studies, comparable sites, screening levels, and cleanup standards). Any procedure or variation that may affect comparability shall be noted, and the data shall be qualified appropriately;
3. Completeness -- the Permittee shall evaluate all laboratory data for completeness with respect to data quality objectives. The degree of completeness shall be reported with the data in any reports in which the data are referenced;
4. Accuracy -- the Permittee shall evaluate all data for accuracy with respect to percent recovered of spiked samples. Results shall be reported for each analyte in any report in which the data are cited; and
5. Precision -- the Permittee shall evaluate all data for precision with respect to RPDs of duplicate samples. Results shall be reported for each analyte in any report in which the data are cited.

6.5.18.3.2. Review of Laboratory Reporting, Documentation, Data Reduction, and Corrective Action Process

Upon receipt of each laboratory data package, the Permittee shall evaluate the data against the criteria outlined in this Permit. Any deviation from the established criteria shall be noted and the data will be qualified appropriately. A full review and discussion of QC data and all data qualifiers shall be submitted with Investigation Reports or other reports prepared in accordance with Permit Section 6.2.4. Data validation procedures for all samples shall include review of the following, as appropriate:

1. Holding times;
2. Detection limits;
3. Field equipment rinsate blanks;
4. Field blanks;
5. Field duplicates;
6. Trip blanks;
7. Reagent blanks;
8. Laboratory duplicates;
9. Laboratory blanks;
10. Laboratory matrix spikes;
11. Laboratory matrix spike duplicates;
12. Surrogate recoveries; and
13. Representativeness, comparability, completeness, accuracy, and precision as required in Permit Section 6.5.18.3.1 above.

If quality control problems are encountered, appropriate corrective action shall be implemented. All corrective action shall be defensible and the corrected data shall be qualified as appropriate or rejected.

6.5.18.3.2.1. Blanks

The analytical results of field blanks and equipment blanks shall be reviewed to evaluate ambient site conditions and the adequacy of equipment decontamination, respectively. The analytical results of trip blanks shall be reviewed to evaluate the possibility for contamination of samples resulting from improperly cleaned sample containers or transport containers. The analytical results of laboratory blanks shall be reviewed to evaluate the possibility of contamination of a sample caused by analytical procedures. If reagent blanks are required, the analytical results of reagent blanks shall be reviewed to evaluate whether the reagents were contaminated prior to use. If contaminants are detected in any blanks, the sample data shall be qualified, as appropriate.

6.5.18.3.2.2. Field and Laboratory Duplicates

RPDs for field and laboratory duplicates shall be calculated and reported.

6.5.18.3.2.3. Laboratory Spikes

Percent recovered for laboratory spikes shall be calculated and reported.

6.5.18.3.2.4. Holding Times

The Permittee shall review the sampling, extraction, and analysis dates to confirm that extraction and analyses were completed within the recommended holding times, as specified by EPA protocol. Appropriate data qualifiers shall be noted if holding times were exceeded.

REFERENCES

New Mexico Environment Department (NMED), 2000. Guidance for Assessing Ecological Risks Posed by Chemicals: Screening-Level Ecological Risk Assessment, as updated, New Mexico Environment Department, Santa Fe, New Mexico, March 2000.

New Mexico Environment Department (NMED), 2009. Technical Background Document for Development of Soil Screening Levels, Rev. V, New Mexico Environment Department, Santa Fe, New Mexico, December 2009.

U.S. Environmental Protection Agency (EPA), 1980. Samplers and Sampling Procedures for Hazardous Waste Streams; Municipal and Environmental Research Laboratory, U.S. Environmental Protection Agency, Cincinnati, Ohio, EPA-600/2-80-018, January 1980.

U.S. Environmental Protection Agency (EPA), 1986. Test Methods for Evaluating Solid Waste, Physical/Chemical Methods; 3rd edition, update 3, SW-846, Office of Solid waste and Emergency Response, U.S. Environmental Protection Agency, Washington, D.C.

U.S. Environmental Protection Agency (EPA), 2005. Guidance for Developing Ecological Screening Levels, Office of Solid waste and Emergency Response, U.S. Environmental Protection Agency, Washington, D.C., OSWER Directive 9825.7-55, Revised February 2005.

U.S. Environmental Protection Agency (EPA), 2009. Regional Screening Levels for Chemical Contaminants at Superfund Sites, December, 2009.

U.S. Environmental Protection Agency (EPA), 1996. Soil Screening Guidance: User's Guide, Office of Solid Waste and Emergency Response, U.S. Environmental Protection Agency, Washington, D.C., EPA-9355.4-23, July 1996.

PERMIT ATTACHMENT A: GENERAL FACILITY INFORMATION

1.0 INTRODUCTION

This Permit Attachment (A) presents a general description of Kirtland Air Force Base (KAFB-the Facility) and KAFB's Explosive Ordnance Disposal (EOD) Range. It also presents general information on wastes treated at the Open Detonation (OD) Unit.

1.1. GENERAL DESCRIPTION OF THE FACILITY AND THE EOD RANGE

KAFB, which is owned and operated by the U.S. Department of Defense (the Permittee), is located in Bernalillo County, adjacent to Albuquerque in north-central New Mexico. An estimated 24,000 people are employed at the Facility and at the U.S. Department of Energy and with other tenants located within the Facility. The Facility comprises an area of approximately 52,233 acres (about 82 square miles). The location of KAFB is shown on Figure 1-1 (Permit Part 1). The central mission of KAFB is the administration of defense programs for the U.S. Department of Defense.

The OD Unit is located on the EOD Range in the south-central portion of KAFB. The EOD Range is southeast of the former Manzano Base, east of Demolition Range Road, and approximately two miles north of the southern perimeter of KAFB (Figure 1-1, Permit Part 1). The OD Unit is circular in shape with a diameter of 1,500 feet Figure 2-1, Permit Part 2). Typical excavations (craters, pits) where treatment takes place are rectangular and are about 30 feet long, 15 feet wide and about 12 feet deep. The EOD Range occupies generally flat, gently west-sloping land located between the Rio Grande Valley to the west and the base of the Manzano Mountains to the east. The nearest major surface water body is the Rio Grande, located about 10 miles west of the EOD Range.

1.2. PURPOSE OF THE OD TREATMENT UNIT

The Permittee treats hazardous wastes by open detonation at the OD Unit located at the EOD Range, which is located in a remote, sparsely populated area within the KAFB Facility boundary. The wastes treated at the OD Unit are assigned U.S. Environmental Protection Agency (EPA) Hazardous Waste Numbers D001 (ignitability) and/or D003 (reactivity). The wastes may also carry EPA Hazard Waste Numbers D002 (corrosivity), D005, D007, D008, and D009 (toxicity characteristic metals), D018 (benzene), D030 (2,4-dinitrotoluene), D034 (hexachloroethane), and D040 (trichloroethylene) and various underlying hazardous constituents. Wastes may be stabilized with safing fluids (i.e., a substance, such as hydraulic fluid or diesel fuel, with a specific gravity between a liquid and a solid used to desensitize explosives, making them safer to handle).

Treatment is performed by detonating explosives to countercharge hazardous wastes to remove their characteristics of reactivity and/or ignitability. The frequency of operations at the OD Unit varies, as treatment events are conducted on an as-needed basis.

All hazardous waste treated by the OD Unit has the potential to detonate or is a propellant. In accordance with 40 C.F.R. § 261.23(a)(6), the high explosive (HE) waste streams are capable of detonation if subjected to a strong initiating source or if heated under confinement. The remaining waste streams have the potential to detonate because they are explosives as defined in

49 C.F.R. §173.53, pursuant to 40 C.F.R. §261.23(a)(8). As stated in Chapter 7, Section 7.3, of SW-846 (EPA, 1986), as amended, the definition of reactivity "is intended to identify wastes that, because of their extreme instability and tendency to react violently or explode, pose a problem at all stages of the waste management process."

HE, when accidentally exposed to even a small initiating source such as friction, a pinch point, electrical discharge, heat, or impact, can potentially detonate. HEs typically managed at the OD Unit have detonation velocities averaging four to six miles per second and pressures as high as 300,000 times atmospheric pressure for short periods. Fickett and Davis (1979) explain that a good solid explosive converts energy at a rate of 10^{10} watts per square centimeter at its detonation front.

1.3. ROUTES OF TRAVEL

A system of interior roads, shown on Figure 1-1 (Permit Part 1), is maintained at KAFB. About 78 total miles of roadway exist, of which about 33 miles are paved.

Traffic access to and egress from the OD Unit is along the roads shown on Figure 1-1 (Permit Part 1). The roads along which wastes are transported to the EOD Range within KAFB include Southgate Avenue, Hardin Boulevard, Pennsylvania Street, Wyoming Boulevard, Lovelace Road, and Demolition Range Road.

1.4. SECURITY

1.4.1. Introduction

The following paragraphs describe the site-wide and OD Unit-specific security provisions at the KAFB Facility that shall be implemented to prevent unknowing or unauthorized entry of persons or livestock onto the OD Unit. Additional requirements are found in Permit Section 2.1.

1.4.2. Barriers and Means to Control Entry

The OD Unit, situated within the EOD Range is located within KAFB, which has 24-hour security surveillance and controls entry at all times to the Facility through entrance gates. Access to the KAFB Facility is provided through five controlled entrance gates. Access control procedures are designed to ensure that only properly identified and authorized persons, vehicles, and property are allowed entrance to and exit from KAFB. Surveillance is provided by KAFB Security Police, who continuously monitor and control entry inside the KAFB perimeter. The major duties of the KAFB security personnel are to control vehicle, personnel, and material access/egress. KAFB is enclosed by a 7.5-foot chain-link fence and by barbed wire fence. During non-working hours, security personnel routinely patrol the KAFB perimeter fence.

A fence is also located along the perimeter of the EOD Range. A gate is located at the entrance road to the EOD Range and OD Unit. The locations of the security fence and the access gate for the EOD Range and OD Unit are shown on Figure 2-1, in Permit Part 2.

Only personnel with appropriate clearance and escorted visitors are allowed access to the EOD Range. Vehicles and personnel entering the EOD Range are subject to search by security personnel. The EOD Range and OD Unit are surrounded by a three-strand barbed-wire fence, which limits any traffic through or other access to these areas.

REFERENCES

U.S. Environmental Protection Agency (EPA), 1986. Test Methods for Evaluating Solid Waste, Physical/Chemical Methods; 3rd edition, update 3, SW-846, Office of Solid waste and Emergency Response, U.S. Environmental Protection Agency, Washington, D.C.

W. Fickett and W. Davis, 1979. Detonation: University of California Press, Berkeley, CA.

PERMIT ATTACHMENT B: LIST OF AUTHORIZED HAZARDOUS WASTES

1.0 INTRODUCTION

Table B-1 lists the hazardous wastes that the Permittee is authorized to treat at the Open Detonation (OD) Unit. Wastes carrying Environmental Protection Agency (EPA) Hazardous Waste Numbers D002, D005, D007 through D009, D018, D030, D034, and D040 shall not be treated at the OD Unit unless, at the point of generation, the wastes are also reactive and/or ignitable. Wastes that are not reactive and/or ignitable shall not be mixed with reactive or ignitable wastes for the purpose of generating a hazardous waste that is authorized for treatment at the OD Unit. Hazardous wastes that are not authorized by this Permit for treatment shall not be accepted by the Facility for treatment and shall be returned to the generator. The Permittee shall also comply with Permit Section 2.7.

TABLE B-1 List of Hazardous Wastes Authorized to be Treated at the OD Unit	
Common and/or Chemical Name – Symbol	**EPA Hazardous Waste Number(s)**
ALSC, HNS	D001, D003
ALSC (RDX)	D001, D003
Amatol (AN, TNT)	D001, D003
Ammonium Nitrate (AN)	D003
Ammonium Perchlorate (AP)	D003
Ammonium Picrate	D001, D003
ANFO	D001, D003
APEX 1220	D001, D003
APEX 1320	D001, D003
ARTEC (HMX-water)	D001, D003
ATX-M	D001, D003
ATX 25RM Slurry	D001, D003
AWH Shape Charge	D001, D003
Baratol (HE)	D001, D003, D005
Barium Nitrate	D001, D003, D005
Barium Peroxide	D001, D003, D005
Barium Potassium Nitrate	D001, D003, D005
Barium Soluble Compounds	D001, D003, D005
BCTK Explosives	D001, D003
Benzene	D001, D018
BKN03 Propellant	D001, D003
Black Powder (Low Explosive)	D001, D003
Blasting Agent	D001, D003
Chromium	D007
CLSC (Copper Linear Shaped Charge)	D001, D003
Composition A (HE)	D001, D003
Composition B (HE)	D001, D003
Composition B/Baratol Mixture (HE)	D001, D003, D005
Composition C4 Class 3 (HE)	D001, D003
Cordite (Double-base gum)	D001, D003
CP (2-[5-cyanotetrazolato] pentamine cobalt (III) perchlorate)	D001, D003
Cyclonite (HE, RDX)	D001, D003
Cyclotol (RDX, TNT)	D001, D003
C-1 Detasheet	D001, D003
C-3	D001, D003
C-4	D001, D003
C-6 Discs	D001, D003
DACP Powder	D001, D003
TABLE B-1	

(continued)	
Common and/or Chemical Name - Symbol	**EPA Hazardous Waste Number(s)**
Detaflex	D003
Detasheet A	D001, D003
Detasheet A4	D001, D003
Detasheet A5	D001, D003
Detasheet C	D001, D003
Detasheet C1	D001, D003
Detasheet C2	D001, D003
Detasheet C3	D001, D003
Detasheet C4	D001, D003
Detasheet C5	D001, D003
Detasheet C6	D001, D003
Detasheet D	D001, D003
Detasheet L	D001, D003
DetCord (PETN)	D001, D003
Detonators	D001, D003, D008
Detonators EBW	D001, D003
Detonators HBW, Ensign Bickford	D001, D003
Dinitrotoluene (DNT)	D001, D003, D030
Dipicrylamide	D001, D003
DBX	D003
Diazodinitrophenol (DDNP)	D003
Double Base Smokeless Powder	D001, D003
DNP	D001, D003
DNPT	D003
Dynamite	D003
Ednatol	D003
EL-506A (HE, PETN)	D001, D003
EL-506D (HE, PETN)	D001, D003
Extex 3003	D001, D003
Extex 8003	D001, D003
Explosive D	D001, D003
Explosive Piston Motors	D003
Flex Linear Shaped Charge	D001, D003, D008
Gas Pressure Generator	D001, D003
Heat Powder	D001, D003
Hexachlorethane (HC Smoke)	D034
Hexanitroazobenzene	D001, D003
HMX (octogen) High Melting Explosive	D001, D003
HNAB	D001, D003
Hexanitrostilbene (HNS)	D001, D003
TABLE B-1	

(continued)	
Common and/or Chemical Name - Symbol	**EPA Hazardous Waste Number(s)**
HNS I	D001, D003
HNS II	D001, D003
HNS Titanium Powder	D001, D003
Holex 2506	D001, D003
Improved Military Rifle (IMR) propellant 4350	D001
IMR 4064	D001
Iremite 60	D001, D003
Iremite 80	D001, D003
Iragel	D001, D003
Ireco Booster 2-C, 3-C, 4-C	D001, D003
Iron Perchlorate	D003
Iron Potassium Perchlorate	D003
JPN Propellant	D001, D003
Kinestik Part A, B	D001, D003
Lead Azide (HE)	D001, D003, D008
Lead Case Flexible Linear Shaped Charge	D001, D003, D008
Lead Mononitraresorcinate (LMNR)	D001, D003, D008
Lead Sulfocyanate	D001, D003, D008
Lead Styphnate (HE)	D001, D003, D008
LX-04	D001, D003
LX-10	D001, D003
LX-13	D001, D003
LX-14	D001, D003
LX-15	D001, D003
LX-16	D001, D003
LX-17	D001, D003
M-6 Propellant	D001, D003
M-77 Water Gel Explosives	D001, D003, D005
MDF (RDX, HNS)	D001, D003
Mercury Fulminate (HE)	D001, D003, D009
Minol	D001, D003
N-5 Sheet Propellant	D001, D003
Nitrocellulose	D001, D003
Nitroglycerin	D001, D003
Nitroguanidine	D001, D003
Nitromethane	D001, D003
NQ	D001, D003
Octol LGE Cast	D001, D003
PBX 9010	D001, D003
PBX 9205	D001, D003
TABLE B-1	

(continued)	
Common and/or Chemical Name - Symbol	**EPA Hazardous Waste Number(s)**
PBX 9404	D001, D003
PBX 9407	D001, D003
PBX 9504	D001, D003
PBXN-5	D001, D003
PBXN-6	D001, D003
PBXN-301	D001, D003
Pentaerythritol Tetranitrate (PETN) (HE)	D001, D003
PETN/Titanium Mix	D001, D003
PETN Zirconium	D001, D003
PETRIN	D001, D003
Pentolite (PETN/TNT) (HE)	D001, D003
Photo Flash Powder (simulators)	D001, D003
Picric Acid	D001, D002, D003
Picritol	D001, D003
Plain Wave Generator (PBX 9404)	D001, D003
Plasticized White Phosphorous	D001
Plasticizer	D001, D003
Polysulfide Prepolymer	D001, D003
Potassium Chlorate	D003
Potassium Nitrate	D003
Potassium Perchlorate (initiator)	D001, D003
Primacord (PETN)	D001, D003
Propellant HPC-95, HPC-60	D001, D003
Propellant M-30, M1, M6	D001, D003
Propellant MC-1951	D001, D003
Propellant (TPH1207C)	D001, D003
RDX	D001, D003
RDX #5	D001, D003
Red Phosphorous	D001
RL-5-X Detcord	D001, D003
Rocket Motor Double Base Propellant	D001, D003
RP-2	D001
RP-87	D001
Separation Explosives (RDX)	D001, D003
Semtex	D001, D003
Smokeless Powder	D003
Sodium Azide	D001, D003
Sodium Nitrate	D003
Strontium Nitrate	D003
Strontium Peroxide	D003
TABLE B-1	

(continued)	
Common and/or Chemical Name - Symbol	**EPA Hazardous Waste Number(s)**
Tetryl (HE)	D001, D003
Tetrytol	D001, D003
TH-1	D001, D003
TH-3	D001, D003
Thermite Powder	D003
TH/KP	D001, D003
Titanium Tetrachloride	D003
TPH 3442 (propellant)	D003
Titanium Boron Powder	D001
Titanium Hydride	D001
Titanium Subhydride	D001
TLX	D001, D003
Trinitrotoluene (TNT)	D001, D003
Tritonal	D001, D003
TATB Pellets, Pad	D001, D003
Toluene (nitrated forms)	D001, D003
Torpex	D003
Tovex	D003
TPH 3386 (propellant)	D003
Triaminotrinitrobenzene (TATB)	D001, D003, D018
Trichloroethylene	D040
WAK 2, TP-H12	D001, D003
XTX 8003	D001, D003
Aluminum	D001, D003
Iron	D001
Lead	D008
Lead Alloy	D008

DEFINITIONS

ALSC aluminum linear shaped charge
AN ammonium nitrate
Anfo ammonium nitrate-fuel oil
AP ammonium perchlorate
CLSC copper linear shaped charge
DDNP Diazodinitrophenol
DNT Dinitrotoluene
HC hexachlorathane
HE high explosive
HMX cyclotetramethylene-tetranitramine; octohydro-1,3,5,7-tetranitro 1,3,5,7-tetrazocine
HNS hexanitrostilbene
IMR improved military rifle
LMNR lead mononitraresorcinate
PBX plastic-bonded explosive; RDX and plasticizer
PETN nitropentaerythrite; pentaerythrite tetranitrate; pentaerythritol
RDX cyclotrimethylenetrinitramine
TATB triaminotrinitrobenzene
TNT trinitrotoluene

PERMIT ATTACHMENT C: WASTE ANALYSIS PLAN

1.0 INTRODUCTION

This Waste Analysis Plan (WAP) describes the procedures that shall be used at the Facility to characterize waste to be treated at the Open Detonation (OD) Unit.

1.1. HAZARDOUS WASTES TREATED AT THE OD UNIT

Hazardous wastes treated at the OD Unit are classified as a non-wastewater waste under the Land Disposal Restrictions (LDR) regulations at 40 C.F.R. Part 268. Knowledge of the chemical and physical properties of hazardous wastes to be treated at the OD Unit is essential for proper waste management. The hazardous wastes treated at the OD Unit exhibit the characteristic of reactivity (D003). Some of these wastes also exhibit the characteristics of ignitability (D001). These wastes may also potentially contain the following toxicity characteristic metals and organic compounds, identified by specific U.S. Environmental Protection Agency (EPA) Hazardous Waste Numbers: barium (D005), chromium (D007), lead (D008), mercury (D009), benzene (D018), 2,4-dinitrotoluene (D030), hexachloroethane (D034), and trichloroethylene (D040). They may also contain underlying hazardous constituents (UHCs) such as chromium, lead, nickel, vanadium, and zinc. The characteristics of hazardous wastes treated at the OD Unit shall be identified using Acceptable Knowledge (AK) or sampling and analysis, as appropriate, and shall be documented in writing. Incompatible wastes shall not be accepted for treatment at the OD Unit. It may be necessary to saturate the wastes with a safing fluid (e.g., water, acetone, alcohol, hydraulic fluid) before treatment.

Categories of hazardous waste that may be accepted for treatment include, for example, explosives, propellants, and pyrotechnics in the form of pure substances and explosives-contaminated wastes. Waste that may be treated at the OD Unit shall include only the waste types authorized in Permit Attachment B. Corrosive (D002) wastes (e.g., picric acid) that are also reactive may be treated at the OD Unit. The hazardous wastes to be treated at the OD Unit are mostly in solid form, however, on occasion, wastes in liquid form (e.g., picric acid) may be treated.

Barium (D005), chromium (D007), lead (D008), and mercury (D009) are toxicity characteristic metals that may be in the wastes or in the casings surrounding the wastes to be treated. The toxicity characteristic organic compounds benzene (D018), 2,4-dinitrotoluene (D030), hexachloroethane (D034), and trichloroethylene (D040) may also be present.

1.2. WASTE ANALYSIS PARAMETERS

Explosive Ordnance Disposal (EOD) personnel shall review characterization information to ensure that hazardous wastes are properly characterized for their physical and chemical properties and can be managed safely and in accordance with the requirements of this Permit. AK shall only be used in lieu of sampling and analysis when the composition and physical characteristics of the waste are exactly known and well controlled.

Waste characterization information must include all necessary information on the presence of toxicity characteristic metals and organic compounds, as defined in 40 C.F.R. Part 261, Subpart C, and data on the presence of any UHCs listed in 40 C.F.R. § 268.48 in accordance with 40 C.F.R. § 268.9(a).

1.3. WASTE CHARACTERIZATION PROCEDURES

The approach to characterization shall be based on the chemical and physical nature of the waste. Characterization procedures used at the Facility require all generators to provide AK, related technical information, and/or sampling and analysis results (including information on UHCs) as appropriate. Accurate characterization is necessary for appropriate waste classification and assignment of EPA Hazardous Waste Numbers, in the preparation of LDR documentation, and ensuring proper management of waste.

1.3.1. Characterization Strategy

The characterization strategy for hazardous wastes to be treated at the OD Unit is described below.

1.3.1.1. Wastes to be Treated

Prior to accepting waste for treatment at the OD Unit, a detailed chemical and physical description of the waste shall be provided by the generator.

Ensuring that detailed and accurate waste characterization exists shall include the steps outlined below in Permit Sections 1.3.1.2 through 1.3.1.4. Hazardous waste destined for treatment shall be packaged in containers; both the waste and the containers shall be inspected before acceptance for treatment and again before loading the waste into the treatment unit.

1.3.1.2. Verification

All waste shipments to the OD Unit shall be verified in two phases prior to treatment to ensure that the waste is authorized for treatment in accordance with Permit Attachment B. Phase 1 will be conducted to ensure shipping documentation completeness, and Phase 2 is to ensure that the waste delivered corresponds to the documentation provided for that waste. Waste shall not be accepted for treatment until all verification is complete.

1.3.1.3. Phase 1 Verification

Screening is performed by the appointed EOD Team Chief. Documentation may include, but is not limited to, a completed Ammunition Disposition Request (ADR), a hazardous waste manifest, a material safety data sheet, a description of the process generating the waste, and sampling and analysis data.

Upon receipt of a waste shipment at the OD Unit, a determination of shipping documentation (hazardous waste manifest) completeness shall be made by EOD personnel. Each shipping document that accompanies an off-site waste shipment shall be checked to ensure that the following information is present and complete:

- The shipment identification number.

- The proper U.S. Department of Transportation basic description.
- The quantity (weight) of waste in the shipment.
- The number and type of containers in the shipment.
- A signed and dated certification of the shipment's content.
- The shipment labels and placards which match the shipping document.

If documentation is incomplete or inadequate, EOD personnel shall contact the generator for clarification and require that the generator correct the situation. Only waste that meets the requirements of this Permit shall be transported to the OD Unit for treatment.

Containers will be visually examined for defects such as dents, cracks, and corrosion. Conditionally exempt small quantity generators do not need a hazardous waste manifest. If there are discrepancies, they shall be resolved by contacting the generator before EOD personnel sign the shipping document. If the discrepancies cannot be resolved, EOD personnel shall reject the shipment. Rejected waste shall be returned to the generator.

1.3.1.4. Phase 2 Verification

The EOD Team Chief, with assistance from other EOD personnel, shall compare the contents of waste shipments received with the description on the documentation provided by the generator to ensure that they match. The visual inspection shall include content identification and quantity estimation. If any waste fails verification, it shall be returned to the generator to resolve the discrepancy.

1.3.2. Sampling and Analysis of Waste

Sampling and analysis of waste for purposes of characterization shall be conducted in accordance with the procedures outlined in Sections 1.3.2.1 through 1.3.2.4 of this Permit Attachment (C) and Permit Section 2.6.3.

1.3.2.1. Sampling Equipment

Each sample of waste requiring sampling and analysis shall be collected using appropriate sampling equipment, as recommended in SW-846 (EPA, 1986) or other Department-approved sampling guidance.

1.3.2.2. Equipment Decontamination

Disposable, clean equipment shall be used to eliminate the potential for cross contamination during sampling. Therefore, maintaining and decontaminating sampling equipment will not be necessary.

1.3.2.3. Sample Preservation and Storage

Waste samples shall be collected in clean containers and preserved, as appropriate, to ensure that their integrity remains intact prior to, during, and after transport to the analytical laboratory. Container types, preservation techniques, and holding times for expected analytes of interest are presented in Table C-1.

1.3.2.4. Quality Assurance/Quality Control

The Permittee shall implement a quality assurance (QA) process designed to obtain high quality data. Quality control (QC) procedures shall be employed to measure the degree to which this QA objective is fulfilled. At a minimum, the QA process shall meet the requirements of Permit Sections 6.5.17.6, 6.5.18.1, and 6.5.18.3.

QC samples shall be collected as part of sampling activities. Duplicates shall be collected and analyzed for all constituents of concern. A chain-of-custody form shall be completed and shall include the type of sample collected; the names and signatures of the sampler(s); sample identification numbers, date, and time of collection; the designation as a grab or composite sample; the names, dates, times, and signatures of any persons involved in transferring samples; and the shipping number. Personnel shall be properly trained in the use of sampling equipment, sample containers, and sampling methods to ensure that sampling activities are conducted appropriately.

1.4. ANALYTICAL LABORATORY AND TESTING/ANALYTICAL METHODS SELECTION

An EPA-certified analytical laboratory shall be selected to perform laboratory analysis of waste. The laboratory shall be required to have a comprehensive QA/QC program, technical analytical expertise, and an effective information management system.

The selection of analytical testing methods for waste is based on the following.

- The physical state of the waste.
- The analytes of interest.
- The required detection limits (i.e., regulatory thresholds).
- Information requirements (e.g., to ensure compliance with LDR treatment standards).

1.5. WASTE RE-EVALUATION FREQUENCIES

A re-evaluation of waste characterization data shall be conducted as necessary but at least annually to ensure that data are accurate, in accordance with 40 C.F.R. § 264.13(a)(3). Updates of waste characterization information are required when:

- A change occurs in the process or operation generating the hazardous waste, and
- Hazardous waste received from an off-site facility does not match the waste specified on the accompanying manifest or shipping papers.

Waste characterization data for the wastes treated at the OD Unit shall be re-evaluated at least annually. This information shall be used to determine if waste characterization data are accurate and to determine the appropriateness of current waste management practices and characterization methods, and shall be documented in the Operating Record.

REFERENCE

U.S. Environmental Protection Agency (EPA), 1986. Test Methods for Evaluating Solid Waste, Physical/Chemical Methods; 3rd edition, update 3, SW-846, Office of Solid waste and Emergency Response, U.S. Environmental Protection Agency, Washington, D.C.

TABLE C-1 Sample Containers, Preservation Methods, and Holding Times for Analysis of Waste[a]			
Sample Type	**Container Type[b]**	**Preservation Method**	**Holding Time**
Volatile Organics	4 oz glass jar with Teflon cap	Cool to 4 ºC	14 days
Semivolatile Organics	4 oz glass jar with Teflon cap	Cool to 4ºC	14 days
Metals			
(except hexavalent chromium and mercury)	4 oz glass jar with Teflon cap	Cool to 4ºC	180 days
(Hexavalent chromium)	4 oz glass jar with Teflon cap		28 days
(Mercury)	4 oz glass jar with Teflon cap		28 days

a. Containers, methods and holding times from most current version of SW-846 (EPA, 1986)
b. Other container types may be used depending upon the laboratory or the method, with prior NMED approval.

DEFINITIONS
NMED New Mexico Environment Department
oz ounces
ºC degrees Celsius

PERMIT ATTACHMENT D: ANNUAL SOIL SAMPLING AND ANALYSIS PLAN

1.0 INTRODUCTION

The purpose of this sampling and analysis plan is to ensure that accurate data are collected to determine whether a release of hazardous waste or hazardous constituents has occurred during the operating period of the Open Detonation (OD) Unit that may pose a threat to human health. Any corrective action that may be required for the OD Unit shall be conducted in accordance with Part 6 of this Permit.

The OD Unit is located at the Kirtland Air Force Base (KAFB) Explosive Ordnance Disposal (EOD) Range and is permitted as a Resource Conservation and Recovery Act (RCRA) Subpart X miscellaneous unit. The OD Unit is used to treat hazardous waste to remove the hazardous characteristics of reactivity and ignitability. The Permittee shall perform soil monitoring at the OD Unit during operations to assess whether or not contaminants are being released to soil at levels that could endanger human health. This soil sampling and analysis shall be performed on an annual basis in accordance with the procedures described in this Annual Soil Sampling and Analysis Plan (SSAP).

1.1. SAMPLING PROCEDURES

This Section (1.1) describes procedures and methods for sampling soil at the OD Unit. Other applicable procedures or methods provided in the most current version of *SW-846* (EPA, 1986) may be used if conditions or experience show the alternate method(s) to be more appropriate and if approved by the Department. All sampling procedures used will be documented in a field logbook. Sampling shall be performed in accordance with procedures given in *Samplers and Sampling Procedures for Hazardous Waste Streams* (EPA, 1980), or SW-846, and in accordance with this SSAP.

1.1.1. Sampling Schedule and Frequency

Soil samples shall be collected annually at the OD Unit during the month of June. Sampling shall be conducted at the OD Unit before any backfilling, excavation, or grading is performed at the site since the last treatment event. If no treatment events have occurred during a particular annual period, annual sampling will not be conducted for that annual period. The Department shall be notified if this circumstance occurs.

1.1.2. Sampling Strategy and Analytical Parameters

For the OD Unit, four soil samples shall be collected from the zero- to six-inch depth and analyzed for total metals, explosives and other constituents listed in Table D-1. The sampling location strategy depends on the physical characteristics of the OD Unit. If only one crater (pit) is present during the sampling event, then four soil samples shall be taken from the walls of the crater at each of the four primary compass directions (Figure D-1). If more than one crater is present, a grid (with a minimum of 100 possible locations) that encompasses all of the craters shall be established, and four random sample locations within the grid will be selected for the sampling event (Figure D-2). The grid will be square in shape and its overall maximum size shall be established using the maximum distance between the walls of the craters that are present

at the site. If no craters are present, then a 150-foot by 150-foot grid shall be established at the center of the cleared area which composes the OD Unit, and four soil sample locations shall be randomly selected from within the grid.

Each sample location shall be located by reference to a surveyed grid datum, prominent site features, or from some documented reference point that can be located in the field. Sample locations shall be recorded in the field logbook, and shall be shown on a figure depicting the OD Unit in the annual reports (see Section 1.7 of this Permit Attachment).

1.1.3. Sample Collection

Qualified personnel shall collect soil samples. Sample collection procedures, types of containers and storage procedures specific to each SW-846 method shall be strictly adhered to. Prior to collecting a soil sample, sampling personnel shall scrape aside loose materials (e.g., rocks, litter) from the sampling location. Personnel shall collect soil samples using metal or plastic scoops, wooden or disposable plastic hand trowels, or similar equipment. Non-sparking equipment shall be used whenever required by EOD personnel for worker safety. Excess soil generated at each soil sampling location may be used as backfill. Samples shall be representative of the site. Cross-contamination of samples shall be prevented. Sample collection activities shall also conform to these requirements:

1. Personnel shall schedule sampling activities with EOD Range Control;
2. Personnel shall obtain clearance from an EOD Technician/Specialist for the selected location of each sample;
3. Personnel shall wear clean gloves before collecting each individual sample;
4. Personnel shall use clean sampling equipment to collect soil samples. (Note: A disposable sampler may be presumed clean if it is still in a factory-sealed wrapper. Reusable samplers will be scraped to remove any loose material, washed with a detergent and water solution, rinsed several times with tap water, rinsed with deionized water, drained of excess water, and air-dried or wiped dry.);
5. Personnel shall clear each sample for shipment to the analytical laboratory by an EOD Technician/Specialist; and
6. Personnel shall check out with EOD Range Control when sampling has been completed.

Samples collected for analysis of white phosphorous must the follow the special sample collection procedures in SW-846, Method 7580.

1.1.3.1. Sample Containers and Preservatives

Samples shall be placed in appropriate containers, compatible with the intended analysis. All containers shall be new and certified clean to ensure the integrity of samples collected. Samples shall be properly prepared and preserved as necessary to maintain sample integrity. Table D-1 lists the proper container, preservative, and holding time for each chemical parameter of interest.

1.1.3.2. Sample Identification

Sample identification numbers shall be assigned by alpha/numeric characters corresponding to the last two digits of the calendar year (YY), two digits of the month (MM), two digits of the day

of the month (DD), a code indicating soil sample (SS), and a unique number (##) designating the sample location. Thus, a complete format of a sample identification number is: YYMMDDSS##. For example, soil sample number two collected on 3rd of June 2007 would be labeled: 070603SS02.

1.1.3.3. Sample Handling, Documentation, and Custody Procedures

Chain-of-custody procedures shall be followed in accordance with Permit Section 6.5.5.3. Labels shall be affixed to sample containers in accordance with Permit Section 6.5.5.4.

The chain-of-custody form shall be signed upon receipt at the laboratory, and the original or a copy returned to the KAFB Environmental Management (EM) Branch Office for inclusion in the Operating Record. The Chain-of-custody form shall include or be accompanied by a request-for-analysis form that lists all analyses to be performed for the samples and all special instructions related to sample management or analysis. Any potential hazards posed by the samples shall be listed on the request-for-analysis form.

The sample container shall be sealed with a gummed paper seal or tag attached to the container in such a way that the seal must be broken in order to open the container.

A field logbook shall be kept and shall contain information pertinent to field surveys and sampling. Entries in the logbook shall be conducted in accordance with Permit Section 6.5.2.

The analytical laboratory shall be required to have procedures for minimizing cross contamination of samples and securing sample custody within the laboratory.

Samples relinquished to the laboratory shall be subject to the following procedures for transfer of custody and shipment.

1. When transferring the possession of samples, the individuals relinquishing and receiving them shall sign, date, and note the time on the Chain-of-custody form.
2. Shipping containers such as coolers shall be custody-sealed for shipment to the laboratory.

Laboratory personnel shall verify that samples are correctly labeled, that documentation is correct, and shall inspect the physical condition of the containers. Any discrepancies are to be resolved between laboratory and sampling personnel at this time. The laboratory portion of the form shall be completed by the laboratory personnel and shall include at a minimum:

1. The name of the person receiving the sample,
2. Laboratory accession (identification) number,
3. The date and time of sample receipt, and
4. Sample condition

1.1.3.4. Sample Shipping

Sample shipment shall be conducted in accordance with Permit Section 6.5.5.2.

1.2. INVESTIGATION-DERIVED WASTE

Investigation–derived waste shall be managed in accordance with Permit Section 6.5.7.

1.3. QUALITY ASSURANCE/QUALITY CONTROL PROGRAM

Because important decisions will be based on the data collected as part of this SSAP, a program to ensure that data are of high quality is essential. The Permittee shall follow a quality assurance/quality control (QA/QC) program that mandates documentation of the precision and accuracy of laboratory analyses as well as other aspects of quality assurance.

1.3.1. Quality Control Targets

For metals, quality control targets for accuracy and precision shall be 75-125% recovered and ±35% relative percent difference (RPD), respectively. The laboratory reporting limits for metals shall be at or below the respective background level for each metal subject to analysis.
For high explosives (HE), quality control targets for accuracy and precision shall be 20-120% recovered and ±50% RPD, respectively. The laboratory reporting limits for HE compounds shall be at or below the appropriate human risk industrial screening level for each HE compound (NMED, 2009).

1.3.2. Field Quality Control

Field quality control shall be conducted in accordance with Permit Section 6.5.14 and Table D-2 of this Permit Attachment.

1.4. LABORATORY ANALYSIS

Laboratory analysis shall be conducted in accordance with Permit Section 6.5.18.

1.5. DATA VALIDATION

Data validation shall be conducted in accordance with Permit Section 6.5.18.3.

1.6. HUMAN RISK SCREENING

If a sample result for a metal exceeds the applicable background level listed in Table D-4, the result shall be compared to the most current EPA Regional Screening Levels (RSLs) and Department soil screening levels (SSLs-NMED, 2009) for an industrial land use scenario. The industrial land use scenario shall only apply to risk screening under this SSAP, and not for purposes of closure or corrective action. Analytical results for explosives and SVOCs shall be compared to the SSLs. EPA RSLs and Department SSLs for industrial scenarios are presented in Table D-4 for the metals, SVOCs, and HE compounds that are to be evaluated.

Sample results for arsenic shall be compared with the approved background level because the natural background concentration of arsenic in this area exceeds the EPA human health medium-specific screening level. Additionally, the screening level for thallium shall be set equal to the Department soil screening level for this constituent.

If a Department SSL or EPA RSL does not exist for a substance, the Permittee shall calculate a screening level based on an industrial scenario and a cancer risk of 10^{-5} for carcinogens, and a hazard quotient (HQ) of 1.0 for noncarcinogens. This calculated screening level shall be subject to Department approval and shall be revised if determined by the Department not to be protective of human health.

Any exceedance of an EPA RSL, Department SSL, or calculated screening level shall be

reported to the Department in writing within 15 calendar days. The Department will review the information and, at its discretion, may require additional site characterization to protect the health and safety of site workers. If the Department requires additional site characterization, the Permittee shall prepare a sampling and analysis plan (SAP) for Department approval. The SAP shall be prepared and submitted to the Department within 60 calendar days of the request. Upon Department approval of the SAP, the Permittee shall implement the plan within 30 days. Upon completion of the field investigation, the Permittee shall report the results of the additional site characterization effort in writing to the Department within 90 calendar days. The Department will then determine if additional sampling is required, if the site must be remediated immediately to protect workers, or if no corrective action is required.

1.7. REPORTING

The Permittee shall submit two copies of each annual report to the Department within 90 days of completion of each sampling event. Each annual report shall include:

1. A summary cover letter.
2. Copies of all laboratory reports associated with the sampling event, including the analytical results for each sample.
3. A summary of any constituents detected at concentrations exceeding human risk levels including any exceeding a screening level calculated by the Permittee when a Department SSL or EPA RSL is unavailable. The method and data used by the Permittee to calculate a screening level must also be reported.
4. A summary of field and laboratory QC sample results.
5. A summary of whether the data meet the data quality objectives listed in this Permit Attachment. And,
6. A scaled, oriented map showing the location of the OD Unit sampling grid (if any), craters (if any), and all sample locations.

REFERENCES

New Mexico Environment Department (NMED), 2009. Technical Background Document for Development of Soil Screening Levels, Rev, V, New Mexico Environment Department, Santa Fe, New Mexico, December 2009.

U.S. Environmental Protection Agency (EPA), 1980. Samplers and Sampling Procedures for Hazardous Waste Streams; Municipal and Environmental Research Laboratory, U.S. Environmental Protection Agency, Cincinnati, Ohio, EPA-600/2-80-018, January 1980.

U.S. Environmental Protection Agency (EPA), 1986. Test Methods for Evaluating Solid Waste, Physical/Chemical Methods; 3rd edition, update 3, SW-846, Office of Solid waste and Emergency Response, U.S. Environmental Protection Agency, Washington, D.C.

U.S. Environmental Protection Agency (EPA), 2002. RCRA Waste Sampling Draft Technical Guidance; Office of Solid Waste and Emergency Response, U.S. Environmental Protection Agency, Washington, D.C., EPA530-D-002, August 2002.

Table D-1
Analytical Parameters and Methods, Container Types, Preservation Methods, and Holding Times for Soil Samples[a]

Parameter	Analytical Method[b]	Container Type and Preservation Method[c]	Holding Time
Total Metals: Antimony, Arsenic, Barium, Beryllium, Cadmium, Chromium (total), Cobalt, Copper, Lead, Mercury, Nickel, Selenium, Silver, Thallium, Tin, Vanadium, Zinc	6010C or 7000 Series	4 oz plastic or glass jar, stored at <4ºC	180 days; 28 days for Mercury and Chromium
High Explosives (HEs): 1,3,5-Trinitrobenzene; 1,3-Dinitrobenzene; TNT (2,4,6-trinitrotoluene); 2,4-Dinitrotoluene; 2,6-Dinitrotoluene; 2-Amino-4,6-Dinitrotoluene; 4-Amino-2,6-Dinitrotoluene; HMX (octahydro-1,3,5,7-tetranitro-1,3,5,7-tetrazocine); 2-Nitrotoluene; Nitrobenzene; 3-Nitrotoluene; 4-Nitrotoluene; Tetryl; RDX (hexahydro-1,3,5-trinitro-1,3,5-triazine), 3,5-Dinitroaniline, PETN (pentaerythritol nitrate), nitroglycerine	8330B	4 oz glass jar, stored at <4ºC	14 days
White Phosphorous	7580	4 oz glass jar with PTFE lid, fill to top to minimize air in jar, stored at <4ºC	Indefinite (if preserved at <4ºC, kept in dark and tightly sealed)
Dioxins and Furans	8280B or 8290A	250 mL wide mouth amber glass jar with PTFE lid, stored at <4ºC	30 days
Perchlorate	6850	4 oz glass jar, stored at <4ºC	28 days

a. Analytical methods, preservation methods, and holding times are from most current version of Methods for Evaluating Solid Waste, Physical/Chemical Methods, SW-846 (EPA, 1986).
b. Another applicable or newer method may be used with prior NMED approval.
c. Other container types may be used depending upon the laboratory or the method used with prior NMED approval.

DEFINITIONS:

mL	milliliters
NMED	New Mexico Environment Department
oz	ounces
PTFE	polytetrafluoroethylene
ºC	degrees Celsius
<	less than

TABLE D-2
Field Quality Control Samples

Quality Control Sample Type	Sample Matrix	Applicable Analytes	Frequency	Purpose
Field duplicate	Soil	Metals, HE, White Phosphorus, Perchlorate, Dioxins and Furans	One sample per sampling event	Document precision of the sampling process
Equipment blank	Water	Metals, HE, White Phosphorus, Perchlorate, Dioxins and Furans	One sample per day (if using non-disposable equipment)	Document if equipment is being properly decontaminated between samples

DEFINITION
HE high explosive

TABLE D-3
Background Concentrations Of Naturally Occurring Metals in Soil at Kirtland Air Force Base

Metal	Surface Soil (mg/kg)
Antimony	3.9
Arsenic	5.6
Barium	130
Beryllium	0.65
Cadmium	<1
Chromium (total)	17.3
Cobalt	5.2
Copper	15.4
Lead	21.4
Mercury	<0.25
Nickel	11.5
Selenium	<1
Silver	<1
Thallium	<1.1
Tin	<10
Vanadium	20.4
Zinc	62

DEFINITIONS
mg/kg milligrams per kilogram
< less than

TABLE D-4
List of Analytical Parameters and Industrial Soil Screening Levels

Analytical Parameters	EPA Regional RSL[a] (mg/kg)	NMED SSL[b] (mg/kg)
Metals		
Antimony	410	454
Arsenic	1.6	17.7
Barium	190,000	224,000
Beryllium	2,000	2,260
Cadmium	810	1,120
Chromium (Total)	1,400	Not established
Cobalt	300	20,500
Copper	41,000	45,400
Lead	800	800
Mercury (methyl)	100	114
Nickel	20,000	22,700
Selenium	5,100	5,680
Silver	5,100	5,680
Thallium	66	74.9
Tin	610,000	Not established
Vanadium	5,200	5,680
Zinc	310,000	341,000
High Explosives (HE)		
1,3,5-Trinitrobenzene	27,000	Not established
1,3-Dinitrobenzene	62	Not established
TNT (2,4,6-Trinitrotoluene)	79	469
2,4-Dinitrotoluene	1,200	103
2,6-Dinitrotoluene	620	687
2-Amino-4,6-Dinitrotoluene	2,000	Not established
4-Amino-2,6-Dinitrotoluene	1,900	Not established
HMX (Octahydro-1,3,5,7-tetranitro-1,3,5,7-tetrazocine)	49,000	34,200
RDX (Hexahydro-1,3,5-trinitro-1,3,5-triazine)	24	174
m-Nitrotoluene	12,000	22,700
Nitrobenzene	280	277
o-Nitrotoluene	13	145
p-Nitrotoluene	110	1,200
Tetryl	2,500	2,740
3,5-Dinitroaniline	Not established	Not established
PETN (pentaerythritol tetranitrate)	Not established	Not established
Nitroglycerine	62	68.4
Other Analytes		
White phosphorous	20	Not established
Perchlorate	720	795
Dioxins and Furans (in TEQ TCDD)	0.000018	0.000204

a. Values from "Regional Screening Levels for Chemical Contaminants at Superfund Sites" (EPA, 2009).

http://www.epa.gov/reg3hwmd/risk/human/rb-concentration-table/index.htm
b. Values from "Technical Background Document for Development of Soil Screening Levels", Rev. 5 (NMED, 2009).
c. The toxicity of dioxins and furans will be measured in relation to the most toxic form of dioxin (2,3,7,8-tetrachlorodibenzo-p-dioxin [TCDD]) by calculating the toxic equivalent (TEQ).

DEFINITIONS

mg/kg	milligram per kilogram
NMED	New Mexico Environment Department
RSL	Regional Screening Level
SSL	soil screening level

Figure D-1

Figure D-2

PERMIT ATTACHMENT E: INSPECTION PLAN

1.0 INTRODUCTION

This Permit Attachment addresses general inspection requirements of 40 C.F.R. § 264.15.

1.1. INSPECTION SCHEDULE

The inspection schedule is presented in Table E-1 and shall be maintained at the Explosive Ordnance Disposal (EOD) Shop, as required by 40 C.F.R. § 264.15(b)(2).

1.2. SCOPE OF INSPECTIONS

At a minimum, the items listed in Table E-1 shall be inspected at the indicated frequencies.

1.3. FREQUENCY OF INSPECTIONS

Items listed in Table E-1 shall be inspected at the frequencies indicated in the table.

TABLE E-1
Inspection Schedule for the OD Unit

Item Number	Inspected For	Frequency
1	Are warning signs posted on the Explosive Ordnance Disposal Range boundary fence at 300-foot intervals?	Monthly
2	Is the EOD Range flag serviceable/posted?	Immediately before treatment operations
3	Are all combustibles clear of the OD Unit to 200 feet, including vegetation?	Immediately before treatment operations
4	Are firebreaks clear of combustibles, including vegetation?	Within 24 hours before treatment operations
5	Is a first-aid kit available?	Immediately before treatment operations
6	Is the OD Unit clear of explosives from previous treatment activities including the loading and unloading areas?	Immediately before treatment operations and within 24 hours after treatment operations
7	Are the EOD Range gates working properly?	Monthly
8	Is the Contingency Plan available at the EOD Range personnel bunker?	Immediately before treatment operations
9	Are all fire-protection and communication equipment operational?	Immediately before treatment operations
10	Is the OD Unit area in good condition?	Monthly and within 24 hours before treatment operations
11	Are metal fragments cleaned up?	Monthly and within 24 hours after treatment operations
12	Is the EOD Range boundary fence in good condition?	Monthly
13	Are the EOD Range roads and firebreaks in good condition?	Monthly
14	Is the personnel bunker in good condition?	Monthly
15	Is the runoff berm around the OD Unit in good condition?	Monthly
16	Is there standing water in a pit or crater at the OD Unit?	Immediately before treatment operations and within 24 hours of a precipitation event
17	Is there kick out or treatment residues following OD operations?	Within 24 hours after treatment operations

PERMIT ATTACHMENT F: CONTINGENCY PLAN

1.0 INTRODUCTION

This Contingency Plan has been prepared for the Open Detonation (OD) Unit located at the Explosive Ordnance Disposal (EOD) Range at the Kirtland Air Force Base (KAFB) Facility in compliance with 40 C.F.R. Part 264, Subpart D, as applicable. This plan consists of emergency response procedures and activities specific to the OD Unit.

1.1. PURPOSE AND IMPLEMENTATION

The purpose of this Contingency Plan is to define the responsibilities and provide for coordination of activities to minimize hazards to human health or the environment from fires, explosions, or any sudden or non-sudden release of hazardous waste or hazardous constituents. In accordance with 40 C.F.R. § 264.51(b), the provisions of this plan shall be carried out immediately whenever there is a fire, explosion, or a release of hazardous waste or hazardous constituents that could threaten human health or the environment.

In the case of major incidents or emergencies that cannot be controlled with EOD Range resources, the Emergency Coordinator (EC) shall notify the KAFB Fire Department and the KAFB Command Post (KCP). The KCP shall assume primary responsibility for response coordination in the case of such major incidents or emergencies or delegate that responsibility to the KAFB Fire Chief. Once the KCP or KAFB Fire Chief completes its response, the EC shall assume responsibility to ensure compliance with all the provisions of this Contingency Plan, including post-emergency inspections and reporting.

1.2. DISTRIBUTION

To assure proper implementation, this Contingency Plan shall be studied and understood by all personnel involved in the management of hazardous waste at the OD Unit and by all personnel required to respond to emergency situations at the OD Unit.

A copy of this Contingency Plan and any subsequent revisions to the plan shall be maintained at the Environmental Management (EM) Branch Office and a current copy shall be maintained at the KCP, and at the personnel bunker at the EOD Range. Copies and subsequent revisions shall be distributed to the KAFB Fire Department, the Albuquerque Fire Department, and the New Mexico Environment Department in the event that they are called upon to assist with or provide emergency services.

1.3. CHARACTERISTICS OF WASTES MANAGED AT THE OD UNIT

The Permittee treats reactive (D003) and ignitable (D001) hazardous wastes. These hazardous wastes include explosives, propellants, and pyrotechnics.

1.4. SUPPORT AGREEMENTS WITH OUTSIDE FACILITIES

The Permittee shall maintain support agreements in accordance with Permit Section 2.4.4.

1.5. EMERGENCY COORDINATOR

An EC (see Table F-1 of this Permit Attachment) shall be on site during treatment activities to coordinate emergency response measures. The EC shall be thoroughly familiar with this Contingency Plan, this Permit, characteristics of the hazardous wastes managed at the OD Unit, the hazardous waste management operations and activities conducted at the OD Unit, the location of hazardous wastes managed at the OD Unit when treatment operations are in progress, the location of the Operating Record at the Facility, and the EOD Range layout. The Base Civil Engineer shall also serve as the functional equivalent of an alternate EC. If the Base Civil Engineer becomes the EC (because the primary EC is not available), the Base Civil Engineer shall be present at the OD Unit for the entire duration of the treatment event.

The EC shall ensure that personnel assigned to the EOD Range are trained in the location and use of eyewash solutions, fire extinguishers, and emergency protective clothing; in emergency procedures; and in evacuation procedures before starting any treatment operations.

The EC has three primary responsibilities. They are:

1. Assess the situation. By observing the scene, interviewing personnel, and/or reviewing records, the EC shall gather information relevant to the response, such as the type of event, quantity and type of released material, and actual or potential hazards to human health or the environment.
2. Protect personnel. The EC shall take reasonable measures to ensure the safety of personnel, such as accounting for EOD Range personnel, attending to injuries, or coordinating the evacuation of EOD Range personnel, if necessary. If evacuation is indicated for personnel, the KCP shall be informed.
3. Contain or mitigate the hazards. The EC shall take reasonable measures to ensure that fires, explosions, or releases do not occur, recur, or spread.

1.6. RESPONSE PROCEDURES

When the EC is notified of an incident or emergency, he shall first determine the scale of the incident or emergency and decide if the incident or emergency is minor or major. In the case of minor incidents or emergencies, the EC shall coordinate the response. In the case of major incidents, the EC shall relinquish control to the KCP, which may in turn relinquish control to the KAFB Fire Chief when he arrives to handle the emergency; however, the EC shall remain available to provide technical guidance and information.

If necessary to protect human health, personnel shall evacuate the OD Unit during an emergency in accordance with the requirements of Section 1.6.5 of this Permit Attachment.

In the event that the EC determines an incident to be minor, a person shall be assigned to stand by at a safe distance with a two-way radio. At the first indication of an escalation in the degree of the incident, the standby person shall be instructed to notify the KCP.

The EC or EM Branch Chief of Compliance shall notify the National Response Center (1-800-424-8802 or current phone number) and the Department with the details of the incident or emergency as soon as possible after being notified of the incident or emergency.

After any incident or emergency, the EC shall ensure that the OD Unit and emergency

equipment are cleaned, waste is properly managed and disposed of, and the OD Unit is safe to resume operation. Before operations are resumed, the EC shall contact the EM Branch Chief of Compliance, who shall inform the appropriate agencies. The EC shall also ensure that the emergency recovery inspections and activities described in Section 1.8.1 of this Permit Attachment are conducted. The EC shall also be responsible for preparing post-emergency or post-incident reports, as presented below in Section 1.8.2 of this Permit Attachment.

1.6.1. Spills

The first priority in dealing with any spill is protection of personnel. If any hazardous waste is spilled during transfer to a treatment unit, transfer of the waste shall be discontinued immediately. The Range Supervisor shall notify the EC, proper personal protective equipment (PPE) shall be donned, and the spilled material and potentially contaminated media (e.g., soil) shall be contained, removed, and managed appropriately as solid or hazardous waste. Wastes not authorized for treatment at the OD Unit shall be removed and treated or disposed of at an off-site facility, as appropriate. If appropriate, the waste shall be saturated (e.g., with water) as a precautionary measure. The incident, including details of the spill and cleanup, shall be noted in the Operating Record.

1.6.2. Personnel Exposure

In the event of personnel exposure to hazardous waste, including, but not limited to, irritation of the eyes, breathing passages, or skin; difficulty in breathing; and/or nausea, light-headedness, vertigo, or blurred vision, personnel shall immediately take the following measures.

1. Notify the EC immediately.
2. The EC shall attempt to ascertain what, if any, chemical exposure occurred and what corrective measures are appropriate.
3. Transport the affected person to a medical facility for evaluation.
4. Evacuate and barricade the area to prevent unauthorized entry.

1.6.3. Explosion and/or Fire Involving Ordnance

EOD personnel shall implement operating practices designed to minimize the risk of fires and explosions that endanger human health or the environment at the OD Unit.

1.6.4. Natural Disasters

After any natural disaster in the vicinity of the OD Unit (e.g., earthquake, floods, lightning strike), the EC shall inspect the OD Unit for any signs of damage, leakage, and land movement and initiate any necessary corrective measures to rectify potential or actual problems. Inspection findings and corrective measures shall be recorded in the Operating Record.

1.6.5. Evacuation

Personnel shall evacuate the EOD Range upon voice command or by notification over two-way radio or other communication device.

1.6.5.1. Evacuation Procedure

The following procedure shall be implemented for evacuation:

1. When an evacuation is announced, stop work.
2. Assist injured personnel to evacuate, if possible.
3. Report to the designated assembly area outside the EOD Range personnel bunker for roll call to be taken by the EC or his designee.
4. Be continually cognizant of wind directions (stay upwind, if possible) and emergency equipment.
5. Do not reenter the affected area until the EC or KAFB Fire Chief authorizes reentry.

1.6.5.2. Evacuation Route

The EC shall be responsible for ensuring that all EOD personnel and site visitors are familiar with evacuation procedures and routes. A map showing the evacuation route is provided as Figure F-1. The map shall be posted at the EOD Range personnel bunker and carried by the EC on all treatment operations.

1.7. EMERGENCY EQUIPMENT

Emergency equipment shall be available for use at the OD Unit. The emergency equipment listed in Table F-2 shall be repaired, replaced, and/or upgraded with functionally equivalent components and equipment, as necessary.

1.8. EMERGENCY AND INCIDENT RECOVERY PROCEDURES

The recovery procedures that shall be followed after a minor or major incident or emergency at the OD Unit are described below.

1.8.1. Post-Emergency Inspections and Activities

The following post-emergency incident inspections and activities shall be conducted:

1. The EC will assure that the time, date, and details of any incident or emergency are noted in the Operating Record in accordance with 40 C.F.R. § 264.56(i).
2. The EC shall inspect the premises for leaks or ruptures of equipment, and shall ensure that all recovered material and waste is managed properly. The results of the inspection shall be recorded in the Operating Record. Only containers made of or lined with materials that will not react with and are otherwise compatible with the waste resulting from cleanup procedures shall be used.
3. Emergency response equipment shall be carefully inspected and the equipment decontaminated, replaced, or refurbished, if needed. Fire extinguishers shall be checked for adequate charge. PPE shall be checked for contamination. Remedial equipment shall be inspected for contamination and proper operation. The supply of eyewash solution and other expendable items used for first aid or cleanup shall be checked and replaced, as necessary.

4. Within 24 hours of an emergency or incident, fire extinguishers shall be replaced or recharged and PPE decontaminated, repaired, or replaced as necessary.
5. Within three days of an emergency or incident, other equipment and structures shall be decontaminated. Decontamination wastes shall be collected and managed appropriately. Appropriate PPE shall be worn during decontamination procedures.
6. Within 30 days of an emergency or incident, other equipment shall be repaired or replaced as necessary.

1.8.2. Post-Emergency or Incident Reports

The following post-emergency or incident reports shall be made:

1. A verbal report of any incident or emergency shall be reported promptly to the EM Branch Chief of Compliance if he was not informed during its occurrence.
2. A written emergency or incident report shall be prepared jointly by the EC and the EM Branch Chief of Compliance and forwarded to the Department within 15 working days, as required by 40 C.F.R. § 264.56(i). The written report shall include, at a minimum, the following.
    a. Name, address, and telephone number of the Commander of KAFB, the EC, and the EM Branch Chief of Compliance;
    b. Name, address, and telephone number of the responsible official;
    c. Date, time, and the type of emergency or incident;
    d. Name and quantity of material and waste involved;
    e. Extent of injuries, if any;
    f. Assessment of actual or potential hazards to human health or the environment; and
    g. Estimated quantity and disposition of recovered material and waste.
3. Before operations are resumed at the OD Unit, the Department shall be notified that the OD Unit is in compliance with 40 C.F.R. §§ 264.56(h) and 264.56(i) and the requirements of this Permit. The notification shall address the fact that no new waste shall be treated that may be incompatible with released material and waste until cleanup procedures are completed and that all emergency equipment is cleaned and fit for its intended use.

1.8.3. Emergency/Incident Response Evaluation

The Permittee shall be responsible for annual evaluations of the KAFB Facility emergency response plans and for evaluation of the response to any incident or emergency. If these evaluations reveal that changes to the emergency response plans are necessary, they shall be amended by the Permittee and distributed to the appropriate organizations.

This Contingency Plan shall be reviewed and, if necessary, amended by the Permittee whenever:

1. The Permit, or applicable regulations, is revised.
2. The plan fails in an incident or emergency.

3. The design, construction, operation, and/or maintenance of the OD Unit or other circumstances change in a way that materially increases the potential for fires, explosions, or releases of hazardous waste or hazardous constituents, or changes the response necessary in an incident or emergency.
4. The list of emergency equipment changes.

Whenever any of the EC contact information in Table F-1 changes, a revised table shall be provided to the Department and distributed to all Contingency Plan holders. A copy of the revised table shall also be maintained at the EOD Range personnel bunker. A revision of Table F-1 constitutes an amendment to this Contingency Plan. The Permittee shall request a modification to this Permit should it become necessary to amend this Contingency Plan for any reason.

TABLE F-1
Emergency Coordinator Contact Information for the OD Unit

Contact or Name	Address	Office Phone	Home Phone
D. Brent Wilson, Base Civil Engineer	Building 20684, KAFB, NM 87117	846-7911 or 846-0411	281-5857

TABLE F-2
Type and Location of Emergency Equipment Available for Use at the OD Unit

Emergency Item or Equipment	Description	Location	Contact
Emergency Vehicles	Emergency Response Vehicle: Mobile Command Post equipped with communications equipment.	KAFB Civil Engineer Readiness	846-9196
	Ambulances	KAFB Fire Department	911 or 846-8069
	Security Vehicles: Vans and trucks equipped with communications equipment and utilized for transportation of personnel and equipment.	KAFB Security Police	846-7926
	Fire Trucks: Fire-fighting vehicles outfitted with equipment for fighting fires and with self-contained breathing apparatuses (SCBAs).	KAFB Fire Department	911 or 846-8069
	Helicopter: Rotary-wing aircraft for transportation of personnel to or from site.	KAFB Command Post	846-3777
Medical Supplies	First aid kit	EOD Range personnel bunker or vehicle	EC or Range Safety Officer
	Stretchers/Stokes Litter: Equipment for movement of injured personnel.	KAFB Fire Department	846-8069
	Blankets: Normal blankets.		
	Medical Kits: Emergency first-aid supplies.		
	Oxygen: Medical grade oxygen in compressed cylinders equipped for personnel use.		
Safety Supplies	Fire Extinguisher (ABC)	EOD Range personnel bunker or vehicle	EC or Range Safety Officer
	Eye Wash Kit		
	Spill Containment Kit		
	Decontamination Kit		
	Air Packs: SCBAs equipped with positive pressure mode for use by personnel entering hazardous atmospheres.	KAFB Fire Department	846-8069
	Monitoring Instruments		
General Supplies	Two-Way Radio	EOD Range personnel bunker or vehicle	EC or Range Safety Officer
	Shovels		
	Hand Tools		
	Broom(s)		
Transportation	Tractor-trailer combinations,	KAFB Logistics Readiness Squadron	853-7843
	Flat-bed trucks		
	Enclosed panel vans		
	Passenger vehicles, including sedans and vans		
	Passenger buses		

DEFINITIONS
SCBA self contained breathing apparatus

Figure F-1

PERMIT ATTACHMENT G: PERSONNEL TRAINING PLAN

1.0 INTRODUCTION

The primary objective of the Explosives Ordnance Disposal (EOD) training program shall be to prepare personnel to conduct operations at the Open Detonation (OD) Unit in a safe and environmentally sound manner and in compliance with this Permit and the New Mexico Hazardous Waste Management Regulations (HWMR), 20.4.1 NMAC. To achieve this objective, the program provides personnel with training relevant to their positions.

All personnel shall complete initial training within six months of assignment to EOD Range duty. Personnel shall not work at the OD Unit until they have completed training on the Contingency Plan (Permit Attachment F). Personnel shall be given, at a minimum, a basic understanding of the regulatory requirements of hazardous waste management, this Permit, and emergency response procedures. Personnel shall receive additional classroom and on-the-job training designed specifically to teach them how to perform their duties safely and in conformance with regulatory requirements and this Permit. All personnel shall receive the required training prior to being allowed to work unsupervised.

1.1. TRAINING PROGRAM

Training for personnel is the overall responsibility of the EOD Flight Chief. All training shall be conducted by qualified EOD Technicians and includes formal classroom sessions, on-the-job training, and review of written procedures and plans. A summary of the training program for personnel is shown in Table G-1.

1.1.1. Job Title/Job Description

As required by 40 C.F.R. § 264.16(d)(1) and (2), records of each job title related to hazardous waste management at the OD Unit, a list of employees for each job title, and job descriptions for each job title shall be maintained at the EOD Shop. Job descriptions shall include hazardous waste management duties, and required skills, experience, and education.

Records relating to the training program shall be maintained at the EOD Shop. The records shall also include a list of courses required for each position, course descriptions, documentation that each employee has received and completed appropriate training, and information regarding qualifications.

1.1.2. Relevance of Training to Job Position

The training program shall provide employees with training to respond effectively to emergencies at the OD Unit. Personnel shall receive relevant training on the requirements of this Permit (including Contingency Plan implementation), OD Unit operations (including emergency procedures, equipment, and systems), and in management of hazardous wastes.

1.1.3. Training Content, Frequency, and Techniques

The training program shall include a comprehensive combination of internal training courses and on-the-job training. Each training course shall be developed carefully to support the goal of safe and environmentally sound operations at the OD Unit in compliance with this Permit and the

HWMR. Course outlines shall be maintained in the Training Section at the EOD Shop. The general training content and frequency of training are presented in Table G-1.

1.2. TRAINING DIRECTOR

The Training Director (EOD Flight Chief) shall direct the training program and shall be responsible for establishing training requirements for personnel. The EOD Flight Chief shall be required to be knowledgeable of the applicable hazardous waste management regulations and specific processes employed at the OD Unit, pursuant to the HWMR and this Permit.

1.3. IMPLEMENTATION OF TRAINING PROGRAM

The training program shall be implemented to ensure that all personnel who work at the OD Unit receive the training indicated in Table G-1. All personnel shall participate annually in a training refresher. Visitors shall be provided instruction commensurate with the nature of their visit.

TABLE G-1
Training Program for the OD Unit

Course	Content	Frequency
Basic EOD Course	Covers all aspects of positions and duties associated with EOD and OD Unit operations	Initial
Explosive Safety	General Safety Requirements, Motor Vehicle Transportation, Disposal Range Requirements, Disposal Range Procedures, Range Safety, Standard Safety Guidelines, Site Entry, Site Control, Personal Protective Equipment, Contingency Plan, Implementation, Procedures for Using Emergency Equipment, Procedures for Shutdown of Operations, Responses(s) to Emergencies, Emergency Coordinator(s), Evacuation Route and Procedures, Post-emergency Procedures	Initial/Annual
Relevant In-House Training	General Overview of Procedures to Perform Operations at the EOD Range and OD Unit; Waste Analysis Plan; Identification of Waste to be Managed; Waste Screening and Verification; Range Operation; Safety Practices; Security; Range Inspections; Preventive Procedures, Structures, and Equipment; Prevention of Reaction of Reactive Waste, Ignitable and Incompatible Waste; Authorized Wastes	Initial/Annual
Resource Conservation and Recovery Act Training	Hazardous Waste Management and Regulations – Overview, Hazardous Substances and Properties, General Facility Standards, Preparedness and Prevention, Contingency Plan and Emergency Procedures, Record Keeping and Reporting	Initial/Annual

PERMIT ATTACHMENT H: CLOSURE PLAN

1.0 INTRODUCTION

This Closure Plan describes the activities necessary to close the Open Detonation (OD) Unit at the Explosive Ordnance Disposal (EOD) Range, Kirtland Air Force Base (KAFB). Until final closure is complete in accordance with the New Mexico Hazardous Waste Management Regulations and certification of closure has been approved by the Department, a copy of the approved Closure Plan and all approved revisions shall be maintained in the Operating Record. This Closure Plan and any revisions thereof shall be made available, upon request, to the Department.

If the OD Unit can not be cleaned closed, the Permittee shall amend this plan in accordance with Permit Section 4.2 and implement the new plan upon obtaining approval from the Department.

1.1. GENERAL CLOSURE INFORMATION

This Closure Plan has been prepared in accordance with the requirements of 40 C.F.R. § 270.14(b)(13), and 40 C.F.R. Part 264, Subparts G and X.

1.1.1. Closure Performance Standard

The OD Unit shall be closed to meet the following performance standards:

- Minimize the need for further maintenance;
- Control, minimize, or eliminate, to the extent necessary to protect human health and the environment, the post-closure escape of hazardous waste, hazardous constituents, leachate, contaminated runoff, or hazardous waste decomposition products to ground or surface waters or to the atmosphere; and
- Comply with the requirements of 40 C.F.R Subpart G and § 264.601.

1.1.2. Final Closure Activities

The Permittee shall notify the Department, in writing, at least 45 calendar days before the date on which final closure of the OD Unit will commence. Partial closure (i.e., closure of just one part of the Unit) shall not occur unless directed otherwise by the Department.

Final closure shall consist of:

1. Removing all structures and equipment used at the OD Unit;
2. Removing soil and debris that have contaminant concentrations that pose unacceptable risk to human health or the environment; and
3. Sending for treatment and disposal any solid and hazardous waste, including any treatment residues, to a permitted treatment, storage, or disposal facility (TSDF) in accordance with applicable regulatory requirements.

Final closure shall be complete when:

1. All solid and hazardous waste have been treated and disposed of off-site as required by law;

2. All structures and all equipment have been removed from the OD Unit;
3. Sampling demonstrates that no unacceptable risk to human health or the environment exists in soil or groundwater at the OD Unit and surrounding areas of the EOD Range that was caused by contamination from the OD Unit;
4. A Certification of Closure and Closure Report have been submitted to the Department; and
5. The Department has approved the Closure Report and Certification of Closure.

1.1.3. Maximum Extent of Operations

Closure activities and any corrective action that may be required shall not be limited to the OD Unit if contamination occurs or could occur beyond the boundary.

1.1.4. Schedule for Closure

Closure of the OD Unit shall comply with the schedule presented in Table H-1.

1.2. CLOSURE REPORT

Upon completion of the closure activities, a Closure Report shall be submitted to the Department with a Certification of Closure (see Permit Section 4.7). The Closure Report shall document the closure activities conducted and contain, at a minimum, the following information:

1. The certification described in Permit Section 4.7;
2. A summary of closure activities;
3. Any significant variance from the approved plan and the reason for the variance;
4. A summary of all sampling data associated with the closure, including analytical results for all field and laboratory quality control samples;
5. A statement indicating whether the quality of data is adequate to support closure in accordance with the Performance Standards of this Closure Plan (see Section 1.1.1 of this Permit Attachment);
6. The location of the file of supporting documentation (e.g., memos, logbooks, laboratory sample analysis data); and
7. Disposal location of all solid and hazardous waste, including decommissioned equipment and structures and any contaminated debris and soil, and any treatment residues.

1.3. CLOSURE PROCEDURES

All hazardous waste present at the OD Unit shall be treated before closure activities commence, provided such waste is authorized to be treated at the OD Unit or, the waste shall be treated and disposed of at an offsite facility as permitted by law. Structures and equipment shall be removed. Structures and equipment shall be dismantled, placed into containers, and managed as solid or hazardous waste, as applicable, and disposed of as permitted by law.

The first phase of closure shall consist of a hazards survey of the OD Unit conducted by qualified health physics and industrial hygiene personnel. The purpose of the survey shall be to locate and remove any “kick-out” (untreated waste, waste fragments, or unexploded ordnance)

and to identify potential contamination concerns that may present hazards to workers during closure activities and to specify any control measures necessary to reduce worker risk. This survey shall provide the information necessary for health physics and industrial hygiene personnel to identify worker qualifications, personal protective equipment (PPE), safety awareness, work permits, exposure control programs, and emergency coordination that may be required to perform closure activities. All workers involved in the closure activities shall be required to have training and medical monitoring, in accordance with applicable regulations. Personnel performing closure activities shall be required to wear PPE as specified by health physics and industrial hygiene personnel.

Surface and subsurface soil and any debris at the OD Unit shall be characterized by sampling and analysis. Soil sampling shall follow the procedures described in Section 1.4 of this Permit Attachment (H). Soil shall be analyzed for the parameters listed in Tables H-2, H-3, and H-4. If sampling and analysis of soil indicates the presence of hazardous waste or hazardous constituents above background levels, a risk assessment shall be conducted based on a residential land-use scenario to determine whether the contaminants pose an unacceptable risk to human health or the environment. In lieu of a baseline risk assessment, the Permittee may compare the soil sampling results to the soil screening levels using the procedures listed in the Department's most current version of "Technical Background Document for Development of Soil Screening Levels" (as it may be updated), provided the soil screening levels are based on a residential land use scenario. If the risk assessment demonstrates that the level of contamination is unacceptable, the contaminated soil exhibiting unacceptable risk shall be subject to corrective action under Permit Part 6 and shall be excavated and removed. The excavated soil shall be collected, transferred to containers, and, if applicable, managed and disposed of as hazardous waste.

The Permittee shall conduct corrective action activities at the OD Unit using the cleanup levels in Permit Section 6.2.3 if corrective action is necessary. Clean up levels shall be based on a residential land use scenario.

Background soil concentrations for metals are those approved by the Department for the KAFB Facility, and are listed in Table D-4 of Permit Attachment D.

1.4. SAMPLING, DECONTAMINATION PROCEDURES, AND PPE

This Section describes procedures and methods for sampling soil and liquid. Other applicable procedures or methods given in the most current version of *Test Methods for Evaluating Solid Waste, Physical/Chemical Methods (SW-846)* (EPA, 1986) and all approved updates) may be used at the time of actual closure if conditions or experience show the alternate method(s) to be more appropriate, and if approved by the Department. All sampling methods and procedures used shall be described in the Closure Report. Sampling of waste shall be conducted in accordance with procedures given below in this Permit Attachment (H) and in *Samplers and Sampling Procedures for Hazardous Waste Streams (EPA, 1980)* or *SW-846*.

Reusable tools and equipment shall be scraped as necessary to remove any contaminated soil, debris, or residue; cleaned with detergent and water solution; and rinsed with clean water. The wash and rinse water shall be collected and sampled and analyzed for characterization as waste.

All PPE worn by personnel performing closure activities will be disposable and after use shall be placed into containers and managed as solid or hazardous waste, as applicable.

1.4.1. Soil Sampling

Soil samples shall be collected on a 25-foot by 25-foot grid spacing from the surface to 15-feet below ground surface at five-foot intervals (total of four samples per location). At a minimum, the 25-foot by 25-foot grid shall encompass all portions of the OD Unit that have hosted or may have hosted a pit or crater used for the treatment of hazardous waste. Any areas at the OD Unit used for training shall be considered a part of the OD Unit for purposes of establishing the sampling grid.

The samples shall be analyzed for the parameters listed in Tables H-2, H-3, and H-4, which include the general types of hazardous wastes managed at the OD Unit.

Surface soil samples (zero to six inches depth) shall be collected with a wooden or Teflon™ trowel or scoop. To collect deeper samples, a Veihmeyer soil sampler, auger drill, direct push technology, or other appropriate method shall be used. Only discrete grab samples shall be collected; no samples shall be composited.

Clean sampling equipment shall be used to collect each sample. Unused, disposable sampling equipment may be presumed clean if still in a factory-sealed wrapper prior to use. Reusable sampling equipment shall be decontaminated after each use by scraping to remove any loose material, washing with a detergent and water solution, rinsing several times with tap water, rinsing with deionized water, and drained of excess water, and air-dried or wiped dry.

1.4.2. Liquid Sampling

A Coliwasa sampler or similar device shall be used to sample liquids (for example, rinse water). As an alternative to the Coliwasa, glass tubes or similar devices may be used to sample liquids.

1.4.3. Sample Containers and Preservatives

Samples shall be placed in clean containers compatible with the intended analysis and shall be properly prepared, preserved, documented, labeled, handled, and secured to maintain sample integrity (see Tables H-5 and H-6).

1.4.4. Sample Handling and Documentation

Each sample shall be labeled, sealed, and accompanied by a chain-of-custody form and a request-for-analysis form. A chain-of-custody form shall be used to track samples from collection through analysis to ensure that the integrity of the samples is protected. The sample handling and documentation procedures shall be equivalent to those in the most current version of *SW-846*.

A chain-of-custody form shall be prepared for all samples collected for laboratory analyses. The form shall include at a minimum:

1. Sample identification number.
2. Name and signature of sample collector.
3. Date and time of sample collection.
4. Location at which sample was collected.
5. Type of sample (e.g., soil, liquid).

6. Signatures of persons who have had the samples in their possession.
7. Dates and times of possession.

The form shall be completed upon receipt at the laboratory and the original returned to the Permittee for inclusion in the Operating Record. The request-for-analysis form shall list all analyses to be performed for the samples and all special instructions relating to sample management or analysis. Any potential hazards posed by the samples shall be listed on the request-for-analysis form.

Sample containers shall be sealed with gummed paper seals attached to the containers in such a way that the seals must be broken in order to open the containers. Seals and sample labels shall be completed with a waterproof pen or marker. Sample labels are necessary to prevent misidentification of samples and shall include at minimum the following information:

1. A unique sample identification number.
2. Name or initials of sample collector.
3. Sample collection date and time.
4. Sample location.
5. Sample type, depth, and description.

A field logbook shall be kept and shall contain information pertinent to field surveys and sampling. Sufficient information shall be recorded so that a person can reasonably reconstruct what occurred at a sampling event without relying on a collector's memory. Entries in the logbook for a given sampling event shall, at a minimum, include:

1. Purpose of sampling.
2. Sample locations.
3. Name and business address of person making log entry.
4. Numbers, types, and volumes of samples, including field QC samples.
5. Description of sampling method and equipment used.
6. Date and time of sample collection.
7. Sample destination and transporter's name (for example, name of laboratory, United Parcel Service).
8. Map or photograph of the sampling site.
9. Field observations (for example, ambient temperature, sky conditions, past 24-hour precipitation).
10. Listing of sample identification number(s).
11. Signature of person responsible for the log entry.

1.4.5. Sample Shipping

Samples shall be packaged and shipped to the laboratory in accordance with DOT shipping requirements and in a manner to ensure that the integrity of the samples is protected. The sample containers shall be cushioned to protect against breakage or puncture.

1.4.6. Sample Analysis

Samples shall be analyzed at an EPA-certified commercial laboratory. Test methods for analysis of all samples shall be performed according to procedures documented in *SW-846* or other methods approved by the Department. Constituents in the hazardous wastes treated at the OD Unit are to be included in these analyses. Analytical methods and detection limits are listed in Tables H-2 through H-4.

Calibration, operation, QC (bias, precision, blank and matrix effects), and requirements for laboratory analyses shall be performed as listed in the individual analytical methods of *SW-846*. All laboratory analyst notebooks, log-sheets, instrument printouts, charts, and calculations relevant to analyses of these samples shall be identified and remain accessible. This information may be requested by the Department for independent review and validation. If requested by the Department, the information shall be provided by the Permittee to the Department.

The analytical laboratory shall have procedures for minimizing cross-contamination of samples and securing sample custody within the laboratory.

1.4.7. Quality Assurance (QA)/Quality Control (QC)

Because decisions about closure activities shall be based, in part, on analyses of samples, a program to ensure data are of high quality is mandatory. The Permittee shall ensure the high quality of data by documenting sample collection and management. The Permittee shall accomplish this also by following a QA/QC program that mandates documentation of the precision and accuracy of all laboratory analyses, as well as data completeness, representativeness, and comparability.

Sampling activities shall include the collection of field QC samples and their documentation. QC samples to be collected include equipment blanks, trip blanks, field blanks, and duplicate samples. Table H-7 of this Permit Attachment (H) summarizes the field QC sample requirements.

Blanks and duplicate samples shall be prepared or collected to monitor the performance of the data collection and analysis process, beginning with sampling and continuing through transportation, storage, and analysis. To document adequate decontamination of sampling equipment, equipment blanks (consisting of deionized water rinsate captured from decontaminated sampling equipment) shall be prepared and analyzed if reusable sampling equipment is employed.

In the case of samples to be analyzed for volatile organic compounds, in order to document cross-contamination attributable to shipping and handling procedures, trip blanks (consisting of deionized water) shall be prepared, taken to the sampling site, and then shipped to the laboratory along with the other samples to be analyzed for VOCs.

In the case of samples to be analyzed for volatile organic compounds, field blanks shall also be prepared to document cross-contamination attributable to field conditions. Field blanks (consisting of deionized water) shall be prepared, taken to the sampling site, their containers opened during the sampling of environmental media, and then shipped to the laboratory along with the samples to be analyzed for volatile organic compounds.

Equipment blanks shall be collected at a frequency of one per sampling day per media type. Duplicate samples shall be collected at a frequency of at least one per every twenty environmental samples per media type. Field and trip blanks shall be collected at a frequency of at least one each per sampling day. Acceptance criteria for QA/QC sample analyses shall be consistent with those for environmental samples as specified in Permit Attachment D, Section 1.3.

The Permittee shall require that the analytical laboratory operate under a QA Program Plan (QAPP) that meets the requirements of *SW-846*. QC procedures at the analytical laboratory are to be guided by the laboratory's QAPP. Laboratory QC samples are required to evaluate the accuracy and precision of analytical data. The laboratory must analyze and report to the Permittee the results of the following types of laboratory quality control samples: method blanks, duplicates, spikes, matrix spikes and matrix spike duplicates.

The Permittee shall also validate the data following the procedures in Permit Section 6.5.18.3.

1.5. MANAGEMENT OF WASTE FROM CLOSURE ACTIVITIES

Wastes that will be generated during closure activities at the OD Unit include decommissioned structures and equipment, excess soil from sampling, decontamination water, PPE, and possibly contaminated soil and debris and treatment residues.

1.5.1. Waste Management

Wastes associated with closure activities at the OD Unit shall also be managed as follows:

1. Wastes shall be stored in appropriate containers that are compatible with the wastes and that are in good condition.
2. If hazardous or potentially hazardous, the containers shall be labeled as hazardous waste or shall be labeled with the contents of the container. If potentially hazardous waste is determined not to be hazardous waste, the container label shall be changed to indicate that the waste is not hazardous waste.
3. Hazardous waste shall be managed in accordance with all applicable regulations in 40 C.F.R. 261-268.
4. Waste containers shall remain under the control of the personnel generating the waste.
5. Waste containers shall be segregated according to compatibility and chemical waste type.
6. Wastes shall be stored in containers that remain closed, except when adding or removing wastes.
7. Waste containers bearing free liquid shall be provided with secondary containment of sufficient volume to prevent spilled liquids from being released onto the ground.
8. Waste containers shall be managed in such a way as to prevent ruptures and leaks.

9. Waste containers shall be labeled appropriately, pending receipt of analytical results. Labels shall be marked using a permanent marker or pen. In addition to that required by item #2 of this Section, label information shall include waste source, depth (if appropriate), the date on which accumulation began, and the name and contact information of the generator.

1.5.2. Waste Characterization

Characterization of waste generated during closure activities shall be based upon the results of sampling and analysis.

1.5.3. Waste Disposal

All wastes from closure activities determined to be hazardous shall be managed in accordance with the Hazardous Waste Management Regulations (HWMR) from the time of generation. Hazardous waste shall be shipped off-site for treatment and disposal at a permitted RCRA Subtitle C facility. Wastes characterized as non-hazardous shall also be managed and disposed of in accordance with applicable law.

1.6. GROUNDWATER MONITORING WELLS

Groundwater monitoring wells shall be properly plugged and abandoned in accordance with all regulations and Department guidance, provided groundwater contamination has not occurred. If groundwater contamination has occurred, monitoring wells shall be maintained for the purpose of implementing corrective action. If corrective action is required by the Department, the Permittee shall immediately implement corrective action pursuant to Part 6 of this Permit.

REFERENCES

U.S. Environmental Protection Agency (EPA), 1986. Test Methods for Evaluating Solid Waste, Physical/Chemical Methods; 3rd edition, update 3, SW-846, Office of Solid waste and Emergency Response, U.S. Environmental Protection Agency, Washington, D.C.

U.S. Environmental Protection Agency (EPA), 1980. Samplers and Sampling Procedures for Hazardous Waste Streams; Municipal and Environmental Research Laboratory, U.S. Environmental Protection Agency, Cincinnati, Ohio, EPA-600/2-80-018, January 1980.

"U.S. Environmental Protection Agency Contract Laboratory Program Statement of Work for Inorganic and Organic Analysis" (EPA, 1990).

TABLE H-1
Closure Schedule

Activity	Time Required
Advertise for proposals.	-90 Days
Notify the Department of receiving final volume of hazardous waste.	-45 Days
Receive proposals.	-30 Days
Select contractor and award contract.	-10 Days
Begin closure activities—field investigation.	Day 0
OD Unit structure and equipment removal.	Day 10
Conduct soil sampling.	Day 50
Obtain analysis of soil samples.	Day 80
Soil excavation (if necessary) and verification sampling.	Day 100
Final decontamination activities and soil removal (if necessary).	Day 130
Submit final report and Closure Certification to the Department.	180 days after receiving final volume of hazardous waste

Note: The schedule above indicates calendar days from the beginning of closure activities by which the listed activities shall be completed. Some activities may be conducted simultaneously.

TABLE H-2
Maximum Detection Limits and Analytical Methods for Analysis of Metals

Analyte	Maximum Detection Limit		EPA *SW-846*[c] Analytical Method[d]
	Water (ug/L)[a]	Soil (mg/kg)[b]	
Arsenic	1.0	1.0	6010C, 7000B, 7061A
Antimony	2.0	6.0	6010C, 7000B
Barium	2.0	20.0	6010C, 7000B
Beryllium	0.20	0.50	6010C, 7000B
Cadmium	0.10	0.5	6010C, 7000B
Chromium	1.0	1.0	6010C, 7000B, 7195, 7196A, 7197
Cobalt	1.0	5.0	6010C, 7000B
Copper	2.0	2.5	6010C, 7470A, 7471B
Lead	1.0	1.0	6010C, 7000B
Mercury	0.2	0.1	7000B, 7470A, 7471B
Nickel	1.0	4.0	6010C, 7000B
Selenium	2.0	3.5	6010C, 7000B, 7741B, 7742
Silver	0.20	1.0	6010C, 7000B
Thallium	1.0	2.5	6010C, 7000B
Tin	5.0	5.0	6010C, 7000B
Vanadium	1.0	5.0	6010C, 7000B
Zinc	2.0	5.0	6010C, 7000B

a ug/L = micrograms per liter;

b mg/kg = milligrams per kilogram (non-aqueous detection limit);

c U.S. Environmental Protection Agency, 1986 and all approved updates, "Test Methods for Evaluating Solid Waste, Physical/Chemical Methods, *SW-846"*.

d Another applicable or newer method may be used with prior NMED approval.

TABLE H-3
Maximum Detection Limits and Analytical Methods
for Analysis of VOCs and SVOCs

Analyte	Media (Maximum Detection Limit)	
	Water (ug/L)[1]	Soil (ug/kg)[2]
Volatile Organic Compounds (VOCs)		
Method SW-846-8260B		
Acetone	5.0	10
Benzene	0.50	5.0
Bromochloromethane	0.50	5.0
Bromodichloromethane	0.50	5.0
Bromoform	0.50	5.0
Bromomethane	0.50	5.0
Carbon disulfide	0.50	5.0
Carbon tetrachloride	0.50	5.0
Chlorobenzene	0.50	5.0
Chloroethane	0.50	5.0
Chloroform	0.50	5.0
Chloromethane	0.50	5.0
cis-1,2-Dichloroethene	0.50	5.0
cis-1,3-Dichloropropene	0.50	5.0
Cyclohexane	0.50	5.0
Dibromochloromethane	0.50	5.0
Dichlorodifluoromethane	0.50	5.0
Ethylbenzene	0.50	5.0
Isopropylbenzene	0.50	5.0
Methyl acetate	0.50	5.0
Methylcyclohexane	0.50	5.0
Methylene chloride	0.50	5.0
Methyl tert-butyl ether (MTBE)	0.50	5.0
4-Methyl-2-pentanone	5.0	10
Styrene	0.50	5.0
Toluene	0.50	5.0
trans-1,2-Dichloroethene	0.50	5.0
trans-1,3-Dichloropropene	0.50	5.0
Trichloroethene (TCE)	0.50	5.0
Trichlorofluoromethane	0.50	5.0
Tetrachloroethene	0.50	5.0
m,p-Xylene	0.50	5.0
o-Xylene	0.50	5.0
Vinyl chloride	0.50	5.0
1,2-Dibromo-3-chloropropane	0.50	5.0
1,2-Dichlorobenzene	0.50	5.0
1,3-Dichlorobenzene	0.50	5.0
1,4-Dichlorobenzene	0.50	5.0
1,1-Dichloroethane	0.50	5.0

Table H-3 (Continued)		
Analyte	**Media**	
	Water (ug/L)	**Soil (ug/kg)**
1,2-Dibromoethane	0.50	5.0
1,2-Dichloroethane	0.50	5.0
1,1-Dichloroethene	0.50	5.0
1,2-Dichloropropane	0.50	5.0
1,4-Dioxane	1.0	100
1,1,2,2-Tetrachloroethane	0.50	5.0
1,2,3-Trichlorobenzene	0.50	5.0
1,2,4-Trichlorobenzene		5.0
1,1,1-Trichloroethane	0.50	5.0
1,1,2-Trichloroethane	0.50	5.0
1,1,2-Trichloro-1,2,2-trifluoroethane	0.50	5.0
1,2,3-Trichloropropane	na	10.0
1,2,4-Trimethylbenzene	na	na
1,3,5-Trimethylbenzene	na	na
2-Butanone	5.0	10
2-Hexanone	5.0	10
Method SW-846-8011		
Ethylene dibromide	0.02	na
1,2-dibromo-3-chloropropane	0.02	na
Semi-Volatile Organic Compounds (SVOCs)		
Method SW-846-8270C		
Benzaldehyde	5.0	170
Phenol	5.0	170
Bis(2-chloroethyl) ether	5.0	170
2-Chlorophenol	5.0	170
2-Methylphenol	5.0	170
2,2'-Oxybis(1-choloropropane)	5.0	170
Acetophenone	5.0	170
4-Methylphenol	5.0	170
N-Nitroso-di-n propylamine	5.0	170
Hexachloroethane	5.0	170
Nitrobenzene	5.0	170
Isophorone	5.0	170
2-Nitrophenol	5.0	170
2,4-Dimethylphenol	5.0	170
Bis(2-chloroethoxy) methane	5.0	170
2,4-Dichlorophenol	5.0	170
Naphthalene	5.0	170
4-Chloroaniline	5.0	170
Hexachlorobutadiene	5.0	170
Caprolactam	5.0	170
4-Chloro-3-methylphenol	5.0	170
2-Methylnaphthalene	5.0	170
Hexachlorocyclopentadiene	5.0	170
2,4,6-Trichlorophenol	5.0	170
2,4,5-Trichlorophenol	5.0	170
1,1'-Biphenyl	5.0	170
2-Chloronaphthalene	5.0	170

Table H-3
(Continued)

Analyte	Media	
	Water (ug/L)	**Soil (ug/kg)**
2-Nitroaniline	10	330
Dimethylphthalate	5.0	170
2,6-Dinitrotoluene	5.0	170
Acenaphthylene	5.0	170
3-Nitroaniline	10	330
Acenaphthene	5.0	170
2,4-Dinitrophenol	10	330
4-Nitrophenol	10	330
Dibenzofuran	5.0	170
2,4-Dinitrotoluene	5.0	170
Diethyl phthalate	5.0	170
Fluorene	5.0	170
4-Chlorophenyl-phenyl ether	5.0	170
4-Nitroaniline	10	330
4,6-Dinitro-2-methylphenol	10	330
N-Nitrosodiphenylamine	5.0	170
1,2,4,5-Tetrachlorobenzene	5.0	170
4-Bromophenyl-phenylether	5.0	170
Hexachlorobenzene	5.0	170
Atrazine	5.0	170
Pentachlorophenol	5.0	330
Phenanthrene	5.0	170
Anthracene	5.0	170
Carbazole	5.0	170
Di-n-butyl phthalate	5.0	170
Fluoranthene	5.0	170
Pyrene	5.0	170
Butyl benzyl phthalate	5.0	170
3,3'-dicholorobenzidine	5.0	170
Benzo(a)anthracene	5.0	170
Chrysene	5.0	170
Bis(2-ethylhexyl) phthalate	5.0	170
Di-n-octyl phthalate	5.0	170
Benzo(b) fluoranthene	5.0	170
Benzo(k) fluoranthene	5.0	170
Benzo(a) pyrene	5.0	170
Indeno(1,2,3,-cd) pyrene	5.0	170
Dibenzo(a,h) anthracene	5.0	170
Benzo(g,h,i)perylene	5.0	170

1. Micrograms per liter = parts per billion
2. Micrograms per kilogram = parts per billion
3. not applicable

TABLE H-4
Maximum Detection Limits and Analytical Methods for Analysis of High Explosives and Other Compounds

Analyte (Group)	Maximum Detection Limits[a]		Analytical Method EPA *SW-846*[b]
	Soil (mg/kg)	Water (ug/L)	
1,3,5-Trinitrobenzene	0.25	7.3	8330B
1,3-Dinitrobenzene	0.25	4.0	"
2,4,6-Trinitrotoluene (TNT)	0.25	6.9	"
2,4-Dinitrotoluene	0.25	5.7	"
2,6-Dinitrotoluene	0.26	9.4	"
2-Amino-4,6-Dinitrotoluene	0.25	--	"
4-Amino-2,6-Dinitrotoluene	0.25	--	"
Octahydro-1,3,5,7-tetranitro-1,3,5,7-tetrazocine (HMX)	0.22	13.0	"
2-Nitrotoluene	0.25	12.0	"
Nitrobenzene	0.26	6.4	"
3-Nitrotoluene	0.25	7.9	"
4-Nitrotoluene	0.25	8.5	"
Tetryl	0.65	4.0	"
Hexahydro-1,3,5-trinitro-1,3,5-triazine (RDX)	1.0	14.0	"
Nitroglycerin (NG)	6.1	3.65	"
Perchlorate	0.010	0.53	6850
White phosphorus	0.43	0.008	7580
Dioxins and Furans	0.50	0.005	8280B or 8290A

a. mg/kg = milligrams per kilogram; ug/L = micrograms per liter.

b. U.S. Environmental Protection Agency, 1986 and all approved updates, "Test Methods for Evaluating Solid Waste, Physical/Chemical Methods, *SW-846"*.

TABLE H-5
Sample Containers, Preservation Methods, and Holding Times for Soil Samples

Analyte Group	Container Type[a]	Preservation Method	Holding Time[b]
Metals[c] (except mercury and hexavalent chromium)	4 oz glass jar with PTFE[d] cap	Cool to 4 degrees Celsius (°C)	180 days
Mercury	4 oz glass jar with PTFE cap	Cool to 4°C	28 days
Hexavalent chromium	4 oz glass jar with PTFE cap	Cool to 4°C	28 days
Volatile organic compounds[c]	4 oz glass jar with PTFE cap	Cool to 4°C	14 days
Semivolatile organic compounds[c]	4 oz glass jar with PTFE cap	Cool to 4°C	14 days
High explosives[c]	4 oz glass jar with PTFE cap	Cool to 4°C	14 days
Perchlorate	4 oz glass jar with PTFE cap	Cool to 4°C	28 days
White Phosphorus	4 oz glass jar with PTFE cap	Cool to 4°C	Indefinite (if preserved at or below 4°C, kept in the dark, and tightly sealed)
Dioxins and Furans	250 mL wide mouth amber glass jar with PTFE lid	Cool to 4°C	30 days

a. Other container types may be used depending upon the laboratory or the method used and with prior NMED approval.

b. Holding time information from U.S. Environmental Protection Agency, 1986 and all approved updates, "Test Methods for Evaluating Solid Waste, Physical/Chemical Methods," *SW-846*.

c. Volatile and semivolatile organic compounds, metals, and high explosives are listed by respective test method numbers in U.S. Environmental Protection Agency, 1986 and all approved updates, "Test Methods for Evaluating Solid Waste, Physical/Chemical Methods," *SW-846*.

d. Polytetrafluoroethylene (Teflon™)

TABLE H-6
Sample Containers, Preservation Methods and Holding Times for Liquid Samples

Analyte Group	Container Type[a]	Preservation Method	Holding Time[b]
Metals[c] (except mercury and hexavalent chromium)	1-liter Polyethylene bottle with PTFE[d] lined cap	HNO_3[e] to pH <2 and cool to 4 degrees Celsius (°C)	180 days
Mercury	1-liter Polyethylene or Glass bottle with PTFE-lined lid	HNO_3 to pH <2	28 days
Hexavalent chromium	1-liter Amber Glass jar with PTFE lined cap	Cool to 4°C	24 hours
Volatile organic compounds[c]	3 x 40 mL Glass vials with PTFE-lined septum caps	HCl[f] Cool to 4°C	14 days
Semivolatile organic compounds[c]1 Liter	2 x 1-liter Amber Glass with PTFE-lined lid	Cool to 4°C	7 days
High explosives[c]	1-liter Amber Glass with PTFE-lined lid	Cool to 4°C	7 days
Perchlorate	125-mL Polyethylene bottle with PTFE-lined lid	Cool to 4°C	28 days
White Phosphorus	500-mL Polyethylene bottle with PTFE-lined lid	Cool to 4°C, kept in dark storage	5 days
Dioxins and Furans	4 x 1-liter Amber Glass with PTFE-lined lid	Cool to 4°C	30 days

a. Other container types may be used depending upon the laboratory or the method used and with prior NMED approval.

b. Holding time information from U.S. Environmental Protection Agency, 1986 and all approved updates, "Test Methods for Evaluating Solid Waste, Physical/Chemical Methods," *SW-846.*

c. Volatile and semivolatile organic compounds, metals, and high explosives are listed by respective test method numbers in U.S. Environmental Protection Agency, 1986 and all approved updates, "Test Methods for Evaluating Solid Waste, Physical/Chemical Methods," *SW-846*.

d. Polytetrafluoroethylene (Teflon™)

e. HNO_3 = Nitric acid

f HCl = Hydrochloric acid

TABLE H-7
Field Quality Control Samples

Quality Control Sample Type	Sample Matrix	Applicable Analyses	Frequency	Purpose
Trip blank	Water/Soil	VOCs[a]	One per day	Document any contamination attributable to shipping and field handling procedures
Field blank	Soil/Water	VOCs	One per day	Document any contamination attributable to field conditions
Field duplicate	Soil/Water	VOCs, SVOCs[b], metals, HE[c] Dioxins and Furans White Phosphorus Perchlorate	Minimum of one per 20 environmental samples per media type	Document precision of the sampling/analysis process
Equipment blank	Water	VOCs, SVOCs, metals, HE Dioxins and Furans White Phosphorus Perchlorate	One sample per day per media type	Document whether decontamination of sampling equipment was adequate

a VOCs = volatile organic compounds.

b SVOCs = semivolatile organic compounds.

c. HE = High Explosives

PERMIT ATTACHMENT I: COMPLIANCE SCHEDULES

1.0 INTRODUCTION

The Permittee shall meet the due dates in the compliance schedules of Tables I-1 through I-3 of this Permit Attachment (I), as well as any other due dates specified in this Permit that are not included in the tables of Permit Attachment I. Table I-1 contains a list of general submittals and their due dates. Table I-2 lists various submittals related to corrective action and their due dates, whereas, Table I-3 lists submittals for corrective action related to specific SWMUs and AOCs and their associated due dates.

Table I-1
General Submittals[a]

Facility Submission Requirements	Due Date
Biennial Report (Permit Section 2.16)	March 1 of every even-numbered year
Waste Minimization Program Certified Report (Permit Section 2.8)	Annually, by December 1
Annual Sampling and Analysis Report for Air (Permit Section 3.3)	Annually by March 31
Permit renewal (Permit Section 1.14)	180 days before Permit expiration
Non-Compliance Oral Report (Permit Section 1.27, item 1)	Within 24 hours of non-compliance activity
Non-Compliance Written Report (Permit Section 1.27, item 2)	Within five days of non-compliance activity
Certification of Construction or Modification (Permit Section 1.26)	Prior to treatment or storage of hazardous waste in the modified portion of the permitted unit
Revised Closure Plan (Permit Sections 4.1 and 4.2)	Within 60 days after discovering that a revised Closure Plan is required in accordance with this Permit, or within 60 days after receiving written notification by the Department whichever is earlier
Notification of Closure (Permit Section 4.3)	45 days prior to closure
Final Closure Report and written Closure Certification (Permit Section 4.7)	Within 60 calendar days from the date of completion of closure of the OD Unit.
Human Risk Screening: Exceedances of SSLs (Permit Attachment D, Section 1.6)	Within 15 days of exceedance
Annual Soil Sampling Report (Permit Attachment D, Section 1.7)	Within 90 days of completion of each sampling event
Monitoring Well Installation Plan (Permit Section 3.5.1)	Within 90 days of the effective date of this Permit
Well Completion Report (Permit Section 3.5.1)	Within 30 days of completing well installation
Groundwater Sampling and Analysis Plan (Permit Section 3.5.2)	Within 90 days of the effective date of this Permit

a. Not necessarily all-inclusive listing of required submittals under this Permit

TABLE I-2 Submittal Requirements for Corrective Action	
TYPE OF SUBMITTAL	**DUE DATE**
ANNUAL REPORTS	
Annual Report: Outdoor Testing and Training Activities (Permit Section 6.1.7)	90 days from effective date of this Permit and annually thereafter by March 31 of each year
Quarterly Reports	
Quarterly Progress Reports (Permit Section 6.1.6)	January 31, April 30, July 31, and October 31 of each calendar year
Quarterly Perchlorate Screening Reports (Permit Section 6.4.1.4)	January 31, April 30, July 31, and October 31 of each year for at least 8 consecutive quarters
Other Reports/Submittals	
Offsite Access (Permit Section 6.1.1)	Immediately upon discovery
Field Sampling/Activities (Permit Section 6.1.2)	At least 15 days prior to field sampling or activity
Verbal notification of newly-discovered releases, SWMUs or AOCs (Permit Section 6.1.8)	Within 24 hours after release discovery
Written notification of newly-discovered releases, SWMUs or AOCs (Permit Section 6.1.8)	Within 15 days after release discovery
SWMU Assessment Report (SAR) (Permit Section 6.1.8)	Within 90 days after submitting written notification of a newly-discovered SWMU/AOC
Notification of Land Transfer (Permit Section 6.1.12)	Within 90 days of transfer of the property
Investigation Work Plan (Permit Section 6.2.2.1.1)	Date specified in Table I-3
Investigation Report (Permit Section 6.2.2.1.2)	Schedule provided in Table I-3
Corrective Measures Evaluation (CME) Work Plan (Permit Section 6.2.2.2.2)	Within 90 days of notification by the Department
Corrective Measures Evaluation (CME) Report (Permit Section 6.2.2.2.3)	Within 90 days of completion of CME
Risk Assessment Report (Permit Section 6.2.4.5)	Appended to or in combination with a CME or Investigation Report, or as otherwise specified in a work plan or by the Department in writing
CMI Work Plan (Permit Section 6.2.2.2.7)	Within ninety (90) days after the Department's selection of a final remedy, or as otherwise specified by the Department in writing
CMI Work Plan Progress Report (Permit Section 6.2.2.2.9)	In accordance with the schedule approved in the CMI Work Plan
CMI Report (Permit Section 6.2.2.2.10)	Within 90 days of completion of remedy or ACM
Accelerated Corrective Measures (ACM) Work Plan (Permit Section 6.2.2.2.11.2)	Prior to ACM initiation
ACM CMI Report (Permit Section 6.2.2.2.11.3)	Within ninety (90) days of completion of ACM

Table I-2 (continued)	
Interim Measures Work Plan (Permit Section 6.2.2.2.12.2)	Within 60 days after receiving notification from the Department that interim measures are required, or such other period as stated in the notification
Emergency Interim Measures (Permit Section 6.2.2.2.12.4)	Within three (3) days of discovery that Emergency IM are required
Interim Measures Report (Permit Section 6.2.2.2.12.5)	60 days after completion of Interim Measure or as otherwise specified in the Interim Measures Work Plan
Periodic Monitoring Reports (Permit Section 6.5.17.7	Within 90 days of completion of monitoring fieldwork or in accordance with work plan schedules
General Facility Information (Permit Section 6.2.1.1)	Within 90 days from effective date of this Permit and annually thereafter by March 31 if update needed
Report on Potential Receptors (Permit Section 6.2.1.2)	Within 90 days from effective date of this Permit and no later than March 31 of subsequent years if an update is needed
Surface Water Contamination Assessment Report (Permit Section 6.2.1.3)	Within 90 days after effective date of Permit
Corrective Measures Evaluation (CME) Work Plan: Landfills with contents not removed (Permit Section 6.4.1.1**)**	Within 180 days after effective date of this Permit
CME Report: Landfills with contents not removed (Permit Section 6.2.2.2.3)	Within 90 days of completion of CME
Military Range Assessment Report (Permit Section 6.4.1.2)	Within 90 days after effective date of Permit

TABLE I-3
Solid Waste Management Units (SWMUs) and Areas of Concern (AOCs)
Requiring Corrective Action

SWMU/ AOC	IRP SITE	DESCRIPTION	REQUIRED SUBMITTAL	
			TYPE	DUE DATE
6-1	LF-001	Landfill #1	Long Term Monitoring and Maintenance Plan	submitted
6-2	LF-002	Landfill #2	Corrective Measures Implementation Report for Cover Construction	submitted
			Corrective Measures Implementation Work Plan for Sewer Line Removal or Abandonment	180 days after effective date of Permit
			Long Term Monitoring and Maintenance Plan	submitted
6-4	LF-008	Landfills #4, 5 and 6	Investigation Work Plan (groundwater selenium)	3/31/11
			Long Term Monitoring and Maintenance Plan	submitted
6-19	OT-029	Open Burn Pit on EOD Range	Investigation Report	12/28/11
6-24	WP-016	Manzano Sewage Treatment Facility	Investigation Report (groundwater)	submitted
MBG	MBG	Manzano Base Groundwater	Investigation Work Plan	3/31/11
6-30	RW-006	Radioactive Burial 11	Investigation Report	submitted
10-2-A	ST-325	Corrosion Control Shop Storm Drain Bldg. 482	Investigation Report	12/28/10
10-2-B	ST-220	Paint Shop, Storm Drain	Investigation Report	12/28/10
10-2-C	ST-220	Plating & Anodizing Bldg. 1001	Investigation Report	submitted
10-2-D	ST-329	Propulsion Branch Floor Drain Bldg. 336	Investigation Report	submitted
10-2-F	ST-325	H-3/H-53 Phase Dock Bldg. 1000 Floor Drains	Investigation Report	12/28/10
10-2-G	ST-331	C-130 Maintenance Shop Bldg. 1009 Storm Sewer	Investigation Report	12/28/10
10-2-H	ST-285	West Storm Sewer System	Investigation Report	12/28/12
10-2-I	ST-286	East Storm Sewer System	Investigation Report	12/28/12
10-7-V	ST-267	Oil/Water Separator Bldg. 57007	Investigation Report	submitted
10-21-B	ST-288	Septic System Bldg. 614	Investigation Report	12/31/12
	ST-289	Septic System Bldg. 617 & 620	Investigation Report	12/31/12
	ST-291	Septic System Bldg. 617	Investigation Report	12/31/12
10-21-C	ST-294	Septic System Bldg. 633	Investigation Report	12/31/12
	ST-298	Septic System Bldg. 730 &734	Investigation Report	12/31/12
	ST-299	Septic System Bldg. 751	Investigation Report	12/31/12

Table I-3
(continued)

SWMU/ AOC	IRP SITE	DESCRIPTION	REQUIRED SUBMITTAL	
			TYPE	DUE DATE
10-21-M	ST-309	Septic System Bldg. 37504	Investigation Report	12/31/12
10-21-N	ST-310	Septic System Bldgs. 37507, 37508 & 37513	Investigation Report	12/31/12
	ST-322	Septic System Bldgs. 37507, 37508 & 37513	Investigation Report	12/31/12
10-21-O	ST-311	Septic System Plant 1 & Bldg. 37501	Investigation Report	12/31/12
10-21-P	ST-312	Septic System Plant 2 & Bldg. 37503	Investigation Report	12/31/12
10-21-Q	ST-313	Septic System Bldgs. 37529 & 37530	Investigation Report	12/31/12
10-21-R	ST-293	Septic System Bldg. 37570	Investigation Report	12/31/12
10-21-S	ST-314	Septic System Bldgs. 48056 & 48059	Investigation Report	12/31/12
10-21-T	ST-316	Septic System CERF Bldgs. 57003 & 57012	Investigation Report	12/31/12
	ST-340	Septic System CERF Bldgs. 57001 & 57002	Investigation Report	submitted
10-21-U	ST-318	Septic System Bldg. 37200	Investigation Report	6/30/13
10-21-V	ST-319	Septic System Bldg. 37541	Investigation Report	6/30/13
10-21-Z	ST-330	Septic System Bldg. 1032	Investigation Report	6/30/13
10-21-AA	ST-333	Septic System SOR Bldg. 66001	Investigation Report	6/30/13
	ST-343	Septic System SOR Bldgs. 66000 & 66008	Investigation Report	6/30/13
	ST-344	Septic System SOR Bldgs. 66042	Investigation Report	6/30/13
ST-70-A	ST-202 & 203	Oil/Water Separator & Sediment Trap Bldgs. 333/334	Investigation Report	submitted
ST-70-B	ST-210	Oil/Water Separator Tank & Drying Rack Bldg. 377	Investigation Report	submitted
ST-70-C	ST-211	Oil/Water Separator Bldg. 381	Investigation Report	submitted
ST-70-D	ST-215 & 216	Oil/Water Separators (2) Bldg. 471	Investigation Report	submitted
ST-70-E	ST-219	Oil/Water Separator Bldgs. 481/482	Investigation Report	submitted
ST-70-F	ST-247	Oil/Water Separator Bldg. 2637	Investigation Report	submitted
ST-70-G	ST-248	Oil/Water Separator Bldg. 20205	Investigation Report	submitted
ST-70-H	ST-258	Oil/Water Separator Bldg. 20375	Investigation Report	submitted
ST-70-I	ST-260	Oil/Water Separator Bldg. 20442	Investigation Report	submitted

Table I-3
(continued)

SWMU/ AOC	IRP SITE	DESCRIPTION	REQUIRED SUBMITTAL	
			TYPE	DUE DATE
ST-73	ST-073	CERF Drain	Investigation Report	submitted
ST-106 and SS-111	ST-106 and SS-111	Bulk Fuels Facility Spill	CME Report	180 days after NMED approves site characterization
DP-067	DP-067	Three Mine Shafts	Investigation Report	6/16/11
DP-088	DP-088	Trestle Site Disposal Area	Investigation Report	6/16/11
WP-026	WP-026	Sewage Lagoons and Golf Course Pond	Investigation Report	submitted
SS-102	SS-102	ARES Test Facility	Investigation Report	6/30/11
RW-68	RW-68	Radium Dump/Slag Pile and Cratering Area	Investigation Report	submitted
TAG	TAG	Tijeras Arroyo Groundwater Area	Investigation Report	submitted
Monitoring Well WYO-4 Area	WYO-4 Well Ground-water Area	TCE contaminated groundwater	Investigation Work Plan	3/31/11
EOD Hill	EOD Hill	Perchlorate contaminated groundwater	Investigation Work Plan	submitted
McCormick Ranch	McCor-mick Ranch	Nitrate contaminated groundwater	Investigation Work Plan	3/31/11

PERMIT ATTACHMENT J: LIST OF HAZARDOUS WASTE MANAGEMENT UNITS

1.0 INTRODUCTION

Table J-1 lists the operating and closed hazardous waste management units at the Facility.

TABLE J-1
Hazardous Waste Management Units

Operating Hazardous Waste Management Units
Open Burn (OB) Treatment Unit (pending closure)
Open Detonation (OD) Treatment Unit
Closed Hazardous Waste Management Units
Hazardous Waste Container Storage Unit (CSU) / Defense Reutilization and Marketing Office Building 1024

PERMIT ATTACHMENT K: LIST OF SWMUS AND AOCS FOR WHICH CORRECTIVE ACTION IS COMPLETE

1.0 INTRODUCTION

Table K-1 lists SWMUs and AOCs for which corrective action is complete without controls.

TABLE K-1
Solid Waste Management Units (SWMUS) and Areas of Concern (AOCS) for which Corrective Action is Complete Without Controls
(Granted No Further Action Status)

SWMUs/AOCs			
SWMU/AOC	**IRP SITE**	**DESCRIPTION**	**DATE OF APPROVAL**
6-7	LF-018	Landfill A	8/28/03
6-10	LF-009	Abandoned Landfill	8/28/03
6-15	LF-045	Unnamed Dump	8/28/03
6-16	FT-013	Kirtland Fire Training Area	8/28/03
8-53	ST-335	Paint Shop Floor Drain, Bldg. 20681	8/28/03
8-58	ST-321	Battery Storage Area, Bldg. 57007	8/28/03
10-3	ST-249	Waste Oil Storage Tank, Bldg. 20205	8/28/03
ST-66	ST-066	Trestle Facility Oil Water Separator and Pit	8/28/03
SS-76	SS-076	Fuel Tank Burn Area	8/28/03
SS-83	SS-083	Skeet Range and Landfill Road	8/28/03
ST-326	ST-326	Waste Oil Storage Tank, Bldg. 20375	8/28/03
ST-328	ST-328	Blast Overpressure Site Cesspools	8/28/03
6-A1	RW-021	Radioactive Burial 7	8/03/05
8-49	SS-061	Fuel Shop Waste Battery Storage, Bldg. 20667	8/03/05
LF-56	LF-056	Landfill D	8/03/05
OT-086	OT-086	Former Small Arms Range	8/03/05
RW-085	RW-085	Manzano Maintenance Building	8/03/05
SS-65	SS-065	Horizontal Dipole Drum Rack	8/03/05
SS-082	SS-082	ALECS Facility	8/03/05
SS-103	SS-103	Jet Engine Test Fuel Line	8/03/05
ST-59	ST-059	ART Drum	8/03/05
ST-60	ST-060	ART Pit	8/03/05
6-A2-A	RW-004	Radioactive Holding Tank 4	9/21/05
6-A2-B	RW-005	Radioactive Holding Tank 5	9/21/05
6-A2-C	RW-017	Radioactive Holding Tank 6	9/21/05
6-A2-D	RW-019	Radioactive Holding Tank 8	9/21/05
6-A2-E	RW-023	Radioactive Holding Tank 9	9/21/05

TABLE K-1
(Continued)

SWMU/AOC	IRP SITE	DESCRIPTION	DATE OF APPROVAL
6-8	LF-015	Landfill B	9/21/05
6-29	LF-020	Manzano Landfill	9/21/05
8-13	ST-071	Bldg. 1000/1001 Oil/Water Separator	9/21/05
9-14	ST-270	Buried Caustic Drain Line Bldg. 617	9/21/05
9-15	ST-271	Neutralization Pit Bldg. 617	9/21/05
9-16	ST-272	Evaporation/Infiltration Pond Bldg. 617	9/21/05
10-21-S	ST-353	Bldg. 48057 Septic Tank	9/21/05
	ST-354	Sheep Grooming Septic Tank	9/21/05
SS-69	SS-069	Drum Storage Area	9/21/05
ST-100	ST-100	Coyote Springs Cesspool	9/21/05
ST-341	ST-341	Condensate Tank Bldg. 1033	9/21/05
WP-58	WP-058	East Laundry Bldg. 20451	9/21/05
10-21-OO	ST-355	Riding Stables Residence [Domestic Sewage]	9/21/05
OT-010	OT-010	Radiation Training Sites 5-8	9/21/05
RW-075	RW-075	South Tijeras Radiation Trench	9/21/05
10-7-A	ST-204	Sediment Trap Bldg. 333	11/29/05
	ST-205	Oil/Water Separator Bldg. 333	11/29/05
10-7-B	ST-206	Oil/Water Separator Bldg. 336	11/29/05
	ST-207	Oil/Water Separator Bldg. 336	11/29/05
	ST-208	Oil/Water Separator Bldg. 336	11/29/05
	ST-209	Catch Basin Bldg. 336	11/29/05
10-7-C	ST-212	Oil/Water Separator Bldg. 381	11/29/05
	ST-213	Area Drain Bldg. 381	11/29/05
10-7-D	ST-217	Oil/Water Separator Bldg. 481	11/29/05
10-7-E	ST-218	Oil/Water Separator Bldg. 482	11/29/05
10-7-F	ST-222	Oil/Water Separator Bldg. 1031	11/29/05
	ST-223	Sewage Ejector Unit Bldg. 1031	11/29/05
	ST-224	Area Drain Bldg. 1031	11/29/05
	ST-225	Holding Tank Bldg. 1031	11/29/05
10-7-G	ST-226	Oil/Water Separator Bldg. 1037	11/29/05
	ST-227	Holding Tank Building 1037	11/29/05
10-7-H	ST-228	Area Drain Bldg. 1040	11/29/05
10-7-I	ST-229	Sewage Ejector Unit Bldg. 1043	11/29/05
10-7-J	ST-230	Oil/Water Separator Bldg. 1046	11/29/05
	ST-231	Holding Tank Bldg. 1046	11/29/05
	ST-232	Sewage Ejector Unit Bldg. 1046	11/29/05
	ST-233	Area Drain Bldg. 1046	11/29/05

TABLE K-1
(Continued)

SWMU/AOC	IRP SITE	DESCRIPTION	DATE OF APPROVAL
10-7-K	ST-234	Oil/Water Separator Bldg. 1051	11/29/05
	ST-235	Oil/Water Separator Bldg. 1051	11/29/05
	ST-236	Oil/Water Separator Bldg. 1051	11/29/05
	ST-237	Area Drain Bldg. 1051	11/29/05
10-7-L	ST-238	Oil/Water Separator Bldg. 1056	11/29/05
	ST-239	Oil/Water Separator Bldg. 1056	11/29/05
10-7-M	ST-240	Holding Tank Bldg. 1058	11/29/05
10-7-N	ST-241	Oil/Water Separator Bldg. 1061	11/29/05
10-7-O	ST-244	Oil/Water Separator Bldg. 1064	11/29/05
	ST-245	Holding Tank Bldg. 1064	11/29/05
10-7-P	ST-246	Oil/Water Separator Bldg. 1070	11/29/05
10-7-Q	ST-254	Oil/Water Separator Bldg. 20365	11/29/05
10-7-R	ST-255	Oil/Water Separator Bldg. 20375	11/29/05
	ST-256	Oil/Water Separator Bldg. 20375	11/29/05
	ST-257	Oil/Water Separator Bldg. 20375	11/29/05
10-7-S	ST-259	Oil/Water Separator Bldg. 20422	11/29/05
10-7-T	ST-263	Oil/Water Separator Bldg. 23226	11/29/05
10-7-U	ST-264	Oil/Water Separator Bldg. 30142	11/29/05
6-14	ST-051	Sewage Effluent Line	2/27/06
8-5	ST-201	Oil/Water Separator Bldg. 255	2/27/06
8-6	WP-047	Silver Recovery Unit	2/27/06
8-26	ST-242	Oil/Water Separator Bldg. 1063	2/27/06
	ST-243	Oil/Water Separator Bldg. 1063	2/27/06
8-28	ST-250	Oil/Water Separator Bldg. 20338	2/27/06
8-29	ST-251	Oil/Water Separator Bldg. 20344	2/27/06
8-31-A	ST-252	Oil/Water Separator Bldg. 20348	2/27/06
8-31-B	ST-253	Oil/Water Separator Bldg. 20348	2/27/06
8-41	ST-274	Waste Battery Storage Area Bldg. 20423	2/27/06
8-47	ST-261	Oil/Water Separator (OW/S) Bldg. 20423	2/27/06
8-55	ST-262	Oil/Water Separator CE Bldg. 20698	2/27/06
10-1-A	ST-278	Sanitary Sewer System A	2/27/06
10-1-B	ST-279	Sanitary Sewer System B	2/27/06
10-1-C	ST-280	Sanitary Sewer System C	2/27/06
10-1-D	ST-281	Sanitary Sewer System D	2/27/06
10-1-E	ST-282	Sanitary Sewer System E	2/27/06
10-1-F	ST-283	Sanitary Sewer System F	2/27/06
10-1-G	ST-284	Sanitary Sewer System G	2/27/06
10-1-H	ST-327	Manzano Sanitary Sewer System	2/27/06

TABLE K-1
(Continued)

SWMU/AOC	IRP SITE	DESCRIPTION	DATE OF APPROVAL
6-31	OT-028	McCormick Ranch Range	6/02/06
9-4	ST-276	Waste Accumulation Area Bldg. 617	6/02/06
9-20	SS-062	Waste Accumulation Area Bldg. 909	6/02/06
10-21-B	ST-273	Septic System Bldg. 618	6/02/06
	ST-351	Building 635 Septic Tank	6/02/06
	ST-352	Building 613/614 Septic Tank	6/02/06
DP-099	DP-099	Disposal Pit Bldg. 29015	6/02/06
DP-101	DP-101	Old EOD Disposal Pits	6/02/06
FT-015	FT-015	NMERI Fire Suppression Test Area	6/02/06
LF-268	LF-268	Active Landfill	6/02/06
OT-74	OT-074	Pistol Range Sites	6/02/06
OT-091	OT-091	South Coyote Firing Site	6/02/06
RW-084	RW-084	Manzano Burial Site	6/02/06
SD-090	SD-090	JATO Rocket Motor Disposal Site	6/02/06
SS-078	SS-078	Water Tower Soils	6/02/06
SS-079	SS-079	Building 381 Spill Site	6/02/06
SS-081	SS-081	Detention Pond and Yard Bldg. 907	6/02/06
SS-089	SS-089	Transportation Yard	6/02/06
ST-72	ST-072	MWSA Security Garage Oil/Water Separator, Bldg. 30146	6/02/06
ST-080	ST-080	Auto Hobby Shop Bldg. 30124	6/02/06
ST-347	ST-347	Building 29015 Cesspool	6/02/06
WP-087	WP-087	Grab Site Waste Pile	6/02/06
WP-339	WP-339	Contractor Yard West of Bldg. 20423	6/02/06
6-11	LF-044	Fill Area Southeast of Old Sewage Lagoons (Former LF-044)	7/17/07
ST-064	ST-064	Corps of Engineers (COE) Vehicle Maintenance Yard, (Former ST-337)	7/17/07
ST-108	ST-108	Abandoned JP-4 Fuel Line (ST-108)	7/17/07
SS-77	SS-77	Abandoned Railroad Spur	7/17/07
6-32	FT-014	Manzano Fire Training Area (Former FT-14)	7/17/07
8-35	ST-214	Waste Oil Storage Tank, Building 471 (Former ST-214)	7/17/07
10-21-B	ST-348	Site ST-348, Building 610 Septic Tank	7/17/07
10-21-B	ST-349	Site ST-349, Building 626 Septic Tank	7/17/07
10-2-E	SS-063	Jet Engine Test Cell (Former ST-336)	7/17/07
6-22	OT-046	Lake Christian	7/17/07
LF-107	ST-107	Veterans Administration Demolition Debris Landfill (LF-107)	7/17/07
SS-78-B	SS-078	Water Tower Soils (WT-21871)	7/17/07

TABLE K-1
(Continued)

SWMU/AOC	IRP SITE	DESCRIPTION	DATE OF APPROVAL
SS-78-C	SS-078	Water Tower Soils (WT-2474)	7/17/07
SS-78-D	SS-078	Water Tower Soils (ITRI WTs)	7/17/07
10-21-A	ST-287	Building 525 Septic System	4/29/08
10-21-B	ST-290	Building 619 Septic System	4/29/08
10-21-B	ST-292	Building 622 Septic System	4/29/08
10-21-C	ST-295	Building 638 Septic System	4/29/08
10-21-D	ST-296	Building 702 Septic System	4/29/08
10-21-D	ST-297	Building 707 Septic System	4/29/08
10-21-E	ST-300	Building 20199 Septic System	4/29/08
10-21-F	ST-301	Building 20560 Septic System	4/29/08
10-21-G	ST-302	Building 20599 Septic System	4/29/08
10-21-H	ST-303	Building 20749 Septic System	4/29/08
10-21-I	ST-304	Building 20797 Septic System	4/29/08
10-21-J	ST-305	Building 28054 Septic System	4/29/08
10-21-J	ST-306	Building 28050 Septic System	4/29/08
10-21-K	ST-307	Building 30101 Septic System	4/29/08
10-21-L	ST-308	Building 37511 Septic System	4/29/08
10-21-K	ST-315	Building 30102 Septic System	4/29/08
10-21-T	ST-317	Building 57011 Septic System	4/29/08
10-21-W	ST-320	Building 20149 Septic System	4/29/08
10-21-X	ST-323	Building 29042 Septic System	4/29/08
10-21-Y	ST-324	Building 29051 Septic System	4/29/08
10-21-AA	ST-342	SOR Building 66029 Septic System	4/29/08
10-21-AA	ST-345	SOR Building 66006 Septic System	4/29/08
10-21-BB	ST-346	Trestle Site Septic System	4/29/08
6-3	LF-007	Landfill 3	4/29/08
ST-356	ST-356	Skeet Range Septic Tank [Domestic Sewage]	4/29/08
10-21-X	ST-350	600 Area Field Office Septic Tank [Domestic Sewage]	4/29/08

PERMIT ATTACHMENT L (RESERVED)

(Reserved for Groundwater Sampling and Analysis Plan)

NEW MEXICO
ENVIRONMENT DEPARTMENT

Harold Runnels Building
1190 Saint Francis Drive (87505)
PO Box 5469, Santa Fe, NM 87502-5469
Phone (505) 827-2990 Fax (505) 827-1628
www.env.nm.gov

SUSANA MARTINEZ
Governor
JOHN A. SANCHEZ
Lt. Governor

RYAN FLYNN
Cabinet Secretary
BUTCH TONGATE
Deputy Secretary

CERTIFIED MAIL – RETURN RECEIPT REQUESTED

April 4, 2016

Mr. L. Wayne Bitner
Chief, Environmental Restoration
2050 Wyoming Blvd SE
Kirtland AFB, New Mexico 87117-5600

RE: DP-1770 Modification Application and Termination

Dear Mr. Bitner:

On December 4, 2015, the New Mexico Environment Department (NMED) Ground Water Quality Bureau (GWQB) received Kirtland Air Force Base's (KAFB) application (Application) to modify Discharge Permit 1770 (DP-1770). The Application requested authorization to apply treated groundwater as an irrigation source to the KAFB Tijeras Arroyo Golf Course (Golf Course), to utilize the treated groundwater for dust suppression, and to infiltrate a portion of the water. The source of this discharge is groundwater contaminated with ethylene dibromide (EDB) extracted from wells KAFB-106228R, KAFB-106233 and KAFB-106234, which is then treated using granular activated carbon (GAC) for EDB removal to below the constituent's 0.05 µg/L Maximum Contaminant Level prior to discharge. KAFB has established a treatment goal for the GAC system of non-detectable EDB. The proposed discharge is on or near the northwest edge of the Golf Course, Kirtland Air Force Base, Albuquerque in Section 9, Township 9N, Range 4E, Bernalillo County, New Mexico.

In addition to the land application procedures addressed in the Application, KAFB has requested authorization to utilize underground injection wells as a means to dispose of the treated groundwater in a separate discharge permit application (DP-1839). The groundwater that is the subject of DP-1770 is undergoing remediation, *i.e.*, extracted and treated, pursuant to KAFB's Hazardous Waste Treatment Facility Operating Permit, EPA ID No. NM9570024423, and meets Federal Drinking Water Standards. The GWQB also notes that KAFB has been irrigating the Golf Course with water of similar chemistry and quality for over fifteen years, with no adverse effects to public health or the environment.

KAFB is abating water pollution under Resource Conservation and Recovery Act (RCRA) authority delegated to NMED, pursuant to a hazardous waste permit and the Hazardous Waste Management Regulations, 20.4.1 NMAC. Therefore, KAFB is exempt from abatement plan requirements for this activity pursuant to 20.6.2.4105.A(2) and (3) NMAC. As would be the case if the abatement was occurring strictly under an abatement plan approved pursuant to the Ground and Surface Water Protection Regulations, 20.6.2 NMAC, a discharge permit for land application of treated effluent is not required. Therefore, the GWQB hereby terminates DP-1770 as it is not required for the activity of irrigating the Golf Course with treated effluent regulated pursuant to Hazardous Waste Permit No. NM9570024423.

Should any of these circumstances change, please contact NMED immediately so that we may re-evaluate the regulatory status of this activity. DP-1839 is not impacted by this determination.

If you have any questions, please contact Steve Pullen of the Ground Water Quality Bureau's Pollution Prevention Section at (505) 827-2962.

Sincerely,

Trais Kliphuis, Director
Water Protection Division

Cc: (via e-mail)
Kathryn Roberts, NMED Resource Protection Division
Dennis McQuillan, NMED Chief Scientist
Michelle Hunter, NMED Ground Water Quality Bureau
John Kieling, NMED Hazardous Waste Bureau
Steve Huddleson, NMED Ground Water Quality Bureau
Steve Pullen, NMED Ground Water Quality Bureau
Jennifer Hower, NMED Office of General Counsel
John Verheul, NMED Office of General Counsel

NEW MEXICO
ENVIRONMENT DEPARTMENT

Ground Water Quality Bureau
1190 South St. Francis Drive (87505)
P.O. Box 5469, Santa Fe, New Mexico 87502-5469
Phone (505) 827-2900 Fax (505) 827-2965
www.env.nm.gov

SUSANA MARTINEZ
Governor

JOHN A. SANCHEZ
Lieutenant Governor

BUTCH TONGATE
Cabinet Secretary

J.C. BORREGO
Deputy Secretary

CERTIFIED MAIL – RETURN RECEIPT REQUESTED

April 28, 2017

Colonel Eric H. Froelich, Commander
337 ABW/CC
2000 Wyoming Blvd SE
Kirtland AFB, NM 87117-5606

RE: Discharge Permit Issuance, DP-1839, Kirtland Air Force Base

Dear Col. Froelich:

The New Mexico Environment Department (NMED) issues the enclosed Discharge Permit, DP-1839, to Kirtland Air Force Base (Permittee) pursuant to the New Mexico Water Quality Act (WQA), NMSA 1978 §§74-6-1 through 74-6-17, and the New Mexico Ground and Surface Water Protection Regulations, 20.6.2 NMAC, under the authority of the New Mexico Water Quality Control Commission (WQCC).

The Discharge Permit contains terms and conditions that shall be complied with by the Permittee and are enforceable by NMED pursuant to Section 20.6.2.3104 NMAC, WQA, NMSA 1978 §74-6-5 and §74-6-10. Please be aware that this Discharge Permit may contain conditions that require the Permittee to implement operational, monitoring or closure actions by a specified deadline. Such conditions are listed at the beginning of the operational, monitoring and closure plans of this Discharge Permit.

Issuance of this Discharge Permit does not relieve the Permittee of the responsibility to comply with the WQA, WQCC Regulations, and any other applicable federal, state, and/or local laws, regulations, zoning requirements, and nuisance ordinances.

Pursuant to Paragraph (4) of 20.6.2.3109.H NMAC, the term of the Discharge Permit shall be five years from the effective date. The term of this Discharge Permit will end on April 28, 2022.

NMED requests that the Permittee submit an application for renewal (or renewal and modification) at least 180 days prior to the date the Discharge Permit term ends.

An invoice for the Discharge Permit Fee of $1,600.00 is being sent under separate cover. Payment of the Discharge Permit Fee must be received by NMED within 30 days of the date the Discharge Permit is issued.

If you have any questions, please contact Steve Pullen at (505) 827-2962. Thank you for your cooperation during this Discharge Permit review.

Sincerely,

Michelle Hunter, Chief
Ground Water Quality Bureau

MH:sdp

Encs: Discharge Permit, DP-1839

cc (electronic w/enclosure):
J. Kieling, NMED-HWB
D. Agnew, NMED-GWQB
S. Pullen, NMED-GWQB
L. King, EPA-Region 6 (6PD-N)
S. Clark, AFCEC-CZOW
K. Lynnes, KAFB
A. Bodour, KAFB-AFCEC
T. Simpler, USACE

file:
Read File
DP1839 File

GROUND WATER DISCHARGE PERMIT
Kirtland Air Force Base
Underground Injection Control Wells
DP-1839

I. INTRODUCTION

The New Mexico Environment Department (NMED) Ground Water Quality Bureau (GWQB) issues this Discharge Permit (DP-1839) for discharges via Class V underground injection control (UIC) well(s) to Kirtland Air Force Base (KAFB or Permittee) pursuant to the New Mexico Water Quality Act (WQA), New Mexico Statutes Annotated (NMSA) 1978 §§74-6-1 through 74-6-17, and the New Mexico Water Quality Control Commission (WQCC) Regulations, 20.6.2 New Mexico Administrative Code (NMAC).

The discharge that is covered by this Discharge Permit is limited to groundwater associated with the KAFB's Bulk Fuel Facility (BFF) corrective action. The groundwater is specifically the dissolved-phase portion of the contaminant plume within the regional aquifer that is elevated above the standards of 20.6.2.3103 NMAC and investigation derived waste (IDW) that meets the design parameters of the treatment system. This groundwater is being treated as an interim measure implemented pursuant to the corrective action provisions in Part 6 of KAFB's Hazardous Waste Treatment Facility Operating Permit (HWTF Permit No. NM9570024423 – "RCRA Permit").

The NMED GWQB's purpose in issuing this Discharge Permit, and in imposing the requirements and conditions specified herein, is to control the discharge of water contaminants so as to protect groundwater for present and potential future use as domestic and agricultural water supply and other uses and to protect public health. In issuing this Discharge Permit, NMED has determined that the requirements of Subsection C of 20.6.2.3109 NMAC have been or will be met. Pursuant with Section 20.6.2.3104 NMAC, it is the responsibility of the Permittee to comply with the terms and conditions of this Discharge Permit; failure to do so may result in an enforcement action(s) by NMED (20.6.2.1220 NMAC).

The NMED's Hazardous Waste Bureau (HWB) and GWQB both provide regulatory oversight at the BFF project site. The HWB regulates the evaluation and remediation of the KAFB BFF dissolved-phase plume and the associated groundwater treatment system (GWTS). The GWQB regulates the procedures that ensure treated groundwater discharged from the GWTS to UIC well(s) meet Discharge Permit requirements. This Discharge Permit is not intended to conflict or supersede the remedial actions selected for the BFF under the Resource Conservation and Recovery Act (RCRA), any implementing agreements, or the corrective action provisions of the RCRA Permit.

In the event that an associated comprehensive Work Plan or report is submitted to the NMED, NMED's HWB and GWQB will coordinate review of the comprehensive documents to ensure there is no conflict with any agency response. Associated documents will be submitted to the apparent lead bureau, copied to the other bureau, and NMED will determine which bureau will respond.

The activities which produce the discharge, the location of the discharge, and the quantity, quality, and flow characteristics of the discharge are described as follows.

The constituents of concern (CoC) within the dissolved-phase portion of the contaminant plume have been extensively investigated at the KAFB BFF under the RCRA Permit and have been narrowed to seven CoCs based on groundwater monitoring of the dissolved-phase portion of the contaminant plume within the regional aquifer. These seven CoCs have been identified as being present in untreated groundwater at concentrations potentially exceeding their respective regulatory action levels, and include ethylene dibromide (EDB), benzene, toluene, ethylbenzene, total xylenes, dissolved iron, and dissolved manganese. The CoCs and their respective effluent standards are listed in Table 2. The term "effluent standard" is used in this Discharge Permit to refer to the New Mexico Water Quality Control Commission (WQCC) groundwater standard or the federal Environmental Protection Agency (EPA) maximum contaminant level (MCL); whichever is more stringent.

Under the RCRA interim measure, contaminated groundwater is pumped from extraction wells and distributed through a piping system to a GWTS. Contaminated groundwater may also originate from groundwater monitoring or newly installed extraction wells within the dissolved-phase portion of the contaminant plume undergoing development, testing, or sampling. This liquid IDW will be transported by truck to the GWTS and added to the influent stream for treatment. This work is being completed in accordance with Work Plans approved by the NMED HWB.

The GWTS consists of a series of lead-lag granulated activated carbon (GAC) treatment vessels designed to adsorb the groundwater organic CoCs, thus reducing contaminant concentrations to at or below the effluent standards cited in Permit Condition #6 and identified in Permit Table #2. Adherence to the numeric standards will be assured by sampling the associated fluids at numerous stages of plume delineation, extraction, and treatment. Sampling associated with treatment is conducted at the influent to the GWTS, between the lead-lag GAC tanks, and at the effluent port prior to discharge to the UIC well(s). Samples collected between the lead-lag GAC tanks will notify operators when breakthrough is beginning to occur and replacement of the lead GAC tank is needed. The treatment capacity of the GWTS will be doubled in 2017 by adding a second treatment train to support the increased volume (not to exceed the permitted volume) that will be produced as additional extraction wells are installed and begin operation. Additional design changes are also planned to add additional pre-treatment and to optimize operations. This expansion/optimization of the treatment system will include two additional lead-lag GAC tanks, sand filters, and/or equipment and piping upgrades to the GWTS.

Treated effluent will be conveyed to UIC wells as defined by 20.6.2.5002.B(5)(d)(i) NMAC, including the well identified as KAFB-7 and up to four additional wells, for injection into the regional aquifer within the KAFB facility boundary. This Discharge Permit authorizes the discharge of a maximum of 1,440,000 gallons per day (gpd) via the NMED approved UIC well(s). Treated effluent is pumped from the GWTS through single-walled piping and distributed to the UIC well(s). Appendix A includes the specifics of a typical UIC well design. Final design plans will be submitted for NMED approval prior to mobilization for drilling and installation of new UIC well(s). Total discharge volume will be metered at the GWTS effluent port and at the UIC

well(s). The combined treated effluent rate of discharge employed by the Permittee will not exceed 1,000 gallons per minute (gpm), which is the maximum design treatment rate of the GWTS.

Monitoring of the extraction, treatment, and injection systems will be performed to ensure proper system operation using an automated monitoring system with a centrally located programmable logic controller (PLC) or an equivalent system. The PLC allows the operator to evaluate and control operations to maintain GWTS efficiency and effectiveness in treating the CoCs, and ensure proper discharge to the UIC well(s). Incoming data includes flowrates, pressures (*i.e.*, hydraulic head), liquid levels, groundwater levels, pump status, and alarms from the system sites. The treated effluent pumped to the UIC well(s) will be controlled via monitoring devices (*i.e.*, water level transducers and pressure head gauges) to prevent overfilling of the UIC well(s), to keep the down-hole discharge injection pipe(s) filled, and to prevent cascading of the effluent water into the UIC well(s). Effluent water will enter the UIC well casing and gravity flow through the well screen into the formation. The PLC will be programmed to alarm the operator in the event that the water level within the UIC well casing reaches the high-level set point.

The discharge, including all activities associated with the extraction and treatment of contaminated groundwater, and all associated procedures to maintain regulatory compliance with the RCRA Permit, are described in the Permittee's *Operation and Maintenance Plan* (O&M Plan). The O&M Plan is a HWB approved document that provides the procedures for management of the contaminated groundwater extraction and conveyance systems, the GWTS, and the sampling and quality assurance requirements. The O&M Plan also complies with the requirements in this Discharge Permit.

A Contingency Plan, which describes the actions that the Permittee will take in the event of a failure of the system that generates and discharges the treated effluent to a UIC well(s), is attached to this Discharge Permit at Appendix C.

KAFB is located southeast of Albuquerque in Bernalillo County. The discharge authorized by this Discharge Permit is located within the Designated UIC Area in Section 01 of T9N R3E, Sections 05, 06, 07, 08, and 09 of T9N R4E, and Section 31 of T10N R4E in the southern portion of the facility proximal to the groundwater monitoring wells associated with the existing nitrate plume (SWMU ST-105). Permit Appendix B identifies the Designated UIC Area and the current footprint of the 10 milligrams per liter (mg/L) nitrate plume within the regional aquifer. Additional UIC wells and associated infrastructure installed within the Designated UIC Area are subject to the conditions of this Discharge Permit and would not require a permit modification in accordance with 20.6.2.7(P) NMAC.

The nitrate plume is being remediated under the *Site ST-105 Stage 2 Abatement Plan for Nitrate Contaminated Water* (Abatement Plan) dated October 2007, which was approved by the GWQB Remediation Oversight Section in correspondence dated September 26, 2008. The most current version of the approved Abatement Plan may be viewed at the GWQB's web site at https://www.env.nm.gov/gwb/RemediationOversight.htm.

The regional groundwater beneath the SWMU ST-105 where KAFB-7 and the proposed UIC well(s) are located ranges from a depth of 202 to 709 feet (ft) below ground surface (bgs) with an average of 434 ft bgs and has a total dissolved solids (TDS) concentration ranging from 160 to 1200 mg/L with an average of 345 mg/L.

The application consists of the *Discharge Permit Application* (Application) submitted by the Permittee on December 4, 2015, a revised Application submitted by the Permittee on September 28, 2016, and additional information submitted as requested by NMED. The discharge shall be managed in accordance with all conditions and requirements of this Discharge Permit.

Pursuant to Section 20.6.2.3109 NMAC, NMED reserves the right to require a discharge permit modification in the event NMED determines that the requirements of 20.6.2 NMAC are being or may be violated or the standards of Section 20.6.2.3103 NMAC are being or may be violated. This may include a determination that structural controls and/or management practices approved under this Discharge Permit are not protective of groundwater quality and that more stringent requirements to protect groundwater quality may be required by NMED. Though conformance with this Discharge Permit and the RCRA Permit would result in a very low probability of there being a discharge causing groundwater contamination above applicable standards, NMED reserves the right to require remediation of such a discharge.

Issuance of this Discharge Permit does not relieve the Permittee of the responsibility to comply with the WQA, WQCC Regulations, and any other applicable federal, state, and/or local laws, regulations, zoning requirements, and nuisance ordinances.

The following acronyms and abbreviations may be used in this Discharge Permit:

Abbreviation	Explanation	Abbreviation	Explanation
bgs	below ground surface	MCL	maximum contaminant level
BFF	Bulk Fuels Facility	mg/L	milligrams per liter
CFR	Code of Federal Regulations	mL	milliliters
CoCs	constituents of concern	NMAC	New Mexico Administrative Code
DP	Discharge Permit	NMED	New Mexico Environment Department
EDB	ethylene dibromide	NMSA	New Mexico Statutes Annotated
EPA	United States Environmental Protection Agency	NO_3-N	nitrate-nitrogen
GAC	granulated activated carbon	O&M Plan	Operation and Maintenance Plan
gpd	gallons per day	PLC	programmable logic controller
gpm	gallons per minute	RCRA	Resource Conservation and Recovery Act
GWTS	groundwater treatment system	SWMU	solid waste management unit
GWQB	Ground Water Quality Bureau	TDS	total dissolved solids
ft	feet	total nitrogen	= TKN + NO_3-N
HWB	Hazardous Waste Bureau	UIC	underground injection control
HWTF	Hazardous Waste Treatment Facility	VOC	volatile organic carbon
IDW	investigation derived waste	WQA	New Mexico Water Quality Act
KAFB	Kirtland Air Force Base	WQCC	Water Quality Control Commission

II. FINDINGS

In issuing this Discharge Permit, NMED finds the following:

1. The Permittee is discharging effluent treated to at or below regulatory standards from the facility so that such effluent may move directly or indirectly into groundwater within the meaning of Section 20.6.2.3104 NMAC.

2. The Permittee is discharging effluent from the facility so that such effluent may move into groundwater of the State of New Mexico which has an existing concentration of 10,000 mg/L or less of TDS within the meaning of 20.6.2.3101(A) NMAC.

3. The discharge from the facility is not subject to any of the exemptions of Section 20.6.2.3105 NMAC.

4. The Permittee is operating UIC recharge well(s) within the meaning of 20.6.2.5002(A)(1) and 20.6.2.5002(B)(5)(d)(i) NMAC which is subject to the prohibitions listed under 20.6.2.5004(A)(4) NMAC.

III. AUTHORIZATION TO DISCHARGE

Pursuant to 20.6.2.3104 NMAC, it is the responsibility of the Permittee to ensure that discharges authorized by this Discharge Permit are consistent with the terms and conditions herein.

The Permittee is authorized to discharge up to 1,440,000 gpd of treated effluent via a maximum of five UIC wells to the groundwater aquifer within the Designated UIC Area in Section 01 of T9N R3E (KAFB-7), Sections 05, 06, 07, 08, and 09 of T9N R4E, and Section 31 of T10N R4E, Bernalillo County, NM. The Designated UIC Area is identified in Appendix B. UIC wells currently authorized by this Discharge Permit are identified in Table 1. Up to four additional UIC wells may be proposed pursuant to Permit Condition #11 of this Discharge Permit.

[20.6.2.3104 NMAC, 20.6.2.3106(C) NMAC, 20.6.2.3109(C) NMAC]

IV. CONDITIONS

The following conditions shall be complied with by the Permittee and are enforceable by NMED. Any reference in this Discharge Permit to communication with NMED shall be inferred to mean communication with the Bureau Chiefs of the GWQB and the HWB. The Permittee is authorized to discharge treated effluent subject to the following conditions.

A. OPERATIONAL PLAN

#	**Terms and Conditions**
1.	The Permittee shall implement the following operational plan to ensure compliance with Title 20, Chapter 6, Parts 2 and 4 NMAC. [20.6.2.3109.C NMAC]
2.	The Permittee shall operate in a manner such that standards and requirements of Sections 20.6.2.3101 and 20.6.2.3103 NMAC are not violated. [20.6.2.3101 NMAC, 20.6.2.3103 NMAC, 20.6.2.3109(C) NMAC]
3.	The Permittee shall ensure that the most recent versions of all Work Plans associated with the GWTS, the effluent conveyance pipeline, and the UIC well(s) are consistent with the requirements of this Discharge Permit. [20.6.2.3101 NMAC, 20.6.2.3103 NMAC, 20.6.2.3109(C) NMAC]
4.	The Permittee shall ensure all discharges associated with this Discharge Permit are located within the Designated UIC Area within Section 01 of T9N R3E, Sections 05, 06, 07, 08, and 09 of T9N R4E, and Section 31 of T10N R4E (See Appendix B). [20.6.2.3101 NMAC, 20.6.2.3103 NMAC, 20.6.2.3109(C) NMAC]
5.	The Permittee shall ensure that proposed UIC well locations (see Appendix B) and associated discharges are consistent with the most recent approved Stage 2 Abatement Plan for SWMU ST-105. [20.6.2.3101 NMAC, 20.6.2.3103 NMAC, 20.6.2.3109(C) NMAC]
6.	The Permittee shall ensure that discharged groundwater effluent is less than or equal to the effluent standards for all constituents referenced in 20.6.2.3103 NMAC. The term "effluent standard" is used in this Discharge Permit to refer to the New Mexico Water Quality Control Commission (WQCC) groundwater standard or the federal Environmental Protection Agency (EPA) maximum contaminant level (MCL); whichever is more stringent.

#	**Terms and Conditions**
	[20.6.2.3109(C) NMAC, 20.7.10.100 NMAC]
7.	The Permittee shall ensure that GWTS influent chemistry is consistent with the design basis of the GWTS. [20.6.2.3109(C) NMAC, 20.7.10.100 NMAC]
8.	The Permittee is authorized to install and operate not more than five UIC wells. Authorized UIC wells are listed in Table 1. [20.6.2.3109(C) NMAC, 20.7.10.100 NMAC]
9.	The Permittee shall ensure that the total discharge from the facility via UIC wells does not exceed 1,440,000 gpd. [20.6.2.3109(C) NMAC, 20.7.10.100 NMAC]
10.	Prior to the installation of a new UIC well, the Permittee shall submit a Work Plan for NMED approval that satisfies the requirements of this Discharge Permit and the corrective action provisions at Part 6 of the RCRA Permit. This Work Plan shall, at a minimum, include the following information unless the Permittee can demonstrate to NMED that an item is not applicable or appropriate under the proposed activity or if an item has been provided separately under another submission: a. A statement of purpose and need for the additional UIC well(s); b. A list of groundwater monitoring wells which may be added to the monitoring program to effectively monitor performance of the new UIC well(s); c. A map showing the location of the proposed UIC well(s) and the location of all associated monitoring well(s); d. The geographic coordinates of the location of the UIC well(s) including township/range and section; e. A map showing the location of the nearest production well; f. A proposal of how the structural integrity of the treated effluent conveyance system between the GWTS and the new well will be demonstrated; g. Existing data showing the depth to water and general groundwater quality at the proposed new UIC well discharge location; h. A detailed description of groundwater flow modeling (numeric or analytical) predicting the effect of injection on the groundwater flow direction at the discharge location; i. A detailed description of geochemical modeling (numeric or analytical) evaluating the interaction between the treated effluent and receiving groundwater. Prior to any such geochemical modeling the treated effluent and receiving groundwater shall be

#	**Terms and Conditions**
	tested for the analytes listed in Table 5 unless the Permittee can demonstrate that testing for a particular analyte is unnecessary; j. A detailed description of the impact that the proposed injection will have on any known groundwater contaminant plumes, e.g., the nitrate plume(s) addressed in the Site ST-105 Stage 2 Abatement Plan for Nitrate Contaminated Water; k. Maximum estimated monthly discharge volume to the UIC well(s); l. Project schedule, including the date the discharge is to commence and the anticipated duration; and m. Necessary changes to this Discharge Permit's language should the proposal be approved, *e.g.*, the listing of authorized injection wells and associated monitoring wells in Table 1. These Work Plans shall be submitted for NMED approval at least 90 days prior to the scheduled installation of any UIC well. Proposed changes to this Discharge Permit constituting a "permit modification" as defined at 20.6.2.7.P NMAC shall not be submitted as a Work Plan, but shall instead be submitted as a discharge permit modification request as specified at 20.6.2.3109.G NMAC. A proposal to locate a discharge at a location outside the areas specified in Permit Condition #4 shall be considered a permit modification. A proposal to locate a UIC well at a location within the Designated UIC Area shall not be considered a permit modification unless the discharge quality or quantity is modified from that permitted herein. The Permittee shall post the approved Work Plan to the appropriate web site, *i.e.*, KAFB/Environment/Kirtland AFB Fuel Plume Project Documents. [20.6.2.7(P) NMAC, 20.6.2.3107(A) NMAC, 20.6.2.3109(G) NMAC, 20.6.2.5003 NMAC]
11.	Prior to discharging to a newly installed UIC well, the Permittee shall submit written notification to NMED stating the date that the discharge is to commence. [20.6.2.3107(A) NMAC]
12.	The Permittee shall ensure that the GWTS is secured to control access by the general public. [20.6.2.3109(B) and(C) NMAC, NMSA 1978, §74-6-5(D)]
13.	The Permittee shall maintain signs in English and Spanish (unless otherwise prohibited by KAFB policy) at appropriate locations indicating that the GWTS effluent is non-potable. Signs shall be posted at the UIC wellheads, at the GWTS, and any associated UIC well-related infrastructure.

#	**Terms and Conditions**
	[20.6.2.3109(B) and(C) NMAC, NMSA 1978, § 74-6-5(D)]
14.	The Permittee shall ensure that the UIC well(s) include monitoring devices, *i.e.,* water level and pressure head transducers, to prevent overfilling of the well. The Permittee shall measure the volume of treated effluent discharged to each UIC well and maintain a record of these volumes. [20.6.2.3107 and 20.6.2.3109(C)(3)(c)(i) NMAC]
15.	The Permittee shall ensure the treated effluent conveyance system, *i.e.*, piping, between the GWTS and the UIC well(s) does not leak and shall report any such leakage to the NMED GWQB in accordance with 20.6.2.1203(A) NMAC and copy the NMED HWB. Within one year of the effective date of this Discharge Permit, the Permittee shall demonstrate the structural integrity of the treated effluent conveyance system between the GWTS and KAFB-7. Prior to testing, the Permittee shall propose for NMED approval the test method to be used. The results of the mechanical integrity testing shall be submitted to NMED within 60 days of test completion. The Permittee shall integrity test the treated effluent conveyance system between GWTS and the UIC well(s) prior to submitting a permit renewal application. [20.6.2.3106(C) NMAC, 20.6.2.3107(A) NMAC]
16.	Prior to an initial discharge from the GWTS of treated effluent associated with a new extraction well, the Permittee shall submit documentation to NMED demonstrating that the treated effluent is at or below the effluent standards specified for the CoCs listed in Table 2. [20.6.2.1202(A) and (C) NMAC, 20.6.2.3109(C) NMAC, NMSA 1978, §§ 61-23-1 through 61-23-32]

B. MONITORING, REPORTING, AND OTHER REQUIREMENTS

#	**Terms and Conditions**
17.	The Permittee shall conduct the monitoring, operations, and reporting listed below. Unless otherwise specified, all periodic monitoring results or general information obtained shall be reported in the forthcoming quarterly report. [20.6.2.3107 NMAC]

#	**Terms and Conditions**
18.	Unless otherwise approved by NMED, the Permittee shall conduct sampling in accordance with standard industry practice. Sampling in accordance with the most current version of the GWTS Sampling and Analysis Plan (Appendix L of the O&M Plan), which includes sampling locations, procedures, field measurements, quality control samples, handling and custody, analytical methods, quality control, analytical validation, and reporting requirements, satisfies this Condition. [20.6.2.3107(B) NMAC]
19.	The Permittee shall submit quarterly and annual reports to NMED pursuant to the most recent NMED HWB approved Work Plans. The Permittee shall identify the portions of these reports pertaining to this Discharge Permit with a table in the reports that identifies those portions. Quarterly reports shall be submitted as specified below unless otherwise authorized by NMED: • January 1st through March 31st – due by June 30th • April 1st through June 30th – due by September 30th • July 1st through September 30th – due by December 31st • October 1st through December 31st – due by March 31st Annual reporting requirements for the previous year, i.e., January 1st through December 31st, shall be reported in the March 31st quarterly report. [20.6.2.3107(A) NMAC]
20.	The Permittee shall monitor the concentration of all CoCs listed on Table 2 in GWTS treated effluent. Associated sampling and analysis shall be performed monthly at a minimum. When groundwater from a new extraction well is first introduced to the GWTS, CoC monitoring of the GWTS treated effluent shall occur daily for the first week of treatment, weekly for the first month of treatment, and monthly thereafter. If alterations to, or conditions at, the GWTS result in a potential impact to effluent quality, the Permittee will repeat this sampling sequence as directed by NMED. A representative sample of GWTS influent and effluent shall be analyzed annually for the constituents identified in Table 3. A representative sample of GWTS influent and effluent shall be analyzed every five years for the constituents identified in Table 4. The first analysis of the five-year constituent list shall occur in July 2017. Any newly identified constituents detected during the five-years sampling events will be added to the annual sampling constituent list in Table 3.

#	**Terms and Conditions**
	All analysis of GWTS influent and effluent shall utilize analytical methods with detection limits that are sufficiently low to allow comparison to the standards included in the above referenced state and federal regulations. All sampling, analysis, and reporting shall comply with the most recent approved Work Plans. [20.6.2.3107(A) NMAC and 20.6.2.3107(B) NMAC]
21.	The Permittee shall report the volume of treated GWTS effluent discharged to each UIC well each quarter. This report shall include the following: a. Monthly average, maximum, and minimum values for flow rate and volume of treated effluent transferred to each UIC well; b. The totalized monthly volume of treated effluent transferred to all UIC wells; and c. Monthly average, maximum, and minimum head values of injection water for each UIC well. The Permittee shall monitor the GWTS effluent volume utilizing an effluent flow meter installed on the effluent pump skid after the GAC units. Each UIC well shall have a dedicated flow meter. Flow meters shall be inspected and calibrated in accordance with the associated manufacturer's recommendations. [20.6.2.3107 NMAC]
22.	The Permittee shall include the following results and general information in quarterly reports to NMED: a. Any mechanical integrity conducted on either the GWTS or a UIC well; b. Any replacement of GAC media and the associated data that initiated the decision to replace the media; c. Any UIC well rehabilitation conducted; d. Any malfunction, repair, or replacement of a flow meter; and e. Any additional operational changes with the potential to affect the discharge. [20.6.2.3107 NMAC]
23.	The Permittee shall monitor the groundwater wells in the vicinity of KAFB-7 and in the vicinity of any newly installed UIC well(s) to determine any change to aquifer chemistry that may be the result of injection. This monitoring shall be performed annually, shall conform to the procedures of the most current approved Work Plan, and shall measure the CoCs listed in Table 2. This chemistry will be reported in the Annual Report for BFF. ST-105 Annual Report includes elevation contour mapping and analytical parameters identified in the Stage 2 Abatement Plan.

#	Terms and Conditions
	The Permittee shall develop a groundwater elevation contour map depicting the groundwater flow direction in the vicinity of each UIC well and report it in the ST-105 Annual Report. If the chemical quality of the treated groundwater being injected changes over time, NMED may require the Permittee to repeat geochemical modeling (numeric or analytical) to predict the interaction between the treated effluent and receiving groundwater. [20.6.2.3107 NMAC]
24.	The Permittee shall post all reports required by this Discharge Permit on KAFB's most current web site (e.g., https://kirtlandafb.tlisolutions.com/main.aspx.) [20.6.2.3107(A) NMAC]

C. CONTINGENCY PLAN

#	Terms and Conditions
25.	If the automated monitoring system records a system alarm indicating a threat condition to a UIC well, and that threat condition is confirmed, at a minimum the affected UIC well will be taken off-line. If the alarm condition is confirmed during the response investigation, the UIC well(s) will be taken off-line and the discharge to the UIC well(s) will not be resumed until the problem is identified and corrected. [20.6.2.3107(A) NMAC]
26.	In accordance with this Discharge Permit, if the discharge to a UIC well exceeds effluent standards, the Permittee shall enact the Contingency Plan (Appendix C). The Permittee may be required to remediate water pollution in accordance with the corrective action provisions in Part 6 of the RCRA Permit except as provided in 20.6.2.4105(B) NMAC. [20.6.2.3107(A) NMAC, 20.6.2.3109(E) NMAC, 20.6.2.4105(A)(2) and (3) NMAC]
27.	In the event that a release or a spill occurs that is not authorized under this Discharge Permit, the Permittee shall notify the NMED GWQB in accordance with 20.6.2.1203(A) NMAC, shall include any additional reporting requirements specified at RCRA Permit Section 1.27, and shall copy the NMED HWB. The Permittee shall also take measures to mitigate damage from the unauthorized discharge and initiate corrective actions specified in the Contingency Plan (Appendix C). The Permittee may be required to remediate water pollution in accordance with the corrective action provisions in Part 6 of the RCRA Permit except as provided in 20.6.2.4105(B) NMAC.

#	**Terms and Conditions**
	Nothing in this condition shall be construed as relieving the Permittee of the obligation to comply with all requirements of Section 20.6.2.1203 NMAC. [20.6.2.1203 NMAC, 20.6.2.4105(A)(2) and (3) NMAC]
28.	In the event that information indicates that a UIC well referenced at Table 1 is not constructed in a manner consistent with its intended use or is not completed in a manner that is protective of groundwater quality, the Permittee shall submit a Work Plan to the NMED with a proposal for well rehabilitation, abandonment only, or abandonment and replacement. This Work Plan shall include a project schedule and shall be submitted for NMED approval within 120 days following confirmation of the above referenced problems. The Permittee may propose an alternate use for the well. The UIC well requiring replacement shall be properly plugged and abandoned in accordance with Part 6.5.17.10.9 of the RCRA permit. [20.6.2.3107(A) NMAC, 20.6.2.5005 NMAC]
29.	In the event that NMED or the Permittee identifies any failures of the Application or this Discharge Permit not specifically noted herein, NMED may require the Permittee to submit a corrective action plan and a schedule for completion of corrective actions to address the failures. Additionally, NMED may require a modification to this Discharge Permit to achieve compliance with 20.6.2 NMAC. [20.6.2.3107(A) NMAC, 20.6.2.3109(E) NMAC]

D. CLOSURE PLAN

#	**Terms and Conditions**
30.	Upon permanent cessation of discharge to a UIC well(s), the Permittee shall perform the following closure measures upon NMED approval, unless UIC well(s) and/or conveyance pipelines are needed for another use: a) Cap, plug, or remove all conveyance pipelines to prevent the discharge of GWTS treated effluent to all UIC well(s); b) Abandon UIC well(s) in accordance with Part 6.5.17.10.9 of the RCRA permit, which reference OSE regulation 19.27.4.30 and 31 NMAC and associated well abandonment guidance; and c) Appropriately dispose of any wastes associated with UIC well plugging and abandonment. The Permittee may, instead of abandoning a UIC well, propose an alternate use for the well.

	Upon cessation of the closure measures, the Permittee shall perform the following post-closure measures: a) Continue monitoring CoCs in groundwater for at least two years, or as appropriate and in concurrence with NMED; and b) Enact the release notification requirements of the Contingency Plan if groundwater standards are exceeded. The Permittee may be required to remediate water pollution in accordance with the corrective action provisions in Part 6 of the RCRA Permit except as provided in 20.6.2.4105(B) NMAC. When all post-closure requirements have been met, the Permittee may request to terminate the Discharge Permit. [20.6.2.3107 (A)11 NMAC]

E. GENERAL TERMS AND CONDITIONS

#	Terms and Conditions
31.	The Permittee shall maintain a written record of the following information: a) Information and data used to complete the Application for this Discharge Permit; b) Records of any releases or spills not authorized under this Discharge Permit and reports submitted pursuant to 20.6.2.1203 NMAC; c) Records of the operation, maintenance, and repair of all facilities/equipment used to treat, store, or inject the treated groundwater; d) Facility record drawings (plans and specifications) showing the actual construction of the facility and that the construction complies with all applicable statutes, regulations, and codes including applicable Department of Defense Engineering Standards; e) Copies of quarterly reports completed and/or submitted to NMED pursuant to this Discharge Permit; f) The volume of treated water discharged pursuant to this Discharge Permit; g) Groundwater quality and injected water quality data collected pursuant to this Discharge Permit; h) Copies of construction records and well logs for all groundwater monitoring wells required to be sampled pursuant to this Discharge Permit; i) Records of the maintenance, repair, replacement, or calibration of any monitoring equipment or flow measurement devices required by this Discharge Permit; and j) Data and information related to field measurements, sampling, and analysis conducted pursuant to this Discharge Permit. The following information shall be recorded and made available to NMED upon request: i) The dates, location, and times of sampling or field measurements; ii) The sample analysis date of each sample; iii) The name and address of the laboratory, and the name of the signatory authority for the laboratory analysis;

#	**Terms and Conditions**
	iv) The analytical technique or method used to analyze each sample or collect each field measurement; v) The results of each analysis or field measurement; vi) The results of any split, spiked, duplicate or repeat sample; and vii) A copy of the laboratory analysis chain-of-custody as well as a description of the quality assurance and quality control procedures used. The written record shall be maintained by the Permittee so that it is accessible within a reasonable time period during or following a facility inspection by NMED through the post-closure period and shall be made available to NMED upon request. [20.6.2.3107(A) and (C) NMAC]
32.	The Permittee shall allow NMED representatives to inspect the facility and its operations which are subject to this Discharge Permit and the WQCC regulations. NMED representatives may, upon presentation of proper credentials, enter at reasonable times upon or through any premises in which a water contaminant source is located or in which any records are located regarding this discharge permit or related discharges required to be maintained by regulations of the federal government or the WQCC. The Permittee shall allow NMED representatives to have access to any copy of the records, and to perform assessments, sampling, or monitoring during an inspection for the purpose of evaluating compliance with this Discharge Permit and the WQCC regulations. Nothing in this Discharge Permit shall be construed as limiting in any way the inspection and entry authority of NMED under the WQA, the WQCC Regulations, or any other local, state, or federal regulations. [20.6.2.3107(D) NMAC, NMSA 1978, §§ 74-6-9(B) and 74-6-9(E)]
33.	The Permittee shall, upon NMED's request, allow for NMED's duplication of records required by this Discharge Permit and/or furnish to NMED electronic copies of such records. [20.6.2.3107(D) NMAC]
34.	In the event the Permittee proposes a change to the facility or the facility's discharge that would result in a change in the volume discharged; the location of the discharge; or in the amount or character of water contaminants received, treated, or discharged by the facility that differs from the terms and conditions in this Discharge Permit, the Permittee shall notify NMED prior to implementing such changes. The Permittee shall obtain approval (which may require modification of this Discharge Permit) by NMED prior to implementing such changes.

#	**Terms and Conditions**
	[20.6.2.7(P) NMAC, 20.6.2.3107(C) NMAC, 20.6.2.3109(E) and (G) NMAC]
35.	In the event the Permittee proposes to construct or change an existing system such that the quantity or quality of the discharge will change substantially from that authorized by this Discharge Permit, the Permittee shall submit construction plans and specifications to NMED for the proposed system or process unit prior to the commencement of construction. In the event the Permittee implements changes to an existing system authorized by this Discharge Permit which will result in only a minor effect on the quality of the discharge, the Permittee shall report such changes (including the submission of record drawings, where applicable) in the next quarterly report to NMED. [20.6.2.1202(A) and (C) NMAC, NMSA 1978, §§ 61-23-1 through 61-23-32]
36.	Any violation of the requirements and conditions of this Discharge Permit, including any failure to allow properly credentialed NMED staff to enter and inspect records or facilities, or any refusal or failure to provide NMED with records or information required to be maintained by this Discharge Permit or related regulation may subject the Permittee to a civil enforcement action. Pursuant to WQA 74-6-10(A) and (B), such action may include a compliance order requiring compliance immediately or in a specified time, assessing a civil penalty, modifying or terminating the Discharge Permit, or any combination of the foregoing; or an action in district court seeking injunctive relief, civil penalties, or both. Pursuant to WQA 74-6-10(C) and 74-6-10.1, civil penalties of up to $15,000 per day of noncompliance may be assessed for each violation of the WQA 74-6-5, the WQCC Regulations, or this Discharge Permit, and civil penalties of up to $10,000 per day of noncompliance may be assessed for each violation of any other provision of the WQA, or any regulation, standard, or order adopted pursuant to such other provision. In any action to enforce this Discharge Permit, the Permittee waives any objection to the admissibility as evidence of any data generated pursuant to this Discharge Permit. [20.6.2.1220 NMAC, NMSA 1978, §§ 74-6-10 and 74-6-10.1]
37.	No person shall: 1) make any false material statement, representation, certification, or omission of material fact in an application, record, report, plan, or other document filed, submitted, or required to be maintained under the WQA; 2) falsify, tamper with, or render inaccurate any monitoring device, method, or record required to be maintained under the WQA; or 3) fail to monitor, sample, or report as required by a permit issued pursuant to a state or federal law or regulation.

#	**Terms and Conditions**
	Any person who knowingly violates or knowingly causes or allows another person to violate the requirements of this condition is guilty of a fourth degree felony and shall be sentenced in accordance with the provisions of NMSA 1978, § 31-18-15. Any person who is convicted of a second or subsequent violation of the requirements of this condition is guilty of a third degree felony and shall be sentenced in accordance with the provisions of NMSA 1978, § 31-18-15. Any person who knowingly violates the requirements of this condition or knowingly causes another person to violate the requirements of this condition and thereby causes a substantial adverse environmental impact is guilty of a third degree felony and shall be sentenced in accordance with the provisions of NMSA 1978, § 31-18-15. Any person who knowingly violates the requirements of this condition and knows at the time of the violation that he is creating a substantial danger of death or serious bodily injury to any other person is guilty of a second degree felony and shall be sentenced in accordance with the provisions of NMSA 1978, § 31-18-15. [20.6.2.1220 NMAC, NMSA 1978, §§ 74-6-10.2(A) through 74-6-10.2.F]
38.	Nothing in this Discharge Permit shall be construed in any way as relieving the Permittee of the obligation to comply with all applicable federal, state, and local laws, regulations, permits, or orders. [NMSA 1978, § 74-6-5.L]
39.	The Permittee may file a petition for review before the WQCC on this Discharge Permit. Such petition shall be in writing to the WQCC within thirty days of the receipt of postal notice of this Discharge Permit and shall include a statement of the issues to be raised and the relief sought. Unless a timely petition for review is made, the decision of NMED shall be final and not subject to judicial review. [20.6.2.3112 NMAC, NMSA 1978, § 74-6-5.O]
40.	Prior to the transfer of any ownership, control, or possession of this facility or any portion thereof, the Permittee shall: 1) notify the proposed transferee in writing of the existence of this Discharge Permit; 2) include a copy of this Discharge Permit with the notice; and 3) Deliver or send by certified mail to NMED a copy of the notification and proof that such notification has been received by the proposed transferee. Until both ownership and possession of the facility have been transferred to the transferee, the Permittee shall continue to be responsible for any discharge from the facility. [20.6.2.3111 NMAC]

#	**Terms and Conditions**
41.	Payment of permit fees is due at the time of Discharge Permit approval. Permit fees shall be paid in a single payment or shall be paid in equal installments on a yearly basis over the term of the Discharge Permit. Single payments shall be remitted to NMED no later than 30 days after the Discharge Permit effective date. Initial installment payments shall be remitted to NMED no later than 30 days after the Discharge Permit effective date; subsequent installment payments shall be remitted to NMED no later than the anniversary of the Discharge Permit effective date. Permit fees are associated with issuance of this Discharge Permit. Nothing in this Discharge Permit shall be construed as relieving the Permittee of the obligation to pay all permit fees assessed by NMED. A Permittee that ceases discharging or does not commence discharging from the facility during the term of the Discharge Permit shall pay all permit fees assessed by NMED. An approved discharge permit shall be suspended or terminated if the facility fails to remit an installment payment by its due date. [20.6.2.3114(F) NMAC, NMSA 1978, § 74-6-5(K)]

TABLE 1 - Authorized Underground Injection Control Wells

Well Identifier	Well Location	Associated Monitoring Wells
KAFB-7	Latitude 35° 02' 31.41" N Longitude 106° 34' 10.79" W Section 01 of T9N R3E	KAFB-0505, KAFB-0507, KAFB-0508

TABLE 2 - Constituents of Concern (CoCs)

(Constituents measured in the dissolved-phase portion of BFF plume at concentrations exceeding effluent standards.)

Constituent	Effluent Standards
Ethylene dibromide (EDB)	0.05 µg/L
Benzene	5.0 µg/L
Ethylbenzene	700 µg/L
Toluene	750 µg/L
Total xylenes	620 µg/L
Iron	1,000 µg/L
Manganese	200 µg/L

TABLE 3 - Annual Monitoring Constituent List

(Constituents having 20.6.2.3103 NMAC Human Health Standards and Federal Drinking Water Primary Maximum Contaminant Levels (MCLs) that have ever been detected within KAFB BFF site wells. Permittee may petition NMED to change a constituent monitoring frequency from annual to once every five years, i.e., move to Table 4, if after eight consecutive quarters of monitoring the constituent is not detected in any BFF site wells.)

Category	Constituent
Anions	
	chloride
	nitrogen (nitrate-nitrite)
	sulfate
Organic compounds	
	1,1,2,2-tetrachloroethane
	1,1,2,2-tetrachloroethylene (PCE)
	1,1,2-trichloroethane
	1,1,2-trichloroethylene (TCE)
	1,2-dichloroethane (EDC)
	1,1-dichloroethane
	1,2-dibromomethane
	bis(2-ethylhexyl) phthalate
	Chloroform
	cis-1,2-dichloroethylene
	Dibromochloromethane
	Methylene chloride
	Naphthalenes
	Phenols
	Pyrene

TABLE 4 – Five-year Monitoring Constituent List

(Constituents with 20.6.2.3103 NMAC action levels and Federal Drinking Water maximum contaminant levels (MCLs) – this list is not meant to be redundant with Table 3)

Category	Constituent
Anion	
	Fluoride
Metals	
	Aluminum
	Antimony
	Arsenic
	Barium
	Beryllium
	Cadmium
	Chromium
	Copper
	Cyanide (as free Cyanide)
	Lead
	Manganese
	Mercury (total)
	Selenium
	Silver
	Thallium
	Uranium
	Zinc
Organic compounds	
	Dichloromethane
	Methyl tertiary butyl ether (MTBE)

TABLE 5 – Geochemical Modeling Analyte List

Analyte
Calcium
Magnesium
Sodium
Potassium
Chloride
Sulfate
Total Carbonate Alkalinity
Silica
Iron
Manganese
Dissolved Organic Carbon
Aluminum
Arsenic
Barium
Nitrate-Nitrite(N)
Strontium
Temperature (°C)
pH
ORP (mV), Eh (mV)
DO
Charge Balance (%)

PERMIT TERM & SIGNATURE

EFFECTIVE DATE: April 28, 2017
EXPIRATION DATE: April 28, 2022

[Subsection H of 20.6.2.3109 NMAC, NMSA 1978, § 74-6-5.I]

Michelle Hunter, Chief
Ground Water Quality Bureau
New Mexico Environment Department

Appendix A

Injection Well Configuration (KAFB-7)

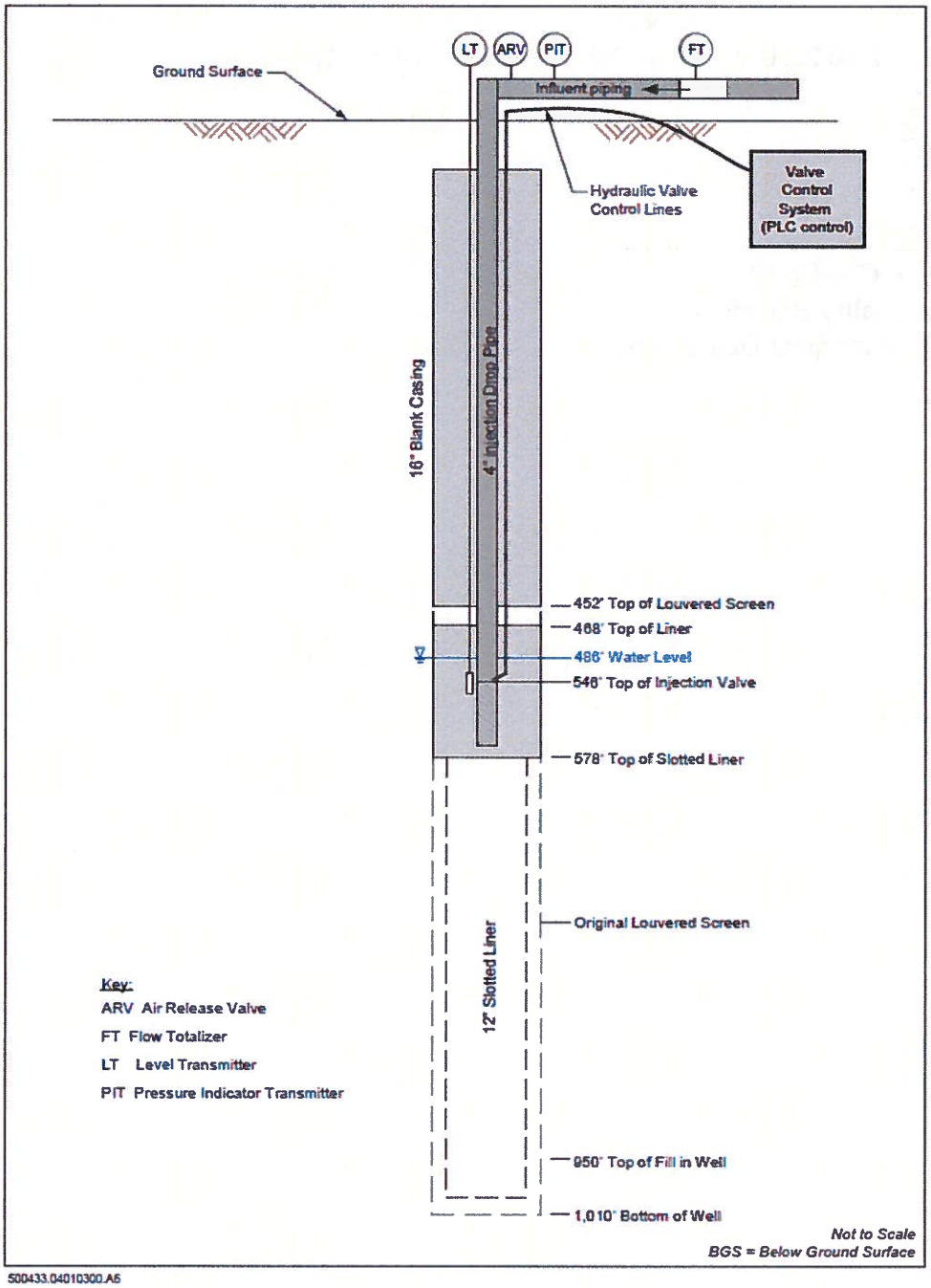

Appendix B

Designated UIC Area and Nitrate Plume

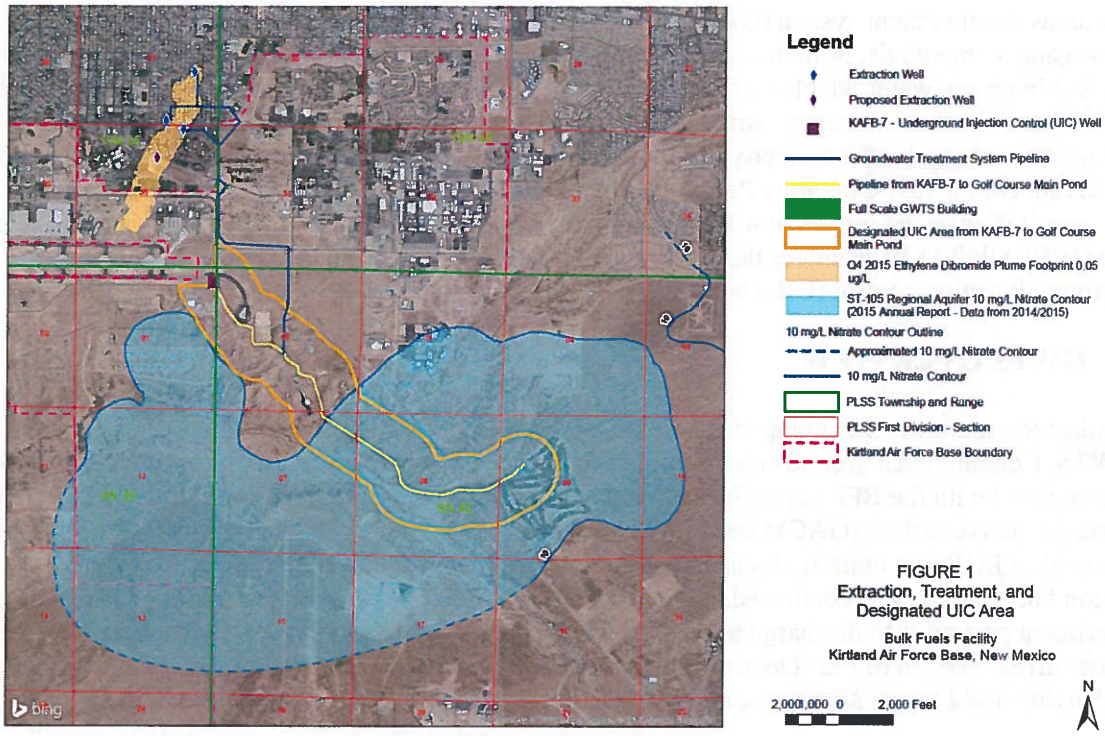

FIGURE 1
Extraction, Treatment, and Designated UIC Area
Bulk Fuels Facility
Kirtland Air Force Base, New Mexico

Appendix C

Contingency Plan

This Contingency Plan (Plan) has been developed for DP-1839 pursuant to 20.6.2.3107(A)(10) NMAC to cope with a failure of the Discharge Permit or system. This Plan describes the actions that Kirtland Air Force Base (AFB) will take in the event of a failure of Discharge Permit 1839 (DP-1839) or the systems that generates and discharges the treated effluent that is the subject of DP-1839. The provisions of this Plan will be carried out immediately whenever there is a release which could threaten human health or the environment.

1.0 BACKGROUND

The groundwater treatment system (GWTS) treats groundwater that contains low concentrations of fuel-related organic compounds, primarily ethylene dibromide (EDB), from a historic leak of aviation gasoline and jet fuel in groundwater which is conveyed to the GWTS from the extraction well network off-base. The GWTS and the associated infrastructure are part of an interim measure pump and treat system that is being implemented under the corrective action provisions in Part 6.2.2.2.12 of Kirtland AFB's Hazardous Waste Treatment Facility Operating Permit (HWTF Permit No. NM9570024423 –"RCRA Permit"). The RCRA permit is enforced by the New Mexico Environment Department's (NMED's) Hazardous Waste Bureau (HWB). DP-1839 regulates the discharge of treated effluent from the GWTS to one or more underground injection control (UIC) wells.

2.0 GWTS OVERVIEW

Contaminated groundwater is pumped from extraction wells and distributed through a piping system to the GWTS. Contaminated groundwater may also originate from groundwater monitoring or extraction wells associated with the BFF corrective action that are undergoing development, testing, or sampling. The granular active carbon (GAC) vessels are arranged in series to provide the contact time required for the removal of EDB and other fuel related organic compounds to achieve the effluent standards in Condition #6. Sampling is conducted at the influent to the GWTS, between the lead-lag GAC tanks, and at the effluent port prior to discharge to the UIC well(s) in accordance with the frequencies established in the most current version of the "*Operations and Maintenance Plan Groundwater Treatment System Bulk Fuels Facility Solid Waste Management Unit ST-106/SS-111*" that has been approved by the NMED HWB.

To ensure that the treated effluent meets all applicable effluent standards in DP-1839, Kirtland AFB has conservatively defined breakthrough as contaminant removal of equal to 90% of the applicable effluent standard as measured between the GAC vessels. If contaminant breakthrough occurs in the lead GAC vessel, the vessels are switched in the lead-lag position and GAC change-out is scheduled. Sampling frequency is increased for any GWTS system change (i.e., new extraction wells added to system).

Samples are collected from the GTWS effluent pipe on a monthly basis. Sampling frequency is increased for any GWTS system change (i.e., new extraction wells added to system). In the unlikely event that the GWTS cannot achieve all applicable effluent standards, the affected treatment train will be shut-down until system modifications can be approved and implemented.

The GWTS is designed and instrumented to efficiently operate 24-hours per day with minimal operator attention. A control system and operator interface panel is installed to allow remote control of the GWTS

and the extraction and injection well network. The control system includes telemetry and web access to alert operators of off-hour alarm conditions. Subcontractor staff are scheduled for on-call responses on weekends and after hours for any emergency response if alarm conditions warrant.

3.0 CONTINGENCY PLAN OVERVIEW

In the event of a spill, leak or unplanned release to the environment associated with the treated effluent from the GWTS or the treated effluent conveyance system, Kirtland AFB will assess possible hazards to human health and/or the environment and will implement this Plan. Possible failures of DP-1839 or the treatment system include the following:

- Treated effluent exceeds one of more of the effluent standards in Condition # 6.
- A leak from the treated effluent conveyance system.
- UIC well is not constructed in a manner consistent with its intended use or completed in a manner that is protective of groundwater.
- The automated monitoring system records a system alarm that indicates a possible threat to a UIC well.

The Permittee's planned response to each of these possible contingencies is described below.

3.1 Treated effluent exceeds one or more effluent standards

As discussed above, the GWTS is operated very conservatively to ensure that effluent standards are never exceeded between the two lead-lag GAC vessels. This is done to ensure that there will be no effluent standard exceedances at the effluent discharge point. In the unlikely event that treated effluent that exceeds one or more effluent standards is discharged to a permitted UIC well, the Permittee will submit a "Notification of Discharge-Removal" to the NMED Groundwater Quality Bureau (GWQB) pursuant to 20.6.2.1203(A) NMAC as required in Condition # 27. The Permittee will copy the NMED HWB on the initial and all subsequent release reports.

In the event of such an exceedance, one or both treatment trains at the GWTS will be promptly shut-down as necessary until system modifications can be approved by the NMED HWB and implemented. If the exceedance is related to concentrations of one or more contaminants in the influent, the Permittees will submit a work plan to the NMED HWB to sample one or more extraction wells. If necessary, an extraction well with an exceedance will be taken off line until the problem is addressed and the NMED HWB authorizes the well to begin pumping again. If plant adjustments are necessary, the Permittee will make the necessary changes. If the required corrective actions are considered to be outside the scope of work for plant operations, one or both treatment trains at the GWTS will be shut down and Kirtland AFB will submit a corrective action plan to the NMED HWB and copy the GWQB. One or both treatment trains at the GWTS will remain shut down pending the approval of the corrective action plan from the NMED HWB.

Following the necessary changes, the effluent groundwater will be re-tested, and the GWTS monitoring frequency will be increased as required in Discharge Permit (i.e., daily for the first week and weekly for three additional weeks). After 4 consecutive weeks of analytical results below the applicable effluent standards, monitoring will return to a monthly frequency.

If necessary, Kirtland AFB will sample groundwater associated with the affected UIC well(s) for all relevant constituents and will provide the data to the NMED HWB and GWQB. Any groundwater

corrective actions will be implemented pursuant to Part 6.2.2 of the RCRA Permit. The Permittee will copy the NMED GWQB on all documents related to the corrective action required in Condition # 26.

3.2 Leak from treated effluent conveyance system

As discussed above, the treated effluent meets all applicable effluent standards in Condition #6. In the event there is a leak from the treated effluent conveyance system that transports the treated effluent to a UIC well, the Permittee will conservatively submit a "Notification of Discharge-Removal" to the NMED GWQB pursuant to 20.6.2.1203(A) NMAC, which includes an estimate of the volumes released, the location of the release and the likely cause of the failure. The Permittee will copy the NMED HWB on the initial and all subsequent release reports.

If necessary, corrective actions will be implemented pursuant to Part 6.2.2 of the RCRA Permit. The Permittee will copy the NMED GWQB on all documents related to the corrective action as required in Condition # 27.

3.3 UIC well is not constructed in a manner consistent with its intended use or not completed in a manner that is protective of groundwater

The design of any new UIC well installed under DP-1839 is subject to approval in accordance with Condition #10. In the unlikely event that a well is not constructed or completed to meet the approved specifications and a design change has not been approved by NMED, the Permittee will submit a work plan to NMED with a proposal for well rehabilitation, abandonment only or abandonment and replacement as detailed in Condition #28.

3.4 The automated monitoring system records a system alarm that indicates a possible threat to a UIC well

Alarms may be activated in the UIC well either due to pressure reading in the discharge pipe or a fluid level in the well casing outside of the operating parameters. Both alarms automatically shut-down the GWTS. Operators will be notified immediately by email of the alarm condition, and proceed to investigate the alarms through the human machine interface (HMI) at the site or remote access after-hours to determine if the alarm represents actual field conditions. Corrective action and subsequent reporting will depend on the condition causing the alarm condition.

4.0 RELEASE NOTIFICATION REQUIREMENTS

4.1 External Notification Procedures

In the event of a spill, leak or unplanned release to the environment associated with the treated effluent from the GWTS or the treated effluent conveyance system, Kirtland AFB will follow the release reporting requirements in 20.6.2.1203(A) NMAC. These requirements are fundamentally equivalent to the "Twenty-Four Hour and Subsequent Reporting" requirements in Part 1.27 of the RCRA Permit. The NMED HWB will be copied on all notifications and any subsequent reports.

4.2 Internal Notification Procedures

GWTS Operators/Contractor staff notify the Chief of Environmental Restoration Program at Kirtland AFB by telephone and by email immediately following any accidental releases of untreated/treated water

at the GWTS, immediately upon having knowledge of a non-compliance event (i.e., sampling results), or if the GWTS operation has to be shut down continuously for more than 24 hours (may include normal maintenance, equipment repairs, or alarm investigations).

STATE OF NEW MEXICO OFFICE OF THE STATE ENGINEER PERMITS

STATE OF NEW MEXICO
OFFICE OF THE STATE ENGINEER

DISTRICT 1

TOM BLAINE, P.E.
NEW MEXICO STATE ENGINEER

5550 San Antonio Drive, N.E.
Albuquerque, NM 87109 (505) 383-4000

December 10, 2015

File No.: RG-1587

Kirtland Air Force Base
Attn: Wayne Bitner, Chief, Environmental Restoration
AFCEC/Kirtland AFB IST; Bldg 20685
2050 Wyoming Blvd, SE
Kirtland AFB, NM 87117-5270

RE: Permit No. RG-1587

Greetings,

Your copy of the above numbered permit, which has been approved subject to the conditions set forth on the approval page, is enclosed.

Please review the Conditions of Approval for any required submittals. If submittals are not made by the date(s) indicated in the conditions, your rights under this permit are subject to expiration unless a request for an Extension of Time is received in the District Office of the State Engineer by that date, and that Extension of Time is subsequently approved.

Appropriate forms can be downloaded from the OSE website at www.ose.state.nm.us/WR/forms.php or will be mailed to you upon request.

Sincerely,

Christopher Burrus
Water Resource Specialist
Albuquerque, OSE, District 1

C: CB/cb

HCI-54235
$50

File No. RG-1587

NEW MEXICO OFFICE OF THE STATE ENGINEER

APPLICATION FOR PERMIT TO CHANGE AN EXISTING WATER RIGHT

(Non 72-12-1)

(check applicable boxes):

For fees, see State Engineer website: http://www.ose.state.nm.us/

☒ Change Purpose of Use ☒ Groundwater ☐ Surface Water ☐ Change Place of Use ☐ Groundwater ☐ Surface Water	☐ Change Point of Diversion (POD): From: ☐ Groundwater ☐ Surface Water To: ☐ Groundwater ☐ Surface Water	☐ Additional Groundwater Point of Diversion (POD) ☐ Additional Surface Water Point of Diversion (POD)
☐ Temporary Change, NMSA 1978, § 72-12-7(B) Requested Start Date: (Not to Exceed 3 ac-ft in One Year)		Requested End Date:
☐ Water Use Lease, NMSA 1978, §§ 72-6-1 to-7 Requested Start Date:		Requested End Date:

1. APPLICANT(S) (Required) Note: water-right owner must be listed as an applicant.

Name: **Kirtland Air Force Base**	Name: **N/A**
Contact or Agent: check here if Agent ☒ **Wayne Bitner**	Contact or Agent: check here if Agent ☐ **N/A**
Mailing Address: **Chief Environmental Restoration 2050 Wyoming Blvd SE**	Mailing Address: **N/A**
City: **Albuquerque**	City:
State: **NM** Zip Code: **87117-5270**	State: Zip Code:
Phone: **N/A** ☐ Home ☐ Cell Phone (Work): **505-853-3484**	Phone: ☐ Home ☐ Cell Phone (Work):
E-mail (optional): **Ludie.Bitner@us.af.mil**	E-mail (optional):

2015 SEP 17 PM 4:15 STATE ENGINEER OFFICE ALBUQUERQUE NEW MEXICO

2. CURRENT OSE FILE INFORMATION (Required)

OSE File No(s):	Priority Date (if known):	Subfile/Cause No. (if applicable):

3. CURRENT PURPOSE OF USE AND AMOUNT OF WATER (Required)

☐ Domestic ☐ Livestock ☒ Irrigation ☐ Municipal ☐ Industrial ☐ Commercial ☒ Other Use (specify): _____ Describe a specific use If applicable (i.e. sand & gravel washing, dairy etc): **extraction/production well**	Amount of Water (acre-feet per annum): If more details are needed, type "See Comments" in "Other" field below, and explain in Additional Statements Section. Diversion: **See comments** Consumptive Use: **See comments** Other (include units): **see comments**

FOR OSE INTERNAL USE

Application for Permit, Form wr-06, Rev 9/26/12

File No.: RG-1587	Trn. No.:	Receipt No.: 1-54235 $50
Trans Description (optional):		Sub-Basin:
PCW/LOG Due Date:	PBU Due Date:	

4. COUNTY WHERE WATER RIGHT IS CURRENTLY USED (Required)

Bernalillo

5. ADDITIONAL STATEMENTS CONCERNING THE CURRENT WATER RIGHT

RG-1587 (KAFB-7) is an existing well included in Kirtland AFB's water right as described in District Court order: United States District Court, District of New Mexico, State of New Mexico State Engineer vs. Kirtland Air Force, dated November 27, 1973. See court order included as Attachment 1. The Kirtland AFB water rights allow for diversion and consumptive use of up to 4,500 acre feet per anum. The well is currently used as an extraction well for nitrate abatement at SWMU ST-105. This application does not seek to increase the allowable groundwater diversion described for RG-1587, but seeks to change the purpose of use to pollution control, recovery, and irrigation, including both injection and extraction of groundwater

6. CURRENT or MOVE-FROM POINT(S) OF DIVERSION (POD) (Required)

☐ Surface POD OR ☒ Ground Water POD (Well)

Name of ditch, acequia, or spring:

Stream or water course: | Tributary of:

If application proposes a new point of diversion involving a diversion dam, storage dam, main canal, and/or pipeline, complete Attachment 2. ☐ Check here if Attachment 2 is included in this application packet.

POD Location Required: Coordinate location must be reported in NM State Plane (NAD 83), UTM (NAD 83), or Latitude/Longitude (Lat/Long - WGS84).
District II (Roswell) & District VII (Cimarron) customers, provide a PLSS location in addition to above.

☐ NM State Plane (NAD83) (Feet)
☐ NM West Zone
☐ NM East Zone
☐ NM Central Zone

☐ UTM (NAD83) (Meters)
☐ Zone 12N
☐ Zone 13N

☒ Lat/Long (WGS84) (to the nearest 1/10th of second)

POD Number (if known):	X or Easting or Longitude:	Y or Northing or Latitude:	Provide if known: -Public Land Survey System (PLSS) (*Quarters or Halves , Section, Township, Range*) OR - Hydrographic Survey Map & Tract; OR - Lot, Block & Subdivision; OR - Land Grant Name
RG-1587	106 34 6.06	35 2 23.68	NW 1/4, NW 1/4, Sec 6, T 9N, R 4E

2015 SEP 17 PM 4:16

NOTE: If more PODS need to be described, complete form WR-08 (Attachment 1 – POD Descriptions)
Additional point of diversion descriptions are attached: ☐ Yes ☐ No If yes, how many____

Point of Diversion is on Land Owned by:

Other description relating point of diversion to common landmarks, streets, or other:

FOR OSE INTERNAL USE

Application for Permit, Form wr-06

File Number: RG -1587 | Trn Number:

7. CURRENT or MOVE-FROM PLACE(S) OF USE (Required)

The land is legally described by (check all that apply):

☒ Public Land Survey System (PLSS) (quarters, section, township, range)
☐ Irrigation or Conservation District Map
☐ Hydrographic Survey Report or Map
☐ Subdivision
☐ Grant

Complete the blocks below for all tracts of land (more than one description can be provided for a tract if available):

PLSS Quarters or Halves, **and/or** Name of Hydrographic Survey, **and/or** Name of Irrigation or Conservation District, **and/or** Name and County of Subdivision **and/or** Grant	PLSS Section **and/or** Map No. **and/or** Lot No.	PLSS Township **and/or** Tract No. (Please list each tract individually) **and/or** Block No.	PLSS Range	Acres	Priority
RG-1587--NW 1/4, NW 1/4,	**S6**	**T9N**	**R3E**		
			Total Acres:		

Other description relating place of use to common landmarks, streets, or other: **RG 1587 (KAFB-7) is an existing well included Kirtland AFB's water right as descibed in Attachment 1. This application seeks to change the purpose of use to pollution control, recovery, and irrigation, including both injection and extraction**

Place of use is on land owned by (required):

Are there other sources of water for these lands? No ☒ Yes ☐ describe by OSE file number:

Note: If on Federal or State Land, please provide copy of lease.

2015 SEP 17 PM 4:15

8. MOVE-TO PURPOSE OF USE AND AMOUNT OF WATER (Complete this section ONLY if the purpose of use is changing)

☐ Domestic ☐ Livestock ☒ Irrigation ☐ Municipal ☐ Industrial ☐ Commercial ☒ Other Use (specify): **Pollution Control and Recovery** Describe a specific use If applicable (i.e. sand & gravel washing, dairy etc): **Injection and Extraction of groundwater**	Amount of Water (acre-feet per annum): If more details are needed, type "See Comments" in "Other" field below, and explain in Additional Statements Section. Diversion: _____ Consumptive Use: _____ Other (include units): **see comments**

9. MOVE-TO POINT(S) OF DIVERSION (POD) (Complete this section ONLY if adding or replacing a POD)

☐ **Surface POD** **OR** ☒ **Ground Water POD (Well)**

Name of ditch, acequia, or spring:

Stream or water course: | Tributary of:

If application proposes a new point of diversion involving a diversion dam, storage dam, main canal, and/or pipeline, complete Attachment 2. ☐ Check here if Attachment 2 is included in this application packet.

POD Location Required: Coordinate location must be reported in NM State Plane (NAD 83), UTM (NAD 83), or Latitude/Longitude (Lat/Long - WGS84).
District II (Roswell) & District VII (Cimarron) customers, provide a PLSS location in addition to above.

☒ NM State Plane (NAD83) (Feet)
☐ NM West Zone
☐ NM East Zone
☒ NM Central Zone

☐ UTM (NAD83) (Meters)
☐ Zone 12N
☐ Zone 13N

☐ Lat/Long (WGS84) (to the nearest 1/10th of second)

POD Number (if known):	X or Easting or Longitude:	Y or Northing or Latitude:	Provide if known: -Public Land Survey System (PLSS) (*Quarters or Halves , Section, Township, Range*) OR - Hydrographic Survey Map & Tract; OR - Lot, Block & Subdivision; OR - Land Grant Name
KAFB-7 (RG-1587)	1544679.14	1470794.81	NW 1/4, NW 1/4, Sec 6, T 9N, R 4E

2016 SEP 17 PM 4:15

NOTE: If more PODS need to be described, complete form WR-08 (Attachment 1 – POD Descriptions)
Additional POD descriptions are attached: ☐ **Yes** ☒ **No** **If yes, how many** _____

Other description relating point(s) of diversion to common landmarks, streets, or other: **KAFB-7 is located on Kirtland AFB just south of Kirtland Road between Ammo Road and Ordnance Street.**

Point of Diversion is on Land Owned by: **Kirtland Afb**

Note: The following information is for wells only. If more than one (1) well needs to be described, provide attachment.

Approximate depth of well (feet): **1,000.00** | Outside diameter of well casing (inches): **16.00**

Driller Name: **NA** | Driller License Number: **NA**

FOR OSE INTERNAL USE — Application for Permit, Form wr-06

File Number: RG.1587 | Trn Number:

If replacing the current well, is the current well to be plugged? ☐ Yes ☐ No ☒ Not Applicable
If No, state for what use it is retained:

2015 SEP 17 PM 4:15
STATE ENGINEER OFFICE
ALBUQUERQUE, NEW MEXICO

10. MOVE-TO PLACE(S) OF USE (Complete this section ONLY if adding or changing a place of use)
List each individually

The land is legally described by (check all that apply):

☐ Public Land Survey System (PLSS) (quarters, section, township, range)
☐ Irrigation or Conservation District Map
☐ Hydrographic Survey Report or Map
☐ Subdivision
☐ Grant

Complete the blocks below for all tracts of land (more than one description can be provided for a tract if available):

PLSS Quarters or Halves, **and/or** Name of Hydrographic Survey, **and/or** Name of Irrigation or Conservation District, **and/or** Name and County of Subdivision **and/or** Grant	PLSS Section **and/or** Map No. **and/or** Lot No.	PLSS Township **and/or** Tract No. (Please list each tract individually) **and/or** Block No.	PLSS Range	Acres	Priority
			Total Acres:		

Other description relating place of use to common landmarks, streets, or other:

Place of use is on land owned by (required):

Are there other sources of water for these lands? No ☐ Yes ☐ describe by OSE file number:

2015 SEP 17 PM 4:15

STATE ENGINEER OFFICE ALBUQUERQUE, NM

Note: If on Federal or State Land, please provide copy of lease.

11. ADDITIONAL STATEMENTS OR EXPLANATIONS

RG-1587 (KAFB-7) is an existing well included in Kirtland AFB's water right as described in District Court order: United States District Court, District of New Mexico, State of New Mexico State Engineer vs. Kirtland Air Force, dated November 27, 1973. See court order included as Attachment 1. The Kirtland AFB water rights allow for diversion and consumptive use of up to 4,500 acre feet per anum. The well is currently used as an extraction well for nitrate abatement at SWMU ST-105. This application does not seek to increase the allowable groundwater diversion described for RG-1587, but seeks to change the purpose of use to pollution control, recovery, and irrigation, including both injection and extraction of groundwater

ACKNOWLEDGEMENT

I, We (name of applicant(s)), **Eric H. Froehlich**
Print Name(s)

affirm that the foregoing statements are true to the best of (my, our) knowledge and belief.

Applicant Signature

Applicant Signature

ACTION OF THE STATE ENGINEER

This application is:

☒ approved ☐ partially approved ☐ denied

provided it is not exercised to the detriment of any others having existing rights, and is not contrary to the conservation of water in New Mexico nor detrimental to the public welfare and further subject to the attached conditions of approval.

2015 SEP 17 PM 4:17

Witness my hand and seal this 10th day of December 2015, for the State Engineer,

Tom Blaine, P.E.
State Engineer
, State Engineer

By: Jeffrey L. Peterson
Signature Print

Title: Water Resource Supervisor
Print

FOR OSE INTERNAL USE

Application for Permit, Form wr-06

File Number: RG-1587	Trn Number:

CONDITIONS OF APPROVAL

1. This application is approved as follows:

Permittee:	Kirtland Air Force Base
Permit No:	RG-1587
Application File Date:	September 17, 2015
Notice for Publication Issued:	October 13, 2015
Affidavit of Publication Filed:	November 4, 2015, The Albuquerque Journal published on October 16, 23, and 30, 2015
Priority:	March 1, 1949
Source:	Groundwater
Point of Diversion:	
RG-1587:	Located at a point where X=1,544,731.13 feet and Y=1,470,756.22 feet, NMSPCS, Central Zone, NAD 83, on land owned by the Kirtland Air Force Base, Bernalillo County, New Mexico.
Purpose of Use:	Extraction/Production, Injection, and Irrigation
Place of Use:	NE ¼ NE ¼, Section 1, Township 10 North, Range 3 East, NMPM, Bernalillo County, New Mexico, and under permits RG-1579 through RG-1589 the applicant will discharge treated groundwater into the Tijeras Arroyo Golf Course main pond, infiltration galleries located adjacent to the golf course, and injection wells on land owned by the Kirtland Air Force Base.

2. The total diversion of water from well RG-1587 under this permit shall not exceed 4,500 acre-feet per annum.

3. The total injection of water from well RG-1587 under this permit shall not exceed 2,000 acre-feet per annum.

4. Well RG-1587 shall be equipped with a totalizing meter of a type, at location(s) approved by, and installed in a manner acceptable to the State Engineer. Records of the amount of water pumped and injected shall be submitted, in writing, to the District 1 Office of the State Engineer on or before the 10th day of January, April, July and October of each year. No water shall be diverted from any well unless equipped with a functional totalizing meter. The Permittee shall provide in writing the make, model, serial number, date of installation, initial reading, units, and dates of recalibration of each meter and any replacement meter.

5. The Permittee shall utilize the highest and best technology to ensure conservation of water to the maximum extent practical.

6. This Permit will expire on December 1, 2025.

Witness my hand and seal this 10th day of December, A.D., 2015

Tom Blaine, P.E.
NEW MEXICO STATE ENGINEER

By: _____
Jeffrey L. Peterson
Water Resource Supervisor
District I

CB:cb
cc: WRAB

FIGURE 1

KAFB-7 LOCATION

STATE ENGINEER OFFICE
ALBUQUERQUE, NEW MEXICO
2015 SEP 17 PM 4:15

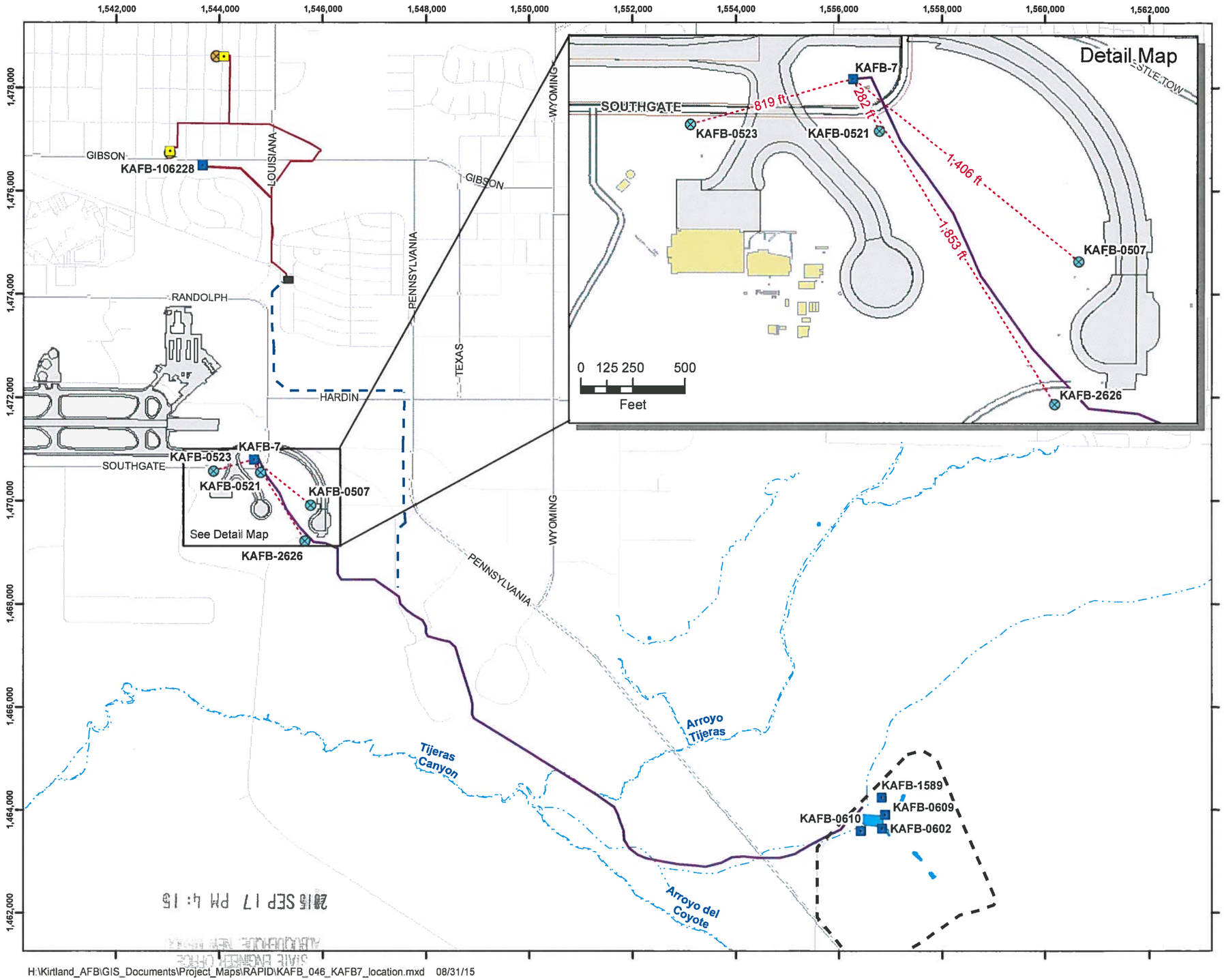

Legend

- Monitoring Well
- Proposed Monitoring Well
- Existing Extraction Well
- Proposed Extraction Well
- Distance Line from KAFB-7
- Influent Pipeline
- Permanent Effluent Pipeline
- Pipe from KAFB-7
- Ephemeral Stream
- Permanent Groundwater Treatment System
- Tijeras Arroyo Golf Course
- Pond

Service Layer Credits: Source: Esri, DigitalGlobe, GeoEye, Earthstar Geographics, CNES/Airbus DS, USDA, USGS, AEX, Getmapping, Aerogrid, IGN, IGP, swisstopo, and the GIS User Community

Revision Date: 08/31/15

N

0 1,000 2,000 4,000

Feet

1 inch = 2,000 feet

Projection : NAD83 State Plane New Mexico Central FIPS3002 Feet

RAPID RESPONSE
OSE PERMIT APPLICATION
BULK FUELS FACILITY
KIRTLAND AIR FORCE BASE, NEW MEXICO

FIGURE 1

KAFB-7 LOCATION

DEPARTMENT OF THE AIR FORCE
HEADQUARTERS 377TH AIR BASE WING (AFMC)

CERTIFIED RETURN-RECEIPT REQUESTED

2015 SEP 17 PM 4:14
STATE ENGINEER OFFICE
ALBUQUERQUE, NEW MEXICO

Colonel Eric H. Froehlich
377 ABW/CC
2000 Wyoming Blvd SE
Kirtland AFB, NM 87117-5600

Office of the State Engineer
c/o Jeffrey L. Peterson, Water Rights Division
5550 San Antonio Blvd. NE
Albuquerque, New Mexico 87109

Dear Mr. Peterson

Kirtland Air Force Base (KAFB) is submitting herein one "Application for Permit to Change an Existing Water Right" with supporting documents to add an additional purpose of use for existing well RG-1587 (KAFB-7). This application seeks to change the purpose of use of RG-1587 to pollution control, recovery, and irrigation, which will include extraction and injection of groundwater. This application does not seek to increase the allowable groundwater diversion described for RG-1587, but it does seek to credit any injected water towards KAFB's consumptive water use. RG-1587 is an existing well included in the KAFB water right as described in District Court order: United States District Court, District of New Mexico, State of New Mexico State Engineer vs. Kirtland Air Force, dated November 27, 1973 (Attachment 1). The KAFB water right allows for diversion and consumptive use of up to 4,500 acre feet per annum. The well is currently used as an extraction well for nitrate abatement at Solid Waste Management Unit (SWMU) ST-105.

To prevent spreading of contaminated groundwater into the Albuquerque municipal water supply and expedite the collapse of the downgradient portion of the SWMU SS-111 dissolved-phase ethylene dibromide (EDB) plume, KAFB plans to install up to eight extraction wells. One well, KAFB-106228 (RG-1579 POD 292) is currently installed and actively extracting water from the aquifer. Two additional extraction wells, KAFB-106233 and KAFB-106234 (RG-1579 POD 309 and 310) are currently being installed and will be operational by winter 2015. Up to five more extraction wells may be installed in subsequent years to extract up to 1,200 gallons per minute (gpm) total (approximately 2,000 acre feet per year) when the well network is completed, and will be will be supplemental to the wells described in KAFB file No. RG-1579 through RG-1589. Extracted water is treated using a granular activated carbon groundwater treatment system (GWTS), and is discharged to the KAFB Golf Course Pond (GCMP) in accordance with the temporary permission to discharge approved by the New Mexico Environment Department (NMED) Groundwater Quality Bureau (GWQB) in a letter dated June 1, 2015.

During winter months the KAFB GCMP will not have the capacity to accept the entirety of the water extracted from the existing and proposed extraction wells. As a result, this application seeks to change the purpose of use for RG-1587 to include injection of treated water, and to credit any injected water up to the entire extracted amount of 2000 acre feet per year towards KAFB's consumptive use. The GWTS could operate for up to ten years; however, it is possible that the GWTS could be operational for a longer or shorter period of time. Construction details for KAFB-7 are included as Attachment 2 to this application. Existing downhole apparatus for KAFB-7 will be replaced or upgraded as necessary to allow for injection of treated groundwater.

The specific requirements for pollution control and recovery will apply to RG-1587 and are as follows:

- The need for the pollution control or recovery operation:
  - SWMU SS-111 is groundwater impacted by jet fuel. The New Mexico Environment Department has directed KAFB to implement Interim Measures to address the groundwater contamination. Existing and proposed extraction wells will extract contaminated water and treat it to concentrations below applicable Environmental Protection Agency maximum contaminant levels and New Mexico Water Quality Control Commission standards. Treated water will be injected back into the aquifer via RG-1587.

- The estimated maximum period of time for completion of the operation:
  - 10 years.

- The annual diversion amount for each well:
  - This application does not seek to increase the allowable diversion amount of 4,500 acre feet per annum included under the KAFB water right.

- The annual consumptive use for each well:
  - This application does not seek to increase the allowable consumptive use of 4,500 acre feet per annum included under the KAFB water right.

- The maximum amount of water to be diverted for the duration of the operation:
  - This application does not seek to increase the allowable diversion amount of 4,500 acre feet per annum included under the KAFB water right.
  - Up to 2,000 acre feet per annum will be injected into the aquifer via existing well RG1587 (KAFB-7) and will be credited to KAFB's consumptive use.

- The method and place of discharge
  - Water extracted from SWMU SS-111 will be discharged to the GCMP, or infiltration galleries. In addition, this application seeks to permit RG-1587 for pollution control, recovery, and irrigation, which will include injection of treated groundwater.

- The method of measurement of water produced and discharged:
  - Water will be metered as it is extracted from the individual extraction wells and treated by the GWTS.

- The source of water to be injected:
  - Injected water will be extracted from existing and proposed extraction wells installed to expedite the collapse of the downgradient portion of the SWMU SS-111 dissolved-phase EDB plume. The extracted water will be treated through a granular-activated carbon system prior to injection.

- The method of measurement of water injected:
  - Treated water will be metered as it is discharged to RG-1587.

- The characteristics of the aquifer:
  - The aquifer is primarily comprised of unconsolidated sand and gravel, with an average hydraulic conductivity of 63 feet/day.

2015 SEP 17 PM 4 14
STATE ENGINEER OFFICE
ALBUQUERQUE, NEW MEXICO

- The method of determining the resulting annual consumptive use of water and depletion from any related stream system:
  - The groundwater from KAFB-106233 and KAFB-106234 are projected to be extracted at a rate of up to 200 gpm (323 acre-feet per year per well) and groundwater from KAFB-106228 is currently permitted to extracted at a rate of 250 gpm (403 acre-feet per year). Once the five additional extraction wells are added to the treatment network, the eight extraction wells are estimated to extract up to 1,200 gpm total (approximately 2,000 acre feet per year). The groundwater will be metered from each extraction well as it is extracted from the aquifer and pumped to the KAFB GWTS. Treated water will be metered as the groundwater is discharged to the GCMP and infiltration galleries. These metered locations will be used to determine the annual consumptive use.
  - Treated water will also be discharged via injection to RG-1587. A flow meter will be installed at RG-1587 to measure the volume of treated water injected into the aquifer. Treated water will be injected into RG-1587 during periods in which the GCMP and infiltration galleries are non-operational, so the volume removed from the extraction wells will essentially equal the amount discharged to the aquifer. Injected water will be created to KAFB's consumptive use.

- Proof of any permit required from the NMED:
  - KAFB is working with the NMED – Hazardous Waste Bureau and GWQB to identify necessary permits. These include the following:
    a. Discharge Permit
    b. Temporary Discharge Permit
  - A Modification to Discharge Permit DP-1770 has been submitted to the NMED GWQB and the first Public Notice has been issued. Additional information regarding the KAFB-7 injection well will be submitted to the NMED GWQB to include in the permit modification.
  - Temporary permission to discharge treated groundwater to the GCMP was issued by the NMED in a letter dated June 1, 2015.

- An access agreement if the applicant is not the owner of the land on which the pollution plume control or recovery well is to be located:
  - KAFB is the owner of the land on which RG-1587 is located.

In addition to the application, this packet contains figure illustrating the location of KAFB-7 (RG-1587), the Kirtland AFB water rights file, and well construction details for KAFB-7. Please contact Mr. L. Wayne Bitner at 505.853.3484 or at ludie.bitner@us.af.mil or Ms. Victoria R. Branson at 505.846.6362 or at victoria.branson@us.af.mil if you have any questions.

Sincerely

ERIC H. FROEHLICH, Colonel, USAF
Commander

Attachment: WR06 Application for Permit to Change an Existing Water Right

cc:
AFCEC-CZRX (Bodour)
USACE-Omaha District Office (Ellender)
USACE-ABQ District Office (Simpler, Phaneuf)
Public Info Repository, AR/IR, and File

2015 SEP 17 PM 4:15
STATE ENGINEER OFFICE
ALBUQUERQUE, NEW MEXICO

ATTACHMENT 1

KIRTLAND WATER RIGHT

STATE ENGINEER OFFICE
ALBUQUERQUE, NEW MEXICO
2015 SEP 17 PM 4:15

73 DEC 3 A 8:26
ALBUQUERQUE, N. MEX.
ORIGINAL
FILED IN MY OFFICE
NOV 27 1973
L. C. KANALY
CLERK

IN THE UNITED STATES DISTRICT COURT

DISTRICT OF NEW MEXICO

STATE OF NEW MEXICO, ex rel, S. E. REYNOLDS, State Engineer.

Plaintiff

vs.

JOHN McLUCAS, Secretary of the Air Force, THOMAS W. MORGAN, Commander, Air Force Special Weapons Center, and JAMES B. MYERS, Base Commander, Kirtland Air Force Base

Defendants.

JUDGMENT AND ORDER

THIS MATTER coming on to be heard upon the Stipulation of the parties, and the Court having considered the same and being otherwise fully advised in the premises, finds that the Court has jurisdiction of the parties and the subject matter and that the said Stipulation should be approved and incorporated in the final judgment of this Court.

IT IS THEREFORE ORDERED, ADJUDGED AND DECREED that the Stipulation of the parties is hereby approved and incorporated in this judgment as if set out in full herein.

IT IS FURTHER ORDERED that the defendants, their employees, agents, assigns and successors in interest be and they are hereby permanently enjoined and restrained from any diversion and/or use of water from the Rio Grande Underground Water BAsin in and for Kirtland Air Force BAse except in strict conformity with this final judgment.

HOWARD BRATTON

JUDGE OF THE U. S. DISTRICT COURT

2015 SEP 17 PM 4:15
STATE ENGINEER OFFICE
ALBUQUERQUE, NEW MEXICO

I agree;
FLS
J Grant

IN THE UNITED STATES DISTRICT COURT

DISTRICT OF NEW MEXICO

STATE OF NEW MEXICO, ex rel, S. E. REYNOLDS, State Engineer.	)
Plaintiff	)
vs.	)
JOHN McLUCAS, Secretary of the Air Force, THOMAS W. MORGAN, Commander, Air Force Special Weapons Center, and JAMES B. MYERS, Base Commander, Kirtland Air Force Base	)
Defendants.	)

73 DEC 3 A 8:
ALBUQUERQUE, N.M.
ORIGINAL FILED IN MY OFFICE
NOV 27 1973
L. G. KANALY
CLERK

STIPULATION

COME NOW the Plaintiff and Defendants herein, by and through their attorneys, and hereby mutually stipulate and agree that final judgment may enter in this cause in the following terms:

1. The United States of America, acting through and by means of the United States Air Force, owns and operates that certain complex of military facilities known as Kirtland Air Force Base within Bernalillo County, New Mexico, which Base includes the former Sandia Base, a Military installation heretofore operated by the United States Army. That area heretofore known as Sandia Base shall be designated in this stipulation as Kirtland East and that area known as Kirtland Air Force Base prior to the merger of the two installations shall be designated as Kirtland West.

2. On November 29, 1956, the Plaintiff, S. E. Reynolds, State Engineer, duly and lawfully declared the Rio Grande Underground Water Basin, an underground reservoir of public waters of the State of New Mexico having reasonably ascertainable boundaries.

3. All of Kirtland East and Kirtland West were, on November 29, 1956, and have continued to the present time to be within the exterior boundaries of the said Rio Grande Underground Water Basin.

4. On November 29, 1956, the United States of America owned within Kirtland East a water supply system consisting of 9 completed and operating wells, together with associated water storage and delivery works, and had prior to that date diverted and used underground waters of the Rio Grande Underground Water Basin by means of each and every of the said 9 wells for the lawful purposes of the said military installation.

5. The said nine wells in the Kirtland East water supply system were duly declared by an authorized representative of the United States of America in the office of the Plaintiff on the 4th day of October, 1957, and have been since that date designated in the files of the State Engineer as wells No. RG-1581 through RG-1589. The respective locations and priorities of the said 9 wells, as declared by the United States of America, are as follows:

RG-1581 NW1/4SE1/4, Sec. 31 T. 10 N., R. 4 E. March 1, 1949

RG-1582 NW1/4NW1/4, Sec. 1 T. 9 N., R. 3 E. August, 1949

RG-1583 NW1/4SW1/4, Sec. 30, T. 10 N., R. 4 E. August, 1949

RG-1584 NE1/4SW1/4, Sec. 6, T. 9 N., R. 4 E. August, 1949

RG-1585 NE1/4SW1/4, Sec. 29, T. 10 N., R. 4 E. July, 1952

RG-1586 SW1/4SE1/4, Sec. 32, T. 10 N., R. 4 E. July, 1952

RG-1587 NW1/4NW1/4, Sec. 6, T. 9 N., R. 4 E. Feb., 1955

RG-1588 SW1/4SW1/4, Sec. 5, T. 9 N., R. 4 E. Feb., 1955

RG-1589 SW1/4SW1/4, Sec. 15, T. 9 N., R. 4 E. Feb., 1949

2015 SEP 17 PM 4:15
STATE ENGINEER OFFICE
ALBUQUERQUE, NEW MEXICO

73 DEC 3 A8:27
STATE ENGINEER OFFICE
SANTA FE, N. MEX.

6. Between November 1, 1958, and May 27, 1959, the United States of America drilled or caused to be drilled, in the NW1/4NE1/4 of Sec. 20, T. 9 N., R. 4 E., an additional water well which was thereafter made a part of the water supply system of Kirtland East. This well is designated in the files of the State Engineer as RG-1581 through RG-1589-S. By means of the said well, the United States of America has thereafter continually diverted and beneficially used public underground waters of the Rio Grande Underground Water Basin, as a supplemental point of diversion in and for Kirtland East.

7. In 1972, the United States of America drilled or caused to be drilled an additional water well within Kirtland East in the NW1/4NE1/4 of Sec. 4, T. 9 N., R. 4 E., which well has been completed except for the installation of a pump and has not yet been put to beneficial use, and which is hereby designated RG-1581 through RG-1589-S-2. The said well was drilled for the purpose of serving as a supplemental well for the water supply system of Kirtland East

8. The United States of America owns, under the Constitution and laws of the State of New Mexico, the right to divert the public underground waters of the Rio Grande Underground Water Basin, through and by means of the said eleven wells set forth in paragraphs 5, 6 and 7, in an amount not to exceed an annual quantity of four thousand five hundred (4,500) acre-feet, and to apply the same to beneficial use for the purposes of Kirtland Air Force Base. The priorities of the said eleven wells composing the water supply system of Kirtland East are as set forth

73 DEC 3 A8:27

above in paragraphs 5, 6 and 7. The defendants stipulate that the United States Air Force has no right to divert any of the underground waters of the Rio Grande Underground Water Basin, by means of the said 11 wells or otherwise, for the purposes of Kirtland Air Force Base, except as set forth in this Stipulation, provided, however, that the United States shall enjoy the same right as any other appropriator in the State of New Mexico to make application hereafter to the Plaintiff, State Engineer, for permit to drill supplemental well(s) (i.e., make partial or total change in point of diversion or place or purpose of use) or to effect the transfer of valid and existing water rights for the purposes of Kirtland Air Force Base.

9. On November 29, 1956, the United States of America owned a water supply system in and for Kirtland West consisting of two water wells whose respective locations and priorities were declared in the Office of the State Engineer, by a duly authorized representative of the United States on the 4th day of October, 1957, to be as follows:
RG-1579 NW1/4NW1/4, Sec. 35, T. 10 N., R. 3 E., Oct. 9, 1952
RG-1580 SE1/4NW1/4, Sec. 34, T. 10 N., R. 3 E., Mar. 6, 1956

10. In 1969, the United States of America drilled or caused to be drilled an additional well in and for the Kirtland West water supply system, designated in the records of the State Engineer as RG-1579 and RG-1580 Combined-S, which well was thereafter made a part of the Kirtland West water supply system as a supplemental well.

11. The United States of America owns, under the Constitution and laws of the State of New Mexico, the right to divert

ALBUQUERQUE, N. MEX.
OFFICE
73 DEC 3 AM 8:27
2015 SEP 17 PM 4:15
STATE ENGINEER OFFICE
ALBUQUERQUE, NEW MEXICO

the public underground waters of the Rio Grande Underground Water Basin by means of the three wells set out in paragraphs 9 and 10 above in an amount not to exceed an annual quantity of 1,898 acre-feet for the purposes of Kirtland Air Force Base. The defendants stipulate that the United States Air Force has no right to divert or use the underground waters of the Rio Grande Underground Water Basin for the purposes of Kirtland Air Force Base, except as set forth in this Stipulation, by means of the said three wells or otherwise, provided, however, that the United States of America shall enjoy the same right as any other appropriator of public water in the State of New Mexico to make application to the Plaintiff, State Engineer, hereafter for permit to drill and use supplemental well(s) (i.e., make partial or total change in point of diversion or place or purpose of use) or to effect the transfer of existing valid water rights for the purposes of Kirtland Air Force Base.

12. The United States of America also owns the right under the Constitution and laws of the State of New Mexico to divert public underground waters of the Rio Grande Underground Water Basin in an amount not to exceed three acre-feet per year by and from each of the following three domestic wells located and existing within, and for the purposes of Kirtland Air Force Base:

Location	Priorities
RG-1578 SE1/4NW1/4, Sec. 35, T. 9 N., R. 4 E.	1945
RG-1590 SE1/4NW1/4, Sec. 35, T. 9 N., R. 4 E.	1945
RG-1591 NE1/4SE1/4, Sec. 24, T. 9 N., R. 4 E.	1948

13. The defendants stipulate that the United States Air Force will not after the entry of final judgment herein drill

73 DEC 3 AM 8:27

or cause or allow to be drilled any water well(s) within the boundaries of the Rio Grande Underground Water Basin, within and/or for the purposes of Kirtland Air Force Base (including Kirtland East and Kirtland West), except when and to the extent that it will have fully complied with the laws of the State of New Mexico and the Rules and Regulations of the State Engineer in respect to obtaining from the State Engineer permit(s) to drill water wells and/or produce public waters therefrom for any purpose.

14. The defendants stipulate that they will make on behalf of the United States accurate monthly reports to the Plaintiff, State Engineer, of the total metered quantities of underground water diverted by means of any and all of the wells composing the Kirtland East and Kirtland West water supply systems, provided, however, that the United States of America shall not be required to make application for, or obtain permit authorizing the physical combination of the two water supply systems so long as the total annual metered diversion from each system is within the respective limit established in paragraphs 8 and 11. The defendants further agree that they will, within 60 days of the date of entry of final judgment herein, file in the Office of the Plaintiff, State Engineer, on forms to be supplied by the Plaintiff, applications on behalf of the United States seeking the right to divert and use public underground waters of the Rio Grande Underground Water Basin by means of those two certain wells RG-1581 through RG-1589-S-2 and RG-1579 and RG-1580 Combined-S, within the respective limits set forth in paragraphs 8 and 11 above. The State of New Mexico agrees that together

73 DEC 3 A8:27

2015 SEP 17 PM 4:16

STATE ENGINEER OFFICE
ALBUQUERQUE, NEW MEXICO

with the terms of judgment entered in this cause pursuant to this Stipulation, the said applications shall be administratively recognized as evidencing the right of the United States to use the said two wells within the terms of this Stipulation and the Order of the Court entered pursuant thereto, without any further requirement for advertisement or hearing.

PAUL L. BLOOM
Special Assistant Attorney General
State of New Mexico

s/ Victor Ortega
United States Attorney

ALBUQUERQUE, N. MEX.
OFFICE
73 DEC 3 A 8:27

ATTACHMENT 2

KAFB-7 WELL CONSTRUCTION INFORMATION

2016 SEP 17 PM 4:15
STATE ENGINEER OFFICE
ALBUQUERQUE, NEW MEXICO

DATA WELL NO. 7 KIRTLAND EAST

ELEVATION (FT)	LOCATION	DATE CONSTR ENDED
5349.0	NE¼-NE¼-NE¼=SEC 1-T9N-R3E	February 1955

WELL

TYPE		
Rotary Drilled, Gravel Packed, 3/4" Gravel		
DEPTH: 1010'	DIAMETER: 28" Hole, 16" Casing	PUMPSETTING DEPTH: 475'
ORIGINAL STATIC LEVEL: 395'	DRAWDOWN: 22'	RECOVERY TIME:

TEST DATA		AIR LINE AND GAGES					SPECIFIC CAPACITY (GAL) PER (FT)
WELL CAPACITY	PUMPING LEVEL	YES	X	NO		LENGTH	GPM / DRAWDOWN = 64 GPM/FT
1400GPM	417'		X			475'	

WELL PUMPING EQUIPMENT

PUMP

TYPE AND MAKE			CAPACITY
Submersible, Byron-Jackson			1150 GPM
SUCTION (FT): N/A	SIZE AND LENGTH: N/A	COLUMN: 10" w/check valve at water level	

HEAD			NUMBER BOWLS	SIZE AND TYPE	NO. STAGES
ABOVE GRD	BELOW GRD	TOTAL			
161'	425'	586'		12" 3CK	7

MOTOR

SERIAL NO.	TYPE	MAKE	HP	RPM	FRAME	PHASE	CYCLES	VOLTAGE
	14" H Submersible	B&J	200	1750		3	60	440

STAND BY POWER	MAKE	SIZE
440 volt	Cummins Installed 1970	300KW

HP	RPM	DESCRIPTION
	1800	Diesel powered generator

CASING AND WELL SCREENING MATERIAL USED	SETTING DEPTH	LENGTH EACH
16" O.D. Blank Casing	448	448
16" O.D. ⅛" Shutter Screen casing	856	408
16" O.D. Blank Casing	880	24
16" O.D. ⅛" Shutter screen casing	976	96
16" O.D Blank Casing	1,010	34

STATE ENGINEER OFFICE RECEIVED MAR 1 1955 ROSWELL, N.M.

FORMATIONS ENCOUNTERED DURING DRILLING #7(KE)	DEPTH (FT)	STRATUM
Top soil, sand and gravel	35	35
Sand, gravel and clay	95	60
Course sand and gravel	125	30
Sandy clay and gravel	190	65
Sand and gravel	240	50
Coarse sand and gravel	275	35
Sand, gravel and streaks of clay	315	40
Sand, gravel and boulders	465	250
Sand, gravel and streaks of clay	525	60
Sand, gravel and boulders	740	215
Coarse sand and boulders	855	115
Sandy clay	945	90
Coarse sandy clay and boulders	1,000	55

CHANGES MADE FROM ORIGINAL DATA

1961: Motor failed,equipment removed. Well bailed and surged and added 40 CY of gravel (3/4") and removed 30 CY of 1/4" gravel. Installed new pump and motor identical to original. Static level 418 feet.

1967: Pump failed to operate, equipment removed. Well bailed, surged and caged. 80 CY of 1/4 inch gravel removed and 100 CY of 3/4 inch gravel added. Installed new identical equipment. Static level 420 feet.

1970: Equipment failed, removed. Installed Johnson pump and 250 HP GE submersible motor, 1400 GPM @ 615' head. Static level 425 feet.

1973: Equipment failed, removed. Installed 7-stage Fairbanks-Morse lineshaft pump w/250 HP Westinghouse hollowshaft motor, 1400 GPM @ 560' head. Static level 425 feet.

1976: Motor burned out, replaced w/250 HP GE hollowshaft. (Jan-Apr) $6,171.03
Sand sampler installed

1976: July, replaced water meter and installed drawdown recorder. $4,500.00
September, replaced seal and bearings in motor. $1,800.00

1977: March, Motor Overhauled (Shops). $1,500.00

DRILLING COMPANY	LOCATION
LOSCOE MOSS CO	LOS ANGELES CALIFORNIA

STATE OF NEW MEXICO
OFFICE OF THE STATE ENGINEER
DISTRICT I

TOM BLAINE, P.E.
STATE ENGINEER

5550 San Antonio NE
Albuquerque, NM 87109
(505) 383-4000

June 17, 2015

Kirtland Air Force Base
C/o Wayne Bitner
Chief Environmental Restoration
AFCEC/CZO, Kirtland IST
2050 Wyoming Blvd. SE
Albuquerque, NM 87117-5270

FILE: RG-1579 POD 292

Greetings:

Enclosed is your copy of Permit to Change the Place and Purpose of Use of Groundwater and to Drill an Additional Groundwater Point of Diversion, numbered above, which has been approved subject to the Conditions of Approval, attached hereto.

Sincerely,

Jeffrey L. Peterson
Water Resource Specialist Senior

JLP:jlp
Enclosures as stated

HCl- 53067
#25

File No. RG-1573 POD 292

NEW MEXICO OFFICE OF THE STATE ENGINEER

APPLICATION FOR PERMIT TO CHANGE AN EXISTING WATER RIGHT
(Non 72-12-1)
(check applicable boxes):

For fees, see State Engineer website: http://www.ose.state.nm.us/

☒ Change Purpose of Use ☒ Groundwater ☐ Surface Water X Change Place of Use X Groundwater ☐ Surface Water	☐ Change Point of Diversion (POD): From: ☐ Groundwater ☐ Surface Water To: ☐ Groundwater ☐ Surface Water	X Additional Groundwater Point of Diversion (POD) ☐ Additional Surface Water Point of Diversion (POD)
☐ Temporary Change, NMSA 1978, § 72-12-7(B) Requested Start Date: (Not to Exceed 3 ac-ft in One Year)		Requested End Date:
☐ Water Use Lease, NMSA 1978, §§ 72-6-1 to-7 Requested Start Date:		Requested End Date:

1.APPLICANT(S) **(Required) Note: water-right owner must be listed as an applicant.**

Name: **Kirtland Air Force Base**	Name: **N/A**
Contact or Agent: **Wayne Bitner** check here if Agent	Contact or Agent: **N/A** check here if Agent
Mailing Address: **Chief Environmental Restoration AFCEC/CZO, Kirtland IST 2050 Wyoming Blvd SE**	Mailing Address: **N/A**
City: **Albuquerque**	City:
State: **NM** Zip Code: **87117-5270**	State: Zip Code:
Phone: **N/A** ☐ Home Cell Phone (Work): **505-853-3484**	Phone: ☐ Home Cell Phone (Work):
E-mail (optional): **ludie.bitner@us.af.mil**	E-mail (optional):

2. CURRENT OSE FILE INFORMATION **(Required)**

OSE File No(s): **RG-1579 through RG-1589**	Priority Date (if known):	Subfile/Cause No. (if applicable):

3. CURRENT PURPOSE OF USE AND AMOUNT OF WATER **(Required)**

☐ Domestic ☐ Livestock ☒ Irrigation ☐ Municipal ☐ Industrial ☐ Commercial ☒ Other Use (specify): **Pollution Control and Recovery** Describe a specific use If applicable (i.e. sand & gravel washing, dairy etc): **Extraction of groundwater for remediation**	Amount of Water (acre-feet per annum): If more details are needed, type "See Comments" in "Other" field below, and explain in Additional Statements Section. Diversion: **up to 403** Consumptive Use: **up to 403** Other (include units): **see comments**

FOR OSE INTERNAL USE — Application for Permit, Form wr-06, Rev 9/26/12

File No.: RG-1579 POD 292	Trn. No.:	Receipt No.: HCl- 53067

4. COUNTY WHERE WATER RIGHT IS CURRENTLY USED (Required)

Bernalillo

5. ADDITIONAL STATEMENTS CONCERNING THE CURRENT WATER RIGHT

Extraction well KAFB-106228 will be supplimental to the wells described in Kirtland AFB file No. RG 1579 through RG-1589. The application does not request to increase the allowable groundwater diversion described in RG-1579 through 1589, but seeks to change the purpose of use to pollution control, recovery, and irrigation and to add a place of use not currently described in RG-1579 through RG-1589.

6. CURRENT or MOVE-FROM POINT(S) OF DIVERSION (POD) (Required)

☐ Surface POD OR ☒ Ground Water POD (Well)

Name of ditch, acequia, or spring:

Stream or water course: | Tributary of:

If application proposes a new point of diversion involving a diversion dam, storage dam, main canal, and/or pipeline, complete Attachment 2. ☐ Check here if Attachment 2 is included in this application packet.

POD Location Required: Coordinate location must be reported in NM State Plane (NAD 83), UTM (NAD 83), or Latitude/Longitude (Lat/Long - WGS84).
District II (Roswell) & District VII (Cimarron) customers, provide a PLSS location in addition to above.

☒ NM State Plane (NAD83) (Feet)
☐ NM West Zone
☐ NM East Zone
☒ NM Central Zone

☐ UTM (NAD83) (Meters)
☐ Zone 12N
☐ Zone 13N

☐ Lat/Long (WGS84) (to the nearest 1/10th of second)

POD Number (if known):	X or Easting or Longitude:	Y or Northing or Latitude:	Provide if known: -Public Land Survey System (PLSS) (*Quarters or Halves , Section, Township, Range*) OR - Hydrographic Survey Map & Tract; OR - Lot, Block & Subdivision; OR - Land Grant Name
KAFB-106228	1543617	1476456	

NOTE: If more PODS need to be described, complete form WR-08 (Attachment 1 – POD Descriptions)
Additional point of diversion descriptions are attached: ☐ Yes ☒ No If yes, how many

Point of Diversion is on Land Owned by: The Albuquerque Christ United Methodist Church

Other description relating point of diversion to common landmarks, streets, or other: South of Gibson Blvd. SE, west of Louisiana Blvd., east of Dakota St. SE, and north of Mitchell St. SE. See attached Figure 1.

2011 NOV 13 PM 3:16

FOR OSE INTERNAL USE | Application for Permit, Form wr-06

File Number: RG-1579 POD252 | Trn Number:

7. CURRENT or MOVE-FROM PLACE(S) OF USE (Required)

The land is legally described by (check all that apply):

☒ Public Land Survey System (PLSS) (quarters, section, township, range)
☐ Irrigation or Conservation District Map
☐ Hydrographic Survey Report or Map
☐ Subdivision
☐ Grant

Complete the blocks below for all tracts of land (more than one description can be provided for a tract if available):

PLSS Quarters or Halves, **and/or** Name of Hydrographic Survey, **and/or** Name of Irrigation or Conservation District, **and/or** Name and County of Subdivision **and/or** Grant	PLSS Section **and/or** Map No. **and/or** Lot No.	PLSS Township **and/or** Tract No. (Please list each tract individually) **and/or** Block No.	PLSS Range	Acres	Priority
RG-1579	**36**	**10 N**	**3 E**		
			Total Acres:		

Other description relating place of use to common landmarks, streets, or other: **Kirtland AFB as described in District Court order: United States District Court, District of New Mexico, State of New Mexico State Engineer vs. Kirtland Air Force, dated November 27, 1973. See court order attached.**

Place of use is on land owned by (required): **Kirtland Air Force Base**

Are there other sources of water for these lands? No ☒ Yes ☐ describe by OSE file number:

Note: If on Federal or State Land, please provide copy of lease.

8. MOVE-TO PURPOSE OF USE AND AMOUNT OF WATER (Complete this section ONLY if the purpose of use is changing)

☐ Domestic ☐ Livestock ☒ Irrigation ☐ Municipal ☐ Industrial ☐ Commercial ☒ Other Use (specify): **Pollution Control and Recovery** Describe a specific use If applicable (i.e. sand & gravel washing, dairy etc): **Extraction of groundwater for remediation**	Amount of Water (acre-feet per annum): If more details are needed, type "See Comments" in "Other" field below, and explain in Additional Statements Section. Diversion: **up to 403** Consumptive Use: **up to 403** Other (include units): **see comments**

9. MOVE-TO POINT(S) OF DIVERSION (POD) (Complete this section ONLY if adding or replacing a POD)

☐ **Surface POD** **OR** ☒ **Ground Water POD (Well)**

Name of ditch, acequia, or spring:

Stream or water course:	Tributary of:

If application proposes a new point of diversion involving a diversion dam, storage dam, main canal, and/or pipeline, complete Attachment 2. ☐ Check here if Attachment 2 is included in this application packet.

POD Location Required: Coordinate location must be reported in NM State Plane (NAD 83), UTM (NAD 83), or Latitude/Longitude (Lat/Long - WGS84).
District II (Roswell) & District VII (Cimarron) customers, provide a PLSS location in addition to above.

☒ NM State Plane (NAD83) (Feet)
☐ NM West Zone
☐ NM East Zone
☒ NM Central Zone

☐ UTM (NAD83) (Meters)
☐ Zone 12N
☐ Zone 13N

☐ Lat/Long (WGS84) (to the nearest 1/10th of second)

POD Number (if known):	X or Easting or Longitude:	Y or Northing or Latitude:	Provide if known: -Public Land Survey System (PLSS) (*Quarters or Halves , Section, Township, Range*) OR - Hydrographic Survey Map & Tract; OR - Lot, Block & Subdivision; OR - Land Grant Name
KAFB-106228	1543617	1476456	

2015 FEB -5 PM 1:39

NOTE: If more PODS need to be described, complete form WR-08 (Attachment 1 – POD Descriptions)
Additional POD descriptions are attached: ☐ **Yes** ☒ **No** **If yes, how many**_____

Other description relating point(s) of diversion to common landmarks, streets, or other: **South of Gibson Blvd. SE, west of Louisiana Blvd., east of Dakota St. SE, and north of Mitchell St. SE. See attached Figure 1.**

Point of Diversion is on Land Owned by: **Albuquerque Christ United Methodist Church**

Note: The following information is for wells only. If more than one (1) well needs to be described, provide attachment.

Approximate depth of well (feet): 530 to 600, not to exceed 700 ft Outside diameter of well casing (inches): 8 -12, not to exceed 12

Driller Name: **NA**	Driller License Number: **NA**

FOR OSE INTERNAL USE

Application for Permit, Form wr-06

File Number: RG-1579 POD292	Trn Number:

If replacing the current well, is the current well to be plugged? ☐ Yes ☐ No ☒ Not Applicable

If No, state for what use it is retained:

10. MOVE-TO PLACE(S) OF USE (Complete this section ONLY if adding or changing a place of use)
List each individually

The land is legally described by (check all that apply):

☒ Public Land Survey System (PLSS) (quarters, section, township, range)
☐ Irrigation or Conservation District Map
☐ Hydrographic Survey Report or Map
☐ Subdivision
☐ Grant

Complete the blocks below for all tracts of land (more than one description can be provided for a tract if available):

PLSS Quarters or Halves, **and/or** Name of Hydrographic Survey, **and/or** Name of Irrigation or Conservation District, **and/or** Name and County of Subdivision **and/or** Grant	PLSS Section **and/or** Map No. **and/or** Lot No.	PLSS Township **and/or** Tract No. (Please list each tract individually) **and/or** Block No.	PLSS Range	Acres	Priority
NE1/4 NE1/4	**36**	**10 N**	**3 E**		

Total Acres:

Other description relating place of use to common landmarks, streets, or other: **South of Gibson Blvd. SE, west of Louisiana Blvd., east Dakota St. SE, and north of Mitchell St. SE. See attached Figure 1.**

Place of use is on land owned by (required): **Albuquerque Christ United Methodist Church**

Are there other sources of water for these lands? No ☒ Yes ☐ describe by OSE file number:

Note: If on Federal or State Land, please provide copy of lease.

11. ADDITIONAL STATEMENTS OR EXPLANATIONS

This application seeks to use well KAFB-106228 for a groundwater extraction pilot implementation plan suplemental to the Kirtland AFB water rights (RG-1579 through 1589). The applicaton does not request to increase the allowable groundwater diversion described in RG-1579 through RG-1589, but seeks to change the purpose of use to pollution control, recovery, and irrigation and to add a place of use not currently described in RG-1579 through RG1589. The well will extract groundwater up to 403 acre feet per year (250 gallons per minute) for 10 years. The extracted groundwater will be treated and discharged at Kirtland AFB's infiltration gallery and a reclaimed wastewater system.

ACKNOWLEDGEMENT

I, We (name of applicant(s)), **Tom D. Miller, Colonel USAF**
Print Name(s)

affirm that the foregoing statements are true to the best of (my, our) knowledge and belief.

Applicant Signature

Tom D. Miller SEP 2 9 2014
Applicant Signature

ACTION OF THE STATE ENGINEER

This application is:

☒ approved ☐ partially approved ☐ denied

provided it is not exercised to the detriment of any others having existing rights, and is not contrary to the conservation of water in New Mexico nor detrimental to the public welfare and further subject to the attached conditions of approval.

2015 JUN 30 PM 1:51

Witness my hand and seal this 17th day of June 2015, for the State Engineer,

Tom Blaine, P.E.
State Engineer, State Engineer

By: Wayne Canon
Signature

Wayne G. Canon
Print

Title: Water Resource Supervisor
Print

FOR OSE INTERNAL USE — Application for Permit, Form wr-06

File Number: RG 1579 POD 292	Trn Number:

CONDITIONS OF APPROVAL

Permit No.: RG-1579 POD 292
Permittee: Kirtland Air Force Base

1. This application is approved as follows:

Permittee:	Kirtland Air Force Base
Permit Number:	RG-1579 POD 292
Application File Date:	November 13, 2014
Notice for Publication:	February 10, 2015
Affidavit of Publication:	May 1, 2015 from the *Albuquerque Journal*
Priority:	March 1, 1949
Source:	Groundwater
Points of Diversion:	RG-1581 POD 292, located at a point where X=1,543,677 feet and Y=1,476,476 feet, NMSPCS, Central Zone, NAD 83, within the NE ¼ NE ¼ of Section 36, Township 10 North, Range 3 East, NMPM, Bernalillo County New Mexico.
Purpose of Use:	Pollution control and recovery, specifically extraction of groundwater for remediation
Place of Use:	Land within Kirtland Air Force Base, and land within Section 36, Township 10 North, Range 3 East, NMPM, Bernalillo County, New Mexico.
Amount of Water:	403 acre-feet per annum

2. The total diversion of groundwater from well RG-1579 POD 292 shall be limited to 403 acre-feet per annum, measured at the well, a portion of the 6,398 acre-feet per annum which includes the water right of 4,500 acre-feet per annum from well No.s RG-1581 through RG-1589 (Kirtland East), and 1,898 acre-feet per annum from No.s RG-1579, RG-1580 and RG-1579 and RG-1580 Combined-S (Kirtland West).

3. The total amount of water pumped from well RG-1579 POD 292 shall be measured by a totalizing meter of a type, at a location, and installed in a manner acceptable to the State Engineer. The Permittee shall provide the make, model, serial number, initial reading, units, multiplier, data of installation, and dates of recalibration to the State Engineer prior to any diversion of water under this permit.

CONDITIONS OF APPROVAL

Permit No.: RG-1579 POD 292
Permittee: Kirtland Air Force Base

4. Records of the quantity of water diverted from well RG-1579 POD 292 shall be submitted to the District 1 Office via mail, e-mail, or facsimile on or before the 10th day of the months of January, April, July and October for the preceding three calendar months, i.e. quarterly.

6. The Permittee shall utilize the highest and best technology available to assure conservation of water to the maximum extent practical.

7. This permit shall automatically expire on June 15, 2025 or upon completion of the intended purpose of use. If the intended purpose of use is completed prior to June 15, 2025, the permittee shall notify the State Engineer by certified letter.

8. Proof of Completion of Well shall be filed on or before June 15, 2017.

Witness my hand and seal this 17th day of June, A.D. 2015.

TOM BLAINE, P.E.
NEW MEXICO STATE ENGINEER

By: _____
Wayne G. Canon
Water Resource Supervisor, District 1

STATE OF NEW MEXICO
OFFICE OF THE STATE ENGINEER

DISTRICT 1

TOM BLAINE, P.E.
NEW MEXICO STATE ENGINEER

5550 San Antonio Drive, N.E.
Albuquerque, NM 87109 (505) 383-4000

October 29, 2015

File No.: RG-1579

Kirtland Air Force Base
Attn: Wayne Bitner, Chief, Environmental Restoration
AFCEC/Kirtland AFB IST; Bldg 20685
2050 Wyoming Blvd, SE
Kirtland AFB, NM 87117-5270

RE: Permit No. RG-1579 POD309 and 310

Greetings,

Your copy of the above numbered permit, which has been approved subject to the conditions set forth on the approval page, is enclosed.

Please review the Conditions of Approval for any required submittals. If submittals are not made by the date(s) indicated in the conditions, your rights under this permit are subject to expiration unless a request for an Extension of Time is received in the District Office of the State Engineer by that date, and that Extension of Time is subsequently approved.

Appropriate forms can be downloaded from the OSE website at www.ose.state.nm.us/WR/forms.php or will be mailed to you upon request.

Sincerely,

Christopher Burrus
Water Resource Specialist
Albuquerque, OSE, District 1

C: CB/cb

HCI-53980
$130.00

File No. RG 1579

POD 309 - 310

NEW MEXICO OFFICE OF THE STATE ENGINEER

APPLICATION FOR PERMIT TO CHANGE AN EXISTING WATER RIGHT

(Non 72-12-1)

(check applicable boxes):

For fees, see State Engineer website: http://www.ose.state.nm.us/

☒ Change Purpose of Use ☒ Groundwater ☐ Surface Water ☒ Change Place of Use ☒ Groundwater ☐ Surface Water	☐ Change Point of Diversion (POD): From: ☐ Groundwater ☐ Surface Water To: ☐ Groundwater ☐ Surface Water	☒ Additional Groundwater Point of Diversion (POD) ☐ Additional Surface Water Point of Diversion (POD)
☐ Temporary Change, NMSA 1978, § 72-12-7(B) Requested Start Date: (Not to Exceed 3 ac-ft in One Year)		Requested End Date:
☐ Water Use Lease, NMSA 1978, §§ 72-6-1 to-7 Requested Start Date:		Requested End Date:

1. APPLICANT(S) (Required) Note: water-right owner must be listed as an applicant.

Name: **Kirtland Air Force Base**	Name: **N/A**
Contact or Agent: check here if Agent ☒ **Wayne Bitner, Chief, Environmental Restoration**	Contact or Agent: check here if Agent ☐ **N/A** Mailing Address: **N/A**
Mailing Address: **AFCEC/Kirtland AFB IST; Bldg 20685; 2050 Wyoming Blvd SE**	
City: Kirtland AFB	City:
State: **NM** Zip Code: **87117-5270**	State: Zip Code:
Phone: **N/A** ☐ Home ☐ Cell Phone (Work): **505-853-3484**	Phone: ☐ Home ☐ Cell Phone (Work):
E-mail (optional): **Ludie.Bitner@us..af.mil**	E-mail (optional):

2. CURRENT OSE FILE INFORMATION (Required)

OSE File No(s): **RG-1579 THROUGH RG-1589**	Priority Date (if known):	Subfile/Cause No. (if applicable):

3. CURRENT PURPOSE OF USE AND AMOUNT OF WATER (Required)

☐ Domestic ☐ Livestock ☒ Irrigation ☐ Municipal ☐ Industrial ☐ Commercial ☒ Other Use (specify): **Pollution Control and Recovery** Describe a specific use If applicable (i.e. sand & gravel washing, dairy etc): **Extraction of groundwater for remediation**	Amount of Water (acre-feet per annum): If more details are needed, type "See Comments" in "Other" field below, and explain in Additional Statements Section. Diversion: **up to 646** Consumptive Use: **up to 646** Other (include units): **see comments**

STATE ENGINEER OFFICE ALBUQUERQUE, NM
2015 JUL 1 PM 3 02

FOR OSE INTERNAL USE — Application for Permit, Form wr-06, Rev 9/26/12

File No.: RG-1579	Trn. No.:	Receipt No.: 1-53980 9/130
Trans Description (optional): POD 309 + 310		Sub-Basin:
PCW/LOG Due Date:	PBU Due Date:	

4. COUNTY WHERE WATER RIGHT IS CURRENTLY USED (Required)

Bernalillo

5. ADDITIONAL STATEMENTS CONCERNING THE CURRENT WATER RIGHT

Extraction wells KAFB-106233 and KAFB-106234 will be supplimental to the wells described in Kirtland AFB file No. RG 1579 through RG-1589. The application does not request to increase the allowable groundwater diversion described in RG-1579 through 1589, but seeks to change the purpose of use to pollution control, recovery, and irrigation and to add a place of use not currently described in RG-1579 through RG-1589.

6. CURRENT or MOVE-FROM POINT(S) OF DIVERSION (POD) (Required)

☐ **Surface POD** **OR** ☒ **Ground Water POD (Well)**

Name of ditch, acequia, or spring:

Stream or water course: | Tributary of:

If application proposes a new point of diversion involving a diversion dam, storage dam, main canal, and/or pipeline, complete Attachment 2. ☐ Check here if Attachment 2 is included in this application packet.

POD Location Required: Coordinate location must be reported in NM State Plane (NAD 83), UTM (NAD 83), or Latitude/Longitude (Lat/Long - WGS84).
District II (Roswell) & District VII (Cimarron) customers, provide a PLSS location in addition to above.

☒ NM State Plane (NAD83) (Feet)
☐ NM West Zone
☐ NM East Zone
☒ NM Central Zone

☐ UTM (NAD83) (Meters)
☐ Zone 12N
☐ Zone 13N

☐ Lat/Long (WGS84) (to the nearest 1/10th of second)

POD Number (if known):	X or Easting or Longitude:	Y or Northing or Latitude:	Provide if known: -Public Land Survey System (PLSS) (*Quarters or Halves , Section, Township, Range*) OR - Hydrographic Survey Map & Tract; OR - Lot, Block & Subdivision; OR - Land Grant Name
KAFB-106233 POD 309	1543061	1476824	
KAFB-106234 POD 310	1544083	1478577	

2015 JUL 10 PM 3:0

STATE ENGINEER OFFICE ALBUQUERQUE, NEW MEXICO

NOTE: If more PODS need to be described, complete form WR-08 (Attachment 1 – POD Descriptions)
Additional point of diversion descriptions are attached: ☐ **Yes** ☒ **No** **If yes, how many**

Point of Diversion is on Land Owned by: **City Of Albuquerque**

Other description relating point of diversion to common landmarks, streets, or other: **Extraction Well KAFB-106233 will be located near Gibson Blvd SE and California St SE. Extraction Well KAFB-106234 will be located near the intersection of Anderson Ave and Georgia St SE**

FOR OSE INTERNAL USE — Application for Permit, Form wr-06

File Number: RG 1579 POD 309-310 | Trn Number:

7. CURRENT or MOVE-FROM PLACE(S) OF USE (Required)

The land is legally described by (check all that apply):

☒ Public Land Survey System (PLSS) (quarters, section, township, range)

☐ Irrigation or Conservation District Map

☐ Hydrographic Survey Report or Map

☐ Subdivision

☐ Grant

Complete the blocks below for all tracts of land (more than one description can be provided for a tract if available):

PLSS Quarters or Halves, **and/or** Name of Hydrographic Survey, **and/or** Name of Irrigation or Conservation District, **and/or** Name and County of Subdivision **and/or** Grant	PLSS Section **and/or** Map No. **and/or** Lot No.	PLSS Township **and/or** Tract No. (Please list each tract individually) **and/or** Block No.	PLSS Range	Acres	Priority
RG-1579	**36**	**10 N**	**3 E**		
			Total Acres:		

Other description relating place of use to common landmarks, streets, or other: **Kirtland AFB as described in District Court order: United States District Court, District of New Mexico, State of New Mexico State Engineer vs. Kirtland Air Force, dated November 27, 1973. See court order attached.**

Place of use is on land owned by (required): **Kirtland Air Force Base**

Are there other sources of water for these lands? No ☒ Yes ☐ describe by OSE file number:

Note: If on Federal or State Land, please provide copy of lease.

STATE ENGINEER OFFICE
ALBUQUERQUE, NEW MEXICO
2015 JUL 10 PM 01

FOR OSE INTERNAL USE

Application for Permit, Form wr-06

File Number: RG-1579 POD 309+310 | Trn Number:

8. MOVE-TO PURPOSE OF USE AND AMOUNT OF WATER (Complete this section ONLY if the purpose of use is changing)

☐ Domestic ☐ Livestock ☒ Irrigation ☐ Municipal ☐ Industrial ☐ Commercial ☒ Other Use (specify): **Pollution Control and Recovery** Describe a specific use if applicable (i.e. sand & gravel washing, dairy etc): **Extraction of groundwater for remediation**	Amount of Water (acre-feet per annum): If more details are needed, type "See Comments" in "Other" field below, and explain in Additional Statements Section. Diversion: **up to 646** Consumptive Use: **up to 646** Other (include units): **see comments**

9. MOVE-TO POINT(S) OF DIVERSION (POD) (Complete this section ONLY if adding or replacing a POD)

☐ **Surface POD** **OR** ☒ **Ground Water POD (Well)**

Name of ditch, acequia, or spring:

Stream or water course: | Tributary of:

If application proposes a new point of diversion involving a diversion dam, storage dam, main canal, and/or pipeline, complete Attachment 2. ☐ Check here if Attachment 2 is included in this application packet.

POD Location Required: Coordinate location must be reported in NM State Plane (NAD 83), UTM (NAD 83), or Latitude/Longitude (Lat/Long - WGS84).
District II (Roswell) & District VII (Cimarron) customers, provide a PLSS location in addition to above.

☒ NM State Plane (NAD83) (Feet)
- ☐ NM West Zone
- ☐ NM East Zone
- ☒ NM Central Zone

☐ UTM (NAD83) (Meters)
- ☐ Zone 12N
- ☐ Zone 13N

☐ Lat/Long (WGS84) (to the nearest 1/10th of second)

POD Number (if known):	X or Easting or Longitude:	Y or Northing or Latitude:	Provide if known: -Public Land Survey System (PLSS) *(Quarters or Halves , Section, Township, Range)* OR - Hydrographic Survey Map & Tract; OR - Lot, Block & Subdivision; OR - Land Grant Name
KAFB-106233	1543061	1476824	
KAFB-106234	1544083	1478577	

2015 JUL 10 PM 3:01

STATE ENGINEER OFFICE ALBUQUERQUE, NEW MEXICO

NOTE: If more PODS need to be described, complete form WR-08 (Attachment 1 – POD Descriptions)
Additional POD descriptions are attached: ☐ **Yes** ☒ **No** **If yes, how many**

Other description relating point(s) of diversion to common landmarks, streets, or other: **KAFB-106233 will be located near Gibson Blvd SE and California St SE. KAFB-106234 will be located near the intersection of Anderson Ave and Georgia St SE**

Point of Diversion is on Land Owned by: **City Of Albuquerque**

Note: The following information is for wells only. If more than one (1) well needs to be described, provide attachment.

Approximate depth of well (feet): **~535.00**	Outside diameter of well casing (inches): **8.00**
Driller Name: **NA**	Driller License Number: **NA**

If replacing the current well, is the current well to be plugged? ☐ Yes ☐ No ☒ Not Applicable
If No, state for what use it is retained:

STATE ENGINEER OFFICE
ALBUQUERQUE, NEW MEXICO
2015 JUL 10 PM 3:01

10. MOVE-TO PLACE(S) OF USE (Complete this section ONLY if adding or changing a place of use)
List each individually

The land is legally described by (check all that apply):

☒ Public Land Survey System (PLSS) (quarters, section, township, range)
☐ Irrigation or Conservation District Map
☐ Hydrographic Survey Report or Map
☐ Subdivision
☐ Grant

Complete the blocks below for all tracts of land (more than one description can be provided for a tract if available):

PLSS Quarters or Halves, **and/or** Name of Hydrographic Survey, **and/or** Name of Irrigation or Conservation District, **and/or** Name and County of Subdivision **and/or** Grant	PLSS Section **and/or** Map No. **and/or** Lot No.	PLSS Township **and/or** Tract No. (Please list each tract individually) **and/or** Block No.	PLSS Range	Acres	Priority
SE 1/4 SE 1/4	**25**	**10 N**	**3 E**		
NE 1/4 SE 1/4	**25**	**10 N**	**3 E**		
			Total Acres:		

2015 JUL 10 PM 3:01

Other description relating place of use to common landmarks, streets, or other: **KAFB-106233 will be located near Gibson Blvd SE and California St SE. KAFB-106234 will be located near the intersection of Anderson Ave and Georgia St SE**

Place of use is on land owned by (required): **City of Albuquerque**

Are there other sources of water for these lands? No ☒ Yes ☐ describe by OSE file number:

Note: If on Federal or State Land, please provide copy of lease.

11. ADDITIONAL STATEMENTS OR EXPLANATIONS

This application seeks to use wells KAFB-106233 and KAFB-106234 for a groundwater extraction and treatment system supplemental to the Kirtland AFB water rights (RG-1579 through 1589). The application does not request to increase the allowable groundwater diversion described in RG-1579 through RG-1589, but seeks to change the purpose of use to pollution control, recovery, and irrigation and to add places of use not currently described in RG-1579 through RG1589. The wells will extract groundwater up to 323 acre feet per year (200 gallons per minute) per well (646 acre feet per year total), for 10 years. The extracted groundwater will be treated and discharged to the Golf Course Main Pond and Infiltration Galleries on Kirtland AFB

ACKNOWLEDGEMENT

I, We (name of applicant(s)), ERIC H. FROELICH, Colonel, USAF Commander
Print Name(s)

affirm that the foregoing statements are true to the best of (my, our) knowledge and belief.

Applicant Signature

Applicant Signature

ACTION OF THE STATE ENGINEER

This application is:

☐ approved ☐ partially approved ☐ denied

provided it is not exercised to the detriment of any others having existing rights, and is not contrary to the conservation of water in New Mexico nor detrimental to the public welfare and further subject to the attached conditions of approval.

STATE ENGINEER OFFICE
ALBUQUERQUE
2015 JUL 10 P 3:01

Witness my hand and seal this _____ day of _____ 20 _____ , for the State Engineer,

_____, State Engineer

By: _____
Signature

_____
Print

Title: _____
Print

FOR OSE INTERNAL USE

Application for Permit, Form wr-06

File Number: RG 1579 POD 309+310	Trn Number:

11. ADDITIONAL STATEMENTS OR EXPLANATIONS

This application seeks to use wells KAFB-106233 and KAFB-106234 for a groundwater extraction and treatment system supplemental to the Kirtland AFB water rights (RG-1579 through 1589). The application does not request to increase the allowable groundwater diversion described in RG-1579 through RG-1589, but seeks to change the purpose of use to pollution control, recovery, and irrigation and to add places of use not currently described In RG-1579 through RG1589. The wells will extract groundwater up to 323 acre feet per year (200 gallons per minute) per well (646 acre feet per year total), for 10 years. The extracted groundwater will be treated and discharged to the Golf Course Main Pond and Infiltration Galleries on Kirtland AFB

ACKNOWLEDGEMEN

T I, We (name of applicant(s)), ERIC H. FROEHLICH, Colonel, USAF
Print Name(s)

affirm that the foregoing statements are true to the best of (my, our) knowledge and belief.

Applicant Signature

Applicant Signature

ACTION OF THE STATE ENGINEER

This application is:

☒ approved ☐ partially approved ☐ denied

provided it is not exercised to the detriment of any others having existing rights, and is not contrary to the conservation of water in New Mexico nor detrimental to the public welfare and further subject to the attached conditions of approval.

STATE ENGINEER OFFICE
ALBUQUERQUE, NEW MEXICO
2015 JUL 10 PM 3:02

Witness my hand and seal this 28th day of October 2015, for the State Engineer,

Tom Blaine, P.E.
State Engineer, State Engineer

By: _____
Signature

Jeffrey L. Peterson
Print

Title: Water Resource Supervisor
Print

FOR OSE INTERNAL USE

Application for Permit, Form wr-06

File Number: RG-1579 POD 309 + 310

Trn Number:

CONDITIONS OF APPROVAL

1. This application is approved as follows:

Permittee:	Kirtland Air Force Base
Permit No:	RG-1579 POD 309 and POD 310
Application File Date:	July 10, 2015
Notice for Publication Issued:	August 25, 2015
Affidavit of Publication Filed:	September 14, 2015, The Albuquerque Journal published on August 28, September 5, and September 11, 2015
Priority:	March 1, 1949
Source:	Groundwater
Point of Diversion:	
RG-1579 POD 309:	Located at a point where X=1,543,061 feet and Y=1,476,824 feet, NMSPCS, Central Zone, NAD 83, on land owned by the City of Albuquerque, Bernalillo County, New Mexico.
RG-1579 POD 310:	Located at a point where X=1,544,083 feet and Y=1,478,577 feet, NMSPCS, Central Zone, NAD 83, on land owned by the City of Albuquerque, Bernalillo County, New Mexico.
Purpose of Use:	Pollution Control and Recovery, and Irrigation

Place of Use:
SE ¼ SE ¼, Section 25, Township 10 North, Range 3 East, NMPM, Bernalillo County, New Mexico, and under permits RG-1579 through RG-1589 the applicant will discharge treated groundwater into the Tijeras Arroyo Golf Course main pond, infiltration galleries located adjacent to the golf course, and injection wells on land owned by the Kirtland Air Force Base.

2. The total diversion of water from wells RG-1579 POD309 and RG-1579 POD310 under this permit shall not exceed 636 acre-feet per annum.

3. Wells RG-1579 POD309 and RG-1579 POD310 shall be equipped with a totalizing meter of a type, at location(s) approved by, and installed in a manner acceptable to the State Engineer. Records of the amount of water pumped shall be submitted, in writing, to the District 1 Office of the State Engineer on or before the 10th day of January, April, July and October of each year. No water shall be diverted from any well unless equipped with a functional totalizing meter. The Permittee shall provide in writing the make, model, serial number, date of installation, initial reading, units, and dates of recalibration of each meter and any replacement meter.

4. The Permittee shall utilize the highest and best technology to ensure conservation of water to the maximum extent practical.

5. This Permit will expire on November 1, 2025.

Witness my hand and seal this 29th day of October, A.D., 2015

Tom Blaine, P.E.
NEW MEXICO STATE ENGINEER

By: _____
Jeffery L. Peterson
Water Resource Supervisor
District I

CB:cb
cc: WRAB

File No.: RG-1579

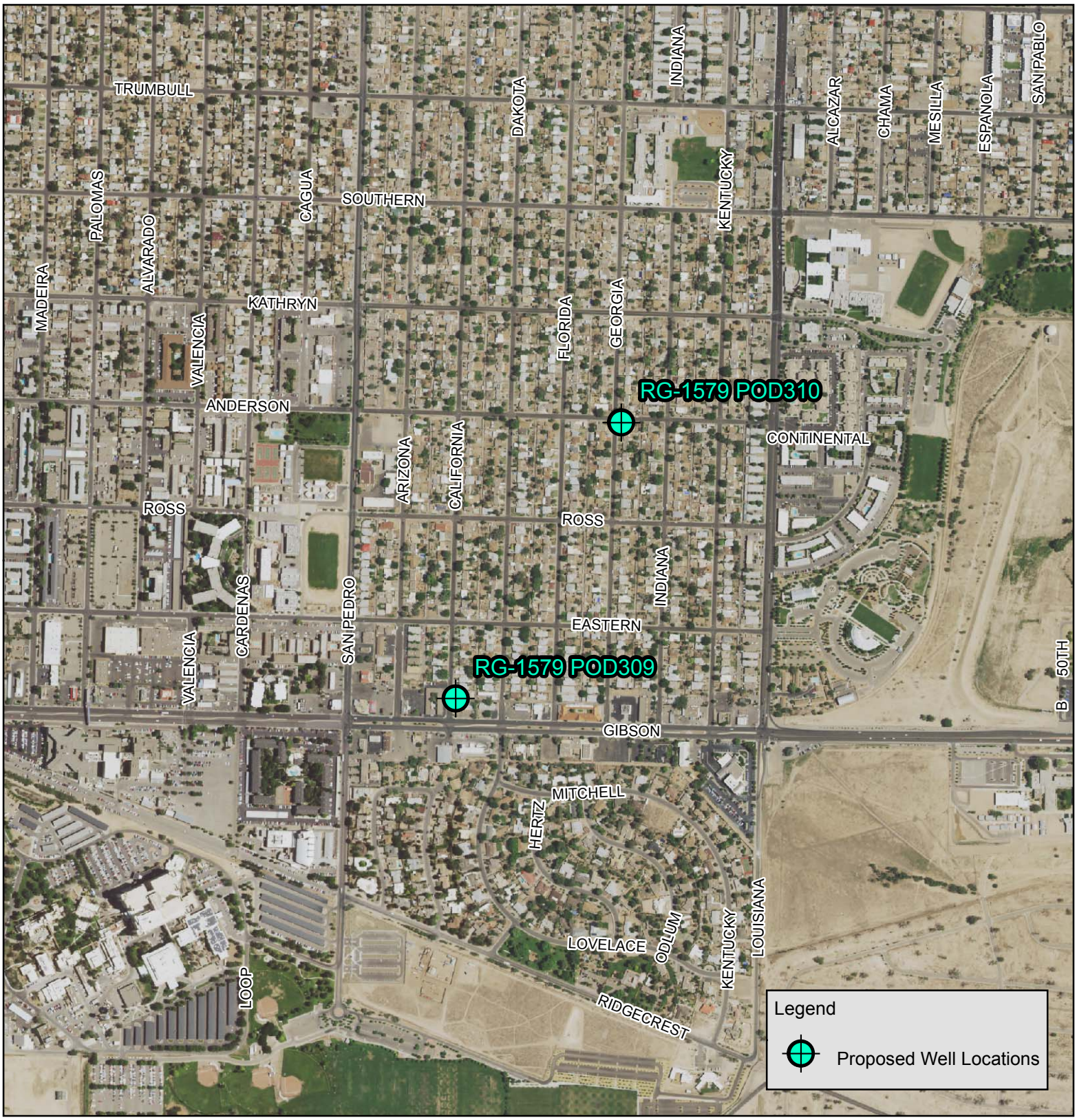

N

Absolute Scale 1:10,000

Coordinate System:
NAD 1983 UTM Meters

0 500 1,000 Feet

0 100 200 Meters

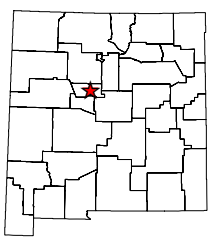

RG-1579
POD309 and POD310

Location

Conditions of Approval

State of New Mexico
Office of the State Engineer
District 1
5550 San Antonio Dr NE
Albuquerque, NM 87109

Tom Blaine, P.E. State Engineer

Created by C.Burrus

DEPARTMENT OF THE AIR FORCE
HEADQUARTERS 377TH AIR BASE WING (AFMC)

CERTIFIED RETURN-RECEIPT REQUESTED

Colonel Eric H. Froehlich
377 ABW/CC
2000 Wyoming Blvd SE
Kirtland AFB, NM 87117-5600

JUL 0 9 2015

Office of the State Engineer
c/o Jeffrey L. Peterson, Water Rights Division
5550 San Antonio Blvd. NE
Albuquerque, New Mexico 87109

Dear Mr. Peterson

Kirtland Air Force Base (AFB) is submitting herein one "Application for Permit to Change an Existing Water Right" with supporting documents for extraction wells. This application seeks to permit the exploratory wells KAFB-106233 and KAFB-106234 as supplemental wells to Kirtland AFB water rights RG-1579 through RG-1589 by changing the purpose of use to pollution control, recovery, and irrigation and by adding places of use not currently described in water rights RG-1579 through RG-1589. The extraction wells (KAFB-106233 and KAFB-106234) are to be advanced into the water table and screened to extract water from the Shallow, Intermediate, and Deep aquifer zones to aid in the treatment of contaminated groundwater as part of the existing ethylene dibromide (EDB) pump and treat system at Kirtland AFB Bulk Fuels Facility SWMUs ST-106 and SS-111. These wells are proposed to be advanced on City of Albuquerque property.

To prevent spreading of contaminated groundwater into the Albuquerque municipal water supply and expedite the collapse of the downgradient portion of the dissolved-phase EDB plume, Kirtland AFB plans to install extraction wells KAFB-106233 and KAFB-106234. Groundwater from the two extraction wells will be pumped through high-density polyethylene pipelines to the groundwater treatment system (GWTS) located just east of Louisiana Boulevard on Kirtland AFB property. The GWTS will remediate dissolved phase EDB and petroleum-related contaminants of concern to concentrations below the Environmental Protection Agency (EPA) maximum contaminant levels (MCLs) and New Mexico Water Quality Control standards.

2015 JUL 13 AM 8:19
STATE ENGINEER OFFICE
ALBUQUERQUE, NEW MEXICO

Treated water will be discharged to two locations on Kirtland AFB: the Golf Course Main Pond (GCMP) to irrigate the Tijeras Arroyo Golf Course, and infiltration galleries to be located adjacent to the Golf Course. Treated groundwater will be discharged to the unlined infiltration galleries located adjacent to the Tijeras Arroyo Golf Course during winter months, or if the discharge volume exceeds GCMP capacity. The infiltration galleries will be designed to provide sufficient surface area for the treated water to percolate into the vadose zone soil. KAFB-106233 and KAFB-106234 will extract groundwater up to 323 acre feet per year (200 gallons per minute) for each well. Initially, all treated water will be discharged to the GCMP until the

- The source of water to be injected:
  - No water will be injected into the water table during this operation.

- The method of measurement of water injected:
  - No water will be injected into the water table during this operation.

- The characteristics of the aquifer:
  - The aquifer is primarily comprised of unconsolidated sand and gravel, with an average hydraulic conductivity of 63 feet/day.

- The method of determining the resulting annual consumptive use of water and depletion from any related stream system:
  - The groundwater from KAFB-106233 and KAFB-106234 are projected to be extracted at a rate of up to 200 gallons per minute equivalent to 323 acre-feet per year per well. The groundwater will be metered as it is extracted from the aquifer and pumped to the Kirtland AFB water treatment system and will be metered as the groundwater is discharged to the GCMP and infiltration galleries. These metered locations will be used to determine the annual consumptive use.

- Proof of any permit required from the New Mexico Environment Department:
  - Kirtland AFB is working with the New Mexico Environment Department – Hazardous Waste Bureau and Groundwater Quality Bureau to identify necessary permits. These include any of the following:
    a. Discharge Permit
    b. Temporary Discharge Permit

  - KAFB-106233 and KAFB-106234 will be included under the modification to discharge permit (DP)-1770. In the meantime, temporary permission to discharge to the GCMP has been granted for 120 days.

- An access agreement if the applicant is not the owner of the land on which the pollution plume control or recovery well is to be located:
  - Kirtland AFB is currently updating existing access agreements for KAFB-106233 and KAFB-106234. Once updated, Kirtland AFB will submit the access agreements to the Office of the State Engineer.

In addition to the application, this packet contains a summary of the well construction KAFB-106233 and KAFB-106234, and one figure showing the well locations. The well construction details may be subject to change depending on the EDB vertical extent that will be characterized by observations wells to be installed prior to the installation of extraction wells.

STATE ENGINEER OFFICE
ALBUQUERQUE, NEW MEXICO
2015 JUL 10 P

number and location of the infiltration galleries are determined. The extracted, treated, and injected groundwater will have no additional diversion to Kirtland AFB's water rights. The GWTS could operate for up to ten years; however, it is possible that the GWTS could be operational for a longer or shorter period of time.

Extraction wells KAFB-106233 and KAFB-106234 will be supplemental to the wells described in Kirtland AFB file No. RG-1579 through RG-1589. The application does not request to increase the allowable groundwater diversion described in RG-1579 through RG-1589, but seeks to change the purpose of use to pollution control, recovery, and irrigation and to add a place of use not currently described in RG-1579 through RG-1589. The current places of use for wells KAFB-106233 and KAFB-106234 are on the City of Albuquerque property; this application seeks to add Kirtland AFB as a place of use to the water rights RG-1579 through RG-1589.

The specific requirements for pollution control and recovery will apply to the exploratory wells KAFB-106233 and KAFB-106234, and are as follows:

- The need for the pollution control or recovery operation:
  - The KAFB-106233 and KAFB-106234 wells are currently categorized as exploratory wells at SWMU SS-111, which is groundwater impacted by jet fuel. The New Mexico Environment Department has directed Kirtland AFB to implement Interim Measures to address the groundwater contamination.KAFB-106233 and KAFB-106234 will expand the current treatment system, which is extracted water from KAFB-106228

- The estimated maximum period of time for completion of the operation:
  - 10 years.

- The annual diversion amount for each well:
  - Up to 323 acre-feet per year.

- The annual consumptive use for each well:
  - Up to 323 acre-feet per year.

- The maximum amount of water to be diverted for the duration of the operation:
  - Up to 3,230 acre-feet.
  - No water will be injected in the water table during this operation.

- The method and place of discharge
  - The groundwater from wells KAFB-106233 and KAFB-106234 will be discharged at the GCMP at Tijeras Arroyo Golf Course, or at infiltration galleries.

- The method of measurement of water produced and discharged:
  - Any extracted water will be metered as it is extracted from the aquifer and as it is discharged from the GWTS.

2015 JUL 10 PM 3:01
STATE ENGINEER OFFICE
ALBUQUERQUE, NEW MEXICO

Please contact Mr. L. Wayne Bitner at 505.853.3484 or at ludie.bitner@us.af.mil or Ms. Victoria R. Branson at 505.846.6362 or at victoria.branson@us.af.mil if you have any questions.

Sincerely

ERIC H. FROEHLICH, Colonel, USAF
Commander

Attachment: WR06 Application for Permit to Change an Existing Water Right

cc:
AFCEC-CZRX (Bodour)
USACE-Omaha District Office (Ellender)
USACE-ABQ District Office (Simpler, Phaneuf)
Public Info Repository, AR/IR, and File

STATE ENGINEER OFFICE
ALBUQUERQUE, NEW MEXICO
2015 JUL 10 PM 3:01

FIGURE 1

PROPOSED WELL LOCATIONS

STATE ENGINEER OFFICE
ALBUQUERQUE, NEW MEXICO
2015 JUL 10 PM 3:01

STATE ENGINEER OFFICE
ALBUQUERQUE, NEW MEXICO
2015 JUL 10 PM 3:01

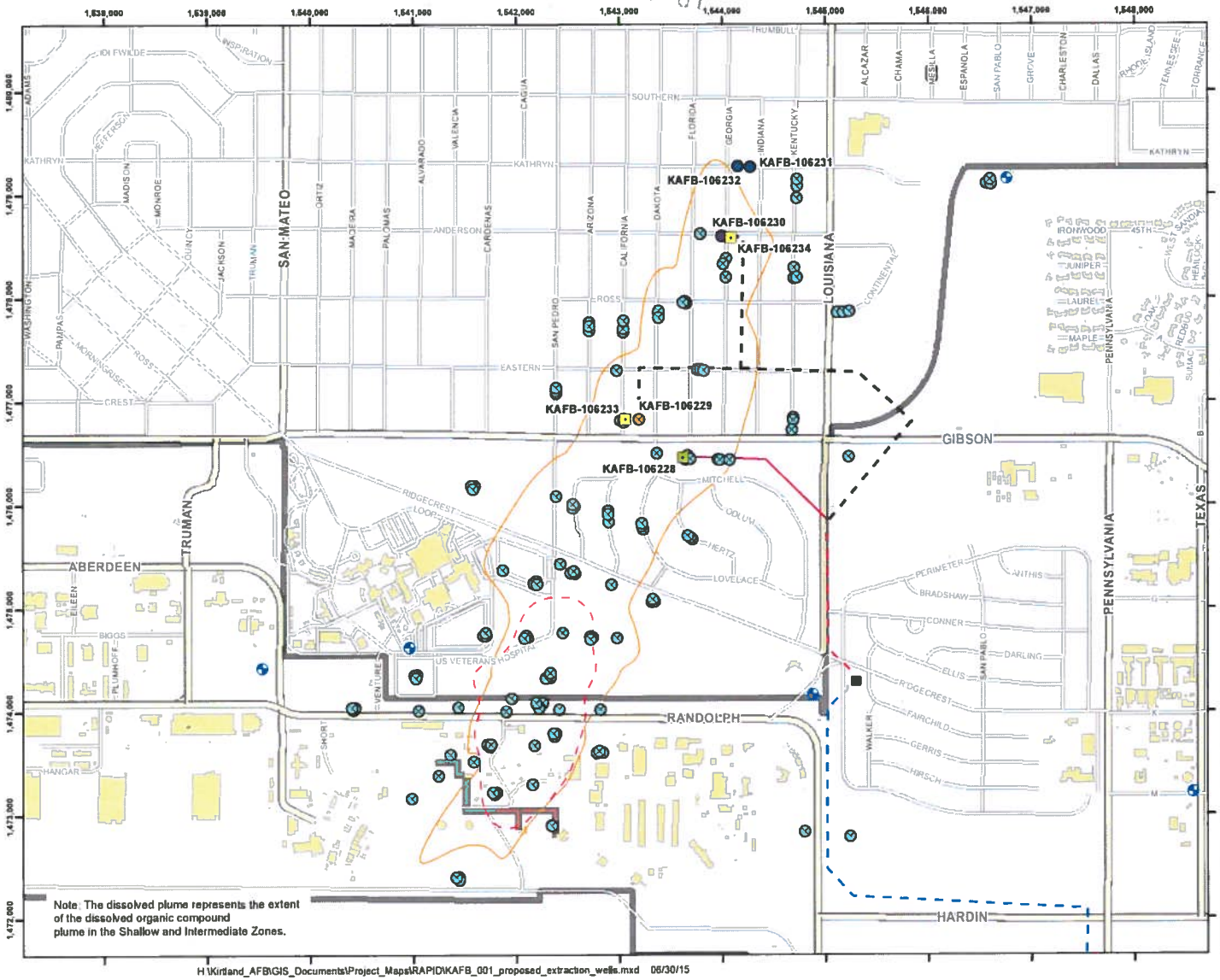

H:\Kirtland_AFB\GIS_Documents\Project_Maps\RAPID\KAFB_001_proposed_extraction_wells.mxd 06/30/15

Legend

- Proposed Extraction Well
- Existing Extraction Well
- Proposed Observation Monitoring Well
- Proposed Data Gap and Observation Monitoring Well
- Proposed Data Gap Monitoring Well
- Existing Monitor Well
- Water Supply Well
- Proposed Influent Piping
- Influent Piping
- Permanent Underground Discharge Piping
- Permanent Underground Influent Piping
- Dissolved Plume January 2015
- New Groundwater Treatment System Building
- Historical Area of Observed LNAPL (July 2009)

SITE LOCATION

Revision Date: 06/30/15

N

0 500 1,000 2,000

Feet
1 inch = 1,000 feet

Projection: NAD83 State Plane New Mexico Central FIPS3002 Feet

PERMIT APPLICATION
OFFICE OF THE STATE ENGINEER
BULK FUELS FACILITY
KIRTLAND AIR FORCE BASE, NEW MEXICO

FIGURE 1

EXTRACTION WELL LOCATIONS

FIGURE 2

EXTRACTION WELL CONSTRUCTION DIAGRAM

STATE ENGINEER OFFICE
ALBUQUERQUE, NEW MEXICO
2015 JUL 10 PM 3:01

Extraction Well Construction Diagram

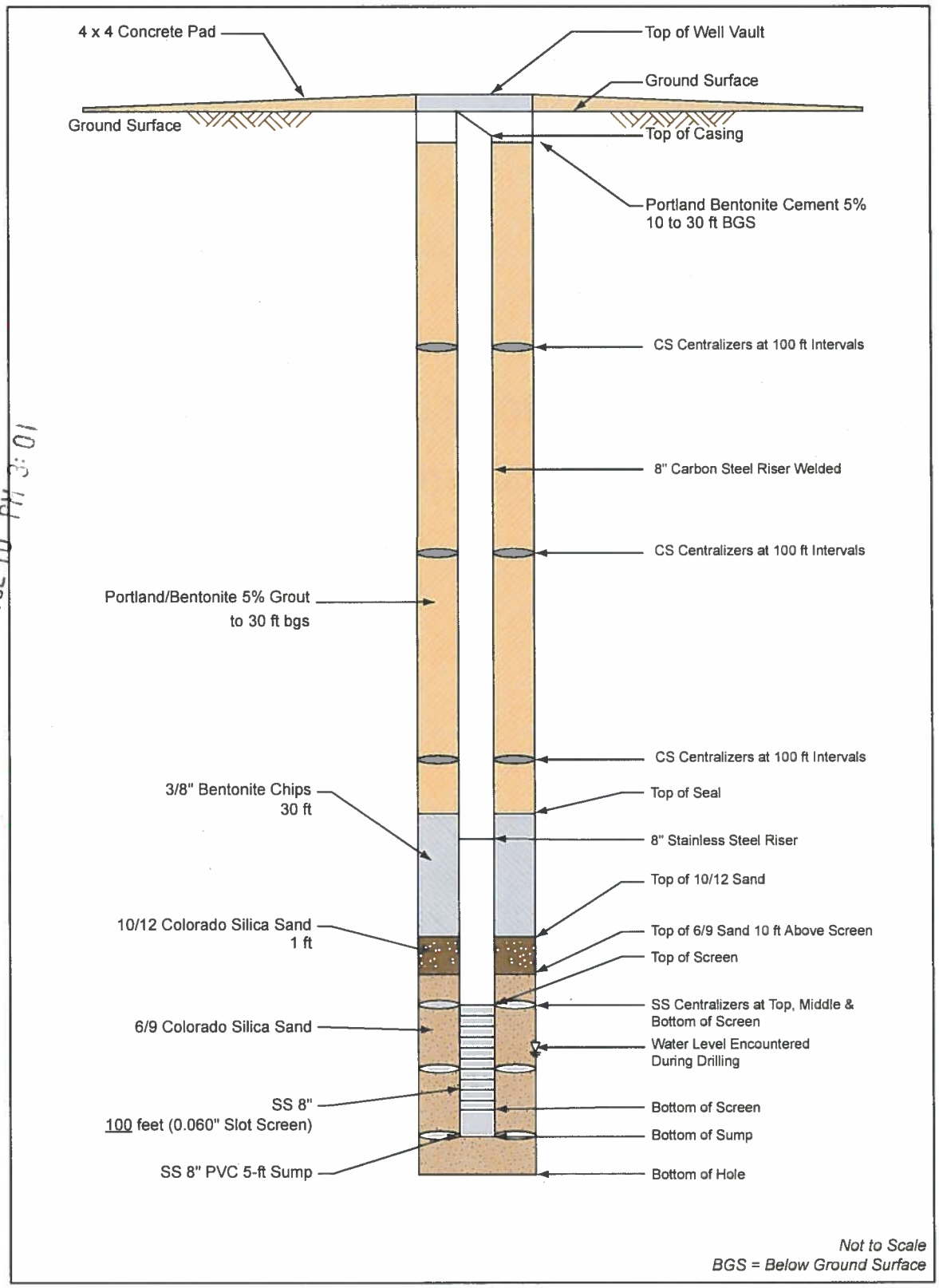

STATE ENGINEER OFFICE
ALBUQUERQUE, NEW MEXICO
2015 JUL 10 PM 3:01

500433 04010300 A1_Extraction_template

ATTACHMENT 1

WELL SUMMARY

STATE ENGINEER OFFICE
ALBUQUERQUE, NEW MEXICO
2015 JUL 10 PM 3:01

KIRTLAND AIR FORCE BASE
BULK FUELS FACILITY SPILL
WELL SUMMARY

Extraction Well

Extraction wells KAFB-106233 and 106234 will be screened to extract water from the top 80 feet of the aquifer. The final well design will be based on model results and lithologic data from nearby groundwater monitoring wells to capture the maximum radius of influence and have at least 70 percent efficiency. Extraction wells will be installed in accordance with the *Rapid Response Action, Additional Data Gap Groundwater Monitoring Wells and Expansion of Groundwater Extraction Work Plan* (USACE, 2015a) and additional correspondence between Kirtland AFB and NMED pertaining to extraction well installation (USACE, 2015b; 2015c).

The extraction wells will be drilled using mud rotary drilling technology. The wells will be constructed using 8-inch diameter casing, screened at an interval extending from 80-feet below current groundwater, upwards to a level at the site of 20-feet above groundwater level, or approximately 100-feet total screened interval. A moderately aggressive filter pack and 50 to 60 slot screen size will be used. The well string will be composed of nominal 8-inch steel pipe from ground surface to 20 feet above the water table encountered during drilling bgs, followed by stainless steel wire wrap screen to a depth of 80 feet below the water table encountered during drilling, and finally stainless pipe and cap extending to 5 feet below the screen. Following placement of the well screen and riser pipe, filter pack (sand) will be placed adjacent to the well screen followed by a fine sand seal and bentonite chip seal. A cement/bentonite grout will extend from the bentonite chip seal to near ground surface. The bentonite chip seal will be hydrated in lifts using a "clean" water source.

- The appropriate depth of the boring will be determined in the field and is dependent on the occurrence of significant water. If significant groundwater is encountered during drilling, drilling will cease, and the hole will be allowed to equilibrate for approximately 1 hour to determine the water table elevation.

- If the boring is over drilled beyond the bottom of the proposed sump elevation by more than 10 feet, the borehole will be backfilled with filter pack material to an elevation approximately 5 feet below the proposed bottom of sump elevation.

- The well will be constructed within the borehole using a 5-foot stainless-steel sump; 304 Stainless steel wire wrap with a 50 to 60 slotted screen size; and 8-inch steel casing. The sump will extend 5 feet below the bottom of the screened interval.

ALBUQUERQUE, NEW MEXICO
2015 JUL 10 PM 3:02

- While slowly removing the drill casing from the borehole, the borehole annular space will be backfilled with a filter pack. The filter pack will be placed using a tremie pipe to avoid bridging and ensure a continuous filter pack throughout the screened interval of the well. The well may be gently surged to breakup bridging and ensure complete placement of the filter pack around the well screen. A gravel tube will be installed within the annulus between the well string and the borehole from 10 feet above the top of screen extending upward to the surface, and will be welded to the steel riser pipe. The gravel tube will be 2 ½ inches inner diameter, and will be composed of the same materials as the adjacent riser pipe. The gravel tube will be installed free of sand.

- A 30 to 40-foot hydrated bentonite seal will be emplaced above the sand filter pack, incrementally hydrated with potable water in 1-foot lifts for the first 10 feet.

- A high solids (20 wt%) bentonite grout will be emplaced by tremie pipe to within 30 feet of the surface, and a cement/bentonite grout will be emplaced to the ground surface.

- To the surface, a cement/bentonite grout mixture will be installed over the high-solids bentonite grout using a tremie pipe. The mixture will consist of 94 pounds of Portland cement to 7 gallons of approved water and 3 percent by weight of sodium bentonite powder.

- A three-foot square by four-inch thick concrete surface pad shall be installed around the well immediately after the protective casing is installed. The surface pad shall be sloped so that drainage will be off the pad and away from the protective casing. In addition, a minimum of one inch of the finished pad shall be below grade or ground elevation to prevent washing and undermining by soil erosion.

- Protective casing with a locking cover shall be installed around the well casing (flush to the street) to prevent damage or unauthorized entry. The protective casing shall be anchored in the concrete surface pad below the frost line.

Final well design details will be determined based on installation of surrounding monitoring wells and during drilling of the borehole at this location.

2015 JUL 10 PM 3:02
STATE ENGINEER OFFICE
ALBUQUERQUE, NEW MEXICO

References

USACE. 2015a. *Rapid Response Action, Additional Data Gap Groundwater Monitoring Wells and Expansion of Groundwater Extraction Work Plan, Bulk Fuels Facility, Kirtland Air Force Base, New Mexico.* Prepared by CB&I Federal Services, Inc. for the USACE Albuquerque District under USACE Contract No. W912DY-10- D-0014, Delivery Order 0002. June.

USACE. 2015b.*Groundwater Extraction Pilot Implementation and Additional Plume Characterization Letter Work Plan Addendum #3 Bulk Fuels Facility (BFF) Spill, Solid Waste Management Units ST-106 and SS-111, Kirtland Air Force Base, Albuquerque, New Mexico.* Prepared by CB&I Federal Services, Inc. for the USACE Albuquerque District under USACE Contract No. W912DY-10-D-0014, Delivery Order 0002. March.

USACE. 2015c.*Groundwater Extraction Pilot Implementation and Additional Plume Characterization Letter Work Plan Addendum #4 Bulk Fuels Facility (BFF) Spill, Solid Waste Management Units ST-106 and SS-111, Kirtland Air Force Base, Albuquerque, New Mexico.* Prepared by CB&I Federal Services, Inc. for the USACE Albuquerque District under USACE Contract No. W912DY-10-D-0014, Delivery Order 0002.May.

ATTACHMENT 2

KIRTLAND WATER RIGHT

STATE ENGINEER OFFICE
ALBUQUERQUE, NEW MEXICO
2015 JUL 10 PM 3:02

73 DEC 3 A 8:26
ALBUQUERQUE, N. MEX.

IN THE UNITED STATES DISTRICT COURT

DISTRICT OF NEW MEXICO

STATE OF NEW MEXICO, ex rel, S. E. REYNOLDS, State Engineer.

Plaintiff

vs.

JOHN McLUCAS, Secretary of the Air Force, THOMAS W. MORGAN, Commander, Air Force Special Weapons Center, and JAMES B. MYERS, Base Commander, Kirtland Air Force Base

Defendants.

ORIGINAL
FILED IN MY OFFICE
NOV 27 1973
L. C. KANALY
CLERK

JUDGMENT AND ORDER

THIS MATTER coming on to be heard upon the Stipulation of the parties, and the Court having considered the same and being otherwise fully advised in the premises, finds that the Court has jurisdiction of the parties and the subject matter and that the said Stipulation should be approved and incorporated in the final judgment of this Court.

IT IS THEREFORE ORDERED, ADJUDGED AND DECREED that the Stipulation of the parties is hereby approved and incorporated in this judgment as if set out in full herein.

IT IS FURTHER ORDERED that the defendants, their employees, agents, assigns and successors in interest be and they are hereby permanently enjoined and restrained from any diversion and/or use of water from the Rio Grande Underground Water BAsin in and for Kirtland Air Force BAse except in strict conformity with this final judgment.

HOWARD BRATTON

JUDGE OF THE U. S. DISTRICT COURT

2015 JUL 10 PM 3:02
STATE ENGINEER OFFICE
ALBUQUERQUE, NEW MEXICO

1 general
FLS
J Black

IN THE UNITED STATES DISTRICT COURT

DISTRICT OF NEW MEXICO

STATE OF NEW MEXICO, ex rel, S. E. REYNOLDS, State Engineer.

Plaintiff

vs.

JOHN McLUCAS, Secretary of the Air Force, THOMAS W. MORGAN, Commander, Air Force Special Weapons Center, and JAMES B. MYERS, Base Commander, Kirtland Air Force Base

Defendants.

73 DEC 3 A 8:
ALBUQUERQUE, N.M.
ORIGINAL FILED IN MY OFFICE
NOV 27 1973
L. G. KANALY
CLERK

STATE ENGINEER OFFICE
ALBUQUERQUE NEW MEXICO
2015 JUL 10 PM 3:02

STIPULATION

COME NOW the Plaintiff and Defendants herein, by and through their attorneys, and hereby mutually stipulate and agree that final judgment may enter in this cause in the following terms:

1. The United States of America, acting through and by means of the United States Air Force, owns and operates that certain complex of military facilities known as Kirtland Air Force Base within Bernalillo County, New Mexico, which Base includes the former Sandia Base, a Military installation heretofore operated by the United States Army. That area heretofore known as Sandia Base shall be designated in this stipulation as Kirtland East and that area known as Kirtland Air Force Base prior to the merger of the two installations shall be designated as Kirtland West.

2. On November 29, 1956, the Plaintiff, S. E. Reynolds, State Engineer, duly and lawfully declared the Rio Grande Underground Water Basin, an underground reservoir of public waters of the State of New Mexico having reasonably ascertainable boundaries.

3. All of Kirtland East and Kirtland West were, on November 29, 1956, and have continued to the present time to be within the exterior boundaries of the said Rio Grande Underground Water Basin.

4. On November 29, 1956, the United States of America owned within Kirtland East a water supply system consisting of 9 completed and operating wells, together with associated water storage and delivery works, and had prior to that date diverted and used underground waters of the Rio Grande Underground Water Basin by means of each and every of the said 9 wells for the lawful purposes of the said military installation.

5. The said nine wells in the Kirtland East water supply system were duly declared by an authorized representative of the United States of America in the office of the Plaintiff on the 4th day of October, 1957, and have been since that date designated in the files of the State Engineer as wells No. RG-1581 through RG-1589. The respective locations and priorities of the said 9 wells, as declared by the United States of America, are as follows:

RG-1581 NW1/4SE1/4, Sec. 31 T. 10 N., R. 4 E. March 1, 1949

RG-1582 NW1/4NW1/4, Sec. 1 T. 9 N., R. 3 E. August, 1949

RG-1583 NW1/4SW1/4, Sec. 30, T. 10 N., R. 4 E. August, 1949

RG-1584 NE1/4SW1/4, Sec. 6, T. 9 N., R. 4 E. August, 1949

RG-1585 NE1/4SW1/4, Sec. 29, T. 10 N., R. 4 E. July, 1952

RG-1586 SW1/4SE1/4, Sec. 32, T. 10 N., R. 4 E. July, 1952

RG-1587 NW1/4NW1/4, Sec. 6, T. 9 N., R. 4 E. Feb., 1955

RG-1588 SW1/4SW1/4, Sec. 5, T. 9 N., R. 4 E. Feb., 1955

RG-1589 SW1/4SW1/4, Sec. 15, T. 9 N., R. 4 E. Feb., 1949

2015 JUL 10 PM 3:02

STATE ENGINEER OFFICE
ALBUQUERQUE, NEW MEXICO

73 DEC 3 A8:27

6. Between November 1, 1958, and May 27, 1959, the United States of America drilled or caused to be drilled, in the NW1/4NE1/4 of Sec. 20, T. 9 N., R. 4 E., an additional water well which was thereafter made a part of the water supply system of Kirtland East. This well is designated in the files of the State Engineer as RG-1581 through RG-1589-S. By means of the said well, the United States of America has thereafter continually diverted and beneficially used public underground waters of the Rio Grande Underground Water Basin, as a supplemental point of diversion in and for Kirtland East.

7. In 1972, the United States of America drilled or caused to be drilled an additional water well within Kirtland East in the NW1/4NE1/4 of Sec. 4, T. 9 N., R. 4 E., which well has been completed except for the installation of a pump and has not yet been put to beneficial use, and which is hereby designated RG-1581 through RG-1589-S-2. The said well was drilled for the purpose of serving as a supplemental well for the water supply system of Kirtland East

8. The United States of America owns, under the Constitution and laws of the State of New Mexico, the right to divert the public underground waters of the Rio Grande Underground Water Basin, through and by means of the said eleven wells set forth in paragraphs 5, 6 and 7, in an amount not to exceed an annual quantity of four thousand five hundred (4,500) acre-feet, and to apply the same to beneficial use for the purposes of Kirtland Air Force Base. The priorities of the said eleven wells composing the water supply system of Kirtland East are as set forth

STATE ENGINEER OFFICE
ALBUQUERQUE, NEW MEXICO
2015 JUL 10 PM 3:02

73 DEC 3 A8:27

above in paragraphs 5, 6 and 7. The defendants stipulate that the United States Air Force has no right to divert any of the underground waters of the Rio Grande Underground Water Basin, by means of the said 11 wells or otherwise, for the purposes of Kirtland Air Force Base, except as set forth in this Stipulation, provided, however, that the United States shall enjoy the same right as any other appropriator in the State of New Mexico to make application hereafter to the Plaintiff, State Engineer, for permit to drill supplemental well(s) (i.e., make partial or total change in point of diversion or place or purpose of use) or to effect the transfer of valid and existing water rights for the purposes of Kirtland Air Force Base.

9. On November 29, 1956, the United States of America owned a water supply system in and for Kirtland West consisting of two water wells whose respective locations and priorities were declared in the Office of the State Engineer, by a duly authorized representative of the United States on the 4th day of October, 1957, to be as follows:
RG-1579 NW1/4NW1/4, Sec. 35, T. 10 N., R. 3 E., Oct. 9, 1952
RG-1580 SE1/4NW1/4, Sec. 34, T. 10 N., R. 3 E., Mar. 6, 1956

10. In 1969, the United States of America drilled or caused to be drilled an additional well in and for the Kirtland West water supply system, designated in the records of the State Engineer as RG-1579 and RG-1580 Combined-S, which well was thereafter made a part of the Kirtland West water supply system as a supplemental well.

11. The United States of America owns, under the Constitution and laws of the State of New Mexico, the right to divert

STATE ENGINEER OFFICE
ALBUQUERQUE, NEW MEXICO
2015 JUL 10 PM 3:02

ALBUQUERQUE, N. MEX.
OFFICE
73 DEC 3 A8:27

the public underground waters of the Rio Grande Underground Water Basin by means of the three wells set out in paragraphs 9 and 10 above in an amount not to exceed an annual quantity of 1,898 acre-feet for the purposes of Kirtland Air Force Base. The defendants stipulate that the United States Air Force has no right to divert or use the underground waters of the Rio Grande Underground Water Basin for the purposes of Kirtland Air Force Base, except as set forth in this Stipulation, by means of the said three wells or otherwise, provided, however, that the United States of America shall enjoy the same right as any other appropriator of public water in the State of New Mexico to make application to the Plaintiff, State Engineer, hereafter for permit to drill and use supplemental well(s) (i.e., make partial or total change in point of diversion or place or purpose of use) or to effect the transfer of existing valid water rights for the purposes of Kirtland Air Force Base.

STATE ENGINEER OFFICE
ALBUQUERQUE, NEW MEXICO
2015 JUL 10 PM 3:02

12. The United States of America also owns the right under the Constitution and laws of the State of New Mexico to divert public underground waters of the Rio Grande Underground Water Basin in an amount not to exceed three acre-feet per year by and from each of the following three domestic wells located and existing within, and for the purposes of Kirtland Air Force Base:

Location	Priorities
RG-1578 SE1/4NW1/4, Sec. 35, T. 9 N., R. 4 E.	1945
RG-1590 SE1/4NW1/4, Sec. 35, T. 9 N., R. 4 E.	1945
RG-1591 NE1/4SE1/4, Sec. 24, T. 9 N., R. 4 E.	1948

13. The defendants stipulate that the United States Air Force will not after the entry of final judgment herein drill

73 DEC 3 AM 8:27

or cause or allow to be drilled any water well(s) within the boundaries of the Rio Grande Underground Water Basin, within and/or for the purposes of Kirtland Air Force Base (including Kirtland East and Kirtland West), except when and to the extent that it will have fully complied with the laws of the State of New Mexico and the Rules and Regulations of the State Engineer in respect to obtaining from the State Engineer permit(s) to drill water wells and/or produce public waters therefrom for any purpose.

14. The defendants stipulate that they will make on behalf of the United States accurate monthly reports to the Plaintiff, State Engineer, of the total metered quantities of underground water diverted by means of any and all of the wells composing the Kirtland East and Kirtland West water supply systems, provided, however, that the United States of America shall not be required to make application for, or obtain permit authorizing the physical combination of the two water supply systems so long as the total annual metered diversion from each system is within the respective limit established in paragraphs 8 and 11. The defendants further agree that they will, within 60 days of the date of entry of final judgment herein, file in the Office of the Plaintiff, State Engineer, on forms to be supplied by the Plaintiff, applications on behalf of the United States seeking the right to divert and use public underground waters of the Rio Grande Underground Water Basin by means of those two certain wells RG-1581 through RG-1589-S-2 and RG-1579 and RG-1580 Combined-S, within the respective limits set forth in paragraphs 8 and 11 above. The State of New Mexico agrees that together

2015 JUL 10 PM 3:02
STATE ENGINEER OFFICE
ALBUQUERQUE, NEW MEXICO

73 DEC 3 A8:27
NEW MEXICO

with the terms of judgment entered in this cause pursuant to this Stipulation, the said applications shall be administratively recognized as evidencing the right of the United States to use the said two wells within the terms of this Stipulation and the Order of the Court entered pursuant thereto, without any further requirement for advertisement or hearing.

PAUL L. BLOOM
Special Assistant Attorney General
State of New Mexico

s/ Victor Ortega
United States Attorney

STATE ENGINEER OFFICE
ALBUQUERQUE, NEW MEXICO
2015 JUL 10 PM 3:03

ALBUQUERQUE, N. MEX.
OFFICE
73 DEC 3 A8:27

STATE OF NEW MEXICO
OFFICE OF THE STATE ENGINEER

DISTRICT 1

TOM BLAINE, P.E.
NEW MEXICO STATE ENGINEER

5550 San Antonio Drive, N.E.
Albuquerque, NM 87109 (505) 383-4000

December 7, 2016

File No.: RG-1579

Kirtland Air Force Base
Attn: Wayne Bitner, Chief, Environmental Restoration
AFCEC/Kirtland AFB IST; Bldg 20685
2050 Wyoming Blvd, SE
Kirtland AFB, NM 87117-5270

RE: Permit No. RG-1579 POD319

Greetings,

Your copy of the above numbered permit, which has been approved subject to the conditions set forth on the approval page, is enclosed.

Please review the Conditions of Approval for any required submittals. If submittals are not made by the date(s) indicated in the conditions, your rights under this permit are subject to expiration unless a request for an Extension of Time is received in the District Office of the State Engineer by that date, and that Extension of Time is subsequently approved.

Appropriate forms can be downloaded from the OSE website at www.ose.state.nm.us/WR/forms.php or will be mailed to you upon request.

Sincerely,

Christopher Burrus
Water Resource Specialist
Albuquerque, OSE, District 1

C: CB/cb

1-55404
$50

File No. RG-1579 POD 3 19

NEW MEXICO OFFICE OF THE STATE ENGINEER

APPLICATION FOR PERMIT TO CHANGE AN EXISTING WATER RIGHT

(Non 72-12-1)

(check applicable boxes):

For fees, see State Engineer website: http://www.ose.state.nm.us/

☒ Change Purpose of Use ☒ Groundwater ☐ Surface Water ☒ Change Place of Use ☒ Groundwater ☐ Surface Water	☐ Change Point of Diversion (POD): From: ☐ Groundwater ☐ Surface Water To: ☐ Groundwater ☐ Surface Water	☒ Additional Groundwater Point of Diversion (POD) ☐ Additional Surface Water Point of Diversion (POD)
☐ Temporary Change, NMSA 1978, § 72-12-7(B) Requested Start Date: (Not to Exceed 3 ac-ft in One Year)		Requested End Date:
☐ Water Use Lease, NMSA 1978, §§ 72-6-1 to-7 Requested Start Date:		Requested End Date:

1. APPLICANT(S) (Required) Note: water-right owner must be listed as an applicant.

Name: Kirtland Air Force Base	Name: N/A
Contact or Agent: check here if Agent ☒ Wayne Bitner, Chief, Environmental Restoration	Contact or Agent: check here if Agent ☐ N/A
Mailing Address: AFCEC/Kirtland AFB IST; Bldg 20685; 2050 Wyoming Blvd SE	Mailing Address:
City: Kirtland AFB	City:
State: NM Zip Code: 87117-5270	State: Zip Code:
Phone: N/A ☐ Home ☐ Cell Phone (Work): 505-853-3484	Phone: ☐ Home ☐ Cell Phone (Work):
E-mail (optional): ludie.bitner@us.af.mil	E-mail (optional):

STATE ENGINEERS OFFICE ALBUQUERQUE, NEW MEXICO 2016 AUG 25 PM 3:55

2. CURRENT OSE FILE INFORMATION (Required)

OSE File No(s): RG-1579 through RG-1589	Priority Date (if known): March 1, 1949	Subfile/Cause No. (if applicable):

3. CURRENT PURPOSE OF USE AND AMOUNT OF WATER (Required)

☒ Domestic ☐ Livestock ☒ Irrigation ☒ Municipal ☒ Industrial ☐ Commercial ☒ Other Use (specify): Kirtland Air Force Base Describe a specific use If applicable (i.e. sand & gravel washing, dairy etc): _____	Amount of Water (acre-feet per annum): If more details are needed, type "See Comments" in "Other" field below, and explain in Additional Statements Section. Diversion: 323 (partial) Consumptive Use: up to 323 Other (include units): _____

FOR OSE INTERNAL USE

Application for Permit, Form wr-06, Rev 3/07/16

File No.: RG 1579	Trn. No.:	Receipt No.:
Trans Description (optional): POD 3 19		Sub-Basin:
PCW/LOG Due Date:	PBU Due Date:	

4. COUNTY WHERE WATER RIGHT IS CURRENTLY USED (Required)

Bernalillo

5. ADDITIONAL STATEMENTS CONCERNING THE CURRENT WATER RIGHT

Extraction well KAFB-106239 will be supplemental to existing wells described in OSE file No. RG-1579 through RG-1589. The application will not increase the allowable groundwater diversion described in RG-1579 through 1589, but seeks to make a change to the purpose of use to include pollution control, recovery, and irrigation and a change in point of diversion to include a location that is not currently described in RG-1579 through RG-1589.

6. CURRENT or MOVE-FROM POINT(S) OF DIVERSION (POD) (Required)

☐ **Surface POD** OR ■ **Ground Water POD (Well)**

Name of ditch, acequia, or spring: N/A

Stream or water course: N/A | Tributary of: N/A

If application proposes a new point of diversion involving a diversion dam, storage dam, main canal, and/or pipeline, complete Attachment 2. ☐ Check here if Attachment 2 is included in this application packet.

POD Location Required: Coordinate location must be reported in NM State Plane (NAD 83), UTM (NAD 83), or Latitude/Longitude (Lat/Long - WGS84).
District II (Roswell) & District VII (Cimarron) customers, provide a PLSS location in addition to above.

■ NM State Plane (NAD83) (Feet)
☐ NM West Zone
☐ NM East Zone
■ NM Central Zone

☐ UTM (NAD83) (Meters)
☐ Zone 12N
☐ Zone 13N

☐ Lat/Long (WGS84) (to the nearest 1/10th of second)

POD Number (if known):	X or Easting or Longitude:	Y or Northing or Latitude:	Provide if known: -Public Land Survey System (PLSS) (*Quarters or Halves , Section, Township, Range*) OR - Hydrographic Survey Map & Tract; OR - Lot, Block & Subdivision; OR - Land Grant Name
RG-1579 through RG-1589	–	–	See District Court Order dated Nov. 27, 1973 (attached)

STATE ENGINEERS OFFICE
2016 AUG 25 PM 3:55

NOTE: If more PODS need to be described, complete form WR-08 (Attachment 1 – POD Descriptions)
Additional point of diversion descriptions are attached: ■ Yes ☐ No **If yes, how many** 11

Point of Diversion is on Land Owned by: Kirtland Air Force Base

Other description relating point of diversion to common landmarks, streets, or other: See attached District Court Order dated November 27, 1973.

FOR OSE INTERNAL USE — Application for Permit, Form wr-06

File Number: RG-1579 POD319 | Trn Number:

7. CURRENT or MOVE-FROM PLACE(S) OF USE (Required)

The land is legally described by (check all that apply):

☐ Public Land Survey System (PLSS) (quarters, section, township, range)
☐ Irrigation or Conservation District Map
☐ Hydrographic Survey Report or Map
☐ Subdivision
☐ Grant

Complete the blocks below for all tracts of land (more than one description can be provided for a tract if available):

PLSS Quarters or Halves, **and/or** Name of Hydrographic Survey, **and/or** Name of Irrigation or Conservation District, **and/or** Name and County of Subdivision **and/or** Grant	PLSS Section **and/or** Map No. **and/or** Lot No.	PLSS Township **and/or** Tract No. (Please list each tract individually) **and/or** Block No.	PLSS Range	Acres	Priority
Kirtland Air Force Base					
			Total Acres:		

Other description relating place of use to common landmarks, streets, or other:

Place of use is on land owned by (required):
Kirtland Air Force Base

Are there other sources of water for these lands? No ■ Yes ☐ describe by OSE file number:

Note: If on Federal or State Land, please provide copy of lease.

STATE ENGINEERS OFFICE
ALBUQUERQUE, NEW MEXICO
2016 AUG 25 PM 3:55

FOR OSE INTERNAL USE

Application for Permit, Form wr-06

File Number: RG-1579 POD 319

Trn Number:

8. MOVE-TO PURPOSE OF USE AND AMOUNT OF WATER (Complete this section ONLY if the purpose of use is changing)

☐ Domestic ☐ Livestock ☒ Irrigation ☐ Municipal ☐ Industrial ☐ Commercial ☒ Other Use (specify): Pollution Control/Recovery Describe a specific use If applicable (i.e. sand & gravel washing, dairy etc): Groundwater remediation	Amount of Water (acre-feet per annum): If more details are needed, type "See Comments" in "Other" field below, and explain in Additional Statements Section. Diversion: 323 Consumptive Use: Up to 323 Other (include units):

9. MOVE-TO POINT(S) OF DIVERSION (POD) (Complete this section ONLY if adding or replacing a POD)

☐ Surface POD OR ☒ Ground Water POD (Well)

Name of ditch, acequia, or spring: N/A

Stream or water course: N/A | Tributary of: N/A

If application proposes a new point of diversion involving a diversion dam, storage dam, main canal, and/or pipeline, complete Attachment 2. ☐ Check here if Attachment 2 is included in this application packet.

POD Location Required: Coordinate location must be reported in NM State Plane (NAD 83), UTM (NAD 83), or Latitude/Longitude (Lat/Long - WGS84).
District II (Roswell) & District VII (Cimarron) customers, provide a PLSS location in addition to above.

☒ NM State Plane (NAD83) (Feet)
☐ NM West Zone
☐ NM East Zone
☒ NM Central Zone

☐ UTM (NAD83) (Meters)
☐ Zone 12N
☐ Zone 13N

☐ Lat/Long (WGS84) (to the nearest 1/10th of second)

POD Number (if known):	X or Easting or Longitude:	Y or Northing or Latitude:	Provide if known: -Public Land Survey System (PLSS) (*Quarters or Halves , Section, Township, Range*) OR - Hydrographic Survey Map & Tract; OR - Lot, Block & Subdivision; OR - Land Grant Name
KAFB-106239	1542707.9	1475412.0	

STATE ENGINEERS OFFICE
ALBUQUERQUE, NEW MEXICO
2016 AUG 25 PM 3:55

NOTE: If more PODS need to be described, complete form WR-08 (Attachment 1 – POD Descriptions)
Additional POD descriptions are attached: ☐ Yes ☒ No **If yes, how many**

Other description relating point(s) of diversion to common landmarks, streets, or other: East of San Pedro Dr. along southside of Ridgecrest Dr.

Point of Diversion is on Land Owned by: City of Albuquerque

Note: The following information is for wells only. If more than one (1) well needs to be described, provide attachment.

Approximate depth of well (feet): 575 | Outside diameter of well casing (inches): 8

Driller Name: To be determined | Driller License Number: To be determined

If replacing the current well, is the current well to be plugged? ☐ Yes ☐ No ☒ Not Applicable
If No, state for what use it is retained:

FOR OSE INTERNAL USE — Application for Permit, Form wr-06

File Number: RG-1579 POD3 19 | Trn Number:

10. MOVE-TO PLACE(S) OF USE (Complete this section ONLY if adding or changing a place of use)
List each individually

The land is legally described by (check all that apply):

☐ Public Land Survey System (PLSS) (quarters, section, township, range)
☐ Irrigation or Conservation District Map
☐ Hydrographic Survey Report or Map
☐ Subdivision
☐ Grant

Complete the blocks below for all tracts of land (more than one description can be provided for a tract if available):

PLSS Quarters or Halves, **and/or** Name of Hydrographic Survey, **and/or** Name of Irrigation or Conservation District, **and/or** Name and County of Subdivision **and/or** Grant	PLSS Section **and/or** Map No. **and/or** Lot No.	PLSS Township **and/or** Tract No. (Please list each tract individually) **and/or** Block No.	PLSS Range	Acres	Priority
No changes to place of use.					
			Total Acres:		

Other description relating place of use to common landmarks, streets, or other:

Place of use is on land owned by (required):
Kirtland Air Force Base

Are there other sources of water for these lands? No ■ Yes ☐ describe by OSE file number:

Note: If on Federal or State Land, please provide copy of lease.

STATE ENGINEERS OFFICE
ALBUQUERQUE, NEW MEXICO
2016 AUG 25 PM 3:55

FOR OSE INTERNAL USE — Application for Permit, Form wr-06

File Number: RG-1579 POD 3/9 | Trn Number:

11. ACEQUIA OR COMMUNITY DITCH REQUIREMENTS

☒ A. The water right is not within a Community Ditch or Acequia.

☐ B. The water right is within a Community Ditch or Acequia. **If you checked box B you must:**

1) Attach documentary evidence provided by commissioners of the Community Ditch or Acequia confirming applicant's compliance with any applicable requirement for the change adopted by the Community Ditch or Acequia **or**

2) Attach an affidavit from the commissioners of the Community Ditch or Acequia stating that no such requirement has been adopted by the relevant association bylaws.

This documentation is required pursuant to NMSA 1978 § 72-5-24.1.

12. ADDITIONAL STATEMENTS OR EXPLANATIONS

This application seeks to add a new point of diversion (KAFB-106239) for groundwater extraction supplemental to the Kirtland AFB water rights (OSE file no. RG-1579 through 1589). The application does not request to increase the allowable groundwater diversion described in RG-1579 through RG-1589, but seeks to change the purpose of use to pollution control, recovery, and irrigation and to add a new point of diversion that is not currently described in RG-1579 through RG1589.

KAFB-106239 will extract groundwater up to 323 acre feet per year (200 gallons per minute), for approximately 10 years. The extracted groundwater will be treated and discharged to the Golf Course Main Pond and Infiltration Galleries on Kirtland AFB, and/or injected back into the aquifer through KAFB-7 (OSE file no. RG-1587).

STATE ENGINEERS OFFICE
ALBUQUERQUE, NEW MEXICO
2016 AUG 25 PM 3:55

ACKNOWLEDGEMENT

I, We (name of applicant(s)), Eric H. Froehlich, COLONEL, USAF, 377 ABW COMMANDER
Print Name(s)

affirm that the foregoing statements are true to the best of (my, our) knowledge and belief.

Applicant Signature

Applicant Signature

ACTION OF THE STATE ENGINEER

This application is:

☑ approved ☐ ~~partially approved~~ ☐ ~~denied~~

provided it is not exercised to the detriment of any others having existing rights, and is not contrary to the conservation of water in New Mexico nor detrimental to the public welfare and further subject to the attached conditions of approval.

Witness my hand and seal this 7 day of December 20 16, for the State Engineer,

Tom Blaine, P.E.
State Engineer, State Engineer

By: Signature CHRISTOPHER BURRUS Print

Title: Water Resource Specialist Print

STATE ENGINEERS OFFICE
ALBUQUERQUE, NEW MEXICO
2016 AUG 25 PM 3:55

FOR OSE INTERNAL USE

Application for Permit, Form wr-06

File Number: RG-1579 POD3/9	Trn Number:

CONDITIONS OF APPROVAL

1. This application is approved as follows:

Permittee:	Kirtland Air Force Base
Permit No:	RG-1579 POD319
Application File Date:	August 25, 2016
Notice for Publication Issued:	September 14, 2016
Affidavit of Publication Filed:	October 6, 2016, The Albuquerque Journal published on September 18, 25, and October 2, 2016
Priority:	March 1, 1949 through March 6, 1956
Source:	Groundwater
Point of Diversion:	
RG-1579 POD319:	(KAFB-106239) Located at a point where X=1,542,707.9 feet and Y=1,475,412 feet, NAD 83, SPCS, Central Zone, on land owned by the City of Albuquerque, Bernalillo County, New Mexico.
Purpose of Use:	Pollution Control and Recovery
Place of Use:	SE ¼ SE ¼, Section 25, Township 10 North, Range 3 East, NMPM, Bernalillo County, New Mexico, and under permits RG-1579 through RG-1589 the applicant will discharge treated groundwater into the Tijeras Arroyo Golf Course main pond, infiltration galleries located adjacent to the golf course, and injection well, RG-1587, on land owned by Kirtland Air Force Base.

2. The total diversion of water from well RG-1579 POD319 under this permit shall not exceed 323 acre-feet per annum consumptive use.

3. The new well shall be drilled by a well driller licensed in the State of New Mexico, and a well record for new well RG-1579 POD319 shall be filed with the Office of the State Engineer within twenty (20) days of drilling the well.

4. Well RG-1579 POD319 shall be equipped with a totalizing meter of a type, at location(s) approved by, and installed in a manner acceptable to the State Engineer. Records of the amount of water pumped shall be submitted, in writing, to the District 1 Office of the State Engineer on or before the 10th day of each month. No water shall be diverted from any well unless equipped with a functional totalizing meter. The Permittee shall provide in writing the make, model, serial number, date of installation, initial reading, units, and dates of recalibration of each meter and any replacement meter.

5. The Permittee shall utilize the highest and best technology to ensure conservation of water to the maximum extent practical.

6. This Permit will expire on December 1, 2025.

7. The State Engineer retains jurisdiction over this permit.

8. Pursuant to Section 72-8-1 NMSA, the permittee shall allow the state engineer and his representative's entry upon private property for the performance of their respective duties, including access to the wells for meter readings and water level measurements.

Witness my hand and seal this 7 day of December, A.D., 2016

Tom Blaine, P.E.
NEW MEXICO STATE ENGINEER

By: _____

Christopher Burrus
Water Resource Specialist
District I
CB:cb
cc: WRAB

Application for Permit to Change an Existing Water Right

STATE ENGINEERS OFFICE
ALBUQUERQUE, NEW MEXICO
2016 AUG 25 PM 3:54

DEPARTMENT OF THE AIR FORCE
377TH AIR BASE WING (AFGSC)

Colonel Eric H. Froehlich
377 ABW/CC
2000 Wyoming Blvd SE
Kirtland AFB NM 87117-5000

AUG 2 4 2016

STATE ENGINEERS OFFICE
ALBUQUERQUE, NEW MEXICO
2016 AUG 25 PM 3:54

Office of the State Engineer
c/o Jeffery L. Peterson, Water Rights Division
5550 San Antonio Blvd NE
Albuquerque New Mexico 87109

Dear Mr. Peterson

Kirtland Air Force Base (AFB) is submitting herein one "Application for Permit to Change an Existing Water Right" with supporting documents for a proposed extraction well (KAFB-106239) to be located on City of Albuquerque property near the intersection of San Pedro Drive and Ridgecrest Drive. This application seeks to permit KAFB-106239 under existing Kirtland AFB water rights described under OSE file number RG-1579 through RG-1589. The application requests a change in purpose to include pollution control, recovery, and irrigation and addition of the supplemental point of diversion currently not described within OSE file number RG-1579 through RG-1589.

KAFB-106239 will be used for the extraction and treatment of contaminated groundwater at the Kirtland AFB Bulk Fuels Facility SWMUs ST-106 and SS-111. The extraction well will be constructed from 8-inch diameter galvanized and stainless steel. A 100-foot stainless steel wire-wrap screen will extend below the water table so that contaminated groundwater can be extracted from the shallow aquifer. Stainless steel centralizers shall be placed at the top, center, and bottom of the screen, and at 100 foot intervals along the casing. All casing sections will be joined with weld rings. The borehole annulus will be filled with a silica sand filter pack (#10-20), followed by bentonite and portland cement seals to near ground surface.

Extraction well KAFB-106239 will divert groundwater up to 323 acre feet per year for treatment and use. The extracted groundwater will be pumped through high-density polyethylene pipelines to the groundwater treatment system located just east of Louisiana Boulevard on Kirtland AFB property. The system will remediate dissolved phase ethylene dibromide and petroleum-related contaminants of concern to concentrations below the Environmental Protection Agency maximum contaminant levels and New Mexico Water Quality Control standards.

Treated water will be discharged to multiple locations on Kirtland AFB: The Golf Course Main Pond to irrigate the Tijeras Arroyo Golf Course or direct injection at KAFB-7 (OSE file number RG-1587).

Attached to the application are the pollution control and/or recovery plan summary, figures showing the proposed extraction well location and construction plan details, a narrative summary of the proposed well construction plan, and Kirtland AFB water right summary.

If you have any question or concerns, please contact Mr. Wayne Bitner at (505) 853-3484 or at ludie.bitner@us.af.mil.

Sincerely

ERIC H. FROEHLICH, Colonel, USAF
Commander

Attachment:
WR-06 Application for Permit to Change an Existing Water Right

cc:
NMED-EHD (Roberts, McQuillan)
NMED-HWB (Agnew)
NMED-GWQB (Hunter, Pullen)
EPA Region 6 (King, Ellinger)
AFCEC/CZ (Bodour, Bitner, Clark)
USACE-ABQ District Office (Simpler, Phaneuf, Dreeland; Sanchez; Salazar)
Public Info Repository, Administrative Record/Information Repository (AR/IR) and File

STATE ENGINEERS OFFICE
ALBUQUERQUE, NEW MEXICO
2016 AUG 25 PM 3:54

TABLE 1

POLLUTION CONTROL AND/OR RECOVERY PLAN SUMMARY, KAFB-106239

STATE ENGINEERS OFFICE
ALBUQUERQUE NEW MEXICO
2016 AUG 25 PM 3:55

Table 1. Pollution Control and/or Recovery Plan Summary, Extraction Well KAFB-106239

Item	Comments
Description of need	The New Mexico Environment Department has directed Kirtland AFB to implement Interim Measures to address the groundwater contamination. Extraction well KAFB-106239 will aid in the remediation of the contaminated groundwater.
Estimated maximum time for completion of operation	10 years
Annual diversion amount	Instantaneous flow rate of 200 gallons per minute equates to maximum diversion of 323 acre-feet per year
Annual consumptive use amount	Up to 323 acre-feet per year
Maximum amount of water to be diverted and injected for duration of operation	Maximum diversion is 323 acre-feet per year. No injection is planned for this location.
Method and place of discharge	Extracted groundwater will be treated and discharged to the Golf Course Main Pond or KAFB-7 (OSE-File number RG-1587).
Method of measurement of water produced and discharged	Extracted water will be metered at the point of diversion and at the point of discharge.
Source of water to be injected	Not applicable
Method of measurement of water injected	Not applicable
Characteristics of aquifer	Unconsolidated sand and gravel sediments of the Middle Rio Grande Basin aquifer. An average hydraulic conductivity value for the area is 63 feet/day.
Method of determining resulting annual consumptive use of water and depletion from any related steam system.	Not applicable.
Proof of any permit required from the New Mexico Environment Department.	Kirtland AFB is working with the New Mexico Environment Department Hazardous Waste Bureau and Groundwater Quality Bureau to identify necessary permits. Extraction well KAFB-106239 will be included under Discharge Permit (DP)-1839 when discharging to KAFB-7. NMED determined that there is no DP required for discharge to the Golf Course Main Pond.
An access agreement if the applicant is not owner of the land on which the pollution plume control or recovery well is to be located.	Kirtland AFB is currently updating the existing access agreements with the City of Albuquerque for KAFB-106239. Once updated, Kirtland AFB will submit the access agreements to the Office of the State Engineer.

STATE ENGINEERS OFFICE
ALBUQUERQUE, NEW MEXICO
2016 AUG 22 PM 3:55

FIGURE 1

LOCATION FOR EXTRACTION WELL KAFB-106239

STATE ENGINEERS OFFICE
ALBUQUERQUE, NEW MEXICO
2016 AUG 25 PM 3:55

Legend

- Proposed Extraction Well

N

0 50 100 200 300 400 Feet

1 in = 200 ft

KIRTLAND AIR FORCE BASE BULK FUELS FACILITY
KIRTLAND AIR FORCE BASE, NEW MEXICO

FIGURE 1

PROPOSED EXTRACTION WELL

P:\gis\Projects\Kirtland\Figures\NMOSE\Fig1_NMOSE07Mar2016.mxd 3/7/2016 EA ASpiller

STATE ENGINEERS OFFICE
ALBUQUERQUE, NEW MEXICO
2016 AUG 25 PM 3:55

FIGURE 2

EXTRACTION WELL CONSTRUCTION DIAGRAM

STATE ENGINEERS OFFICE
ALBUQUERQUE, NEW MEXICO
2016 AUG 25 PM 3:55

PROPOSED EXTRACTION WELL CONSTRUCTION - KAFB-106239

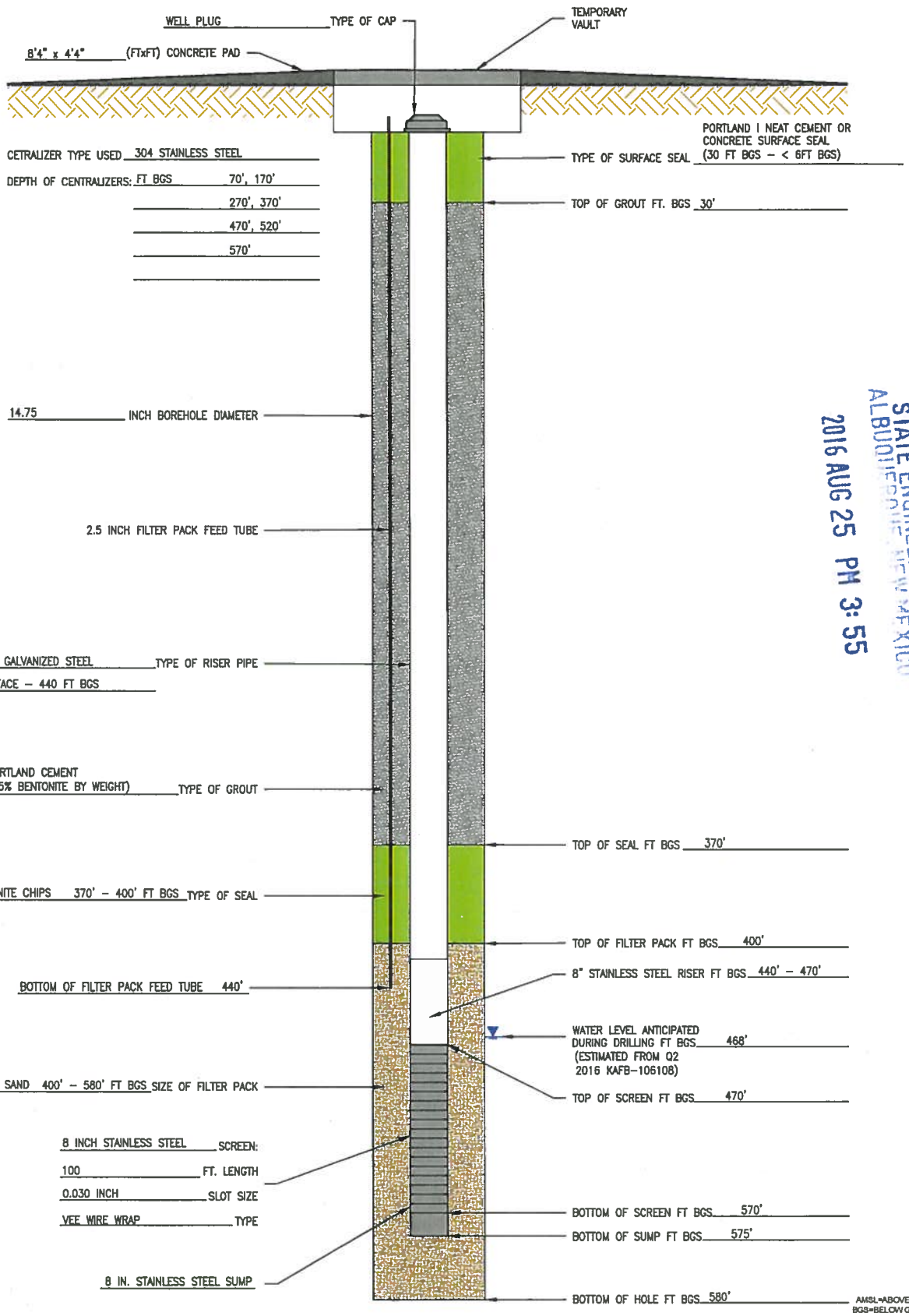

NOT TO SCALE
AMSL=ABOVE MEAN SEA LEVEL
BGS=BELOW GROUND SURFACE
FT=FEET

STATE ENGINEERS OFFICE
ALBUQUERQUE, NEW MEXICO
2016 AUG 25 PM 3:55

EA ENGINEERING, SCIENCE, AND TECHNOLOGY, INC., PBC
320 Gold Avenue, SW Suite 1300
Albuquerque, NM 87102
Phone: (505) 224-9013
Fax: (505) 224-9016

KIRTLAND AIR FORCE BASE		INSTALLATION START DATE/TIME:	INSTALLATION END DATE/TIME:
PROJECT NO.: 62599DM01	WELL ID: KAFB-106239 (EXTRACTION)	GEOLOGIST:	DRILLER:

FILE PATH: F:\FEDERAL\DOD\AFCEC\PROJECTS\62599DM01 - KIRTLAND BFT\CADD\FIGURES\EXTRACTION WELLS-NM\APRIL 2016\EXTRACTION WELL COMPLETION DIAGRAM-KAFB-106239.DWG [EXTRACTION WELL] MATHER, JASON 7/25/2016 10:29 AM

ATTACHMENT 1

WELL CONSTRUCTION PLAN

STATE ENGINEERS OFFICE
ALBUQUERQUE, NEW MEXICO
2016 AUG 25 PM 3:55

KIRTLAND AIR FORCE BASE BULK FUELS FACILITY SPILL

WELL CONSTRUCTION PLAN FOR KAFB-106239

Extraction well KAFB-106239 will be installed and developed in accordance with the NMED-approved *Work Plan for the Bulk Fuels Facility Expansion of the Dissolved-Phase Plume Groundwater Treatment System Design, Solid Waste Management Unit St-106/SS-111* (USACE 2016) with completion details provided in the attached Technical Memorandum dated 3 May 2016.

A 14.75-inch borehole will be advanced using mud rotary drilling methods to approximately 580 feet below ground surface (ft bgs) for construction of the extraction well. The 8-inch steel casing string will be composed of galvanized steel from ground surface to 440 ft bgs, then 304 Stainless steel from 440 to 470 ft bgs, followed by 304 Stainless steel wire wrap screen from 470 to 570 ft bgs, and finally 304 Stainless steel from 560 to 565 ft bgs.

Following placement of the well screen and riser pipe, the filter pack (silica sand) will be placed adjacent to the well screen. A bentonite chip and cement/bentonite grout will extend from the filter pack to near ground surface. Additional construction details are provided below.

- If the boring is over drilled beyond the bottom of the proposed sump elevation by more than 10 feet, the borehole will be backfilled with filter pack material to an elevation approximately 5 feet below the proposed bottom of sump elevation.
- The filter pack will be placed using a tremie pipe to avoid bridging and ensure a continuous filter pack throughout the screened interval of the well. The well may be gently surged to breakup bridging and ensure complete placement of the filter pack around the well screen.
- A 30 to 40-foot hydrated bentonite seal will be emplaced above the sand filter pack, incrementally hydrated with potable water.
- A high-solids bentonite grout will be emplaced by tremie pipe to within 30 feet of the surface, and a cement/bentonite grout will be emplaced to the ground surface.
- To the surface, a cement/bentonite grout mixture will be installed over the high-solids bentonite grout using a tremie pipe. The mixture will consist of 94 pounds of Portland cement to 7 gallons of approved water and 3 percent by weight of sodium bentonite powder.
- An approximate eight-foot by 4-foot by four-inch thick concrete surface pad shall be installed around the well immediately after the protective casing is installed. The surface pad shall be sloped so that drainage will be off the pad and away from the protective casing. In addition, a minimum of one inch of the finished pad shall be below grade or ground elevation to prevent washing and undermining by soil erosion.

STATE ENGINEERS OFFICE
ALBUQUERQUE, NEW MEXICO
2016 AUG 25 PM 4: 55

Final well construction details will be determined in the field based on observed conditions at this location.

References

USACE. 2016. *Work Plan for the Bulk Fuels Facility Expansion of the Dissolved-Phase Plume Groundwater Treatment System Design, Solid Waste Management Unit ST-106/SS-111.* Prepared by EA Engineering, Science, and Technology, Inc., PBC for USACE–Albuquerque District. 21 January.

EA Engineering, Science, & Technology, Inc., PBC
320 Gold Avenue SW, Suite 1300
Albuquerque, New Mexico 87102
Phone: (505) 224-9013

3 May 2016

Mr. Trent Simpler, PE
USACE Albuquerque District
4101 Jefferson Plaza NE
Albuquerque, NM 87109

STATE ENGINEERS OFFICE
ALBUQUERQUE, NEW MEXICO
2016 AUG 25 PM 3:55

RE: Design Memorandum for Filter Pack and Screen Extraction Well KAFB-106239
Bulk Fuels Facility Project, Albuquerque, New Mexico

Dear Mr. Simpler,

The proposed extraction well KAFB-106239 has been designed to meet the current and future needs of the Kirtland Bulk Fuels Facility (BFF) Pump and Treat (P&T) system. This Design Memorandum provides basis and specification of filter pack and slot size for KAFB-106239 to meet the performance objectives of the remedial design.

PROJECT OVERVIEW

Three groundwater extraction wells are currently pumping and providing system performance data at the BFF P&T system. A fourth well location has been determined by groundwater flow modeling to be necessary for plume containment and collapse. Current models of the Kirtland BFF Pump and Treat system indicate the process may take up to a decade to completely collapse the ethylene dibromide (EDB) plume. The proposed location of the extraction well KAFB-106239 has been selected by the BFF Project Modeling Working Group comprised of stakeholders from government and private industry. Changes in EDB concentration within the plume over time, or a change in pump and treat strategy may require a larger extraction volume than presently considered. This Design Memorandum provides basis and specification of filter pack and slot size for KAFB-106239 that allows a wide range of pumping rates to facilitate varying system operation to meet current and future project goals.

DESIGN CRITERIA

The filter pack and slot size for KAFB-106239 has been designed with the following goals:

- Provide a wide range of well yield based on formation capacity and well hydraulics to allow variation in pumping stresses and account for loss of well efficiency due to fouling between well maintenance;
- Provide low groundwater entrance velocity through the screen for efficient performance;
- Minimize or eliminate sediment pumping via proper filter sizing and low entrance velocities.

REFERENCES

Colorado Sand - Typical Specifications and Properties, retrieved from www.premiersilica.com on April 22, 2016.

Driscoll, F.G.. (1986). Groundwater and Wells 2nd Edition. St. Paul, Minnesota: Johnson Filtration Systems Inc. pg. 441-443, 451, 951.

Stainless Steel Well Screens and Accessories, Johnson Screens, pg. 8, retrieved from www.groundwatersupply.net on April 22, 2016.

The Engineering ToolBox. Sieve Size and Mesh Designation. Located retrieved from http://www.engineeringtoolbox.com/sieve-numbers-openings-d_1645.html on May 2, 2016.

FILTER PACK AND SCREEN DESIGN

Filter Pack Sizing

The filter pack was designed using the method described by Driscoll 1986. Grain size distribution curves from wells KAFB-106212 and KAFB-106229 were used to determine representative aquifer matrix grain size distribution. The grain-size distribution curves for the finest grained sediments in each borehole were utilized to determine the appropriate range of filter packs. Following Driscoll, the 70% retained (d_{70}) grain size (0.35 mm) was multiplied by a factor of 5 which is appropriate for uniform aquifers with a 40% retained sediment size 0.010 inches or less, which our formation grain sizes satisfy. For each grain size distribution curve, a parallel coarser filter pack curve representing a uniformity coefficient of approximately 2.5 was constructed through the d_{70} grain size multiplied by the factor of 5. The resultant filter pack d_{70} values are 1.85 and 1.75 mm, respectively, for the fine fraction in KAFB-106212 and KAFB-106229.

STATE ENGINEERS OFFICE
ALBUQUERQUE, NEW MEXICO
2016 AUG 25 PM 3:51

The uniformity coefficient is the ratio of the 60% finer by weight grain size to the 10% finer by weight grain sizes. The uniformity coefficient (CU):

$$CU = \frac{D60}{D10} \quad \text{Equation 1}$$

A line with CU approximately equal to 2.5 was constructed through the d_{70} values of 1.85 and 1.75 mm (Attachment 1). These curves represent the range of grain sizes in an ideal filter pack for the fine portion of aquifer. Based on the design filter pack curves in Attachment 1, the filter pack should be composed of grain sizes between 3.0 and 0.5 mm (equivalent to #7 to #32 sieve sizes [Attachment 2]). Using this criterion for filter pack, a range of screen slot sizes can be selected, including 10, 20, 30 and 40 slot.

Selecting Slot Screen Size

For design purposes, the extraction well KAFB-106239 will be constructed with 8 inch pipe size stainless steel vee-wire continuous wrap screen. The Johnson Screens "Free-Flow" 304 stainless steel screens technical information (Attachment 3) was used to estimate the transmitting capacity of a range of slot screen sizes. Casing strength of 1,000 foot maximum depth with a hanging weight of 20,800 pounds was used to resist collapse. The transmitting capacities for various slot sizes were calculated from the respective intake areas from Attachment 3 to determine the maximum production rate of the well. Transmitting Capacity was calculated as follows (Attachment 3):

$$\text{Transmitting Capacity}\left[\frac{gpm}{ft\ screen}\right] = \text{Intake Area } (IN^2/\text{Ft screen}) * 0.31 \left[\frac{gpm}{ft\ screen}\right] \quad \text{Equation 2}$$

The transmitting capacity for 80 feet of submerged 20, 30, and 40 slot screen were considered as shown in Table 1 The total screen length will be 100 feet with 10 feet unsubmerged and approximately 10 feet of drawdown in the well. Therefore, 80 feet of effective screen length was used in the design.

Table 1. Analysis of Well Yield for Various Slot Sizes

Slot Size	Open Area (in^2/ft)	Transmitting Capacity (gpm/ft)	Total Discharge (gpm)
20 (0.020 in)	39	12.1	968
30 (0.030 in)	55	17.0	1,360
40 (0.040 in)	70	21.7	1,736

Theoretical Maximum Well Yield

EA anticipates the operational well yield to be around 100 gpm; however, to accommodate future flow modification, a design flow rate of up to 300 gpm is considered appropriate. Moreover, the theoretical well yield in areas of high permeability (e.g., 200 ft/day) is much higher, on order of 94 gpm per foot of drawdown:

$$Specific\ Capacity = \frac{Q}{\Delta S} \approx T = K * b = 200\frac{ft}{day} * 90\,ft * 7.48\frac{gallons}{ft^3} * \frac{day}{1{,}440\,min} = 94\frac{gpm}{ft} \quad \text{Equation 3}$$

Q = well yield (ft^3/sec)
ΔS = drawdown in well (ft)
T = Transmissivity (ft^2/day and gpm/ft)
K = hydraulic conductivity (ft/day)
b = aquifer thickness (estimated as submerged screen length – 90 ft)

STATE ENGINEERS OFFICE
ALBUQUERQUE, NEW MEXICO
2016 AUG 25 PM 3:55

The empirical relationship between specific capacity and transmissivity is provided in Driscoll 1986:

$$T \cong 1500\,\frac{Q}{\Delta S} \quad \text{Equation 4}$$

In equation 4, Q is in gpm and T gallons per day per foot (gpd/ft) versus gpm/ft, but the relationship between T, Q and drawdown is demonstrated. Based on transmissivity and considerations discussed above, a 30-slot screen will meet all the design criteria and objectives listed above.

Entrance Velocity

The entrance velocity of the water flowing into the well was considered. It is customary to design wells with an entrance velocity of 0.1 feet per second or less (Attachment 3). Wells with entrance velocities greater than 0.1 feet per second have a greater tendency to entrain sediment, lower well efficiency, and attendant higher lifting costs. The entrance velocity ($V_{entrance}$) was calculated as:

$$V_{entrance} = \frac{Q\left(\frac{ft^3}{sec}\right)}{A\,(ft^2)} = \frac{300\ gpm}{(7.48\ \frac{gpm}{ft^3} * 60\ \frac{sec}{min})} * \frac{1}{\left(\frac{55}{144}\ \frac{ft^2}{ft} * 80\,ft\right)} = 0.022\ \frac{ft}{sec} \quad \text{Equation 4}$$

The 30 slot screen size will yield the maximum anticipated discharge of 300 gpm at 22 percent (0.022/0.1) of the Johnson Screen design entrance velocity of 0.1 ft/sec. The low entrance velocity will provide an efficient well and will further protect against sediment entrainment.

Selected Filter Pack

A 30 slot screen size has an opening size of 0.030 inches. The # 20 sieve has an opening of 0.0331 inches and the # 25 sieve size has an opening of 0.0278 inches. Using the Colorado Sand typical specifications and properties chart (Attachment 4), EA selected a filter pack with a retention rate greater than 90%. EA estimates than approximately half of all material passed by a #20 sieve but retained by a #25 sieve would pass through the screen. Therefore, the 10/20 mesh filter pack is expected to retain 97 to 98 percent of the filter pack.

Summary

In summary, a continuous vee-wire stainless steel 30 slot screen is selected with a 10/20 mesh filter pack. This design will achieve a wide range of flow rates at low to moderate entrance velocities, provide an efficient design, and mitigate or eliminate altogether sediment pumping.

If you have any questions or would need additional information, please do not hesitate to call me at (505) 400-7125.

STATE ENGINEERS OFFICE
ALBUQUERQUE NEW MEXICO
2016 AUG 25 PM 3:55

Sincerely,

Jay T. Snyder, PG, CHg, EI
Senior Hydrogeologist

CC: Devon Jercinovic, PMP. PG, Project Manager
Lee Becker P.E., Project Engineer

Attachments:
1 Filter Design
2 Sieve and Mesh Dimensions
3 Stainless Steel Well Screens and Accessories
4 Colorado Sand - Typical Specifications & Properties

ATTACHMENT 1

FILTER DESIGN

STATE ENGINEERS OFFICE
ALBUQUERQUE NEW MEXICO
2016 AUG 25 PM 3:55

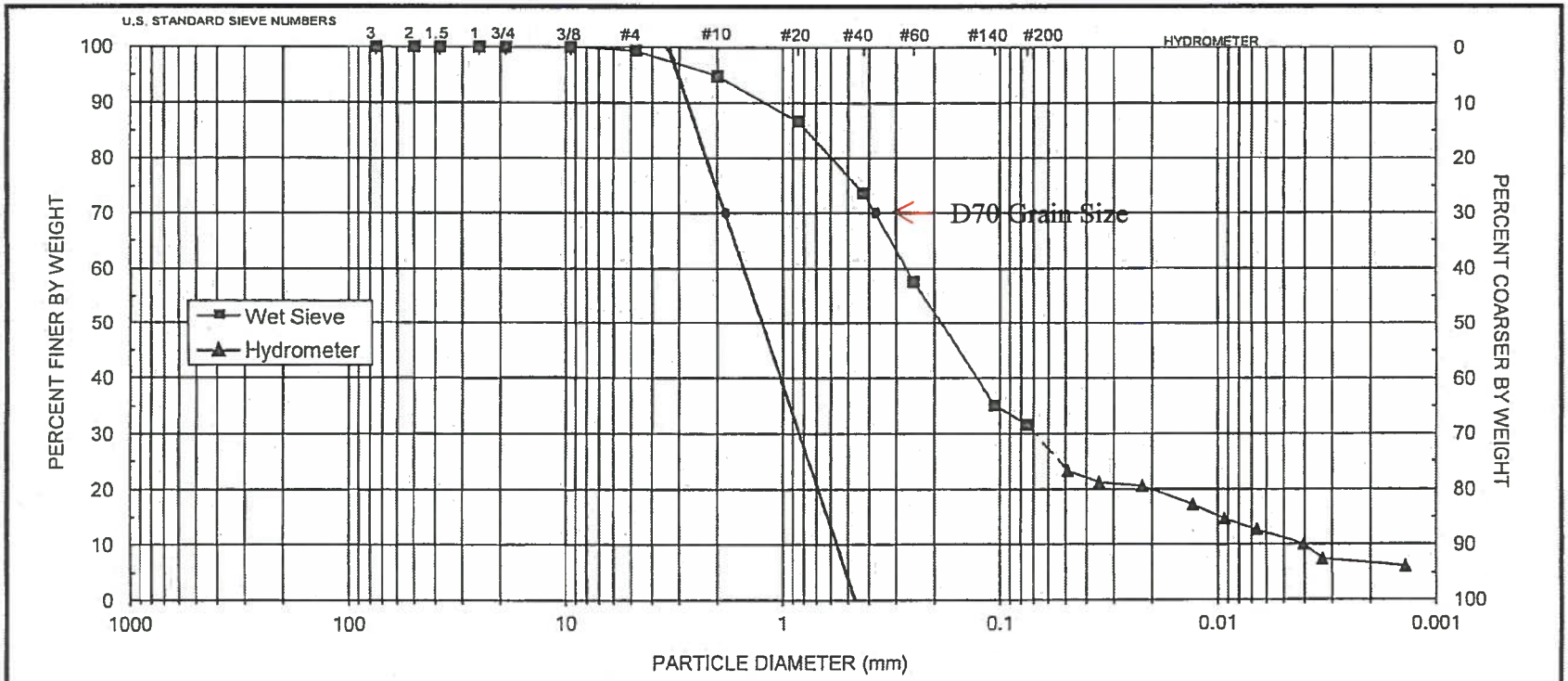

UNIFIED	COBBLES	GRAVEL		SAND			SILT OR CLAY				
		Coarse	Fine	Coarse	Medium	Fine					
USDA	COBBLES	GRAVEL		SAND				SILT	CLAY		
				Very coarse	Coarse	Medium	Fine	Very fine			

d_{10} = 0.0040	d_{30} = 0.069	d_{50} = 0.19	d_{60} = 0.27	C_u = 68	C_c = 4.4

SAMPLE NUMBER	CLIENT SAMPLE ID	ASTM CLASSIFICATION	USDA CLASSIFICATION
1502313-001B	KAFB106212-GEO-001	Classification by ASTM 2487 requires Atterberg test	Sandy Loam

2016 AUG 25 PM 3:55
STATE ENGINEERS OFFICE
ALBUQUERQUE, NEW MEXICO

1.) Multiply the D70 grain size by 5. 5 x 0.37 mm = 1.85 mm
2.) Draw curve with an uniformity coefficient of 2.5 through D70 = 1.85 mm.
3.) Determine minimum (0.46 mm) and maximum (3.1 mm) filter pack grain sizes.

GRAIN SIZE DISTRIBUTION

ASTM D422

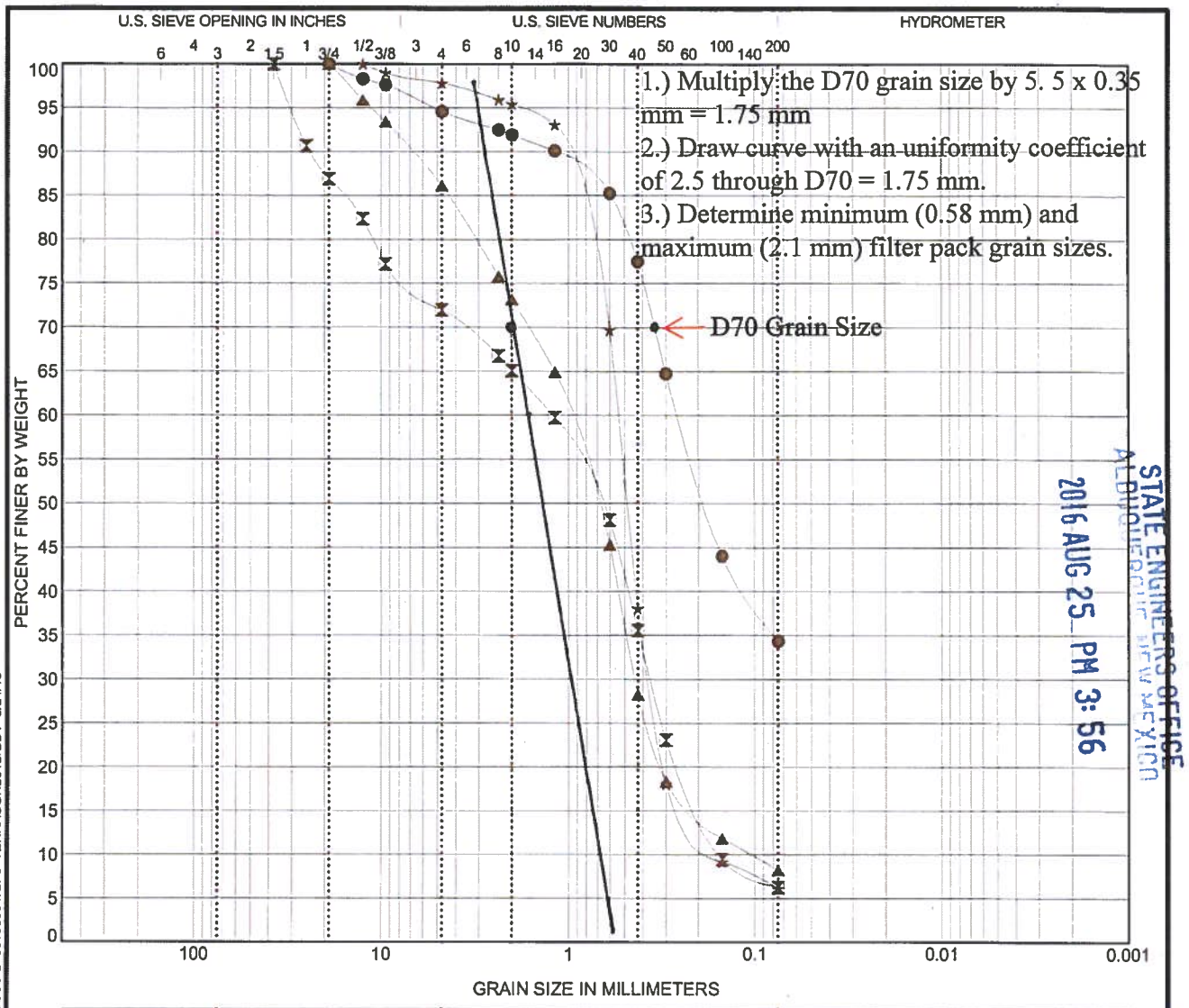

STATE ENGINEERS OFFICE
ALBUQUERQUE, NEW MEXICO
2016 AUG 25 PM 3:56

COBBLES	GRAVEL		SAND			SILT OR CLAY
	coarse	fine	coarse	medium	fine	

	Boring ID	Depth	USCS Classification	LL	PL	PI	Cc	Cu
●	106229 - 452 to 454	0	SILTY SAND(SM)	NP	NP	NP		
⧗	106229 - 465 to 470	0	POORLY GRADED SAND with SILT and GRAVEL(SP-SM)	NP	NP	NP	0.71	7.84
▲	106229 - 490 to 495	0	WELL-GRADED SAND with SILT(SW-SM)	NP	NP	NP	1.85	9.46
★	106229 - 517 to 525	0	POORLY GRADED SAND with SILT(SP-SM)	NP	NP	NP	1.58	3.38

	Boring ID	Depth	D_{100}	D_{60}	D_{30}	D_{10}	%Gravel	%Sand	%Fines
●	106229 - 452 to 454	0	19	0.256			5.4	60.2	34.4
⧗	106229 - 465 to 470	0	37.5	1.209	0.364	0.154	28.0	65.7	6.3
▲	106229 - 490 to 495	0	19	0.995	0.44	0.105	13.9	77.9	8.2
★	106229 - 517 to 525	0	12.5	0.54	0.369	0.16	2.2	91.7	6.2

PROJECT: KAFB Nov Response -Geotech Lab Testing

SITE: KAFB
Albuquerque, NM

Terracon
4905 Hawkins, NE
Albuquerque, New Mexico

PROJECT NUMBER: 66155064

CLIENT: CB&I Federal Services
Albuquerque, NM

EXHIBIT: B-1

LABORATORY TESTS ARE NOT VALID IF SEPARATED FROM ORIGINAL REPORT. GRAIN SIZE: USCS-2 66155064.GPJ TERRACON2012.GDT 8/24/15

STATE ENGINEERS OFFICE
ALBUQUERQUE NEW MEXICO
2016 AUG 25 PM 3:56

ATTACHMENT 2

SIEVE AND MESH DIMENSIONS

Attachment 2. Sieve and Mesh Dimensions from The Engneering ToolBox

Commonly used US Standard commercial sieve and mesh dimensions:

Sieve size	Opening		Standard Mesh
(mm)	*(in)*	*(10^{-6} m)*	*US*
11.2	0.438	11200	7/16"
6.35	0.250	6350	1/4"
5.6	0.223		3.5
4.75	0.187		4
4.0	0.157		5
3.35	0.132		6
2.80	0.110		7
2.36	0.0937		8
2.0	0.0787		10
1.7	0.0661		12
1.4	0.0555		14
1.18	0.0469		16
1.0	0.0394		18
0.841	0.0331	841	20
0.71	0.0278		25
0.595	0.0232	595	30
0.50	0.0197		35
0.400	0.0165	400	40
0.355	0.0139		45
0.30	0.0117		50
0.250	0.0098	250	60
0.210	0.0083	210	70
0.177	0.0070	177	80
0.149	0.0059	149	100
0.125	0.0049	125	120
0.105	0.0041	105	140
0.088	0.0035	88	170
0.074	0.0029	74	200
0.063	0.0024	63	230
0.053	0.0021	53	270
0.044	0.0017	44	325
0.037	0.0015	37	400
0.025	0.0010		500
0.020	0.0008		632

STATE ENGINEERS OFFICE
ALBUQUERQUE, NEW MEXICO
2016 AUG 25 PM 3:56

STATE ENGINEERS OFFICE
ALBUQUERQUE, NEW MEXICO
2016 AUG 25 PM 3:56

ATTACHMENT 3

STAINLESS STEEL WELL SCREENS AND ACCESSORIES

TECHNICAL INFORMATION: JOHNSON SCREENS® FREE-FLOW® 304 STAINLESS STEEL SCREENS

JOHNSON SCREENS LARGE DIAMETER *FREE-FLOW* SCREENS: SIZES 6P - 16T

Size In.	Max Depth: ft	OD: In.	ID: In.	Weight[1]: lbs/ft	Recom. Hang Weight[2]: lbs	Collapse Strength[1]: PSI	Intake Area[3] - In²/ft of Screen							
							Screen Slot Size in Thousandths of an Inch							
							10	20	30	40	50	60	80	100
6" P	100	6.5	6.0	4.4	4,300	87	35	61	82	98	111	123	140	153
	250	6.6	6.0	4.8	4,300	194	20	37	51	64	75	85	102	115
	600	6.7	5.9	6.0	8,800	185	20	37	52	65	76	86	103	117
	1,000	6.8	5.9	7.6	8,800	677	16	30	43	54	64	73	89	103
8" T	250	7.6	6.7	7.0	11,000	127	23	42	59	73	86	98	117	133
	1,000	7.7	6.7	8.9	11,000	468	18	34	48	61	73	83	101	116
8" P	250	8.7	7.9	7.9	12,100	85	26	48	67	84	99	112	134	152
	1,000	8.8	7.9	10.1	20,800	314	21	39	55	70	83	95	115	133
10" T	250	9.5	8.6	8.3	12,100	65	28	53	74	92	108	122	146	166
	1,000	9.6	8.6	10.7	12,100	242	23	43	60	76	90	103	126	145
10" P	600	10.8	9.8	12.6	15,400	170	25	48	68	86	102	116	142	163
	1,000	10.8	9.8	17.8	15,400	226	25	48	68	86	102	116	142	163
12" T	600	11.4	10.4	13.6	17,600	145	27	51	72	90	107	123	149	173
	1,000	11.4	10.4	19.0	17,600	192	27	51	72	90	107	123	149	173
12" P	250	12.8	11.8	14.8	17,600	103	30	57	80	102	121	138	168	193
	600	12.8	11.8	20.9	17,600	136	30	57	80	102	121	138	168	193
	1,000	12.9	11.8	25.2	17,600	193	29	55	78	98	117	134	163	188
14" T	250	12.6	11.6	13.6	14,300	108	30	56	79	100	119	136	165	190
	600	12.6	11.6	19.6	14,300	143	30	56	79	100	119	136	165	190
	1,000	12.6	11.6	24.0	14,300	207	28	53	76	96	114	131	160	184
14" P / 16" T	250	14.1	13.1	15.5	17,100	77	33	63	89	112	133	152	185	213
	600	14.1	13.1	22.2	17,100	102	33	63	89	112	133	152	185	213
	1,000	14.1	13.1	27.2	17,100	148	32	60	85	107	128	146	179	206

NOTES:

- Screens are available in up to 40 foot lengths of continuously wrapped screen with no mid-weld
- 316 stainless steel screen technical information is available upon request
- P - pipe size, T - telescope

1. Based on 0.030 In. slot size (collapse values contain no safety factor)
2. Recommended hang weight is 50 percent of the calculated tensile strength
3. Transmitting capacity in gpm/ft of screen = open area x 0.31

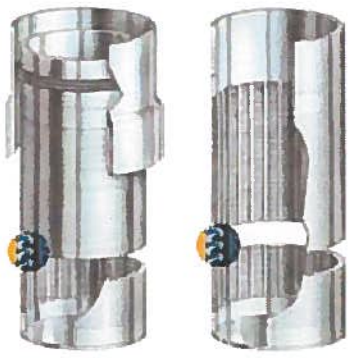

Telescope size screens (left) install through the casing and usually have a Figure K packer as upper fitting. Pipe size screens (right) usually have weld rings at each end and attach directly to the casing.

STATE ENGINEERS OFFICE
2016 AUG 25 PM 3:56

ATTACHMENT 4

COLORADO SAND - TYPICAL SPECIFICATIONS & PROPERTIES

STATE ENGINEERS OFFICE
ALBUQUERQUE, NEW MEXICO
2016 AUG 25 PM 3:56

Attachment 4. Grain Size Distribution for Various Colorado Silica Sand products

Colorado Sand - Typical Specifications & Properties

	Sieves																					
Products	5	6	7	8	10	12	14	16	18	20	25	30	35	40	45	50	60	70	100	140	200	Pan
6/9	0-5	0-5	10-20	49-59	10-25	0-3																0-1
8/12		0-1		0-5	20-40	32-42	0-10	0-1														0-1
8/16				0-5	15-30	30-50	15-30	5-15	0-5													0-1
10/16				0-1	0-5	25-50	15-50	10-20	0-1													0-1
10/20				0-1	0-5	3-18	30-40	30-45	10-25	0-5	0-1											0-1
12/20					0-1	5-15	30-50	20-40	10-20	0-5	0-1											0-1
16/30							0-1	0-5	25-45	23-33	15-20	5-15	0-5									0-1
20/40								0-1		0-1	0-10	28-57	30-40	15-27	5-10							0-1
30/70											0-1	0-5		5-20		40-70	10-30	5-10	0-10			0-1
100 Mesh														15-40		5-15	10-20	5-10	10-20	0-10	0-5	0-1
Traction Sand												50-70		0-40		0-30	5-20	5-15	5-10			0-1

Retrieved from www.premiersilica.com on April 22, 2016

2016 AUG 25 PM 3:56
STATE ENGINEERS OFFICE
ALBUQUERQUE, NEW MEXICO

STATE ENGINEERS OFFICE
ALBUQUERQUE, NEW MEXICO
2016 AUG 25 PM 3:56

ATTACHMENT 2

KAFB WATER RIGHTS

IN THE UNITED STATES DISTRICT COURT

DISTRICT OF NEW MEXICO

STATE OF NEW MEXICO, ex rel, S. E. REYNOLDS, State Engineer.	)
Plaintiff	)
vs.	)
JOHN McLUCAS, Secretary of the Air Force, THOMAS W. MORGAN, Commander, Air Force Special Weapons Center, and JAMES B. MYERS, Base Commander, Kirtland Air Force Base	)
Defendants.	)

73 DEC 3 A 8:26
ALBUQUERQUE, N. MEX.
OFFICE
ORIGINAL
FILED IN MY OFFICE
NOV 27 1973
L. G. KARALY
CLERK
STATE ENGINEER OFFICE
ALBUQUERQUE, NEW MEXICO
2016 AUG 25 PM 3:56
2016 JUL 10 PM 3:02

JUDGMENT AND ORDER

THIS MATTER coming on to be heard upon the Stipulation of the parties, and the Court having considered the same and being otherwise fully advised in the premises, finds that the Court has jurisdiction of the parties and the subject matter and that the said Stipulation should be approved and incorporated in the final judgment of this Court.

IT IS THEREFORE ORDERED, ADJUDGED AND DECREED that the Stipulation of the parties is hereby approved and incorporated in this judgment as if set out in full herein.

IT IS FURTHER ORDERED that the defendants, their employees, agents, assigns and successors in interest be and they are hereby permanently enjoined and restrained from any diversion and/or use of water from the Rio Grande Underground Water BAsin in and for Kirtland Air Force BAse except in strict conformity with this final judgment.

HOWARD BRATTON

JUDGE OF THE U. S. DISTRICT COURT

J. general;
FLS
J Baird

IN THE UNITED STATES DISTRICT COURT

DISTRICT OF NEW MEXICO

STATE OF NEW MEXICO, ex rel, S. E. REYNOLDS, State Engineer,

Plaintiff

vs.

JOHN McLUCAS, Secretary of the Air Force, THOMAS W. MORGAN, Commander, Air Force Special Weapons Center, and JAMES B. MYERS, Base Commander, Kirtland Air Force Base

Defendants.

73 DEC 3 A 8:
ALBUQUERQUE, N.M.
ORIGINAL FILED IN MY OFFICE
NOV 27 1973
L. G. KANALY
CLERK

STIPULATION

COME NOW the Plaintiff and Defendants herein, by and through their attorneys, and hereby mutually stipulate and agree that final judgment may enter in this cause in the following terms:

1. The United States of America, acting through and by means of the United States Air Force, owns and operates that certain complex of military facilities known as Kirtland Air Force Base within Bernalillo County, New Mexico, which Base includes the former Sandia Base, a Military installation heretofore operated by the United States Army. That area heretofore known as Sandia Base shall be designated in this stipulation as Kirtland East and that area known as Kirtland Air Force Base prior to the merger of the two installations shall be designated as Kirtland West.

2. On November 29, 1956, the Plaintiff, S. E. Reynolds, State Engineer, duly and lawfully declared the Rio Grande Underground Water Basin, an underground reservoir of public waters of the State of New Mexico having reasonably ascertainable boundaries.

STATE ENGINEERS OFFICE
ALBUQUERQUE, NEW MEXICO
2016 AUG 25 PM 3:56

STATE ENGINEER OFFICE
ALBUQUERQUE, NEW MEXICO
2015 JUL 10 PM 3:02

3. All of Kirtland East and Kirtland West were, on November 29, 1956, and have continued to the present time to be within the exterior boundaries of the said Rio Grande Underground Water Basin.

4. On November 29, 1956, the United States of America owned within Kirtland East a water supply system consisting of 9 completed and operating wells, together with associated water storage and delivery works, and had prior to that date diverted and used underground waters of the Rio Grande Underground Water Basin by means of each and every of the said 9 wells for the lawful purposes of the said military installation.

5. The said nine wells in the Kirtland East water supply system were duly declared by an authorized representative of the United States of America in the office of the Plaintiff on the 4th day of October, 1957, and have been since that date designated in the files of the State Engineer as wells No. RG-1581 through RG-1589. The respective locations and priorities of the said 9 wells, as declared by the United States of America, are as follows:

RG-1581 NW1/4SE1/4, Sec. 31 T. 10 N., R. 4 E. March 1, 1949

RG-1582 NW1/4NW1/4, Sec. 1 T. 9 N., R. 3 E. August, 1949

RG-1583 NW1/4SW1/4, Sec. 30, T. 10 N., R. 4 E. August, 1949

RG-1584 NE1/4SW1/4, Sec. 6, T. 9 N., R. 4 E. August, 1949

RG-1585 NE1/4SW1/4, Sec. 29, T. 10 N., R. 4 E. July, 1952

RG-1586 SW1/4SE1/4, Sec. 32, T. 10 N., R. 4 E. July, 1952

RG-1587 NW1/4NW1/4, Sec. 6, T. 9 N., R. 4 E. Feb., 1955

RG-1588 SW1/4SW1/4, Sec. 5, T. 9 N., R. 4 E. Feb., 1955

RG-1589 SW1/4SW1/4, Sec. 15, T. 9 N., R. 4 E. Feb., 1949

STATE ENGINEERS OFFICE
ALBUQUERQUE, NEW MEXICO
2016 AUG 25 PM 3:56

STATE ENGINEERS OFFICE
ALBUQUERQUE, NEW MEXICO
2015 JUL 10 PM 3:02

73 DEC 3 A8:27

6. Between November 1, 1958, and May 27, 1959, the United States of America drilled or caused to be drilled, in the NW1/4NE1/4 of Sec. 20, T. 9 N., R. 4 E., an additional water well which was thereafter made a part of the water supply system of Kirtland East. This well is designated in the files of the State Engineer as RG-1581 through RG-1589-S. By means of the said well, the United States of America has thereafter continually diverted and beneficially used public underground waters of the Rio Grande Underground Water Basin, as a supplemental point of diversion in and for Kirtland East.

7. In 1972, the United States of America drilled or caused to be drilled an additional water well within Kirtland East in the NW1/4NE1/4 of Sec. 4, T. 9 N., R. 4 E., which well has been completed except for the installation of a pump and has not yet been put to beneficial use, and which is hereby designated RG-1581 through RG-1589-S-2. The said well was drilled for the purpose of serving as a supplemental well for the water supply system of Kirtland East

8. The United States of America owns, under the Constitution and laws of the State of New Mexico, the right to divert the public underground waters of the Rio Grande Underground Water Basin, through and by means of the said eleven wells set forth in paragraphs 5, 6 and 7, in an amount not to exceed an annual quantity of four thousand five hundred (4,500) acre-feet, and to apply the same to beneficial use for the purposes of Kirtland Air Force Base. The priorities of the said eleven wells composing the water supply system of Kirtland East are as set forth

STATE ENGINEERS OFFICE
ALBUQUERQUE, NEW MEXICO
2016 AUG 25 PM 3:56

STATE ENGINEER OFFICE
ALBUQUERQUE, NEW MEXICO
2015 JUL 10 PM 3:02

73 DEC 3 A8:27

above in paragraphs 5, 6 and 7. The defendants stipulate that the United States Air Force has no right to divert any of the underground waters of the Rio Grande Underground Water Basin, by means of the said 11 wells or otherwise, for the purposes of Kirtland Air Force Base, except as set forth in this Stipulation, provided, however, that the United States shall enjoy the same right as any other appropriator in the State of New Mexico to make application hereafter to the Plaintiff, State Engineer, for permit to drill supplemental well(s) (i.e., make partial or total change in point of diversion or place or purpose of use) or to effect the transfer of valid and existing water rights for the purposes of Kirtland Air Force Base.

9. On November 29, 1956, the United States of America owned a water supply system in and for Kirtland West consisting of two water wells whose respective locations and priorities were declared in the Office of the State Engineer, by a duly authorized representative of the United States on the 4th day of October, 1957, to be as follows:

RG-1579 NW1/4NW1/4, Sec. 35, T. 10 N., R. 3 E., Oct. 9, 1952

RG-1580 SE1/4NW1/4, Sec. 34, T. 10 N., R. 3 E., Mar. 6, 1956

10. In 1969, the United States of America drilled or caused to be drilled an additional well in and for the Kirtland West water supply system, designated in the records of the State Engineer as RG-1579 and RG-1580 Combined-S, which well was thereafter made a part of the Kirtland West water supply system as a supplemental well.

11. The United States of America owns, under the Constitution and laws of the State of New Mexico, the right to divert

STATE ENGINEERS OFFICE
ALBUQUERQUE NEW MEXICO
2016 AUG 25 PM 3:56

STATE ENGINEER OFFICE
ALBUQUERQUE NEW MEXICO
2015 JUL 10 PM 3:02

ALBUQUERQUE, N. MEX.
OFFICE

73 DEC 3 A8:27

the public underground waters of the Rio Grande Underground Water Basin by means of the three wells set out in paragraphs 9 and 10 above in an amount not to exceed an annual quantity of 1,898 acre-feet for the purposes of Kirtland Air Force Base. The defendants stipulate that the United States Air Force has no right to divert or use the underground waters of the Rio Grande Underground Water Basin for the purposes of Kirtland Air Force Base, except as set forth in this Stipulation, by means of the said three wells or otherwise, provided, however, that the United States of America shall enjoy the same right as any other appropriator of public water in the State of New Mexico to make application to the Plaintiff, State Engineer, hereafter for permit to drill and use supplemental well(s) (i.e., make partial or total change in point of diversion or place or purpose of use) or to effect the transfer of existing valid water rights for the purposes of Kirtland Air Force Base.

STATE ENGINEERS OFFICE
ALBUQUERQUE, NEW MEXICO
2016 AUG 25 PM 3:56

STATE ENGINEER OFFICE
ALBUQUERQUE, NEW MEXICO
2015 JUL 10 PM 3:02

12. The United States of America also owns the right under the Constitution and laws of the State of New Mexico to divert public underground waters of the Rio Grande Underground Water Basin in an amount not to exceed three acre-feet per year by and from each of the following three domestic wells located and existing within, and for the purposes of Kirtland Air Force Base:

Location	Priorities
RG-1578 SE1/4NW1/4, Sec. 35, T. 9 N., R. 4 E.	1945
RG-1590 SE1/4NW1/4, Sec. 35, T. 9 N., R. 4 E.	1945
RG-1591 NE1/4SE1/4, Sec. 24, T. 9 N., R. 4 E.	1948

13. The defendants stipulate that the United States Air Force will not after the entry of final judgment herein drill

73 DEC 3 AM 8:27

or cause or allow to be drilled any water well(s) within the boundaries of the Rio Grande Underground Water Basin, within and/or for the purposes of Kirtland Air Force Base (including Kirtland East and Kirtland West), except when and to the extent that it will have fully complied with the laws of the State of New Mexico and the Rules and Regulations of the State Engineer in respect to obtaining from the State Engineer permit(s) to drill water wells and/or produce public waters therefrom for any purpose.

14. The defendants stipulate that they will make on behalf of the United States accurate monthly reports to the Plaintiff, State Engineer, of the total metered quantities of underground water diverted by means of any and all of the wells composing the Kirtland East and Kirtland West water supply systems, provided, however, that the United States of America shall not be required to make application for, or obtain permit authorizing the physical combination of the two water supply systems so long as the total annual metered diversion from each system is within the respective limit established in paragraphs 8 and 11. The defendants further agree that they will, within 60 days of the date of entry of final judgment herein, file in the Office of the Plaintiff, State Engineer, on forms to be supplied by the Plaintiff, applications on behalf of the United States seeking the right to divert and use public underground waters of the Rio Grande Underground Water Basin by means of those two certain wells RG-1581 through RG-1589-S-2 and RG-1579 and RG-1580 Combined-S, within the respective limits set forth in paragraphs 8 and 11 above. The State of New Mexico agrees that together

STATE ENGINEERS OFFICE
ALBUQUERQUE, NEW MEXICO
2016 AUG 25 PM 3:56

STATE ENGINEER OFFICE
ALBUQUERQUE, NEW MEXICO
2015 JUL 10 PM 3:02

73 DEC 3 AM 8:27

with the terms of judgment entered in this cause pursuant to this Stipulation, the said applications shall be administratively recognized as evidencing the right of the United States to use the said two wells within the terms of this Stipulation and the Order of the Court entered pursuant thereto, without any further requirement for advertisement or hearing.

PAUL L. BLOOM
Special Assistant Attorney General
State of New Mexico

s/ Victor Ortega
United States Attorney

STATE ENGINEER OFFICE
ALBUQUERQUE, NEW MEXICO
2015 JUL 10 PM 3:03

STATE ENGINEER OFFICE
ALBUQUERQUE, NEW MEXICO
2016 AUG 25 PM 3:56

ALBUQUERQUE, N. MEX.
73 DEC 3 A8:27

APPENDIX A-2

Access Agreements

RIGHT OF ENTRY AGREEMENTS

CHRIST UNITED METHODIST CHURCH

LICENSE

TO

KIRTLAND AIR FORCE BASE

CHRIST UNITED METHODIST CHURCH, INC., a New Mexico nonprofit corporation, hereinafter referred to as the "LICENSOR," as owner of the property located at 6200 Gibson Boulevard, S.E., Albuquerque, NM 87108, hereby grants to the Secretary of the Air Force, by and through the Installation Commander, Kirtland Air Force Base (AFB), Albuquerque, New Mexico, hereinafter referred to as the 'LICENSEE," or his authorized representative, a License upon the following terms and conditions:

1. The LICENSOR hereby grants unto the LICENSEE a no-rent license to enter upon the LICENSOR's real property located at 6200 Gibson Boulevard, S.E., Albuquerque, Bernalillo County, New Mexico, which real property is also known as :

> Tract C, as shown on the Replat of Tracts B, C, D and E, Siesta Hills No. 2, recorded November 25, 1980 in Book B18, Page 84, records of Bernalillo County, New Mexico,

as more specifically identified on the general location map, attached hereto and incorporated herein as Attachment A, for the express purpose of:

> 1) constructing, drilling, installing, operating, maintaining and removing one (1) bulk fuels facility (BFF) interim fuel remediation extraction well, extraction well pipeline and associated electrical power lines, pole, transformer and junction boxes; 2) depending upon the depth of the ethylene-di-bromide plume, constructing, drilling, installing, operating, maintaining and removing no more than two (2) BFF regional deep monitoring wells; and 3) parking well drilling and construction equipment, to include a fork lift, water truck, other miscellaneous work pickups, hopper, lined waste roll-off bin and daily construction supplies, to include well casing; and 4) collecting ground water monitoring samples from the regional deep monitoring well and extracting and pumping ethylene-di-bromide contaminated groundwater through the extraction well pipeline to Kirtland AFB for treatment during the term of the Kirtland AFB BFF fuel release remediation; in that area of the LICENSOR's west parking lot located immediately adjacent to the city alley right-of-way at the south boundary of the parking lot, as shown on the aerial photograph attached hereto and incorporated herein as Attachment B.

2. The term of this license is five (5) years, beginning on January 9, 2015 and ending January 8, 2020.

3. The LICENSEE, its officers, employees, agents, representatives, contractors, and assigns, shall use the area described above, and as shown in Attachments A and B, for the purposes described above and not for any other purpose without first obtaining the written consent of the LICENSOR. The LICENSEE, its officers, employees, agents, representatives, contractors, and assigns shall comply with the following additional LICENSOR use restrictions:

3.1. LICENSEE shall conduct no activities on LICENSOR's property on any Saturday or Sunday during the term of this License;

3.2. LICENSEE shall remove the basketball board standard from the west parking lot and reinstall it at a location on the parcel to be specified by the LICENSOR;

3.3. LICENSEE shall provide for city waste disposal truck access to the LICENSOR's trash dumpster located at the SE corner of the west parking lot to facilitate waste collection and disposal;

3.4 LICENSEE shall provide access to the west door of the Church through the west parking lot for Food Band truck deliveries on the first Tuesday of each month;

3.5. LICENSEE shall provide access to the west door of the Church through the west parking lot to LICENSOR's contractor(s) for the construction and installation of an ADA compliant wheelchair ramp; and

3.6. LICENSEE shall provide day and night access to the west door through the west parking lot for groups, including church members, using church facilities.

4. All tools, equipment, and other property (the "Personal Property") taken upon or placed upon the LICENSOR's land by the LICENSEE shall remain the property of the LICENSEE and shall be removed within seven (7) days after the installation of the extraction and/or ground water monitoring wells or the expiration or revocation of this License. In the event that the LICENSEE fails to timely remove the Personal Property the LICENSOR may, at the LICENSOR's election, remove and have stored the Personal Property at the LICENSEE's expense or may elect to retain the Personal Property as LICENSOR's property.

5. Liability and Insurance.

5.1 Liability

5.1.1 As between the PARTIES, the LICENSEE, its agents, representatives, contractors and/or sub-contractors assume all risk of loss or damage to property and injury or death to persons,

whether to its officers, employees, contractors of any tier, agents, invitees or others, by reason of or incident to LICENSEE's use of the licensed area, and its activities conducted under this LICENSE. The LICENSEE agrees to hold harmless the LICENSOR, and its officials, agents and employees from any claims, actions, suits or other proceedings arising from or out of the acts or omissions of the LICENSEE, its agents, representatives, contractors or sub-contractors or arising from the failure of the LICENSEE, its agents, representatives, contractors or sub-contractors to perform any act or duty required of the LICENSEE herein. To the extent provided by law, the LICENSEE's liability under this clause is subject to the availability of funds, as set forth in 31 USC § 1341 (Anti-Deficiency Act) and nothing contained in this License may be considered as implying Congress will at a later date appropriate funds sufficient to meet deficiencies.

5.1.2. The LICENSEE hereby undertakes a contractual obligation to repair all actual damages to LICENSOR's property and improvements caused by LICENSEE's operation(s). Upon completion of the repairs, LICENSEE shall repave the west parking lot ensuring said paving is on-grade with the LICENSEE installed well casings and/or vaults. In lieu of performing such repair, LICENSEE may, at its discretion, pay for said repairs and parking lot repaving. To the extent provided by law, the Licensee's liability under this clause is subject to the availability of funds, as set forth in 31 USC § 1341 (Anti-Deficiency Act) and nothing contained in this License may be considered as implying Congress will at a later date appropriate funds sufficient to meet deficiencies. The provisions of this clause are without prejudice to any rights the LICENSOR may have to make a claim for damages under applicable laws.

5.1.3. Claims for damages, personal injury or death arising from negligent or wrongful act of LICENSEE, its officers, employees, contractors of any tier, agents or invitees (but specifically excluding contractual claims arising under paragraph 6.1.2 above) shall be subject to the provisions of the Federal Tort Claims Act (28 USC §§ 2671 et seq.).

5.2 Insurance Requirement. LICENSEE shall require its agents, representatives, contractors or sub-contractors to obtain insurance coverage for the specific protection and benefit of the LICENSOR, including but not necessarily limited to, the following coverage:

5.2.1. Comprehensive General Liability Insurance. Comprehensive general liability insurance with liability limits in an initial amount not less than $1,000,000 aggregate limit of liability for bodily injury, including death, and property damage in any one occurrence.

5.2.2. Automobile Liability Insurance. An automobile liability policy with liability limits in amounts not less than $1,000,000 combined single limit of liability for bodily injury, including death, and property damage in any one occurrence. Said policy of insurance must include coverage for the use of all owned, non-owned, hired

automobiles, vehicles and other equipment both on and off work and is in addition to the Comprehensive General Liability Coverage.

5.2.3. Proof of Insurance: During the term of this Agreement, not less than once each year, on or before 9 January 2015 and 9 January of each succeeding year, LICENSEE shall cause its primary contractor to provide to the LICENSOR without demand, or more frequently upon demand, proof of all required insurance coverage. Prior to expiration or exchange of any policy, LICENSEE shall cause its primary contractor to furnish the LICENSOR evidence satisfactory to the LICENSOR that the policy has been renewed or replaced or is no longer required by this Agreement. All policies required hereunder shall provide that the LICENSOR shall be given thirty (30) days prior written notice of cancellation, non-renewal or material alteration of coverage. Provisions that the insurance company shall "endeavor to give the LICENSOR notice" shall not be allowed.

6. The LICENSEE shall be solely responsible for maintaining the premises upon which LICENSEE's equipment is being stored in a safe condition during the term of this License.

7. The LICENSEE will use all reasonable means available to protect the environment and natural resources from damage arising from this License or activities incident to it, to include the removal and disposal of all municipal and hazardous waste generated at all well and infrastructure construction and operation sites in accordance with City of Albuquerque, State and Federal law. Where damage occurs, the Licensee shall be liable and shall restore the damaged resources to the condition existing prior to the implementation of the remediation and monitoring, as documented in the Request for Environmental Impact Analysis (AF Form 813), which is attached hereto and incorporated herein as Attachment C, and an Environmental Baseline Survey (EBS), which is attached hereto and incorporated herein as Attachment D. Upon revocation or termination of this License, with the exception of pre-existing conditions identified in Attachments C and D, the LICENSOR's land will be returned in the same environmental condition as received, but without the contamination conditions for which the LICENSEE is performing the remediation, which shall be documented in a final closeout EBS, a copy of which shall be provided to the LICENSOR.

8. In connection with its use of or any other activity on the property, the LICENSEE, its officers, employees, agents, representatives, contractors, and assigns will at all times and in all respects comply with all federal, state and local laws, ordinances and regulations, relating to the protection of the environment, including but not limited to protection of surface water and groundwater; industrial hygiene; the use, handling and disposal of any hazardous or toxic substances; the Clean Air Act, 42 U.S.C. 7401 et seq. applicable state and air quality local laws, and policies and procedures of the City's Environmental Health Air Quality Division.

9. The LICENSEE, its officers, employees, agents, representatives, contractors, and assigns shall comply with all other applicable federal, state and local laws, statutes, ordinances and regulations and will not discriminate illegally against any person.

10. For purposes of giving formal written notice, the points of contact are as follows:

LICENSOR: CHRIST UNITED METHODIST CHURCH
Attn: Ms. Vicki Chronister
6200 Gibson Blvd., SE
Albuquerque, NM 87108

LICENSEE: Installation Commander
2000 Wyoming Blvd, SE
Kirtland AFB, NM 87117

11. Claims.

11.1 Point of Contact. The Permittee point of contact for all damages, whether to real or personal property, will be submitted to:

AFNWC/JA
2000 Wyoming Blvd., SE
Building 20604, Room B-36
Kirtland AFB, NM 87117
(505) 846-4217

11.2 Claims Process:

To file a claim for damage and/or injury due to LICENSEE''s operations, the claimant, or his/her authorized agent, must file a properly signed SF-95, *Claim for Damage, Injury or Death*, setting forth a sum certain for damage to or loss of property, personal injury or death, to the POC identified in 11.1 above, within two (2) years of the incident causing the damage or injury. The claim form is available at the website www.claims.jag.af.mil.

12. This License contains the entire agreement of the parties. Changes to this License are not binding unless made in writing and signed by both parties.

13. This License is governed by and construed and enforced in accordance with federal law and the laws of New Mexico.

14. If any part of this License is held to be invalid or unenforceable, the remainder of this License will remain valid and enforceable if the remainder of the License is reasonably capable of completion.

15. Index of Attachments

Attachment A – Description of Licensed Premises

Attachment B – Map

Attachment C – AF-813

Attachment D – Environmental Baseline Survey (EBS)

SIGNATURES ON FOLLOWING PAGES

CHRIST UNITED METHODIST CHURCH, INC.,
a New Mexico nonprofit corporation

By Vickie Chronister
VICKIE CHRONISTER, President and
Chair of Board of Trustees

STATE OF NEW MEXICO
COUNTY OF BERNALILLO

The foregoing instrument was acknowledged before me this 9th day of January, 2015, by Vickie Chronister, as President and Chair of Board of Trustees, Christ United Methodist Church, Inc., a New Mexico nonprofit corporation.

Julie A. Walker
Notary Public

My Commission Expires:
04/22/2018

OFFICIAL SEAL
Julie A. Walker
NOTARY PUBLIC
STATE OF NEW MEXICO
My Commission Expires: 04/22/2018

FOR THE UNITED STATES OF AMERICA

Tom D. Miller

TOM D. MILLER, Colonel, USAF
Commander

STATE OF NEW MEXICO
COUNTY OF BERNALILLO

The foregoing instrument was acknowledged before me this 9th day of January, 2015, by Tom D. Miller, Colonel, USAF, the Commander, 377 ABW, duly authorized to sign on behalf of the United States of America.

Julie A. Walker

Notary Public

My Commission Expires:
04/22/2018

OFFICIAL SEAL
Julie A. Walker
NOTARY PUBLIC
STATE OF NEW MEXICO
My Commission Expires: 04/22/2018

N
Attachment A
115 ft
N - 35° 03' 28.2"
W - 106° 34' 23.9"
72 ft
57 ft
KAFB-106212
9 ft
26 ft
28 ft
KAFB-106228
KAFB-106035
KAFB-106036
KAFB-106037
0
10
20
40
Feet

Attachment B

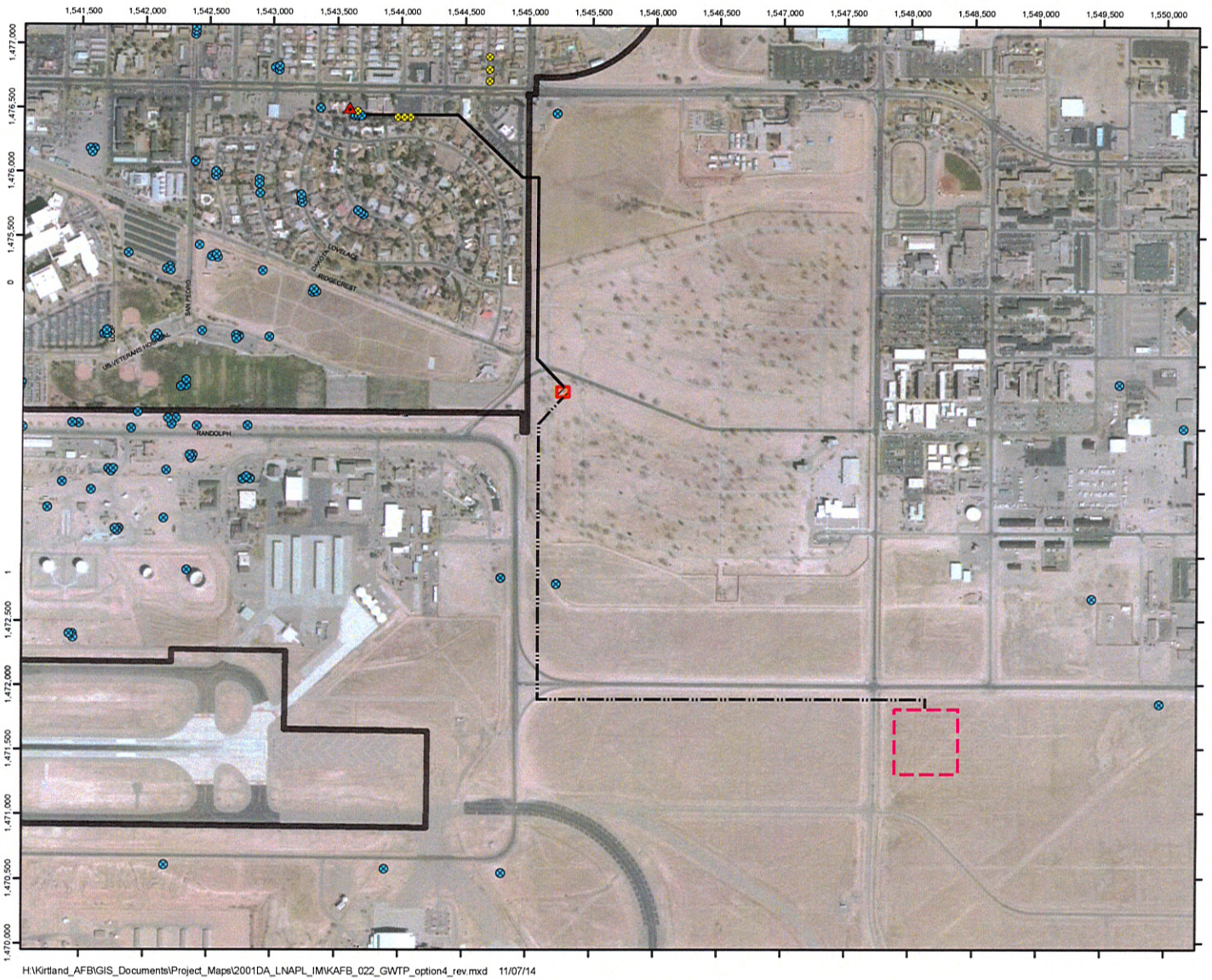

Legend

- Proposed Monitor Well
- Proposed Extraction Well Location
- Monitor Well
- New Underground Influent Piping
- New Underground Discharge Piping
- New Groundwater Treatment Plant
- New Infiltration Gallery
- Installation Boundary

Service Layer Credits: Source: Esri, DigitalGlobe, GeoEye, i-cubed, Earthstar Geographics, CNES/Airbus DS, USDA, USGS, AEX, Getmapping, Aerogrid, IGN, IGP, swisstopo, and the GIS User Community VA parking lot area from Google Maps

Revision Date: 11/07/14

N

0 400 800 1,600

Feet

1 inch = 800 feet

Projection : NAD83 State Plane New Mexico Central FIPS3002 Feet

DISSOLVED PHASE EDB
INTERIM MEASURE WORK PLAN
BULK FUELS FACILITY
KIRTLAND AIR FORCE BASE, NEW MEXICO

FIGURE 2

PIPING LAYOUT

PERMIT AMENDMENT NO. 2

THIS PERMIT AMENDMENT NO. 2 to the New Mexico Veterans Administration Health Care System ("NMVAHCS") Permit dated from 9/12/2008 to 8/31/2013 (the "Permit") is entered into this 11 day of July, 2016 between the Director, NMVAHCS, hereinafter referred to as the "PERMITTOR," and the Secretary of the Air Force, acting by and through the Installation Commander, Kirtland Air Force Base (KAFB), hereinafter referred to as the "PERMITTEE." The PERMITTOR and the PERMITTEE, when referred to together herein, shall also be known as the "PARTIES."

RECITALS

WHEREAS, the PERMITTOR granted the Permit to the PERMITTEE on 12 September 2008 for a term of five (5) years beginning 12 September 2008 and ending 31 August 2013, but revocable at will by the PERMITTOR, to conduct environmental services and remediation on NMVAHCS property, to include drilling and monitoring test wells to explore the quality of the groundwater at the well sites on the NMVAHCS and the use of remediation equipment; and

WHEREAS, the regulatory oversight of the PERMITTEE's remediation activity for the KAFB bulk fuels release has been assumed by the New Mexico Environment Department's Hazardous Waste Bureau ("NMED-HWB"), resulting in changes to the PERMITTEE's bulk fuels release remediation efforts; and

WHEREAS, the PERMITTEE's contractor shall investigate the KAFB bulk fuels release and implement interim and/or final remediation activities;

WHEREAS, the PARTIES signed Permit Amendment 1 granting the PERMITTEE a continuing right-of-entry to investigate and remediate the PERMITTEE's bulk fuel release during the term 28 January 2011 through 27 January 2016; and

WHERAS, it has been determined that the PERMITTEE has a continuing need for the continued use of the PERMIT and Grant of Right of Entry to investigate and remediate the PERMITTEE's bulk fuel release,

AGREEMENT

NOW THEREFORE, the PARTIES hereto do mutually agree as follows:

1. The Permit shall be amended to extend the permit term for a five (5) year term beginning on 28 January 2016 and ending on 27 January 2021.

2. All Permit references to "PERMITTEE's contractor" shall refer to any of the PERMITTEE's contractors/subcontractors conducting environmental services for the KAFB bulk fuels release investigation and remediation.

3. Permit § 8(8), *Effective Date*, shall be amended to read as follows:

   "This Agreement is effective for the period 28 January 2016 through 27 January 2021."

4. All other terms and conditions of the NMVAHCS Permit shall be and remain the same.

(Signatures on Following Pages)

IN WITNESS WHEREOF, I have hereunto set my hand as Director, New Mexico Veterans Administration Health Care System this 28 day of June, 2016.

FOR THE NEW MEXICO VETERANS
ADMINISTRATION HEALTH CARE SYSTEM

ANDREW WELCH, MHA, FACHE
Director
New Mexico VA Health Care System

IN WITNESS WHEREOF, I have hereunto set my hand by authority of the Secretary of the Air Force this 11 day of July, 2016.

FOR THE SECRETARY OF THE AIR FORCE

ERIC H. FROEHLICH, Colonel, USAF
Commander

Department of Veterans Affairs

PERMIT FOR USE OF REAL PROPERTY BY FEDERAL AGENCY

1. PERMIT NO.

Permission, revocable at the will of the Department of Veterans Affairs, is hereby granted the permittee hereinafter named to use the property described below for the purpose designated. subject to the conditions, special and general, herein prescribed.

2. NAME OF PERMITTEE AGENCY

U.S. Air Force
Kirtland AFB, NM 87117

3A. NAME AND ADDRESS OF LOCAL PERMITTEE REPRESENTATIVE

Mark Holmes, Project Manager
Natural Resource Management Restoration Section
Kirtland AFB, NM 87117-5522

3B. TELEPHONE NUMBER

(505) 846-9005

4. NAME AND ADDRESS OF INSTALLATION

New Mexico VA Health Care System (NMVAHCS)
1501 San Pedro S.E.
Albuquerque, NM 87108

5. MAXIMUM PERIOD COVERED

FROM *(MM/DD/YYYY)*	TO *(MM/DD/YYYY)*
9/12/2008	8/31/2013

6A. DESCRIPTION OF PROPERTY AFFECTED

Described herein in the terms of this Permit

6B. EXHIBIT(S) ATTACHED

None

7. PURPOSE OF PERMIT

To grant permission for Kirtland AFB to use a contractor/subcontractor to conduct environmental services and remediation on NMVAHCS property. Environmental services include the drilling and monitoring of test wells to explore the quality of the groundwater at the well sites on the NMVAHCS and the use of remediation equipment.

By the acceptance of this permit, the permittee agrees to abide by and be bound by the following conditions:

8. SPECIAL CONDITIONS

VA grants this Permit to Kirtland Air Force Base under the following conditions, which Kirtland Air Force Base accepts.

1. PURPOSE:

This Permit outlines the grant of right of entry and agreement between the New Mexico VA Health Care System (NMVAHCS) and Kirtland Air Force Base (KAFB) for disclosure of results of environmental services on NMVAHCS property. NMVAHCS has granted permission for KAFB to use a contractor to conduct environmental services and remediation on NMVAHCS property. The contractor selected by KAFB to conduct environmental services and remediation is CH2MHill. KAFB agrees to allow NMVAHCS direct access to any information and outcomes regarding environmental services and remediation performed on NMVAHCS property by CH2MHill.

2. BACKGROUND:

In 2001, KAFB completed delineation of contaminated soil and groundwater discovered in 1999 as part of the Stage 1 Abatement Plan. In February 2007, KAFB discovered fuel product on the groundwater at another location near the Bulk Fuels Facility, which is being investigated as part of a Modification to the Stage 2 Abatement Plan. KAFB has delineated the contaminated areas on its property in the first and second stages of their abatement plan. The proposed next step in the Stage 2 Abatement Plan Modification is to investigate the land both within and outside of the KAFB boundaries, to determine if, and to what extent the fuel product has migrated outside of KAFB boundaries.

(CONTINUED ON PAGES 1 THROUGH 4 ATTACHED TO THIS VA FORM 10-6215)

Item 8. SPECIAL CONDITIONS, Paragraph 2, continued:

Subsequent to the investigation, KAFB may be required to install remediation systems to remove the fuel product. As part of these efforts, KAFB has retained the services of an environmental contractor, CH2MHill, to perform environmental services on land both inside and outside of the KAFB boundary.

The land proposed to be tested includes an 11.5 acre plot of land on VA property or other areas identified and agreed upon that are owned by NMVAHCS. KAFB is required by the New Mexico Environment Department to define the extent of the fuel product on and off of KAFB. KAFB may therefore be required to install groundwater monitor wells on other VA property, specifically within the parking lots south and east of the VA Hospital to complete the investigation. This has been presented to the VA Engineering Staff in previous meetings. These 11.5 acres of VA-owned land are currently vacant, but the NMVAHCS has future plans to develop this land under the Federal Enhanced Use Lease (EUL) authority. The NMVAHCS needs assurance that any environmental contamination on its 11.5 acre property has been addressed, and will be remediated before proceeding further with its EUL project plans. Thus, the NMVAHCS has granted permission to KAFB to conduct environmental services on the property proposed for use in the EUL or other areas identified and agreed upon that are owned by NMVAHCS. This testing is projected to include the drilling and testing of monitoring wells, in order to explore the quality of the groundwater beneath the 11.5 acre parcel, to determine whether the leaked fuel product has migrated to affect the 11.5 acre parcel or other VA property. The NMVAHCS needs to have unrestricted access to any and all results of the testing, conducted by CH2MHill, on its 11.5 acre parcel of land and on all other VA property.

3. RESPONSIBILITIES:

a. Kirtland Air Force Base:

1) Allows NMVAHCS full, unrestricted access to any and all results of environmental services performed on NMVAHCS (VA) property.

2) Coordinates communication between NMVAHCS and KAFB to ensure that NMVAHCS is provided full access to all environmental services results derived from activities on NMVAHCS property.

3) Agrees to provide a written copy of any final environmental assessment reports produced by CH2MHill, once all testing on NMVAHCS property is complete.

4) Agrees to maintain open communication with the Engineering Staff of the NMVAHCS regarding environmental services performed on NMVAHCS property, and promptly informs them of any proposed changes to the initial testing protocols and schedules.

b. New Mexico VA Health Care System:

1) Grants KAFB or its contractor/subcontractor permission to conduct environmental services on NMVAHCS property, to include drilling monitoring wells on NMVAHCS property to determine the quality of the groundwater at the well sites located on NMVAHCS property.

2) Grants KAFB or its contractor/subcontractor permission to temporarily install and use remediation equipment such as soil vapor extraction systems currently installed on KAFB, to remove any leaked fuel product. When remediation equipment is used by KAFB or its subcontractor, KAFB agrees to adhere to the following:

a. Remediation equipment will be secured using a secured chain-link fencing system.

b. Remediation equipment located in residential areas will be soundproofed.

c. KAFB will be responsible for and will address issues of physical equipment security, public safety and public perception at the time the remediation equipment is deployed.

d. KAFB will be responsible for meeting any and all applicable air emission standards for the remediation equipment.

e. KAFB agrees to comply with any and all applicable city, state or federal laws and regulations regarding EPA permitting.

f. All tools, equipment, and other property taken upon, placed upon, or installed on VA property by KAFB, or its contractor/subcontractor, excluding the installed monitoring wells, shall remain the property of KAFB, or its contractor/subcontractor, and may be removed by KAFB, or its contractor/subcontractor, at any time within a reasonable period after the expiration of this right-of-entry.

g. Monitoring wells drilled and installed on VA property will remain in place until groundwater remediation activities are completed consistent with the terms of Paragraph 6, Terms of Agreement, contained herein, at which time NMVAHCS will determine which monitoring wells will be removed and/or abandoned in place. All monitoring well removal and/or abandonment activities will comply with the provisions of Title 19, Chapter 27 and Title 20, Chapter 6 of the New Mexico Administrative Code (NMAC).

3) Grants KAFB permission to erect a temporary equipment staging area on VA property in an area within the 11.5 acre plot of land, not to exceed 50 feet by 100 feet for the purpose of housing supplies needed for the environmental services effort. When a temporary equipment staging area has been established by KAFB, KAFB agrees to adhere to the following:

a. The temporary storage area located on VA property within the 11.5 acre plot of land will be secured using a secured chain-link fencing system.

b. KAFB will be responsible for and will address issues of physical equipment security, public safety and public perception at the time the remediation equipment is deployed.

c. KAFB agrees to maintain oversight of and responsibility for all items placed in the designated temporary storage area.

d. KAFB will be responsible for and will address issues of physical equipment security, public safety and public perception at the time the temporary storage area is deployed.

e. All tools, equipment, and other property taken upon the land and housed or placed on VA property within the temporary equipment staging area by KAFB, or its contractor/subcontractor, shall remain the property of KAFB, or its contractor/subcontractor, and may be removed by KAFB, or its contractor/subcontractor, at any time within a reasonable period after the expiration of this right-of-entry.

4) Receives copies of all environmental services performed by CH2MHill, reviews them, and promptly provides comment back to KAFB regarding any concerns, questions, or issues involving the environmental services so that if changes need to be made to the environmental services schedule and/or protocols, this information can be communicated to KAFB and CH2MHill.

5) Maintains open communication with the KAFB Natural Resource Management Restoration Section concerning the environmental services on NMVAHCS property.

6) Informs KAFB of any access and/or scheduling issues with the environmental services performed by CH2MHill.

7) Grants KAFB, via VA Form 10-6215, "Permit for Use of Real Property by Federal Agency," a five (5) year "Right of Entry" for the installation of and collection of data from groundwater monitoring wells designed to both delineate and remediate any leaked groundwater fuel product.

4. PROCEDURES:

Standard procedures and timelines for receiving regular updates on the progress of environmental services, as well as periodic written reports and the final written report produced by CH2MHill will be developed and adhered to.

5. PAYMENT / REIMBURSEMENT:

No payment or reimbursement will be made or exchanged between NMVAHCS and KAFB for environmental services conducted, or copies of testing results shared between the two organizations in accordance with this Permit.

6. TERMS OF AGREEMENT:

This five (5) year agreement may be modified or revised by written amendment, provided such revision or modification is mutually agreed upon and signed by the authorized representative of Kirtland Air Force Base and the New Mexico VA Health Care System. This agreement will remain in effect during the period stated unless terminated at the request of either party after thirty (30) days notice in writing. The parties involved shall review this agreement annually. No later than twelve (12) months prior to the expiration of this Permit, NMVAHCS and KAFB officials will review the status of groundwater monitoring and remediation efforts and determine whether the Permit and Right of Entry shall both expire or be renewed for an additional term not to exceed five (5) years.

7. PROTECTION OF RESOURCES

a. GRANTEE will use all reasonable means available to protect the environment and natural resources from damage arising from this Right of Entry or activities incident to it. Where damage nonetheless occurs, GRANTEE shall be liable to restore the damaged resources. Upon termination of this Right of Entry, the land shall be returned to GRANTOR in the same environmental condition as received, as documented in the Request for Environmental Impact Analysis (AF Form 813) and Environmental Baseline Survey (EBS) Waiver for Right of Entry attached hereto and made a part hereof as Exhibit B and C respectively.

b. To the extent provided by law and subject to the availability of funds, KAFB agrees to use its appropriations and resources, as required, to repair damages to said parcel and pay any awards, claims, settlements or judgments rising out of its use of said parcel, or routes of ingress or egress therefrom, including reimbursement of the Judgment Fund, 31 USC § 1304; provided however, that NMVAHCS or another agency of the Government may, as a matter of its internal policy, assume responsibility for certain claims of that agency's personnel while assigned or detailed to the KAFB, or otherwise present on the said parcel.

8. EFFECTIVE DATE:

This agreement is effective for the period 09/12/2008 through 08/31/2013.

for Michael S. Duvall, Col, USAF
Commander, 377th Air Base Wing
Kirtland Air Force Base

16 Sep 08
Date

per George Marnell
Director
New Mexico VA Health Care System

Sept. 12, 2008
Date

RENEWAL DATE: 09/01/2013

Attachments:

A. Aerial Map of Proposed Locations for Additional Groundwater Monitoring Points
B. Request for Environmental Impact Analysis (AF Form 813)
C. Waiver for Right of Entry (ROE) on NMVAHCS Property

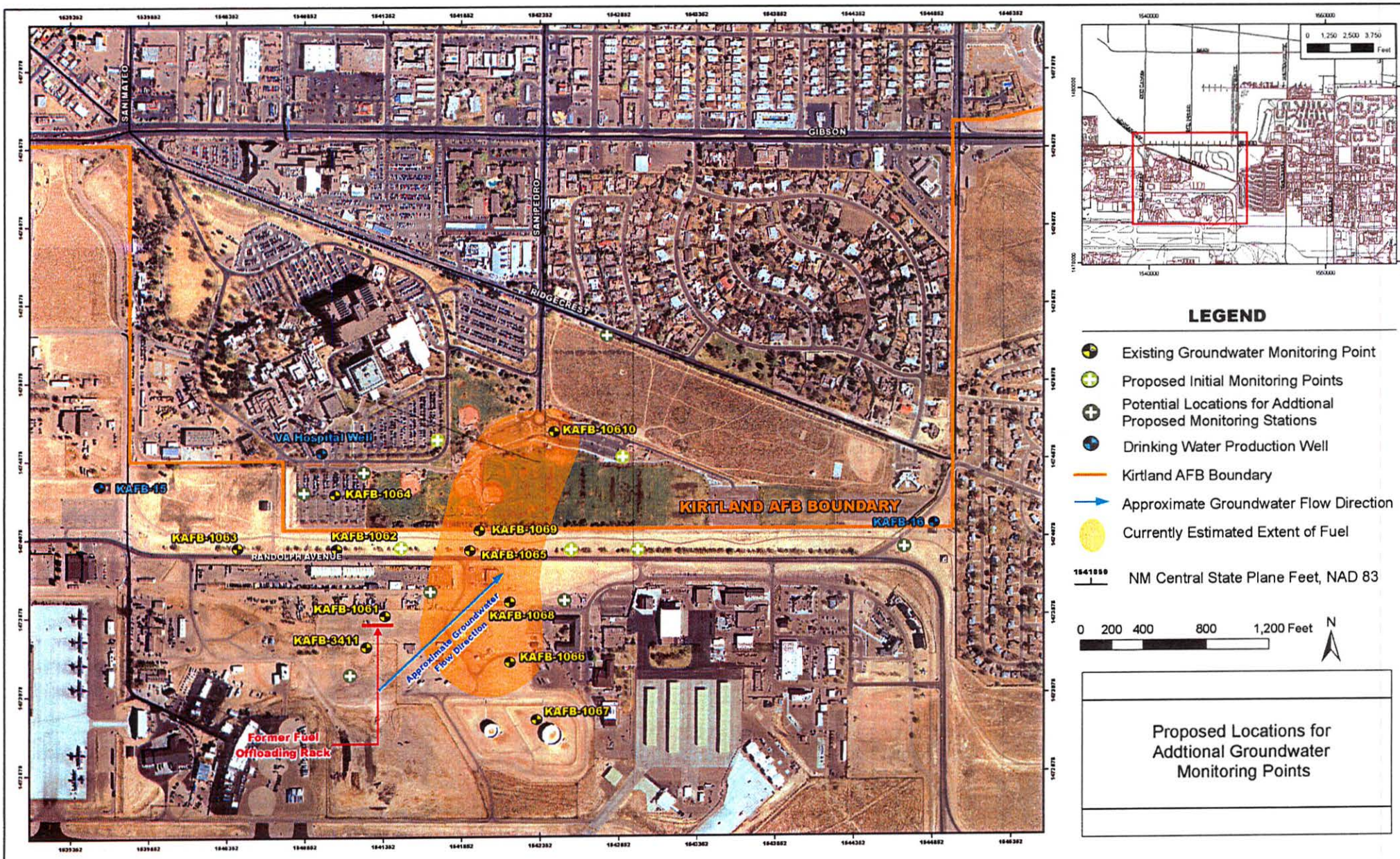
SAN MATEO
GIBSON
SAN PEDRO
RIDGECREST
VA Hospital Well
KAFB-10610
KAFB-15
KAFB-1064
KIRTLAND AFB BOUNDARY
KAFB-16
KAFB-1063
KAFB-1062
KAFB-1069
RANDOLPH AVENUE
KAFB-1065
KAFB-1061
KAFB-1068
KAFB-3411
Approximate Groundwater Flow Direction
KAFB-1066
KAFB-1067
Former Fuel Offloading Rack
0 1,250 2,500 3,750 Feet
LEGEND
Existing Groundwater Monitoring Point
Proposed Initial Monitoring Points
Potential Locations for Addtional Proposed Monitoring Stations
Drinking Water Production Well
Kirtland AFB Boundary
Approximate Groundwater Flow Direction
Currently Estimated Extent of Fuel
1641850
NM Central State Plane Feet, NAD 83
0 200 400 800 1,200 Feet
N
Proposed Locations for Addtional Groundwater Monitoring Points

Exhibit A

REQUEST FOR ENVIRONMENTAL IMPACT ANALYSIS

Report Control Symbol RCS: 35-09- 610

INSTRUCTIONS: *Section I to be completed by Proponent; Sections II and III to be completed by Environmental Planning Function. Continue on separate sheets as Necessary, Reference appropriate item numbers.*

SECTION I - PROPONENT INFORMATION

1. TO *(Environmental Planning Function)*	2. FROM *(Proponent organization and functional address symbol)*	2a. Telephone
Department of the Air Force HQ 377th Air Base Wing ATTN: 377 MSG/CEANQ	Mark Holmes 377 MSG/CEANR	6-9005

3. TITLE OF PROPOSED ACTION
Environmental services on NM Veterans Affairs Health Care System (NMVAHCS)

4. PURPOSE AND NEED FOR ACTION *(Identify decision to be made and need date)*
To grant permission for Kirtland AFB to use a subcontractor (CH2MHill) to conduct environmental services and remediation on NMVAHCS property. KAFB is required by the New Mexico Environment Department to define the extent of the fuel product contaminating groundwater on and off of KAFB.

5. DESCRIPTION OF PROPOSED ACTION AND ALTERNATIVES (DOPAA) *(Provide sufficient details for evaluation of the total section.)*
KAFB proposes to conduct environmental services and remediation on NM VA HCS property. Environmental services include both the drilling and monitoring of monitor wells to explore the quality of the groundwater to determine if the fuel product has migrated to and affected the NMVAHCS property and the use of remediation equipment on the NMVAHCS property. (Cont.)

6. PROPONENT APPROVAL *(Name and Grade)*	6a. SIGNATURE	6b. DATE
MARK HOLMES YD-02	Mark Holmes	4 SEP 08

SECTION II PRELIMINARY ENVIRONMENTAL SURVEY. *(Check appropriate box and describe potential environmental effects including cumulative effects.) (+ = positive effect; O = no effect; - = adverse effect; U = unknown effect)*	+	O	-	U
7. AIR INSTALLATION COMPATIBLE USE ZONE/LAND USE *(Noise, accident potential encroachment, etc.)*				
8. AIR QUALITY *(Emission, attainment status, state implementation plan, etc.)*				
9. WATER RESOURCES *(Quality, quantity, source, etc.)*				
10. SAFETY AND OCCUPATIONAL HEALTH *(Asbestos/radiation/chemical exposure, explosives safety quantity-distance, etc.)*				
11. HAZARDOUS MATERIALS/WASTE *(Use/storage/generation, solid waste, etc.)*				
12. BIOLOGICAL RESOURCES *(Wetlands/floodplains, flora, fauna, etc.*				
13. CULTURAL RESOURCES *(Native American burial sites, archeological, historical, etc.)*				
14. GEOLOGY AND SOILS *(Topography, minerals, geothermal, Installation Restoration Program, seismicity, etc.)*				
15. SOCIOECONOMIC *(Employment/population projections, school and local fiscal impacts, etc.)*				
16. OTHER *(Potential impacts not addressed above.)*				

SECTION III - ENVIRONMENTAL ANALYSIS DETERMINATION

17. ☐ PROPOSED ACTION QUALIFIES FOR CATEGORICAL EXCLUSION (CATEX) # _____ OR

☐ PROPOSED ACTION DOES NOT QUALIFY FOR A CATEX. FURTHER ENVIRONMENTAL ANALYSIS IS REQUIRED

18. REMARKS

19. ENVIRONMENTAL PLANNING FUNCTION CERTIFICATION *(Name and Grade)*	19a. SIGNATURE	19b. DATE
Evelyn C. Watkins, YD-02 *NEPA Program Manager*	Evelyn C Watkins	8 Sep 08

Exhibit B

Comments on AF 813

4. Purpose and Need for Action (continued)

5. Description of Proposed Action (continued)

The investigation will begin as soon as a right-of-entry has been properly secured.

Although the proposed project may require access to NMVAHCS property in general, specific NMVAHCS property identified as areas of probable locations of monitor well and remediation equipment include an 11.5 acre tract of vacant land located along Ridgecrest Drive adjacent to the City of Albuquerque Bullhead Park, and two parking lots located directly north and west of the BullHead park. NMVAHCS has future plans to develop the 11.5 acre tract of vacant land under the Federal Enhanced Use Lease (EUL) authority. The NMVAHCS needs assurance that any environmental contamination on its 11.5 acre property has been addressed, and will be remediated before proceeding further with its EUL project plans. Thus, the NMVAHCS has granted permission to KAFB to conduct environmental services on the property proposed for use in the EUL. The NMVAHCS needs to be able to have unrestricted access to any and all results of the testing, conducted by CH2MHill, on its 11.5 acre parcel of land.

BACKGROUND:

In 2001, KAFB completed delineation of contaminated soil and groundwater discovered in 1999 as part of the Stage 1 Abatement Plan. In February 2007, KAFB discovered fuel product on the groundwater at another location near the Bulk Fuels Facility, which is being investigated as part of a Modification to the Stage 2 Abatement Plan. KAFB has delineated the contaminated areas on its property in the first and second stages of their abatement plan. The proposed next step in the Stage 2 Abatement Plan Modification is to investigate the land both within and outside of the KAFB boundaries, to determine if, and to what extent the fuel product has migrated outside of KAFB boundaries.

[redacted]

VA PROPERTY

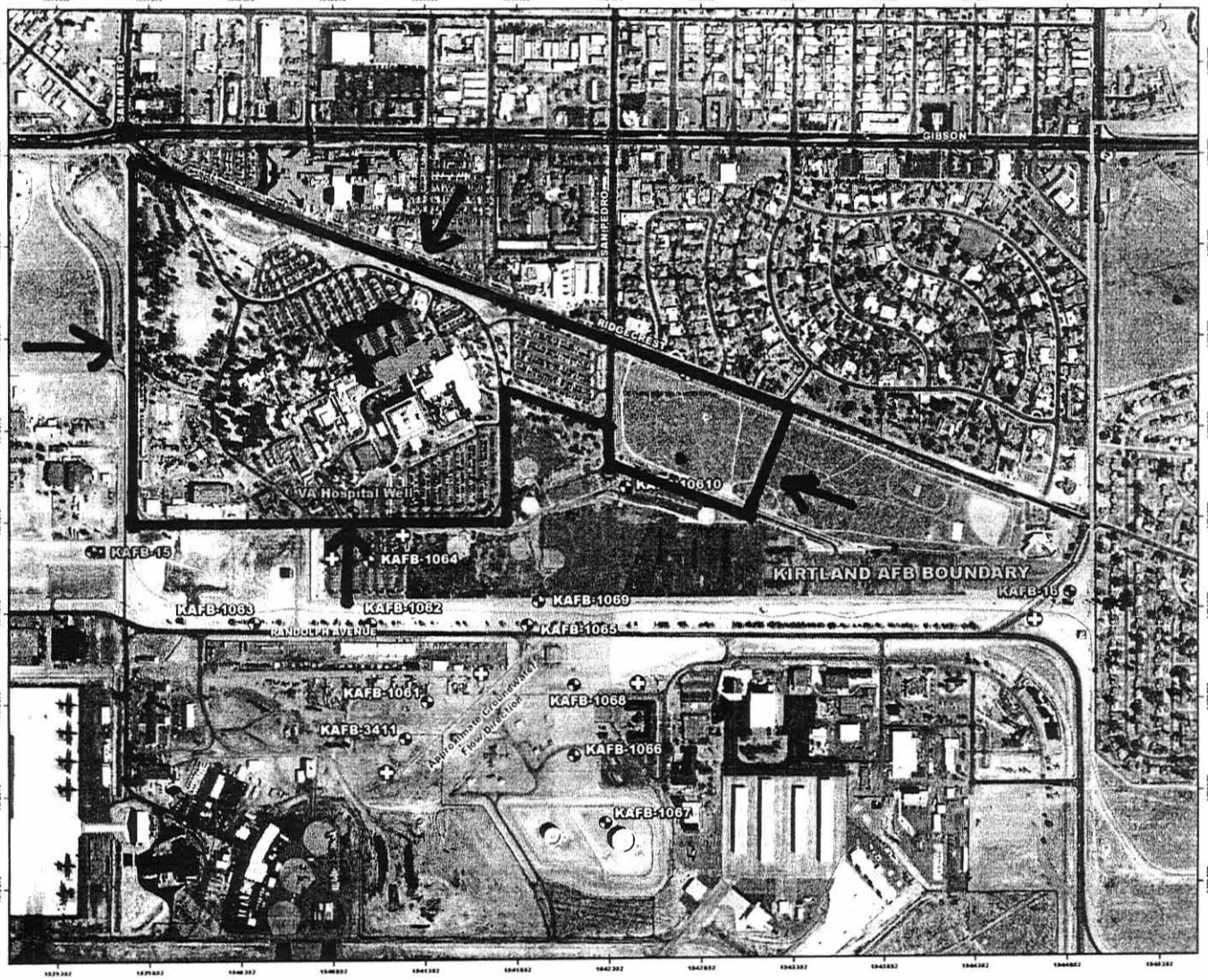

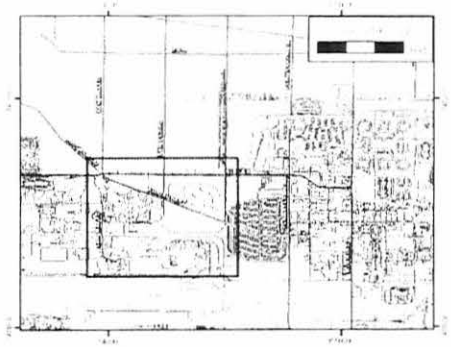

LEGEND

- Existing Groundwater Monitoring Point
- Proposed Initial Monitoring Points
- Potential Locations for Addtional Proposed Monitoring Points
- Drinking Water Production Well
- Kirtland AFB Boundary
- Approximate Groundwater Flow Direction
- Currently Estimated Extent of Fuel

1541850 NM Central State Plane Feet, NAD 83

0 200 400 800 1,200 Feet N

Proposed Locations for Additional Groundwater Monitoring Points

DEPARTMENT OF THE AIR FORCE
377th Civil Engineer Division (AFMC)

SEP 1 1 2008

MEMORANDUM FOR 377 MSG/CEPR

FROM: 377 MSG/CE

SUBJECT: Environmental Baseline Survey (EBS) Waiver for Right of Entry (ROE) to Collect Water Monitoring Samples on New Mexico Veterans Affairs Health Care Systems Property

1. This EBS waiver is accomplished in accordance with (IAW) AFI 32-7066, *Environmental Baseline Surveys in Real Estate Transactions*, to meet real estate transaction requirements. The proposed transaction is to attain a ROE on New Mexico Veterans Affairs Health Care Systems property in order to conduct environmental services and remediation.

2. This ROE would allow Kirtland Air Force Base (AFB) to enter and drill and monitor wells to explore the quality of the groundwater to determine if contaminants from the Kirtland AFB Bulk Fuel Facility release have migrated to and/or have contaminated the groundwater at the subject location. The property includes approximately 11.5 acres of vacant land located adjacent to Kirtland AFB and the City of Albuquerque Bullhead Park.

3. This waiver is being granted in accordance with AFI 32-7066, Section 1.5.3, Issuing entry rights for surveys, inspections, and tests where there will be no introduction of hazardous materials or petroleum products on the property.

4. 377 MSG/CE is signing in accordance with a Delegation of Authority Letter dated 8 April 08 from 377 ABW/CC.

5. If you have any questions or require further information, please contact Dr. Evelyn Watkins, NEPA Program Manager, at 505-846-4377.

D. BRENT WILSON, PE
Base Civil Engineer

Exhibit C

GIBSON MEDICAL CENTER
LICENSE
TO
KIRTLAND AIR FORCE BASE

GIBSON MEDICAL CENTER, hereinafter referred to as the "LICENSOR," as owner of the property located at 5400 Gibson Blvd SE, Albuquerque, NM 87108, hereby grants to the Secretary of the Air Force, by and through the Installation Commander, Kirtland Air Force Base, Albuquerque, New Mexico, hereinafter referred to as the 'LICENSEE," or his authorized representative, a LICENSE upon the following terms and conditions:

1. The LICENSOR hereby grants unto the LICENSEE a license to enter upon the LICENSOR's real property located at 5400 Gibson Blvd SE, Albuquerque, Bernalillo County, New Mexico, which real property is also known as:

SWIFT ADDITION, LOT 1, BERNALILLO COUNTY
&
LOVELACE HOSPITAL, LOT A1 A, BERNALILLO COUNTY

and more specifically identified on the attached general location map, which is attached hereto and incorporated herein as Attachment A, for the express purpose of:

constructing, installing, operating, maintaining, modifying, repairing, replacing and/or removing soil vapor and ground water monitoring wells for the collection of soil and groundwater samples; and collecting quarterly well samples as more fully identified in Attachments B and C, attached hereto and incorporated herein.

2. The LICENSEE shall use the area described above, and as shown in Attachments A and B, for the purposes described above and not for any other purpose without first obtaining the written consent of the LICENSOR and shall adhere to the following use conditions:

a. LICENSEE shall obtain a City of Albuquerque Well Permit for each well by making application to the Development and Building Services Division. One permit may be used for multiple wells, grouped by type of well, by installation priority, by cluster or by location.

b. Ensure that the LICENSEE's Contractor complies with the terms of the well permit Division.

c. Ensure that the LICENSEE's Contractor complies with permitting and environmental health protections requirements of the city of Albuquerque Environmental Health Department, including but not limited to air quality and noise remediation;

d. Restore all well heads to pre-existing grades and restore any surface disturbance created by the well installation process;

e. At each successive License renewal, or upon request, provide the LICENSOR a well status update as set forth in the annual monitoring reports submitted to the New Mexico Environment Department Hazardous Waste Bureau

f. Provide the LICENSOR a 48 hour notice, as set forth in Condition 11 herein, before the Contractor enters the property to conduct sampling.

3. This License shall remain in effect for a period of five (5) years beginning on the date of execution by the PARTIES, with multiple options to renew thereafter, corresponding with, but not to exceed, the New Mexico Environment Department Hazardous Waste Bureau (NMED-HWB) remediation timetable, which timetable will be attached and incorporated herein as Attachment D when approved by the NMED-HWB, unless revoked as provided herein, or extended by the mutual written consent of both parties.

4. Either Party may revoke this License upon providing written notice to the other party thirty (30) days prior to such revocation.

5. All tools, equipment, and other property (the "Personal Property") taken upon or placed upon the LICENSOR's land by the LICENSEE shall remain the property of the LICENSEE and shall be removed within thirty (30) days after the expiration or revocation of this License. In the event that the LICENSEE fails to timely remove the Personal Property the LICENSOR may, at the LICENSOR's election, remove and have stored the Personal Property at the LICENSEE's expense or may elect to retain the Personal Property as LICENSOR's property.

6. Damages and Indemnity. The LICENSEE shall repair or pay for all actual damages done to LICENSOR's property and improvements caused by LICENSEE's operation(s), to include damage caused by vibration during well drilling and installation. All claims for damage to LICENSOR's property and improvements shall be subject to the provisions of the Federal

Tort Claims Act (28 USC §§ 2671 et seq.). To the extent provided by law, the Licensee's liability under this clause is subject to the availability of funds, as set forth in 31 USC § 1341 (Anti-Deficiency Act) and nothing contained in this License may be considered as implying Congress will at a later date appropriate funds sufficient to meet deficiencies. The provisions of this clause are without prejudice to any rights the LICENSOR may have to make a claim for damages under applicable laws.

7. The LICENSEE shall be solely responsible for maintaining the premises upon which the Improvements are being constructed in a safe condition during construction and subsequent well monitoring events.

8. The Licensee will use all reasonable means available to protect the environment and natural resources from damage arising from this License or activities incident to it, to include the removal and disposal of all municipal and hazardous waste generated at all well and infrastructure construction and operation sites in accordance with City of Albuquerque, State and Federal law. Where damage occurs, the Licensee shall be liable and shall restore the damaged resources to the condition existing prior to the implementation of the remediation and monitoring, as documented in the Request for Environmental Impact Analysis (AF Form 813), which is attached hereto and incorporated herein as Attachment E, and two Environmental Baseline Surveys (EBS), which are attached hereto and incorporated herein as Attachments F and G. Upon revocation or termination of this License, with the exception of pre-existing conditions identified in Attachments E, F and G, the LICENSOR's land will be returned in the same environmental condition as received but without the contamination conditions for which the LICENSEE is performing the remediation.

9. In connection with its use of or any other activity on the property, the LICENSEE, its officers, employees, agents, representatives, contractors, and assigns will at all times and in all respects comply with all federal, state and local laws, ordinances and regulations, relating to the protection of the environment, including but not limited to protection of surface water and groundwater; industrial hygiene; the use, handling and disposal of any hazardous or toxic substances; the Clean Air Act, 42 U.S.C. 7401 et seq. applicable state and air quality local laws, and policies and procedures of the City's Environmental Health Air Quality Division.

10. The LICENSEE and its contractors shall comply with all other applicable federal, state and local laws, statutes, ordinances and regulations and will not discriminate illegally against any person.

11. For purposes of giving formal written notice, the points of contact are as follows:

LICENSOR: GIBSON MEDICAL CENTER
2009 EUBANK NE
Albuquerque, NM 87112

LICENSEE: Installation Commander
2000 Wyoming Blvd, SE
Kirtland AFB, NM 87117

12. Claims.
    a. Point of Contact. The Permittee point of contact for all damages, whether to real or personal property, will be submitted to:

    377 ABW/JA
    Attention: Claims Division
    2000 Wyoming Blvd., SE
    Kirtland AFB, NM 87117-5000
    (505) 846-4217
    http://www.kirtland.af. mil/Organizations/StaffJudge/index.htm

    b. Claims Process:
    To file a claim for damage and/or injury due to Permittee's operations, the claimant, or his/her authorized agent, must file a properly signed SF-9S, *Claim for Damage, Injury or Death,* setting forth a sum certain for damage to or loss of property, personal injury or death, to the POC identified in Condition 13(a) above, within two (2) years of the incident causing the damage or injury. The claim form is available at the website provided herein in paragraph a.

13. This License contains the entire agreement of the parties. Changes to this License are not binding unless made in writing and signed by both parties.

14. This License is governed by and construed and enforced in accordance with federal law and the laws of New Mexico.

15. If any part of this License is held to be invalid or unenforceable, the remainder of this License will remain valid and enforceable if the remainder of the License is reasonably capable of completion.

16. Index of Attachments

Attachment A - General Location Map
Attachment B - Well Permits as Developed
Attachment C - Sampling Schedule
Attachment D - NMED-HWB Remediation Plan and Timetable
Attachment E - Request for Environmental Impact Analysis (AF Form 813)
Attachment F - Initial Environmental Baseline Survey (EBS)
Attachment G - Final EBS

(SIGNATURES ON FOLLOWING PAGES)

FOR THE GIBSON MEDICAL CENTER

Nadine Martinez-Dasklalos

Nadine Martinez, MBA
Gibson Medical
Property Manager

STATE OF NEW MEXICO)
)ss.
COUNTY OF BERNALILLO)

The foregoing instrument was acknowledged before me this 15th day of July, 2016, by Nadine Martinez, Gibson Medical Center Property Manager.

Notary Public

My Commission Expires:
10-19-2019

FOR THE UNITED STATES OF AMERICA

ERIC H. FROEHLICH, Colonel, USAF
Commander

OFFICIAL SEAL
Lori A. Orona
NOTARY PUBLIC
STATE OF NEW MEXICO
My Commission Expires: 2/21/2019

STATE OF NEW MEXICO)
)ss.
COUNTY OF BERNALILLO)

The foregoing instrument was acknowledged before me this 17 day of June, 2016, by Eric H. Froehlich, Colonel, USAF, the Commander, 377 ABW, duly authorized to sign on behalf of the United States of America.

Notary Public

My Commission Expires:
2 February 2019

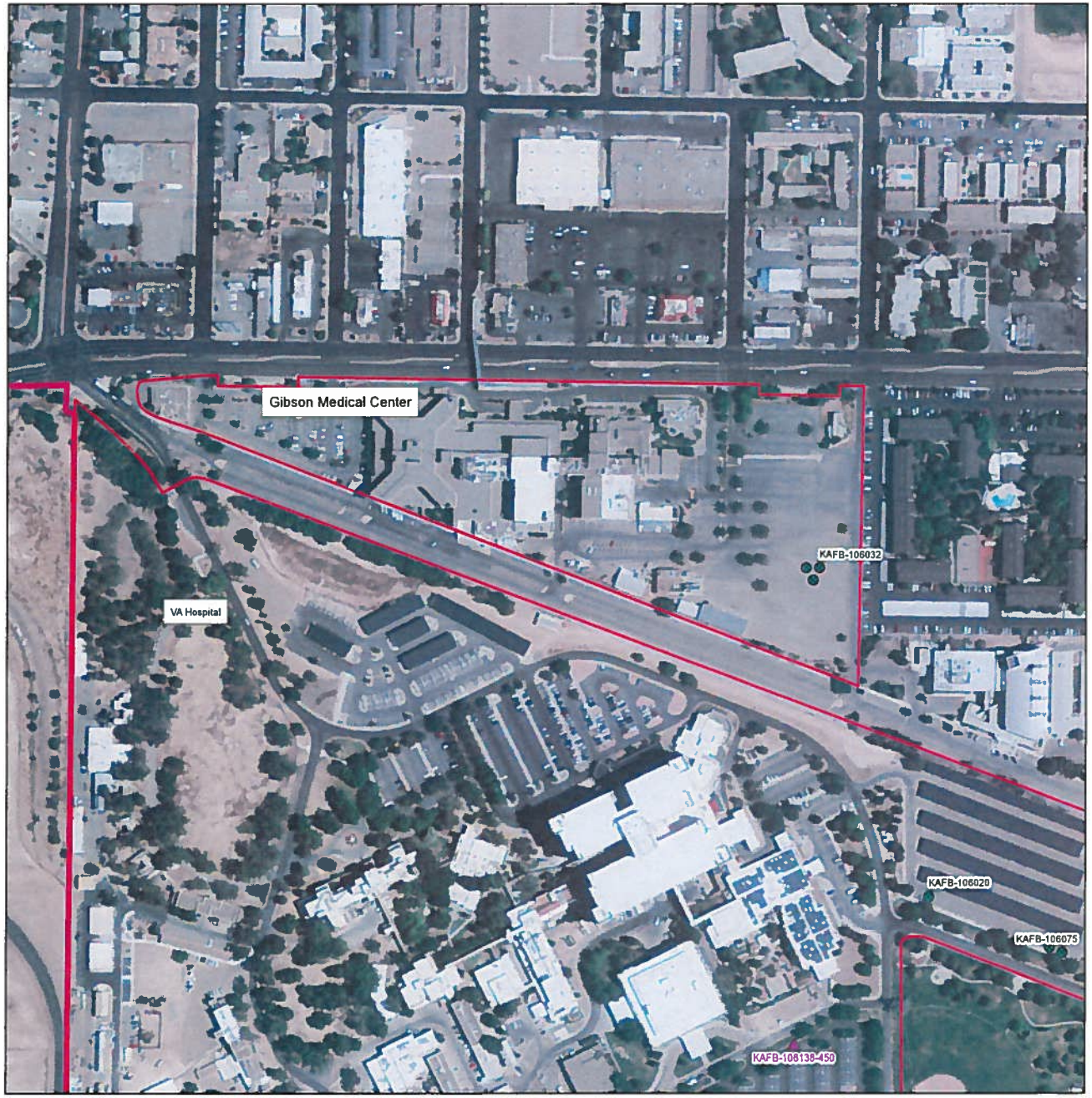

Legend

- Groundwater Monitoring Wells (Off-Base)
- Soil Vapor Monitoring Point (Off-Base)
- KAFB-106211
- USGS Sentinel Well
- Extraction Well
- KAFB-106157 (to be abandoned)
- Parcel Boundaries
- KAFB Base Boundary

Note: Due to the density of wells, not all well labels appear on this figure. Please use with corresponding table for full list of wells.

Off-Base Well Location Map

Bulk Fuels Facility
Kirtland Air Force Base, New Mexico

500 250 0 Attachment A 500 Feet

N

Attachment B

Well Permits as Developed

(To be Attached Upon Approval and Signature by the City of Albuquerque)

Sampling Schedule

Sampling Event	Date of Event*			
	1st Quarter	2nd Quarter	3rd Quarter	4th Quarter
Gauging of 3 GMC wells	January	April	July	October
Sampling of 3 GMC wells	January	April	July	October

*Note #1: Teams entering the property will provide a 48 hour notice.
Note #2: Subject to change based on conditions (ie: access schedules, sampling pump deficiencies, water quality, etc).

Attachment D

New Mexico Environmental Department (NMED) - HWB Remediation Plan and Timetable

(To be Attached Upon Completion by NMED)

REQUEST FOR ENVIRONMENTAL IMPACT ANALYSIS

Report Control Symbol RCS: 35- 09-846

INSTRUCTIONS: *Section I to be completed by Proponent; Sections II and III to be completed by Environmental Planning Function. Continue on separate sheets as Necessary, Reference appropriate item numbers.*

SECTION I - PROPONENT INFORMATION

1. TO *(Environmental Planning Function)*	2. FROM *(Proponent organization and functional address symbol)*	2a. Telephone
Department of the Air Force HQ 377th Air Base Wing ATTN: 377 MSG/CEIE	Victoria Branson AFCEC/CZO	505-846-6362

3. TITLE OF PROPOSED ACTION

Bulk Fuels Facility (BFF) restoration project - Renewal License (File 9A-3m, LIC/I-KI-11-0002) to enter Real Property with the Gibson Medical Center, LLC for access to current and future wells to comply with New Mexico Environment Department (NMED) approved Resource Conservation and Recovery Act (RCRA) permit No. NM9570024423 requirements.

4. PURPOSE AND NEED FOR ACTION *(Identify decision to be made and need date)*

See Page 2

5. DESCRIPTION OF PROPOSED ACTION AND ALTERNATIVES (DOPAA) *(Provide sufficient details for evaluation of the total section.)*

See Page 2

6. PROPONENT APPROVAL *(Name and Grade)*	6a. SIGNATURE	6b. DATE
VICTORIA L BRANSON	Victoria L Branson	2/11/2016

SECTION II PRELIMINARY ENVIRONMENTAL SURVEY. *(Check appropriate box and describe potential environmental effects including cumulative effects.) (+ = positive effect; O = no effect; - = adverse effect; U = unknown effect)*	+	O	-	U
7. AIR INSTALLATION COMPATIBLE USE ZONE/LAND USE *(Noise, accident potential encroachment, etc.)*		X		
8. AIR QUALITY *(Emission, attainment status, state implementation plan, etc.)*		X		
9. WATER RESOURCES *(Quality, quantity, source, etc.)*		X		
10. SAFETY AND OCCUPATIONAL HEALTH *(Asbestos/radiation/chemical exposure, explosives safety quantity-distance, etc.)*		X		
11. HAZARDOUS MATERIALS/WASTE *(Use/storage/generation, solid waste, etc.)*		X		
12. BIOLOGICAL RESOURCES *(Wetlands/floodplains, flora, fauna, etc.*		X		
13. CULTURAL RESOURCES *(Native American burial sites, archeological, historical, etc.)*		X		
14. GEOLOGY AND SOILS *(Topography, minerals, geothermal, Installation Restoration Program, seismicity, etc.)*		X		
15. SOCIOECONOMIC *(Employment/population projections, school and local fiscal impacts, etc.)*		X		
16. OTHER *(Potential impacts not addressed above.)*				

SECTION III - ENVIRONMENTAL ANALYSIS DETERMINATION

17. [X] PROPOSED ACTION QUALIFIES FOR CATEGORICAL EXCLUSION (CATEX) # A2.3.19 ; OR

[ ] PROPOSED ACTION DOES NOT QUALIFY FOR A CATEX, FURTHER ENVIRONMENTAL ANALYSIS IS REQUIRED

18. REMARKS

EBS Wavier Letter required. Visual Site Inspection for EBS Waiver Letter was conducted on 19 Feburary 2016 by Ms. Victoria Branson & Ms. Martha Garcia.

The proposed action will occur in a Carbon Monoxide (CO) maintenance area. However, the Regulatory Authority has approved a CO Limited Maintenance Plan eliminating the need for a General Conformity analyses.

19. ENVIRONMENTAL PLANNING FUNCTION CERTIFICATION *(Name and Grade)*	19a. SIGNATURE	19b. DATE
John S. Pike, GS-14 377 MSG/CEI		20160224

Comments on AF 813

4. Purpose and Need for Action (continued)

In support of the Bulk Fuels Facility remediation project, the 377th Air Base Wing Enviromental Restoration is requesting a Renewal License (File 9A-3m, LIC/I-KI-11-0002) to enter Real Property with the Gibson Medical Center, LLC for access to the area bounded by Gibson Blvd SE, Ridgecrest Dr. SE, and San Pedro Dr. SE to the north, southwest, and east, respectively (see attached Figure 1), to facilitate access to current and future wells. The area requested by Environmental Restoration is for access to perform the requirements dictated by the New Mexico Environment Department (NMED) approved RCRA permit No. NM9570024423.

5. Description of Proposed Action (continued)

The 377th Air Base Wing Enviromental Restoration is requesting a renewal License (File 9A-3m, LIC/I-KI-11-0002) to enter Real Property with the Gibson Medical Center, LLC for access to current wells and the future installation and use of wells associated with the NMED approved RCRA permit No. NM9570024423. The area to be accessed is bounded by Gibson Blvd SE, Ridgecrest Dr. SE, and San Pedro Dr. SE to the north, southwest, and east, respectively (see attached Figure 1). The wells will be secured by locked protective covers or vault lids, and the area will be used during normal business hours.

The DOPAA (alternative) would require the 377th Air Base Wing Enviromental Restoration to not have access to existing and future wells and remediation systems associated with the NMED approved RCRA permit No. NM9570024423. This lack of access would delay the project and limit the extent to which the project could be completed.

Reference Document:

File 9A-3m - LIC/I-KI-11-0002 Gibson Medical Center.

8.1 RECERTIFICATION

I have conducted this Environmental Baseline Survey on behalf of the Air Force. I have reviewed all appropriate records made available, and conducted visual site inspections of the selected facilities following an analysis of information during the record search. The information contained within the survey report is based on records made available and, to the best of my knowledge, is correct and current as of 19 January 2016.

Recertified by: Martha E. Garcia
MARTHA E. GARCIA
NEPA Program Manager

Date: 20 January 2016

Approved by:
GREGORY S. CAPRA, P.E., LEED AP
Base Civil Engineer

Date: 7 Feb 16

Attachment G

Final EBS

(Will be Completed Upon Site Close Out)

LICENSE AGREEMENT
BETWEEN
THE CITY OF ALBUQUERQUE
AND
KIRTLAND AIR FORCE BASE

THIS REVOCABLE LICENSE, made and entered into this ___21nd___day of _September,__ 2016 by and between the City of Albuquerque, New Mexico, a municipal corporation (hereinafter referred to as the "CITY" or "LICENSOR") as LICENSOR and the Secretary of the Air Force, represented by the Installation Commander, Kirtland Air Force Base, located at 2000 Wyoming Boulevard SE, Kirtland Air Force Base, Albuquerque, NM 87117-5663, (hereinafter referred to as "KIRTLAND AFB" or "LICENSEE") as LICENSEE.

WITNESSETH, that in consideration of the mutual obligations and covenants herein, the parties hereto do mutually agree as follows:

1. Subject to the terms and conditions of this License, and as set forth in the Vadose Zone Investigation Work Plan Bulk Fuels Facility Spill, Solid Waste Management Units ST-106 and SS-111 – March 2011 and Groundwater Investigation Work Plan, Bulk Fuels Facility Spill, Solid Waste Management Units ST-106 and SS-111 – March 2011, which are attached hereto and incorporated herein as Attachments A and B, respectively, the final revised plans will be attached and incorporated herein upon approval and signature by New Mexico Environmental Department (NMED), the LICENSOR grants to LICENSEE this License to:

a. Construct, install, operate, maintain, modify, repair, replace, remove, and plug and abandon soil vapor and ground water monitoring wells for the collection of groundwater samples and conducting aquifer tests. Wells are identified as shallow (groundwater surface), intermediate (45 to 60 feet below groundwater surface) and deep (85 to 100 feet below groundwater surface). Existing and currently proposed monitoring wells subject to the terms of this permit are:

Kirtland Bulk Fuels Facility Off-Base Groundwater Monitoring Well Locations[1]

WELL ID	LATITUDE	LONGITUDE	AQUIFER ZONE
KAFB-106004	35° 3' 6.950" N	106° 34' 55.396" W	Shallow
KAFB-106010	35° 3' 10.983" N	106° 34' 38.422" W	Shallow
KAFB-106021	35° 3' 24.053" N	106° 34' 39.241" W	Shallow
KAFB-106022	35° 3' 28.203" N	106° 34' 27.493" W	Shallow
KAFB-106023	35° 3' 20.015" N	106° 34' 23.331" W	Shallow
KAFB-106025	35° 3' 36.107" N	106° 34' 32.215" W	Shallow
KAFB-106026	35° 3' 49.160" N	106° 34' 22.522" W	Shallow
KAFB-106028-510	35° 3' 6.723" N	106° 34' 39.866" W	Shallow
KAFB-106029	35° 3' 33.861" N	106° 34' 39.293" W	Shallow
KAFB-106030	35° 3' 34.151" N	106° 34' 39.277" W	Intermediate
KAFB-106031	35° 3' 34.435" N	106° 34' 39.272" W	Deep
KAFB-106035	35° 3' 27.632" N	106° 34' 24.235" W	Shallow
KAFB-106036	35° 3' 27.638" N	106° 34' 23.943" W	Intermediate
KAFB-106037	35° 3' 27.635" N	106° 34' 23.638" W	Deep
KAFB-106042	35° 3' 42.716" N	106° 34' 24.318" W	Shallow
KAFB-106043	35° 3' 42.581" N	106° 34' 24.532" W	Deep
KAFB-106049	35° 3' 39.887" N	106° 34' 35.451" W	Shallow
KAFB-106050	35° 3' 40.670" N	106° 34' 35.443" W	Intermediate
KAFB-106051	35° 3' 40.327" N	106° 34' 35.445" W	Deep
KAFB-106052	35° 3' 39.769" N	106° 34' 31.480" W	Shallow
KAFB-106053	35° 3' 40.078" N	106° 34' 31.474" W	Intermediate
KAFB-106054	35° 3' 40.851" N	106° 34' 31.460" W	Deep
KAFB-106055	35° 3' 36.160" N	106° 34' 22.812" W	Shallow
KAFB-106057	35° 3' 36.151" N	106° 34' 22.460" W	Intermediate
KAFB-106058	35° 3' 36.059" N	106° 34' 22.073" W	Deep

[1] This list of wells does not include wells drilled on Federal and/or private parcels granted under separate license and/or permit.

KAFB-106065	35° 3' 6.659" N	106° 34' 40.370" W	Intermediate
KAFB-106066	35° 3' 7.162" N	106° 34' 39.872" W	Deep
KAFB-106067	35° 3' 10.559" N	106° 34' 34.926" W	Shallow
KAFB-106068	35° 3' 10.653" N	106° 34' 35.215" W	Deep
KAFB-106069	35° 3' 10.388" N	106° 34' 35.186" W	Intermediate
KAFB-106070	35° 3' 22.682" N	106° 34' 33.181" W	Shallow
KAFB-106071	35° 3' 21.610" N	106° 34' 33.116" W	Deep
KAFB-106072	35° 3' 22.349" N	106° 34' 33.177" W	Intermediate
KAFB-106085	35° 3' 23.072" N	106° 34' 37.108" W	Shallow
KAFB-106086	35° 3' 22.937" N	106° 34' 37.257" W	Intermediate
KAFB-106087	35° 3' 23.262" N	106° 34' 37.266" W	Deep
KAFB-106088	35° 3' 20.928" N	106° 34' 29.104" W	Shallow
KAFB-106089	35° 3' 21.239" N	106° 34' 29.194" W	Intermediate
KAFB-106090	35° 3' 21.515" N	106° 34' 29.258" W	Deep
KAFB-106091	35° 3' 31.328" N	106° 34' 31.769" W	Shallow
KAFB-106092	35° 3' 31.149" N	106° 34' 31.393" W	Intermediate
KAFB-106093	35° 3' 31.447" N	106° 34' 31.390" W	Deep
KAFB-106094	35° 3' 10.477" N	106° 34' 42.518" W	Shallow
KAFB-106095	35° 3' 10.718" N	106° 34' 42.698" W	Intermediate
KAFB-106096	35° 3' 10.449" N	106° 34' 42.876" W	Deep
KAFB-106099	35° 3' 6.888" N	106° 34' 55.682" W	Intermediate
KAFB-106100	35° 3' 6.636" N	106° 34' 55.522" W	Deep
KAFB-106103	35° 3' 20.166" N	106° 34' 23.609" W	Intermediate
KAFB-106104	35° 3' 20.340" N	106° 34' 23.887" W	Deep
KAFB-106105	35° 3' 41.551" N	106° 34' 27.374" W	Intermediate
KAFB-106106	35° 3' 41.797" N	106° 34' 27.352" W	Shallow
KAFB-106107	35° 3' 41.163" N	106° 34' 27.382" W	Deep
KAFB-106204	35° 3' 52.598" N	106° 34' 11.292" W	Shallow
KAFB-106205	35° 3' 53.771" N	106° 34' 11.270" W	Intermediate
KAFB-106206	35° 3' 54.416" N	106° 34' 11.254" W	Deep
KAFB-106207	35° 4' 4.140" N	106° 33' 55.532" W	Shallow

KAFB-106208	35° 4' 4.481" N	106° 33' 55.526" W	Intermediate
KAFB-106209	35° 4' 4.943" N	106° 33' 55.527" W	Deep
KAFB-106213	35° 3' 27.578" N	106° 34' 20.372" W	Shallow
KAFB-106214	35° 3' 27.570" N	106° 34' 20.119" W	Intermediate
KAFB-106215	35° 3' 27.569" N	106° 34' 19.707" W	Deep
KAFB-106216	35° 3' 31.620" N	106° 34' 11.594" W	Shallow
KAFB-106217	35° 3' 31.353" N	106° 34' 11.606" W	Intermediate
KAFB-106218	35° 3' 30.980" N	106° 34' 11.611" W	Deep
KAFB-106219	35° 3' 41.994" N	106° 34' 4.794" W	Shallow
KAFB-106220	35° 3' 41.906" N	106° 34' 5.057" W	Intermediate
KAFB-106221	35° 3' 41.808" N	106° 34' 5.457" W	Deep
KAFB-106222	35° 3' 45.955" N	106° 34' 11.564" W	Shallow
KAFB-106223	35° 3' 44.965" N	106° 34' 11.580" W	Intermediate
KAFB-106224	35° 3' 43.181" N	106° 34' 11.608" W	Deep
KAFB-106225	35° 3' 46.803" N	106° 34' 19.493" W	Shallow
KAFB-106226	35° 3' 45.032" N	106° 34' 19.516" W	Intermediate
KAFB-106227	35° 3' 43.402" N	106° 34' 19.546" W	Deep
KAFB-106230	35° 3' 49.027" N	106° 34' 20.588" W	Intermediate
KAFB-106231	35° 3' 55.595" N	106° 34' 16.057" W	Shallow
KAFB-106232	35° 3' 55.601" N	106° 34' 16.383" W	Intermediate
KAFB-106235	Anderson Ave between Georgia St. and Florida St. (new installation-2016)		Deep
KAFB-106236	California St. South of Anderson Ave (new installation-2016)		Shallow
KAFB-106237	California St. South of Anderson Ave (new installation-2016)		Intermediate
KAFB-106238	California St. South of Anderson Ave (new installation -2016)		Deep
KAFB-106TBD	Pending NMED Requirement		TBD
KAFB-106TBD	Pending NMED Requirement		TBD
KAFB-106TBD	Pending NMED Requirement		TBD

Kirtland Bulk Fuels Facility Off-Base Soil Vapor Monitoring Well Locations[2]

WELL ID	LATITUDE	LONGITUDE	AQUIFER ZONE (depth horizon)
KAFB-106028-150	35° 3' 6.716" N	106° 34' 39.868" W	Vadose (150 ft bgs)
KAFB-106028-250	35° 3' 6.718" N	106° 34' 39.868" W	Vadose (250 ft bgs)
KAFB-106028-350	35° 3' 6.719" N	106° 34' 39.864" W	Vadose (350 ft bgs)
KAFB-106028-450	35° 3' 6.720" N	106° 34' 39.863" W	Vadose (450 ft bgs)

USGS Monitoring Well Locations3[3]

WELL ID	LATITUDE	LONGITUDE	AQUIFER ZONE
Cesar Chavez Shallow Sentinel (1)	35° 03' 59.53" N	106° 33' 51.79" W	Shallow
Cesar Chavez Deep Sentinel (3)	35° 03' 59.48" N	106° 33' 51.79" W	Deep
Cesar Chavez Observation (Temp) (3)	35° 03' 59.27" N	106° 33' 52.22" W	Deep
Cesar Chavez Flow-Logger Well (temp) (1)	35° 03' 59.66" N	106° 33' 52.22" W	Deep
Southern Shallow Sentinel Well (1)	35° 03' 59.58" N	106° 33' 39.23" W	Shallow
Southern Deep Sentinel Wells (3)	35° 03' 59.65" N	106° 33' 39.24" W	Deep
Southern Flow-Logger Well (temp) (3)	35° 03' 59.62" N	106° 33' 40.01" W	Deep
Southern Observation Wells (temp)(1)	35° 03' 58.83" N	106° 33' 40.00" W	Deep

b. Construct, install, operate, maintain, modify, repair, replace, remove, and plug and abandon groundwater extraction wells, and their associated pipeline and infrastructure, to include underground power lines, for the extraction and transport of influent (LNAPL, and/or its various constituents, to include ethylene-di-bromide (EDB)), to the Kirtland AFB groundwater treatment facility for treatment. Existing and currently proposed extraction wells and extraction well pipelines subject to the terms of this permit are:

[2] This list of wells does not include wells drilled on Federal and/or private parcels granted under separate license and/or permit.

[3] This list of USGS wells does not include USGS wells drilled on Federal and/or private parcels by separate license and/or permit.

Extraction Well Locations

WELL ID	LATITUDE	LONGITUDE	AQUIFER ZONE
KAFB-106233	35° 3' 30.906" N	106° 34' 31.391" W	Deep
KAFB-106234	35° 3' 48.991" N	106° 34' 18.709" W	Deep
KAFB - 106239	Ridgecrest Drive east of San Pedro (new installation – 2016)		Deep
KAFB-106240	Georgia St. and Eastern Ave if data suggests it is required (new installation – 2016)		Deep
KAFB-106TBD	Pending NMED Requirement		Deep
KAFB-106TBD	Pending NMED Requirement		Deep

Extraction Pipeline Locations

Extraction Pipeline	Location
Two (2) seventeen hundred foot (1700') long influent extraction pipelines consisting of one (1) seventeen hundred foot (1700') long four inch by eight inch (4"x8") dual containment pipeline and one (1) seventeen hundred foot (1700') long eight inch by twelve inch (8"x12") dual containment pipeline	From extraction well KAFB-106228 east in the City alley to Kirtland AFB
two (2) forty nine hundred foot (4900')long influent extraction pipelines consisting of one (1) forty nine hundred foot (4900') long four inch by eight inch (4x8") dual containment pipeline and one (1) forty nine hundred foot (4900') long eight inch by twelve inch (8"x12") dual containment pipeline.	As depicted in Attachments F and K
Two (2) twenty two hundred foot (2200') long influent extraction pipelines consisting of one (1) twenty two hundred foot (2200') long four inch by eight inch (4"x8") dual containment pipeline and one (1) twenty two hundred foot long (2200') eight inch by twelve inch (8"x12") dual containment pipeline.	(final location selection pending NMED's final selection of two extraction well locations)

c. Respond to and conduct emergency response activities at all current and future monitoring and extraction well locations and extraction well pipeline locations identified herein.

d. Construct, install, operate, maintain, modify, repair, replace, remove, and plug and abandon additional groundwater extraction wells, and their associated pipeline and infrastructure, to include underground power lines additional groundwater monitoring wells, influent extraction wells, and/or influent extraction pipelines required by NMED/HWB to complete the Bulk Fuels Facility fuel plume remediation. All such activity shall occur within the area of investigation described in Condition 1 herein and as more fully depicted in Attachment D herein, such construction and installation being subject to the terms and conditions herein, or as otherwise agreed to by the PARTIES by written agreement and submission of well permits and other drawings, plans and schematics as determined necessary by the City and the City manuals.

e. Coordinate all LICENSOR well location deviation requests with the NMED/HWB.

f. Construct, install, operate, maintain, modify, repair, replace, remove, plug and abandon a core drilling borehole, as more fully depicted in Attachment G herein, for the collection of a continuous core sample extending from a borehole depth of three hundred fifty feet (350') to five hundred feet (500') below ground level. The final core depth will depend upon observed LNAPL concentrations. A second alternate core drilling borehole may be necessary, if the first borehole LNAPL is observed in the first core sample. Specific borehole latitude/longitude location coordinates will be provided upon determination of the final borehole location and engineering specifications will be submitted prior to drilling. If the location of boreholes is within the confines of Bullhead park, the borehole location, core drilling time of year and other logistic considerations must be discussed with Park personnel well in advance of any activity planned for the Park and written approval by the Parks and Recreation Director must be obtained.

Core Drilling Borehole Locations

WELL ID	LATITUDE	LONGITUDE	AQUIFER ZONE
Core Borehole 1	TBD	TBD	Deep
Core Borehole 2 (if needed)	TBD	TBD	Deep

g. Conduct all remediation activities set forth in Clauses 1(a) through 1(f) herein on City property, including rights of ways, within the following general area within the municipal boundaries of the City of Albuquerque and City-owned property in the County of Bernalillo, excluding all City-owned parks except Bullhead Park, Phil Chacon Park and the Veterans Memorial:

Beginning at starting point #100 located at coordinates E1539764.97 N1474552.887, which point is located 610.56 feet S 57-56-34 E of the USGS Monument Hanger at coordinates 1539727.504 1474552.886; thence N 0-30-7 E 2011.624 feet to a point #101; thence N 68-28-49 W 22.557 feet to a point #102; thence N 1-7-56 E 65.504 feet to a point #103; thence N 1-47-38 E 102.451 feet to a point #104; thence N 0-51-35 E 2602.194 feet to a point #105; thence N 1-29-12 W 990.385 feet to a point #106; thence N 1-18-22 E 932.223 feet to a point #107; thence N 0-27-50 E749.859 feet to a point #108; thence S 88-55-28 E5316.566 feet to a point #109; thence N 89-23-49 E 3136.126 feet to a point #110; thence S 89-37-0 E 2356.942 feet to a point #111; thence S 0-49-9 W 1848.795 feet to a point #112; thence S 90-0-0 W 10.337 feet to a point #113; thence S 0-57-13 W 153.937 feet to a point #114; thence N 89-32-15 W 31.865 feet to a point #115; thence S 0-57-40 W 460.914 feet to a point #116; thence S 89-48-22 W 149.943 feet to a point #117; thence S 0-59-55 W 199.934 feet to a point #118; thence S 89-47-15 W 199.934 feet to a point #119; curve R 767.288 feet D 29-56-13 C S 20-12-45 W L to a point #120; thence S 5-44-26 W 1316.071 feet to a point #121; curve R 908.641 feet D 84-40-10 C S 47-27-1 W R to a point #122; thence N 89-6-23 W 133.287 feet to a point #123; thence S 0-59-11 W 131.748 feet to a point #124; thence S 89-57-53 W 61.472 feet to a point #125; thence S 0-3-57 E 19.993 feet to a point #126; thence N 89-55-56 E 9.996 feet to a point #127; thence S 0-4-7 E 2619.911 feet to a point #128; thence S 89-55-53 W 39.985 feet to a point #129; thence N 0-4-6 W 149.662 feet to a point #130; thence N 89-45-44 W 4239.031 feet to a point #131; thence N 0-16-36 E 406.187 feet to a point #132, thence N 89-44-15 W 1003.504 feet to starting point #100;

and as more fully identified in Attachments D and E attached hereto and incorporated herein. Final locations of each well described and shown in the attachments, any changes in location and any future wells determined to be necessary to the investigation and remediation of the fuel plume shall be approved by the LICENSOR, as follows: new or additional sampling wells determined to be necessary during the term of this license that are located within the license agreement area in city right-of-ways need prior approval of the City Environmental Health Department, Environmental Services Division. All wells and construction need to be addressed by amending this License and approval by the City of Albuquerque Chief Administrative Officer. Additionally, all wells must be processed through the Well Permit approval process prior to LICENSEE commencing construction. Final locations of all pipelines described and shown in the attachments, any changes in location and any future wells, extraction pipelines or other infrastructure determined to be necessary to the investigation and remediation of the fuel plume shall be approved by the LICENSOR prior to LICENSEE commencing construction.

2. The LICENSEE shall use the area described in Clause 1(g) herein and as shown in Attachments D and E for the purposes described in Clause 1 herein and not for any other purpose without first obtaining the written consent of the LICENSOR and shall adhere to the following use conditions:

a. As to the underground extraction pipeline, LICENSEE shall:

i. Obtain written preconstruction approval of the location of the pipeline, which written approval will be documented on the underground influent pipeline map attached hereto and incorporated herein as Attachment F;

a. Future Underground Influent Extraction Pipeline Locations:

Reserved.

ii. Conduct all construction, installation, maintenance, operation modification, repair, replacement, removal and abandonment activities to minimize impacts to the LICENSOR's property and minimize construction related noise and dust;

iii. Backfill the pipeline trench immediately and in such a manner as to retard soil subsidence;

iv. Inspect and repair any subsequent subsidence occurring along the length of the pipeline;

v. Coordinate with the City Engineering Department when initiating horizontal drilling under city streets, particularly Louisiana Avenue, for pipeline installation to minimize traffic flow interruptions and damage to the surface of any city street;

vi. Repair immediately all damage to city streets and/or alleys along the entire length of the pipeline;

vii. Provide an as-built schematic to the LICENSOR to eliminate potential damage to the influent extraction pipeline system during any LICENSOR maintenance and/or construction activities, or any other LICENSOR subsurface activities, which schematic shall be attached hereto and incorporated herein as part of Attachment K when construction is completed;

b. Future As Builts Schematic and Cross Sections of Wells and Extraction Pipeline

Reserved

viii. Coordinate all extraction pipeline deviations with the LICENSOR;

ix. Register the influent extraction pipeline with New Mexico One Call to eliminate inadvertent line ruptures or breaks during LICENSOR and/or third party digging or excavation activities; and

x. Remove said influent extraction pipeline upon New Mexico Environment Department's approved closure of the LICENSEE's bulk fuel release remediation.

c. As to the monitoring and extraction well locations, LICENSEE shall:

i. Obtain a City of Albuquerque Well Permit for each well by making application to the Development and Building Services Division. One permit may be used for multiple wells, grouped by type of well, by installation priority, by cluster or by location;

a. Future Well Permits:
Reserved.

ii. Ensure that the LICENSEE's Contractor complies with the terms of all issued well permits and coordinates field activities with the Development and Building Services Division;

iii. Ensure that the LICENSEE's Contractor complies with permitting and traffic/safety control requirements of the City's Department of Municipal Development (DMD), including but not limited to obtaining an excavation and barricade permit at each cluster;

iv. Ensure that the LICENSEE's Contractor complies with permitting and environmental Health protections requirements of the City of Albuquerque Environmental Health Department, including but not limited to air quality and noise remediation;

v. Restore all well heads to pre-existing grades in compliance with City ordinances, codes and guidelines and according to the approved work plans;

vi. Coordinate all well installations within City Parks with the City's Department of Parks and Recreation (Parks) to implement adequate safety control measures prior to and during well drilling and construction activities and to minimize disruption to activities and uses scheduled by Parks;

vii. Revegetate the soil surface immediately consistent with the landscaping specifications contained in the City's Standard Specifications for Public Works Construction, Section 1000 – Landscaping and coordinate all surface restoration with Parks to allow on-site pre-construction field inspections by Parks with the KAFB contractor and a post-construction field inspection by Parks following the restoration activities; and

viii. Ensure LICENSEE's Contractor contacts the Bullhead Park Superintendent and/or park personnel to coordinate all sampling at wells 106028, 106065 and 106066 within Bullhead Park prior to traversing the park with vehicles to conduct the sampling.

ix. Coordinate all monitoring and sampling activity affecting the Cesar Chavez Community Center facility with the facility's site manager to implement adequate safety control measures prior to and during well monitoring and sampling activities to minimize disruption to activities and uses scheduled by Family and Community Services.

x. Restore any surface disturbance created by monitoring and sampling activities at the Cesar Chavez Community Center to its pre-disturbance condition.

xi. Repair or replace any curbing or other vehicular access facility infrastructure affected by monitoring and sampling activities at the Cesar Chavez Community Center to restore it to its pre-disturbance condition.

d. Miscellaneous locations: all ingress, egress and miscellaneous sites disturbed by the LICENSEE during the construction, installation, maintenance, operation, repair and/or removal of wells and underground pipeline shall be returned to pre-construction condition or as mutually agreed by the Parties.

e. Before commencing or resuming any construction and repairs in USS Bullhead Park and/or the Veterans Memorial, LICENSEE shall coordinate with the Director of Parks and Recreation Department to schedule LICENSEE's activities so as to not interfere with activities and uses scheduled by Parks. The decision of the Director of Parks and Recreation as to when LICENSEE's construction and repairs may occur shall be final.

f. In addition to the foregoing, LICENSEE shall, during and after the installation of its remediation infrastructure, ensure that the City property continues to be usable for its intended uses reasonably to the same extent as before the installation of the remediation infrastructure.

3. This License shall remain in effect for a period of ten (10) years beginning on the date of execution by the LICENSEE, with multiple options to renew in five-year increments thereafter, corresponding with, but not to exceed, the New Mexico Environment Department Hazardous Waste Bureau remediation timetable, as set forth in Attachments A through D incorporated above in Clause 1, unless revoked as provided herein, or extended by the mutual written consent of both parties.

4. Either Party may revoke this License upon providing written notice to the other party thirty (30) days prior to such revocation.

5. All tools, equipment, and other property (the "Personal Property") taken upon or placed upon the City's land by the LICENSEE shall remain the property of the LICENSEE and shall be removed within thirty (30) days after the expiration or revocation of this License. In the event that the LICENSEE fails to timely remove the Personal Property the LICENSOR may, at the LICENSOR's election, remove and have stored the Personal Property at the LICENSEE's expense or may elect to retain the Personal Property as LICENSOR's property.

6. Damages.

a. If any action of the LICENSEE's officers, employees, or authorized representatives including contractors and subcontractors) in the exercise of this license results in damage to the Property, or any other property of the LICENSOR or LCENSOR's tenants, including but not limited to water lines, sanitary and storm sewers, and other utilities and services, caused by LICENSEE's Operation(s), to include but not limited to damage caused by vibration during well and pipeline drilling and installation, the LICENSEE will either repair such damage or make an appropriate settlement with the LICENSOR. Upon completion, expiration or termination of this license, LICENSEE shall make all reasonable efforts to restore the Property to its original condition in accordance with section 9. The LICENSEE's liability under this clause may not exceed appropriations available for such payment and nothing contained in this license may be considered as implying that Congress will at a later date appropriate funds sufficient to meet deficiencies. The provisions of this paragraph are without prejudice to any rights the LICENSOR may have to make a claim under applicable laws for any other damages than provided herein.

b. The LICENSEE shall respond to claims repair or pay for all actual damages done to City Property and improvements, or to the improvements of the City's tenants. All claims for damage to adjacent properties caused by LICENSEE's Operations, to include damage caused by vibration during well and pipeline drilling and installation, brought by third parties shall be subject to the claims process set forth in Condition 13 herein and as limited by the provisions of the Federal Tort Claims Act (28 USC §§ 2671 et seq.). To the extent provided by law, the LICENSEE's liability under this clause is subject to the availability of funds, as set forth in 31 USC § 1341 (Anti-Deficiency Act) and nothing contained

in this License may be considered as implying Congress will at a later date appropriate funds sufficient to meet deficiencies. The provisions of this clause are without prejudice to any rights the LICENSOR or any third party may have to make a claim for damages under applicable laws.

7. The LICENSEE shall be solely responsible for maintaining in a safe condition the premises upon which the LICENSEE's remediation operations, to include but not limited to construction of improvements, subsequent well monitoring events effluent pipeline transport from well sites to the LICENSEE groundwater treatment facility, are being conducted and the property of the LICENSOR or LICENSOR's tenants within the premises, including but not limited to water lines, sanitary and storm sewer and other utilities and services. To the extent provided by law, the LICENSEE's liability under this clause is subject to the availability of funds, as set forth in 31 USC § 1341 (Anti-Deficiency Act) and nothing contained in this License may be considered as implying Congress will at a later date appropriate funds sufficient to meet deficiencies. Nothing herein is intended to impair any right or immunity under the laws of the State of New Mexico.

8. The hold harmless provisions contained herein shall not apply to any liability, claims, damages, losses or expenses, including reasonable attorney's fees, arising out of bodily injury to persons or damage to property caused by or resulting from, in whole or in part, the negligent act or omission of the City, or the agents or employees of the City. Furthermore, LICENSEE shall require its agents, representatives, contractors or sub-contractors to obtain insurance for the specific protection and benefit of the City, including but not necessarily limited to, the following coverage:

a. Comprehensive General Liability Insurance. Comprehensive general liability insurance with liability limits in an initial amount not less than $1,000,000 aggregate limit of liability for bodily injury, including death, and property damage in any one occurrence.

b. Automobile Liability Insurance. An automobile liability policy with liability limits in amounts not less than $1,000,000 combined single limit of liability for bodily injury, including death, and property damage in any one occurrence. Said policy of insurance must include coverage for the use of all owned, non-owned, hired automobiles, vehicles and other equipment both on and off work and is in addition to the Comprehensive General Liability Coverage.

c. Workers' Compensation Insurance. Workers' Compensation Insurance for its employees in accordance with the provisions of the Workers' Compensation Act of the State of New Mexico.

d. Owner's Protective Public Liability Insurance. During any period of construction or major renovation, an owner's protective public liability insurance policy with liability limits in an amount not less than $1,000,000 combined single limit of liability for bodily injury, including death and property damage in any one occurrence.

e. Builder's Risk and Property Insurance. During any period of construction or major renovation, until completion of the construction, builder's risk, vandalism and malicious mischief insurance for the value of the property. Alternatively, Contractor shall procure and maintain insurance against loss or damage to the Project by fire, lightning, vandalism, and malicious mischief with the uniform extended coverage endorsement limited only as may be provided in the standard form or extended coverage endorsement at the time in use by the State of New Mexico to provide for not less than 90% recovery of the market value of the buildings and other improvements.

f. Increased Limits. The City may require the LICENSEE's Contractor to reasonably increase the maximum limits of any insurance required herein and LICENSEE's Contractor shall promptly comply.

g. No Subrogation. LICENSEE's Contractor and its surety shall and hereby do waive any right of subrogation they may acquire against the City, its officers, agents and employees by reason of any payment made on account of injury, including death, sustained by any employee of the insured arising out of performance of this Agreement. Neither the LICENSEE's Contractor nor its employees are considered to be employees of the City of Albuquerque for any purpose whatsoever.

h. The LICENSEE's Contractor shall be and is an independent contractor at all times in the performance of this Agreement. Neither the LICENSEE's Contractor nor its employees are entitled to any benefits from the City under the provisions of the Worker's Compensation Act of the State of New Mexico, nor to any of the benefits granted to employees of the City under the provisions of the Merit System Ordinance or any other law or provision, as now enacted or hereafter amended.

i. Proof of Insurance: During the term of this Agreement, not less than once each year, on or before May 31, LICENSEE's Contractor shall provide to the City without demand, or more frequently upon demand, proof of all required insurance coverage. Prior to expiration or exchange of any policy, LICENSEE's Contractor shall furnish the City evidence satisfactory to the City that the policy has been renewed or replaced or is no longer required by this Agreement. All policies required hereunder shall provide that the City shall be given thirty (30) days prior written notice of cancellation, non-renewal or material alteration of coverage. Provisions that the insurance company shall "endeavor to give the City notice" shall not be allowed.

j. Application of Net Proceeds of Insurance. The Net Proceeds of builder's risk insurance and of fire and other hazard and casualty insurance, carried pursuant to the provisions of this Agreement hereof, shall be applied first to the payment of the interests of the City as it may be from time to time, and only after such payment, to the interests of Contractor and others, and otherwise as provided in this Agreement and the Net Proceeds of liability insurance carried pursuant to the provisions of this Agreement hereof shall be applied toward extinguishment or satisfaction of the liability with respect to which such insurance proceeds have been paid.

k. Additional Provisions Respecting Insurance. All insurance required of Contractor pursuant to this Agreement shall be obtained by Contractor from and maintained in generally recognized responsible insurance authorized to do business in the State of New Mexico. All applicable policies evidencing such insurance shall name both the City and Contractor as named insured and the City shall be named as loss payee as to the City's Mortgage under the builder's risk and property insurance required by this Agreement.

9. The LICENSEE will use all reasonable means available to protect the environment and natural resources from damage arising from this License or activities incident to it, to include the removal and disposal of all municipal and hazardous waste generated at all well and infrastructure construction and operation sites in accordance with City of Albuquerque, State and Federal law. Where damage occurs, the Licensee shall be liable and shall restore the damaged resources to the condition existing prior to the implementation of the remediation and monitoring, as documented in the Request for Environmental Impact Analysis (AF Form 813), which is attached hereto and made a part of this License as Attachment H, and two Environmental Baseline Survey (EBS), which are to be attached hereto and made a part of

this License as Attachments I and J when completed. Upon revocation or termination of this License, with the exception of pre-existing conditions identified in Attachments H, I and J herein, the LICENSOR's land will be returned in the same environmental condition as received but without the contamination conditions for which the LICENSEE is performing the remediation.

a. Final EBS

Reserved

10. In connection with its use of or any other activity at the Location, the LICENSEE, its officers, employees, agents, representatives, contractors, and assigns will at all times and in all respects comply with all federal, state and local laws, ordinances and regulations, relating to the protection of the environment, including but not limited to protection of surface water and groundwater; industrial hygiene; the use, handling and disposal of any hazardous or toxic substances; the Clean Air Act, 42 U.S.C. 7401 et seq. applicable state and air quality local laws, and policies and procedures of the City's Environmental Health Air Quality Division.

11. The LICENSEE and its agents, representatives, contractors or sub-contractors shall comply with all other applicable federal, state and local laws, statutes, ordinances and regulations and will not discriminate illegally against any person.

12. For purposes of giving formal written notice, the points of contact are as follows:

For the City: Chief Administrative Officer, City of Albuquerque
City-County Government Center, #1 Civic Plaza
P.O. Box 1293
Albuquerque, NM 87103

For Kirtland: Installation Commander
2000 Wyoming Blvd, SE
Kirtland AFB, NM 87117

13. Claims.

a. Point of Contact. The LICENSEE's point of contact for all damages, whether to real or

personal property, will be submitted to:

377 ABW/JA
Attention: Claims Division
2000 Wyoming Blvd., SE
Building 20604, Room B-36

Kirtland AFB, NM 87117-5000
(505) 846-4217
http://www.claims.jag.af.mil

b. Claims Process. As set forth in License #LIC/I-KI-11-0001 Condition 6, *Damages*, a claim for damage and/or injury due to LICENSEE's operations, a claimant, or his/her authorized agent, must file a properly signed SF-95, *Claim for Damage, Injury, or Death,* setting forth a sum certain for damage to or loss of property, personal injury or death, to the point of contact identified in Condition 7(a) above. The claim form is available at the website provided herein in Condition 7(a) above. To the extent provided by law, the LICENSEE's liability under this Condition 13 is subject to the availability of funds, as set forth in 31 USC § 1341 (Anti-Deficiency Act) and nothing contained in this License may be considered as implying Congress will at a later date appropriate funds sufficient to meet deficiencies. The provisions of this Condition 13 are without prejudice to any rights the LICENSOR or any third party may have to make a claim for damages under applicable laws.

14. Index of Attachments referred to in License, copies of which are on file with LICENSOR

Attachment A – Vadose Zone Investigation Work Plan - Bulk Fuels Facility Spill, Solid Waste Management Units ST-106 and SS-111 – March 2011

Attachment B – Groundwater Investigation Work Plan, Bulk Fuels Facility Spill, Solid Waste Management Units ST-106 and SS-111 – March 2011

Attachment C – Well Permits for wells identified under clauses 1(a) and 1(b) on file with LICENSOR'S City Engineer

Attachment D – General Location Map of License Area

Attachment E – Off Installation Well Location Map 2015

Attachment F – City of Albuquerque Well Locations with LNAPL Containment System

Attachment G – Coring Borehole location map

Attachment H – Requests for Environmental Impact Analysis (AF Form 813) dated 2/17/09 and 3/18/10 (Attachments H-1 and H-2, respectively)

Attachment I – Initial Environmental Baseline Survey (EBS) dated 2/22/11, 3/2/10, 3/3/10, and 2/4/09 (Attachments I-1, I-2, I-3, and I-4, respectively)

Attachment J – Final Environmental Baseline Survey February 2012

Attachment K – As built schematics and cross sections of wells and extraction pipeline (to be attached and incorporated herein when completed)

15. This License contains the entire agreement of the parties. Changes to this License are not binding unless made in writing and signed by both parties.

16. This License is governed by and construed and enforced in accordance with federal law and the laws of New Mexico.

17. If any part of this License is held to be invalid or unenforceable, the remainder of this License will remain valid and enforceable if the remainder of the License is reasonably capable of completion.

SIGNATURES ON FOLLOWING PAGES

CITY OF ALBUQUERQUE
A New Mexico municipal corporation

Robert Perry
Chief Administrative Officer

STATE OF NEW MEXICO)
)ss.
COUNTY OF BERNALILLO)

The foregoing instrument was acknowledged before me this 21 day of Sept, 2016, by Robert Perry, Chief Administrative Officer of the City of Albuquerque, New Mexico, a New Mexico municipal corporation, on behalf of said corporation.

Notary Public

My Commission Expires:
4-4-2017

OFFICIAL SEAL
Giselle M. Alvarez
NOTARY PUBLIC
STATE OF NEW MEXICO
My Commission Expires: 4-4-2017

FOR THE UNITED STATES OF AMERICA

ROBERT E. MORIARTY, P.E.
Director
Installations Directorate

STATE OF TEXAS)
)ss.
COUNTY OF BEXAR)

The foregoing instrument was acknowledged before me this 3rd day of August 2016, by Robert E. Moriarty, P.E., Director, Installations Directorate, Air Force Civil Engineer Center, USAF, duly authorized to sign on behalf of the United States of America.

AGUSTIN PERALES
Notary Public, State of Texas
My Commission Expires
February 22, 2019

Notary Public

My Commission Expires:
2/22/2019

APPENDIX B

Health and Safety

HEALTH AND SAFETY

The foremost priority in operating the groundwater treatment system (GWTS) is to ensure the health and safety of the operator, visitors, and nearby residents. The operations and maintenance phase of the project includes all activities following construction and startup, and involves the operation of the GWTS, as designed, until the remediation criteria are met.

B.1 Accident Prevention Plan

Operation and maintenance of the GWTS is covered under the contractor's specific Accident Prevention Plan or similar approved plan. The Accident Prevention Plan should cover all remediation activities related to the GWTS and includes a Site Safety and Health Plan, which specifies the procedures that are necessary to protect onsite personnel, visitors, and the public from harm resulting from project activities or exposure to hazardous materials. A copy of the contractor's Site Safety and Health Plan must be kept at the GWTS for reference.

The operator must be familiar with their Accident Prevention Plan and its requirements, including training (project orientation, Occupational Safety and Health Administration Hazardous Waste Operations and Emergency Response [also known as HAZWOPER]), medical monitoring, personal protective equipment, confined space entry procedures, fall protection measures (required for any activity having a potential fall greater than 6 feet), air monitoring, hazard communication, emergency response plan, hospital route, and the site control log. Prior to assignments at the GWTS, all personnel shall be trained in the contents of this Operations and Maintenance Plan. The plant operators will provide a safety briefing for visitors to the plant and well locations. A sign-in sheet for visitors will be posted at the GWTS.

Additionally, activity hazard analyses (AHA) have been developed for all major tasks to be performed at the GWTS and are included in the Accident Prevention Plan. Activity hazard analysis is a documented process by which the steps required to accomplish a work activity are outlined, the actual or potential hazards of the activity are identified, and measures for the elimination or control of those hazards are specified. The risk assessment and management process is accomplished through the preparation of the AHAs. Applicable AHA(s) will be reviewed by personnel assigned to the GWTS or assisting in specific activities. Additional AHAs will be prepared when new tasks are added, when the job situation changes, or when it becomes necessary to alter safety requirements.

Treatment plant operations may normally be conducted in Level D personal protective equipment, which includes protective footwear, standard work clothing, hard hats, and protective eye wear (safety glasses). All equipment in the GWTS has been specified to meet Occupational Safety and Health Administration noise limits. During startup, noise monitoring will be conducted, and any area requiring hearing protection will be posted. In the event of any unauthorized discharge, refer to the appropriate AHA and Contingency Plan (Appendix K).

B.2 Hazards

Operation of the GWTS may include the following hazards, which the Operator should be aware of:

- Contact with contaminated (untreated) groundwater
- Confined space entry
- Electrical hazards
- Hazards associated with rotating equipment (pump shafts, vent fans)

- Release of stored energy (mechanical and pressurized systems)
- Hearing damage hazards
- Slip/trip/fall hazards
- Exposure to oxidants (sodium hypochlorite)
- Lifting heavy objects
- Heat and cold stress
- Pinch points (lift gates, vault lids)
- Hand tool use
- Respiratory hazards (granular activated carbon fines, sand filter media [DMI-65]).

The following paragraphs outline the hazard categories and the corresponding control measures that will be applied during any additional startup activities or GWTS operations and maintenance.

B.2.1 Slips, Trips, and Falls

Slips, trips, and falls are frequently the cause of various accidents and injuries, with a high risk of serious injury. The following actions will reduce the risks from slips, trips, and falls:

- Maintain sufficient lighting inside and outside buildings.
- Use and maintain guarded work platforms for access to equipment for operations and maintenance.
- Maintain slip-resistant floor surfaces.
- Always use the vertical lifeline fall protection systems for a fixed ladder or harness for elevated lifts.
- Maintain clear space around all sampling locations.

B.2.2 Rotating Equipment

Personnel can be seriously injured when appendages or clothing are caught in rotating equipment. All rotating equipment is provided with guards and shielding that should be maintained and not removed. In addition, operators should be aware of locations of the emergency stop buttons that have been provided at key locations.

B.2.3 Confined Space

Potential confined space hazards in the GWTS include the feed tank, the treated water tank, the granular activated carbon vessels, and the well vaults. Operators will follow their approved confined space entry procedures and equipment lock-out/tag-out procedures if it is necessary to enter any of these confined spaces. These procedures should be in conformance with the Safety and Health Requirements Manual, Engineer Manual EM-385-1-1 (U.S. Army Corps of Engineers, 2014). Copies of these procedures will be maintained at the GWTS system control room. Confined space entry procedures must account for the potential for oxygen-deficient atmospheres in any tank or vessel that contains wet carbon or wet carbon fines. Wet carbon will adsorb oxygen from the air and can result in oxygen-deficient atmospheres.

B.2.4 Electrical

In addition to the 120-volt utility, lighting, and control circuits, there is also 480-volt equipment in the GWTS, and 12,470-volt power feeding the transformers for the GWTS building and the well control house building. All three of the existing well pumps, the groundwater feed pumps, the treated water pump, the air compressor, as well as the heaters for the building are connected to 480-volt power service.

The potential for injury and property damage from electrocution and/or arc flash exists, especially with the 480-volt equipment and control panels. In order to reduce this hazard, the design uses separate combination starters and variable frequency drive cabinets to keep the 480-volt power out of the programmable logic controller control panels and thereby reduces the personal protective equipment required to access the programmable logic controller for startup and troubleshooting. External controls for the variable frequency drives will be installed on the high-voltage cabinets to allow pump restarts without an electrician. In addition, all utilities at the site, including the buried 480- and 12,740-volt cable, are marked with buried detectable warning tape to reduce the potential for accidental intrusion.

All maintenance and troubleshooting activities involving the electrical system should be conducted by qualified personnel. These activities will follow the contractor's approved lockout/tagout procedures and arc flash hazard procedures. Work on energized 480-volt circuits will only be conducted by a qualified electrician with the permission of the site manager.

References

U.S. Army Corps of Engineers. 2014. EM 385-1-1, *Safety and Health Requirements Manual.* U.S. Army Corps of Engineers. November 30.

APPENDIX C

Organization and Responsibilities

Figure C-1 Groundwater Treatment System Organization and Responsibilities

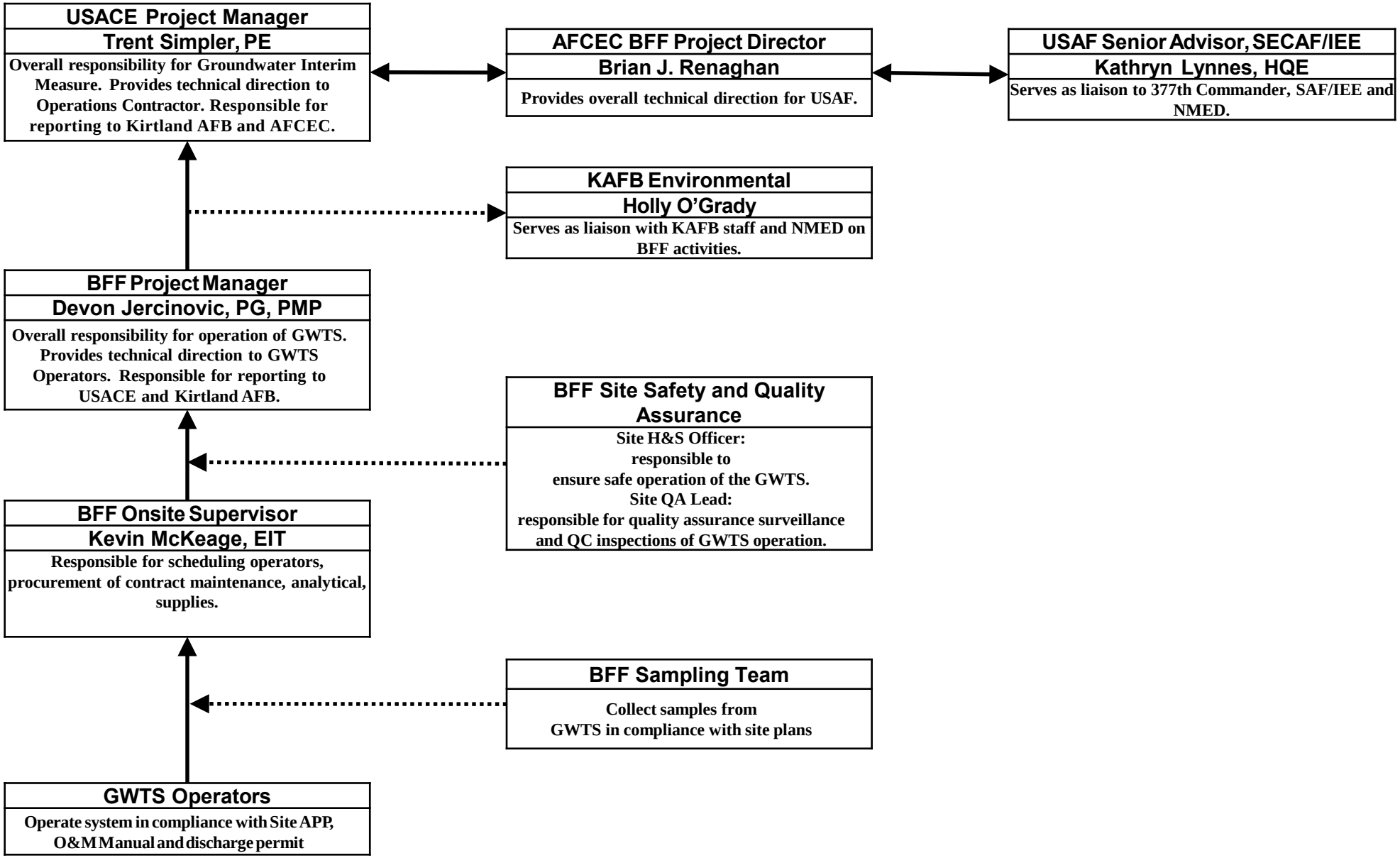

APPENDIX D

Description of Groundwater Treatment System Equipment and Facilities

DESCRIPTION OF GROUNDWATER TREATMENT SYSTEM EQUIPMENT AND FACILITIES

The purpose of this appendix is to familiarize users with basic information regarding the groundwater treatment system (GWTS). Pertinent vendor catalog information and manuals from equipment manufacturers are provided in the equipment binders that will be kept at the GWTS building. The text of this appendix is intended to provide an overview without being overly redundant with the manufacturer's information. A flow diagram and piping and instrumentation diagrams for the GWTS are provided in Appendix E of the Operations and Maintenance Plan.

D.1 Groundwater Extraction Wells, Pumps, and Conveyance Lines

The extraction system consists of four extraction wells (KAFB-106228, KAFB-106233, KAFB-106234, and KAFB-106239), one well control house (WCH), and approximately 3 miles of double-wall piping to convey the extracted groundwater to the GWTS. As shown on the flow sheet in Appendix E, the well pumps are P-101, P-102, P-103, and P-104 (pending) for the four wells.

The wellhead for each well is enclosed in a below grade, reinforced concrete well vault. The vaults house the piping that connects the well pump outlet to the double-wall pipelines that carry the contaminated groundwater to the GWTS. The conveyance lines are fitted with leak-monitoring devices (conductivity switches) in the annular space between the inner and outer walls of the double-wall pipe. Water sensors are also located in each well vault.

D.1.1 KAFB-106228

KAFB-106228 is located in the parking lot of Christ United Methodist Church at 6200 Gibson Boulevard Southeast. The extraction well is 8 inches in diameter and screened from 440 to 540 feet below ground surface (bgs). The well is equipped with a well pump (P-101), which is a 30-horsepower (Hp), 16-stage submersible centrifugal pump (480-volt, three-phase) capable of pumping a nominal flow rate up to 180 gallons per minute (gpm). Flow rate is controlled by manually adjusting the inline valve at the wellhead. P-101 is set 15 feet above the bottom of the well screen.

Electrical power for KAFB-106228 is supplied by a nearby Public Service Company of New Mexico pole-top three-phase transformer that feeds 480-volt, three-phase power routed a short distance overhead to an above grade rack. The rack is located on Christ United Methodist Church property and is installed in an enclosed shed. The rack secures a 200-ampere line disconnect switch, service meter (provided by Public Service Company of New Mexico), and service entrance disconnect. The shed and panels are always locked. Power from the service disconnect breaker feeds the well pump motor starter and a small power center for 120-volt devices. The well pump and flow control valve are automated by the main control panel in the GWTS building. Control wiring for the well pump and other well instrumentation is installed in a conduit alongside the pipeline from the wellhead to the treatment plant. All controls are fed to the main control panel in the GWTS building.

For KAFB-106228, the groundwater flowmeter and a motor-actuated control valve are installed in the well vault for KAFB-106228. These instruments can be used to regulate the groundwater extraction rate. The low profile, lockable well vault is concrete-constructed with an H-20 traffic-rated cover and flush-mounted with the existing grade.

The conveyance line from this well is a 4-inch inner × 8-inch outer diameter double-wall, high density polyethylene (HDPE) pipe. The inner wall is DR-11, while the outer wall is DR-17. The pipeline runs

from the well vault under an unnamed alley that runs parallel to and just south of Gibson Boulevard. It crosses underneath Louisiana Boulevard onto Kirtland Air Force Base property and turns south to the valve vault. The valve vault is similar to the well vault and was installed initially to provide a connection to the former temporary treatment system. The conveyance line then runs south and southeast to the GWTS building. Air/vacuum relief valves and leak detection are installed in both the wellhead vault and valve vault. Leak detection switches are installed in the annular space between the inner and outer walls of the double-wall pipe. These switches are installed in a flange on the end of the pipeline that is located in the wellhead vault.

D.1.2 KAFB-106233 and KAFB-106234

KAFB-106233 is located at the end of California Street Southeast near its intersection with Gibson Boulevard. The extraction well is 8 inches in diameter and is screened from 430 to 532 feet bgs. The well is equipped with a well pump (P-102), which is a 40-Hp, 22-stage submersible centrifugal pump (480-volt, three-phase) that is designed to pump up to 180 gpm of groundwater. Flow rate is controlled by manually adjusting the inline valve at the WCH. P-102 is set 15 feet above the bottom of the well screen.

KAFB-106234 is located at the southeast corner of the intersection of Anderson Avenue and Georgia Avenue. The extraction well is 8 inches in diameter and screened from 439.6 to 539.6 feet bgs. The well is equipped with a well pump (P-103), which is a 40-Hp, 22-stage submersible centrifugal pump (480-volt, three-phase) that is designed to pump up to 180 gpm of groundwater. Flow rate is controlled by manually adjusting the inline valve at the WCH. P-103 intake is set at 15 feet bgs above the bottom of the well screen.

Electrical power for KAFB-106233 and KAFB-106234 is supplied from the WCH through a 480-volt power cable installed in conduit buried alongside the groundwater pipeline from the wellhead to the GWTS. Signal wiring for the well level and leak detection is installed in a parallel conduit. All signals are connected to a panel in the WCH and transmitted by telemetry to the main control panel in the GWTS building.

The conveyance lines for wells KAFB-106233 and KAFB-106234 to the WCH are double-wall 4- × 8-inch HDPE pipe as was used for well KAFB-106228. Each pipe is sloped toward the well vault to ensure that any internal leaks will activate the leak detection sensor in the secondary containment pipe. The conveyance line for KAFB-106233 runs from the well vault north under California Street, east under an alley, and turns north under the alley that runs between California Street and Dakota Street. The conveyance line turns east under Eastern Avenue, crosses under Louisiana Boulevard to the New Mexico Veterans Memorial, where it turns southeast toward the WCH and onto Kirtland Air Force Base property. The conveyance for KAFB-106234 runs from the well vault east under Anderson Avenue and turns south under the alley that runs between Georgia Street and Indiana Street to Eastern Avenue. From there, it runs parallel to the line for well KAFB-106233.

The conveyance lines from KAFB-106233 and KAFB-106234 both go through a valve vault that is located under Eastern Avenue, where it intersects the alley between Georgia Street and Indiana Street. Air/vacuum relief valves are installed on both pipelines in this vault. Leak detection switches are also installed in this vault. Air/vacuum relief valves and a pressure relief valve are also installed in the wellhead vault for both pipelines.

D.1.3 KAFB-106239

KAFB-106239 is located at the southeast corner of the intersection of Ridgecrest Drive and San Pedro Drive. This extraction well is 8 inches in diameter and screened from 470 to 527.7 feet bgs. The well is equipped with a 25-Hp pump (P-104) submersible centrifugal pump (480-volt, three-phase) that is designed to pump 75 gpm of groundwater. Flow rate is controlled by a variable frequency drive housed at the nearby electrical rack. P-104 is set 15 feet above the bottom of the well screen.

Electrical power for KAFB-106239 is supplied from on-Base through a 480-volt power cable installed in a concrete encased conduit buried alongside the groundwater pipeline from the Base to the electrical rack in the Veterans Affairs parking lot then to the well head. A 12-strand fiber optic cable is installed in a parallel conduit. All signal and electrical wires coming from the wellhead are connected to the control panel on the electrical rack in the Veterans Affairs parking lot.

The conveyance line for KAFB-106239 runs from the well vault to a junction vault on-Base with the KAFB-106228 existing conveyance line; the entirety of the conveyance line is composed of double-wall 4- × 8-inch HDPE pipe. This section of pipe is equipped with continuous leak detection within an annular space of the dual wall conveyance line running from the well vault to the junction vault. The conveyance line runs from the well vault east along the southern edge of Ridgecrest Drive. The conveyance line crosses Ridgecrest Drive just east (approximately 150 feet) of the intersection of Kentucky Street and Ridgecrest Drive. The conveyance line then proceeds along the north side of Ridgecrest Drive under Kentucky Street and Louisiana Boulevard and onto the Base where it ties into the existing KAFB-106228 conveyance line just northeast of the intersection of Ridgecrest Drive and Perimeter Circle. The conveyance line junction is contained in a junction vault equipped with a leak detection sensor.

D.2 Well Control House for KAFB-106233 and KAFB-106234

The WCH is located on Kirtland Air Force Base as Building 19160. This insulated steel-stud building with a stucco exterior is located at the closest point from Kirtland Air Force Base property to the extraction wells. The building is heated and cooled to protect equipment within. The building has a concrete slab floor with a curb for leak containment. The pipelines from KAFB-106233 and KAFB-106234 terminate into a piping manifold in the WCH that includes the sample points, flowmeters, and control valves for both wells. The piping manifold then combines the groundwater flow from the two wells and connects to an 8- × 12-inch diameter double-wall HDPE pipeline that runs from the WCH to the GWTS building. Leak detection switches for the containment annulus are located in the WCH. Additional pressure gauges are installed on the outer wall of the influent pipes from KAFB-106233 and KAFB-106234. While the well pumps are running, these gauges will show if there has been a breach in the inner wall pipe. Power to the WCH is supplied from a nearby underground 12,740-volt power service connected to a pad-mounted transformer that supplies 480-volt power to an electrical service rack that includes the reduced voltage (soft-start) motor starters for the well pumps and feeds the power cable that runs out to the pumps. The signal cables from the well and valve vaults terminate at a control panel in the WCH that communicates with the GWTS main control system by radio telemetry.

D.3 Groundwater Treatment System Building

The GWTS building is a single-story, free-standing 4,160-square foot (52 × 80 feet), non-sprinkler equipped structure. The building has a covered (16 × 80 feet) truck-loading/unloading bay and a control room (12 × 12 feet) attached to the side of the main structure. The main control programmable logic controller (PLC) for the GWTS is installed in this control room. The PLC integrates all controls for the

four operating extraction wells, the GWTS, and discharge to the Tijeras Arroyo golf course main pond (GCMP) and injection well KAFB-7.

The building is constructed of conventional reinforced concrete masonry block walls supporting a steel bar joist roof. The floor slab is constructed as a reinforced concrete slab-on-grade with isolated spread footings provided as necessary to support the carbon beds and water tanks. The slab is designed to accommodate vehicle and/or fork-truck traffic/loading as well as loading from miscellaneous totes and equipment. A curb integral to the wall of the building is sealed to act as secondary containment. The containment is able to hold the liquid volume of the largest vessel in the facility if a pipe/tank should rupture (Appendix K). Stormwater runoff from the building, and surrounding drive and parking area, is diverted to a small run-off swale that, during heavy rain events, overflows to the street. The building includes an attached open-air truck-loading/unloading bay that is covered with a roof structure. The truck bay includes a concrete apron that slopes to a containment trench designed to capture approximately 5,000 gallons of water.

The building is heated to 50 degrees Fahrenheit and ventilated with exhaust fans. The heating system will prevent freezing of pipelines, and the location of control/electrical equipment is acceptable for proper electrical component operation. Additional utilities include a 6-inch-diameter non-potable water connection from the Kirtland Air Force Base water distribution system. This line supplies a 2-inch line inside the building that is used for general washdown and carbon changeout operations. A hose bib (hydrant-style connector) is installed outside the building in the truck bay, which allows for ease of slurrying granular activated carbon during changeout.

A 480-volt, three-phase service is supplied by tapping into the existing 12,470-volt service line at Pennsylvania Avenue and Ridgecrest Street. An underground service line from a sectionalizer at Walker Street feeds a 500-kilovolt-ampere transformer located east of the GWTS building. Underground cable connects the transformer to the main disconnect panel in the GWTS building. The electrical service panel in the building contains distribution equipment for the building and for both trains of the GWTS. The control room also contains the main GWTS PLC and human machine interface.

The GWTS is designed and instrumented to efficiently operate 24 hours per day with minimal Operator attention needed. The system is monitored and controlled by a PLC-based system that includes radio telemetry and web access to alert operators to off-hour upset conditions and allow them to monitor the system. The GWTS includes two parallel treatment trains. The process flow diagram and piping and instrumentation diagrams for the GWTS are provided in Appendix E. The components of the GWTS are described in the following sections.

D.4 Pre-Treatment

The GWTS feed tanks (TK-110 and TK-210) are 6,000-gallon storage tanks that currently receive untreated water from the three well pumps. They are flat-bottomed tanks constructed of epoxy-coated carbon steel, 10 feet in diameter × 11 feet tall. The treated water storage tanks (TK-116 and TK-216) are identical to the feed tanks. All tanks are fitted with level switches and level indication instruments. All tanks are vented into the GWTS building through screened vent caps. Additional details on the tanks are provided in Appendix J.

Immediately upstream of the feed tanks, injectors are tapped into the influent lines. These injectors are linked to dosing pumps that are used to provide sodium hypochlorite into the influent water (3 gallons per day resulting in a chlorine residual of 0.3 parts per million). The sodium hypochlorite is a reagent used by the sand filters to removed dissolved metals (explained later in this section). The units provide a storage capacity of 15 gallons (5-day capacity).

The feed pumps (P-112 A/B and P212 A/B) are identical centrifugal pumps sized to process 200 gpm per pump when operated in tandem. Two feed pumps are required per train and supply influent water to the sand filters, pre-treatment bag filters, and carbon beds. Having two smaller pumps provides a backup for when the system is operating at less than 200 gpm capacity (per train). The pumps are horizontal, American National Standards Institute style pumps (Goulds 3196 MTI 2x3-6) with stainless steel wetted parts and mechanical seals. The pumps have 15-Hp motors and are rated for 100 feet of total discharge head. The feed pumps and the pre-treatment bag filters were supplied by Fliteway as a pre-piped, skid-mounted system that includes flowmeters and other instruments. The flow from each pump is controlled by a separate variable frequency drive controlling the pump speed. The flowmeter on the skid (FIT-3102) is a magnetic flow metering device.

Sand filters are installed on both treatment trains to remove suspended solids, biological materials, and dissolved metals from the influent water. The sand filter skid consists of two sand filter housings per influent skid. Each filter skid is installed with a backwash line, controller, and copper piping to the GWTS air compressor to perform a manually initiated 4-minute backwashing cycle when sand filter differential pressure exceeds 10 pounds per square inch from clean filter operational pressure differential. The sand filters are designed to be backwashed at 239 gpm. Water is pumped to the prefilters for the GAC following pre-treatment.

The sand filter backwash water is discharged to a 40-yard roll-off clarifier located outside of the GWTS above the truck bay sump. This clarifier is designed to contain a maximum of 8,000 gallons (approximately 8 backwash cycles). The clarifier is fitted with a high level sensor that alarms the Operator that the clarifier requires draining. When the clarifier requires draining, a hose is connected to the clarifier effluent port and drained to the GWTS internal sump. If needed, the tube media may be removed and solids vacuumed from the clarifier via a vacuum truck once the clarifier has been drained. Any removed solids will be properly characterized and disposed of at a permitted facility.

The pre-filters for the carbon beds (F-112 A/B) are two bag-filter housings piped in parallel. Each housing holds six, 30- × 6-inch diameter filter bags rated at nominal 10-micron filtration. The filter housings are epoxy-coated carbon steel with stainless steel baskets. A davit support for the filter housing lid is provided for supporting the lid during filter bag changeout. The post-filters have an identical setup. Additional information on the pump-filter skids is included in the Fliteway Operations and Maintenance Manual.

D.5 Carbon Filtration

The two carbon vessels (V-114 A/B) are 10 feet in diameter, and each can be loaded with 20,000 pounds of activated carbon. They are constructed of epoxy-lined carbon steel and fitted with a common valve manifold that allows either bed to operate in the lead/lag position. The valve manifold also allows for backwashing of the carbon beds and allows operation of only one bed online, if desired. The valves on the manifold are gear-driven 8-inch butterfly valves. The valve position (open/closed) for different operating modes is provided in the TIGG Operations and Maintenance Manual and are also shown in Appendix J. Since the GWTS may be operated at less than its design capacity, the groundwater flow distributors on the carbon beds are designed to minimize channeling at low flow rates. Flow distributors and other internals in the carbon vessels are constructed of stainless steel. The carbon vessels are American Society of Mechanical Engineers-code vessels rated for 125 pounds per square inch gauge. Additional information on the carbon adsorbers is included in the TIGG Operations and Maintenance Manual provided in Appendix J. Each vessel is loaded with 20,000 pounds of TIGG 5DC 12-40 NSF-grade carbon. The size range for the carbon is 12-40 mesh.

The discharge pumps (P-118) are each rated for 400 gpm. These pumps are horizontal American National Standards Institute-style centrifugal type pumps (Goulds 3196 MTI 3x4-10H) with stainless steel wetted parts and a mechanical seal. The pumps have 20-Hp motors and are rated for 400 gpm at 80 feet of total discharge head. The discharge pump skids has similar instrumentation as the feed pump skids. A skid-mounted variable frequency drive controls the pump speed and thereby the discharge flowrate. The flowmeters on the skids (FIT-3108, FIT-3208) are magnetic flow metering devices. The post-filters (F-118 A/B, F-218 A/B) are identical to the pre-filters. Additional information on the pump-filter skids is included in the Fliteway Operations and Maintenance Manual.

D.6 Treated Water Discharge

Treated water from the GWTS is pumped through almost 2 miles of below grade, 12-inch single-wall HDPE discharge line to a tee connection installed on an existing base pipeline that connects well KAFB-7 to the GCMP. Five valve vaults are installed at roughly 2,000-foot intervals along the discharge line that house air/vacuum relief valves. The existing KAFB-7-to-GCMP pipeline includes both 14-inch polyvinyl chloride pipe and 12-inch HDPE pipe. The section where the tee connects the treated water pipeline to the KAFB-7 line is 12-inch HDPE. As shown on the piping and instrumentation diagrams, there are two manual, post-indicator valves, one each on either side of the tee, that have been installed on the GCMP/KAFB-7 line. These valves allow the operators to direct the treated water to either the GCMP or to KAFB-7 by opening one valve and closing the other.

D.6.1 Tijeras Arroyo Golf Course Main Pond

Discharge to the GCMP does not require a New Mexico Environment Department (NMED) discharge permit (NMED, 2016), but must meet the requirements of Hazardous Waste Treatment Facility Permit No. NM9570024423 (NMED, 2010). Directing effluent to the GCMP is a manual operation at the post-indicator valves. The GWTS staff will manually drive to switch the position of the pipeline valves as necessary (GCMP valve open, KAFB-7 valve shut). GCMP level is reported on the human machine interface and a high level switch at the pond will shut down the GWTS to prevent overfilling of the pond. The signal from the high level switch is transmitted to the GWTS control system by radio telemetry.

D.6.2 KAFB-7

KAFB-7 is located within the bounds of Section 6 of T9N, R4E and was originally used as a drinking water well but was taken out of this service and adapted for use as an extraction well due to high nitrates in the groundwater at this location. During its operation as an extraction well, KAFB-7 discharged water to the GCMP that was used to irrigate the golf course. KAFB-7 has since been converted to a Class V injection well for discharge of the treated groundwater, and the discharge to the well is governed by Underground Injection Control permit DP-1839 (NMED, 2017). The line-shaft well pump was removed from the well, and a 4-inch-diameter drop pipe was installed in its place. The drop pipe terminates at 525 feet bgs, roughly 25 feet below the static water level. At the bottom of the drop pipe, there is a downhole control valve (V-smart valve) that regulates the flow of groundwater into the well. The purpose of this valve is to control the pressure in the drop pipe at the top of the well to between 5 and 25 pounds per square inch gauge. This ensures that the drop pipe is full of water, and there is no damage to the pipe due to cavitation. The control valve is modulated by a hydraulic pump system installed in the surface near KAFB-7. This hydraulic system is controlled by the GWTS PLC to manage the injection flow rate while maintaining pressure at the top of the drop pipe. A level transducer in the well sends water level in the well to the GWTS PLC. A control panel in the KAFB-7 WCH communicates with the PLC by radio telemetry.

D.6.3 Dust Suppression

On the treated water discharge line, between the post-treatment bag filters and the underground effluent pipeline leaving the building, there are two actuated valves that can be used to deliver water to the truck bay via a 2-inch steel pipe. The pipe is equipped with a mechanical totalizing flowmeter and the valves are controlled by the GWTS PLC to divert water to the external line hookup for dust suppression. At this time, dust-suppression valve operation has been locked out to access.

References

New Mexico Environment Department (NMED). 2010. Hazardous Waste Treatment Facility Operating Permit, EPA ID Number NM9570024423, Issued to U.S. Air Force for the Open Detonation Unit Located at Kirtland Air Force Base, Bernalillo County, New Mexico, by the New Mexico Environment Department Hazardous Waste Bureau. July.

NMED. 2016. DP-1770 Modification Application and Termination, New Mexico Environment Department, Ground Water Quality Bureau. April.

NMED. 2017. Discharge Permit Issuance DP-1839, Kirtland Air Force Base, Bernalillo County, New Mexico, New Mexico Environment Department, Ground Water Quality Bureau. April.

APPENDIX E

Process Drawings and Groundwater Treatment System Equipment/Instrument Location Pictures

P&IDs

IDENTIFICATION LETTERS

	FIRST–LETTER		SUCCEEDING–LETTERS		
	MEASURED OR INITIATING VARIABLE	MODIFIER	READOUT OR PASSIVE FUNCTION	OUTPUT FUNCTION	MODIFIER
A	ANALYSIS		ALARM		
B	BURNER, COMBUSTION		USER'S CHOICE	USER'S CHOICE	USER'S CHOICE
C	USER'S CHOICE			CONTROL	CLOSE, CLOSED
D	USER'S CHOICE	DIFFERENTIAL			
E	VOLTAGE		SENSOR (PRIMARY ELEMENT)		
F	FLOW RATE	RATIO, FRACTION			
G	USER'S CHOICE		GLASS, VIEWING DEVICE, GAUGE		
H	HAND	HAND			HIGH
I	CURRENT (ELECTRICAL)		INDICATE (ANALOG)		
J	POWER	SCAN			
K	TIME, TIME SCHEDULE	TIME RATE OF CHANGE		CONTROL STATION	
L	LEVEL		LIGHT, STATUS		LOW, LIGHT, STATUS
M	USER'S CHOICE	MOMENTARY			MIDDLE,INTERMEDIATE
N	USER'S CHOICE		USER'S CHOICE	USER'S CHOICE	USER'S CHOICE
O	USER'S CHOICE		ORIFICE RESTRICTION		OPEN
P	PRESSURE, VACUUM		POINT (TEST CONNECTION)		
Q	QUANTITY, HEAT	INTEGRATE, TOTALIZE			
R	RADIATION, RESTRICTION		RECORD		
S	SPEED, FREQUENCY	SAFETY		SWITCH	
T	TEMPERATURE			TRANSMIT	MULTIFUNCTION
U	MULTIVARIABLE		MULTIFUNCTION	MULTIFUNCTION	
V	VIBRATION, MECHANICAL ANALYSIS			VALVE, DAMPER, LOUVER	
W	WEIGHT, FORCE		WELL		
X	UNCLASSIFIED	X AXIS	UNCLASSIFIED	UNCLASSIFIED	UNCLASSIFIED
Y	EVENT, STATE OR PRESENCE	Y AXIS		RELAY, COMPUTE, CONVERT, SOLENOID	
Z	POSITION, DIMENSION	Z AXIS, POSITION, DIMENSION	POSITION, DIMENSION	DRIVER, ACTUATOR, UNCLASSIFIED FINAL CONTROL ELEMENT	

SPECIAL ABBREVIATIONS

APC – ADVANCED PROCESS CONTROL
ATM – ATMOSPHERE
CEMS – CONTINUOUS EMISSION MONITORING SYSTEMS
CO – CARBON MONOXIDE
D/P – DIFFERENTIAL PRESSURE
PCS – PROCESS CONTROL SYSTEM
DEEN – DEENERGIZE
DISP – DISPLACEMENT
EN – ENERGIZE
FF – FOUNDATION FIELD BUS
FG – SIGHT GLASS
FGPLC – FIRE AND GAS DETECTION PLC
FO – FLOW ORIFICE
GC – GAS CHROMATOGRAPH
GWR – GUIDED WAVE RADAR
H2 – HYDROGEN
H2S – HYDROGEN SULFIDE
HOA – HAND SELECTOR SWITCH (HAND–OFF–AUTO)
HSL – SWITCH(ES) AND LIGHT(S)
INT – INTERFACE
MAG – MAGNETIC
MMS – MACHINERY MONITORING SYSTEM
NOX – NITROUS OXIDE
O2 – OXYGEN GAS
PLC – PROGRAMMABLE LOGIC CONTROLLER
PP – PRESSURE SENSING POINT
PSE – RUPTURE DISK
PSV – PRESSURE OR VACUUM SAFETY RELIEF VALVE
PVSV – PRESSURE–VACUUM SAFETY RELIEF VALVE
RO – RESTRICTION ORIFICE
RTD – RESISTANCE TEMPERATURE DETECTOR
SIS – SAFETY INSTRUMENTED SYSTEM
TJI – MULTIPOINT TEMPERATURE INDICATOR (NON DCS)
TJR – MULTIPOINT TEMPERATURE RECORDER (NON DCS)
TJT – MULTIPOINT TEMPERATURE TRANSMITTER
TW – THERMOWELL OR TEST WELL
UK – PANEL, CONSOLE, OR RACK
XE – FLAME ARRESTOR
XV – SPECIAL VALVES NOT PART OF A MEASURED VARIABLE LOOP–eg ON–OFF VALVES, MOTOR OPERATED VALVES, IN–LINE SOLENOID VALVES, EXCESS FLOW VALVES

TYPICAL TAG NUMBER FORMAT

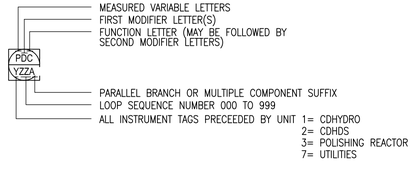

DCS SUB–FUNCTION

* SYMBOLS FOR DCS SUB–FUNCTIONS
D – DEVIATION ALARM
HH – HIGH–HIGH ALARM
H – HIGH ALARM
L – LOW ALARM
LL – LOW–LOW ALARM
Mo3 – MIDDLE OF THREE

SIGNAL TYPES

OP – OUTPUT
PV – PROCESS VARIABLE
SP – SETPOINT

INSTRUMENT LINE DESIGNATIONS

INSTRUMENT SUPPLY OR CONNECTION TO PROCESS
PNEUMATIC SIGNAL
ELECTRIC SIGNAL
HYDRAULIC SIGNAL
IA INSTRUMENT AIR
CAPILLARY TUBE
ELECTROMAGNETIC OR SONIC SIGNAL (GUIDED)
INTERNAL SYSTEM LINK
MECHANICAL LINK
INSTRUMENT PURGE (**) PURGE MEDIUM (SERVICE ABBREVIATION) SEE "INSTRUMENT PURGE DETAIL"

INSTRUMENT SYMBOL IDENTIFICATION & REPRESENTATION

LOCAL INSTRUMENT OR FUNCTION ONLY
INSTRUMENT ON PANEL OR HARD CONSOLE IN CONTROL ROOM
INSTRUMENT ON RACK OR REAR OF PANEL IN CONTROL ROOM
INSTRUMENT ON LOCAL PANEL
INSTRUMENT ON REAR LOCAL PANEL
SIS UCXX — SIS INTERLOCK
XX= INTERLOCK NUMBER
FGS UCXX — FGS MONITORING
XX= INTERLOCK/LOGIC NUMBER
DISPLAY PROCESS CONTROL SYSTEM (PCS) FUNCTION IN CONTROL ROOM
DISPLAY PROCESS CONTROL SYSTEM (PCS) FUNCTION NON–DISPLAY
DISCRETE HARDWARE INTERLOCK
130 — SYSTEM FOR LOGIC FUNCTION(S) OR COMPLEX ADVANCED CONTROL SYSTEMS
Y= SYSTEM/PACKAGED EQUIPMENT CONTROL NUMBER
PLCX UCXX — PLC LOGIC
XX= INTERLOCK/LOGIC NUMBER
PCS UCXX — PCS LOGIC
XX= INTERLOCK/LOGIC NUMBER

COMPUTER FUNCTION AND LOGIC SYSTEMS

FIELD MOUNTED COMPUTER FUNCTION
PANEL OR HARD CONSOLE COMPUTER FUNCTION
LOCAL PANEL COMPUTER FUNCTION
BATCH OR SEQUENTIAL LOGIC PROGRAMMABLE FUNCTION IN CONTROL ROOM
PROGRAMMABLE LOGIC CONTROL FUNCTION LOCAL
PROGRAMMABLE LOGIC CONTROL FUNCTION WHEN PART OF PCS
PROGRAMMABLE LOGIC CONTROL FUNCTION NON–DISPLAY
PROGRAMMABLE LOGIC CONTROL FUNCTION ON LOCAL PANEL

INSTRUMENT PURGE DETAIL

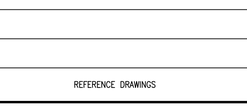

MATH FUNCTIONS

* SYMBOLS FOR MATH FUNCTION
Σ SUM
Δ DIFFERENCE
X MULTIPLY
— DIVIDE
> HIGH SELECT
< LOW SELECT
√ EXTRACT SQUARE ROOT
REV REVERSE
± BIAS
Σ/n AVERAGE
⌃ HIGH LIMIT
⌄ LOW LIMIT
SW SWITCH
K PROPORTIONAL
f(x) UNSPECIFIED FUNCTION
∫ INTEGRATION
X^n EXPONENTIAL
d/dt DERIVATIVE
x^{-k} INVERSE
f(t) TIME FUNCTION

CONTROL VALVE TYPE

GENERAL CONTROL VALVE GLOBE
BALL OR PLUG (OPTIONAL)
DIAPHRAGM (OPTIONAL)
BUTTERFLY (OPTIONAL)
THREE WAY GLOBE NOTE 6
FOUR WAY GLOBE NOTE 6

CONVERTERS

(OPTIONAL)

/ SYMBOLS FOR CONVERTERS (INPUT/OUTPUT)
A – ANALOG
D – DIGITAL
E – VOLTAGE
H – HYDRAULIC
I – CURRENT
P – PNEUMATIC

CONTROL ACTUATORS

NOTE 6

SPRING AND DIAPHRAGM
* SYMBOL INDICATES TYPE
M – ELECTRIC MOTOR
S – SOLENOID
E – ELECTRIC–HYDRAULIC
H – HYDRAULIC
PISTON TYPE – SINGLE ACTING
PISTON TYPE – DOUBLE ACTING

COMPUTER FUNCTIONS

(OPTIONAL)

* SYMBOLS FOR COMPUTER FUNCTIONS
DDC – DIRECT DIGITAL CONTROL
SPC – SUPERVISORY SETPOINT CONTROL
DI – DIGITAL INPUT
DO – DIGITAL OUTPUT
AI – ANALOG INPUT
AO – ANALOG OUTPUT

MANUAL OPERATORS

CONTROL VALVE WITH HANDWHEEL
SOLENOID VALVE WITH MANUAL RESET
SOLENOID VALVE WITH REMOTE RESET

ADDITIONAL INFORMATION

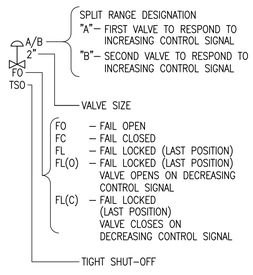

INLINE FLOW INSTRUMENTS

ORIFICE PLATE OR FLOW ORIFICE
ORIFICE PLATE IN QUICK CHANGE FITTINGS
VENTURI FLOW TUBE
FLOW NOZZLE
WEIR
FLOW STRAIGHTENING VANES
FLUME
FI — ROTAMETER
WEDGE
C — CORIOLIS MASS FLOW METER
TARGET TYPE SENSOR
AVERAGING PITOT TUBE OR ANNUBAR
INLINE SIGHT GLASS
TURBINE / PROPELLER METER
POSITIVE DISPLACEMENT FLOW TOTALIZING INDICATOR
VORTEX SENSOR
SONIC FLOW METER
M — MAGNETIC FLOW METER
TH — THERMAL DISPERSION FLOW METER
DIAPHRAGM SEALS
FLUSH MOUNTED
WITH PIPE ROOT VALVE

SELF ACTUATED DEVICES

PSE — PRESSURE RELIEF RUPTURE DISK
PSE — VACUUM RELIEF RUPTURE DISK
L — INTERNAL FLOAT TYPE LEVEL INSTRUMENT
TCV — TEMPERATURE REGULATOR
PCV — UPSTREAM CONN. FOR BACK PRESSURE DOWNSTREAM CONN. FOR PRESSURE REDUCING PRESSURE REGULATOR WITH EXTERNAL PRESSURE TAP
PCV — UPSTREAM CONN. FOR BACK PRESSURE DOWNSTREAM CONN. FOR PRESSURE REDUCING PRESSURE REGULATOR SELF–CONTAINED
PDCV — REGULATOR WITH INTERNAL AND DIFFERENTIAL PRESSURE REDUCING EXTERNAL PRESSURE TAPS
PSV (SIZE) (PRESSURE) NOTE 9 — SAFETY RELIEF VALVE
PSV (SIZE) (PRESSURE) NOTE 9 — VACUUM RELIEF VALVE
PVSV (SIZE) (PRESSURE) — PRESSURE AND VACUUM SAFETY RELIEF VALVE (CONSERVATION VENT)
PSV — INDICATE INTERNAL OR EXTERNAL TAPPING
PILOT OPERATED SAFETY RELIEF VALVE (PRESSURE TAP CONNECTED TO VALVE BODY OR LINE/VESSEL AS REQUIRED.)
RELIEVING MANHOLE COVER
* INDICATED TYPE
PSV – PRESSURE OR VACUUM RELIEF
PVSV – PRESSURE–VACUUM RELIEF
LI — FLOAT AND TAPE TYPE LEVEL INDICATOR OR TRANSMITTER FOR STORAGE TANKS
ARV — AIR/VACUUM RELIEF VALVE

GENERAL NOTES

1. THE INSTRUMENTATION REPRESENTATION ON P&ID'S, AS PER ABBREVIATED ISA SYMBOLOGY. COMPLEX OR UNUSUAL LOOPS ARE DEPICTED WITH INDIVIDUAL COMPONENT BALLOONS AS REQUIRED FOR CLARITY.
2. SAFE OPERATION OF ANY SYSTEM WITH BLOCK VALVES ON THE INLET OR OUTLET LINES OF RELIEVING DEVICES REQUIRE ADMINISTRATIVE CONTROLS WHICH ARE TOTALLY UNDER THE CONTROL AND RESPONSIBILITY OF THE OWNER.

MISCELLANEOUS

INDICATING LIGHT
DUPLEX TEMPERATURE ELEMENT
SKIN — SKIN TYPE TEMPERATURE ELEMENT
TT TE TW — ACTUAL DEPICTION TE, TW NOT SHOWN ON P&ID.
SOLENOID OPERATED VALVE ARROW INDICATES DE–ENERGIZED POSITION NOTE 5
IA PILOT CABINET — PILOT OPERATED OR ASSISTED RELIEF VALVE WITH PILOT CABINET

THIS ASBUILT (RECORD DRAWING) HAS BEEN PREPARED, IN PART, BASED UPON INFORMATION FURNISHED BY OTHERS. WHILE THIS INFORMATION IS BELIEVED TO BE RELIABLE, CB&I ASSUMES NO RESPONSIBILITY FOR THE ACCURACY OF THIS RECORD DRAWING OR FOR ANY ERRORS OR OMISSIONS THAT MAY HAVE BEEN INCORPORATED INTO IT AS A RESULT OF INCORRECT INFORMATION PROVIDED TO CB&I. THOSE RELYING ON THIS RECORD DOCUMENT ARE ADVISED TO OBTAIN INDEPENDENT VERIFICATION OF ITS ACCURACY.

PROFESSIONAL SEAL

U.S. ARMY CORPS OF ENGINEERS
ALBUQUERQUE DISTRICT
ALBUQUERQUE, NEW MEXICO

CB&I FEDERAL SERVICES LLC
312 DIRECTORS DRIVE
KNOXVILLE, TENNESSEE 37923
865-690-3211

CLIENT DWG NO:

NOTES

NO.	REVISION	DRAWN	CK'D	APPD	DATE
1	RECORD DRAWING	CFB	SES	BAH	03/25/16
0	ISSUED FOR CONSTRUCTION	EGA	SES	BAH	03/30/15

REFERENCE DRAWINGS

THIS DOCUMENT IS THE PROPERTY OF CHICAGO BRIDGE & IRON COMPANY ("CB&I"). IT MAY CONTAIN INFORMATION DESCRIBING TECHNOLOGY OWNED BY CB&I AND DEEMED TO BE COMMERCIALLY SENSITIVE. IT IS TO BE USED ONLY IN CONNECTION WITH WORK BEING PERFORMED BY CB&I. REPRODUCTION IN WHOLE OR IN PART FOR ANY PURPOSE OTHER THAN WORK PERFORMED BY CB&I IS FORBIDDEN EXCEPT BY EXPRESS WRITTEN PERMISSION OF CB&I. IT IS TO BE SAFEGUARDED AGAINST BOTH DELIBERATE AND INADVERTENT DISCLOSURE TO ANY THIRD PARTY.

DRAWN: EGA | CK'D: SES | APPD: BAH | DATE: 03/30/15 | SCALE: NONE

PROCESS LEAD SHEET
INST. SYMBOLS, LEGENDS & ABBREVIATIONS
PHASE IV MID–PLUME PUMP & TREAT SYSTEM

FOR: BULK FUELS FACILITY, KIRTLAND AFB, NM

PROJECT NO: 140705 | DWG NO: 140705–001–PR–03–400011 | REV: 1

File: 140705–001–PR–03–400011.DWG.dwg
Plot Date/Time: Mar 21, 2016 – 2:20pm
Plotted By: charles.bentley

Form: CMS–830–00–FM–02104 CBI ANSI D.dwg

MISCELLANEOUS ABBREVIATIONS

AG	ABOVE GROUND
ATM	ATMOSPHERE
BFW	BOILER FEED WATER
BL	BATTERY LIMIT
BV	BY VENDOR
CO	CLEAN OUT
CSC	CAR SEALED CLOSE
CSO	CAR SEALED OPEN
D	DRAIN
DEC	DETAILED ENGINEERING CONTRACTOR (COMPANY)
DMDS	DIMETHYL DISULFIDE
EPC	ENGINEERING PROCUREMENT AND CONSTRUCTION
FP	FULL PORT
GO	GEAR OPERATED
HC	HOSE CONNECTION
HCN	HEAVY CAT NAPHTHA
HH	HANDHOLE
ISBL	INSIDE BATTERY LIMIT
LC	LOCKED CLOSED
LCN	LIGHT CAT NAPHTHA
LO	LOCKED OPEN
LP	LOW PRESSURE
MAX	MAXIMUM
MIN	MINIMUM
MP	MEDIUM PRESSURE
MW	MANWAY
MH	MANHOLE
NC	NORMALLY CLOSED
NNF	NORMALLY NO FLOW
NO	NORMALLY OPEN
OSBL	OUTSIDE BATTERY LIMIT
RO	ROD OUT
RSP	REMOVABLE SPOOL PIECE
S	SAMPLE CONNECTION
SC	SAMPLE CONN WITH COOLER
SO	STEAM OUT
SP	SPECIALTY ITEM
TL	TANGENT LINE
TL/TL	TANGENT TO TANGENT
TP	TIE-IN POINT
TS	TEMPORARY STRAINER
TYP	TYPICAL
UC	UTILITY CONNECTION
UG	UNDERGROUND
V	VENT

PIPELINE IDENTIFICATION

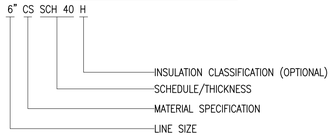

INSULATION CLASSIFICATION

A	ACOUSTICAL INSULATION (NOTE 5)	N	NO INSULATION
C	ANTICONDENSATION	P	PERSONNEL PROTECTION
E	ELECTRICAL TRACING	R	CONTRATRACE
F	COLD INSULATION	S	STEAM TRACING
H	HEAT CONSERVATION	T	HOT OIL TRACING
I	WINTERIZING/ANTIFREEZING	V	UNINSULATED TRACER
J	JACKETING	Z	PAINTING

TRACING LEGEND

EP	ELECTRICAL TRACING FOR PROCESS REASONS
EW	ELECTRICAL TRACING FOR WINTERIZATION
TL	TRACING WITH LP STEAM (STABILIZATION)
TM	TRACING WITH MP STEAM
TS	SPACER TRACING WITH LP STEAM
TW	TRACING WITH HOT WATER OR OIL (WINTERIZATION)

MATERIAL SPECIFICATION

CS	CARBON STEEL ASTM53
HDPE	HIGH DENSITY POLYETHYLENE, PE 3408
CU	COPPER
PVC	POLYVINYL CHLORIDE

DRAWING NUMBER IDENTIFICATION

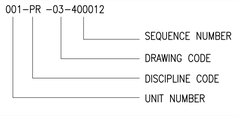

PIPING LINES

PIPELINE TO/FROM DRAWING OF ANOTHER UNIT

UNDERGROUND PIPING (BURIED LINE)

TRACING
REFER TO TRACING LEGEND FOR XX VALUES

JACKETED LINE

VENDOR PACKAGE BOUNDARY

BATTERY LIMIT

(UG) SPEC | (AG) SPEC

GATE/GENERAL VALVE

VALVE WITH PLUG

VALVE WITH BLIND FLANGE

BUTTERFLY VALVE

DIAPHRAGM VALVE

GLOBE VALVE

NEEDLE VALVE

PLUG VALVE

BALL VALVE

CHECK VALVE

STOP CHECK VALVE (BOILER NON-RETURN VALVE)

THREE WAY VALVE

ANGLE VALVE

RAM TYPE VALVE (SPECIALTY ITEM)

MECH. LINK — INTERLOCKED VALVES (MECHANICAL LINK)

SPRING LOADED QUICK OPENING OR CLOSING VALVE

SLIDE VALVE

SLOPE — SLOPE INDICATION

FREE DRAINING — FREE DRAINING

PIPING SYMBOLS

OUTSIDE BATTERY LIMIT

DWG.NO. — CONTINUITY ARROW

BLIND FLANGE

PIPE CAP (WELDED)

ECCENTRIC REDUCER

CONCENTRIC REDUCER

SP / XYZZ — STRAINER

TS — TEMPORARY STRAINER

CONE TYPE STRAINER

T-TYPE STRAINER

Y-TYPE STRAINER

REMOVABLE SPOOL

B — BLINDING POINT

SPACER FOR BLIND

LINE BLIND (SPADE)

REVERSIBLE BLIND (OPEN) (FIGURE EIGHT)

REVERSIBLE BLIND (CLOSED) (FIGURE EIGHT)

SPEC BREAK
XXX | XXX — XXX – PIPING SPEC

MIN — MINIMUM DISTANCE

DUCT OR STACK DAMPER

XX — OPEN SERVICE DRAIN
XX – SERVICE SYMBOL

XX — CLOSED SERVICE DRAIN
XX – SERVICE SYMBOL

ATMOSPHERIC VENT

SAFETY AND FIRE WATER PROTECTION

SAFETY SHOWER

EYE WASH

GATE VALVE WITH POST INDICATOR

HH — HOSE CONNECTION

HR — HOSE REEL

FIRE HYDRANT

FIRE MONITOR

FLANGED CONNECTION

HOSE CONNECTION

FLEXIBLE HOSE

EXPANSION JOINT

INLINE MIXER

EXHAUST HEAD

T — STEAM TRAP/DRAIN TRAP (NON PROCESS)

SP / XYZZ / T — CONTINUOUS DRAINER

EDUCTOR OR EJECTOR

PIPING SPECIALTY ITEM
SP / XYZZ
ZZ- SEQUENCE NUMBER
Y- AREA NUMBER (1=100, 2=200,...7=700)
X- UNIT NUMBER

SAMPLE CONN OR (WITH COOLER)
SC / XYZZ
ZZ- SEQUENCE NUMBER
Y- AREA NUMBER (1=100, 2=200,...7=700)
X- UNIT NUMBER

DISCIPLINE INDEX CODE (P1, P2)
IP-INDEX-XXX-YYY-ZZZZ
SEQUENCE NUMBER
INTERCONNECTING UNIT
ORIGINATING ISBL UNIT NUMBER

D — DRAIN PORT WITH VALVE

S — SAMPLE PORT WITH VALVE

AIR FILTER WITH HOOD

FLAME ARRESTOR

GRADE

FUNNEL

VENT

GENERAL NOTES

THIS ASBUILT (RECORD DRAWING) HAS BEEN PREPARED, IN PART, BASED UPON INFORMATION FURNISHED BY OTHERS. WHILE THIS INFORMATION IS BELIEVED TO BE RELIABLE, CB&I ASSUMES NO RESPONSIBILITY FOR THE ACCURACY OF THIS RECORD DRAWING OR FOR ANY ERRORS OR OMISSIONS THAT MAY HAVE BEEN INCORPORATED INTO IT AS A RESULT OF INCORRECT INFORMATION PROVIDED TO CB&I. THOSE RELYING ON THIS RECORD DOCUMENT ARE ADVISED TO OBTAIN INDEPENDENT VERIFICATION OF ITS ACCURACY.

PROFESSIONAL SEAL

U.S. ARMY CORPS OF ENGINEERS
ALBUQUERQUE DISTRICT
ALBUQUERQUE, NEW MEXICO

CB&I FEDERAL SERVICES LLC
312 DIRECTORS DRIVE
KNOXVILLE, TENNESSEE 37923
865-690-3211

CLIENT DWG NO:

NOTES

NO.	REVISION	DRAWN	CK'D	APPD	DATE
1	RECORD DRAWING	CFB	SES	BAH	03/25/16
0	ISSUED FOR CONSTRUCTION	EGA	SES	BAH	03/30/15

REFERENCE DRAWINGS

THIS DOCUMENT IS THE PROPERTY OF CHICAGO BRIDGE & IRON COMPANY ("CB&I"). IT MAY CONTAIN INFORMATION DESCRIBING TECHNOLOGY OWNED BY CB&I AND DEEMED TO BE COMMERCIALLY SENSITIVE. IT IS TO BE USED ONLY IN CONNECTION WITH WORK BEING PERFORMED BY CB&I. REPRODUCTION IN WHOLE OR IN PART FOR ANY PURPOSE OTHER THAN WORK PERFORMED BY CB&I IS FORBIDDEN EXCEPT BY EXPRESS WRITTEN PERMISSION OF CB&I. IT IS TO BE SAFEGUARDED AGAINST BOTH DELIBERATE AND INADVERTENT DISCLOSURE TO ANY THIRD PARTY.

DRAWN: EGA | CK'D: SES | APPD: BAH | DATE: 03/30/15 | SCALE: NONE

PROCESS LEAD SHEETS
INST. SYMBOLS, LEGENDS & ABBREVIATIONS
PHASE IV MID-PLUME PUMP & TREAT SYSTEM

FOR: BULK FUELS FACILITY, KIRTLAND AFB, NM

PROJECT NO: 140705 | DWG NO: 140705-001-PR-03-400012 | REV: 1

Form: CMS-830-00-FM-02104 CBI ANSI D.dwg

File: 140705-001-PR-03-400012.DWG.dwg
Plot Date/Time: Mar 21, 2016 - 2:22pm
Plotted By: charles.bentley

PUMPS/AGITATORS

CENTRIFUGAL/INLINE PUMP (MOTOR DRIVEN)

CENTRIFUGAL/INLINE PUMP (TURBINE DRIVEN)

BLOWER

SUMP PUMP

SUBMERSIBLE PUMP

CAN PUMP

DIAPHRAGM PUMP

ROTARY PUMP

METERING PUMP

SCREW/PROGRESSIVE CAVITY PUMP

AGITATOR

DRIVERS

ELECTRIC MOTOR

DIESEL DRIVE – D
AIR MOTOR – A
HYDRAULIC MOTOR – H

STEAM TURBINE

PROCESS EQUIPMENT

VERTICAL SHELL AND TUBE EXCHANGER AS PER TEMA

SHELL AND TUBE EXCHANGER AS PER TEMA

SHELL AND TUBE EXCHANGER AS PER TEMA

SHELL AND TUBE EXCHANGER AS PER TEMA

SHELL AND TUBE EXCHANGER AS PER TEMA

SHELL AND TUBE EXCHANGER AS PER TEMA

KETTLE EXCHANGER AS PER TEMA

KETTLE EXCHANGER AS PER TEMA

DOUBLE PIPE HEAT EXCHANGER

SPIRAL HEAT EXCHANGER

PLATE & FRAME EXCHANGER

STORAGE TANK WITH CONE ROOF

STORAGE TANK WITH DISH ROOF

STORAGE TANK WITH INTERNAL FLOATING ROOF

TRAYED TOWER TRAY NUMBERING AS DEPICTED

VORTEX BREAKER

TL

DIM. TO GRADE

TOWER/VESSEL WITH PROCESS PACKING

TOWER/VESSEL WITH DEMISTER PAD

AIR COOLER

AIR COOLER W/LOUVER

SINGLE FILTER

DUPLEX FILTER

CENTRIFUGAL COMPRESSOR

SCREW TYPE COMPRESSOR

RECIPROCATING COMPRESSOR

CORE (DOUBLE PLATE) EXCHANGER

CORE & KETTLE EXCHANGER

MH

HH

EQUIPMENT CLASS

F	FIRED HEATERS
T	TOWERS – SHELLS
R	REACTORS AND COKE DRUMS
E	HEAT EXCHANGERS – SHELL AND TUBE
AC	HEAT EXCHANGE EQUIPMENT SPECIAL (AIR COOLERS)
STR	STRAINERS AND COALESCERS
FG	LINE FILTERS AND SILENCERS
P	PUMPS AND DRIVES
C	COMPRESSORS AND BLOWERS
M	STEAM SPECIALTIES – DESUPERHEATERS LINE SEPARATORS
PA	PACKAGE UNITS AND SPECIAL EQUIPMENT
TK	TANK
AD	SUMP
J	EDUCTOR
EH	ELECTRIC HEATER

GENERAL NOTES

THIS ASBUILT (RECORD DRAWING) HAS BEEN PREPARED, IN PART, BASED UPON INFORMATION FURNISHED BY OTHERS. WHILE THIS INFORMATION IS BELIEVED TO BE RELIABLE, CB&I ASSUMES NO RESPONSIBILITY FOR THE ACCURACY OF THIS RECORD DRAWING OR FOR ANY ERRORS OR OMISSIONS THAT MAY HAVE BEEN INCORPORATED INTO IT AS A RESULT OF INCORRECT INFORMATION PROVIDED TO CB&I. THOSE RELYING ON THIS RECORD DOCUMENT ARE ADVISED TO OBTAIN INDEPENDENT VERIFICATION OF ITS ACCURACY.

PROFESSIONAL SEAL

U.S. ARMY CORPS OF ENGINEERS
ALBUQUERQUE DISTRICT
ALBUQUERQUE, NEW MEXICO

CB&I FEDERAL SERVICES LLC
312 DIRECTORS DRIVE
KNOXVILLE, TENNESSEE 37923
865-690-3211

CLIENT DWG NO:

NOTES

NO.	REVISION	DRAWN	CK'D	APPD	DATE
1	RECORD DRAWING	CFB	SES	BAH	03/25/16
0	ISSUED FOR CONSTRCUTION	EGA	SES	BAH	03/30/15

REFERENCE DRAWINGS

THIS DOCUMENT IS THE PROPERTY OF CHICAGO BRIDGE & IRON COMPANY ("CB&I"). IT MAY CONTAIN INFORMATION DESCRIBING TECHNOLOGY OWNED BY CB&I AND DEEMED TO BE COMMERCIALLY SENSITIVE. IT IS TO BE USED ONLY IN CONNECTION WITH WORK BEING PERFORMED BY CB&I. REPRODUCTION IN WHOLE OR IN PART FOR ANY PURPOSE OTHER THAN WORK PERFORMED BY CB&I IS FORBIDDEN EXCEPT BY EXPRESS WRITTEN PERMISSION OF CB&I. IT IS TO BE SAFEGUARDED AGAINST BOTH DELIBERATE AND INADVERTENT DISCLOSURE TO ANY THIRD PARTY.

DRAWN: EGA | CK'D: SES | APPD: BAH | DATE: 03/30/15 | SCALE: NONE

PROCESS LEAD SHEET
INST. SYMBOLS, LEGENDS & ABBREVIATIONS
PHASE IV MID-PLUME PUMP & TREAT SYSTEM

FOR: BULK FUELS FACILITY, KIRTLAND AFB, NM

PROJECT NO: 140705 | DWG NO: 140705-001-PR-03-400013 | REV: 1

File: 140705-001-PR-03-400013.dwg
Plot Date/Time: Mar 21, 2016 - 2:24pm
Plotted By: charles.bentley

Form: CMS-830-00-FM-02104 CBI ANSI D.dwg

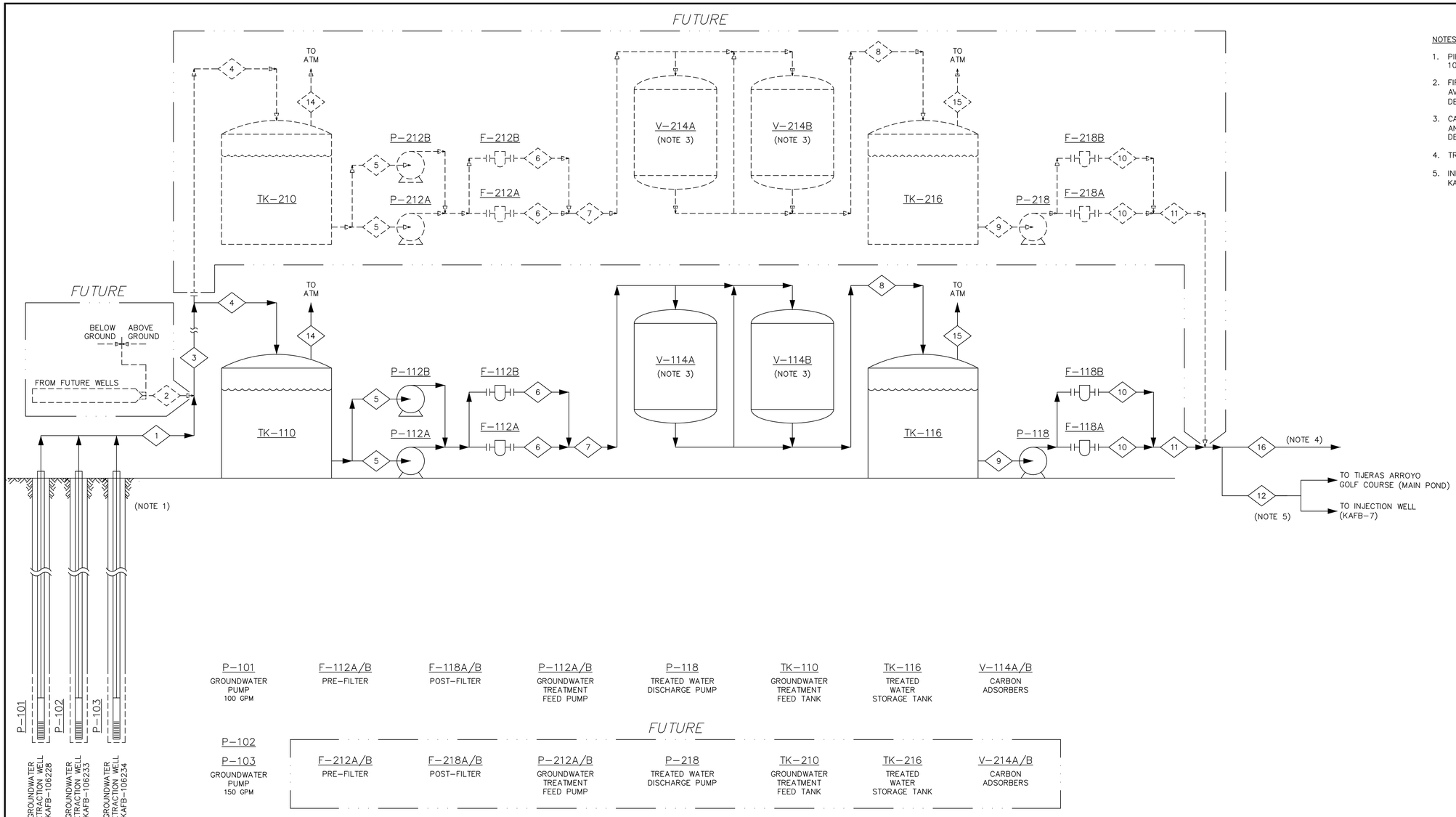

NOTES:

1. PIPELINE FROM GROUNDWATER WELL KAFB-106228, KAFB-106233 AND KAFB 106234 IS DOUBLE-WALLED HDPE PIPE.
2. FIRST 3 WELLS ARE EXPECTED TO PRODUCE 400 GPM OF GROUND WATER. AVERAGE EDB CONCENTRATION IS EXPECTED TO BE BETWEEN 0.05 AND 0.5 UG/L. DESIGN INLET EDB TO CARBON BEDS IS 2.0 UG/L.
3. CARBON VESSELS ARE RUN IN SERIES WITH OPTIONAL VALVING FOR PARALLEL AND LEAD/LAG CONFIGURATION. SEE DRAWING PR-03-400003 FOR VALVING DETAIL.
4. TREATED WATER CONNECTION FOR DUST CONTROL. (INTERMITTENT)
5. INITIALLY TREATED GW (UP TO 400 GPM) WILL GO TO GOLF COURSE AND/OR THE KAFB-7, (INJECTION WELL).

P-101	F-112A/B — PRE-FILTER
GROUNDWATER PUMP 100 GPM	F-118A/B — POST-FILTER
P-102	P-112A/B — GROUNDWATER TREATMENT FEED PUMP
P-103 GROUNDWATER PUMP 150 GPM	P-118 — TREATED WATER DISCHARGE PUMP
	TK-110 — GROUNDWATER TREATMENT FEED TANK
	TK-116 — TREATED WATER STORAGE TANK
	V-114A/B — CARBON ADSORBERS

FUTURE

P-212A/B — PRE-FILTER	F-218A/B — POST-FILTER
P-212A/B — GROUNDWATER TREATMENT FEED PUMP	P-218 — TREATED WATER DISCHARGE PUMP
TK-210 — GROUNDWATER TREATMENT FEED TANK	TK-216 — TREATED WATER STORAGE TANK
V-214A/B — CARBON ADSORBERS	

COMPONENT \ STREAM NO.	1	2	3	4	5	6	7	8	9	10	11	12	13	14	15	16		
	WELLS TO GWTS	FUTURE WELLS TO GWTS	WELL FIELD TO GWTS	INFLUENT TO FEED TANK	GWTS FEED PUMPS	PRE-FILTER	CARBON ABSORPTION INLET	TREATED WATER	DISCHARGE PUMP	POST-FILTER	TREATED DISCHARGE	TREATED DISCHARGE	INFILTRATION GALLERY	GROUNDWATER TREATMENT FEED TANK VENT	TREATED WATER STORAGE TANK VENT	TREATED WATER TO DUST CONTROL CONNECTION		
LIQUID FLOW (DESIGN) gpm	400	400	800	400	200	200	400	400	400	200	400	400				100 (NOTE 4)		
LIQUID FLOW (average) gpm	400 (NOTE 2)																	
AIR FLOW acfm (scfm)																		
ETHYLENE DIBROMIDE (EDB) ug/L	2	2	2	2	2	2	2	0.03	0.03	0.03	0.03	0.03						
PRESSURE psig (psia)	25	25	25	25	5	25	25	25	5	25	25	25		(12.05)	(12.05)			
TEMPERATURE °F	58	58	58	58	58	58	58	58	58	58	58	58		68	68			
DENSITY (AT 70°F) lb/ft³	62.4	62.4	62.4	62.4	62.4	62.4	62.4	62.4	62.4	62.4	62.4	62.4		0.061	0.061			

THIS ASBUILT (RECORD DRAWING) HAS BEEN PREPARED, IN PART, BASED UPON INFORMATION FURNISHED BY OTHERS. WHILE THIS INFORMATION IS BELIEVED TO BE RELIABLE, CB&I ASSUMES NO RESPONSIBILITY FOR THE ACCURACY OF THIS RECORD DRAWING OR FOR ANY ERRORS OR OMISSIONS THAT MAY HAVE BEEN INCORPORATED INTO IT AS A RESULT OF INCORRECT INFORMATION PROVIDED TO CB&I. THOSE RELYING ON THIS RECORD DOCUMENT ARE ADVISED TO OBTAIN INDEPENDENT VERIFICATION OF ITS ACCURACY.

PROFESSIONAL SEAL

U.S. ARMY CORPS OF ENGINEERS
ALBUQUERQUE DISTRICT
ALBUQUERQUE, NEW MEXICO

CB&I FEDERAL SERVICES LLC
312 DIRECTORS DRIVE
KNOXVILLE, TENNESSEE 37923
865-690-3211

CLIENT DWG NO:

NOTES

NO.	REVISION	DRAWN	CK'D	APPD	DATE
1	RECORD DRAWING	RJT	SES	BAH	03/25/16
0	ISSUED FOR CONSTRUCTION	EGA	SES	BAH	03/30/15

REFERENCE DRAWINGS

THIS DOCUMENT IS THE PROPERTY OF CHICAGO BRIDGE & IRON COMPANY ("CB&I"). IT MAY CONTAIN INFORMATION DESCRIBING TECHNOLOGY OWNED BY CB&I AND DEEMED TO BE COMMERCIALLY SENSITIVE. IT IS TO BE USED ONLY IN CONNECTION WITH WORK BEING PERFORMED BY CB&I. REPRODUCTION IN WHOLE OR IN PART FOR ANY PURPOSE OTHER THAN WORK PERFORMED BY CB&I IS FORBIDDEN EXCEPT BY EXPRESS WRITTEN PERMISSION OF CB&I. IT IS TO BE SAFEGUARDED AGAINST BOTH DELIBERATE AND INADVERTENT DISCLOSURE TO ANY THIRD PARTY.

DRAWN: EGA | CK'D: SES | APPD: BAH | DATE: 03/30/15 | SCALE: NONE

PROCESS FLOW DIAGRAM
MID-PLUME PUMP & TREAT SYSTEM

FOR: BULK FUELS FACILITY, KIRTLAND AFB, NM

PROJECT NO: 140705 | DWG NO: 140705-001-PR-01-400001 | REV: 1

File: 140705-001-PR-01-400001.dwg
Plot Date/Time: Mar 23, 2016 - 8:56am
Plotted By: charles.bentley

Form: CMS-830-00-FM-02104 CBI ANSI D.dwg

NOTES:

1. DOUBLE-WALLED PIPE WILL PENETRATE BUILDING FLOOR.
2. LEVEL TRANSDUCER TO MONITOR WATER LEVEL.
3. INTERSTITIAL LEAK DETECTION.
4. VAULT LEAK DETECTION.
5. INSTALLED AND CAPPED BELOW GRADE DURING PHASE IV FOR RAPID WELLS.
6. TWO CHECK VALVES INSTALLED ON 3" DIA. DROP PIPE TO PUMP. CHECK VALVES ARE LOCATED AT PUMP DISCHARGE AND 250 FEET ABOVE DISCHARGE.

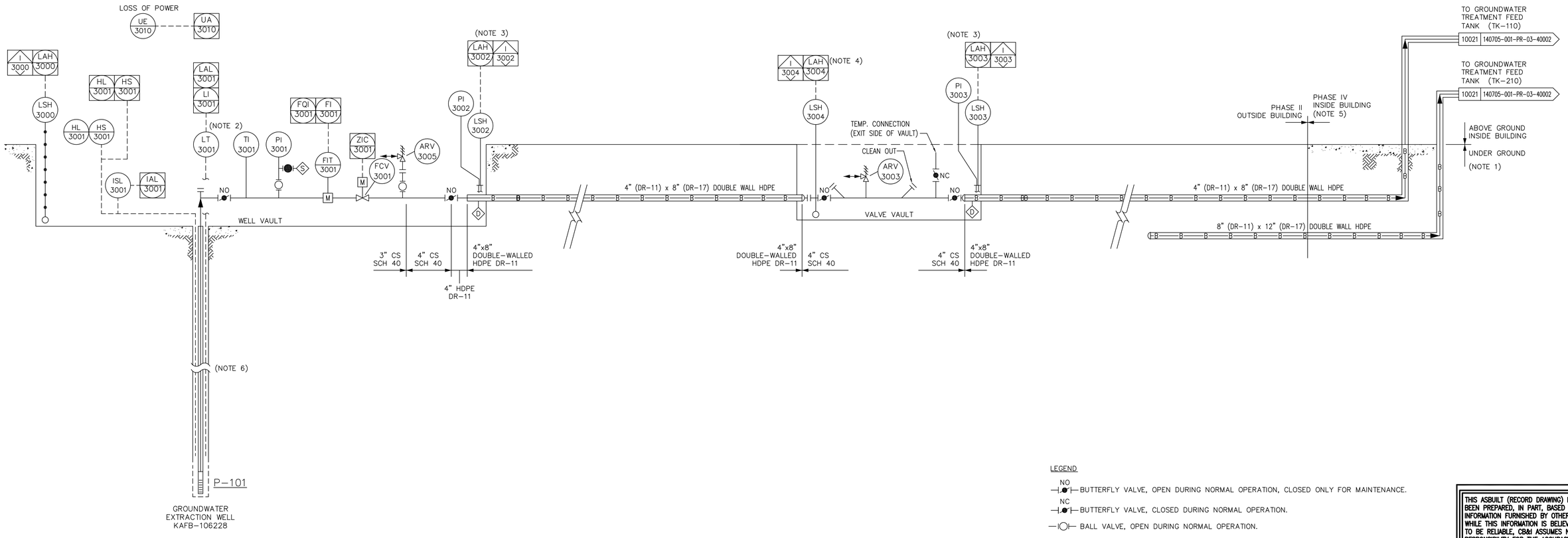

P-101
WELL PUMP
30 HP
100 GPM
600 FT TDH

LEGEND

- NO — BUTTERFLY VALVE, OPEN DURING NORMAL OPERATION, CLOSED ONLY FOR MAINTENANCE.
- NC — BUTTERFLY VALVE, CLOSED DURING NORMAL OPERATION.
- BALL VALVE, OPEN DURING NORMAL OPERATION.
- BALL VALVE, CLOSED DURING NORMAL OPERATION.

THIS ASBUILT (RECORD DRAWING) HAS BEEN PREPARED, IN PART, BASED UPON INFORMATION FURNISHED BY OTHERS. WHILE THIS INFORMATION IS BELIEVED TO BE RELIABLE, CB&I ASSUMES NO RESPONSIBILITY FOR THE ACCURACY OF THIS RECORD DRAWING OR FOR ANY ERRORS OR OMISSIONS THAT MAY HAVE BEEN INCORPORATED INTO IT AS A RESULT OF INCORRECT INFORMATION PROVIDED TO CB&I. THOSE RELYING ON THIS RECORD DOCUMENT ARE ADVISED TO OBTAIN INDEPENDENT VERIFICATION OF ITS ACCURACY.

PROFESSIONAL SEAL

U.S. ARMY CORPS OF ENGINEERS
ALBUQUERQUE DISTRICT
ALBUQUERQUE, NEW MEXICO

CB&I FEDERAL SERVICES LLC
312 DIRECTORS DRIVE
KNOXVILLE, TENNESSEE 37923
865-690-3211

CLIENT DWG NO:

NOTES

REFERENCE DRAWINGS	NO.	REVISION	DRAWN	CK'D	APPD	DATE
	1	RECORD DRAWING	CFB	SES	BAH	03/25/16
	0	ISSUED FOR CONSTRUCTION	EGA	SES	BAH	03/30/15

THIS DOCUMENT IS THE PROPERTY OF CHICAGO BRIDGE & IRON COMPANY ("CB&I"). IT MAY CONTAIN INFORMATION DESCRIBING TECHNOLOGY OWNED BY CB&I AND DEEMED TO BE COMMERCIALLY SENSITIVE. IT IS TO BE USED ONLY IN CONNECTION WITH WORK BEING PERFORMED BY CB&I. REPRODUCTION IN WHOLE OR IN PART FOR ANY PURPOSE OTHER THAN WORK PERFORMED BY CB&I IS FORBIDDEN EXCEPT BY EXPRESS WRITTEN PERMISSION OF CB&I. IT IS TO BE SAFEGUARDED AGAINST BOTH DELIBERATE AND INADVERTENT DISCLOSURE TO ANY THIRD PARTY.

DRAWN: EGA | CK'D: SES | APPD: BAH | DATE: 03/30/15 | SCALE: NONE

PIPING & INSTRUMENTATION DIAGRAM
EXTRACTION WELL KAFB-106228
MID-PLUME PUMP & TREAT SYSTEM

FOR: BULK FUELS FACILITY, KIRTLAND AFB, NM

PROJECT NO: 140705 | DWG NO: 140705-001-PR-03-400001 | REV: 1

File: 140705-001-PR-03-400001.dwg
Plot Date/Time: Mar 23, 2016 - 9:08am
Plotted By: charles.bentley

Form: CM5-830-00-FM-02104 CB ANSI D.dwg

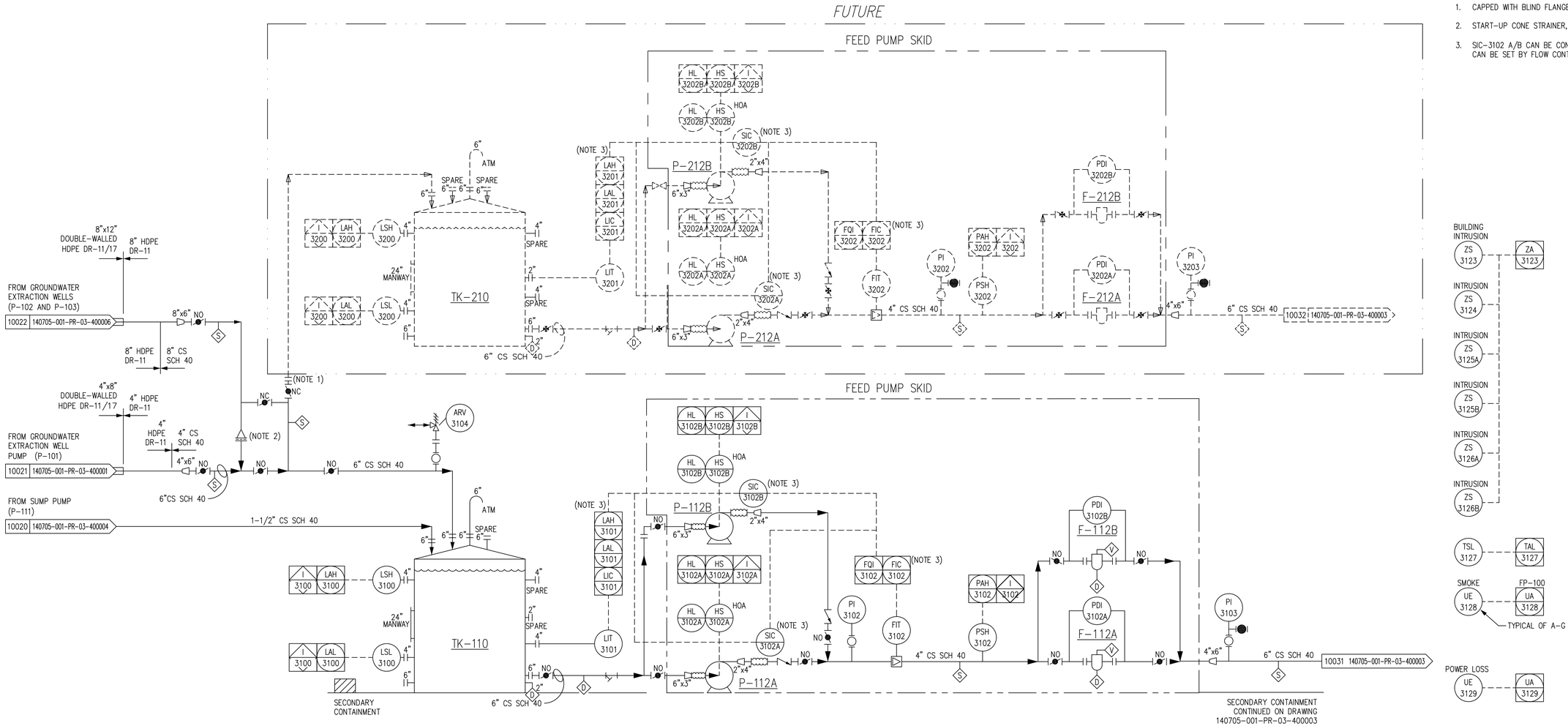

NOTES:

1. CAPPED WITH BLIND FLANGE FOR FUTURE USE.
2. START-UP CONE STRAINER, SEE MECHANICAL DRAWINGS FOR DETAILS.
3. SIC-3102 A/B CAN BE CONTROLLED BY LEVEL IN TK-110 (LIC-3101) OR CAN BE SET BY FLOW CONTROL SET POINT ON FIC - 3102

LEGEND

- NO — BUTTERFLY VALVE, OPEN DURING NORMAL OPERATION, CLOSED ONLY FOR MAINTENANCE.
- NC — BUTTERFLY VALVE, CLOSED DURING NORMAL OPERATION.
- BALL VALVE, OPEN DURING NORMAL OPERATION.
- BALL VALVE, CLOSED DURING NORMAL OPERATION.
- V — VENT
- D — DRAIN

FUTURE

F-112A/B
PRE-FILTER

P-112A/B
GROUNDWATER TREATMENT FEED PUMP
15 HP
200 GPM
100 FT TDH

TK-110
GROUNDWATER TREATMENT FEED TANK
10' DIA. 12' H.
6,000 GALLONS

F-212A/B
PRE-FILTER

P-212A/B
GROUNDWATER TREATMENT FEED PUMP
15 HP
200 GPM
100 FT TDH

TK-210
GROUNDWATER TREATMENT FEED TANK
10' DIA. 12' H.
6,000 GALLONS

THIS ASBUILT (RECORD DRAWING) HAS BEEN PREPARED, IN PART, BASED UPON INFORMATION FURNISHED BY OTHERS. WHILE THIS INFORMATION IS BELIEVED TO BE RELIABLE, CB&I ASSUMES NO RESPONSIBILITY FOR THE ACCURACY OF THIS RECORD DRAWING OR FOR ANY ERRORS OR OMISSIONS THAT MAY HAVE BEEN INCORPORATED INTO IT AS A RESULT OF INCORRECT INFORMATION PROVIDED TO CB&I. THOSE RELYING ON THIS RECORD DOCUMENT ARE ADVISED TO OBTAIN INDEPENDENT VERIFICATION OF ITS ACCURACY.

PROFESSIONAL SEAL

U.S. ARMY CORPS OF ENGINEERS
ALBUQUERQUE DISTRICT
ALBUQUERQUE, NEW MEXICO

CB&I FEDERAL SERVICES LLC
312 DIRECTORS DRIVE
KNOXVILLE, TENNESSEE 37923
865-690-3211

CLIENT DWG NO:

NOTES

NO.	REVISION	DRAWN	CK'D	APPD	DATE
1	RECORD DRAWING	RJT	SES	BAH	03/25/16
0	ISSUED FOR CONSTRUCTION	ECA	SES	BAH	03/30/15

REFERENCE DRAWINGS

THIS DOCUMENT IS THE PROPERTY OF CHICAGO BRIDGE & IRON COMPANY ("CB&I"). IT MAY CONTAIN INFORMATION DESCRIBING TECHNOLOGY OWNED BY CB&I AND DEEMED TO BE COMMERCIALLY SENSITIVE. IT IS TO BE USED ONLY IN CONNECTION WITH WORK BEING PERFORMED BY CB&I. REPRODUCTION IN WHOLE OR IN PART FOR ANY PURPOSE OTHER THAN WORK PERFORMED BY CB&I IS FORBIDDEN EXCEPT BY EXPRESS WRITTEN PERMISSION OF CB&I. IT IS TO BE SAFEGUARDED AGAINST BOTH DELIBERATE AND INADVERTENT DISCLOSURE TO ANY THIRD PARTY.

DRAWN: EGA | CK'D: SES | APPD: BAH | DATE: 03/30/15 | SCALE:

PIPING & INSTRUMENT DIAGRAM
GROUNDWATER TREATMENT SYSTEM
MID-PLUME PUMP & TREAT SYSTEM

FOR: BULK FUELS FACILITY, KIRTLAND AFB, NM

PROJECT NO: 140705 | DWG NO: 140705-001-PR-03-400002 | REV: 1

File: 140705-001-PR-03-400002.dwg
Plot Date/Time: Mar 23, 2016 - 9:06am
Plotted By: charles.bentley

Form: CMS-830-00-FM-02104 CB! ANSI D.dwg

NOTES:

1. WALL MOUNTED UTILITY STATION.
2. VALVE INCLUDES INTEGRAL BACK FLOW PREVENTION CAPABILITY
3. VALVE POSITIONS SET ACCORDING TO TABLES

FUTURE

FROM GROUNDWATER TREATMENT FEED PUMP (P-212A/B)
10032 | 140705-001-PR-03-400002

6" CS SCH 40

1-1/2 CU, TYPE K

TAP ON EXISTING WATER LINE

6"x1-1/2"

6" C900 PVC

FI/FQI 3130

BURIED OUTSIDE BUILDING

ABOVE GROUND INSIDE BUILDING

PRV 3130

(NOTE 2)

1 1/2" CU

1 1/2" C.S. GALV.

(NOTE 1)

(NOTE 1)

HL 3120

HS 3120

HS 3120

(NOTE 1)

1" CS SCH 40

VENDOR SUPPLIED PACKAGE UNIT

AIR COMPRESSOR AND FILTERS

C-120

SECONDARY CONTAINMENT CONTINUED FROM DRAWING 140705-001-PR-03-400002

ARV 3206

BACK WASH EFFLUENT

CARBON SKID

½" AIR RELIEF BLOW-OFF

2" MANUAL VENT LINE

TO FLOOR

V-214A

V-214B

PI 3205

PAH 3205

PSH 3205

PI 3204A

PI 3204B

8"x¾"

8"x2"

¼"

2"x¾"

4"x¾"

4"x2"

PRESSURE RELIEF FOR FILLING

CARBON FILL

CARBON DISCHARGE

BACK WASH INFLUENT

FUTURE

ARV 3106

6" CS SCH 40

TO TREATED WATER STORAGE TANK (TK-216)

10042 | 140705-001-PR-03-400004

ARV 3106

BACK WASH EFFLUENT

CARBON SKID

½" AIR RELIEF BLOW-OFF

2" MANUAL VENT LINE

TO FLOOR

V-114B

V-114A

V-1 V-2 V-3 V-4 V-5 V-6 V-7 V-8 V-9 V-10 V-11 V-12 V-13 V-14 V-15 V-16

(NOTE 3)

PI 3105

PAH 3105

PSH 3105

PI 3104B

PI 3104A

8"x¾"

8"x2"

¼"

2"x¾"

4"x¾"

4"x2"

PRESSURE RELIEF FOR FILLING

CARBON FILL

CARBON DISCHARGE

BACK WASH INFLUENT

FROM GROUNDWATER TREATMENT FEED PUMP (P-112A/B)

10031 | 140705-001-PR-03-400002

6" CS SCH 40

ARV 3107

TO TREATED WATER STORAGE TANK (TK-116)

10041 | 140705-001-PR-03-400004

6" CS SCH 40

SECONDARY CONTAINMENT CONTINUED ON DRAWING 140705-001-PR-03-400004

LENGEND

NO — BUTTERFLY VALVE, OPEN DURING NORMAL OPERATION, CLOSED ONLY FOR MAINTENANCE.

NC — BUTTERFLY VALVE, CLOSED DURING NORMAL OPERATION.

BALL VALVE, OPEN DURING NORMAL OPERATION.

BALL VALVE, CLOSED DURING NORMAL OPERATION.

DRAIN

SAMPLE

C-120
PACKAGE AIR COMPRESSOR SYSTEM
107 SCFM
115 PSIG

V-114A/B
CARBON ADSORBERS
40,000 LBS.

V-214A/B
CARBON ADSORBERS
40,000 LBS.

FUTURE

THIS ASBUILT (RECORD DRAWING) HAS BEEN PREPARED, IN PART, BASED UPON INFORMATION FURNISHED BY OTHERS. WHILE THIS INFORMATION IS BELIEVED TO BE RELIABLE, CB&I ASSUMES NO RESPONSIBILITY FOR THE ACCURACY OF THIS RECORD DRAWING OR FOR ANY ERRORS OR OMISSIONS THAT MAY HAVE BEEN INCORPORATED INTO IT AS A RESULT OF INCORRECT INFORMATION PROVIDED TO CB&I. THOSE RELYING ON THIS RECORD DOCUMENT ARE ADVISED TO OBTAIN INDEPENDENT VERIFICATION OF ITS ACCURACY.

PROFESSIONAL SEAL

U.S. ARMY CORPS OF ENGINEERS
ALBUQUERQUE DISTRICT
ALBUQUERQUE, NEW MEXICO

CB&I FEDERAL SERVICES LLC
312 DIRECTORS DRIVE
KNOXVILLE, TENNESSEE 37923
865-690-3211

CLIENT DWG NO:

NOTES

REFERENCE DRAWINGS

NO.	REVISION	DRAWN	CK'D	APPD	DATE
1	RECORD DRAWING	RJT	SES	BAH	03/25/16
0	ISSUED FOR CONSTRUCTION	EGA	SES	BAH	03/30/15

THIS DOCUMENT IS THE PROPERTY OF CHICAGO BRIDGE & IRON COMPANY ("CB&I"). IT MAY CONTAIN INFORMATION DESCRIBING TECHNOLOGY OWNED BY CB&I AND DEEMED TO BE COMMERCIALLY SENSITIVE. IT IS TO BE USED ONLY IN CONNECTION WITH WORK BEING PERFORMED BY CB&I. REPRODUCTION IN WHOLE OR IN PART FOR ANY PURPOSE OTHER THAN WORK PERFORMED BY CB&I IS FORBIDDEN EXCEPT BY EXPRESS WRITTEN PERMISSION OF CB&I. IT IS TO BE SAFEGUARDED AGAINST BOTH DELIBERATE AND INADVERTENT DISCLOSURE TO ANY THIRD PARTY.

DRAWN: EGA | CK'D: SES | APPD: BAH | DATE: 03/30/15 | SCALE: NONE

PIPING & INSTRUMENTATION DIAGRAM
GROUNDWATER TREATMENT SYSTEM
MID-PLUME PUMP & TREAT SYSTEM

FOR: BULK FUELS FACILITY, KIRTLAND AFB, NM

PROJECT NO: 140705 | DWG NO: 140705-001-PR-03-400003 | REV: 1

Form: CMS-830-00-FM-02104 CBI ANSI D.dwg

File: 140705-001-PR-03-400003.dwg
Plot Date/Time: Mar 21, 2016 - 3:18pm
Plotted By: charles.bentley

NOTES:

1. CAPPED WITH BLIND FLANGE FOR FUTURE USE.
2. SIC-3108 CAN BE CONTROLLED BY LEVEL IN TK-116 OR CAN BE SET BY FLOW CONTROL SET POINT ON FIC-3108.

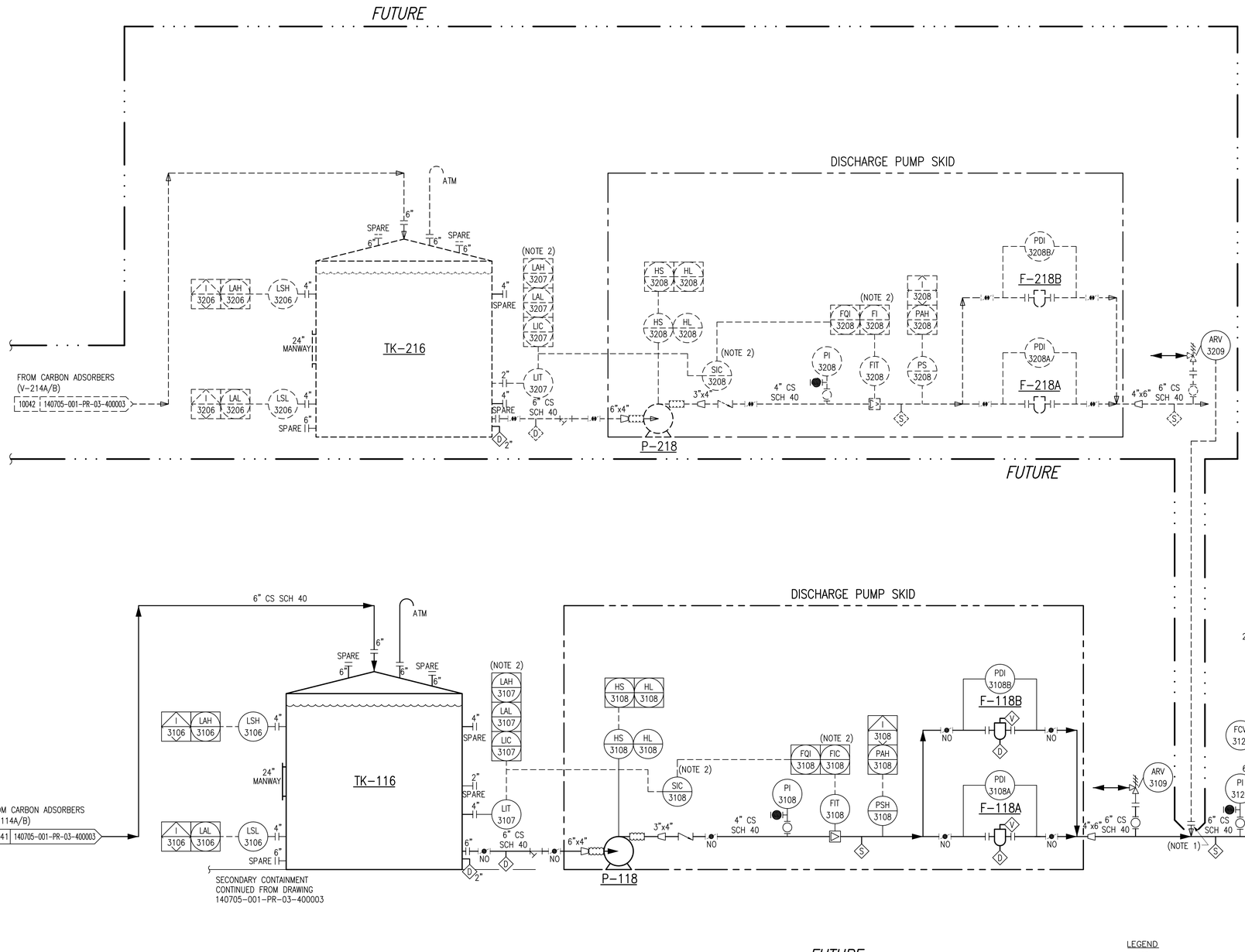

LEGEND

NO
- BUTTERFLY VALVE, OPEN DURING NORMAL OPERATION, CLOSED ONLY FOR MAINTENANCE.

NC
- BUTTERFLY VALVE, CLOSED DURING NORMAL OPERATION.
- BALL VALVE, OPEN DURING NORMAL OPERATION.
- BALL VALVE, CLOSED DURING NORMAL OPERATION.
- GATE VALVE, NORMALLY OPEN.

F-118A/B
POST-FILTER

P-118
TREATED WATER DISCHARGE PUMP
40 HP
400 GPM
180 FT TDH

P-111
SUMP PUMP
1/3 HP
5 GPM
20 FT TDH

TK-116
TREATED WATER STORAGE
10' DIA. 12' H
6,000 GALLONS

FUTURE

F-218A/B
POST-FILTER

P-218
TREATED WATER DISCHARGE PUMP
40 HP
400 GPM
180 FT TDH

TK-216
TREATED WATER STORAGE
10' DIA.
12' H
6,000 GALLONS

THIS ASBUILT (RECORD DRAWING) HAS BEEN PREPARED, IN PART, BASED UPON INFORMATION FURNISHED BY OTHERS. WHILE THIS INFORMATION IS BELIEVED TO BE RELIABLE, CB&I ASSUMES NO RESPONSIBILITY FOR THE ACCURACY OF THIS RECORD DRAWING OR FOR ANY ERRORS OR OMISSIONS THAT MAY HAVE BEEN INCORPORATED INTO IT AS A RESULT OF INCORRECT INFORMATION PROVIDED TO CB&I. THOSE RELYING ON THIS RECORD DOCUMENT ARE ADVISED TO OBTAIN INDEPENDENT VERIFICATION OF ITS ACCURACY.

PROFESSIONAL SEAL

U.S. ARMY CORPS OF ENGINEERS
ALBUQUERQUE DISTRICT
ALBUQUERQUE, NEW MEXICO

CB&I FEDERAL SERVICES LLC
312 DIRECTORS DRIVE
KNOXVILLE, TENNESSEE 37923
865-690-3211

CLIENT DWG NO:

NOTES

REFERENCE DRAWINGS

NO.	REVISION	DRAWN	CK'D	APPD	DATE
1	RECORD DRAWING	RJT	SES	BAH	03/25/16
0	ISSUED FOR CONSTRUCTION	EGA	SES	BAH	03/30/15

THIS DOCUMENT IS THE PROPERTY OF CHICAGO BRIDGE & IRON COMPANY ("CB&I"). IT MAY CONTAIN INFORMATION DESCRIBING TECHNOLOGY OWNED BY CB&I AND DEEMED TO BE COMMERCIALLY SENSITIVE. IT IS TO BE USED ONLY IN CONNECTION WITH WORK BEING PERFORMED BY CB&I. REPRODUCTION IN WHOLE OR IN PART FOR ANY PURPOSE OTHER THAN WORK PERFORMED BY CB&I IS FORBIDDEN EXCEPT BY EXPRESS WRITTEN PERMISSION OF CB&I. IT IS TO BE SAFEGUARDED AGAINST BOTH DELIBERATE AND INADVERTENT DISCLOSURE TO ANY THIRD PARTY.

DRAWN: EGA | CK'D: SES | APPD: BAH | DATE: 03/30/15 | SCALE: NONE

PIPING & INSTRUMENTATION DIAGRAM
GROUNDWATER TREATMENT SYSTEM
MID-PLUME PUMP & TREAT SYSTEM

FOR: BULK FUELS FACILITY, KIRTLAND AFB, NM

PROJECT NO: 140705 | DWG NO: 140705-001-PR-03-400004 | REV: 1

File: 140705-001-PR-03-400004.dwg
Plot Date/Time: Mar 23, 2016 - 9:41am
Plotted By: charles.bentley

Form: CMS-830-00-FM-02104 CBI ANSI D.dwg

NOTES:

1. NEW 12" HDPE TREATED WATER PIPELINE FROM GWTS WILL CONNECT TO EXISTING KAFB-7 TO GOLF COURSE PIPELINE. CONNECTION WILL UTILIZE EXISTING TAP INSTALLED FOR TTS.
2. MANUAL DIRECT-BURY PIV VALVES WILL BE INSTALLED ON EITHER SIDE OF TAP AND USED TO SEND WATER TO EITHER GOLF COURSE MAIN POND OR KAFB-7.
3. EXISTING CHECK VALVE AND FLOW METER IN KAFB-7 VALVE VAULT WILL BE REVERSED TO ALLOW FOR WATER INJECTION.
4. SIGNALS TO AND FROM GOLF COURSE MAIN POND AND KAFB-7 CONTROL HOUSE ARE TRANSMITTED TO THE GWTS BUILDING BY TELEMETRY.

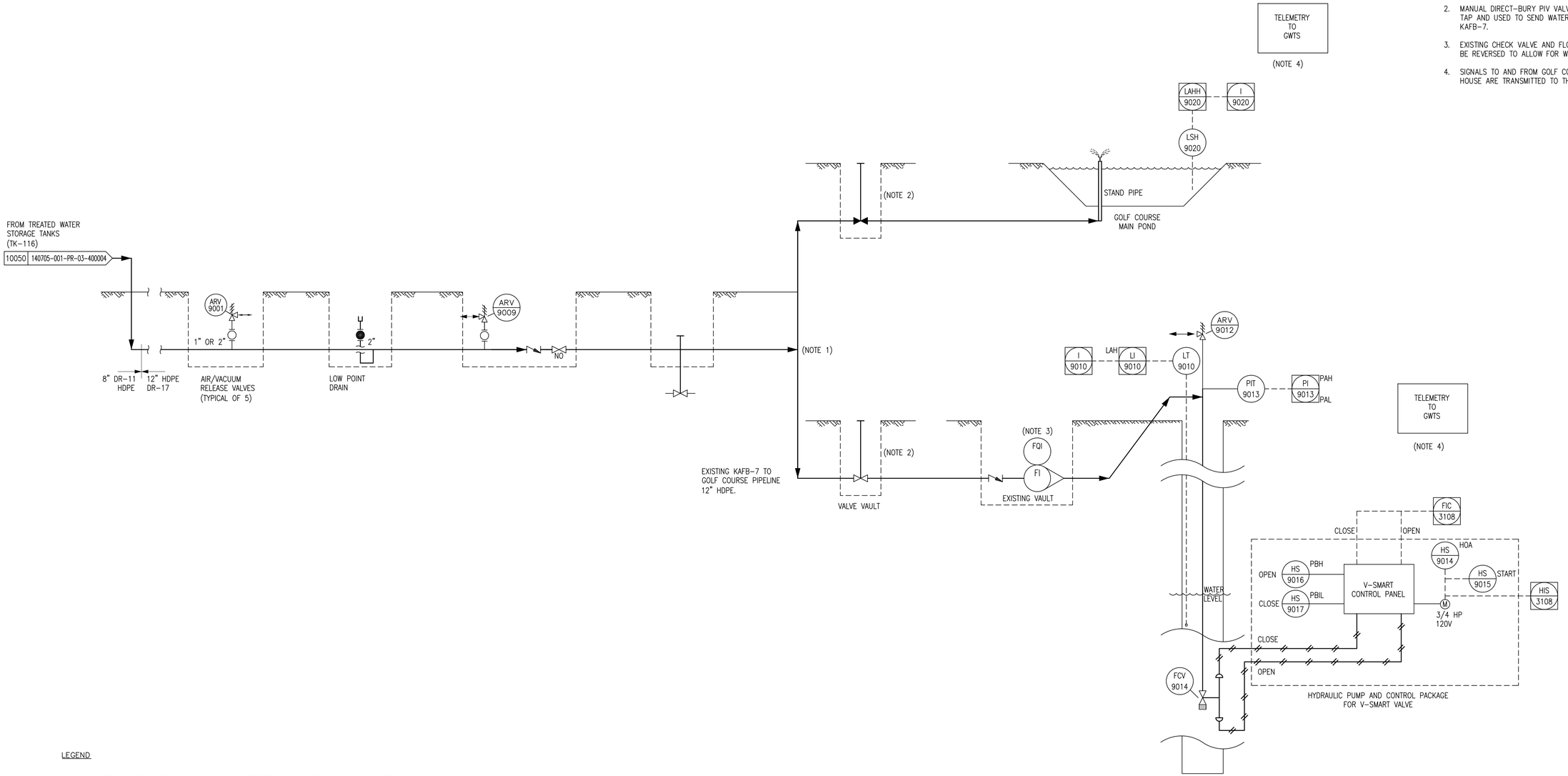

KAFB-7
INJECTION WELL

LEGEND

- GATE VALVE, OPEN DURING NORMAL OPERATION, CLOSED ONLY FOR MAINTENANCE.
- GATE VALVE, CLOSED DURING NORMAL OPERATION.
- BALL VALVE, OPEN DURING NORMAL OPERATION.
- BALL VALVE, CLOSED DURING NORMAL OPERATION.

PROFESSIONAL SEAL

U.S. ARMY CORPS OF ENGINEERS
ALBUQUERQUE DISTRICT
ALBUQUERQUE, NEW MEXICO

CB&I FEDERAL SERVICES LLC
312 DIRECTORS DRIVE
KNOXVILLE, TENNESSEE 37923
865-690-3211

CLIENT DWG NO:

NOTES							
		0	ISSUED FOR O&M MANUAL	RJT	SES	SES	03/31/16
	REFERENCE DRAWINGS	NO.	REVISION	DRAWN	CK'D	APPD	DATE

THIS DOCUMENT IS THE PROPERTY OF CHICAGO BRIDGE & IRON COMPANY ("CB&I"). IT MAY CONTAIN INFORMATION DESCRIBING TECHNOLOGY OWNED BY CB&I AND DEEMED TO BE COMMERCIALLY SENSITIVE. IT IS TO BE USED ONLY IN CONNECTION WITH WORK BEING PERFORMED BY CB&I. REPRODUCTION IN WHOLE OR IN PART FOR ANY PURPOSE OTHER THAN WORK PERFORMED BY CB&I IS FORBIDDEN EXCEPT BY EXPRESS WRITTEN PERMISSION OF CB&I. IT IS TO BE SAFEGUARDED AGAINST BOTH DELIBERATE AND INADVERTENT DISCLOSURE TO ANY THIRD PARTY.

DRAWN: RJT | CK'D: SES | APPD: SES | DATE: 03/31/16 | SCALE: NONE

PIPING & INSTRUMENTATION DIAGRAM
GOLF COURSE AND KAFB-7 INJECTION
MID-PLUME PUMP & TREAT SYSTEM

FOR: BULK FUELS FACILITY, KIRTLAND AFB, NM

PROJECT NO: 500433 | DWG NO: 500433-001-PR-03-400005 | REV: 0

Form: CMS-830-00-FM-02104 CBI ANSI D.dwg

File: 500433-001-PR-03-400005.dwg
Plot Date/Time: Mar 31, 2016 - 10:22am
Plotted By: charles.bentley

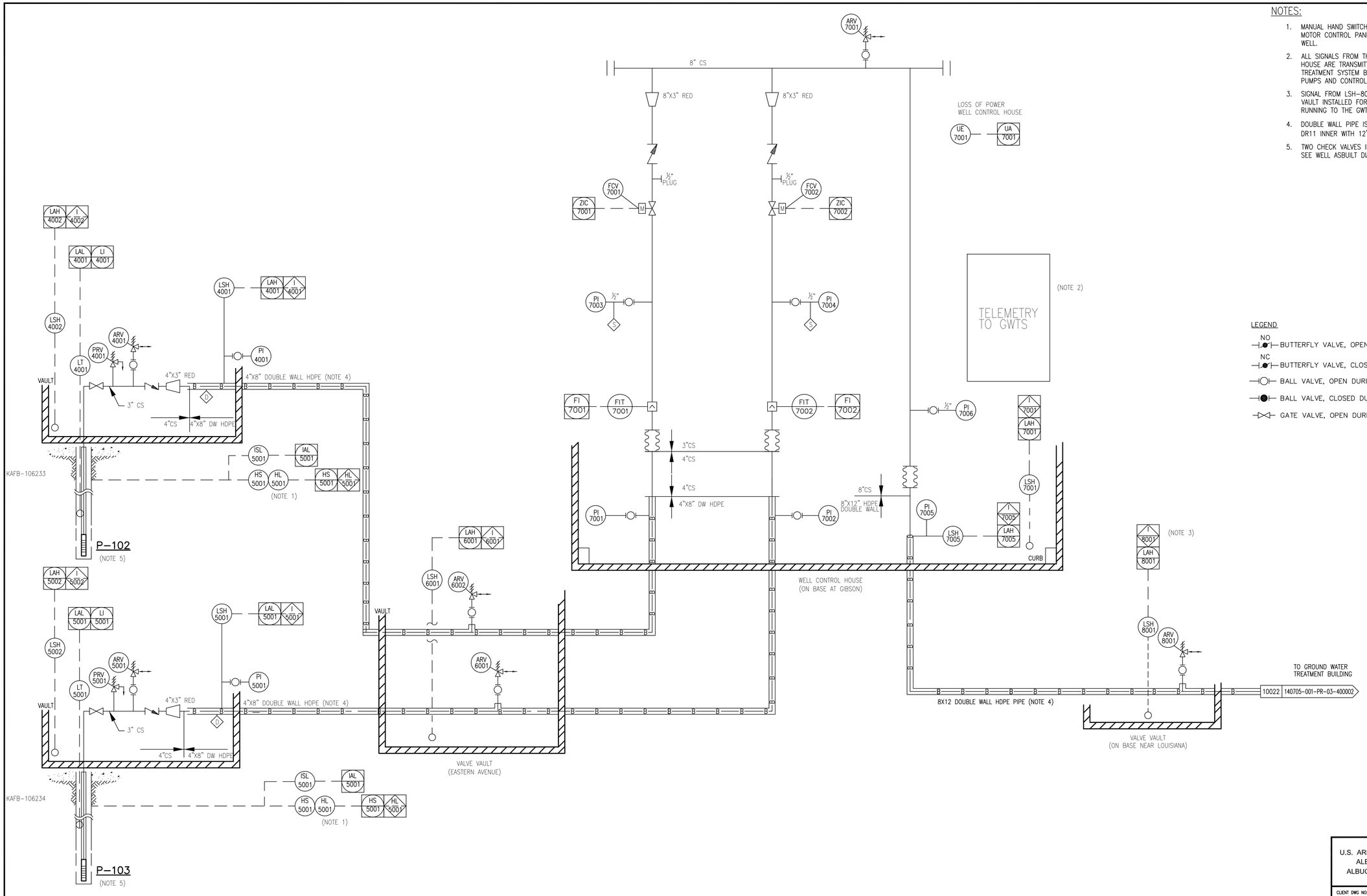

NOTES:

1. MANUAL HAND SWITCHES FOR KAFB-106233 AND 106234 ARE INSTALLED ON MOTOR CONTROL PANEL IN THE WELL CONTROL HOUSE. NO SWITCHES AT THE WELL.
2. ALL SIGNALS FROM THE INSTRUMENTS IN THE WELL VAULTS AND WELL CONTROL HOUSE ARE TRANSMITTED TO THE MAIN CONTROL PANEL IN THE GROUNDWATER TREATMENT SYSTEM BUILDING BY A TELEMETRY SYSTEM. CONTROL SIGNALS TO PUMPS AND CONTROL VALVES ALSO TRANSMITTED BY TELEMETRY.
3. SIGNAL FROM LSH-8001 IS HARD WIRED TO THE JUNCTION BOX IN THE VALVE VAULT INSTALLED FOR KAFB-106228 AND CONNECTED TO EXISTING CABLE RUNNING TO THE GWTS CONTROL PANEL.
4. DOUBLE WALL PIPE IS 4"-DR11 INNER PIPE WITH 8"-DR17 OUTER PIPE OR 8" DR11 INNER WITH 12" DR17 OUTER.
5. TWO CHECK VALVES INSTALLED ON DROP PIPE BETWEEN PUMP AND SURFACE. SEE WELL ASBUILT DIAGRAM FOR DROP PIPE DETAILS.

LEGEND

- NO — BUTTERFLY VALVE, OPEN DURING NORMAL OPERATION.
- NC — BUTTERFLY VALVE, CLOSED DURING NORMAL OPERATION.
- BALL VALVE, OPEN DURING NORMAL OPERATION.
- BALL VALVE, CLOSED DURING NORMAL OPERATION.
- GATE VALVE, OPEN DURING NORMAL OPERATION.

PROFESSIONAL SEAL

U.S. ARMY CORPS OF ENGINEERS
ALBUQUERQUE DISTRICT
ALBUQUERQUE, NEW MEXICO

CB&I FEDERAL SERVICES LLC
312 DIRECTORS DRIVE
KNOXVILLE, TENNESSEE 37923
865-690-3211

CLIENT DWG NO:

NOTES

REFERENCE DRAWINGS

NO.	REVISION	DRAWN	CK'D	APPD	DATE
0	ISSUED FOR O&M MANUAL	RJT	SES	SES	03/29/16

THIS DOCUMENT IS THE PROPERTY OF CHICAGO BRIDGE & IRON COMPANY ("CB&I"). IT MAY CONTAIN INFORMATION DESCRIBING TECHNOLOGY OWNED BY CB&I AND DEEMED TO BE COMMERCIALLY SENSITIVE. IT IS TO BE USED ONLY IN CONNECTION WITH WORK BEING PERFORMED BY CB&I. REPRODUCTION IN WHOLE OR IN PART FOR ANY PURPOSE OTHER THAN WORK PERFORMED BY CB&I IS FORBIDDEN EXCEPT BY EXPRESS WRITTEN PERMISSION OF CB&I. IT IS TO BE SAFEGUARDED AGAINST BOTH DELIBERATE AND INADVERTENT DISCLOSURE TO ANY THIRD PARTY.

DRAWN: RJT | CK'D: SES | APPD: SES | DATE: 03/29/16 | SCALE: NONE

PIPING AND INSTRUMENTATION DIAGRAM
RAPID EXTRACTION WELLS
MID-PLUME PUMP & TREAT SYSTEM

FOR: BULK FUELS FACILITY, KIRTLAND AFB, NM

PROJECT NO: 500433 | DWG NO: 500433-001-PR-03-400006 | REV: 0

File: 500433-001-PR-03-400006.dwg
Plot Date/Time: Mar 29, 2016 - 3:39pm
Plotted By: charles.bentley

Form: CMS-830-00-FM-02104 CBI ANSI D.dwg

TRAIN 1 VALVE POSITIONS

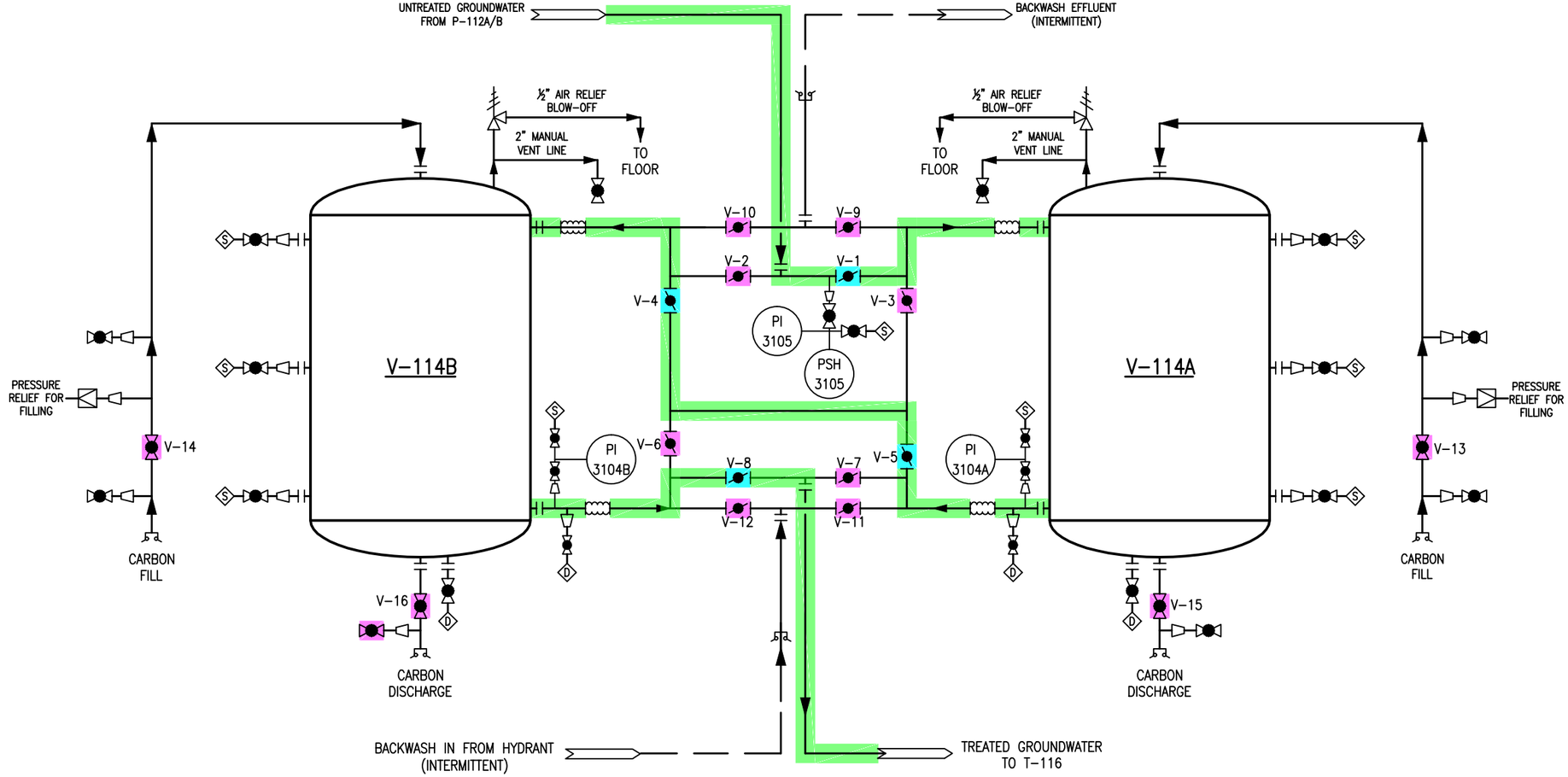

LEGEND

- EXPANSION JOINT
- BALL VALVE
- PRESSURE SWITCH
- REDUCER
- PRESSURE GUAGE
- RUPTURE DISK
- MANUALLY OPERATED BUTTTERFLY VALVE
- QUICK CONNECT CAM LOCK FITTING
- AIR RELIEF VALVE
- S — SAMPLE PORT
- FC — FLUSH CONNECTION
- D — DRAIN CONNECTION

- CLOSED VALVE
- OPEN VALVE
- GROUND WATER FLOW

NO.	REVISION	DRAWN	CK'D	APPD	DATE

DRAWN: | CK'D: | APPD: | DATE: | SCALE:

U.S. ARMY ENGINEER DISTRICT
CORPS OF ENGINEERS
ALBUQUERQUE, NEW MEXICO

CLIENT DWG NO:

CARBON BED VALVE POSITIONS
SERIES OPERATION
A LEAD - B LAG

FOR:

PROJ NO:140705 | DWG NO: FIGURE E-1 | REV:

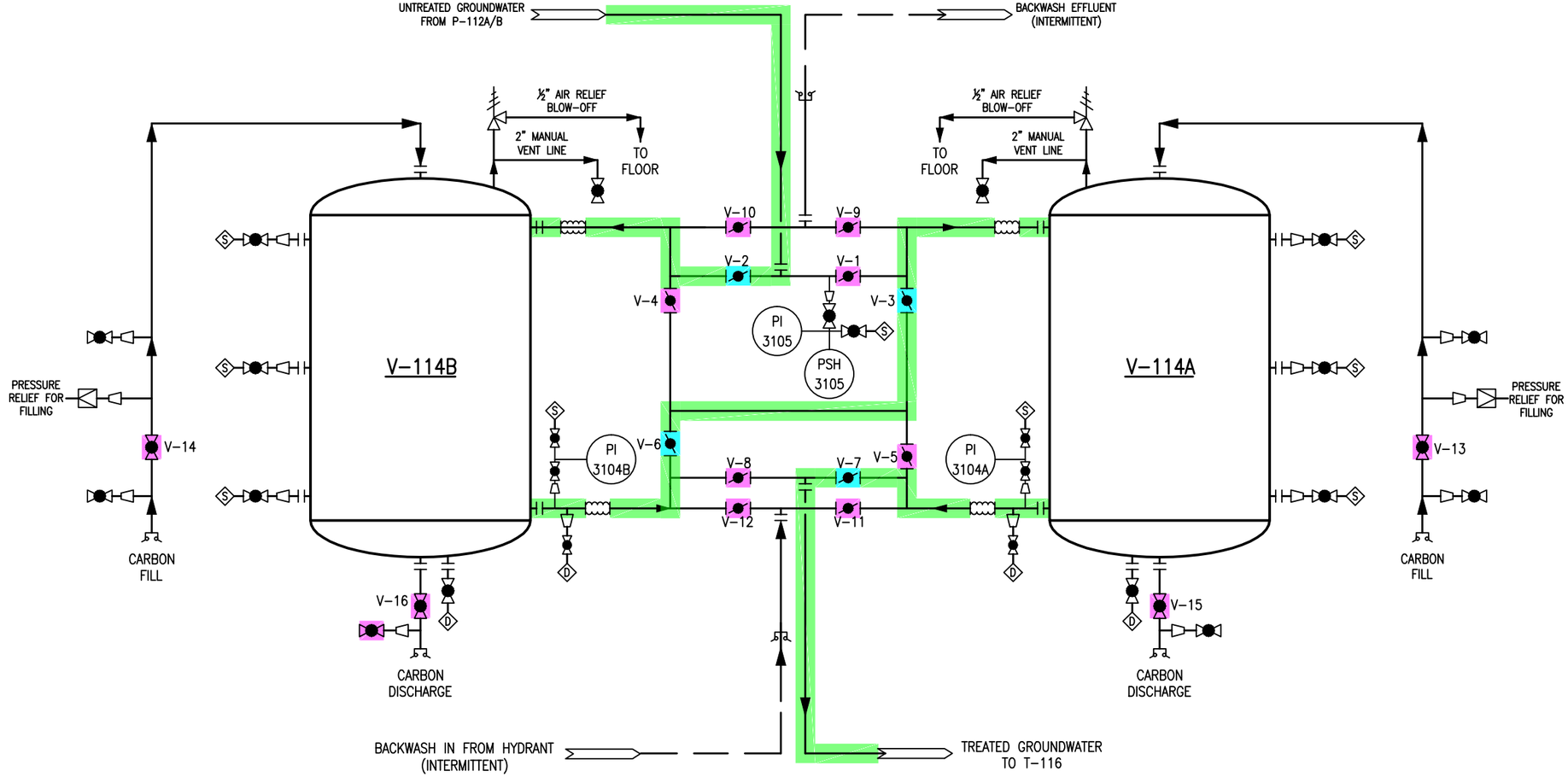

LEGEND

- EXPANSION JOINT
- BALL VALVE
- PRESSURE SWITCH
- REDUCER
- PRESSURE GUAGE
- RUPTURE DISK
- MANUALLY OPERATED BUTTTERFLY VALVE
- QUICK CONNECT CAM LOCK FITTING
- AIR RELIEF VALVE
- S — SAMPLE PORT
- FC — FLUSH CONNECTION
- D — DRAIN CONNECTION

- CLOSED VALVE
- OPEN VALVE
- GROUND WATER FLOW

NO.	REVISION	DRAWN	CK'D	APPD	DATE

DRAWN:	CK'D:	APPD:	DATE:	SCALE:

U.S. ARMY ENGINEER DISTRICT
CORPS OF ENGINEERS
ALBUQUERQUE, NEW MEXICO

CLIENT DWG NO:

CARBON BED VALVE POSITIONS

SERIES OPERATION

B LEAD - A LAG

FOR:

PROJ NO:	DWG NO: FIGURE E-2	REV:

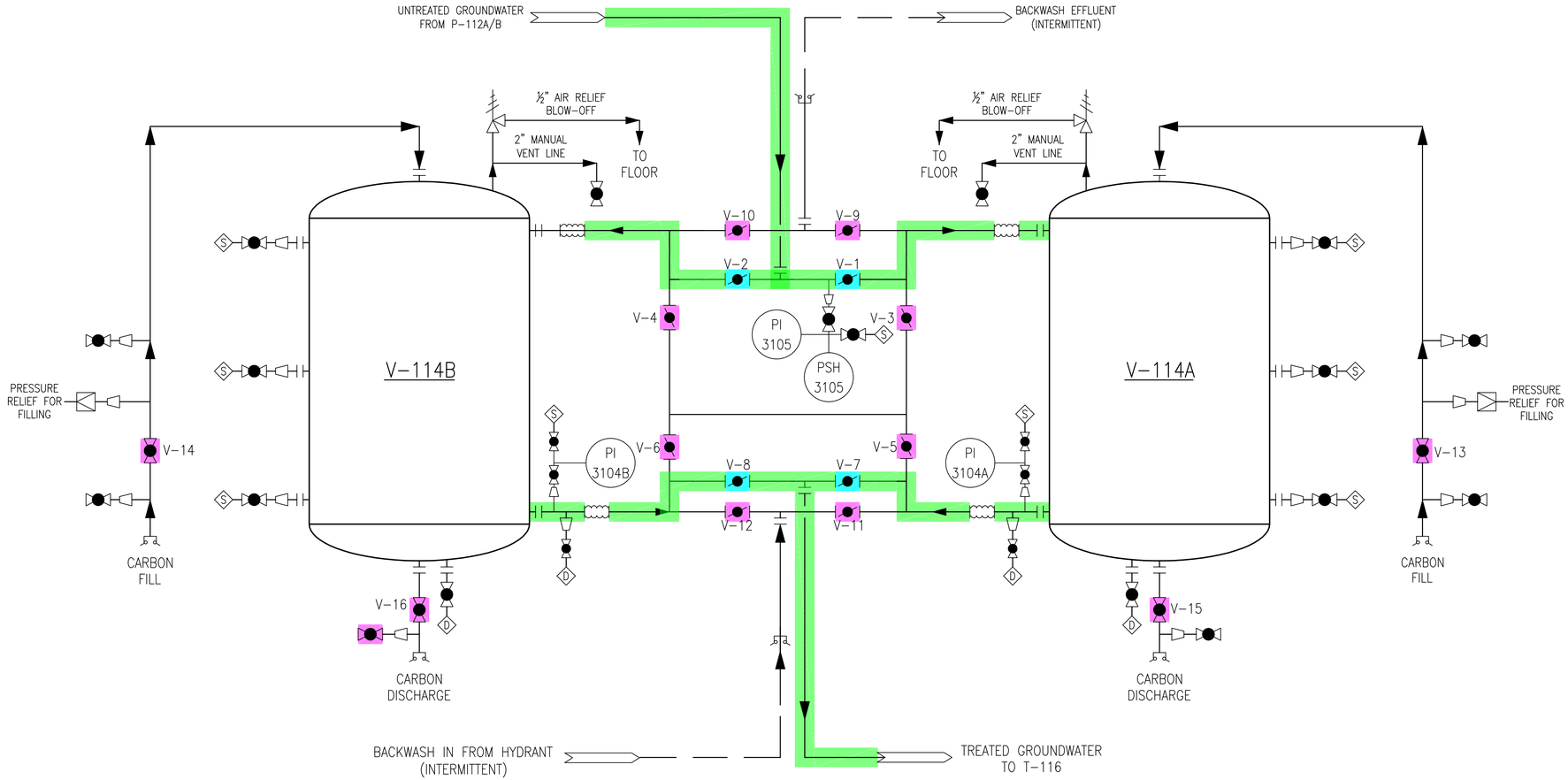

LEGEND

- EXPANSION JOINT
- BALL VALVE
- PRESSURE SWITCH
- REDUCER
- PRESSURE GUAGE
- RUPTURE DISK
- MANUALLY OPERATED BUTTTERFLY VALVE
- QUICK CONNECT CAM LOCK FITTING
- AIR RELIEF VALVE
- S — SAMPLE PORT
- FC — FLUSH CONNECTION
- D — DRAIN CONNECTION

- CLOSED VALVE
- OPEN VALVE
- GROUND WATER FLOW

U.S. ARMY ENGINEER DISTRICT
CORPS OF ENGINEERS
ALBUQUERQUE, NEW MEXICO

CLIENT DWG NO:

CARBON BED VALVE POSITIONS

PARALLEL FLOW

A AND B BOTH ONLINE

FOR:

NO.	REVISION	DRAWN	CK'D	APPD	DATE

DRAWN:	CK'D:	APPD:	DATE:	SCALE:	PROJ NO:	DWG NO: FIGURE E-3	REV:

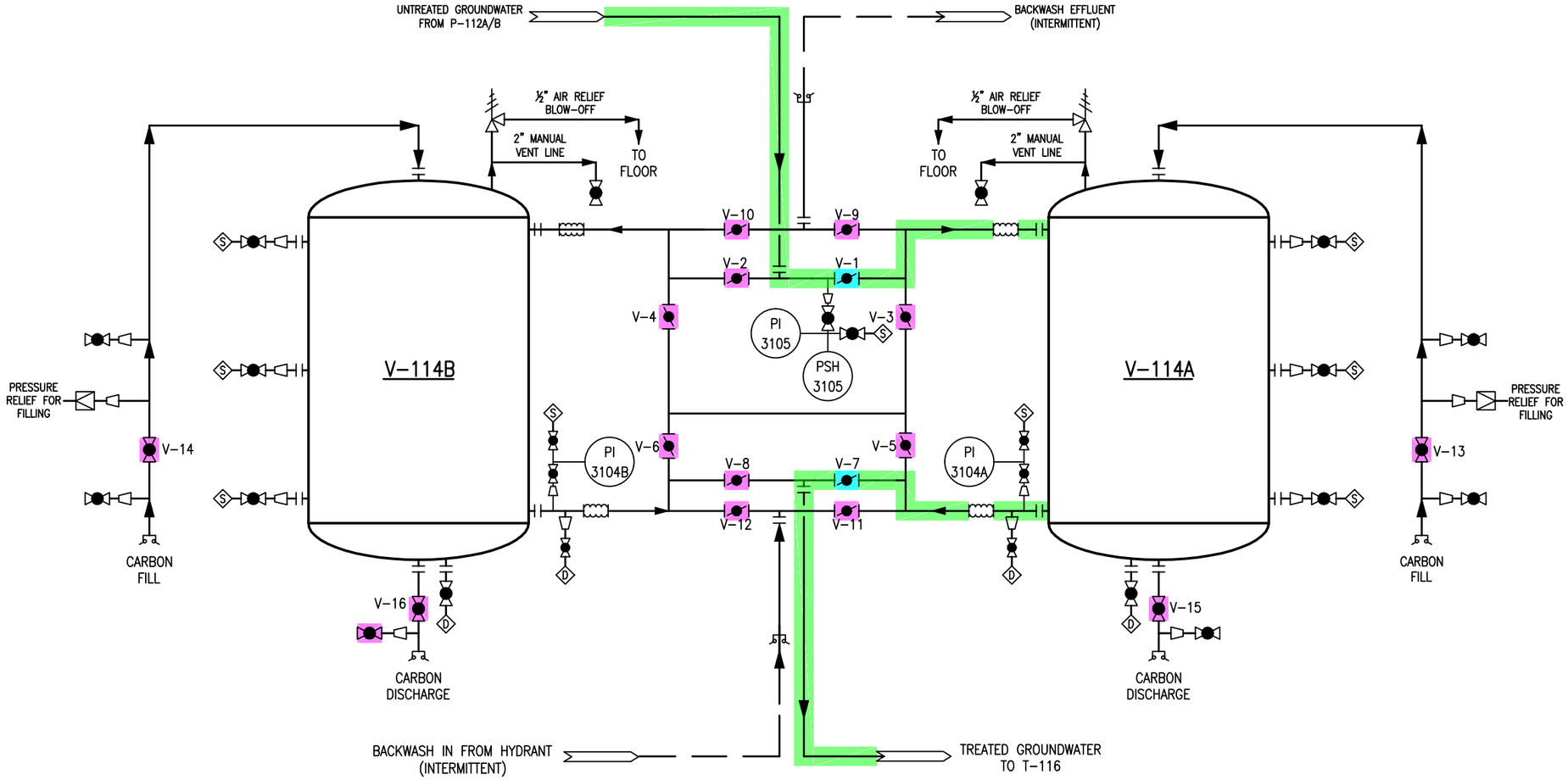

LEGEND

- EXPANSION JOINT
- BALL VALVE
- PRESSURE SWITCH
- REDUCER
- PRESSURE GUAGE
- RUPTURE DISK
- MANUALLY OPERATED BUTTTERFLY VALVE
- QUICK CONNECT CAM LOCK FITTING
- AIR RELIEF VALVE
- S — SAMPLE PORT
- FC — FLUSH CONNECTION
- D — DRAIN CONNECTION

- CLOSED VALVE
- OPEN VALVE
- GROUND WATER FLOW

NO.	REVISION	DRAWN	CK'D	APPD	DATE

DRAWN: | CK'D: | APPD: | DATE: | SCALE:

U.S. ARMY ENGINEER DISTRICT
CORPS OF ENGINEERS
ALBUQUERQUE, NEW MEXICO

CLIENT DWG NO:

CARBON BED VALVE POSITIONS

SINGLE BED

A ONLINE B OFFLINE

FOR:

PROJ NO: | DWG NO: FIGURE E-4 | REV:

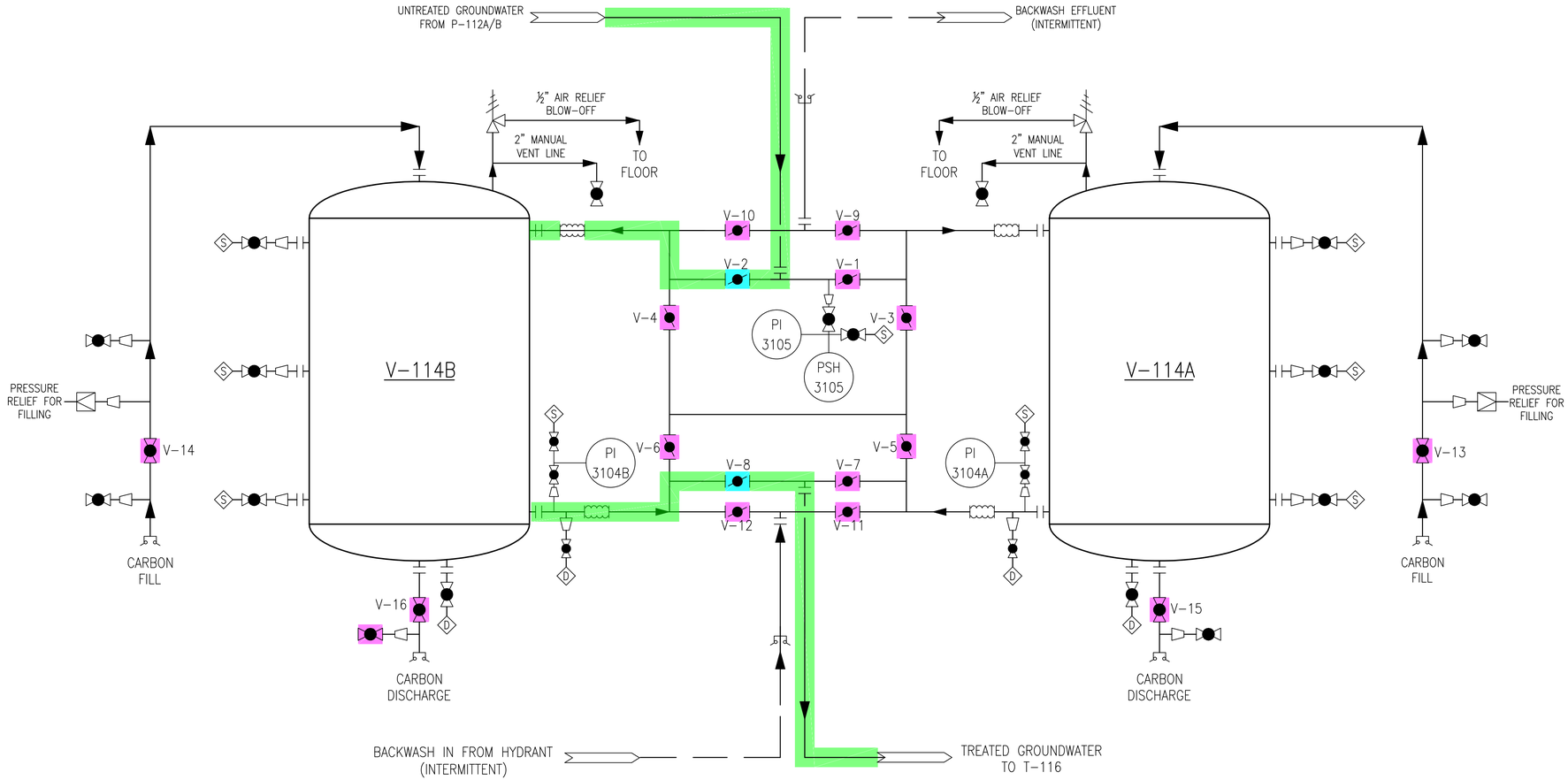

LEGEND

- EXPANSION JOINT
- BALL VALVE
- PRESSURE SWITCH
- REDUCER
- PRESSURE GUAGE
- RUPTURE DISK
- MANUALLY OPERATED BUTTTERFLY VALVE
- QUICK CONNECT CAM LOCK FITTING
- AIR RELIEF VALVE
- S — SAMPLE PORT
- FC — FLUSH CONNECTION
- D — DRAIN CONNECTION

- CLOSED VALVE
- OPEN VALVE
- GROUND WATER FLOW

NO.	REVISION	DRAWN	CK'D	APPD	DATE

DRAWN:	CK'D:	APPD:	DATE:	SCALE:

U.S. ARMY ENGINEER DISTRICT
CORPS OF ENGINEERS
ALBUQUERQUE, NEW MEXICO

CLIENT DWG NO:

CARBON BED VALVE POSITIONS

SINGLE BED

B ONLINE A OFFLINE

FOR:

PROJ NO:	DWG NO: FIGURE E-5	REV:

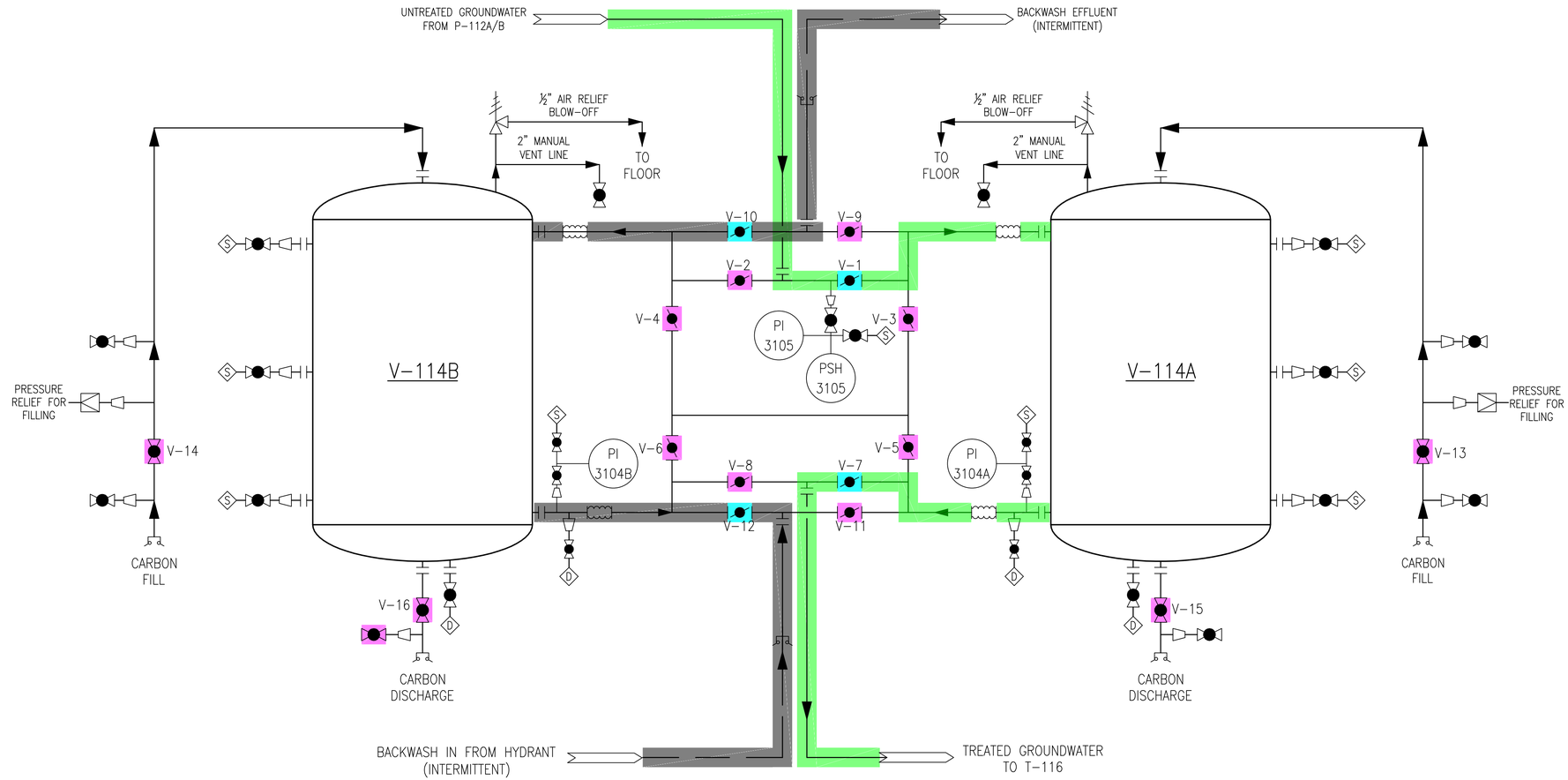

LEGEND

- EXPANSION JOINT
- BALL VALVE
- PRESSURE SWITCH
- REDUCER
- PRESSURE GUAGE
- RUPTURE DISK
- MANUALLY OPERATED BUTTTERFLY VALVE
- QUICK CONNECT CAM LOCK FITTING
- AIR RELIEF VALVE
- S — SAMPLE PORT
- FC — FLUSH CONNECTION
- D — DRAIN CONNECTION

- CLOSED VALVE
- OPEN VALVE
- GROUND WATER FLOW
- BACKWASH FLOW

NO.	REVISION	DRAWN	CK'D	APPD	DATE

DRAWN:	CK'D:	APPD:	DATE:	SCALE:

U.S. ARMY ENGINEER DISTRICT
CORPS OF ENGINEERS
ALBUQUERQUE, NEW MEXICO

CLIENT DWG NO:

CARBON BED VALVE POSITIONS
ONLINE AND BACKWASH
A ONLINE B BACKWASH

FOR:

PROJ NO:	DWG NO: FIGURE E-6	REV:

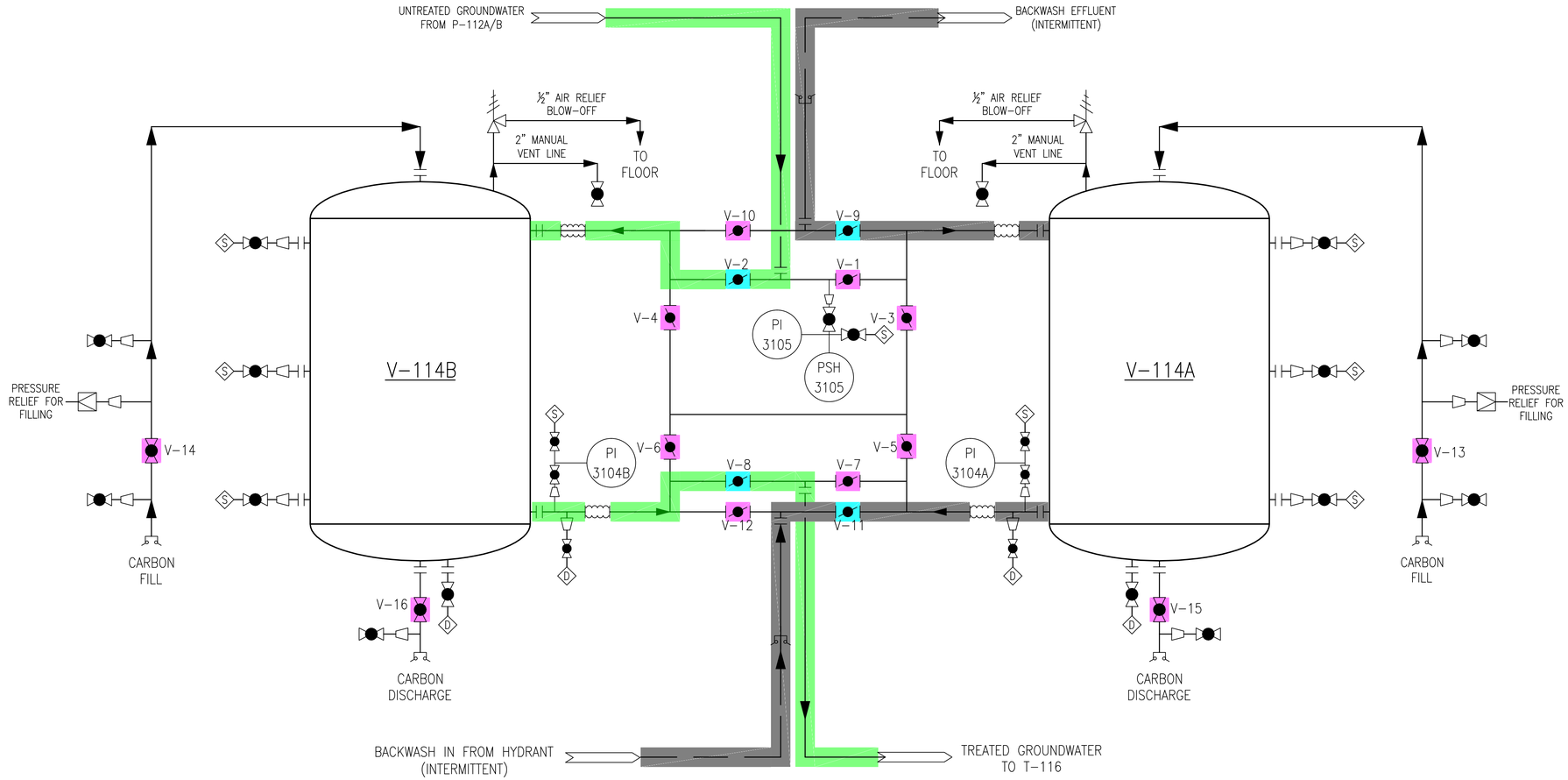

LEGEND

- EXPANSION JOINT
- BALL VALVE
- PRESSURE SWITCH
- REDUCER
- PRESSURE GUAGE
- RUPTURE DISK
- MANUALLY OPERATED BUTTTERFLY VALVE
- QUICK CONNECT CAM LOCK FITTING
- AIR RELIEF VALVE
- S — SAMPLE PORT
- FC — FLUSH CONNECTION
- D — DRAIN CONNECTION

- CLOSED VALVE
- OPEN VALVE
- GROUND WATER FLOW
- BACKWASH FLOW

NO.	REVISION	DRAWN	CK'D	APPD	DATE

DRAWN:	CK'D:	APPD:	DATE:	SCALE:

U.S. ARMY ENGINEER DISTRICT
CORPS OF ENGINEERS
ALBUQUERQUE, NEW MEXICO

CLIENT DWG NO:

CARBON BED VALVE POSITIONS

ONLINE AND BACKWASH

B ONLINE A BACKWASH

FOR:

PROJ NO:	DWG NO: FIGURE E-7	REV:

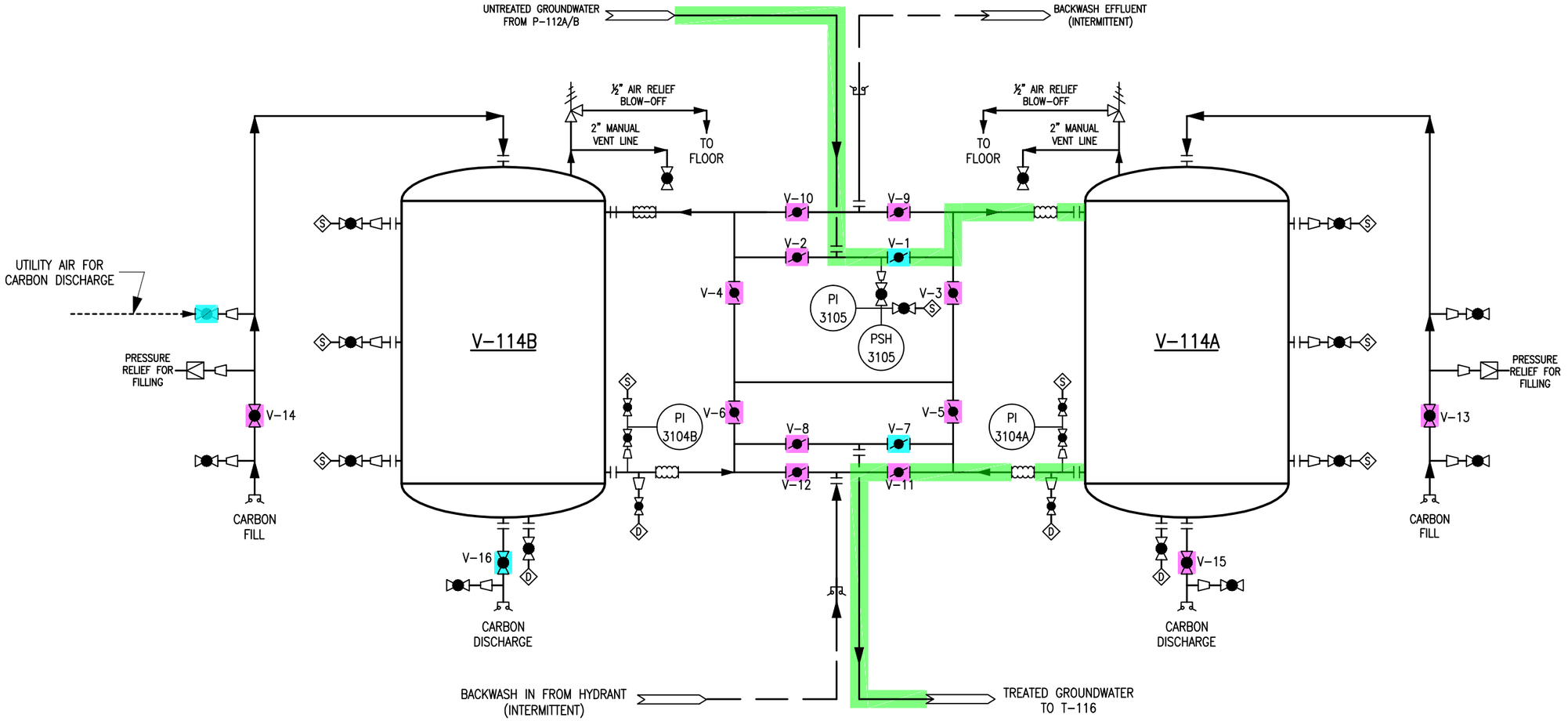

LEGEND

- EXPANSION JOINT
- BALL VALVE
- PRESSURE SWITCH
- REDUCER
- PRESSURE GUAGE
- RUPTURE DISK
- MANUALLY OPERATED BUTTTERFLY VALVE
- QUICK CONNECT CAM LOCK FITTING
- AIR RELIEF VALVE
- S — SAMPLE PORT
- FC — FLUSH CONNECTION
- D — DRAIN CONNECTION

- CLOSED VALVE
- OPEN VALVE
- GROUND WATER FLOW
- BACKWASH FLOW

NO.	REVISION	DRAWN	CK'D	APPD	DATE

DRAWN:	CK'D:	APPD:	DATE:	SCALE:

U.S. ARMY ENGINEER DISTRICT
CORPS OF ENGINEERS
ALBUQUERQUE, NEW MEXICO

CLIENT DWG NO:

CARBON BED VALVE POSITIONS

ONLINE AND UNLOADING CARBON

A ONLINE B UNLOADING CARBON

FOR:

PROJ NO:	DWG NO: FIGURE E-8	REV:

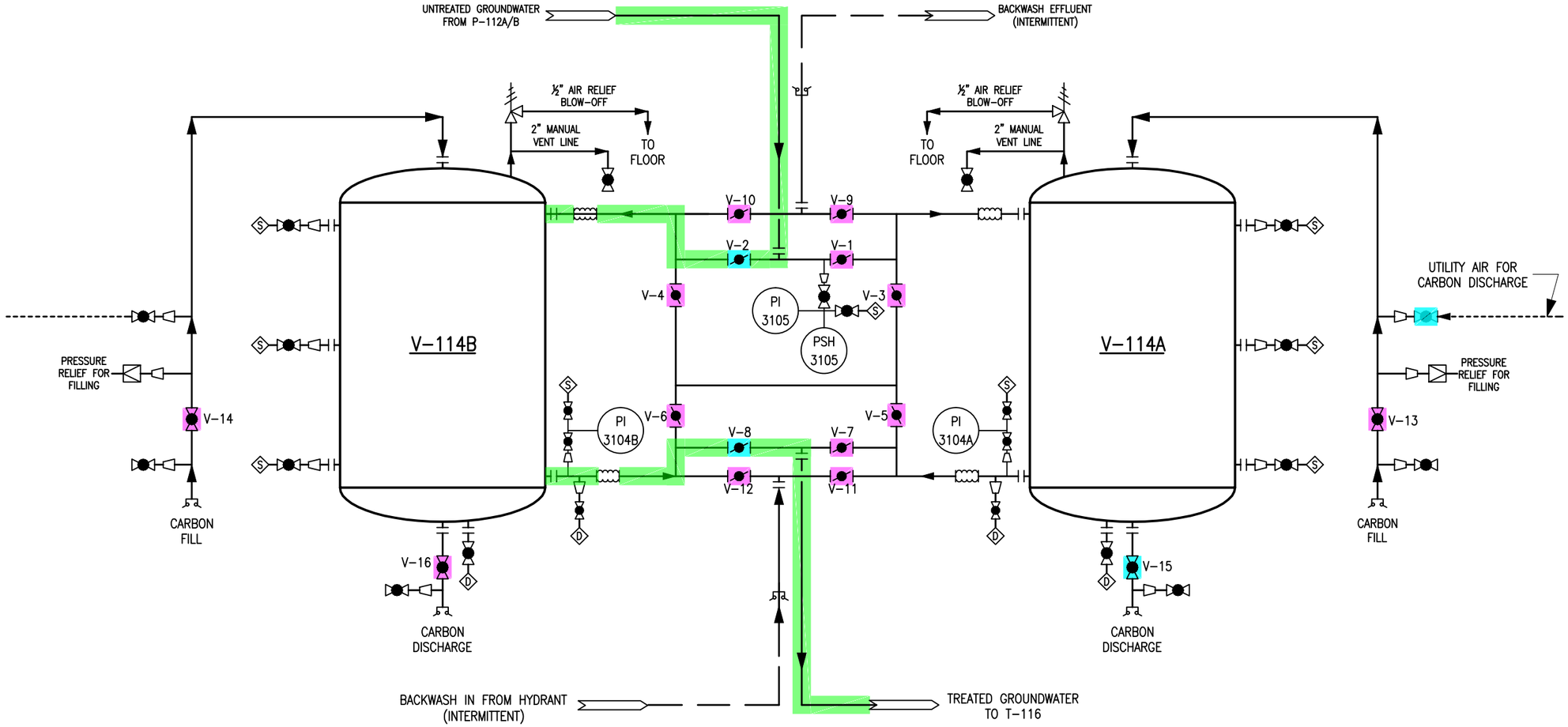

LEGEND

- EXPANSION JOINT
- BALL VALVE
- PRESSURE SWITCH
- REDUCER
- PRESSURE GUAGE
- RUPTURE DISK
- MANUALLY OPERATED BUTTTERFLY VALVE
- QUICK CONNECT CAM LOCK FITTING
- AIR RELIEF VALVE
- S — SAMPLE PORT
- FC — FLUSH CONNECTION
- D — DRAIN CONNECTION

- CLOSED VALVE
- OPEN VALVE
- GROUND WATER FLOW
- BACKWASH FLOW

NO.	REVISION	DRAWN	CK'D	APPD	DATE

DRAWN:	CK'D:	APPD:	DATE:	SCALE:

U.S. ARMY ENGINEER DISTRICT
CORPS OF ENGINEERS
ALBUQUERQUE, NEW MEXICO

CLIENT DWG NO:

CARBON BED VALVE POSITIONS

ONLINE AND UNLOADING CARBON

B ONLINE A UNLOADING CARBON

FOR:

PROJ NO:	DWG NO: FIGURE E-9	REV:

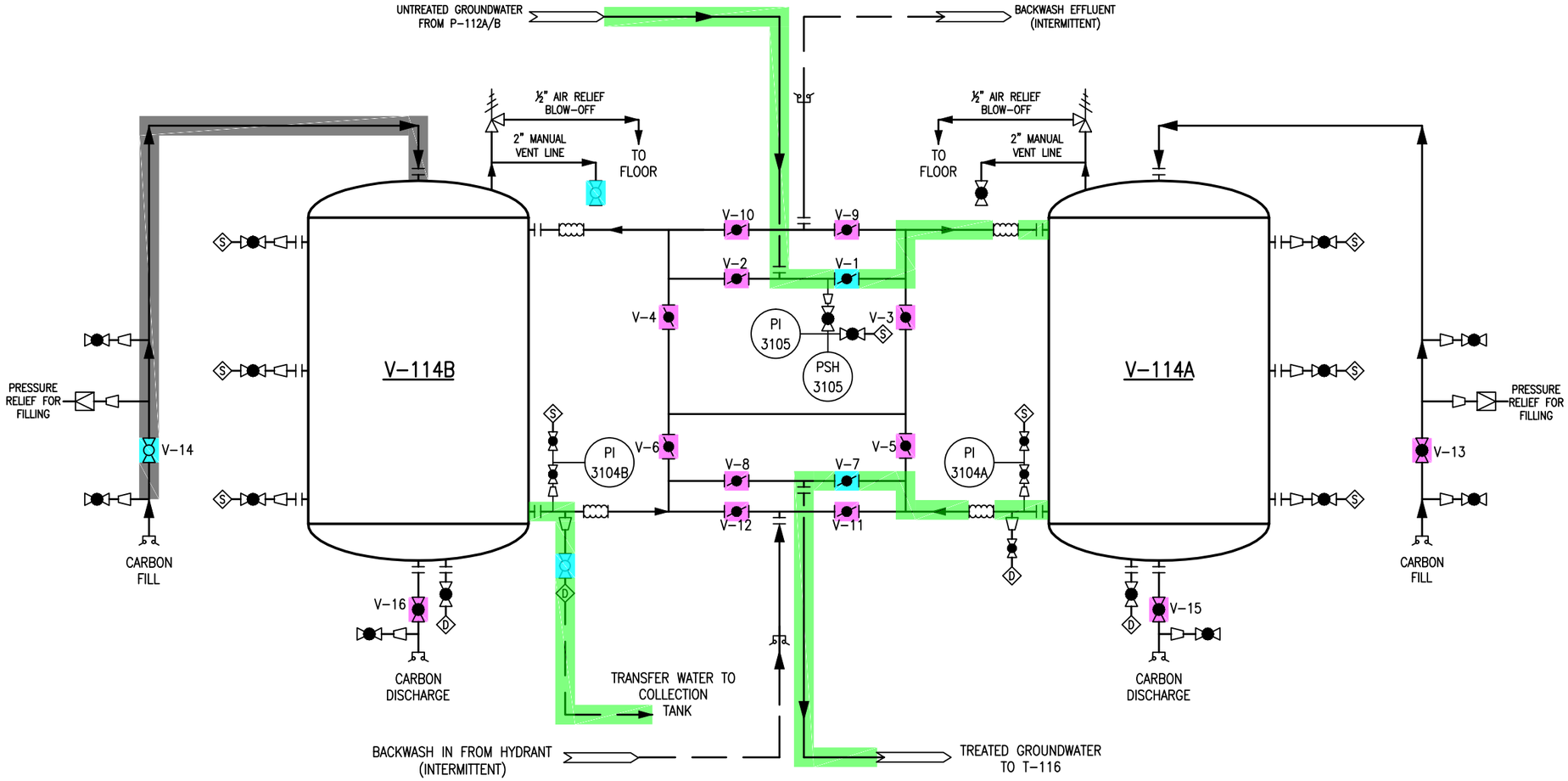

LEGEND

- EXPANSION JOINT
- BALL VALVE
- PRESSURE SWITCH
- REDUCER
- PRESSURE GUAGE
- RUPTURE DISK
- MANUALLY OPERATED BUTTTERFLY VALVE
- QUICK CONNECT CAM LOCK FITTING
- AIR RELIEF VALVE
- S — SAMPLE PORT
- FC — FLUSH CONNECTION
- D — DRAIN CONNECTION

- CLOSED VALVE
- OPEN VALVE
- GROUND WATER FLOW
- CARBON SLURRY FLOW

NO.	REVISION	DRAWN	CK'D	APPD	DATE

DRAWN:	CK'D:	APPD:	DATE:	SCALE:

U.S. ARMY ENGINEER DISTRICT
CORPS OF ENGINEERS
ALBUQUERQUE, NEW MEXICO

CLIENT DWG NO:

CARBON BED VALVE POSITIONS

ONLINE AND LOADING CARBON

A ONLINE B LOADING CARBON

FOR:

PROJ NO:	DWG NO: FIGURE E-10	REV:

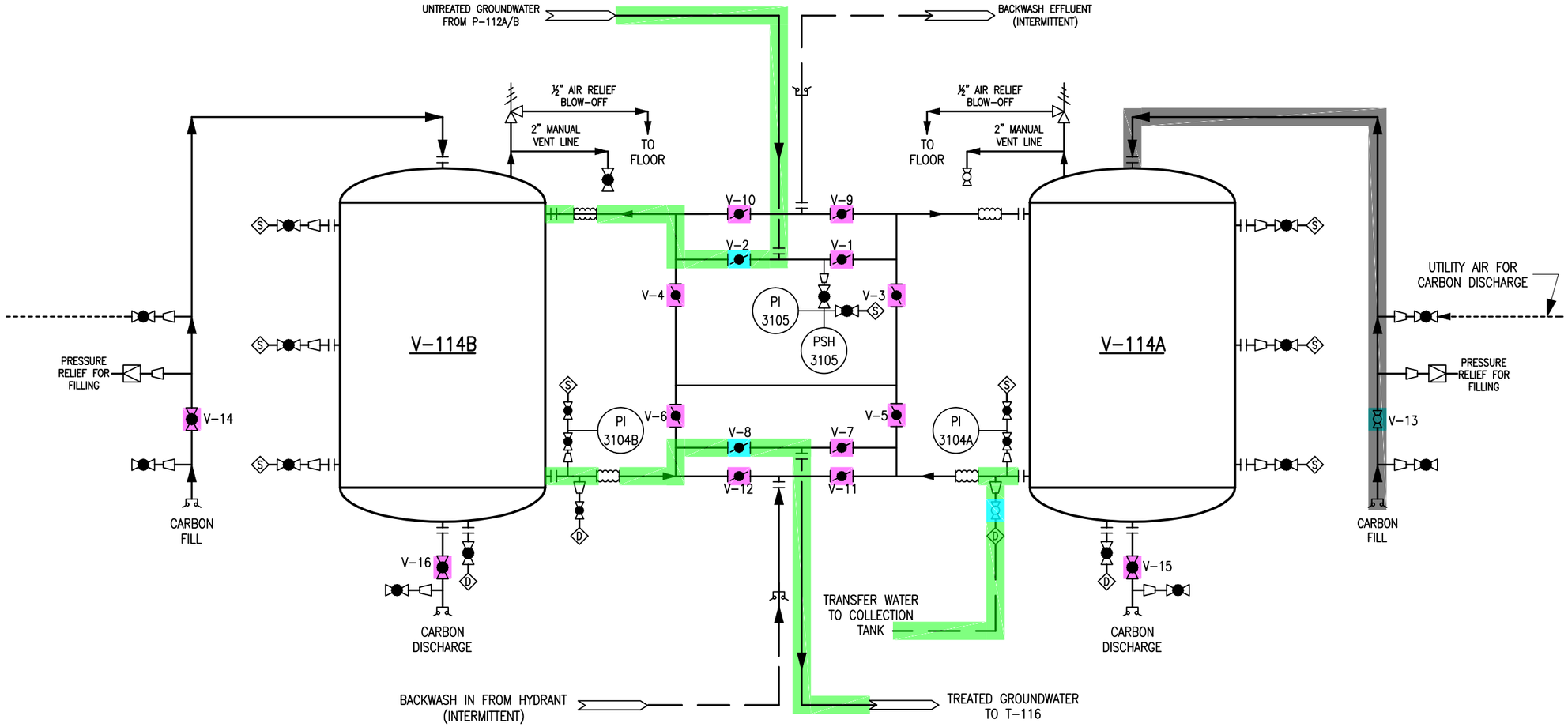

LEGEND

- EXPANSION JOINT
- BALL VALVE
- PRESSURE SWITCH
- REDUCER
- PRESSURE GUAGE
- RUPTURE DISK
- MANUALLY OPERATED BUTTTERFLY VALVE
- QUICK CONNECT CAM LOCK FITTING
- AIR RELIEF VALVE
- S — SAMPLE PORT
- FC — FLUSH CONNECTION
- D — DRAIN CONNECTION

- CLOSED VALVE
- OPEN VALVE
- GROUND WATER FLOW
- CARBON SLURRY FLOW

NO.	REVISION	DRAWN	CK'D	APPD	DATE

DRAWN: | CK'D: | APPD: | DATE: | SCALE:

U.S. ARMY ENGINEER DISTRICT
CORPS OF ENGINEERS
ALBUQUERQUE, NEW MEXICO

CLIENT DWG NO:

CARBON VALVE POSITIONS
ONLINE AND LOADING CARBON
B ONLINE A LOADING CARBON

FOR:

PROJ NO: | DWG NO: FIGURE E-11 | REV:

TRAIN 2 VALVE POSITIONS

SECTION 8

OPERATING INFORMATION

FIGURE 1 VESSEL V-214A TO V-214B SERIES FLOW

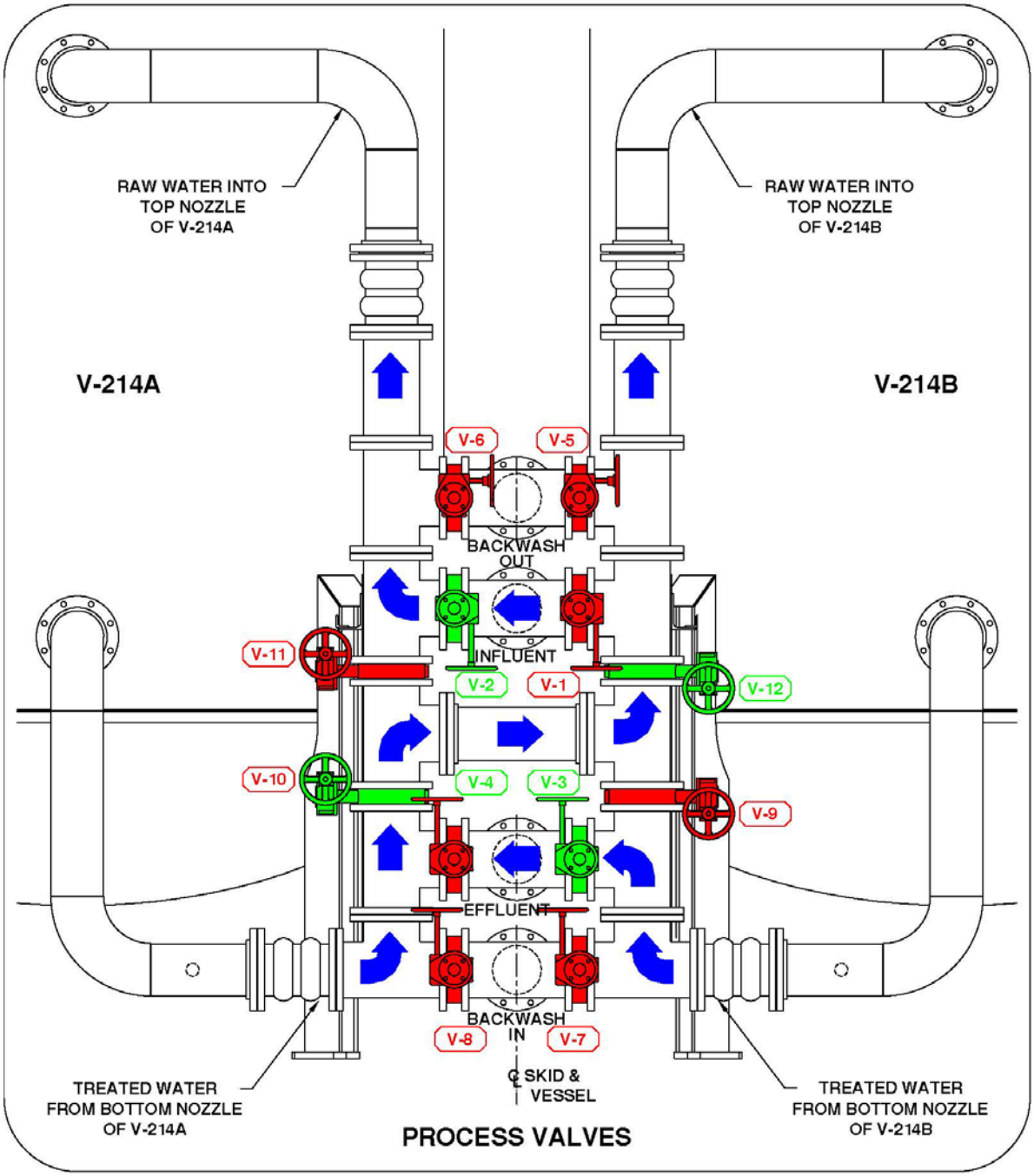

FIGURE 2 VESSEL V-214B ON-LINE VESSEL V-214A CARBON TRANSFER

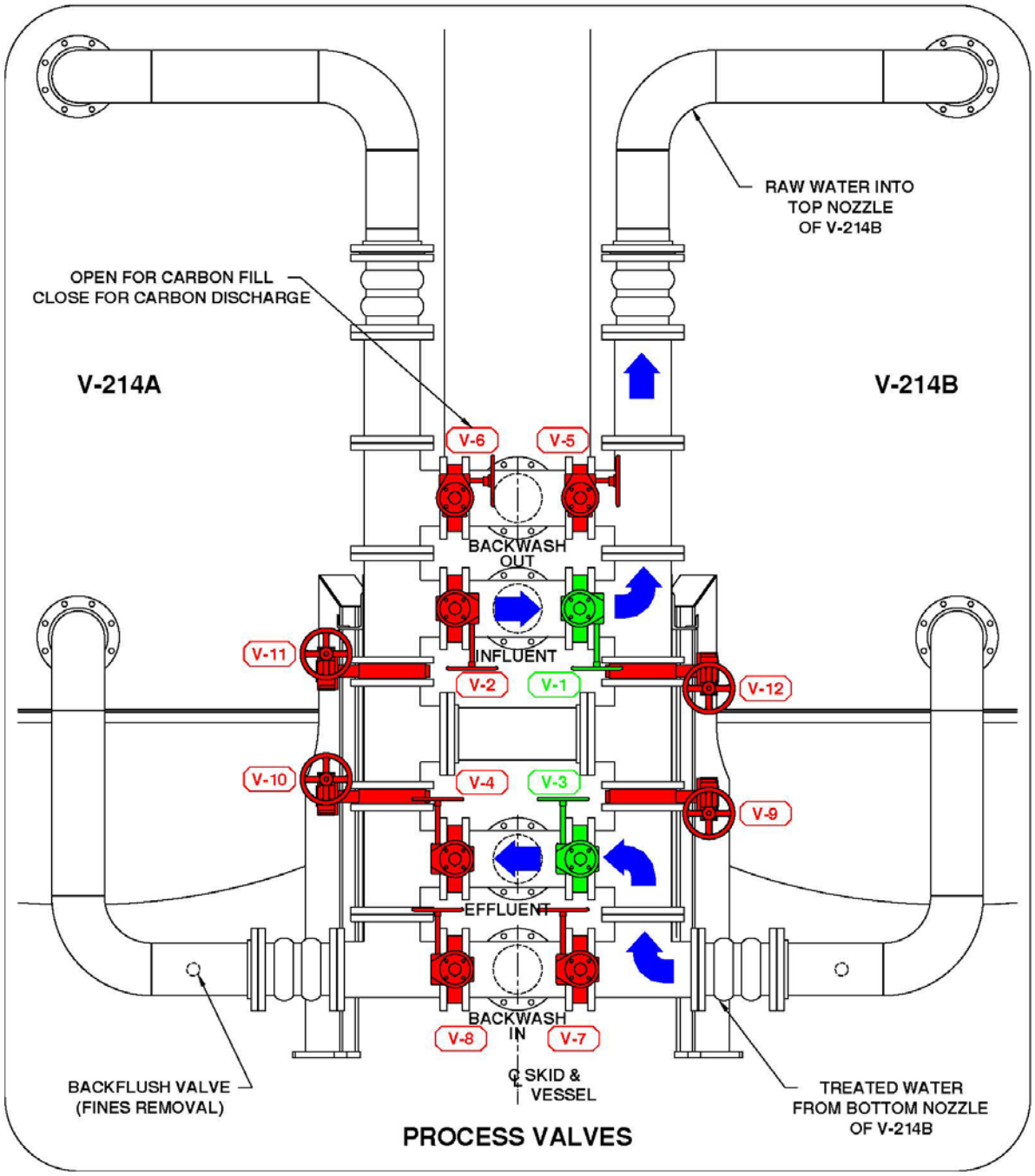

FIGURE 3 SERIES FLOW VESSEL V-214B TO V-214A

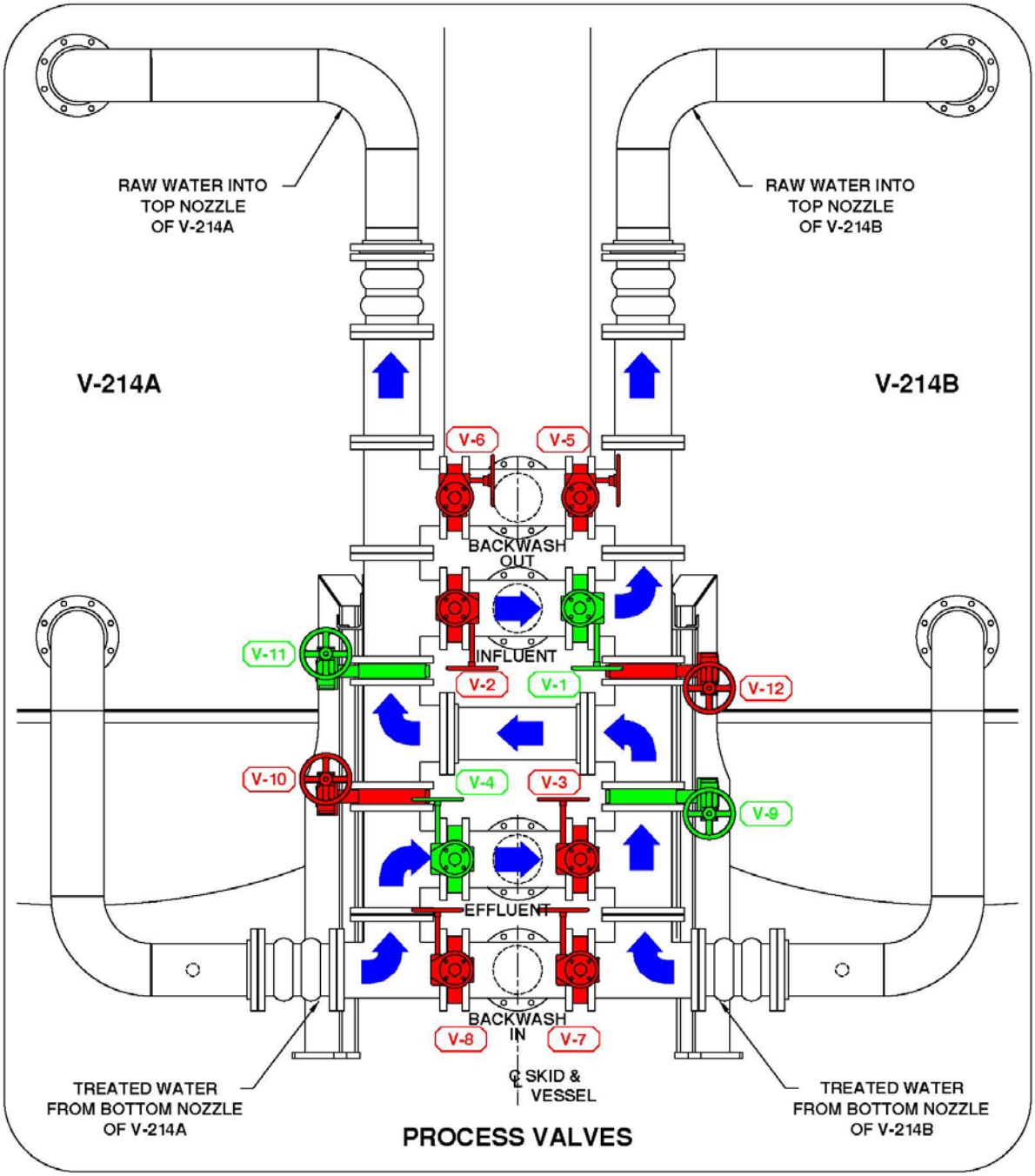

FIGURE 4 VESSEL V-214A ON-LINE VESSEL V-214B CARBON TRANSFER

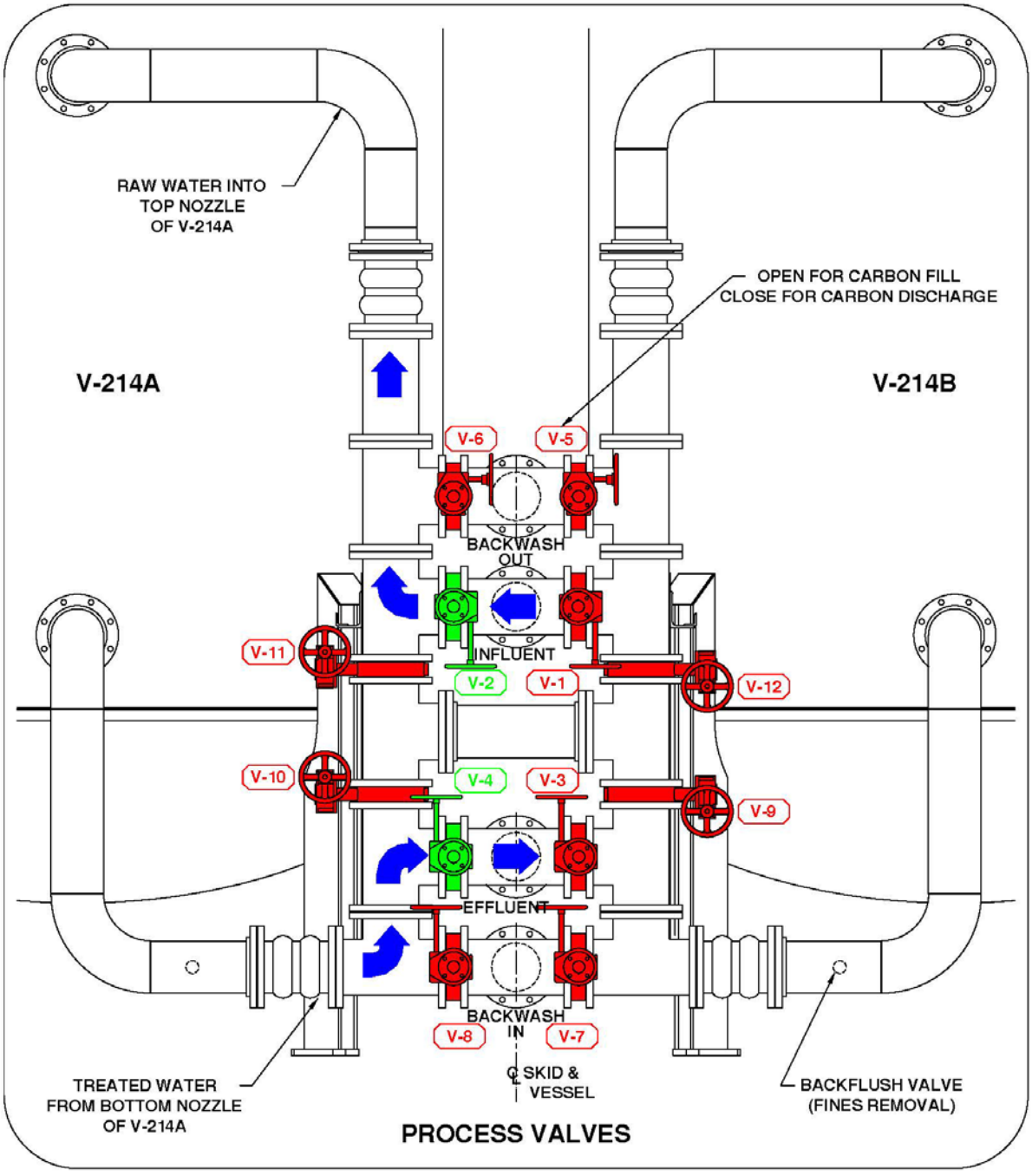

FIGURE 5 PARALLEL FLOW VESSEL V-214A AND V-214B

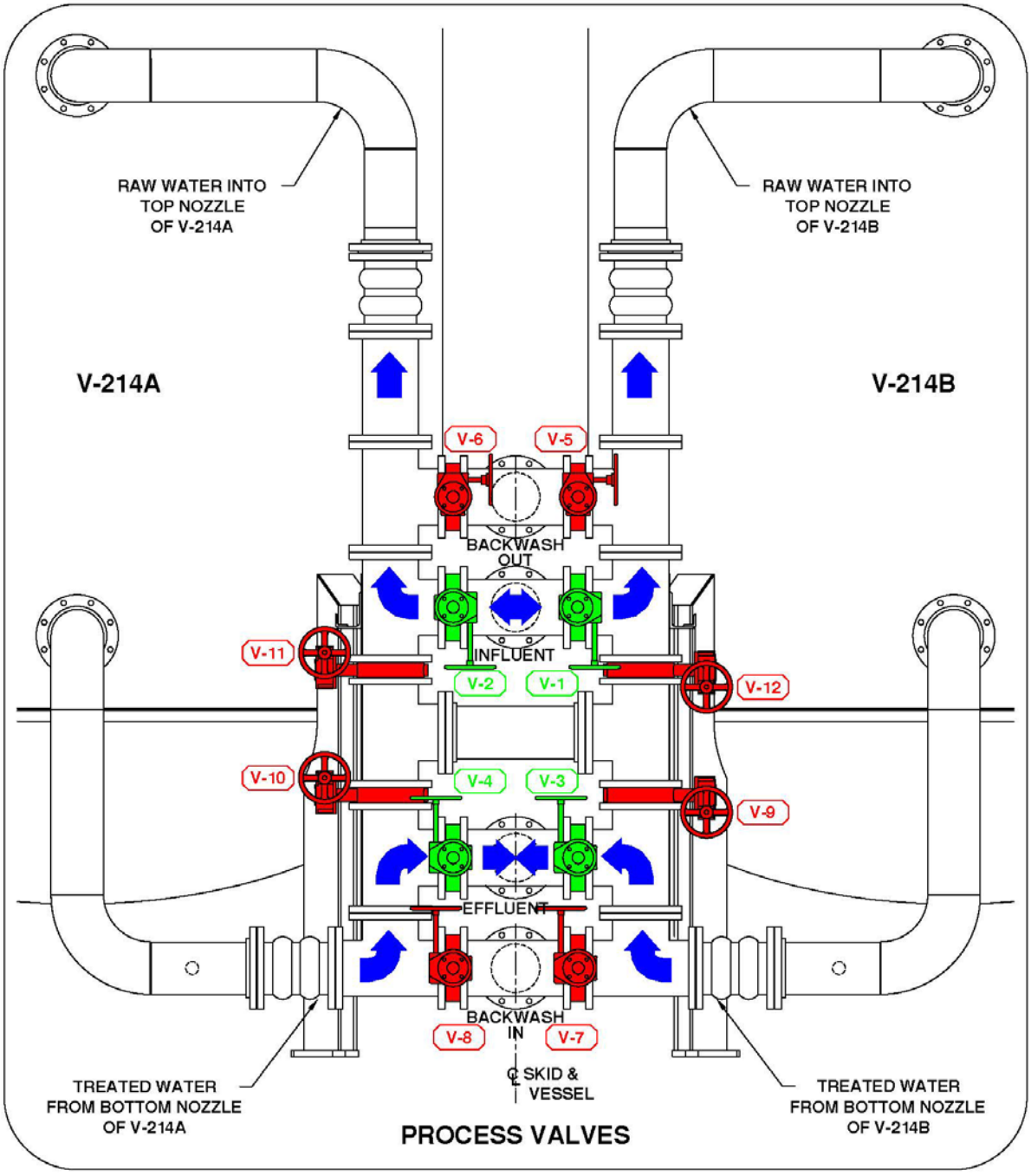

FIGURE 6 VESSEL V-214B ON-LINE VESSEL V-214A BACKWASHING

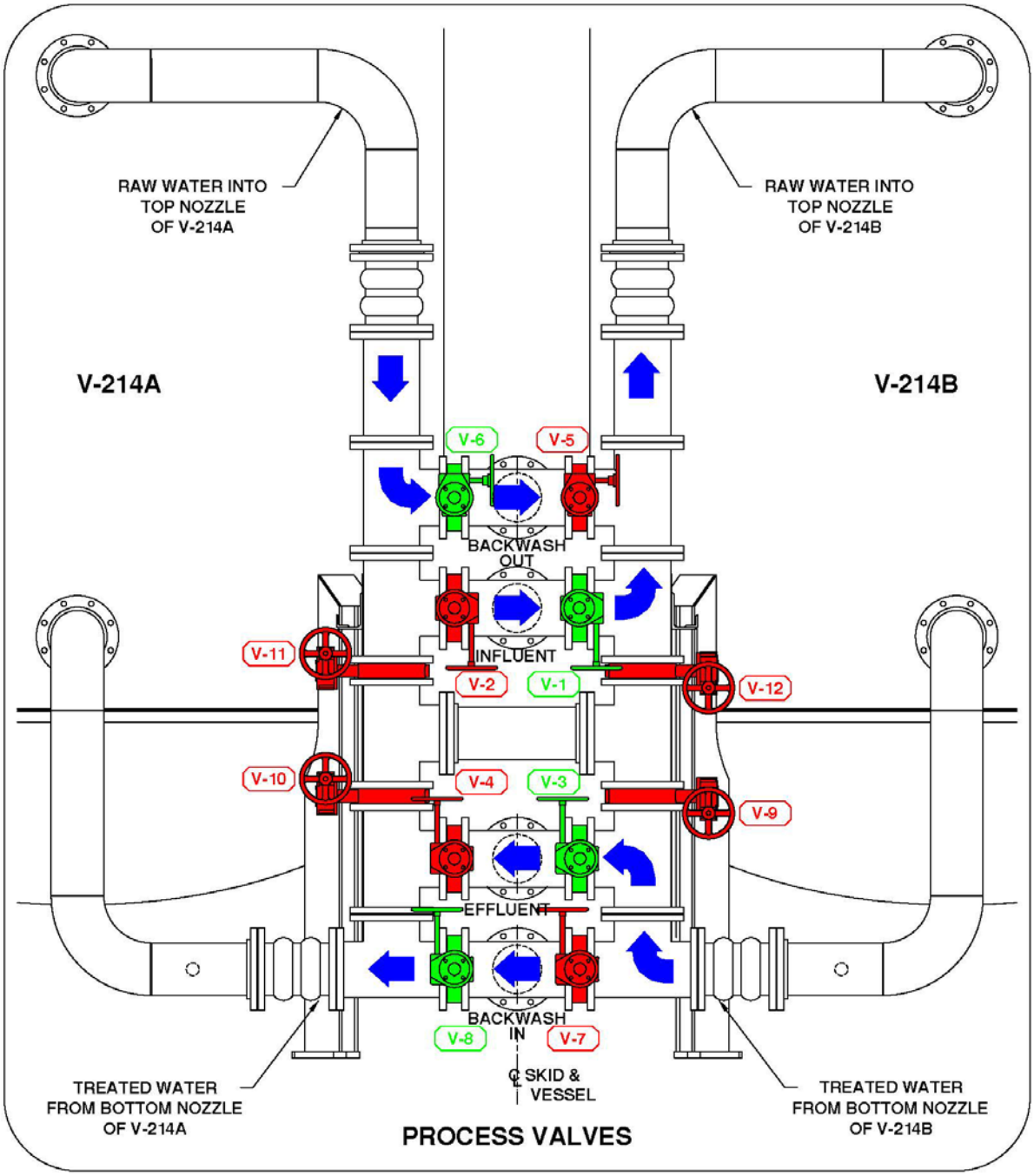

FIGURE 7 VESSEL V-214A ON-LINE VESSEL V-214B BACKWASHING

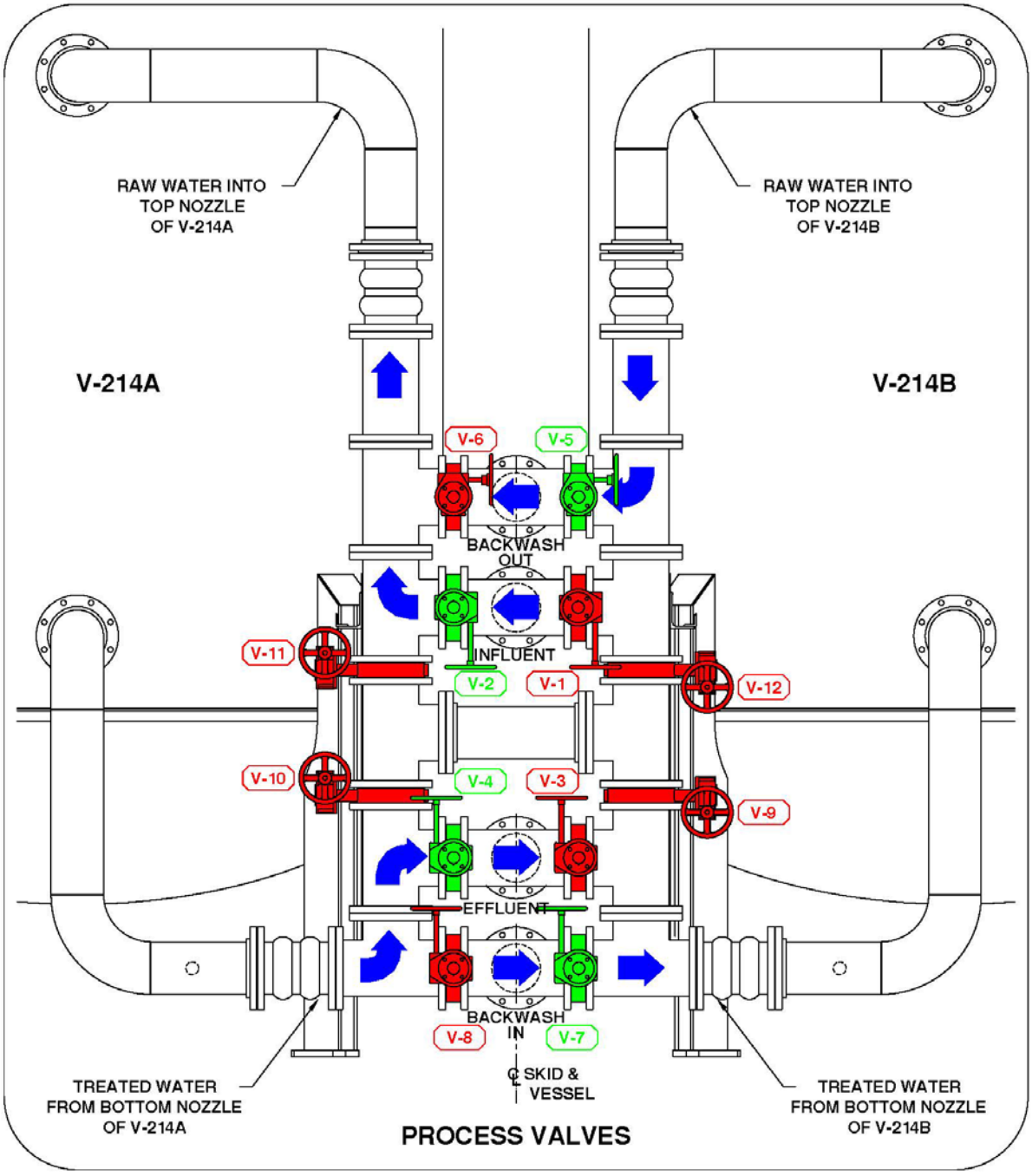

GWTS EQUIPMENT PHOTOGRAPHS

KAFB-106239 Vault

KAFB-106239 Wellhead

KAFB-106239
Electrical Pad

Junction Vault

Junction Vault

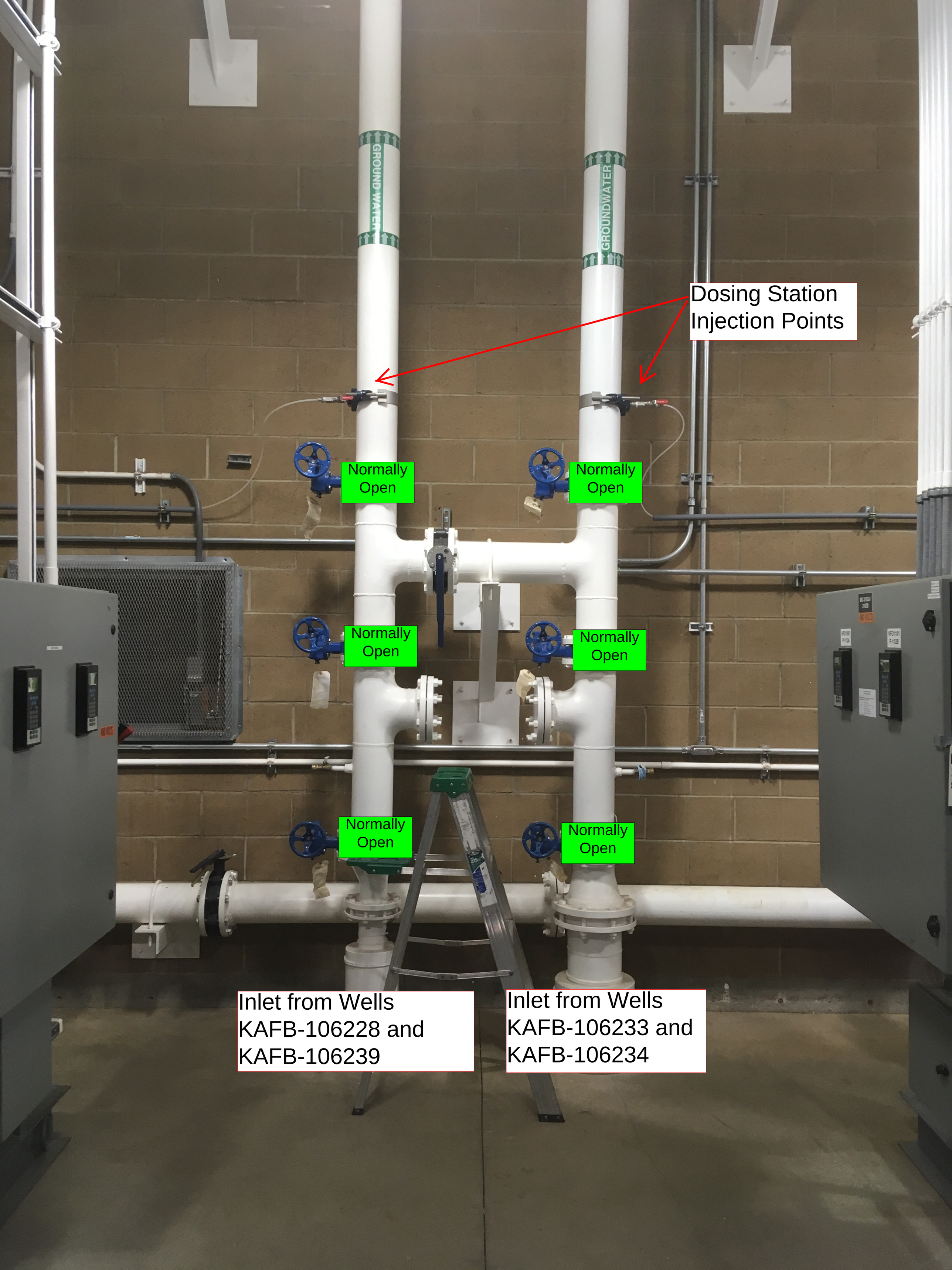
GROUND WATER
GROUNDWATER
Dosing Station Injection Points
Normally Open
Normally Open
Normally Open
Normally Open
Normally Open
Normally Open
Inlet from Wells KAFB-106228 and KAFB-106239
Inlet from Wells KAFB-106233 and KAFB-106234

LSH-3100
LSL-3100
LIT-3101
Magnetic Flow Meter
(FIT-3102)
TK-110
Feed Tank
Vent
Sight Glass
F-112A
Plexiglas
Viewport

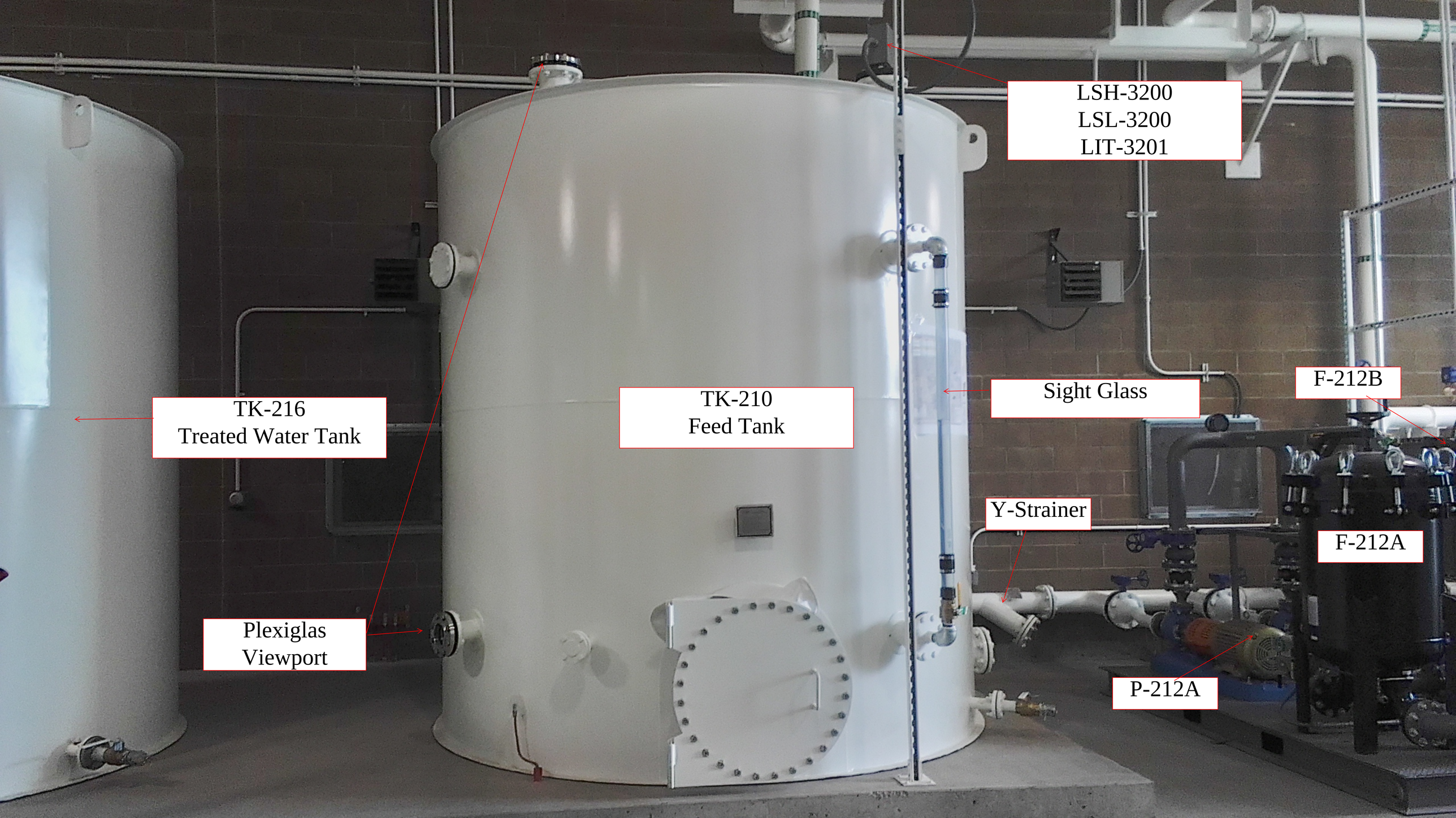
LSH-3200
LSL-3200
LIT-3201
TK-216
Treated Water Tank
TK-210
Feed Tank
Sight Glass
F-212B
Y-Strainer
F-212A
Plexiglas
Viewport
P-212A

Normally Open
F-112B Vent
PI-3103
F-112A Vent
Normally Open
F-112B
F-112A
GROUNDWATER
Normally Open

TK-110
Feed Tank
Flow Meter Transmitter
(FIT-3102)
Sample Port
Vent
PSH-3102
F-112B
F-112A
P-112A
P-112B
PDIT-3103
SIC-3102A /
3102B
480 VOLTS
VFD1061
P-112A
VFD1101
P-112B
DANGER
DRAIN
PENTAIR

PI-3102
Normally Open
F-112A
F-112B
Normally Open

TK-210
Feed Tank
P-212A
Normally
Open
Normally
Open

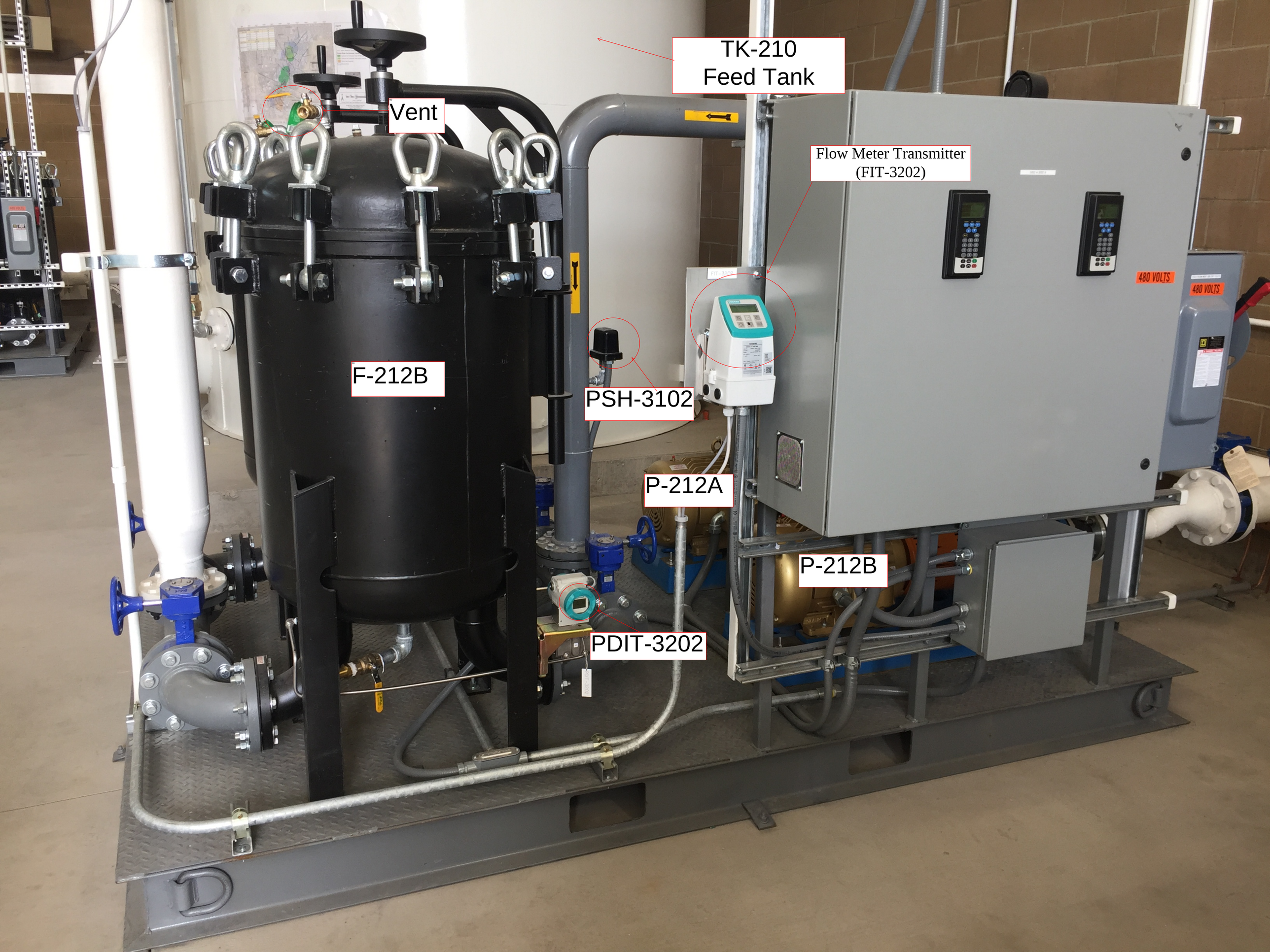
TK-210
Feed Tank
Vent
Flow Meter Transmitter
(FIT-3202)
F-212B
PSH-3102
P-212A
P-212B
PDIT-3202
480 VOLTS
480 VOLTS

PI-3202

Magnetic Flow Meter
(FIT-3202)

F-212B

F-212A

Normally
Open

Normally
Open

Normally
Open

P-212B

P-212A

V-114B
Carbon#1
V-114A
Carbon#2
PI-3105
PI-3104B
PI-3104A
Sample Port
after V-114B
Sample Port
after V-114A

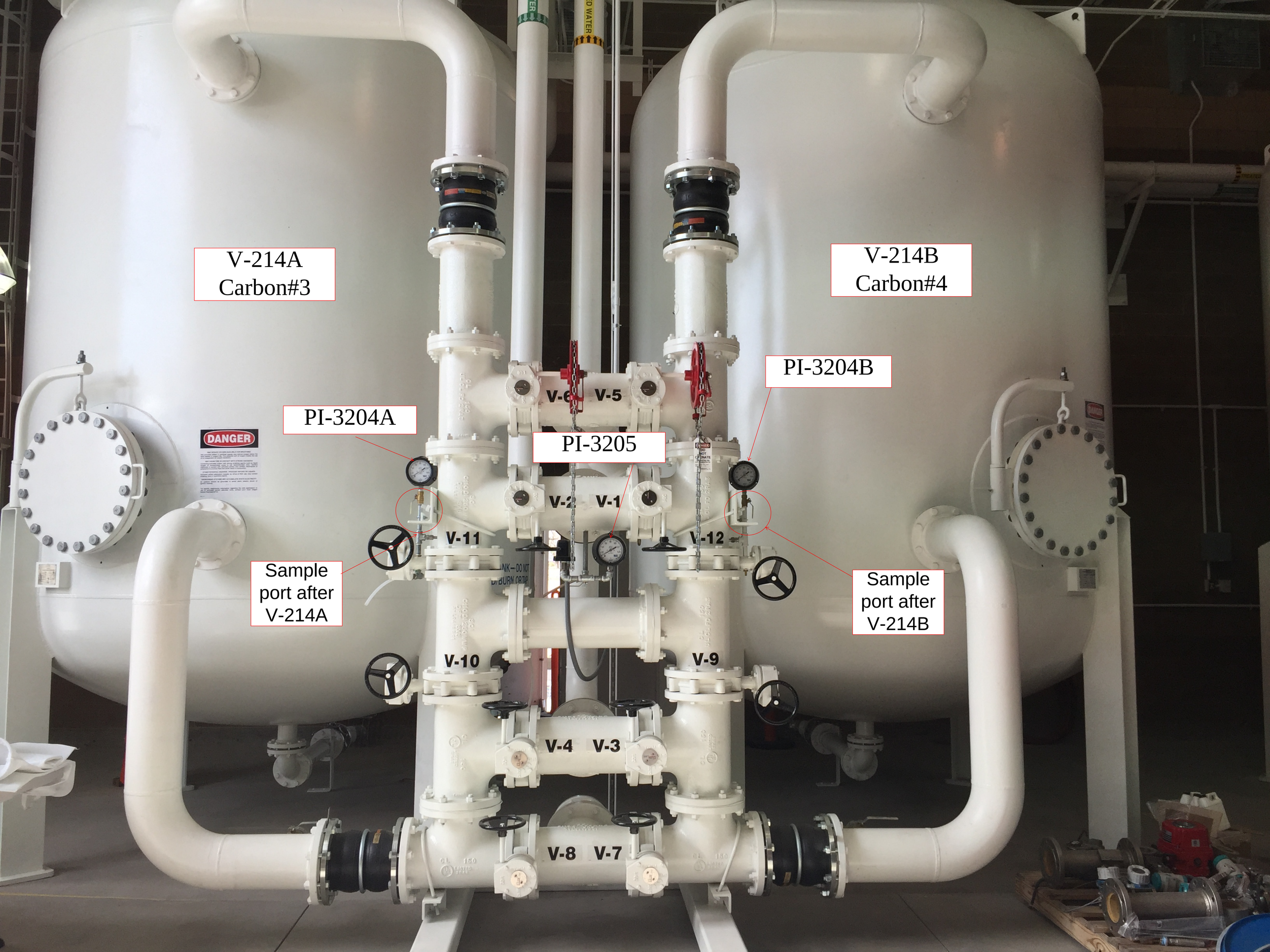
V-214A
Carbon#3
V-214B
Carbon#4
PI-3204A
PI-3205
PI-3204B
Sample
port after
V-214A
Sample
port after
V-214B
V-6
V-5
V-2
V-1
V-11
V-12
V-10
V-9
V-4
V-3
V-8
V-7
DANGER

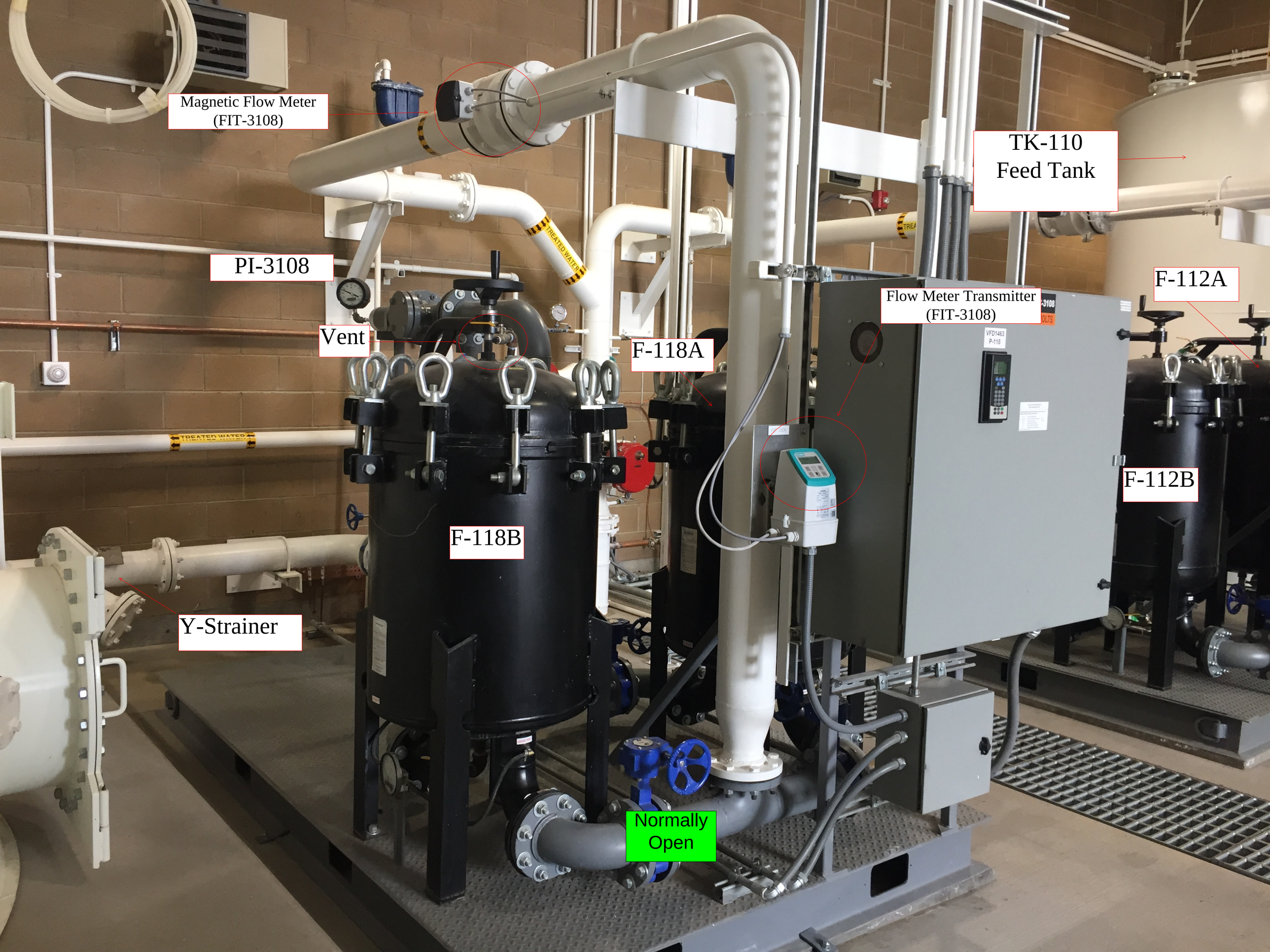
Magnetic Flow Meter
(FIT-3108)
TK-110
Feed Tank
PI-3108
Vent
F-118A
Flow Meter Transmitter
(FIT-3108)
F-112A
F-112B
F-118B
Y-Strainer
Normally
Open

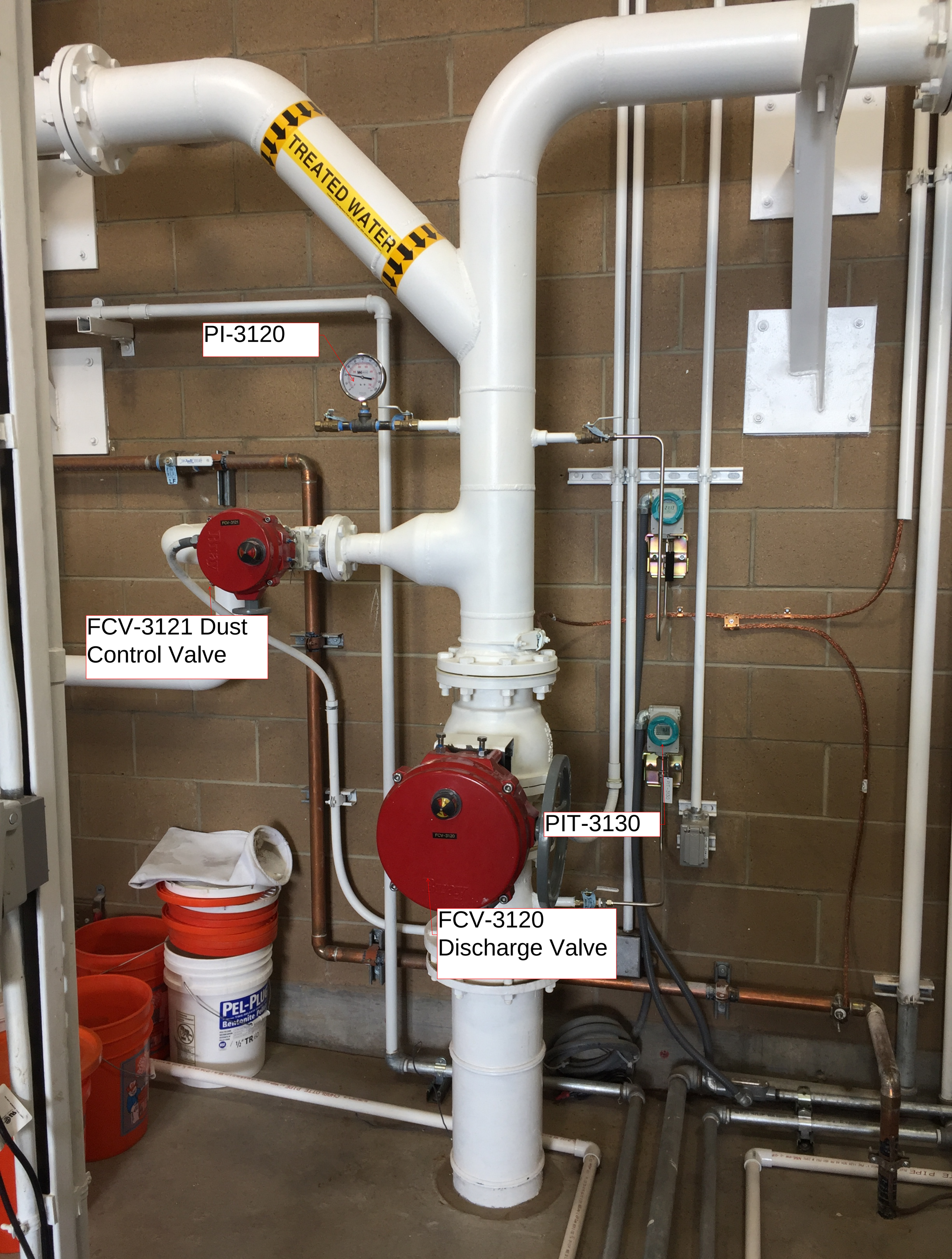
TREATED WATER
PI-3120
FCV-3121 Dust Control Valve
PIT-3130
FCV-3120 Discharge Valve

Sight Glass

TK-116
Treated Water Tank

Y-Strainer

Normally
Open

Magnetic Flow Meter
(FIT-3208)
PI-3208
F-218B Vent
F-218A Vent
Flow Meter Transmitter
(FIT-3208)
Normally
Open
F-218A
F-218B
P-218
PI-3203

TK-116
Treated Water Tank
Vent
F-218A
F-218B
F-118A
F-118B
P-118
Normally Open
PI-3102
Normally Open
P-218

Normally Open

Normally Open

Normally Open

WATER
Normally Open
F-218A
F-218B
PSH-3208
P-218
Normally Open

Tank Vent
TK-116
Treated Water Tank
Sight Glass
F-118B

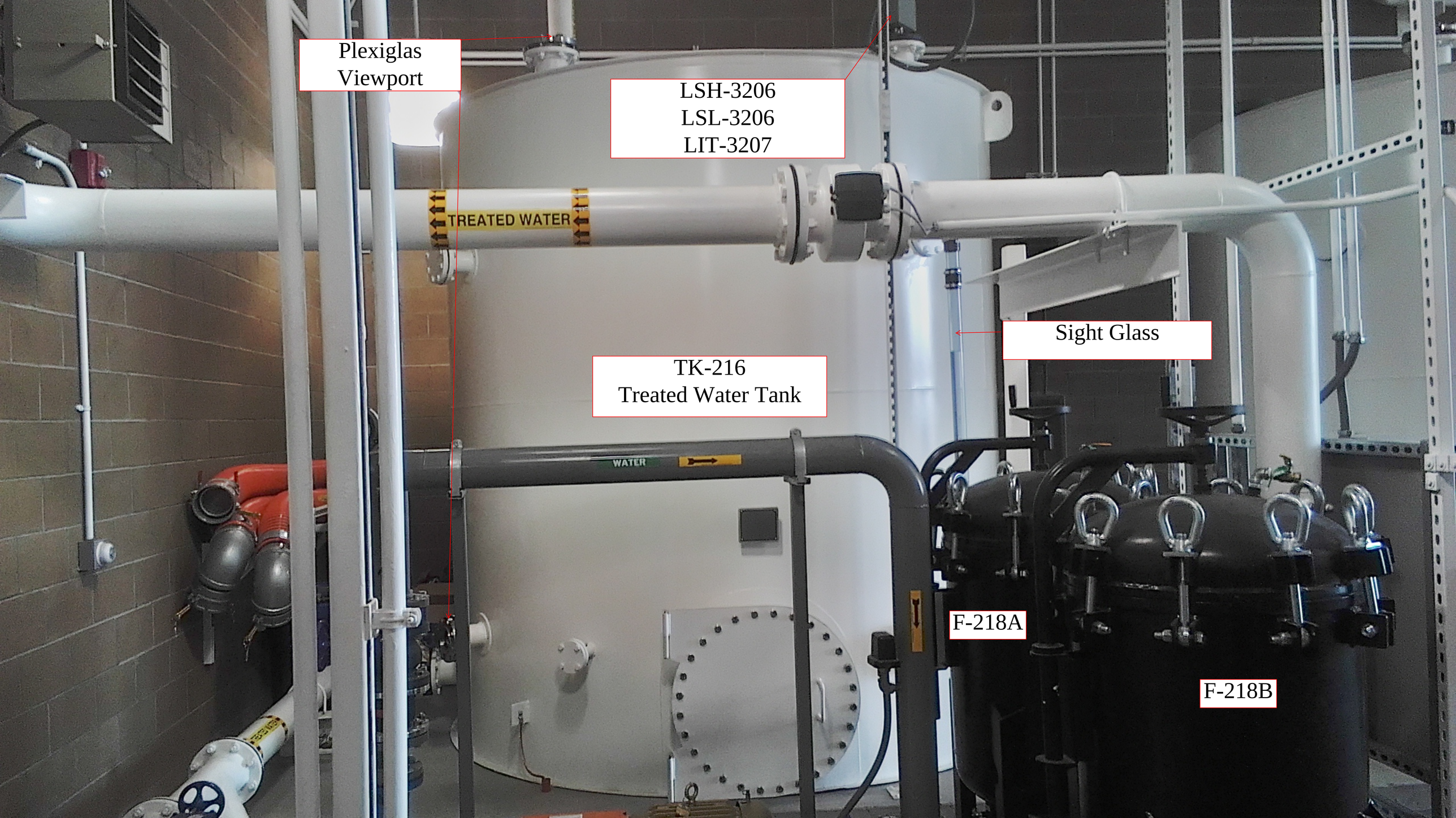
Plexiglas
Viewport
LSH-3206
LSL-3206
LIT-3207
TREATED WATER
Sight Glass
TK-216
Treated Water Tank
WATER
F-218A
F-218B

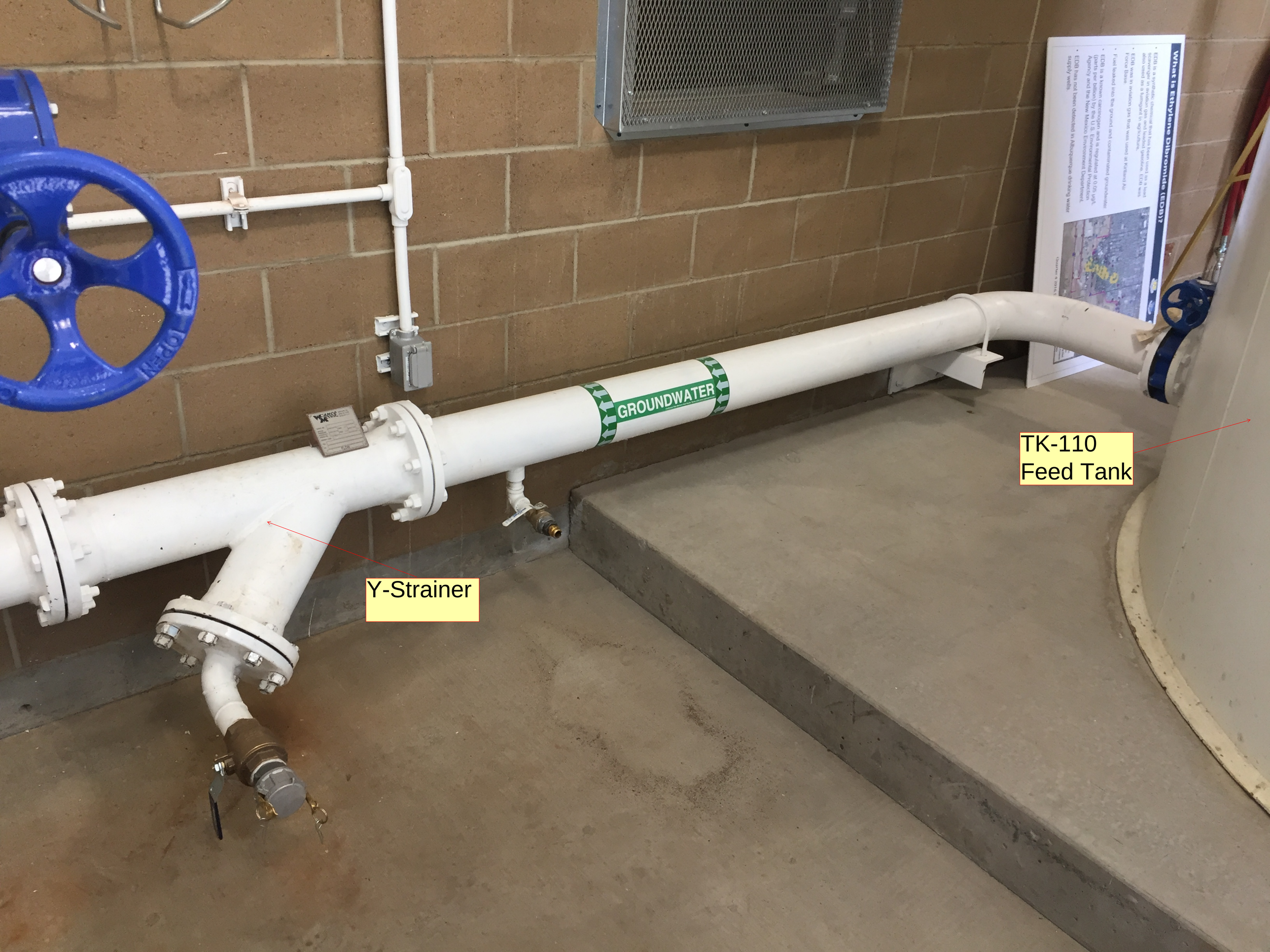
What is Ethylene Dibromide (EDB)?
GROUNDWATER
TK-110
Feed Tank
Y-Strainer

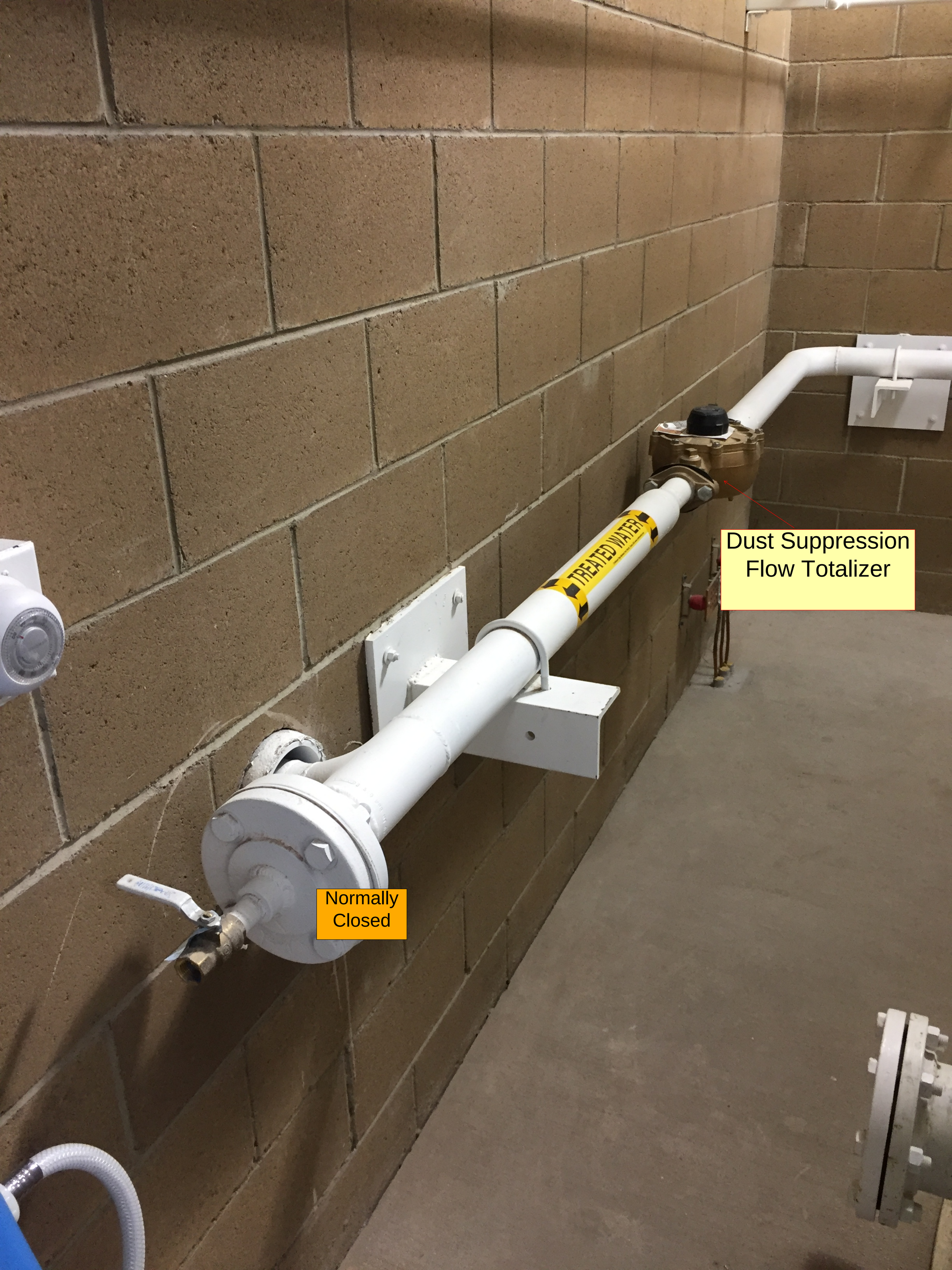
TREATED WATER
Dust Suppression
Flow Totalizer
Normally
Closed

CP-100
HMI Screen

NOTICE

IN CASE OF EMERGENCY, CONTACT

EA Engineering, Science, and Technology, Inc., PBC

KEVIN McKEAGE (316) 765-1486

TYLER CURLEY (719) 688-9558

DEVON JERCINOVIC (505) 401-1181

BASE EMERGENCY NUMBER (505) 853-9111

EMERGENCY
STOP
BUTTON

Post Indicator
Valve to Golf
Course Main Pond
Post Indicator
Valve to KAFB-7

KAFB-7 Wellhead
Pressure Transmitter
KAFB-7 Flow Meter
KAFB-7 PLC Cabinet
Hydraulic Unit Cabinet

GROUNDWATER
GROUND WATER
GROUNDWATER
yardney
WATER FILTRATION SYSTEMS
YARDNEY WATER MANAGEMENT SYSTEMS, INC. | RIVERSIDE, CA | U.S.A.
www.yardneyfilters.com
yardney
WATER FILTRATION SYSTEMS
YARDNEY WATER MANAGEMENT SYSTEMS, INC. | RIVERSIDE, CA | U.S.A.
www.yardneyfilters.com
yardney
SF-101

yardney
WATER FILTRATION SYSTEMS
YARDNEY WATER MANAGEMENT SYSTEMS, INC. | RIVERSIDE, CA | U.S.A.
www.yardneyfilters.com
yardney
WATER FILTRATION SYSTEMS
YARDNEY WATER MANAGEMENT SYSTEMS, INC. | RIVERSIDE, CA | U.S.A.
www.yardneyfilters.com
yardney
SF-201

Cl-101

DDC

GRUNDFOS

3-121/128 OZ PLASTIC BOTTLES

DO NOT STACK OVER 4 HIGH
DO NOT DOUBLE STACK

LIQUID

11

LIMITED QUANTITY

UP

CI-201

LSH-4000

GWTT
Ground/Water Treatment & Technology, LLC
NEW JERSEY • DELAWARE • MASSACHUSETTS
800-770-0901 WWW.GWTTLLC.COM

APPENDIX F

Process-Control Description

PROCESS CONTROL DESCRIPTION

SUMMARY

This appendix includes process control operations, interlocks, and control methodology for programming of the programmable logic controller (PLC) and human machine interface (HMI):

Main System Sections:

1. Process System Overview
2. Extraction Well KAFB-106228 Control Description
3. Main Treatment Plant Control Description
4. KAFB-106233 and KAFB-106234 Control Description
5. KAFB-106239 Control Description
6. Injection Well and Pond Level Control Description
7. Sand Filter, Dosing Pumps, and Clarifier Control
8. Communications System
9. Historical Data and User Interface Screens
10. Internet-Based Monitoring
11. Identification
12. Field Quality Control.

DEFINITIONS

The following definitions are relevant to this document

- ***GWTS***—Groundwater Treatment System
- ***HIM***—Human Interface Module
- ***HMI***—Human Machine Interface
- ***P&ID***—Piping and Instrumentation Diagram
- ***PID***—Proportional, Integral, Derivative
- ***PLC***—Programmable Logic Controller
- ***VFD***—Variable Frequency Drive.

1. Process System Overview

The following is a description of each of the component systematic parts for the system.

1.1 Main Treatment Plant

Contaminated groundwater from the four extraction wells is piped to a treatment facility located on Kirtland Air Force Base property. The GWTS includes two parallel treatment trains, each with the capacity to treat 400 gallons per minute of groundwater. Each treatment train begins with a 6,000-gallon influent equalization tank with level feedback to the PLC. The two carbon adsorbers in each train are 10 feet in diameter and designed for optimal ethylene dibromide removal at flow rates between 120 and 400 gallons per minute. The carbon beds operate in lead-lag configuration. A 6,000-gallon holding tank holds the treated water before discharge. A portion of the discharge water can be diverted to a hose connection to truck sump located immediately outside of the treatment plant. Treated groundwater is then

routed through the effluent pipeline to gravity fed injection well KAFB-7 or the main pond at the on-base Tijeras Arroyo golf course.

2. Extraction Well KAFB-106228 Control Description

The following control description for the Extraction Well and Wellhead Vault is for the KAFB-106228 extraction well and wellhead vault. Control for wells KAFB-106233 and KAFB-106234 is described in Section 1.6.

2.1 Wellhead Vault and Valve Vault Interlocks and Alarms

Level Switch LSH-3000—The leak detection switch is located in the wellhead vault and provides a dry contact back to the PLC. Alarm status is displayed on the HMI screen. A high level in the well vault activates the LSH-3000 interlock and disables the well KAFB-106228 pumps, initiates a remote alarm, and notifies the Operators of a leak in the wellhead vault. Operator intervention is required to restart the extraction well pumps.

Level Switch LSH-3002—This leak detection switch is located in the pipeline secondary containment in the wellhead vault and provides a contact back to the PLC. Alarm status is displayed on the HMI screen. A high level in the containment activates the LSH-3002 interlock and disables the well KAFB-106228 pump, initiates a remote alarm, and notifies the Operators of a leak in the containment. Operator intervention is required to restart the extraction well pumps.

Level Switch LSH-3003—This leak detection switch is located in the pipeline secondary containment, in the Louisiana vault, and provides a dry contact back to the PLC. Alarm status is displayed on the HMI screen. A high level in the containment activates the LSH-3003 interlock and disables the well KAFB-106228 pump, initiates a remote alarm, and notifies the Operators of a leak in the containment. Operator intervention is required to restart the extraction well pumps.

Level Switch LSH-3004—The leak detection switch is located in the Louisiana vault and provides a dry contact back to the PLC. Alarm status is displayed on the HMI screen. A high level in the well vault activates the LSH-3000 interlock and disables the well KAFB-106228 pump, initiates a remote alarm, and notifies the Operators of a leak in the valve vault. Operator intervention is required to restart the extraction well pumps.

Loss of Power UEL-3010—On loss of power to the extraction well pump (P-101), the power supply in the extraction well control panel provides an alarm contact to the PLC and the power failure is displayed on the HMI screen. Power failure initiates a remote alarm to notify the Operators.

2.2 Extraction Well KAFB-106228 Controls and Interlocks

The following control description applies to Extraction Well (KAFB-106228) with Well Pump P-101, Flow Control Valve FCV-3001, and Flow Transmitter FIT-3001.

2.2.1 Remote Controls and Indications

The Treatment Plant Main Control Panel (CP-100) HMI display is programmed to show all extraction well system indications and controls including pump running status, flow measurement, flow total, wellhead pressure, downhole water elevation, control interlocks, and alarms. Well Pump HMI controls

include OFF/ON/SEQ selection. For normal operation, the local HAND/OFF/AUTO switch HS-3001 in the wellhead control panel indicates to the HMI that Well Pump P-101 is in AUTO mode. The well pump will not start through the HMI unless the local switch is in AUTO. After power loss and power-up, the Well Pump P-101 is automatically restarted if it is in AUTO mode.

Remote Modes Available:

- Remote SEQ Mode
- Remote ON Mode.

Remote SEQ Mode

Pump starting and stopping are controlled by the PLC at the Treatment Plant Control Panel (CP-100). The Operator uses ZIC-3001 to adjust the position signal to the control valve FCV-3001 at the HMI to obtain the target groundwater extraction rate as measured by FIT-3001.

There is a low level alarm set point (>10 feet above pump intake) on the level transducer in the well that shuts down P-101. The pump alarm is reset when the level in the well recovers to a preset elevation and when the reset button is pushed on the HMI. Also to protect the pump from running dry, a low current switch (ISL-3001) turns the pump off to prevent damage to motor. The Operator may restart the pump after low current shutdown. In the event of either failure, Operator intervention is required to restart the extraction well pumps.

Remote ON Mode

The ON button allows the Operator to run Well Pump P-101 through the PLC so long as the ON mode is selected on the screen.

2.2.2 Local Controls and Indications

Controls

Controls include HAND/OFF/AUTO HS-3001 selection switch on the wellhead motor starter panel MS-101.

Indications

Indicator lights include a green running light and a red stop light HL-3001 on the motor starter panel MS-101.

Flow indicator FIT-3001 displays instantaneous groundwater flow rate for Well KAFB-106228. FQI-3001 displays total integrated groundwater flow.

PI-3001 shows pressure in the groundwater pipeline at the top of the wellhead.

TI-3001 shows the temperature of the groundwater at the top of the wellhead.

2.2.3 Interlocks

Well Pump P-101 is interlocked to shut down on Groundwater Treatment Feed Tank high-high level alarm at the Main Treatment Plant. The pump will be disabled and placed in OFF mode and require user intervention to restart.

Well Pump P-101 is interlocked to shut down on any containment area leak detection alarm. The pump will be disabled and placed in a faulted state and require user intervention to restart.

All well pumps are interlocked to shut down on any pipeline containment leak detection alarm. The pump will be disabled and placed in a faulted state and require user intervention to restart.

Well Pump P-101 is interlocked to shut down on a low well water level alarm generated by the PLC via the signal from LIT-3001. The pump will be disabled and placed in a faulted state and require user intervention to restart.

Well Pump P-101 is interlocked to shut down on treatment plant shutdown.

When Well Pump P-101 Low Current from ISL-3001 is received, the pump will be disabled and placed in a faulted state and require user intervention to restart.

Overload protection OL-3001 will shut the pump down. The pump will be disabled and placed in a faulted state and require user intervention to restart.

3. Main Treatment Plant Control Description

The following is a description of the control system in the Treatment Plant.

3.1 Treatment Plant General Interlocks and Alarms

Leak Detection Interlock LSH-3121—Level Switch LSH-3121 is located in the groundwater system building containment sump and provides dry contacts back to the PLC. Normal and alarm status is displayed on the HMI screen. A leak detection alarm will disable all three extraction well pumps (P-101, P-102, and P-103), the influent pumps (P-112 A/B, P-212 A/B), and the effluent pumps (P-118, P-218). A leak will also initiate a remote alarm and notify the Operators of a leak at the Treatment Plant. Operator intervention shall be required to restart the pumps.

Leak Detection Interlock LSH-3122—Level Switch LSH-3122 is located in the truck bay sump and provides contacts back to the PLC. Normal and alarm status is displayed on the HMI screen. An activation alarm will disable the Treated Water Discharge Pump P-118. An activated switch will also initiate a remote alarm and notify the Operators of a leak at the Treatment Plant. Operator intervention shall be required to restart the pump.

Intrusion Detection Switches ZS-3123, ZS-3124, ZS-3125A/B, and ZS-3126A/B—Located on each of the entry doors and provides a common signal back to the PLC and is displayed on the HMI screen as an alarm when active. Opening and closing of the door are logged events. Opening a door will also initiate a remote alarm to notify the Operators.

Low Temperature Switch TSL-3127—TSL-3127 provides a low temperature alarm contact back to the PLC and is displayed on the HMI screen. The switch will be set to alarm at 35 degrees Fahrenheit. Low temperature will initiate a remote alarm, TAL-3127, to notify the Operators.

Smoke Detector Alarm UA-3128—Provides a contact back to the PLC and is displayed on the HMI screen. A smoke alarm will initiate a remote alarm, UA-3128, to notify the Operators and the Kirtland Air Force Base fire department.

Loss of Power Alarm UA-3129—On loss of power to the Treatment Plant, the uninterruptible power supply in the control panel provides an alarm contact to the PLC and displays the power failure on the HMI screen. Power failure triggers the system to turn off including all upstream and downstream processes (i.e., extraction well pumping). Power failure will initiate a remote alarm, UA-3129, to notify the Operators.

An Ethernet connection is provided at the main treatment plant control panel CP-100 to allow the Operator to attach a laptop control station for programming purposes. In addition, all information and control functions are available to the Operator via the computer touch screen mounted on the front of CP-100.

3.2 Groundwater Treatment Feed Pumps and Their Associated Equipment and Instrumentation

3.2.1 Remote Controls and Indications

The Treatment Plant main control panel (CP-100) HMI display is programmed to show Groundwater Treatment Feed Pump indications and controls including running status, running speed, flow measurement, flow total, and alarms that affect the pump.

HMI Controls for the Groundwater Treatment Feed Pumps (P-112 A/B, P-212 A/B) include Remote OFF, ON, and SEQ selections. The Groundwater Treatment Feed Pumps will not start through the HMI unless the local HIM for the VFD is in AUTO.

SEQ Mode (Automatic Flow Control)

Pump starting, speed, and stopping are controlled by the PLC at the Treatment Plant control panel (CP-100). The system is set to vary the flow rate by a user settable flow rate. The flow will be varied by modulating the speed of the pump(s) by responding to the programmed PID. Both the A and B pumps have sequence numbers that directly affect how the pumps respond to automated control by the HMI. When the pumps are in series, the pump in position 1 will operate solely and the pump in position 2 will activate only in the event of a failure of the pump in position 1 (applicable when flow rates are less than 200 gallons per minute). When pumps are operated in parallel, both pumps are set as the same position (applicable when flow rates exceed 200 gallons per minute). When the level in the influent tank reaches 6 feet the train influent pump(s), activate and proceed to pump the tank level to 4 feet, which causes the pump(s) to cycle off.

Remote ON Mode

The ON button allows the Operator to run Groundwater Treatment Feed Pump P-112A/B through the PLC so long as the ON button is selected.

Indications

When the Groundwater Treatment Feed Tank level as measured by LIT-3101 drops to 24 inches, a low level alarm will be activated and whichever train's influent pump(s) operating will shut down. Pump(s) will be disabled and require user intervention to restart.

When the Treated Water Storage Tank level as measured by LIT-3107 reaches 120 inches, a high level alarm will be activated and whichever train's influent pump(s) is operating will shut down. Pump(s) will be disabled and require user intervention to restart.

3.2.2 Local Controls and Indications

Controls

The HIM of the VFD allows manual drive operation including a manual drive and fixed speed operation.

Indications

VFD Controller indications are all contained within the HIM of the VFD Controller.

The influent skid flow indicator will display the instantaneous, combined flow rate for both Groundwater Treatment Feed Pumps on a skid.

3.2.3 Interlocks

Each interlock is train specific; train tanks, pumps, and vessels are independent in their effect on their associated train (Train 1 failures do not affect Train 2 operation, etc.)

Groundwater Treatment Feed Pumps are interlocked to shut down on treatment plant shutdown or low level in the influent tank. The pump(s) will be disabled and require user intervention to restart.

Groundwater Treatment Feed Pumps are interlocked to shut down on high level in the effluent feed tank. Pump(s) will be disabled and require user intervention to restart.

Groundwater Treatment Feed Pumps are interlocked to shut down on high pump outlet pressure on the influent skid pressure switch set at 45 pounds per square inch gauge. The pump(s) will be disabled and require user intervention to restart.

Groundwater Treatment Feed Pumps are interlocked to shut down on high carbon vessel pressure set at 45 pounds per square inch gauge. Pump(s) will be disabled and require user intervention to restart.

Groundwater Treatment Feed Pumps are interlocked to shut down on a containment area leak detection alarm. Pump(s) will be disabled and require user intervention to restart.

VFD Motor Protective Functions will shut down the associated pump. The Operator will be required to reset and restart Groundwater Treatment Feed Pump manually at the VFD Controller after a VFD Controller protection shutdown.

3.3 Treated Water Discharge Pump

The following is a description of the control of Pump P-118, P-218 and their associated equipment and instrumentation. Control of these pump is similar to the control of the influent pumps.

3.3.1 Remote Controls and Indications

The Treatment Plant main control panel (CP-100) HMI display will be programmed to show Treated Water Discharge Pump indications and controls including running status, running speed, flow measurement, flow total, and alarms that affect the pump. The pump will not start through the HMI unless the local HIM for the VFD is in AUTO.

AUT Mode (Groundwater Flow Control)

Pump starting, speed, and stopping are controlled by the PLC at the Treatment Plant control panel (CP-100). The system is set to vary the flow rate by a user settable flow rate. The flow will be varied by modulating the speed of the pump by responding to the programmed PID. When the level in the effluent tank reaches 6 feet, the effluent pump activates and proceeds to pump the tank level to 4 feet, which causes the pump to cycle off.

Remote ON Mode

The ON button allows the Operator to run the effluent pump through the PLC so long as the ON button is selected.

3.3.2 Local Controls and Indications

Controls

The HIM of the VFD allows manual drive operation including a manual drive and fixed speed operation.

Indications

VFD Controller indications are all contained within the HIM of the VFD Controller.

Flow indicator FIT-3108 will display the instantaneous flow rate for the Treated Water Discharge Pump.

3.3.3 Interlocks

Treated Water Discharge Pumps are interlocked to shut down on treatment plant shutdown or low-low level in their respective effluent tank. The pumps will be disabled and require user intervention to restart.

Treated Water Discharge Pumps are interlocked to shut down on high level in the golf course pond LAH-9020. The pumps will be disabled and placed in Remote MANUAL Mode and require user intervention to restart.

Treated Water Discharge Pumps are interlocked to shut down on high pump outlet pressure set at 40 pounds per square inch gauge. The pumps will be disabled and require user intervention to restart.

Treated Water Discharge Pumps are interlocked to shut down on high pressure at the injection wellhead PAH-9013 (when in Well 7 Mode). The pumps will be disabled and require user intervention to restart.

Treated Water Discharge Pumps are interlocked to shut down on high level in the injection well LAH-9010 (when in Well 7 Mode). The pumps will be disabled and placed in Remote MANUAL Mode and require user intervention to restart.

Treated Water Discharge Pumps are interlocked to shut down on a containment area leak detection alarms. The pumps will be disabled and require user intervention to restart.

VFD Motor Protective Functions will shut down the Treated Water Discharge Pump affected. The Operator will be required to reset and restart the pump manually at the VFD Controller after a VFD Controller protection shutdown.

3.4 Air Compressor (C-120)

C-120 is a manually operated compressor that is used during carbon changeouts. The air compressor is controlled by hand switch HS-3120 for on/off operation during carbon transfers.

3.5 Sump Pump (P-111)

Pump P-111 is a self-contained float-operated sump pump that is used to pump water from the treatment building containment into the Groundwater Treatment Feed Tank or into drums for disposal. The sump pump is controlled by a float switch attached to the pump. When the level of water in the building containment is high enough to trip the float switch, the pump turns on and moves water to the desired location. The pump can also be operated manually to pump down the sump for maintenance or to remove any standing water from the sump.

3.6 Dust Control (FCV-3120)

FCV-3120 and FCV-3121 are two motor-operated flow control valves that are used to divert water to a hose-bib on the exterior of the building. This function is needed to wet the new carbon prior to carbon changeout.

3.6.1 Remote Controls and Indications

The valves are operable from a keypad outside of the building, HS-3120. The Operator will require a code to initiate flow diversion from the effluent location to the hose-bib. Once the code is properly entered, the PLC will initiate the commands needed to fully open FCV-3121 and close FCV-3120. This will divert the treated water to the hose-bib at the combined rates of the effluent pumps.

Once initiated, the system starts a timer for 30 minutes of operation. After 30 minutes of operation, FCV-3122 will close and FCV-3120 will open and direct flow back to the discharge location. At any point during the process, the Operator may restart the timer at the keypad. Also, at any point during the process, the Operator may end the flow to the hose-bib at the keypad.

3.6.2 Local Controls and Indications

The valve has the capability of being manually operated if desired by plant Operators by way of the valve handle. When the valve handle is pulled toward the Operator, the remote actuation is disabled, allowing the Operator to open or close the valve manually.

3.6.3 Interlocks

A high level in the truck bay sump, LAH-3121, will shut down the entire system requiring Operator assistance in order to restart the system.

4. KAFB-106233 and KAFB-106234 Control Description

The following is a control description for the two extraction wells (KAFB-106233 and KAFB-106234) and the associated equipment and instrumentation.

4.1 Wellhead Vault, Air Release Vault, and Well Control House Interlocks and Alarms

Level Switch LSH-4001—This leak detection switch is located in the pipeline secondary containment in the wellhead vault for KAFB-106233 and provides a contact back to the PLC. Alarm status is displayed on the HMI screen. A high level in the interstitial space will activate LSH-4001 interlock and will disable all well pumps, initiate a remote alarm, and notify the Operators of a leak in the containment. Operator intervention shall be required to restart the well pumps.

Well Pump P-102 is interlocked to shut down on a low well water level alarm generated by the PLC via the signal from LIT-4001. The pump will be disabled and placed in a faulted state and require user intervention to restart.

Level Switch LSH-4002—The leak detection switch is located in the wellhead vault for KAFB-106233 and provides a dry contact back to the PLC. Alarm status is displayed on the HMI screen. A high level in the wellhead vault will activate LSH-4002 interlock and will disable the well's pump, initiate a remote alarm, and notify the Operators of a leak in the wellhead vault. Operator intervention shall be required to restart the pump.

Level Switch LSH-5001—This leak detection switch is located in the pipeline secondary containment in the wellhead vault for KAFB-106234 and provides a contact back to the PLC. Alarm status is displayed on the HMI screen. A high level in the interstitial space will activate LSH-5001 interlock and will disable the three well pumps, initiate a remote alarm, and notify the Operators of a leak in the containment. Operator intervention shall be required to restart the well pumps.

Well Pump P-103 is interlocked to shut down on a low well water level alarm generated by the PLC via the signal from LIT-5001. The pump will be disabled and placed in faulted Mode and require user intervention to restart.

Level Switch LSH-5002—The leak detection switch is located in the wellhead vault for KAFB-106234 and provides a dry contact back to the PLC. Alarm status is displayed on the HMI screen. A high level in the wellhead vault will activate LSH-5002 interlock and will disable the well's pump, initiate a remote alarm, and notify the Operators of a leak in the wellhead vault. Operator intervention shall be required to restart the well pump.

Level Switch LSH-6001—The leak detection switch is located in the air release vault on Eastern Avenue and provides a dry contact back to the PLC. Alarm status is displayed on the HMI screen. A high level in the air release vault will activate LSH-6001 interlock and will disable the pumps at KAFB-106233 and

KAFB-106234, initiate a remote alarm, and notify the Operators of a leak in the system at the air release vault. Operator intervention shall be required to restart the well pumps.

Level Switch LSH-7001—The leak detection switch is located in the well control house and provides a dry contact back to the PLC. Alarm status is displayed on the HMI screen. A high level in the well control house will activate LSH-7001 interlock and will disable the pumps at KAFB-106233 and KAFB-106234, initiate a remote alarm, and notify the Operators of a leak in the system at the well control house. Operator intervention shall be required to restart the well pumps.

Level Switch LSH-7005—This leak detection switch is located in the pipeline secondary containment in the well control house and provides a contact back to the PLC. Alarm status is displayed on the HMI screen. A high level in the interstitial space will activate LSH-7005 interlock and will disable all well pumps, initiate a remote alarm, and notify the Operators of a leak in the containment at the well control house. Operator intervention shall be required to restart the well pumps.

Level Switch LSH-8001—The leak detection switch is located in the air release valve vault at the Louisiana Boulevard vault and provides a dry contact back to the PLC. Alarm status is displayed on the HMI screen. A high level in the well control house will activate LSH-7001 interlock and will disable the pumps at KAFB-106233 and KAFB-106234, initiate a remote alarm, and notify the Operators of a leak in the Louisiana Boulevard vault. Operator intervention shall be required to restart the well pumps.

4.2 KAFB-106233 and KAFB-106234 Controls and Interlocks

The following control description applies to Extraction Wells (KAFB-106233 and KAFB-106234) with Well Pumps P-102 and P-103, respectively, Flow Control Valves FCV-7001 and FCV-7002, respectively, and Flow Transmitters FIT-7001 and FIT-7002, respectively.

4.2.1 Remote Controls and Indications

The Treatment Plant Main Control Panel (CP-100) HMI display is programmed to show extraction well system indications and controls including pump running status, flow measurement, flow total, and alarms. Well Pump HMI controls include OFF, ON, and SEQ selection. For normal operation, the local HAND/OFF/AUTO switches HS-4001 and HS-5001 at the well control house panel will indicate to the HMI that Well Pumps P-102 and P-103, respectively, are in AUTO mode. The well pump will not start through the HMI unless the local switch is in AUTO.

Modes Available:

- Remote SEQ Mode
- Remote ON Mode.

Remote SEQ Mode

Pump starting and stopping are controlled by the PLC at the Treatment Plant Control Panel (CP-100). On initial startup, the pumps are turned on from the PLC and set to the desired groundwater extraction rate by manually adjusting the position of control valves located in the well vaults. The Operator will monitor groundwater flow as measured by FI-7001 and FI-7002 and adjust the control valves to obtain the target groundwater extraction rates for the two wells.

The PLC will monitor the groundwater level in the extraction wells (LI-4001 and LI-5001). There are low level alarm setpoints in wells KAFB-106233 and KAFB-106234. The alarm is set to 5 feet above the

transducer (>10 feet above pump intake), but is Operator settable should conditions determine that a different value should be used. These low level alarms will shut down the groundwater pumps, P-102 and P-103 and require Operator interaction to restart.

Remote ON Mode

A ON button allows the Operator to run Well Pump P-102 and P-103 through the PLC so long as the button ON mode is selected on the screen.

4.2.2 Local Controls and Indications

Controls

Controls include HAND/OFF/AUTO HS-4001 and HS-5001 selection switch on the wellhead motor starter panels MS-102 and MS-103, respectively. If the user toggles HAND, the pump starts and runs. The pump continues to run as long as the switch is in HAND mode.

Indications

Indicator lights include a green running light and a red stop light HL-4001 and HL-5001 on motor starter panels MS-102 and MS-103, respectively.

Flow indicator FIT-4001 will display instantaneous groundwater flow rate for Well KAFB-106233. Flow indicator FIT-5001 will display instantaneous groundwater flow rate for Well KAFB-106234.

PI-4001 will show pressure in the groundwater pipeline at the top of the wellhead for KAFB-106233. PI-5001 will show pressure in the groundwater pipeline at the top of the wellhead for KAFB-106234.

PI-7001 will show pressure in the interstitial space between the inner and outer pipe of the double-wall pipeline at well control house for output from KAFB-106233. An increase in this pressure indicates that there may be a leak in the inner pipe. PI-7002 will show pressure in the interstitial space between the inner and outer pipe of the double-wall groundwater pipeline at well control house for output from KAFB-106234.

PI-7003 will show pressure in the groundwater pipeline at well control house for output from KAFB-106233. PI-7004 will show pressure in the groundwater pipeline at well control house for output from KAFB-106234.

PI-7005 will show pressure in the groundwater pipeline at the well control house for the combined output from KAFB-106233 and KAFB-106234.

4.2.3 Interlocks

Well Pump P-102 is interlocked to shut down on Groundwater Treatment Feed Tank high-high level alarm at the Main Treatment Plant. The pump will be disabled and placed in OFF Mode and require user intervention to restart.

Well Pump P-102 is interlocked to shut down on a containment area leak associated with any of the three extraction wells. The pumps are interlocked to shut down during a leak detection alarm in the well and valve vaults associated with that well. Conveyance line leak alarms are associated with interstitial pipe

leaks that cause a shutdown of all well pumps. Pumps will be disabled and placed in a faulted state and require user intervention to restart.

Well Pump P-102 is interlocked to shut down on treatment plant shutdown.

Well Pump P-102 is interlocked to shut down on a low well water level alarm generated by the PLC via the signal from LIT-4001. The pump will be disabled and placed in a faulted state and requires user intervention to restart.

Overload protection OL-4001 will shut the pump down. The Operator will be required to reset OL-4001 manually at starter MS-102 to restart Well Pump P-102 after an overload protection shutdown.

Well Pump P-103 is interlocked to shut down on Groundwater Treatment Feed Tank high-high level alarm at the Main Treatment Plant. The pump will be disabled and placed in a faulted Mode and require user intervention to restart.

Well Pump P-103 is interlocked to shut down on a containment area leak associated with any of the three extraction wells. This includes leak detection alarms in the well and valve vaults and the containment on the double wall pipelines. Conveyance line leak alarms are associated with interstitial pipe leaks that cause a shutdown of all well pumps. Pumps will be disabled and placed in faulted state and require user intervention to restart.

Well Pump P-103 is interlocked to shut down on treatment plant shutdown.

Well Pump P-103 is interlocked to shut down on a low well water level alarm generated by the PLC via the signal from LIT-5001. Pump will be disabled and placed in faulted state and require user intervention to restart.

Overload protection OL-5001 will shut the pump down. The Operator will be required to reset OL-5001 manually at starter MS-103 to restart Well Pump P-103 after an overload protection shutdown.

5. KAFB-106239 Control Description

The following is a control description for extraction well KAFB-106239 and associated equipment and instrumentation.

5.1 Wellhead Vault and Junction Vault Interlocks and Alarms

Level Switch LD-301—This continuous leak detection conductor is located in the pipeline secondary containment from the wellhead vault for KAFB-106239 to the junction vault and provides a contact back to the PLC. Alarm status is displayed on the HMI screen. A high level in the interstitial space will activate the LD-301 interlock and will disable all well pumps, initiate a remote alarm, and notify the Operators of a leak in the containment piping. Operator intervention shall be required to restart the well pumps.

Well Pump P-301 is interlocked to shut down on a low well water level alarm generated by the PLC via the signal from LT-301. Pump will be disabled and placed in OFF Mode and require user intervention to restart.

Level Switch LSH-301—The leak detection switch is located in the wellhead vault for KAFB-106239 and provides a dry contact back to the PLC. Alarm status is displayed on the HMI screen. A high level in the wellhead vault will activate LSH-301 interlock and will disable the well's pump, initiate a remote alarm, and notify the Operators of a leak in the wellhead vault. Operator intervention shall be required to restart the pump.

Level Switch LSH-302—The leak detection switch is located in the junction vault and provides a dry contact back to the PLC. Alarm status is displayed on the HMI screen. A high level in the junction vault will activate the LSH-302 interlock and will disable the pumps at KAFB-106228 and KAFB-106239, initiate a remote alarm, and notify the Operators of a leak in the junction vault. Operator intervention shall be required to restart the well pumps.

5.2 KAFB-106239 Controls and Interlocks

The following control description applies to Extraction Well KAFB-106239 with Well Pump P-301, Flow Control Valve FCV-301, and Flow Transmitter FIT-301.

5.2.1 Remote Controls and Indications

The Treatment Plant Main Control Panel (CP-100) HMI display is programmed to show extraction well system indications and controls including pump running status, flow measurement, flow total, and alarms. Well Pump HMI controls include OFF, ON, and SEQ selection. For normal operation, the local HAND/OFF/AUTO switch HS-301 at the wellhead electrical panel will indicate to the HMI that Well Pump P-301 is in AUTO mode. The well pump will not start through the HMI unless the local switch is in AUTO.

Modes Available:

- Remote SEQ Mode
- Remote ON Mode.

Remote SEQ Mode

Pump starting and stopping are controlled by the PLC at the Treatment Plant Control Panel (CP-100). On initial startup, the pumps are turned on from the PLC and set to the desired groundwater extraction rate by manually adjusting the frequency percentage of the VFD. The Operator will monitor groundwater flow as measured by FIT-301 and adjust the frequency percentage to obtain the target groundwater extraction rate for the well.

The PLC will monitor the groundwater level in the extraction well (LIT-301). There is a low level alarm set point in well KAFB-106239. The alarm is set to 5 feet above the transducer (>10 feet above pump intake), but is Operator settable should conditions determine that a different value should be used. These low level alarms will shut down the groundwater pump, P-301, and require Operator interaction to restart.

Remote ON Mode

An ON button allows the Operator to run Well Pump P-301 through the PLC so long as the button ON mode is selected on the screen.

5.2.2 Local Controls and Indications

Controls

Controls include HAND/OFF/AUTO HS-301 selection switch on the wellhead VFD panel VFD-301. If the user toggles HAND, the pump can be operated using the enclosed VFD interface.

Indications

Indicator lights include a green running light and a red stop light HL-301 on the VFD panel VFD-301.

Flow indicator FIT-301 will display instantaneous groundwater flow rate for Well KAFB-106239.

PI-301 will show pressure in the groundwater pipeline at the top of the wellhead for KAFB-106239.

PI-302 will show pressure in the interstitial space between the inner and outer pipe of the double-wall pipeline at the wellhead vault of KAFB-106239. An increase in this pressure indicates that there may be a leak in the inner pipe.

5.2.3 Interlocks

Well Pump P-301 is interlocked to shut down on Groundwater Treatment Feed Tank high-high level alarm at the Main Treatment Plant. The pump will be disabled and placed in a faulted state and require user intervention to restart.

Well Pump P-301 is interlocked to shut down on a containment area leak associated with any of the four extraction wells. The pumps are interlocked to shut down during a leak detection alarm in the well and valve vaults associated with that well. Conveyance line leak alarms are associated with interstitial pipe leaks that cause a shutdown of all well pumps. Pumps will be disabled and placed in a faulted state and require user intervention to restart.

Well Pump P-301 is interlocked to shut down on treatment plant shutdown.

Well Pump P-301 is interlocked to shut down on a low well water level alarm generated by the PLC via the signal from LIT-301. Pump will be disabled and placed in a faulted state and require user intervention to restart.

Overload protection OL-301 will shut the pump down. The Operator will be required to reset OL-301 manually at VFD-301 to restart Well Pump P-301 after an overload protection shutdown.

6. Injection Well and Pond Level Control Description

The following is a description of the control system for the Injection Well and Pond Level.

6.1 Injection Well and Pond Level Interlocks and Alarms

The interlocks and alarms associated with the Injection Well and Pond Level affect the operation of the GWTS.

Injection Well Water Level is monitored by LIT-9010. If the level rises to above normal operating levels (4,909 feet above mean sea level; the top of the louvered screen), LAH-9010 will trigger and the treatment system will shut down. This level setpoint is Operator settable on the HMI.

Injection Well Head Pressure is monitored by PIT-9013. If the pressure at the wellhead rises above 50 pounds per square inch gauge, an alarm will trigger and the treatment system will shut down.

Main Pond Water Level is monitored by LIT-9020. If the level rises to 1 foot below the maximum level as defined by Tijeras Arroyo golf course personnel (set at 5.5 feet in the HMI, 3.5 on the pond stadia rod), an alarm will trigger and the treatment system will shut down. This level setpoint is Operator settable on the HMI.

6.2 Injection Well Control Valve Control Description

The injection well at KAFB-7 contains a V-Smart Control Valve that regulates flow into the aquifer. The V-Smart Control Valve is accompanied by a hydraulic pump and two solenoid valves that control how open the valve is. These components come as part of a control panel. This panel has a HAND/OFF/AUTO switch (HS-9014), Start Button (HS-9015), Open Button (HS-9016), and Close Button (HS-9017). In addition, there are provisions for remote control of the system.

6.2.1 V-Smart Control Valve Manual Control

When the Operator has selected HAND on HS-9014, the Operator will be allowed to start the hydraulic pump with HS-9013 and adjust the aperture with the Open and Close solenoid valves HS-9016 and HS-9017, respectively.

6.2.2 V-Smart Control Valve Automatic Control

When the Operator has selected AUTO on HS-9014 and the Operator selects Well 7 as the discharge location, the PLC will automatically adjust the valve in accordance with the PID controller in the HMI.

When placed in Well 7, the hydraulic pump P-9014 will be turned on so that control of the valve aperture is possible. P-9014 will remain on until the golf course is selected as the discharge location.

The Operator will need to be cautious when changing discharge location because the valve system at the Junction of the GWTS discharge pipeline and the existing pipeline connecting KAFB-7 and the golf course main pond is not automated. Therefore, the Operator must ensure the valving is correct prior to changing modes (a popup reminder will appear on the HMI screen when changing discharge location).

These modes are described below.

Fully Automatic Operation

When the user has selected Well 7 at the HMI in the main treatment system control room and the HAND/OFF/AUTO Switch HS-9014 is in the AUTO position, the PLC controls the aperture of the control valve automatically. This control is achieved utilizing feedback from the injection wellhead pressure transmitter PIT-9013.

The system will control pressure at the wellhead ensuring that it stays at the user settable value. The system is set to maintain pressure between at 15 pounds per square inch.

The Automatic Control algorithm pulses the Open and Close solenoid valves for a 10-second duration when the pressure is too great or too low, respectively.

Exiting Injection Mode

At any time, the Operator may elect to exit Well 7 Mode by selecting golf course mode. When this occurs, the system will perform an exit sequence to close the KAFB-7 valve.

The valve Close command will be held for a user settable period of time (default = 60 seconds). After that timer has expired, the hydraulic pump P-9014 will be shut off.

In addition, any condition that would cause P-118 to shut down will cause the exit sequence to occur. The exit sequence will also be performed when a Pressure or Well Level Alarm occurs. In these cases, however, Well 7 Mode will not be exited.

7. Sand Filter, Dosing Pumps, and Clarifier Control

The following is a description of the control system for the sand filters, dosing pumps, and clarifier.

7.1 Sand Filter Interlocks and Alarms

The sand filters are not equipped with any interlocks but do alarm when the units enter a backwash cycle based on differential pressure.

7.2 Sand Filter Control Description

The sand filters are not equipped with any PLC or HMI related controls. The sand filters are equipped with a self-contained control panel that can be used to schedule recurring backwashing events if desired. The control panel also automatically manages the function of electronic actuators that open and close the pneumatic valves used for backwashing. The sand filters are currently set to operate in an as needed fashion, meaning that they only backwash when a certain differential pressure is obtained and held for approximately 30 seconds. The differential pressure resulting in the initiation of a backwash is manually set on the underside of the sand filter control panel.

7.3 Dosing Pump Interlocks and Alarms

The dosing pumps are equipped with a level sensor that causes the dosing pump screen to change color from green to yellow when the stored oxidant quantity falls below approximately 3 gallons, and then red when the level falls below the pump intake. Once the level falls below the intake of the pump, the dosing station faults and must be refilled and reset on the HMI prior to restarting the pump.

7.4 Dosing Pump Control Description

The dosing pump can be activated on the HMI in two modes, manual and auto. Manual mode operates the dosing station without any direction from the PLC. Auto mode operates the dosing station only when the associated train is in operation. Dosing rate is manually adjusted on the pump using the pump control dial.

7.5 Clarifier Interlocks and Alarms

The clarifier is equipped with a high level switch that engages interlocks and alarms. In the event that the level switch activates, the entire GWTS experiences a shutdown and sends an alarm to the GWTS Operator. The clarifier must be manually drained in order to disengage the clarifier high level switch and restart the GWTS.

7.6 Clarifier Control Description

The clarifier is not equipped with any electronic controls.

8. Communications System

The main PLC at the Treatment Plant communicates with offsite personnel via a licensed wireless cellular data system. Alarms to notify the Operator are sent by email or text message through control system internet connection. Remote Alarms are provided in Table F-1.

9. Historical Data and User Interface Screens

9.1 Historical Data

The following data are stored in non-volatile data storage utilizing a CompactFlash card installed in the PLC. All data are stored for at least 3 months on the HMI. Operators are able to download data via an Ethernet connection in the main control panel (CP-100).

Data (unit)	Period
Flow Transmitters	
Flow (gallons per minute)	1 minute
Well Level Transmitters	
Level (feet above mean sea level)	1 minute
Tank Level Transmitters	
Level (feet)	1 minute
Effluent and KAFB-7 Pressure Transmitters	
Pressure (pounds per square inch)	1 minute
Golf Course Main Pond Level	
Level (feet)	1 minute
Logs	
Event Log (Stored on Non-Volatile Data Storage)	Not applicable
Alarm Log (Stored on Non-Volatile Data Storage)	Not applicable

9.2 Operator Interface Screens

Screens are provided in Appendix G.

10. Internet-Based Monitoring

Software—C-more® Programming Software.

Security—Uses password-based security to allow viewing. Up to 5 users may be logged on at any one time.

Scope—All process variables, process states, alarms, and historical trending are viewable through the Explorer screens.

Control—Full Remote Control of the system is possible after proper login has occurred. Only one remote controller is allowed at a given time.

Alarming—Any alarm notifications to remote Operators are performed over a cellular network and transmitted via email. Provide for at least six email recipients. Provided capability to add and remove recipients.

11. Identification

HMI equipment and instrumentation tags are based on the instrument and equipment tags on the piping and instrumentation diagrams.

12. Field Quality Control

Every 5 years, the system should be tested for stability, including the following tests:

- Loop Check
- Status Indication Function Check
- Alarm Limit Check
- Alarm Logging and Acknowledging Check
- Trending and Visualization Check
- Remote Alarm Notification Check.

Table F-1
Groundwater Treatment System Remote Alarms and Interlocks

Alarm Signal From	Remote Alarm Message	System Interlock Response
P-101	EXTRACTION WELL PUMP 101 FAILED <!<mm/dd/yy>!> <!<24H:MM:SS>!>	KAFB-106228 Pump Shutdown
P-102	EXTRACTION WELL PUMP 102 FAILED <!<mm/dd/yy>!> <!<24H:MM:SS>!>	KAFB-106233 Pump Shutdown
P-103	EXTRACTION WELL PUMP 103 FAILED <!<mm/dd/yy>!> <!<24H:MM:SS>!>	KAFB-106234 Pump Shutdown
P-112A	GROUND WATER FEED PUMP 112A FAILED <!<mm/dd/yy>!> <!<24H:MM:SS>!>	Train 1 Influent Pump A Shutdown
P-112B	GROUND WATER FEED PUMP 112B FAILED <!<mm/dd/yy>!> <!<24H:MM:SS>!>	Train 1 Influent Pump B Shutdown
P-212A	GROUND WATER FEED PUMP 212A FAILED <!<mm/dd/yy>!> <!<24H:MM:SS>!>	Train 2 Influent Pump A Shutdown
P-212B	GROUND WATER FEED PUMP 212B FAILED <!<mm/dd/yy>!> <!<24H:MM:SS>!>	Train 2 Influent Pump B Shutdown
LSH-3100	GROUND WATER TANK 110 LEVEL SW HI <!<mm/dd/yy>!> <!<24H:MM:SS>!>	All Extraction Wells Shutdown
LSL-3100	GROUND WATER TANK 110 LEVEL SW LO <!<mm/dd/yy>!> <!<24H:MM:SS>!>	Train 1 Influent Skid Pumps Shutdown
LSH-3200	GROUND WATER TANK 210 LEVEL SW HI <!<mm/dd/yy>!> <!<24H:MM:SS>!>	All Extraction Wells Shutdown
LSL-3200	GROUND WATER TANK 210 LEVEL SW LO <!<mm/dd/yy>!> <!<24H:MM:SS>!>	Train 2 Influent Skid Pumps Shutdown
PSH-3105	CARBON ABSORBER V114AB PRESS SW HI <!<mm/dd/yy>!> <!<24H:MM:SS>!>	Train 1 Influent Skid Pumps Shutdown
PSH-3102	TRAIN 1 FEED DISCHARGE PRESS SW HI <!<mm/dd/yy>!> <!<24H:MM:SS>!>	Train 1 Influent Skid Pumps Shutdown
PSH-3205	CARBON ABSORBER V214AB PRESS SW HI <!<mm/dd/yy>!> <!<24H:MM:SS>!>	Train 2 Influent Skid Pumps Shutdown
PSH-3202	TRAIN 2 FEED DISCHARGE PRESS SW HI <!<mm/dd/yy>!> <!<24H:MM:SS>!>	Train 2 Influent Skid Pumps Shutdown
P-9014	INJECTION WELL 7 HYDRAULIC PUMP FAILED <!<mm/dd/yy>!> <!<24H:MM:SS>!>	All Effluent Skid Pumps Shutdown
P-118	TREATED WATER DIST PUMP 118 FAILED <!<mm/dd/yy>!> <!<24H:MM:SS>!>	Train 1 Effluent Skid Pump Shutdown
P-218	TREATED WATER DIST PUMP 218 FAILED <!<mm/dd/yy>!> <!<24H:MM:SS>!>	Train 2 Effluent Skid Pump Shutdown
LSH-3106	TREATED WATER TANK 116 LEVEL SW HI <!<mm/dd/yy>!> <!<24H:MM:SS>!>	Train 1 Influent Skid Pumps Shutdown
LSL-3106	TREATED WATER TANK 116 LEVEL SW LO <!<mm/dd/yy>!> <!<24H:MM:SS>!>	Train 1 Effluent Skid Pump Shutdown
LSH-3206	TREATED WATER TANK 216 LEVEL SW HI <!<mm/dd/yy>!> <!<24H:MM:SS>!>	Train 2 Influent Skid Pumps Shutdown
LSL-3206	TREATED WATER TANK 216 LEVEL SW LO <!<mm/dd/yy>!> <!<24H:MM:SS>!>	Train 2 Effluent Skid Pump Shutdown
PSH-3108	TRAIN 1 DIST PRESS SW HI <!<mm/dd/yy>!> <!<24H:MM:SS>!>	Train 1 Effluent Skid Pump Shutdown
PSH-3208	TRAIN 2 DIST PRESS SW HI <!<mm/dd/yy>!> <!<24H:MM:SS>!>	Train 2 Effluent Skid Pump Shutdown
LSH-3002	WELL 228 CONVEYANCE LEAK DETECTED<!<mm/dd/yy>!> <!<24H:MM:SS>!>	Entire System Shutdown
LSH-3004	WELL 228 LOUISIANA VAULT LEAK DETECTED<!<mm/dd/yy>!> <!<24H:MM:SS>!>	KAFB-106228 Pump Shutdown
LSH-3003	WELL 228 LOUISIANA CONVEYANC LEAK DETECTED<!<mm/dd/yy>!> <!<24H:MM:SS>!>	Entire System Shutdown
LSH-3000	WELL 228 VAULT LEAK DETECTED<!<mm/dd/yy>!> <!<24H:MM:SS>!>	KAFB-106228 Pump Shutdown
LSH-4001	WELL 233 CONVEYANCE LEAK DETECTED<!<mm/dd/yy>!> <!<24H:MM:SS>!>	Entire System Shutdown
LSH-6001	EASTERN AVE VAULT LEAK DETECTED<!<mm/dd/yy>!> <!<24H:MM:SS>!>	KAFB-106233 and KAFB-106234 Pumps Shutdown
LSH-4002	WELL 233 VAULT LEAK DETECTED<!<mm/dd/yy>!> <!<24H:MM:SS>!>	KAFB-106233 Pump Shutdown
LSH-5001	WELL 234 CONVEYANCE LEAK DETECTED<!<mm/dd/yy>!> <!<24H:MM:SS>!>	Entire System Shutdown
LSH-5002	WELL 234 VAULT LEAK DETECTED<!<mm/dd/yy>!> <!<24H:MM:SS>!>	KAFB-106234 Pump Shutdown
CP-100	GW FEED PMP 112B COMM FAILED <!<mm/dd/yy>!> <!<24H:MM:SS>!>	Train 1 Influent Skid Pumps Shutdown
CP-100	GW FEED PMP 112A COMM FAILED <!<mm/dd/yy>!> <!<24H:MM:SS>!>	Train 1 Influent Skid Pumps Shutdown
CP-100	GW FEED PMP 212A COMM FAILED <!<mm/dd/yy>!> <!<24H:MM:SS>!>	Train 2 Influent Skid Pumps Shutdown
CP-100	GW FEED PMP 212B COMM FAILED <!<mm/dd/yy>!> <!<24H:MM:SS>!>	Train 2 Influent Skid Pumps Shutdown
CP-100	TW DIST PMP 118 COMM FAILED <!<mm/dd/yy>!> <!<24H:MM:SS>!>	Train 1 Effluent Skid Pump Shutdown

Table F-1
Groundwater Treatment System Remote Alarms and Interlocks

Alarm Signal From	Remote Alarm Message	System Interlock Response
CP-100	TW DIST PMP 218 COMM FAILED <!<mm/dd/yy>!> <!<24H:MM:SS>!>	Train 2 Effluent Skid Pump Shutdown
ZS-3123 ZS-3124 ZS-3125A/B ZS-3126A/B	PLANT INTRUSION ALARM <!<mm/dd/yy>!> <!<24H:MM:SS>!>	None
CP-100	PLANT EMO ALARM <!<mm/dd/yy>!> <!<24H:MM:SS>!>	Entire System Shutdown
LSH-3121	PLANT SUMP LEAK DETECT ALARM <!<mm/dd/yy>!> <!<24H:MM:SS>!>	Entire System Shutdown
LSH-3122	TRUCK SUMP LEAK DETECT ALARM <!<mm/dd/yy>!> <!<24H:MM:SS>!>	Entire System Shutdown
PIT-3130	SYS DISCH DOWNSTREAM PRESS ALARM <!<mm/dd/yy>!> <!<24H:MM:SS>!>	All Effluent Skid Pumps Shutdown
PDI-3102A	GW TRAIN 1 FEED DIFF PRESS A ALARM <!<mm/dd/yy>!> <!<24H:MM:SS>!>	None
PDI-3102B	GW TRAIN 1 FEED DIFF PRESS B ALARM <!<mm/dd/yy>!> <!<24H:MM:SS>!>	None
LIT-9010	WELL 7 HIGH LEVEL ELEVATION ALARM <!<mm/dd/yy>!> <!<24H:MM:SS>!>	All Effluent Skid Pumps Shutdown
LIT-4001	WELL 233 DRAWDOWN LEVEL ELEVATION ALARM <!<mm/dd/yy>!> <!<24H:MM:SS>!>	KAFB-106233 Pump Shutdown
LIT-5001	WELL 234 DRAWDOWN LEVEL ELEVATION ALARM <!<mm/dd/yy>!> <!<24H:MM:SS>!>	KAFB-106234 Pump Shutdown
PDI-3202A	GW TRAIN 2 FEED DIFF PRESS A ALARM <!<mm/dd/yy>!> <!<24H:MM:SS>!>	None
PDI-3202B	GW TRAIN 2 FEED DIFF PRESS B ALARM <!<mm/dd/yy>!> <!<24H:MM:SS>!>	None
LIT-3001	WELL 228 DRAWDOWN LEVEL ELEVATION ALARM <!<mm/dd/yy>!> <!<24H:MM:SS>!>	KAFB-106228 Pump Shutdown
LSH-8001	233/234 LOUISIANA VAULT LEAK ALARM <!<mm/dd/yy>!> <!<24H:MM:SS>!>	KAFB-106233 and KAFB-106234 Pumps Shutdown
LSH-7001	WELL HOUSE FLOOR LEAK ALARM <!<mm/dd/yy>!> <!<24H:MM:SS>!>	KAFB-106233 and KAFB-106234 Pumps Shutdown
LSH-7005	WELL HOUSE CONVEYANCE LEAK ALARM <!<mm/dd/yy>!> <!<24H:MM:SS>!>	Entire System Shutdown
CP-102	WELL HOUSE EMO ALARM <!<mm/dd/yy>!> <!<24H:MM:SS>!>	Entire System Shutdown
LIT-9020	GOLF COURSE POND LEVEL HIGH SHUTDOWN <!<mm/dd/yy>!> <!<24H:MM:SS>!>	All Effluent Skid Pumps Shutdown
CP-100	TRAIN 1 NOT IN PROCESS MODE <!<mm/dd/yy>!> <!<24H:MM:SS>!>	All Train 1 Influent and Effluent Pump Shutdown
CP-100	TRAIN 2 NOT IN PROCESS MODE <!<mm/dd/yy>!> <!<24H:MM:SS>!>	All Train 2 Influent and Effluent Pump Shutdown
SF-101	SAND FILTER 1 IN BACKWASH <!<mm/dd/yy>!> <!<24H:MM:SS>!>	None
SF-201	SAND FILTER 2 IN BACKWASH <!<mm/dd/yy>!> <!<24H:MM:SS>!>	None
LSH-4000	BACKWASH TANK LEVEL SW HI <!<mm/dd/yy>!> <!<24H:MM:SS>!>	Entire System Shutdown
CI-101	CHEMICAL PUMP 1 FAILED <!<mm/dd/yy>!> <!<24H:MM:SS>!>	Train 1 Dosing Pump Shutdown
CI-201	CHEMICAL PUMP 2 FAILED <!<mm/dd/yy>!> <!<24H:MM:SS>!>	Train 2 Dosing Pump Shutdown
P-301	EXTRACTION WELL PUMP 105 FAILED <!<mm/dd/yy>!> <!<24H:MM:SS>!>	KAFB-106239 Pump Shutdown
LD-301	WELL 239 CONVEYANCE LEAK DETECTED<!<mm/dd/yy>!> <!<24H:MM:SS>!>	Entire System Shutdown
LSH-301	WELL 239 VAULT LEAK DETECTED<!<mm/dd/yy>!> <!<24H:MM:SS>!>	KAFB-106239 Pump Shutdown
LIT-301	WELL 239 DRAWDOWN LEVEL ELEVATION ALARM <!<mm/dd/yy>!> <!<24H:MM:SS>!>	KAFB-106239 Pump Shutdown
ZA-301A/B	WELL 239 VAULT HATCH DOOR OPEN <!<mm/dd/yy>!> <!<24H:MM:SS>!>	None

Table F-1
Groundwater Treatment System Remote Alarms and Interlocks

Alarm Signal From	Remote Alarm Message	System Interlock Response
LSH-302	WALKER STREET VAULT LEAK ALARM <!<mm/dd/yy>!> <!<24H:MM:SS>!>	KAFB-106228 and KAFB-106239 Pumps Shutdown
TAL-3127	"Low Temperature Alarm Main Plant"	None
BAH-3128	"Smoke Alarm"	Notifies Base Fire Department
UA-3129	"Loss of Power"	None

A system interlock response of "None" indicates that a remote alarm message is sent to the Operator, but does not initiate a preprogrammed programmable logic controller system response.
KAFB = Kirtland Air Force Base.

APPENDIX G

Human Machine Interface Screens

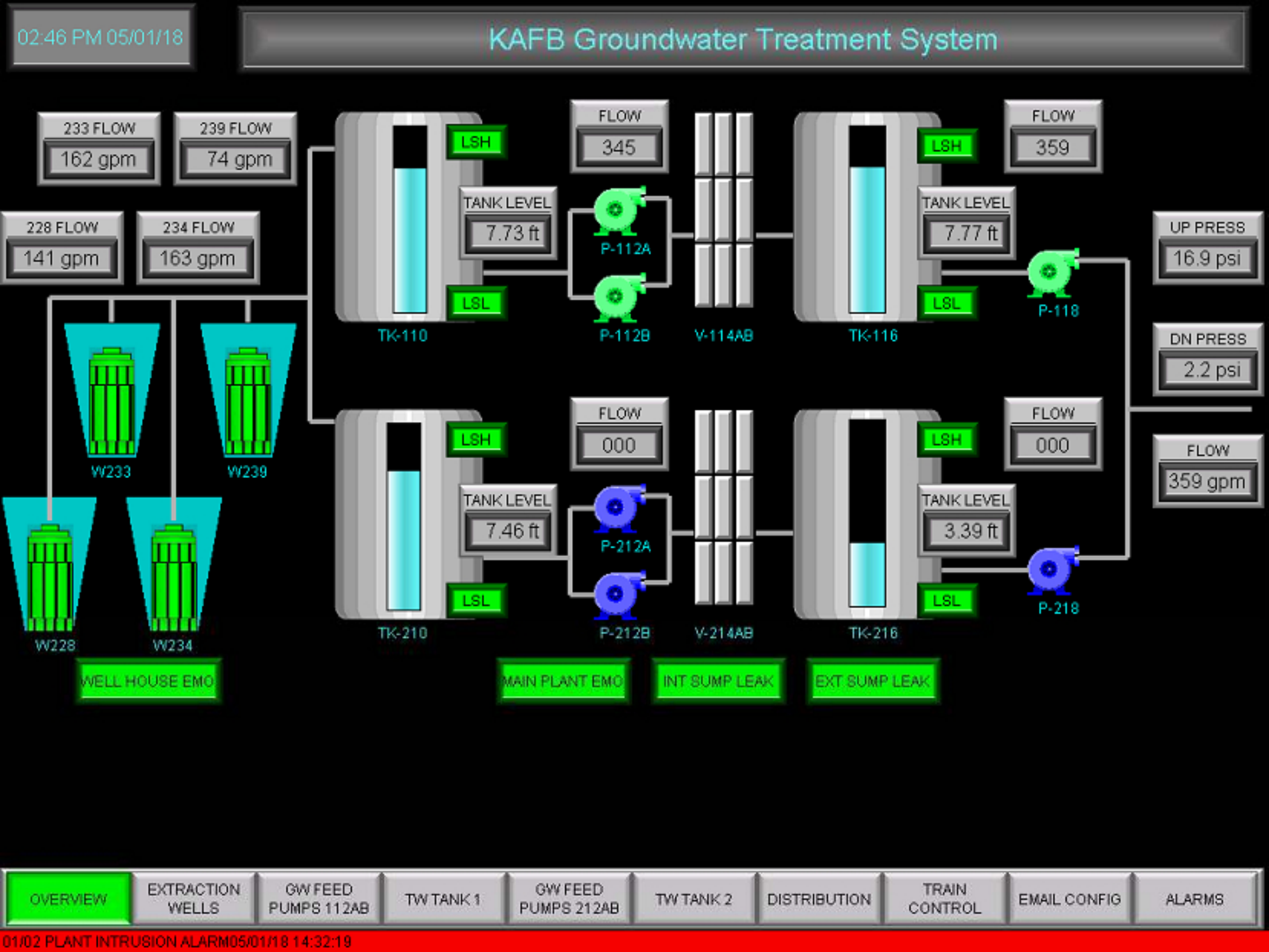
02:46 PM 05/01/18
KAFB Groundwater Treatment System
233 FLOW
162 gpm
239 FLOW
74 gpm
228 FLOW
141 gpm
234 FLOW
163 gpm
W233
W239
W228
W234
LSH
LSL
TANK LEVEL
7.73 ft
TK-110
FLOW
345
P-112A
P-112B
V-114AB
TANK LEVEL
7.77 ft
TK-116
FLOW
359
P-118
UP PRESS
16.9 psi
DN PRESS
2.2 psi
FLOW
359 gpm
TANK LEVEL
7.46 ft
TK-210
FLOW
000
P-212A
P-212B
V-214AB
TANK LEVEL
3.39 ft
TK-216
FLOW
000
P-218
WELL HOUSE EMO
MAIN PLANT EMO
INT SUMP LEAK
EXT SUMP LEAK
OVERVIEW
EXTRACTION WELLS
GW FEED PUMPS 112AB
TW TANK 1
GW FEED PUMPS 212AB
TW TANK 2
DISTRIBUTION
TRAIN CONTROL
EMAIL CONFIG
ALARMS
01/02 PLANT INTRUSION ALARM05/01/18 14:32:19

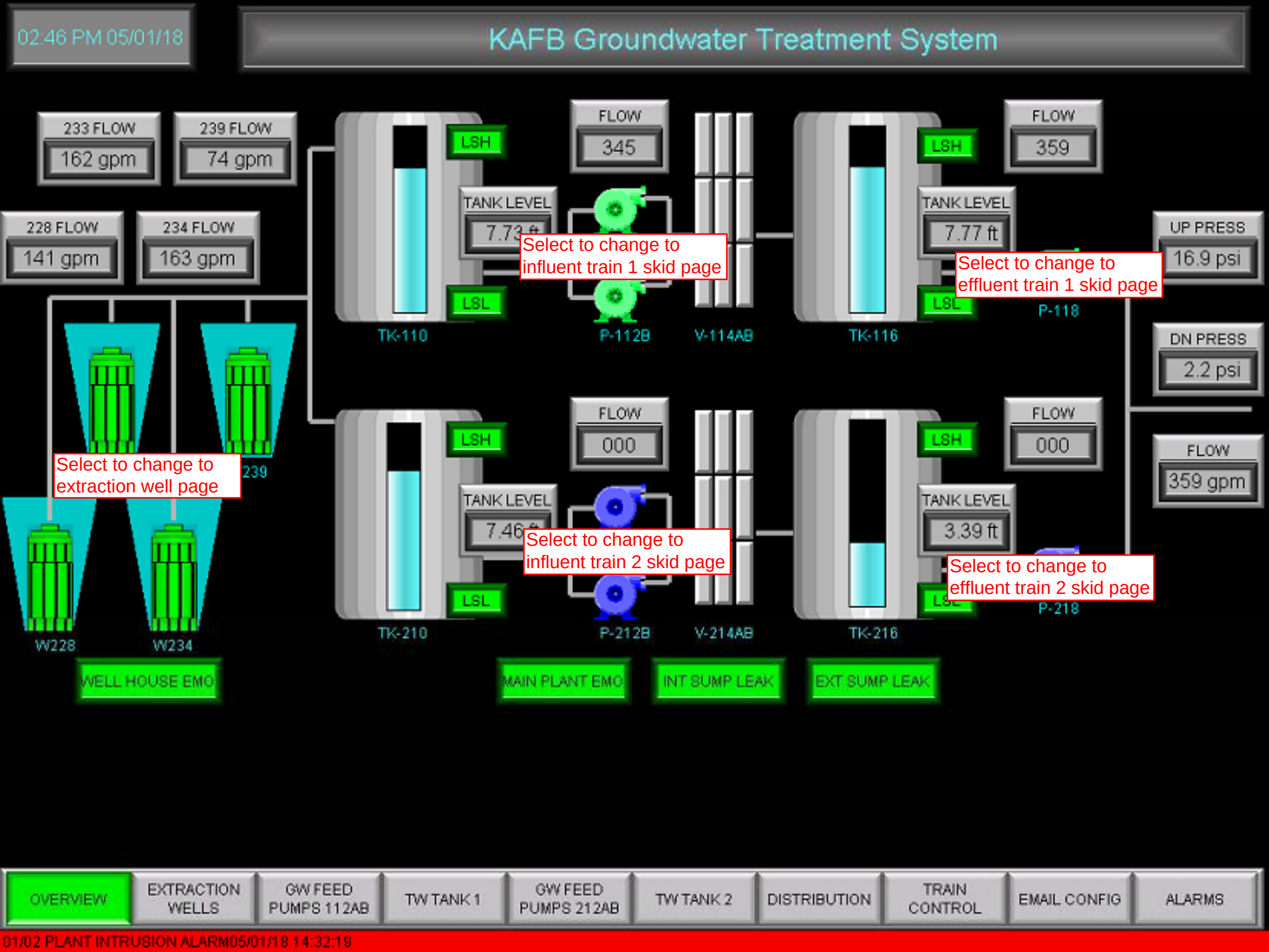
02:46 PM 05/01/18
KAFB Groundwater Treatment System
233 FLOW
162 gpm
239 FLOW
74 gpm
228 FLOW
141 gpm
234 FLOW
163 gpm
LSH
LSL
TANK LEVEL
7.73 ft
FLOW
345
TK-110
P-112B
V-114AB
TK-116
7.77 ft
359
P-118
UP PRESS
16.9 psi
DN PRESS
2.2 psi
FLOW
359 gpm
Select to change to influent train 1 skid page
Select to change to effluent train 1 skid page
Select to change to extraction well page
239
TK-210
7.46 ft
000
P-212B
V-214AB
TK-216
3.39 ft
P-218
Select to change to influent train 2 skid page
Select to change to effluent train 2 skid page
W228
W234
WELL HOUSE EMO
MAIN PLANT EMO
INT SUMP LEAK
EXT SUMP LEAK
OVERVIEW
EXTRACTION WELLS
GW FEED PUMPS 112AB
TW TANK 1
GW FEED PUMPS 212AB
TW TANK 2
DISTRIBUTION
TRAIN CONTROL
EMAIL CONFIG
ALARMS
01/02 PLANT INTRUSION ALARM05/01/18 14:32:19

02:47 PM 05/01/18

KAFB Extraction Wells

P101 - CONTROL
OFF ON SEQ
RUNNING

P102 - CONTROL
OFF ON SEQ
RUNNING

P103 - CONTROL
OFF ON SEQ
RUNNING

P105 - CONTROL
OFF ON SEQ
RUNNING

P3100

P3200

TANK LEVEL
7.72 ft

TK 1 IN AVG
NO YES

TANK LEVEL
7.51 ft

TK 2 IN AVG
NO YES

AUTO
W228

AUTO
W233

AUTO
W234

AUTO
W239

W228	W233	W234	W239
Flow 141 gpm	Flow 162 gpm	Flow 163 gpm	Flow 75 gpm
PRESS 63 psi	PRESS 23 psi	PRESS 23 psi	PRESS 43 psi
LEVEL 17.51 ft	LEVEL 32.19 ft	LEVEL 20.72 ft	LEVEL 28.89 ft
			SPEED 85 %

AVG TANK
7.62 ft

LEVEL PID
100 %

START PID CO
65 %

START DELAY
10 sec

STOP PID CO
50 %

STOP DELAY
10 sec

OVERVIEW | EXTRACTION WELLS | GW FEED PUMPS 112AB | TW TANK 1 | GW FEED PUMPS 212AB | TW TANK 2 | DISTRIBUTION | TRAIN CONTROL | EMAIL CONFIG | ALARMS

01/02 PLANT INTRUSION ALARM05/01/18 14:32:19

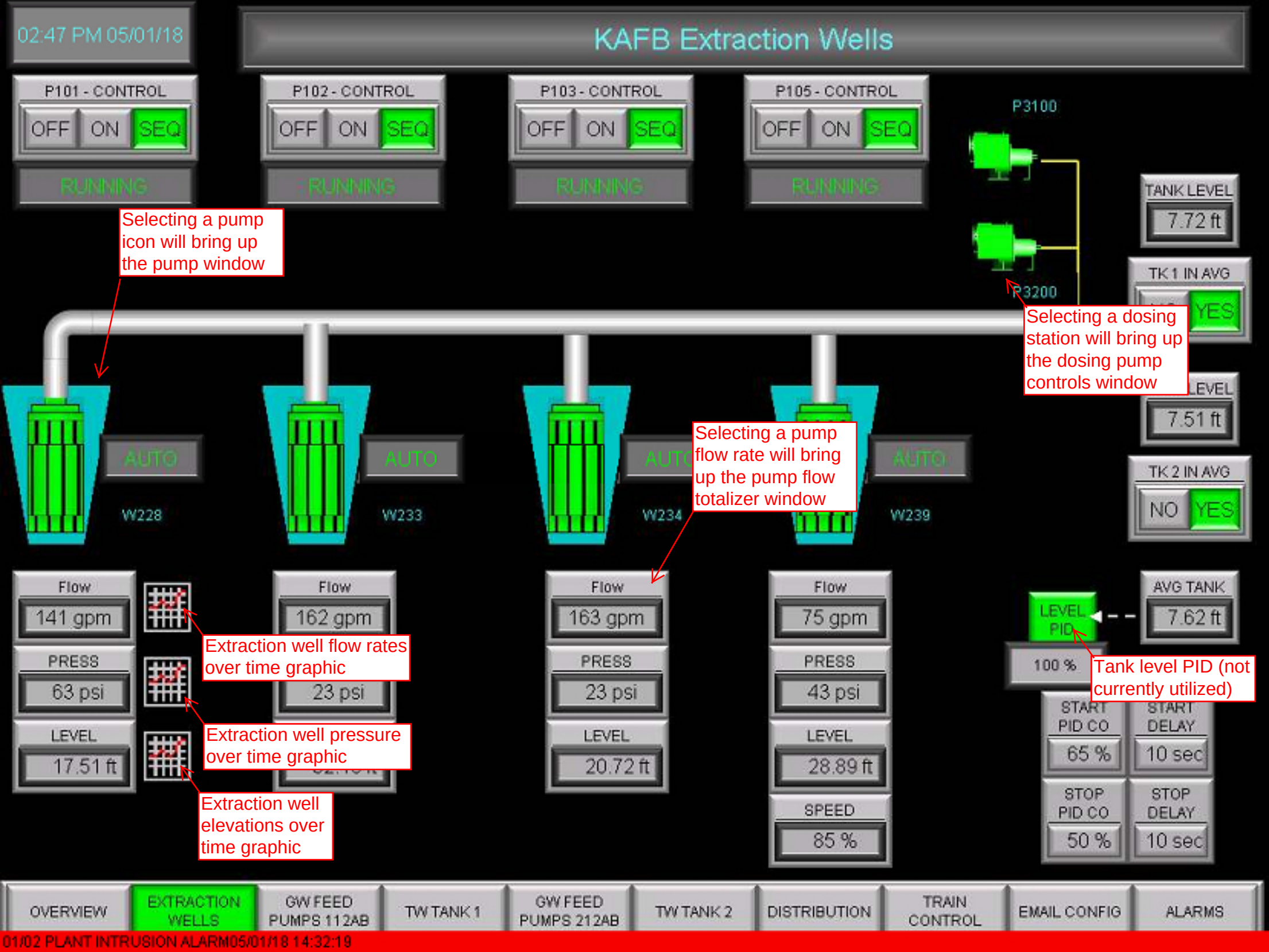
02:47 PM 05/01/18
KAFB Extraction Wells
P101 - CONTROL
OFF ON SEQ
RUNNING
P102 - CONTROL
OFF ON SEQ
RUNNING
P103 - CONTROL
OFF ON SEQ
RUNNING
P105 - CONTROL
OFF ON SEQ
RUNNING
P3100
P3200
TANK LEVEL
7.72 ft
TK 1 IN AVG
YES
LEVEL
7.51 ft
TK 2 IN AVG
NO YES
Selecting a pump icon will bring up the pump window
Selecting a dosing station will bring up the dosing pump controls window
Selecting a pump flow rate will bring up the pump flow totalizer window
AUTO
W228
AUTO
W233
AUTO
W234
AUTO
W239
Flow
141 gpm
PRESS
63 psi
LEVEL
17.51 ft
Flow
162 gpm
PRESS
23 psi
Flow
163 gpm
PRESS
23 psi
LEVEL
20.72 ft
Flow
75 gpm
PRESS
43 psi
LEVEL
28.89 ft
SPEED
85 %
AVG TANK
7.62 ft
LEVEL PID
100 %
START PID CO
65 %
START DELAY
10 sec
STOP PID CO
50 %
STOP DELAY
10 sec
Extraction well flow rates over time graphic
Extraction well pressure over time graphic
Extraction well elevations over time graphic
Tank level PID (not currently utilized)
OVERVIEW
EXTRACTION WELLS
GW FEED PUMPS 112AB
TW TANK 1
GW FEED PUMPS 212AB
TW TANK 2
DISTRIBUTION
TRAIN CONTROL
EMAIL CONFIG
ALARMS
01/02 PLANT INTRUSION ALARM05/01/18 14:32:19

02:47 PM 05/01/18

KAFB Extraction Wells

PUMP 101

SEQ NUMBER: 1

RUNTIME: 7,856 hrs

CLOSE

P102 - CONTROL: OFF ON SEQ — RUNNING

P103 - CONTROL: OFF ON SEQ — RUNNING

P105 - CONTROL: OFF ON SEQ — RUNNING

P3100

P3200

TANK LEVEL: 7.73 ft

TK 1 IN AVG: NO YES

TANK LEVEL: 7.56 ft

TK 2 IN AVG: NO YES

W228	W233	W234	W239
AUTO	AUTO	AUTO	AUTO
Flow: 141 gpm	Flow: 161 gpm	Flow: 163 gpm	Flow: 74 gpm
PRESS: 63 psi	PRESS: 23 psi	PRESS: 23 psi	PRESS: 43 psi
LEVEL: 17.51 ft	LEVEL: 32.19 ft	LEVEL: 20.74 ft	LEVEL: 28.85 ft
			SPEED: 85 %

LEVEL PID: 100 %

AVG TANK: 7.64 ft

START PID CO: 65 %

START DELAY: 10 sec

STOP PID CO: 50 %

STOP DELAY: 10 sec

OVERVIEW | EXTRACTION WELLS | GW FEED PUMPS 112AB | TW TANK 1 | GW FEED PUMPS 212AB | TW TANK 2 | DISTRIBUTION | TRAIN CONTROL | EMAIL CONFIG | ALARMS

01/02 PLANT INTRUSION ALARM05/01/18 14:32:19

02:47 PM 05/01/18

KAFB Extraction Wells

P101 - CONTROL
OFF ON SEQ
RUNNING

PUMP 102
SEQ NUMBER
3
RUNTIME
7,119 hrs
CLOSE

P103 - CONTROL
OFF ON SEQ
RUNNING

P105 - CONTROL
OFF ON SEQ
RUNNING

P3100
P3200

TANK LEVEL
7.73 ft

TK 1 IN AVG
NO YES

TANK LEVEL
7.60 ft

TK 2 IN AVG
NO YES

AUTO
W228

AUTO
W233

AUTO
W234

AUTO
W239

Flow	PRESS	LEVEL
141 gpm	63 psi	17.51 ft
162 gpm	23 psi	32.19 ft
164 gpm	23 psi	20.74 ft
74 gpm	43 psi	28.89 ft

SPEED
85 %

AVG TANK
7.66 ft

LEVEL PID
100 %

START PID CO
65 %

START DELAY
10 sec

STOP PID CO
50 %

STOP DELAY
10 sec

OVERVIEW | EXTRACTION WELLS | GW FEED PUMPS 112AB | TW TANK 1 | GW FEED PUMPS 212AB | TW TANK 2 | DISTRIBUTION | TRAIN CONTROL | EMAIL CONFIG | ALARMS

02/02 WELL 239 DRAWDOWN LEVEL ELEVATION ALARM 04/23/18 08:51:24

02:47 PM 05/01/18

KAFB Extraction Wells

P101 - CONTROL
OFF ON SEQ
RUNNING

P102 - CONTROL
OFF ON SEQ
RUNNING

PUMP 103
SEQ NUMBER
4
RUNTIME
8,729 hrs
CLOSE

P105 - CONTROL
OFF ON SEQ
RUNNING

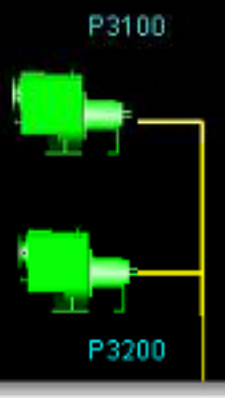

TANK LEVEL
7.71 ft

TK 1 IN AVG
NO YES

TANK LEVEL
7.64 ft

TK 2 IN AVG
NO YES

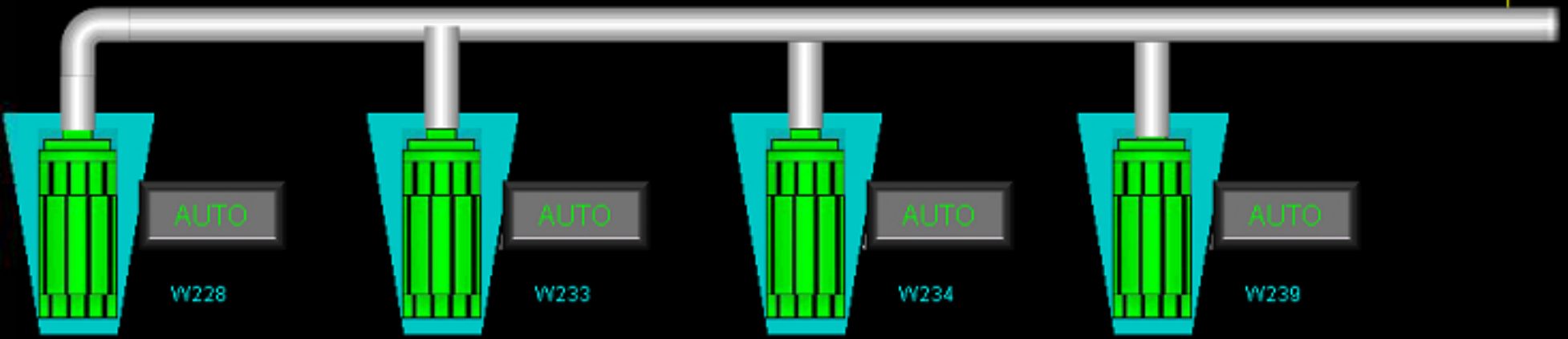

W228	W233	W234	W239
Flow 141 gpm	Flow 162 gpm	Flow 164 gpm	Flow 75 gpm
PRESS 63 psi	PRESS 23 psi	PRESS 23 psi	PRESS 43 psi
LEVEL 17.51 ft	LEVEL 32.14 ft	LEVEL 20.71 ft	LEVEL 28.85 ft
			SPEED 85 %

AVG TANK
7.69 ft

LEVEL PID
100 %

START PID CO
65 %

START DELAY
10 sec

STOP PID CO
50 %

STOP DELAY
10 sec

OVERVIEW | EXTRACTION WELLS | GW FEED PUMPS 112AB | TW TANK 1 | GW FEED PUMPS 212AB | TW TANK 2 | DISTRIBUTION | TRAIN CONTROL | EMAIL CONFIG | ALARMS

01/02 PLANT INTRUSION ALARM05/01/18 14:32:19

02:47 PM 05/01/18

KAFB Extraction Wells

P101 - CONTROL
OFF ON SEQ
RUNNING

P102 - CONTROL
OFF ON SEQ
RUNNING

P103 - CONTROL
OFF ON SEQ
RUNNING

PUMP 105

MIN SPEED	MAX SPEED	SEQ NUMBER
50.0 %	85.0 %	2

RUNTIME
1,078 hrs

CLOSE

P3100

P3200

TANK LEVEL
7.72 ft

TK 1 IN AVG
NO YES

TANK LEVEL
7.68 ft

TK 2 IN AVG
NO YES

AUTO W228

AUTO W233

AUTO W234

AUTO W239

	W228	W233	W234	W239
Flow	141 gpm	161 gpm	164 gpm	75 gpm
PRESS	63 psi	23 psi	23 psi	43 psi
LEVEL	17.51 ft	32.19 ft	20.71 ft	28.89 ft
SPEED				85 %

LEVEL PID
100 %

AVG TANK
7.70 ft

START PID CO	START DELAY
65 %	10 sec

STOP PID CO	STOP DELAY
50 %	10 sec

OVERVIEW | EXTRACTION WELLS | GW FEED PUMPS 112AB | TW TANK 1 | GW FEED PUMPS 212AB | TW TANK 2 | DISTRIBUTION | TRAIN CONTROL | EMAIL CONFIG | ALARMS

01/02 PLANT INTRUSION ALARM05/01/18 14:32:19

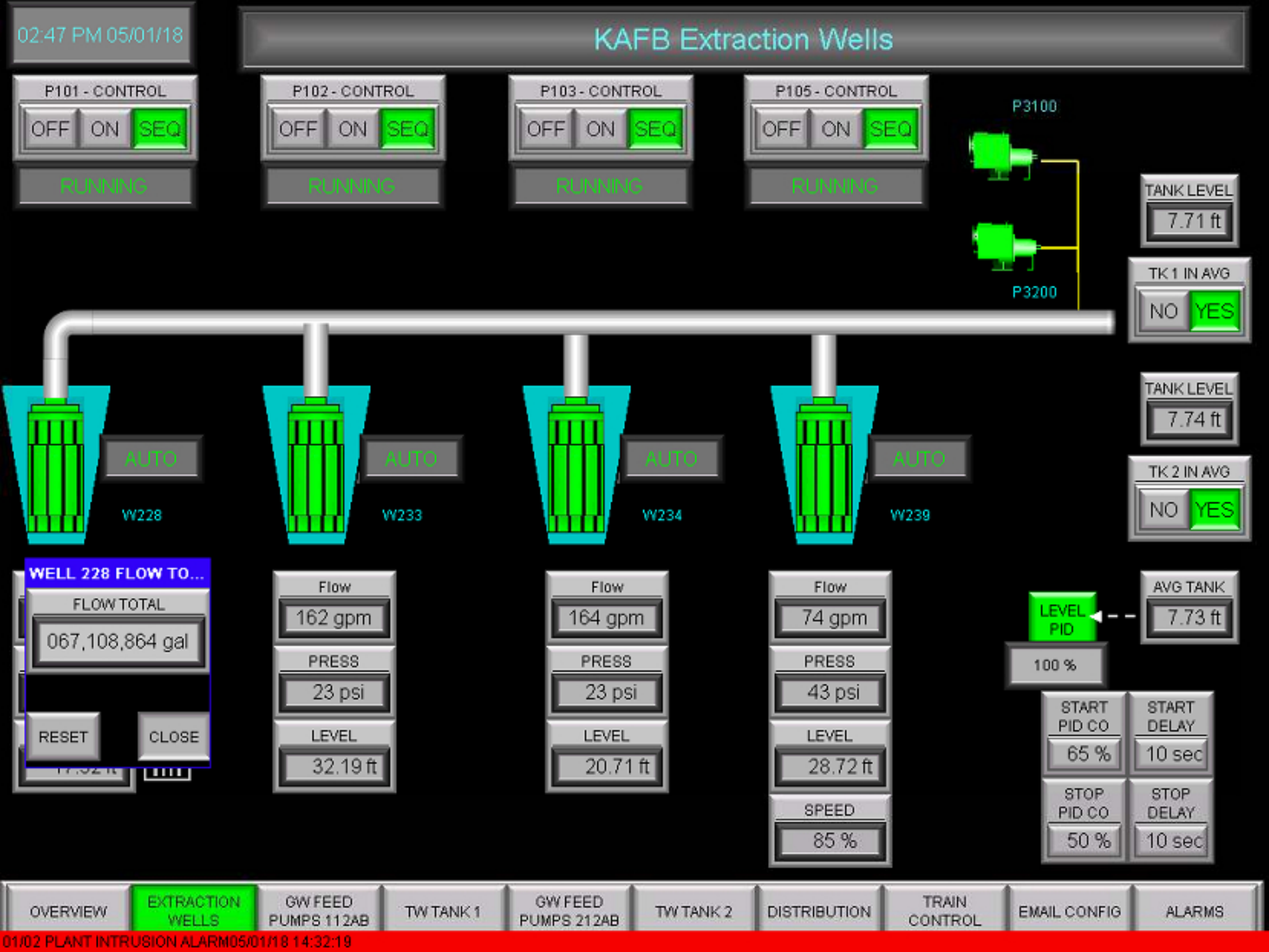
02:47 PM 05/01/18
KAFB Extraction Wells
P101 - CONTROL
OFF ON SEQ
RUNNING
P102 - CONTROL
OFF ON SEQ
RUNNING
P103 - CONTROL
OFF ON SEQ
RUNNING
P105 - CONTROL
OFF ON SEQ
RUNNING
P3100
P3200
TANK LEVEL
7.71 ft
TK 1 IN AVG
NO YES
TANK LEVEL
7.74 ft
TK 2 IN AVG
NO YES
AUTO
W228
AUTO
W233
AUTO
W234
AUTO
W239
WELL 228 FLOW TO...
FLOW TOTAL
067,108,864 gal
RESET
CLOSE
Flow
162 gpm
PRESS
23 psi
LEVEL
32.19 ft
Flow
164 gpm
PRESS
23 psi
LEVEL
20.71 ft
Flow
74 gpm
PRESS
43 psi
LEVEL
28.72 ft
SPEED
85 %
AVG TANK
7.73 ft
LEVEL PID
100 %
START PID CO
65 %
START DELAY
10 sec
STOP PID CO
50 %
STOP DELAY
10 sec
OVERVIEW
EXTRACTION WELLS
GW FEED PUMPS 112AB
TW TANK 1
GW FEED PUMPS 212AB
TW TANK 2
DISTRIBUTION
TRAIN CONTROL
EMAIL CONFIG
ALARMS
01/02 PLANT INTRUSION ALARM05/01/18 14:32:19

02:47 PM 05/01/18

KAFB Extraction Wells

P101 - CONTROL
OFF ON SEQ
RUNNING

P102 - CONTROL
OFF ON SEQ
RUNNING

P103 - CONTROL
OFF ON SEQ
RUNNING

P105 - CONTROL
OFF ON SEQ
RUNNING

P3100

P3200

TANK LEVEL
7.71 ft

TK 1 IN AVG
NO YES

TANK LEVEL
7.80 ft

TK 2 IN AVG
NO YES

AUTO
W228

AUTO
W233

AUTO
W234

AUTO
W239

Flow
141 gpm

PRESS
63 psi

LEVEL
17.52 ft

WELL 233 FLOW TO...
FLOW TOTAL
067,108,864 gal
RESET
CLOSE

Flow
163 gpm

PRESS
23 psi

LEVEL
20.72 ft

Flow
75 gpm

PRESS
43 psi

LEVEL
28.77 ft

SPEED
85 %

AVG TANK
7.75 ft

LEVEL PID
100 %

START PID CO
65 %

START DELAY
10 sec

STOP PID CO
50 %

STOP DELAY
10 sec

OVERVIEW | EXTRACTION WELLS | GW FEED PUMPS 112AB | TW TANK 1 | GW FEED PUMPS 212AB | TW TANK 2 | DISTRIBUTION | TRAIN CONTROL | EMAIL CONFIG | ALARMS

01/02 PLANT INTRUSION ALARM05/01/18 14:32:19

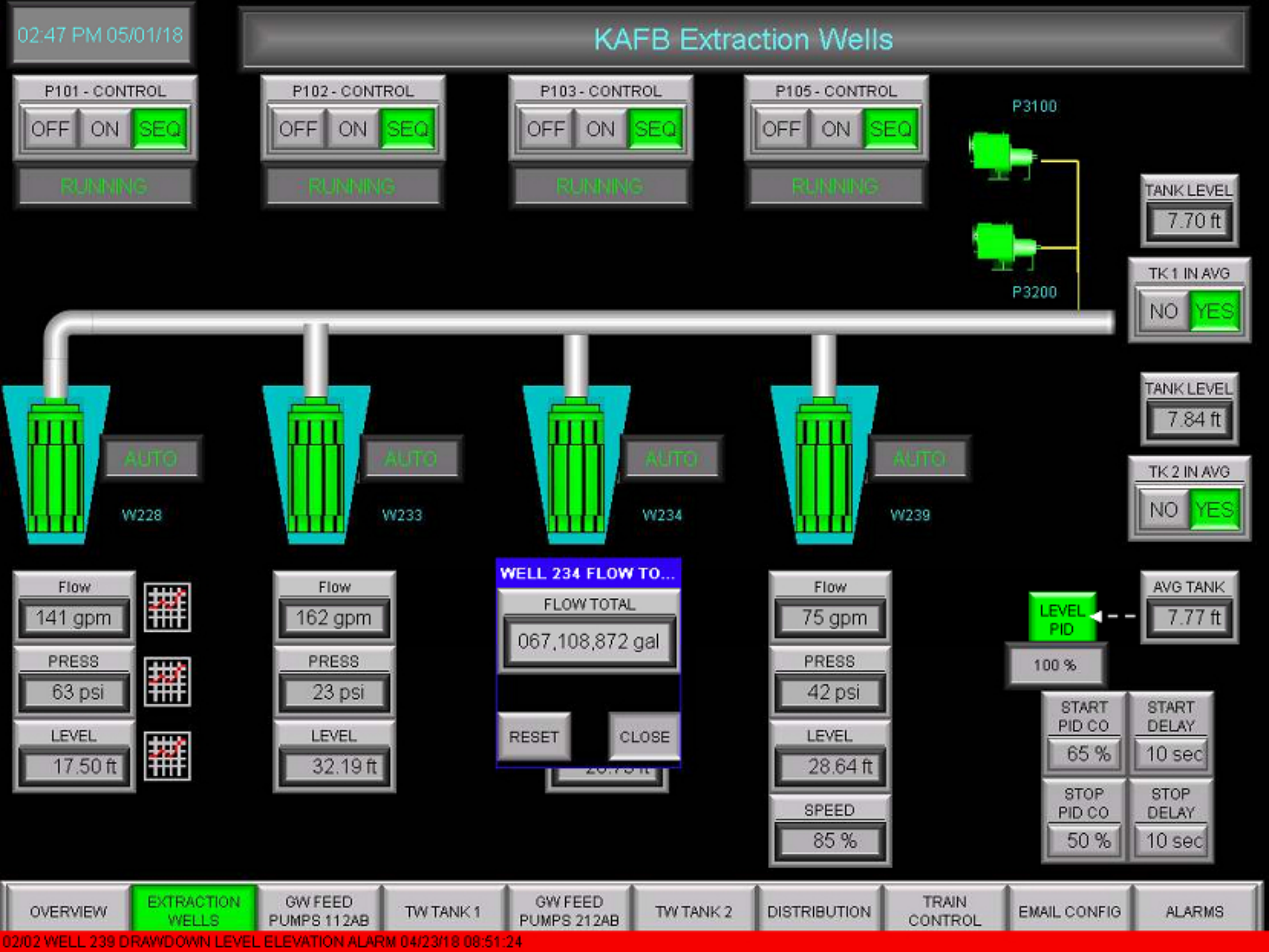
02:47 PM 05/01/18
KAFB Extraction Wells
P101 - CONTROL
OFF ON SEQ
RUNNING
P102 - CONTROL
OFF ON SEQ
RUNNING
P103 - CONTROL
OFF ON SEQ
RUNNING
P105 - CONTROL
OFF ON SEQ
RUNNING
P3100
P3200
TANK LEVEL
7.70 ft
TK 1 IN AVG
NO YES
TANK LEVEL
7.84 ft
TK 2 IN AVG
NO YES
AUTO
W228
AUTO
W233
AUTO
W234
AUTO
W239
Flow
141 gpm
PRESS
63 psi
LEVEL
17.50 ft
Flow
162 gpm
PRESS
23 psi
LEVEL
32.19 ft
WELL 234 FLOW TO...
FLOW TOTAL
067,108,872 gal
RESET
CLOSE
Flow
75 gpm
PRESS
42 psi
LEVEL
28.64 ft
SPEED
85 %
AVG TANK
7.77 ft
LEVEL PID
100 %
START PID CO
65 %
START DELAY
10 sec
STOP PID CO
50 %
STOP DELAY
10 sec
OVERVIEW
EXTRACTION WELLS
GW FEED PUMPS 112AB
TW TANK 1
GW FEED PUMPS 212AB
TW TANK 2
DISTRIBUTION
TRAIN CONTROL
EMAIL CONFIG
ALARMS
02/02 WELL 239 DRAWDOWN LEVEL ELEVATION ALARM 04/23/18 08:51:24

02:48 PM 05/01/18

KAFB Extraction Wells

P101 - CONTROL
OFF ON SEQ
RUNNING

P102 - CONTROL
OFF ON SEQ
RUNNING

P103 - CONTROL
OFF ON SEQ
RUNNING

P105 - CONTROL
OFF ON SEQ
RUNNING

P3100

P3200

TANK LEVEL
7.69 ft

TK 1 IN AVG
NO YES

TANK LEVEL
7.88 ft

TK 2 IN AVG
NO YES

AUTO
W228

AUTO
W233

AUTO
W234

AUTO
W239

Flow
141 gpm
PRESS
63 psi
LEVEL
17.51 ft

Flow
162 gpm
PRESS
23 psi
LEVEL
32.19 ft

Flow
164 gpm
PRESS
23 psi
LEVEL
20.72 ft

WELL 235 FLOW TO...
FLOW TOTAL
003,876,928 gal
RESET
CLOSE
SPEED
85 %

AVG TANK
7.79 ft
LEVEL PID
100 %
START PID CO
65 %
START DELAY
10 sec
STOP PID CO
50 %
STOP DELAY
10 sec

OVERVIEW | EXTRACTION WELLS | GW FEED PUMPS 112AB | TW TANK 1 | GW FEED PUMPS 212AB | TW TANK 2 | DISTRIBUTION | TRAIN CONTROL | EMAIL CONFIG | ALARMS

02/02 WELL 239 DRAWDOWN LEVEL ELEVATION ALARM 04/23/18 08:51:24

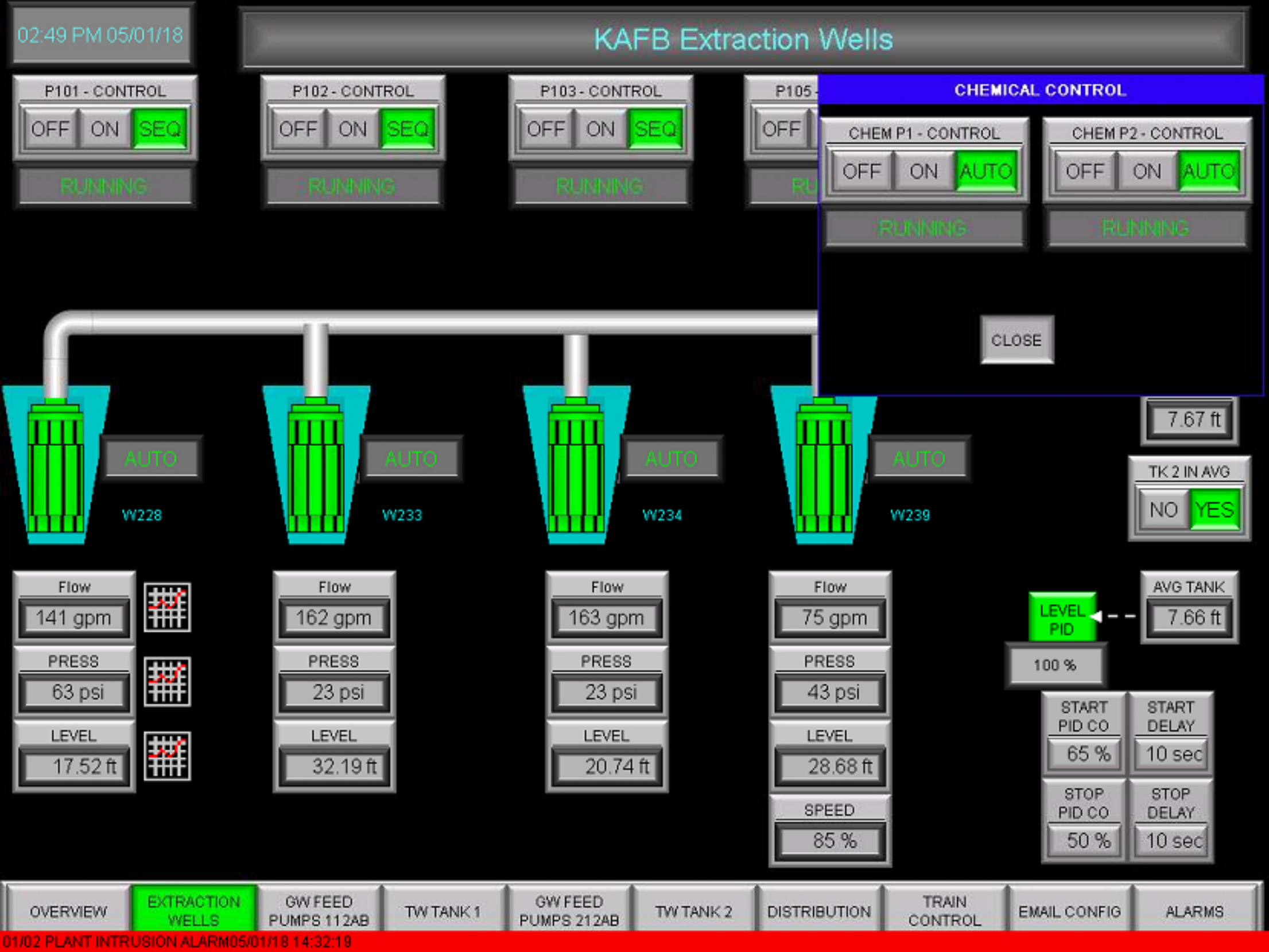
02:49 PM 05/01/18
KAFB Extraction Wells
P101 - CONTROL
OFF ON SEQ
RUNNING
P102 - CONTROL
OFF ON SEQ
RUNNING
P103 - CONTROL
OFF ON SEQ
RUNNING
P105 -
OFF
RU
CHEMICAL CONTROL
CHEM P1 - CONTROL
OFF ON AUTO
RUNNING
CHEM P2 - CONTROL
OFF ON AUTO
RUNNING
CLOSE
AUTO
W228
AUTO
W233
AUTO
W234
AUTO
W239
7.67 ft
TK 2 IN AVG
NO YES
Flow
141 gpm
PRESS
63 psi
LEVEL
17.52 ft
Flow
162 gpm
PRESS
23 psi
LEVEL
32.19 ft
Flow
163 gpm
PRESS
23 psi
LEVEL
20.74 ft
Flow
75 gpm
PRESS
43 psi
LEVEL
28.68 ft
SPEED
85 %
LEVEL PID
100 %
AVG TANK
7.66 ft
START PID CO
65 %
START DELAY
10 sec
STOP PID CO
50 %
STOP DELAY
10 sec
OVERVIEW
EXTRACTION WELLS
GW FEED PUMPS 112AB
TW TANK 1
GW FEED PUMPS 212AB
TW TANK 2
DISTRIBUTION
TRAIN CONTROL
EMAIL CONFIG
ALARMS
01/02 PLANT INTRUSION ALARM05/01/18 14:32:19

02:49 PM 05/01/18

KAFB Extraction Wells

P101 - CONTROL
OFF ON SEQ
RUNNING

P102 - CONTROL
OFF ON SEQ
RUNNING

P103 - CONTROL
OFF ON SEQ
RUNNING

P105 - CONTROL
OFF ON SEQ
RUNNING

P3100

P3200

TANK LEVEL
7.65 ft

TK 1 IN AVG
NO YES

AUTO
W228

AUTO
W233

AUTO
W234

W228	W233	W234
Flow 141 gpm	Flow 161 gpm	Flow 164 gpm
PRESS 63 psi	PRESS 23 psi	PRESS 23 psi
LEVEL 17.52 ft	LEVEL 32.19 ft	LEVEL 20.71 ft

GW Feed Tanks Avg - Level Ctrl

CLR STOP

SETPOINT
9.5 ft

AUTO

10.00
7.50
5.00
2.50
0.00
89 91.5 94 96.5 99
OUTPUT 100%
AUTO

KP 1.75
KI 0.020
KD 0.00

CLOSE

LEVEL
28.85 ft

SPEED
85 %

65 %
10 sec

STOP PID CO
50 %

STOP DELAY
10 sec

OVERVIEW | EXTRACTION WELLS | GW FEED PUMPS 112AB | TW TANK 1 | GW FEED PUMPS 212AB | TW TANK 2 | DISTRIBUTION | TRAIN CONTROL | EMAIL CONFIG | ALARMS

01/02 PLANT INTRUSION ALARM05/01/18 14:32:19

02:50 PM 05/01/18

EXTRACTION WELLS DISCHARGE FLOW

CLOSE

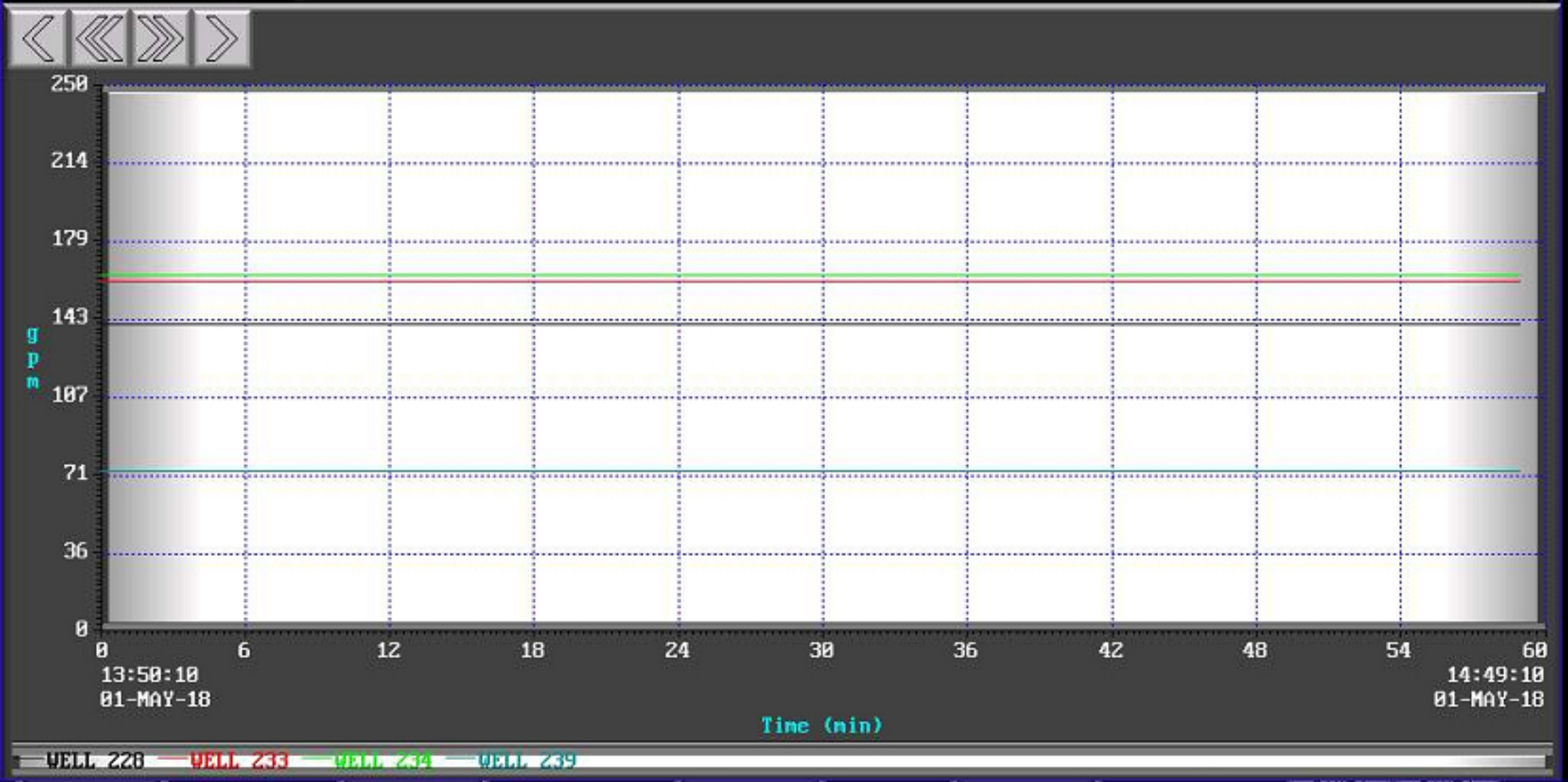

LEVEL 17.52 ft

LEVEL 32.23 ft

LEVEL 20.71 ft

LEVEL 28.85 ft

SPEED 85 %

START PID CO 65 %

START DELAY 10 sec

STOP PID CO 50 %

STOP DELAY 10 sec

OVERVIEW | EXTRACTION WELLS | GW FEED PUMPS 112AB | TW TANK 1 | GW FEED PUMPS 212AB | TW TANK 2 | DISTRIBUTION | TRAIN CONTROL | EMAIL CONFIG | ALARMS

01/02 PLANT INTRUSION ALARM05/01/18 14:32:19

02:50 PM 05/01/18

EXTRACTION WELL PRESSURES

CLOSE

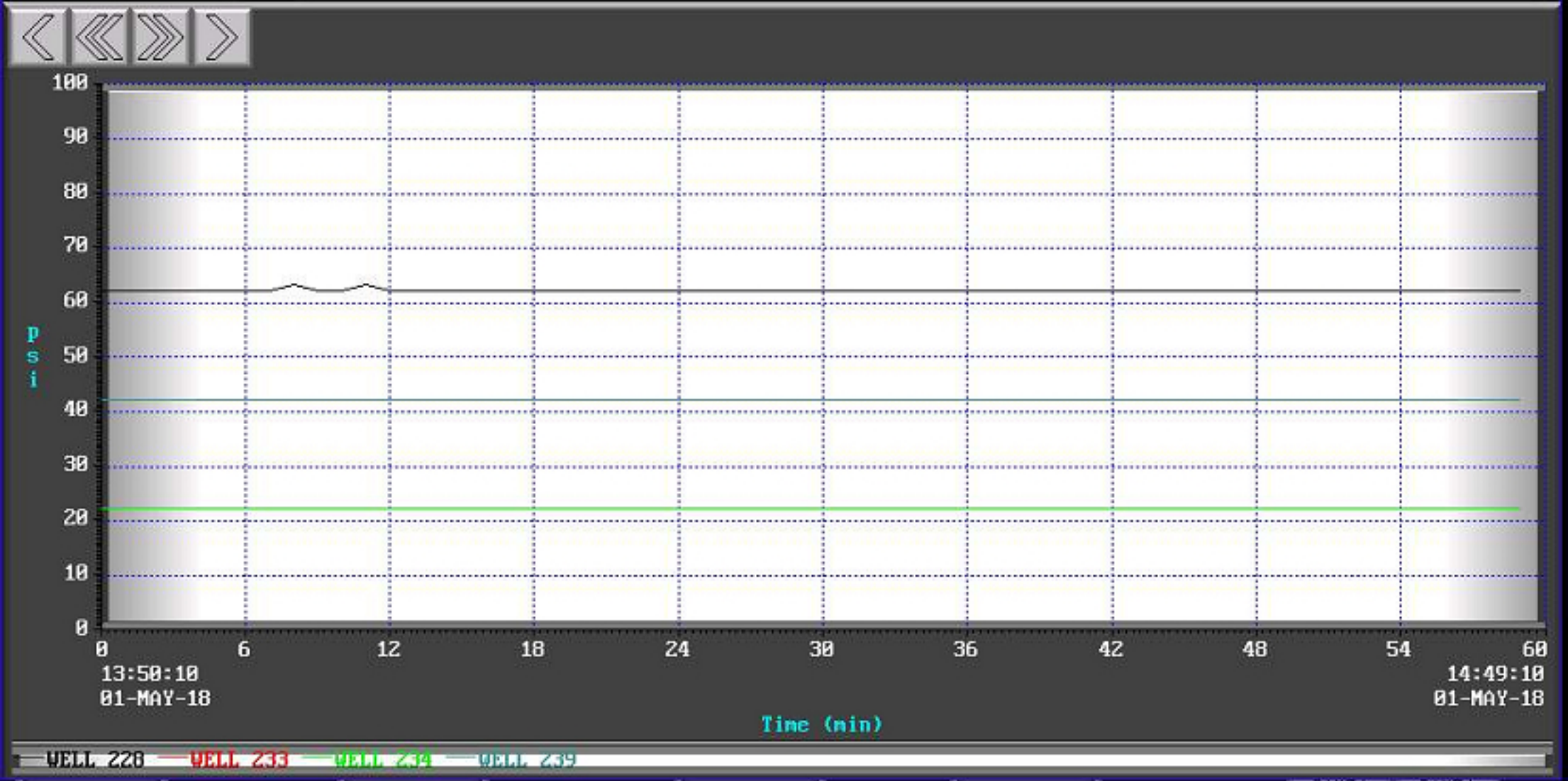

LEVEL
17.51 ft

LEVEL
32.23 ft

LEVEL
20.74 ft

LEVEL
28.89 ft

SPEED
85 %

START PID CO
65 %

START DELAY
10 sec

STOP PID CO
50 %

STOP DELAY
10 sec

OVERVIEW | EXTRACTION WELLS | GW FEED PUMPS 112AB | TW TANK 1 | GW FEED PUMPS 212AB | TW TANK 2 | DISTRIBUTION | TRAIN CONTROL | EMAIL CONFIG | ALARMS

02/02 WELL 239 DRAWDOWN LEVEL ELEVATION ALARM 04/23/18 08:51:24

02:50 PM 05/01/18

EXTRACTION WELLS DRAWDOWN LEVEL

CLOSE

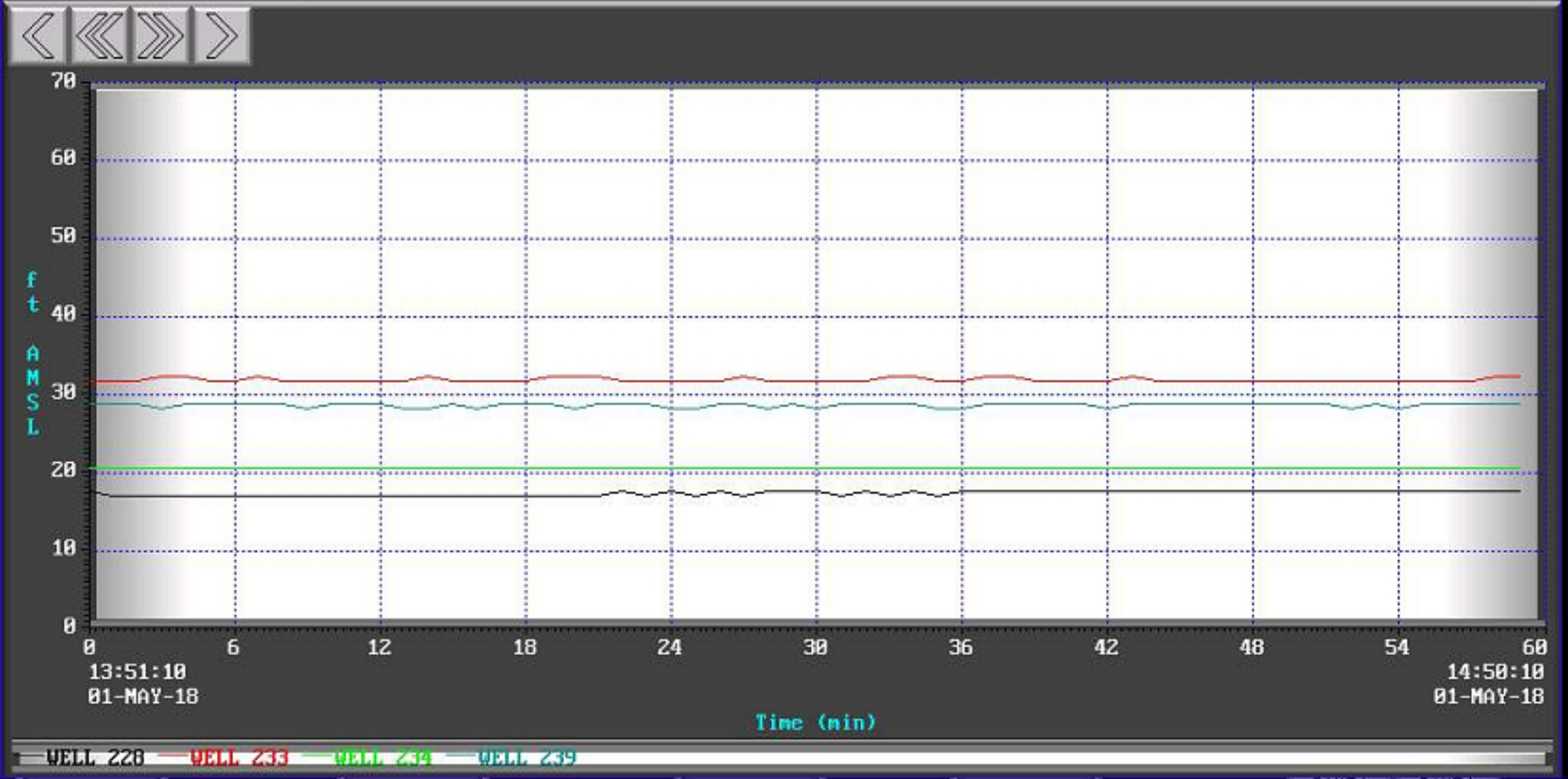

LEVEL
17.51 ft

LEVEL
32.23 ft

LEVEL
20.73 ft

LEVEL
29.06 ft

SPEED
85 %

START PID CO
65 %

START DELAY
10 sec

STOP PID CO
50 %

STOP DELAY
10 sec

OVERVIEW | EXTRACTION WELLS | GW FEED PUMPS 112AB | TW TANK 1 | GW FEED PUMPS 212AB | TW TANK 2 | DISTRIBUTION | TRAIN CONTROL | EMAIL CONFIG | ALARMS

02/02 WELL 239 DRAWDOWN LEVEL ELEVATION ALARM 04/23/18 08:51:24

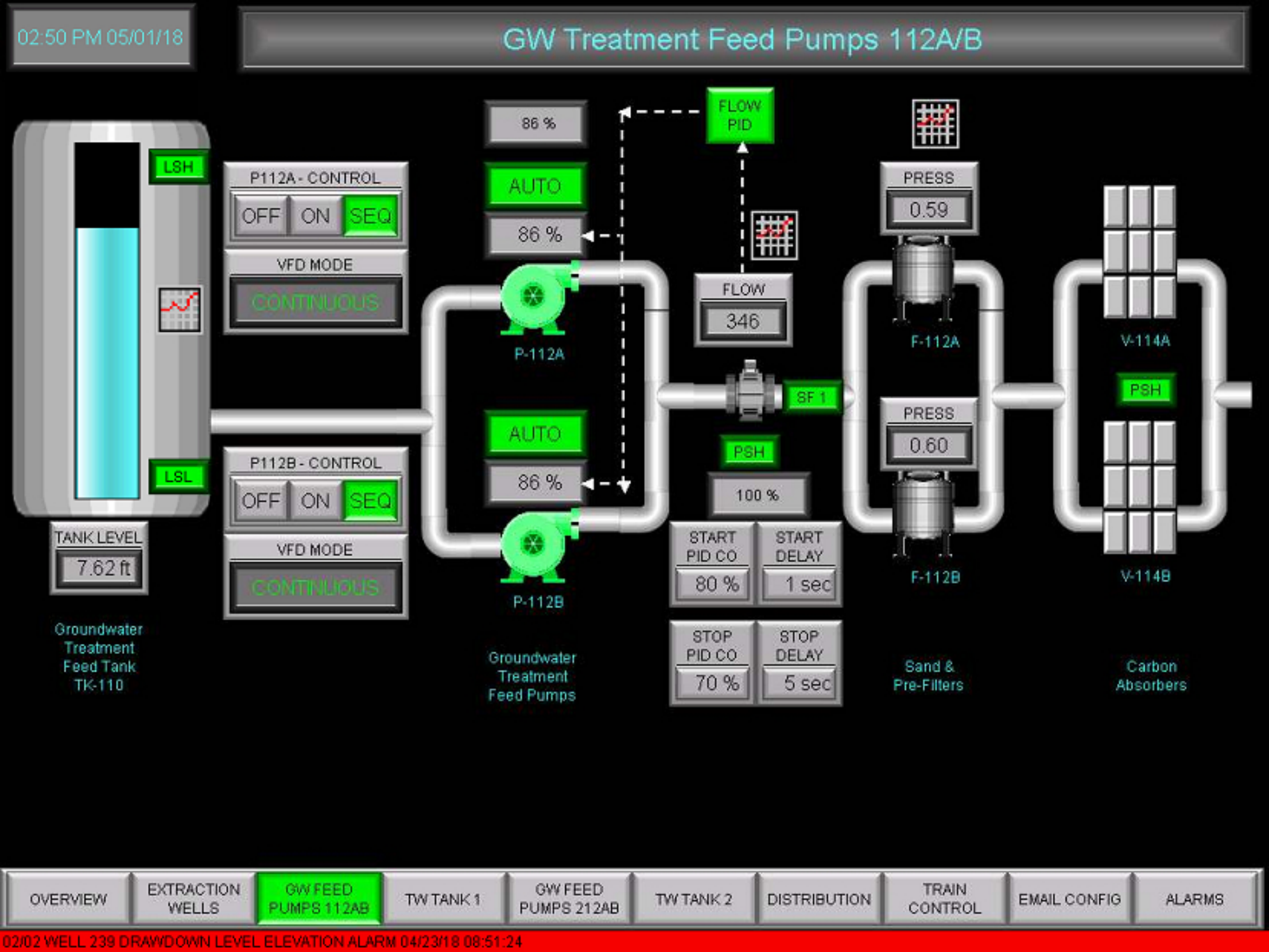
02:50 PM 05/01/18
GW Treatment Feed Pumps 112A/B
LSH
LSL
TANK LEVEL
7.62 ft
Groundwater Treatment Feed Tank TK-110
P112A - CONTROL
OFF
ON
SEQ
VFD MODE
CONTINUOUS
P112B - CONTROL
OFF
ON
SEQ
VFD MODE
CONTINUOUS
86 %
AUTO
86 %
P-112A
AUTO
86 %
P-112B
Groundwater Treatment Feed Pumps
FLOW PID
FLOW
346
SF 1
PSH
100 %
START PID CO
80 %
START DELAY
1 sec
STOP PID CO
70 %
STOP DELAY
5 sec
PRESS
0.59
F-112A
PRESS
0.60
F-112B
Sand & Pre-Filters
V-114A
PSH
V-114B
Carbon Absorbers
OVERVIEW
EXTRACTION WELLS
GW FEED PUMPS 112AB
TW TANK 1
GW FEED PUMPS 212AB
TW TANK 2
DISTRIBUTION
TRAIN CONTROL
EMAIL CONFIG
ALARMS
02/02 WELL 239 DRAWDOWN LEVEL ELEVATION ALARM 04/23/18 08:51:24

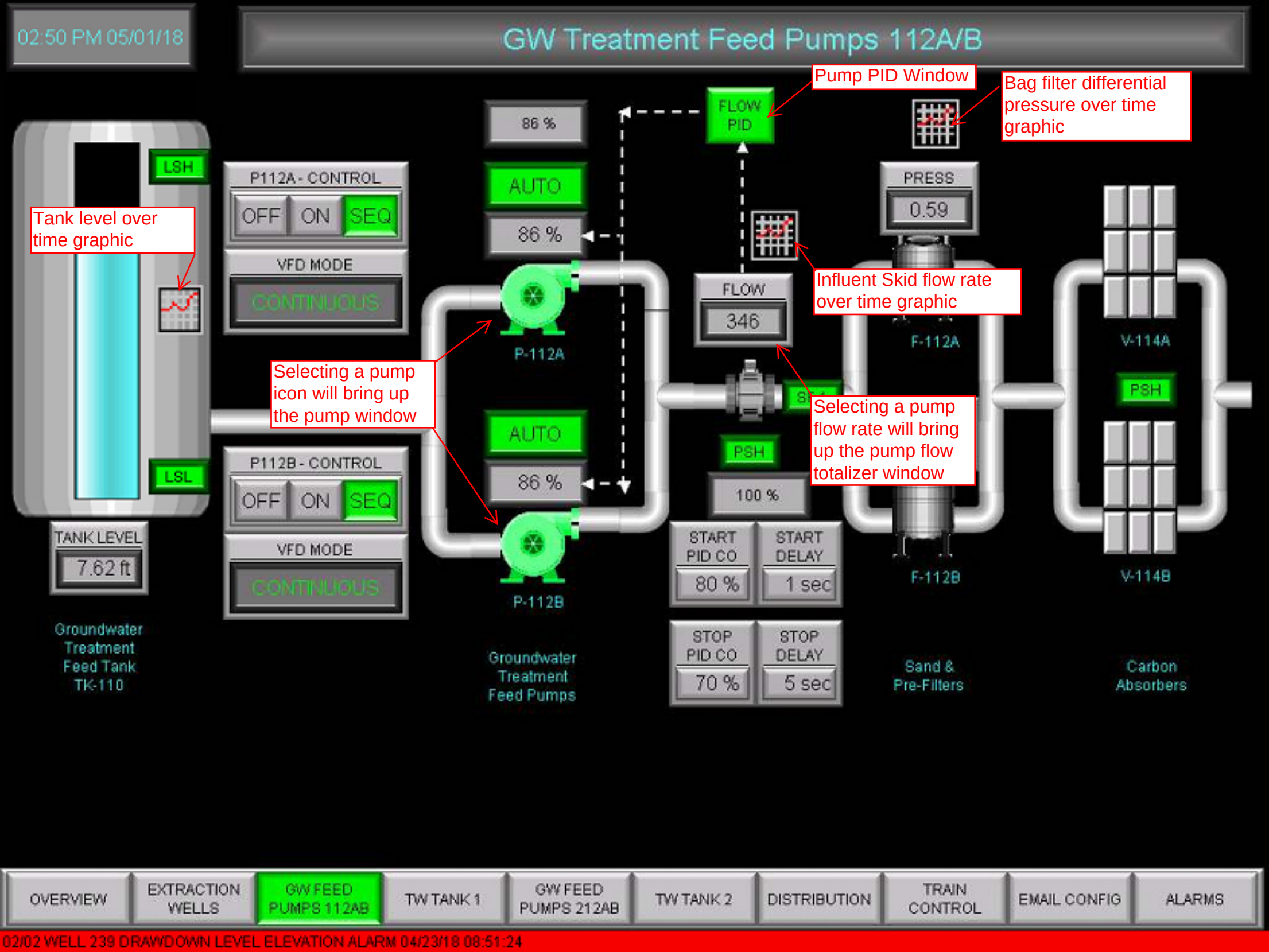
02:50 PM 05/01/18
GW Treatment Feed Pumps 112A/B
Pump PID Window
Bag filter differential pressure over time graphic
Tank level over time graphic
Influent Skid flow rate over time graphic
Selecting a pump icon will bring up the pump window
Selecting a pump flow rate will bring up the pump flow totalizer window
LSH
LSL
TANK LEVEL
7.62 ft
Groundwater Treatment Feed Tank TK-110
P112A - CONTROL
OFF ON SEQ
VFD MODE
CONTINUOUS
P112B - CONTROL
OFF ON SEQ
VFD MODE
CONTINUOUS
86 %
AUTO
86 %
P-112A
AUTO
86 %
P-112B
Groundwater Treatment Feed Pumps
FLOW PID
FLOW
346
PSH
100 %
START PID CO
80 %
START DELAY
1 sec
STOP PID CO
70 %
STOP DELAY
5 sec
PRESS
0.59
F-112A
F-112B
Sand & Pre-Filters
V-114A
PSH
V-114B
Carbon Absorbers
OVERVIEW
EXTRACTION WELLS
GW FEED PUMPS 112AB
TW TANK 1
GW FEED PUMPS 212AB
TW TANK 2
DISTRIBUTION
TRAIN CONTROL
EMAIL CONFIG
ALARMS
02/02 WELL 239 DRAWDOWN LEVEL ELEVATION ALARM 04/23/18 08:51:24

02:50 PM 05/01/18

TANK LEVELS

CLOSE

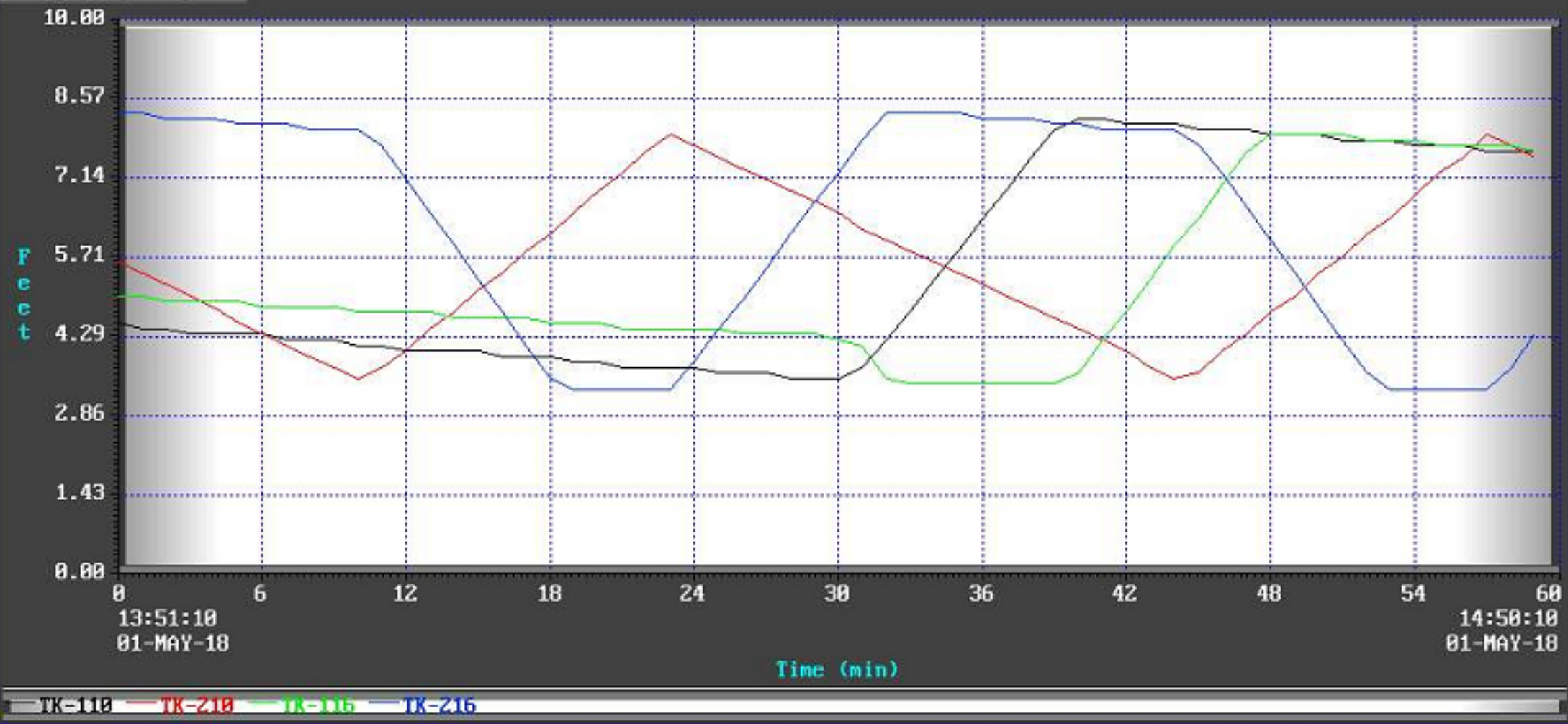

OVERVIEW | EXTRACTION WELLS | GW FEED PUMPS 112AB | TW TANK 1 | GW FEED PUMPS 212AB | TW TANK 2 | DISTRIBUTION | TRAIN CONTROL | EMAIL CONFIG | ALARMS

02/02 WELL 239 DRAWDOWN LEVEL ELEVATION ALARM 04/23/18 08:51:24

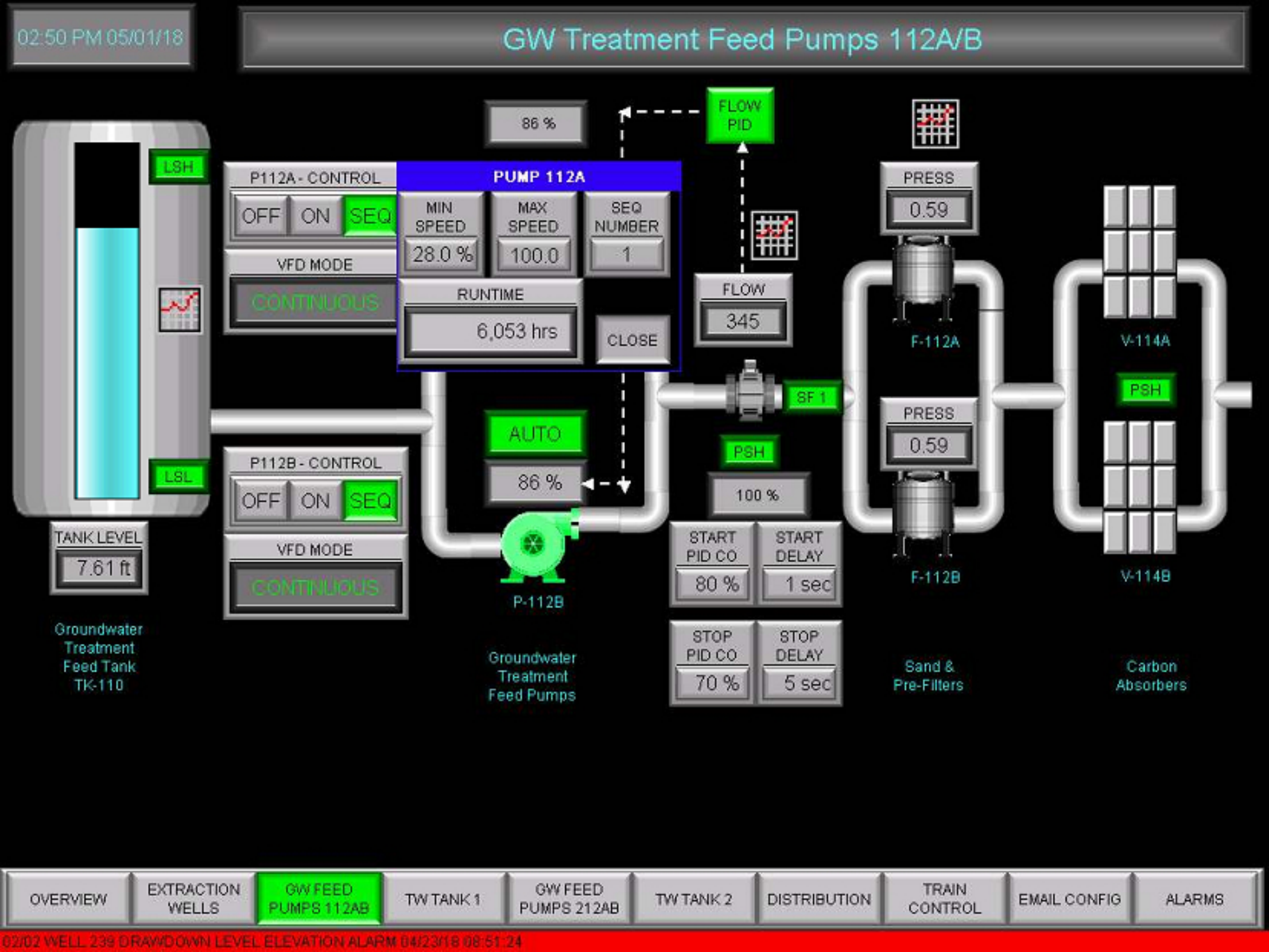
02:50 PM 05/01/18
GW Treatment Feed Pumps 112A/B
86 %
FLOW PID
LSH
LSL
P112A - CONTROL
OFF
ON
SEQ
VFD MODE
CONTINUOUS
PUMP 112A
MIN SPEED
28.0 %
MAX SPEED
100.0
SEQ NUMBER
1
RUNTIME
6,053 hrs
CLOSE
FLOW
345
PRESS
0.59
F-112A
V-114A
PSH
SF 1
PRESS
0.59
F-112B
V-114B
AUTO
86 %
PSH
100 %
P112B - CONTROL
OFF
ON
SEQ
VFD MODE
CONTINUOUS
START PID CO
80 %
START DELAY
1 sec
STOP PID CO
70 %
STOP DELAY
5 sec
TANK LEVEL
7.61 ft
P-112B
Groundwater Treatment Feed Tank TK-110
Groundwater Treatment Feed Pumps
Sand & Pre-Filters
Carbon Absorbers
OVERVIEW
EXTRACTION WELLS
GW FEED PUMPS 112AB
TW TANK 1
GW FEED PUMPS 212AB
TW TANK 2
DISTRIBUTION
TRAIN CONTROL
EMAIL CONFIG
ALARMS
02/02 WELL 239 DRAWDOWN LEVEL ELEVATION ALARM 04/23/18 08:51:24

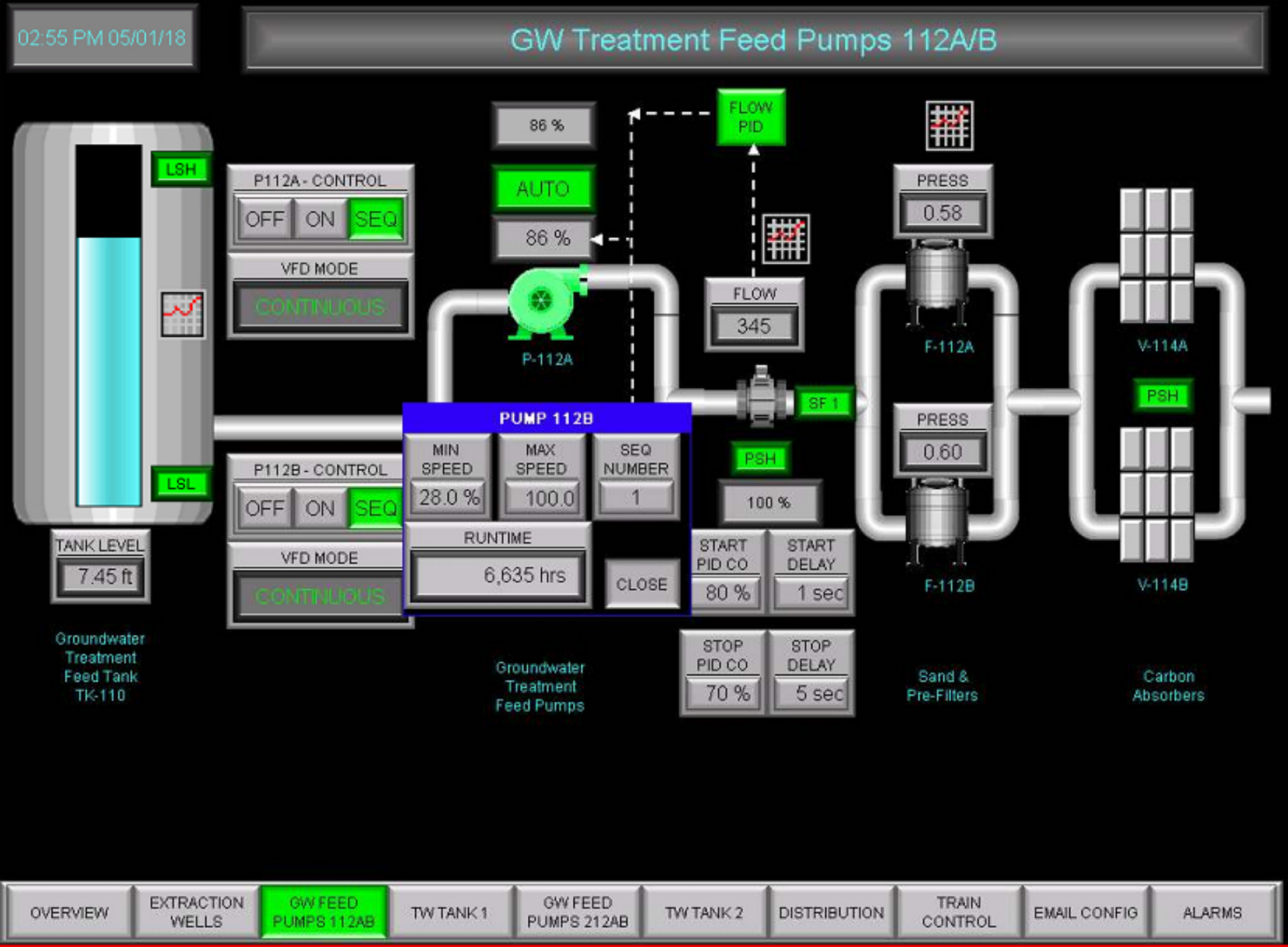
02:55 PM 05/01/18
GW Treatment Feed Pumps 112A/B
LSH
LSL
TANK LEVEL
7.45 ft
Groundwater Treatment Feed Tank TK-110
P112A - CONTROL
OFF ON SEQ
VFD MODE
CONTINUOUS
P112B - CONTROL
OFF ON SEQ
VFD MODE
CONTINUOUS
86 %
AUTO
86 %
FLOW PID
P-112A
FLOW
345
PUMP 112B
MIN SPEED
28.0 %
MAX SPEED
100.0
SEQ NUMBER
1
RUNTIME
6,635 hrs
CLOSE
Groundwater Treatment Feed Pumps
SF 1
PSH
100 %
START PID CO
80 %
START DELAY
1 sec
STOP PID CO
70 %
STOP DELAY
5 sec
PRESS
0.58
F-112A
PRESS
0.60
F-112B
Sand & Pre-Filters
V-114A
PSH
V-114B
Carbon Absorbers
OVERVIEW
EXTRACTION WELLS
GW FEED PUMPS 112AB
TW TANK 1
GW FEED PUMPS 212AB
TW TANK 2
DISTRIBUTION
TRAIN CONTROL
EMAIL CONFIG
ALARMS
01/02 PLANT INTRUSION ALARM05/01/18 14:32:19

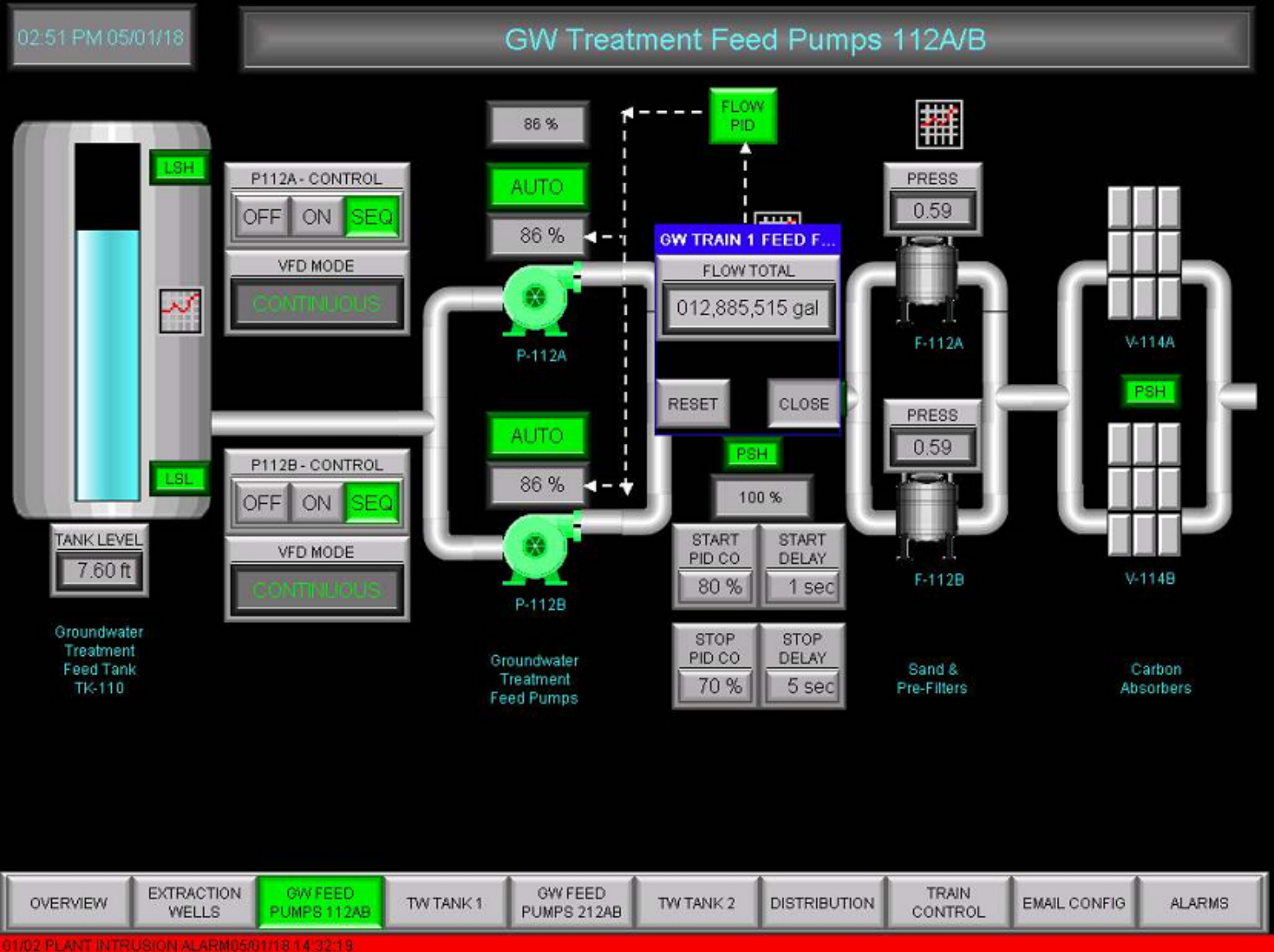
02:51 PM 05/01/18
GW Treatment Feed Pumps 112A/B
LSH
LSL
TANK LEVEL
7.60 ft
Groundwater Treatment Feed Tank TK-110
P112A - CONTROL
OFF ON SEQ
VFD MODE
CONTINUOUS
P112B - CONTROL
OFF ON SEQ
VFD MODE
CONTINUOUS
86 %
AUTO
86 %
P-112A
AUTO
86 %
P-112B
Groundwater Treatment Feed Pumps
FLOW PID
GW TRAIN 1 FEED F...
FLOW TOTAL
012,885,515 gal
RESET
CLOSE
PSH
100 %
START PID CO
80 %
START DELAY
1 sec
STOP PID CO
70 %
STOP DELAY
5 sec
PRESS
0.59
F-112A
PRESS
0.59
F-112B
Sand & Pre-Filters
V-114A
PSH
V-114B
Carbon Absorbers
OVERVIEW
EXTRACTION WELLS
GW FEED PUMPS 112AB
TW TANK 1
GW FEED PUMPS 212AB
TW TANK 2
DISTRIBUTION
TRAIN CONTROL
EMAIL CONFIG
ALARMS
01/02 PLANT INTRUSION ALARM05/01/18 14:32:19

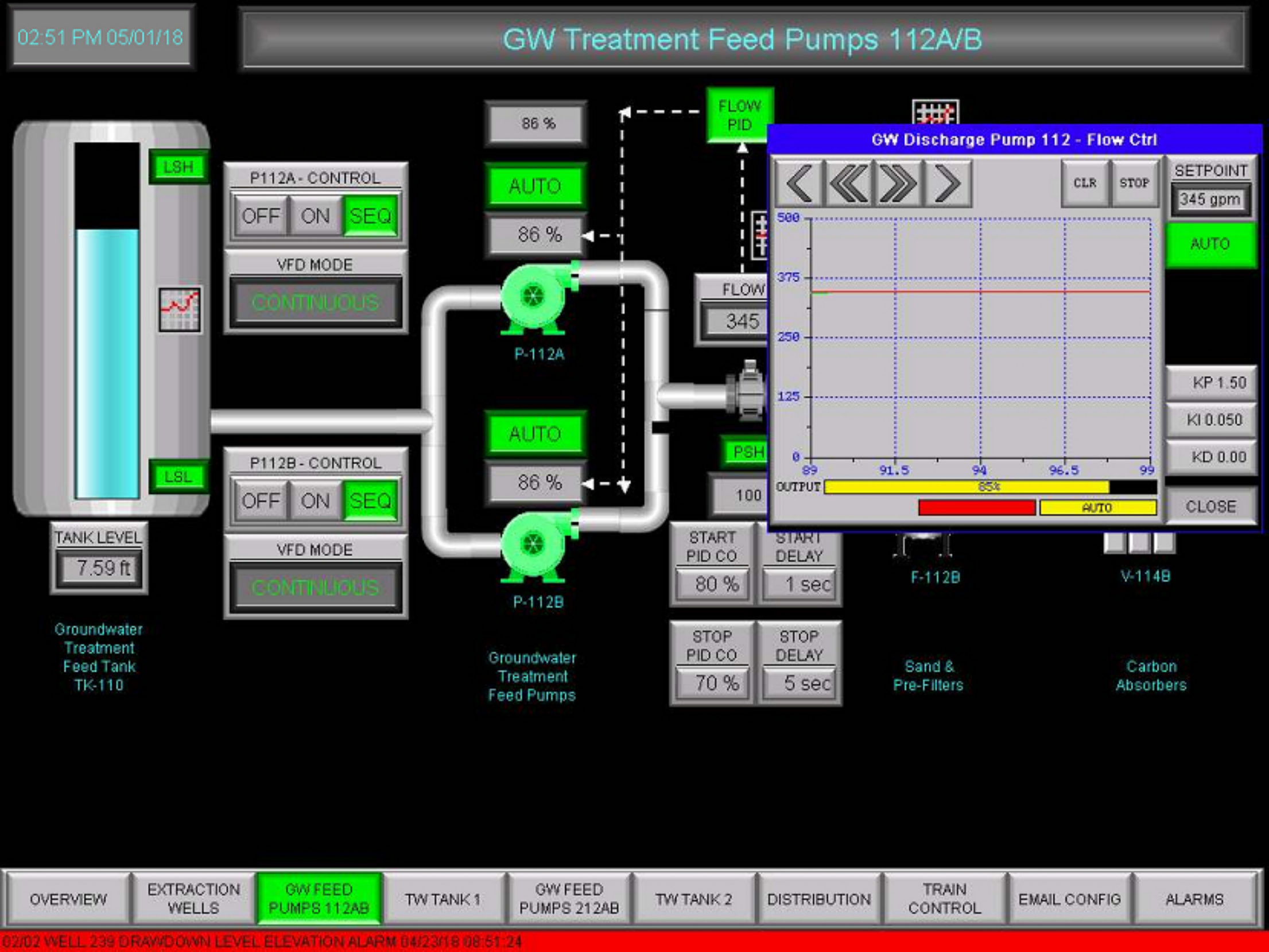
02:51 PM 05/01/18
GW Treatment Feed Pumps 112A/B
LSH
LSL
TANK LEVEL
7.59 ft
Groundwater Treatment Feed Tank TK-110
P112A - CONTROL
OFF ON SEQ
VFD MODE
CONTINUOUS
P112B - CONTROL
OFF ON SEQ
VFD MODE
CONTINUOUS
86 %
AUTO
86 %
P-112A
AUTO
86 %
P-112B
Groundwater Treatment Feed Pumps
FLOW PID
FLOW
345
PSH
100
START PID CO
80 %
START DELAY
1 sec
STOP PID CO
70 %
STOP DELAY
5 sec
F-112B
Sand & Pre-Filters
V-114B
Carbon Absorbers
GW Discharge Pump 112 - Flow Ctrl
CLR
STOP
SETPOINT
345 gpm
AUTO
500
375
250
125
0
89
91.5
94
96.5
99
OUTPUT
65%
AUTO
KP 1.50
KI 0.050
KD 0.00
CLOSE
OVERVIEW
EXTRACTION WELLS
GW FEED PUMPS 112AB
TW TANK 1
GW FEED PUMPS 212AB
TW TANK 2
DISTRIBUTION
TRAIN CONTROL
EMAIL CONFIG
ALARMS
02/02 WELL 239 DRAWDOWN LEVEL ELEVATION ALARM 04/23/18 08:51:24

02:51 PM 05/01/18

GROUNDWATER TRAIN 1 FEED FLOW

CLOSE

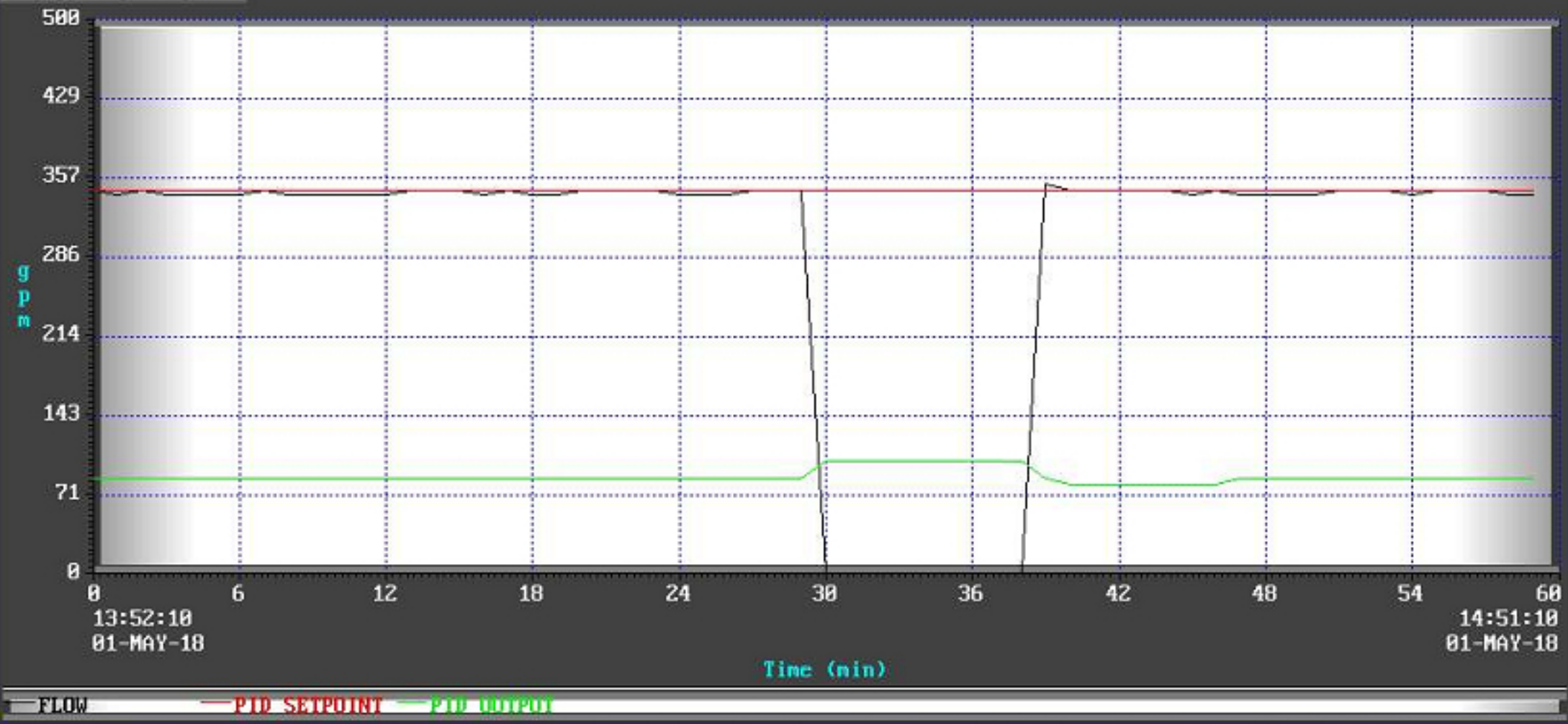

OVERVIEW | EXTRACTION WELLS | GW FEED PUMPS 112AB | TW TANK 1 | GW FEED PUMPS 212AB | TW TANK 2 | DISTRIBUTION | TRAIN CONTROL | EMAIL CONFIG | ALARMS

02/02 WELL 239 DRAWDOWN LEVEL ELEVATION ALARM 04/23/18 08:51:24

02:51 PM 05/01/18

BAG FILTER DIFFERENTIAL PRESSURES

CLOSE

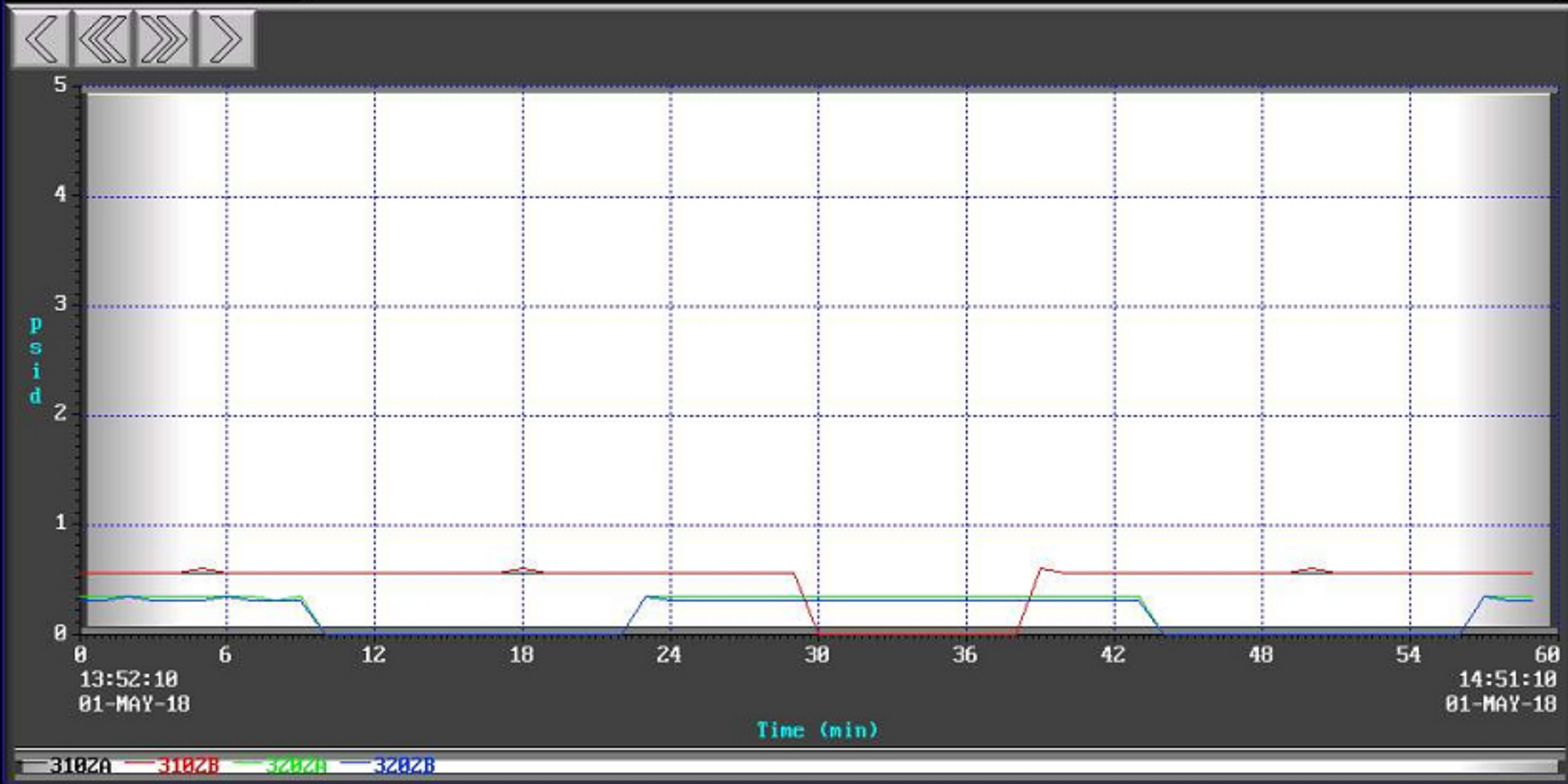

OVERVIEW | EXTRACTION WELLS | GW FEED PUMPS 112AB | TW TANK 1 | GW FEED PUMPS 212AB | TW TANK 2 | DISTRIBUTION | TRAIN CONTROL | EMAIL CONFIG | ALARMS

01/02 PLANT INTRUSION ALARM05/01/18 14:32:19

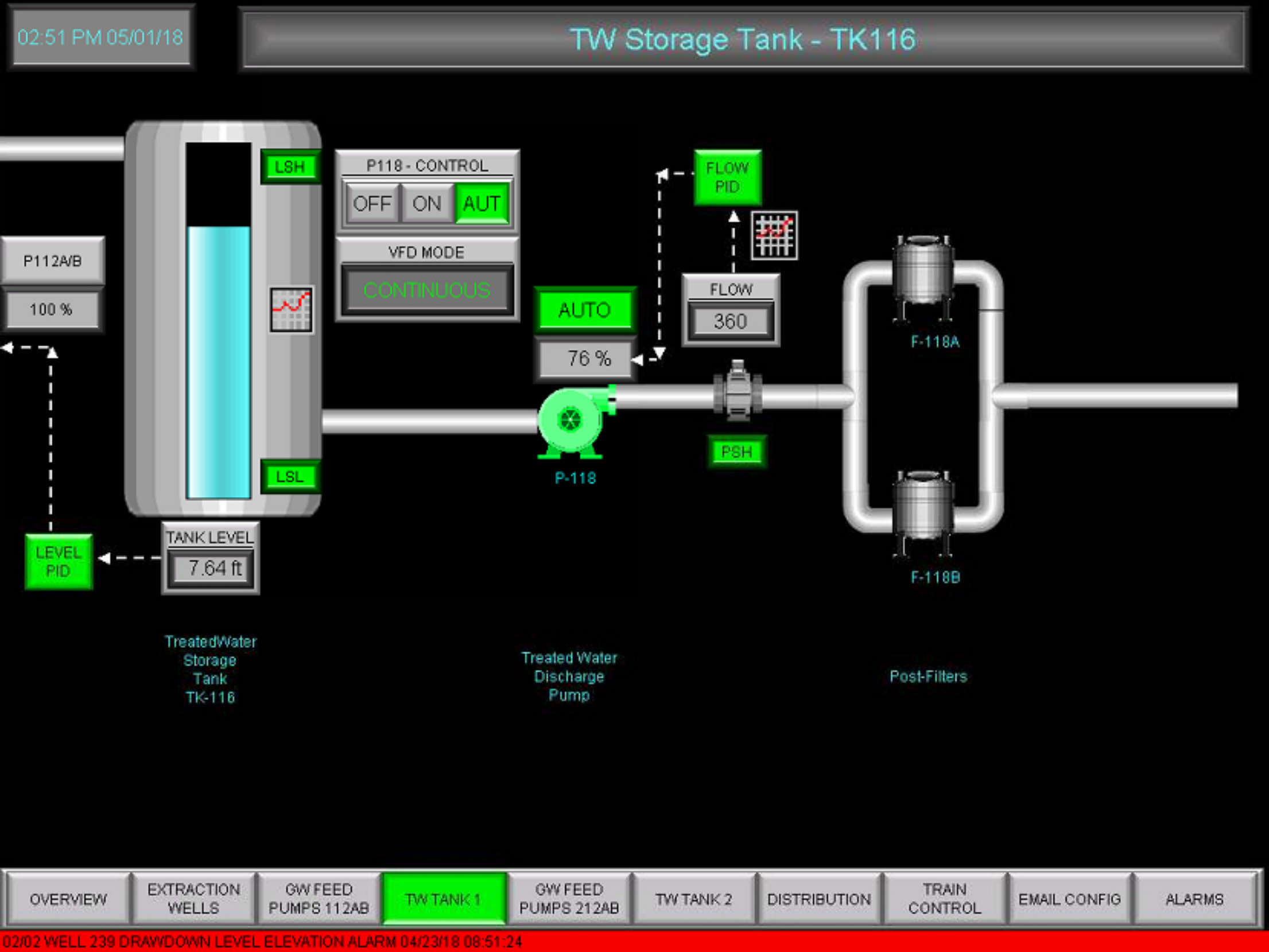
02:51 PM 05/01/18
TW Storage Tank - TK116
LSH
P118 - CONTROL
OFF
ON
AUT
VFD MODE
CONTINUOUS
FLOW PID
FLOW
360
AUTO
76 %
P112A/B
100 %
LSL
P-118
PSH
F-118A
F-118B
LEVEL PID
TANK LEVEL
7.64 ft
TreatedWater Storage Tank TK-116
Treated Water Discharge Pump
Post-Filters
OVERVIEW
EXTRACTION WELLS
GW FEED PUMPS 112AB
TW TANK 1
GW FEED PUMPS 212AB
TW TANK 2
DISTRIBUTION
TRAIN CONTROL
EMAIL CONFIG
ALARMS
02/02 WELL 239 DRAWDOWN LEVEL ELEVATION ALARM 04/23/18 08:51:24

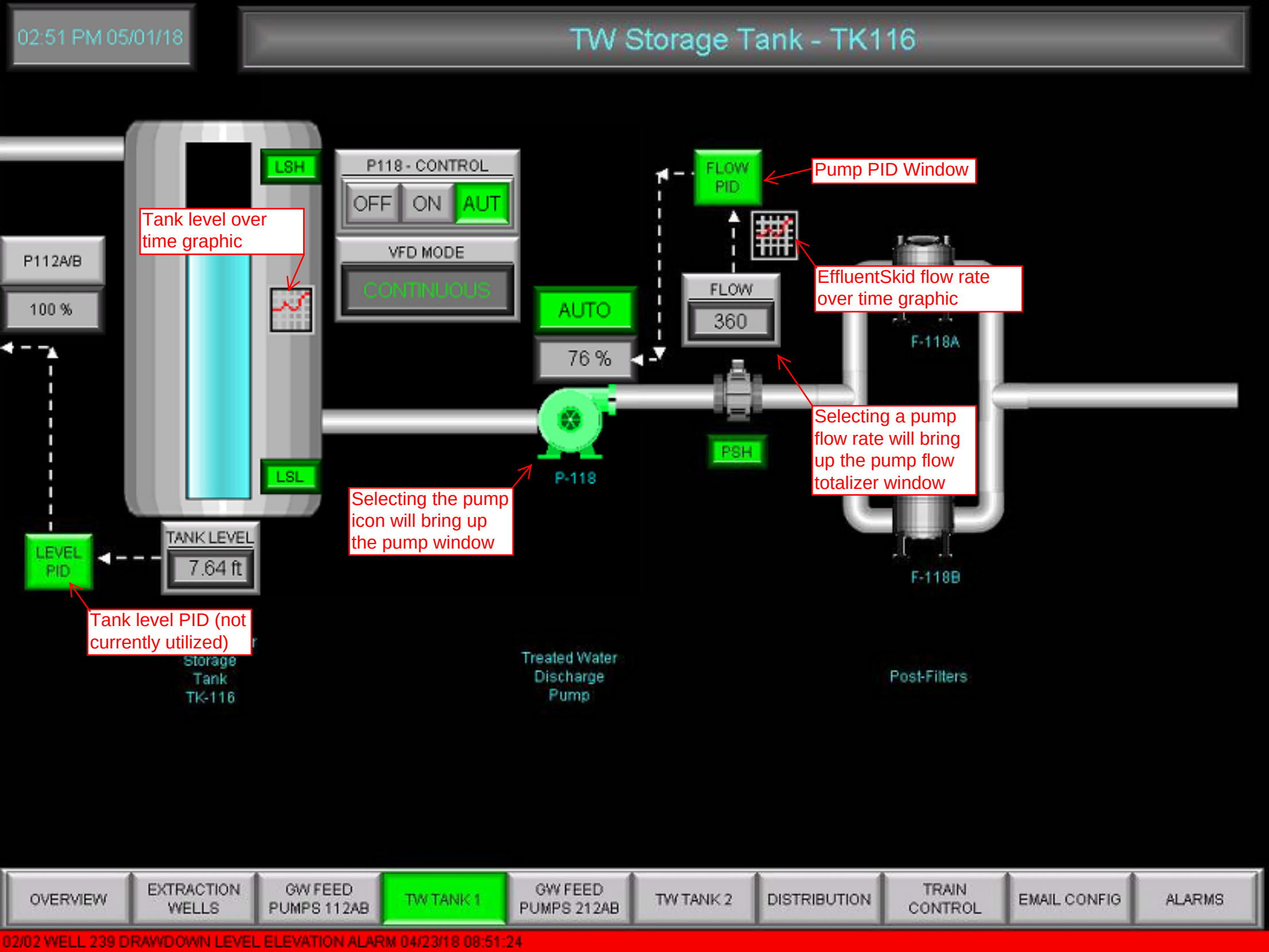
02:51 PM 05/01/18
TW Storage Tank - TK116
LSH
LSL
P118 - CONTROL
OFF
ON
AUT
VFD MODE
CONTINUOUS
P112A/B
100 %
AUTO
76 %
FLOW PID
FLOW
360
PSH
P-118
F-118A
F-118B
TANK LEVEL
7.64 ft
LEVEL PID
Tank level over time graphic
Pump PID Window
EffluentSkid flow rate over time graphic
Selecting a pump flow rate will bring up the pump flow totalizer window
Selecting the pump icon will bring up the pump window
Tank level PID (not currently utilized)
Storage Tank TK-116
Treated Water Discharge Pump
Post-Filters
OVERVIEW
EXTRACTION WELLS
GW FEED PUMPS 112AB
TW TANK 1
GW FEED PUMPS 212AB
TW TANK 2
DISTRIBUTION
TRAIN CONTROL
EMAIL CONFIG
ALARMS
02/02 WELL 239 DRAWDOWN LEVEL ELEVATION ALARM 04/23/18 08:51:24

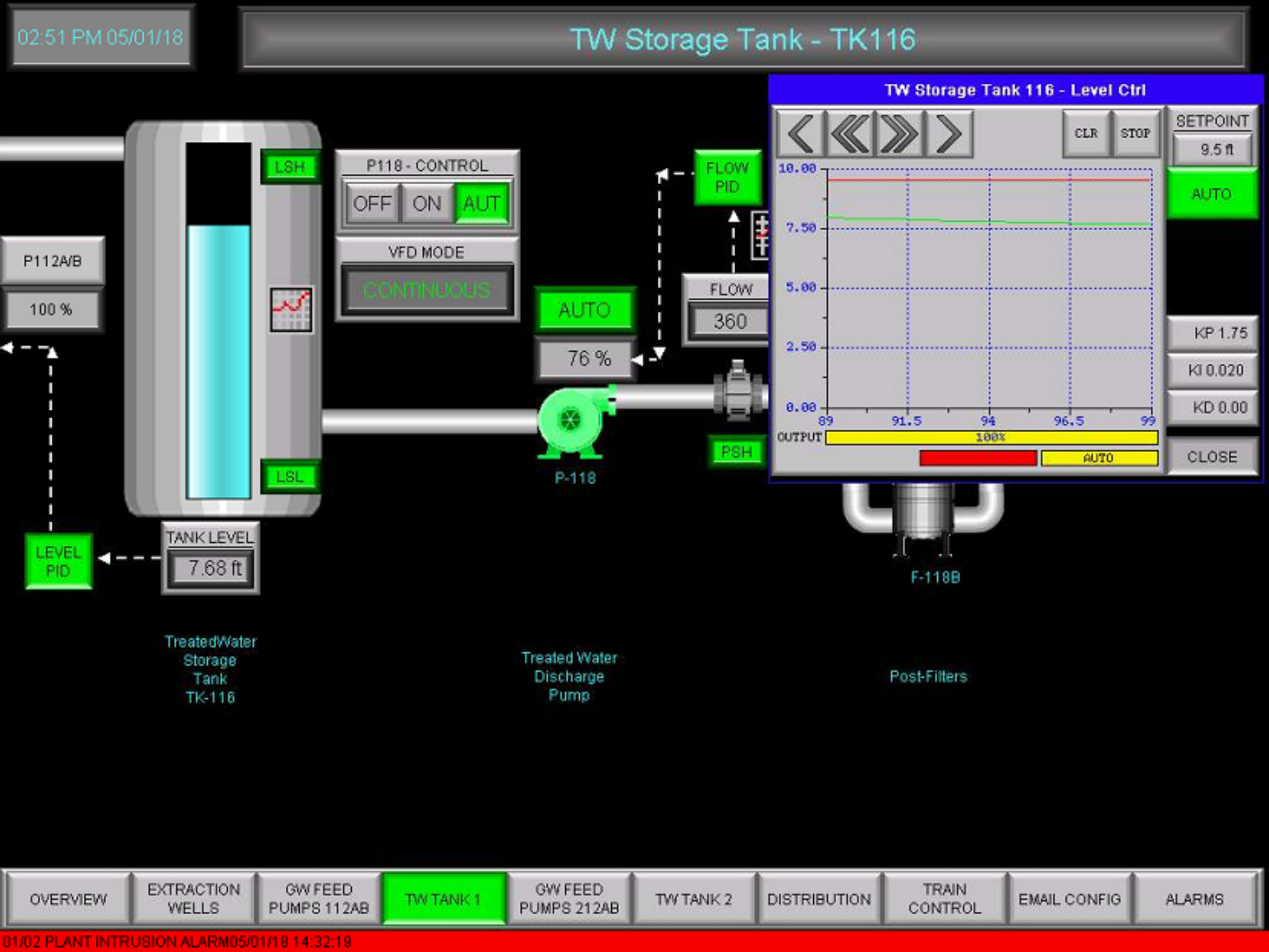
02:51 PM 05/01/18
TW Storage Tank - TK116
TW Storage Tank 116 - Level Ctrl
LSH
LSL
P118 - CONTROL
OFF
ON
AUT
VFD MODE
CONTINUOUS
P112A/B
100 %
FLOW PID
FLOW
360
AUTO
76 %
P-118
PSH
F-118B
CLR
STOP
SETPOINT
9.5 ft
AUTO
KP 1.75
KI 0.020
KD 0.00
CLOSE
10.00
7.50
5.00
2.50
0.00
89
91.5
94
96.5
99
OUTPUT
100%
AUTO
LEVEL PID
TANK LEVEL
7.68 ft
TreatedWater Storage Tank TK-116
Treated Water Discharge Pump
Post-Filters
OVERVIEW
EXTRACTION WELLS
GW FEED PUMPS 112AB
TW TANK 1
GW FEED PUMPS 212AB
TW TANK 2
DISTRIBUTION
TRAIN CONTROL
EMAIL CONFIG
ALARMS
01/02 PLANT INTRUSION ALARM05/01/18 14:32:19

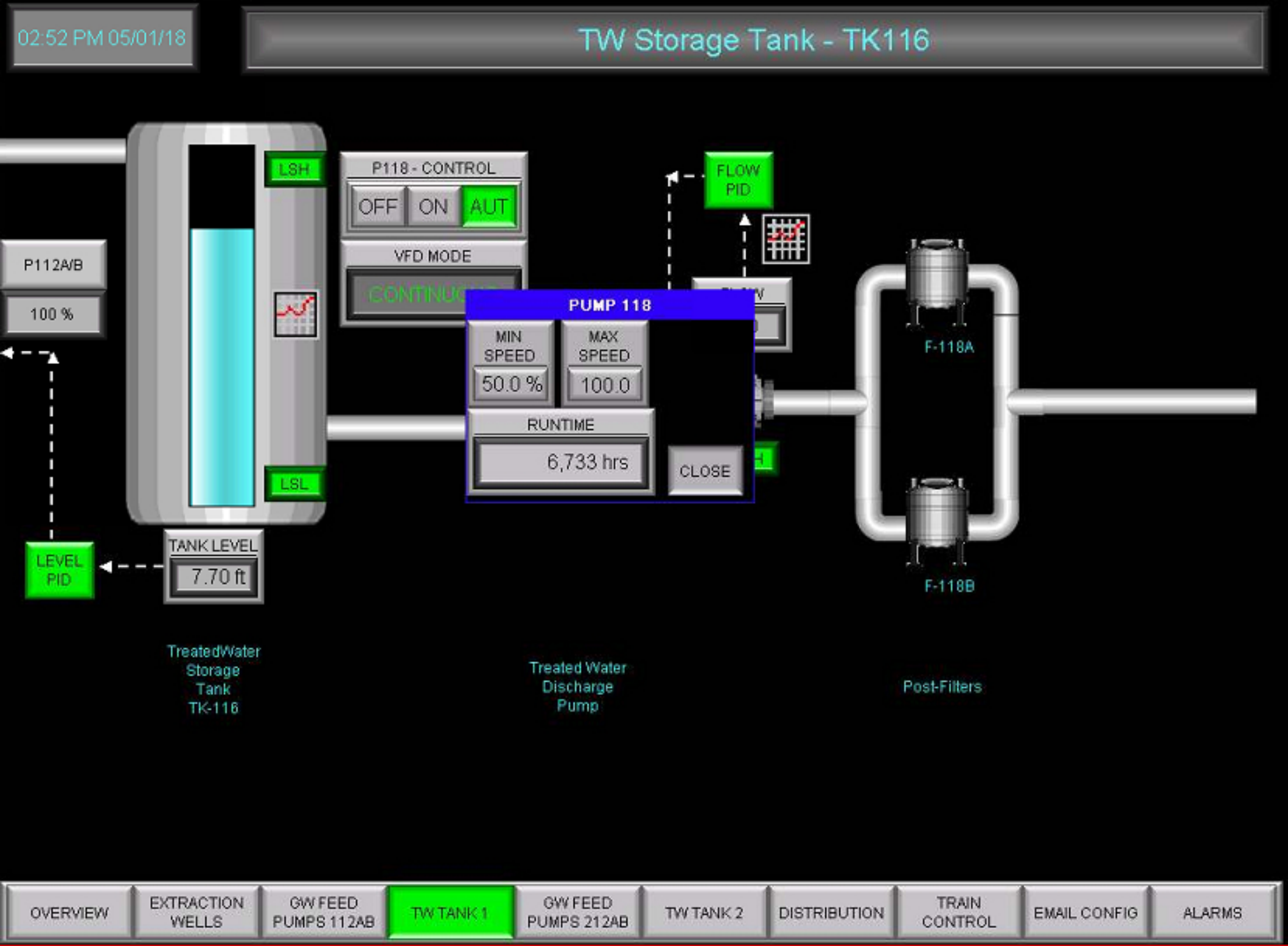
02:52 PM 05/01/18
TW Storage Tank - TK116
LSH
LSL
P118 - CONTROL
OFF
ON
AUT
VFD MODE
CONTINUOUS
FLOW PID
PUMP 118
MIN SPEED
50.0 %
MAX SPEED
100.0
RUNTIME
6,733 hrs
CLOSE
P112A/B
100 %
LEVEL PID
TANK LEVEL
7.70 ft
F-118A
F-118B
TreatedWater Storage Tank TK-116
Treated Water Discharge Pump
Post-Filters
OVERVIEW
EXTRACTION WELLS
GW FEED PUMPS 112AB
TW TANK 1
GW FEED PUMPS 212AB
TW TANK 2
DISTRIBUTION
TRAIN CONTROL
EMAIL CONFIG
ALARMS
01/02 PLANT INTRUSION ALARM05/01/18 14:32:19

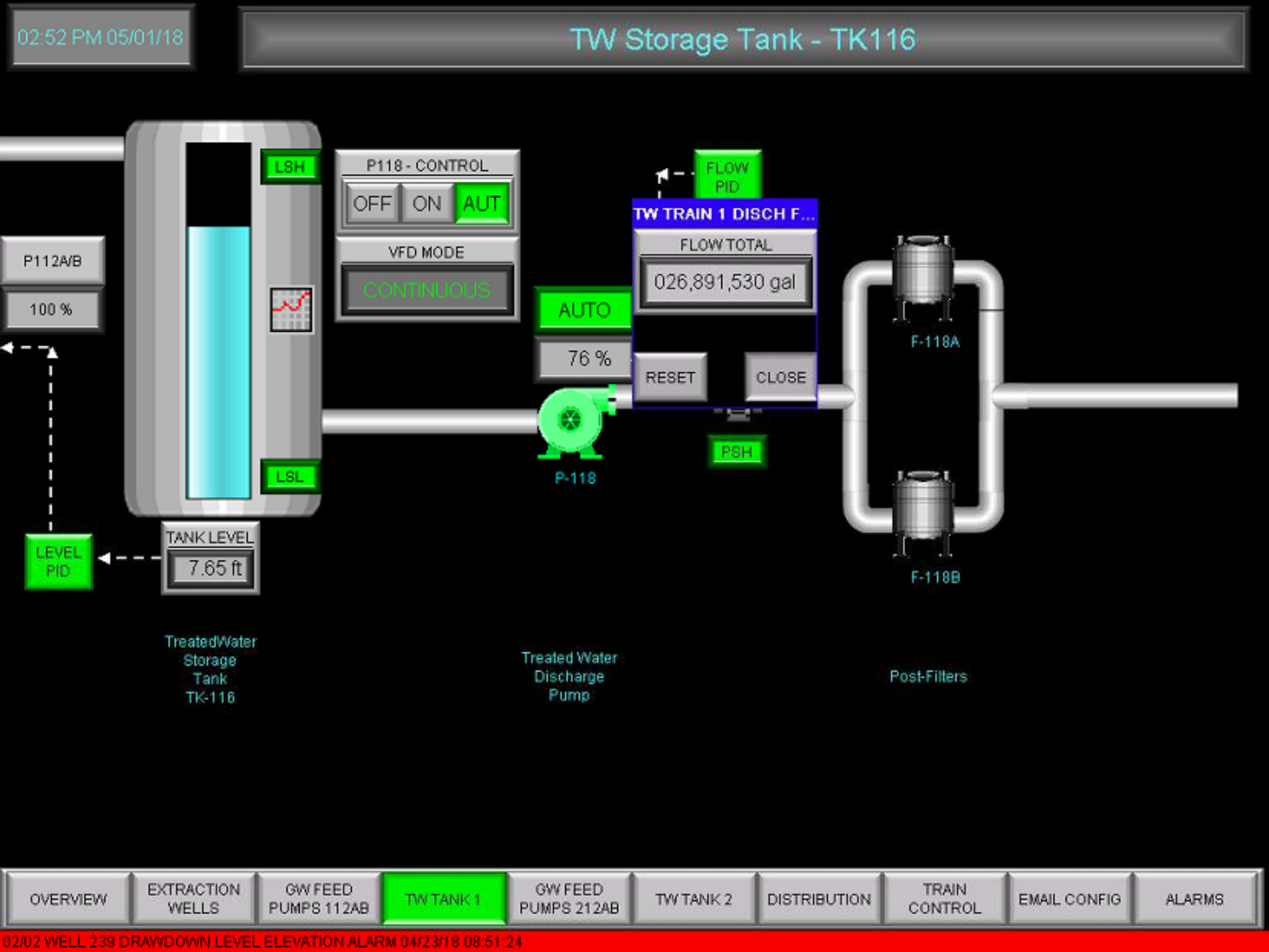
02:52 PM 05/01/18
TW Storage Tank - TK116
LSH
LSL
P118 - CONTROL
OFF
ON
AUT
VFD MODE
CONTINUOUS
FLOW PID
TW TRAIN 1 DISCH F...
FLOW TOTAL
026,891,530 gal
AUTO
76 %
RESET
CLOSE
PSH
P-118
P112A/B
100 %
LEVEL PID
TANK LEVEL
7.65 ft
F-118A
F-118B
TreatedWater Storage Tank TK-116
Treated Water Discharge Pump
Post-Filters
OVERVIEW
EXTRACTION WELLS
GW FEED PUMPS 112AB
TW TANK 1
GW FEED PUMPS 212AB
TW TANK 2
DISTRIBUTION
TRAIN CONTROL
EMAIL CONFIG
ALARMS
02/02 WELL 239 DRAWDOWN LEVEL ELEVATION ALARM 04/23/18 08:51:24

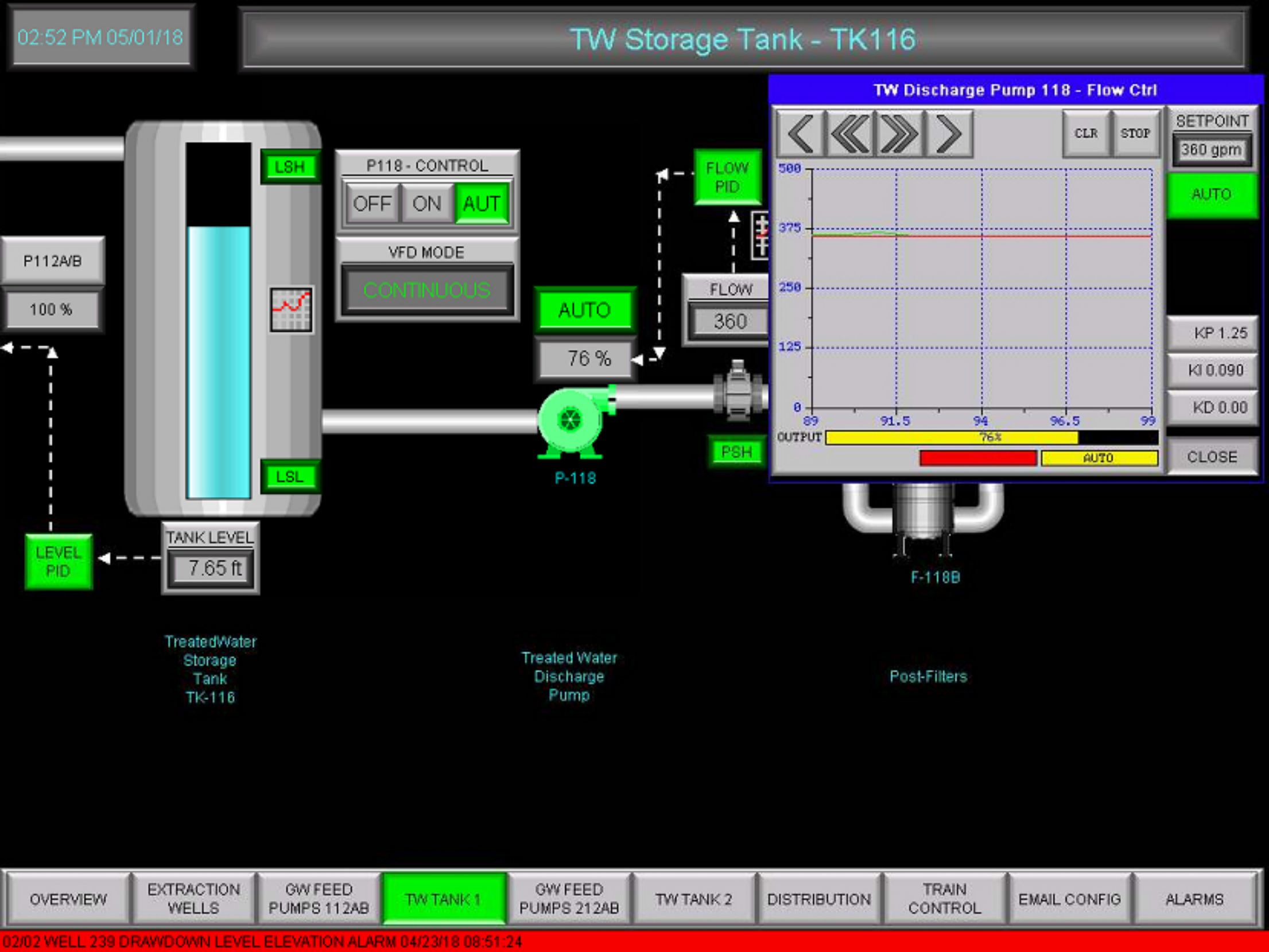
02:52 PM 05/01/18
TW Storage Tank - TK116
TW Discharge Pump 118 - Flow Ctrl
LSH
LSL
P118 - CONTROL
OFF
ON
AUT
VFD MODE
CONTINUOUS
P112A/B
100 %
LEVEL PID
TANK LEVEL
7.65 ft
AUTO
76 %
P-118
FLOW PID
FLOW
360
PSH
CLR
STOP
SETPOINT
360 gpm
AUTO
KP 1.25
KI 0.090
KD 0.00
CLOSE
500
375
250
125
0
89
91.5
94
96.5
99
OUTPUT
76%
AUTO
F-118B
TreatedWater Storage Tank TK-116
Treated Water Discharge Pump
Post-Filters
OVERVIEW
EXTRACTION WELLS
GW FEED PUMPS 112AB
TW TANK 1
GW FEED PUMPS 212AB
TW TANK 2
DISTRIBUTION
TRAIN CONTROL
EMAIL CONFIG
ALARMS
02/02 WELL 239 DRAWDOWN LEVEL ELEVATION ALARM 04/23/18 08:51:24

02:52 PM 05/01/18

TREATEDWATER TRAIN 1 DISCHARGE FLOW

CLOSE

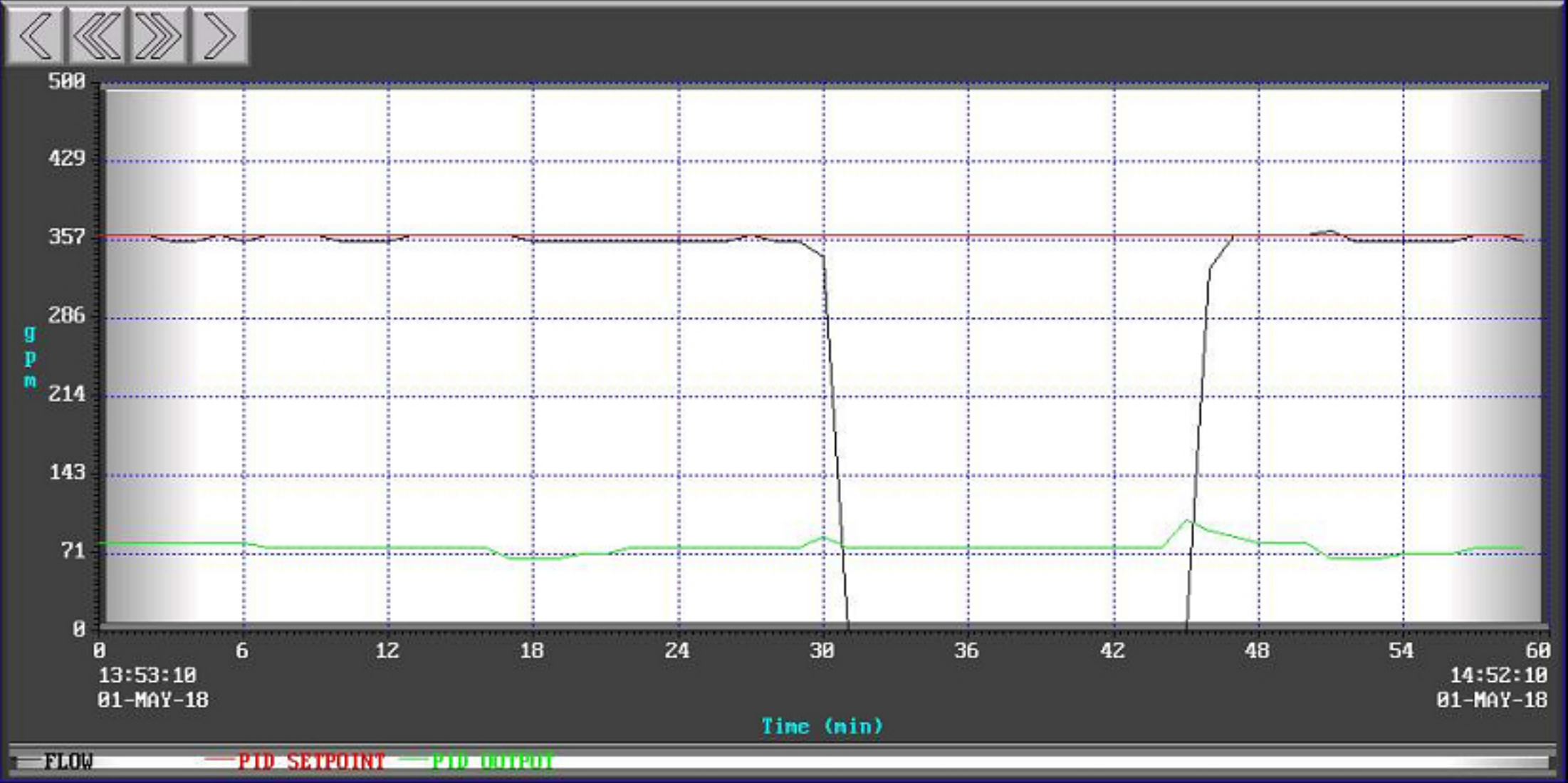

OVERVIEW | EXTRACTION WELLS | GW FEED PUMPS 112AB | TW TANK 1 | GW FEED PUMPS 212AB | TW TANK 2 | DISTRIBUTION | TRAIN CONTROL | EMAIL CONFIG | ALARMS

02/02 WELL 239 DRAWDOWN LEVEL ELEVATION ALARM 04/23/18 08:51:24

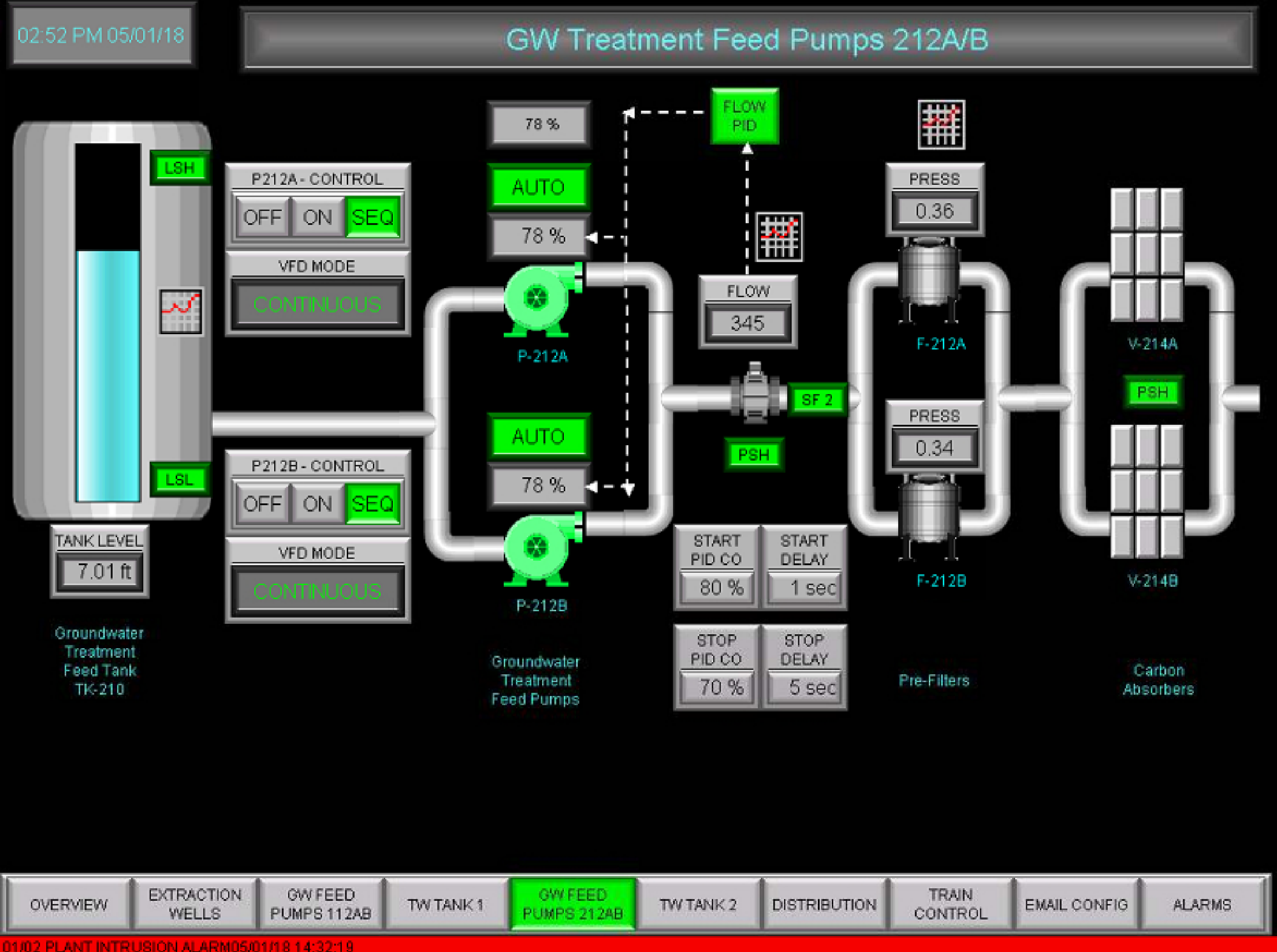
02:52 PM 05/01/18
GW Treatment Feed Pumps 212A/B
LSH
LSL
TANK LEVEL
7.01 ft
Groundwater Treatment Feed Tank TK-210
P212A - CONTROL
OFF ON SEQ
VFD MODE
CONTINUOUS
P212B - CONTROL
OFF ON SEQ
VFD MODE
CONTINUOUS
78 %
AUTO
78 %
P-212A
AUTO
78 %
P-212B
Groundwater Treatment Feed Pumps
FLOW PID
FLOW
345
SF 2
PSH
START PID CO
80 %
START DELAY
1 sec
STOP PID CO
70 %
STOP DELAY
5 sec
PRESS
0.36
F-212A
PRESS
0.34
F-212B
Pre-Filters
V-214A
PSH
V-214B
Carbon Absorbers
OVERVIEW
EXTRACTION WELLS
GW FEED PUMPS 112AB
TW TANK 1
GW FEED PUMPS 212AB
TW TANK 2
DISTRIBUTION
TRAIN CONTROL
EMAIL CONFIG
ALARMS
01/02 PLANT INTRUSION ALARM05/01/18 14:32:19

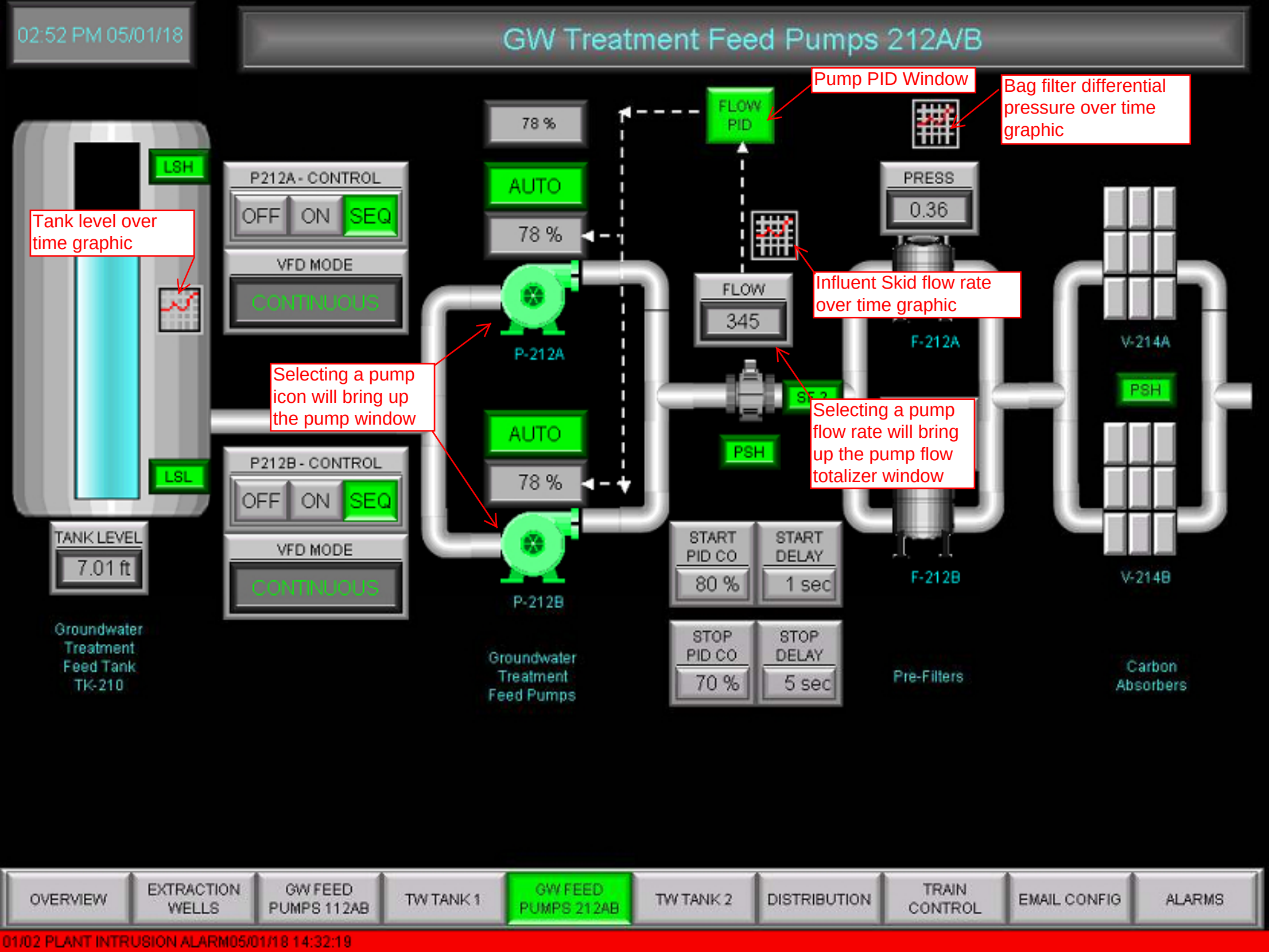
02:52 PM 05/01/18
GW Treatment Feed Pumps 212A/B
Pump PID Window
Bag filter differential pressure over time graphic
Tank level over time graphic
Influent Skid flow rate over time graphic
Selecting a pump icon will bring up the pump window
Selecting a pump flow rate will bring up the pump flow totalizer window
LSH
LSL
TANK LEVEL
7.01 ft
Groundwater Treatment Feed Tank TK-210
P212A - CONTROL
OFF ON SEQ
VFD MODE
CONTINUOUS
P212B - CONTROL
OFF ON SEQ
VFD MODE
CONTINUOUS
78 %
AUTO
78 %
P-212A
AUTO
78 %
P-212B
Groundwater Treatment Feed Pumps
FLOW PID
FLOW
345
PSH
START PID CO
80 %
START DELAY
1 sec
STOP PID CO
70 %
STOP DELAY
5 sec
PRESS
0.36
F-212A
F-212B
Pre-Filters
V-214A
PSH
V-214B
Carbon Absorbers
OVERVIEW
EXTRACTION WELLS
GW FEED PUMPS 112AB
TW TANK 1
GW FEED PUMPS 212AB
TW TANK 2
DISTRIBUTION
TRAIN CONTROL
EMAIL CONFIG
ALARMS
01/02 PLANT INTRUSION ALARM05/01/18 14:32:19

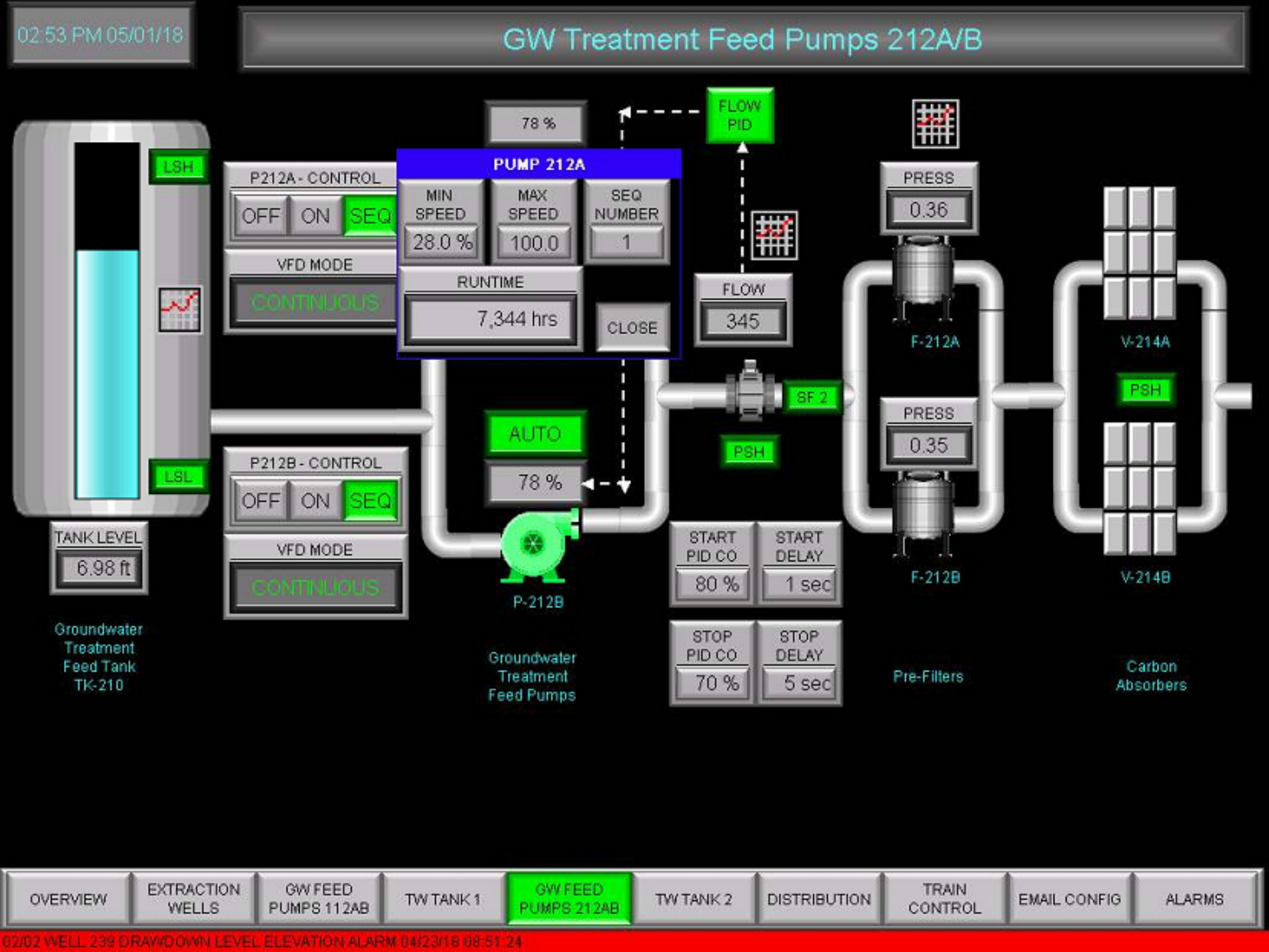
02:53 PM 05/01/18
GW Treatment Feed Pumps 212A/B
78 %
FLOW PID
PUMP 212A
MIN SPEED
28.0 %
MAX SPEED
100.0
SEQ NUMBER
1
RUNTIME
7,344 hrs
CLOSE
P212A - CONTROL
OFF
ON
SEQ
VFD MODE
CONTINUOUS
LSH
LSL
TANK LEVEL
6.98 ft
Groundwater Treatment Feed Tank TK-210
P212B - CONTROL
OFF
ON
SEQ
VFD MODE
CONTINUOUS
AUTO
78 %
P-212B
Groundwater Treatment Feed Pumps
FLOW
345
SF 2
PSH
START PID CO
80 %
START DELAY
1 sec
STOP PID CO
70 %
STOP DELAY
5 sec
PRESS
0.36
F-212A
PRESS
0.35
F-212B
Pre-Filters
V-214A
PSH
V-214B
Carbon Absorbers
OVERVIEW
EXTRACTION WELLS
GW FEED PUMPS 112AB
TW TANK 1
GW FEED PUMPS 212AB
TW TANK 2
DISTRIBUTION
TRAIN CONTROL
EMAIL CONFIG
ALARMS
02/02 WELL 239 DRAWDOWN LEVEL ELEVATION ALARM 04/23/18 08:51:24

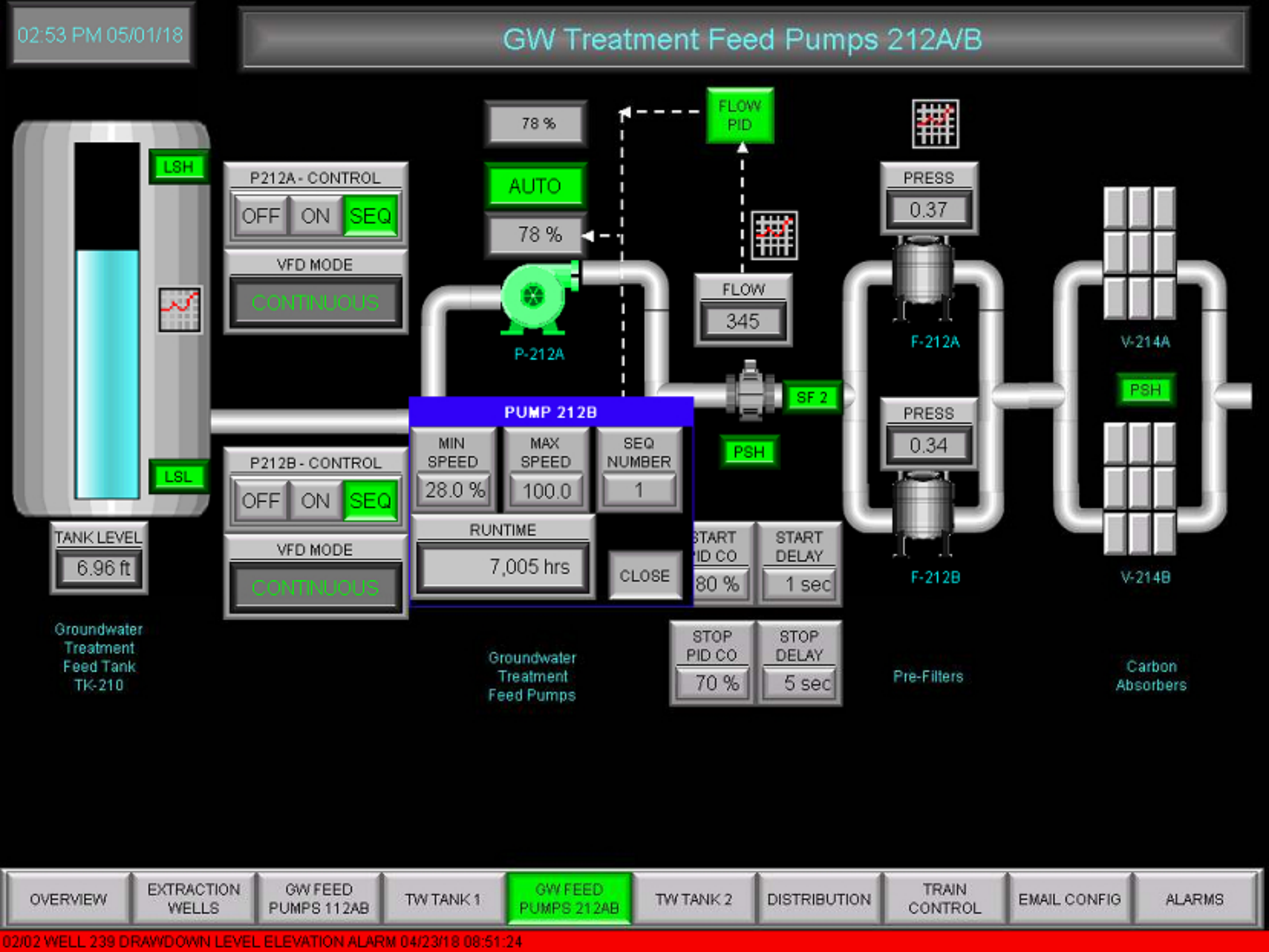
02:53 PM 05/01/18
GW Treatment Feed Pumps 212A/B
78 %
FLOW PID
AUTO
78 %
LSH
LSL
P212A - CONTROL
OFF ON SEQ
VFD MODE
CONTINUOUS
P-212A
FLOW
345
PRESS
0.37
F-212A
V-214A
PSH
SF 2
PSH
PRESS
0.34
F-212B
V-214B
PUMP 212B
MIN SPEED
28.0 %
MAX SPEED
100.0
SEQ NUMBER
1
RUNTIME
7,005 hrs
CLOSE
START PID CO
80 %
START DELAY
1 sec
STOP PID CO
70 %
STOP DELAY
5 sec
P212B - CONTROL
OFF ON SEQ
VFD MODE
CONTINUOUS
TANK LEVEL
6.96 ft
Groundwater Treatment Feed Tank TK-210
Groundwater Treatment Feed Pumps
Pre-Filters
Carbon Absorbers
OVERVIEW
EXTRACTION WELLS
GW FEED PUMPS 112AB
TW TANK 1
GW FEED PUMPS 212AB
TW TANK 2
DISTRIBUTION
TRAIN CONTROL
EMAIL CONFIG
ALARMS
02/02 WELL 239 DRAWDOWN LEVEL ELEVATION ALARM 04/23/18 08:51:24

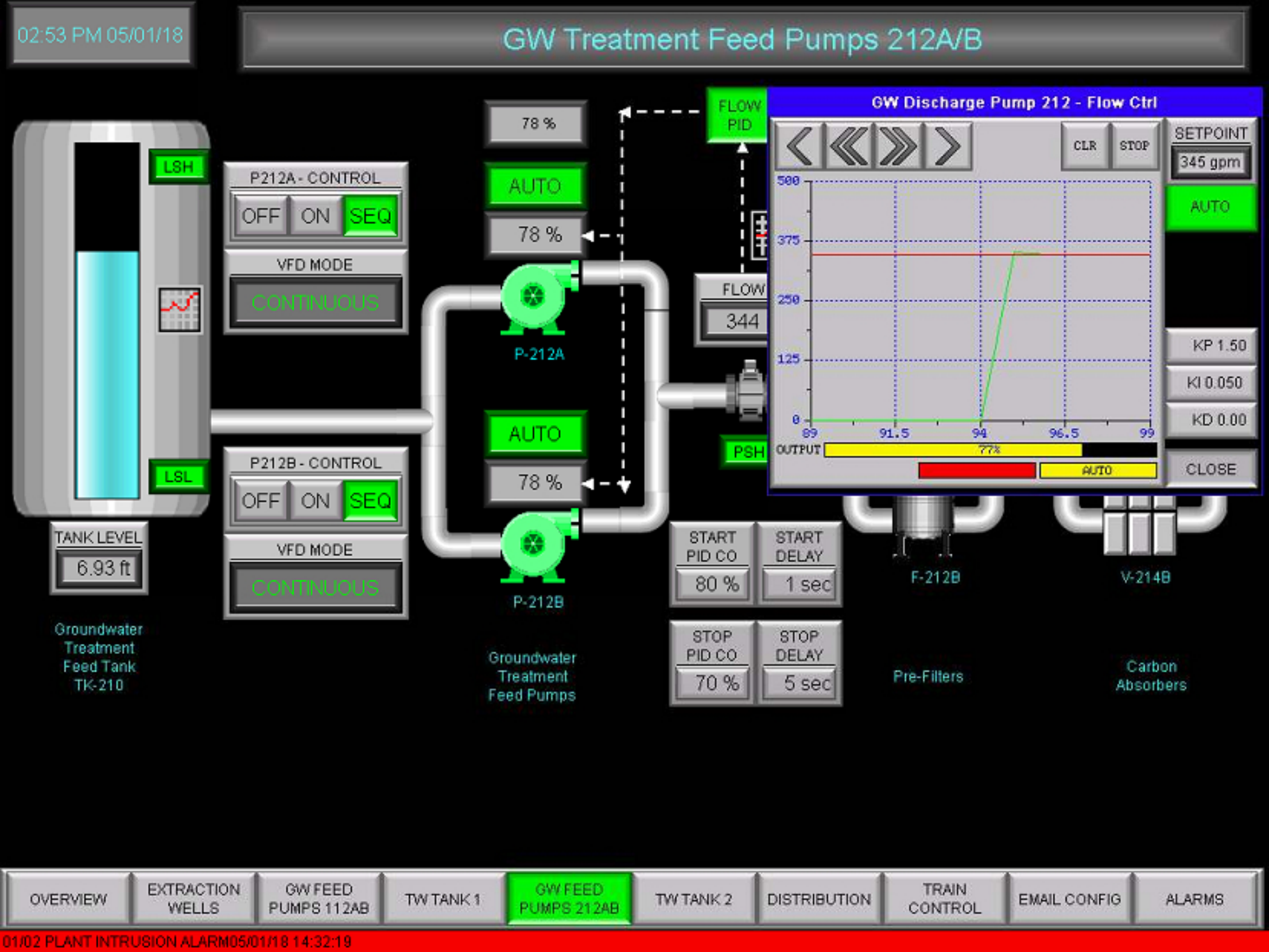
02:53 PM 05/01/18
GW Treatment Feed Pumps 212A/B
LSH
LSL
TANK LEVEL
6.93 ft
Groundwater Treatment Feed Tank TK-210
P212A - CONTROL
OFF ON SEQ
VFD MODE
CONTINUOUS
P212B - CONTROL
OFF ON SEQ
VFD MODE
CONTINUOUS
78 %
AUTO
78 %
P-212A
AUTO
78 %
P-212B
Groundwater Treatment Feed Pumps
FLOW PID
FLOW
344
PSH
START PID CO
80 %
START DELAY
1 sec
STOP PID CO
70 %
STOP DELAY
5 sec
Pre-Filters
F-212B
V-214B
Carbon Absorbers
GW Discharge Pump 212 - Flow Ctrl
CLR
STOP
SETPOINT
345 gpm
AUTO
500
375
250
125
0
89
91.5
94
96.5
99
OUTPUT
77%
AUTO
KP 1.50
KI 0.050
KD 0.00
CLOSE
OVERVIEW
EXTRACTION WELLS
GW FEED PUMPS 112AB
TW TANK 1
GW FEED PUMPS 212AB
TW TANK 2
DISTRIBUTION
TRAIN CONTROL
EMAIL CONFIG
ALARMS
01/02 PLANT INTRUSION ALARM05/01/18 14:32:19

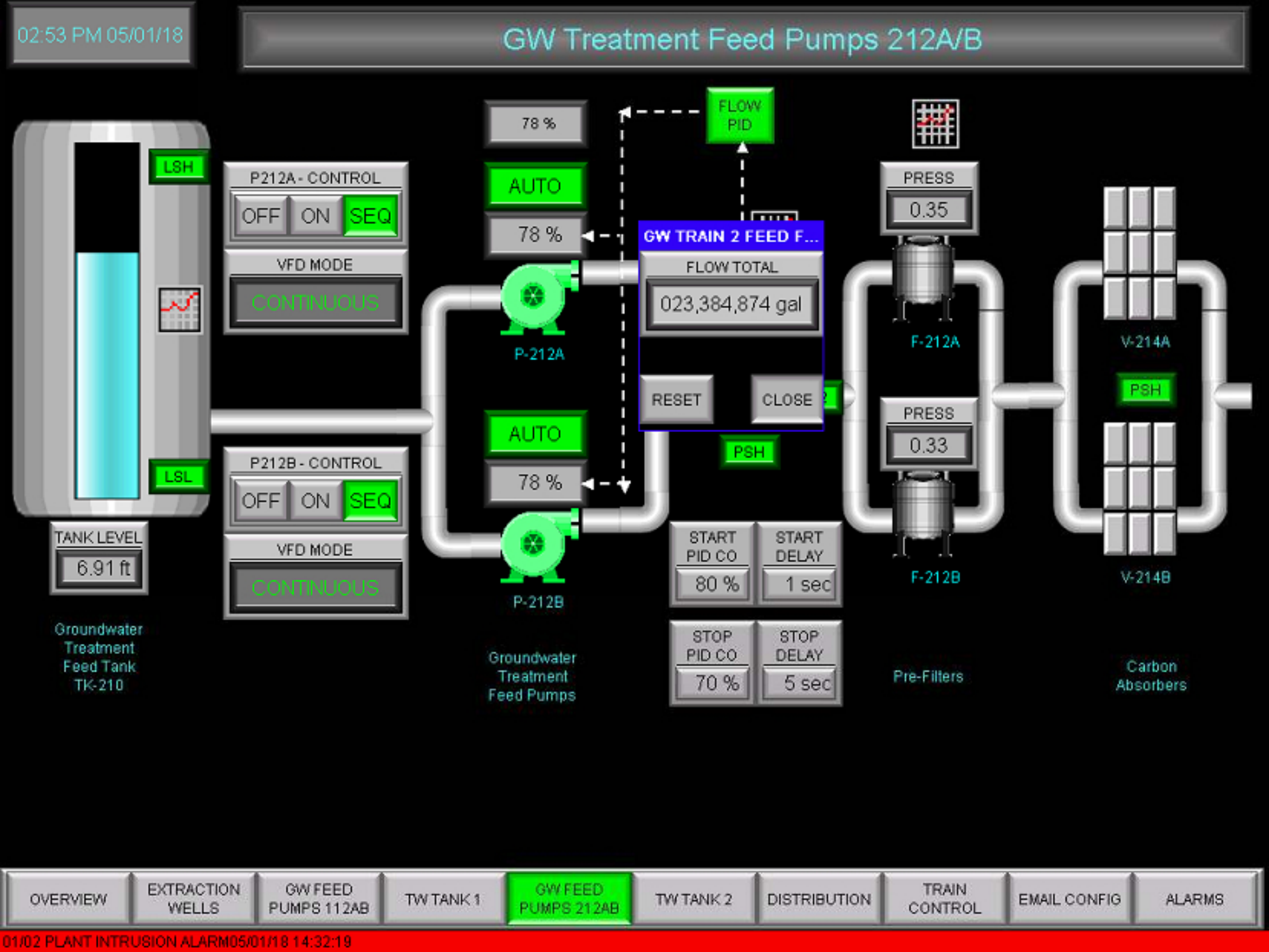
02:53 PM 05/01/18
GW Treatment Feed Pumps 212A/B
LSH
LSL
TANK LEVEL
6.91 ft
Groundwater Treatment Feed Tank TK-210
P212A - CONTROL
OFF ON SEQ
VFD MODE
CONTINUOUS
P212B - CONTROL
OFF ON SEQ
VFD MODE
CONTINUOUS
78 %
AUTO
78 %
P-212A
AUTO
78 %
P-212B
Groundwater Treatment Feed Pumps
FLOW PID
GW TRAIN 2 FEED F...
FLOW TOTAL
023,384,874 gal
RESET
CLOSE
PSH
START PID CO
80 %
START DELAY
1 sec
STOP PID CO
70 %
STOP DELAY
5 sec
PRESS
0.35
F-212A
PRESS
0.33
F-212B
Pre-Filters
V-214A
PSH
V-214B
Carbon Absorbers
OVERVIEW
EXTRACTION WELLS
GW FEED PUMPS 112AB
TW TANK 1
GW FEED PUMPS 212AB
TW TANK 2
DISTRIBUTION
TRAIN CONTROL
EMAIL CONFIG
ALARMS
01/02 PLANT INTRUSION ALARM05/01/18 14:32:19

02:53 PM 05/01/18

GROUNDWATER TRAIN 2 FEED FLOW

CLOSE

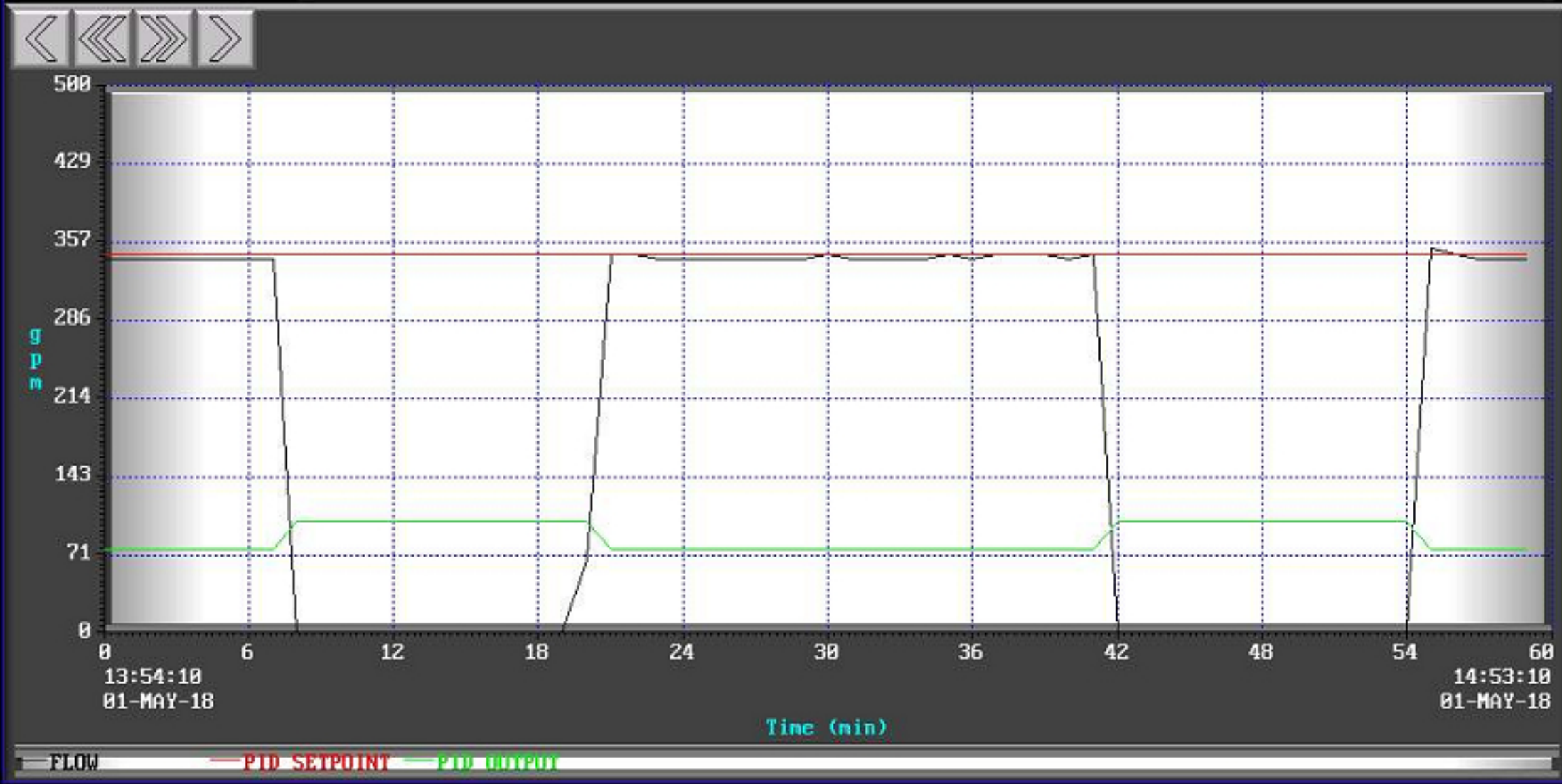

OVERVIEW | EXTRACTION WELLS | GW FEED PUMPS 112AB | TW TANK 1 | GW FEED PUMPS 212AB | TW TANK 2 | DISTRIBUTION | TRAIN CONTROL | EMAIL CONFIG | ALARMS

01/02 PLANT INTRUSION ALARM05/01/18 14:32:19

02:53 PM 05/01/18

BAG FILTER DIFFERENTIAL PRESSURES

CLOSE

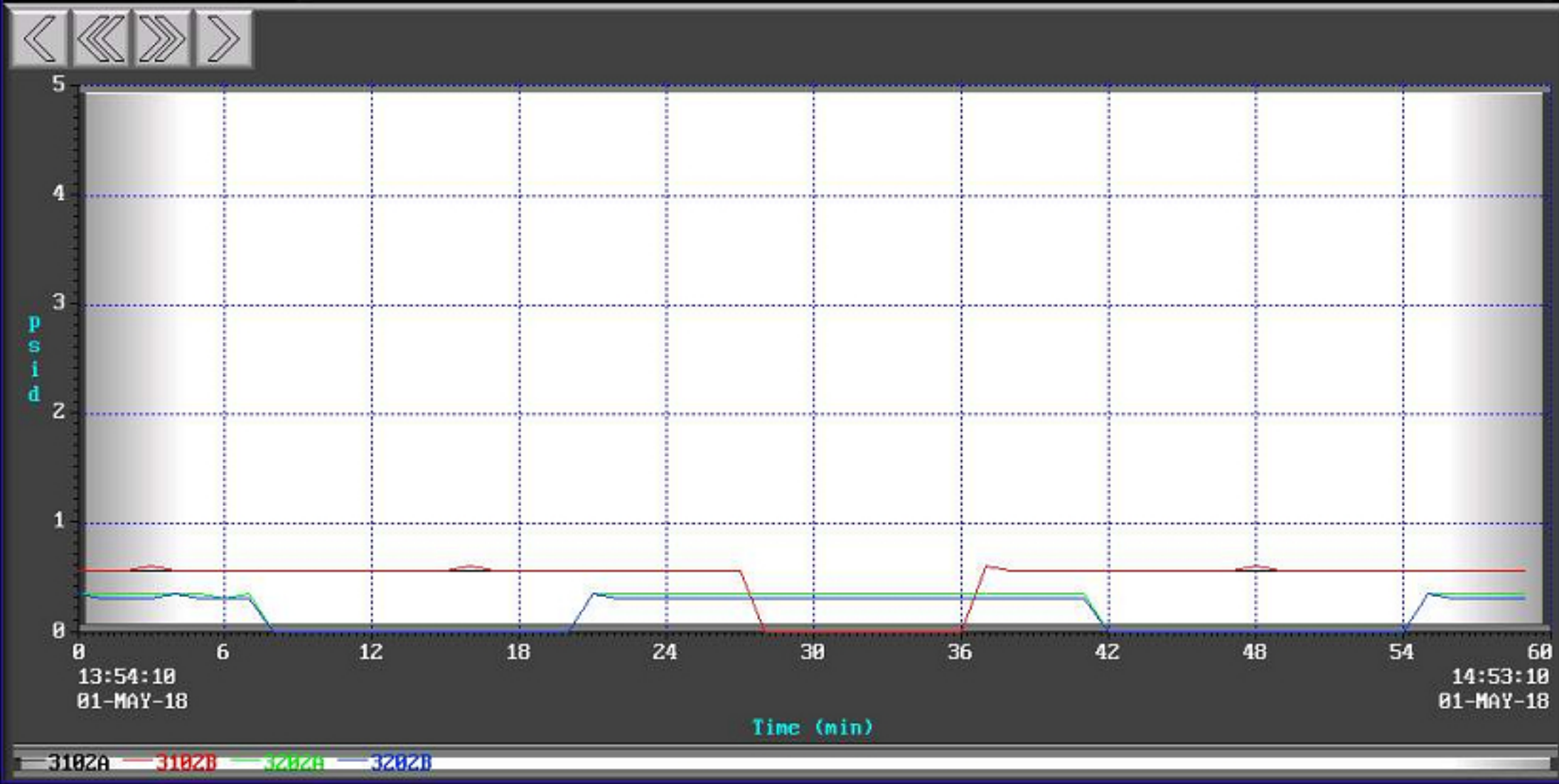

OVERVIEW | EXTRACTION WELLS | GW FEED PUMPS 112AB | TW TANK 1 | GW FEED PUMPS 212AB | TW TANK 2 | DISTRIBUTION | TRAIN CONTROL | EMAIL CONFIG | ALARMS

01/02 PLANT INTRUSION ALARM05/01/18 14:32:19

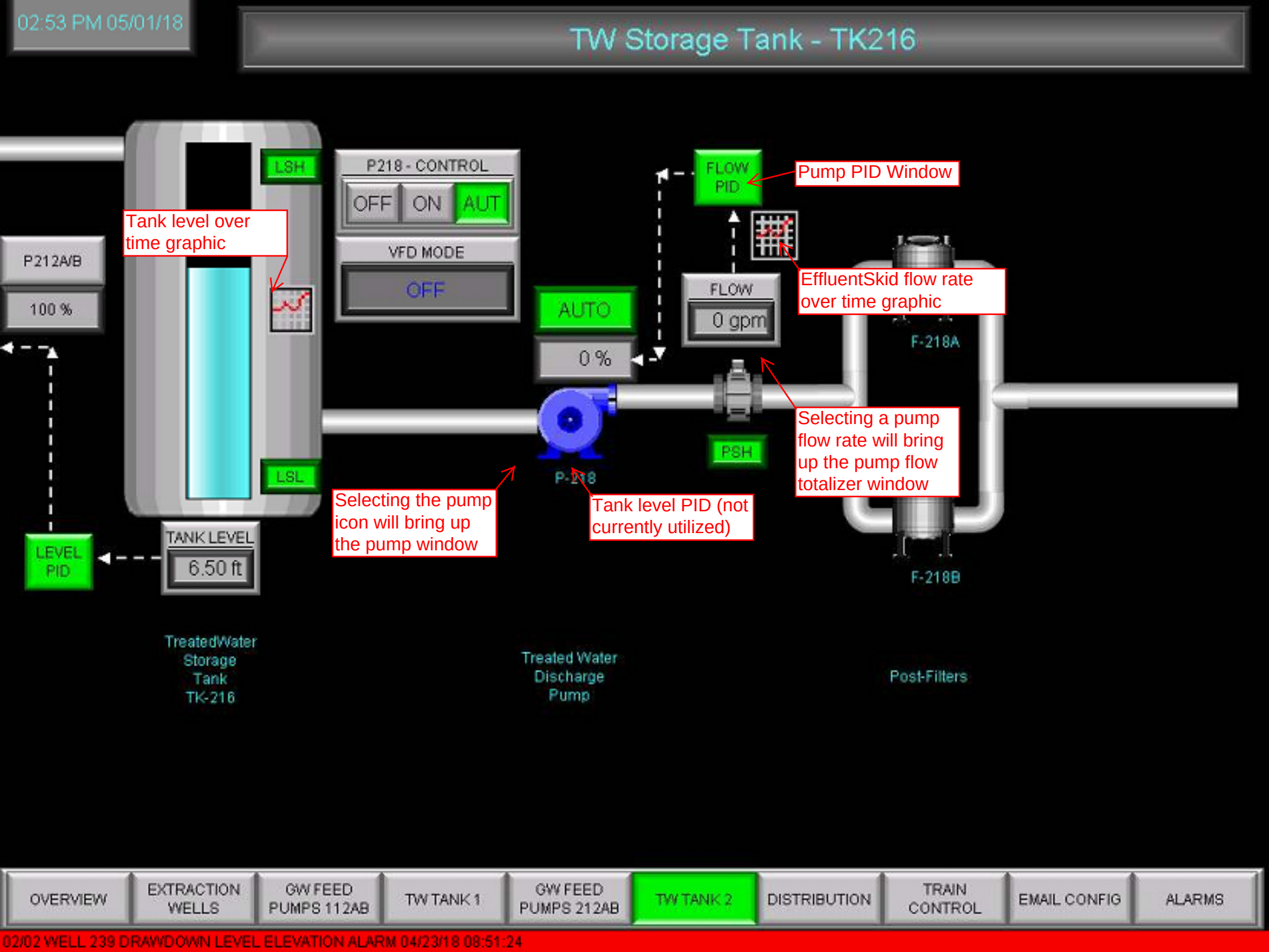
02:53 PM 05/01/18
TW Storage Tank - TK216
LSH
LSL
P218 - CONTROL
OFF
ON
AUT
VFD MODE
OFF
P212A/B
100 %
AUTO
0 %
FLOW PID
FLOW
0 gpm
PSH
F-218A
F-218B
P-218
LEVEL PID
TANK LEVEL
6.50 ft
Tank level over time graphic
Pump PID Window
EffluentSkid flow rate over time graphic
Selecting a pump flow rate will bring up the pump flow totalizer window
Selecting the pump icon will bring up the pump window
Tank level PID (not currently utilized)
TreatedWater Storage Tank TK-216
Treated Water Discharge Pump
Post-Filters
OVERVIEW
EXTRACTION WELLS
GW FEED PUMPS 112AB
TW TANK 1
GW FEED PUMPS 212AB
TW TANK 2
DISTRIBUTION
TRAIN CONTROL
EMAIL CONFIG
ALARMS
02/02 WELL 239 DRAWDOWN LEVEL ELEVATION ALARM 04/23/18 08:51:24

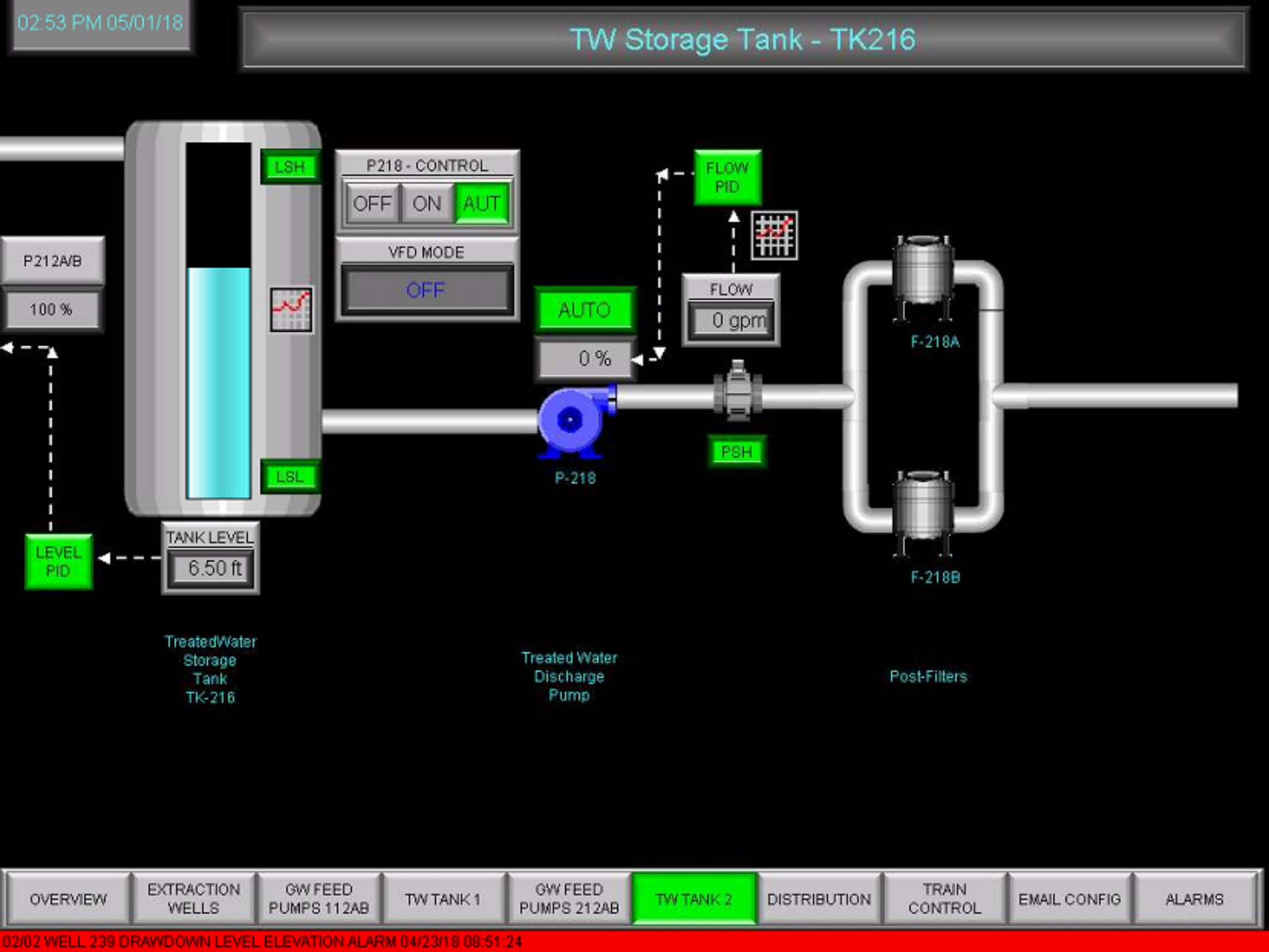
02:53 PM 05/01/18
TW Storage Tank - TK216
LSH
P218 - CONTROL
OFF
ON
AUT
VFD MODE
OFF
FLOW PID
FLOW
0 gpm
P212A/B
100 %
AUTO
0 %
LSL
P-218
PSH
F-218A
F-218B
LEVEL PID
TANK LEVEL
6.50 ft
TreatedWater Storage Tank TK-216
Treated Water Discharge Pump
Post-Filters
OVERVIEW
EXTRACTION WELLS
GW FEED PUMPS 112AB
TW TANK 1
GW FEED PUMPS 212AB
TW TANK 2
DISTRIBUTION
TRAIN CONTROL
EMAIL CONFIG
ALARMS
02/02 WELL 239 DRAWDOWN LEVEL ELEVATION ALARM 04/23/18 08:51:24

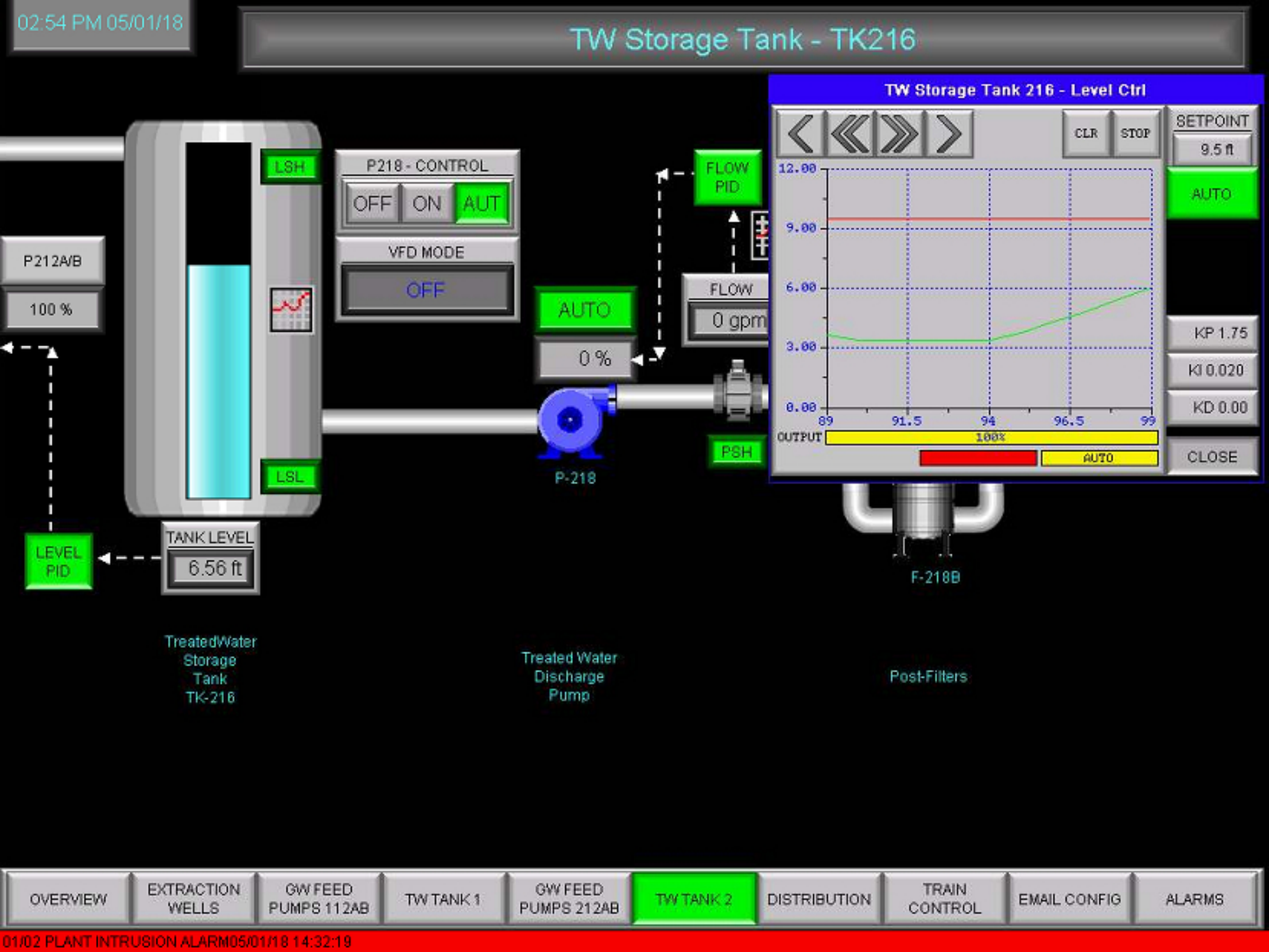
02:54 PM 05/01/18
TW Storage Tank - TK216
TW Storage Tank 216 - Level Ctrl
LSH
LSL
P218 - CONTROL
OFF
ON
AUT
VFD MODE
OFF
P212A/B
100 %
FLOW PID
FLOW
0 gpm
AUTO
0 %
PSH
P-218
CLR
STOP
SETPOINT
9.5 ft
AUTO
12.00
9.00
6.00
3.00
0.00
89
91.5
94
96.5
99
OUTPUT
100%
AUTO
KP 1.75
KI 0.020
KD 0.00
CLOSE
LEVEL PID
TANK LEVEL
6.56 ft
F-218B
TreatedWater Storage Tank TK-216
Treated Water Discharge Pump
Post-Filters
OVERVIEW
EXTRACTION WELLS
GW FEED PUMPS 112AB
TW TANK 1
GW FEED PUMPS 212AB
TW TANK 2
DISTRIBUTION
TRAIN CONTROL
EMAIL CONFIG
ALARMS
01/02 PLANT INTRUSION ALARM05/01/18 14:32:19

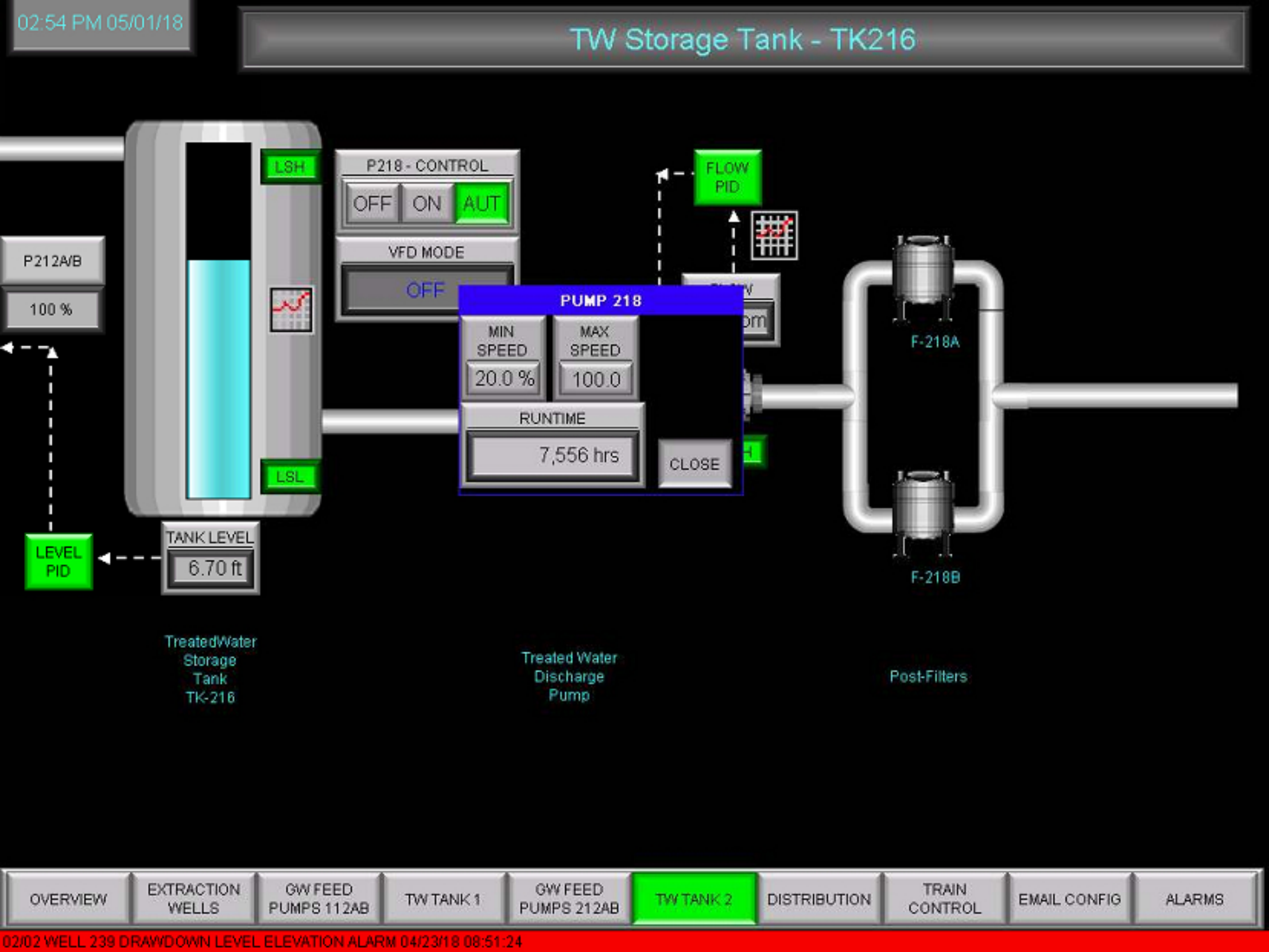
02:54 PM 05/01/18
TW Storage Tank - TK216
LSH
LSL
P218 - CONTROL
OFF
ON
AUT
VFD MODE
OFF
PUMP 218
MIN SPEED
20.0 %
MAX SPEED
100.0
RUNTIME
7,556 hrs
CLOSE
FLOW PID
P212A/B
100 %
LEVEL PID
TANK LEVEL
6.70 ft
F-218A
F-218B
TreatedWater Storage Tank TK-216
Treated Water Discharge Pump
Post-Filters
OVERVIEW
EXTRACTION WELLS
GW FEED PUMPS 112AB
TW TANK 1
GW FEED PUMPS 212AB
TW TANK 2
DISTRIBUTION
TRAIN CONTROL
EMAIL CONFIG
ALARMS
02/02 WELL 239 DRAWDOWN LEVEL ELEVATION ALARM 04/23/18 08:51:24

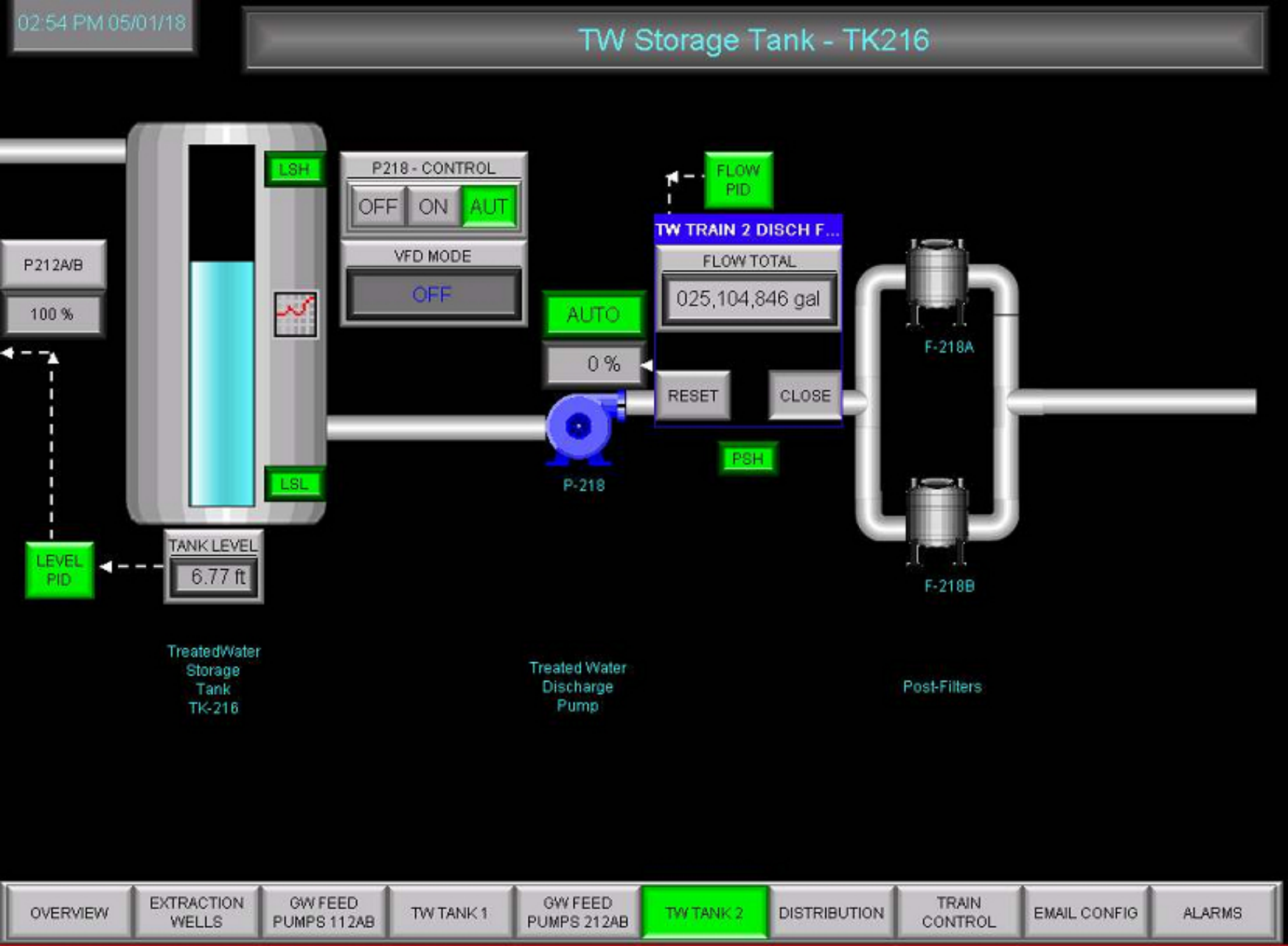
02:54 PM 05/01/18
TW Storage Tank - TK216
LSH
P218 - CONTROL
OFF
ON
AUT
VFD MODE
OFF
FLOW PID
TW TRAIN 2 DISCH F...
FLOW TOTAL
025,104,846 gal
P212A/B
100 %
AUTO
0 %
RESET
CLOSE
PSH
P-218
F-218A
F-218B
LSL
LEVEL PID
TANK LEVEL
6.77 ft
TreatedWater Storage Tank TK-216
Treated Water Discharge Pump
Post-Filters
OVERVIEW
EXTRACTION WELLS
GW FEED PUMPS 112AB
TW TANK 1
GW FEED PUMPS 212AB
TW TANK 2
DISTRIBUTION
TRAIN CONTROL
EMAIL CONFIG
ALARMS
02/02 WELL 239 DRAWDOWN LEVEL ELEVATION ALARM 04/23/18 08:51:24

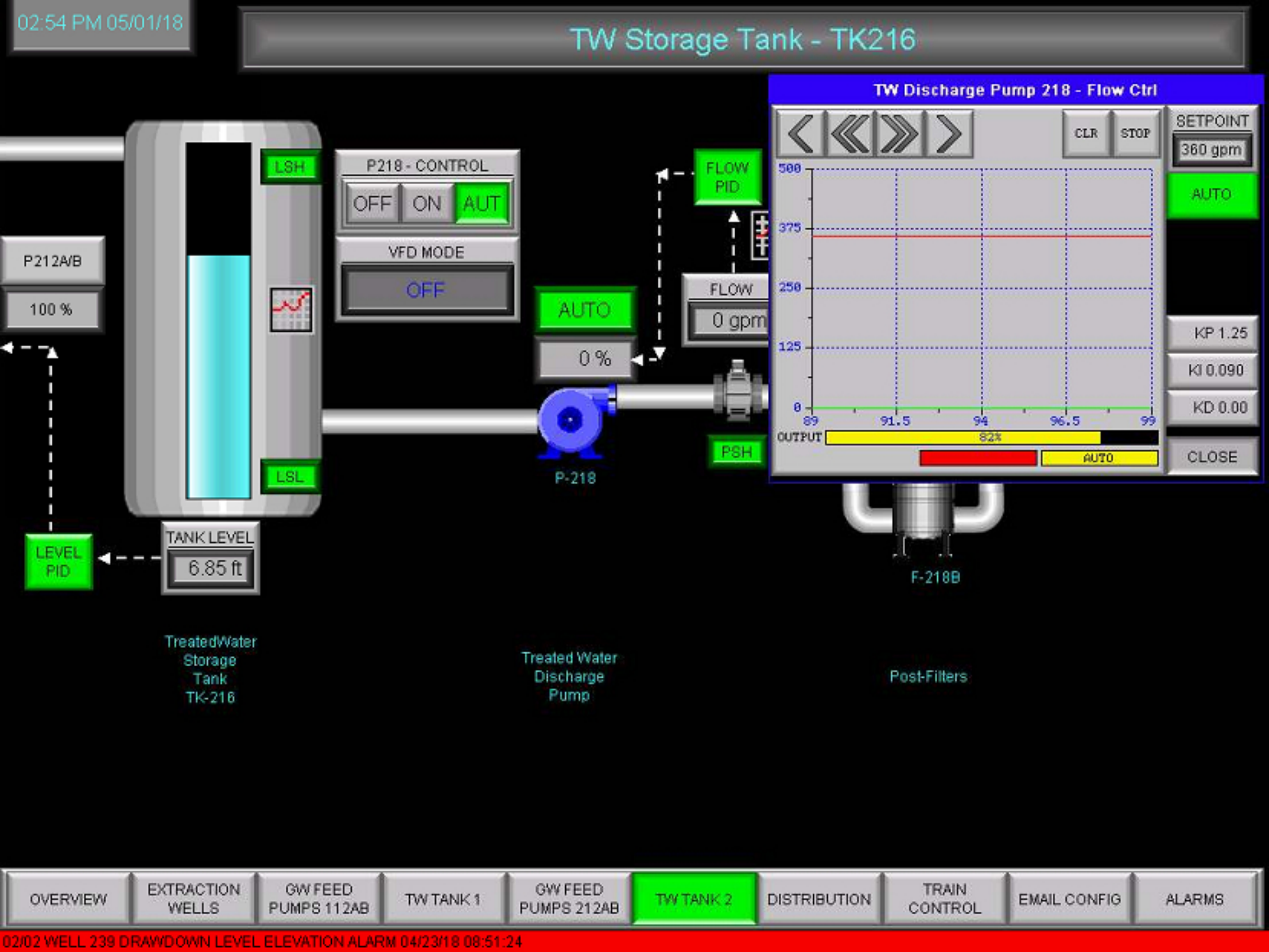
02:54 PM 05/01/18
TW Storage Tank - TK216
TW Discharge Pump 218 - Flow Ctrl
LSH
LSL
P218 - CONTROL
OFF
ON
AUT
VFD MODE
OFF
P212A/B
100 %
AUTO
0 %
FLOW PID
FLOW
0 gpm
PSH
P-218
SETPOINT
360 gpm
AUTO
CLR
STOP
500
375
250
125
0
89
91.5
94
96.5
99
OUTPUT
82%
AUTO
KP 1.25
KI 0.090
KD 0.00
CLOSE
LEVEL PID
TANK LEVEL
6.85 ft
F-218B
TreatedWater Storage Tank TK-216
Treated Water Discharge Pump
Post-Filters
OVERVIEW
EXTRACTION WELLS
GW FEED PUMPS 112AB
TW TANK 1
GW FEED PUMPS 212AB
TW TANK 2
DISTRIBUTION
TRAIN CONTROL
EMAIL CONFIG
ALARMS
02/02 WELL 239 DRAWDOWN LEVEL ELEVATION ALARM 04/23/18 08:51:24

02:54 PM 05/01/18

TREATEDWATER TRAIN 2 DISCHARGE FLOW

CLOSE

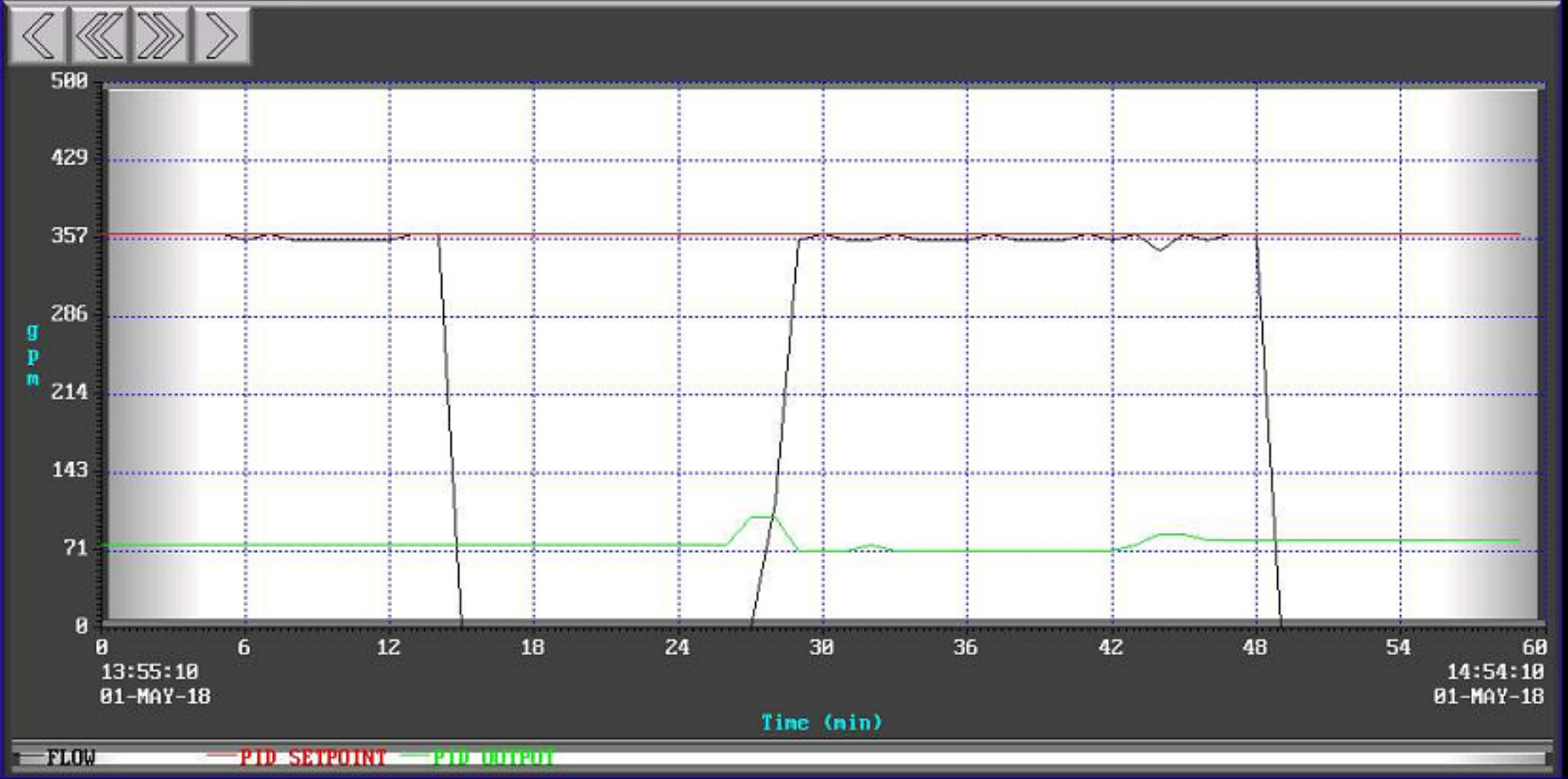

OVERVIEW | EXTRACTION WELLS | GW FEED PUMPS 112AB | TW TANK 1 | GW FEED PUMPS 212AB | TW TANK 2 | DISTRIBUTION | TRAIN CONTROL | EMAIL CONFIG | ALARMS

01/02 PLANT INTRUSION ALARM05/01/18 14:32:19

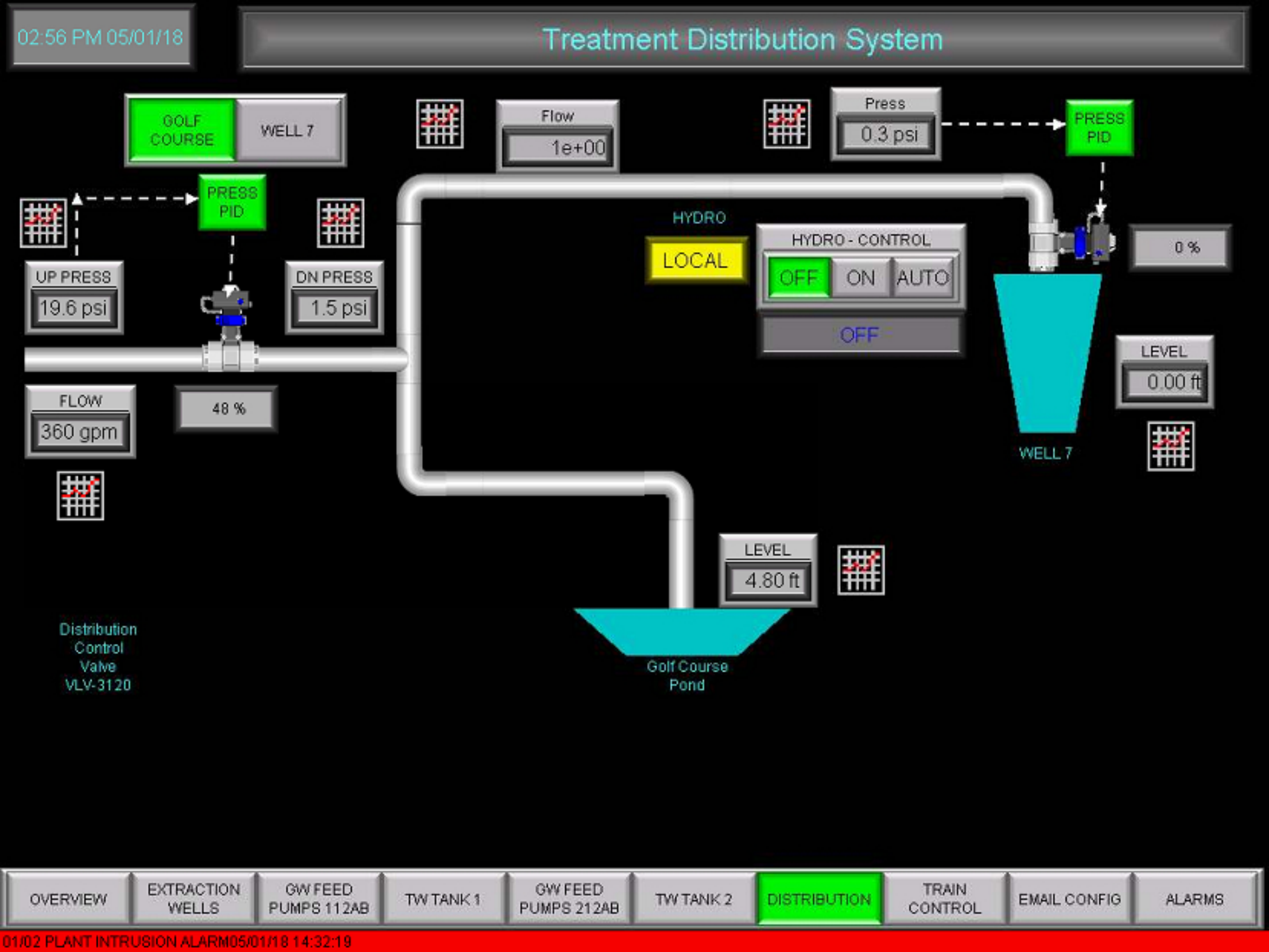
02:56 PM 05/01/18
Treatment Distribution System
GOLF COURSE
WELL 7
Flow
1e+00
Press
0.3 psi
PRESS PID
PRESS PID
HYDRO
LOCAL
HYDRO - CONTROL
OFF
ON
AUTO
OFF
0 %
UP PRESS
19.6 psi
DN PRESS
1.5 psi
LEVEL
0.00 ft
FLOW
360 gpm
48 %
WELL 7
LEVEL
4.80 ft
Distribution Control Valve VLV-3120
Golf Course Pond
OVERVIEW
EXTRACTION WELLS
GW FEED PUMPS 112AB
TW TANK 1
GW FEED PUMPS 212AB
TW TANK 2
DISTRIBUTION
TRAIN CONTROL
EMAIL CONFIG
ALARMS
01/02 PLANT INTRUSION ALARM05/01/18 14:32:19

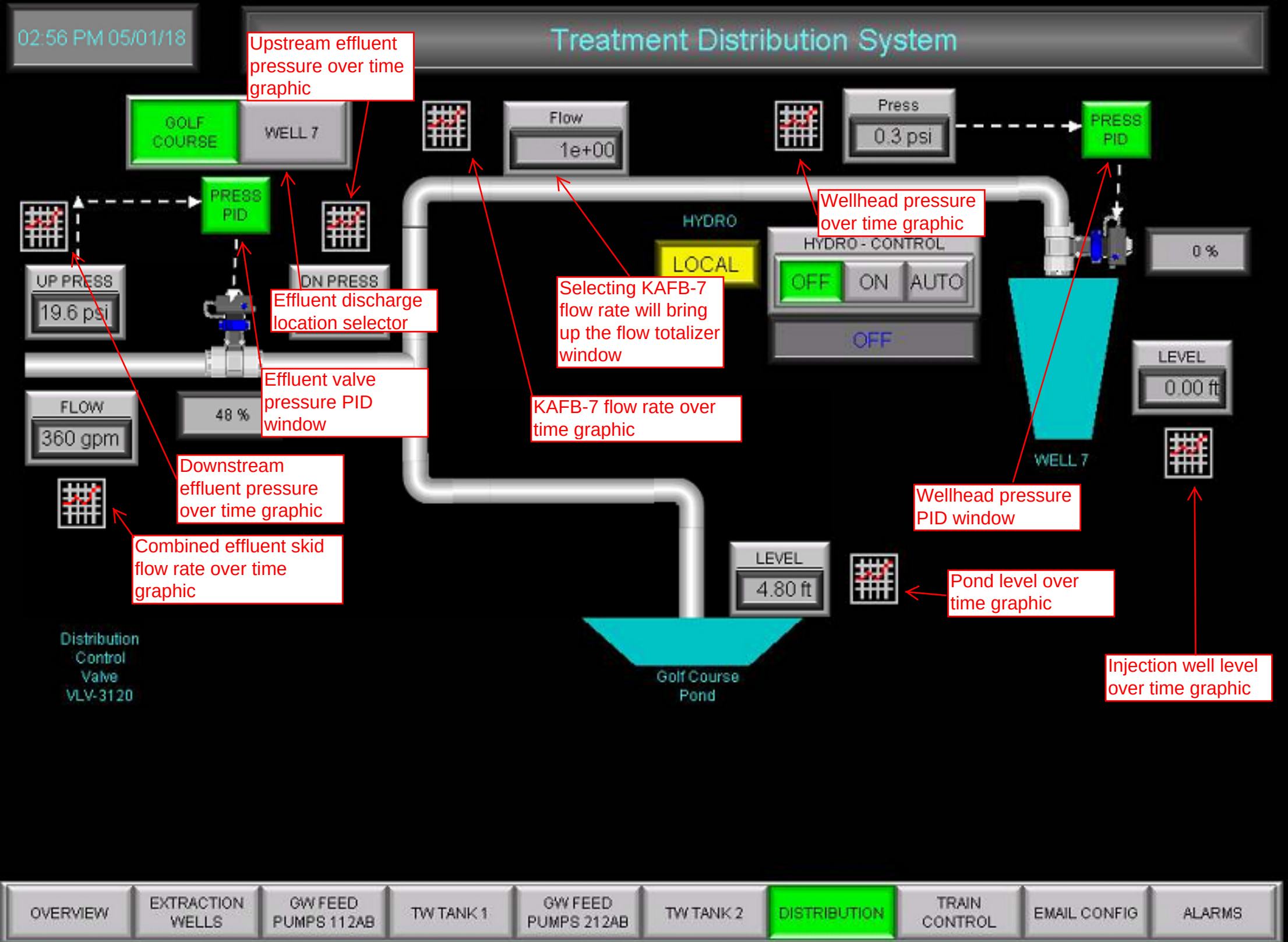
02:56 PM 05/01/18
Treatment Distribution System
Upstream effluent pressure over time graphic
GOLF COURSE
WELL 7
Flow
1e+00
Press
0.3 psi
PRESS PID
PRESS PID
HYDRO
LOCAL
HYDRO - CONTROL
OFF
ON
AUTO
OFF
0 %
Wellhead pressure over time graphic
UP PRESS
19.6 psi
DN PRESS
Effluent discharge location selector
Selecting KAFB-7 flow rate will bring up the flow totalizer window
Effluent valve pressure PID window
KAFB-7 flow rate over time graphic
FLOW
360 gpm
48 %
LEVEL
0.00 ft
WELL 7
Downstream effluent pressure over time graphic
Wellhead pressure PID window
Combined effluent skid flow rate over time graphic
LEVEL
4.80 ft
Pond level over time graphic
Distribution Control Valve VLV-3120
Golf Course Pond
Injection well level over time graphic
OVERVIEW
EXTRACTION WELLS
GW FEED PUMPS 112AB
TW TANK 1
GW FEED PUMPS 212AB
TW TANK 2
DISTRIBUTION
TRAIN CONTROL
EMAIL CONFIG
ALARMS
01/02 PLANT INTRUSION ALARM05/01/18 14:32:19

02:56 PM 05/01/18

TREATEDWATER UPSTREAM PRESSURE

CLOSE

OVERVIEW | EXTRACTION WELLS | GW FEED PUMPS 112AB | TW TANK 1 | GW FEED PUMPS 212AB | TW TANK 2 | DISTRIBUTION | TRAIN CONTROL | EMAIL CONFIG | ALARMS

01/02 PLANT INTRUSION ALARM05/01/18 14:32:19

02:56 PM 05/01/18

TREATEDWATER TOTAL DISCHARGE FLOW

CLOSE

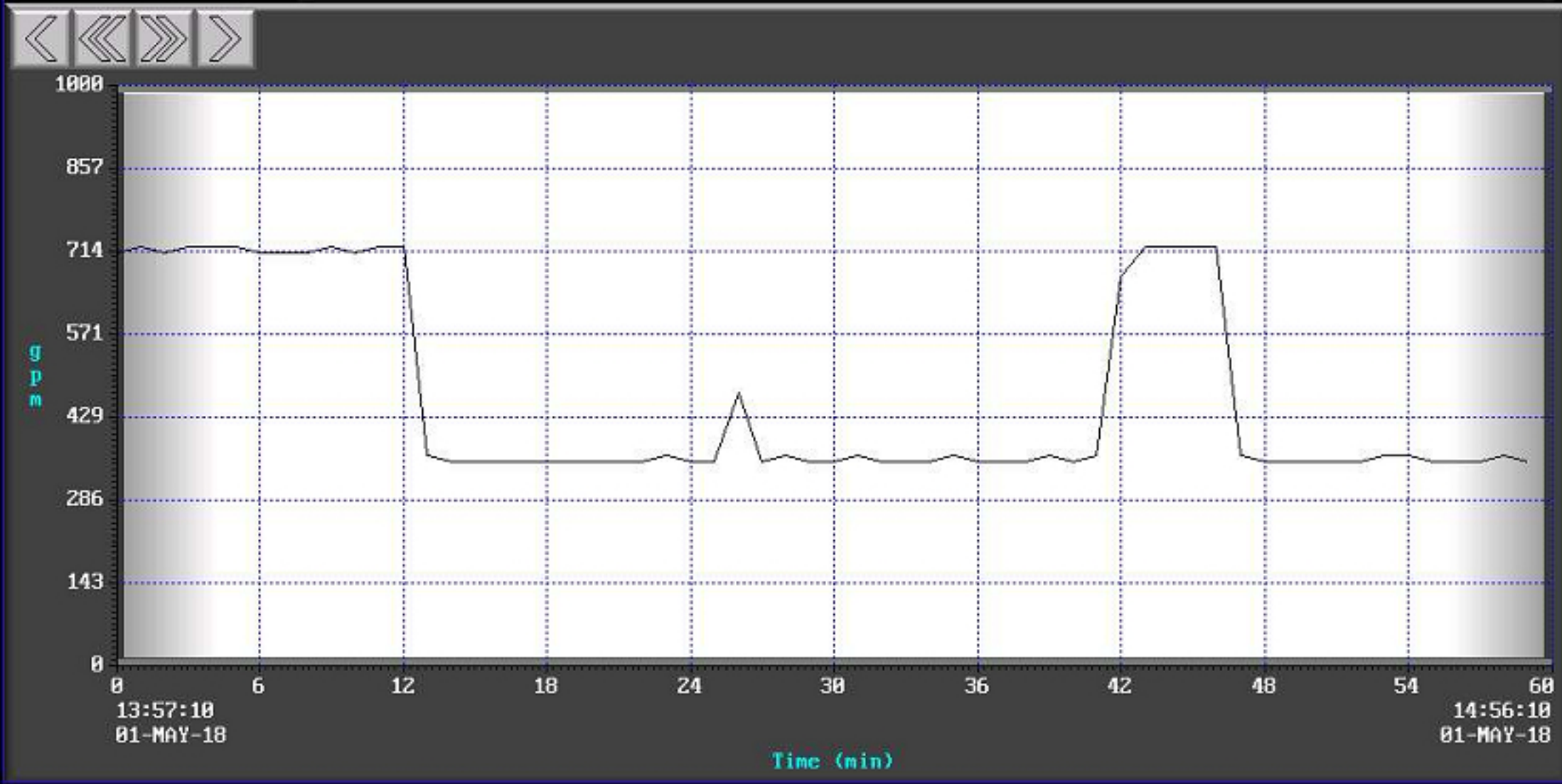

OVERVIEW | EXTRACTION WELLS | GW FEED PUMPS 112AB | TW TANK 1 | GW FEED PUMPS 212AB | TW TANK 2 | DISTRIBUTION | TRAIN CONTROL | EMAIL CONFIG | ALARMS

02/02 WELL 239 DRAWDOWN LEVEL ELEVATION ALARM 04/23/18 08:51:24

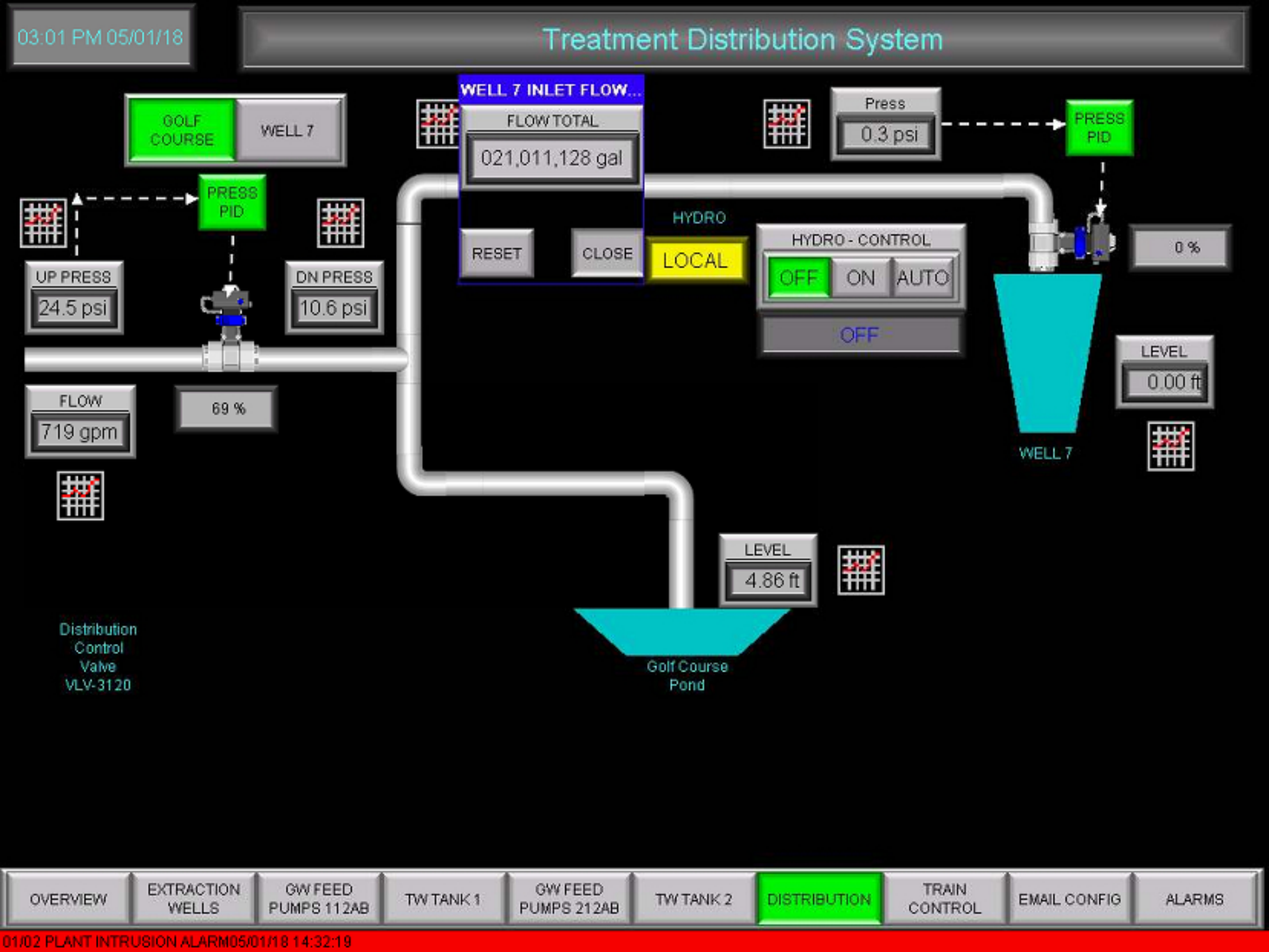
03:01 PM 05/01/18
Treatment Distribution System
GOLF COURSE
WELL 7
WELL 7 INLET FLOW...
FLOW TOTAL
021,011,128 gal
RESET
CLOSE
HYDRO
LOCAL
HYDRO - CONTROL
OFF
ON
AUTO
OFF
Press
0.3 psi
PRESS PID
PRESS PID
UP PRESS
24.5 psi
DN PRESS
10.6 psi
FLOW
719 gpm
69 %
0 %
LEVEL
0.00 ft
WELL 7
LEVEL
4.86 ft
Distribution Control Valve VLV-3120
Golf Course Pond
OVERVIEW
EXTRACTION WELLS
GW FEED PUMPS 112AB
TW TANK 1
GW FEED PUMPS 212AB
TW TANK 2
DISTRIBUTION
TRAIN CONTROL
EMAIL CONFIG
ALARMS
01/02 PLANT INTRUSION ALARM05/01/18 14:32:19

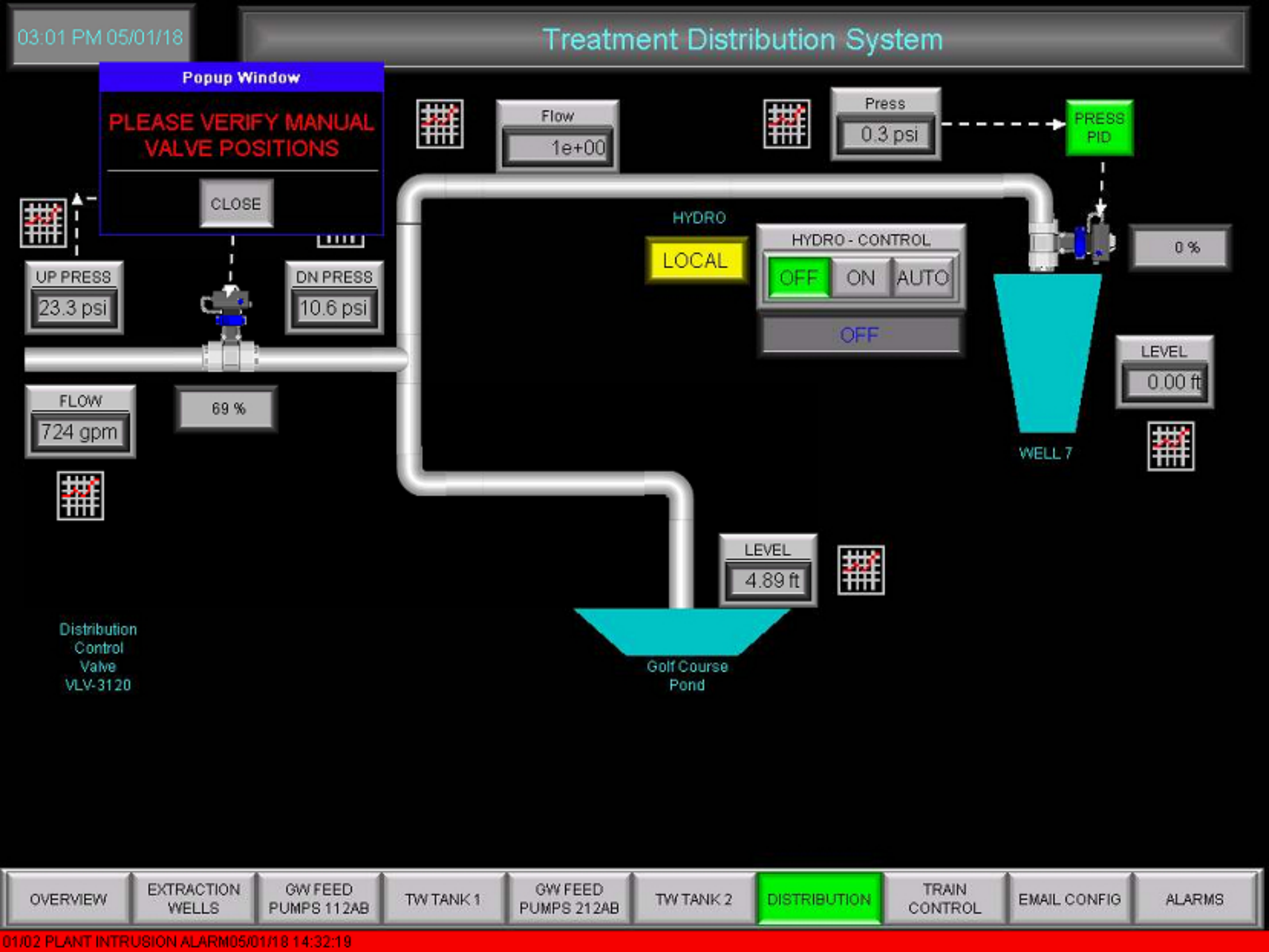
03:01 PM 05/01/18
Treatment Distribution System
Popup Window
PLEASE VERIFY MANUAL VALVE POSITIONS
CLOSE
Flow
1e+00
Press
0.3 psi
PRESS PID
HYDRO
LOCAL
HYDRO - CONTROL
OFF
ON
AUTO
OFF
0 %
UP PRESS
23.3 psi
DN PRESS
10.6 psi
FLOW
724 gpm
69 %
LEVEL
0.00 ft
WELL 7
LEVEL
4.89 ft
Distribution Control Valve VLV-3120
Golf Course Pond
OVERVIEW
EXTRACTION WELLS
GW FEED PUMPS 112AB
TW TANK 1
GW FEED PUMPS 212AB
TW TANK 2
DISTRIBUTION
TRAIN CONTROL
EMAIL CONFIG
ALARMS
01/02 PLANT INTRUSION ALARM05/01/18 14:32:19

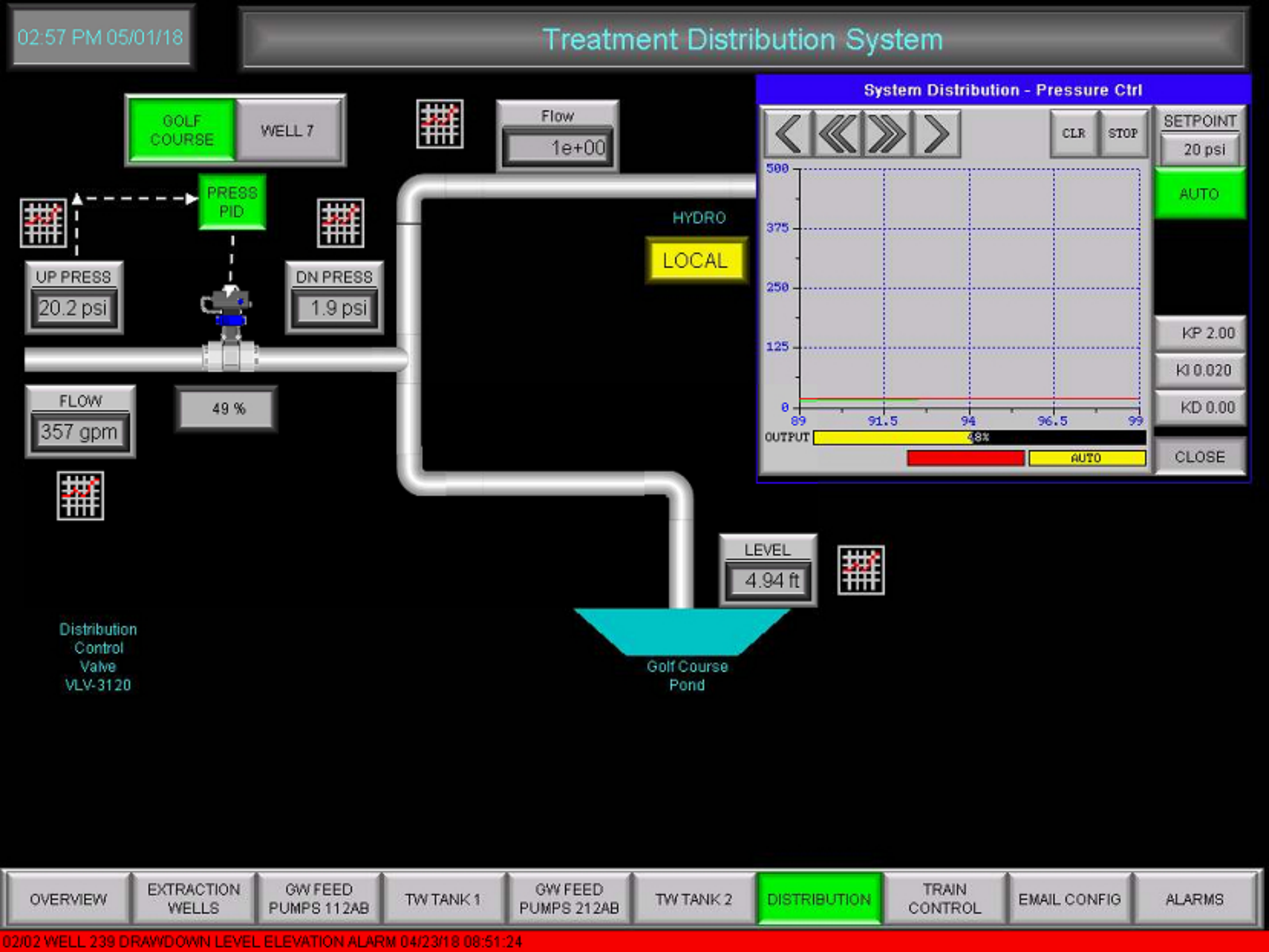
02:57 PM 05/01/18
Treatment Distribution System
GOLF COURSE
WELL 7
Flow
1e+00
PRESS PID
HYDRO
LOCAL
UP PRESS
20.2 psi
DN PRESS
1.9 psi
FLOW
357 gpm
49 %
LEVEL
4.94 ft
Distribution Control Valve VLV-3120
Golf Course Pond
System Distribution - Pressure Ctrl
CLR
STOP
SETPOINT
20 psi
AUTO
500
375
250
125
0
89
91.5
94
96.5
99
OUTPUT
48%
AUTO
KP 2.00
KI 0.020
KD 0.00
CLOSE
OVERVIEW
EXTRACTION WELLS
GW FEED PUMPS 112AB
TW TANK 1
GW FEED PUMPS 212AB
TW TANK 2
DISTRIBUTION
TRAIN CONTROL
EMAIL CONFIG
ALARMS
02/02 WELL 239 DRAWDOWN LEVEL ELEVATION ALARM 04/23/18 08:51:24

02:57 PM 05/01/18

TREATEDWATER DOWNSTREAM PRESSURE

CLOSE

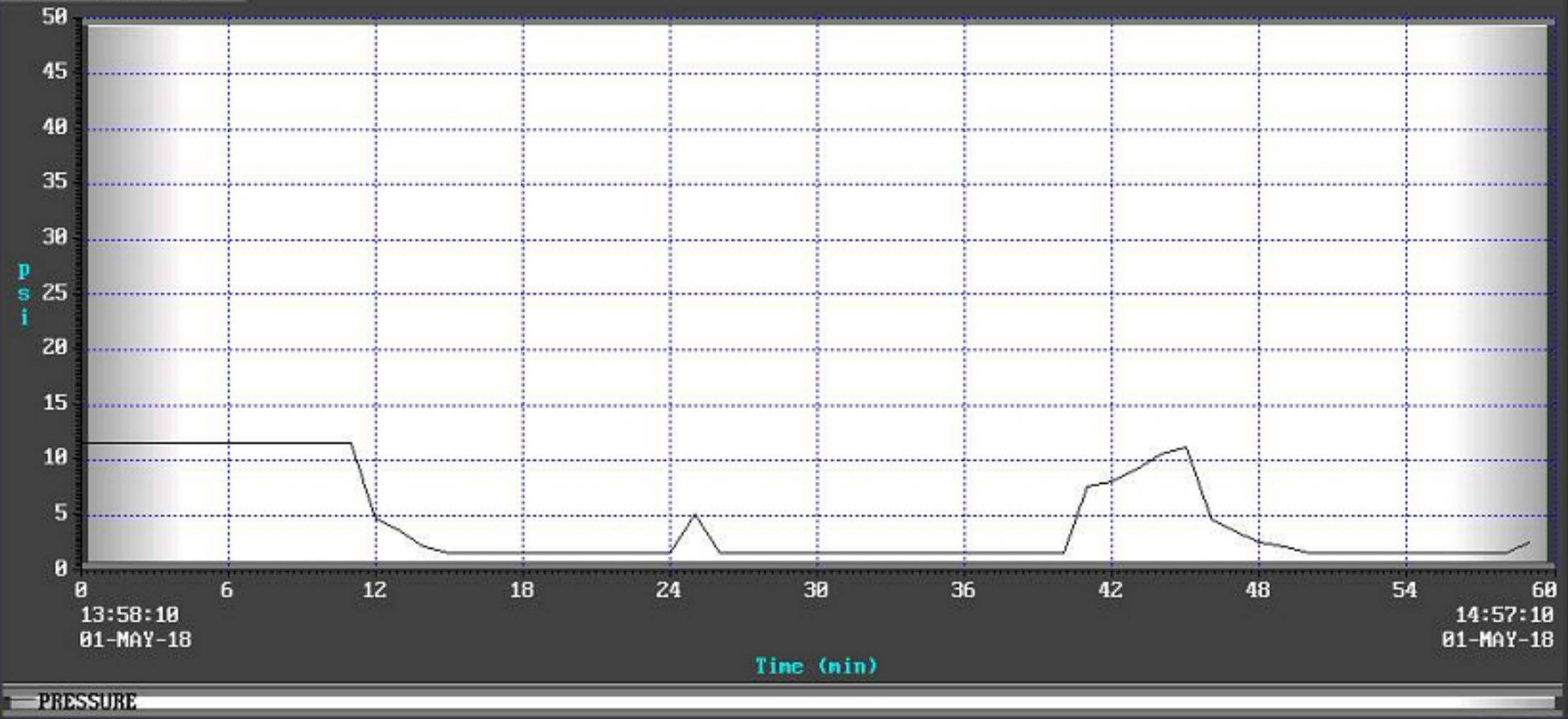

PRESSURE

OVERVIEW | EXTRACTION WELLS | GW FEED PUMPS 112AB | TW TANK 1 | GW FEED PUMPS 212AB | TW TANK 2 | DISTRIBUTION | TRAIN CONTROL | EMAIL CONFIG | ALARMS

02/02 WELL 239 DRAWDOWN LEVEL ELEVATION ALARM 04/23/18 08:51:24

02:57 PM 05/01/18

WELL 7 INLET FLOW

CLOSE

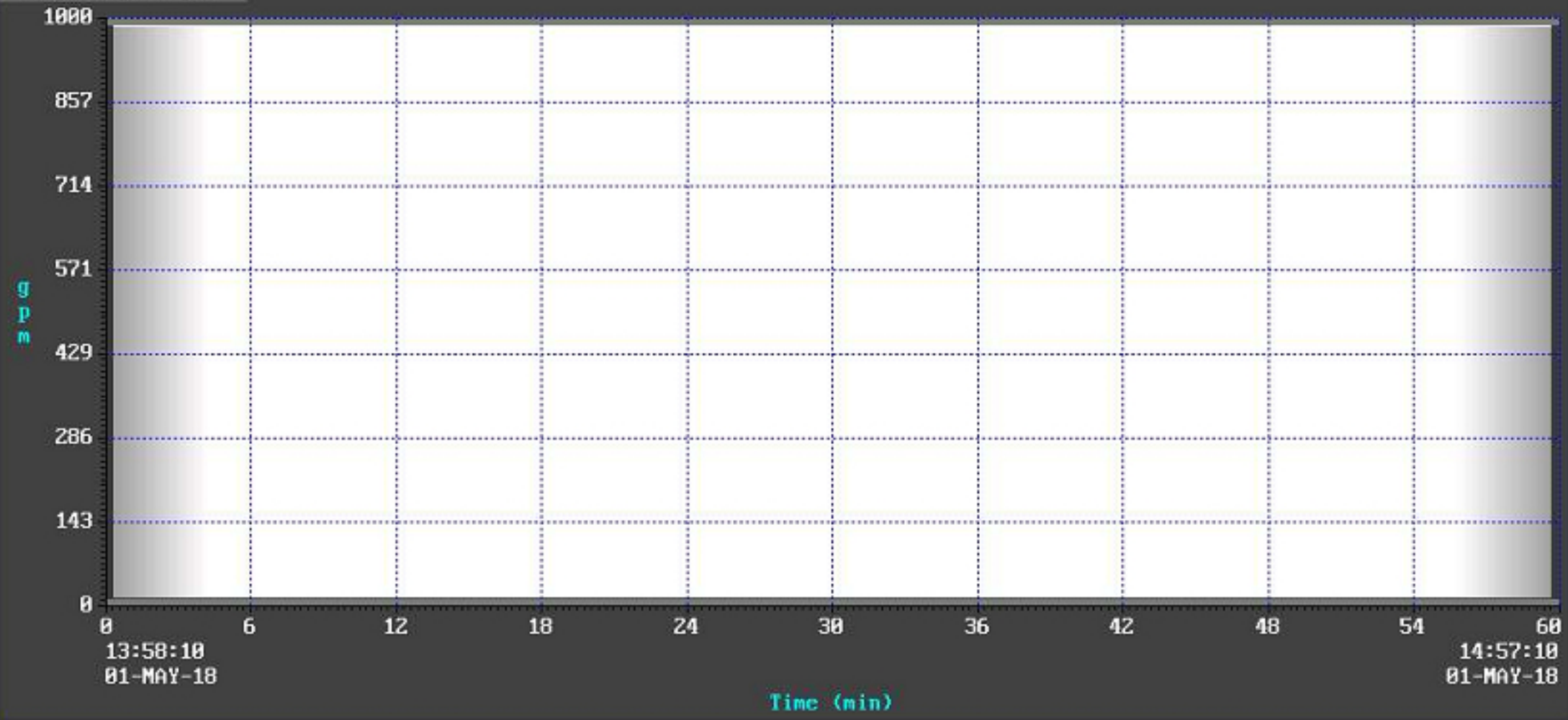

OVERVIEW | EXTRACTION WELLS | GW FEED PUMPS 112AB | TW TANK 1 | GW FEED PUMPS 212AB | TW TANK 2 | DISTRIBUTION | TRAIN CONTROL | EMAIL CONFIG | ALARMS

02/02 WELL 239 DRAWDOWN LEVEL ELEVATION ALARM 04/23/18 08:51:24

02:57 PM 05/01/18

WELL 7 INLET PRESSURE

CLOSE

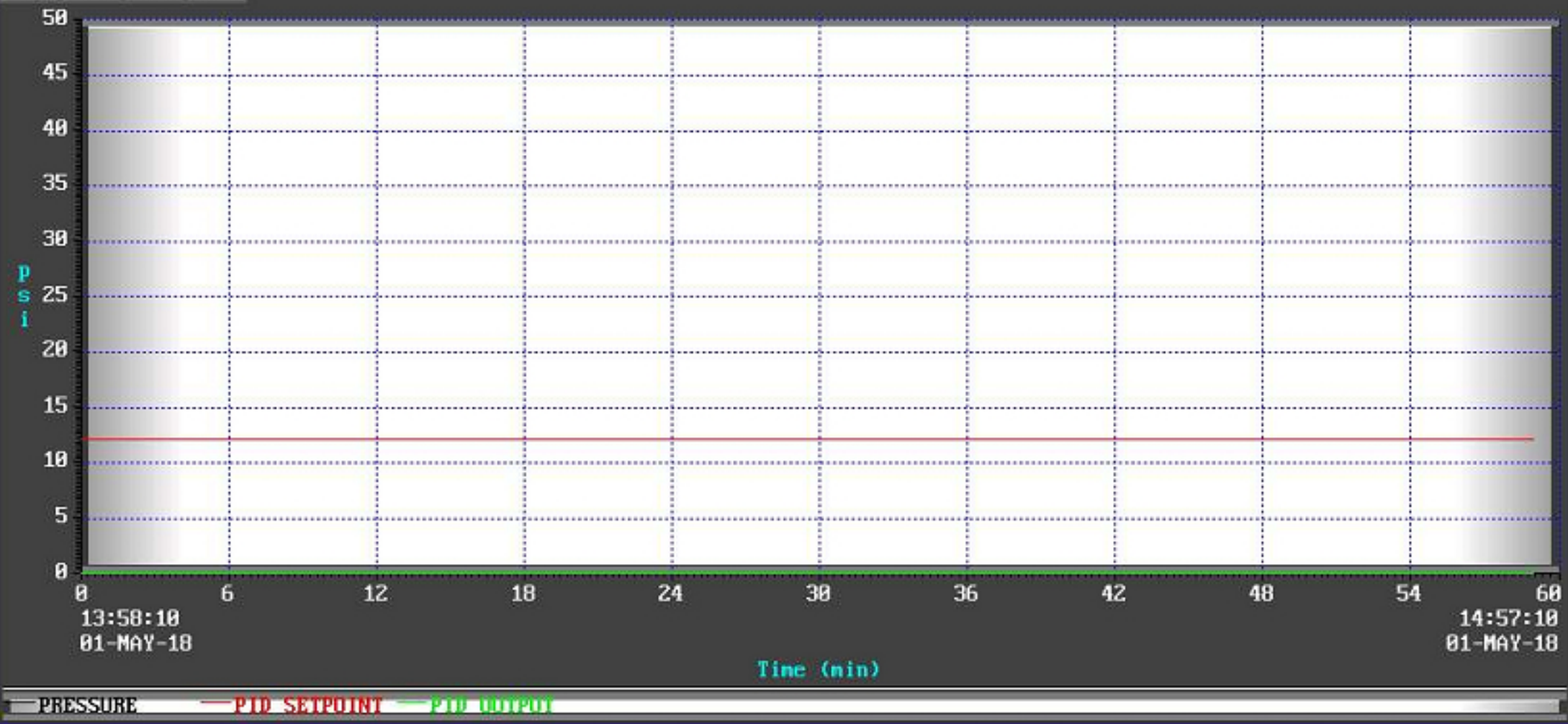

OVERVIEW | EXTRACTION WELLS | GW FEED PUMPS 112AB | TW TANK 1 | GW FEED PUMPS 212AB | TW TANK 2 | DISTRIBUTION | TRAIN CONTROL | EMAIL CONFIG | ALARMS

02/02 WELL 239 DRAWDOWN LEVEL ELEVATION ALARM 04/23/18 08:51:24

02:57 PM 05/01/18

Treatment Distribution System

GOLF COURSE | WELL 7

Flow
1e+00

PRESS PID

HYDRO
LOCAL

UP PRESS
30.9 psi

DN PRESS
7.5 psi

FLOW
652 gpm

62 %

LEVEL
4.89 ft

Distribution Control Valve VLV-3120

Golf Course Pond

Well 7 Injection - Pressure Ctrl

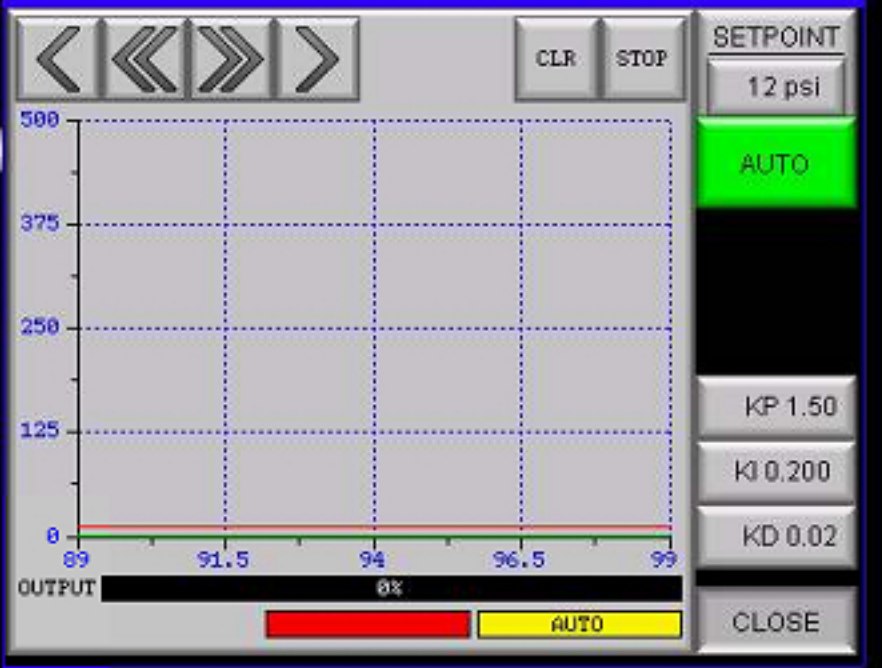

OVERVIEW | EXTRACTION WELLS | GW FEED PUMPS 112AB | TW TANK 1 | GW FEED PUMPS 212AB | TW TANK 2 | DISTRIBUTION | TRAIN CONTROL | EMAIL CONFIG | ALARMS

02/02 WELL 239 DRAWDOWN LEVEL ELEVATION ALARM 04/23/18 08:51:24

02:57 PM 05/01/18

WELL 7 LEVEL

CLOSE

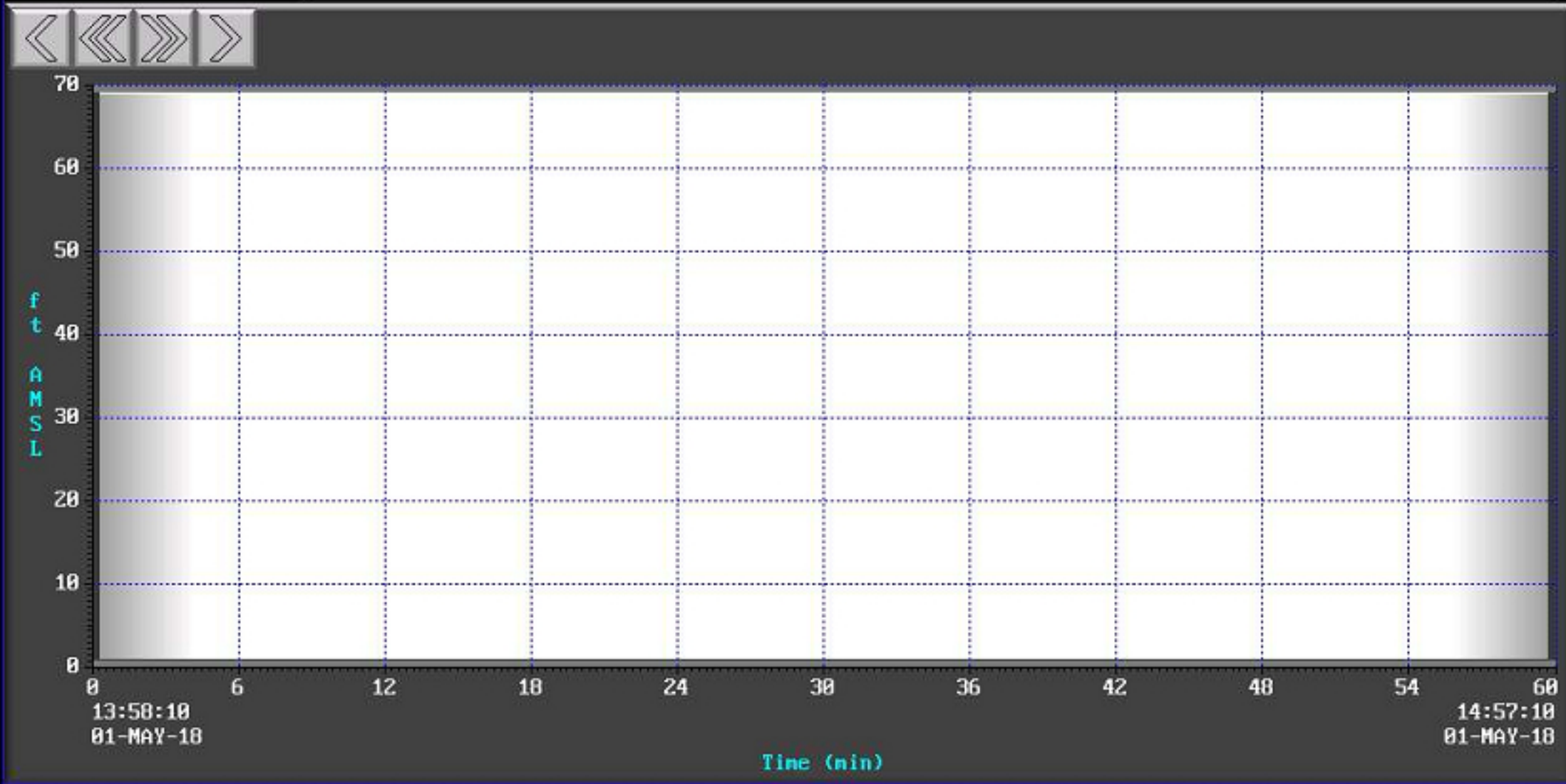

02/02 WELL 239 DRAWDOWN LEVEL ELEVATION ALARM 04/23/18 08:51:24

02:58 PM 05/01/18

GOLF COURSE POND LEVEL

CLOSE

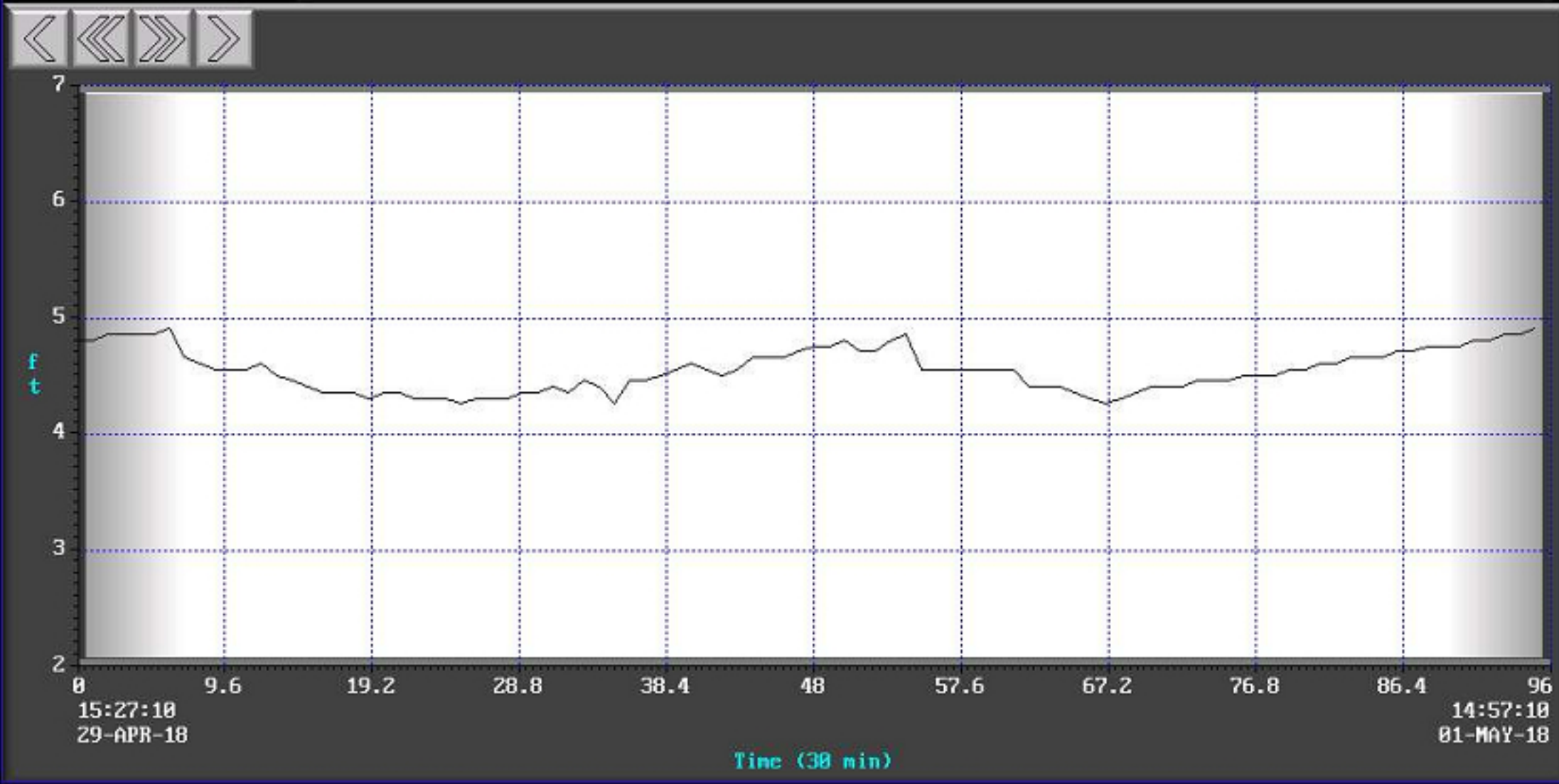

OVERVIEW | EXTRACTION WELLS | GW FEED PUMPS 112AB | TW TANK 1 | GW FEED PUMPS 212AB | TW TANK 2 | DISTRIBUTION | TRAIN CONTROL | EMAIL CONFIG | ALARMS

01/02 PLANT INTRUSION ALARM05/01/18 14:32:19

02:58 PM 05/01/18

Train Control

	Train 1			Train 2		
Groundwater Tank	7.4 ft			5.9 ft		
GW Feed Pump A	CONTINUOUS	1	OFF ON SEQ	CONTINUOUS	1	OFF ON SEQ
GW Feed Pump B	CONTINUOUS	1	OFF ON SEQ	CONTINUOUS	1	OFF ON SEQ
Treatedwater Tank	7.5 ft			8.5 ft		
Distribution Pump	CONTINUOUS		OFF ON SEQ	CONTINUOUS		OFF ON SEQ
Train Status	PROCESSING			PROCESSING		
Control	OFF ON		RESET	OFF ON		RESET
Inf / Eff Flow SP's	345 gpm	360 gpm		345 gpm	360 gpm	

	Status	Sequence #	Sequence Ctrl		Level Stop	Level Start
Extraction Well 228	RUNNING	1	OFF ON SEQ	GW Pumps	3.5 ft	7.5 ft
Extraction Well 233	RUNNING	3	OFF ON SEQ	TW Pumps	3.5 ft	7.5 ft
Extraction Well 234	RUNNING	4	OFF ON SEQ			
Extraction Well 239	RUNNING	2	OFF ON SEQ			

Shutdowns

- Pre-Filter Hi Diff Press: 4.0 psid
- Distribution Hi Press: 45.0 psid
- Well 7 Hi Level: 500 ft
- Golf Course Level Shutdown: 5.5 ft
- Extraction Well Drawdown Lo: 5 ft

01/02 PLANT INTRUSION ALARM05/01/18 14:32:19

02:58 PM 05/01/18

KAFB Groundwater Treatment System

Email Address

1	BFFGWTS@EAEST.COM
2	
3	
4	
5	
6	

TEST EMAIL

02/02 WELL 239 DRAWDOWN LEVEL ELEVATION ALARM 04/23/18 08:51:24

02:58 PM 05/01/18

KAFB Groundwater Treatment System Alarms

Alarm Summary — Total of 64 Alarms

Message	Confirm	Activated	Confirmed	Deactivated
PLANT INTRUSION ALARM05/01/18 14:32:19	Required	18/05/01 14:32:19		
PLANT INTRUSION ALARM05/01/18 13:43:46	Required	18/05/01 13:43:46		18/05/01 14:07:17
PLANT INTRUSION ALARM05/01/18 06:02:35	Required	18/05/01 06:02:35		18/05/01 06:06:08
PLANT INTRUSION ALARM04/30/18 10:04:39	Required	18/04/30 10:04:39		18/04/30 13:50:30
PLANT INTRUSION ALARM04/30/18 09:48:21	Required	18/04/30 09:48:21		18/04/30 09:48:29
PLANT INTRUSION ALARM04/30/18 07:28:03	Required	18/04/30 07:28:03		18/04/30 07:31:58
WELL 239 VAULT HATCH DOOR OPEN 04/30/18 07:14:25	Required	18/04/30 07:14:25		18/04/30 07:16:38
PLANT INTRUSION ALARM04/30/18 06:10:31		18/04/30 06:10:31	18/04/30 06:13:01	18/04/30 06:50:09
PLANT INTRUSION ALARM04/27/18 12:40:29		18/04/27 12:40:29	18/04/30 06:13:01	18/04/27 12:40:36
PLANT INTRUSION ALARM04/27/18 09:35:18		18/04/27 09:35:18	18/04/30 06:13:01	18/04/27 12:40:23
TRAIN 2 NOT IN PROCESS MODE 04/27/18 06:48:03		18/04/27 06:48:03	18/04/27 07:54:06	18/04/27 07:27:48
TRAIN 1 NOT IN PROCESS MODE 04/27/18 06:47:58		18/04/27 06:47:58	18/04/27 07:54:06	18/04/27 07:27:48
PLANT INTRUSION ALARM04/27/18 06:27:15		18/04/27 06:27:15	18/04/27 07:54:06	18/04/27 08:14:10
SAND FILTER 2 IN BACKWASH 04/27/18 03:56:25		18/04/27 03:56:25	18/04/27 07:54:06	18/04/27 04:04:24
PLANT INTRUSION ALARM04/26/18 13:13:32		18/04/26 13:13:32	18/04/27 07:54:06	18/04/26 14:02:31
PLANT INTRUSION ALARM04/26/18 13:07:03		18/04/26 13:07:03	18/04/27 07:54:06	18/04/26 13:08:14
WELL 239 VAULT HATCH DOOR OPEN 04/26/18 12:42:53		18/04/26 12:42:53	18/04/27 07:54:06	18/04/26 12:48:55
EXTRACTION WELL PUMP 105 FAILED 04/26/18 10:40:23		18/04/26 10:40:23	18/04/27 07:54:06	18/04/26 10:41:03
WELL 239 VAULT HATCH DOOR OPEN 04/26/18 09:45:59		18/04/26 09:45:59	18/04/27 07:54:06	18/04/26 10:10:13
PLANT INTRUSION ALARM04/26/18 06:28:28		18/04/26 06:28:28	18/04/27 07:54:06	18/04/26 08:13:30
PLANT INTRUSION ALARM04/25/18 13:52:55		18/04/25 13:52:55	18/04/27 07:54:06	18/04/25 13:53:56
PLANT INTRUSION ALARM04/25/18 09:15:47		18/04/25 09:15:47	18/04/27 07:54:06	18/04/25 09:36:57
PLANT INTRUSION ALARM04/25/18 06:39:52		18/04/25 06:39:52	18/04/27 07:54:06	18/04/25 08:20:46
PLANT INTRUSION ALARM04/24/18 09:15:13		18/04/24 09:15:13	18/04/27 07:54:06	18/04/24 09:16:26
PLANT INTRUSION ALARM04/24/18 06:09:17		18/04/24 06:09:17	18/04/27 07:54:06	18/04/24 06:56:33
PLANT INTRUSION ALARM04/23/18 14:20:32		18/04/23 14:20:32	18/04/27 07:54:06	18/04/23 14:43:27
WELL 239 VAULT HATCH DOOR OPEN 04/23/18 13:41:12		18/04/23 13:41:12	18/04/27 07:54:06	18/04/23 14:11:15
PLANT INTRUSION ALARM04/23/18 13:29:12		18/04/23 13:29:12	18/04/27 07:54:06	18/04/23 13:30:20
WELL 239 VAULT HATCH DOOR OPEN 04/23/18 08:54:17		18/04/23 08:54:17	18/04/27 07:54:06	18/04/23 09:51:03
WELL 239 DRAWDOWN LEVEL ELEVATION ALARM 04/23/18 08:51:24		18/04/23 08:51:24	18/04/27 07:54:06	

Page Up | Page Down | Line Up | Line Down | Detail | Clear All | Confirm | Confirm All

OVERVIEW | EXTRACTION WELLS | GW FEED PUMPS 112AB | TW TANK 1 | GW FEED PUMPS 212AB | TW TANK 2 | DISTRIBUTION | TRAIN CONTROL | EMAIL CONFIG | ALARMS

01/02 PLANT INTRUSION ALARM05/01/18 14:32:19

APPENDIX H

Design Calculations for Carbon Vessel Media Beds

TIGG CARBON LIFE ANALYSES

From: John Mickler
To: Jim Kearns; Jercinovic, Devon
Cc: Nicholas Kelly
Subject: RE: Kirtland BFF - GAC Lifetime Analysis w/ Update Concentrations
Date: Friday, April 14, 2017 6:06:26 AM

Devon, EA is granted permission to provide this information to NMED in support of the TIGG equipment and carbons for this application.

Let us know if you need any other help.

John M. Mickler P.E., PMP
Vice President and General Manager

TIGG, LLC
1 Willow Avenue
Oakdale, PA 15071
Office: 724-703-3020 x106
Mobile: 412-370-5833
jmickler@tigg.com

1 Willow Avenue
Oakdale, PA 15071
p. 724-703-3020
f. 724-703-3026

Title: Kirtland AFB 4/13/17

Report Basis

Flow Rate	400 GPM
Water pH	7
Water Temperature	65 °F

Component	Inlet Concentration
ethylene dibromide	20.000 ppb
benzene	450.000 ppb
ethyl benzene	102.000 ppb
toluene	212.000 ppb
xylene	110.000 ppb

Report: 114.31 lbs. activated carbon per day saturated at conditions

Average Loading at Saturation 4.024 lbs./100 lbs. Carbon

Note: Contact TIGG Corporation if comments are needed on preferential adsorption of contaminants above.

PROPRIETARY AND CONFIDENTIAL

THIS INFORMATION IS THE EXCLUSIVE PROPERTY OF TIGG LLC, AND SHALL NOT BE COPIED OR DISSEMINATED WITHOUT PRIOR CONSENT. THIS COMPUTER PROJECTION IS FOR SATURATION OF TIGG 5D LIQUID PHASE ACTIVATED CARBONS. IT IS FOR GENERAL GUIDANCE ONLY AND IS NOT A PERFORMANCE GUARANTEE OF ANY SORT. IT ASSUMES CONSISTENT CONDITIONS AND PURITY LEVELS AS LISTED, BUT DOES NOT ALLOW FOR POSSIBLE COMPETITIVE ORGANICS NOT LISTED.

1 Willow Avenue
Oakdale, PA 15071
p. 724-703-3020
f. 724-703-3026

Title: Kirtland AFB 4/13/17

Report Basis

Flow Rate	400 GPM
Water pH	7
Water Temperature	65 °F

Component	Inlet Concentration
ethylene dibromide	10.000 ppb
benzene	225.000 ppb
ethyl benzene	51.000 ppb
toluene	106.000 ppb
xylene	55.000 ppb

Report: 43.64 lbs. activated carbon per day saturated at conditions

Average Loading at Saturation 3.245 lbs./100 lbs. Carbon

Note: Contact TIGG Corporation if comments are needed on preferential adsorption of contaminants above.

PROPRIETARY AND CONFIDENTIAL

THIS INFORMATION IS THE EXCLUSIVE PROPERTY OF TIGG LLC, AND SHALL NOT BE COPIED OR DISSEMINATED WITHOUT PRIOR CONSENT. THIS COMPUTER PROJECTION IS FOR SATURATION OF TIGG 5D LIQUID PHASE ACTIVATED CARBONS. IT IS FOR GENERAL GUIDANCE ONLY AND IS NOT A PERFORMANCE GUARANTEE OF ANY SORT. IT ASSUMES CONSISTENT CONDITIONS AND PURITY LEVELS AS LISTED, BUT DOES NOT ALLOW FOR POSSIBLE COMPETITIVE ORGANICS NOT LISTED.

CARBON ADSORBER DESIGN CALCULATION

Project Title:	**Mid-Plume Pump and Treat System, Kirtland Air Force Base, New Mexico**	**Document Number:**	**140705-001-PR-CL-40002**
Owner:	**Process Engineering**	**Revision:**	**0**

CARBON ADSORBER DESIGN CALCULATION

Rev	Status/Changes	Performed		Checked		Approved	
		Initial	Date	Initial	Date	Initial	Date
0	100% Design	SES	3/09/15	DWB	3/10/15	BACH	3/11/15

CARBON ADSORBER DESIGN CALCULATION

Project Title:	Mid-Plume Pump and Treat System, Kirtland Air Force Base, New Mexico	Document Number:	140705-001-PR-CL-40002
Owner:	Process Engineering	Revision:	0

Table of Contents

1.0 Introduction 3

1.1 Background 3

1.2 Objectives 3

2.0 Inputs and assumptions 3

2.1 Calculation Methodology 3

2.2 Inputs 4

2.3 Assumptions 4

3.0 Results and Conclusions 5

3.1 Results 5

3.2 Conclusions 5

4.0 References 5

List of Attachments

Attachment A: Process flow diagram for groundwater treatment system
Attachment B: Groundwater data for monitoring wells
Attachment C: Design recommendations for activated carbon
Attachment D: Tigg submittals on activated carbon and carbon adsorbers
Attachment E: Spreadsheet - carbon adsorber calculations

CARBON ADSORBER DESIGN CALCULATION

Project Title:	Mid-Plume Pump and Treat System, Kirtland Air Force Base, New Mexico	Document Number:	140705-001-PR-CL-40002
Owner:	Process Engineering	Revision:	0

1.0 INTRODUCTION

The mid-plume pump and treat system is part of an interim remedial measure for the Bulk Fuels Facility (BFF) groundwater plume at Kirtland AFB. The mid-plume groundwater is currently contaminated with ethylene dibromide (EDB) at concentrations above the maximum contaminant level (MCL) of 0.05 µg/L. The mid-plume pump and treat system will eventually consist of several extraction wells that are expected to produce up to 800 gpm of groundwater. Current scope of work is to design and install one groundwater extraction well and a groundwater treatment (GWT) system designed for 400 gpm of groundwater.

1.1 Background

Attachment A is a flow diagram for the mid-plume groundwater treatment system. Groundwater from the extraction well is pumped from the well through a buried pipeline into the GWT system feed tank. The groundwater is then pumped from the feed tank through pre-filters and activated carbon adsorbers which remove the EDB. The treated water from the carbon adsorbers is collected in a discharge tank and then pumped into an infiltration gallery for disposal. The design flow rate for the first extraction well is 100 gpm. Eventually additional wells and a second 400 gpm treatment system will be installed.

The carbon adsorber system is a standard two-bed unit with a piping manifold. The two carbon beds will be run in lead-lag configuration. The lead bed removes almost all of the EDB while the lag or polishing bed is on line to remove any remaining EDB from the lead bed effluent. The piping manifold for the carbon adsorbers allows either bed to serve as the lead or lag bed and allows either bed to be taken offline for carbon replacement while the other bed is in service.

1.2 Objectives

The objectives for this calculation are to determine the amount of carbon needed for EDB removal, the diameter of the carbon adsorbers and to estimate the carbon consumption. The carbon adsorbers will be sized for a maximum groundwater flow rate of 400 gpm and a minimum flow rate of 100 gpm.

2.0 INPUTS AND ASSUMPTIONS

2.1 Calculation Methodology

The amount of carbon needed in the carbon adsorbers is set by the residence time needed to remove the EDB from the groundwater. This design criteria based on the empty bed contact time which is the volume of the carbon divided by the groundwater flow rate. The required contact time depends on the characteristics of the organic, its concentration in the groundwater and the degree of removal required. Unless pilot test data is available, design contact time is based on the recommendations of the carbon vendors. EDB has a higher solubility in water and is less readily adsorbed by activated carbon than many

organics, especially hydrocarbons. In addition the drinking water standard for EDB is very low (0.05 µg/L). Because of these factors and past operating experience with EDB and similar compounds, vendors recommend a contact time of at least 8 to 10 minutes in the each of the two carbon beds operating in series. During the aquifer test on KAFB 106157, carbon treatment with a contact time of 10 to 11 minutes successfully removed EDB from the groundwater. For this calculation, the design contact time will be a more conservative 12 minutes. The additional contact time and carbon volume will be needed if dissolved gasoline range organics (GRO) from the downgradient plume are pulled into the extraction well.

Once the amount of carbon is calculated, based on the required contact time and groundwater flow rate, the diameter of the carbon bed can be determined. The diameter of the carbon bed has to be large enough so that the pressure drop through the bed is reasonable but not so large that the groundwater flow is too low. Groundwater flow rate, or hydraulic loading (calculated as gpm/square foot of carbon bed cross sectional area), must be high enough to provide good distribution of the groundwater over the carbon in the adsorber. This minimum hydraulic loading is a function of the size of the carbon, design of the carbon adsorber inlet and outlet manifolds and is obtained from the equipment vendor. Typically minimum flow is between 1 and 2 gpm per square foot (gpm/ft2). Maximum loading can be as high as 9 gpm/ft2, but 5 is a more typical design value.

Unless test data is available, carbon usage for removal of any organic, including EDB, is typically calculated from isotherm adsorption data provided by the carbon vendor. The isotherm data is a curve showing the predicted loading capacity for the organic on the carbon (grams of organic adsorbed per gram of carbon) plotted against the organic concentration in groundwater. Carbon loading for an adsorber is generally taken to be 60% to 75% of the isotherm loading. This accounts for imperfect mass transfer in the carbon bed. Once the loading is estimated, carbon usage can be calculated based on the mass of organic removed divided by the loading of the organic on the carbon.

2.2 Inputs

Inputs include:

- The groundwater design (maximum) feed rate is 400 gpm. Minimum flow to the carbon adsorbers will be 100 gpm. The carbon adsorber feed pumps will be shut down if flow drops below 100 gpm.
- Design groundwater EDB concentration is 2.0 µg/L. Actual concentration, based on recent monitoring well analysis, shown as Attachment B, should be between 0.14 and 1.4 µg/L
- Groundwater inlet temperature from the extraction well will be between 55 to 60°F.

2.3 Assumptions

1) Although Tigg and other vendors report that a contact time of 8 to 10 minutes can give acceptable removal for EDB, the carbon beds will be designed to provide 12 minutes contact time. This provides extra contact time and carbon if GRO compounds are pulled into the extraction well.
2) Carbon density is 30 pounds per cubic foot.
3) Extracted groundwater will be no higher in EDB than 2.0 µg/L. Attachment B shows recent analytical results for the three monitoring wells that are closest to the new proposed extraction well, KAFB-106228. This data shows that the EDB in the groundwater from these monitoring wells ranges from 0.16 to 1.4 µg/L. The design value of 2.0 should be conservative.
4) Based on Tigg's recommendation, minimum groundwater flow for the adsorbers will be 1 gpm per square foot of adsorber cross section.
5) Estimated EDB loading on the carbon at 2.0 µg/L inlet will be 0.0062 gram of EDB per gram of carbon.

3.0 RESULTS AND CONCLUSIONS

3.1 Results

At the design flow rate of 400 gpm of groundwater and a design contact time of 12 minutes, 20,000 pounds of carbon is required. Standard 20,000 pound carbon beds are 10 foot diameter.

With 10 foot diameter carbon bed and a minimum groundwater flow of 100 gpm. The hydraulic loading is 1.27 gpm per square foot which is above the minimum value of 1.0. At 400 gpm the hydraulic loading is 5.1 gpm/ft2 and vendor pressure drop curves shows less than 2 psi pressure drop over the system.

At a design EDB concentration of 2.0 µg/L of EDB in the groundwater and a groundwater flow of 400 gpm, carbon usage is estimated to be 567 pounds per year. Based on this usage the 20,000 pound carbon adsorber should last 20 years. It is likely that the bed life will be limited by fouling due to mineral scale, fine soil particles or biological deposits. A yearly evaluation of pressure drop through the carbon beds and EDB removal trends is recommended. It is not uncommon to change carbon on a yearly or biannual basis in this type of service.

3.2 Conclusions

The carbon adsorption system design of two 10 foot diameter beds, each containing 20,000 pounds of carbon, meets all design criteria.

4.0 REFERENCES

Table 5-1 in Kirtland BFF Quarterly reports contains the analytical data on the groundwater monitoring wells. Monitoring wells KAFB-106035, KAFB-106036 and KAFB-106037 are close to the location of the first extraction well, KAFB-106228. The data shown in Atttachment B is extracted from this table in the quarterly reports.

The letter report on the KAFB 106157 aquifer test is:

USACE, 2014, "Fourth Quarter CY2013 Aquifer Test Results", January 27, 2014, Bulk Fuels Facility Spill, Solid Waste Management Units ST-106 and SS-111. Prepared by Shaw Environmental & Infrastructure, Inc. for the USACE Albuquerque District under USACE Contract No. W912DY-10-D-0014, Delivery Order 002. October.

The work plan which describes the carbon adsorption system is:

USACE, 2013a, *Groundwater Extraction Well KAFB-106157 Aquifer Testing Work Plan, Bulk Fuels Facility, Spill, Solid Waste Management Units ST-106 and SS-111.* Prepared by Shaw Environmental & Infrastructure, Inc. for the USACE Albuquerque District under USACE Contract No. W912DY-10-D-0014, Delivery Order 002. October.

CARBON ADSORBER DESIGN CALCULATION

Project Title:	**Mid-Plume Pump and Treat System, Kirtland Air Force Base, New Mexico**	**Document Number:**	**140705-001-PR-CL-40002**
Owner:	**Process Engineering**	**Revision:**	**0**

Attachment A:

Process flow diagram for groundwater

treatment system

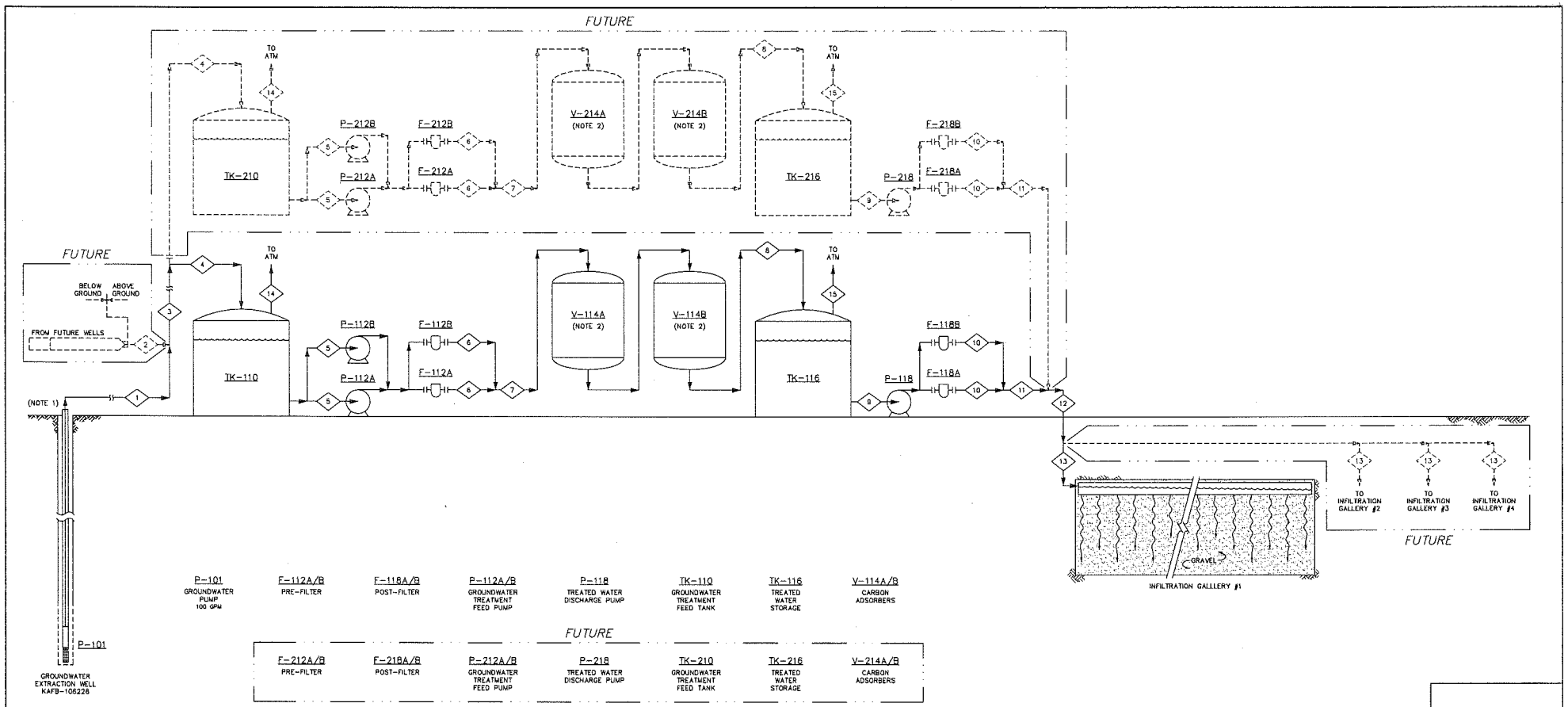

STREAM NO. / COMPONENT		1	2	3	4	5	6	7	8	9	10	11	12	13	14	15			
		KAFB-106228 TO GWTS	FUTURE WELLS TO GWTS	WELL FIELD TO GWTS	INFLUENT TO FEED TANK	GWTS FEED PUMPS	PRE-FILTER	CARBON ABSORPTION INLET	TREATED WATER	DISCHARGE PUMP	POST-FILTER	TREATED DISCHARGE	TREATED DISCHARGE	INFILTRATION GALLERY	TREATED WATER STORAGE TANK VENT	TREATED WATER STORAGE TANK VENT			
LIQUID FLOW (maximum)	gpm		700	800	400	200	400	400	400	400	400	400	800	200					
LIQUID FLOW (average)	gpm	100																	
AIR FLOW	acfm (scfm)																		
INFILTRATION RATE	gal/day/ft^2													TBD		ATM			
ETHYLENE DIBROMIDE (EDB)	µg/L	2	2	2	2	2	2	2	0.03	0.03	0.03	0.03	0.03	0.03					
PRESSURE	psig	25	25	25	25	19	25	25	25	19	25	25	25	1	(12.05)	(12.05)			
TEMPERATURE	°F	58	58	58	58	58	58	58	58	58	58	58	58	58	68	68			
DENSITY (AT 70°F)	lb/ft^3	62.4	62.4	62.4	62.4	62.4	62.4	62.4	62.4	62.4	62.4	62.4	62.4	62.4	0.061	0.061			

NOTES

1. PIPELINE FROM GROUNDWATER WELL KAFB-106226 IS DOUBLE-WALLED HDPE PIPE.
2. CARBON VESSELS ARE RUN IN SERIES WITH OPTIONAL VALVING FOR PARALLEL AND LEAD/LAG CONFIGURATION. SEE DRAWING 03-000003 FOR VALVING DETAIL.

REFERENCE DRAWINGS

NO.	REVISION	DRAWN	CK'D	APP'D	DATE
A	30% INTERNAL REVIEW	EGA	ACS	SES	1/9/15

THIS DOCUMENT IS THE PROPERTY OF CHICAGO BRIDGE & IRON COMPANY ("CB&I"). IT MAY CONTAIN INFORMATION DESCRIBING TECHNOLOGY OWNED BY CB&I AND DESIGNED TO BE COMMERCIALLY SENSITIVE. IT IS TO BE USED ONLY IN CONNECTION WITH WORK BEING PERFORMED BY CB&I. REPRODUCTION IN WHOLE OR IN PART FOR ANY PURPOSE, OTHER THAN WORK PERFORMED BY CB&I, IS FORBIDDEN EXCEPT BY EXPRESS WRITTEN PERMISSION OF CB&I. IT IS TO BE SAFEGUARDED AGAINST BOTH DELIBERATE AND INADVERTENT DISCLOSURE TO ANY THIRD PARTY.

DRAWN: EGA | CK'D: ACS | APP'D: SES | DATE: 1/9/15 | SCALE: NONE

PROFESSIONAL SEAL

U.S. ARMY ENGINEER DISTRICT
CORPS OF ENGINEERS
ALBUQUERQUE, NEW MEXICO

CB&I FEDERAL SERVICES LLC
312 DIRECTORS DRIVE
KNOXVILLE, TENNESSEE 37923
865-690-3211

CLIENT DWG NO.

PROCESS FLOW DIAGRAM (PFD)
PHASE IV MID-PLUME PUMP & TREAT SYSTEM

FOR: BULK FUELS FACILITY, KIRTLAND AFB, NM

PROJECT NO: 140705 | DWG NO: 140705-001-PR-01-000001 | REV: A

File: 140705-001-PR-01-000001.dwg
Plot Date/Time: Jan 09, 2015 - 10:34am
Plotted By: Edward Anderson

CARBON ADSORBER DESIGN CALCULATION

Project Title:	**Mid-Plume Pump and Treat System, Kirtland Air Force Base, New Mexico**	**Document Number:**	**140705-001-PR-CL-40002**
Owner:	**Process Engineering**	**Revision:**	**0**

Attachment B:

Groundwater data for monitoring wells

Attachment B-Groundwater Analyses
(for well cluster near proposed new extraction well)

LOCATION_CODE		KAFB-106035 – 0 - 22ft below water level											
SAMPLE_NO		GW1320			GW1454			GW1586			GW1751		
SAMPLE_DATE		16-Oct-13			27-Jan-14			9-Apr-14			15-Jul-14		
PURP		REG			REG			REG			REG		
Test Group	Units	Result	Qual	LOD	Result	Qual	LOD	Result	Qual	LOD	Result	Qual	LOD
1,2-DIBROMOETHANE	ug/L	0.667		0.0188	1.42	D	0.0932	1.35	D	0.0942	0.514		0.0188
Water Chemistry													
OXIDATION-REDUCTION POTENTIAL	MV	31			-54			125					
SPECIFIC CONDUCTIVITY	US/CM	430.9			473.2			441.1					
PH	PH UNITS	7.64			9.12			7.69					
TEMPERATURE	DEG C	18.64			18.85			19.04					
TURBIDITY, NTU	NTU	1.23			1.53			0.35					
DISSOLVED OXYGEN	MG/L	5.18			3.81			4.51					
ALKALINITY, TOTAL	MG/L	140			140			148					
BROMIDE	mg/L	0.372		0.125	0.418		0.125	0.421	MJ	0.125	0.372		0.125
CHLORIDE	mg/L	31.7	M	0.33	37.6		0.33	38.6		0.33	39.2		0.33
SULFATE	mg/L	46.8	M	1	46.1		1	46.7		1	46.9		1
NITROGEN, NITRATE-NITRITE	mg/L	0.428	J	0.75	0.326	J	0.75	0.311	J	0.75	0.453	JN	0.75
ALKALINITY, BICARBONATE (AS CACO3)	mg/L	115		1	120		1	123		1	131		1
ALKALINITY, CARBONATE (AS CACO3)	mg/L	ND	U	1	ND	U	1	ND	U	1	ND	U	1
AMMONIA (AS N)	mg/L	ND	U	0.15	ND	U	0.15	ND	U	0.15	0.157	J	0.15
SULFIDE, TOTAL	mg/L	ND	U	1.69	ND	U	1.82	ND	U	1.82	0.863	J	1.96
Metals													
CALCIUM	mg/L	50.7		2	54.1		2	51.8		2	55.7		2
LEAD	mg/L	0.00215	J	0.003	ND	U	0.003	ND	U	0.003	ND	U	0.003
MAGNESIUM	mg/L	6.67		3	7.17	N	3	7.53		3	7.94		3
POTASSIUM	mg/L	2.37	J	3	2.42	NJ	3	2.44	J	3	2.57	J	3
SODIUM	mg/L	27.5		3	29.1		3	28.7		3	30.7		3
IRON, DISSOLVED	mg/L	ND	U	0.06	ND	U	0.06	ND	U	0.06	ND	U	0.06
MANGANESE, DISSOLVED	mg/L	ND	U	0.006	ND	U	0.006	ND	U	0.006	ND	U	0.006
Hydrocarbons													
DIESEL RANGE ORGANICS	mg/L	ND	U	0.198	ND	U	0.2	ND	XU	0.2	ND	U	0.204
GASOLINE RANGE ORGANICS	mg/L	ND	U	0.1	ND	U	0.1	ND	U	0.1	ND	U	0.1
VOCs													
1,1,1,2-TETRACHLOROETHANE	ug/L	ND	U	0.5	ND	U	0.5	ND	XU	0.5	ND	U	0.5
1,1,1-TRICHLOROETHANE	ug/L	ND	U	0.5	ND	U	0.5	ND	U	0.5	ND	U	0.5
1,1,2,2-TETRACHLOROETHANE	ug/L	ND	U	0.5	ND	U	0.5	ND	U	0.5	ND	U	0.5
1,1,2-TRICHLOROETHANE	ug/L	ND	U	0.5	ND	U	0.5	ND	U	0.5	ND	U	0.5
1,1-DICHLOROETHANE	ug/L	ND	U	0.5	ND	U	0.5	ND	U	0.5	ND	U	0.5
1,1-DICHLOROETHENE	ug/L	ND	U	0.5	ND	U	0.5	ND	U	0.5	ND	U	0.5
1,1-DICHLOROPROPENE	ug/L	ND	U	0.5	ND	U	0.5	ND	U	0.5	ND	U	0.5
1,2,3-TRICHLOROBENZENE	ug/L	ND	U	0.5	ND	U	0.5	ND	U	0.5	ND	U	0.5
1,2,3-TRICHLOROPROPANE	ug/L	ND	U	1	ND	U	1	ND	U	1	ND	U	1
1,2,4-TRICHLOROBENZENE	ug/L	ND	U	0.5	ND	U	0.5	ND	U	0.5	ND	U	0.5
1,2,4-TRIMETHYLBENZENE	ug/L	ND	U	0.5	ND	U	0.5	ND	U	0.5	ND	U	0.5
1,2-DIBROMO-3-CHLOROPROPANE	ug/L	ND	U	1	ND	U	1	ND	U	1	ND	U	1
1,2-DIBROMOETHANE	ug/L	0.77	J	0.5	1.32		0.5	1.18		0.5	0.658	J	0.5
1,2-DICHLOROBENZENE	ug/L	ND	U	0.5	ND	U	0.5	ND	U	0.5	ND	U	0.5
1,2-DICHLOROETHANE	ug/L	ND	U	0.5	ND	U	0.5	ND	U	0.5	ND	U	0.5
1,2-DICHLOROPROPANE	ug/L	ND	U	0.5	ND	U	0.5	ND	U	0.5	ND	U	0.5
1,3,5-TRIMETHYLBENZENE	ug/L	ND	U	0.5	ND	U	0.5	ND	U	0.5	ND	U	0.5
1,3-DICHLOROBENZENE	ug/L	ND	U	0.5	ND	U	0.5	ND	U	0.5	ND	U	0.5
1,3-DICHLOROPROPANE	ug/L	ND	U	0.5	ND	U	0.5	ND	U	0.5	ND	U	0.5
1,4-DICHLOROBENZENE	ug/L	ND	U	0.5	ND	U	0.5	ND	U	0.5	ND	U	0.5
2,2-DICHLOROPROPANE	ug/L	ND	U	0.5	ND	XU	0.5	ND	U	0.5	ND	U	0.5
2-BUTANONE	ug/L	ND	U	5	ND	U	5	ND	U	5	ND	U	5
2-CHLOROTOLUENE	ug/L	ND	U	0.5	ND	U	0.5	ND	U	0.5	ND	U	0.5
2-HEXANONE	ug/L	ND	U	2.5	ND	U	2.5	ND	U	2.5	ND	U	2.5
4-CHLOROTOLUENE	ug/L	ND	U	0.5	ND	U	0.5	ND	U	0.5	ND	U	0.5
4-METHYL-2-PENTANONE	ug/L	ND	U	2.5	ND	U	2.5	ND	U	2.5	ND	U	2.5
ACETONE	ug/L	ND	U	5	ND	XU	5	ND	U	5	2.76	XJ	5
BENZENE	ug/L	ND	U	0.5	ND	U	0.5	ND	U	0.5	ND	U	0.5
BROMOBENZENE	ug/L	ND	U	0.5	ND	U	0.5	ND	U	0.5	ND	U	0.5
BROMOCHLOROMETHANE	ug/L	ND	U	0.5	ND	U	0.5	ND	U	0.5	ND	U	0.5

Attachment B-Groundwater Analyses
(for well cluster near proposed new extraction well)

LOCATION_CODE		KAFB-106035 – 0 - 22ft below water level											
SAMPLE_NO		GW1320			GW1454			GW1586			GW1751		
SAMPLE_DATE		16-Oct-13			27-Jan-14			9-Apr-14			15-Jul-14		
PURP		REG			REG			REG			REG		
Test Group	Units	Result	Qual	LOD	Result	Qual	LOD	Result	Qual	LOD	Result	Qual	LOD
BROMODICHLOROMETHANE	ug/L	ND	U	0.5	ND	U	0.5	ND	U	0.5	ND	U	0.5
BROMOFORM	ug/L	ND	U	0.5	ND	U	0.5	ND	XU	0.5	ND	U	0.5
BROMOMETHANE	ug/L	ND	U	1	ND	U	1	ND	U	1	ND	XU	1
CARBON DISULFIDE	ug/L	ND	U	0.5	ND	U	0.5	ND	U	0.5	ND	U	0.5
CARBON TETRACHLORIDE	ug/L	ND	U	0.5	ND	U	0.5	ND	U	0.5	ND	U	0.5
CHLOROBENZENE	ug/L	ND	U	0.5	ND	U	0.5	ND	U	0.5	ND	U	0.5
CHLOROETHANE	ug/L	ND	U	1	ND	U	1	ND	U	1	ND	U	1
CHLOROFORM	ug/L	ND	U	0.5	ND	U	0.5	ND	U	0.5	ND	U	0.5
CHLOROMETHANE	ug/L	ND	U	0.5	ND	U	0.5	ND	U	0.5	ND	U	0.5
CIS-1,2-DICHLOROETHENE	ug/L	ND	U	0.5	ND	U	0.5	ND	U	0.5	ND	U	0.5
CIS-1,3-DICHLOROPROPENE	ug/L	ND	U	0.5	ND	U	0.5	ND	U	0.5	ND	U	0.5
DIBROMOCHLOROMETHANE	ug/L	ND	U	0.5	ND	U	0.5	ND	U	0.5	ND	U	0.5
DIBROMOMETHANE	ug/L	ND	U	0.5	ND	U	0.5	ND	U	0.5	ND	U	0.5
DICHLORODIFLUOROMETHANE	ug/L	ND	U	1	ND	XU	1	ND	U	1	ND	U	1
ETHYLBENZENE	ug/L	ND	U	0.5	ND	U	0.5	ND	U	0.5	ND	U	0.5
HEXACHLOROBUTADIENE	ug/L	ND	U	0.5	ND	U	0.5	ND	U	0.5	ND	U	0.5
ISOPROPYLBENZENE	ug/L	ND	U	0.5	ND	U	0.5	ND	XU	0.5	ND	U	0.5
METHYL TERT-BUTYL ETHER	ug/L	ND	U	0.5	ND	U	0.5	ND	U	0.5	ND	U	0.5
METHYLENE CHLORIDE	ug/L	ND	U	1	ND	U	1	ND	U	1	ND	U	1
NAPHTHALENE	ug/L	ND	U	0.5	ND	U	0.5	ND	U	0.5	ND	U	0.5
N-BUTYLBENZENE	ug/L	ND	U	0.5	ND	U	0.5	ND	U	0.5	ND	U	0.5
N-PROPYLBENZENE	ug/L	ND	U	0.5	ND	U	0.5	ND	U	0.5	ND	U	0.5
P-ISOPROPYLTOLUENE	ug/L	ND	U	0.5	ND	U	0.5	ND	U	0.5	ND	U	0.5
SEC-BUTYLBENZENE	ug/L	ND	U	0.5	ND	U	0.5	ND	U	0.5	ND	U	0.5
STYRENE	ug/L	ND	U	0.5	ND	U	0.5	ND	XU	0.5	ND	U	0.5
TERT-BUTYLBENZENE	ug/L	ND	U	0.5	ND	U	0.5	ND	U	0.5	ND	U	0.5
TETRACHLOROETHENE	ug/L	ND	U	0.5	ND	U	0.5	ND	XU	0.5	ND	U	0.5
TOLUENE	ug/L	ND	U	0.5	ND	U	0.5	ND	U	0.5	ND	U	0.5
TRANS-1,2-DICHLOROETHENE	ug/L	ND	U	0.5	ND	U	0.5	ND	U	0.5	ND	U	0.5
TRANS-1,3-DICHLOROPROPENE	ug/L	ND	U	0.5	ND	U	0.5	ND	U	0.5	ND	U	0.5
TRICHLOROETHENE	ug/L	ND	U	0.5	ND	U	0.5	ND	U	0.5	ND	U	0.5
TRICHLOROFLUOROMETHANE	ug/L	ND	U	1	ND	U	1	ND	U	1	ND	U	1
VINYL CHLORIDE	ug/L	ND	U	0.5	ND	U	0.5	ND	U	0.5	ND	U	0.5
XYLENES	ug/L	ND	U	1.5	ND	U	1.5	ND	U	1.5	ND	U	1.5

Attachment B-Groundwater Analyses
(for well cluster near proposed new extraction well)

LOCATION_CODE		KAFB-106036 -- 22 - 37 ft below water level											
SAMPLE_NO		GW1321			GW1455			GW1587			GW1752		
SAMPLE_DATE		16-Oct-13			27-Jan-14			9-Apr-14			10-Jul-14		
PURP		REG			REG			REG			REG		
Test Group	Units	Result	Qual	LOD	Result	Qual	LOD	Result	Qual	LOD	Result	Qual	LOD
1,2-DIBROMOETHANE	ug/L	0.481		0.0188	0.58		0.0187	0.601		0.0189	0.493		0.0189
Water Chemistry													
OXIDATION-REDUCTION POTENTIAL	MV	76			127			217					
SPECIFIC CONDUCTIVITY	US/CM	520.6			501			485.7					
PH	PH UNITS	7.63			7.73			7.66					
TEMPERATURE	DEG C	18.86			17.79			19.24					
TURBIDITY, NTU	NTU	0.97			2.11			0.47					
DISSOLVED OXYGEN	MG/L	3.96			2.93			2.98					
ALKALINITY, TOTAL	MG/L	136			120			132					
BROMIDE	mg/L	0.538		0.125	0.5		0.125	0.458	MJ	0.125	0.473		0.125
CHLORIDE	mg/L	44.5	M	0.33	44.4		0.33	41.7		0.33	44.1		0.33
SULFATE	mg/L	64.3	M	1	59.6		1	55.6		1	58.7		1
NITROGEN, NITRATE-NITRITE	mg/L	0.798	J	0.75	0.66	J	0.75	0.55	J	0.75	0.573	NJ	0.75
ALKALINITY, BICARBONATE (AS CACO3)	mg/L	120		1	122		1	128		1	134		1
ALKALINITY, CARBONATE (AS CACO3)	mg/L	ND	U	1	ND	U	1	ND	U	1	ND	U	1
AMMONIA (AS N)	mg/L	ND	U	0.15	ND	U	0.15	ND	U	0.15	0.159	J	0.15
SULFIDE, TOTAL	mg/L	ND	U	1.69	ND	U	1.79	ND	U	1.82	ND	U	2
Metals													
CALCIUM	mg/L	63.2		2	61.1		2	58.5		2	63.2		2
LEAD	mg/L	0.00155	J	0.003	ND	U	0.003	ND	U	0.003	ND	U	0.003
MAGNESIUM	mg/L	8.3		3	8.16	N	3	8.51		3	8.87		3
POTASSIUM	mg/L	2.66	J	3	2.57	NJ	3	2.73	J	3	2.76	J	3
SODIUM	mg/L	29.6		3	29.6		3	29.8		3	32		3
IRON, DISSOLVED	mg/L	ND	U	0.06	ND	U	0.06	0.0332	J	0.06	ND	U	0.06
MANGANESE, DISSOLVED	mg/L	ND	U	0.006	ND	U	0.006	ND	U	0.006	ND	U	0.006
Hydrocarbons													
DIESEL RANGE ORGANICS	mg/L	ND	U	0.198	ND	U	0.222	ND	XU	0.196	ND	U	0.192
GASOLINE RANGE ORGANICS	mg/L	ND	U	0.1	ND	U	0.1	ND	U	0.1	ND	U	0.1
VOCs													
1,1,1,2-TETRACHLOROETHANE	ug/L	ND	U	0.5	ND	U	0.5	ND	XU	0.5	ND	U	0.5
1,1,1-TRICHLOROETHANE	ug/L	ND	U	0.5	ND	U	0.5	ND	U	0.5	ND	QU	0.5
1,1,2,2-TETRACHLOROETHANE	ug/L	ND	U	0.5	ND	U	0.5	ND	U	0.5	ND	U	0.5
1,1,2-TRICHLOROETHANE	ug/L	ND	U	0.5	ND	U	0.5	ND	U	0.5	ND	U	0.5
1,1-DICHLOROETHANE	ug/L	ND	U	0.5	ND	U	0.5	ND	U	0.5	ND	U	0.5
1,1-DICHLOROETHENE	ug/L	ND	U	0.5	ND	U	0.5	ND	U	0.5	ND	U	0.5
1,1-DICHLOROPROPENE	ug/L	ND	U	0.5	ND	U	0.5	ND	U	0.5	ND	U	0.5
1,2,3-TRICHLOROBENZENE	ug/L	ND	U	0.5	ND	U	0.5	ND	U	0.5	ND	U	0.5
1,2,3-TRICHLOROPROPANE	ug/L	ND	U	1	ND	U	1	ND	U	1	ND	U	1
1,2,4-TRICHLOROBENZENE	ug/L	ND	U	0.5	ND	U	0.5	ND	U	0.5	ND	U	0.5
1,2,4-TRIMETHYLBENZENE	ug/L	ND	U	0.5	ND	U	0.5	ND	U	0.5	ND	U	0.5
1,2-DIBROMO-3-CHLOROPROPANE	ug/L	ND	U	1	ND	U	1	ND	U	1	ND	U	1
1,2-DIBROMOETHANE	ug/L	0.57	J	0.5	0.51	J	0.5	0.529	J	0.5	0.482	J	0.5
1,2-DICHLOROBENZENE	ug/L	ND	U	0.5	ND	U	0.5	ND	U	0.5	ND	U	0.5
1,2-DICHLOROETHANE	ug/L	ND	U	0.5	ND	U	0.5	ND	U	0.5	ND	U	0.5
1,2-DICHLOROPROPANE	ug/L	ND	U	0.5	ND	U	0.5	ND	U	0.5	ND	U	0.5
1,3,5-TRIMETHYLBENZENE	ug/L	ND	U	0.5	ND	U	0.5	ND	U	0.5	ND	U	0.5
1,3-DICHLOROBENZENE	ug/L	ND	U	0.5	ND	U	0.5	ND	U	0.5	ND	U	0.5
1,3-DICHLOROPROPANE	ug/L	ND	U	0.5	ND	U	0.5	ND	U	0.5	ND	U	0.5
1,4-DICHLOROBENZENE	ug/L	ND	U	0.5	ND	U	0.5	ND	U	0.5	ND	U	0.5
2,2-DICHLOROPROPANE	ug/L	ND	U	0.5	ND	XU	0.5	ND	U	0.5	ND	U	0.5
2-BUTANONE	ug/L	ND	U	5	ND	U	5	ND	U	5	ND	U	5
2-CHLOROTOLUENE	ug/L	ND	U	0.5	ND	U	0.5	ND	U	0.5	ND	U	0.5
2-HEXANONE	ug/L	ND	U	2.5	ND	U	2.5	ND	U	2.5	ND	U	2.5
4-CHLOROTOLUENE	ug/L	ND	U	0.5	ND	U	0.5	ND	U	0.5	ND	U	0.5
4-METHYL-2-PENTANONE	ug/L	ND	U	2.5	ND	U	2.5	ND	U	2.5	ND	U	2.5
ACETONE	ug/L	ND	U	5	ND	XU	5	ND	U	5	ND	J	5
BENZENE	ug/L	ND	U	0.5	ND	U	0.5	ND	U	0.5	ND	U	0.5
BROMOBENZENE	ug/L	ND	U	0.5	ND	U	0.5	ND	U	0.5	ND	U	0.5
BROMOCHLOROMETHANE	ug/L	ND	U	0.5	ND	U	0.5	ND	U	0.5	ND	U	0.5

Attachment B-Groundwater Analyses
(for well cluster near proposed new extraction well)

LOCATION_CODE		KAFB-106036 -- 22 - 37 ft below water level											
SAMPLE_NO		GW1321			GW1455			GW1587			GW1752		
SAMPLE_DATE		16-Oct-13			27-Jan-14			9-Apr-14			10-Jul-14		
PURP		REG			REG			REG			REG		
Test Group	Units	Result	Qual	LOD	Result	Qual	LOD	Result	Qual	LOD	Result	Qual	LOD
BROMODICHLOROMETHANE	ug/L	ND	U	0.5	ND	U	0.5	ND	U	0.5	ND	U	0.5
BROMOFORM	ug/L	ND	U	0.5	ND	U	0.5	ND	XU	0.5	ND	QU	0.5
BROMOMETHANE	ug/L	ND	U	1	ND	U	1	ND	U	1	ND	U	1
CARBON DISULFIDE	ug/L	ND	U	0.5	ND	U	0.5	ND	U	0.5	ND	U	0.5
CARBON TETRACHLORIDE	ug/L	ND	U	0.5	ND	U	0.5	ND	U	0.5	ND	QU	0.5
CHLOROBENZENE	ug/L	ND	U	0.5	ND	U	0.5	ND	U	0.5	ND	U	0.5
CHLOROETHANE	ug/L	ND	U	1	ND	U	1	ND	U	1	ND	U	1
CHLOROFORM	ug/L	ND	U	0.5	ND	U	0.5	ND	U	0.5	ND	U	0.5
CHLOROMETHANE	ug/L	ND	U	0.5	ND	U	0.5	ND	U	0.5	ND	U	0.5
CIS-1,2-DICHLOROETHENE	ug/L	ND	U	0.5	ND	U	0.5	ND	U	0.5	ND	U	0.5
CIS-1,3-DICHLOROPROPENE	ug/L	ND	U	0.5	ND	U	0.5	ND	U	0.5	ND	U	0.5
DIBROMOCHLOROMETHANE	ug/L	ND	U	0.5	ND	U	0.5	ND	U	0.5	ND	U	0.5
DIBROMOMETHANE	ug/L	ND	U	0.5	ND	U	0.5	ND	U	0.5	ND	U	0.5
DICHLORODIFLUOROMETHANE	ug/L	ND	U	1	ND	XU	1	ND	U	1	ND	QU	1
ETHYLBENZENE	ug/L	ND	U	0.5	ND	U	0.5	ND	U	0.5	ND	U	0.5
HEXACHLOROBUTADIENE	ug/L	ND	U	0.5	ND	U	0.5	ND	U	0.5	ND	U	0.5
ISOPROPYLBENZENE	ug/L	ND	U	0.5	ND	U	0.5	ND	XU	0.5	ND	U	0.5
METHYL TERT-BUTYL ETHER	ug/L	ND	U	0.5	ND	U	0.5	ND	U	0.5	ND	U	0.5
METHYLENE CHLORIDE	ug/L	ND	U	1	ND	U	1	ND	U	1	ND	U	1
NAPHTHALENE	ug/L	ND	U	0.5	ND	U	0.5	ND	U	0.5	ND	U	0.5
N-BUTYLBENZENE	ug/L	ND	U	0.5	ND	U	0.5	ND	U	0.5	ND	U	0.5
N-PROPYLBENZENE	ug/L	ND	U	0.5	ND	U	0.5	ND	U	0.5	ND	U	0.5
P-ISOPROPYLTOLUENE	ug/L	ND	U	0.5	ND	U	0.5	ND	U	0.5	ND	U	0.5
SEC-BUTYLBENZENE	ug/L	ND	U	0.5	ND	U	0.5	ND	U	0.5	ND	U	0.5
STYRENE	ug/L	ND	U	0.5	ND	U	0.5	ND	XU	0.5	ND	U	0.5
TERT-BUTYLBENZENE	ug/L	ND	U	0.5	ND	U	0.5	ND	U	0.5	ND	U	0.5
TETRACHLOROETHENE	ug/L	ND	U	0.5	ND	U	0.5	ND	XU	0.5	ND	U	0.5
TOLUENE	ug/L	ND	U	0.5	ND	U	0.5	ND	U	0.5	ND	U	0.5
TRANS-1,2-DICHLOROETHENE	ug/L	ND	U	0.5	ND	U	0.5	ND	U	0.5	ND	U	0.5
TRANS-1,3-DICHLOROPROPENE	ug/L	ND	U	0.5	ND	U	0.5	ND	U	0.5	ND	U	0.5
TRICHLOROETHENE	ug/L	ND	U	0.5	ND	U	0.5	ND	U	0.5	ND	U	0.5
TRICHLOROFLUOROMETHANE	ug/L	ND	U	1	ND	U	1	ND	U	1	ND	QU	1
VINYL CHLORIDE	ug/L	ND	U	0.5	ND	U	0.5	ND	U	0.5	ND	QU	0.5
XYLENES	ug/L	ND	U	1.5	ND	U	1.5	ND	U	1.5	ND	U	1.5

Attachment B-Groundwater Analyses
(for well cluster near proposed new extraction well)

LOCATION_CODE		KAFB-106037 – 47 to 62 ft below water level											
SAMPLE_NO		GW1322			GW1456			GW1588			GW1753		
SAMPLE_DATE		16-Oct-13			27-Jan-14			9-Apr-14			10-Jul-14		
PURP		REG			REG			REG			REG		
Test Group	Units	Result	Qual	LOD	Result	Qual	LOD	Result	Qual	LOD	Result	Qual	LOD
1,2-DIBROMOETHANE	ug/L	0.23		0.0188	0.171		0.0188	0.157		0.0188	0.182		0.0184
Water Chemistry													
OXIDATION-REDUCTION POTENTIAL	MV	167			169			210					
SPECIFIC CONDUCTIVITY	US/CM	339			317.2			312.6					
PH	PH UNITS	7.65			7.75			7.7					
TEMPERATURE	DEG C	18.5			17.47			19.01					
TURBIDITY, NTU	NTU	2.34			1.66			0.46					
DISSOLVED OXYGEN	MG/L	7.05			6.6			7.83					
ALKALINITY, TOTAL	MG/L	132			128			124					
BROMIDE	mg/L	0.121		0.125	ND	U	0.125	ND	MU	0.125	0.047	J	0.125
CHLORIDE	mg/L	11.4	M	0.33	10.4		0.33	10.2		0.33	10.3		0.33
SULFATE	mg/L	36.9	M	1	33.4		1	33.1		1	33.7		1
NITROGEN, NITRATE-NITRITE	mg/L	0.306	J	0.75	ND	U	0.75	ND	U	0.75	ND	UN	0.75
ALKALINITY, BICARBONATE (AS CACO3)	mg/L	106		1	107		1	112		1	116		1
ALKALINITY, CARBONATE (AS CACO3)	mg/L	ND	U	1	ND	U	1	ND	U	1	ND	U	1
AMMONIA (AS N)	mg/L	ND	U	0.15	ND	U	0.15	ND	U	0.15	ND	U	0.15
SULFIDE, TOTAL	mg/L	ND	U	1.69	ND	U	1.79	ND	U	1.75	ND	U	2
Metals													
CALCIUM	mg/L	38.5		2	35.7		2	35.6		2	37.2		2
LEAD	mg/L	0.00157	J	0.003	ND	U	0.003	ND	U	0.003	ND	U	0.003
MAGNESIUM	mg/L	5.08		3	4.9	NJ	3	5.28		3	5.37		3
POTASSIUM	mg/L	2.12	J	3	1.97	NJ	3	2.12	J	3	2.17	J	3
SODIUM	mg/L	22.8		3	22.3		3	23.2		3	24.7		3
IRON, DISSOLVED	mg/L	ND	U	0.06	ND	U	0.06	ND	U	0.06	ND	U	0.06
MANGANESE, DISSOLVED	mg/L	ND	U	0.006	ND	U	0.006	ND	U	0.006	ND	U	0.006
Hydrocarbons													
DIESEL RANGE ORGANICS	mg/L	ND	U	0.2	ND	U	0.2	ND	XU	0.2	ND	U	0.196
GASOLINE RANGE ORGANICS	mg/L	ND	U	0.1	ND	U	0.1	ND	U	0.1	ND	U	0.1
VOCs													
1,1,1,2-TETRACHLOROETHANE	ug/L	ND	U	0.5	ND	U	0.5	ND	XU	0.5	ND	U	0.5
1,1,1-TRICHLOROETHANE	ug/L	ND	U	0.5	ND	U	0.5	ND	U	0.5	ND	QU	0.5
1,1,2,2-TETRACHLOROETHANE	ug/L	ND	U	0.5	ND	U	0.5	ND	U	0.5	ND	U	0.5
1,1,2-TRICHLOROETHANE	ug/L	ND	U	0.5	ND	U	0.5	ND	U	0.5	ND	U	0.5
1,1-DICHLOROETHANE	ug/L	ND	U	0.5	ND	U	0.5	ND	U	0.5	ND	U	0.5
1,1-DICHLOROETHENE	ug/L	ND	U	0.5	ND	U	0.5	ND	U	0.5	ND	U	0.5
1,1-DICHLOROPROPENE	ug/L	ND	U	0.5	ND	U	0.5	ND	U	0.5	ND	U	0.5
1,2,3-TRICHLOROBENZENE	ug/L	ND	U	0.5	ND	U	0.5	ND	U	0.5	ND	U	0.5
1,2,3-TRICHLOROPROPANE	ug/L	ND	U	1	ND	U	1	ND	U	1	ND	U	1
1,2,4-TRICHLOROBENZENE	ug/L	ND	U	0.5	ND	U	0.5	ND	U	0.5	ND	U	0.5
1,2,4-TRIMETHYLBENZENE	ug/L	ND	U	0.5	ND	U	0.5	ND	U	0.5	ND	U	0.5
1,2-DIBROMO-3-CHLOROPROPANE	ug/L	ND	U	1	ND	U	1	ND	U	1	ND	U	1
1,2-DIBROMOETHANE	ug/L	ND	U	0.5	ND	U	0.5	ND	U	0.5	ND	U	0.5
1,2-DICHLOROBENZENE	ug/L	ND	U	0.5	ND	U	0.5	ND	U	0.5	ND	U	0.5
1,2-DICHLOROETHANE	ug/L	ND	U	0.5	ND	U	0.5	ND	U	0.5	ND	U	0.5
1,2-DICHLOROPROPANE	ug/L	ND	U	0.5	ND	U	0.5	ND	U	0.5	ND	U	0.5
1,3,5-TRIMETHYLBENZENE	ug/L	ND	U	0.5	ND	U	0.5	ND	U	0.5	ND	U	0.5
1,3-DICHLOROBENZENE	ug/L	ND	U	0.5	ND	U	0.5	ND	U	0.5	ND	U	0.5
1,3-DICHLOROPROPANE	ug/L	ND	U	0.5	ND	U	0.5	ND	U	0.5	ND	U	0.5
1,4-DICHLOROBENZENE	ug/L	ND	U	0.5	ND	U	0.5	ND	U	0.5	ND	U	0.5
2,2-DICHLOROPROPANE	ug/L	ND	U	0.5	ND	XU	0.5	ND	U	0.5	ND	U	0.5
2-BUTANONE	ug/L	ND	U	5	ND	U	5	ND	U	5	ND	U	5
2-CHLOROTOLUENE	ug/L	ND	U	0.5	ND	U	0.5	ND	U	0.5	ND	U	0.5
2-HEXANONE	ug/L	ND	U	2.5	ND	U	2.5	ND	U	2.5	ND	U	2.5
4-CHLOROTOLUENE	ug/L	ND	U	0.5	ND	U	0.5	ND	U	0.5	ND	U	0.5
4-METHYL-2-PENTANONE	ug/L	ND	U	2.5	ND	U	2.5	ND	U	2.5	ND	U	2.5
ACETONE	ug/L	ND	U	5	ND	XU	5	ND	U	5	ND	U	5
BENZENE	ug/L	ND	U	0.5	ND	U	0.5	ND	U	0.5	ND	U	0.5
BROMOBENZENE	ug/L	ND	U	0.5	ND	U	0.5	ND	U	0.5	ND	U	0.5
BROMOCHLOROMETHANE	ug/L	ND	U	0.5	ND	U	0.5	ND	U	0.5	ND	U	0.5

Attachment B-Groundwater Analyses
(for well cluster near proposed new extraction well)

LOCATION_CODE		KAFB-106037 – 47 to 62 ft below water level											
SAMPLE_NO		GW1322			GW1456			GW1588			GW1753		
SAMPLE_DATE		16-Oct-13			27-Jan-14			9-Apr-14			10-Jul-14		
PURP		REG			REG			REG			REG		
Test Group	Units	Result	Qual	LOD	Result	Qual	LOD	Result	Qual	LOD	Result	Qual	LOD
BROMODICHLOROMETHANE	ug/L	ND	U	0.5	ND	U	0.5	ND	U	0.5	ND	U	0.5
BROMOFORM	ug/L	ND	U	0.5	ND	U	0.5	ND	XU	0.5	ND	QU	0.5
BROMOMETHANE	ug/L	ND	U	1	ND	U	1	ND	U	1	ND	U	1
CARBON DISULFIDE	ug/L	ND	U	0.5	ND	U	0.5	ND	U	0.5	ND	U	0.5
CARBON TETRACHLORIDE	ug/L	ND	U	0.5	ND	U	0.5	ND	U	0.5	ND	QU	0.5
CHLOROBENZENE	ug/L	ND	U	0.5	ND	U	0.5	ND	U	0.5	ND	U	0.5
CHLOROETHANE	ug/L	ND	U	1	ND	U	1	ND	U	1	ND	U	1
CHLOROFORM	ug/L	ND	U	0.5	ND	U	0.5	ND	U	0.5	ND	U	0.5
CHLOROMETHANE	ug/L	ND	U	0.5	ND	U	0.5	ND	U	0.5	ND	U	0.5
CIS-1,2-DICHLOROETHENE	ug/L	ND	U	0.5	ND	U	0.5	ND	U	0.5	ND	U	0.5
CIS-1,3-DICHLOROPROPENE	ug/L	ND	U	0.5	ND	U	0.5	ND	U	0.5	ND	U	0.5
DIBROMOCHLOROMETHANE	ug/L	ND	U	0.5	ND	U	0.5	ND	U	0.5	ND	U	0.5
DIBROMOMETHANE	ug/L	ND	U	0.5	ND	U	0.5	ND	U	0.5	ND	U	0.5
DICHLORODIFLUOROMETHANE	ug/L	ND	U	1	ND	XU	1	ND	U	1	ND	QU	1
ETHYLBENZENE	ug/L	ND	U	0.5	ND	U	0.5	ND	U	0.5	ND	U	0.5
HEXACHLOROBUTADIENE	ug/L	ND	U	0.5	ND	U	0.5	ND	U	0.5	ND	U	0.5
ISOPROPYLBENZENE	ug/L	ND	U	0.5	ND	U	0.5	ND	XU	0.5	ND	U	0.5
METHYL TERT-BUTYL ETHER	ug/L	ND	U	0.5	ND	U	0.5	ND	U	0.5	ND	U	0.5
METHYLENE CHLORIDE	ug/L	ND	U	1	ND	U	1	ND	U	1	ND	U	1
NAPHTHALENE	ug/L	ND	U	0.5	ND	U	0.5	ND	U	0.5	ND	U	0.5
N-BUTYLBENZENE	ug/L	ND	U	0.5	ND	U	0.5	ND	U	0.5	ND	U	0.5
N-PROPYLBENZENE	ug/L	ND	U	0.5	ND	U	0.5	ND	U	0.5	ND	U	0.5
P-ISOPROPYLTOLUENE	ug/L	ND	U	0.5	ND	U	0.5	ND	U	0.5	ND	U	0.5
SEC-BUTYLBENZENE	ug/L	ND	U	0.5	ND	U	0.5	ND	U	0.5	ND	U	0.5
STYRENE	ug/L	ND	U	0.5	ND	U	0.5	ND	XU	0.5	ND	U	0.5
TERT-BUTYLBENZENE	ug/L	ND	U	0.5	ND	U	0.5	ND	U	0.5	ND	U	0.5
TETRACHLOROETHENE	ug/L	ND	U	0.5	ND	U	0.5	ND	XU	0.5	ND	U	0.5
TOLUENE	ug/L	ND	U	0.5	ND	U	0.5	ND	U	0.5	ND	U	0.5
TRANS-1,2-DICHLOROETHENE	ug/L	ND	U	0.5	ND	U	0.5	ND	U	0.5	ND	U	0.5
TRANS-1,3-DICHLOROPROPENE	ug/L	ND	U	0.5	ND	U	0.5	ND	U	0.5	ND	U	0.5
TRICHLOROETHENE	ug/L	ND	U	0.5	ND	U	0.5	ND	U	0.5	ND	U	0.5
TRICHLOROFLUOROMETHANE	ug/L	ND	U	1	ND	U	1	ND	U	1	ND	QU	1
VINYL CHLORIDE	ug/L	ND	U	0.5	ND	U	0.5	ND	U	0.5	ND	QU	0.5
XYLENES	ug/L	ND	U	1.5	ND	U	1.5	ND	U	1.5	ND	U	1.5

CARBON ADSORBER DESIGN CALCULATION

Project Title:	**Mid-Plume Pump and Treat System, Kirtland Air Force Base, New Mexico**	**Document Number:**	**140705-001-PR-CL-40002**
Owner:	**Process Engineering**	**Revision:**	**0**

Attachment C:

Design recommendations for activated carbon

SIEMENS

"Rules of Thumb"

The following general observations offer guidelines for applying activated carbon for the adsorption of organic compounds in both liquid phase and gas phase applications. These "Rules of Thumb" should only be used as guidelines as situations that lie outside of the suggested boundary conditions may be acceptable, safe and economic under a specific set of conditions.

Gas Phase Adsorption Applications

➢Influent gas temperatures to a carbon bed should not exceed 120°F

- Higher temperatures will significantly reduce the carbon's adsorption capacity
- May cause damage to PVC internals
- May make bed hot spots and bed fires more likely

➢The total influent VOC concentration should not exceed 25% of the L.E.L. (lower explosive limit) for the compounds being adsorbed

- If influent concentrations exceed these levels, dilution air should be used

➢A good design superficial velocity for a gas phase adsorber should be between 40 – 60 fpm

- Depending on operating conditions and concentrations, a range of superficial velocities from 20 to 80 would be acceptable

➢When the influent VOC concentration exceeds 5,000 ppmv, superficial velocities <20 fpm should be avoided

➢For up flow operation, a superficial velocity of >80 fpm should be avoided to prevent bed expansion, carbon particle movement and bed "burping"

➢If ketones and similarly reactive organics are being adsorbed, intermittent and low flow conditions should be avoided

➢The use of impregnated carbons where low flow and intermittent flow conditions exist should be avoided

➢When ketones are being adsorbed and a bed hot spot develops, oxidation of the ketones on the carbon surface will take place before the carbon itself begins to burn and will result in the formation of thousands of ppms of carbon monoxide (CO)

- This formation of carbon monoxide allows a CO monitor to be used as a sensitive indicator of a bed hot spot problem

➢If high VOC concentrations are being adsorbed under low flow rate conditions, 15 to 25% water (based on carbon weight) should be added to the bed to prevent an excessive temperature rise within the carbon's principle mass transfer zone

➢When adsorbing low to moderate VOC concentrations, the relative humidity of the influent gas should be controlled so that it is less than 50%

➢The GAC loading capacities of organic compounds that have large Henry's Constants are more adversely affected by high relative humidity than are organic compounds that have small values for their Henry's Constant

- As an example, in going from a relative humidity of 50% to 95% at 10 ppmv and 90 ^{o}F, the GAC loading capacity for benzene (Henry's Constant ~ 400 atm) decreases by a factor of 2.5 while the GAC loading for hexane (Henry's Constant ~ 48,000 atm) decreases by a factor of 5.

➢In general an adsorber operating at 95% RH will require the use of 2 – 3 times more carbon when compared to an adsorber seeing the same influent VOC concentrations but operating at 40% RH

➢A reduction in the relative humidity of an air stream from >95% to <40% can be achieved by heating the air by 25 – 30 ^{o}F

➢Operating two adsorbers in a series configuration (lead/lag operation) can result in a reduction in GAC usage rates of 20 – 40% when compared to using a single adsorber

Liquid Phase Adsorption Applications

➢In order to minimize channeling, up flow operation should be used when the influent water flow rate is less than 10% of a vessel's design flow rate

- In low flow situations where there is not a significant bed pressure drop, up flow will give the best distribution of water and will significantly reduce the chances of channeling

➢Conditions for channeling and premature breakthrough during the operation of a liquid phase adsorber increase rapidly as the pressure drop across the carbon bed approaches zero

- Hydraulic loadings of <1 gpm/ft^2 do not result in a significant pressure drops across beds of 8x30 or 12x40 mesh carbons, making them susceptible to channeling

➢At ambient temperatures, a minimum soak time for a carbon bed during startup of 24 hours is required to assure >90% of a carbon's surface area is available for adsorption

➢During startup, a GAC bed that is not backwashed or back flushed after initial soaking is likely to show flow abnormalities and premature contaminant breakthrough when put into service

➢A single GAC adsorber should not be operated at an empty bed contact time (EBCT) that is less than 5 minutes

- Short contact times can lead to poor carbon utilization and early contaminant breakthrough

➢Shortening of the empty bed contact time (increasing the water flow rate) will increase the length of the mass transfer zone (MTZ) for the compounds of interest and can significantly increase GAC usage rates

➢The following are minimum suitable per vessel EBCTs for the adsorption of the listed compounds:

- BTEX - 5 to 8 minutes
- THMs - 8 to 10 minutes
- MTBE - 10 to 15 minutes – EDB not as bad as MTBE
- chlorine - 5 to 8 minutes
- chloramines - 10 to 15 minutes or longer

➢Suitable hydraulic loadings for liquid phase vessels can range from 1.5 to 9 gpm/ft^2

➢Hydraulic loadings of 3.5 to 5.0 are good design values with respect to minimizing GAC usage rates

➢Both hydraulic loading (HL) and empty bed contact time (EBCT) should be considered together when defining the operation of a liquid phase carbon adsorber

System Operation

➢For water flowing through a pipe, fluid velocities up to 5 – 6 feet/second are acceptable

- Fluid velocities of 7 to 10 feet/second are acceptable if pressure drop is not an issue

➢For sizing of ducts used in vapor phase applications, gas velocities of 3000 – 5000 fpm are acceptable

Shealy, Stuart

From: John Sherbondy <jsherbondy@tigg.com>
Sent: Monday, March 09, 2015 11:28 AM
To: Shealy, Stuart
Subject: RE: Design parameters for EDB removal

Stuart,

Responses in order:

8 to 10 min OK

1) This is fair, leaning higher as the usage rate increases, generally. We assume a mass transfer zone of about 6 minutes which leaves in this case 2-4 minutes worth of carbon for saturation.
2) We have run at 0.5 gpm/ft2 in our CP style vessels but prefer to be at 1 or higher. The only reason we go that low is the fact that we have an inlet distributor as well as a collector. If just using liquid head to distribute flow would not go below 1 gpm/ft2.

1 gpm/ft^2 OK

I am assuming this discussion is not for Kirtland as we are well above the contact time and flow velocity figures with our design.

John Sherbondy
Account Manager
Office: 800-925-0011 x102
Mobile: 412-720-4897

Learn How to Get the Most From Your Vessel's Activated Carbon Bed

www.TIGG.com

CONFIDENTIALITY NOTICE: The information contained in this transmission may be confidential or privileged, and is intended solely for the entity or individual to whom it is addressed. If you are not the intended recipient, please be advised that any use, copying, disclosure, dissemination or distribution is strictly prohibited. If you received this transmission in error, please contact the sender at TIGG Corporation immediately by replying to this email and deleting it from your computer.

From: Shealy, Stuart [mailto:Stuart.Shealy@CBIFederalServices.com]
Sent: Monday, March 09, 2015 11:19 AM
To: John Sherbondy
Subject: Design parameters for EDB removal

John

A couple of things I wanted to confirm.

1) I have typically used an empty bed contact time of 8 to 10 minutes to achieve 98 to 99% removal of EDB from groundwater. Does that fit with your expectation ?

2) Typically have tried to get minimum superficial velocity of 1.5 gpm/ft2 to ensure good water distribution through carbon bed. Can I go a little lower if I have to ?

Thanks

stuart

Stuart E. Shealy, PE
Senior Process Engineer 3
Technical Services
CB&I Federal Services
Tel: 865-694-7447
Cell: 865-661-7328
Stuart.shealy@cbifederalservices.com

CB&I Federal Services
312 Directors Drive
Knoxville, TN 37923
www.cbi.com

This e-mail and any attached files may contain CB&I Federal Services LLC (or its affiliates) confidential and privileged information. This information is protected by law and/or agreements between CB&I Federal Services LLC (or its affiliates) and either you, your employer or any contract provider with which you or your employer are associated. If you are not an intended recipient, please contact the sender by reply e-mail and delete all copies of this e-mail; further, you are notified that disclosing, copying, distributing or taking any action in reliance on the contents of this information is strictly prohibited.

CARBON ADSORBER DESIGN CALCULATION

Project Title:	**Mid-Plume Pump and Treat System, Kirtland Air Force Base, New Mexico**	**Document Number:**	**140705-001-PR-CL-40002**
Owner:	**Process Engineering**	**Revision:**	**0**

Attachment D:

Tigg submittals on activated carbon

and carbon adsorbers

TIGG corporation
www.TIGG.com

TIGG 5DC 1240

Virgin Liquid Phase Coconut Based Activated Carbon

DESCRIPTION

TIGG 5DC 1240 is a coconut-based activated carbon specially designed to remove low concentrations of weakly adsorbed organics from water. This activated carbon combines higher than usual microporosity with sufficient transport pores to permit superior loadings of highly soluble organics.

TYPICAL PROPERTIES	TIGG 5DC 1240
U.S Sieve, 90 wt% min	12 x 40
Iodine Number, mg/g, min	1050
Apparent Density, (dense packing)	
g/cc	0.47 - 0.52
lbs/ft^3	29 - 32
Abrasion No. - min	85

wsc 30

TYPICAL APPLICATIONS

This activated carbon is more cost effective than standard liquid phase carbons in removing highly soluble organics such as methyl tertiary butyl ether (MTBE) and tertiary butyl alcohol (TBA) from water. This carbon is typically employed in an adsorber downstream of TIGG 5D 1240 or other TIGG liquid phase adsorbent which exhibits broad-spectrum purification ability.

Standard packaging of the activated carbon is in 55 pound pags or 1100 pound supersaks.

Wet drained activated carbon adsorbs oxygen from the air. Therefore, when workers need to enter a vessel containing wet activated carbon, they should follow confined space/low oxygen level procedures. Activated carbon dust does not present an explosion hazard.

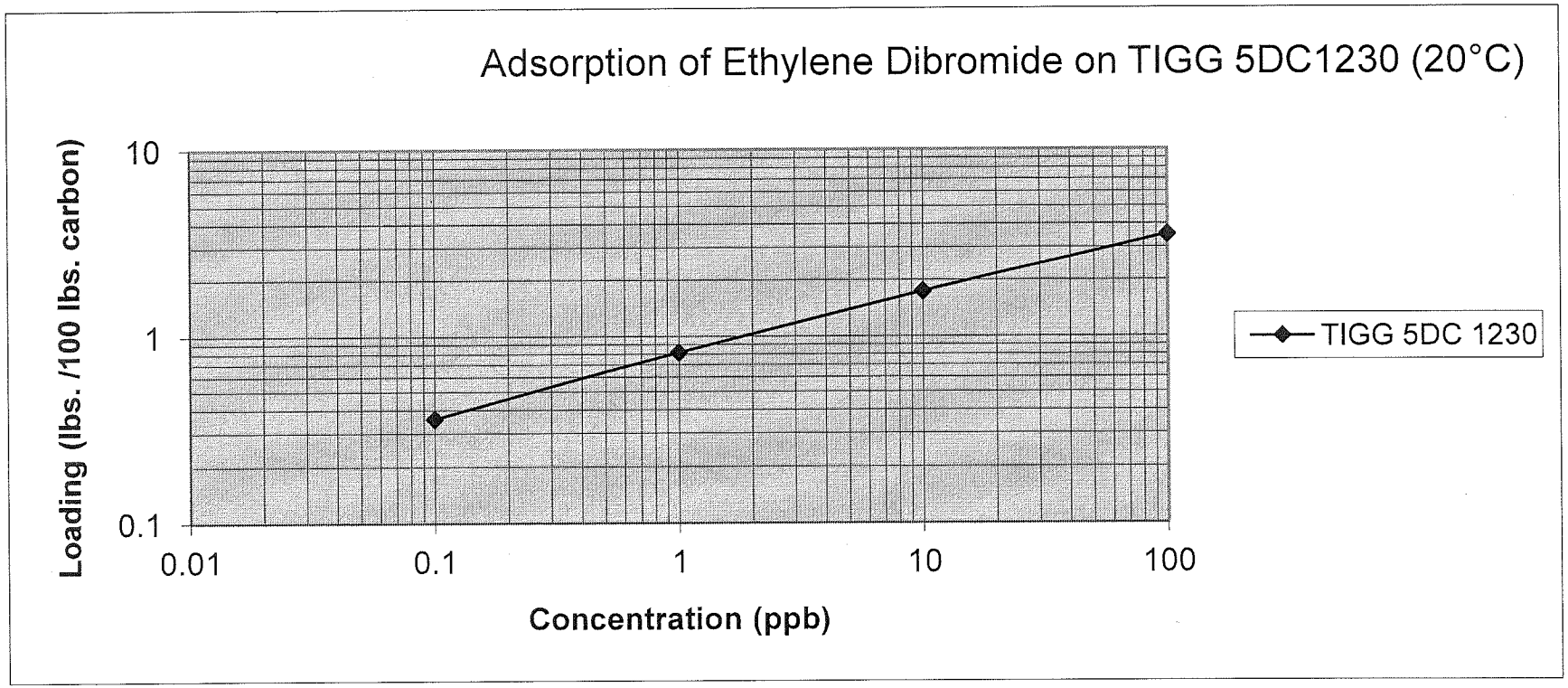
Adsorption of Ethylene Dibromide on TIGG 5DC1230 (20°C)
Loading (lbs. /100 lbs. carbon)
10
1
0.1
0.01
0.1
1
10
100
Concentration (ppb)
TIGG 5DC 1230

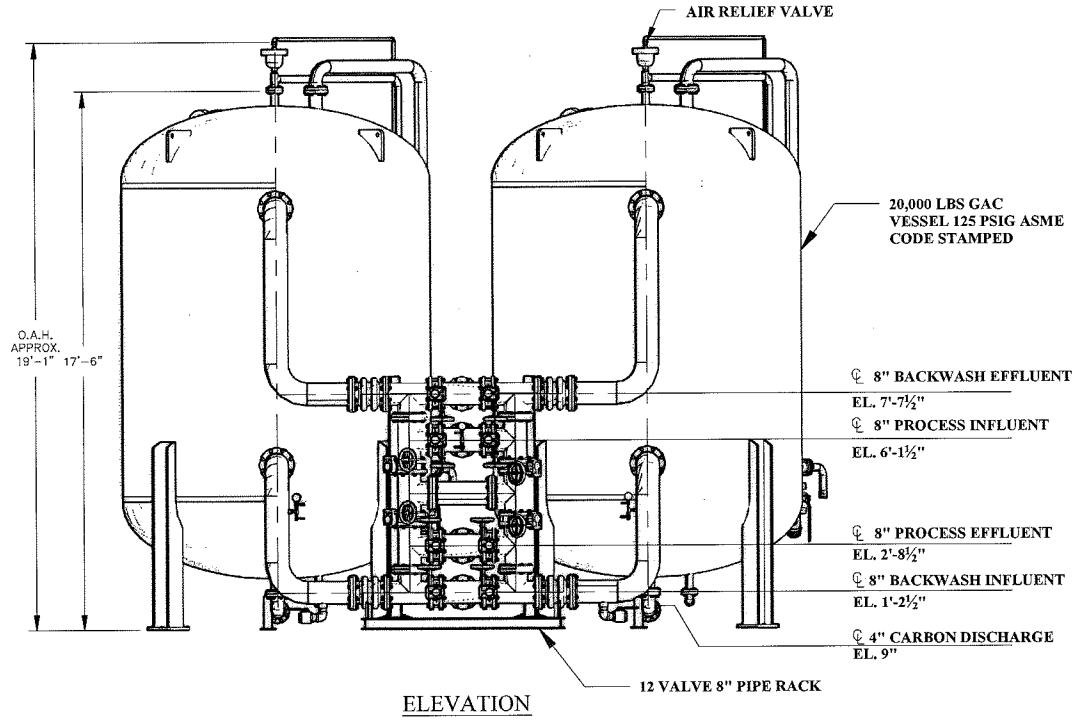

ELEVATION

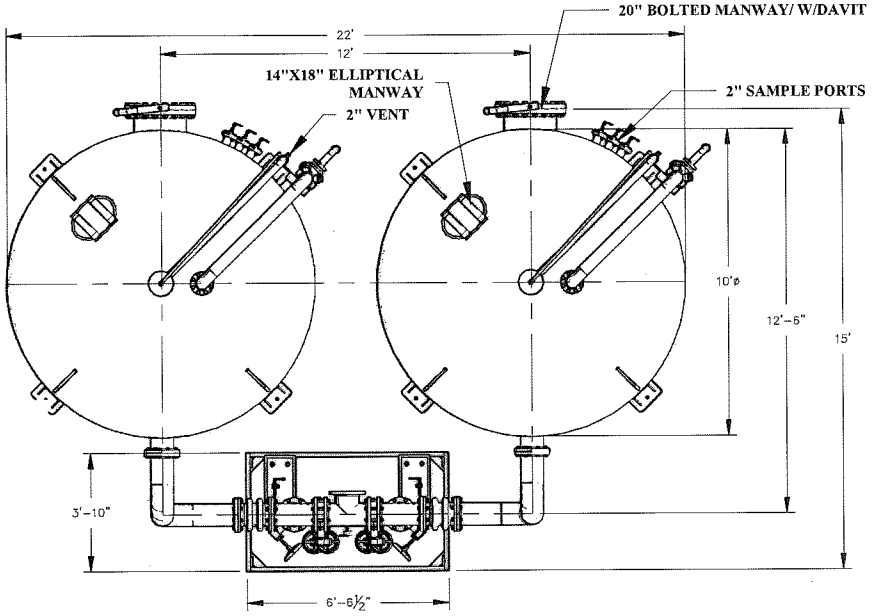

PLAN

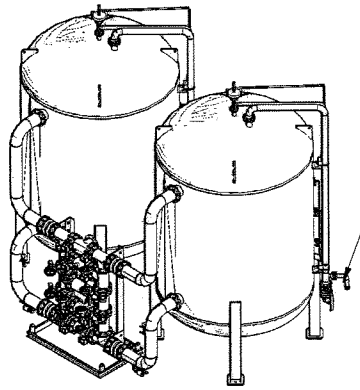

FOR REFERENCE ONLY

NO.	REVISION	BY	DATE
1	ADD SAMPLE PORTS TO VESSEL	RC	12/19/12

PROJECT
CP-20K-10
(SYSTEM)

PROJ. NO.	SALES
P.O. NO.	

THIS DRAWING AND DESIGN ARE THE PROPERTY OF TIGG CORP. AND SHALL NOT BE REPRODUCED IN WHOLE OR IN PART, OR USED IN ANY WAY FOR THE PROFIT OF ANYONE OTHER THAN TIGG CORP. EXCEPT AS EXPRESSLY PERMITTED IN WRITING BY TIGG CORP. THIS DRAWING IS LOANED SUBJECT TO RETURN ON DEMAND.

DRAWN BY	JB
DESIGN BY	JB
CHKD. BY	BB
DATE	2/9/10
SCALE	NTS

TIGG corporation

SYSTEM GENERAL ARRANGEMENT

DWG. NO. CP-20K-10-1003 REV. 1

MARK	SERVICE	DESCRIPTION	LOCATION
NOZZLE SCHEDULE			
N9	SAMPLE	2" 150# FFSO FLANGE	SHELL
N8	SAMPLE	2" 150# FFSO FLANGE	SHELL
N7	SAMPLE	2" 150# FFSO FLANGE	SHELL
N6	AIR RELIEF	2" 150# FFSO FLANGE	TOP HEAD
N5	DRAIN	2" 150# FFSO FLANGE	BOTTOM HEAD
N4	CARBON DISCHARGE	4" 150# FFSO FLANGE	BOTTOM HEAD
N3	CARBON FILL/PRES. RELIEF	4" 150# FFSO FLANGE	TOP HEAD
N2	OUTLET	8" 150# FFSO FLANGE	SHELL
N1	INLET	8" 150# FFSO FLANGE	SHELL
M2	MANWAY	20" 150# FFSO W/ DAVIT	SHELL
M1	MANWAY	14"x18" ELL. MANWAY	TOP HEAD

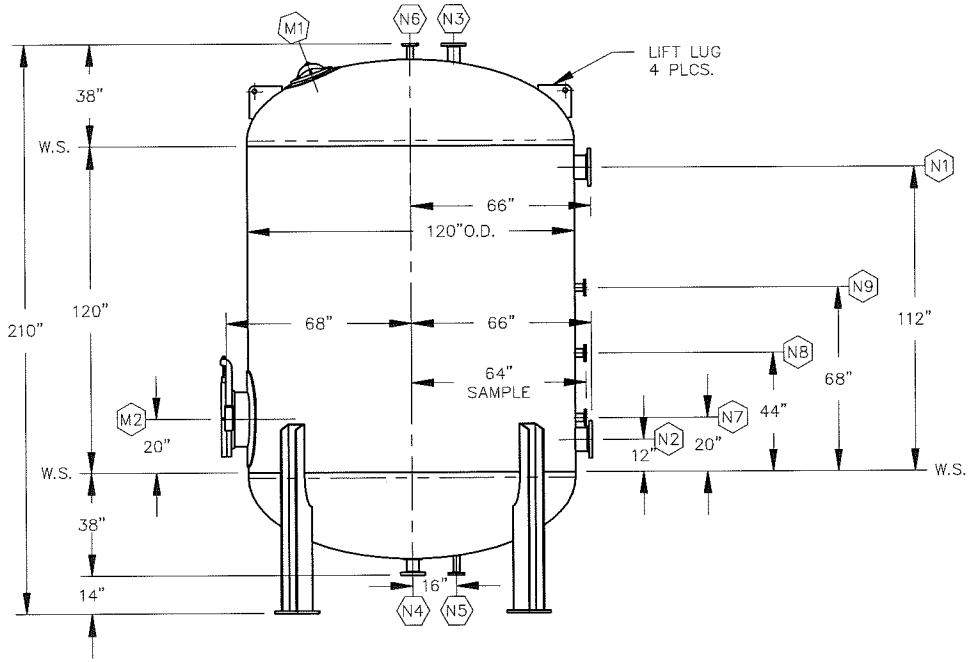

ELEVATION

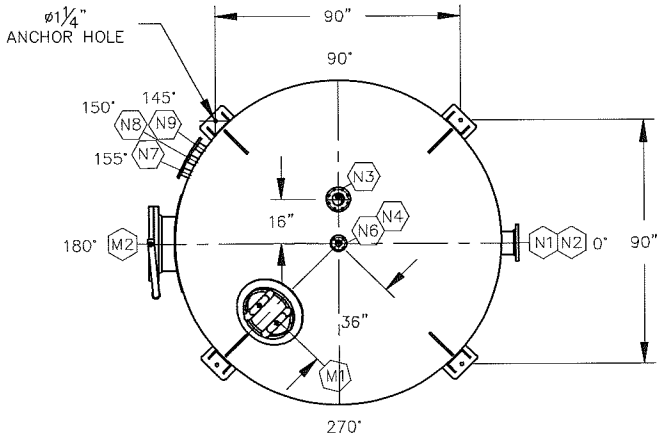

PLAN

VESSEL STANDARDS

VESSEL MATERIALS : SA-516-70	VESSEL ACCESS : 20" BOLTED MANWAY W/ DAVIT
LINING : NSF APPROVED VINYL ESTER	LIQUID DRAIN ASSEMBLY : 2" 150# FFSO FLANGE
EXTERIOR PAINT : EPOXY BASE / URETHANE TOP COAT	TOTAL VOLUME : 1055 FT³
HEAD THICKNESS : ½" NOM.	SHIP WT. EMPTY : 11783 LBS
SHELL THICKNESS : ½" NOM.	MAX. OPERATING PRESSURE : 125 PSIG/-15 PSIG (VAC.)
INTERNALS : STAINLESS STEEL	MAX. OPERATING TEMPERATURE. : 150°F

NO.	REVISION	BY	DATE
3	UPDATE VESSEL STANDARDS	RC	5/1/13
2	ADD SAMPLE PORTS	RC	11/15/12
1	REVISE FLANGE TYPE & LINING	JB	7/5/11

PROJECT

CP-20K-10

PROJ. NO.	SALES
P.O. NO.	
DRAWN BY	JB
DESIGN BY	BB
CHKD. BY	BB
DATE	2/28/11
SCALE	NTS

THIS DRAWING AND DESIGN ARE THE PROPERTY OF TIGG CORP. AND SHALL NOT BE REPRODUCED IN WHOLE OR IN PART, NOR EMPLOYED FOR ANY PURPOSE OTHER THAN SPECIFICALLY PERMITTED IN WRITING BY TIGG CORP. THIS DRAWING LOANED SUBJECT TO RETURN ON DEMAND.

TIGG corporation

PLAN & ELEVATION

CP-20K-10-1001 REV. 3

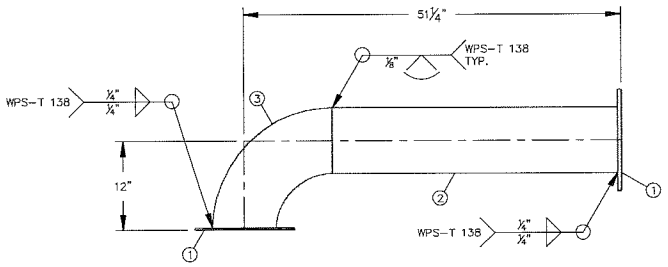

DISCHARGE FLANGE CONNECTION

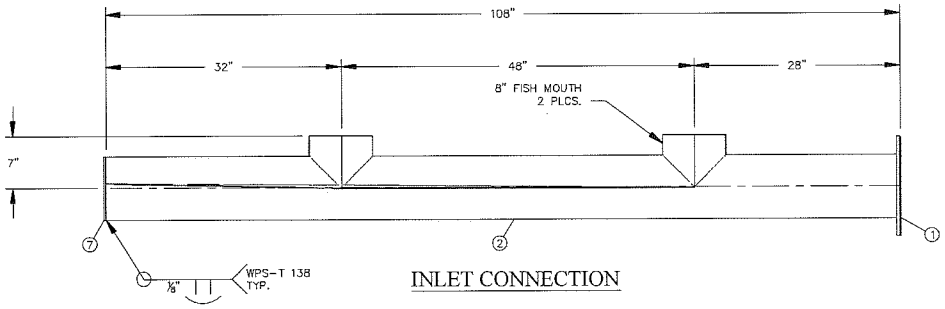

INLET CONNECTION

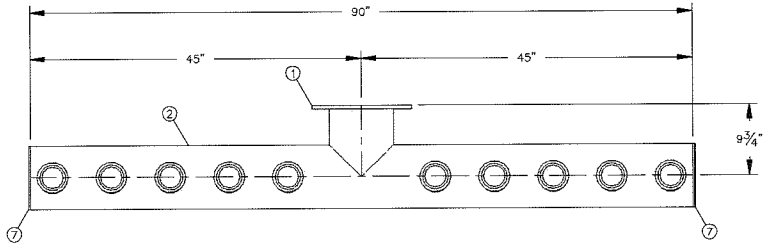

DISCHARGE LATERAL CONNECTION

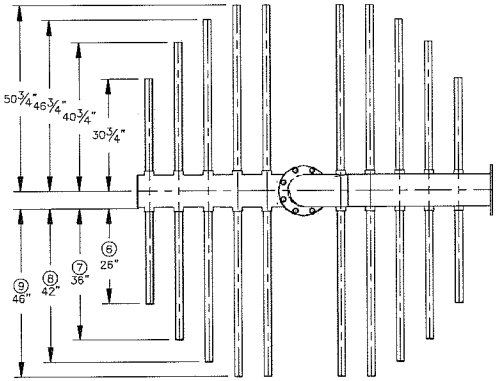

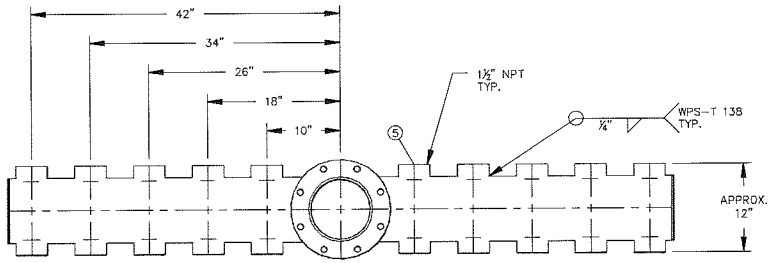

DISCHARGE LATERAL CONNECTION

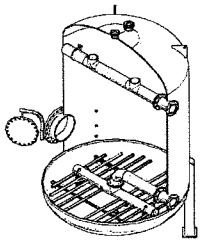

ITEM	QTY.	DESCRIPTION	MATERIAL
	1	8" U-BOLT	304SS
	20	1½" U-BOLT	304SS
	48	¾"ø WASHER	304SS
	24	¾"ø HEAVY HEX NUT	18-8 OR BETTER
	24	¾"ø x 2" BOLT	18-8 OR BETTER
	3	8" 150# FULL FACE GASKET	NEOPRENE
9	8	1½" WEDGE WIRE 0.010"SLOTTED PIPE 46" LONG	SA-182 304L
8	4	1½" WEDGE WIRE 0.010"SLOTTED PIPE 42" LONG	SA-182 304L
7	4	1½" WEDGE WIRE 0.010"SLOTTED PIPE 36" LONG	SA-182 304L
6	4	1½" WEDGE WIRE 0.010"SLOTTED PIPE 26" LONG	SA-182 304L
5	20	1½" NPT 3000# HALF COUPLING	SA-182 304L
4	3	8 5/16"ø x ½" END PLATE	SA-240 304L
3	1	8" SCH 10 90° LR ELBOW	SA-312 304L
2	22'	8" SCH 10 PIPE	SA-312 304L
1	4	8" 150# FABRICATED FLANGE ½" TK.	SA-240 304L

BILL OF MATERIALS

NO.	REVISION	BY	DATE

RELEASED FOR FABRICATION

PROJECT	CP-20K-10
PROJ. NO.	PLANT STANDARDS
P.O. NO.	
DRAWN BY	JB
DESIGN BY	BB
CHKD. BY	
DATE	3/11/11
SCALE	NTS

THIS DRAWING AND DESIGN IS THE PROPERTY OF TIGG CORP. AND IS LOANED SUBJECT TO THE AGREEMENT THAT IT SHALL NOT BE COPIED, USED OR REPRODUCED FOR ANY PURPOSE OTHER THAN THAT FOR WHICH IT IS SPECIFICALLY FURNISHED WITHOUT THE WRITTEN CONSENT OF TIGG CORP. AND IS SUBJECT TO RETURN ON DEMAND.

TIGG corporation

VESSEL INTERNALS
(STAINLESS STEEL)

DWG. NO. CP-20K-10-2004(SS) REV. 0

CP20K-10 System Pressure Drop

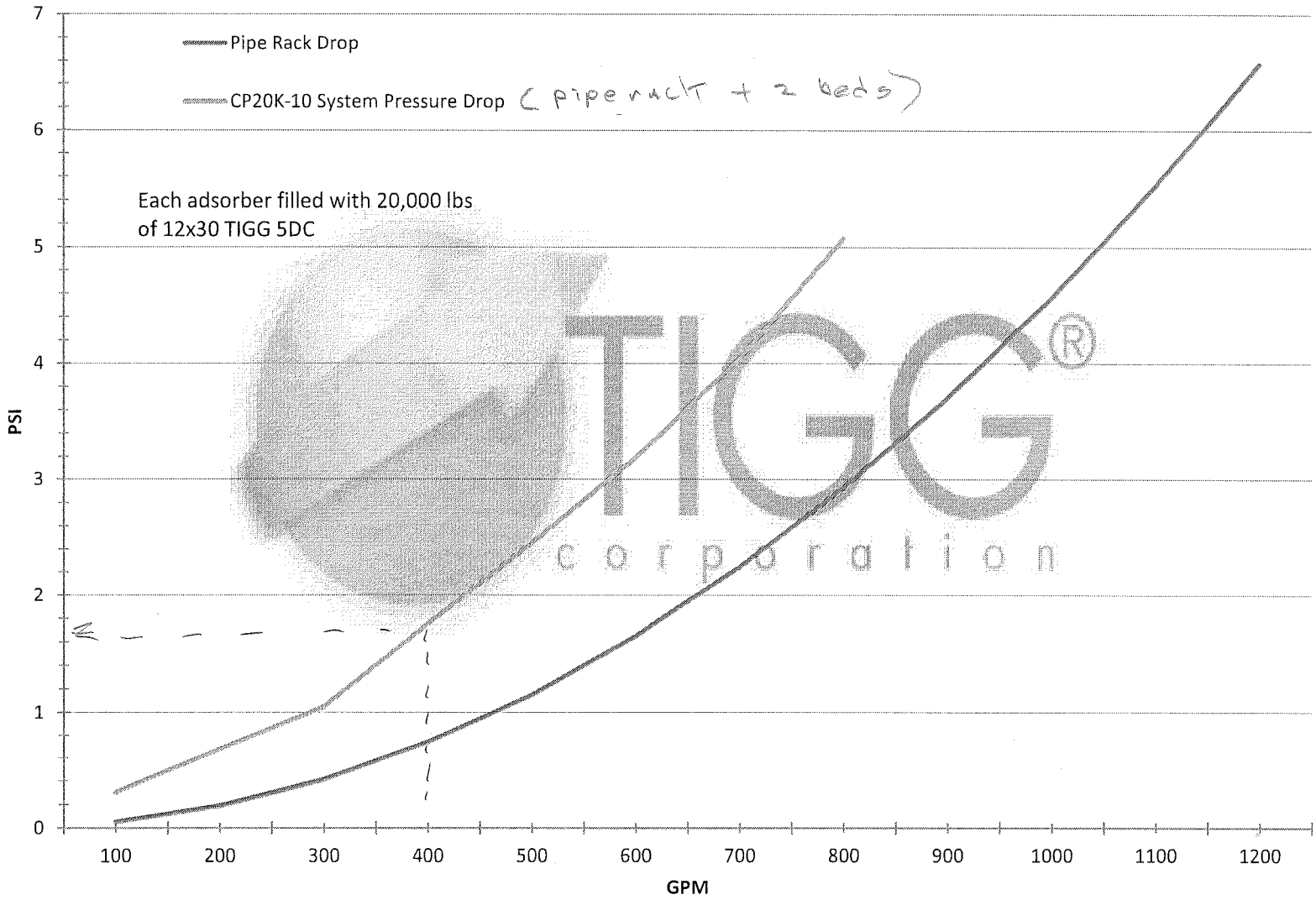

CARBON ADSORBER DESIGN CALCULATION

Project Title:	**Mid-Plume Pump and Treat System, Kirtland Air Force Base, New Mexico**	**Document Number:**	**140705-001-PR-CL-40002**
Owner:	**Process Engineering**	**Revision:**	**0**

Attachment E:

Spreadsheet – carbon adsorber calculations

Carbon Treatment Calculations
Kirtland BFF Mid Plume Interim Measure

Calculate carbon volume needed to provide adequate contact time to remove EDB to low levels.

Flow rate, gpm	400	
Contact time, minutes	12	from assumptions
Carbon density, lb/ft3	30	
Carbon volume, ft3	642	
Carbon weight, lb	**19,251**	

Calculate bed velocity in Carbon bed

Based on needing 20,000 lbs of carbon, use a 10-ft diameter adsorber

Flow rate, gpm	100	200	400
bed diameter, ft	10	10	10
Cross-sectional area, t2	78.54	78.54	78.54
hydraulic loading, gpm/ft2	1.27	2.55	5.09

loading exceeds minimum criteria of 1.0 gpm/ft2 at minimum groundwater flow of of 100 gpm.
At 400 gpm (max flow) loading is 5.1, which is good

Calculate estimated carbon consumption using loading data for EDB on carbon vs inlet concentration.

EDB Loading from Tigg

conc, ug/L	loading g EDB/g carbon
0.1	0.0036
1	0.0082
10	0.018

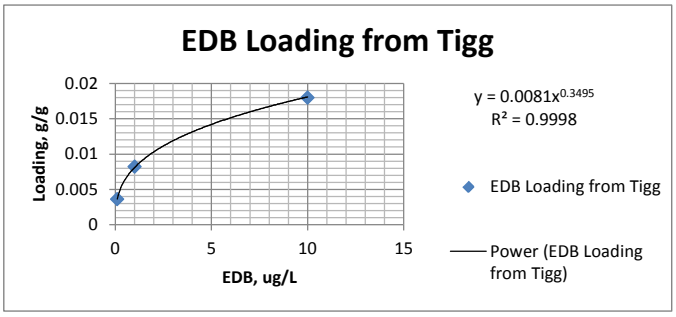

Carbon usage

EDB conc in GW, ug/L	2	1.5	1	0.5
loading from Tigg correllation, g EDB/g carbon	0.0103	0.0093	0.0081	0.0064
flow, gpm	400	400	400	400
EDB, lb/day	0.0096	0.0072	0.0048	0.0024
Isotherm loading correction factor	0.6	0.6	0.6	0.6
Estimated carbon loading g EDB/ g carbon	0.0062	0.0056	0.0049	0.0038
carbon, lb/day	1.6	1.3	1.0	0.6
carbon, lb/month	47	39	30	19
carbon, lb/year	567	470	361	230

APPENDIX I

Groundwater Treatment System Operations Log Sheets and Record Forms

DAILY INSPECTION FORM

Daily and Weekly Inspection Log for the Kirtland AFB GWTS

Location	Component	Item	Normal Range	Recordation Frequency	Monday __/__/__ Time:	Tuesday __/__/__	Wednesday __/__/__	Thursday __/__/__	Friday __/__/__	Saturday __/__/__	Sunday __/__/__
HMI	Well KAFB-106228	GW flow, FT-3001 (gpm)	0-200 gpm	Daily							
		Wellhead Pressure (psig)	< 150 psig	Daily							
		Water Level Above Transducer (ft)	---	Daily							
	Well KAFB-106233	GW flow, FT-7001 (gpm)	0-200 gpm	Daily							
		Wellhead Pressure (psig)	< 150 psig	Daily							
		Water Level Above Transducer (ft)	---	Daily							
	Well KAFB-106234	GW flow, FI-7002(gpm)	0-200 gpm	Daily							
		Wellhead Pressure (psig)	< 150 psig	Daily							
		Water Level Above Transducer (ft)	---	Daily							
	Well KAFB-106239	GW flow, FI-7002(gpm)	0-200 gpm	Daily							
		Wellhead Pressure (psig)	< 150 psig	Daily							
		Water Level Above Transducer (ft)	---	Daily							
	Influent Pump Skid (1)	GW flow (gpm)	0-400 gpm	Daily							
		Totalizer (1000 gal)	---	Daily							
		Bag filter differential pressure, F112A, PDI-3102A	<15 psid	Daily							
		Bag filter differential pressure, F112B, PDI-3102B	<15 psid	Daily							
	Influent Pump Skid (2)	GW flow (gpm)	0-400 gpm	Daily							
		Totalizer (1000 gal)	---	Daily							
		Bag filter differential pressure, F-212A, PDI-3202A	<15 psid	Daily							
		Bag filter differential pressure, F-212B, PDI-3202B	<15 psid	Daily							
	Effluent Skid Pump (1)	GW flow (gpm)	0-400 gpm	Daily							
		Totalizer (1000 gal)	---	Daily							
	Effluent Skid Pump (2)	GW flow (gpm)	0-400 gpm	Daily							
		Totalizer (1000 gal)	---	Daily							
	Injection Well 7	Pressure (psig)	0-120 psig	Daily							
		Water Level Above Transducer (ft)	10-30 ft	Daily							
	Golf Course Pond	Pond Level (ft)	0.7-3.5 ft	Daily							
Well Vault	KAFB-106228	Totalizer (Mgal)	---	Weekly							
		GW flow, FT-3001 (gpm)	0-200 gpm	Weekly							
Well Vault	KAFB-106239	Totalizer (Mgal)	---	Weekly							
		GW flow, FT-3001 (gpm)	0-200 gpm	Weekly							
Well Control House	KAFB-106233	Wellhead Pressure (psig)	< 150 psig	Weekly							
		GW flow, FT-7001 (gpm)	0-200 gpm	Weekly							
		Totalizer (Mgal)	---	Weekly							
	KAFB-106234	Wellhead Pressure (psig)	< 150 psig	Weekly							
		GW flow, FT-7002 (gpm)	0-200 gpm	Weekly							
		Totalizer (Mgal)	---	Weekly							
	Well Control House	Effluent Line Pressure, PI-7005	< 150 psig	Weekly							
Well Head	KAFB-7	*Totalizer (1000 gal)	---	Weekly							
		GW flow (gpm)	0-800 gpm	Weekly							

* The KAFB-7 Totalizer reading should be recorded weekly as well as on days when the effluent flow is changed between KAFB-7 and the Golf Course Main Pond.

Notes:

Daily and Weekly Inspection Log for the Kirtland AFB GWTS

Location	Component	Item	Normal Range	Recordation Frequency	Monday __/__/__ Time:	Tuesday __/__/__	Wednesday __/__/__	Thursday __/__/__	Friday __/__/__	Saturday __/__/__	Sunday __/__/__
GWTS	Influent Pump Skid (Train 1)	Inlet pressure pump skid, PI-3102 (psig)	< 60 psig	Daily							
		Bag filter differential pressure, F112A, PDI-3102A	<15 psid	Daily							
		Bag filter differential pressure, F112B, PDI-3102B	<15 psid	Daily							
		Sand filter differential pressure, SF-101 (1)	---	Daily							
		Sand filter differential pressure, SF-101 (2)	---	Daily							
		Outlet pressure pump skid, PI-3103 (psig)	< 60 psig	Daily							
		GW flow (gpm)	0-500 gpm	Daily							
		Totalizer (Mgal)	---	Daily							
		Bag filters changed?	yes/no	Daily							
	Influent Pump Skid (Train 2)	Inlet pressure pump skid, PI-3202 (psig)	< 60 psig	Daily							
		Bag filter differential pressure, F212A	<15 psid	Daily							
		Bag filter differential pressure, F212B	<15 psid	Daily							
		Sand filter differential pressure, SF-201 (1)	---	Daily							
		Sand filter differential pressure, SF-201 (2)	---	Daily							
		Outlet pressure pump skid,PI-3203, (psig)	< 60 psig	Daily							
		GW flow (gpm)	0-500 gpm	Daily							
		Totalizer (Mgal)	---	Daily							
		Bag filters changed?	yes/no	Daily							
	GAC (Train 1)	V-114A Pressure, PI-3104A (psig)	0-20 psig	Daily							
		Between Tanks, PI-3105 (psig)	0-20 psig	Daily							
		V-114B Pressure, PI-3104B (psig)	0-20 psig	Daily							
		Which Tank is Lead?	---	Daily							
		Which Tank is Lag?	---	Daily							
	GAC (Train 2)	V-214A Pressure (psig)	0-20 psig	Daily							
		Between Tanks (psig)	0-20 psig	Daily							
		V-214B Pressure (psig)	0-20 psig	Daily							
		Which Tank is Lead?	---	Daily							
		Which Tank is Lag?	---	Daily							
	Effluent Pump Skid (Train 1)	Inlet press. pump skid, PI-3108 (psig)	< 60 psig	Daily							
		Bag filter differential pressure, F-118A	<15 psid	Daily							
		Bag filter differential pressure, F-118B	<15 psid	Daily							
		Upstream outlet press. pump tree (psig)	< 60 psig	Daily							
		GW flow (gpm)	0-500 gpm	Daily							
		Totalizer (Mgal)	---	Daily							
	Effluent Pump Skid (Train 2)	Inlet press. pump skid, PI-3208 (psig)	< 60 psig	Daily							
		Bag filter differential pressure, F-218A	<15 psid	Daily							
		Bag filter differential pressure, F-218B	<15 psid	Daily							
		Upstream outlet press. pump tree (psig)	< 60 psig	Daily							
		GW flow (gpm)	0-500 gpm	Daily							
		Totalizer (Mgal)	---	Daily							
	Dosing Pumps/Backwash System	Dosing Pump Level (Train 1, gal)	---	Daily							
		Dosing Pump Level Topped Up (Train 1)	yes/no	Daily							
		Dosing Pump Level (Train 2, gal)	---	Daily							
		Dosing Pump Level Topped Up (Train 2)	yes/no	Daily							
		Clarifier Level (ft)	---	Daily							
		Clarifier Discharged to Sump?	yes/no	Daily							

Notes:

WEEKLY INSPECTION FORM

KAFB BFF: Weekly Inspection Form for GWTS

Train: _____

Groundwater Feed (tank, feed pumps and pre-filter)	Condition	Inspector	Date/Time
Pipes, fittings and instruments free of leaks			
Feed pump seals free of leaks			
Pump vibration normal (i-ALERT®)			
Oil reservoir for feed pumps full			
Pump oil has been changed within last 90 days			
Filter housing gaskets free of leaks			
Filter differential pressure less than 15 psi			
Vent air from top of filter housings			
Notes:			

Carbon Adsorbers	Condition	Inspector	Date/Time
Pipes, fittings and instruments free of leaks			
Pressure drop less than 15 psig for each bed			
Vent air from top of carbon beds			
Notes:			

Treated Water Discharge (tank, feed pumps and post-filter)	Condition	Inspector	Date/Time
Pipes, fittings and instruments free of leaks			
Treated water discharge pump seal free of leaks			
Pump vibration normal (i-ALERT®)			
Oil reservoir for feed pump full			
Pump oil has been changed within last 90 days			
Filter housing gaskets free of leaks			
Filter differential pressure less than 15 psi			
Vent air from top of filter housings			
Notes:			

Calrifier and Backwashing Lines	Condition	Inspector	Date/Time
Pipes, fittings and instruments free of leaks			
Notes:			

MONTHLY INSPECTION FORM

Monthly Operation and Maintenance Inspections
Vaults

Wellhead Vault KAFB-106228	Condition	Inspected by	Date/Time
wellhead vault dry and free of debris			
Air relief valve (ARV-3005) outlet clear			
Pressure in double wall pipe interstitial space (PI-3002) is near zero after ventvalve is opened for 2 minutes and then closed			
Piping, valves and electrical boxes are free of leaks and external corrosion			
Electrical cables, vault cover and seals intact			
Locks on electrical shed and panels intact			

Valve Vault KAFB-106228 (Louisiana inside base fence)	Condition	Inspected by	Date/Time
Vault dry and free of debris			
Air relief valve (ARV-3008) outlet clear			
Pressure in double wall pipe interstitial space (PI-3003) is near zero after ventvalve is opened for 2 minutes and then closed			
Piping, valves and electrical boxes are free of leaks and external corrosion			
Electrical cables, vault cover and seals intact			

Wellhead Vault KAFB-106233	Condition	Inspected by	Date/Time
Vault dry and free of debris			
Air relief valve (ARV-4001) outlet clear			
Pressure in double wall pipe interstitial space (PI-4001) is near zero after ventvalve is opened for 2 minutes and then closed			
Piping, valves and electrical boxes are free of leaks and external corrosion			
Electrical cables, vault cover and seals intact			

Wellhead Vault KAFB-106234	Condition	Inspected by	Date/Time
Vault dry and free of debris			
Air relief valve (ARV-5001) outlet clear			
Pressure in double wall pipe interstitial space (PI-5001) is near zero after ventvalve is opened for 2 minutes and then closed			
Piping, valves and electrical boxes are free of leaks and external corrosion			
Electrical cables, vault cover and seals intact			

Air Release Valve Vault - Eastern Avenue	Condition	Inspected by	Date/Time
wellhead vault dry and free of debris			
Air relief valve (ARV-6001 and ARV-6002) outlets clear			
Piping, valves and electrical boxes are free of leaks and external corrosion			
Electrical cables intact			
Vault cover and seals intact			

Wellhead Vault KAFB-106239	Condition	Inspected by	Date/Time
Vault dry and free of debris			
Pressure in double wall pipe interstitial space (PI-?001) is near zero after ventvalve is opened for 2 minutes and then closed			
Piping, valves and electrical boxes are free of leaks and external corrosion			
Electrical cables, vault cover and seals intact			

Junction Vault KAFB-106239 (Ridgecrest inside base fence)	Condition	Inspected by	Date/Time
Vault dry and free of debris			
Piping, valves and electrical boxes are free of leaks and external corrosion			
Electrical cables, vault cover and seals intact			

Well Control House (WCH) - Gibson Avenue (inside base fence)	Condition	Inspected by	Date/Time
WCH dry and free of debris			
Air relief valve (ARV-3008) outlet clear			
Pressure in double wall pipe interstitial spaces (PI-7001 and PI-7002) is near zeroafter space is vented at wellhead.			
Piping, valves and electrical boxes are free of leaks and external corrosion			
Electrical cables intact			

Monthly Operation and Maintenance Inspections
Vaults

Valve Vault WCH to GWTS (Louisiana inside base fence)	Condition	Inspected by	Date/Time
Vault dry and free of debris			
Air relief valve (ARV-8001) outlet clear			
Piping, valves and electrical boxes are free of leaks and external corrosion			
Electrical cables intact			

Air Relief Valve Vaults on Discharge line (on base)	Condition	Inspected by	Date/Time
Vault dry and free of debris			
Air relief valve outlets clear			

KAFB Well 7 Wellhead	Condition	Inspected by	Date/Time
Well 7 flowmeter vault dry and free of debris			
Air relief valve (ARV-9012) outlet clear			
V-Smart valve hydraulic oil reservoir full			
Piping, valves and electrical boxes are free of leaks and external corrosion			
Electrical cables intact			
Filter pressure reading within green on dial			
Oil temperature between 90-110 degrees Farenheit			
Oil clear and without solids			

Golf Course Main Pond	Condition	Inspected by	Date/Time
GCMP water level consistent with HMI			
Discharge line clear of obstruction(s)			

Monthly Operation and Maintenance Inspections
Vaults

Date/Inspected by:	Flowmeters										
Flowmeter Inspection Items	**FIT- 3001**	**FIT- 7001**	**FIT- 7002**	**FIT-**	**FIT- 3102**	**FIT- 3108**	**FIT- 3202**	**FIT- 3208**	**FIT- 3120**	**FIT- 3120**	**KAFB-7**
Flow reading operational											
PLC totalizer functional											
No moisture in readout											
Free of mechanical damage											
Readings consistent with past operations											

FE/FIT- 3001, located in KAFB-106228 well vault. Magmeter (flow and totalizer) that measures well flow to the GWTS.
FE/FIT- 7001, located in well control house. Magmeter (flow and totalizer) that measures well flow to the GWTS.
FE/FIT- 7002, located in well control house. Magmeter (flow and totalizer) that measures well flow to the GWTS.
FE/FIT- , located in KAFB-106239 well vault. Magmeter (flow and totalizer) that measures well flow to the GWTS.
FE/FIT- 3102, located on the Train 1 feed pump skid in the treatment building. Magmeter (flow and totalizer) that measures flow from the feed tank to carbon beds.
FE/FIT- 3108, located on the Train 1 discharge pump skid in the treatment building. Magmeter (flow and totalizer) that measures flow from the treated water tank to discharge line.
FE/FIT- 3202, located on the Train 2 feed pump skid in the treatment building. Magmeter (flow and totalizer) that measures flow from the feed tank to carbon beds.
FE/FIT- 3208, located on the Train 2 discharge pump skid in the treatment building. Magmeter (flow and totalizer) that measures flow from the treated water tank to discharge line.
FI/FQI- 3120, located on the effluent bypass in the treatment building. Turbine meter (local) with analog flow rate and mechanical totalizer readout in increments of 100 gallons. Measures water volume discahrged to the truck bay.
FI/FQI-KAFB-7, located in existing vault near KAFB-7. Turbine meter with analog flow rate and mechanical totalizer readout in increments of 1,000 gallons. Measures injection volume into KAFB-7.

MISCELLANEOUS OPERATIONS AND MAINTENANCE FORM

Miscellaneous Operations and Maintenance Activities

FILTER PACK TAGGING FORM

Filter pack tagging						
Well		KAFB-106228	KAFB-106233	KAFB-106234	KAFB-106239	Notes
Measuring point		Ground surface				
Bottom of filler tube (ft bgs)		420	420	429		
January	Date/Time					
	WL Depth (ft)					
	Filter Pack Depth (ft)					
February	Date/Time					
	WL Depth (ft)					
	Filter Pack Depth (ft)					
March	Date/Time					
	WL Depth (ft)					
	Filter Pack Depth (ft)					
April	Date/Time					
	WL Depth (ft)					
	Filter Pack Depth (ft)					
May	Date/Time					
	WL Depth (ft)					
	Filter Pack Depth (ft)					
June	Date/Time					
	WL Depth (ft)					
	Filter Pack Depth (ft)					
July	Date/Time					
	WL Depth (ft)					
	Filter Pack Depth (ft)					
August	Date/Time					
	WL Depth (ft)					
	Filter Pack Depth (ft)					
September	Date/Time					
	WL Depth (ft)					
	Filter Pack Depth (ft)					
October	Date/Time					
	WL Depth (ft)					
	Filter Pack Depth (ft)					
November	Date/Time					
	WL Depth (ft)					
	Filter Pack Depth (ft)					
December	Date/Time					
	WL Depth (ft)					
	Filter Pack Depth (ft)					

bgs = below ground surface
ft = feet
NM = not measured

Filter pack tagging tool reference points

Top black mark =	Top black mark = 432 ft
Red mark =	Red mark = 429.5 ft
Bottom black mark =	Bottom black mark = 428 ft

SHUTDOWN LOG

Kirtland AFB GWTS System Shutdown Log

Date of shutdown	Time of shutdown	Date of restart	Time of restart	Was system completely shut down?	If No, which equipment was shut down?	Reason for shutdown
				YES □ NO □		
				YES □ NO □		
				YES □ NO □		
				YES □ NO □		
				YES □ NO □		
				YES □ NO □		
				YES □ NO □		
				YES □ NO □		
				YES □ NO □		
				YES □ NO □		
				YES □ NO □		
				YES □ NO □		
				YES □ NO □		
				YES □ NO □		

IDW DISPOSAL FORM

KAFB BFF: IDW Disposal Form

Sample Quarter	Collection Date	Well ID	Container Type	# of Containers	Estimated Volume	Disposal Date	Disposal Location	Initials	Notes

LOCKOUT TAGOUT FORM

KAFB BFF: GWTS Lockout/Tagout Form

Tagged by:	Date/Time Tagged	Equipment	Date/Time Removed:	Notes:

VFD PERFORMANCE LOG

Weekly VFD Performance and Temperature Log

Date:															
VFD	**Flowrate (gpm)**	**Hertz**	**Amps**	**Flowrate (gpm)**	**Hertz**	**Amps**	**Flowrate (gpm)**	**Hertz**	**Amps**	**Flowrate (gpm)**	**Hertz**	**Amps**	**Flowrate (gpm)**	**Hertz**	**Amps**
P-112A															
P-112B															
P-212A															
P-212B															
P-118															
P-218															
KAFB-106239															

Date:										
Location	**Max VFD Temp (°C)**	**Motor End Temp (°C)**	**Max VFD Temp (°C)**	**Motor End Temp (°C)**	**Max VFD Temp (°C)**	**Motor End Temp (°C)**	**Max VFD Temp (°C)**	**Motor End Temp (°C)**	**Max VFD Temp (°C)**	**Motor End Temp (°C)**
P-112A										
P-112B										
P-212A										
P-212B										
P-118										
P-218										
KAFB-106239		NA		NA		NA		NA		NA

temp = temperature

APPENDIX J

Manufacturers' Literature

KAFB-106228 Manufacturer's Literature

TAG: FIT-3001

© Siemens AG 2009

SITRANS P measuring instruments for pressure

Transmitters for gauge, absolute and differential pressure, flow and level

DS III, DS III PA and DS III FF series
Technical description

VERIFY MEETS BUY AMERICA

Overview

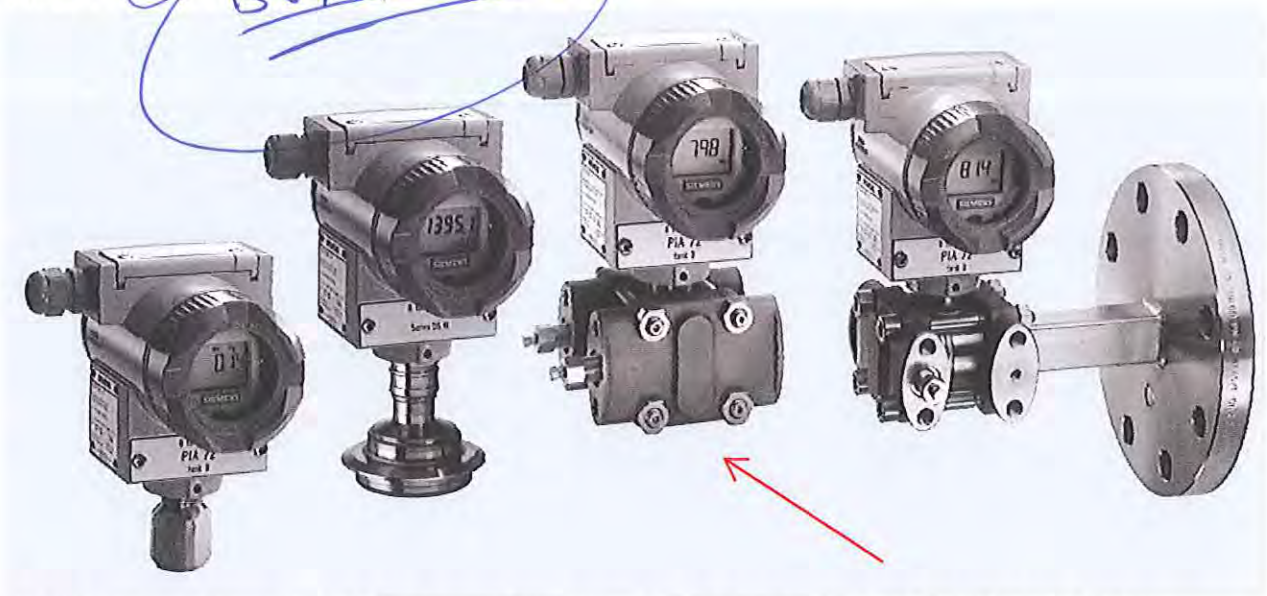

SITRANS P pressure transmitters, DS III series, are digital pressure transmitters featuring extensive user-friendliness and high accuracy. The parameterization is performed using control keys, over HART communication, PROFIBUS-PA or FOUNDATION Fieldbus interface.

Extensive functionality enables the pressure transmitter to be precisely adapted to the plant's requirements. Operation is very simple in spite of the numerous setting options.

Transmitters with type of protection "Intrinsic safety" and "Explosion-proof" may be installed within potentially explosive atmospheres (zone 1) or in zone 0. The transmitters are provided with an EC type examination certificate and comply with the corresponding harmonized European standards (ATEX).

The transmitters can be equipped with various designs of remote seals for special applications such as the measurement of highly viscous substances.

Various versions of the DS III pressure transmitters are available for measuring:

- Gauge pressure
- Absolute pressure
- For differential pressure transmitters
- Filling level
- Mass level
- Volume level
- Volume flow
- Mass flow

Benefits

- High quality and long life
- High reliability even under extreme chemical and mechanical loads
- For aggressive and non-aggressive gases, vapors and liquids
- Extensive diagnosis and simulation functions
- Separate replacement of measuring cell and electronics without recalibration
- Minimum conformity error
- Small long-term drift
- Wetted parts made of high-grade materials (e.g. stainless steel, Hastelloy, gold, Monel, tantalum)
- Infinitely adjustable span from 0.01 bar to 700 bar (0.15 psi to 10153 psi) for DS III with HART communication
- Nominal measuring range from 1 bar to 700 bar (14.5 psi to 10153 psi) for DS III PA (PROFIBUS PA) and FF (FOUNDATION Fieldbus)
- High measuring accuracy
- Parameterization over control keys and HART communication, PROFIBUS PA communication or FOUNDATION Fieldbus interface.

Application

The pressure transmitters of the DS III series, can be used in industrial areas with extreme chemical and mechanical loads. Electromagnetic compatibility in the range 10 kHz to 1 GHz makes the DS III pressure transmitters suitable for locations with high electromagnetic emissions.

Pressure transmitters with type of protection "Intrinsic safety" and "Explosion-proof" may be installed within potentially explosive atmospheres (zone 1) or in zone 0. The pressure transmitters are provided with an EC type examination certificate and comply with the corresponding harmonized European standards (ATEX).

Pressure transmitters with the type of protection "Intrinsic safety" for use in zone 0 may be operated with power supply units of category "ia" and "ib".

The transmitters can be equipped with various designs of remote seals for special applications such as the measurement of highly viscous substances.

The pressure transmitter can be operated locally over 3 control keys or programmed externally over HART communication or over PROFIBUS PA or FOUNDATION Fieldbus interface.

© Siemens AG 2009

SITRANS P, DS III series, for differential pressure and flow		
	HART	**PROFIBUS PA or FOUNDATION Fieldbus**
• Square-root characteristic (flow 25 ... 50%)		≤ 0,2 %
- $r \leq 10$	≤ 0,2 %	-
- $10 < r \leq 30$	≤ 0,4 %	-
Long-term drift (temperature change ± 30 °C (± 54 °F))	≤ (0.25 · r) % every 5 years static pressure max. 70 bar g (1015 psi g)	≤ (0.25 % every 5 years static pressure max. 70 bar g (1015 psi g)
• 20 mbar (0.29 psi)-measuring cell	≤ (0.2 · r) per year	≤ 0.2 per year
Influence of ambient temperature		
• at -10 ... +60 °C (14 ... 140 °F)	≤ (0.08 · r + 0.1) %	≤ 0,3 %
• at -40 ... -10 °C and +60 ... +85 °C (-40 ... +14 °F and 140 ... 185 °F)	≤ (0.1 · r + 0.15) %/10 K (Twice the value with 20-mbar (0.29 psi) measuring cell)	≤ 0.25 %/10 K
Influence of static pressure		
• on the zero point	≤ (0.15 · r) % per 100 bar (1450 psi)	≤ 0.15 % je 100 bar (1450 psi)
- 20 mbar (0.29 psi)-measuring cell	≤ (0.15 · r) % per 32 bar (464 psi)	≤ 0.15 % je 32 bar (464 psi)
• on the span	≤ 0.2 % je 100 bar (1450 psi)	-
- 20 mbar (0.29 psi)-measuring cell	≤ 0.2 % je 32 bar (464 psi)	-
Measured Value Resolution	-	$3 \cdot 10^{-5}$ of nominal measuring range
Rated operating conditions		
Degree of protection (to EN 60529)	IP65	
Process temperature		
• Measuring cell with silicone oil filling	-40 ... +100 °C (-40 ... +212 °F)	
• Measuring cell with inert filling liquid	-20 ... +100 °C (-4 ... +212 °F)	
• In conjunction with dust explosion protection	-20 ... +60 °C (-4 ... +140 °F)	
Ambient conditions		
• Ambient temperature		
- Digital indicators	-30 ... +85 °C (-22 ... +185 °F)	
• Storage temperature	-50 ... +85 °C (-58 ... +185 °F)	
• Climatic class		
- Condensation	Permissible	
• Electromagnetic compatibility		
- Emitted interference and interference immunity	To EN 61326 and NAMUR NE 21	
Material of the mounting bracket		
• Steel	Sheet steel, Mat. No. 1.0330, chrome-plated	
• Stainless steel	Stainless steel, Mat. No. 1.4301 (SS304)	
Design		
Weight (without options)	≈ 4.5 kg (≈ 9.9 lb)	
Housing material	Poor in copper die-cast aluminium, GD-AlSi12 or stainless steel precision casting, mat. No. 1.4408	
Wetted parts materials		
• Seal diaphragm	Stainless steel, mat. No. 1.4404/316L or Hastelloy C276, mat. No. 2.4819, Monel, mat. No. 2.4360, tantalum or gold	
Measuring cell filling	Silicone oil or inert filling liquid (max. 160 bar (2320 psi g) with oxygen measurement)	
Process connection	Female thread ¼-18 NPT and flange connection with mounting thread M10 to DIN 19213 or $^{7}/_{16}$-20 UNF to EN 61518	
Power supply U_H		Supplied through bus
Terminal voltage on transmitter	10.5 ... 45 V DC 10.5 ... 30 V DC in intrinsically-safe mode	-
Separate 24 V power supply necessary	-	No
Bus voltage		
• Not Ex	-	9 ...32 V
• With intrinsically-safe operation	-	9 ...24 V

© Siemens AG 2009

2

SITRANS P, DS III series, for differential pressure and flow		
	HART	**PROFIBUS PA or FOUNDATION Fieldbus**
Power supply U_H		
Current consumption		
• Basic current (max.)	-	12.5 mA
• Startup current ≤ basic current	-	Yes
• Max. current in event of fault	-	15.5 mA
Fault disconnection electronics (FDE) avail.	-	Yes
Certificate and approvals		
Classification according to pressure equipment directive (DRGL 97/23/EC)		
PN 32/160 (MWP 464/2320 psi)	For gases of fluid group 1 and liquids of fluid group 1; complies with requirements of Article 3, paragraph 3 (sound engineering practice)	
PN 420 (MWP 6092 psi)	For gases of fluid group 1 and liquids of fluid group 1; complies with basic safety requirements of Article 3, paragraph 1 (appendix 1); assigned to category III, conformity evaluation module H by the TÜV Nord.	
Explosion protection		
• Intrinsic safety "i"	PTB 99 ATEX 2122	
- Identification	Ex II 1/2 G EEx ia/ib IIB/IIC T6	
- Permissible ambient temperature	-40 ... +85 °C (-40 ... +185 °F) temperature class T4; -40 ... +70 °C (-40 ... +158 °F) temperature class T5; -40 ... +60 °C (-40 ... +140 °F) temperature class T6	
- Connection	To certified intrinsically-safe circuits with maximum values: U_i = 30 V, I_i = 100 mA, P_i = 750 mW; R_i = 300 Ω	FISCO supply unit: U_o = 17.5 V, I_o = 380 mA, P_o = 5.32 W Linear barrier: U_o = 24 V, I_o = 250 mA, P_o = 1.2 W
- Effective internal inductance/capacitance	L_i = 0.4 mH, C_i = 6 nF	L_i = 7 µH, C_i = 1.1 nF
• Explosion-proof "d"	PTB 99 ATEX 1160	
- Identification	Ex II 1/2 G EEx d IIC T4/T6	
- Permissible ambient temperature	-40 ... +85 °C (-40 ... +185 °F) temperature class T4; -40 ... +60 °C (-40 ... +140 °F) temperature class T6	
- Connection	To circuits with values: U_H = 10.5 ... 45 V DC	To circuits with values: U_H = 9 ... 32 V DC
• Dust explosion protection for zone 20	PTB 01 ATEX 2055	
- Identification	Ex II 1 D IP65 T 120 °C Ex II 1/2 D IP65 T 120 °C	
- Permissible ambient temperature	-40 ... +85 °C (-40 ... +185 °F)	
- Max.surface temperature	120 °C (248 °F)	
- Connection	To certified intrinsically-safe circuits with maximum values: U_i = 30 V, I_i = 100 mA, P_i = 750 mW, R_i = 300 Ω	FISCO supply unit: U_o = 17.5 V, I_o = 380 mA, P_o = 5.32 W Linear barrier: U_o = 24 V, I_o = 250 mA, P_o = 1.2 W
- Effective internal inductance/capacitance	L_i = 0.4 mH, C_i = 6 nF	L_i = 7 µH, C_i = 1.1 nF
• Dust explosion protection for zone 21/22	PTB 01 ATEX 2055	
- Identification	Ex II 2 D IP65 T 120 °C	
- Connection	To circuits with values: U_H = 10.5 ... 45 V DC; P_{max} = 1.2 W	To circuits with values: U_H = 9 ... 32 V DC; P_{max} = 1.2 W
• Type of protection "n" (zone 2)	TÜV 01 ATEX 1696 X	Planned
- Identification	Ex II 3 G EEx nA L IIC T4/T5/T6	-
• Explosion protection to FM	Certificate of Compliance 3008490	
- Identification (XP/DIP) or (IS); (NI)	CL I, DIV 1, GP ABCD T4...T6; CL II, DIV 1, GP EFG; CL III; CL I, ZN 0/1 AEx ia IIC T4...T6; CL I, DIV 2, GP ABCD T4...T6; CL II, DIV 2, GP FG; CL III	
• Explosion protection to CSA	Certificate of Compliance 1153651	
- Identification (XP/DIP) or (IS)	CL I, DIV 1, GP ABCD T4...T6; CL II, DIV 1, GP EFG; CL III; Ex ia IIC T4...T6; CL I, DIV 2, GP ABCD T4...T6; CL II, DIV 2, GP FG; CL III	

© Siemens AG 2009

HART communication	
HART communication	230 ... 1100 Ω
Protocol	HART Version 5.x
Software for computer	SIMATIC PDM
PROFIBUS PA communication	
Simultaneous communication with master class 2 (max.)	4
The address can be set using	Configuration tool or local operation (standard setting address 126)
Cyclic data usage	
• Output byte	5 (one measuring value) or 10 (two measuring values)
• Input byte	0, 1, or 2 (register operating mode and reset function for metering)
Internal preprocessing	
Device profile	PROFIBUS PA Profile for Process Control Devices Version 3.0, Class B
Function blocks	2
• Analog input	
- Adaptation to customer-specific process variables	Yes, linearly rising or falling characteristic
- Electrical damping T_{63}, adjustable	0 ... 100 s
- Simulation function	Input /Output
- Failure mode	Can be parameterized (last good value, substitute value, incorrect value)
- Limit monitoring	Yes, one upper and lower warning limit and one alarm limit respectively
• Register (totalizer)	Can be reset, preset, optional direction of counting, simulation function of register output
- Failure mode	Can be parameterized (summation with last good value, continuous summation, summation with incorrect value)
- Limit monitoring	One upper and lower warning limit and one alarm limit respectively
• Physical block	1
Transducer blocks	2
• Pressure transducer block	
- Can be calibrated by applying two pressures	Yes
- Monitoring of sensor limits	Yes
- Specification of a container characteristic with	Max. 30 nodes
- Square-rooted characteristic for flow measurement	Yes
- Gradual volume suppression and implementation point of square-root extraction	Parameterizable
- Simulation function for measured pressure value and sensor temperature	Constant value or over parameterizable ramp function

Communication FOUNDATION Fieldbus	
Function blocks	3 function blocks analog input, 1 function block PID
• Analog input	
- Adaptation to customer-specific process variables	Yes, linearly rising or falling characteristic
- Electrical damping T_{63}, adjustable	0 ... 100 s
- Simulation function	Output/input (can be locked within the device with a bridge)
- Failure mode	Can be parameterized (last good value, substitute value, incorrect value)
- Limit monitoring	Yes, one upper and lower warning limit and one alarm limit respectively
- Square-rooted characteristic for flow measurement	Yes
• PID	Standard FF function block
• Physical block	1 Resource block
Transducer blocks	1 transducer block Pressure with calibration, 1 transducer block LCD
• Pressure transducer block	
- Can be calibrated by applying two pressures	Yes
- Monitoring of sensor limits	Yes
- Simulation function: Measured pressure value, sensor temperature and electronics temperature	Constant value or over parameterizable ramp function

© Siemens AG 2009

DS III series for differential pressure and flow

2

Selection and Ordering data			Order No.
SITRANS P pressure transmitters for differential pressure and flow, Series DS III HART PN 32/160 (MWP 464/2320 psi)			**7MF4433 -** ■■■■■ - ■■■■
Measuring cell filling	**Measuring cell cleaning**		
Silicone oil	Standard	▶	1
Inert liquid[1]	Grease-free		3
Span			
PN 32 (MWP 464 psi)			
1 ... 20 mbar[2]	(0.4015 ... 8.03 inH_2O)	▶	B
PN 160 (MWP 2320 psi)			
1 ... 60 mbar	(0.4015 ... 24.09 inH_2O)	▶	C
2.5 ... 250 mbar	(1.004 ... 100.4 inH_2O)	▶	D
6 ... 600 mbar	(2.409 ... 240.9 inH_2O)	▶	E
16 ... 1600 mbar	(6.424 ... 642.4 inH_2O)	▶	F
50 ... 5000 mbar	(20.08 ... 2008 inH_2O)	▶	G
0.3 ... 30 bar	(4.35 ... 435 psi)	▶	H
Wetted parts materials			
(stainless steel process flanges)			
Seal diaphragm	Parts of measuring cell		
Stainless steel	Stainless steel	▶	A
Hastelloy	Stainless steel		B
Hastelloy	Hastelloy		C
Tantalum[3]	Tantalum		E
Monel[3]	Monel		H
Gold[3]	Gold		L
Version for diaphragm seal[4] [5]			Y
Process connection			
Female thread ¼-18 NPT with flange connection			
• Sealing screw opposite process connection			
- Mounting thread $^7/_{16}$-20 UNF to EN 61518			2
- Mounting thread M10 to DIN 19213 (only for replacement needs)		▶	0
• Vent on side of process flange[2]			
- Mounting thread $^7/_{16}$-20 UNF to EN 61518			6
- Mounting thread M10 to DIN 19213 (only for replacement needs)			4
Non-wetted parts materials			
Process flange screws	Electronics housing		
Stainless steel	Die-cast aluminium	▶	2
Stainless steel	Stainless steel precision casting[6]		3
Version			
• Standard version			1
• International version, English label inscriptions, documentation in 5 languages on CD		▶	2
Explosion protection			
• Without			A
• With ATEX, Type of protection:			
- "Intrinsic safety (EEx ia)"			B
- "Explosion-proof (EEx d)"[7]			D
- "Intrinsic safety and explosion-proof enclosure (EEx ia + EEx d)"[8]			P
- "Ex nA/nL (zone 2)"			E
- "Intrinsic safety, explosion-proof enclosure and dust explosion protection (EEx ia + EEx d + Zone 1D/2D)"[8]		▶	R
• With FM + CSA, Type of protection:			
- "Intrinsic safety and explosion-proof (is + xp)"[7]			NC
Electrical connection / cable entry			
• Screwed gland Pg 13.5[9]			A
• Screwed gland M20x1.5		▶	B
• Screwed gland ½-14 NPT			C
• Han 7D plug (plastic housing) incl. mating connector[10]			D
• M12 connectors (metal)[10]			F

Selection and Ordering data	Order No.
SITRANS P pressure transmitters for differential pressure and flow, Series DS III HART PN 32/160 (MWP 464/2320 psi)	**7MF4433 -** ■■■■■ - ■■■■
Display	
• Without indicator	0
• Without visible digital indicator (digital indicator hidden, setting: mA) ▶	1
• With visible digital indication	6
• With customer-specific digital indicator (setting as specified, Order code "Y21" or „Y22" required)	7

▶ Available ex stock

Power supply units see "SITRANS I power supply units and isolation amplifiers".

Factory-mounting of shut-off valves and valve manifolds see page 2/147.

Included in delivery of the device:
- Brief instructions (Leporello)
- CD-ROM with detailed documentation
- Sealing plug(s) or sealing screw(s) for the process flanges(s)

1) For oxygen application, add Order code E10.
2) Not suitable for connection of remote seal. Position of the top vent valve in the process flanges (see dimensional drawing).
3) Not together with max. span 20 and 60 mbar (8.03 and 24.09 inH_2O)
4) When the manufacture's certificate M (calibration certificate) has to be ordered for transmitters with diaphragm seals, it is recommended only to order this certificate exclusively with the diaphragm seals. The measuring accuracy of the total combination is certified here.
5) Whe the acceptance test certificate 3.1 for transmitters with direct-connected diaphragm seals is ordered, this certificate must also be ordered with the corresponding seals.
6) Not together with Electrical connection „Screwed gland Pg 13.5" and „Han7D plug".
7) Without cable gland, with blanking plug
8) With enclosed cable gland EEx ia and blanking plug
9) Not together with type of protection "Explosion-proof" and and type of protection "Ex nA".
10) M12 delivered without cable socket.

© Siemens AG 2009

DS III series for differential pressure and flow

Selection and Ordering data	Order code	HART	PA	FF
Further designs Add "-Z" to Order No. and specify Order code.				
Pressure transmitter with mounting bracket made of:				
• Steel	A01	✓	✓	✓
• Stainless steel	A02	✓	✓	✓
O-rings for process flanges (instead of FPM (Viton))				
• PTFE (Teflon)	A20	✓	✓	✓
• FEP (with silicone core, approved for food)	A21	✓	✓	✓
• FFPM (Kalrez, compound 4079)	A22	✓	✓	✓
• NBR (Buna N)	A23	✓	✓	✓
Plug				
• Han 7D (metal, gray)	A30	✓		
• Han 8U (instead of Han 7D)	A31	✓		
Sealing screws ¼-18 NPT, with vent valve in mat. of process flanges	A40	✓	✓	✓
Cable sockets for M12 connectors (metal)	A50	✓	✓	✓
Rating plate inscription (instead of German)				
• English	B11	✓	✓	✓
• French	B12	✓	✓	✓
• Spanish	B13	✓	✓	✓
• Italian	B14	✓	✓	✓
English rating plate (calibration certificate) Pressure units in inH_2O or psi	B21	✓	✓	✓
Quality inspection certificate (Factory calibration) to IEC 60770-2 [1]	C11	✓	✓	✓
Acceptance test certificate[2] To EN 10 204-3.1	C12	✓	✓	✓
Factory certificate To EN 10 204-2.2	C14	✓	✓	✓
"Functional Safety (SIL)" certificate	C20	✓		
"PROFIsafe" certificate and protocol	C21		✓	
Setting of upper limit of output signal to 22.0 mA	D05	✓		
Manufacturer's declaration acc. to NACE (only together with seal diaphragm made of Hastelloy and stainless steel)	D07	✓	✓	✓
Type of protection IP68 (only for M20x1.5 and ½-14 NPT)	D12	✓	✓	✓
Digital indicator alongside the input keys (only together with the devices 7MF4433-....2-.A.6 or -.A.7-Z, Y21 or Y22 + Y01)	D27	✓	✓	✓
Process flange screws made of Monel (max. nominal pressure PN20)	D34	✓	✓	✓
Supplied with oval flange set (2 items), PTFE packings and stainles steel screws in thread of process flanges	D37	✓	✓	✓
Use in or on zone 1D/2D (only together with type of protection "Intrinsic safety (EEx ia)")	E01	✓	✓	✓
Use on zone 0 (only together with type of protection "Intrinsic safety (EEx ia)")	E02	✓	✓	✓
TÜV approval to AD/TRD (only together with type of protection "Intrinsic safety (EEx ia)")	E06	✓		
Overfilling safety device for flammable and non-flammable liquids (max. PN 32 (MVWP 464 psi), basic device with type of protection "Intrinsic safety (EEx ia)", to WHG and VbF, not together with measuring cell filling "inert liquid")	E08	✓	✓	✓

Selection and Ordering data	Order code	HART	PA	FF
Further designs Add "-Z" to Order No. and specify Order code.				
Oxygen application (max. 120 bar (1740 psi) at 60°C (140 °F) with oxygen measurement and inert liquid)	E10	✓	✓	✓
Explosion-proof "Intrinsic safety" to INMETRO (Brazil) (only for transmitter 7MF4...-.....-.B..)	E25	✓	✓	✓
Explosion-proof "Intrinsic safety" to NEPSI (China) (only for transmitter 7MF4...-.....-.B..)	E55	✓	✓	✓
Explosion protection "Explosion-proof" to NEPSI (China) (only for transmitter 7MF4...-.....-.D..)	E56	✓	✓	✓
Explosion-proof "Zone 2" to NEPSI (China) (only for transmitter 7MF4...-.....-.E..)	E57	✓	✓	✓
Interchanging of process connection side	H01	✓	✓	✓
Vent on side for gas measurements	H02	✓	✓	✓
Stainless steel process flanges for vertical differential pressure lines (not together with K01, K02 and K04)[3]	H03	✓	✓	✓
Process flange				
• Hastelloy	K01	✓	✓	✓
• Monel	K02	✓	✓	✓
• Stainless steel with PVDF insert max. PN 10 (MWP 145 psi), max. temperature of medium 90 °C (194 °F) For ½-14 NPT inner process connection on the side in the middle of the process flange, vent valve not possible	K04	✓	✓	✓

✓ = available

1) When the manufacture's certificate M (calibration certificate) has to be ordered for transmitters with diaphragm seals, it is recommended only to order this certificate exclusively with the diaphragm seals. The measuring accuracy of the total combination is certified here.

2) Whe the acceptance test certificate 3.1 for transmitters with direct-connected diaphragm seals is ordered, this certificate must also be ordered with the corresponding seals.

3) Not suitable for connection of remote seal

© Siemens AG 2009

Selection and Ordering data	Order code	HART	PA	FF
Additional data Add "-Z" to Order No. and specify Order code.				
Measuring range to be set Specify in plain text: • With linear characteristic (max. 5 digits): Y01: ... up to ... mbar, bar, kPa, MPa, psi	**Y01**	✓		
• With square-rooted characteristic (max. 5 digits): Y02: ... up to ... mbar, bar, kPa, MPa, psi	**Y02**	✓		
Measuring point number (TAG No.) Max. 16 char., specify in plain text: Y15:	**Y15**	✓	✓	✓
Measuring point text Max. 27 char., specify in plain text: Y16:	**Y16**	✓	✓	✓
Entry of HART address (TAG) Max. 8 char., specify in plain text: Y17:	**Y17**	✓		
Setting of pressure indicator in pressure units Specify in plain text (standard setting: mA): Y21: mbar, bar, kPa, MPa, psi, ... Note: The following pressure units can be selected: bar, mbar, mm H_2O*), inH_2O*), ftH_2O*), mmHG, inHG, psi, Pa, kPa, MPa, g/cm^2, kg/cm^2, Torr, ATM oder % *) ref. temperature 20 °C	**Y21**	✓	✓	✓
Setting of pressure indicator in non-pressure units[1] Specify in plain text: Y22: ..... up to ..... l/min, m^3/h, m, USgpm, ... (specification of measuring range in pressure units "Y01" or "Y02" is essential, unit with max. 5 characters)	**Y22**[2] **+ Y01** *or* **Y02**	✓		
Preset bus address (possible between 1 and 126) Specify in plain text: Y25:	**Y25**		✓	

Only "Y01", "Y21", "Y22", "Y25" and "D05" can be factory preset

✓ = available

1) Preset values can only be modified over SIMATIC PDM.
2) Not together with over-filling safety device for flammable and non-flammable liquids (Order code "E08")

© Siemens AG 2009

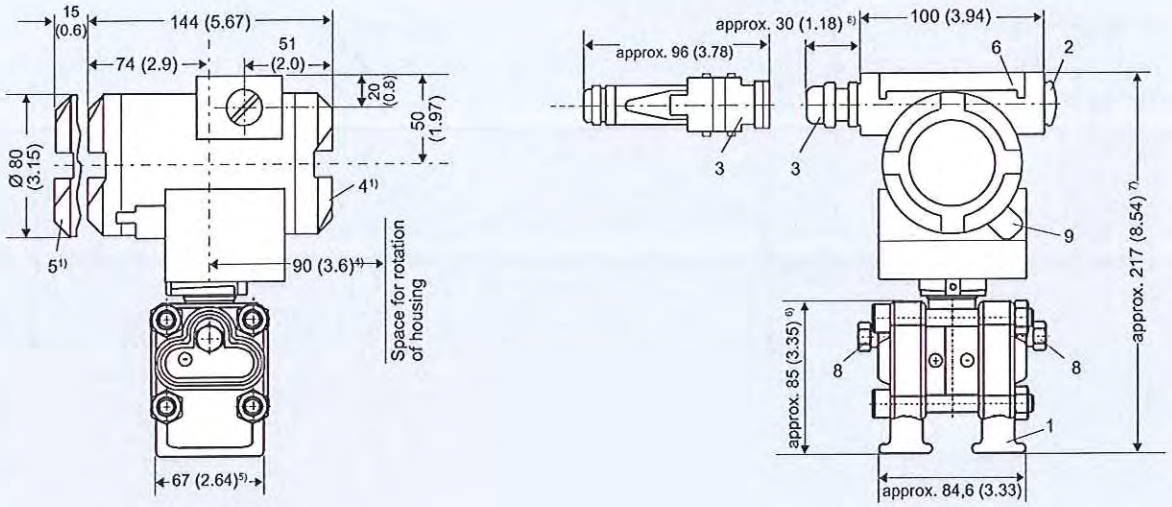

1 Process connection: ¼-18 NPT (EN 61518)
2 Blanking plug
3 Electrical connection:
- screwed gland Pg 13,5 (adapter) [2) 3)],
- screwed gland M20x1,5 [3)],
- screwed gland ½-14 NPT or
- Han 7D/ Han 8U plug [2) 3)]
4 Terminal side
5 Electronics side, digital display (longer overall length for cover with window)
6 Protective cover over keys
7 Mounting bracket (option)
8 Sealing screw (optionally with vent valve)
9 Screw cover - safety bracket (only for type of protection "Explosion-proof enclosure", not shown in the drawing)

1) Allow approx. 20 mm (0.79 inch) thread length to permit unscrewing
2) Not with type of protection "explosion-proof enclosure"
3) Not with type of protection "FM + CSA [is + xp]"
4) 92 mm (3.6 inch) for minimum distance to permit rotation with indicator
5) 74 mm (2.9 inch) for PN ≤ 420 (MWP ≤ 6092 psi)
6) 91 mm (3.6 inch) for PN ≤ 420 (MWP ≤ 6092 psi)
7) 219 mm (8.62 inch) for PN ≤ 420 (MWP ≤ 6092 psi)
8) 45 mm (1.8 inch) for Pg 13,5 with adapter

SITRANS P pressure transmitters, DS III HART series for differential pressure and flow, with process covers for vertical differential pressure lines, option „H03", dimensions in mm (inch)

© Siemens AG 2009

2

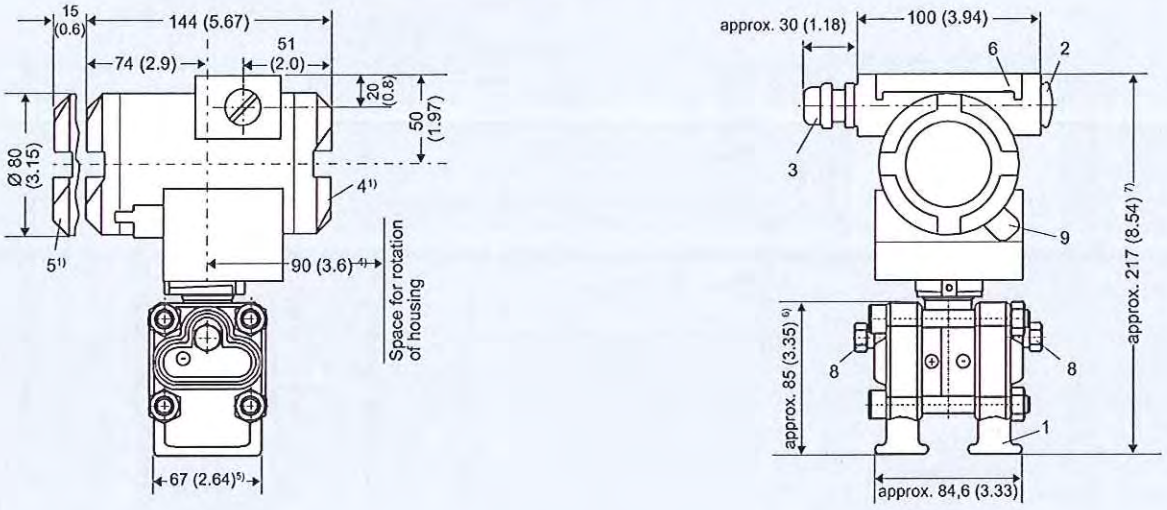

1 Process connection ¼-18 NPT (EN 61 518)
2 Blanking plug
3 Electrical connection:
- screwed gland M20x1.5 [3],
- screwed gland ½-14 NPT or
- PROFIBUS plug M12 [2) 3)]
4 Terminal side
5 Electronics side, digital display (longer overall length for cover with window)
6 Protective cover over keys
7 Mounting bracket (option)
8 Sealing screw (optionally with vent valve)
9 Screw cover safety bracket (only for explosion-proof enclosure, not shown in the drawing)

1) Allow approx. 20 mm (0.79 inch) thread length to permit unscrewing
2) Not with type of protection "explosion-proof enclosure"
3) Not with type of protection "FM + CSA [is + xp]"
4) 92 mm (3.6 inch) for minimum distance to permit rotation with indicator
5) 74 mm (2.9 inch) for PN ≤ 420 (MWP ≤ 6092 psi)
6) 91 mm (3.6 inch) for PN ≤ 420 (MWP ≤ 6092 psi)
7) 219 mm (8.62 inch) for PN ≤ 420 (MWP ≤ 6092 psi)

SITRANS P pressure transmitters, DS III PA and FF series for differential pressure and flow, with process covers for vertical differential pressure lines, option „H03", dimensions in mm (inch)

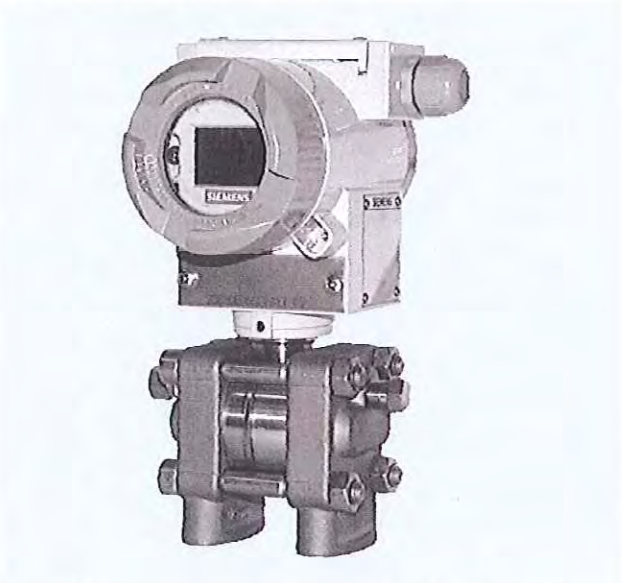

SITRANS P pressure transmitters, DS III series for differential pressure and flow, with process covers for vertical differential pressure lines

Instruction

MI IDP10-T
August 2006

I/A Series® Pressure Transmitters

IDP10 Differential Pressure with HART Communication

Installation, Operation, Calibration, Configuration, and Maintenance

FIT-3001 - Flow Transmitter for KAFB-106228

invensys®
FOXBORO®

Contents

Figures ..... **v**

Tables ..... **vii**

1. Introduction **1**
General Description 1
Reference Documents 1
Transmitter Identification 3
Standard Specifications 5
Product Safety Specifications 10

2. Installation **13**
Transmitter Mounting 13
Process Mounting 13
Manifold Mounted Transmitter 14
Transmitter Mounted on a Coplanar‰ Manifold 15
Pipe or Surface Mounting 15
Standard Mounting Bracket 15
Universal Mounting Bracket 17
Venting and Draining 20
Traditional Structure 20
LP1 Low Profile Structure 20
LP2 Low Profile Structure 21
Installation of Flow Measurement Piping 21
Filling System with Seal Liquid 23
Positioning the Housing 24
Positioning the Display 24
Setting the Write Protect Jumper 24
Cover Locks 24
Wiring 25
Accessing Transmitter Field Terminals 25
Wiring the Transmitter to a Control Loop 26
Multidrop Communication 29
Connecting the Transmitter to an I/A Series System 30
Putting a Differential Pressure Transmitter Into Operation 30
Taking a Differential Pressure Transmitter Out of Operation 30

3. Operation Via Local Display **31**
Entering Numerical Values 33
Reranging 33
Viewing the Database 33
Viewing the Pressure Range 34
Testing the Display 34
Error Messages 35

4. Calibration **37**
General Calibration Notes 37

Calibration Setup 39
Setup of Electronic Equipment 39
Field Calibration Setup 39
Bench Calibration Setup 40
Calibration Using a PC20 41
Calibration Using a PC50 41
Calibration Using a HART Communicator 41
Calibration Using the Optional Local Display 41
Zero Adjustment Using External Zero Button 45
Error Messages 47

5. Configuration 49
Configurable Parameters 49
Configuration Using a PC20 50
Configuration Using a PC50 50
Configuration Using a HART Communicator 50
Configuration Using the Optional Local Display 50
Character Lists 58
Error Messages 59

6. Maintenance 61
Error Messages 61
Parts Replacement 61
Replacing the Terminal Block Assembly 61
Replacing the Electronics Module Assembly 61
Removing and Reinstalling a Housing Assembly 63
Adding the Optional Display 63
Replacing the Sensor Assembly 63
Rotating Process Covers for Venting 64

Index 67

Figures

1	Transmitter Identification	3
2	Top Level Structure Diagram (Version 4 Firmware)	4
3	Top Level Structure Diagram (Version 5 Firmware)	4
4	Minimum Allowable Absolute Pressure vs. Process Temperature with Fluorinert Fill Fluid	7
5	Typical Mounting of an IDP10 Transmitter Supported by Process Piping	13
6	Typical Mounting of an IDP10 Transmitter Supported by a Bypass Manifold	14
7	Typical Mounting of BM-M4A and BM-M4T Manifold with -AM Bracket	14
8	Typical Mounting of MB3VIS-4 or MB5VIS-4 Manifold with Z-Shaped and -UB Bracket	15
9	Typical Mounting of IDP10 Transmitter on Coplanar Manifold	15
10	Pipe or Surface Mounted Transmitter Using a Standard Bracket	16
11	Examples of Mounting With a Standard Bracket	16
12	Details of a Universal Bracket	17
13	Mounting a Transmitter with Traditional Structure Using a Universal Bracket	17
14	Vertical Pipe Mounting a Transmitter with LP2 Structure Using a Universal Bracket	18
15	Horizontal Mounting a Transmitter with LP2 Structure Using a Universal Bracket	19
16	Vertical Mounting - Cavity Draining	20
17	Vertical Mounting - Cavity Venting	20
18	Horizontal Mounting - Cavity Venting	20
19	Vertical Mounting - Cavity Venting	21
20	Horizontal Mounting - Cavity Venting and Draining	21
21	Cavity Venting and Draining	21
22	Example of Horizontal Process Line Installation	22
23	Example of Vertical Process Line Installation	23
24	Housing Set Screw Location	24
25	Cover Lock Location	25
26	Accessing Field Terminals	25
27	Identification of Field Terminals	26
28	Supply Voltage and Loop Load	27
29	Loop Wiring Transmitters	28
30	Wiring Several Transmitters to a Common Power Supply	29
31	Typical Multidrop Network	29
32	Local Display Module	31
33	Top Level Structure Diagram (Version 4 Firmware)	32
34	Top Level Structure Diagram (Version 5 Firmware)	32
35	Display Test Segment Patterns	34
36	4 to 20 mA Output Calibration Setup of Electronic Equipment	39
37	Field Calibration Setup	40
38	Bench Calibration Setup	41
39	Calibration Structure Diagram	43
40	Calibration Structure Diagram (Continued)	44
41	Configuration Structure Diagram	52
42	Configuration Structure Diagram (Continued)	53
43	Configuration Structure Diagram (Continued)	54
44	Replacing the Electronics Module Assembly and Display	62
45	Replacing the Sensor Assembly	64
46	Replacing the Sensor Assembly (pvdf Inserts)	64
47	Sensor Cavity Venting and Draining	65

Tables

1	Reference Documents	1
2	Minimum Loop Load and Supply Voltage Requirements	8
3	Electrical Safety Specifications	11
4	Operation Error Messages	35
5	Calibration Menu	42
6	Calibration Error Messages	47
7	IDP10-T Configurable Parameters	49
8	Configuration Menu	50
9	Alphanumeric Character List	58
10	Numeric Character List	58
11	Configuration Error Messages	59

1. Introduction

General Description

The IDP10-T intelligent differential pressure transmitters measure the difference between two pressures applied to opposite sides of a silicon strain gauge microsensor within the sensor assembly. This microsensor converts differential pressure to a change in resistance. The resistance change is then converted to a 4 to 20 mA or digital signal proportional to differential pressure or to the square root of differential pressure. This measurement signal is transmitted to remote receivers over the same two wires that supply power to the transmitter electronics. These wires also carry two-way data signals between the transmitter and remote communication devices.

The transmitter allows direct analog connection to common receivers while still providing full Intelligent Transmitter Digital Communications using a HART Communicator.

The transmitter is often used for measuring fluid flow rates across a primary device such as an orifice plate, but can also be used for other types of differential pressure measurements such as liquid level, interface level, or density measurements. The IDP10 can also be supplied with direct connected or remote pressure seals to isolate the measuring element from corrosive or viscous fluids.

For more detailed information on the principle of operation of the transmitter, refer to document TI 037-096, available from Invensys Foxboro.

Reference Documents

Table 1. Reference Documents

Document	Description
Dimensional Prints	
DP 020-342	Dimensional Print – PSFLT Pressure Seals
DP 020-343	Dimensional Print – PSFPS and PSFES Pressure Seals
DP 020-345	Dimensional Print – PSFAR Pressure Seals
DP 020-347	Dimensional Print – PSTAR Pressure Seals
DP 020-349	Dimensional Print – PSISR Pressure Seals
DP 020-351	Dimensional Print – PSSCR Pressure Seals
DP 020-353	Dimensional Print – PSSCT Pressure Seals
DP 020-354	Dimensional Print – PSSSR Pressure Seals
DP 020-355	Dimensional Print – PSSST Pressure Seals
DP 020-446	Dimensional Print – IDP10, IDP25, and IDP50 Differential Pressure Transmitters
DP 022-335	Dimensional Print – Model CO Compact Orifice
Parts Lists	
PL 006-172	Parts List – Model CO Compact Orifice

Table 1. Reference Documents (Continued)

Document	Description
PL 009-005	Parts List – IDP10 Differential Pressure Transmitter
Instructions	
MI 020-328	Instruction – Bubble Type Installation for Liquid Level
MI 020-329	Instruction – High Accuracy Flow Measurement
MI 020-366	Instruction – I/A Series Intelligent Pressure Transmitters Operation, Configuration, and Calibration Using a HART Communicator
MI 020-369	Instruction – Pressure Seals
MI 020-427	Instruction – Intrinsic Safety Connection Diagrams and Nonincendive Circuits
MI 020-495	Instruction – PC20 Intelligent Transmitter Configurator
MI 020-501	Instruction – PC50 Intelligent Field Device Tool (Installation and Parts List)
MI 020-505	Instruction – PC50 Intelligent Field Device Tool (Operation Using HART Protocol)
MI 022-137	Instruction – Bypass Manifolds - Installation and Maintenance
MI 022-335	Instruction – Model CO Compact Orifice
Technical Information	
TI 1-50a	Technical Information – Liquid Density Measurement
TI 001-051	Technical Information – Liquid Interface Measurement
TI 001-052	Technical Information – Liquid Level Measurement
TI 37-75b	Technical Information – Transmitter Material Selection Guide
TI 037-096	Technical Information – I/A Series Pressure Transmitters

Transmitter Identification

See Figure 1 for transmitter data plate contents. For a complete explanation of the Model Number code, see the parts list. The firmware version is identified on the top line of the display when **VIEW DB** (View Database) is selected in the top level structure (see Figures 2 or 3).

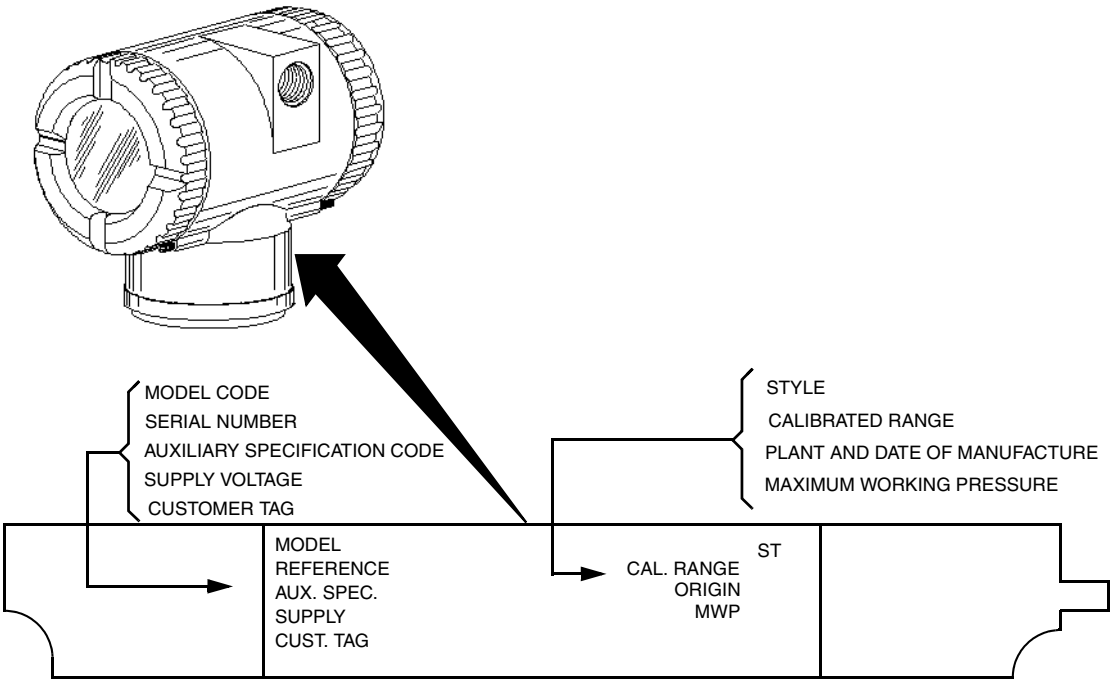

Figure 1. Transmitter Identification

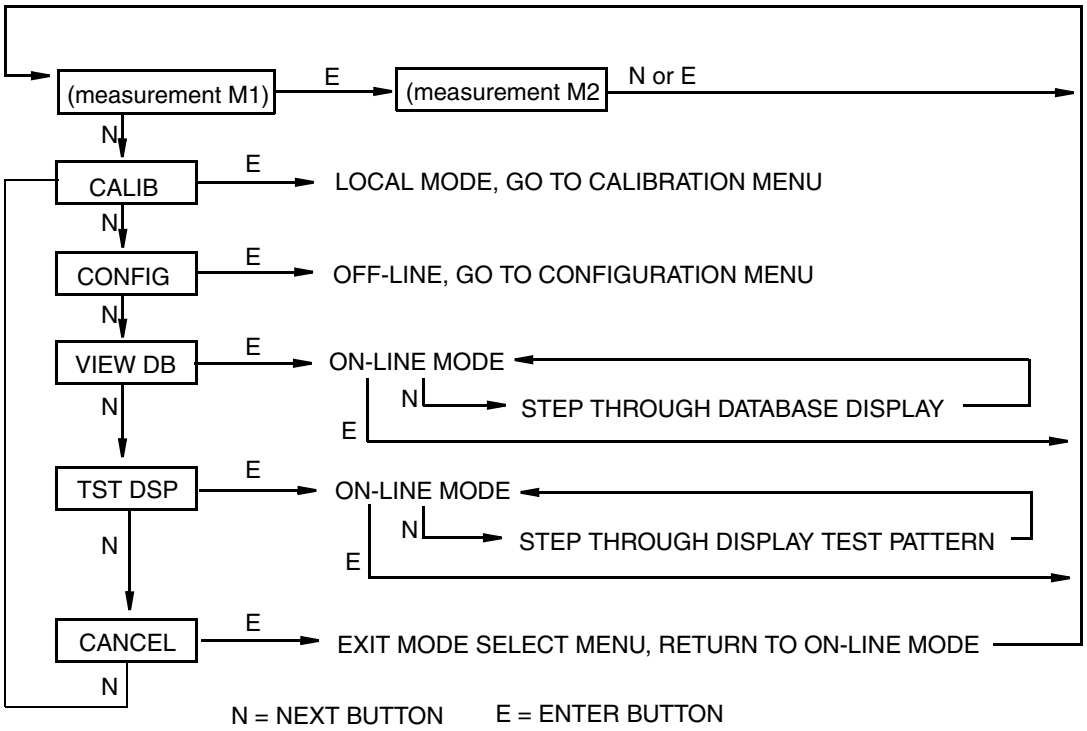

Figure 2. Top Level Structure Diagram (Version 4 Firmware)

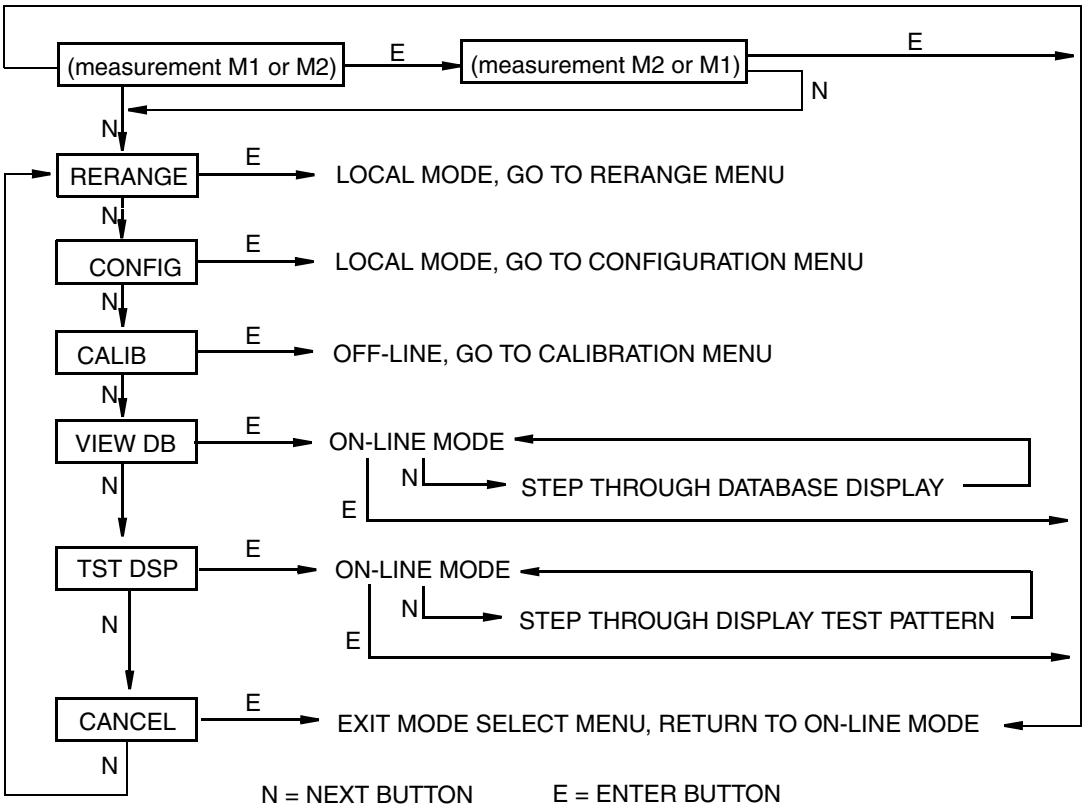

Figure 3. Top Level Structure Diagram (Version 5 Firmware)

Standard Specifications

Operative Limits

Influence	Operative Limits
Sensor Body Temperature[a] Silicone Fill Fluid Fluorinert Fill Fluid Neobee Fill Fluid pvdf Inserts	 -46 and +121°C (-50 and +250°F) -29 and +121°C (-20 and +250°F) -18 and +121°C (0 and 250°F) -7 and +82°C (20 and 180°F)
Electronics Temperature With LCD Display	-40 and +85°C (-40 and +185°F) -40 and +85°C (-40 and +185°F)[b]
Relative Humidity	0 and 100%
Supply Voltage	11.5 and 42 V dc
Output Load[c]	0 and 1450 ohms
Mounting Position	No Limit
Vibration	6.3 mm (0.25 in) double amplitude from 5 to 15 Hz with aluminum housing and from 5 to 9 Hz with 316 ss housing. 0 to 30 m/s (0 to 3 “g”) from 15 to 500 Hz with aluminum housing and 0 to 10 m/s (0 to 1 “g”) from 9 to 500 Hz with 316 ss housing.

(a) Refer to MI 020-369 for temperature limits with pressure seals.

(b) Display updates are slowed and readability decreased at temperatures below -20°C (-4°F).

(c) 250 Ω minimum load is required for communication with a HART Communicator.

Span and Range Limits

Span Limit Code	Span Limits ΔP	Range Limits ΔP [a]
A[b]	0.12 and 7.5 kPa 0.5 and 30 inH_20 12 and 750 mmH_20	-7.5 and +7.5 kPa -30 and +30 inH_20 -750 and +750 mmH_20
B	0.87 and 50 kPa 3.5 and 200 inH_20 87 and 5000 mmH_20	-50 and +50 kPa -200 and +200 inH_20 -5000 and +5000 mmH_20
C	7.0 and 210 kPa 28 and 840 inH_20 2.3 and 69 ftH_20	-210 and +210 kPa -840 and +840 inH_20 -69 and +69 ftH_20
D	0.07 and 2.1 MPa 10 and 300 psi 23 and 690 ftH_20	-0.21 and +2.1 MPa -30 and +300 psi -69 and +690 ftH_20
E	0.7 and 21 MPa 100 and 3000 psi	-0.21 and +21 MPa -30 and +3000 psi

(a) Negative values of differential pressure indicate a higher pressure on the **low side** of the sensor. Positive values indicate a higher pressure on the **high side** of the sensor.

(b) Span Limit Code “A” not available with pressure seals.

Maximum Static, Overrange, and Proof Pressure

Transmitter Configuration (Bolting Material)[c]	Maximum Static and Overrange Pressure Rating[a,e,f]		Proof Pressure Rating[b]	
	MPa	Psi	MPa	Psi
Standard (B7 steel), Option “-B2” (17-4 PH ss), Option “-D3” or “-D7”	25	3625	100	14500
Option “B1” (316 ss) or Option “-D5”	15	2175	60	8700
Option “B3” (B7M)	20	2900	70	11150
Option “-D1”	16	2320	64	9280
Option “-D2”, “-D4”, “-D6”, or “-D8”[d]	10	1500	40	6000
Option “-D9” (17-4 PH ss)	40	5800	100	14500

(a) Either side can be at higher pressure during overrange.

(b) Meets ANSI/ISA Standard S82.03-1988.

(c) -D1 = DIN Single ended process cover with M10 B7 bolting.
-D2 = DIN Double ended process cover with M10 B7 bolting
-D3 = DIN Single ended process cover with 7/16 in B7 bolting.
-D4 = DIN Double ended process cover with 7/16 in B7 bolting.
-D5 = DIN Single ended process cover with 7/16 in 316 ss bolting.
-D6 = DIN Double ended process cover with 7/16 in 316 ss bolting.
-D7 = DIN Single ended process cover with 7/16 in 17-4 ss bolting.
-D8 = DIN Double ended process cover with 7/16 in 17-4 ss bolting
-D9 = DIN Single ended process cover with 7/16 in 17-4 ss bolting.

(d) Limited to operating temperatures ranging from 0 to 60°C (32 to 140°F).

(e) When Structure Codes 78/79 are used (pvdf inserts in the Hi and Lo side process covers), the maximum overrange is 2.1 MPa (300 psi) and temperature limits are -7 and +82°C (20 and 180°F).

(f) Static pressure rating of 40 MPa (5800 psi) with Option Code -Y.

NOTE

Static pressure zero shift for all calibrated spans can be eliminated by readjusting the zero output at nominal operating static pressure.

CAUTION

1. Exceeding the maximum overrange pressure can cause damage to the transmitter degrading its performance.
2. The transmitter could be nonfunctional after application of the proof pressure.

Elevated Zero and Suppressed Zero

For applications requiring an elevated or suppressed zero, the maximum span and the upper and lower range limits of the transmitter can not be exceeded.

Sensor Fill Fluid

Silicone Oil (DC 200) or Fluorinert (FC-43)

Minimum Allowable Absolute Pressure vs. Process Temperature

With Silicone Fill Fluid: At full vacuum: Up to 121°C (250°F)
With Fluorinert Fill Fluid: Refer to Figure 2.

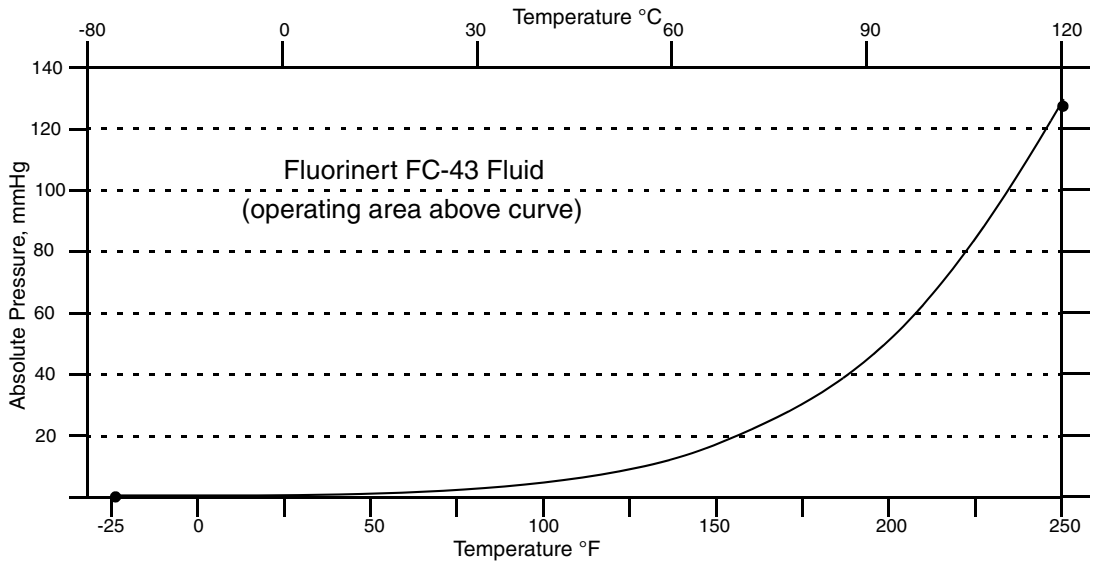

Figure 4. Minimum Allowable Absolute Pressure vs. Process Temperature with Fluorinert Fill Fluid

Mounting Position

The transmitter can be mounted in any orientation. It can be supported by the process piping. It can also be mounted directly to a vertical or horizontal pipe or surface mounted using an optional mounting bracket. The housing can be rotated up to one full turn to any desired position for access to adjustments, display, or conduit connections. See “Positioning the Housing” on page 24. The display (if present) can also be rotated in the housing to any of four different positions at 90° increments. See “Positioning the Display” on page 24.

NOTE

Position effect zero shift for all calibrated spans can be eliminated by readjusting zero output after installation.

Approximate Mass

Without Process Connectors	3.5 kg (7.8 lb)
With Process Connectors	4.2 kg (9.2 lb)
With Optional 316 ss Housing	Add 1.1 kg (2.4 lb)
With Pressure Seals	Varies with seal used

Process Connections

IDP10 transmitters are connected to the process via a 1/4 NPT thread or any one of a number of optional process connectors.

Process Wetted Materials

Diaphragm: 316L ss, Co-Ni-Cr, Hastelloy C, Monel, gold plated 316L ss, or tantalum
Covers and Process Connections: 316 ss, carbon steel, Hastelloy C, Monel, or pvdf inserts
Pressure Seals: Refer to MI 020-369

Process Pressure and Temperature Limits for Pressure Seals

Refer to MI 020-369

Electrical Connections

Field wires enter through 1/2 NPT, PG 13.5, or M20 threaded entrances on either side of the electronics housing. Leads terminate under screw terminals and washers on the terminal block in the field terminal compartment. To maintain RFI/EMI, environmental, and explosionproof ratings, unused conduit connection must be plugged with metal plug (provided), inserted to five full turns.

Field Wiring Reversal

Accidental reversal of field wiring will not damage the transmitter, provided the current is limited to 1 A or less by active current limiting or loop resistance. Sustained currents of 1 A will not damage the electronics module or sensor but could damage the terminal block assembly and external instruments in the loop.

Adjustable Damping

The transmitter response time is normally 1.0 second or the electronically adjustable setting of 0.00 (none), 0.25, 0.50, 1, 2, 4, 8, 16, or 32 seconds, whichever is greater, for a 90% recovery from an 80% input step as defined in ANSI/ISA S51.1.

Output Signal

4 to 20 mA dc linear or 4 to 20 mA dc square root; software selectable. The output is remotely configurable from the HART Communicator and locally configurable with the pushbuttons on the display.

NOTE

Only 4 to 20 mA linear output on absolute pressure, gauge pressure, and flange level transmitters.

Zero and Span Adjustments

Zero and span are adjustable from the HART Communicator. They are also adjustable at the transmitter using the display. An optional external self-contained moisture sealed pushbutton assembly allows local resetting of zero without removing the housing cover.

Power-up Time

Less than 2.0 seconds for output to reach the first valid measurement, then at the electronic damping rate to reach the final measured variable value.

Supply Voltage

Power supply must be capable of providing 22 mA when the transmitter is configured for 4 to 20 mA output. Ripple of up to 2 V pp (50/60/100/120 Hz) is tolerable, but instantaneous voltage must remain within specified range.

The supply voltage and loop load must be within specified limits. This is explained in detail in “Wiring” on page 25. A summary of the minimum requirements is listed in Table 2.

Table 2. Minimum Loop Load and Supply Voltage Requirements

	HART Communication	No HART Communication
Minimum Resistance	250 Ω	0
Minimum Supply Voltage	17 V	11.5 V

Electrical Ground Connections

The transmitter is equipped with an internal ground connection within the field wiring compartment and an external ground connection at the base of the electronics housing. To minimize galvanic corrosion, place the wire lead or contact between the captive washer and loose washer on the external ground screw. If shielded cable is used, earth (ground) the shield at the field enclosure **only**. Do **not** ground the shield at the transmitter.

HART Communicator Connection Points

The HART Communicator can be connected in the loop as shown in “Wiring” on page 25. It can also be connected directly to the transmitter at the two upper banana plug receptacles.

Test Points

The two lower banana plug receptacles (designated **CAL**) can be used to check transmitter output when configured for 4 to 20 mA. Measurements should be 100-500 mV dc for 0-100% transmitter output.

Remote Communications

The transmitter communicates bidirectionally over the 2-wire field wiring to a HART Communicator. The information that can be continuously displayed is:

- Process Measurement (expressed in one or two types of units)
- Transmitter Temperature (sensor and electronics)
- mA Output (equivalent)

The information that can be remotely displayed and reconfigured includes:

- Output in Percent Flow (square root) or Pressure Units (linear). Percent Display in Linear mode on local display is also supported.
- Zero and Span, including reranging
- Zero Elevation or Suppression
- Linear Output or Square Root Output (in some models)
- Pressure or Flow Units (from list provided)
- Temperature Sensor Failure Strategy
- Electronic Damping
- Poll Address (Multidrop mode)
- External Zero (Enable or Disable)
- Failsafe Direction
- Tag, Description, and Message
- Date of Last Calibration

Communications Format

Communication is based upon the FSK (Frequency Shift Keying) technique. The frequencies are superimposed on the transmitter power/signal leads.

4 to 20 mA Output

The transmitter sends its differential pressure measurement to the loop as a continuous 4 to 20 mA dc signal. It also communicates digitally with the HART Communicator at distances up to 3000 m (10 000 ft). Communication between the remote configurator and the transmitter does not disturb the 4 to 20 mA output signal. Other specifications are:

Data Transmission Rate:	1200 Baud
4 - 20 mA Update Rate:	30 times/second
Output when Fail Low:	3.60 mA
Output when Fail High:	21.00 mA
Output when Underrange	3.80 mA
Output when Overrange	20.50 mA
Output when Offline:	User configurable between 4 and 20 mA

Product Safety Specifications

DANGER

To prevent possible explosions and to maintain explosionproof, dust-ignitionproof protection, observe applicable wiring practices. Plug unused conduit opening with the provided metal pipe plug, which engages a minimum of five full threads.

WARNING

To maintain IEC IP66 and NEMA Type 4X protection, the unused conduit opening must be plugged. In addition, the threaded housing covers must be installed. Turn covers to seat the O-ring into the housing and then continue to hand tighten until the cover contacts the housing metal-to-metal.

NOTE

1. These transmitters have been designed to meet the electrical safety description listed in Table 3. For detailed information or status of testing laboratory approvals/certifications, contact Invensys Foxboro.
2. Wiring restrictions required to maintain electrical certification of the transmitter are provided in “Wiring” on page 25.

Table 3. Electrical Safety Specifications

Testing Laboratory, Types of Protection, and Area Classification	Application Conditions	Electrical Safety Design Code
ATEX flameproof: II 2 GD EEx d IIC, Zone 1.	Temperature Class T6 at 85°C (185°F) maximum ambient with Version 4 electronic module. Temperature Class T6, T85°C, Ta = -40 to +85°C with Version 5 electronic module.	D
ATEX intrinsically safe: II 1 GD EEx ia IIC, Zone 0.	Temperature Class T4 at 80°C (176°F), T5 at 40°C (104°F), and T6 at 40°C (104°F) maximum ambient with Version 4 electronic module. Temperature Class T4, T103°C, Ta = -40 to +80°C with Version 5 electronic module.	E
ATEX protection n: II 3 GD EEx nL IIC, Zone 2.	Temperature Class T4 at 80°C (176°F), T5 at 40°C (104°F), and T6 at 40°C (104°F) maximum ambient with Version 4 electronic module. Temperature Class T4, T85°C, Ta = -40 to +80°C with Version 5 electronic module.	N
ATEX multiple certifications, ia & ib and n. Refer to Codes E and N for details.	Applies to Codes D, E, and N.[a]	M
CSA intrinsically safe for Class I, Division 1, Groups A, B, C, and D; Class II, Division 1, Groups E, F, and G; Class III, Division 1. Also, Zone certified intrinsically safe Ex ia IIC and energy limited Ex nA II.	Connect per MI 020-427. Temperature Class T4A at 40°C (104°F) and T3C at 85°C (185°F) maximum ambient. Temperature Class T4 at 40°C (104°F), and T3 at 85°C (185°F) max. ambient.	C
CSA explosionproof for Class I, Division 1, Groups B, C, and D; dust-ignitionproof for Class II, Division 1, Groups E, F, and G; Class III, Division 1.	Maximum Ambient Temperature 85°C (185°F).	
CSA for Class I, Division 2, Groups A, B, C, and D; Class II, Division 2, Groups F and G; Class III, Division 2.	Temperature Class T4A at 40°C (104°F) and T3C at 85°C (185°F) maximum ambient.	
CSA field device zone certified flameproof Ex d IIC. Also, all certifications of Code C above.	Maximum Ambient Temperature 85°C (185°F).	B

Table 3. Electrical Safety Specifications (Continued)

Testing Laboratory, Types of Protection, and Area Classification	Application Conditions	Electrical Safety Design Code
FM intrinsically safe for Class I, Division 1, Groups A, B, C, and D; Class II, Division 1, Groups E, F, and G; Class III, Division 1. Also, Zone certified intrinsically safe AEx ia IIC.	Connect per MI 020-427. Temperature Class T4A at 40°C (104°F) and T4 at 85°C (185°F) maximum ambient. Temperature Class T4 at 85°C (185°F) maximum ambient.	F
FM explosionproof for Class I, Division 1, Groups B, C, and D; dust-ignitionproof for Class II, Division 1, Groups E, F, and G; Class III, Division 1.	Temperature Class T6 at 80°C (176°F) and T5 at 85°C (185°F) maximum ambient.	
FM nonincendive for Class I, Division 2, Groups A, B, C, and D; Class II, Division 2, Groups F and G; Class III, Division 2.	Temperature Class T4A at 40°C (104°F) and T4 at 85°C (185°F) maximum ambient.	
FM field device zone certified flameproof AEx d IIC. Also, all certifications of Code F above.	Temperature Class T6 at 75°C (167°F) maximum ambient.	G
SAA Ex, ia, IIC, intrinsically safe, Gas Group IIC, Zone 0.	Temperature Class T4 at 85°C (185°F) maximum ambient.	H
SAA EX, d, IIC, flameproof, Gas Group IIC, Zone 1.	Temperature Class T5 at 60°C (140°F) maximum ambient.	A
SAA Ex n, IIC, nonincendive, Gas Group IIC, Zone 2.	Temperature Class T6.	K
IECEx intrinsically safe: Ex ia IIC.	Applies to Version 5 electronic module. Temperature Class T4, Ta = -40 to +80°C.	T
IECEx protection n: Ex nL IIC	Applies to Version 5 electronic module. Temperature Class T4, Ta = -40 to +80°C.	U
IECEx flameproof: Ex d IIC	Applies to Version 5 electronic module. Temperature Class T6, Ta = -40 to +75°C.	V

(a) User must permanently mark (check off in rectangular block on data plate) one type of protection only (ia and ib, d, or n). This mark cannot be changed once it is applied.

2. Installation

CAUTION

To avoid damage to the transmitter sensor, do not use any impact devices, such as an impact wrench or stamping device, on the transmitter.

NOTE

1. The transmitter should be mounted so that any moisture condensing or draining into the field wiring compartment can exit through one of the two threaded conduit connections.
2. Use a suitable thread sealant on all connections.

Transmitter Mounting

The IDP Series differential pressure transmitter can be supported by the process piping or mounted to a vertical or horizontal pipe or surface using the optional mounting bracket. See figures below. For dimensional information, refer to DP 020-446.

NOTE

1. If the transmitter is not installed in the vertical position, readjust the zero output to eliminate the position zero effect.
2. When structure codes 78/79 are used (pvdf inserts) with the IDP10 transmitters, the process connection must be made directly to the pvdf inserts in the high and low side process covers.

Process Mounting

With process mounting, the transmitter mounted to and supported by the process piping.

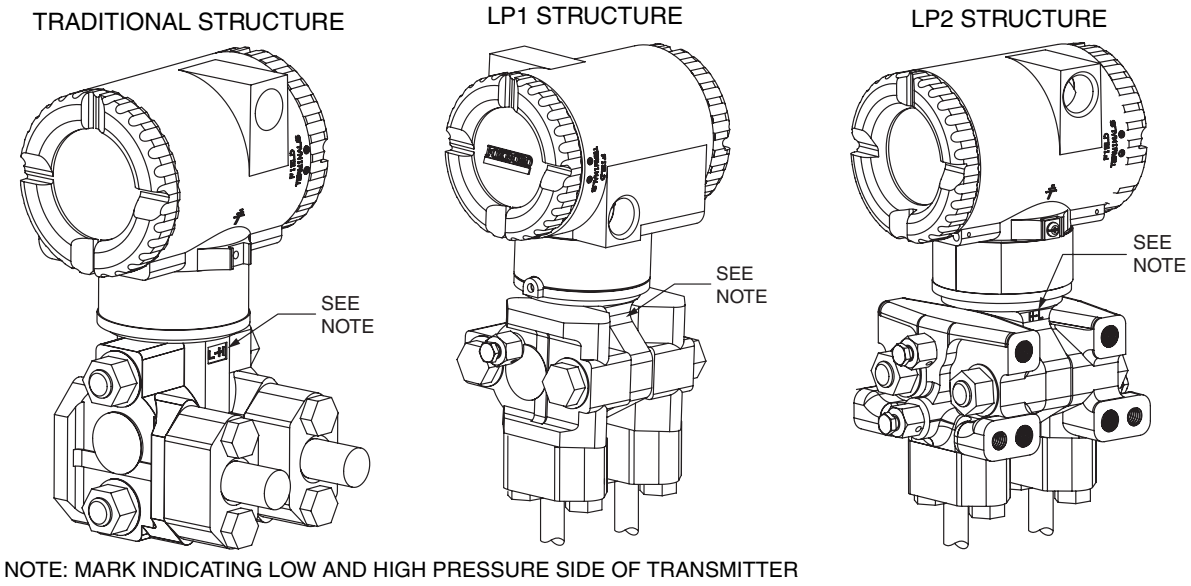

Figure 5. Typical Mounting of an IDP10 Transmitter Supported by Process Piping

Manifold Mounted Transmitter

With manifold mounting, the transmitter is mounted to and supported by a bypass manifold. The bypass manifold can be mounted to a DN50 or 2 inch pipe with an optional mounting bracket.

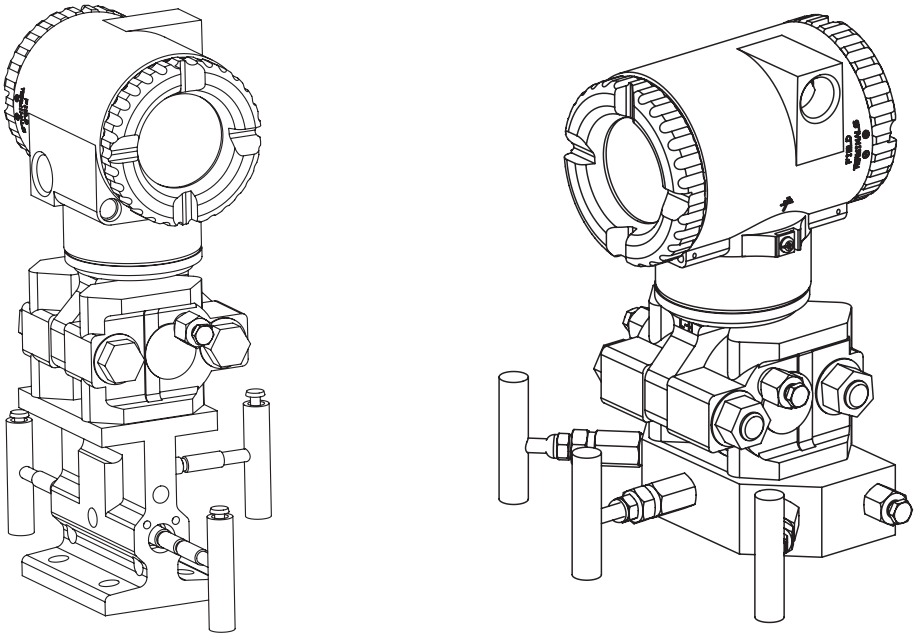

BM-M4A MANIFOLD MB3VIS-4 MANIFOLD

Figure 6. Typical Mounting of an IDP10 Transmitter Supported by a Bypass Manifold

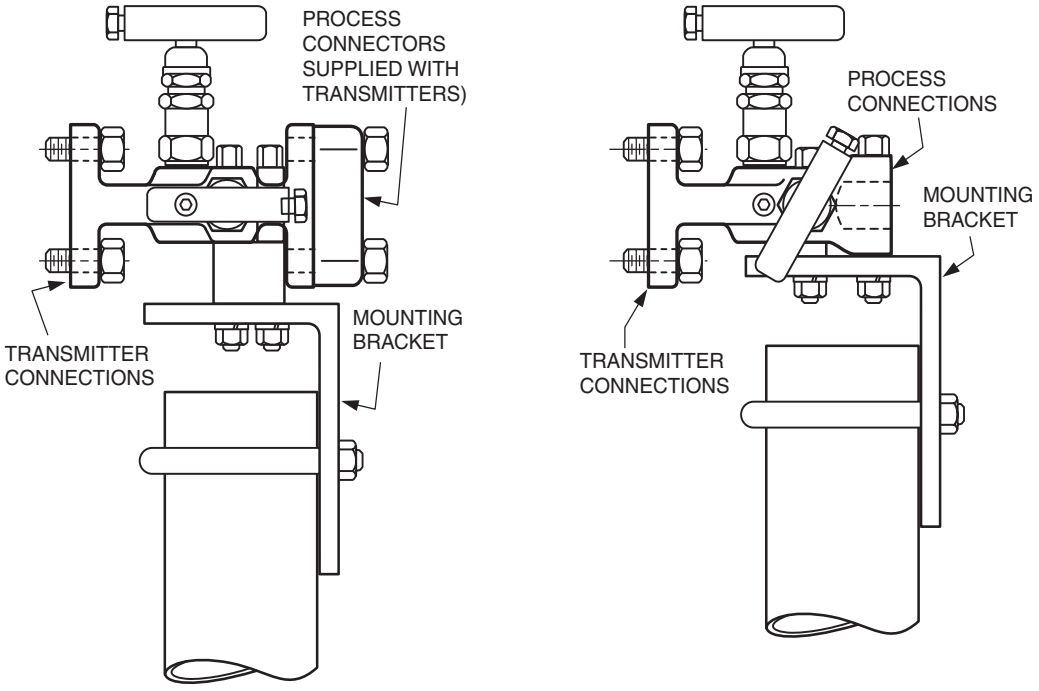

BM-M4A BM-M4T

Figure 7. Typical Mounting of BM-M4A and BM-M4T Manifold with -AM Bracket

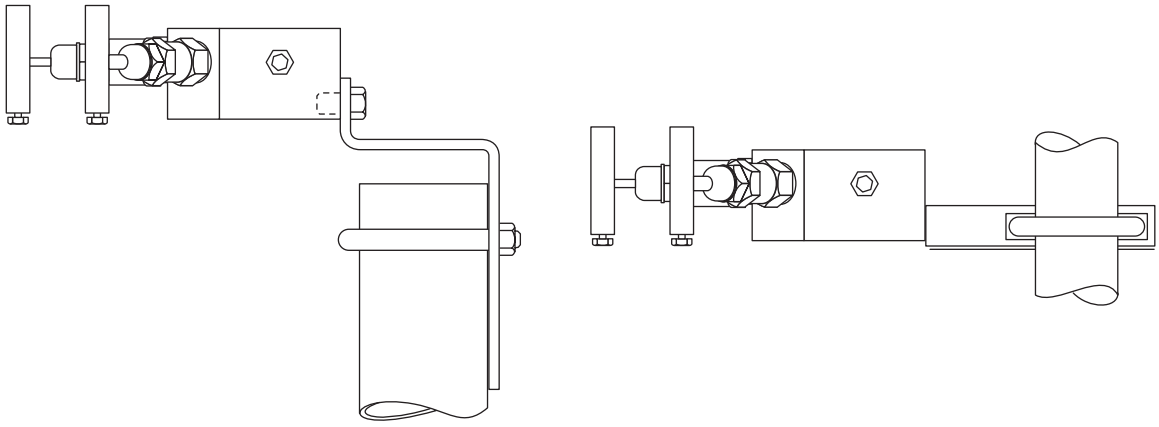

Figure 8. Typical Mounting of MB3VIS-4 or MB5VIS-4 Manifold with Z-Shaped and -UB Bracket

Transmitter Mounted on a Coplanar™ Manifold

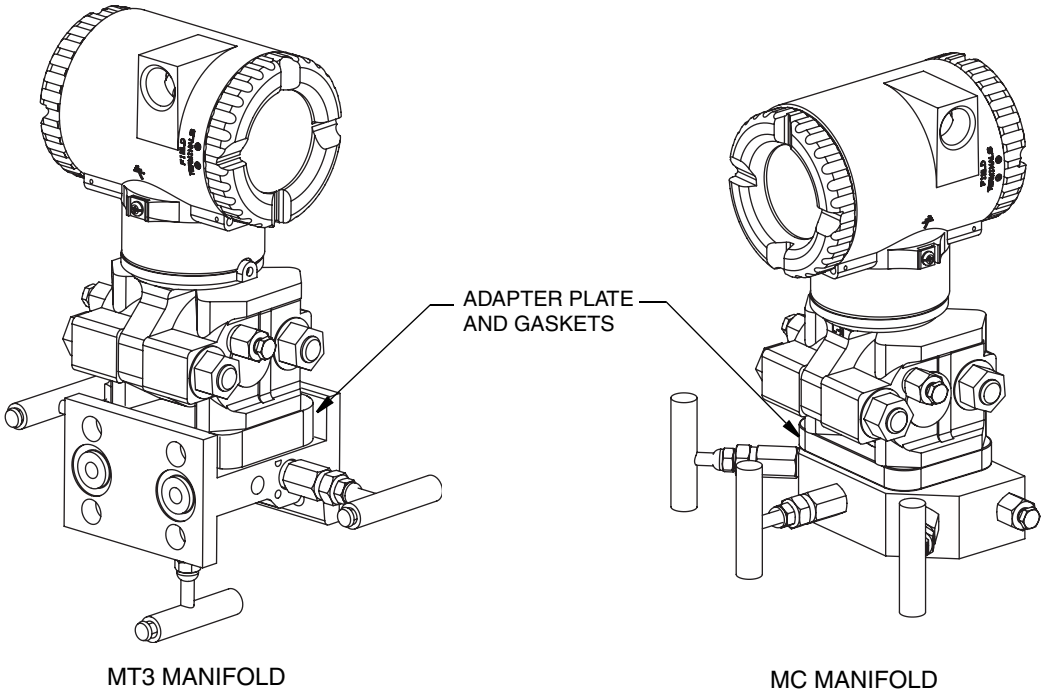

Figure 9. Typical Mounting of IDP10 Transmitter on Coplanar Manifold

Pipe or Surface Mounting

To mount the transmitter to a pipe or surface, use the Standard Mounting Bracket Set (Model Code Option -M1 or M2) or Universal Bracket Mounting Set (Model Code Option -M3).

Standard Mounting Bracket

The transmitter (with either traditional or LP2 low-profile structures) can be mounted to a vertical or horizontal, DN 50 or 2-in pipe using a standard bracket. See Figures 10 and 11 for details of a standard bracket and examples of different mounting situations. Secure the mounting bracket to the transmitter using the four screws provided. Mount the bracket to the pipe. To mount to a horizontal pipe, turn the

U-bolt 90° from the position shown. The mounting bracket can also be used for wall mounting by securing the bracket to a wall using the U-bolt mounting holes.

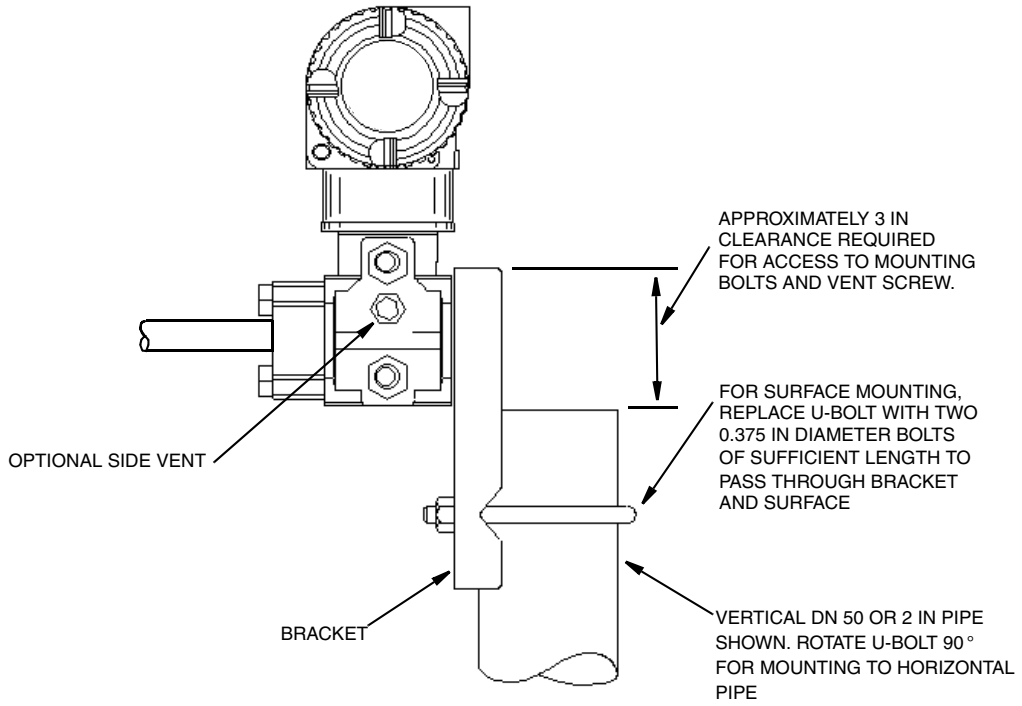

Figure 10. Pipe or Surface Mounted Transmitter Using a Standard Bracket

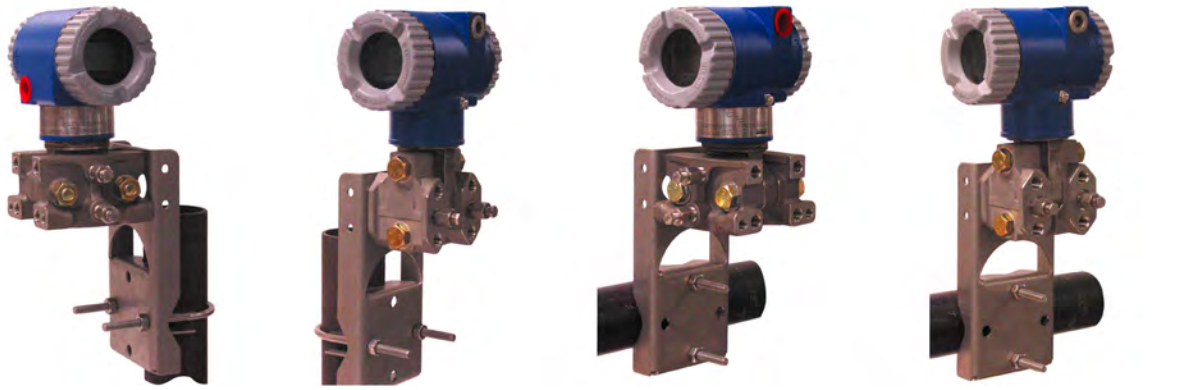

Figure 11. Examples of Mounting With a Standard Bracket

Universal Mounting Bracket

The transmitter (with either traditional or LP2 low-profile structure) can be mounted in a myriad of positions to a vertical or horizontal, DN 50 or 2-in pipe using a universal bracket. See the following figures for details of a universal bracket and examples of different mounting situations. Secure the mounting bracket to the transmitter using the two long or four short screws provided. Mount the bracket to the pipe. The mounting bracket can also be used for wall mounting by securing the bracket to a wall using the U-bolt mounting holes.

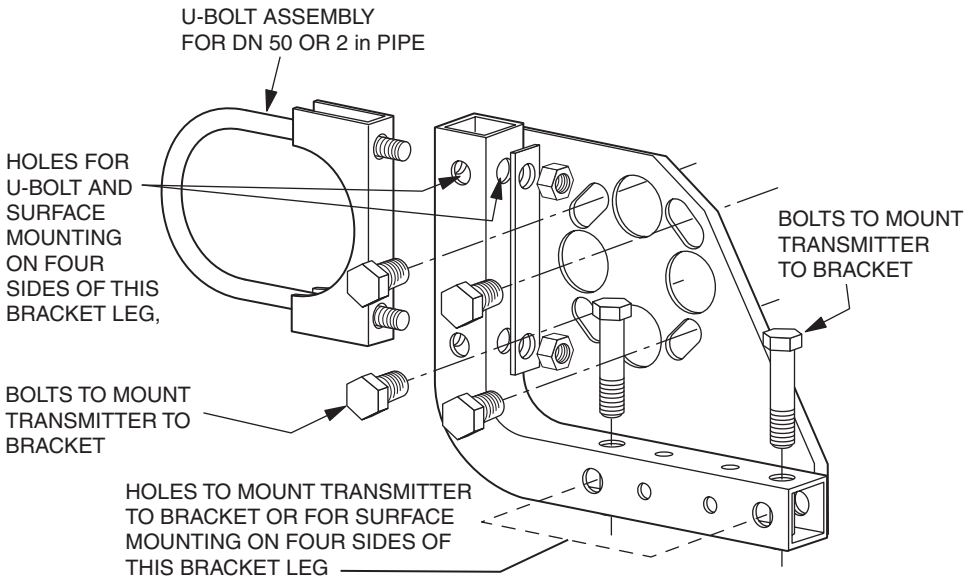

Figure 12. Details of a Universal Bracket

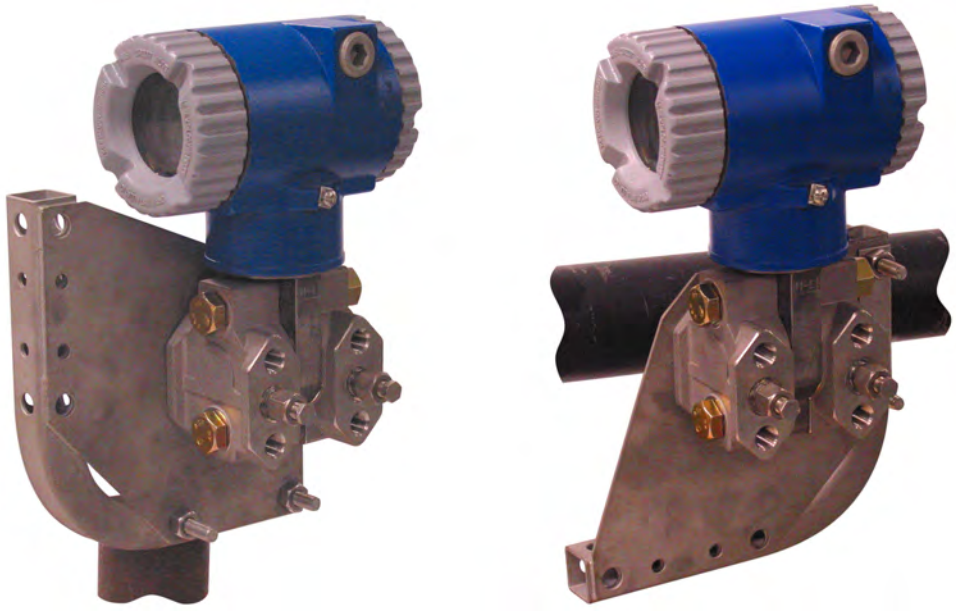

Figure 13. Mounting a Transmitter with Traditional Structure Using a Universal Bracket

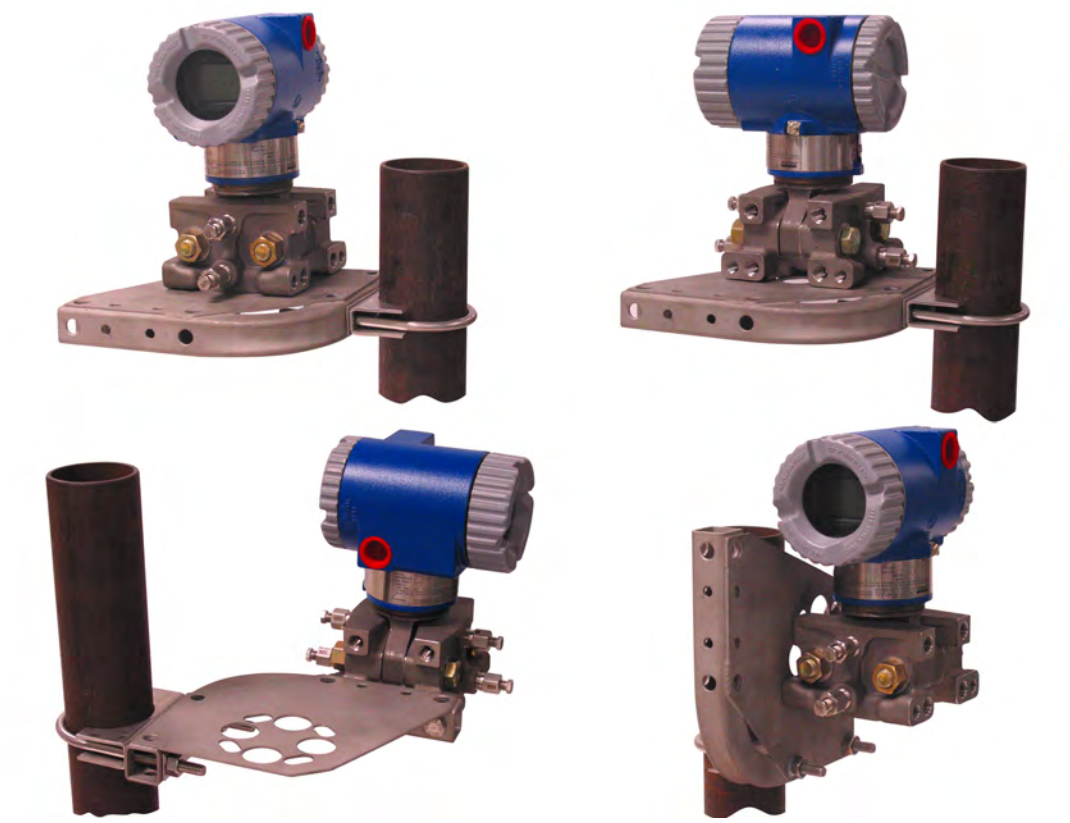

Figure 14. Vertical Pipe Mounting a Transmitter with LP2 Structure Using a Universal Bracket

Figure 15. Horizontal Mounting a Transmitter with LP2 Structure Using a Universal Bracket

Venting and Draining

Traditional Structure

Sensor cavity venting and draining is provided for both vertical and horizontal mounting. For vertical mounted units, draining is via a drain screw and venting is possible with side vents (Option Code -V). For horizontal mounted units, the unit is self draining and venting is via a vent screw.

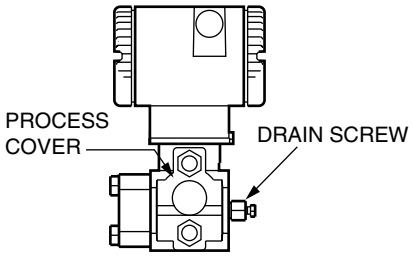

Figure 16. Vertical Mounting - Cavity Draining

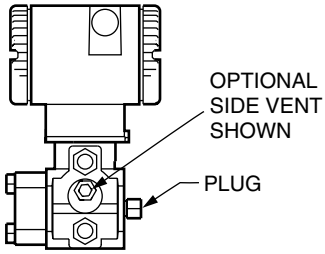

Figure 17. Vertical Mounting - Cavity Venting

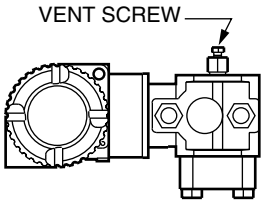

Figure 18. Horizontal Mounting - Cavity Venting

LP1 Low Profile Structure

Sensor cavity venting and draining is provided for both vertical and horizontal mounting. For vertical mounted units, the transmitter is self draining and venting is via a vent screw. For horizontal mounted units, the transmitter can simply be ‘turned over’ (rotated 180 degrees) to orient the high and low pressure sides in the preferred locations. There is no need to unbolt the process covers. If the transmitter is connected with a length of impulse piping, such piping should slope up to the transmitter for gas applications and down for liquid applications.

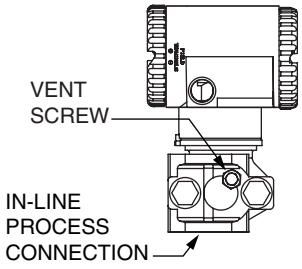

Figure 19. Vertical Mounting - Cavity Venting

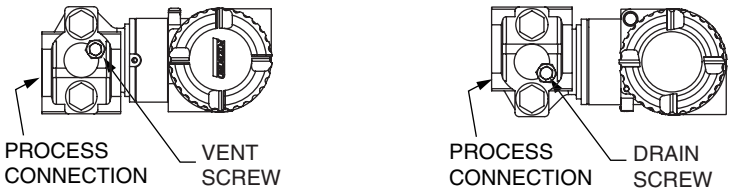

Figure 20. Horizontal Mounting - Cavity Venting and Draining

LP2 Low Profile Structure

The transmitter with LP2 low profile structure had a full-featured vent and drain design with separate vent and drain screws positioned in each cover for complete venting and draining from the sensor cavity.

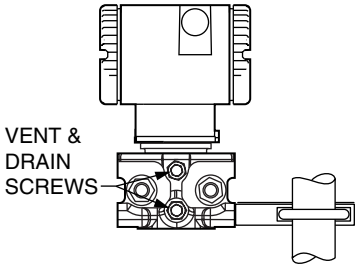

Figure 21. Cavity Venting and Draining

Installation of Flow Measurement Piping

Figures 22 and 23 show typical installations with horizontal and vertical process pipes.

The transmitters are shown below the level of the pressure connections at the pipe (usual arrangement, except for gas flow without a seal liquid), and with filling tees in the lines to the transmitter (for a seal liquid).

If the process fluid being measured must not come in contact with the transmitter, the transmitter lines must be filled with a suitable seal liquid (see procedure in next section). In such a case, the transmitter must be mounted below the level of the pressure connections at the pipe. With steam flow, the lines are filled with water to protect the transmitter from the hot steam. The seal liquid (or water) is added to the lines through the filling tees. To prevent unequal heads on the transmitter, the tees must be at the

same elevation and the transmitter must be mounted vertically (as shown). If a seal liquid is not required, elbows can be used in place of the tees.

Tighten drain plugs and optional vent screws to 20 N·m (15 lb·ft). Tighten the four process connector bolts to a torque of 61 N·m (45 lb·ft).

Note that the low and high pressure sides of the transmitter are identified by an L-H marking on the side of the sensor above the warning label.

With medium viscosity seal liquids and/or long transmitter lines, larger valve sizes should be used.

NOTE

1. With a **horizontal** line, pressure connections at the pipe should be at the side of the line. However, with gas flow without a seal liquid, connections should be at top of line.
2. With a **vertical** line, flow should be upwards.
3. For **liquid** or **steam** flow, the transmitter should be mounted **lower** than the pressure connections at the pipe.
4. For **gas** flow **without** a seal liquid, the transmitter should be mounted **above** the pressure connections at the pipe; for **gas** flow **with** a seal liquid, the transmitter should be mounted **below** the pressure connections.
5. Invensys Foxboro recommends the use of snubbers in installations prone to high levels of fluid pulsations.

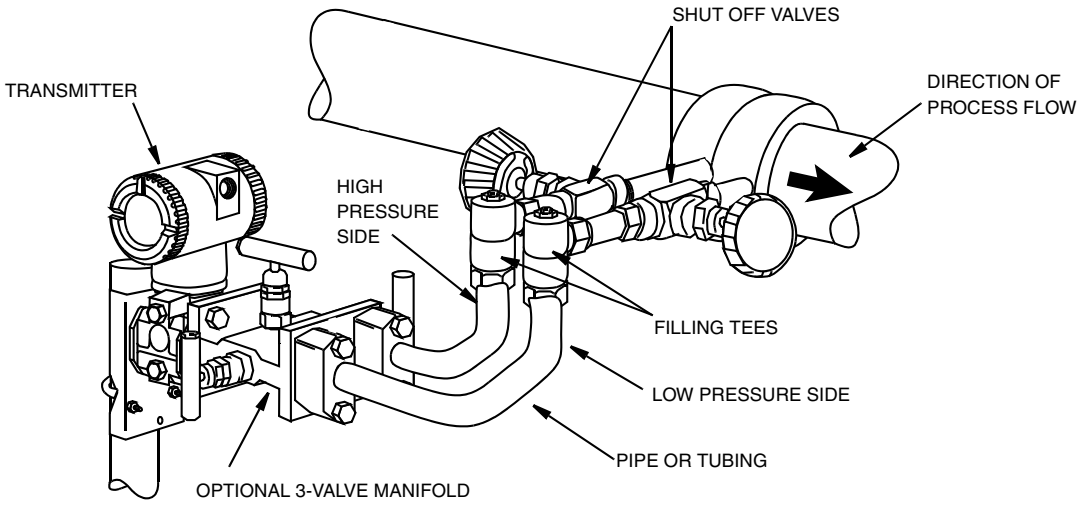

Figure 22. Example of Horizontal Process Line Installation

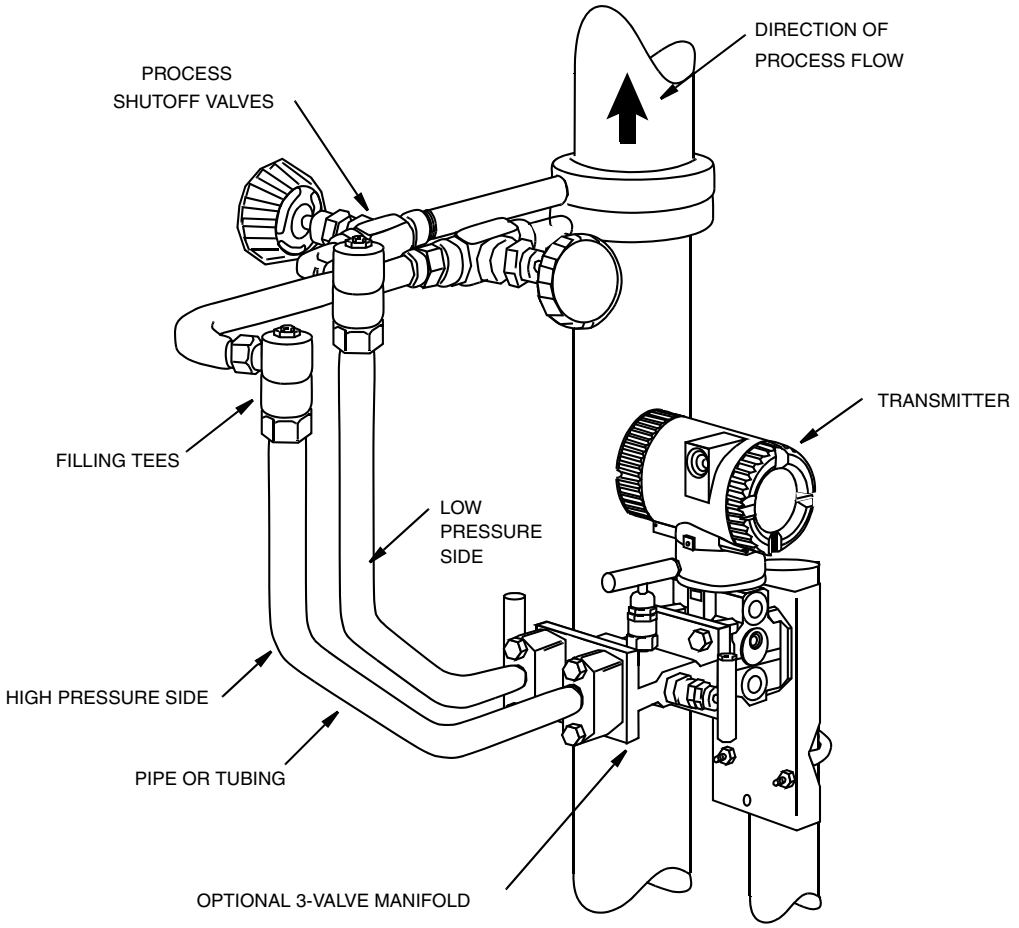

Figure 23. Example of Vertical Process Line Installation

Filling System with Seal Liquid

If the process fluid being measured must not come in contact with the transmitter, the transmitter lines must be filled with a suitable seal liquid. The procedure to do this is as follows:

1. If the transmitter is in service, follow the procedure for “Taking a Differential Pressure Transmitter Out of Operation” on page 30.
2. Close both process shutoff valves.
3. Open all three valves on the 3-valve manifold.
4. Partially open the vent screws on the transmitter until all air has been forced out of the transmitter body and lines. Close the vent screws.
5. Refill the tee connections. Replace the plugs and close the bypass valve. Check for leaks.
6. Follow the procedure for “Putting a Differential Pressure Transmitter Into Operation” on page 30.

CAUTION

To prevent loss of seal liquid and contamination of process fluid, never open both process shutoff valves and manifold shutoff valves if the bypass valve is open.

Positioning the Housing

The transmitter housing (topworks) can be rotated up to one full turn in the counterclockwise direction when viewed from above for optimum access to adjustments, display, or conduit connections.

WARNING

If the electronics housing is removed for any reason, it must be hand tightened fully. Then engage the set screw until it bottoms out and back it off 1/8th turn. Fill the set screw recess with red lacquer (Foxboro Part number X0180GS or equivalent). The housing then may be rotated up to one full turn in a counterclockwise direction for optimum access to adjustments.

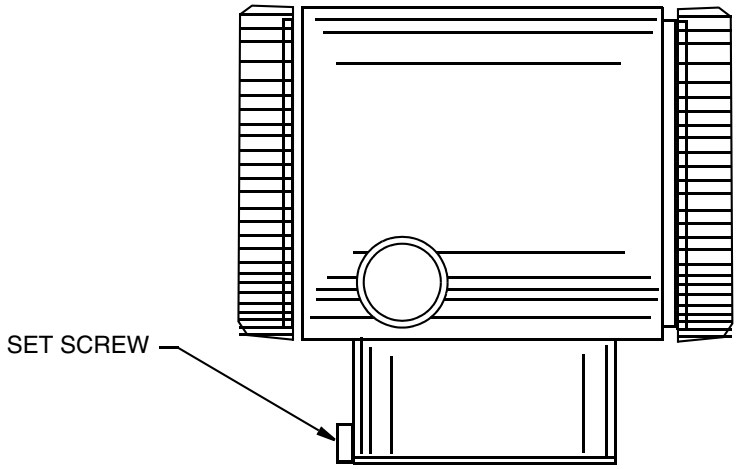

Figure 24. Housing Set Screw Location

Positioning the Display

The display (optional in some models) can be rotated within the housing to any of four positions at 90° increments. To do this, grasp the two tabs on the display and rotate it about 10° in a counterclockwise direction. Pull out the display. Ensure that the O-ring is fully seated in its groove in the display housing. Turn the display to the desired position, reinsert it in the electronics module, aligning the tabs on the sides of the assembly, and twist it in the clockwise direction.

CAUTION

Do **not** turn the display more than 180° in any direction. Doing so could damage its connecting cable.

Setting the Write Protect Jumper

Your transmitter has write protection capability. This means that the external zero, local display, and remote communications can be prevented from writing to the electronics. Write protection is set by moving a jumper that is located in the electronics compartment behind the optional display. To activate write protection, remove the display as described in the previous section, then remove the jumper or move it to the lower position as shown on the exposed label. Replace the display.

Cover Locks

Electronic housing cover locks, shown in Figure 25, are provided as standard with certain agency certifications and as part of the Custody Transfer Lock and Seal option. To lock the covers, unscrew the locking pin until approximately 6 mm (0.25 in) shows, lining up the hole in the pin with the hole in the

housing. Insert the seal wire through the two holes, slide the seal onto the wire ends and crimp the seal

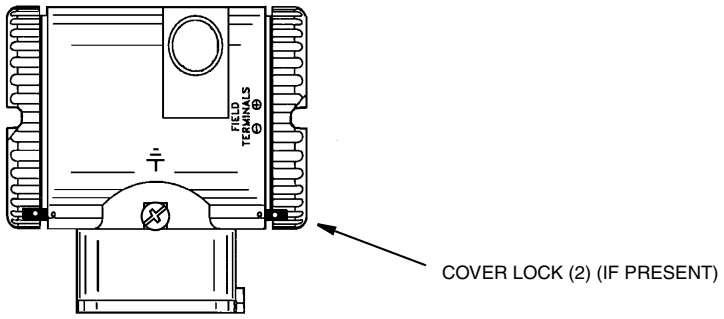

Figure 25. Cover Lock Location

Wiring

The installation and wiring of your transmitter must conform to local code requirements.

WARNING

ATEX requires that when the equipment is intended to be used in an explosive atmosphere caused by the presence of combustible dust, cable entry devices and blanking elements shall provide a degree of ingress protection of at least IP6X. They shall be suitable for the conditions of use and correctly installed.

NOTE

Invensys Foxboro recommends the use of transient/surge protection in installations prone to high levels of electrical transients and surges.

Accessing Transmitter Field Terminals

For access to the field terminals, thread the cover lock (if present) into the housing to clear the threaded cover and remove the cover from the field terminals compartment as shown in Figure 26. Note that the embossed letters **FIELD TERMINALS** identify the proper compartment.

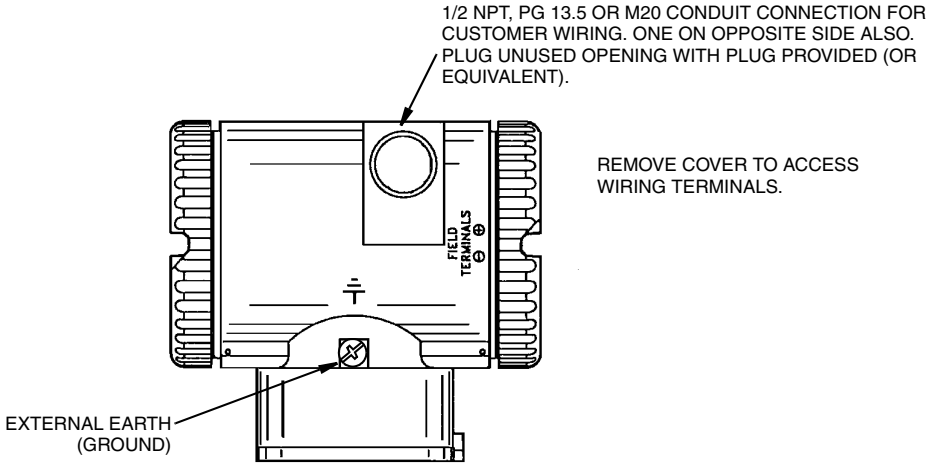

Figure 26. Accessing Field Terminals

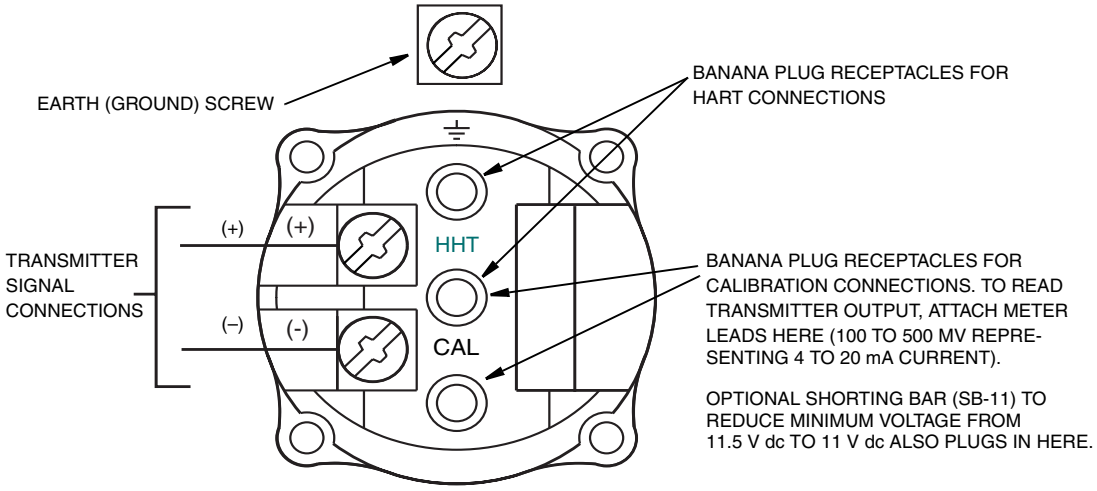

Figure 27. Identification of Field Terminals

Wiring the Transmitter to a Control Loop

When wiring the transmitter, the supply voltage and loop load must be within specified limits. The supply output load vs. voltage relationship is:

R_{MAX} = 47.5 (V - 11.5) and is shown in Figure 28.

NOTE

The relationship when the optional shorting bar is used is:

R_{MAX} = 46.8 (V - 11).

Any combination of supply voltage and loop load resistance in the shaded area can be used. To determine the loop load resistance (transmitter output load), add the series resistance of each component in the loop, excluding the transmitter. The power supply must be capable of supplying 22 mA of loop current.

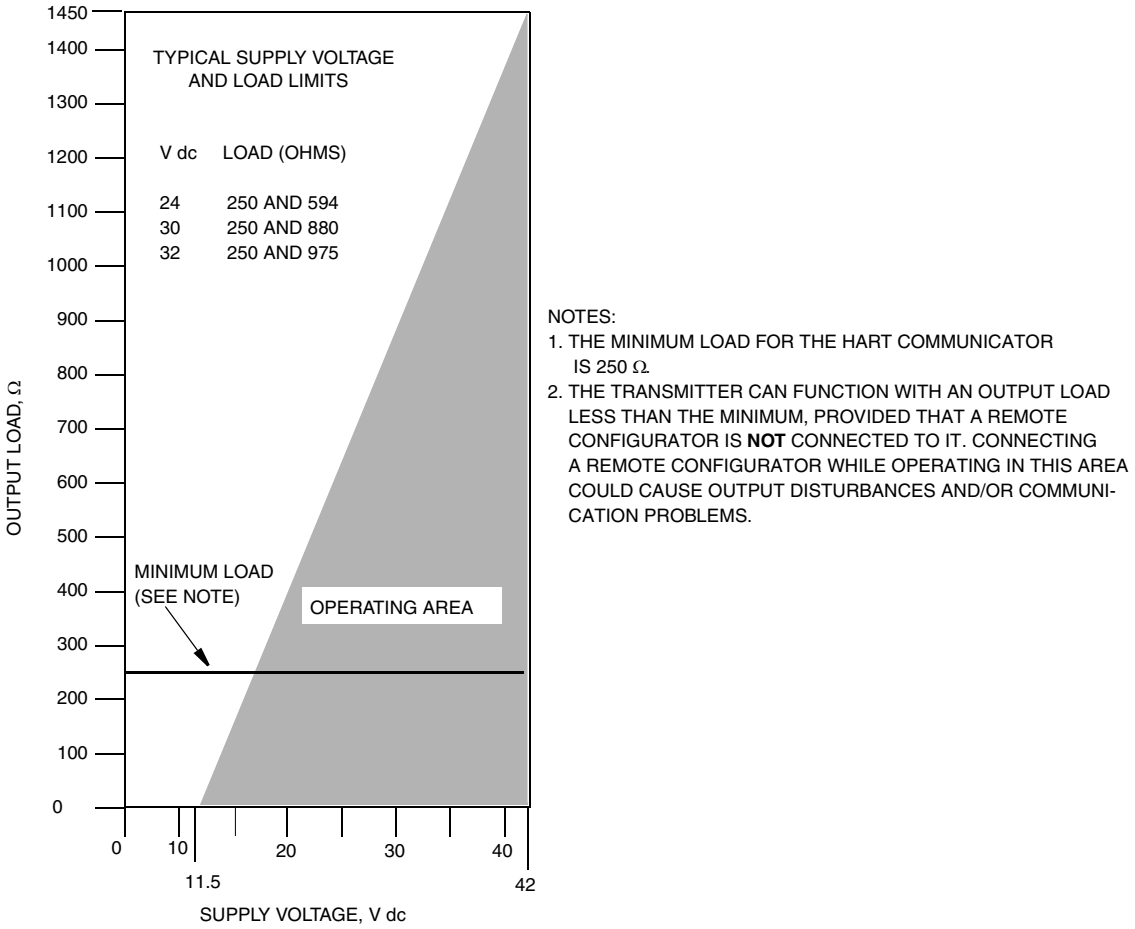

Figure 28. Supply Voltage and Loop Load

Examples:

1. For a loop load resistance of 880 Ω, the supply voltage can be any value from 30 to 42 V dc.
2. For a supply voltage of 24 V dc, the loop load resistance can be any value from 250 to 594 Ω (zero to 594 Ω without a HART Communicator connected to the transmitter).

To wire one or more transmitters to a power supply, proceed with the following steps.

1. Remove the cover from the transmitter field terminals compartment.

2. Run signal wires (0.50 mm^2 or 20 AWG, typical) through one of the transmitter conduit connections. Use twisted single pair to protect the 4 to 20 mA output and/or remote communications from electrical noise. Maximum recommended length for signal wires is:

- 3050 m (10,000 ft) **using single pair cable** and adhering to requirements of HART physical layer implementation defined in HART Document HCF_SPEC-53. Use CN=1 when calculating max. lengths.
- 1525 m (5000 ft) in a multidrop (15 devices maximum) mode. Screened (shielded) cable could be required in some locations.

— NOTE

Do not run transmitter wires in same conduit as mains (ac power) wires.

3. If shielded cable is used, earth (ground) the shield at the power supply **only**. Do not ground the shield at the transmitter.

4. Plug unused conduit connection with the 1/2 NPT, PG 13.5 or M20 metal plug provided (or equivalent). To maintain specified explosionproof and dust-ignitionproof protection, plug must engage a **minimum** of five full threads.
5. Connect an earth (ground) wire to the earth terminal in accordance with local practice.

CAUTION

If the signal circuit must be earthed (grounded), it is preferable to do so at the negative terminal of the dc power supply. To avoid errors resulting from earth loops or the possibility of short-circuiting groups of instruments in a loop, there should be only one earth in a loop.

6. Connect the power supply and receiver loop wires to the "+" and "–" terminal connections.
7. Connect receivers (such as controllers, recorders, indicators) in series with power supply and transmitter as shown in Figure 29.
8. Reinstall the cover onto the housing by rotating it clockwise to seat the O-ring into the housing and then continue to hand tighten until the cover contacts the housing metal-to-metal. If cover locks are present, lock the cover per the procedure described in "Cover Locks" on page 24.
9. If wiring additional transmitters to the same power supply, repeat Steps 1 through 8 for each additional transmitter. The setup with multiple transmitters connected to a single power supply is shown in Figure 30.
10. A HART Communicator or PC-Based Configurator can be connected in the loop between the transmitter and the power supply as shown in Figures 29 and 30. Note that a minimum of 250 Ω must separate the power supply from the HART Communicator or PC-Based Configurator.

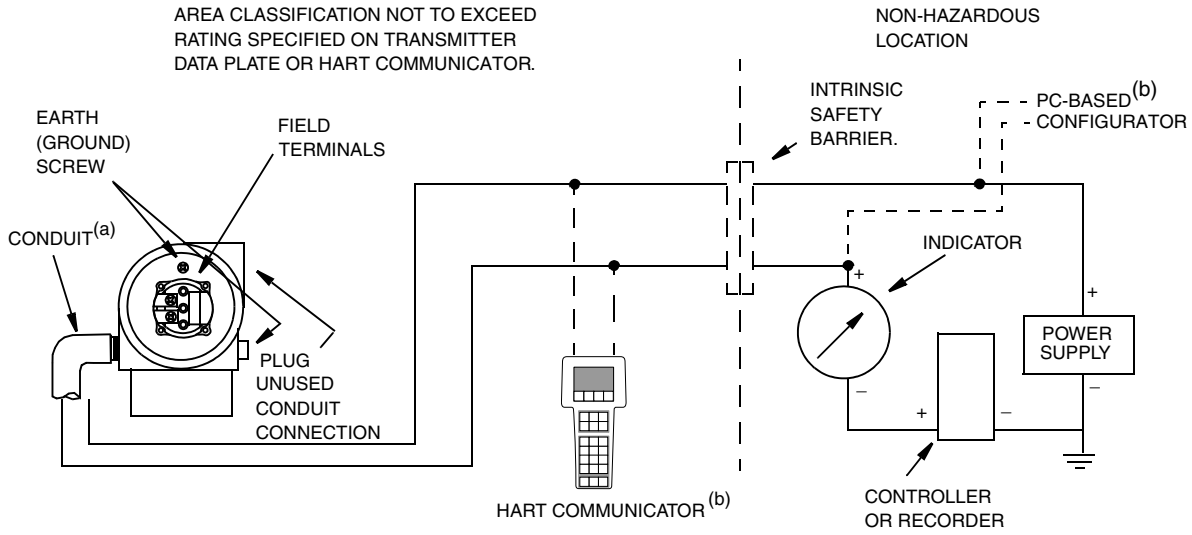

(a) RUN CONDUIT DOWN TO AVOID MOISTURE BUILDUP IN TERMINALS COMPARTMENT.
(b) THERE MUST BE AT LEAST 250 Ω TOTAL RESISTANCE BETWEEN THE HART COMMUNICATOR OR PC-BASED CONFIGURATOR AND THE POWER SUPPLY.

Figure 29. Loop Wiring Transmitters

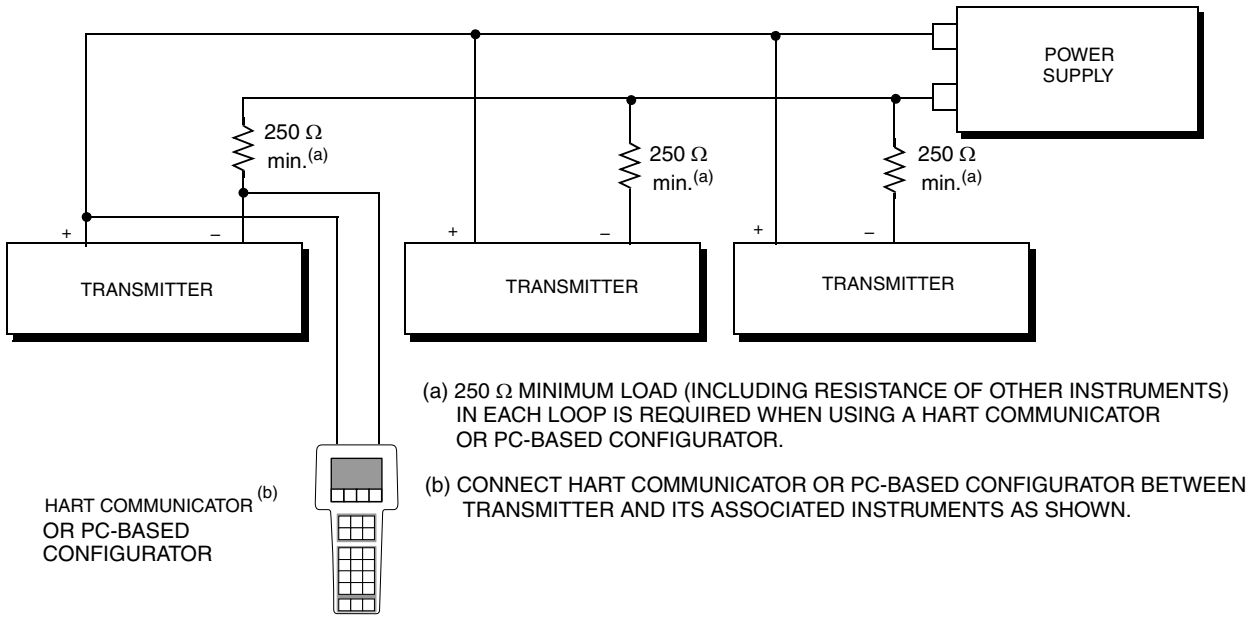

Figure 30. Wiring Several Transmitters to a Common Power Supply

Multidrop Communication

"Multidropping" refers to the connection of several transmitters to a single communications transmission line. Communications between the host computer and the transmitters takes place digitally with the analog output of the transmitter deactivated. With the HART communications protocol, up to 15 transmitters can be connected on a single twisted pair of wires or over leased telephone lines.

The application of a multidrop installation requires consideration of the update rate necessary from each transmitter, the combination of transmitter models, and the length of the transmission line. Multidrop installations are not recommended where Intrinsic Safety is a requirement. Communication with the transmitters can be accomplished with any HART compatible modem and a host implementing the HART protocol. Each transmitter is identified by a unique address (1-15) and responds to the commands defined in the HART protocol.

Figure 31 shows a typical multidrop network. Do not use this figure as an installation diagram. Contact the HART Communications Foundation, (512) 794-0369, with specific requirements for multidrop applications.

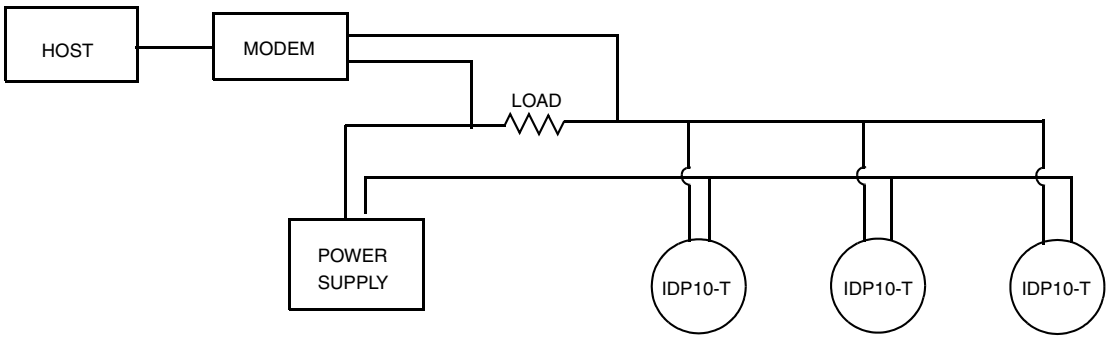

Figure 31. Typical Multidrop Network

The HART Communicator can operate, configure, and calibrate IASPT transmitters with HART communication protocol in the same way as it can in a standard point-to-point installation.

NOTE

IASPT transmitters with HART communication protocol are set to poll address 0 (**POLLADR 0**) at the factory, allowing them to operate in the standard point-to-point manner with a 4 to 20 mA output signal. To activate multidrop communication, the transmitter address must be changed to a number from 1 to 15. Each transmitter must be assigned a unique number on each multidrop network. This change deactivates the 4 to 20 mA analog output.

Connecting the Transmitter to an I/A Series System

The transmitter can also send its measurement to an I/A Series system as a digital signal via an FBM214/215. Wiring terminations at the transmitter are the same as described above. For other system wiring details, refer to the installation instructions provided with the I/A Series system.

Putting a Differential Pressure Transmitter Into Operation

The following procedure explains how to sequence the valves in your flow measurement piping or optional bypass manifold to ensure that your transmitter is not overranged and that seal liquid is not lost. Refer to Figures 22 and 23.

NOTE

This procedure assumes that the process shutoff valves are open.

1. Make sure that both upstream and downstream manifold valves are closed.
2. Make sure that the bypass valve is open.
3. Slowly open the upstream manifold valve.
4. Close the bypass valve.
5. Slowly open the downstream manifold valve.

Taking a Differential Pressure Transmitter Out of Operation

The following procedure explains how to sequence the valves in your flow measurement piping or optional bypass manifold to ensure that your transmitter is not overranged and that seal liquid is not lost. Refer to the Figures 22 and 23.

NOTE

This procedure assumes that the process shutoff valves are open.

1. Close the downstream manifold valve.
2. Close the upstream manifold valve.
3. Open the bypass valve.
4. Carefully open the vent screw to release any residual pressure before disconnecting lines.

WARNING

When venting pressure from the transmitter, wear suitable protective equipment to prevent possible injury from process material, temperature, or pressure.

3. Operation Via Local Display

A local display, as shown in Figure 32, has two lines of information. The upper line is a 5-digit numeric display (4-digit when a minus sign is needed); the lower line is a 7-digit alphanumeric display. The display provides local indication of measurement information.

With Version 4 firmware, the primary (M1) measurement is normally displayed. To view the secondary (M2) measurement, press the **Enter** button while in normal operating mode. Press the **Next** or **Enter** button to return to the primary measurement. If left in M2 display, an M2 message blinks in the lower right of the display. If power to the transmitter is interrupted, the display reverts to the M1 display.

With Version 5 firmware, the display can be configured to meet your specific needs. If configured **Show 1**, M1 is displayed. If configured **Show 2**, M2 is displayed. To temporarily view the alternate measurement, press the **Enter** button. After showing this measurement for a brief period, the display reverts to the configured display. If configured **Toggle**, the display toggles between M1 and M2. When M2 is displayed, an M2 message blinks in the lower right of the display.

The display also provides a means for reranging, calibration, and configuration, viewing the database, testing the display, and reranging the transmitter via the 2-button keypad. You can access these operations by means of a multi-level menu system. Entry to the Mode Select menu is made (from normal operating mode) by pressing the **Next** button. You can exit this menu, restore your prior calibration or configuration, and return to the normal operating mode at any time by going to **Cancel** and pressing the **Enter** button.

The top level structure diagrams for Version 4 and 5 firmware are shown in Figures 33 and 34 respectively.

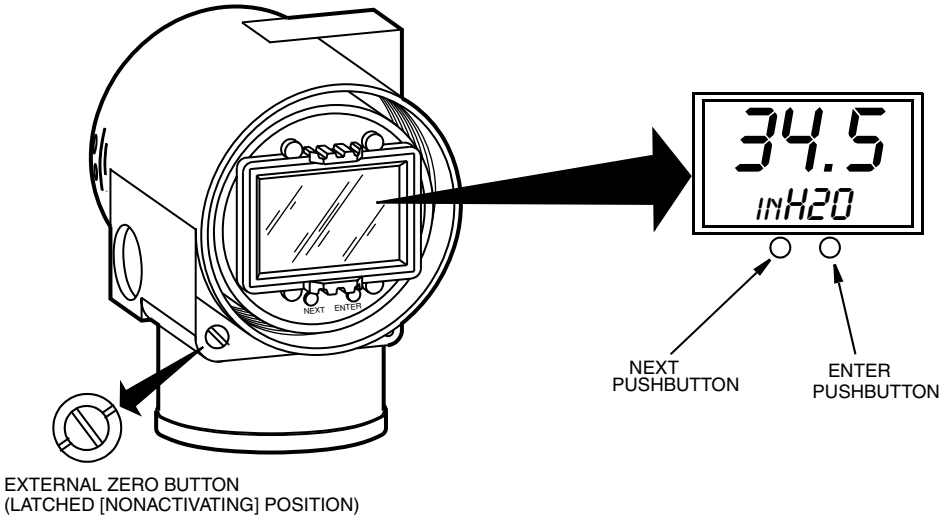

Figure 32. Local Display Module

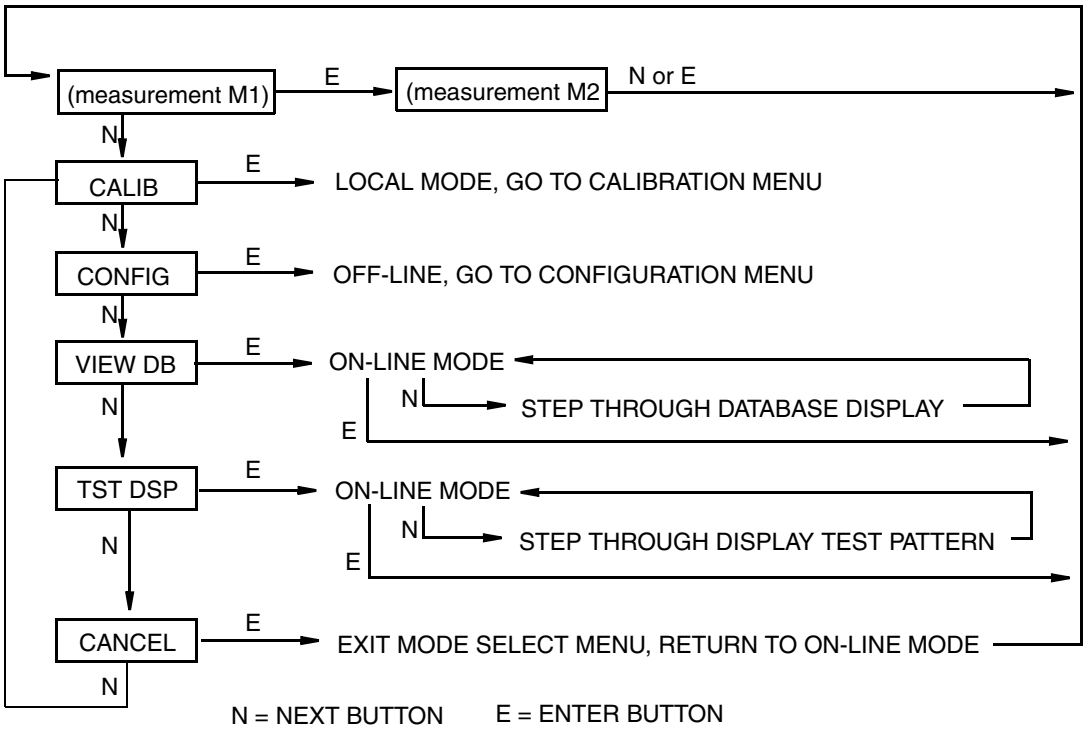

Figure 33. Top Level Structure Diagram (Version 4 Firmware)

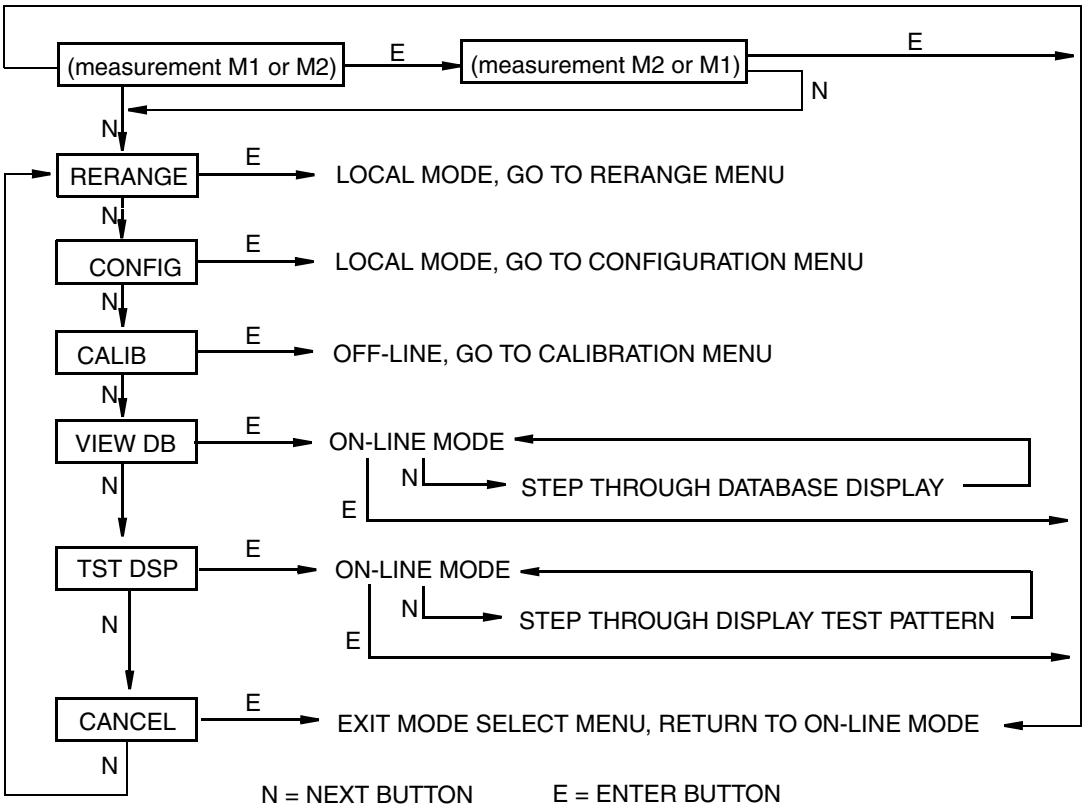

Figure 34. Top Level Structure Diagram (Version 5 Firmware)

Entering Numerical Values

The general procedure for entering numerical values in Calibration and Configuration is as follows:

1. At the appropriate prompt, press the **Enter** button. The display shows the last (or default) value with the first digit flashing.
2. Use the **Next** button to select the desired first digit, then press the **Enter** button. Your selection is entered and the second digit flashes.
3. Repeat Step 2 until you have created your new value. If the number has less than five characters, use leading or trailing zeros for the remaining spaces. When you have configured the fifth space, the display prompts you to place the decimal point.
4. Move the decimal point with the **Next** button until it is where you want it and press the **Enter** button.

— NOTE

1. The decimal point may not be placed directly after the first digit. For example, you can not enter a value as 1.2300; you must enter it as 01.230.
2. The decimal position is identified by flashing except at the position after the fifth digit. At that position (representing a whole number), the decimal point is assumed.

5. The display advances to the next menu item.

Reranging

With Version 4 Firmware, reranging can be done in either Calibration mode (see “RERANGE:” on page 44) or Configuration mode (see “RERANGE:” on page 56).

With Version 5 Firmware, you can access the Rerange mode in the top level menu (see Figure 34). Entry to the Mode Select menu is made (from normal operating mode) by pressing the **Next** button. The display reads **RERANGE**. You can then adjust **M1 URV** and/or **M1 LRV** in the following two submenus.

— NOTE

If **M1 MODE** is in a square root mode, regardless of engineering units selected, **RERANGE** is automatically done in the following “default” pressure units:
- **inH2O**, if **M2 MODE** is a type of square root.
- **M2 EGU** units, if **M2 MODE** is linear.

The bottom line of the display indicates the “default units” during **RERANGE**. Following **RERANGE**, the display automatically switches back to the configured engineering units.

M1 URV:

To edit the upper range value, press **Enter** at the prompt **M1 URV**. Use the procedure “Entering Numerical Values” on page 33 section to edit this parameter.

M1 LRV:

Similar to **M1URV** immediately above.

— NOTE

M1 LRV is bypassed if **M1 MODE** is configured as square root since **M1 LRV** must be zero.

Viewing the Database

You can access the View Database mode by the multi-level menu system described above. Entry to the Mode Select menu is made (from normal operating mode) by pressing the **Next** button. The display reads **CALIB** (with Version 4 firmware) and **RERANGE** (with Version 5 firmware). Use the **Next** button to get to **VIEW DB**. Acknowledge your choice of this selection by pressing the **Enter** button. The display shows the first item in the database. You can step through the database display by

repeated use of the **Next** button. You can abort this procedure at any time by pressing the **Enter** button.

Viewing the Pressure Range

The values of M1LRV and M1 URV can be viewed in VIEW DB as described above.

Testing the Display

You can access the Test Display mode by the same multi-level menu system that was used to enter Reranging, Calibration, Configuration, and View Database mode. Entry to the Mode Select menu is made (from normal operating mode) by pressing the **Next** button. The display reads **CALIB** (with Version 4 firmware) and **RERANGE** (with Version 5 firmware). Use the **Next** button to get to **TST DSP**. Acknowledge your choice of this selection by pressing the **Enter** button. The display shows the first test segment pattern. You can step through the five patterns by repeated use of the **Next** button. You can abort the test at any time by pressing the **Enter** button. The five patterns are shown in Figure 35.

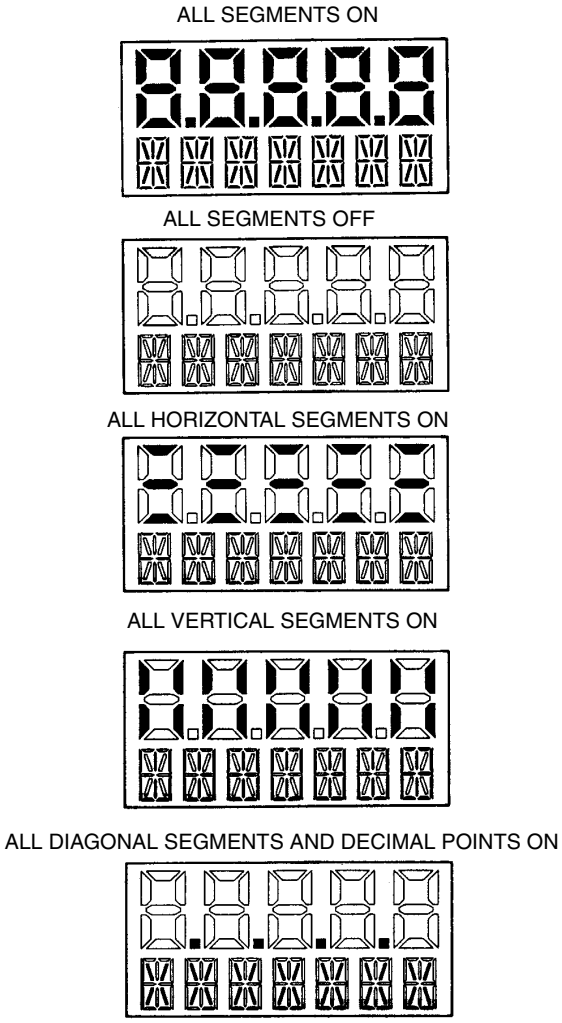

Figure 35. Display Test Segment Patterns

Error Messages

Table 4. Operation Error Messages

Parameter	Condition Tested	Error Message	Action
Normal Operation	Write Protection Enabled	WR PROT	Displays periodically to notify user that unit is in Write Protect.
	Any non-On-line Condition	OFFLINE	Notifies user of a non-On-line condition.
Startup	Database OK or corrupted	INITERR	User should perform SET GDB procedure. See “SET GDB:” on page 58.

4. Calibration

NOTE

1. For best results in applications where high accuracy is required, rezero the transmitter output once it has stabilized at the final operating temperature.

2. Zero shifts resulting from position effects and/or static pressure effects can be eliminated by rezeroing the transmitter output.

3. When checking the zero reading of a transmitter operating in the square root mode, return the output to the linear mode. This eliminates an apparent instability in the output signal. Return the transmitter output to the square root mode after the zero check is complete.

4. After calibrating transmitters operating with a 4 to 20 mA (or 1 to 5 V dc) output signal, check the underrange and overrange output values to ensure that they extend beyond 4 and 20 mA (or 1 and 5 V dc) respectively.

General Calibration Notes

1. Each transmitter is factory characterized over its full rated pressure range. One benefit of this process is that every transmitter can measure any applied differential pressure within its range limits regardless of the calibrated range. The applied differential pressure is measured and converted into an internal digital value of differential pressure. This digital value of differential pressure is always available whether the transmitter is calibrated or not. Calibration assures that the transmitter rated accuracy is achieved over the calibrated range.
2. The internal digital value of differential pressure can be displayed on the optional local display, transmitted digitally, and converted to a 4 to 20 mA analog output signal.
3. Each transmitter is factory calibrated to either a specified or a default calibrated range. This calibration optimizes the accuracy of the internal digital value of differential pressure over that range. If no range is specified, the default range is zero to the sensor upper range limit (URL).
4. The transmitter database has configurable values for both Lower Range Value (LRV) and upper range value (URV). These values are used for two functions.
   a. Defining the Calibrated Range When Using Local Pushbuttons for Calibration:
      - When either **CAL LRV** or **CAL URV** is initiated from the local pushbuttons, the transmitter expects that the differential pressure applied at the time the button is pressed is equal to the LRV or URV value respectively.
      - This function trims the internal digital value of differential pressure; that is, it performs a calibration based on the application of accurate differential pressures equal to the values entered for LRV and URV in the transmitter database.
      - This function also sets the 4 and 20 mA output points; that is, the 4 and 20 mA points correspond to the values of LRV and URV in the database.
      - The value of LRV can be larger than the value of URV.
   b. Reranging Without the Application of Pressure:
      - Since the transmitter continually determines an internal digital value of the measured differential pressure from the lower range limit (LRL) to the upper range limit (URL), the 4 and 20 mA output points can be assigned to any differential pressure values (within the span and range limits) without application of pressure.
      - The reranging function is accomplished by entering new database values for LRV and URV.

- Reranging does not affect the calibration of the transmitter; that is, it does not affect the optimization of the internal digital value of differential pressure over a specific calibrated range.
- If the reranged LRV and URV are not within the calibrated range, the measured values may not be as accurate as when they are within the calibrated range.

If the transmitter is in square root mode for flow rate measurement, the URV in the database is displayed as the flow rate URV when the view database (**VIEW DB**) function is used. However, the LRV and URV in pressure units can be displayed by selecting the reranging (**RERANGE**) function. LRV is always zero when the transmitter is configured for square root mode.

5. When the optional local display is used, the internal digital value of differential pressure is sent directly to the indicator.

- The display can show any measured differential pressure in selected units regardless of the calibrated range and the values of LRV and URV (within the limits of the transmitter and display).
- If the measured differential pressure is outside the range established by the LRV and URV values in the database, the display shows the measurement but also continually blinks to indicate that the measurement is out of range. The mA current signal is saturated at either the low or high overrange limit respectively but the display continually shows the pressure.

6. When configured for 4 to 20 mA output, the internal digital value of differential pressure is converted to an analog current signal.

- The transmitter sets the output at 4 mA for the LRV and 20 mA for the URV.
- There is an independent trim on the digital-to-analog conversion stage. This trim allows for slight adjustment of the 4 and 20 mA outputs. This compensates for any slight difference that exists between the transmitter mA output and an external reference device which is measuring the current.
- The mA trim does not affect the calibration or the reranging of the transmitter and does not affect the internal digital value of differential pressure or the transmission or display of measured pressure.
- The mA trim can be done with or without pressure applied to the transmitter.

7. Zeroing from the local display does not affect the span.

When the transmitter is zeroed to compensate for installed position effect, the transmitter can have either LRV differential pressure applied (**CAL LRV**) or zero differential pressure applied (**CAL AT0**). If using a zero-based range, either method produces the same result. However, if the range is not zero-based, it is advantageous to have both methods available.

For example, consider a differential pressure transmitter having a range of 50 to 100 psig. If it is not feasible to vent the transmitter to atmosphere for zeroing (or to bypass the high and low sides for zeroing), it can be zeroed while the LRV differential pressure of 50 psi is applied by using the **CAL LRV** function. On the other hand, if the transmitter has been installed but there is no pressure in the process line yet (or the high and low sides can be connected by a bypass valve), it can be zeroed while open to atmosphere (or bypassed) by using the **CAL AT0** function.

a. Zeroing with LRV Pressure Applied (**CAL LRV**):

- Before using this zeroing function, apply a differential pressure to the transmitter equal to the value of LRV stored in the transmitter database.
- When you zero the transmitter, the internal digital value of differential pressure is trimmed to be equal to the value of LRV stored in the database and the mA output set to 4 mA.

- If zeroing is done when the applied differential pressure is different from the LRV value in the database, the internal digital value of differential pressure is biased by the difference in the values but the output is still set at 4 mA.
- The **CAL LRV** and **CAL URV** function should be used when calibrating a transmitter for a specific range with known input differential pressures applied for the LRV and URV.

b. Zeroing with Zero Pressure Applied (**CAL AT0**):

- Make sure that the applied differential pressure is at zero. This means venting the transmitter to atmosphere or opening a bypass valve to connect high and low sides.

- When you zero the transmitter, the internal digital value of the differential pressure is trimmed to be equal to zero and the mA output set to an appropriate value such that the mA output is a nominal 4 mA when the LRV pressure is applied later.

Calibration Setup

The following sections show setups for field or bench calibration. Use test equipment that is at least three times as accurate as the desired accuracy of the transmitter.

NOTE

It is not necessary to set up calibration equipment to rerange the transmitter to a different range. The transmitter can be accurately reranged by simply changing the lower range value and the upper range value, which are stored in the transmitter database.

Setup of Electronic Equipment

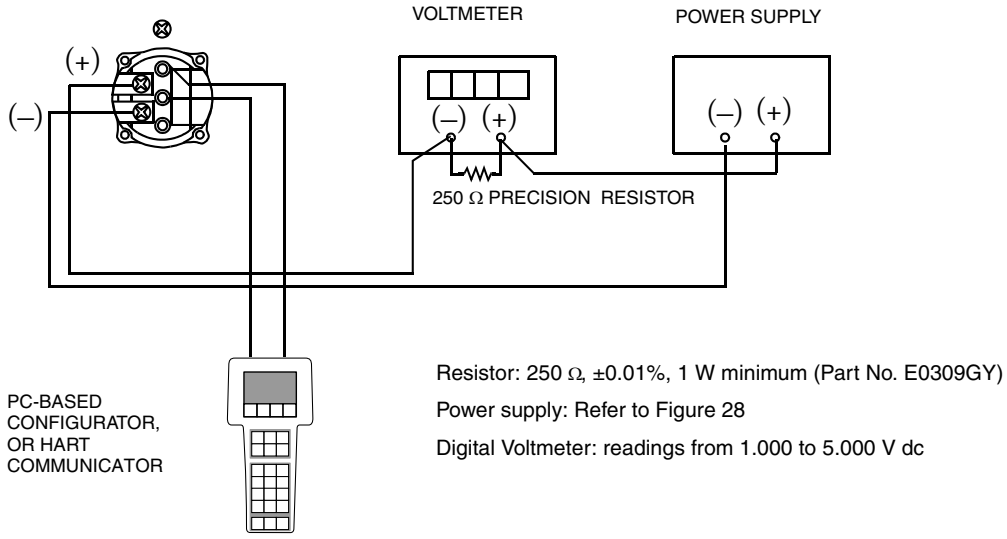

Figure 36. 4 to 20 mA Output Calibration Setup of Electronic Equipment

Field Calibration Setup

Field calibration is performed without disconnecting the process piping. In order to do this, you must have a bypass and shutoff valves between the process and the transmitter and one of the following:

- Access to the process connections on the nonprocess side of the transmitter
- The optional vent screw in the side of the process covers.

If the transmitter is to be removed from the process for calibration, refer to the "Bench Calibration" procedure.

For field calibration, an adjustable air supply and a pressure measuring device are required. For example, a dead weight tester or an adjustable clean air supply and pressure gauge can be used. The pressure source can be connected to the transmitter process connection with pipe fittings or it can be connected to the vent screw assembly using a calibration screw. The calibration screw has a Polyflo fitting and can be used for pressures up to 700 kPa (100 psi). It is available from Invensys Foxboro as Part Number F0101ES.

To set up the equipment, refer to Figure 37 and use the following procedure.

1. If the transmitter is in operation, follow the “Taking a Differential Pressure Transmitter Out of Operation” on page 30.

CAUTION

With liquid service, drain both sides of transmitter to avoid calibration errors.

2. If a calibration screw **is** being used, remove the vent screw and replace it with the calibration screw. Connect the pressure source to the calibration screw using 6 x 1 mm or 0.250 inch tubing.
   If a calibration screw is **not** being used, remove the entire vent screw assembly or drain plug (as applicable) from the high pressure side of the transmitter. Connect calibration tubing using a suitable thread sealant.
3. Close the bypass valve opened in Step 1.
4. Complete the setup shown in Figure 37.

NOTE

For vacuum applications, connect the calibrating pressure source to the low pressure side of the transmitter.

5. If calibrating the output signal, also connect equipment as shown in Figure 36.

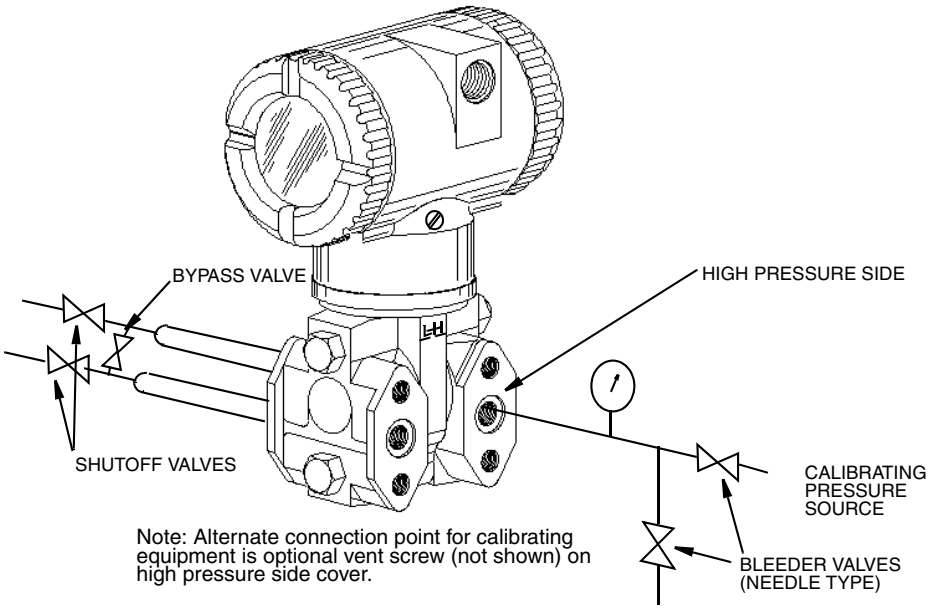

Figure 37. Field Calibration Setup

Bench Calibration Setup

The bench calibration setup requires disconnecting the process piping. For calibration setup without disconnecting the process piping, refer to the "Field Calibration" procedure.

The bench calibration setup is shown in Figure 38. Connect the input piping to the high pressure side of the transmitter as shown. Vent the low pressure side of the transmitter.

NOTE

For vacuum applications, connect the calibrating pressure source to the low pressure side of the transmitter.

If calibrating the output signal, also connect equipment as shown in Figure 36.

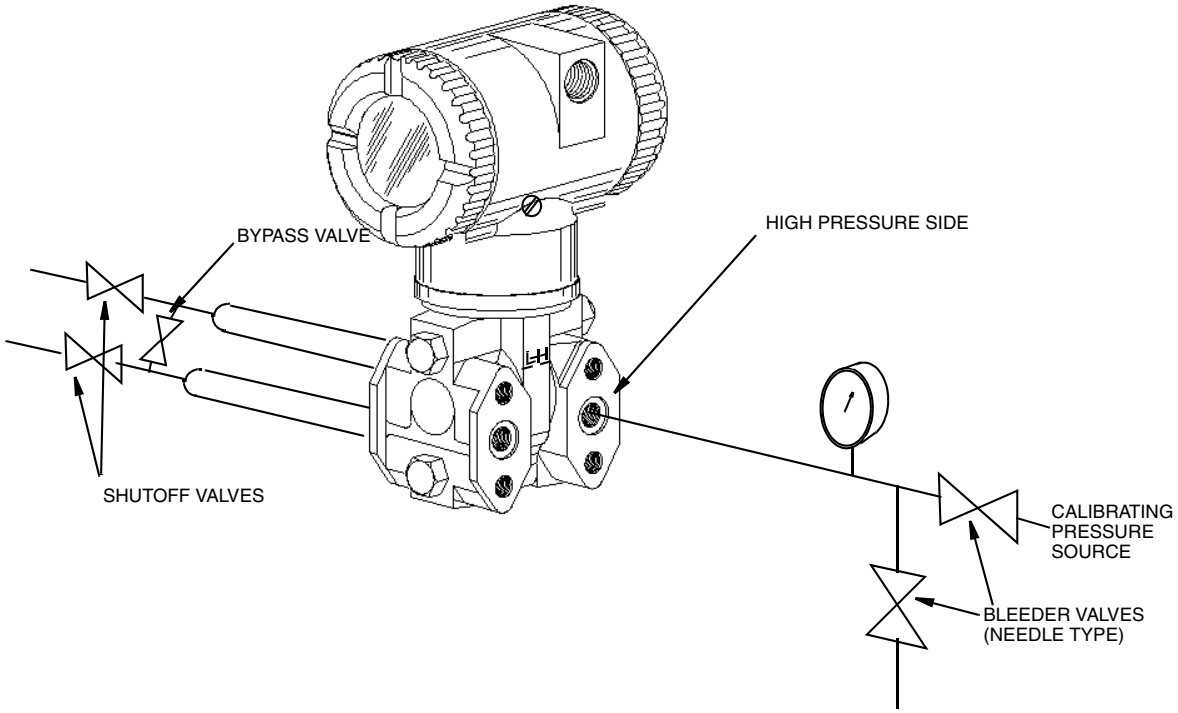

Figure 38. Bench Calibration Setup

Calibration Using a PC20

To calibrate the transmitter using a PC20 Configurator, follow the procedure in MI 020-495.

Calibration Using a PC50

To calibrate the transmitter using a PC50 Configurator, follow the procedure in MI 020-501 and MI 020-505.

Calibration Using a HART Communicator

To calibrate the transmitter using a HART Communicator, follow the procedure in MI 020-366.

Calibration Using the Optional Local Display

To access the Calibration mode (from normal operating mode), press the **Next** button. The display reads **CALIB**, the first item on the menu. Acknowledge your choice of this selection by pressing the **Enter** button. The display shows the first item in the Calibration menu.

NOTE

1. During calibration, a single change could affect several parameters. For this reason, if an entry is entered in error, re-examine the entire database or use the **Cancel** feature to restore the transmitter to its starting configuration and begin again.

2. During adjustment of 4 and 20 mA in the Calibration menu, the milliampere output does not reflect live measurement values.

Table 5. Calibration Menu

Item	Description
CAL AT0	Calibrate at zero pressure.
CAL LRV	Calibrate with pressure at 0% of transmitter range (LRV).
CAL URV	Calibrate with pressure at 100% of transmitter range (URV).
ADJ 4mA	Adjust nominal 4 mA output.
ADJ20mA	Adjust nominal 20 mA output.
RERANGE(a)	Adjust primary upper and lower range values (Version 4 firmware only).
CALDATE	Enter the calibration date.
ADJ 4mA causes the following four submenus.	
A 4mAΔΔ	Increase 4 mA output by large step.
A 4mA∇∇	Decrease 4 mA output by large step.
A 4mAΔ	Increase 4 mA output by small step.
A 4mA∇	Decrease 4 mA output by small step.
ADJ 20mA causes the following four submenus.	
A 20mAΔΔ	Increase 20 mA output by large step.
A 20mA∇∇	Decrease 20 mA output by large step.
A 20mAΔ	Increase 20 mA output by small step.
A 20mA∇	Decrease 20 mA output by small step.
RERANGE causes the following two submenus.	
M1 URV	Adjust upper range value.
M1 LRV	Adjust lower range value.

(a) Rerange with Version 5 firmware is done in the top level menu.

NOTE

It is not necessary to use the **ADJ4mA** or **ADJ20mA** menu selections (commonly known as mA Trim) unless there is a plant requirement to make the 4 and 20 mA output values exactly match readings on certain plant calibration equipment and the calibration operations done result in a small but unacceptable difference between the transmitter mA output and the test equipment mA readout values.

Proceed to calibrate your transmitter by using the **Next** key to select your item and the **Enter** key to specify your selection per Figures 39 and 40. At any point in the calibration you can **Cancel**, restore your prior calibration and return to the on-line mode or **Save** your new calibration.

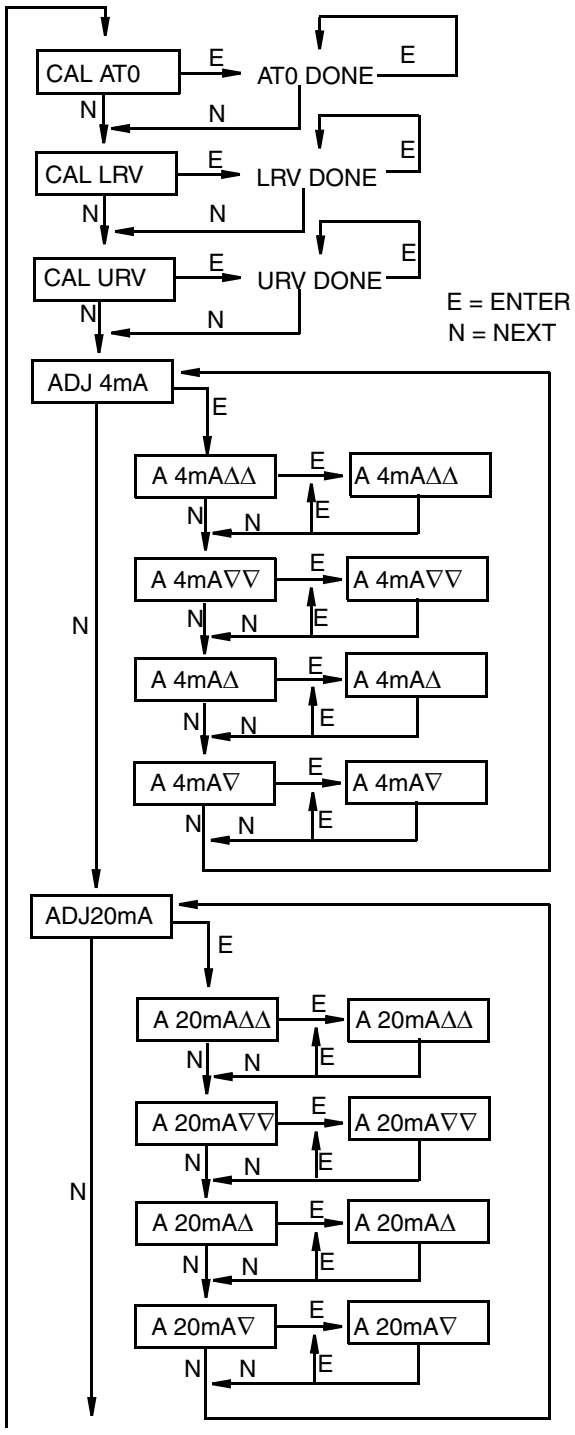

(continued on next figure)

CAL AT0: To set or reset the zero point at zero pressure, apply zero differential pressure to the transmitter and, at display of **CAL AT0**, press **Enter**. This can be done whether LRV is zero or not. Completion is indicated by the display **AT0 Done**.

CAL LRV: To set or reset 0% of range input, apply differential pressure to the transmitter equal to the lower range value (LRV) in the transmitter database and, at display of **CAL LRV**, press **Enter**. Completion is indicated by the display **LRV Done**.

CAL URV: To set or reset 100% of range input, apply differential pressure to the transmitter equal to the upper range value (URV) in the transmitter database and, at display of **CAL URV**, press **Enter**. Completion is indicated by the display **URV Done**.

ADJ4mA: If you configured your transmitter operating mode as 4 to 20 mA, you can adjust the 4 mA output by going to **ADJ4mA** using the **Next** button and press **Enter**. This menu item is bypassed if you configured your transmitter for multidrop mode (poll address other than zero).

To increase the 4 mA output by a large (0.025 mA) step, press **Enter** at the display **A 4mA**ΔΔ. To decrease it by a large step, go to the display **A 4mA**∇∇ by pressing the **Next** button and then **Enter**. To increase it by a small (0.001 mA) step, go to the display **A 4mA**Δ with the **Next** button and then press **Enter**. To decrease it by a small step, go to the display **A 4mA**∇ with the **Next** button and then press **Enter**.

ADJ20mA: Similar to **ADJ4mA**.

Figure 39. Calibration Structure Diagram

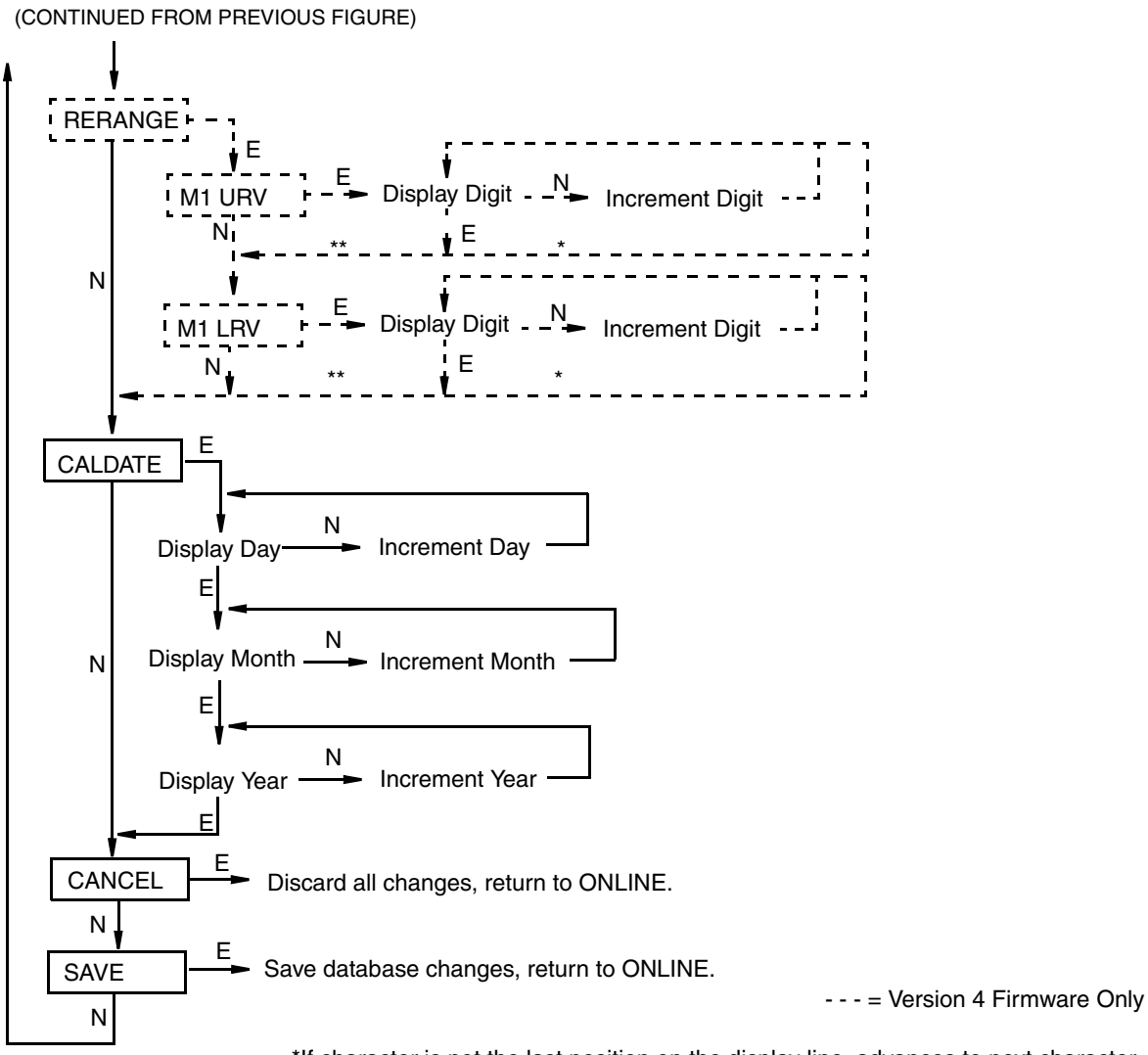

*If character is not the last position on the display line, advances to next character.
**If character is the last position on the display line, advances to next menu item.

NOTE: Commentary about this diagram immediately follows.

Figure 40. Calibration Structure Diagram (Continued)

Commentary on Figure 40

RERANGE:

With Version 5 Firmware: To adjust 100% and 0% range limits, go to **RERANGE** in the top level menu (see “Reranging” on page 33). You can then adjust **M1 URV** and/or **M1 LRV**.

With Version 4 Firmware: To adjust 100% and 0% range values, go to **Rerange** with the **Next** button and press **Enter**. You can then adjust **M1 URV** and/or **M1 LRV** in the following two submenus.

NOTE

If M1 is in square root mode, regardless of engineering units selected, **RERANGE** must be done in “default” pressure units. The “default” pressure units are:

- In **inH2O**, if M2 is a type of square root or **OFF**.
- In **M2 EGU** units, if M2 is linear.

The bottom line of the display indicates the “default" units during **RERANGE**. Following **RERANGE**, the display automatically switches back to the configured engineering units.

M1 URV:

To edit the upper range value, press **Enter** at the prompt **M1 URV**.

M1 LRV:

Similar to **M1URV** immediately above.

NOTE

M1 LRV is bypassed if **M1 MODE** is configured as square root since **M1 LRV** must be zero.

CALDATE:

This is not a required entry but can be used for recordkeeping or plant maintenance purposes. To edit the calibration date, go to **CALDATE** with the **Next** button and press **Enter**. You then can change the day, month, and year. The display shows the last date with the day flashing. Use the **Next** button to step through the menu of digits to select the desired day, then press **Enter**. Repeat this process for the month and year.

Zero Adjustment Using External Zero Button

An optional external zero adjustment mechanism in the electronics housing allows calibration at zero differential pressure (the **CAL AT0** function) or at the lower range value differential pressure (the **CAL LRV** function) without removing the electronics compartment cover. The mechanism is magnetically activated through the housing wall to prevent moisture from entering the enclosure.

NOTE

Do **not** use CAL AT0 if pressure seals are used that are at different elevations from the transmitter.

To use this feature:

1. Unlatch the external zero button by turning it 90° in a counterclockwise direction so that the screwdriver slot lines up with the two holes in the face of the adjacent part. Do **not** push the button in with the screwdriver while doing this.
2. To set or reset the zero point at zero differential pressure, apply zero differential pressure to the transmitter or use a bypass valve to equalize pressure on both sides of the transmitter. Press the external zero button until the display reads **CAL AT0**. Release the button. The display reads **CAL WAIT** and then **RESET** (calibration is complete).

   To set or reset the 0% of range input, apply the lower range value (LRV) differential pressure to the transmitter and press and hold the external zero button until the display reads **CAL LRV** (it reads **CAL AT0** first). Release the button. The display reads **CAL WAIT** and then **RESET** (calibration is complete).

NOTE

If the optional display is not present, the same functions can be accomplished by depending on the length of time the external zero button is depressed. Press and hold the button for 1 to 3 seconds for **CAL AT0** or for 5 or more seconds for **CAL LRV**. Therefore, if your LRV is zero, just depress the button for a few seconds. However, if your LRV is not zero, use **caution** when using the external zero button without the optional display because you must rely strictly on the length of time the button is depressed to differentiate between **CAL AT0** and **CAL LRV**.

Other possible messages are:
DISABLD if **EX ZERO** is configured **EXZ DIS**
IGNORED if the transmitter is not in the on-line mode.
WP ENAB if write protection jumper is in write protect position.

If additional rezeroing is required after Steps 1 and 2 have been accomplished, repeat Step 2.

3. Relatch the external zero button by turning it 90° in a clockwise direction to prevent accidental pressing of the button. Do **not** push the button in with the screwdriver while doing this.

Error Messages

Table 6. Calibration Error Messages

Parameter	Condition Tested	Error Message	User Action
Password Protection	Password	BAD PWD	Bad password entered, use another.
Write Protection	Write protection enabled	REJECT	Displays when user attempts an action that is write protected.
ZERO	Internal offset too large	BADZERO	Check applied pressure, configured **M1 LRV** and configured **M1 EOFF**.
SPAN	Slope too large or too small	BADSPAN	Check applied pressure, configured **M1 LRV** and configured **M1 EFAC**.
M1 URV	M1URV > max pressure in EGU	URV>FMX	Entered pressure is greater than maximum rated pressure of transmitter. Check entry. Verify EGUs.
	M1URV < min pressure in EGU	URV<FMN	Entered pressure is less than minimum rated pressure of transmitter. Check entry. Verify EGUs.
	M1 URV = M1 LRV	LRV=URV	Cannot set span to 0. Check entry. Check **M1 LRV**.
	M1 turndown exceeds limit	BADTDWN	Check entry. Check **M1 LRV**.
	URV < 0 with M1 or M2 SqRt	URV<LRV	Square root mode with nonzero LRV is not valid. Change LRV to 0.
M1 LRV	M1LRV > max pressure in EGU	LRV>FMX	Entered pressure is greater than maximum rated pressure of transmitter. Check entry. Verify EGUs.
	M1LRV < min pressure in EGU	LRV<FMN	Entered pressure is less than minimum rated pressure of transmitter. Check entry. Verify EGUs.
	M1 URV = M1 LRV	LRV=URV	Cannot set span to 0. check entry. Check **M1 URV**.
	M1 turndown exceeds limit	BADTDWN	Check entry. Check **M1 URV**.

5. Configuration

Configurable Parameters

Table 7 lists all the configurable parameters and the factory default for the IDP10-T Transmitters. The factory default values have been customized if the transmitter was ordered with optional feature -C2. The table also shows which parameters are configurable with the integral vs. remote configurators.

Table 7. IDP10-T Configurable Parameters

Parameter	Capability	Factory Default	Configurable with		Application Requirement
			Integ. Indic.	Remote Config.	
Descriptors					
Tag Number	8 characters max	Tag Number	No	Yes	
Descriptor	16 characters max	Tag Name	No	Yes	
Message	32 characters max	Inst Location	No	Yes	
Input					
Calibrated Range	LRV to URV in units listed in (a) below	See (b) below when not specified per S.O.	Yes	Yes	
Output					
Measurement #1 Output (PV)	4 to 20 mA or Fixed Current. Specify Poll Address (1-15) for Fixed Current.	4 to 20 mA	Yes	Yes	
Measurement #1 Mode	Linear or type of square root in (d) below	Linear	Yes	Yes	
Measurement #1 EGUs	If linear, select from units listed in (a) below; If Sq.Rt., select from units listed in (c) below	Units of Calibrated Range	Yes	Yes	
Measurement #2 Mode (SV)	Linear or type of square root in (d) below	Linear	Yes	Yes	
Measurement #2 EGUs	If linear, select from units listed in (a) below; If Sq.Rt., select from units listed in (c) below	Units of Calibrated Range	Yes	Yes	
Temp. Sensor Fail Strategy	Normal oper. or failsafe	Fail-safe	Yes		
Fail-safe	High or Low	High	Yes	Yes	
External Zero	Enabled or Disabled	Enabled	Yes	Yes	
Damping	0 to 32 seconds.	None	Yes	Yes	
Poll Address	0 - 15	0	Yes	Yes	
LCD Indicator (e)	Meas #1 EGU or % Lin	Meas #1 EGU	Yes	No	

(a) psi, inHg, ftH$_2$O, inH$_2$O, atm, bar, mbar, MPa, kPa, Pa, kg/cm^2, g/cm^2, mmHg, torr, mmH$_2$O.

(b) Span Code A: 0 to 30 inH$_2$O; Span Code B: 0 to 200 inH$_2$O; Span Code C: 0 to 30 psi; Span Code D: 0 to 300 psi; Span Code E: 0 to 3000 psi.

(c) gal/s, gal/m, gal/h, gal/d, Mgal/d, ft^3/s, ft^3/m, ft^3/h, ft^3/d, lgal/s, lgal/m, lgal/h, lgal/d, l/s, l/m, l/h, Ml/d, m^3/s, m^3/m, m^3/h, m^3/d, bbl/s, bbl/m, bbl/h, bbl/d, %flow.

(d) Square root with cutoff below 1% of calibrated pressure range or with linear below 4% of calibrated pressure range.

(e) Measurement #2 can be displayed at any time by pressing the **Enter** button regardless of the local display configuration. This reverts to Measurement #1 or % Lin (as configured) when power is cycled off and on.

Configuration Using a PC20

To configure the transmitter using a PC20 Configurator, follow the procedure in MI 020-495.

Configuration Using a PC50

To configure the transmitter using a PC50 Configurator, follow the procedure in MI 020-501 and MI 020-505.

Configuration Using a HART Communicator

To configure the transmitter using a HART Communicator, follow the procedure in MI 020-366.

Configuration Using the Optional Local Display

You can access the Configuration mode by the same multi-level menu system that was used to enter Calibration mode. Entry to the Mode Select menu is made (from normal operating mode) by pressing the **Next** button. The display reads **CALIB**, the first item on the menu. Press the **Next** button again to get to the second item on the menu, **CONFIG**. Acknowledge your choice of this selection by pressing the **Enter** button. The display shows the first item in the Configuration menu. You can then configure items shown in Table 8. The standard factory default configuration is also given in this table.

The standard factory default configuration is not used if custom configuration option -C2 has been specified. Option -C2 is a full factory configuration of all parameters to the user's specifications.

NOTE

1. You can configure most parameters using the local display. However, for more complete configuration capability, use a HART Communicator or PC-Based configurator.
2. During configuration, a single change can affect several parameters. For this reason, if an entry is entered in error, re-examine the entire database or use the **Cancel** feature to restore the transmitter to its starting configuration and begin again.

Table 8. Configuration Menu

Item	Description	Initial Factory Configuration
POLLADR	Poll Address: 0 - 15	0
EX ZERO[a]	External Zero: enable or disable	Enable
S2 FAIL	Temperature Sensor Failure Strategy: S2FATAL or S2NOFTL	S2FATAL
OUT DIR	4 to 20 mA Output: forward or reverse	Forward
OUTFAIL	4 to 20 mA Output: fail mode output - low or high	High
OFFL MA	4 to 20 mA Output in offline mode - last or user set	USER MA
DAMPING	Damping: none, 1/4, 1/2, 1, 2, 4, 8, 16, or 32 seconds	None
M1 MODE	Output: linear or type of square root[b]	Linear
M1DISP	Local Indicator Display in linear mode: in percent or engineering units	M1EGU
M1 EGU	User-Defined Engineering Units	inH_2O or psi
RERANGE[c]	Adjustment of 100% and 0% range values	- - -
M1 URV	Primary Upper Range Value	URL
M1 LRV	Primary Lower Range Value	0
M2 MODE	Output: linear or type of square root	Linear
M2 EGU	User-Defined Engineering Units	Same as M1 EGU
DISPLAY[d]	Display M1, M2, or Toggle between M1 and M2	M1

Table 8. Configuration Menu (Continued)

Item	Description	Initial Factory Configuration
CALDATE	Calibration Date	- - -
ENA PWD	Enable password; no password, configuration only, or configuration and calibration	NO PWD
CFG PWD	User set configuration password (six characters)	- - -
CAL PWD	User set calibration password (six characters)	- - -
SET GDB	Rewrite all calibration and configuration values with default values	- - -

(a) Applies only if transmitter contains External Zero option.

(b) Square root is not applicable to absolute pressure, gauge pressure, and flange level measurement.

(c) Version 4 firmware only. Rerange with Version 5 firmware is done in the top level menu.

(d) Version 5 firmware only.

Proceed to configure your transmitter by using the **Next** button to select your item and the **Enter** button to specify your selection per the following three figures. At any point in the configuration you can **Cancel** your changes and return to the on-line mode, or **Save** your changes.

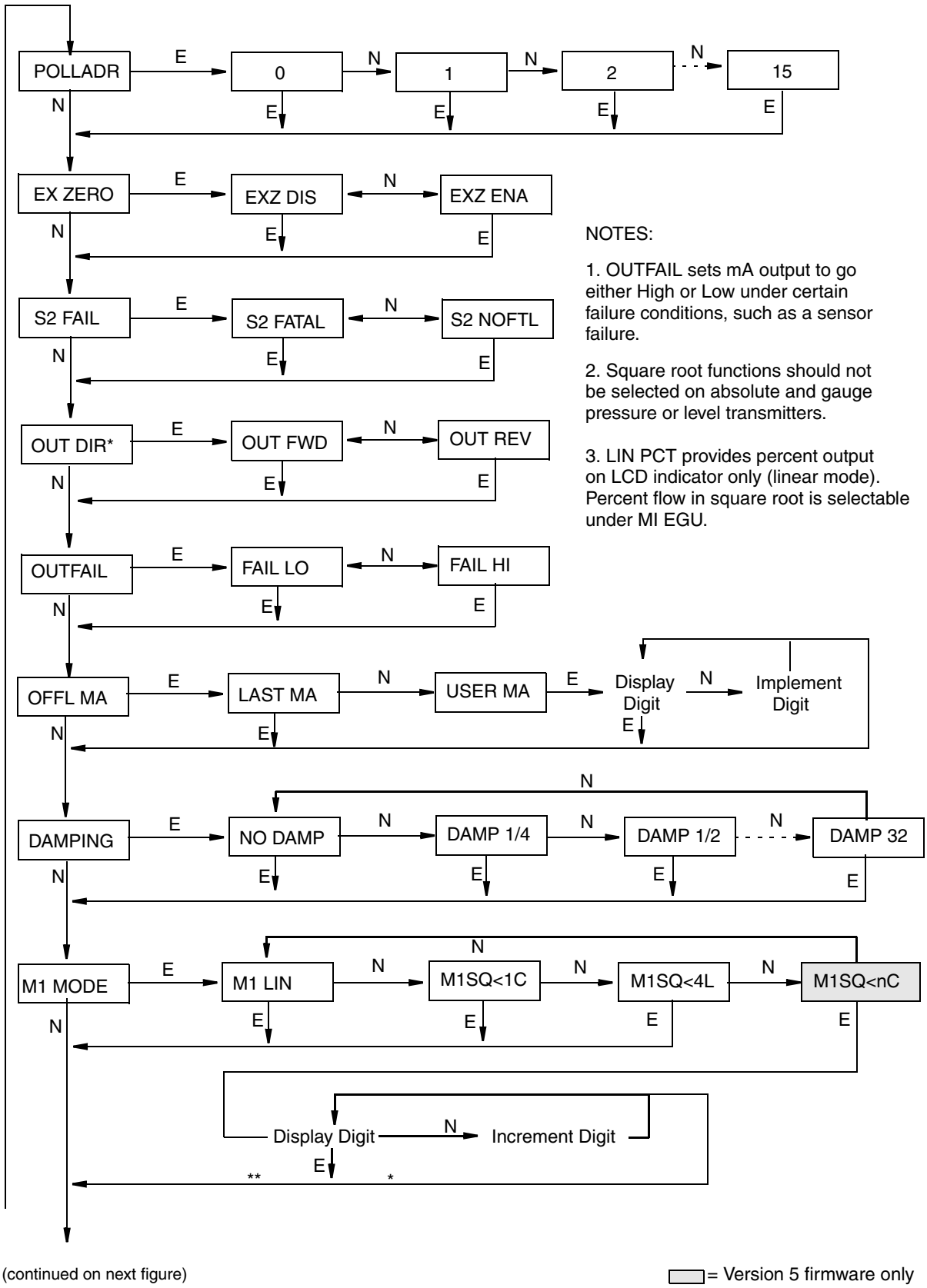

Figure 41. Configuration Structure Diagram

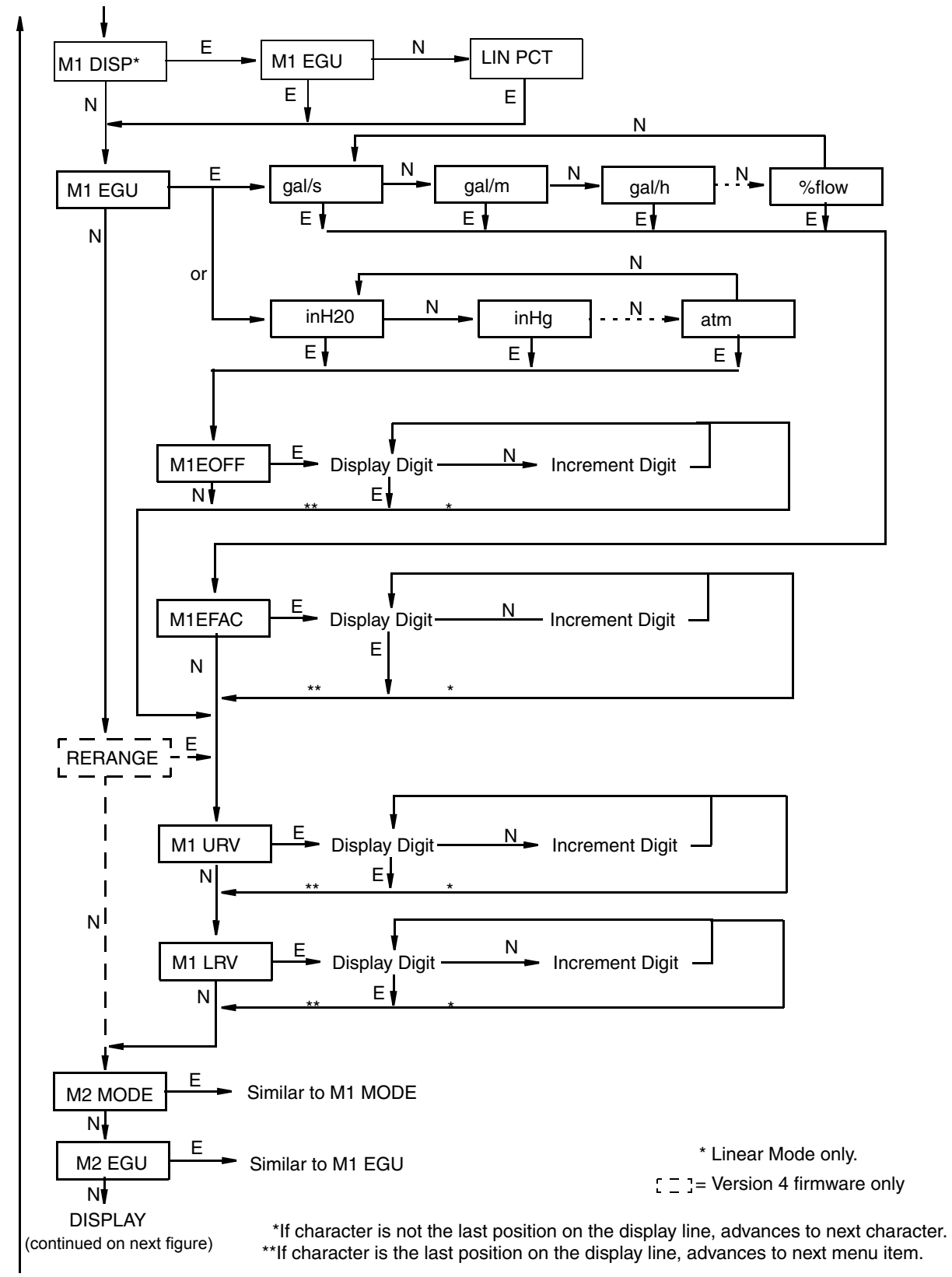

Figure 42. Configuration Structure Diagram (Continued)

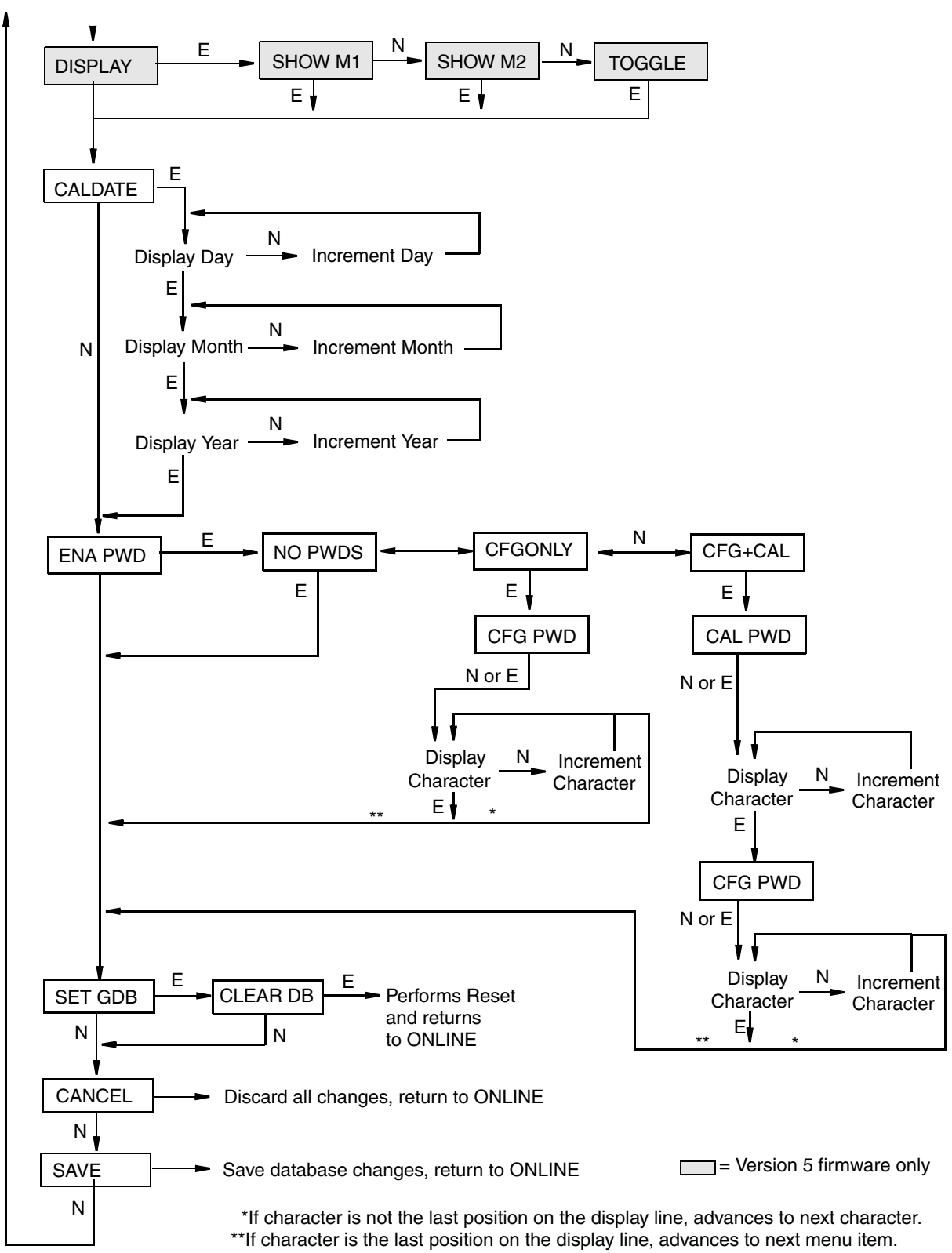

Figure 43. Configuration Structure Diagram (Continued)

Commentary on Configuration Structure Diagram

In general, use the **Next** button to select your item and the **Enter** button to specify your selection.

POLLADR:

To configure the transmitter poll address, press **Enter**. Use the **Next** button to select an address of **0** through **15**, then press **Enter**. An address of 1 through 15 is used for multidrop mode with a fixed mA output.

EX ZERO:

The External Zero feature allows the optional external zero pushbutton to be disabled for additional security. To configure this feature, go to **EX ZERO** with the **Next** button and press **Enter**. Use the **Next** button to select **EXZ DIS** or **EXZ ENA** and press **Enter**.

S2 FAIL:

The temperature sensor compensates for changes in temperature in the transmitter electronics. Failure of this sensor can cause a 4 to 20 mA accuracy change of up to 0.25%. The **S2 FAIL** feature allows you to specify action (or no action) if such a failure occurs. To configure this feature, go to **S2 FAIL** with the **Next** button and press **Enter**. Use the **Next** button to select **S2 FATAL** (to have the output go to that configured in **OUTFAIL**) or **S2 NOFTL** (to continue operation with a temperature sensor failure). This parameter is bypassed if **POLLADR** is configured any number from **1** through **15**.

OUT DIR:

To configure the Output Direction, go to **OUT DIR** with the **Next** button and press **Enter**. Use the **Next** button to select **OUT FWD** (4 - 20 mA) or **OUT REV** (20 - 4 mA) and press **Enter**. This parameter is bypassed if **POLLADR** is configured any number from **1** through **15** or if **M1 MODE** or **M2 MODE** is configured as square root.

OUTFAIL:

The Outfail feature provides high or low output with certain malfunctions. To configure the fail mode output, go to **OUTFAIL** with the **Next** button and press **Enter**. Use the **Next** button to select **FAIL LO** or **FAIL HI** and press **Enter**. This parameter is bypassed if **POLLADR** is configured any number from **1** through **15**.

OFFL MA:

The Off-line mA feature enables you to set the output to a specified value or to the last value if the transmitter goes off-line. To configure the off-line output, go to **OFFL MA** with the **Next** button and press **Enter**. Use the **Next** button to select **LAST MA** or **USER MA** and press **Enter**. If you selected **USER MA**, press **Enter** again at the display of digits. Then use the **Next** button to step through the library of digits to select the desired first digit, then press **Enter**. Your selection is entered and the second character flashes. Repeat this procedure until you have entered the last digit. Then use the **Next** button to move the decimal point to its desired location and press **Enter**. The display advances to the next menu item.

DAMPING:

To configure additional damping, go to **DAMPING** with the **Next** button and press **Enter**. Use the **NEXT** button to select **NO DAMP**, **DAMP 1/4**, **DAMP 1/2**, **DAMP 1**, **DAMP 2**, **DAMP 4**, **DAMP 8**, **DAMP 16**, or **DAMP 32** and press **Enter**.

M1 MODE:

To configure the mode of the primary output (PV), go to **M1 MODE** with the **Next** button and press **Enter**. Use the **Next** button to select **M1 LIN** (linear), **M1SQ<1C** (square root with cutoff below 1% dp (M1 URV in linear units of dp), **M1SQ<4L** (square root with linear below 4% of dp (M1 URV in linear units of dp), or (with Version 5 firmware) **M1SQ<nC** (square root with user configured cutoff specified between 0 and 20% of the flow upper range value, M1 EFAC) and press **Enter**. You cannot configure this parameter as square root if **OUT DIR** was configured as **OUT REV** or if M1LRV is not zero.

— NOTE

Cutoff in **M1SQ<1C** and **M1SQ<4L** is in percent of differential pressure but cutoff in **M1SQ<nC** is in percent of flow rate.

M1 DISP:

To configure the optional local indicator for percent in linear mode, go to **M1 DISP** with the **Next** button and press **Enter**. Use the **Next** button to select **M1 EGU** or **LIN PCT** and press **Enter**. **LIN PCT** only provides percent readings on the local display. **M1EGU** is used for remote communication of Measurement #1, even if **LIN PCT** is selected.

M1 EGU:

To configure pressure or flow engineering units for your display and transmission, go to **M1 EGU** with the **Next** button and press **Enter**. If **M1 MODE** is configured as **M1 LIN**, you are asked to specify one of the following pressure labels: **psi**, **inHg**, **ftH$_2$O**, **inH$_2$O**, **atm**, **bar**, **mbar**, **MPa**, **Pa**, **kPa**, **kg/cm^2**, **g/cm^2**, **mmHg**, **torr**, **mmH$_2$O, mH$_2$O**. or **hW60** (inH2O at 60°F). Your transmitter then automatically adjusts **M1EFAC** (engineering factor), **M1 URV** (upper range value), and **M1 LRV** (lower range value). **M1EOFF** is set to zero.

If **M1 MODE** is configured as **M1 SQ<1C, M1SQ<4L, or M1 SQ<nC**, you are asked to specify one of the following flow labels: **%flow, gal/s**, **gal/m**, **gal/h**, **gal/d**, **Mgal/d**, **ft^3/s**, **ft^3/m**, **ft^3/h**, **ft^3/d**, **lgal/s**, **lgal/m**, **lgal/h**, **lgal/d**, **l/s**, **l/m**, **l/h**, **Ml/d**, **m^3/s**, **m^3/m**, **m^3/h**, **m^3/d**, **bbl/s**, **bbl/m**, **bbl/h**, **bbl/d**. Also **T/h**, **lb/h**, **kg/h**, **Nm^3/h** (normal m^3/h), **Sm^3/h** (standard m^3/h), **Am^3/h** (actual m^3/h), or **MMSCFD** (million scfd) with Version 5 firmware. Check the **M1EFAC** (engineering factor) and, if necessary, adjust it as follows:

M1EFAC:

This parameter is used to input the numerical relationship between the measured span in pressure units and the displayed (and transmitted) span in flow units. It is the displayed URV in flow units (which is also the span in flow units since flow ranges must be zero-based).

Example:

For a 200 inH$_2$O transmitter with a measured range of 0 to 100 inH$_2$O and displayed range of 0 to 500 gal/m, **M1EFAC** = 500.

To edit the span in your configured flow units, press **Enter** at the prompt **M1EFAC**. Use the procedure “Entering Numerical Values” on page 33 to edit this parameter.

RERANGE:

With Version 5 Firmware: To adjust 100% and 0% range values, go to **RERANGE** in the top level menu (see “Reranging” on page 33).. You can then adjust **M1 URV** and/or **M1 LRV**.

With Version 4 Firmware: To adjust 100% and 0% range limits, go to **RERANGE** with the **Next** button and press **Enter**. You can then adjust **M1 URV** and/or **M1 LRV** in the following two submenus.

— NOTE

If **M1 MODE** is in a square root mode, regardless of engineering units selected, **RERANGE** is automatically done in the following “default” pressure units:
- **inH2O**, if **M2 MODE** is a type of square root.
- **M2 EGU** units, if **M2 MODE** is linear.

The bottom line of the display indicates the “default units” during **RERANGE**. Following **RERANGE**, the display automatically switches back to the configured engineering units.

M1 URV:

To edit the upper range value, press **Enter** at the prompt **M1 URV**. Use the procedure “Entering Numerical Values” on page 33 section to edit this parameter.

M1 LRV:

Similar to **M1URV** immediately above.

NOTE

M1 LRV is bypassed if **M1 MODE** is configured as square root since **M1 LRV** must be zero.

M2 MODE:

M2 is a secondary measurement (SV) that is read by the HART Communicator and can be displayed on the optional display. You might use this feature to display M1 in flow units and M2 in comparable pressure units. To configure this parameter, go to **M2 MODE** with the **Next** button and press **Enter**. Use the **Next** button to select **M2 LIN** (linear), **M2SQ<1C** (square root with cutoff below 1% dp (M2 URV in linear units of dp), **M2SQ<4L** (square root with linear below 4% of dp (M2 URV in linear units of dp), or (with Version 5 firmware) **M2SQ<nC** (square root with cutoff specified between 0 and 20% of the flow upper range value, M2 EFAC) and press **Enter**.

M2 EGU:

Similar to **M1 EGU**.

DISPLAY:

With Version 5 Firmware: To display M1, M2, or to toggle between M1 and M2, go to **DISPLAY** with the **Next** button and press **Enter**. Use the **Next** button to select **SHOW M1**, **SHOW M2**, or **TOGGLE** and press **Enter**.

CALDATE:

This is not a required entry but can be used for record-keeping or plant maintenance purposes. To edit the calibration date, go to **CALDATE** with the **Next** button and press **Enter**. You then can change the day, month, and year. The display shows the last date with the day flashing. Use the **Next** button to step through the library of digits to select the desired day, then press **Enter**. Repeat this process for the month and year.

ENA PWD:

To enable or disable the password feature, go to **ENA PWD** with the **Next** button and press **Enter**. Use the **Next** button to select **NO PWDS** (password feature disabled), **CFGONLY** (password required to configure only), or **CFG+CAL** (password required to both configure and calibrate) and press **Enter**.

If you selected **CFG ONLY**, the display changes to **CFG PWD**. Press either the **Next** or **Enter** button. Use the **Next** button to step through the library of characters to select the desired first character, then press **Enter**. Your selection is entered and the second character flashes. Repeat this procedure until you have created your password. If the password has less than six characters, use blanks for the remaining spaces. When you have configured the sixth space, the display advances to the next menu item.

If you selected **CFG+CAL**, the display changes to **CAL PWD**. To create the Calibration password, press either the **Next** or **Enter** button. Use the **Next** button to step through the library of characters to select the desired first character, then press **Enter**. Your selection is entered and the second character flashes. Repeat this procedure until you have created your password. If the password has less than six characters, use blanks for the remaining spaces. When you have configured the sixth space, the display advances to **CFG PWD**. Use the same procedure to create the configuration password.

CAUTION

Record your new password before saving changes to the database.

SET GDB:

If your transmitter database becomes corrupted and you receive an **INITERR** message upon startup, this function enables you to rewrite all calibration and configuration values with default values.

CAUTION

Any calibration and configuration values that you have entered will be lost. Therefore, **SET GDB** should **not** be selected if your transmitter is functioning normally.

Character Lists

Table 9. Alphanumeric Character List

Character List*	
@	‘
, (comma)	(
A-Z (uppercase)	)
[	*
\	+
]	-
^	.
_ (underscore)	/
space	0-9
!	:
“	;
#	<
$	>
%	=
&	?

*List only applies to Model 275 HART Communicator not to optional local display.

Table 10. Numeric Character List

Character List
–
. (decimal point)
0 through 9

Error Messages

Table 11. Configuration Error Messages

Parameter	Condition Tested	Error Message	User Action
Password Protection	Password	BAD PWD	Bad password entered, use another.
Write Protection	Write Protection Enabled	REJECT	Displays when user attempts an action that is write protected.
M1 MODE (being changed to square root)	M1 LRV ≠ 0	LRVnot0	Square root mode with nonzero LRV is not valid. Change **M1 LRV** to 0.
	M1 URV < 0	URV<LRV	Square root mode with negative URV is not valid. Change **M1 URV** to positive value.
	OUT DIR is OUT REV	URV<LRV	Square root mode with URV < LRV is not valid. Change **M1 LRV** to 0 and **M1 URV** to positive value.
	M1EFAC < 0	-M1EFAC	Negative **M1 EFAC** is not valid. Change **M1 EFAC** to positive value.
	M2EFAC < 0	-M2EFAC	Negative **M2 EFAC** is not valid. Change **M2 EFAC** to positive value.
	M1EFAC = 0	0M1EFAC	**M1 EFAC** = 0 is not valid. Change **M1 EFAC** to positive value.
	M2EFAC = 0	0M2EFAC	**M2 EFAC** = 0 is not valid. Change **M2 EFAC** to positive value.
	M1EOFF ≠ 0 or M2EOFF ≠ 0	BADEOFF	Square root mode with nonzero **M1 EOFF** and **M2 EOFF** is not valid. Change **M1 EOFF** and **M2 EOFF** to 0.
M1EFAC	M1EFAC < 0	-M1EFAC	Negative **M1 EFAC** is not valid. Change **M1 EFAC** to positive value.
	M1EFAC = 0	0M1EFAC	**M1 EFAC** = 0 is not valid. Change **M1 EFAC** to positive value.
M1 URV	M1URV > max pressure in EGU	URV>FMX	Entered pressure is greater than maximum rated pressure of transmitter. Check entry. Verify EGUs.
	M1URV < min pressure in EGU	URV<FMN	Entered pressure is less than minimum rated pressure of transmitter. Check entry. Verify EGUs.
	M1 URV = M1 LRV	LRV=URV	Cannot set span to 0. Check entry. Check **M1 LRV**.
	M1 turndown exceeds limit	BADTDWN	Check entry. Check **M1 LRV**.
	URV <0 with M1 or M2 SqRt	URV<LRV	Square root mode with nonzero LRV is not valid. Change **M1 LRV** to 0.

Table 11. Configuration Error Messages (Continued)

Parameter	Condition Tested	Error Message	User Action
M1 LRV	M1LRV > max pressure in EGU	LRV>FMX	Entered pressure is greater than maximum rated pressure of transmitter. Check entry. Verify EGUs.
	M1LRV < min pressure in EGU	LRV<FMN	Entered pressure is less than minimum rated pressure of transmitter. Check entry. Verify EGUs.
	M1 URV = M1 LRV	LRV=URV	Cannot set span to 0. Check entry. Check **M1 URV**.
	M1 turndown exceeds limit	BADTDWN	Check entry. Check **M1 URV**.
M2 MODE (being changed to square root)	M1 LRV ≠ 0	LRVnot0	Square root mode with nonzero LRV is not valid. Change **M1 LRV** to 0.
	M1 URV < 0	URV<LRV	Square root mode with negative URV is not valid. Change **M1 URV** to positive value.
	OUT DIR is OUT REV	URV<LRV	Square root mode with URV < LRV is not valid. Change **M1 LRV** to 0 and **M1 URV** to positive value.
	M1EFAC < 0	-M1EFAC	Negative **M1 EFAC** is not valid. Change **M1 EFAC** to positive value.
	M2EFAC < 0	-M2EFAC	Negative **M2 EFAC** is not valid. Change **M2 EFAC** to positive value.
	M1EFAC = 0	0M1EFAC	**M1 EFAC** = 0 is not valid. Change **M1 EFAC** to positive value.
	M2EFAC = 0	0M2EFAC	**M2 EFAC** = 0 is not valid. Change **M2 EFAC** to positive value.
	M1EOFF ≠ 0 or M2EOFF ≠ 0	BADEOFF	Square root mode with nonzero **M1 EOFF** and **M2 EOFF** is not valid. Change **M1 EOFF** and **M2 EOFF** to 0.
M2EFAC	M2EFAC < 0	-M2EFAC	Negative **M2 EFAC** is not valid. Change **M2 EFAC** to positive value.
	M2EFAC = 0	0M2EFAC	**M2 EFAC** = 0 is not valid. Change **M2 EFAC** to positive value.

6. Maintenance

DANGER

For nonintrinsically safe installations, to prevent a potential explosion in a Division 1 hazardous area, de-energize transmitters before you remove threaded housing covers. Failure to comply with this warning could result in an explosion resulting in severe injury or death.

Error Messages

For error messages displayed on the HART Communicator refer to MI 020-366.

Parts Replacement

Parts replacement is generally limited to the electronics module assembly, housing assembly, sensor assembly, terminal block assembly, cover O-rings, and optional display. For part numbers relating to the transmitter and its options, see PL 009-005.

Replacing the Terminal Block Assembly

1. Turn off transmitter power source.
2. Remove the Field Terminals and the Electronics compartment covers by rotating them counterclockwise. Screw in cover lock if applicable.
3. Remove the digital display (if applicable) as follows: grasp the two tabs on the display and rotate it about 10° in a counterclockwise direction.
4. Remove the electronics module from the housing by loosening the two captive screws that secure it to the housing. Then pull the module out of the housing far enough to gain access to the cable connectors on the rear of the module.
5. Remove the four socket head screws securing the terminal block.
6. Disconnect the terminal block cable connector from the electronics module.
7. Remove the terminal block and the gasket under it.
8. Connect the new terminal block cable connector to the electronics module.
9. Install the new terminal block and new gasket and reinstall the four screws to 0.67 N·m (6 in·lb) in several even increments.
10. Reinstall the electronics module (and digital display if applicable).
11. Reinstall the covers onto the housing by rotating them clockwise to seat the O-ring into the housing and then continue to hand tighten until the each cover contacts the housing metal-to-metal. If cover locks are present, lock the cover per the procedure described in “Cover Locks” on page 24.
12. Turn on transmitter power source.

Replacing the Electronics Module Assembly

To replace the electronics module assembly, refer to Figure 44 and proceed as follows:

1. Turn off transmitter power source.
2. Remove the electronics compartment cover by rotating it counterclockwise. Screw in cover lock if applicable.
3. Remove the digital display (if applicable) as follows: grasp the two tabs on the display and rotate it about 10° in a counterclockwise direction. Pull out the display and disconnect its cable.

4. Remove the electronics module from the housing by loosening the two captive screws that secure it to the housing. Then pull the module out of the housing far enough to gain access to the cable connectors on the rear of the module.

CAUTION

The electronics module is “one assembly” at this point and is electrically and mechanically connected to topworks with a flexible ribbon signal cable, a 2-wire power cable, and in some cases, a cable for an external zero pushbutton. Do **not** exceed the slack available in these cables when removing the assembled module.

5. Unplug all cable connectors from the rear of the electronics module and place the module on a clean surface.
6. Predetermine connector orientation, then insert the cable connectors into the replacement module. Replace the module in the housing using care not to pinch the cables between the module and the housing. Tighten the two screws that secure the module to the housing.
7. Connect the cable from the digital display to the electronics module. Ensure that the O-ring is fully seated in the display housing. Then, holding the digital display by the tabs at the sides of the display, insert it into the housing. Secure the display to the housing by aligning the tabs on the sides of the assembly and rotating it about 10° in a clockwise direction.
8. Reinstall the cover onto the housing by rotating it clockwise to seat the O-ring into the housing and then continue to hand tighten until the cover contacts the housing metal-to-metal. If cover locks are present, lock the cover per the procedure described in “Cover Locks” on page 24.
9. Turn on transmitter power source.

The module replacement procedure is now complete.

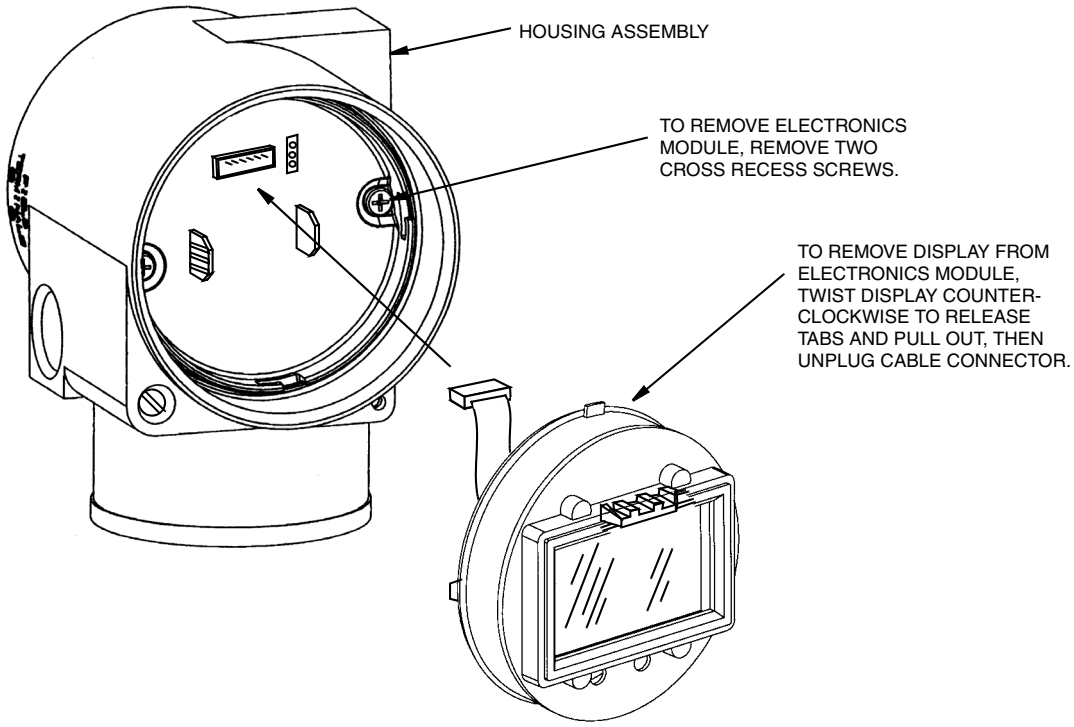

Figure 44. Replacing the Electronics Module Assembly and Display

Removing and Reinstalling a Housing Assembly

To remove and reinstall a housing assembly, refer to Figure 44 and proceed as follows:

1. Remove the electronics module per Steps 1 through 5 in the previous procedure.
2. Remove the housing by rotating it counterclockwise (when viewed from the top) using caution to avoid damaging the ribbon cables.
3. Inspect the sensor O-ring and lubricate if necessary with silicone lubricant (Part Number 0048130 or equivalent).
4. Reinstall the housing by reversing Step 2.
5. Reinstall the electronics module per Steps 6 through 9 in the previous procedure.

Adding the Optional Display

To add the optional display, refer to Figure 44 and proceed as follows:

1. Turn off transmitter power source.
2. Remove the electronics compartment cover by rotating it counterclockwise. Screw in cover lock if applicable.
3. Plug the display into the receptacle at the top of the electronics assembly.
4. Ensure that the O-ring is seated in its groove in the display housing. Then insert the display into the electronics compartment by grasping the two tabs on the display and rotating it about 10° in a clockwise direction.
5. Install the new cover (with a window) onto the housing by rotating it clockwise to seat the O-ring into the housing and then continue to hand tighten until the cover contacts the housing metal-to-metal. If cover locks are present, lock the cover per the procedure described in “Cover Locks” on page 24.
6. Turn on transmitter power source.

Replacing the Sensor Assembly

To replace the sensor assembly, refer to Figures 45 and 46 and proceed as follows:

1. Remove the electronics module as described above.
2. Remove the housing as described above.
3. Remove the process covers from sensor by removing two hex head bolts.
4. Replace the gaskets in the process covers.
5. Install the process covers and housing on the new sensor. Torque cover bolts to 100 N·m (75 lb·ft) in several even increments. Torque values are 68 N·m (50 lb·ft) when 316 ss bolts are specified; 75 N·m (55 lb·ft) when B7M bolts are specified.
6. Reinstall electronics module.
7. Pressure test the sensor and process cover assembly by applying a hydrostatic pressure of 150% of the maximum static and overrange pressure rating to both sides of the process cover/sensor assembly simultaneously through the process connections. Hold pressure for one minute. There should be no leakage of the test fluid through the gaskets. If leakage occurs, retighten the cover bolts per Step 5 (or replace the gaskets) and retest.

CAUTION

Perform hydrostatic test with a liquid and follow proper hydrostatic test procedures.

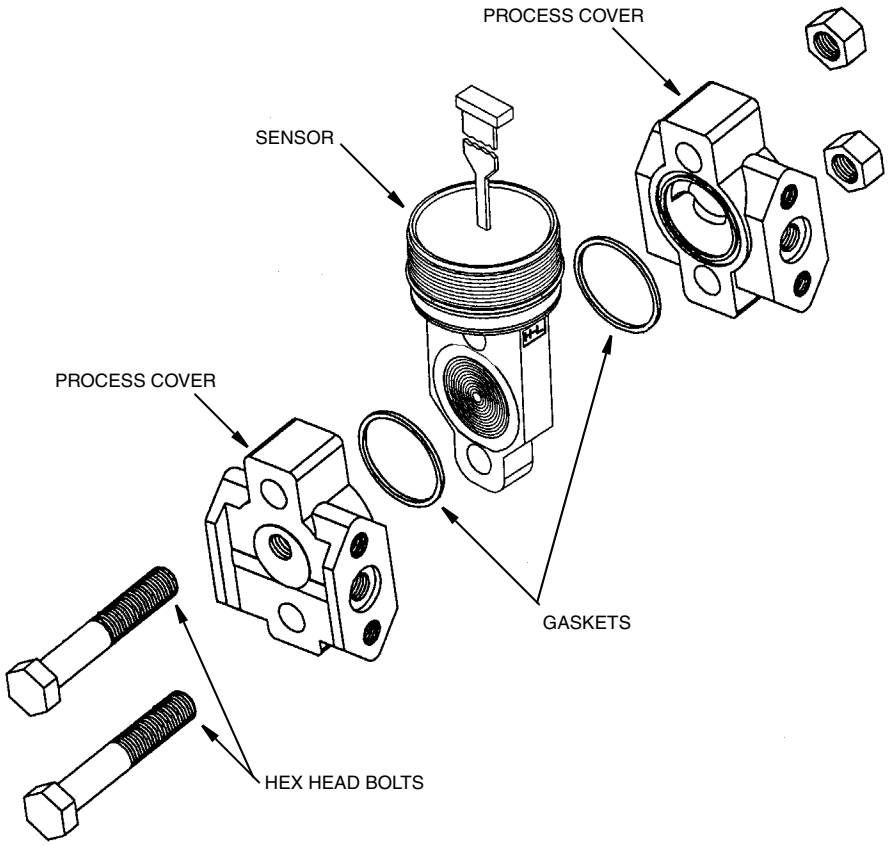

Figure 45. Replacing the Sensor Assembly

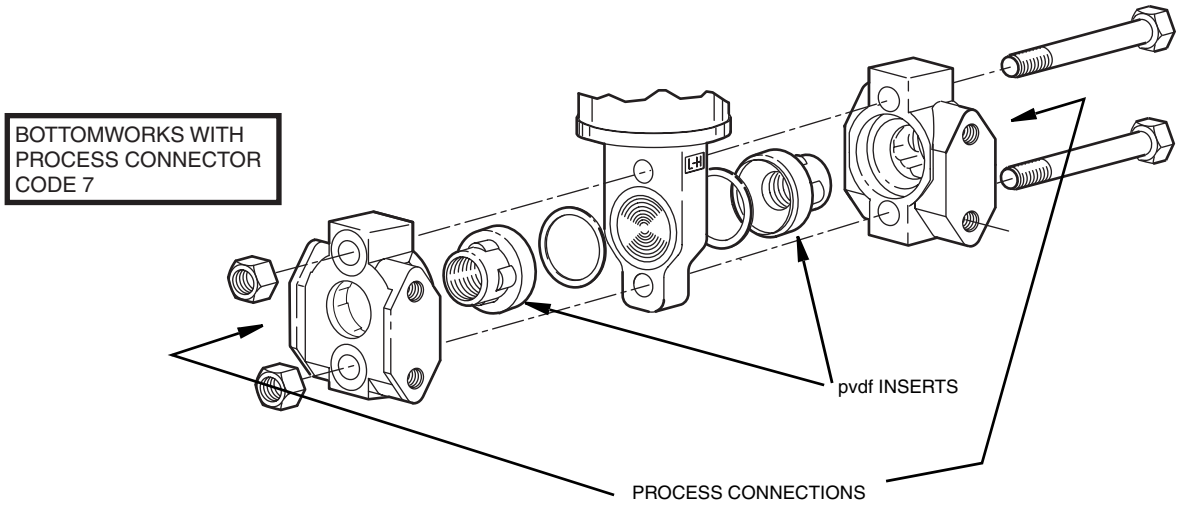

Figure 46. Replacing the Sensor Assembly (pvdf Inserts)

Rotating Process Covers for Venting

As received, your IASPT Transmitter provides sensor cavity draining without the need for side drain connections, regardless of whether the transmitter is mounted vertically or horizontally. Sensor cavity venting is provided by mounting the transmitter horizontally or with the optional vent screw (-V). How-

ever, if you did not specify this option, you can still achieve venting (instead of draining) with vertical mounting by rotating the process covers. See Figure 47.

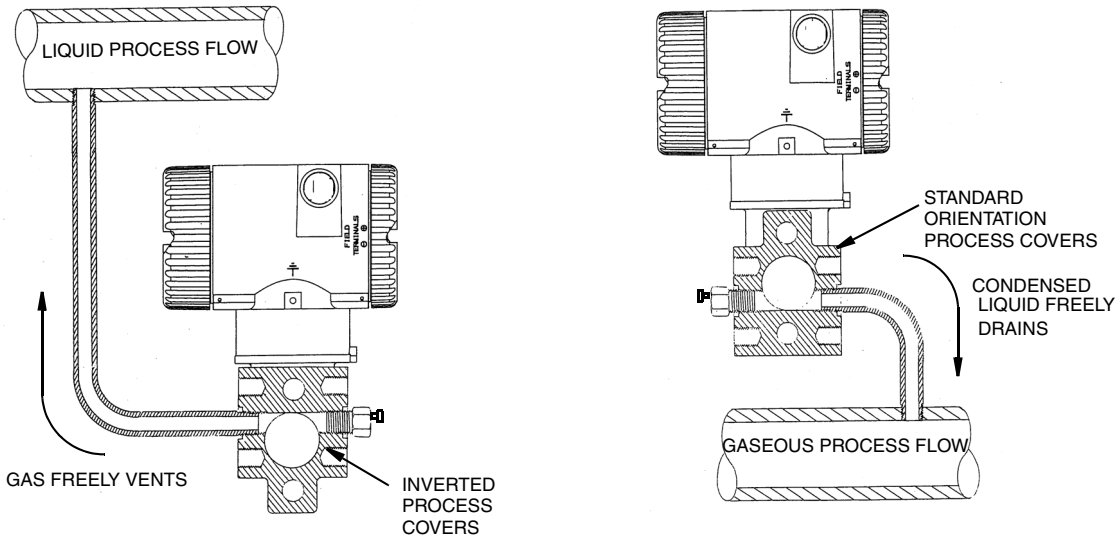

Figure 47. Sensor Cavity Venting and Draining

To rotate the process covers, refer to Figure 45 and proceed as follows:

1. Turn off the transmitter power source and remove the transmitter from the process.
2. Remove the process covers from sensor by removing two hex head bolts.
3. Replace gaskets in process covers.
4. Rotate the process covers so that the longer tab is at the bottom.
5. Reinstall process covers and bolts. Torque cover bolts to 100 N·m (75 lb·ft) in several even increments. Torque values are 68 N·m (50 lb·ft) when 316 ss bolts are specified; 75 N·m (55 lb·ft) when B7M bolts are specified.
6. Pressure test the sensor and process cover assembly by applying a hydrostatic pressure of 150% of the maximum static and overrange pressure (see “Standard Specifications” on page 5) to both sides of the process cover/sensor assembly simultaneously through the process connections. Hold pressure for one minute. There should be no leakage of the test fluid through the gaskets. If leakage occurs, retighten the cover bolts per Step 4 or replace the gaskets and retest.

CAUTION

Perform hydrostatic test with a liquid and follow proper hydrostatic test procedures.

Index

C
Calibration 37
Using a HART Communicator 41
Using a PC20 41
Using a PC50 Configurator 41
Using the Local Display 41
Calibration Notes 37
Calibration Setup 39
Configuration 49
Using a HART Communicator 50
Using a PC20 Configurator 50
Using a PC50 Configurator 50
Using the Local Display 50
Cover Locks 24

D
Display, Positioning the 24

E
Error Messages
Calibration 47
Configuration 59
Operation 35

H
Housing, Positioning the 24

I
Identification 3
Installation 13

M
Maintenance 61
Mounting 13

O
Operation Via Local Display 31

P
Parts Replacement 61
Piping, Installation of Flow Measurement 21

R
Reference Documents 1
Reranging 33

S
Seal Liquid, Filling the System with 23
Specifications

Product Safety 10
Standard 5

W
Wiring 25
Write Protect Jumper, Setting the 24

Z
Zero Adjustment Using External Zero Button 45

ISSUE DATES
DEC 2001
OCT 2003
APR 2004
FEB 2005
JUN 2005
FEB 2006
AUG 2006
Vertical lines to right of text or illustrations indicate areas changed at last issue date.

33 Commercial Street
Foxboro, MA 02035-2099
United States of America
http://www.foxboro.com
Inside U.S.: 1-866-746-6477
Outside U.S.: 1-508-549-2424 or contact your local Foxboro Representative.
Facsimile: (508) 549-4999

Invensys, Foxboro, and I/A Series are trademarks of Invensys plc, its subsidiaries, and affiliates. All other brand names may be trademarks of their respective owners.

Copyright 2001-2006 Invensys Systems, Inc.
All rights reserved

Printed in U.S.A. 0806

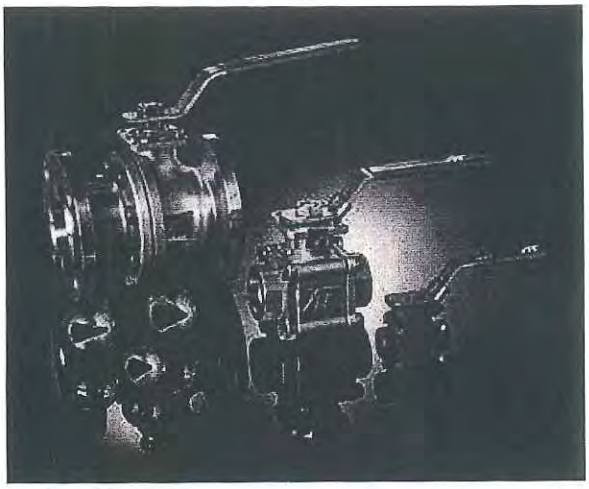

Triac "V" Series Ball Valves are ideal for achieving more precise control with the simplicity and sealing features of a ball valve. We offer them 1/2" – 4" in a 3-piece design and 1/2"– 6" flanged. The standard "V" notch options are 30, 60 & 90. While they are available as manual valves, we specialize in automating them to suit your particular control requirements.

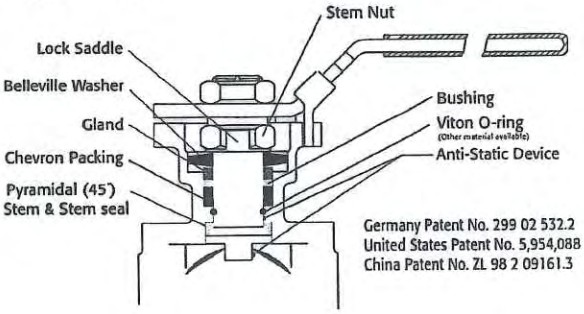

Easy to Automate!

See automated data sheets for pre-sized assemblies

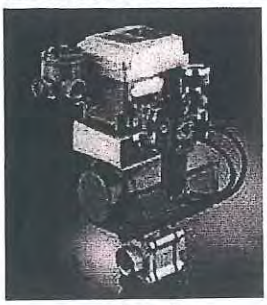

Pneumatic

Electric

TRIAC CONTROLS

"V" Series Control Port Ball Valves

Sizes 1/2" – 6"

3 Piece and 150# Flanged

316SS or WCB

30, 60 & 90 "V" Notch Standard
Others on Request

TA-Luft 2002, Sec.5.3.6.4
TA-Luft Certified for Low Emissions
VDI 2440 Nov.2000, Sec.3.3.1.3

HOW TO ORDER MANUAL VALVES

SAMPLE PART #

V8C-TH-0200-XXX

- V Port
- Valve Series
- Carbon Steel
- Threaded Ends
- Valve Size
- Seat Material
- Special Designation
- Additional Special Designation (V30, V60 or V90)

See part number matrix for itemized options

"V" Series Control Port Ball Valves

A-T Controls, Inc.
9955 International Blvd.
Cincinnati, Ohio 45246
www.atcontrols.com
PHONE (513) 247-5465
FAX (513) 247-5462
sales@atcontrols.com

VM-(A)-20130430
Copyright 2013 A-T Controls, Inc.

"V" Series

Triac "V" port control valves are available with 30V, 60V & 90V notch. V port valves offer better and more consistent control than traditional round ported ball valves. We offer this valve with the control port cast and machined into the ball, not in the seat. This allows for much better flow characteristics and eliminates the need to replace seats. The 30 option allows for finer tapered control throughout the valve rotation and the 60 & 90 offers a larger Cv in addition to controlled flow.

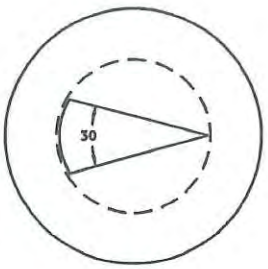

30 V-Port

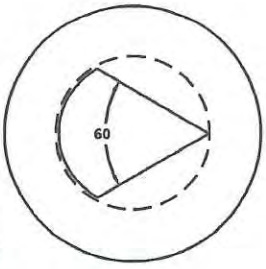

60 V-Port

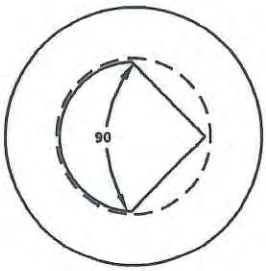

90 V-Port

The 50/50 seat is standard with all V port valves. The 50% SST powder and 50% PTFE offers both strength and superior sealing properties.

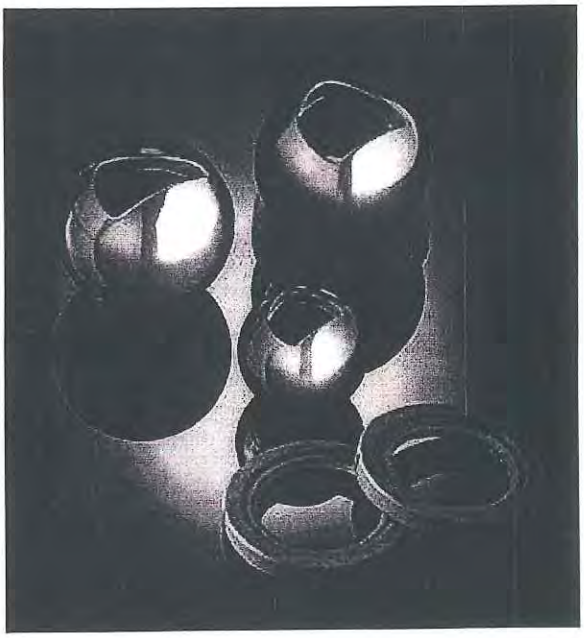

"V" Series

"V" Series Flow Coefficients- Cv Chart

Valve Size	Ball Angle	0%	15%	20%	30%	40%	50%	60%	70%	80%	90%	100%
1/2"	30	0	0.1	0.1	0.2	0.3	0.5	0.8	1.1	1.6	2.2	2.6
	60	0	0.1	0.1	0.3	0.5	0.9	1.4	2	3.3	4.4	6
	90	0	0.1	0.2	0.4	0.6	0.9	1.5	2.2	3.8	5.4	6.9
3/4"	30	0	0.1	0.2	0.5	0.7	1.1	1.8	2.4	3.3	4.5	5.4
	60	0	0.1	0.2	0.7	1	1.7	2.8	4	6.5	9	12
	90	0	0.2	0.4	0.8	1.2	2	3.1	4.6	8	11.3	14
1"	30	0	0.1	0.3	0.8	1.3	2.3	3.5	5.1	9.8	8.5	10
	60	0	0.2	0.4	1.1	1.8	3.4	5.3	7.9	12.3	15.3	21
	90	0	0.2	0.6	1.8	3.4	5.1	8.1	11.4	16	21	29
1 1/4"	30	0	0.2	0.4	1.1	2	3.7	5.5	8	10	13	15
	60	0	0.2	0.6	1.8	3	5.5	9.5	12.8	19	26	39
	90	0	0.3	0.8	2	5	8	14	19	28	39	55
1 1/2"	30	0	0.3	0.6	1.6	3	5	7.5	11	14	17	20
	60	0	0.4	0.8	2.5	4	8	13	19	27	40	52
	90	0	0.4	0.9	3.5	7	13	20	31	42	63	78
2"	**30**	**0**	**0.4**	**1.2**	**3.8**	**6**	**10**	**15**	**23**	**31**	**43**	**60**
	60	0	0.4	1.5	4.6	9	16.5	27	39	55	83	110
	90	0	0.5	2	6	12	22	35	45	70	105	135
2 1/2"	30	0	0.4	1	4	8	12	18	28	37	62	75
	60	0	0.4	1.5	5	10	21	34	53	75	103	150
	90	0	0.5	1.7	7	14	28	48	70	106	160	218
3"	30	0	0.5	1.2	4	8	14	23	33	46	65	82
	60	0	0.5	2.5	6	14	25	40	65	91	128	165
	90	0	0.7	3.5	8	18	35	60	90	135	205	310
4"	30	0	0.6	2	6	15	29	48	71	100	130	159
	60	**0**	**0.7**	**3**	**11**	**25**	**40**	**59**	**90**	**141**	**212**	**356**
	90	0	1	3.5	16	40	75	125	190	295	442	670
6"	30	0	0.9	3.2	14	33	60	103	155	220	280	350
	60	0	2	5	22	60	110	190	285	416	586	800
	90	0	3	8	35	90	160	280	425	650	970	1480
FL		0	0.96	0.95	0.94	0.93	0.92	0.9	0.88	0.86	0.82	0.75
Xt		0	0.98	0.77	0.71	0.67	0.64	0.63	0.62	0.55	0.43	0.4

AM 5/28/15

Pressure vs. Temperature Charts 1"– 6"

150# Flanged Design

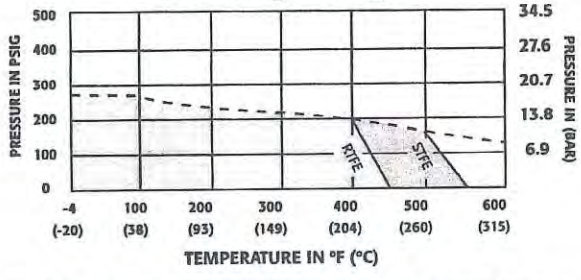

NOTE: Dotted line shows the rating for valve body. Solid line shows the rating for valve seat. Both ratings need to be consulted when determining the limitation of the valve for specific application.

Consult factory for other seat material.

3-piece Design

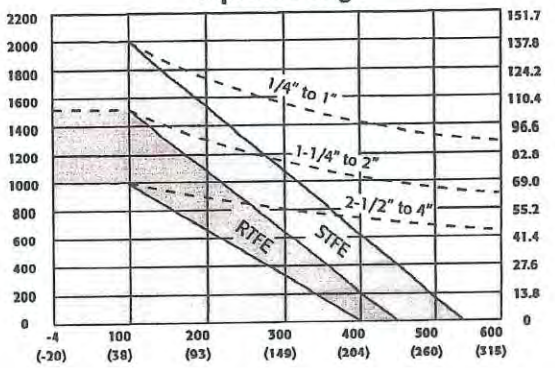

"V" Series
3 Piece

88 Series
V-Port
Control Valve

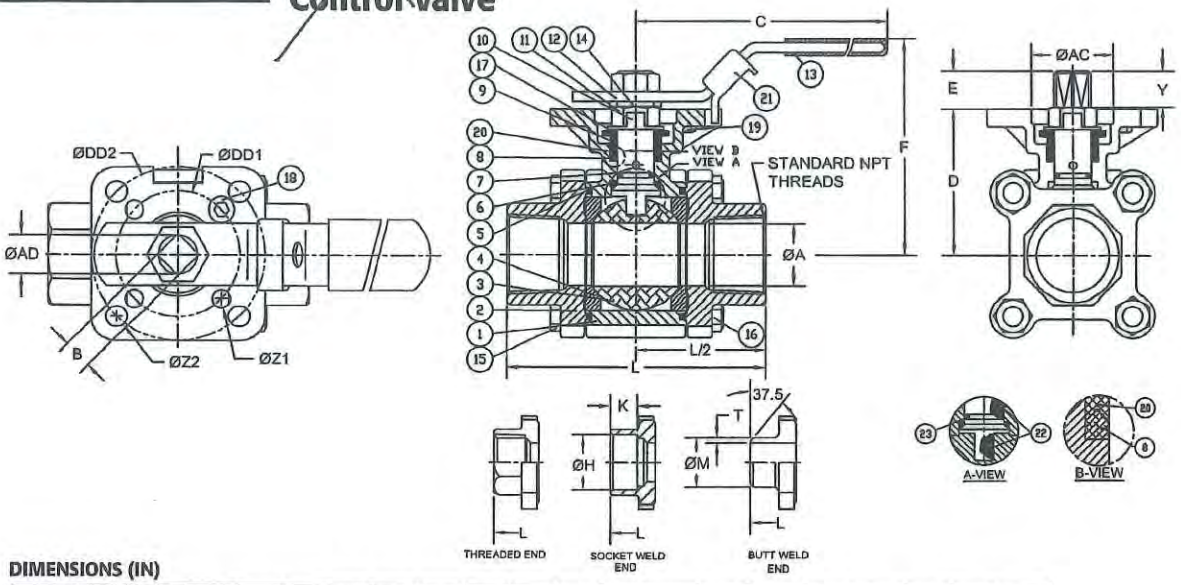

DIMENSIONS (IN)

SIZE	ØA	B	C	D	E	F	H	K	L	M	T	Y	AC	AD	DD1	DD2	ØZ2	ØZ1	(LBS)	ISO5211
1/2"	0.59	0.354	5.47	1.66	0.25	3.00	0.85	0.39	2.85	0.85	0.06	0.25	1.07	0.44	1.654	1.969	0.28	0.28	2.0	F04/F05
3/4"	0.79	0.354	5.47	1.83	0.33	3.20	1.07	0.51	3.36	1.07	0.06	0.33	1.07	0.44	1.969	2.756	0.34	0.28	3.0	F05/F07
1"	0.98	0.433	6.50	2.31	0.41	3.86	1.34	0.51	4.15	1.34	0.06	0.41	1.34	0.56	1.969	2.756	0.34	0.28	4.5	F05/F07
1-1/4"	1.26	0.433	6.50	2.46	0.41	4.00	1.69	0.51	4.37	1.68	0.06	0.41	1.34	0.56	1.969	2.756	0.34	0.28	6.0	F05/F07
1-1/2"	1.50	0.551	8.46	3.11	0.53	5.04	1.92	0.51	5.01	1.91	0.06	0.53	1.54	0.74	1.969	2.756	0.34	0.28	10.0	F05/F07
2"	1.97	0.551	8.46	3.42	0.53	5.35	2.40	0.63	5.62	2.38	0.06	0.53	1.54	0.74	1.969	2.756	0.35	0.30	13.0	F05/F07
2-1/2"	2.56	0.748	10.31	4.28	0.66	6.60	2.89	0.63	7.28	3.00	N/A	0.66	2.09	0.94	2.756	4.016	0.47	0.39	26.0	F07/F10
3"	3.15	0.748	10.31	4.63	0.70	6.96	3.54	0.63	8.07	3.54	N/A	0.70	2.09	0.94	2.756	4.016	0.47	0.39	34.0	F07/F10
4"	3.94	0.748	12.28	5.26	0.66	7.59	4.54	0.79	9.45	4.57	N/A	0.66	2.09	0.94	2.756	4.016	0.47	0.39	52.0	F07/F10

"V" Series
Flanged

90 Series
V-Port
Control Valve
Flanged

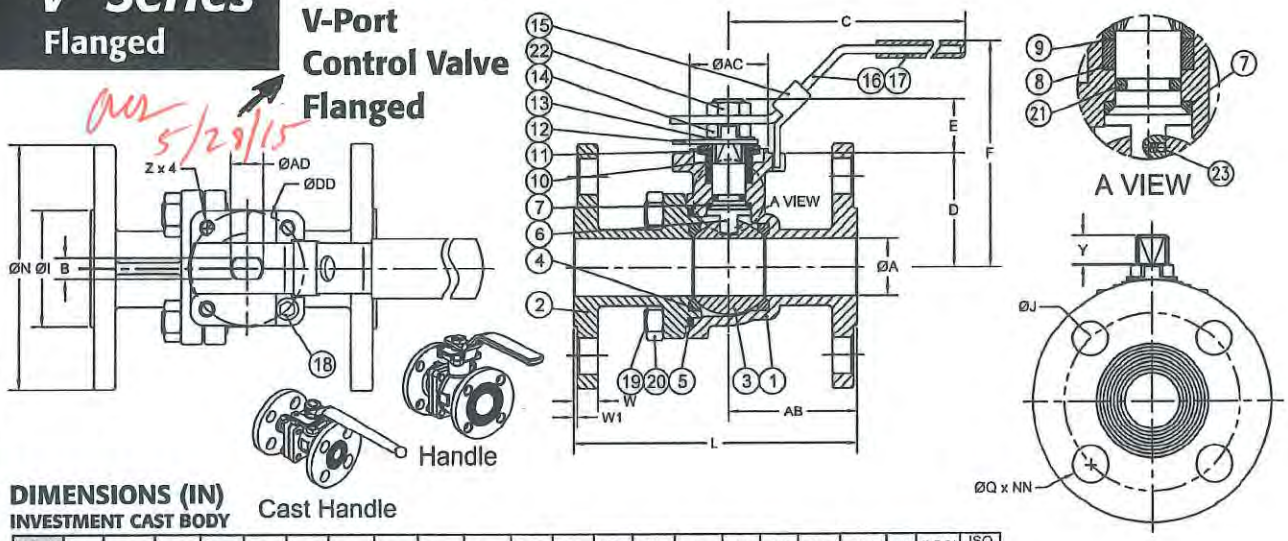

DIMENSIONS (IN)
INVESTMENT CAST BODY

SIZE	A	B	C	D	E	F	I	J	L	N	Q	W	W1	Y	Z	AB	AC	AD	DD	NN	(LBS)	ISO 5211
1/2"	0.59	0.315	6.69	1.34	0.92	3.15	1.47	2.38	4.26	3.50	0.63	0.44	0.06	0.36	M5	1.82	1.17	0.43	1.654	4	3.7	F04
3/4"	0.79	0.315	6.69	1.65	0.94	3.43	1.82	2.75	4.62	3.88	0.63	0.44	0.06	0.40	M5	2.17	1.17	0.43	1.654	4	4.6	F04
1"	0.98	0.382	8.05	1.95	0.94	3.85	2.08	3.13	5.00	4.26	0.63	0.44	0.06	0.32	M6	2.20	1.37	0.56	1.969	4	6.8	F05
1-1/2"	1.50	0.472	10.28	3.08	1.37	6.02	2.88	3.88	6.50	5.00	0.63	0.56	0.06	0.58	M8	2.81	2.17	0.75	2.756	4	13.6	F07
2"	1.97	0.472	10.28	3.40	1.37	6.38	3.62	4.75	7.02	6.00	0.75	0.63	0.06	0.58	M8	3.38	2.17	0.75	2.756	4	19.2	F07
2-1/2"	2.56	0.472	10.28	3.83	1.37	6.81	4.12	5.50	7.49	7.00	0.75	0.69	0.06	0.58	M8	3.02	2.17	0.75	2.756	4	30.0	F07
3"	3.15	0.591	13.94	4.23	1.81	6.95	5.00	6.00	8.01	7.50	0.75	0.75	0.06	0.93	M10	4.01	2.76	0.94	4.016	4	41.0	F10
4"	3.94	0.591	13.94	4.82	1.79	7.52	6.19	7.50	9.04	9.00	0.75	0.94	0.06	0.93	M10	4.06	2.76	0.94	4.016	8	65.0	F10

For 6" valve dimensions please see D9 brochure.

Viton® is a registered trademark of E.I. DuPont de Nemours.

A-T Controls reserves the right to change product designs and technical/dimensional specifications without notice.

A-T Controls, Inc.

9955 International Blvd. Cincinnati, Ohio 45246 www.atcontrols.com

PHONE (513) 247-5465 FAX (513) 247-5462 sales@atcontrols.com

TRIAC CONTROLS

WE/XE Series

WE NEMA 4, 4X & 6

XE NEMA 4, 4X, 6 & 7

SE NEMA 4, 4X, 6 & 9 IP68

Acutator Model	Output Torque	90° Cycle Time (sec)	Motor Size	Full Load Amps					Locked Rotor Amps					Handwheel Turns	Weight
				AC/DC	1 Phase		3 Phase		AC/DC	1 Phase		3 Phase			
WE / XE	In-Lbs.	60 / 50 Hz	Watts	24V	110V/60Hz	220V/60Hz	380V	440V	24V	110V/60Hz	220V/60Hz	380V	440V	N	Lbs.
-690	690	13 / 16	15	5	1.2	0.6	N/A	N/A	12.8	1.4	0.7	N/A	N/A	10	16.4
-1350	1350	21 / 25	40	6	2	1	0.28	0.36	16.9	2.5	1.2	0.75	0.66	11	36.7
-1700	1700	21 / 25	40	7.4	2.3	1.1	0.28	0.36	16.9	2.5	1.2	0.75	0.66	11	36.7
-2640	2640	26 / 31	40	8.9	2.3	1.3	0.27	0.34	30.8	2.9	1.4	1	0.87	13.5	48.6
-4400	4400	26 / 31	90	N/A	4.5	1.9	0.42	0.47	N/A	5	2.4	1.73	1.5	13.5	50.8
-5200	5200	26 / 31	90	N/A	4.5	2	0.42	0.47	N/A	5	2.4	1.73	1.5	13.5	50.8
-6900	6900	31 / 37	180	N/A	5.1	2.4	0.61	0.67	N/A	7.3	3.8	2.73	2.38	16.5	64
-10500	10500	31 / 37	180	N/A	5.4	3.4	0.61	0.67	N/A	7.3	3.8	2.73	2.38	16.5	64
-17500	17500	95 / 112	180	N/A	5.8	2.4	0.61	0.67	N/A	7.3	3.8	2.73	2.38	49.5	167
-25900	25900	95 / 112	180	N/A	6.3	3.4	0.61	0.67	N/A	7.3	3.8	2.73	2.38	49.5	167

Rev.20130924

Standard Specifications

Enclosure.....Weatherproof enclosure, IP67, TYPE 4, 4X, 6
AWWA.....Conforms to AWWA C540-93 requirements
Power supply.....110/220V AC 1PH, 220/380/440/460/480VAC, 3 Phase, 50/60Hz, ±10%
Control power supply.....110/220V AC 1PH, 50/60Hz, ±10%
Duty cycle(on-off).....70% Max 1800 start/hour
Duty cycle(modulating).....70% Max 1800 start/hour
Motor.....Class F Reversible Induction motor
Limit switches.....Open / Close, SPDT, 16A 1/2HP 125/250VAC, 0.6A 125VDC, 0.3A 250VDC
Additional limit switches.....Open / Close, SPDT, 16A 1/2HP 125/250VAC, 0.6A 125VDC, 0.3A 250VDC
Torque switches.....Open / Close, SPDT, 16A 1/2HP 125/250VAC, 0.6A 125VDC, 0.3A 250VDC (except WE/XE-690)
Stall protection.....Built-in thermal protection, Open 302°F (150°C) / Close 207°F (97°C)
Travel angle.....90° ± 10°
Indicator.....Continuous position indicator
Manual override.....Declutching mechanism
Self locking.....Provided by double worm gearing
Mechanical stopper.....Open / Close (external adjustable screws)
Space heater.....7-10W (110/220V AC) Anti-condensation
Cable Conduit.....Two 3/4" NPT
Lubrication.....Grease moly (EP type)
Terminal block.....Spring loaded lever push type
Materials.....Steel, Aluminium alloy, Al bronze, Polycarbonate
Ambient temperature.....-4°F —158°F (optional -40° Low Temp Kit)
Ambient humidity.....90% RH Max. (non-condensing)
External coating.....Anodizing treatment before Dry powder, Polyester, Munsell no. 5R 3.5/12

Options Specifications

ATEX II 2 G
EEx d IIB T4

Explosion-Proof enclosure II 2 G, E Ex d IIB T4, IP67	ATEX certification
Designed to comply with NEMA 7 Explosion Proof	
Watertight enclosure (IP68 10M 72HR)	SE/XE Series
Potentiometer unit (1K ~10K)	WE/XE Series
Proportional control unit (input, output 0~10V DC, 4~20mA DC)	WE/XE Series
Semi-Integral control unit (Local/Remote Selector Switches)	except WE/XE-690
Intelligent Digital control unit (Local/Remote Selector Switches)	except WE/XE-690
Current position transmitter (output 4-20mA DC)	WE/XE Series
Extension 120°, 180°, 270° turn	except WE/XE-17500, 25900
Duty Cycle 70% max (in Ambient temperature)	except WE/XE-690
DC motor (24V DC)	WE/XE-690C—WE/XE-2640C
AC/DC 24V control	WE/XE-690A—WE/XE-2640A
Lever plate actuator	except WE/XE-690
Signal lamp unit (red-close, green-open, yellow-over torque)	
Fire Proofing Actuator 1050 ±5°C/50 min	Consult factory
Fire Proofing Actuator 250 ±5°C/150 min	Consult factory

Explosion Proof Enclosure
- ATEX Certification
- Designed to comply with NEMA 7 Explosion Proof

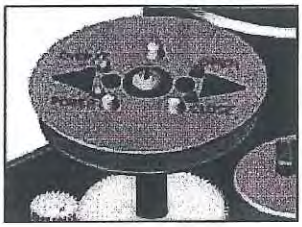

Signal LED Unit
Large indicator with monitoring lamps (Over torque, open and close)

Fire Proofing Acuator

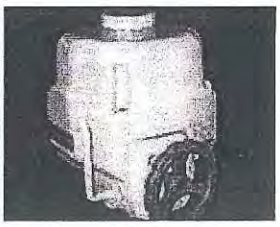

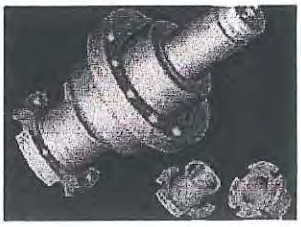

Removable Drive Bushing

High Speed Electric Actuators

Model	Output Torque	Speed (60Hz)	Torque Switch Setting
WE-690*HS2	290 In-Lbs	4.5 seconds	N/A
WE-690*HS1	400 In-Lbs	7.0 seconds	N/A
WE-1350*HS2	840 In-Lbs	7.0 seconds	1,350 In-Lbs
WE-1350*HS1	1,200 In-Lbs	10.5 seconds	1,350 In-Lbs
WE-2640*HS2	1,390 In-Lbs	8.5 seconds	2,640 In-Lbs
WE-2640*HS1	2,050 In-Lbs	13.0 seconds	2,640 In-Lbs
WE-4400*HS2	2,350 In-Lbs	8.5 seconds	4,400 In-Lbs
WE-4400*HS1	3,500 In-Lbs	13.0 seconds	4,400 In-Lbs
WE-6900*HS2	4,500 In-Lbs	10.5 seconds	6,900 In-Lbs
WE-10500*HS1	6,700 In-Lbs	15.5 seconds	10,500 In-Lbs
WE-17500*HS2	12,000 In-Lbs	31.0 seconds	17,500 In-Lbs
WE-25900*HS1	18,000 In-Lbs	47.0 seconds	25,900 In-Lbs

Motor specifications remain the same.
*Must specify voltage - see part number matrix on back cover.

TRIAC CONTROLS

Modulating Options for WE-500-25900

AS 5/28/15

Modulating Cards

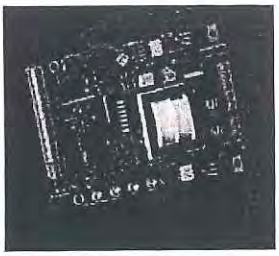

TMC3 Electronic Modulating Card

- Auto Calibration for Easy Setup
- 10 Bit Microprocessor controller for precise positioning and control
- 4-20mA, 1-5mA, 0-10 VDC, 1-5 VDC, 0-135 Ohm or Command Signal Potentiometer
- TMC3 Can be programmed to Fall in Place, Fail CW, or Fail CCW on loss of command signal
- Characterized Control-Linear, quick opening (Square root), or Equal Percentage (Square)
- OnBoard 4-20 mA transmitter (standard)

TDC Electronic Modulating Card

- 450 Point Resolution, 16 Bit Micro Processor
- Auto Calibration
- Adaptive Control Feature (continuously adjusts for load and actuator conditions and positions to ±0.1°)
- Dynamic Breaking
- 4-20mA, 1-5V, 0-5V, 0-10V
- Programmed to Fail in place, Fail CW, or Fail CCW on loss of command signal
- 4-20mA Feedback Transmitter (Optional)

EPC Electronic AS-i Network Card

- AS-i Version 2.1
- 120 VAC or 24VDC Power
- Emergency Override-Normal Operation is overridden when actuator is driven to either Ch or CCh position on command
- Built in Emergency Position Command (EPC) overrides normal operation and automatically operates the valve into either the open or closed position (normally this is the closed position) as defined in the user specifications
- Signal Sentinel continuously monitors the EPC system offering additional failsafe backup in the event of an unexpected local event

Boiler Feedwater Application

- Control signal 4-20mA, specify these parts: LRC-100, POT-102 & Extended Bracket.
- Control signal 0-135 ohm, specify these parts: TDC-100, XMA-108, POT-102 & Extended Bracket

Other Network Cards Available Upon Request

TRIAC CONTROLS

Dimensional Drawing

WE/XE-690, 1350, 1700, 2640, 4400, 5200, 6900, 10500

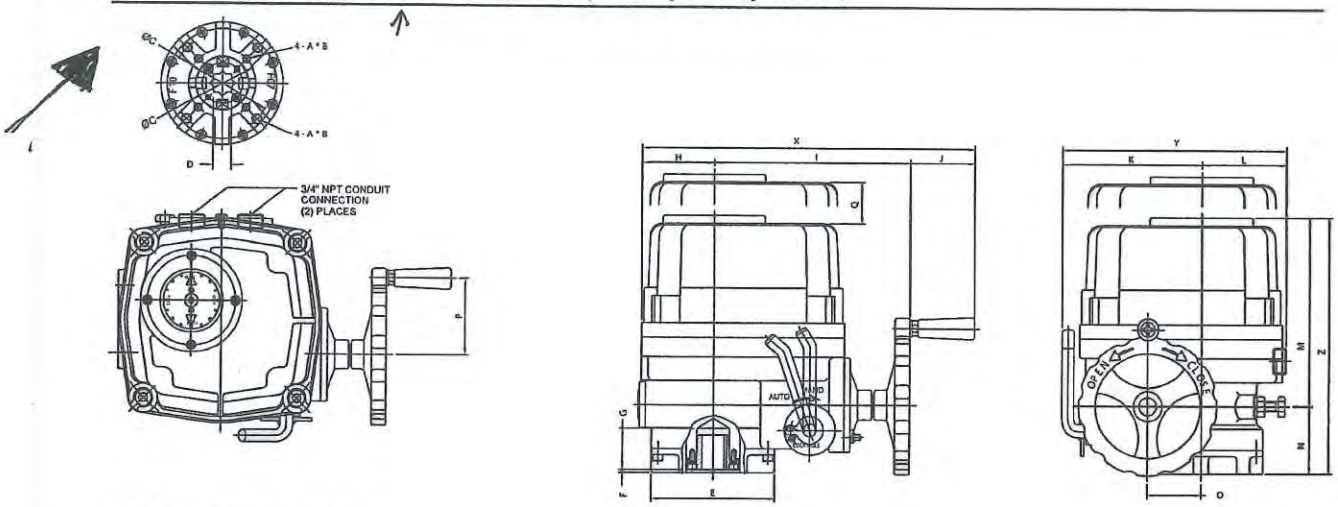

WE/XE-17500, 25900

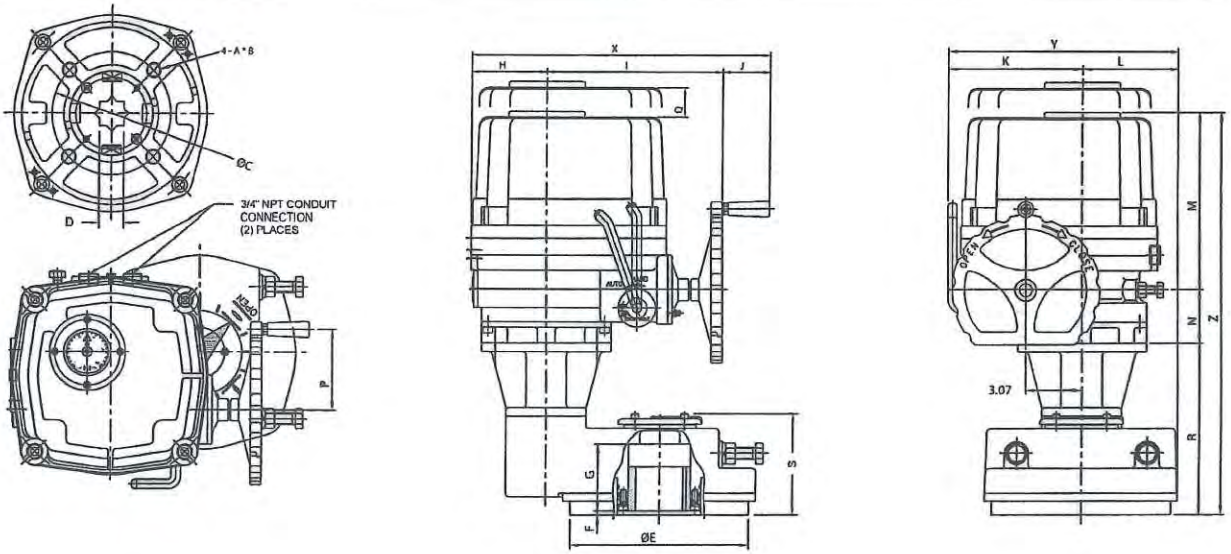

Dimensions

Units (inches)

Model WE/XE	ISO 5211	A	B	C	D sq	E	F	G	H	I	J	K	L	M	N	O	P	Q	R	S	X	Y	Z
-690	F07	M8	0.47	2.756	0.669	3.46	0.12	1.26	1.97	6.18	2.01	3.94	2.76	6.57	2.09	1.57	2.36	4.72	-	-	10.16	6.69	9.25
-1350	F07/F10	M8/M10	0.47/0.59	2.756/4.016	0.748	4.92	0.12	1.65	2.87	7.87	2.56	5.59	3.43	7.56	2.68	2.13	3.07	6.30	-	-	13.31	9.02	10.55
-1700	F07/F10	M8/M10	0.47/0.59	2.756/4.016	0.748	4.92	0.12	1.65	2.87	7.87	2.56	5.59	3.43	7.56	2.68	2.13	3.07	6.30	-	-	13.31	9.02	10.55
-2640	F10/F12	M10/M12	0.59/0.71	4.016/4.921	1.063	5.83	0.12	1.93	3.23	8.70	2.56	6.30	3.90	8.70	2.72	2.56	3.07	7.09	-	-	14.49	10.20	11.42
-4400	F10/F12	M10/M12	0.59/0.71	4.016/4.921	1.063	5.83	0.12	1.93	3.23	8.70	2.56	6.30	3.90	8.70	2.72	2.56	3.07	7.09	-	-	14.49	10.20	11.97
-5200	F10/F12	M10/M12	0.59/0.71	4.016/4.921	1.063	5.83	0.12	1.93	3.23	8.70	2.56	6.30	3.90	8.70	2.72	2.56	3.07	7.09	-	-	14.49	10.20	11.97
-6900	F14	M16	0.95	5.512	1.417	7.01	0.12	2.24	4.06	9.53	2.56	7.32	4.37	9.49	2.91	3.07	4.33	8.27	-	-	16.14	11.69	12.99
-10500	F14	M16	0.95	5.512	1.417	7.01	0.12	2.24	4.06	9.53	2.56	7.32	4.37	9.49	2.91	3.07	4.33	8.27	-	-	16.14	11.69	12.99
-17500	F16	M20	1.18	6.496	1.417	9.65	0.20	3.54	4.06	9.53	2.56	7.32	5.24	9.49	2.91	3.07	4.33	8.27	9.17	5.24	16.14	12.56	22.17
-25900	F16	M20	1.18	6.496	1.417	9.65	0.20	3.54	4.06	9.53	2.56	7.32	5.24	9.49	2.91	3.07	4.33	8.27	9.17	5.24	16.14	12.56	22.17

Wiring Connection

WE/XE-1350 thru 25900 *Two Position 115 VAC/1 Ph* SE 1080

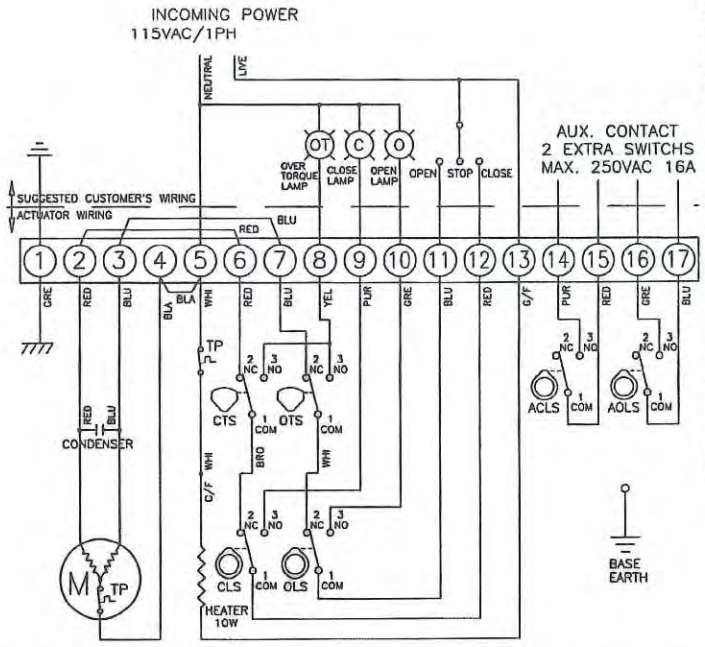

TORQUE AND LIMIT SWITCH OPERATION			
SWITCH	CLOSE ←	INTERMEDIATE	→ OPEN
CLS 1–2			
CLS 1–3			
OLS 1–2			
OLS 1–3			
ACLS 1–2			
ACLS 1–3			
AOLS 1–2			
AOLS 1–3			
CTS 1–3	* CLOSING TORQUE SWITCH INTERRUPTS CONTROL IF MECHANICAL OVERLOAD OCCURS DURING CLOSING CYCLE		
OTS 1–3	* OPENING TORQUE SWITCH INTERRUPTS CONTROL IF MECHANICAL OVERLOAD OCCURS DURING OPENING CYCLE		

SYMBOL	DESCRIPTION	RATING
CLS	CLOSE LIMIT SWITCH	250VAC 10A
OLS	OPEN LIMIT SWITCH	250VAC 10A
CTS	CLOSE TORQUE SWITCH	250VAC 10A
OTS	OPEN TORQUE SWITCH	250VAC 10A
ACLS	AUX. CLOSE LIMIT SWITCH	250VAC 16A
AOLS	AUX. OPEN LIMIT SWITCH	250VAC 16A
TP	THERMAL PROTECTOR	250VAC 15A

*EACH ACTUATOR SHOULD BE POWERED THROUGH IT'S OWN INDIVIDUAL SWITCH OR RELAY CONTACTS TO PREVENT CROSS FEED BETWEEN TWO OR MORE ACTUATORS.

WEM/XEM-1350 thru 25900 *Proportional 115 VAC/1 Ph* SE 1052

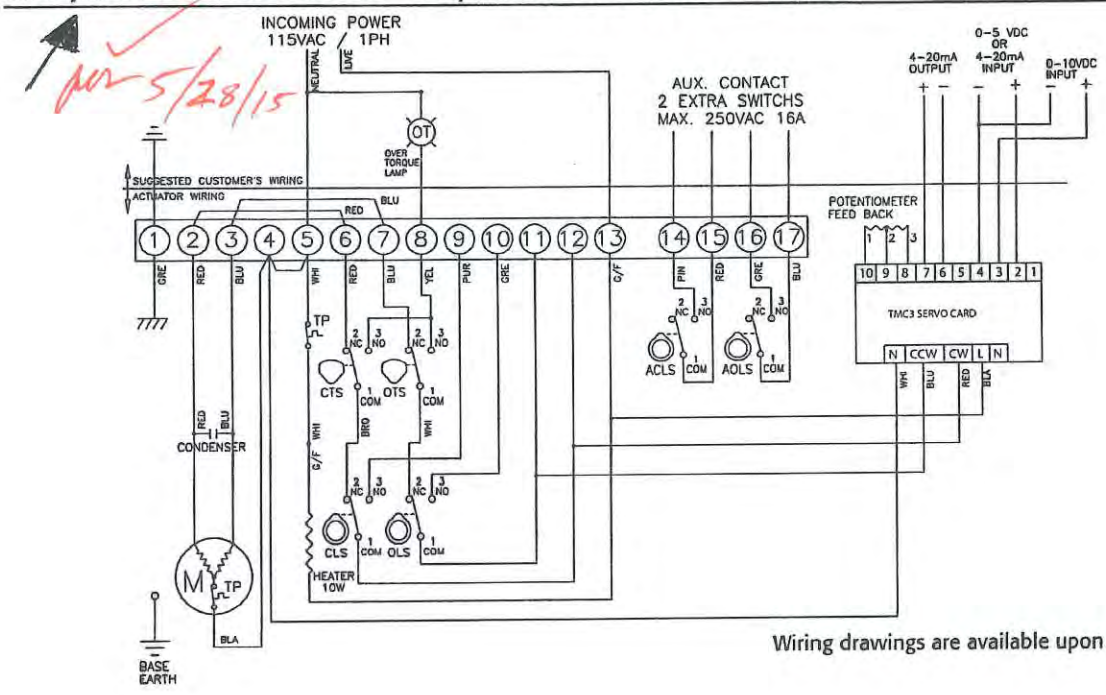

Wiring drawings are available upon request.

TRIAC CONTROLS

Triac WE / XE Series Part Number Reference

WEM-1700 XX

5/28/15

Model	
WE	Weather Proof, IP67, TYPE 4, 4X, 6
XE	Explosion Proof Design, ATEX & IECEx Ex d IIB T4, IP67
FE	Fire Proof Unit (1050°F for 50 Min)
SE	Submersible unit (IP68, 10 meters for 72 Hours)

Control	
Blank	(2) Position Control (Open / Close)
M	Standard Modulating Control Card (TMC3)
D	TDC-100 Modulating Card (Provides 450 points of resolution)
P	Profibus DP
R	Modbus (RS485)
L	Boiler Feed (4-20mA)
S	Boiler Feed (0-135ohm)

Actuator Size	
-350	350 In-Lbs
-350HS	270 In-Lbs
-500	500 In-Lbs
-690	690 In-Lbs
-1350	1350 In-Lbs
-1700	1700 In-Lbs
-2640	2640 In-Lbs
-4400	4400 In-Lbs
-5200	5200 In-Lbs
-6900	6900 In-Lbs
-10500	10500 In-Lbs
-17500	17500 In-Lbs
-25900	25900 In-Lbs
-53000	53000 In-Lbs
-80000	80000 In-Lbs

Motor		
X	115VAC/1PH	Place holder only - Omit when at end of part number
A	24V AC/DC	(N/A 4400 - 25900)
B	12VDC	
C	24VDC*	(N/A 4400 - 25900)
	*Requires additional relays for customer supplied wiring	
D	24VAC/1PH	(N/A 4400 - 25900)
E	220VAC/1PH	
F	220VAC/3PH	(N/A 500, 690)
G	380VAC/3PH	(N/A 500, 690)
H	440VAC/3PH	(N/A 500, 690)
J	460VAC/3PH	(N/A 500, 690)
K	480VAC/3PH	(N/A 500, 690)

Options		
X	No options	Place holder only - Omit when at end of part number
2	ADM-100 Control Board - 24 VDC On/Off	
B	Semi-integral Control Unit	(N/A 500, 690)
C	Intelligent Digital Control Unit	(N/A 500, 690)
D	Local / Remote Control Switches	(Only 500, 690)
E	Electronic Speed Control Module - 115 VAC only	
F	2 Wire Control & Speed Control - 115 VAC only	
G	End of travel time delay (same in both directions)	
HS1/HS2	See High Speed Options	
R	2 Wire Control, Relay - 115 VAC control voltage	
S	2 Wire Control, Relay - 24 VAC control voltage	
T	2 Wire Control, Relay - 24 VDC control voltage	

Miscellaneous Options Note: Add all miscellaneous options to end of part number		
Blank	No options	
T	4-20mA Transmitter	
N	1000 Ohm Potentiometer	
O	5000 Ohm Potentiometer	
P	10K Ohm Potentiometer	
X	120° Operation	(N/A 17500 or 25900)
Y	180° Operation	(N/A 17500 or 25900)
Z	270° Operation	(N/A 17500 or 25900)
L	-40° Low Temp Kit	
I	Position Indicator Lamps (Open, Close, Torque)	(N/A 500, 690)
S	(2) additional limit switches (6 total)	(N/A 500, 690)
	Floor Drive Mounting Configuration - See Floor Drive Catalog	

A-T Controls, Inc.

9955 International Blvd. PHONE (513) 247-5465
Cincinnati, Ohio 45246 FAX (513) 247-5462
www.atcontrols.com sales@atcontrols.com

WE-20150508
Copyright 2013 A-T Controls, Inc.
LIT0021

Examples

WEM-1350
(Weather Proof Housing, Modulating Control, model size 1350, 115VAC / 1PH)

WEM-1350XXT
(Weather Proof Housing, Modulating Control, model size 1350, 115VAC / 1PH, 4-20mA Transmitter)

AT Controls reserves the right to change product designs and technical/dimensional specifications without notice.

CERTIFIED LEAD FREE Ductile Iron Check Valve

NSF/ANSI 372

- ASTM A536 Ductile iron body. • Silicon bronze poppet.
- Stainless steel spring and nut. • Non-toxic polyester powder coat paint.

Standard Stemmed Poppet Check Valve

Stemmed Part No.	Size	Wt.Ea. lbs.	Ctn Qty
653SB	1	1.3	1
654SB	1-1/4	1.7	1
655SB	1-1/2	2.1	1
680SB	2	3.5	1
669SB	2-1/2	15.3	1
670SB	3	11.7	1
681SB	3*	13.1	1
671SB	4	21.5	1
674SB	5	33.7	1
672SB	6	44.5	1
683SB	6*	60.2	1
673SB	8	63.7	1
689SB	10	110.0	1

* High Flow Design

Stemless Poppet Check Valve

Stemless Part No.	Size	Wt.Ea. lbs.	Ctn Qty
2653SB	1	1.3	1
2654SB	1-1/4	1.7	1
2655SB	1-1/2	2.1	1
2680SB	2	3.5	1
-	2-1/2	15.3	1
-	3	11.7	1
2681SB	3*	13.1	1
2671SB	4	21.5	1
2674SB	5	33.7	1
-	6	44.5	1
2683SB	6*	60.2	1
-	8	63.7	1
-	10	110.0	1

* High Flow Design

CERTIFIED LEAD FREE Ductile Iron Check Valve with Break-off Plug

NSF/ANSI 372

- 1/2" Break-off plug standard. • 3/8" Break-off plug optional.

Check Valve (with Break-off Plug)

Stemmed Part No.	Size	Wt.Ea. lbs.	Ctn Qty
668SB	2-1/2	15.3	1
675SB	3	12.3	1
685SB	3*	13.4	1
676SB	4	21.3	1
679SB	5	34.0	1
677SB	6	44.7	1
687SB	6*	60.4	1
678SB	8	64.0	1
690SB	10	110.3	1

* High Flow Design

Stemless Check Valve (with Break-off Plug)

Stemless Part No.	Size	Wt.Ea. lbs.	Ctn Qty
-	2-1/2	15.3	1
-	3	12.3	1
2685SB	3*	13.4	1
2676SB	4	21.3	1
2679SB	5	34.0	1
-	6	44.7	1
2687SB	6*	60.4	1
-	8	64.0	1
-	10	110.3	1

* High Flow Design

CERTIFIED LEAD FREE Break-off Plug Only

- 303 Stainless steel.
- The break-off plug, when manually broken, allows water to drain from drop pipe before removal of pump.

Part No.	Size	Total Length	Wt.Ea. lbs.	Carton Quantity
4061	1/2	3.12	.5	1
4068	3/8	3.0	.4	1
4069**	1/2	6.0	.8	1

** For 8 & 10" Valves

*Silicon bronze components contain less than .05% (1/20 of 1%) Lead.

Check Valves furnished with Buna-N O-Ring, stainless steel spring, stainless steel washer, and stainless steel locknut. All valves 3/4" through 1-1/2" have a working pressure of 400 psi. All valves 2" and larger have a working pressure of 600 psi.

MADE IN U.S.A.

ASHCROFT®
Trust the shield.™

CI Series Bimetal Thermometers

TI 3001 Dial Thermometer

FEATURES

- *1% full span accuracy ASME B40.200 (ASME B40.3 Grade A)*
- *Maximum ambient temp. is 200°F (94°C)*
- *Hermetically sealed case to prevent entry of moisture, interior corrosion and coil freeze-up.*
- *Tamper resistant.*
- *Maxivison® dial allows readability from any angle without parallax error.*
- *Silicone coil dampening (up to 400°F) provides vibration dampening and improves response time.*
- *All-welded stainless steel construction*
- *Heavy-Duty glass lens*
- *Protection IP 65*
- *Five year limited warranty*

MADE IN THE USA

RoHS 2002/95/EC Compliant

SPECIFICATIONS

Ashcroft® Series:	CI
Dial Sizes:	2,″ 3,″ 5″
Stem Length:	2½″-24″ (1)
Case & Stem:	304 stainless steel, hermetically sealed
Stem Dia:	.250″
Window:	Heavy-duty glass, plastic or shatter-proof glass optional
Dial:	Maxivision®, black figures on white background
Pointer:	Black
Connection:	Plain, pointed plain, ¼ NPT, ½ NPT
Connection Location:	Lower, Rear
Ranges:	–80/120°F-200/1000°F –50/50°C-100/500°C

Options:

Code	Description
C4	Individual calibration cert.
XCS	Dual scale (2)
XDM	Dial marking
XNH	Stainless steel tag
XNN	Paper tag
XPD	Plastic window
XSG	Shatter proof glass
X3B	⅜″ stem dia. with ½ NPT
X02	¼ NPT when ½ NPT is standard (3)
XS1	Silicone free

(1) Special or longer length available, consult factory
(2) Dual scale avilable with 3″ and 5″ case only
(3) Only available on rear connection

Thermowells must be used on all pressure or velocity applications, to protect the stem of thermometer from corrosion and physical damage, and to facilitate removal of the thermometer without disturbing the process. Maximum ambient temperature is 200°F (95°C).

as 5/7/15

Ashcroft Part Number:
30CI60R 025 0/250F

HOW TO ORDER

30	CI	60	R	040	0/250°F	XNH

Dial Size: 3″ Code 30
Case Style: CI
Stem Connection: ½ NPT Code 60
Stem Location: Rear Code R
Stem Length: 4″ Code 040
Range: Code 0/250°F
Options: Stainless steel tag

ISO 9001
REGISTERED FIRM
BULLETIN BM-CI

All specifications are subject to change without notice.
All sales subject to standard terms and conditions.
© 2014 Ashcroft Inc. Rev. 07/14

Ashcroft Inc., 250 East Main Street, Stratford, CT 06614 USA
Tel: 203-378-8281 • Fax: 203-385-0408
email: info@ashcroft.com • www.ashcroft.com

ASHCROFT®
Trust the shield.™

CI Series Bimetal Thermometers

CI Series selection table

Case	Size		Stem			Stem Lengths Available			Temperature Range					
Dial	Code	Style Code	Conn.	Code	Location	Code	"S" Length (inches)	Code	°F* Fahrenheit	°/Div.	Fig. Inter.	°C Celsius	°/Div.	Fig. Inter.
2″	20	CI	Plain	40	Rear	R	2½	025	−80/120	2	20	−50/50	1	10
			Pointed	50					−20/120††			−20/120	2	20
			¼ NPT	60					30/130††	1	10	0/50††	1	5
3″	30		½ NPT	60	Rear	R	4	040	0/200	2	20	0/100	1	10
							6	060						
					Lower	L	9	090	0/250		50	10/150	2	20
							12	120	50/300			0/200		
5″	50		½ NPT	60	Rear	R	15	150	50/400	5	50	0/300††	5	50
							18	180	50/550			50/450**†		
							24	240	200/700†			100/500**†		
					Lower	L			100/800†					
									200/1000**†	10	100			

CI Dimensions

Case Series	Dial Size	Connection Location	A	B	C	D	E	S	NPT	Hex	Weight in ounces[3] S − 2½″
CI	2″	Rear (Plain)	2 3/32 (53)	3/8 (10)	3/8 (8)	–	–	–[2]	–	11/16	4½
CI	2″	Rear (Plain, pointed stem)	2 3/32 (53)	3/8 (10)	5/16 (8)	–	–	–[2]	–	11/16	4½
CI	2″	Rear (Threaded)	2 3/32 (53)	3/8 (10)	3/8 (8)	–	–	–[2]	¼	11/16	4½
CI	3″	Rear	3 3/32 (80)	19/32 (15)	3/8 (8)	–	–	–[2]	½	⅞	7
CI	3″	Lower	3 3/32 (80)	1 27/32 (47)	–	2⅝ (67)	¼ (6)	–[2]	½	⅞	11
CI	5″	Rear	5 1/32 (128)	23/32 (18)	3/8 (8)	–	–	–[2]	½	⅞	16
CI	5″	Lower	5 1/32 (128)	1 15/16 (49)	–	3⅝ (92)	¼ (6)	–[2]	½	⅞	26

NOTES:
1. Figures in parenthesis ( ) are in millimeters. All other dimensions are in inches.
2. Standard "S" dimensions are 2½, 4, 6, 9, 12, 15, 18 and 24 inches. Standard stem diameter is ¼ inch.
3. Add 1 oz. for every 2 inches of stem length.

CI Series dual scale ranges

Dual scales are available in 3″ and 5″ dial sizes in the following ranges:

Inner		Outer
−80/120°F	and	−60/50°C
−40/120°F	and	−40/50°C
−40/160°F	and	−40/70°C
−20/120°F	and	−30/50°C††
0/200°F	and	−20/90°C
0/250°F	and	−20/120°C
30/130°F	and	0/55°C††
50/300°F	and	10/150°C
50/400°F	and	10/200°C
50/550°F	and	10/290°C
100/800°F	and	50/400°C†
200/700°F	and	100/370°C†
200/1000°F	and	100/550°C**†

Overtemperature limits

Top of Range °F	Maximum Over Temperature
up to 250	100% of span
251/550	50% of span
551/1000	800°F **

*Dual scale ranges available for all standard °F ranges (3″ and 5″ case only)
**Satisfactory for continuous service up to 800°F or 425°C. Can be used for intermittent service from 800 to 1000°F, or 425 to 500°C. Use Ashcroft Duratemp® thermometers for ranges above and below those listed above.
†Minimum stem length for these ranges is 4″.
††Minimum stem length for lower connection is 4″.

DIMENSIONS

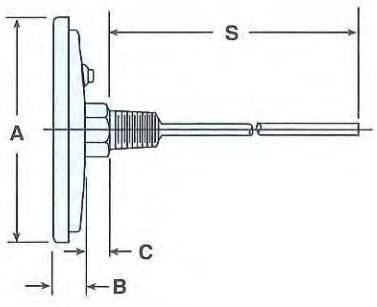

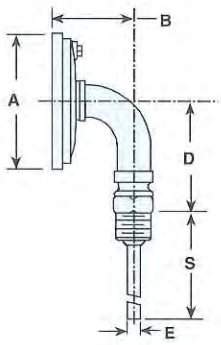

ISO 9001
REGISTERED FIRM
BULLETIN BM-CI

All specifications are subject to change without notice.
All sales subject to standard terms and conditions.
© 2014 Ashcroft Inc. Rev. 07/14

Ashcroft Inc., 250 East Main Street, Stratford, CT 06614 USA
Tel: 203-378-8281 • Fax: 203-385-0408
email: info@ashcroft.com • www.ashcroft.com

Mechanical Pressure Measurement

Bourdon Tube Pressure Gauges Stainless Steel Series

Type 232.53 - Dry Case

Type 233.53 - Liquid-filled Case

0-160 psi RANGE

WIKA Datasheet 23X.53

Part #: 52495728 (233.53 2 100PSI 1/4 B)

Applications

- With liquid filled case for applications with high dynamic pressure pulsations or vibration
- Suitable for corrosive environments and gaseous or liquid media that will not obstruct the pressure system
- Process industry: chemical/petrochemical, power stations, mining, on and offshore, environmental technology, mechanical engineering and plant construction

Special features

- Excellent load-cycle stability and shock resistance
- All stainless steel construction
- Positive pressure ranges to 15,000 psi

Bourdon Tube Pressure Gauge Model 232.53

Standard Features

Design
ASME B40.100 & EN 837-1

Sizes
2", 2½" & 4" (50, 63 and 100 mm)

Accuracy class
2" & 2½": ± 2/1/2% of span (ASME B40.100 Grade A)
4": ± 1.0% of span (ASME B40.100 Grade 1A)

Ranges
Vacuum / compound to 200 psi
Pressure from 15 psi to 15,000 psi 0-160 psi
or other equivalent units of pressure or vacuum

Working pressure

2" & 2½":	Steady:	3/4 scale value
	Fluctuating:	2/3 full scale value
	Short time:	full scale value
4 ":	Steady:	full scale value
	Fluctuating:	0.9 x full scale value
	Short time:	1.3 x full scale value

Operating temperature
Ambient: -40°F to +140°F (-40°C to +60°C) - dry
-4°F to +140°F (-20°C to +60°C) - glycerine filled
-40°F to +140°F (-40°C to +60°C) - silicone filled
Medium: +212°F (+100°C) maximum

Temperature error
Additional error when temperature changes from reference temperature of 68°F (20°C) ±0.4% for every 18°F (10°C) rising or falling. Percentage of span.

Weather protection
Weather tight (NEMA 4X / IP65)

Pressure connection
Material: 316L stainless steel
Lower mount (LM) or center back mount (CBM)
Lower back mount (LBM) for 4" size
1/8" NPT, 1/4" NPT or 1/2" NPT limited to wrench flat area

Bourdon tube
Material: 316L stainless steel

2" & 2½":	≤ 1,000 PSI: C-type,
	≥ 1,500 PSI: helical type
4":	≤ 1,500 PSI: C-type,
	≥ 2,000 PSI: helical type

Movement
Stainless steel

Dial
White aluminum with black lettering, 2" and 2½" with stop pin

WIKA®
Part of your business

Pointer
Black aluminum

Case
304 stainless steel with vent plug and SS crimp ring
Welded case / socket connection

Window
Polycarbonate

Liquid filling
Glycerine 99.7% - Type 233.53

Optional extras

- SS restrictor
- SS front flange
- SS rear flange (2½" and 4" only)
- Zinc-plated steel or SS u-clamp bracket (field installable - see note)
- Cleaned for oxygen service
- Red drag pointer or mark pointer (2½" and 4" only)
- External zero adjustment (4" size only)
- Other pressure connections
- Silicone or Fluorolube case filling
- Other pressure scales available: bar, kPa, MPa, kg/cm² and dual scales

Note: U-clamp bracket for 2" must be ordered with gauge

Dimensions

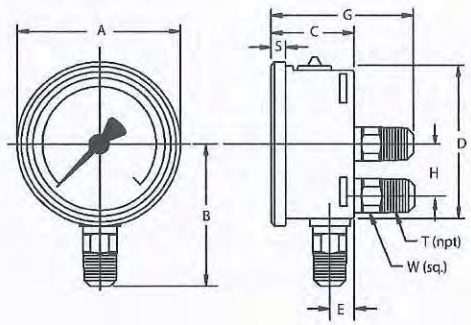

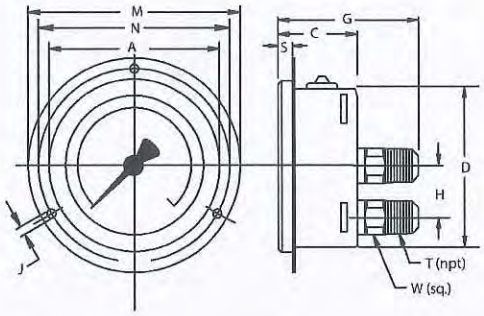

front flange

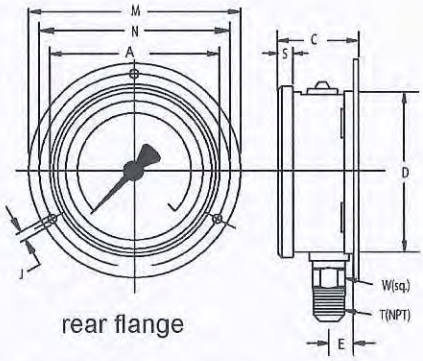

rear flange

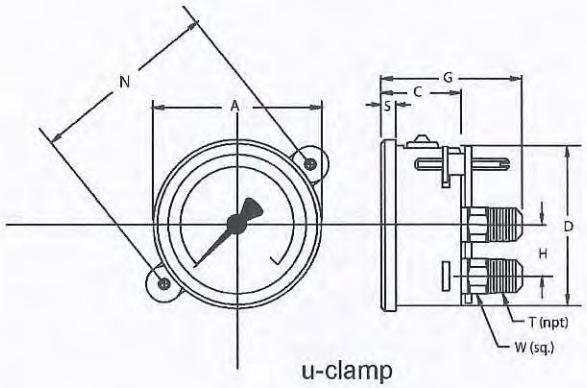

u-clamp

Size		A	B	C	D	E	G	H	J	M	N	S	T	W	Weight
2"	mm	55	48	30	50	12	53	-	3.6	71	60	5.5		14	0.27 lb. dry
	in	2.17	1.89	1.18	1.97	0.47	2.09	-	0.14	2.80	2.36	0.22	1/4"	0.55	0.33 lb. filled
2.5"	mm	69	54	32	62	13	54	-	3.6	88.1	75	6.5		14	0.36 lb. dry
	in	2.69	2.13	1.26	2.45	0.51	2.13	-	0.14	3.47	2.95	0.26	1/4"	0.55	0.44 lb. filled
4"	mm	107	87	48	100	15.5	79.5	30	4.8	132	116	8		22	1.10 lb. dry
	in	4.21	3.43	1.89	3.91	0.61	3.13	1.18	0.19	5.20	4.57	0.31	1/2"	0.87	1.76 lb. filled

Recommended panel cutout is dimension D + 1 mm

WIKA Datasheet 23X.53 05/2009

Ordering information
Pressure gauge model / Nominal size / Scale range / Size of connection / Optional extras required
Specifications and dimensions given in this leaflet represent the state of engineering at the time of printing.
Modifications may take place and materials specified may be replaced by others without prior notice.

WIKA Instrument Corporation
1000 Wiegand Boulevard
Lawrenceville, GA 30043
Tel (770) 513-8200 Toll-free 1-888-WIKA-USA
Fax (770) 338-5118
E-Mail info@wika.com
www.wika.com

ARV Numerous air vacuum relief valves

ar 5/6/15

COMBINATION AIR VALVES (SINGLE BODY TYPE)

MODEL NOS. 201C.2 - 202C.2 - 203C.2 - 204C.2

STANDARD MATERIALS OF CONSTRUCTION

PART NO.	PART NAME	MATERIAL
1	BODY	CAST IRON ASTM A126, CLASS B
2	COVER	CAST IRON ASTM A126, CLASS B
3	BAFFLE	CAST IRON ASTM A126, CLASS B
4	SEAT	BUNA-N
5	FLOAT	STAINLESS STEEL T316, ASTM A240
6	GASKET	COMPRESSED NON-ASBESTOS FIBER
7	COVER BOLT	ALLOY STEEL SAE, GRADE 5
8	RETAINING SCREWS	STAINLESS STEEL T316, ASTM F593
9	GUIDE BUSHING	STAINLESS STEEL T316, ASTM A240
10	FLOAT ARM	STAINLESS STEEL T316, ASTM A240
11	ORIFICE BUTTON	STAINLESS STEEL & BUNA-N
12	PIVOT PIN	STAINLESS STEEL T316, ASTM A276
13	RETAINING RING	STAINLESS STEEL PH 15-7 MO
14	PIPE PLUG	STEEL
15	CUSHION	BUNA-N
16	PLUG	STAINLESS STEEL T316, ASTM A276
17	FLOAT RETAINER	STAINLESS STEEL T316, ASTM F880
18	LOCK NUT	STAINLESS STEEL T316, ASTM F594
29	CUSHION RETAINER	STAINLESS STEEL T316, ASTM F593
30	WASHER	STAINLESS STEEL T316, ASTM A240
34	LOCK WASHER	STAINLESS STEEL T316, ASTM A240

NOTE: ALL SPECIFICATIONS AS LAST REVISED.

Revised 1-29-03

MATERIALS OF CONSTRUCTION	DATE 2/2/69
VAL-MATIC® VALVE AND MANUFACTURING CORP.	DRWG. NO. VM-201C-M

ABL 5/6/15

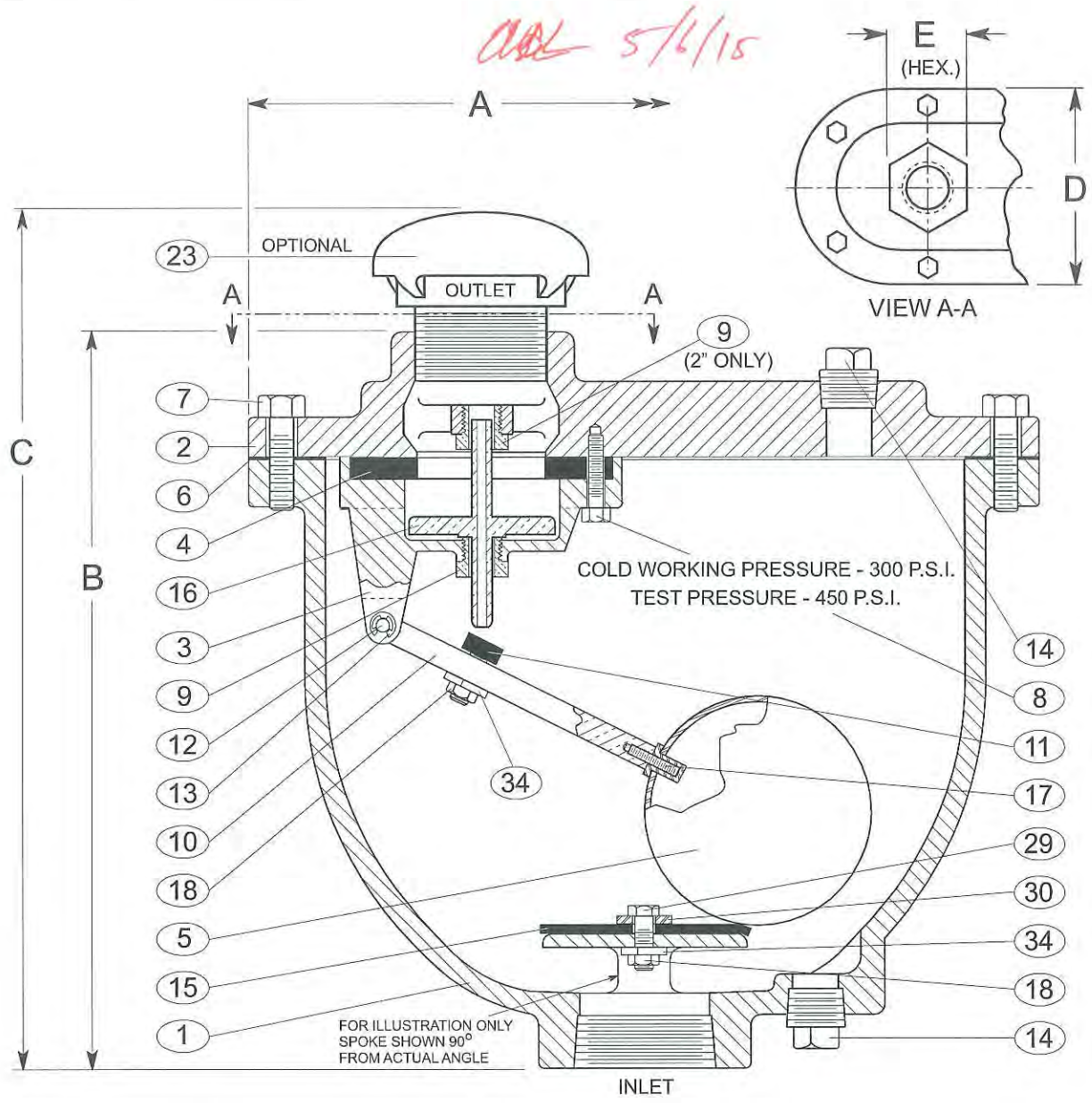

1	BODY	5	FLOAT	9	BUSHING	13	RETAINING RING	18	LOCK NUT
2	COVER	6	GASKET	10	FLOAT ARM	14	PIPE PLUG	23	SCREENED HOOD
3	BAFFLE	7	COVER BOLTS	11	ORIFICE BUTTON	15	CUSHION	29	CUSHION RETAINER
4	SEAT	8	RETAINING SCREWS	12	PIVOT PIN	16	PLUG	30	WASHER
						17	FLOAT RETAINER	34	LOCK WASHER

SEE DRAWING NO. VM-201C-M FOR STANDARD MATERIALS OF CONSTRUCTION.

VALVE SIZE	MODEL NO.*	A	B	C	D	E	INLET SIZE	OUTLET SIZE	ORIFICE SIZE
1"	201C.2	11 3/8"	10 1/2"	12 5/8"	6 3/8"	2"	1" N.P.T.	1" N.P.T.	5/64"
2"	202C.2	14"	13"	15 7/8"	8 1/4"	3 1/4"	2" N.P.T.	2" N.P.T.	3/32"

*Add "H" to Model No. for optional screened hood SPK-1H.

Revised 1-9-06

COMBINATION AIR VALVE (SINGLE BODY TYPE)

DATE 2-2-69

VAL-MATIC® VALVE AND MANUFACTURING CORP.

DRWG. NO. VM-201C

P -101, Well pump
for KAFB-106228

4/30/15

13B63616 150S300-16 60 Hz

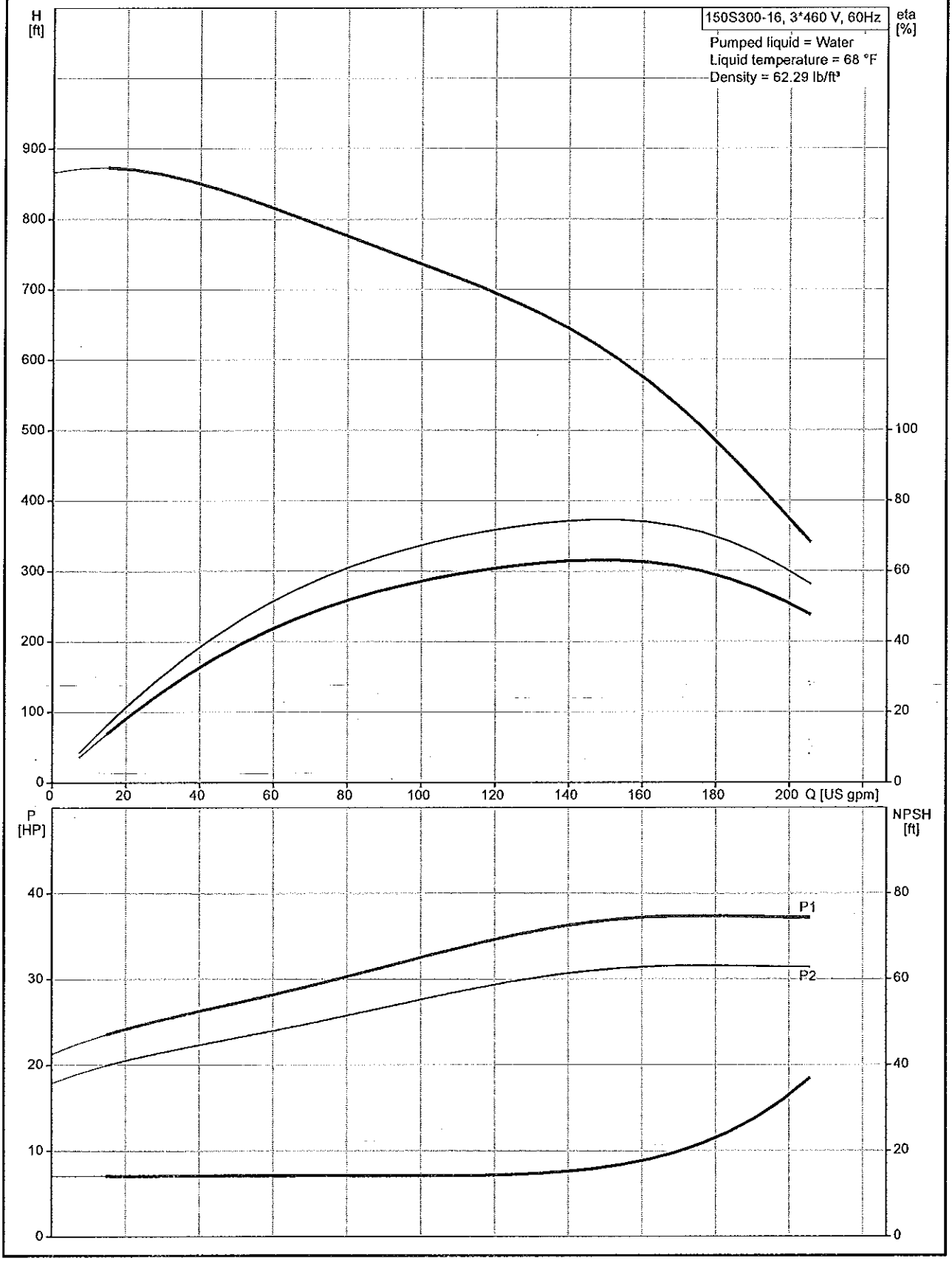

ACK 4/30/15

Description	Value
General information:	
Product name:	150S300-16
Position	
Product No.:	13B63616
EAN:	5700391427961
Price:	$ 0.00
Technical:	
Speed for pump data:	3450 rpm
Rated flow:	159 US gpm
Flow range:	20 .. 206 US gpm
Max flow:	206 US gpm
Rated head:	568 ft
Shaft seal for motor:	SIC/SICNBR
Curve tolerance:	ISO9906:2012 3B
Stages:	16
Model:	A
Valve:	pump with built-in non-return valve
Materials:	
Pump:	Stainless steel
	DIN W.-Nr. 1.4301
	AISI 304
Impeller:	Stainless steel
	DIN W.-Nr. 1.4301
	AISI 304
Motor:	Stainless steel
	DIN W.-Nr. 1.4301
	AISI 304
Installation:	
Maximum ambient pressure:	870 psi
Pump outlet:	3"NPT
Motor diameter:	6 inch
Liquid:	
Max liquid temperature at 0.15 m/sec:	116.6 °F
Electrical data:	
Motor type:	MS6000
Rated power - P2:	30 HP
KVA code:	J
Main frequency:	60 Hz
Rated voltage:	3 x 440-460-480 V
Start. method:	direct-on-line
Starter:	2 1/2
Service factor:	1.15
Rated current:	48.0-46.0-45.0 A
Starting current:	237 A
Cos phi - power factor:	0.87-0.85-0.83
Rated speed:	3450-3470-3480 rpm
Axial load max:	6170 lb
Motor efficiency at full load:	85,0 %
Enclosure class (IEC 34-5):	IP68
Insulation class (IEC 85):	F
Motor protection:	NONE
Thermal protec:	external
Built-in temperature transmitter:	yes
Motor Number:	96166168
Motor to order:	96166168
Cable number:	96163476
Controls:	
Heather:	K76
Others:	

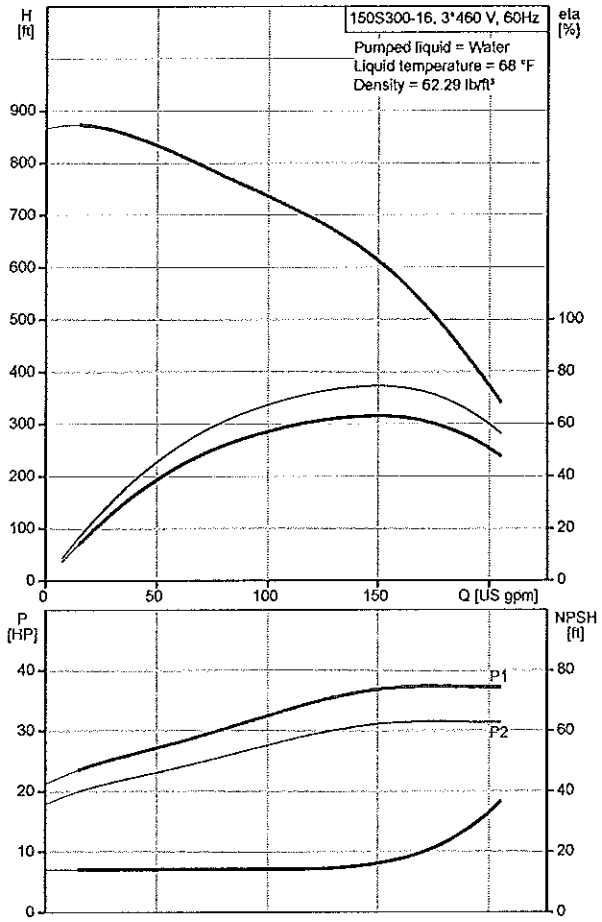

GM 7/30/15

Description	Value
Net weight:	234 lb
Gross weight:	313 lb
Sales region:	Namreg

Acc 4/30/15

13B63616 150S300-16 60 Hz

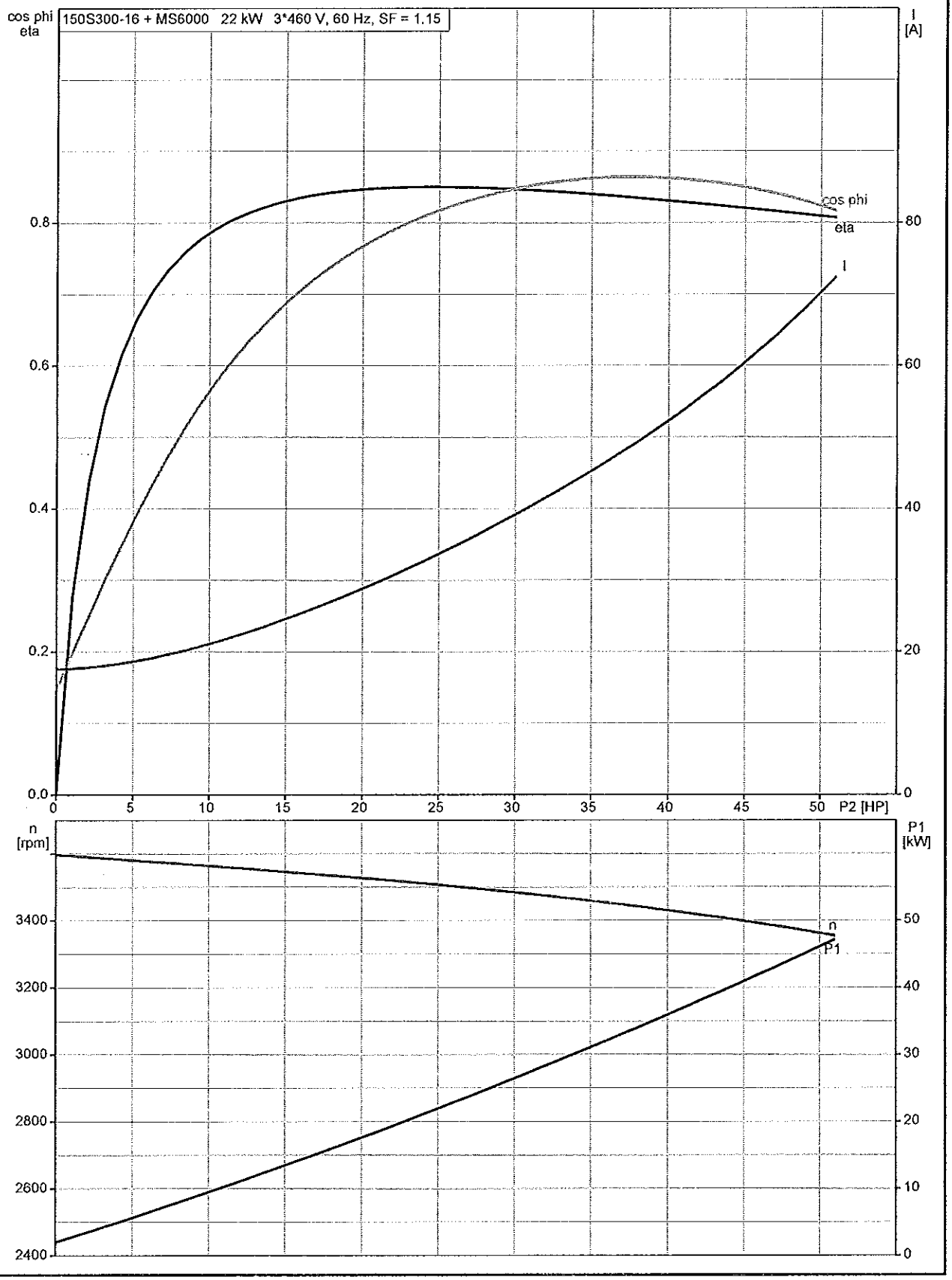

Des 4/30/15

13B63616 150S300-16 60 Hz

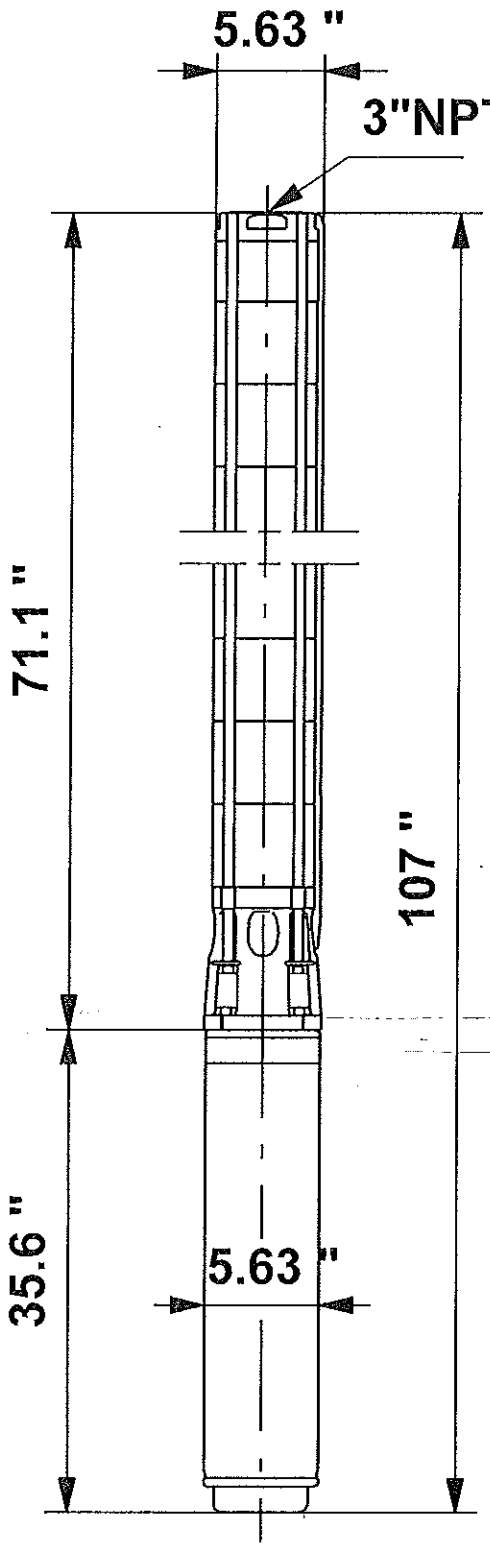

Note! All units are in [mm] unless otherwise stated.
Disclaimer: This simplified dimensional drawing does not show all details.

9/30/15

13B63616 150S300-16 60 Hz

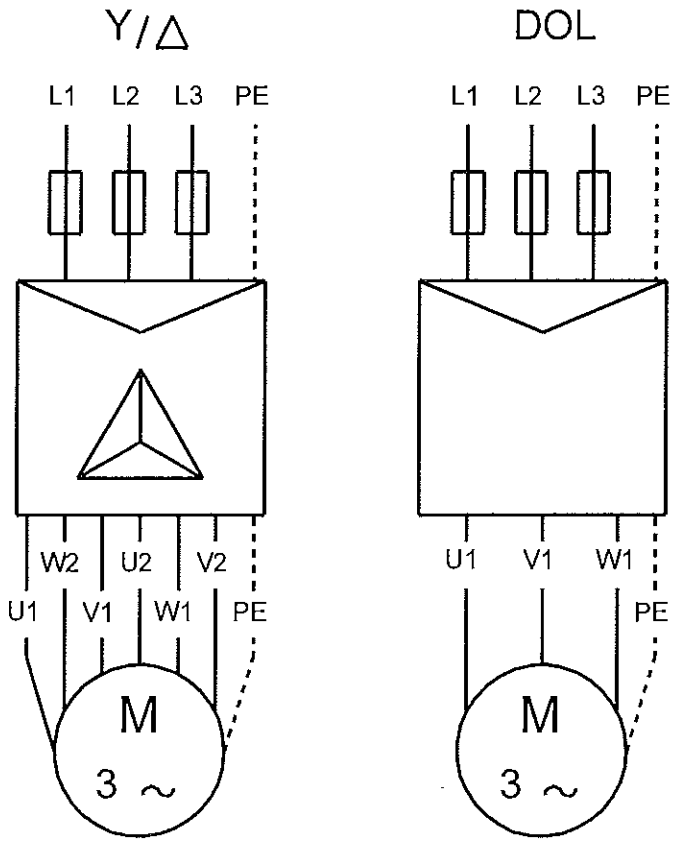

U1, W2	Brown
V1, U2	Black
W1, V2	Grey

All units are [mm] unless otherwise presented.

4/30/15

LIMITED WARRANTY

Products manufactured by GRUNDFOS PUMPS CORPORATION (GRUNDFOS) are warranted to the original user only to be free of defects in material and workmanship for a period of 24 months from date of installation, but not more than 30 months from date of manufacture. GRUNDFOS' liability under this warranty shall be limited to repairing or replacing at GRUNDFOS' option, without charge, F.O.B. GRUNDFOS' factory or authorized service station, any product of GRUNDFOS' manufacture. GRUNDFOS will not be liable for any costs of removal, installation, transportation, or any other charges which may arise in connection with a warranty claim. Products which are sold but not manufactured by GRUNDFOS are subject to the warranty provided by the manufacturer of said products and not by GRUNDFOS' warranty. GRUNDFOS will not be liable for damage or wear to products caused by abnormal operating conditions, accident, abuse, misuse, unauthorized alteration or repair, or if the product was not installed in accordance with GRUNDFOS' printed installation and operating instructions.

To obtain service under this warranty, the defective product must be returned to the distributor or dealer of GRUNDFOS' products from which it was purchased together with proof of purchase and installation date, failure date, and supporting installation data. Unless otherwise provided, the distributor or dealer will contact GRUNDFOS or an authorized service station for instructions. Any defective product to be returned to GRUNDFOS or a service station must be sent freight prepaid; documentation supporting the warranty claim and/or a Return Material Authorization must be included if so instructed.

GRUNDFOS WILL NOT BE LIABLE FOR ANY INCIDENTAL OR CONSEQUENTIAL DAMAGES, LOSSES, OR EXPENSES ARISING FROM INSTALLATION, USE, OR ANY OTHER CAUSES. THERE ARE NO EXPRESS OR IMPLIED WARRANTIES, INCLUDING MERCHANTABILITY OR FITNESS FOR A PARTICULAR PURPOSE, WHICH EXTEND BEYOND THOSE WARRANTIES DESCRIBED OR REFERRED TO ABOVE.

Some jurisdictions do not allow the exclusion or limitation of incidental or consequential damages and some jurisdictions do not allow limitations on how long implied warranties may last. Therefore, the above limitations or exclusions may not apply to you. This warranty gives you specific legal rights and you may also have other rights which vary from jurisdiction to jurisdiction.

ISO 9001 CERTIFIED

L-CP-TL-003	Rev. 05/04
Printed in USA	

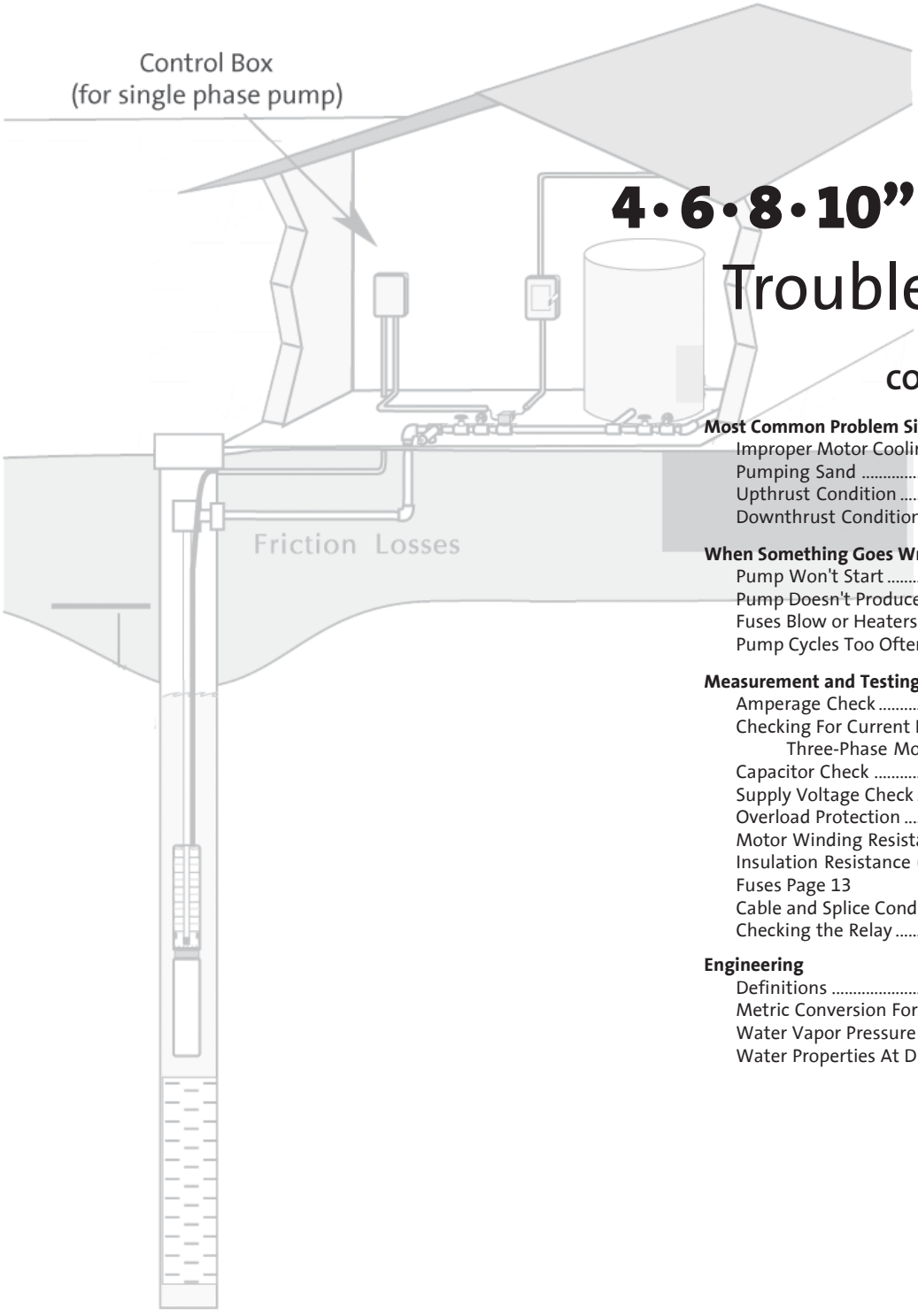

4•6•8•10" Submersibles
Troubleshooting

CONTENTS

Most Common Problem Situations
Improper Motor Cooling ..... Page 2
Pumping Sand ..... Page 3
Upthrust Condition ..... Page 4
Downthrust Condition ..... Page 5

When Something Goes Wrong . . .
Pump Won't Start ..... Page 6
Pump Doesn't Produce Enough Flow (GPM) ..... Page 6
Fuses Blow or Heaters Trip ..... Page 8
Pump Cycles Too Often ..... Page 8

Measurement and Testing
Amperage Check ..... Page 10
Checking For Current Imbalance On Three-Phase Motors ..... Page 10
Capacitor Check ..... Page 11
Supply Voltage Check ..... Page 11
Overload Protection ..... Page 12
Motor Winding Resistance (lead-to-lead) ..... Page 12
Insulation Resistance (lead-to-ground) ..... Page 13
Fuses Page 13
Cable and Splice Condition ..... Page 14
Checking the Relay ..... Page 14

Engineering
Definitions ..... Page 15
Metric Conversion Formulas ..... Page 16
Water Vapor Pressure and Specific Gravity ..... Page 17
Water Properties At Different Altitudes ..... Page 18

Poor Motor Cooling*

A submersible pump motor is cooled by the flow of water past its outer housing as the pump is pumping. The water must flow past the motor at a certain velocity for proper cooling to take place, and the minimum velocity needed is different for each diameter motor.

MINIMUM VELOCITY OF WATER PAST MOTOR*

4" diameter motor ..... .25 feet per second
6" diameter motor ..... .5 feet per second
8" diameter motor ..... .5 feet per second
10" diameter motor ..... .5 feet per second

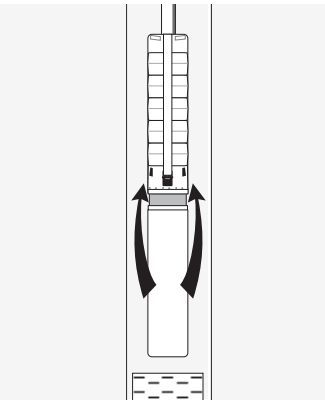

Correct screen position for proper cooling

To determine whether water is flowing past the motor at a high enough velocity, note where the motor diameter and outside sleeve or casing diameter intersect on the following chart. The Gallons Per Minute scale indicates the **minimum flow required** to keep the motor properly cooled.

MINIMUM FLOW REQUIREMENTS FOR SUBMERSIBLE MOTORS*

WELL CASING OR FLOW INDUCER SLEEVE (internal diameter in inches)	4" motor	6" motor	8" motor	10" motor	MOTOR DIAMETER
4 inches	1.2 GPM	--	--	--	MINIMUM FLOW (GPM) (to ensure proper motor cooling)
5	7	--	--	--	
6	13	10	--	--	
7	21	28	--	--	
8	30	45	10	--	
10	--	85	55	30	
12	--	140	110	85	
14	--	198	180	145	
16	--	275	255	220	
18	--	--	--	305	

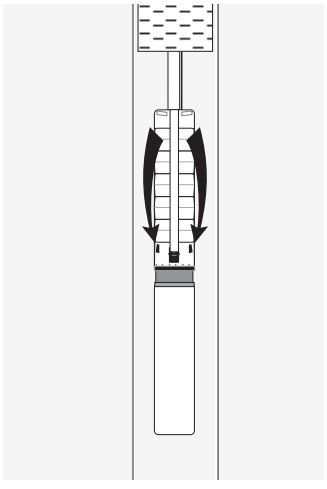

Cascading water from screen does not flow past motor

Insufficient cooling can sometimes result when:

(1) The screen is located above or at the pump, so that the water cascades down into the pump's suction intake without first flowing past the motor.

(2) The casing diameter is so large that the water is drawn into the pump's suction intake from the side without first flowing past the motor.

These problems can be solved by fitting the pump and motor into a **Flow Inducer Sleeve.** This sleeve attaches to the pump and forces water to pass around it and enter the pump's suction intake from below the motor.

If the diameter of the well's casing is too small for a sleeve inducer, a rigid tube (usually 1/4" inside diameter) can be tapped into the discharge piping above the pump (but below any check valves) with the other end positioned below the motor and pointing upwards.

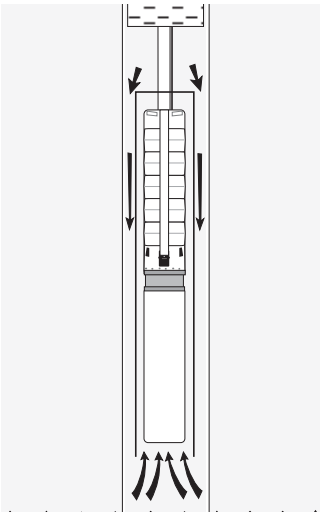

Flow Inducer Sleeve forces water past motor

***Grundfos motors have a more effective internal cooling design; therefore, a cooling sleeve is not required in water up to 30° C (86° F). However, all motors will have a longer life with a cooling sleeve installed.**

Pumping Sand

All submersible water pumps are designed with the idea they will be used to pump clean, clear water. Some design changes can be made to enable them to better handle situations that don't meet this ideal, but only to a limited degree.

No situation shortens the life of submersible pump more than pumping silt or **SAND**.

Effect On Pump	Will Be First Noticed By...	Design Changes To Deal With The Problem
SAND works its way into all moving parts of the pump, grinding bearings, impellers, and all other components as they spin against each other. 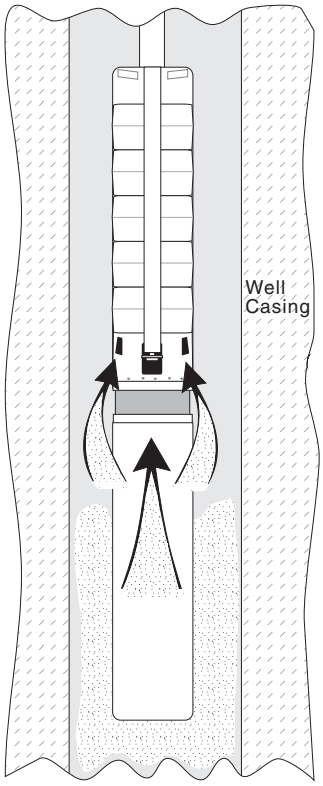	Reduced flow (GPM) and head, since the perfect fit of the impellers and other components will be slowly worn away and the pump will become less and less efficient. 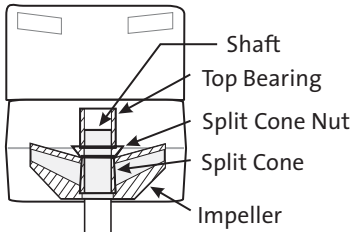 At some point, the pump's performance will become so poor it becomes quite apparent that something is seriously wrong. If the pump is pulled out of the well and the impellers and other moving components are examined, **uniform** wear (not random pitting, which might indicate that pump may have been cavitating) can be seen on virtually every moving part.	There is no way to eliminate all pump damage due to pumping sand. The effects can only be minimized. Since sand tends to be carried along with flow rates greater than 5-8 feet per second (water velocity), an enlarged drop pipe can reduce the water velocity and thereby reduce the chance sand can enter the pump. Of course, if the water velocity drops below the chart on the previous page, motor cooling may become a problem.

Upthrust Condition

Pumps are designed with the expectation that the correct size pump will be used in the right situation. An 80 gallon per minute pump which can produce about 600 feet of head (at the same time it delivers 80 GPM) is designed so that if it is used in this situation, the pump will operate at its best efficiency **and** all its components will have a long life. The perfomance curve to the right shows the most efficient operating range for this type of pump.

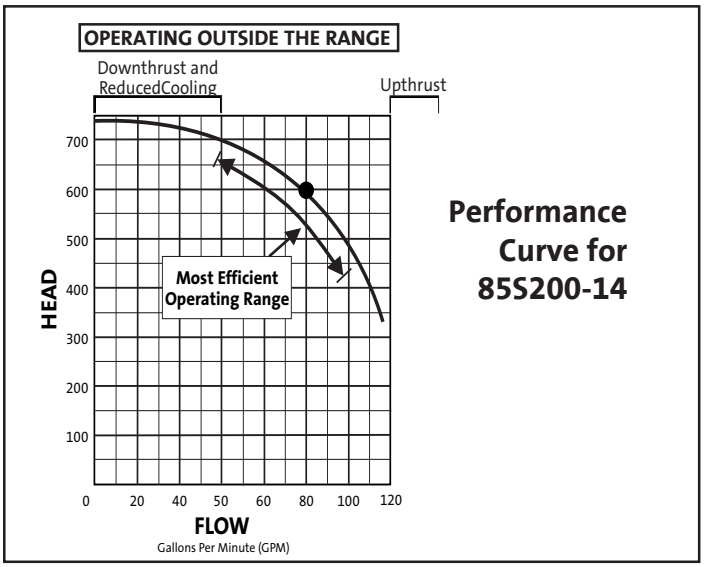

Performance Curve for 85S200-14

If the pump is not operated within this range, problems can occur.

One such problem can occur when a pump is installed and run in a situation in which it will produce far GREATER flow (GPM) than it was designed for. **In other words, the pump is oversized for what is really needed.** When such a pump is started, the initial thrust (upward water surge) generated by the spinning impellers is so much GREATER than the downward thrust it is expecting to overcome (such as the force of the different water pressure, the weight of the impellers and shaft, etc.), that the entire stack of impellers within the pump is lifted upwards **(UPTHRUST).** Pumps are manufactured with bearings designed to handle intermittent upward water surges up to a certain degree. If the actual flow is much greater than this, an upthrust condition exists. The force of this **UPTHRUST** will first put pressure on the motor's thrust bearing. If and when this bearing wears out, the pump's components will begin to absorb the upthrust as they grind against each other. Upthrust is especially damaging when the pump is started and the drop pipe is empty -- causing a great upthrust of water since no head is present. Check valves in the drop pipe will prevent this from occuring.

BEFORE
pump starts pumping

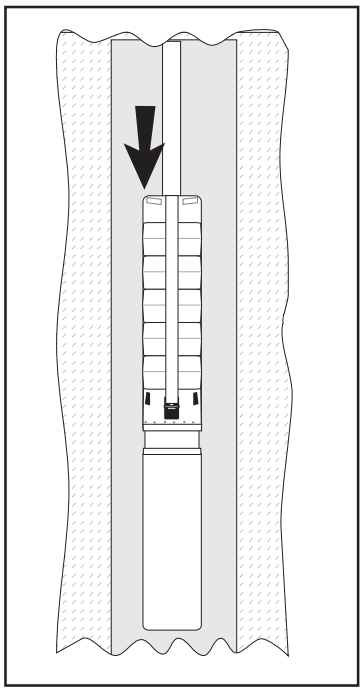

Weight of water and impellers pushes down

AFTER
pump starts pumping

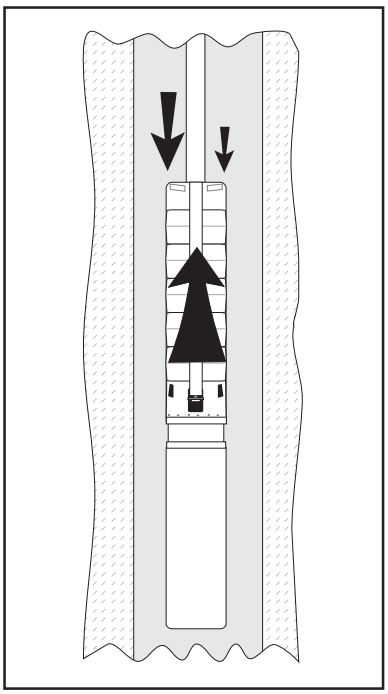

Initial surge of water thrusts impellers upwards

DAMAGE CAUSED

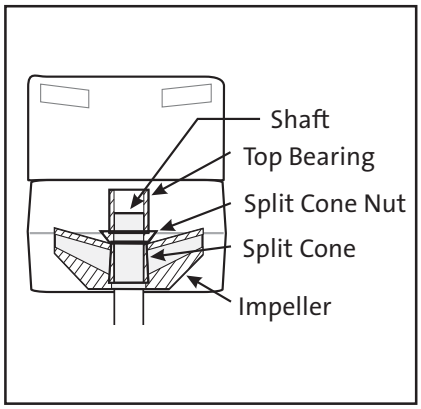

Once the motor's thrust bearing is worn, the pump components begin wearing

Usually, the **UPTHRUST** condition lasts for only a few seconds until the water pressure above the impellers acts as a counterforce to press the impeller stack down onto the motor shaft. Sometimes, however, if the pump is producing far more flow than for which it was designed, the upthrust condition can continue until the pump is stopped.

Downthrust Condition

Pumps are designed with the expectation that the correct size pump will be used in the right situation. An 80 gallon per minute pump which can produce about 600 feet of head (at the same time it delivers 80 GPM) is designed so that if it is used in this situation, the pump will operate at its best efficiency **and** all its components will have a long life. The perfomance curve at right shows the most efficient operating range for this type of pump.

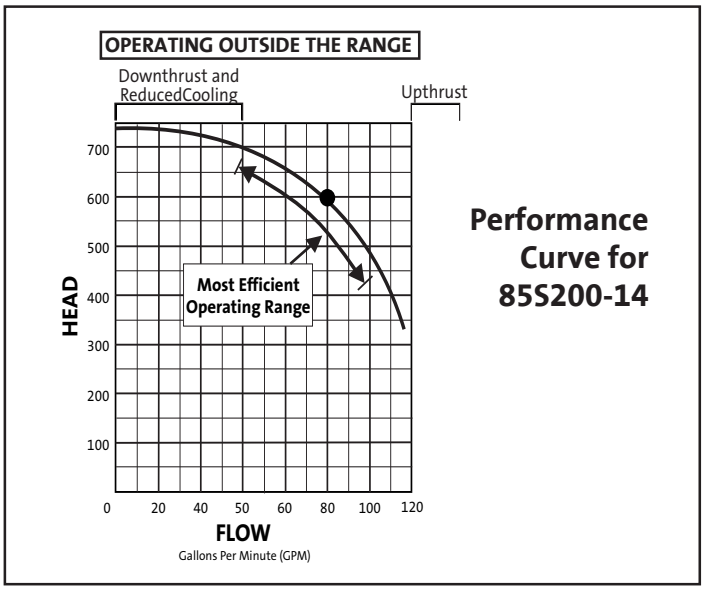

Performance Curve for 85S200-14

If the pump is not operated in this range, problems can occur.

One such problem can occur when a pump is installed and run in a situation in which it will produce HEAD in the range of shut-off pressure (left part of the curve, as shown above). Although the pump is designed to operate over the full curve, if it does not produce enough flow the weight of the shaft and the pressure of the water in the drop pipe is not counterbalanced, causing possible wear to the bearings in the pump and motor. **This can occur if a valve has been closed down so far that the flow is greatly restricted or when the pump is pumping water faster than the well can refill itself.**

In addition to causing possible bearing damage, operating the pump in a downthrust condition is an inefficient use of energy and may not allow for proper motor cooling (see page 2).

BEFORE
pump starts pumping

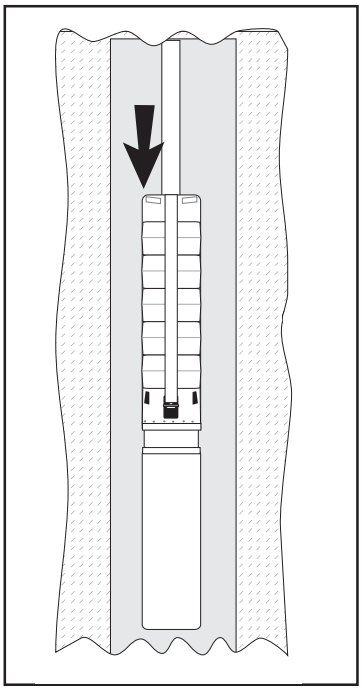

Weight of water and impellers pushes down

AFTER
pump starts pumping

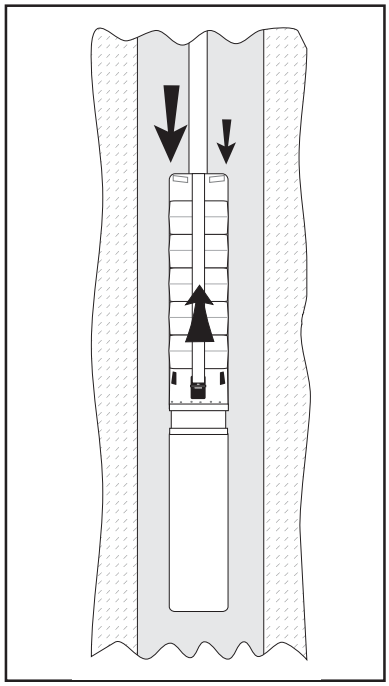

Impellers can produce so much pressure they can grind down against each other

DAMAGE CAUSED

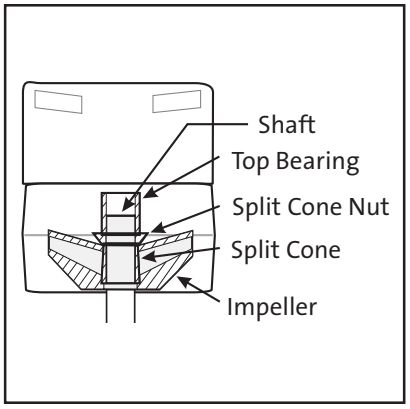

After motor's thrust bearing has worn out, pump components begin to show equal wear from grinding

The best way to check for motor bearing damage is with a shaft height gauge. Refer to the Dismantling & Reassembly section of this manual for complete instructions.

When Something Goes Wrong. . .

Pump Won't Start

Possible Cause	Check This By . . .	Correct This By . . .	
Low or no power at the motor	Check for voltage at the control box or panel. See page 11 for instructions.	If there is no voltage at the control panel, check the feeder panel for tripped circuits and reset those circuits.	1
Fuses are blown or the circuit breakers have tripped.	Turn off the power and remove the fuses. Check for continuity with an ohmmeter as shown on page 13.	Replace the blown fuses or reset the circuit breaker. If the new fuses blow or the circuit breaker trips, the electrical installation, motor, and wires must be checked for defects.	2
(3-phase motors only) **Motor starter overloads are burned or have tripped**	Check for voltage on the line and load side of the starter. Check the amp draw and make sure the heater is sized correctly.	Replace any burned heaters or reset. Inspect the starter for other damage. If the breaker trips again, check the supply voltage. Ensure that heaters are sized correctly and the trip setting is appropriately adjusted.	3
(3-phase motors only) **Starter does not energize**	Energize the control circuit and check for voltage at the holding coil.	If there is no voltage, check the control circuit fuses. If there is voltage, check the holding coil for weak connections. Ensure that the holding coil is designed to operate with the available control voltage. Replace the coil if defects are found.	4
Defective controls	Check all safety and pressure switches for defects. Inspect the contacts in control devices.	Replace worn or defective parts or controls.	5
Motor or cable is defective	Turn off the power and disconnect the motor leads from the control box. Measure the lead-to-lead resistance of the drop cable with an ohmmeter (set to R x 1). Measure the lead-to-ground values with a megohmmeter (set to R x 100K). See pages 12 and 13. Compare these measurements to the rated values for your motor.	If an open or grounded winding is found, pull the pump from the well and recheck the measurements with the lead separated from the motor. Repair or replace the motor or cable.	6
(1-phase motors only) **Defective capacitor**	Turn off the power and discharge the capacitor by shorting the leads together. Check it with an analog ohmmeter (set to R x 100K). See page 11 or use an audible capacitor tester.	When the meter is connected to the capacitor, the needle should jump toward 0 (zero) ohms and slowly drift back to infinity (∞). Replace the capacitor if it is defective.	7
Defective pressure switch or the tubing to it is plugged.	Watch the pressure gauges as the pressure switch operates. Remove the tubing and blow through it.	Replace as neccessary.	8
The pump is mechanically bound or stuck	Turn off the power, pull the pump, and manually rotate the pump shaft. Also check the motor shaft rotation, the shaft height, and the motor's amp draw (to see if it indicates a locked rotor).	If the pump shaft doesn't rotate, remove the pump and examine it. If necessary, dismantle it and check the impellers for obstruction. Check for motor corrosion.	9

Pump Does Not Produce Enough Flow (GPM)

Possible Cause	Check This By . . .	Correct This By . . .	
Shaft is turning in the wrong direction.	Check to make sure the electrical connections in the control panel are correct.	Turn off the power. Correct the wiring. For single phase motors, check the wiring diagram on the motor. For three phase motors, simply switch any two power leads.	10
Pump is operating at the wrong speed (too slow)	Check for low voltage (as shown on page 11) and phase imbalance (as shown on page 10)	Replace defective parts or contact power company, as applicable.	11
Check valve is stuck (or installed backwards)	Pull the pump and reove the check valve.	Re-install or replace.	12
Parts in the pump are worn **or** **Impellers, Inlet Strainer, or Well Screen is clogged**	Install a pressure gauge, start the pump, and gradually close the discharge valve. Read the pressure at shutoff. (Do not allow the pump to operate for an extended period at shutoff).	Convert the PSI you read on the gauge to Feet of Head by: **PSI x 2.31 ft** Add to this number the number of feet (vertically) from the gauge down to the water's pumping level. Refer to the pump curve for the model you are working with to determine the shutoff head expected for that model. If those figures and yours do not match, remove the pump and inspect impellers, chambers, etc., for clogging.	13
The water level in the well may be too low to supply the flow desired **or** **Collapsed well**	Using a depth gauge, check the drawdown in the well while the pump is operating.	If the pumping water level (including drawdown) is not **AT LEAST 3 FEET** above the pump's inlet strainer, either: 1. Lower the pump further down the well. 2. Throttle back the discharge valve to decrease the flow, thereby reducing drawdown.	14
Broken shaft or coupling	Pull pump and inspect	Replace as necessary.	15
There are leaks in the fittings or piping	Pull the pump out of the well.	The suction pipe, valves, and fittings must be made tight. Repair any leaks and retighten all loose fittings.	16

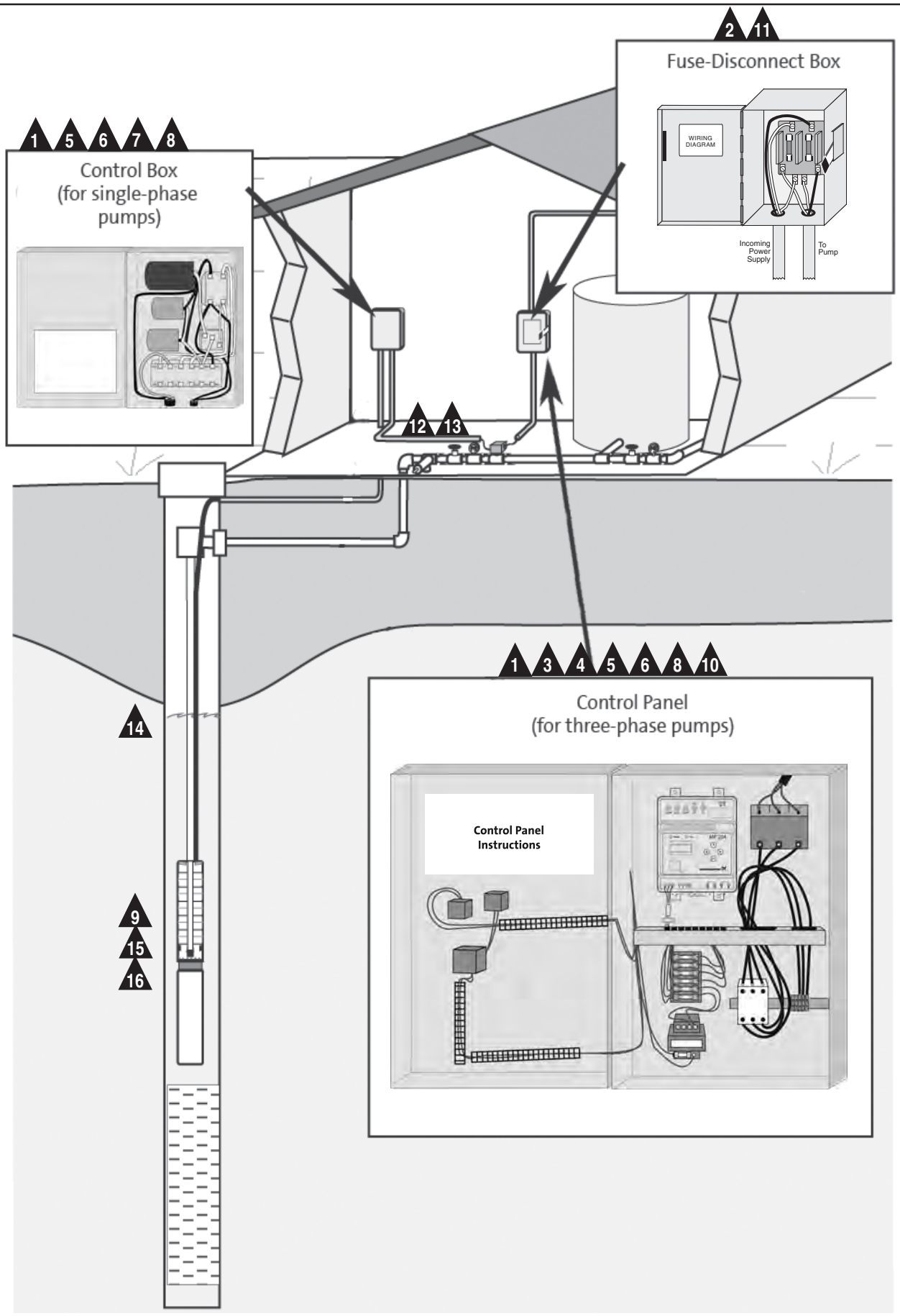
2 11
Fuse-Disconnect Box
WIRING DIAGRAM
Incoming Power Supply
To Pump
1 5 6 7 8
Control Box
(for single-phase pumps)
12 13
1 3 4 5 6 8 10
Control Panel
(for three-phase pumps)
Control Panel Instructions
14
9
15
16

Fuses Blow or Heaters Trip

Possible Cause	Check This By . . .	Correct This By . . .	
Improper voltage	Check the voltage at the control box or panel. See page 11 for instructions.	If voltage varies by more than 10% (+ or -), contact the power company.	
	If the incoming voltage is + or -10%, check the wire size and then measure the distance between the pump motor and the pump control panel.	Rewire with correct gauge. Undersized wire and a great distance between the control panel and the pump motor increases resistance and decreases the voltage by the time it reaches the pump motor.	1
The starter overload is set too low.	Cycle the pump and measure the amperage. See page 10 for instructions.	Increase the heater size (use a slo-bio) or adjust the trip setting. Do not, however, exceed the recommended rating.	2
(3-phase motors only) **Current is imbalanced.**	Check the current draw on each lead to the motor. See page 11 for instructions.	The current imbalance must be within 5% of each other. If they are not, check the wiring and the power supply.	3
The wiring or connections are faulty.	Check to make sure the wiring is correct and there are no loose terminals.	Tighten any loose terminals and replace any damaged wire.	4
(1-phase motors only) **Capacitor is defective**	Turn off the power and discharge the capacitor. Check start and run capacitors with an ohmmeter (set at R x 100K). See page 11 for instructions.	When the meter is connected to the capacitor, the needle should jump towards 0 (zero) ohms and then slowly drift back to infinity (∞). Replace the capacitor if it is defective.	5
Fuse, heater, or starter are the wrong size	Check the fuses and heaters against the motor manufacturer's specification charts.	Replace as necessary.	6
The control box location is too hot	Touch the box with your bare hand during the hottest part of the day -- you should be able to keep your hand on it without burning.	Shade, ventilate, or move the control box so its environment does not exceed 120°F.	7
(1-phase motors only) **Wrong control box**	Check requirements for the motor against the control box specifications.	Replace as necessary.	8
Defective pressure switch	Watch gauges as pressure switch operates.	Replace as necessary.	9
The motor is shorted or grounded.	Turn off the power and disconnect the wiring. Measure the lead-to-lead resistance with an ohmmeter (set to R x1). Measure the lead-to-ground resistance (set to R x100K). Compare these measurements to the rated values for your motor.	If you find an open or grounded winding, remove the motor and recheck the leads. If OK, check the leads for continuity and for bad splice.	10
Poor motor cooling	Find the internal diameter of the well casing (or sleeve, if used) on the chart on page 2 and check for proper cooling.	Increase the pump flow (GPM) so proper cooling is possible (see chart on page 2) or pull the pump out of the well and add a sleeve with a smaller internal diameter *(see chart on page 2).*	11
Bad motor thrust bearing	Measure for high amps as explained on page 10.	If amps are too high, pull the pump and replace the motor.	

Pump Cycles Too Often

Possible Cause	Check This By . . .	Correct This By . . .	
The pressure switch is defective or is not properly adjusted.	Check the pressure setting on the switch. Check the voltage across closed contacts.	Adjust the pressure switch with a screwdriver or replace it if defective.	13
The tank is too small	Check the tank size and amount of air in the tank. The tank size should be about 10 gallons for each GPM needed (16 GPM = 160 gal.). At the pump cut-in pressure, the tank should be about 2/3 filled with air.	Replace the tank with one that is the correct size.	14
There is insufficient air charging of the tank or piping is leaking.	Pump air into the tank or diaphragm chamber. Check the diaphragm for leaks. Check the tank and piping for leaks with soapy water. Check the air-to-water ratio in the tank.	Repair as necessary.	15
Plugged snifter valve or bleed orifice (causing pressure tank to be water-logged)	Examine them for dirt or erosion.	Repair or replace as necessary.	16
Leak in the pressure tank or piping.	Check the setting and operation of the level control.	Readjust the level control setting (according to the manufacturer's instructions) or replace it if defective.	17
The level control is defective or is not properly set.	Check the yield of the well (determined by the well-test) against the pump's performance curve.	Reduce the flow by throttling back the valve. or Change the pump.	18
Pump is oversized for the application. It is outpumping the yield of the well and pumping itself dry.	Refer to the tank's operating and installation instructions and make sure it is installed correctly.	Repair or replace as needed.	19

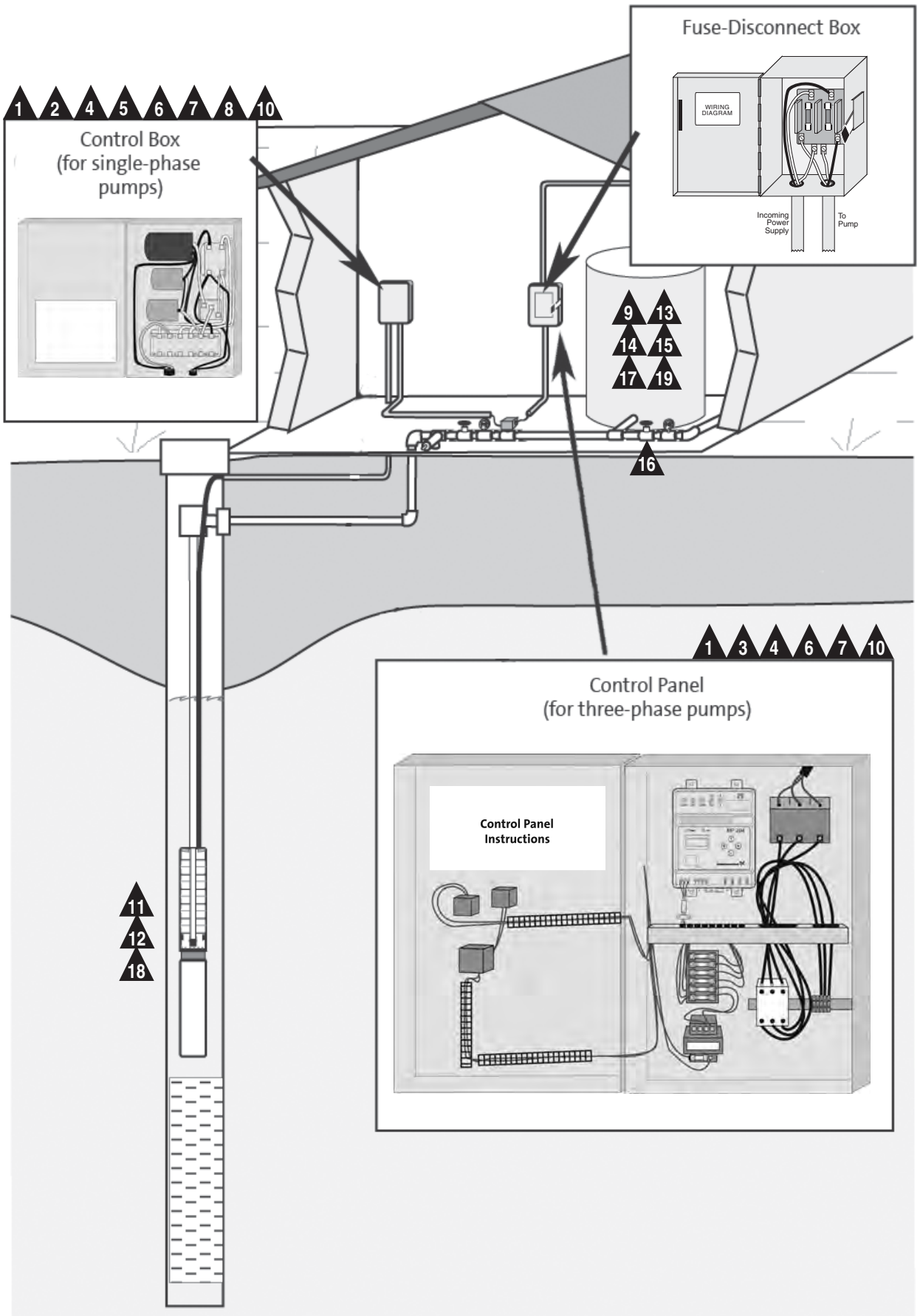
Fuse-Disconnect Box
WIRING DIAGRAM
Incoming Power Supply
To Pump
1 2 4 5 6 7 8 10
Control Box
(for single-phase pumps)
9 13
14 15
17 19
16
1 3 4 6 7 10
Control Panel
(for three-phase pumps)
Control Panel Instructions
11
12
18

Amperage Check

To check the electrical current (measured in amperes, or "amps") use an ammeter.

Instructions

1. Make sure the pump is running
2. Set the rotary scale on the front of the ammeter to the highest scale.
3. Open the control box and place the jaws of the ammeter around the wire to be measured.
4. Slowly rotate the scale on the ammeter back towards 0 (zero) until an exact reading is shown.
5. Record the measurement
6. Repeat for the other wires.

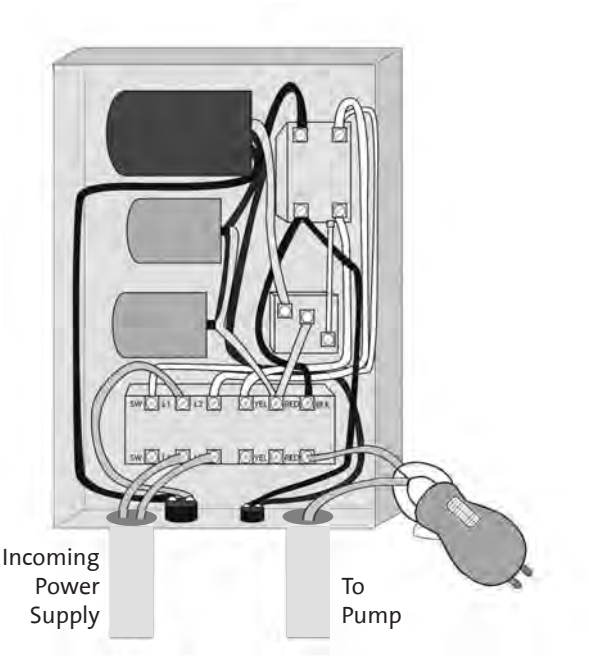

Evaluation

If the amp draw exceeds the service factor amps for the pump (as listed in the Motors section of the Service Manual), then:

- The motor starter may have burned contacts
- The terminals in the starter or terminal box may be loose
- There may be a winding defect. Check the winding and insulation resistance (see pages 12 and 13)
- The motor windings may be shorted or grounded
- The pump may be damaged in some way and may be causing a motor overload.
- A voltage supply or current imbalance (3-phase only) may exist. Follow the steps below to determine if this is true.
- The insulation on the drop cable may be torn, exposing the cable.

Current Imbalance On Three-Phase Motors

If the motor is connected to three-phase power, the balance of those three phases can be checked in the following way:

1. Measure the amperage of each wire as instructed above and record these figures.
2. Add together the total amperage measured by the three wires.
3. Divide this number by three to get the **average** amperage reading for the three wires.
4. Check over your numbers and determine which wire has the greatest difference from the average.
5. Take that number and subtract it from the average to determine the amount of **difference**.
6. Divide the **difference** by the **average**.
7. Multiply this number by 100 to obtain the percent of current imbalance for that particular hookup.
8. Turn **POWER OFF**
9. Repeat these steps for the other two possible hookup installations so that each motor lead is connected to a different power lead than it was before.

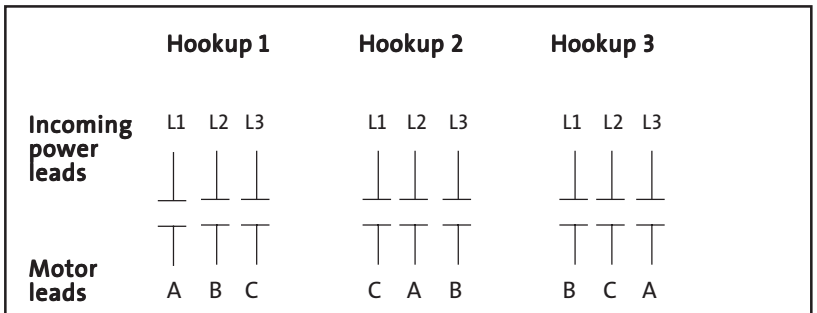

(where A, B, and C represent each motor lead or each set of leads joined together to make a single motor lead)

Example:

A	=	51 amps	C	=	50 amps	B	=	50 amps
B	=	46 amps	A	=	49 amps	C	=	48 amps
C	=	53 amps	B	=	51 amps	A	=	52 amps
Total	=	150	Total	=	150	Total	=	150
150/3	=	50	150/3	=	50	150/3	=	50
- 46	=	4	- 49	=	1	- 48	=	2
4/50	=	.08 or 8 %	1/50	=	.02 or 2 %	2/50	=	.04 or 4 %

Evaluation

If the the current imbalance is greater than 5% on all three hookups, then:

- If the largest difference in amps is consistently drawn from the same power lead (L1, L2, or L3 above), contact the power company. Your voltage should be balanced to within + or - 5%.
- If the largest difference in amps is consistently drawn from the same motor lead (A, B, or C above), there is likely a problem with the motor. Check the items listed under "Evaluation" near the top of this page.

If the current imbalance exceeds 5% one or two of the legs, use the hookup that has the least difference and check the motor for some of the other problems listed under "Evaluation" near the top of this page.

Capacitor Check

To check the condition of any capacitor on single phase motors, use an ohmmeter.

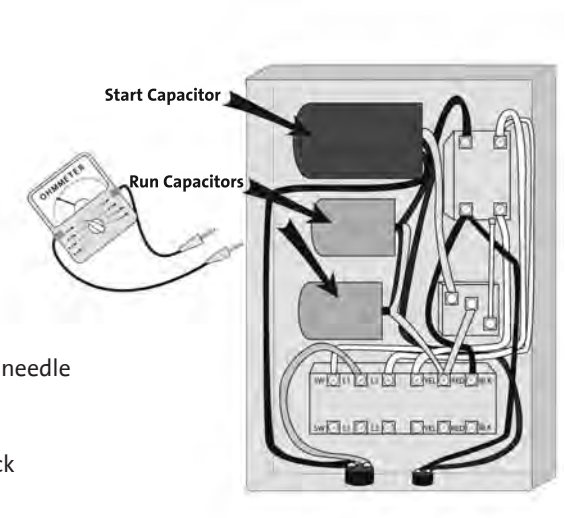

Instructions:

1. Turn the **POWER OFF**.
2. Disconnect the capacitor from the power source.
3. Discharge the capacitor by touching its leads together.
4. Set the scale selector on the ohmmeter to R x 100K.
5. Connect the leads of the ohmmeter to the black and orange wires of the capacitor.
6. Watch the ohmmeter scale.
7. Disconnect one lead from the capacitor for approximately 30 seconds. The needle should return to the last reading taken.

Evaluation

If the capacitor is OK, the needle should swing towards zero and then float back towards infinity (∞). If the needle drops and remains at zero, the capacitor is probably shorted. If the needle remains at a high value, there is an open circuit.

CAUTION: This test may indicate a good capacitor even though it may have lost some capacitance, making the motors run noisy or draw high amps. To safeguard against this, the capacitor can be checked with a capacitor meter.

Supply Voltage Check

To check the supply voltage, use a voltmeter (or amprobe) with the power on.

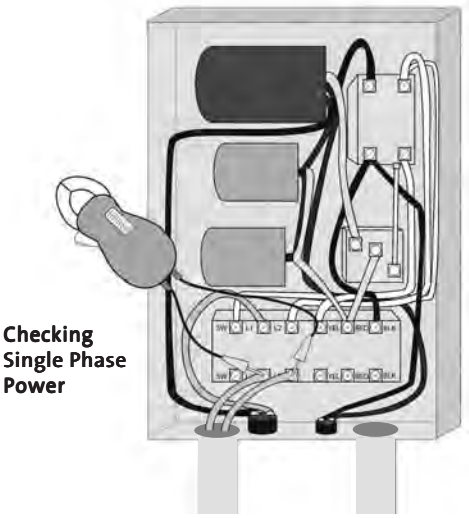

Instructions

1. Set the voltmeter to the highest scale
2. Remove the cover of the control box...BE CAREFUL -- POWER IS STILL BEING SUPPLIED TO THE CIRCUIT. Do not touch the voltmeter leads together while they are in contact with the power lines.
3. Touch the ends of the voltmeter leads as follows:

<u>Single Phase Motors</u>

Touch one voltmeter lead to each of the lines supplying power to the control (L_1 and L_2 , or L_1 and N for 115V circuits). ⟶

<u>Three Phase Motors</u>

Touch a voltmeter lead to the following:

- Power leads L_1 and L_2
- Power leads L_2 and L_3
- Power leads L_3 and L_1

} *These tests should give a reading of full line voltage.*

- Two fuses
- Two contact points
- Two heaters

Evaluation

When the motor is under load, the voltage should be -10% and +6% of the nameplate voltage. Any variation larger than this can cause damage to the motor windings and should be noticeable as a high amp problem.

If The Motor Nameplate Reads . . .		Then the minimum and maximum voltage should be . . .	
		Minimum	Maximum
115V	(single phase)	105 volts	121 volts
208V	(single or three phase)	188 "	220 "
230V	" "	210 "	243 "
460V	(three phase)	414 "	487 "
575V	" "	518 "	609 "

Any variations larger than these may indicate a poor electrical supply. The motor should not be operated under these conditions. Contact your power supplier to correct the problem or change the motor to one requiring the voltage you are receiving.

Motor Winding Resistance (lead-to-lead)

To check the electrical condition of the drop cable, splice, and motor windings, a resistance check with an ohmmeter is required.

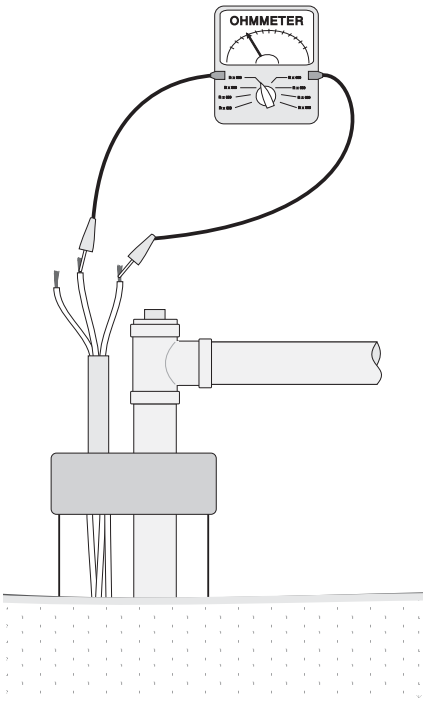

Instructions:

1. Turn the **POWER OFF**.
2. Disconnect all electrical leads to the drop cable.
3. Set the scale selector on the ohmmeter to R x 1 (if you expect ohm values under 10) or R x 10 (for ohm values over 10).
4. Touch the leads of the ohmmeter to two motor leads:
   Single Phase Motors
   Touching the leads of the ohmmeter to the black and yellow leads will measure the main winding's resistance for Franklin and Grundfos 402 motors. The red and yellow leads will be the start winding's resistance.
   Three Phase Motors
   Touching the leads of the ohmmeter to any two black leads will measure that winding's resistance. Repeat for all three possible lead combinations.
5. Watch the ohmmeter scale and record this figure. Subtract the ohm resistance for the drop cable (chart below) from the number. Compare the remaining figure with the one shown in the Motors section of this manual.

If:	Then:
Ohm values are normal	Motor windings are okay
One ohm value is less than normal	That motor winding may be starting to short
One ohm value is greater than normal	That winding may be starting to open
Some ohm values are greater than normal (>25%) and some are less than normal (± 25%)	The leads may be connected incorrectly, or have a break in the insulating jacket

If ohm readings are not normal and you want to verify the problem is not with the splice or drop cable, remove the lead from the motor and check the resistances from pin to pin directly at the motor. If the motor checks out okay, the fault is in the lead or splice (see page 14).

Total Resistance of Drop Cable *(from control box to motor and back)*

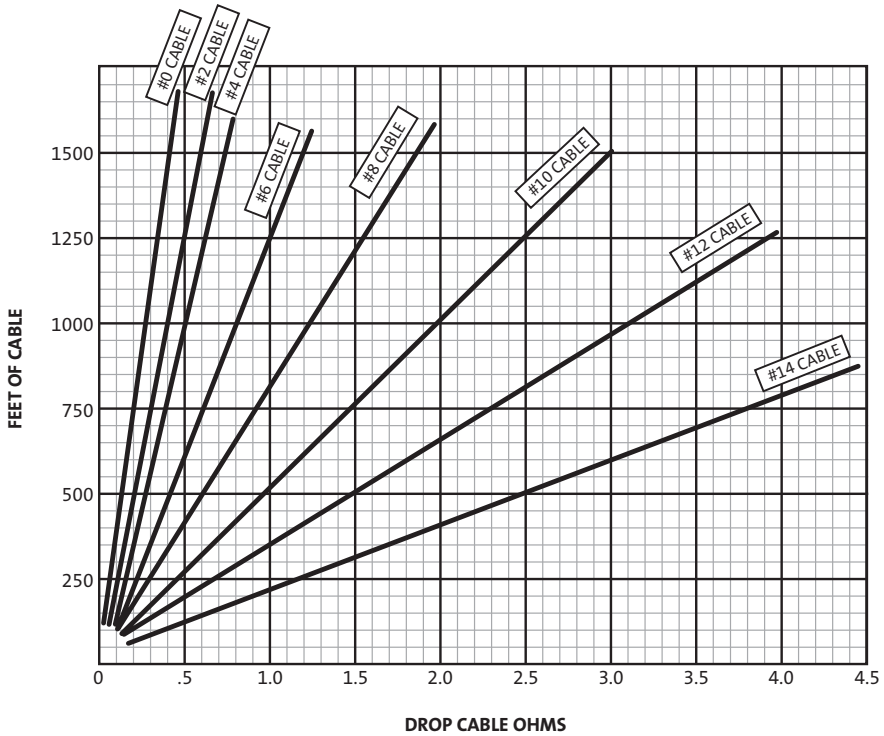

The values shown are for copper conductors. If aluminum conductor drop cable is used, the resistance will be higher for each foot of cable of the same size.

Copper ÷ .61 = Aluminum

Insulation Resistance (lead-to-ground)

To check the insulation resistance of the drop cable, splice, and motor leads, a megohmmeter is required.

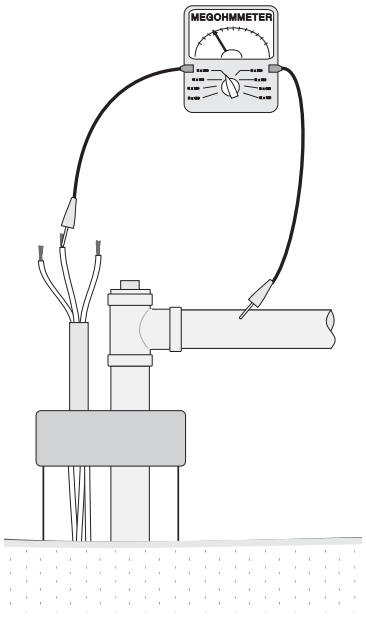

Instructions:

1. Turn the **POWER OFF**.
2. Disconnect all electrical leads to the drop cable.
3. Set the scale selector on the megohmmeter to R x 100, touch its leads together, and adjust the indicator to zero.
4. Touch the leads of the megohmmeter to each of the motor leads and to ground (i.e. L_1 to ground; L_2 to ground, etc.). The well casing, if made of steel, makes an excellent ground.
5. Watch the megohmmeter scale and compare this figure with the chart below.

Evaluation: In general, any ohm value above 1,000,000 ohms indicates everything is OK. The following table gives more specifics.

OHM VALUE	MEGAohm VALUE	THIS INDICATES THAT ...
		If The Motor <u>HAS NOT</u> Yet Been Installed:
2,000,000 (or more)	2.0	It is a new motor
1,000,000 (or more)	1.0	It is a used motor than can be used again (insulation OK)
		If The Motor <u>HAS</u> Been Installed: *(means that ohm readings will be for the drop cable plus the motor)*
500,000 - 1,000,000	0.5 - 1.0	The motor is in reasonably good condition
20,000 - 500,000	.02 - 0.5	The motor may have been damaged by lightning or has damaged leads.
10,000 - 20,000	.01 - .02	The motor has certainly been damaged or has damaged leads. The pump should be pulled and repairs made to the motor leads or replace the motor completely. The motor may still operate, but probably not for long.
less than 10,000	0 - .01	The motor has failed or the motor lead insulation has been completely destroyed. The pump must be pulled and the motor lead (drop cable) repaired or the entire motor replaced. **The motor will not run in this condition.**

Fuses

To check the condition of electrical fuses, an ohmmeter is required.

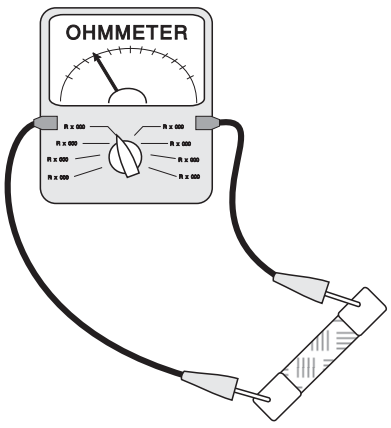

Instructions:

1. Turn the **POWER OFF** at the main disconnect or power source.
2. Remove the fuse.
3. Set the scale selector on the ohmmeter to R x 1.
4. Touch each lead of the ohmmeter to one end of the fuse.

Evaluation:

A good fuse should have zero (0) ohm reading. If the ohm value is near or past infinity, the fuse must be replaced.

Cable and Splice Condition

To check the electrical condition of the cable and splice insulation, a megohmmeter is required.

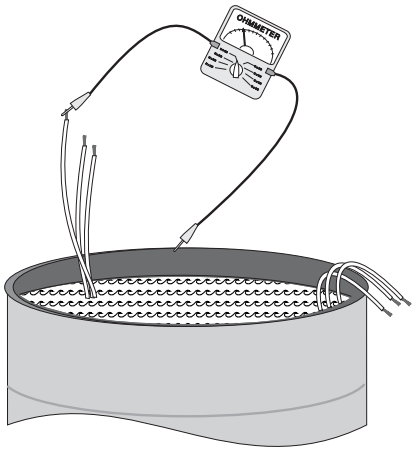

Instructions:

1. Turn the **POWER OFF.**
2. Remove the cable from the motor and electrical supply.
3. Submerge the cable in a steel barrel of water. Make sure both ends stay out of the water. Salt may be added to increase the conductance of the water.
4. Set the megohmmeter to R x 100K. Zero-adjust the ohmmeter by touching its two leads together.
5. Touch one megohmmeter lead to the steel barrel and other to a bare cable lead.
6. If the megohmmeter drifts towards zero (0), either that lead or the splice for that lead has a leak (fault). To find out if it is the splice:

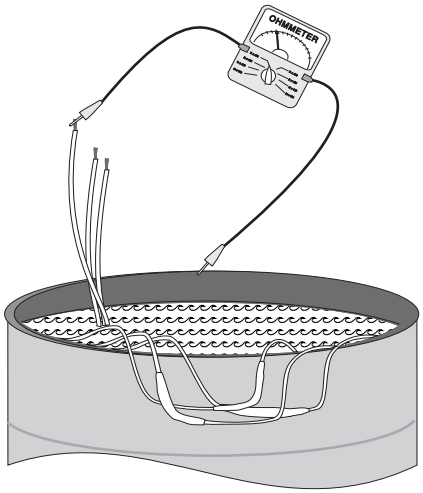

   a. Raise the splice for that lead out of the water.
   b. Repeat step 5.
   c. If the megohmmeter drifts towards infinity, the fault is in the splice.
   d. If the megohmmeter drifts towards zero (0), the fault is somewhere else in that lead. Gradually pull the rest of that cable lead out of the water until the megohmmeter drifts towards infinity. When it does, the leak is at that point in the cable lead.
7. Repeat for each of the motor leads.

Evaluation:
Any faulty leads should be replaced using waterproof electrical tape.

Checking the Relay

(SINGLE-PHASE CONTROL BOXES ONLY)

To check the electrical condition of the relays on single phase control boxes, an ohmmeter is required.

Specific instructions for checking the relay differ from control box to control box. Refer to the inside cover of your control box.

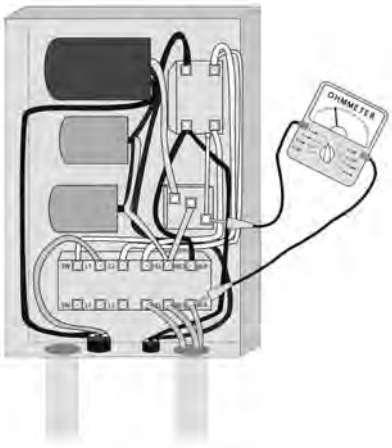

Overload Protection

To check the electrical condition of the thermal overloads, an ohmmeter is required.

Instructions:

1. Turn the **POWER OFF**.
2. Set the scale selector on the ohmmeter to R x 1.
3. Touch one of the ohmmeter leads to an overload protector and one to terminal 1, then terminal 3. Repeat for each overload protector.

Evaluation:
If the ohm values are 0.5 ohms or less, the overload protectors should still be functional. If not, they should be replaced.

Definitions

NET POSITIVE SUCTION HEAD (two types)

Before a centrifugal water pump can operate, the water must enter the pump under a certain minimum amount of pressure. For submersible pumps, this minimum is easily reached, since the pump is submerged in water and both the atmospheric pressure (14.7 psi) and the pressure of the water in the well are present. The amount of pressure (expressed in feet of head) required for a given pump to operate is known as its Net Positive Suction Head **Required**.

This number is determined by extensive testing of the pump by the manufacturer. These requirements are normally shown in graphical form (an **NPSH curve**) for a pump at every flow (GPM) within the flow range for which the pump is designed**.** As a pump's flow (GPM) increases, the NPSHR needed to continue that flow (without cavitating) also increases.

The amount of pressure (expressed in feet of head) that is actually available to a pump is known as its Net Positive Suction Head **Available**. Since the NPSH **Available** to the pump is almost always greater than the NPSH **Required** (for submersible pumps, that is), they are usually not a cause for any concern when sizing a pump or troubleshooting.

For submersible pumps, NPSH Required should not be confused with Total Dynamic Head, which is the amount of head the pump must produce to deliver water at the desired flow rate (GPM) in a given situation. ***Total Dynamic Head*** *(or TDH, as it is sometimes called) is explained below.*

TOTAL DYNAMIC HEAD

When selecting (or "sizing") a pump, two questions must be answered:

1. How much flow is needed ?
   (expressed in Gallons Per Minute)

2. How much head must the pump produce ?
   (known as ***Total Dynamic Head****)*

To determine the Total Dynamic Head the pump must produce, 5 pieces of information are needed:

A **STATIC WATER LEVEL**

+

B **DRAWDOWN**
(as the pump is pumping)

+

C **TANK ELEVATION**

+

D **TANK PRESSURE**
(multiply by 2.31 to convert psi to feet of head)

+

E **FRICTION LOSSES**

THE TOTAL
OF THESE 5 NUMBERS IS
THE AMOUNT OF HEAD
THE PUMP MUST PRODUCE

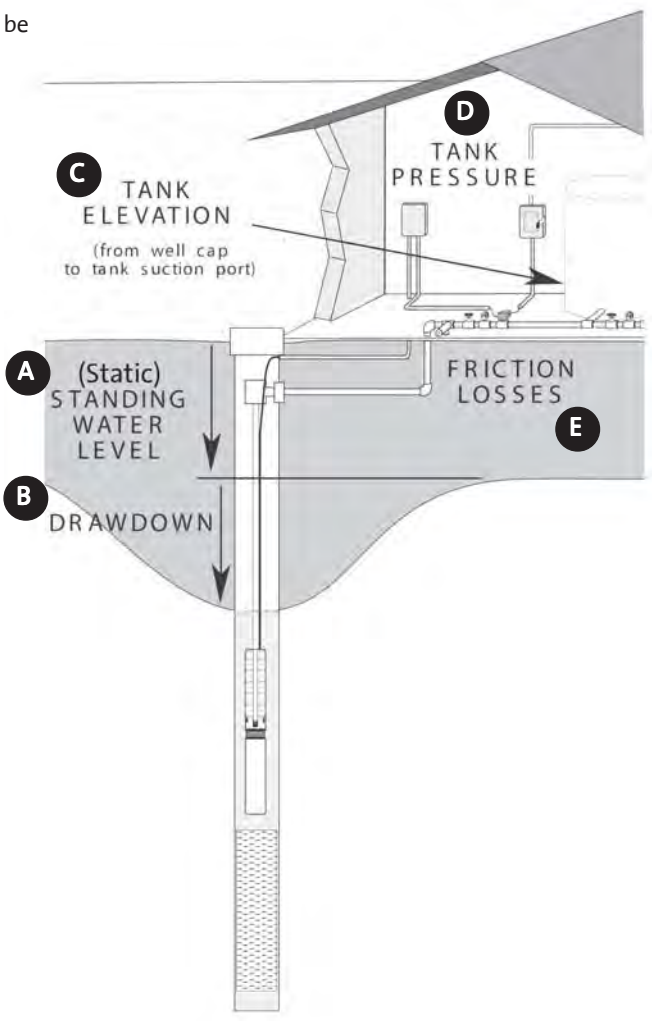

AFFINITY LAWS

The mathematical relationships which permit the head, capacity, brake horsepower (BHP), and NPSH of centrifugal pumps to be predicted based on small changes in impeller diameter size or shaft speed (RPM) changes. These relationships are:

For diameter changes at a constant RPM:

$\frac{D_1}{D_2} = \frac{GPM_1}{GPM_2}$ *Flow changes in direct proportion to the ratio of the diameter change.*

$\left(\frac{D_1}{D_2}\right)^2 = \frac{H_1}{H_2}$ *Head changes to the square ratio of the ratio of the diameter change.*

$\left(\frac{D_1}{D_2}\right)^3 = \frac{BHP_1}{BHP_2}$ *BHP changes to the cube of the ratio of the diameter change*

For RPM changes:

$\frac{RPM_1}{RPM_2} = \frac{GPM_1}{GPM_2}$

$\left(\frac{RPM_1}{RPM_2}\right)^2 = \frac{NPSH_1}{NPSH_2}$

$\left(\frac{RPM_1}{RPM_2}\right)^2 = \frac{H_1}{H_2}$

$\left(\frac{RPM_1}{RPM_2}\right)^3 = \frac{BHP_1}{BHP_2}$

} *Head is affected by the square of the ratio of RPM change and BHP is affected by the cube of the ratio of the RPM change*

Conversion Formulas

HEAD (in feet) = $\frac{\text{Pressure (PSI) x 2.31}}{\text{Specific Gravity (for water, 1.0 at ambient temperatures)}}$

PRESSURE (PSI) = $\frac{\text{HEAD (in ft) x Specific Gravity (for water, 1.0 at ambient temperatures)}}{2.31}$

ATMOSPHERIC PRESSURE Pressure of the Atmosphere Pushing Down (at sea level) = 14.7 PSI = 34 feet of HEAD

BRAKE HORSEPOWER Horsepower Delivered to the Pump Shaft = $\frac{\text{GPM x HEAD x Specific Gravity (for water, 1.0 at ambient temps)}}{\text{3960 x Efficiency Of Pump}}$

PUMP EFFICIENCY Of The Pump = $\frac{\text{GPM x HEAD x Specific Gravity}}{\text{3960 x Brake Horsepower}}$

FOOT POUNDS = Newton Meters (or Nm) x .7376

DEGREES FARENHEIT = (Degrees Celsius x 9/5) + 32

Water Vapor Pressure and Specific Gravity

°F	°C	Specific Gravity (1 at 60°F)	Weight (Lbs per cubic foot)	Vapor Pressure (PSIA)	Vapor Pressure (in feet)
32	0	1.002	62.42	0.0885	0.204
40	4.4	1.001	62.42	0.1217	0.281
45	7.2	1.001	62.40	0.1475	0.340
50	10.0	1.001	62.38	0.1781	0.411
55	12.8	1.000	62.34	0.2563	0.591
60	15.6	1.000	62.34	0.2563	0.591
65	18.3	.999	62.31	0.3056	0.839
70	21.1	.999	62.27	0.3631	0.839
75	23.9	.998	62.24	0.4298	0.994
80	26.7	.998	62.19	0.5069	1.172
85	29.4	.997	62.16	0.5959	1.379
90	32.2	.996	62.11	0.6982	1.617
95	35.0	.995	62.06	0.8153	1.890
100	37.8	.994	62.00	0.9492	2.203
110	43.3	.992	61.84	1.275	2.965
120	48.9	.990	61.73	1.692	3.943
130	54.4	.987	61.54	2.223	5.196
140	60.0	.985	61.39	2.889	6.766
150	65.6	.982	61.20	3.718	8.735
160	71.1	.979	61.01	4.741	11.172
170	76.7	.975	60.79	5.992	14.178
180	82.2	.972	60.57	7.510	17.825
190	87.8	.968	60.35	9.339	22.257
200	93.3	.964	60.13	11.526	27.584
212 (boiling point)	100.0	.959	59.81	14.696	35.353
220	104.4	.956	59.63	17.186	41.343
240	115.6	.948	59.10	24.97	60.77
260	126.7	.939	58.51	35.43	87.05
280	137.8	.929	58.00	49.20	122.18
300	148.9	.919	57.31	67.01	168.22
320	160.0	.909	56.66	89.66	227.55
340	171.1	.898	55.96	89.66	227.55
360	182.2	.886	55.22	153.04	398.49
380	193.3	.874	54.47	195.77	516.75
400	204.4	.860	53.65	247.31	663.42
420	215.6	.847	52.80	308.83	841.17
440	226.7	.833	51.92	381.59	1056.8
460	237.8	.818	51.02	466.9	1317.8
480	248.9	.802	50.00	566.1	1628.4
500	260.0	.786	49.02	680.8	1998.2

Water Properties at Different Altitudes

ALTITUDE		BAROMETER READING		ATMOS. PRESSURE		Boiling Point Of Water F°
Feet	Meters	IN. HG.	MM. HG	PSIA	Feet of Water	
-1000	-304.8	31.0	788	15.2	35.2	213.8
-500	-152.4	30.5	775	15.0	34.6	212.9
0	**0.0**	**29.9**	**760**	**14.7**	**33.9**	**212.0**
+500	+152.4	29.4	747	14.4	33.3	211.1
+1000	304.8	28.9	734	14.2	32.8	210.2
1500	457.2	28.3	719	13.9	32.1	209.3
2000	609.6	27.8	706	13.7	31.5	208.4
2500	762.0	27.3	694	13.4	31.0	207.4
3000	914.4	26.8	681	13.2	30.4	206.5
3500	1066.8	26.3	668	12.9	29.8	205.6
4000	1219.2	25.8	655	12.7	29.2	204.7
4500	1371.6	25.4	645	12.4	28.8	203.8
5000	1524.0	24.9	633	12.2	28.2	202.9
5500	1676.4	24.4	620	12.0	27.6	201.9
6000	1828.8	24.0	610	11.8	27.2	201.0
6500	1981.2	23.5	597	11.5	26.7	200.1
7000	2133.6	23.1	587	11.3	26.2	199.2
7500	2286.0	22.7	577	11.1	25.7	198.3
8000	2438.4	22.2	564	10.9	25.2	197.4
8500	2590.8	21.8	554	10.7	24.7	196.5
9000	2743.2	21.4	544	10.5	24.3	195.5
9500	2895.6	21.0	533	10.3	23.8	194.6
10000	3048.0	20.6	523	10.1	23.4	193.7
15000	4572.0	16.9	429	8.3	19.2	184.0

LSP-TL-015 | Rev. 08/06
PRINTED IN USA

GRUNDFOS Pumps Corporation
17100 W. 118th Terrace
Olathe, Kansas 66062
Phone: 913.227.3400
Fax: 913.227.3500

www.grundfos.com

GRUNDFOS Canada, Inc.
2941 Brighton Road
Oakville, Ontario L6H 6C9 Canada
Phone: 905.829.9533
Fax: 905.829.9512

Bombas GRUNDFOS de Mexico S.A. de C.V.
Boulevard TLC No. 15
Parque Industrial Stiva Aeropuerto
Apodaca, N.L. Mexico 66600
Phone: 52.81.8144.4000
Fax: 52.81.8144.4010

GRUNDFOS®

TAG: LSH-3000
LSH-3004

3E	3N	3B
1" to 3" NPT	#10 Machine Screws from Underside	3/8" - 18NPT, 5/8" - 18UNF, 5/8" - 24UNEF
1 thru 7	1 thru 3	1
Series 3E fittings are cast metal, pressure-tight assemblies capable of handling 1-7 probes. Attachment to vessels is accomplished with external pipe threading. 3E Fittings require the use of 3R rigid or 3W wire suspended electrodes.	Series 3N fittings accommodate 1-3 probes operating at atmospheric pressure. The assembly mounts on a flat surface atop open tanks or closed vessels. 3N Fittings require the use of 3R rigid or 3W wire suspended electrodes.	Series 3B fittings are compact pressure tight assemblies that hold a single electrode probe for use in water and chemicals. These fittings incorporate a 1/4-20 female thread that must be combined with a Series 3R (rigid rod electrode) or Series 3W/3Y (wire suspended electrode) to make a complete assembly.
Die-cast aluminum, epoxy coated	Die-cast aluminum, epoxy coated	—
Cast iron, red brass, 316 stainless steel	PVC, red brass, 316 stainless steel	316 stainless steel
Teflon®	Teflon®	Teflon®
125 psig @ 353°F (cast iron) 250 psig @ 406°F (brass, 316 S.S.)	0 psig @ 150°F (PVC) 0 psig @ 500°F (brass, 316 S.S.)	250 psig @ 406°F 500 psig @ 75°F
U.L. File #MP2489, Vol. 1 Sec. 1; CSA	CSA File #LR11644	U.L. File #MP2489, Vol. 1 Sec. 1; CSA

	No. of Probes	Attachment to Vessel	Conduit Boss Thread Size	Terminal Housing Size (W" x D" x H")
3E	1	1" NPT	1/2" NPT	2-1/4 x 2-1/4 x 2-1/4
	2-3	2" NPT	1/2" NPT	3-1/4 x 3-1/4 x 2-3/8
	4	2-1/2" NPT	1/2" NPT	3-1/4 x 3-1/4 x 2-3/8
	5-7	3" NPT	3/4" NPT	4 x 4 x 2-1/2
3N	1-3	2-1/4" square flat pad, 1-1/2" dia. hole in top of vessel secured with #10 machine screws at the corners of a 1-1/2" square	1/2" NPT	2-1/4 x 2-1/4 x 2-1/4

3E 2 A

- Series **3E**
- Number of Probes **1** thru **7**
- Body Material
  - **A** – Cast Iron
  - **B** – Red Brass
  - **C** – 316 Stainless Steel

3N X X

- Series **3N**
- Number of Probes **1** thru **3**
- Body Material
  - **A** – PVC
  - **B** – Red Brass
  - **C** – 316 Stainless Steel

3B X B

- Series **3B**
- Thread
  - **1** – 3/8" - 18 NPT
  - **2** – 5/8" - 18 UNF
  - **3** – 5/8" - 24 UNEF
- Metal Parts
  - **B** – 316 Stainless Steel

3R, 3W[1]	3R, 3W[1]	3R solid rod (up to 4') 3W[1] or 3Y[2] (greater than 4')

Custom options available. Consult factory.

TAG: LSH-3000
LSH-3004

Series 3R/3T
General Purpose Probes

- Metallic Rods
- Available in Many Materials for Various Requirements
- Adaptable for Various Fittings

For general purpose use, Series 3R probes are metallic rods with threaded ends that screw into a fitting that extends vertically down into the liquid. Available in a variety of materials for different applications. 3T tapered rods are also available.

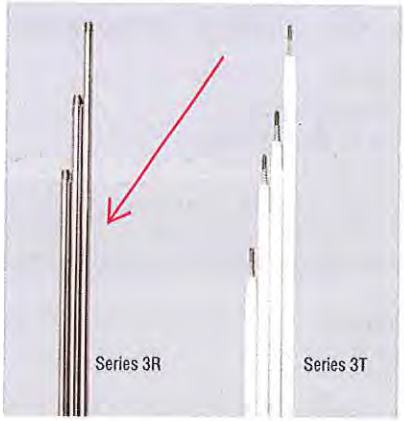

Specifications

Style	
Series 3R	1/4" (.64 cm) threaded rod
Series 3T	1/4" (.64 cm) tapered rod
Material	Brass, Hastelloy C, Monel, 316 stainless steel, titanium, Carp. 20
Sheathing (optional)	PVC heat shrink 200°F (93°C), Teflon® heat shrink 350°F (177°C)

Applications

3R: For use with Series 3E, 3F, 3G, 3B fittings

3T: For use with Series 3G and other custom configurations

How to Order

Use the **Bold** characters from the chart below to construct a product code.

3R 2 C 4

Series
- **3R**
- **3T**

Length (Feet)
- **1** – One
- **2** – Two
- **3** – Three
- **4** – Four
- **5** – Five
- **6** – Six
- **7** – Seven
- **8** – Eight
- **9** – Nine
- **10** – Ten

Probe Material
- **A** – Brass
- **C** – 316 Stainless Steel
- **D** – Carp. 20
- **E** – Hastelloy B
- **F** – Hastelloy C
- **G** – Monel
- **H** – Titanium

Sheathing Heat Shrink
- **0** – None
- **4** – PVC
- **5** – Teflon®

Contact your representative for custom lengths.

Note: Long lengths can be coupled to facilitate shipping and installation. Consult factory.

Dimensions

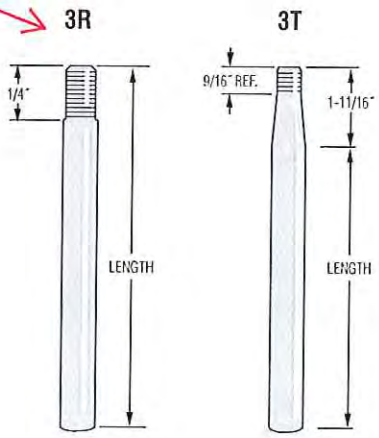

WARRICK CONDUCTIVITY SENSORS

TAG: LSH-3002
LSH-3003

Series 3W – Wire Suspended Probes

- Metallic Bars
- Plastic Shield Protected
- Adaptable to Many Fittings
- Field Assembled

Series 3W probes, consisting of metallic bars within a protective plastic shield, are designed to be suspended in liquid with PVC-insulated wires. They are ideal for applications where rigid electrode rods are impractical or cumbersome, such as:

- Deep Wells
- Pump Control
- Waste Water
- Deep Tanks

7/8″ (2.22 cm) diameter x 3-3/4″ (9.52 cm) length. 3Z1A wire and 3Z1B adaptor kit required for use with 3E, 3F and 3N fittings.

Series 3W

How to Order

Select a 3W electrode, a 3Z1B adaptor and a length of 3Z1A suspension wire to form a complete suspended probe.

1. 3W Electrodes

Probe Material	Part Number
Brass	3W1
316 Stainless Steel	3W2

2. 3Z1B Adaptor Kit
For use with 3E, 3F and 3N fittings.
Part Number: 3Z1B

3. 3Z1A Suspension Wire
Order in standard or custom length.

Length (Feet)	Part Number
500	100325-500
1000	100325-1000
5000	100325-5000
Custom	3Z1A-20

Specify in one foot increments up to 5000 ft.

Components Detail

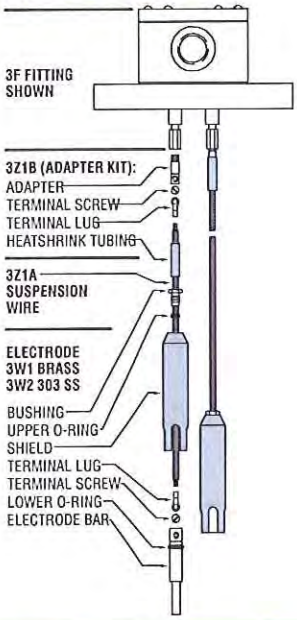

Series 3Y – Corrosion Resistant Probes

- Metallic Bars
- Corrosion Resistant
- Available in Many Materials for Various Requirements
- Adaptable for Various Fittings

Series 3Y wire suspended probes consist of metallic bars within a protective plastic shield, designed to be suspended in liquid. Series 3Y suspension wires are PVC or Teflon© insulated for use in corrosive liquid applications. 7/8″ (2.22 cm) diameter x 3-1/2″ (8.90 cm) length.

Series 3Y

Specifications

Style	Wire suspended
Tip Material	Carp. 20, Hastelloy C, 316 stainless steel
Shield Material	PVC 150°F (66°C), Teflon©

How to Order

Use the **Bold** characters from the chart below to construct a product code.

3Y X X X

Series
3Y

Shield Material
1 – PVC
3 – Teflon©

Probe Tip Material
C – 316 Stainless Steel
D – Carp. 20
F – Hastelloy C

Length of Wire
1 – 10 feet
2 – 20 feet
3 – 30 feet
etc.

Note: 3Z1B Connector is used to connect suspension wire with 3B, 3E, 3F, 3G or 3N fitting.

Applications

- General Purpose
- Wire Suspended Probes
- Corrosive Liquids, Chemicals

KAFB-106233 and KAFB-106234 Manufacturer's Literature

13B63622 150S400-22 60 Hz

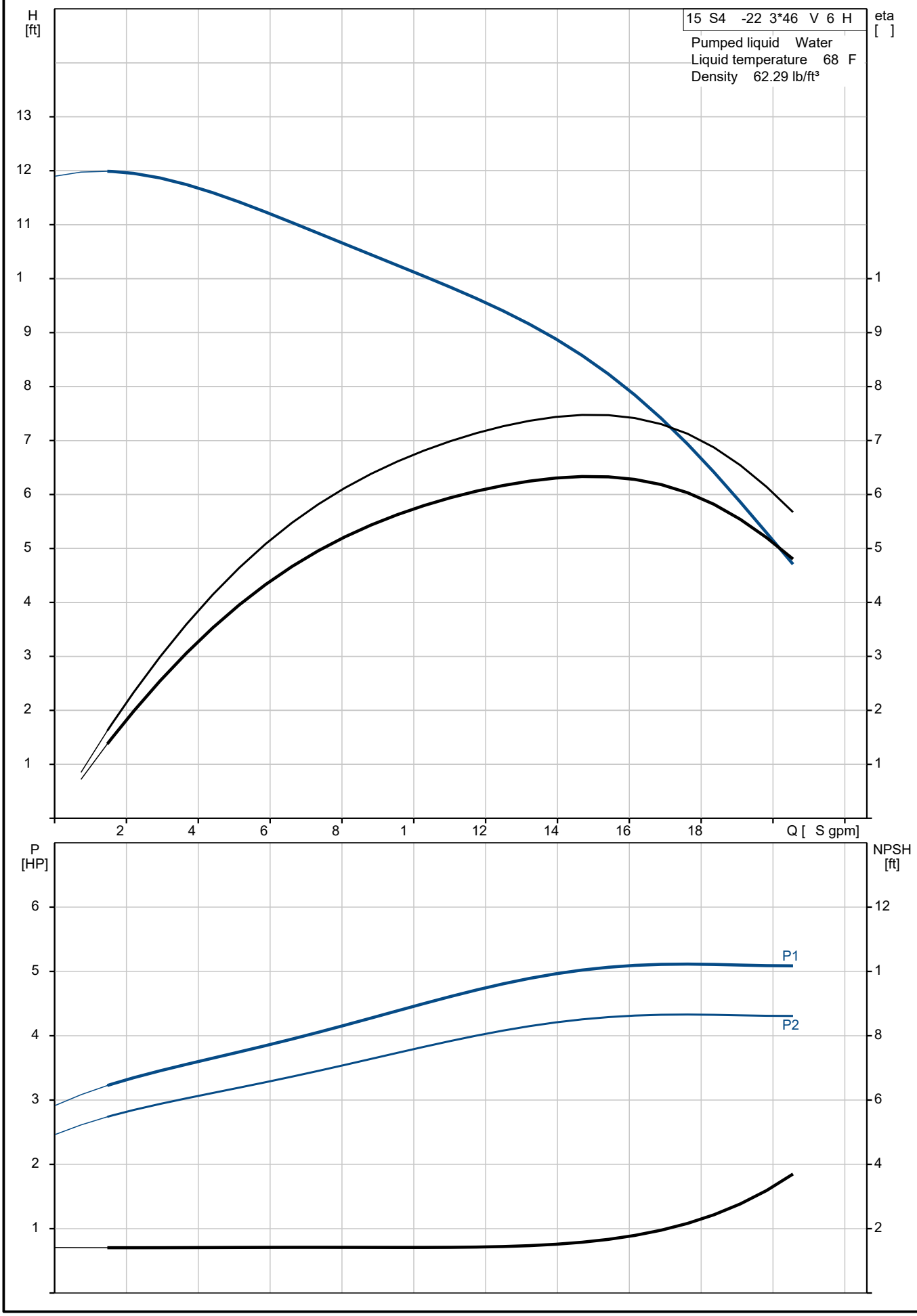

Description	Value
General information:	
Product name:	15 S4 -22
Position	
Product No.:	13B63622
EAN:	57 3914282 3
Price:	On request
Technical:	
Speed for pump data:	345 rpm
Rated flow:	159 S gpm
Rated head:	784 ft
Shaft seal for motor:	SIC/SICNBR
Curve tolerance:	ISO99 6:2 12 3B
Stages:	22
Model:	A
Valve:	pump with built-in non-return valve
Curve tolerance:	ISO99 6:2 12 3B
Materials:	
Pump:	Stainless steel
	DIN W.-Nr. 1.43 1
	AISI 3 4
Impeller:	Stainless steel
	DIN W.-Nr. 1.43 1
	AISI 3 4
Motor:	Stainless steel
	DIN W.-Nr. 1.43 1
	AISI 3 4
Installation:	
Maximum ambient pressure:	87 psi
Motor diameter:	6 inch
Liquid:	
Max liquid temperature at .15 m/sec:	116.6 F
Electrical data:	
Motor type:	MS6
Rated power - P2:	4 HP
KVA code:	H
Main frequency:	6 H
Rated voltage:	3 x 44 -46 -48 V
Start. method:	direct-on-line
Starter:	3
Service factor:	1.15
Rated current:	65. -62. -61. A
Starting current:	47 -52 -56
	32 A
Cos phi - power factor:	.88- .86- .84
Rated speed:	344 -346 -348 rpm
Axial load max:	59.5 lb
Motor efficiency at full load:	85
Enclosure class IEC 34-5 :	IP68
Insulation class IEC 85 :	F
Motor protection:	NONE
Thermal protec:	external
Built-in temperature transmitter:	yes
Motor Number:	9616617
Cable number:	96163476
Controls:	
Heather:	K78
Others:	

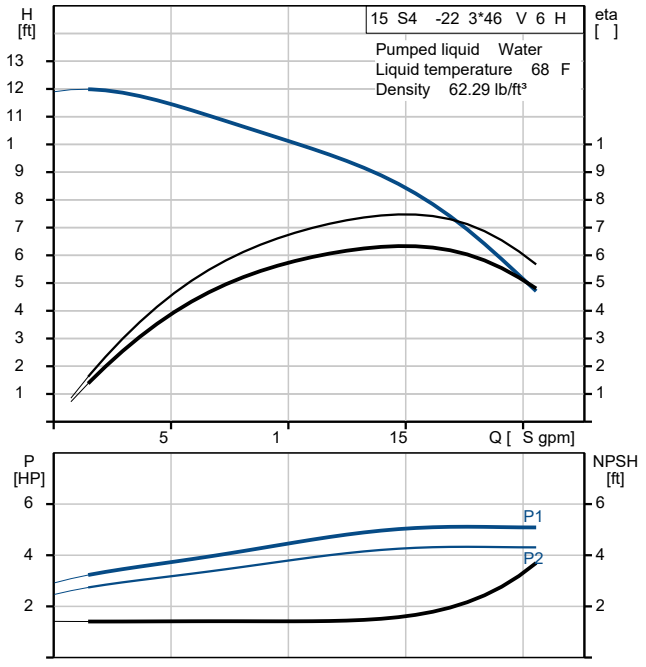

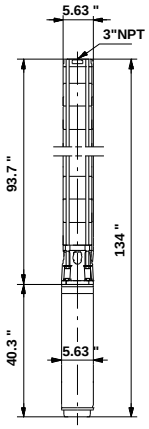

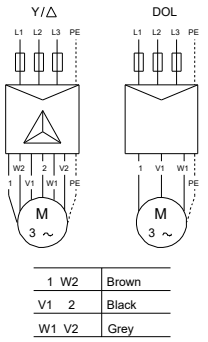

1 W2	Brown
V1 2	Black
W1 V2	Grey

Description	Value
Net weight:	281 lb
Gross weight:	381 lb
Sales region:	Namreg

13B63622 150S400-22 60 Hz

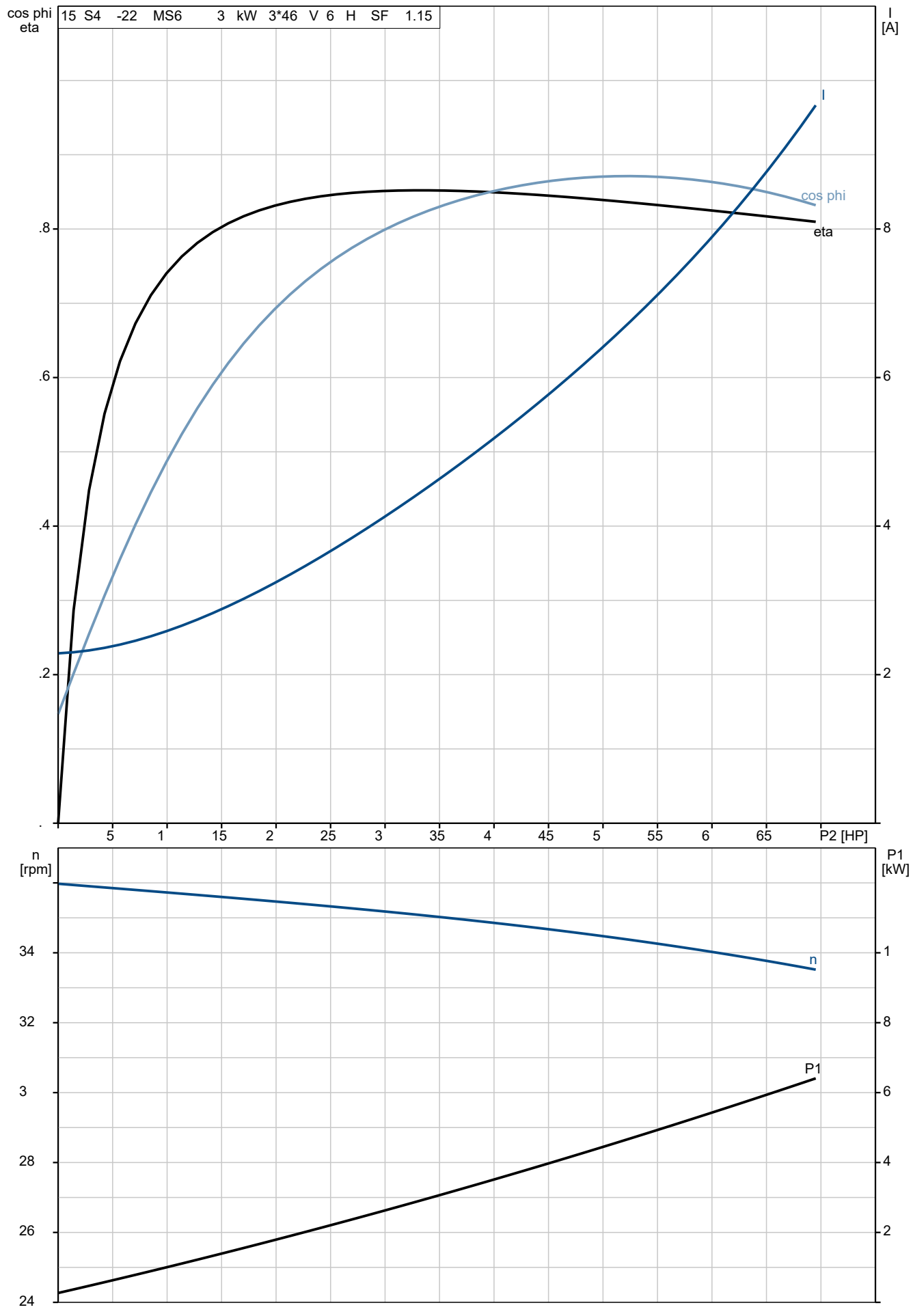

13B63622 150S400-22 60 Hz

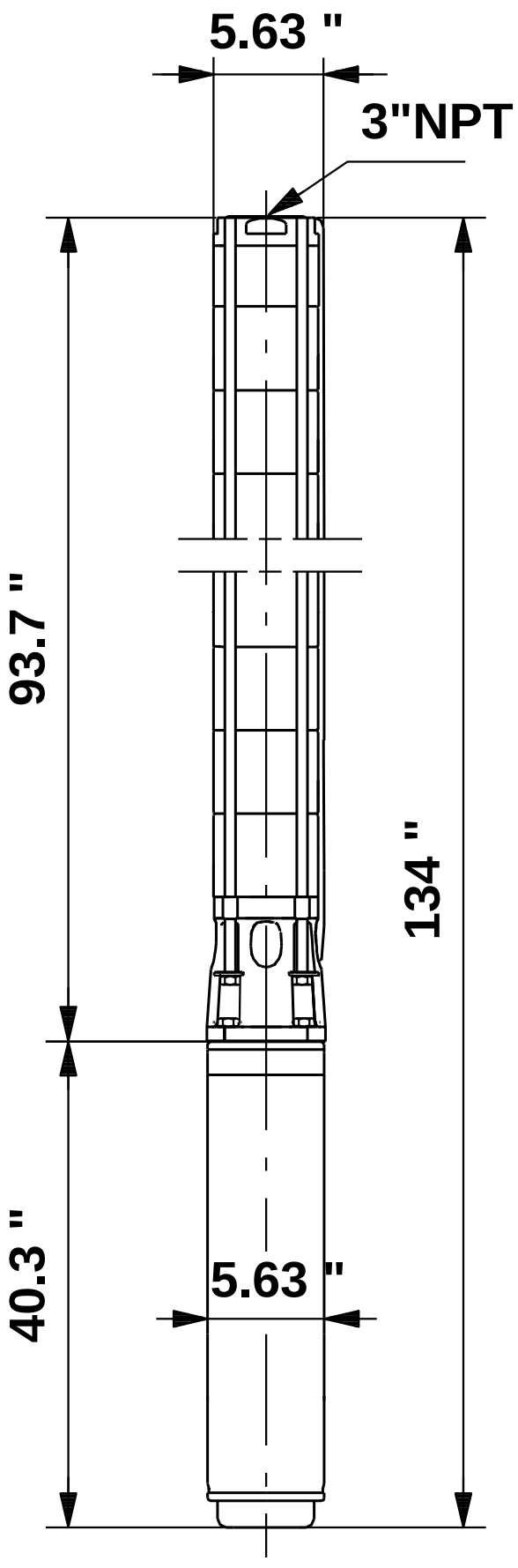

Note! All units are in [mm] unless otherwise stated.
Disclaimer: This simplified dimensional drawing does not show all details.

13B63622 150S400-22 60 Hz

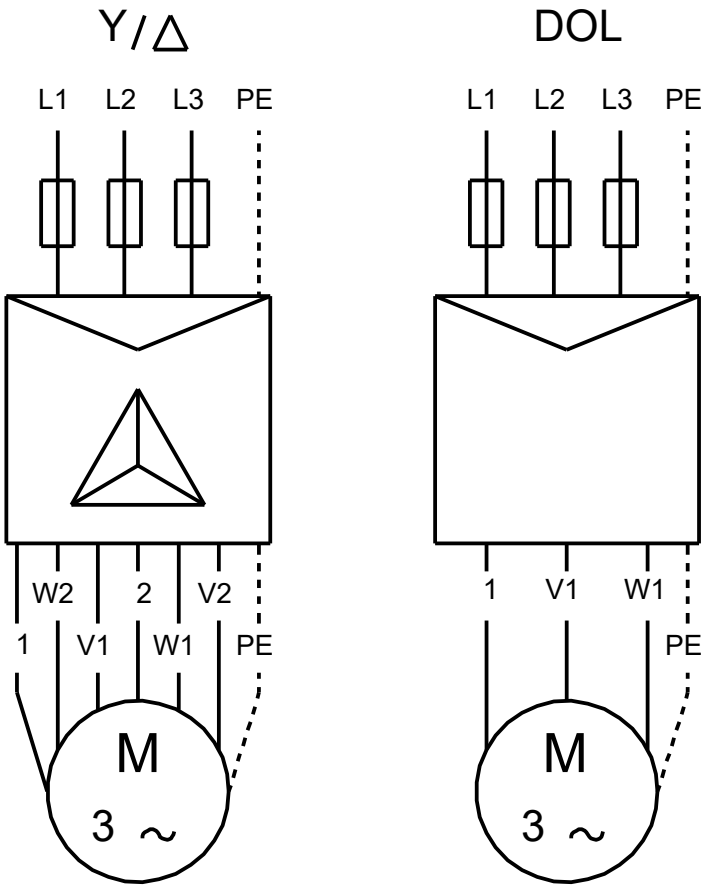

1 W2	Brown
V1 2	Black
W1 V2	Grey

All units are [mm] unless otherwise presented.

Part #: IMS3R-RV-S3/J-G100
Nema 3R with C/B Disconnect
40HP/460VAC/3-Phase

IMS-RV Intelligent Motor Soft-Starter

3Ø, 200~460VAC, 2-250HP,
ADVANCED ELECTRONIC OVERLOAD
INTEGRATED CONTACTOR BYPASS

The World's Most Intelligent Soft-Starter

Integrated electronic motor protection

- Our most advanced motor protection
- Wide range class 5-30 electronic overload
- Advanced protective features include over/under voltage/power, phase loss/unbalance, stalled/locked rotor, cycle fault and UL 1053 ground fault

Approved as equal, with exception to autotransformer requirement.

Soft start features

- Adjustable current limit, initial voltage, start/stop time
- Coast to stop
- Torque boost
- SCR over-temperature detection
- Shorted SCR detection
- Across-the-line start for emergency situations

Built-in power monitoring, fault logging and communications

- Last 15 fault types are recorded (overload, voltage/current loss/unbalance, etc.)
- Fault counter: stores how many times each fault type has occurred (Up to 255)
- Logs changes to parameter settings (e.g. overload, OV/UV)
- All power condition values are displayed
- Built-in RS-485 for Modbus RTU communication

Industrial grade construction

- Door mounted HOA switch
- UL/NEMA Type 3R outdoor rating (4, 4X Available)
- Multi-tap transformer accommodates common voltages; no fuses required
- 120V control power for field devices (optional 24V)
- NEMA rated contactor, 2.5 Million electrical cycles at full rated current

Programmable control options

- Auto-restart
- Backspin delay
- On/Off delay settings
- Minimum run time based on last input
- 12-120V auto run input terminal for remote start/stop
- Dry contact input terminal for remote start/stop
- Analog input for (selectable) 0-10V, 4-20mA, 10k Thermistor, viewable as a Modbus point

Optional circuit breaker disconnect.

- UL 489 circuit breaker provides branch and short circuit protection
- No fuses required
- Lockable handle for safety

< The internal keypad and LCD make the IMS intuitive and versatile. Parameters are easily changed and faults are clearly displayed.

< Standard control features include a 12-120V auto run input, shutdown terminal for applications such as a low level float switch, and more.

< Our multi-tap power transformer accepts inputs of: 200V, 230V, 460V

Ordering and Sizing Information

UL/NEMA TYPE 3R OUTDOOR ENCLOSURE
COMBINATION INTELLIGENT MOTOR SOFT STARTER - 3-Phase, 200–460VAC

200 V - 460 V 3-Phase SFA Range** (A)	Max. 3-PHASE HP (UL) / Max. Amps						Contactor NEMA Size	IMS-RV Part Number
	200V		230V		460V			
	HP	Amps	HP	Amps	HP	Amps		
6~8	2	8	2	8	5	8	1	IMS3R-RV-S1/J-G15
8~11	3	11	3	11	7.5	11		IMS3R-RV-S1/J-G20
11~17	3	17	5	17	10	17		IMS3R-RV-S1/J-G30
16~22	5	22	7.5	22	15	22		IMS3R-RV-S1/J-G40
20~28	7.5	28	10	28	20	28	1P	IMS3R-RV-S1P/J-G50
24~34	10	34	10	34	25	34		IMS3R-RV-S1P/J-G60
32~45	10	45	15	45	30	45	2	IMS3R-RV-S2/J-G80
40~57	15	57	20	57	40	57	3	IMS3R-RV-S3/J-G100
50~71	20	71	25	71	50	71		IMS3R-RV-S3/J-G125
60~85	25	85	30	85	60	85	3P	IMS3R-RV-S3P/J-G150
80~114	30	114	40	114	75	114	4	IMS3R-RV-S4/J-G200
100~DPV*	40	120	50	130	100	124		IMS3R-RV-S4/J-G250
100~142	40	142	50	142	100	142	5	IMS3R-RV-S5/J-G250
120~170	50	170	50	171	125	171		IMS3R-RV-S5/J-G300
160~220	60	220	75	220	150	220		IMS3R-RV-S5/J-G400
201~285	100	285	100	285	200	285		IMS3R-RV-S5/J-G500
240~320	100	330	100	330	250	330		IMS3R-RV-S5/J-G600

UL/NEMA TYPE 3R OUTDOOR ENCLOSURE
STANDARD INTELLIGENT MOTOR SOFT STARTER - 3-Phase, 200–460VAC

200 V - 460 V 3-Phase SFA Range** (A)	Max. 3-PHASE HP (UL) / Max. Amps						Contactor NEMA Size	IMS-RV Part Number
	200V		230V		460V			
	HP	Amps	HP	Amps	HP	Amps		
1~50	15	50	15	50	30	50	2	IMS3R-RV-S2/J-50
1~85	25	85	30	85	77	85	3	IMS3R-RV-S3P/J-85
50~DPV*	40	120	50	130	100	124	4	IMS3R-RV-S4/J-130
50~170	50	170	60	170	125	170	5	IMS3R-RV-S5/J-170
151~220	60	220	75	220	150	220		IMS3R-RV-S5/J-220
176~270	75	270	100	270	200	270		IMS3R-RV-S5/J-270
201~330	100	330	125	330	250	330		IMS3R-RV-S5/J-330

Dimensions

**All measurements in inches*

IMS-RV (Combination)

Starter Size	H	W	D
S1 ~ S3P	32	15	10
S4	36	24	12
S5/J-G200 ~ S5/J-G400	42	30	12
S5/J-G500 ~ S5/J-G600	48	30	16

IMS-RV (Standard)

Starter Size	H	W	D
S2 ~ S3P	32	15	10
S4	36	24	12
S5	42	30	12

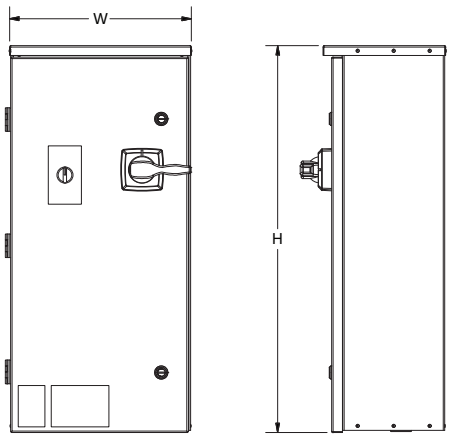

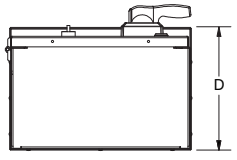

IMS-RV Options

Options	
IMS-SRG240	Surge Suppressor, 200/230 V
IMS-SRG480	Surge Suppressor, 460 V
IMS-SRG600	Surge Suppressor, 600 V
IMS-RPL	Run Pilot Light, Green
IMS-FPL	Fault Pilot Light, Red
IMS-SPB	Start Push-Button Control
IMS-STSP	Start/Stop Push-Button Control (In Lieu of Hand/Off/Auto Switch)
IMS-24	24 VAC Control Circuit (In Lieu of 120 VAC Control Circuit)

IMS-RV Wiring Diagram

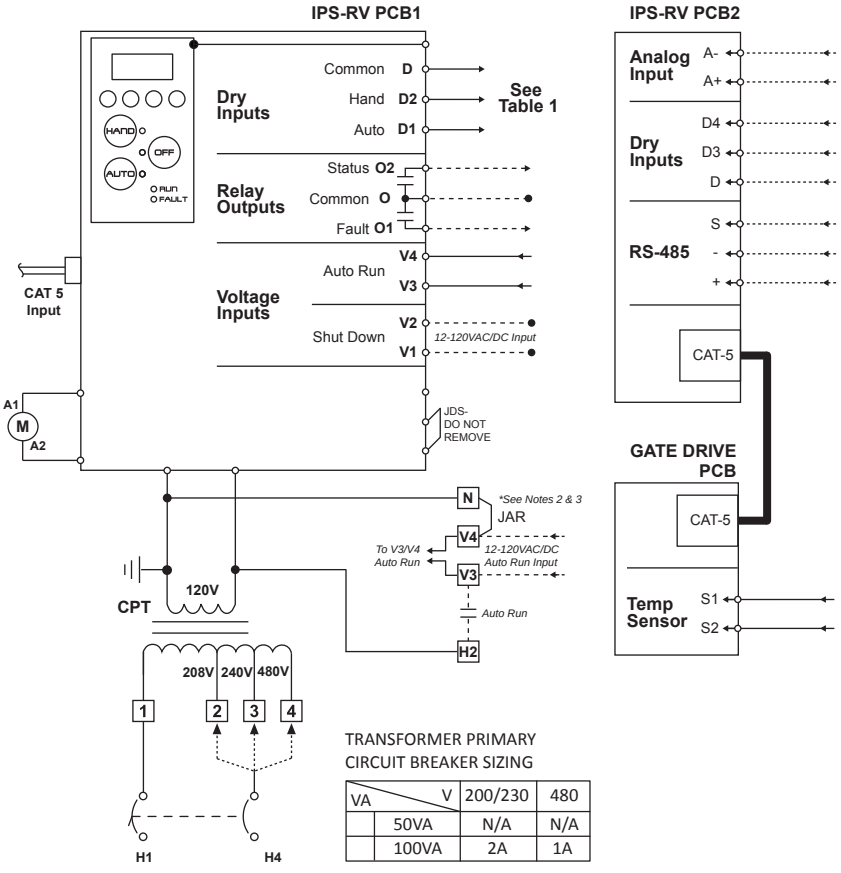

TRANSFORMER PRIMARY CIRCUIT BREAKER SIZING

VA \ V	200/230	480
50VA	N/A	N/A
100VA	2A	1A

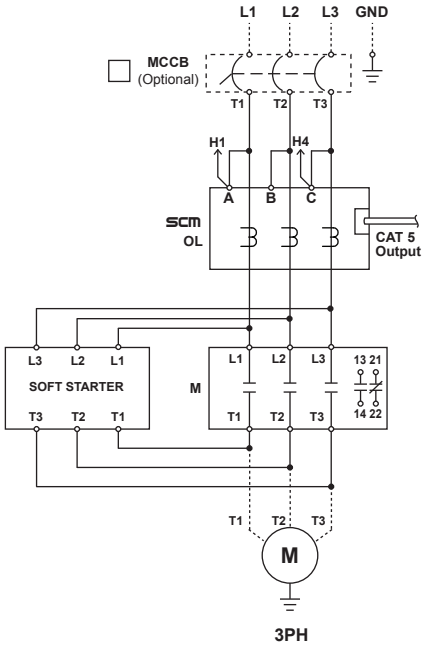

TABLE 1

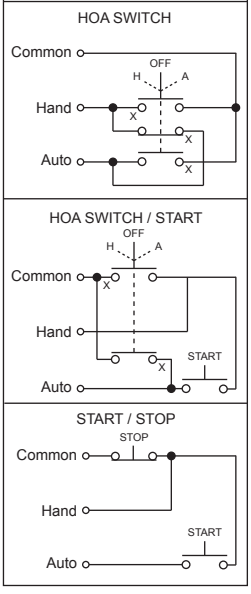

NOTES:

1. DASHED LINES INDICATE FIELD WIRING
2. WHEN JUMPER JAR IS PRESENT, TERMINALS V3 & H2 ACT AS CONNECTIONS FOR A NORMALLY OPEN, DRY CONTACT, AUTO RUN INPUT.
3. REMOVE JUMPER JAR TO USE V3 & V4 TERMINALS AS A VOLTAGE, AUTO RUN INPUT. APPLY 12~120VAC/DC TO ENERGIZE

Specifications

Starter Type			
IMS-RV - Intelligent Motor Soft-Starter			
Standard or Combination - Service Rated			
UL /NEMA Type 3R Enclosed			
User Interface			
Keypad with display screen		Internal	
Hand-Off-Auto Switch		Door mounted	
Standard Control Operations			
Inputs	Voltage Auto	Accepts 12-130VAC/DC. Applying voltage will send a run command to the starter when in Auto mode.	
	Dry Contact Auto	Normally Open dry contact. When closed, the starter will be commanded to run when in Auto mode.	
	Shutdown	Accepts 12-130VAC/DC. Applying voltage will open the contactor and the starter will not accept a run command Hand/Off/Auto LEDs will flash	
	RS-485	Modbus RTU slave	
	Analog	Selectable: 0-10V, 4-20mA, 10k Thermistor, viewable as a Modbus point	
Outputs	Status Relay	Normally Open relay contact, 0.3A @ 125VAC, 1A @ 24VAC	
	Fault Relay	Normally Open relay contact, 0.3A @ 125VAC, 1A @ 24VAC	
Operational	Overload Type	Electronic, I2t trip curve	
	Power Fail	Restart in last mode (Hand/Off/Auto) with no delay (default)	
		Restart in Off mode	
		Restart in Off mode if power failure lasts longer than 2 seconds. Restart in last mode if power failure is less than 2 seconds.	
	On/Off Delay	On/Off, Adjustable: 0.1-99 seconds	
	Fault Reset	Adjustable: Manual or Automatic (default differs per motor protection feature)	
	Starts	6/hour, 20 seconds max. start time @ 400% FLA, 30 seconds max. start time @ 300% FLA	
Environmental			
Ambient Operating Temp		-5° to 140° F (-20° to 60° C)	
Ambient Storage Temp		-5° to 185° F (-20° to 85° C)	
Relative Humidity		5% to 95% non-condensing (NEMA 1)	

Motor Protection	Adjustment/Description	Default Setting
Overload Current Setting Range	Differs per model	Per Amps
Overload Trip Class	Adjustable: 5-30	10
Overload Service Factor	Adjustable: 0.00-2.00	1.15
Over Power	On/Off, Adjustable: 101-200% of measured electrical input	On / 120%
Over / Under Voltage	On/Off, Adjustable: +5-25% over/under the nominal voltage setting	On / 10%
Voltage Phase Unbalance	On/Off, Adjustable: 1-20% voltage phase deviation	On / 3%
Voltage Phase Loss	Always On, Adjustable: 1-50% voltage phase deviation	On
Voltage Phase Sequence Reversal	On/Off, Trips within 0.1 seconds upon voltage phase reversal detection	On
Ground Fault (UL 1053 Certified)	On/Off, Adjustable: 1.0-9.9A	On / 1A
Cycle Fault	On/Off, Adjustable: Trip if cycle rate exceeds 20 starts/minute	On
Warm Start Provision	On/Off, Delays motor restart based on calculated motor temperature	On
Current Phase Unbalance	On/Off, Adjustable: 1-50% current phase unbalance	On / 5%
Locked Rotor / Stall	On/Off, Trips within 0.5 seconds	On
Shorted SCR	Always On: Trips upon detection of a shorted SCR or no motor	On
Open SCR	Always On: Trips if no current is detected during start-up or bypass	On
SCR Over-Temperature	Always On: Trips if the SCR temperature reaches 125oC	On
Across-the-Line Start	On/Off: Allows the user to start the motor across-the-line. (Turns soft starter into standard IPS)	On

Pilot Devices & Accessories

Fits 22mm Mounting Patterns
UL Type 1, 12, 3R, 4 & 4X

Selector Switches

	Type	Part Number
2-Position	Stay Put	CB2-BD2
	Spring Return	CB2-BDR2
3-Position	Stay Put	CB2-BD3
	Spring Return	CB2-BDR3
	Spring Return (R to C)	CB2-BD8
	Spring Return (L to C)	CB2-BD7

Key Switches

	Type	Part Number
2-Position	Stay Put	CB2-BG4
3-Position	Stay Put	CB2-BG0

** Key is removable in all positions*

Non-Illuminated Pushbuttons

	Type	Color	Part Number
	Flush Momentary	White	CB2-BA1
		Black	CB2-BA2
		Green	CB2-BA3
		Red	CB2-BA4
	Projecting Momentary	White	CB2-BL1
		Black	CB2-BL2
		Green	CB2-BL3
		Red	CB2-BL4
	Reset*	Black (Electrical)	CB2-BA2-RST

	Type	Style	Part Number
	Emergency Stop (Red, 40mm)	Turn Release	CB2-BS44
		Key Release	CB2-BS14
		Push/Pull	CB2-BT4
	Dual head Start/Stop	Push Button	CB2-BA87

**Mechanical style reset utilizes CB2-RPX extension shaft and electrical style utilizes CB2-BZ contact block assembly.*

Legend Plates

Description	Part Number
Bypass	CB2-PY2300BYP
Fwd-Auto-Rev	CB2-PY2300FAR
Fault	CB2-PY2300FLT
Fwd-Off-Rev	CB2-PY2300FOR
Low-Auto-High	CB2-PY2300LAH
M1-Auto-M2	CB2-PY2300MAM
M1-Off-M2	CB2-PY2300MOM
Off-Auto	CB2-PY2300OFA
Run	CB2-PY2300RUN
VFD-Off-Bypass	CB2-PY2300VFD
Start	CB2-PY2303
Forward	CB2-PY2305
Up	CB2-PY2307
On	CB2-PY2311
Open	CB2-PY2313
Auto	CB2-PY2315
Reset	CB2-PY2323
Slow	CB2-PY2327
Auto-Hand	CB2-PY2364
Stop	CB2-PY2304
Reverse	CB2-PY2306
Down	CB2-PY2308
Off	CB2-PY2312
Close	CB2-PY2314
Hand	CB2-PY2316
Inch	CB2-PY2321
Fast	CB2-PY2328
Hand-Off-Auto	CB2-PY2387
Low	CB2-PY2333
High	CB2-PY2334
High-Low	CB2-PY2335
Off-On	CB2-PY2336
Up-Down	CB2-PY2338
Emergency Stop (60mm)	CB2-PY9330
Emergency Stop (90mm)	CB2-PY8330

Complete Station - Start/Stop Spring Return

Meets UL Type 1, 12, 3R, 4 & 4X Ratings
Rugged Design
Convenient standard knockouts for easy installation

	Description	Part Number
	Plastic Control Station	**CC2P-215**
	Metal Control Station	**CC2M-215**

E-Stop Station

	Description	Part Number
	Keyed to Release Station	**CC-1PBS142**
	Pull to Release Station	**CC-1PBT42**

Compact Pilot Lights

	Color	Part Number
	Green	**CB2-B7-IV-73***
	Red	**CB2-B7-IV-74***
	Amber	**CB2-B7-IV-75***

** Select desired voltage from table upon ordering 12, 24, 110, 240*

Voltage Selection Chart

AC Voltage	24VAC	110VAC	240VAC
DC Voltage	12VDC	24VDC	

Miscellaneous Accessories

	Description	Part Number
	Attachment Collar	**CB2-B**
	Spare/Replacement Keys	**CB2-K455**
	Padlockable Cover	**CB2-BZ6**
	5.125"/130.18mm plastic shaft reset plunger (can be trimmed to any length)	**CB2-RPX**

Assemblies for Selector Switches & Pushbuttons

	Contact	Part Number
Contact Block & Collar	1 NO	**CB2-BZ101**
	1 NC	**CB2-BZ102**
	2 NO	**CB2-BZ103**
	2 NC	**CB2-BZ104**
	1 NO & 1 NC	**CB2-BZ105**
Additional Contact Blocks (Max 6)	1 NO	**CB2-BE101**
	1 NC	**CB2-BE102**

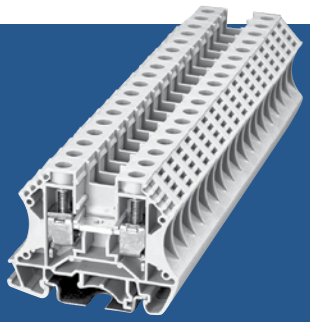

DIN Rail Mountable Terminal Blocks

25~230A at 600VAC
Accepts Wire Size 22~4/0 AWG
Compatible with 32mm & 35mm DIN rails

Specifications

- Increased conductivity and corrosion prevention through use of electrolytic copper conductors
- Screws and fasteners are made of high carbon steel to withstand higher torque
- Steel wirecase for tight connections and vibration resistance
- Large contact points for reliable connections
- Optional pre-printed terminal block markers (standard numeric or custom marking available)

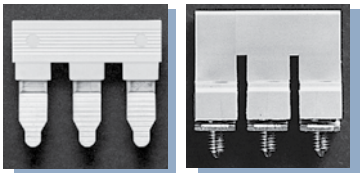

Choose between cage inserted (left) or central type (right) jumpers.

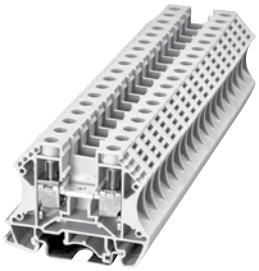

DK Series - Screw Clamp Connection

Part Number	Rated Current	Rated Surge Voltage (kV)	Solid Wire (AWG)	Stranded Wire (AWG)	Wire Strip Length (in)	Torque (lb-in)	Screw	Dimensions H x W x T (in)
DK2.5	25A	2.2	22~12	22~12	0.39~0.47	7	M3	0.20 x 1.87 x 2.32
DK4	35A	2.2	22~10	22~10	0.39~0.47	7	M3	0.24 x 1.87 x 2.32
DK6	45A	2.2	20~8	20~8	0.31	15.6	M4	0.31 x 1.87 x 2.32
DK10	60A	2.2	20~6	20~6	0.47~0.55	15.6	M4	0.39 x 1.87 x 2.32
DK16H	70A	2.2	14~6	14~6	0.59~0.67	30.4	M5	0.47 x 2.50 x 2.32
DK35H	115A	2.2	12~2	12~2	0.63~0.71	50	M6	0.63 x 2.50 x 2.32
DK50	150A	2.2	6~2(105A)	6~1/0	0.98~1.18	50	M6	0.79 x 3.02 x 2.78
DK95	230A	2.2	2~4(100A)	2~4/0	1.18~1.34	90	M8	0.98 x 3.48 x 3.15

Terminal Block Accessories

Model	End Cover	End Bracket	Cross Jumper			Terminal Markers*
			Central Type		Cage Inserted	
			2-Pole	3-Pole	2-Pole	
DK2.5	**DK2.5C**	**SS4**	**DS2.5-02P**	**DS2.5-03P**	**CSC-2.502P**	**TM26**
DK4		**SS4**	**DS4-02P**	**DS4-03P**	**CSC-402P**	**TM37**
DK6		**SS7**	**DS6-02P**	**DS6-03P**	**CSC-602P**	**TM27**
DK10		**SS7**	**DS10-02P**	**DS10-03P**	**CSC-1002P**	**TM28**
DK16H	**DK16HC**	**SS6**	**DS16-02P**	**DS16-03P**	-	**TM28**
DK35H		**SS6**	**DS35-02P**	**-**	-	**TM28**
DK50	-	**SS6**	-	**-**	-	**TM28**
DK95	-	**SS6**	-	-	-	**TM28**

**Specify numeric label range or custom values when ordering*

GK Series - Grounding Terminal Blocks

Part Number	Rated Current	Rated Surge Voltage (kV)	Solid Wire (AWG)	Stranded Wire (AWG)	Wire Strip Length (in)	Torque (lb-in)	Screw	Dimensions H x W x T (in)
DK2.5-PE	25A	2.2	26~12	26~12	0.39~0.55	6.9	M3	0.22 x 1.83 x 2.20
DK4-PE	35A	2.2	26~10	26~10	0.47~0.63	6.9	M3	0.26 x 1.83 x 2.20
DK10-PE	50A	2.2	16~8	16~8	0.47~0.63	15.6	M4	0.41 x 1.83 x 2.20
DK16-PE	65A	-	14~6	14~6	0.55~0.71	30.4	M5	0.47 x 2.46 x 2.20

SK Series - Spring Clamp Connection

Part Number	End Cover	Terminal Markers	Rated Current	Rated Surge Voltage (kV)	Solid Wire (AWG)	Stranded Wire (AWG)	Wire Strip Length (in)	Dimensions H x W x T (in)
AK4	**AK4C**	**TM37**	20A	2.2	28~12	28~12	0.39~0.55	1.30 x 2.32 x 0.24
AK4-TR	**AK4C-TR**	**TM37**	20A	2.2	28~12	28~12	0.39~0.55	1.30 x 3.39 x 0.24

Miniature Circuit Breakers

1~10A at 460VAC
Thermal-magnetic Release
1, 2 & 3-Pole Models

High Value, Supplemental Circuit Breaking

- D-curve magnetic trip point (10x rated current) provides quick response short circuit protection
- UL 1077 listed, supplemental overcurrent protection for situations where UL 489 branch protection is already provided or unnecessary
- Ideal for highly inductive loads or transformers
- IP20 finger safe design and 35mm DIN-rain mountable

Mini Circuit Breakers - D-Curve Magnetic Trip (6kA @ 400VAC)

Amps		Part Number		Part Number		Part Number
1		CI-MCB-D/1P-1A		CI-MCB-D/2P-1A		CI-MCB-D/3P-1A
2		CI-MCB-D/1P-2A		CI-MCB-D/2P-2A		CI-MCB-D/3P-2A
3		CI-MCB-D/1P-3A		CI-MCB-D/2P-3A		CI-MCB-D/3P-3A
4		CI-MCB-D/1P-4A		CI-MCB-D/2P-4A		CI-MCB-D/3P-4A
6		CI-MCB-D/1P-6A		CI-MCB-D/2P-6A		CI-MCB-D/3P-6A
10		CI-MCB-D/1P-10A		CI-MCB-D/2P-10A		CI-MCB-D/3P-10A
16	1-Pole	CI-MCB-D/1P-16A	2-Pole	CI-MCB-D/2P-16A	3-Pole	CI-MCB-D/3P-16A
20		CI-MCB-D/1P-20A		CI-MCB-D/2P-20A		CI-MCB-D/3P-20A
25		CI-MCB-D/1P-25A		CI-MCB-D/2P-25A		CI-MCB-D/3P-25A
32		CI-MCB-D/1P-32A		CI-MCB-D/2P-32A		CI-MCB-D/3P-32A
40		CI-MCB-D/1P-40A		CI-MCB-D/2P-40A		CI-MCB-D/3P-40A
50		CI-MCB-D/1P-50A		CI-MCB-D/2P-50A		CI-MCB-D/3P-50A
63		CI-MCB-D/1P-63A		CI-MCB-D/2P-63A		CI-MCB-D/3P-63A

WELD ON PITLESS ADAPTER

C USA
NSF / ANSI 372
LEAD FREE

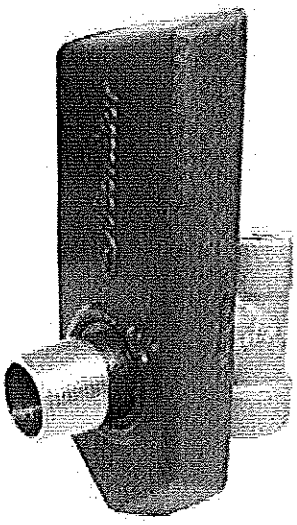

10/22/15

Weld on tear drop designed bottom for easy welding onto a steel casing in 8", 10" and 12" I.D. well sizes.

8123BEZLF Pitless Adapter Pressure Drop Test (using an 80 GPM pump to supply water flow)			
Flow Rate (GPM)	Inlet Pressure (psi)	Outlet Pressure (psi)	Pressure Drop (psi)
40	4	3	1
60	5.5	4.5	1
80	8.5	7	1.5

8-20-2002 Data

PDF Created with deskPDF PDF Writer - Trial :: http://www.docudesk.com

WELD ON PITLESS ADAPTERS

WELD ON PITLESS ADAPTER FOR 8", 10" & 12" WELLS

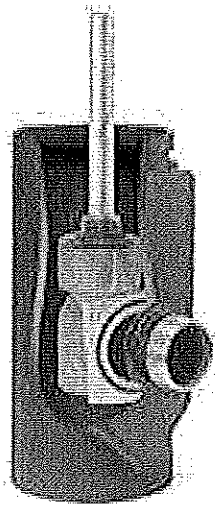

FEATURES

- Durable fabricated steel housing - brass elbow, stainless steel discharge, large drain hole in the pull pipe port, 3" FIP pull pipe, 3" FIP drop pipe, 3" stainless steel MIP discharge and large O-ring seal.
- Designed to be welded onto 8", 10" and 12" I.D. steel casing.
- Designed for shallow or deep settings and high working pressures up to 300 PSI.
- Durable steel housing with tear drop design for EZ bottom welding.
- Water contacts only 304 stainless steel and brass elbow for long term corrosion protection.
- No obstruction in the casing I.D. when the brass elbow is removed.
- Stainless steel 10° tapered slip fitting design on the elbow for easy installation and removal at time of servicing.
- Large O-ring neoprene seal.
- Large drain hole in the 3" FIP pull pipe port.
- Designed for 10,000 lbs. load.
- Also available factory welded to casing.

RCS 10/22/15

Weld On Pitless Adapter				
Order No.	Well Size	Drop Pipe Size	Discharge Size	Weight (lbs.)
8123BEZLF	8", 10", 12" I.D.	3" Female NPT	3" Male NPT	27
83BEZLF	Kit for 8" x 18" L.	3" Female NPT	3" Male NPT	75
83BEZ6LF	Kit for 6"	3" Female NPT	3" Male NPT	90
103BEZLF	Kit for 10" x 18" L.	3" Female NPT	3" Male NPT	95
123BEZLF	Kit for 12" x 18" L.	3" Female NPT	3" Male NPT	115
8123BEZ6LF	8"-12" w/nipple 6" L.	3" Female NPT	3" Male NPT	30

Baker Manufacturing Co., LLC/Monitor Division • Evansville, WI 53536
Phone: 800-356-5130 • Fax: 608-882-3777 • Website: bakermonitor.com
PDF Created with deskPDF PDF Writer - Trial :: http://www.docudesk.com

WELD ON PITLESS ADAPTERS

WELD ON PITLESS ADAPTER FOR 8", 10" & 12" WELLS

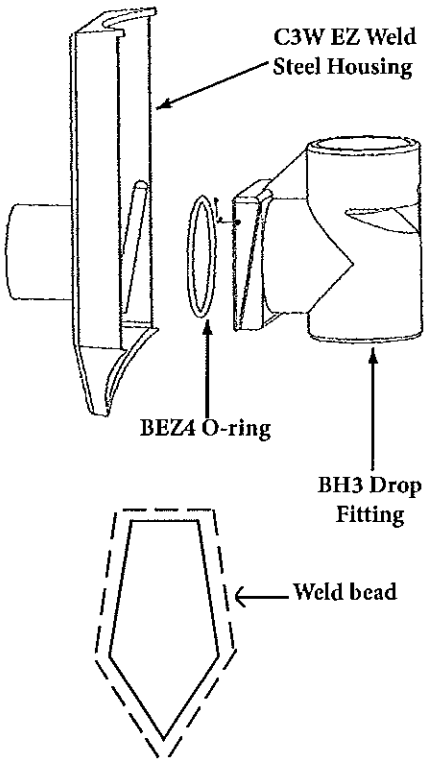

INSTALLATION INSTRUCTIONS

- Locate the template (provided) over the installation location on the steel pipe where you want to install the Monitor EZ Weld Pitless Adapter.
- Center punch at points A on the template.
- Connect all A points with A lines.
- Flame cut over lines. Note: Cut must be parallel with center line of pipe.
- After opening has been cut, pry out the cut casing at the bottom corner.
- BH3 drop fitting must fit through the cut hole.
- Clean off all slag and burrs on the cut casing opening. Place the C3W EZ weld steel housing onto the opening. Tac the corners to hold the steel housing in place. Weld the top and sides to the steel casing. Note: See diagram.

10/22/15

8123BEZLF Pitless Adapter Pressure Drop Test (using an 80 GPM pump to supply water flow)			
Flow Rate (GPM)	**Inlet Pressure** (psi)	**Outlet Pressure** (psi)	**Pressure Drop** (psi)
40	4	3	1
60	5.5	4.5	1
80	8.5	7	1.5

8-20-2002 Data

PDF Created with deskPDF PDF Writer - Trial :: http://www.docudesk.com

CERTIFIED LEAD FREE Ductile Iron Check Valve

NSF/ANSI 372

- ASTM A536 Ductile iron body. • Silicon bronze poppet.
- Stainless steel spring and nut. • Non-toxic polyester powder coat paint.

Standard Stemmed Poppet Check Valve

Stemmed Part No.	Size	Wt.Ea. lbs.	Ctn Qty
653SB	1	1.3	1
654SB	1-1/4	1.7	1
655SB	1-1/2	2.1	1
680SB	2	3.5	1
669SB	2-1/2	15.3	1
670SB	3	11.7	1
681SB	3*	13.1	1
671SB	4	21.5	1
674SB	5	33.7	1
672SB	6	44.5	1
683SB	6*	60.2	1
673SB	8	63.7	1
689SB	10	110.0	1

* High Flow Design

Stemless Poppet Check Valve

Stemless Part No.	Size	Wt.Ea. lbs.	Ctn Qty
2653SB	1	1.3	1
2654SB	1-1/4	1.7	1
2655SB	1-1/2	2.1	1
2680SB	2	3.5	1
-	2-1/2	15.3	1
-	3	11.7	1
2681SB	3*	13.1	1
2671SB	4	21.5	1
2674SB	5	33.7	1
-	6	44.5	1
2683SB	6*	60.2	1
-	8	63.7	1
-	10	110.0	1

* High Flow Design

CERTIFIED LEAD FREE Ductile Iron Check Valve with Break-off Plug

NSF/ANSI 372

- 1/2" Break-off plug standard. • 3/8" Break-off plug optional.

Check Valve (with Break-off Plug)

Stemmed Part No.	Size	Wt.Ea. lbs.	Ctn Qty
668SB	2-1/2	15.3	1
675SB	3	12.3	1
685SB	3*	13.4	1
676SB	4	21.3	1
679SB	5	34.0	1
677SB	6	44.7	1
687SB	6*	60.4	1
678SB	8	64.0	1
690SB	10	110.3	1

* High Flow Design

Stemless Check Valve (with Break-off Plug)

Stemless Part No.	Size	Wt.Ea. lbs.	Ctn Qty
-	2-1/2	15.3	1
-	3	12.3	1
2685SB	3*	13.4	1
2676SB	4	21.3	1
2679SB	5	34.0	1
-	6	44.7	1
2687SB	6*	60.4	1
-	8	64.0	1
-	10	110.3	1

* High Flow Design

CERTIFIED LEAD FREE Break-off Plug Only

- 303 Stainless steel.
- The break-off plug, when manually broken, allows water to drain from drop pipe before removal of pump.

Part No.	Size	Total Length	Wt.Ea. lbs.	Carton Quantity
4061	1/2	3.12	.5	1
4068	3/8	3.0	.4	1
4069**	1/2	6.0	.8	1

** For 8 & 10" Valves

*Silicon bronze components contain less than .05% (1/20 of 1%) Lead.

Check Valves furnished with Buna-N O-Ring, stainless steel spring, stainless steel washer, and stainless steel locknut. All valves 3/4" through 1-1/2" have a working pressure of 400 psi. All valves 2" and larger have a working pressure of 600 psi.

MADE IN U.S.A.

Founded 1882 PHOENIX ®

Commanding a Higher Standard SM

THE PHOENIX FORGE GROUP

1020 MACARTHUR ROAD, READING, PA 19605-9404
(610) 374-3117 • FAX: (610) 374-5211
www.phoenixforge.com

PRODUCT SPECIFICATION BULLETIN

CERTIFICATE of COMPLIANCE

COUPLINGS - API LINE

We hereby certify that the 1/8" through 12" API line couplings manufactured by Capitol Manufacturing conform to the requirements of the latest edition of API 5L. These products conform to the applicable metallurgical and hardness requirements of requirements of NACE MR0175, NACE MR0103, and ISO 15156 and do not exceed a Rockwell hardness of C-22 or a Brinnell hardness of 187 HBW maximum.

Dimensions: API line couplings conform to the dimensional requirements of API 5L.

Threads: The threads of API line couplings conform to API Standard 5B.

Material: API line couplings conform to the mechanical requirements of API 5L Grade "B" PLS 1.

Marking:
API line couplings sizes 1/8" through 3/8" are marked "∅".
API line couplings sizes 1/2" through 1" are marked "∅, SPEC 5L".
API line couplings sizes 1-1/4" through 1-1/2" are marked "∅, SPEC 5L, Heat Code".
API line couplings sizes 2" through 12" are marked "Cap Logo, API License Number, API Monogram, Date of Mfg., Size, B, PLS1, Heat Code".

Surface Finish:
Black Couplings: Zinc phosphate coated with light, dry to touch oil supplied as standard.
Galvanized Couplings: Electro-zinc plated per ASTM B633, Type III, SC2.

These products are manufactured in accordance with the Capitol Manufacturing and Phoenix Forging Company Certified Quality System Program conforming to ISO 9001:2008. These products are inspected by independent quality control personnel conforming to the requirements of EN 10204 Section 3.1B. These products were not exposed to mercury or any other metal alloy that is liquid at ambient temperatures during processing or while in our possession.

Bulletin: B-05.00 Rev. 6 Date: 08/01/11 Approved: Guy Cuccio Title: Technical Services Mgr.

Founded 1882 PHOENIX ®
Commanding a Higher Standard SM

THE PHOENIX FORGE GROUP

1020 MACARTHUR ROAD, READING, PA 19605-9404
(610) 374-3117 • FAX: (610) 374-5211
www.phoenixforge.com

PRODUCT SPECIFICATION BULLETIN

CERTIFICATE of COMPLIANCE

WORKING PRESSURES - API LINE and EXTRA HEAVY COUPLINGS

We hereby certify that the following API line and extra heavy non-recessed AAR couplings manufactured by Capitol Manufacturing will withstand the cold non-shock working pressures at ambient temperatures as listed below:

SIZE	COLD NON-SHOCK WORKING PRESSURE
1/8" - 1"	600 psi
1-1/4" - 2"	400 psi
2-1/2" - 4"	350 psi
5" – 12"	300 psi

We further certify that these products are manufactured and inspected in the United States of America. These products are produced in accordance with the Capitol Manufacturing and The Phoenix Forge Groups ISO 9001:2008 Certified Quality System Program.

These products are inspected by independent quality control personnel conforming to the requirements of EN 10204 Section 3.1B. These products were not exposed to mercury or any other metal alloy that is liquid at ambient temperatures during processing or while in our possession.

Bulletin: B-21.00 Rev. 6 Date: 08/01/11 Approved: Guy Cuccio Title: Technical Services Mgr.

Tags LT-4001
LT-5001

In-Situ

Innovations in **Water Monitoring** Spec Sheet

Level TROLL® 400, 500 & 700 Data Loggers

Get water level data the way you want it, when you want it with industry-leading water level/pressure and temperature data loggers. By partnering with In-Situ, you receive durable Level TROLL® Data Loggers that provide years of service, accurate results, intuitive software, and real-time functionality.

Be Effective

- **Increase productivity:** Reduce training and installation time with In-Situ intuitive software platform and integrated components. Patented twist-lock connectors, included on Level TROLL Loggers and RuggedCable® Systems, ensure error-free deployments.
- **Streamline analysis and reporting:** Automate water level corrections and post-processing, graph data, and accelerate report generation with Win-Situ® Software. Easily export data to Excel,® a web-based management service, or data analysis software.
- **Set up real-time networks:** Access data 24/7 and receive event notifications when you connect data loggers to Tube and Cube systems, radios, or other third-party data collection platforms. Get decision quality data when, where, and how you need it with HydroVu Data Services. Control gates, pumps, alarms, and other equipment by using built-in Modbus/RS485, SDI-12, or 4-20 mA communication protocols.

Be Reliable

- **Deploy in all environments:** Install loggers in fresh water, saltwater, and contaminated waters. Solid titanium and sealed construction outperforms and outlasts coated data loggers.
- **Log accurate data:** Get optimal accuracy under all operating conditions. Sensors undergo NIST®-traceable factory calibration across the full pressure and temperature range. For applications requiring the highest levels of accuracy, use a vented (gauged) system.
- **Get long-lasting operation:** Reduce trips to the field with low-power loggers that typically operate for 10 years.

Be In-Situ

- Receive **free**, 24/7 technical support and online resources.
- Order data loggers and accessories from the In-Situ website.
- Get guaranteed 7-day service for maintenance (U.S.A. only).

Applications

- **Aquifer characterization: slug tests & pumping tests**
- **Coastal: tide/harbor levels & wetland/estuary research**
- **Hydrologic events: crest stage gages, storm surge monitoring, & flood control systems**
- **Long-term, real-time groundwater & surface water monitoring**
- **Mining & remediation**

CALL OR CLICK TO PURCHASE OR RENT
1-800-446-7488 (toll-free in U.S.A. and Canada)
1-970-498-1500 (U.S.A. and international)
WWW.IN-SITU.COM

Level TROLL® 400, 500 & 700 Data Loggers

Spec Sheet

General	Level TROLL 400	Level TROLL 500	Level TROLL 700	Level BaroTROLL
Temperature ranges[1]	Operational: -20-80° C (-4-176° F) Storage: -40-80° C (-40-176° F) Calibrated: -5-50° C (23-122° F)	Operational: -20-80° C (-4-176° F) Storage: -40-80° C (-40-176° F) Calibrated: -5-50° C (23-122° F)	Operational: -20-80° C (-4-176° F) Storage: -40-80° C (-40-176° F) Calibrated: -5-50° C (23-122° F)	Operational: -20-80° C (-4-176° F) Storage: -40-80° C (-40-176° F) Calibrated: -5-50° C (23-122° F)
Diameter	1.83 cm (0.72 in.)	1.83 cm (0.72 in.)	1.83 cm (0.72 in.)	1.83 cm (0.72 in.)
Length	21.6 cm (8.5 in.)	21.6 cm (8.5 in.)	21.6 cm (8.5 in.)	21.6 cm (8.5 in.)
Weight	197 g (0.43 lb)	197 g (0.43 lb)	197 g (0.43 lb)	197 g (0.43 lb)
Materials	Titanium body; Delrin® nose cone	Titanium body; Delrin nose cone	Titanium body; Delrin nose cone	Titanium body; Delrin nose cone
Output options	Modbus/RS485, SDI-12, 4-20 mA	Modbus/RS485, SDI-12, 4-20 mA	Modbus/RS485, SDI-12, 4-20 mA	Modbus/RS485, SDI-12, 4-20 mA
Battery type & life[2]	3.6V lithium; 10 years or 2M readings	3.6V lithium; 10 years or 2M readings	3.6V lithium; 10 years or 2M readings	3.6V lithium; 10 years or 2M readings
External power	8-36 VDC	8-36 VDC	8-36 VDC	8-36 VDC
Memory *Data records*[3] *Data logs*	2.0 MB 130,000 50 logs	2.0 MB 130,000 50 logs	4.0 MB 260,000 50 logs	1.0 MB 65,000 2 logs
Fastest logging rate	2 per second	2 per second	4 per second	1 per minute
Fastest output rate	Modbus: 2 per second SDI-12 & 4-20 mA: 1 per second	Modbus: 2 per second SDI-12 & 4-20 mA: 1 per second	Modbus: 2 per second SDI-12 & 4-20 mA: 1 per second	Modbus: 2 per second SDI-12 & 4-20 mA: 1 per second
Log types	Linear, Fast Linear, and Event	Linear, Fast Linear, and Event	Linear, Fast Linear, Linear Average, Event, Step Linear, True Logarithmic	Linear
Sensor Type/Material	**Piezoresistive; titanium**	**Piezoresistive; titanium**	**Piezoresistive; titanium**	**Piezoresistive; titanium**
Range	Absolute (non-vented) 30 psia: 11 m (35 ft) 100 psia: 60 m (197 ft) 300 psia: 200 m (658 ft) 500 psia: 341 m (1120 ft)	Gauged (vented) 5 psig: 3.5 m (11.5 ft) 15 psig: 11 m (35 ft) 30 psig: 21 m (69 ft) 100 psig: 70 m (231 ft) 300 psig: 210 m (692 ft) 500 psig: 351 m (1153 ft)	Absolute (non-vented) 30 psia: 11 m (35 ft) 100 psia: 60 m (197 ft) 300 psia: 200 m (658 ft) 500 psia: 341 m (1120 ft) 1000 psia: 693 m (2273 ft) Gauged (vented) 5 psig: 3.5 m (11.5 ft) 15 psig: 11 m (35 ft) 30 psig: 21 m (69 ft) 100 psig: 70 m (231 ft) 300 psig: 210 m (692 ft) 500 psig: 351 m (1153 ft)	30 psia (usable up to 16.5 psi; 1.14 bar)
Accuracy[4]	±0.05% full scale (FS) ±0.1% FS	±0.05% FS ±0.1% FS	±0.05% FS ±0.1% FS	±0.05% FS ±0.1% FS
Resolution	±0.005% FS or better	±0.005% FS or better	±0.005% FS or better	±0.005% FS or better
Units of measure	Pressure: psi, kPa, bar, mbar, mmHg, inHg, cmH20, inH20 Level: in., ft, mm, cm, m	Pressure: psi, kPa, bar, mbar, mmHg, inHg, cmH20, inH20 Level: in., ft, mm, cm, m	Pressure: psi, kPa, bar, mbar, mmHg, inHg, cmH20, inH20 Level: in., ft, mm, cm, m	Pressure: psi, kPa, bar, mbar, mmHg, inHg, cmH20, inH20
Temperature Sensor	**Silicon**	**Silicon**	**Silicon**	**Silicon**
Accuracy	±0.1° C	±0.1° C	±0.1° C	±0.1° C
Resolution	0.01° C or better	0.01° C or better	0.01° C or better	0.01° C or better
Units of measure	Celsius or Fahrenheit	Celsius or Fahrenheit	Celsius or Fahrenheit	Celsius or Fahrenheit
Warranty	**3 years**	**3 years**	**3 years**	**3 years**
Notes	[1] Temperature range for non-freezing liquids. [2] Typical battery life when used within the factory-calibrated temperature range. [3] 1 data record = date/time plus 2 parameters logged (no wrapping) from device within the factory-calibrated temperature range. [4] Across factory-calibrated pressure range. [5] Across factory-calibrated pressure and temperature ranges. [6] Up to 5-year (total) extended warranties are available for all sensors—call for details. Delrin is a registered trademark of E.I. du Pont de Nemours and Company. Specifications are subject to change without notice.			

Every Application & Budget

Use maintenance-free, non-vented systems for long-term monitoring and at flood-prone or high-humidity sites. Pair with Tube and Cube Telemtry System and HydroVu for automtatic barometric compensation.

Use high-accuracy, vented systems to conduct aquifer tests and to view barometrically compensated water level data in real time.

Forgot to set a level reference at the beginning of a deployment? Automate level corrections by using Win-Situ Software's post-level correction Wizard.

BaroTROLL® Data Logger

When using a non-vented system, collect barometric pressure and temperature data with a titanium BaroTROLL Data Logger in order to post correct data for barometric pressure fluctuations.

Calculating barometric efficiency? Use the BaroTROLL Logger with vented systems.

CALL OR CLICK TO PURCHASE
1-800-446-7488 (toll-free in U.S.A. and Canada)
1-970-498-1500 (U.S.A. and international)
WWW.IN-SITU.COM
221 East Lincoln Avenue, Fort Collins, CO 80524 USA

Copyright © 2013 In-Situ Inc. All rights reserved. Nov. 2015 (T3; 2K)

Tags LT-4000
LT-5000

In-Situ Inc.

Innovations in Water Monitoring

In-Situ® RuggedCable® Systems

Durable, Direct-Read Cable

RuggedCable Systems are custom-built to endure harsh environments and to last for years. RuggedCable Systems include:

- Titanium twist-lock connectors for quick, reliable connections to instrument body, TROLL® Com Communication Device, desiccant, and other accessories (2-year warranty)
- Metal shield beneath the cable jacket to prevent electrical interferences
- Kellems® grip for secure instrument deployment
- Small desiccant for vented systems (only for storage)

Use RuggedCable Systems with:

- Aqua TROLL® 100, 200, and 400 Instruments
- BaroTROLL® Instruments
- Con TROLL® PRO System
- Level TROLL® 300, 500, and 700 Instruments
- RDO® PRO Probe (twist-lock models)
- TROLL® 9500 Water Quality Instruments
- TROLL® Link Telemetry Systems, MultiHop Radios, and TROLL® Net Hub

Customizable Cable

When ordering, consider the following options:

- **Vented or non-vented cable:** Vented cable is used with vented pressure/level sensors for gauged measurements. The cable vent tube ensures that atmospheric pressure is the reference pressure applied to the sensor diaphragm. Non-vented cable may be used with non-vented instruments for absolute measurements. Compensate absolute measurements with barometric pressure data by using a BaroTROLL® Instrument and Win-Situ® Baro Merge™ Software.
- **Jacket options:** Tefzel® (vented) or thermoplastic polyurethane (TPU; vented or non-vented)
- **Customized lengths:** Up to 1,219 m (4,000 ft) 600Ft Cable
- **Cable termination:** Twist-lock termination (female connector) on one or both cable ends. Other custom configurations are available—call for details.
- ~~**Cable reels:** Plastic or steel reel~~

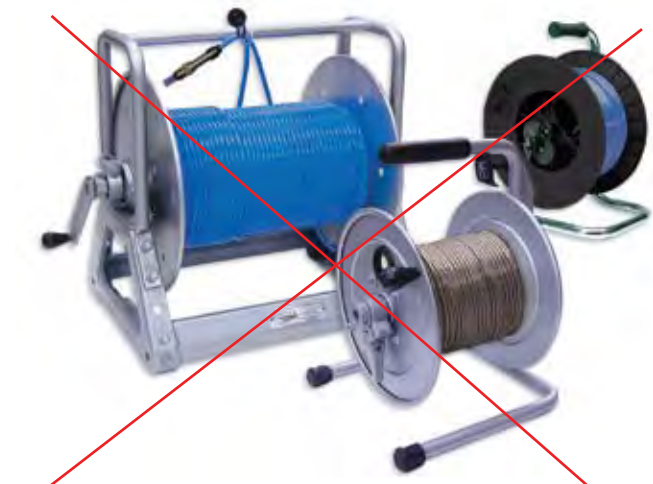

Steel and plastic reels available

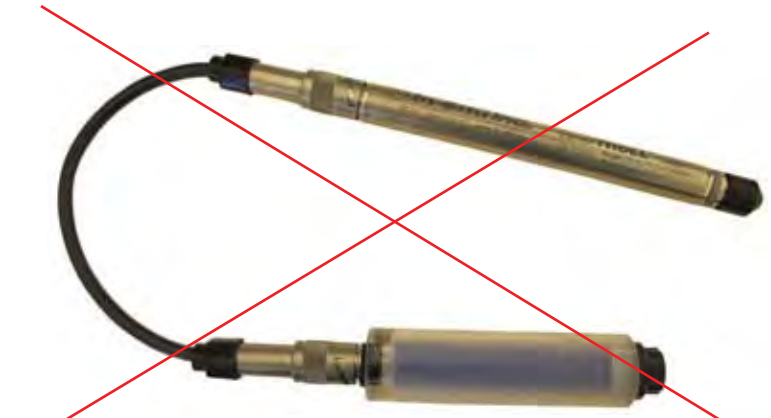

Extra large desiccant connected to RuggedCable System and Level TROLL Instrument

Titanium twist-lock connectors

In-Situ® RuggedCable® Systems

Specifications

Specifications	RuggedCable Systems
Operating temp. range	-25° to 80° C (-13° to 176° F)
Jacket options	• TPU (thermoplastic polyurethane) • Tefzel® (ETFE fluoropolymer; generic equivalent to Teflon®)
Vent options	• Non-vented (absolute) • Vented (gauged) with desiccant (used to mitigate moisture/humidity)
Conductors	6 conductors, 24 AWG, polypropylene insulation
Cable diameter	• TPU: 6.7 mm (0.265 in) • Tefzel: 6.35 mm (0.25 in)
Connector diameter	18. 5 mm (0.73 in)
Weight	• Non-vented, TPU: 16 kg/300 m (35.6 lbs/1,000 ft) • Non-vented, Tefzel: 14 kg/300 m (32 lbs/1,000 ft) • Vented, TPU: 14 kg/300 m (32 lbs/1,000 ft) • Vented, Tefzel: 14 kg/300 m (32 lbs/1,000 ft)
Minimum bend radius	2X cable diameter (13.5 mm; 0.54 in)
Break strength	127 kg (280 lbs)
Maximum cable length	1,219 m (4,000 ft) for RS485
Desiccant pack (required for vented systems)	Large and extra large desiccant packs available with titanium, ABS, or stripped-and-tinned termination.
Warranty	2 years

RuggedCable Selection Guide

Application	Jacket Type	Cable Type
Aquifer characterization	TPU or Tefzel	Vented
Crest stage gaging	TPU	Non-vented
Dewatering	TPU	Vented or non-vented
Flood and storm surge monitoring	TPU	Non-vented
Landfill monitoring	Tefzel	Non-vented
Municipal and industrial monitoring (SCADA)	TPU	Non-vented
Remediation projects	Tefzel	Vented
River, lake, and reservoir monitoring	TPU	Vented or non-vented
Saltwater/brackish water	TPU or Tefzel	Vented or non-vented
Stormwater monitoring	TPU	Vented or non-vented
Tide/harbor monitoring	TPU or Tefzel	Vented
Wetland and estuary monitoring	TPU or Tefzel	Vented or non-vented

Specifications are subject to change without notice.

Accessories

- Large desiccant for low-humidity environments or for deployments where maintenance occurs frequently.
- Extra large desiccant for high-humidity environments or for depolyments where maintenance occurs infrequently. Desiccates six times more saturated air than the large desiccant.
- Titanium cable extenders are used to join two lengths of cable without signal loss. The cable extender seals the cables, provides a weight-bearing connection, and maintains venting.
- Plastic and steel reels

Large desiccant with titanium twist-lock connector for standard deployments

Economical large plastic desiccant

Extra large desiccant with titanium twist-lock connector for high-humidity sites, remote sites, or applications that require fast sampling rates.

Outboard desiccant for use with stripped-and-tinned RuggedCable Systems

Titanium cable extender

Kellems is a registered trademark of Hubbell Incorporated.
Teflon and Tefzel are registered trademarks of E.I. Du Pont de Nemours and Co.

In-Situ Inc.

Call to purchase or rent—www.in-situ.com
221 East Lincoln Avenue, Fort Collins, Colorado, U.S.A. 80524
1-800-446-7488 (toll-free in U.S.A. and Canada)
1-970-498-1500 (U.S.A. and international)
Copyright © 2012 In-Situ Inc. All rights reserved. Sept. 2012 (web)

In-Situ Inc.

Information Sheet

Catalog No. 0053310

SHORT STRIPPED & TINNED CABLE with Male Twist-Lock Connector for Level TROLL®

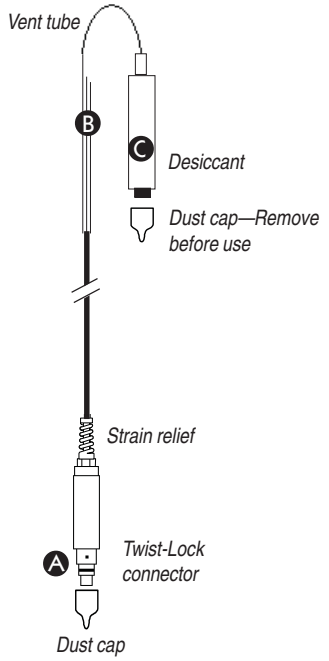

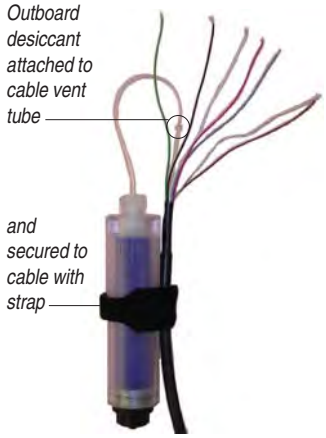

TIP: *The desiccant may be removed from the vent tube, if needed, for better access to the conductor wires. Pull the vent tube extender off the cable vent tube to remove. After connecting and trimming wires, attach desiccant vent tube to cable vent tube and secure desiccant to cable with hook-and-loop strap, as shown here.*

Connects a Level TROLL's RuggedCable™ to a controller or logger for communication via:

- Analog (4-20 mA)
- SDI-12
- RS485 Modbus
- RS232 Modbus (with a customer-supplied converter)

A Male Twist-Lock connector mates with female Twist-Lock connector on the RuggedCable

B Stripped & tinned wires on opposite end for wiring to PLC or logger

C Removable, refillable outboard desiccant protects cable vent tube from condensation in high-humidity environments

SPECIFICATIONS

Materials	PVC, titanium, nylon, Viton®
Dimensions	13.33 cm (5.25 in) long, 19 mm (0.75 in) O.D.
Environmental Rating	IP67 when connected, not designed for submersion
Cable	0.9 m (3 ft) vented TPU (Thermoplastic Polyurethane)
Conductors	6 conductors, 24 AWG, polypropylene insulation
Desiccant pack	Clear acrylic, nylon, HDPE membrane
Desiccant	approx. 22 g silica gel, type 4
Max. recommended cable lengths	SDI-12 61 m (200 ft) Modbus 1259 m (4000 ft) 4-20 mA 1259 m (4000 ft)

CONNECTIONS

Refer to wiring diagrams on back of sheet. Trim back and insulate unused wires. The shield should be wired to a chassis ground or earth ground.

Power Connections. The Red wire provides power for Modbus and SDI-12 modes. The Brown wire provides power for the 4-20 mA mode. If power is present on the Brown wire and not on the Red wire, the device enters the 4-20 mA mode automatically and stays in the 4-20 mode until power is removed from the Brown wire or is applied to the Red wire. The Red wire has priority — if power is applied to both wires at the same time, the device will operate in Modbus or SDI-12 modes but not in 4-20.

Communications. The device automatically switches between Modbus and SDI-12 modes depending on which of the two interfaces has activity. Modbus and SDI-12 cannot be used at the same time — whichever one is currently in use will block communication on the other.

To communicate with the device using Win-Situ® 5 software through a serial COM port: Disconnect the RuggedCable from the short stripped and tinned cable connector. Attach a TROLL Com to the RuggedCable. Connect the TROLL Com's DB9-pin connector to a serial port on a PC running Win-Situ 5.

(over)

SHORT STRIPPED & TINNED CABLE

Level TROLL Connections

ANALOG (4-20 mA) 2 WIRE

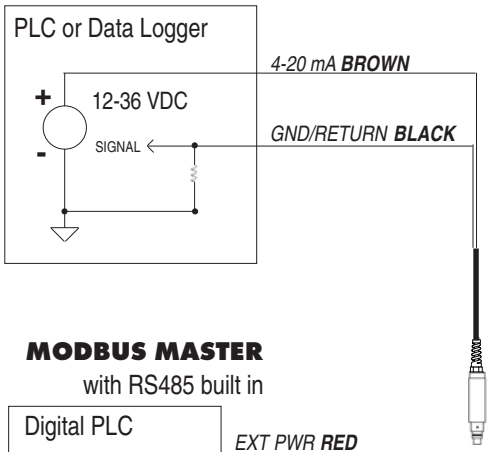

SDI-12 3 WIRE

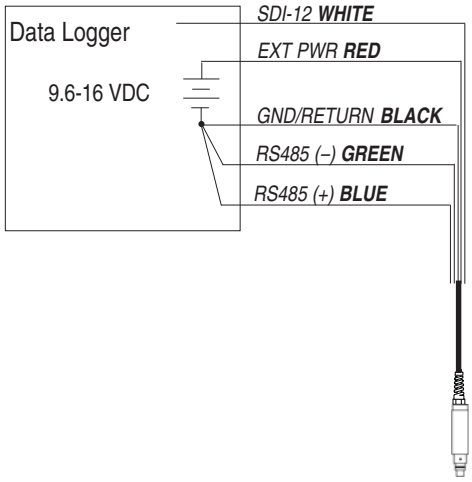

MODBUS MASTER

with RS485 built in

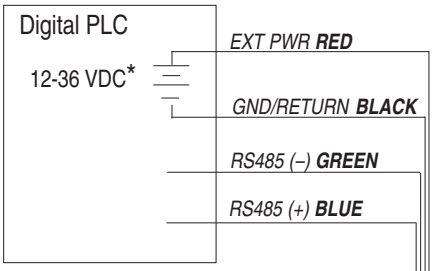

* Optional but highly recommended

MODBUS MASTER

with RS232 built in (converter required)

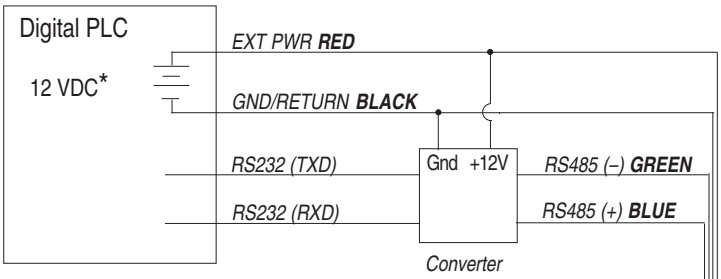

* Voltage limited by converter

Signal	Color
Gnd/Return	BLACK
Ext Power	RED
4-20 mA	BROWN
RS485(–)	GREEN
RS485(+)	BLUE
SDI-12	WHITE

CONVERTER

Port-Powered RS485 converter, such as B&B Electronics Model 485SD9TB

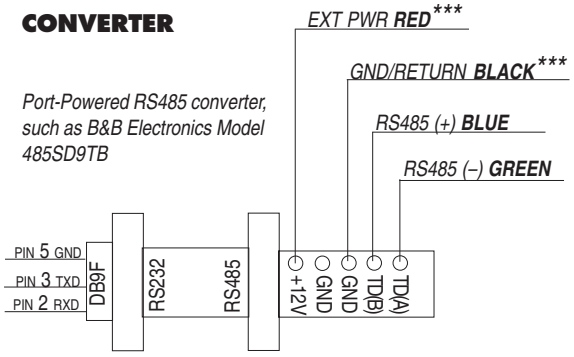

*** Required if port power is not available

1 800 446 7488
(toll-free, US and Canada) or 970 498 1500 **www.in-situ.com**

In-Situ Inc.

Due to continuing product development this information is subject to change without notice. In-Situ and the In-Situ logo, Win-Situ, TROLL, BaroTROLL, RuggedReader, RuggedCable and RDO are trademarks or registered trademarks of In-Situ Inc. Viton is a registered trademark of DuPont Dow Elastomers.
Copyright © 2005-2007 by In-Situ Inc. All rights reserved.

0053312 rev. 004 09/07

TAG: LSH-7001
LSH-7002
LSH-4002
LSH-5002
LSH-6001

Series 3R/3T
General Purpose Probes

- Metallic Rods
- Available in Many Materials for Various Requirements
- Adaptable for Various Fittings

For general purpose use, Series 3R probes are metallic rods with threaded ends that screw into a fitting that extends vertically down into the liquid. Available in a variety of materials for different applications. 3T tapered rods are also available.

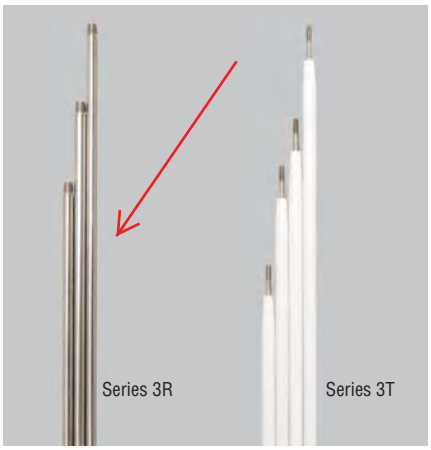

Specifications

Style	
Series 3R	1/4˝ (.64 cm) threaded rod
Series 3T	1/4˝ (.64 cm) tapered rod
Material	Brass, Hastelloy C, Monel, 316 stainless steel, titanium, Carp. 20
Sheathing (optional)	PVC heat shrink 200°F (93°C), Teflon® heat shrink 350°F (177°C)

Applications

3R: For use with Series 3E, 3F, 3G, 3B fittings

3T: For use with Series 3G and other custom configurations

How to Order

Use the **Bold** characters from the chart below to construct a product code.

3R **2** **C** **4**

Series
3R **3T**

Length (Feet)
1 – One
2 – Two
3 – Three
4 – Four
5 – Five
6 – Six
7 – Seven
8 – Eight
9 – Nine
10 – Ten

Probe Material
A – Brass
C – 316 Stainless Steel
D – Carp. 20
E – Hastelloy B
F – Hastelloy C
G – Monel
H – Titanium

Sheathing Heat Shrink
0 – None
4 – PVC
5 – Teflon®

Contact your representative for custom lengths.

Note: Long lengths can be coupled to facilitate shipping and installation. Consult factory.

Dimensions

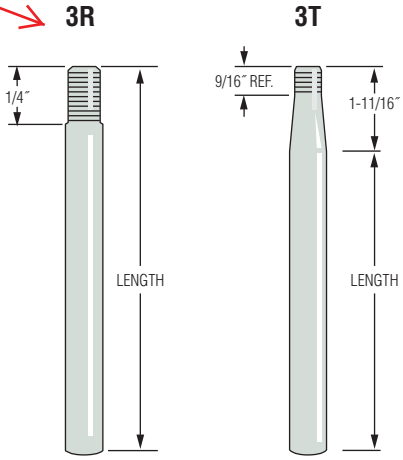

WARRICK CONDUCTIVITY SENSORS

TAG: LSH-4001
LSH-5001

Series 3W – Wire Suspended Probes

- Metallic Bars
- Plastic Shield Protected
- Adaptable to Many Fittings
- Field Assembled

Series 3W probes, consisting of metallic bars within a protective plastic shield, are designed to be suspended in liquid with PVC-insulated wires. They are ideal for applications where rigid electrode rods are impractical or cumbersome, such as:

- Deep Wells
- Pump Control
- Waste Water
- Deep Tanks

7/8″ (2.22 cm) diameter x 3-3/4″ (9.52 cm) length. 3Z1A wire and 3Z1B adaptor kit required for use with 3E, 3F and 3N fittings.

Series 3W

How to Order

Select a 3W electrode, a 3Z1B adaptor and a length of 3Z1A suspension wire to form a complete suspended probe.

1. 3W Electrodes

Probe Material	Part Number
Brass	3W1
316 Stainless Steel	3W2

2. 3Z1B Adaptor Kit
For use with 3E, 3F and 3N fittings.
Part Number: 3Z1B

3. 3Z1A Suspension Wire
Order in standard or custom length.

Length (Feet)	Part Number
500	100325-500
1000	100325-1000
5000	100325-5000
Custom	3Z1A-20

Specify in one foot increments up to 5000 ft.

Components Detail

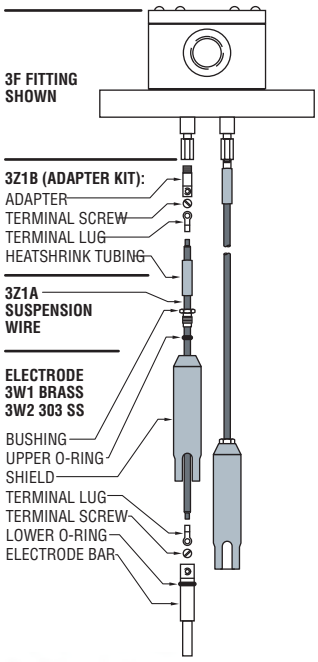

Series 3Y – Corrosion Resistant Probes

- Metallic Bars
- Corrosion Resistant
- Available in Many Materials for Various Requirements
- Adaptable for Various Fittings

Series 3Y wire suspended probes consist of metallic bars within a protective plastic shield, designed to be suspended in liquid. Series 3Y suspension wires are PVC or Teflon® insulated for use in corrosive liquid applications. 7/8″ (2.22 cm) diameter x 3-1/2″ (8.90 cm) length.

Series 3Y

Specifications

Style	Wire suspended
Tip Material	Carp. 20, Hastelloy C, 316 stainless steel
Shield Material	PVC 150°F (66°C), Teflon®

How to Order

Use the **Bold** characters from the chart below to construct a product code.

3Y X X X

Series
3Y

Shield Material
1 – PVC
3 – Teflon®

Probe Tip Material
C – 316 Stainless Steel
D – Carp. 20
F – Hastelloy C

Length of Wire
1 – 10 feet
2 – 20 feet
3 – 30 feet
etc.

Note: 3Z1B Connector is used to connect suspension wire with 3B, 3E, 3F, 3G or 3N fitting.

Applications

- General Purpose
- Wire Suspended Probes
- Corrosive Liquids, Chemicals

BOM #19
TAGS: LSHY-4001
LSHY-4002
LSHY-5001
LSHY-5002
LSHY-6001
LSHY-7001
LSHY-7002

Warrick

Series 16DM

Series 16DM DPDT Load Contact, Solid State Plug-In Module

Part No. 16DMB1B0
Unit Price $267
Lead Time (Days) 5

Image is of actual product

Model	16DM
Mode of Operation	Direct
Sensitivity	10 K
Control Style	Plug-In Module
Socket Style	DIN Mount
Standoff Style	N/A
Enclosure	None
Contact Design	2 Normally Open & 2 Normally Closed (non-powered)
Contact Rating	5 Amp Resistive 1/10 horse power
Secondary Voltage	12 VAC
Terminal Style	Screw Connector
Number of Channels	1
Minimum Temperature (°F)	-40
Maximum Temperature (°F)	150
Protection	Non-Intrinsically Safe
Approvals	UL 508 General Purpose
Minimum Qty (per Release)	1
Weight (Lbs)	1.1

Options

Warrick® Series 16DM Controls

Installation and Operation Bulletin

This bulletin should be used by experienced personnel as a guide to the installation of series 16DM controls. Selection or installation of equipment should always be accompanied by competent technical assistance. We encourage you to contact Gems Sensors Inc. or its representative if further information is required.

	Specifications
Control Design:	Solid-State components enclosed in clear Lexan plug-in style housing. Housing carries no NEMA rating
Contact Design:	2 SPDT (2 form C): Two Normally Open (N.O.) and two Normally Closed (N.C.), non-powered contacts
Contact Ratings:	5 A @ 120, 240 VAC resistive, 1/8 H.P. @ 120 or 240 VAC
Contact Life:	Mechanical: 5 million operations - Electrical: 100,000 operations minimum at rated load
Supply Voltage	24, 120, or 240 VAC Models - Factory Set. Plus 10%, minus 15%, 50/60 Hz
Supply Current:	120, 240, 24 VAC, Relay energized 4.4 VA
Secondary	12 VAC RMS Voltage on probes. 1.5 milli-amp Current
Circuit:	Models operate from 0 to 1,000,000 OHM maximum
Sensitivity:	specific resistance - Factory set
	-40° To 150°F Ambient
Temperature:	All connections #6-32 screw type with pressure clamps
Terminals:	Standard, 0.5 seconds on rising level.
Time Delays:	Additional time delays on rising and/or falling level available as option.
Listings:	U.L. Listing, Industrial Motor Control (508). 240 and 208 volt units are not U.L. limit control recognized.

Installation

1. Install octal socket in appropriate enclosure using two #6 or #8 metal screws.
   a) Install rail mount socket on appropriate rail (DIN mount) in appropriate enclosure, if applicable.
2. Wire control per wiring diagram, following N.E.C. and local codes.
3. Install control module in socket.

Sensitivities vs Maximum Probe Wire Distance*

Sensitivity Character	Sensitivity (K Ohms)	Distance (Ft.)
A or K	4.7	10,000
B or L	10	5,700
C or M	26	2,200
D or N	50	1,075
E or P	100	570
F or R	470	270
G or S	1,000	38

* Based on type MTW or THHN wire, #14 or #16 Awg

Dimensions

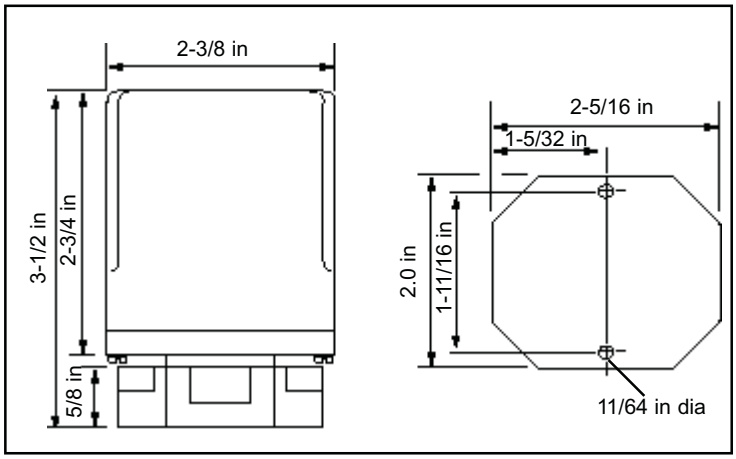

Use copper (60/70° C) wire only. Torque to 20 inch pounds.

Wiring Diagram

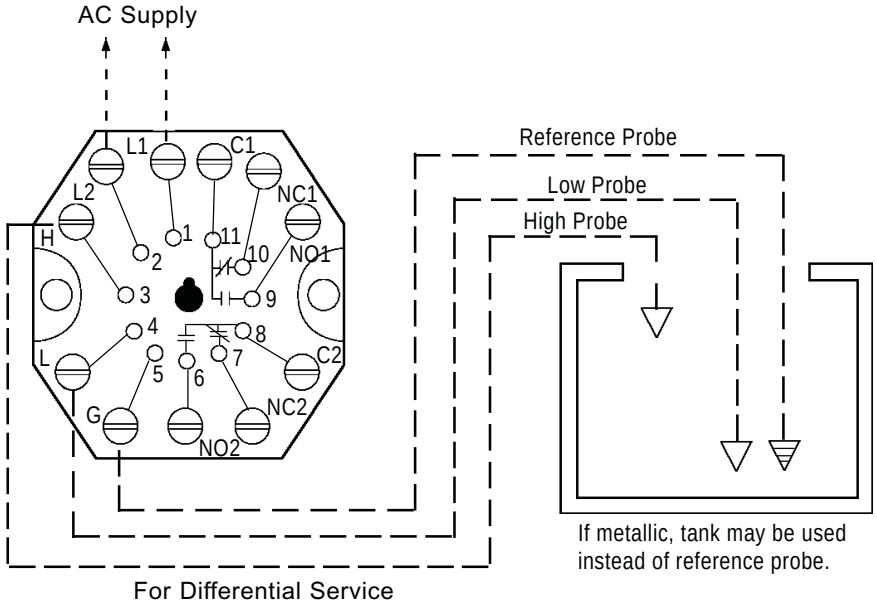

Note: For Single Level Service, use "H" and "G" Connections

Operation

Direct Mode - Single Level Service:
When the liquid rises to the electrode on terminal 3, the control energizes, changing state of the load contacts. **(LED will be lit)** The control remains energized until the liquid level recedes below electrode on terminal 3. The control then de-energizes, **(LED will not be lit)** returning load to original state.

Inverse Mode - Single Level Service:
Control energizes with power, changing state of the load contacts. **(LED will be lit)** When the liquid rises to the electrode on terminal 3, the control de-energizes, returning the load contacts to shelf state. **(LED will not be lit)** The control remains de-energized until liquid level recedes below the electrode connected to terminal 3. The control then energizes.

Direct Mode - Differential Service:
When the liquid rises to the electrode on terminal 3, the control energizes, changing state of the load contacts. **(LED will be lit)** The control remains energized until the liquid level recedes below electrode on terminal 4. The control then de-energizes, **(LED will not be lit)** returning the load contacts to original state.

Inverse Mode - Differential Service:
Control energizes with power, **(LED will be lit)** changing state of the load contacts. When the liquid rises to the electrode on terminal 3, the control de-energizes, returning load contacts to shelf state. **(LED will not be lit)** The control remains de-energized until the liquid level recedes below the electrode on terminal 4. The control then energizes.

Optional

Time Delays: With time delay on increasing level, the liquid must be in contact with the short electrode for the full duration of the time delay before control will operate. With delay on decreasing level, the liquid must be below long electrode for the full duration of the time delay before control will operate. In single level service, terminals 3 and 4 must be jumpered together to achieve time delays on both increasing and decreasing levels or just decreasing level.

16DM B 1 B **-XX-XX**

Time Delay: (decreasing level) 1-20 sec.
Time Delay: (increasing level) 1-20 sec.
Enclosure: 0-none, 1-NEMA 1, 4-NEMA 4, 7-NEMA 7, 12-NEMA 12
Socket Style: A - 11 Pin Octal, B - 11 Pin DIN Mount, M - None, Module Only
Supply Voltage: 1- 120 VAC, 2- 240 VAC, 3- 24 VAC, 8- 208/240 VAC*
Mode/Sensitivity:
Direct A- 4.7K, B- 10K, C- 26K, D- 50K, E- 100K, F- 470K, G- 1M
Inverse K- 4.7K, L- 10K, M- 26K, N- 50K, P- 100K, R- 470K, S- 1M

*187 Vmin to 255 Vmax VAC

Gems Sensors Inc.
One Cowles Road
Plainville, CT 06062-1198
Tel: 860-793-4579
Fax: 860-793-4580

Product: 700-HK32A1

BOM #21

Description: 700-HK General Purpose Slim Line Relay

Representative Photo Only
(actual product may vary based on configuration selections)

CONTROL RELAY DATA

Contact Rating	8 Amp Contact (Slim Line Relay)
Contact Configuration	DPDT Contact Arrangement
Coil Voltage	120V 50/60Hz
Relay Option	No Additional Options

CERTIFICATIONS AND APPROVALS

CE	Marked
UL	Listed with socket, Guide No. NLDX, File No. E3125
UR	Recognized, Guide No. NLDX2, File No. E3125
CSA	
For UL Certifications Directory:	http://database.ul.com/cgi-bin/XYV/template/LISEXT/1FRAME/index.htm

acr
10/4/15

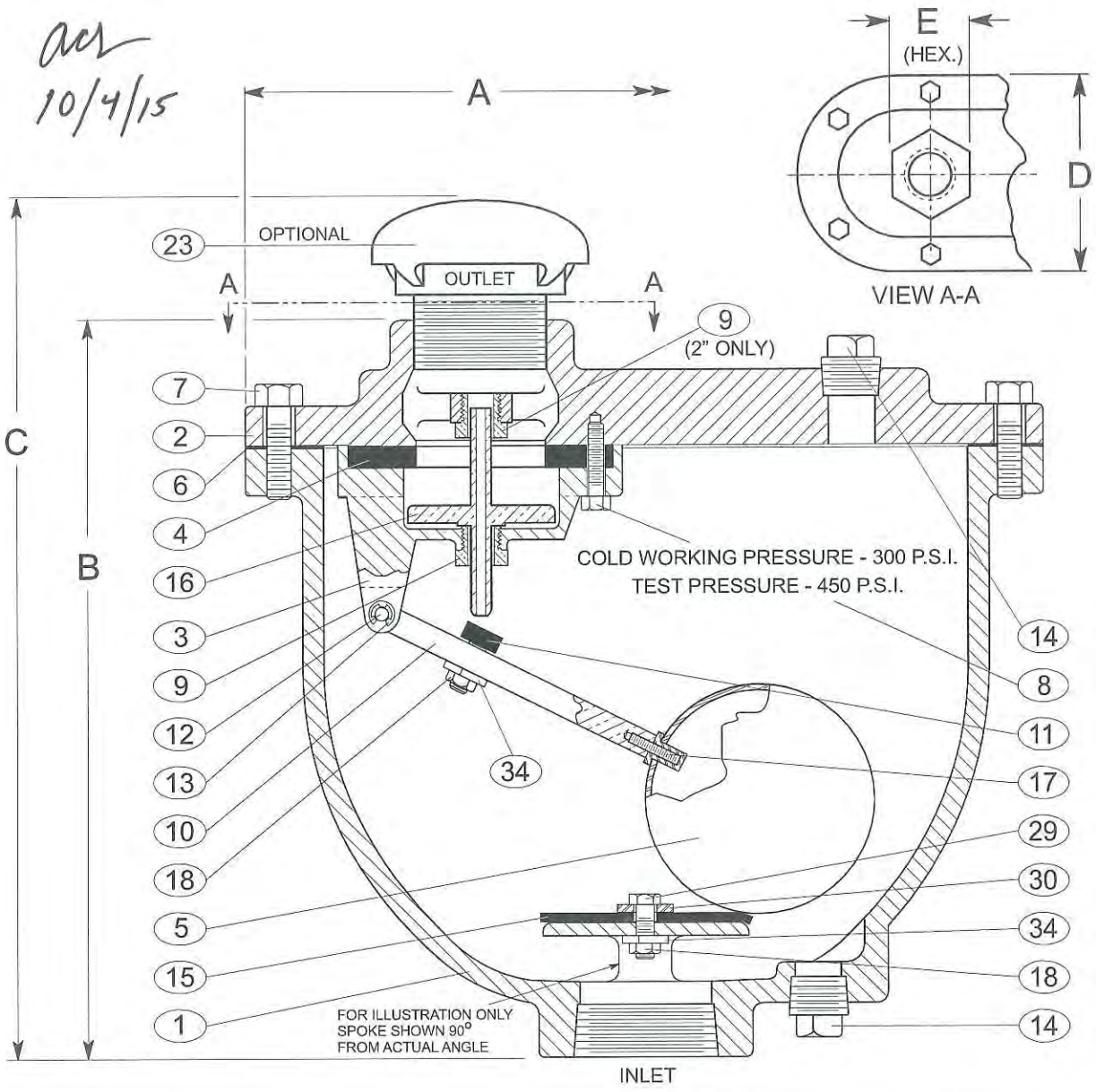

1	BODY	5	FLOAT	9	BUSHING	13	RETAINING RING	18	LOCK NUT
2	COVER	6	GASKET	10	FLOAT ARM	14	PIPE PLUG	23	SCREENED HOOD
3	BAFFLE	7	COVER BOLTS	11	ORIFICE BUTTON	15	CUSHION	29	CUSHION RETAINER
4	SEAT	8	RETAINING SCREWS	12	PIVOT PIN	16	PLUG	30	WASHER
						17	FLOAT RETAINER	34	LOCK WASHER

SEE DRAWING NO. VM-201C-M FOR STANDARD MATERIALS OF CONSTRUCTION.

VALVE SIZE	MODEL NO.*	A	B	C	D	E	INLET SIZE	OUTLET SIZE	ORIFICE SIZE
1"	201C.2	11 3/8"	10 1/2"	12 5/8"	6 3/8"	2"	1" N.P.T.	1" N.P.T.	5/64"
2"	202C.2	14"	13"	15 7/8"	8 1/4"	3 1/4"	2" N.P.T.	2" N.P.T.	3/32"

*Add "H" to Model No. for optional screened hood SPK-1H.

Revised 1-9-06

COMBINATION AIR VALVE (SINGLE BODY TYPE)

DATE 2-2-69

VAL-MATIC® VALVE AND MANUFACTURING CORP.

DRWG. NO. VM-201C

COMBINATION AIR VALVES (SINGLE BODY TYPE)

MODEL NOS. 201C.2 - 202C.2 - 203C.2 - 204C.2

STANDARD MATERIALS OF CONSTRUCTION

PART NO.	PART NAME	MATERIAL
1	BODY	CAST IRON ASTM A126, CLASS B
2	COVER	CAST IRON ASTM A126, CLASS B
3	BAFFLE	CAST IRON ASTM A126, CLASS B
4	SEAT	BUNA-N
5	FLOAT	STAINLESS STEEL T316, ASTM A240
6	GASKET	COMPRESSED NON-ASBESTOS FIBER
7	COVER BOLT	ALLOY STEEL SAE, GRADE 5
8	RETAINING SCREWS	STAINLESS STEEL T316, ASTM F593
9	GUIDE BUSHING	STAINLESS STEEL T316, ASTM A240
10	FLOAT ARM	STAINLESS STEEL T316, ASTM A240
11	ORIFICE BUTTON	STAINLESS STEEL & BUNA-N
12	PIVOT PIN	STAINLESS STEEL T316, ASTM A276
13	RETAINING RING	STAINLESS STEEL PH 15-7 MO
14	PIPE PLUG	STEEL
15	CUSHION	BUNA-N
16	PLUG	STAINLESS STEEL T316, ASTM A276
17	FLOAT RETAINER	STAINLESS STEEL T316, ASTM F880
18	LOCK NUT	STAINLESS STEEL T316, ASTM F594
29	CUSHION RETAINER	STAINLESS STEEL T316, ASTM F593
30	WASHER	STAINLESS STEEL T316, ASTM A240
34	LOCK WASHER	STAINLESS STEEL T316, ASTM A240

NOTE: ALL SPECIFICATIONS AS LAST REVISED.

Revised 1-29-03

MATERIALS OF CONSTRUCTION	DATE 2/2/69
VAL-MATIC® VALVE AND MANUFACTURING CORP.	DRWG. NO. VM-201C-M

CLASSIFIED C UL US

WATER QUALITY
NSF / ANSI 61
2LA8

aes
10/4/12

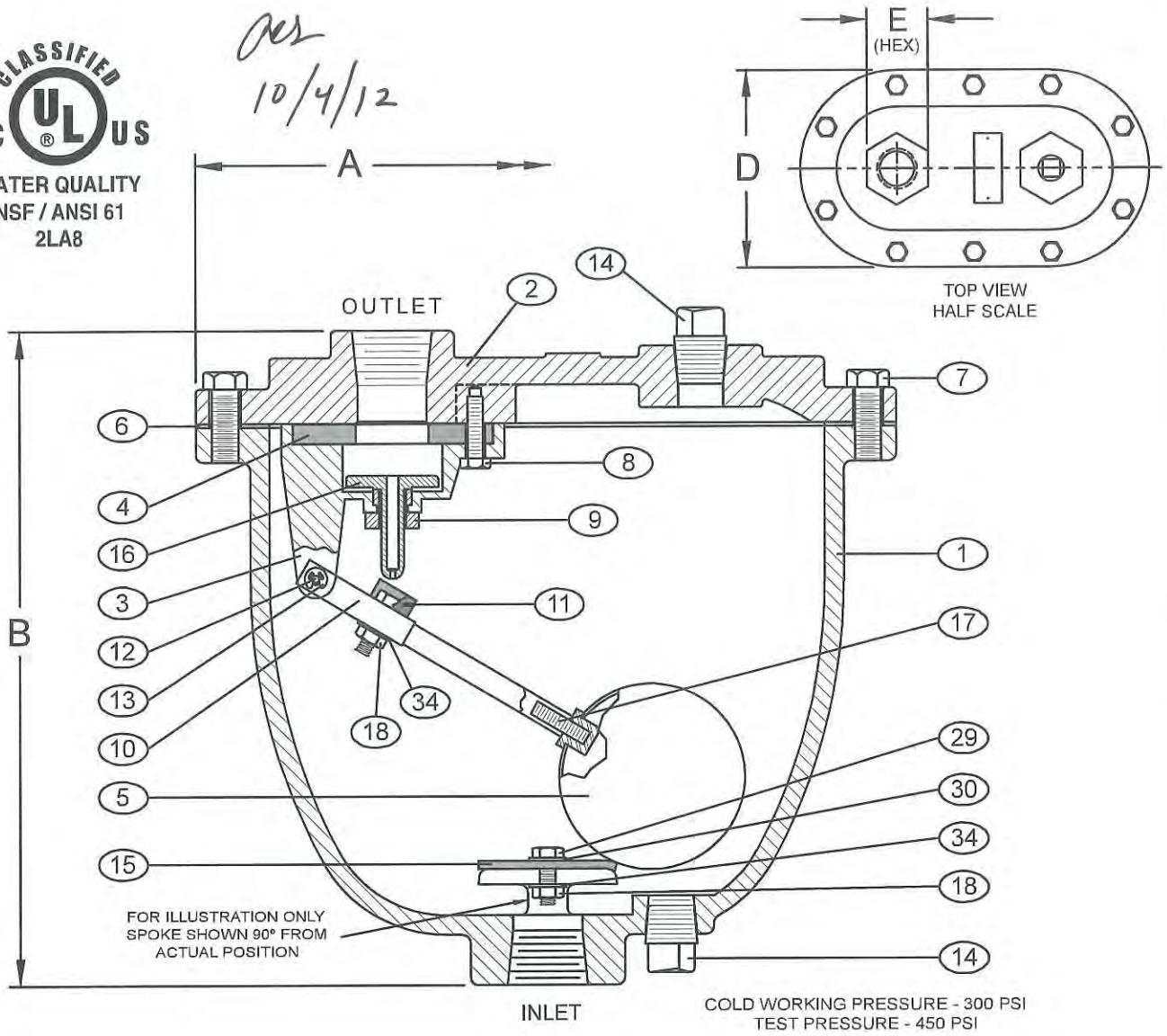

SEE DRAWING NO. VM-201C-M FOR STANDARD MATERIALS OF CONSTRUCTION.
SEE DRAWING NO. VM-201CDISV-M FOR SUPER VALVE MATERIALS OF CONSTRUCTION.

VALVE SIZE	MODEL NUMBER	A	B	D	E	INLET SIZE	OUTLET SIZE	ORIFICE SIZE
1"	201C.2	11.38	10.50	6.38	2.00	1" NPT	1" NPT	5/64"

1	BODY	8	RETAINING SCREWS	15	CUSHION
2	COVER	9	BUSHING	16	PLUG
3	BAFFLE	10	FLOAT ARM	17	FLOAT RETAINER
4	SEAT	11	ORIFICE BUTTON	18	LOCK NUT
5	FLOAT	12	PIVOT PIN	29	CUSHION RETAINER
6	GASKET	13	RETAINING RING	30	WASHER
7	COVER BOLTS	14	PIPE PLUG	34	LOCK WASHER

Revised 8-19-14 (Rev 1)

COMBINATION AIR VALVE (SINGLE BODY TYPE)

DATE 5-8-13

VAL-MATIC VALVE AND MANUFACTURING CORP.

DRWG. NO. VMC-201C

COMBINATION AIR VALVES (SINGLE BODY TYPE)

MODEL NOS. 201C.2SV - 202C.2SV - 203C.2SV - 204C.2SV

STANDARD MATERIALS OF CONSTRUCTION

PART NO.	PART NAME	MATERIAL
1	BODY	CAST IRON ASTM A126, CLASS B (INTERIOR / EXTERIOR FUSION BONDED EPOXY)
2	COVER	CAST IRON ASTM A126, CLASS B (INTERIOR / EXTERIOR FUSION BONDED EPOXY)
3	BAFFLE	CAST IRON ASTM A126, CLASS B (INTERIOR / EXTERIOR FUSION BONDED EPOXY)
4	SEAT	EPDM
5	FLOAT	STAINLESS STEEL T316, ASTM A240
6	GASKET	COMPRESSED NON-ASBESTOS FIBER
7	COVER BOLT	STAINLESS STEEL T316, ASTM F593
8	RETAINING SCREWS	STAINLESS STEEL T316, ASTM F593
9	GUIDE BUSHING	STAINLESS STEEL T316, ASTM A240
10	FLOAT ARM	STAINLESS STEEL T316, ASTM A240
11	ORIFICE BUTTON	STAINLESS STEEL & EPDM
12	PIVOT PIN	STAINLESS STEEL T316, ASTM A276
13	RETAINING RING	STAINLESS STEEL PH 15-7 MO
14	PIPE PLUG	STAINLESS STEEL
15	CUSHION	BUNA-N
16	PLUG	STAINLESS STEEL T316, ASTM A276
17	FLOAT RETAINER	STAINLESS STEEL T316, ASTM F880
18	LOCK NUT	STAINLESS STEEL T316, ASTM F594
29	CUSHION RETAINER	STAINLESS STEEL T316, ASTM F593
30	WASHER	STAINLESS STEEL T316, ASTM A240
34	LOCK WASHER	STAINLESS STEEL T316, ASTM A240

NOTE: ALL SPECIFICATIONS AS LAST REVISED.

MATERIALS OF CONSTRUCTION	DATE 8/10/09
VAL-MATIC® VALVE AND MANUFACTURING CORP.	DRWG. NO. VM-201C.2SV-M

WATER QUALITY
NSF / ANSI 61
2LA8

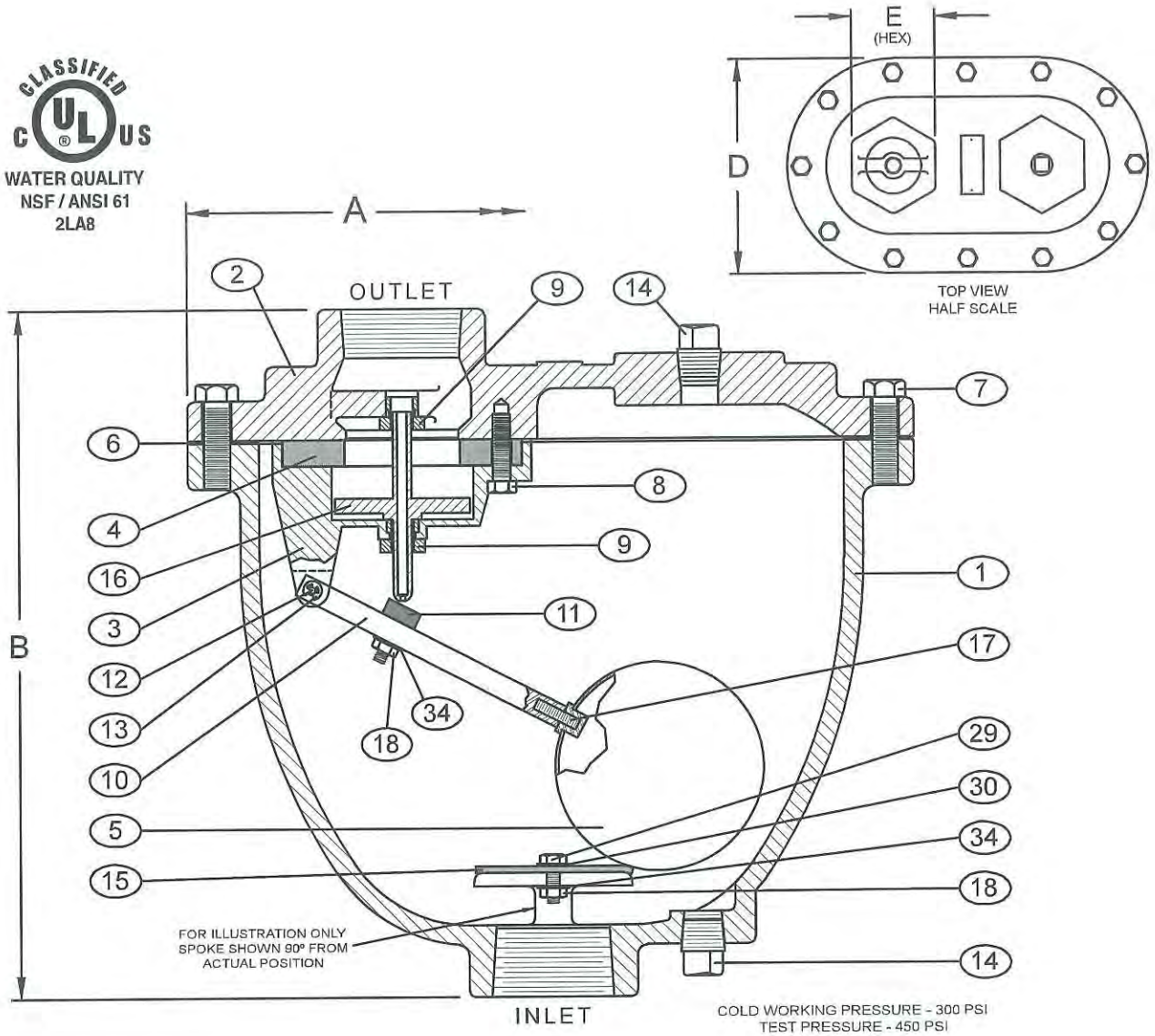

SEE DRAWING NO. VM-201C-M FOR STANDARD MATERIALS OF CONSTRUCTION
SEE DRAWING NO. VM-201CDISV-M FOR SUPER VALVE MATERIALS OF CONSTRUCTION

VALVE SIZE	MODEL NUMBER	A	B	D	E	INLET SIZE	OUTLET SIZE	ORIFICE SIZE
2"	202C.2	14.00	13.00	8.25	3.25	2" NPT	2" NPT	3/32"

1	BODY	8	RETAINING SCREWS	15	CUSHION
2	COVER	9	BUSHING	16	PLUG
3	BAFFLE	10	FLOAT ARM	17	FLOAT RETAINER
4	SEAT	11	ORIFICE BUTTON	18	LOCK NUT
5	FLOAT	12	PIVOT PIN	29	CUSHION RETAINER
6	GASKET	13	RETAINING RING	30	WASHER
7	COVER BOLTS	14	PIPE PLUG	34	LOCK WASHER

Revised 8-19-14 (Rev 1)

COMBINATION AIR VALVE (SINGLE BODY TYPE)

DATE 5-8-13

VAL-MATIC VALVE AND MANUFACTURING CORP.

DRWG. NO. VMC-202C

Triac "V" Series Ball Valves are ideal for achieving more precise control with the simplicity and sealing features of a ball valve. We offer them 1/2" – 4" in a 3-piece design and 1/2"– 6" flanged. The standard "V" notch options are 30, 60 & 90. While they are available as manual valves, we specialize in automating them to suit your particular control requirements.

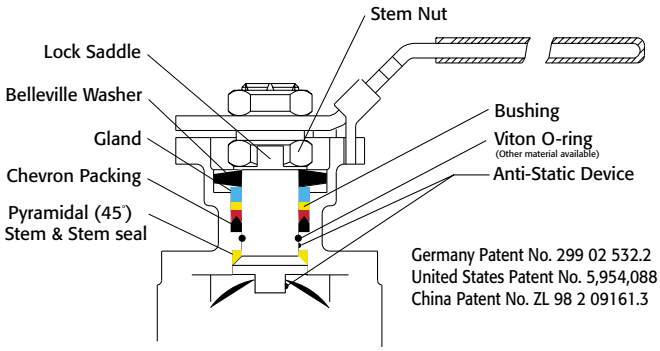

Easy to Automate!

See automated data sheets for pre-sized assemblies

Pneumatic

Electric

TRIAC® CONTROLS

"V" Series Control Port Ball Valves

Sizes 1/2" – 6"

3 Piece and 150# Flanged

316SS or WCB

30, 60 & 90 "V" Notch Standard
Others on Request

TA-Luft 2002, Sec.5.3.6.4
TA-Luft Certified for Low Emissions
VDI 2440 Nov.2000, Sec.3.3.1.3

HOW TO ORDER MANUAL VALVES

SAMPLE PART #

V8C-TH-0200-XXX

- V Port
- Valve Series
- Carbon Steel
- Threaded Ends
- Valve Size
- Seat Material
- Special Designation
- Additional Special Designation (V30, V60 or V90)

See part number matrix for itemized options

A-T Controls, Inc.
9955 International Blvd.
Cincinnati, Ohio 45246
www.atcontrols.com
PHONE (513) 247-5465
FAX (513) 247-5462
sales@atcontrols.com

VM-(A)-20130430
Copyright 2013 A-T Controls, Inc.

"V" Series

"V" Series Flow Coefficients- Cv Chart

Valve Size	Ball Angle	0%	15%	20%	30%	40%	50%	60%	70%	80%	90%	100%
	30	0	0.1	0.1	0.2	0.3	0.5	0.8	1.1	1.6	2.2	2.6
1/2"	60	0	0.1	0.1	0.3	0.5	0.9	1.4	2	3.3	4.4	6
	90	0	0.1	0.2	0.4	0.6	0.9	1.5	2.2	3.8	5.4	6.9
	30	0	0.1	0.2	0.5	0.7	1.1	1.8	2.4	3.3	4.5	5.4
3/4"	60	0	0.1	0.2	0.7	1	1.7	2.8	4	6.5	9	12
	90	0	0.2	0.4	0.8	1.2	2	3.1	4.6	8	11.3	14
	30	0	0.1	0.3	0.8	1.3	2.3	3.5	5.1	9.8	8.5	10
1"	60	0	0.2	0.4	1.1	1.8	3.4	5.3	7.9	12.3	15.3	21
	90	0	0.2	0.6	1.8	3.4	5.1	8.1	11.4	16	21	29
	30	0	0.2	0.4	1.1	2	3.7	5.5	8	10	13	15
1 1/4"	60	0	0.2	0.6	1.8	3	5.5	9.5	12.8	19	26	39
	90	0	0.3	0.8	2	5	8	14	19	28	39	55
	30	0	0.3	0.6	1.6	3	5	7.5	11	14	17	20
1 1/2"	60	0	0.4	0.8	2.5	4	8	13	19	27	40	52
	90	0	0.4	0.9	3.5	7	13	20	31	42	63	78
	30	**0**	**0.4**	**1.2**	**3.8**	**6**	**10**	**15**	**23**	**31**	**43**	**60**
2"	60	0	0.4	1.5	4.6	9	16.5	27	39	55	83	110
	90	0	0.5	2	6	12	22	35	45	70	105	135
	30	0	0.4	1	4	8	12	18	28	37	62	75
2 1/2"	60	0	0.4	1.5	5	10	21	34	53	75	103	150
	90	0	0.5	1.7	7	14	28	48	70	106	160	218
	30	0	0.5	1.2	4	8	14	23	33	46	65	82
3"	60	0	0.5	2.5	6	14	25	40	65	91	128	165
	90	0	0.7	3.5	8	18	35	60	90	135	205	310
	30	0	0.6	2	6	15	29	48	71	100	130	159
4"	**60**	**0**	**0.7**	**3**	**11**	**25**	**40**	**59**	**90**	**141**	**212**	**356**
	90	0	1	3.5	16	40	75	125	190	295	442	670
	30	0	0.9	3.2	14	33	60	103	155	220	280	350
6"	60	0	2	5	22	60	110	190	285	416	586	800
	90	0	3	8	35	90	160	280	425	650	970	1480
F_L		0	0.96	0.95	0.94	0.93	0.92	0.9	0.88	0.86	0.82	0.75
Xt		0	0.98	0.77	0.71	0.67	0.64	0.63	0.62	0.55	0.43	0.4

60 DEGREE BALL

Pressure vs. Temperature Charts 1"– 6"

150# Flanged Design

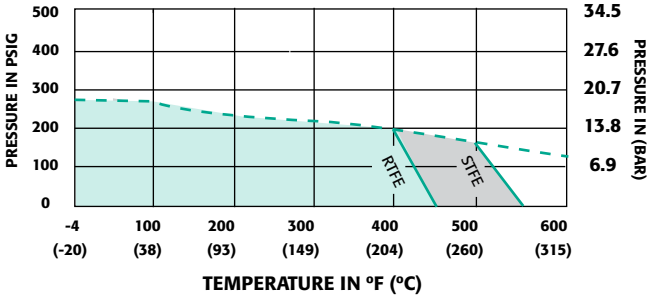

NOTE: Dotted line shows the rating for valve body. Solid line shows the rating for valve seat. Both ratings need to be consulted when determining the limitation of the valve for specific application.
Consult factory for other seat material.

3-piece Design

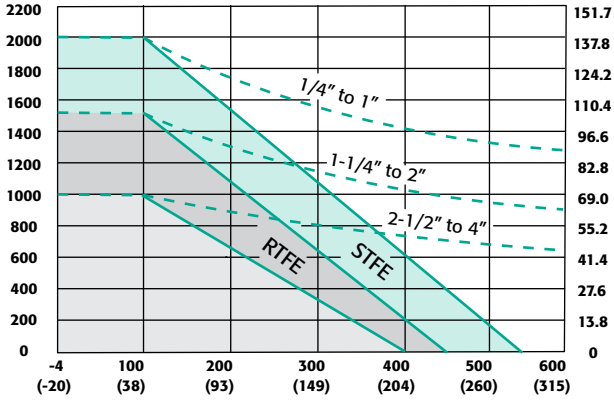

"V" Series

Triac "V" port control valves are available with 30V, 60V & 90V notch. V port valves offer better and more consistent control than traditional round ported ball valves. We offer this valve with the control port cast and machined into the ball, not in the seat. This allows for much better flow characteristics and eliminates the need to replace seats. The 30 option allows for finer tapered control throughout the valve rotation and the 60 & 90 offers a larger Cv in addition to controlled flow.

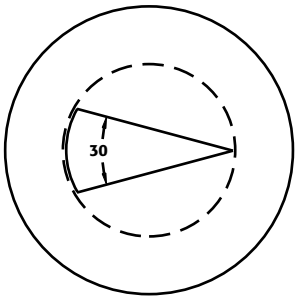

30 V-Port

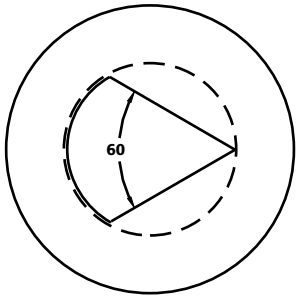

60 V-Port

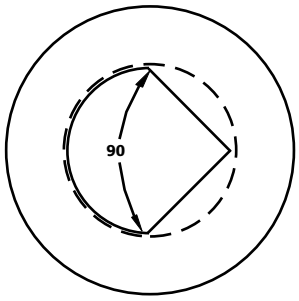

90 V-Port

The 50/50 seat is standard with all V port valves. The 50% SST powder and 50% PTFE offers both strength and superior sealing properties.

"V" Series
3 Piece

88 Series
V-Port
Control Valve

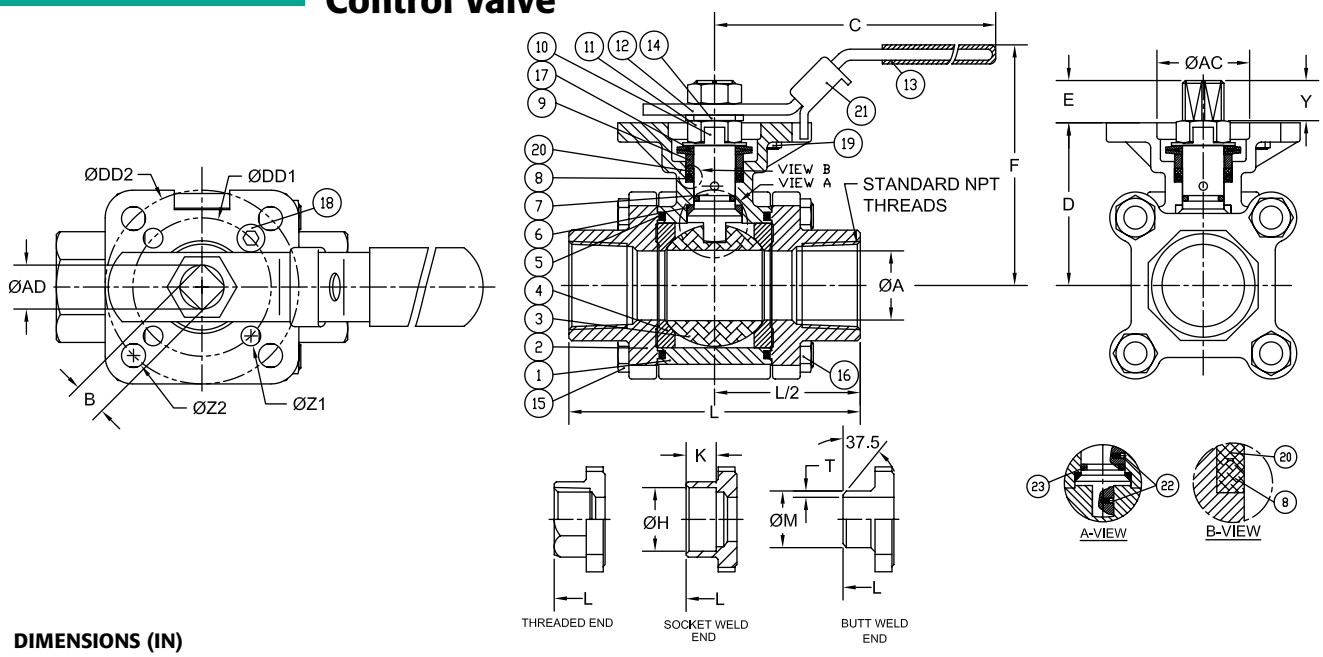

DIMENSIONS (IN)

SIZE	ØA	B	C	D	E	F	H	K	L	M	T	Y	AC	AD	DD1	DD2	ØZ2	ØZ1	(LBS)	ISO5211
1/2"	0.59	0.354	5.47	1.66	0.25	3.00	0.85	0.39	2.85	0.85	0.06	0.25	1.07	0.44	1.654	1.969	0.28	0.28	2.0	F04/F05
3/4"	0.79	0.354	5.47	1.83	0.33	3.20	1.07	0.51	3.36	1.07	0.06	0.33	1.07	0.44	1.969	2.756	0.34	0.28	3.0	FO5/F07
1"	0.98	0.433	6.50	2.31	0.41	3.86	1.34	0.51	4.15	1.34	0.06	0.41	1.34	0.56	1.969	2.756	0.34	0.28	4.5	FO5/F07
1-1/4"	1.26	0.433	6.50	2.46	0.41	4.00	1.69	0.51	4.37	1.68	0.06	0.41	1.34	0.56	1.969	2.756	0.34	0.28	6.0	FO5/F07
1-1/2"	1.50	0.551	8.46	3.11	0.53	5.04	1.92	0.51	5.01	1.91	0.06	0.53	1.54	0.74	1.969	2.756	0.34	0.28	10.0	FO5/F07
2"	1.97	0.551	8.46	3.42	0.53	5.35	2.40	0.63	5.62	2.38	0.06	0.53	1.54	0.74	1.969	2.756	0.35	0.30	13.0	FO5/F07
2-1/2"	2.56	0.748	10.31	4.28	0.66	6.60	2.89	0.63	7.28	3.00	N/A	0.66	2.09	0.94	2.756	4.016	0.47	0.39	26.0	FO7/F10
3"	3.15	0.748	10.31	4.63	0.70	6.96	3.54	0.63	8.07	3.54	N/A	0.70	2.09	0.94	2.756	4.016	0.47	0.39	34.0	FO7/F10
4"	3.94	0.748	12.28	5.26	0.66	7.59	4.54	0.79	9.45	4.57	N/A	0.66	2.09	0.94	2.756	4.016	0.47	0.39	52.0	FO7/F10

"V" Series
Flanged

90 Series
V-Port
Control Valve
Flanged

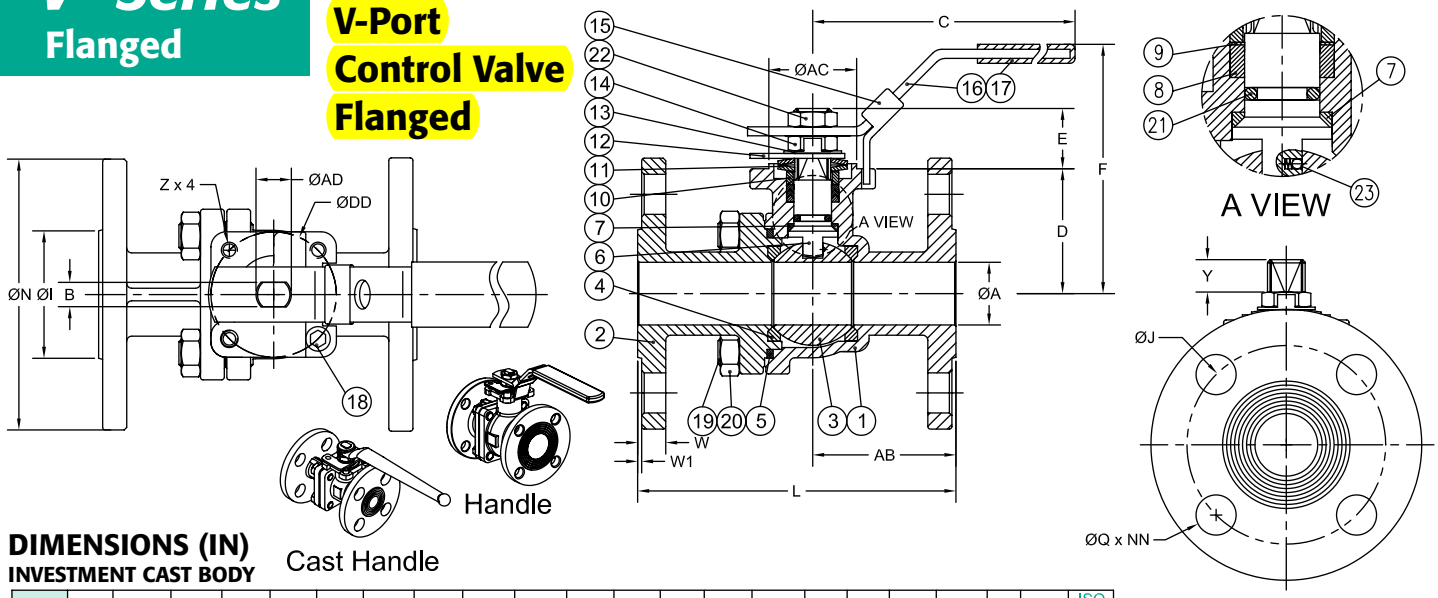

DIMENSIONS (IN)
INVESTMENT CAST BODY

SIZE	A	B	C	D	E	F	I	J	L	N	Q	W	W1	Y	Z	AB	AC	AD	DD	NN	(LBS)	ISO 5211
1/2"	0.59	0.315	6.69	1.34	0.92	3.15	1.47	2.38	4.26	3.50	0.63	0.44	0.06	0.36	M5	1.82	1.17	0.43	1.654	4	3.7	F04
3/4"	0.79	0.315	6.69	1.65	0.94	3.43	1.82	2.75	4.62	3.88	0.63	0.44	0.06	0.40	M5	2.17	1.17	0.43	1.654	4	4.6	F04
1"	0.98	0.382	8.05	1.95	0.94	3.85	2.08	3.13	5.00	4.26	0.63	0.44	0.06	0.32	M6	2.20	1.37	0.56	1.969	4	6.8	F05
1-1/2"	1.50	0.472	10.28	3.08	1.37	6.02	2.88	3.88	6.50	5.00	0.63	0.56	0.06	0.58	M8	2.81	2.17	0.75	2.756	4	13.6	F07
2"	1.97	0.472	10.28	3.40	1.37	6.38	3.62	4.75	7.02	6.00	0.75	0.63	0.06	0.58	M8	3.38	2.17	0.75	2.756	4	19.2	F07
2-1/2"	2.56	0.472	10.28	3.83	1.37	6.81	4.12	5.50	7.49	7.00	0.75	0.69	0.06	0.58	M8	3.02	2.17	0.75	2.756	4	30.0	F07
3"	3.15	0.591	13.94	4.23	1.81	6.95	5.00	6.00	8.01	7.50	0.75	0.75	0.06	0.93	M10	4.01	2.76	0.94	4.016	4	41.0	F10
4"	3.94	0.591	13.94	4.82	1.79	7.52	6.19	7.50	9.04	9.00	0.75	0.94	0.06	0.93	M10	4.06	2.76	0.94	4.016	8	65.0	F10

For 6" valve dimensions please see D9 brochure.

Viton® is a registered trademark of E.I. DuPont de Nemours.

A-T Controls reserves the right to change product designs and technical/dimensional specifications without notice.

A-T Controls, Inc.

9955 International Blvd.
Cincinnati, Ohio 45246
www.atcontrols.com

PHONE (513) 247-5465
FAX (513) 247-5462
sales@atcontrols.com

TRIAC CONTROLS

Electric Actuators

WE Series Weatherproof
CSA Approved TYPE 4 & 4X
350-80,000 In-lbs. torque

XE Series Explosion Proof
ATEX Certified E Ex d IIB T4
690-25,900 In-lbs. torque

AWWA C540-93

C SP US 201383 TYPE 4 & 4X

Ex ATEX II 2 G E Ex d IIB T4

IECEx

WE-350

The WE-350 Electric Actuator is specifically designed to operate small size ball valves (1" and less), dampers and other quarter-turn devices.

Features

- Compact and light weight
- High resistance to corrosion due to hard anodizing on inside and outside with polyester powder coating on external surface
- Multi-voltage (AC85-265V/1PH, 24VDC)
- Standard space heater (0.5W)
- Weather proof (IP67)
- Push Button and Manual lever
- Wide, easy mounting base standard to ISO5211 (F03/F04/F05)
- Standard four limit switches
- Captive cover bolts
- Mechanical position indicator & LED lamp indicators (Open/Close)

Construction

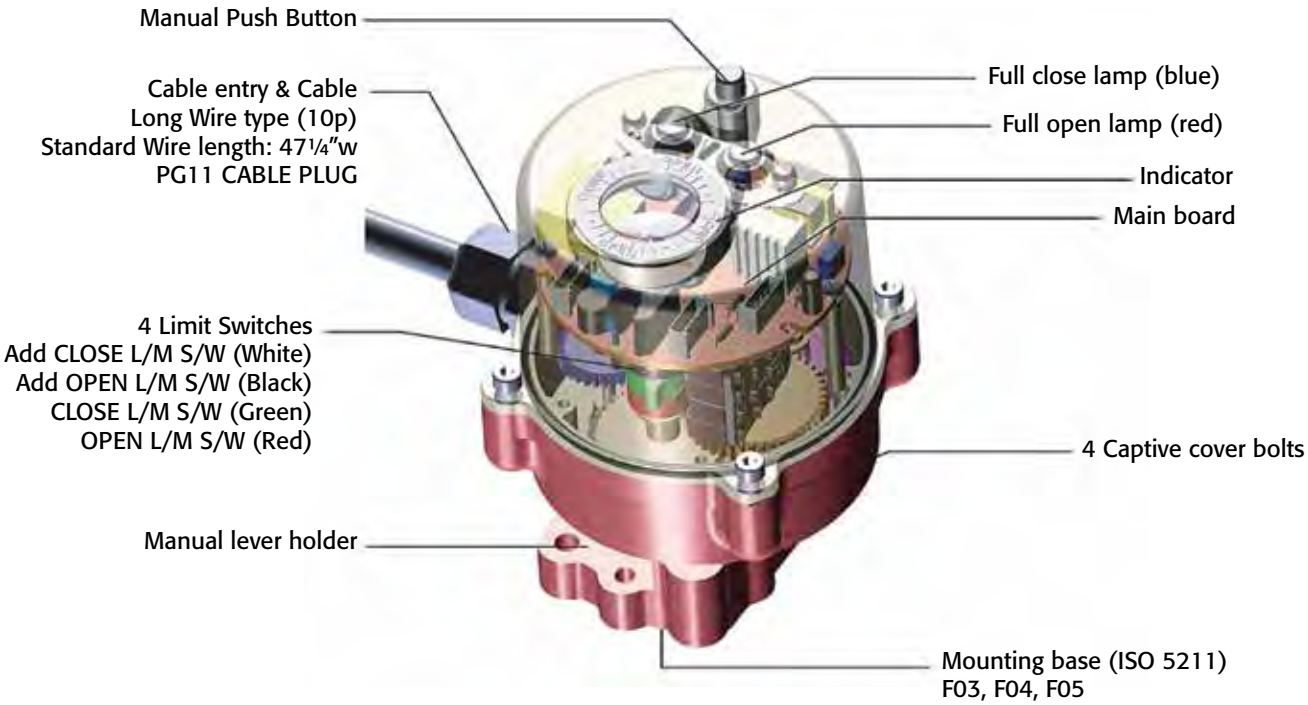

Performance

Type (Model)	Maximum Output Torque	Operating Time 60/50 Hz	Mounting Size	Electric Motor Stop	Suppling Power & Rating Current (A) 60/50Hz, 1 Phase			Duty Cycle IEC34-1	Manual Level Angle	Weight
	In-Lbs.	90°	ISO5211	A	110VAC	220VAC	24VDC	S4		Lbs.
WE-350	354	12 sec.	F03, F04, F05	2A	.12	.06	.46	50%	90°	2.65
WE-350HS	270	6.5 sec.			.065	.033	.25			

Dimensions

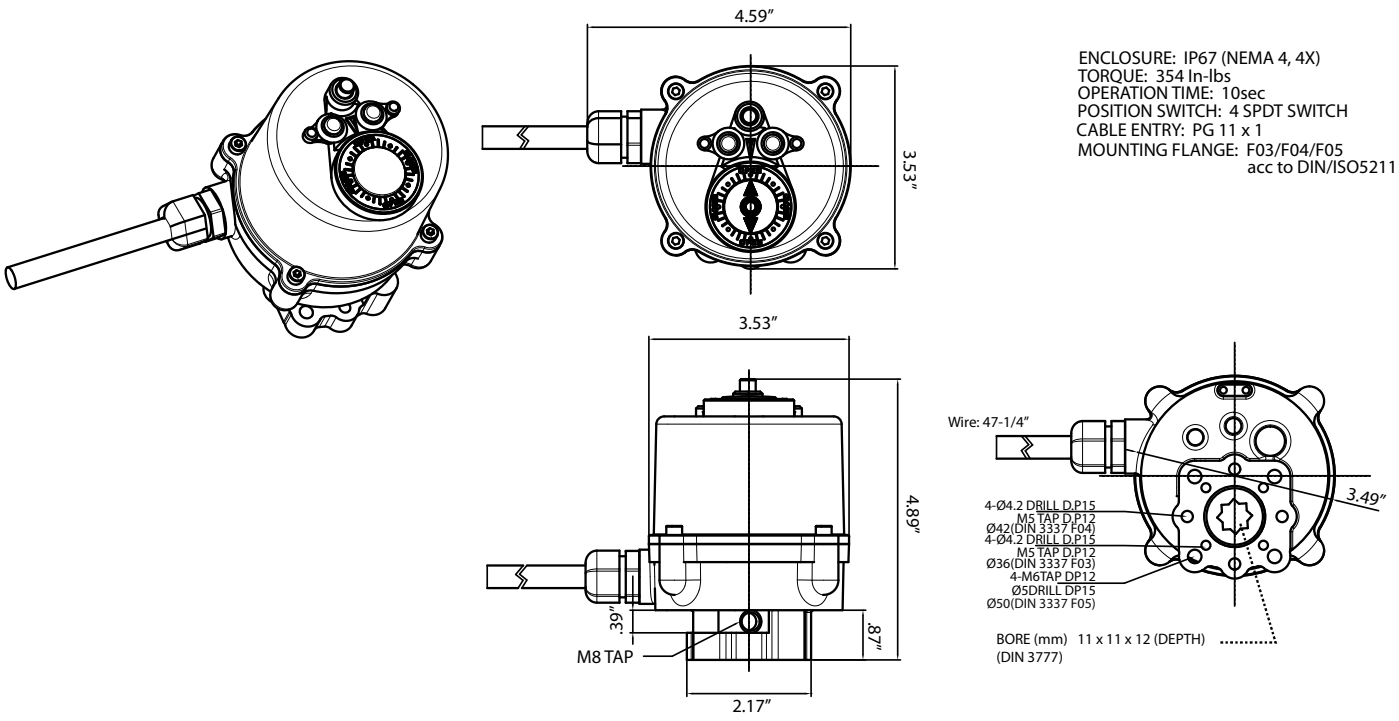

ENCLOSURE: IP67 (NEMA 4, 4X)
TORQUE: 354 In-lbs
OPERATION TIME: 10sec
POSITION SWITCH: 4 SPDT SWITCH
CABLE ENTRY: PG 11 x 1
MOUNTING FLANGE: F03/F04/F05
acc to DIN/ISO5211

Wiring Connection

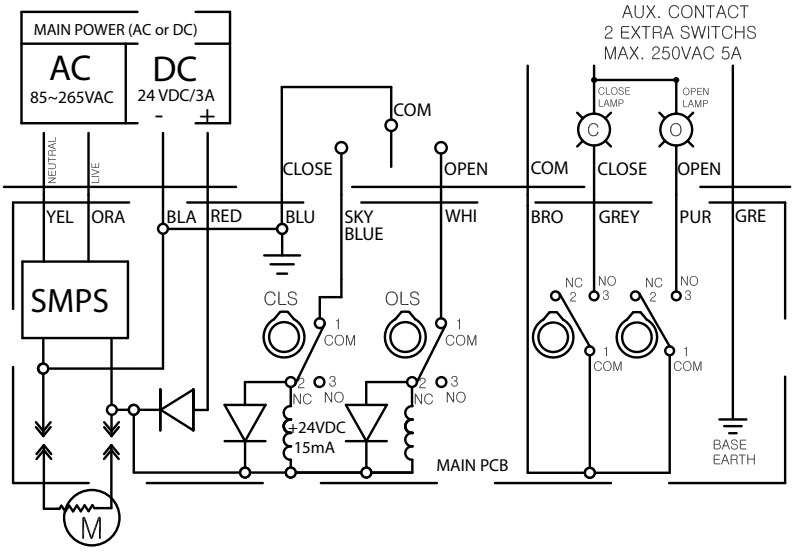

WE-500

The WE-500 Electric Actuator is an extremely rugged design actuator used for small ball valves (2" and less), dampers and other quarter-turn devices. The actuator is TYPE 4, 4X and includes a visual indicator, two auxiliary switches and a compartment heater. A convenient wrench manual override shaft is standard on the WE-500. This actuator is the clear choice when a compact, efficient electric actuator is required!

Features

- Compact and light due to high grade aluminum alloy housing.
- High resistance to corrosion due to hard
- anodizing on inside and outside with polyester powder coating on external surface
- Output torque: 530 In-lbs.
- The actuator motor is a reversible, high torque and low current design.
- Weatherproof (IP67, NEMA 4, 4X)

Standard Configuration

- Manual override
- Wide, easy mounting base standard to ISO5211(F03/F05/F07)
- Standard four limit switches. Two for operation, 2 auxilliary dry contacts
- Captive cover bolts
- Space heater
- Limit switches for tight, easy setting
- Terminal block (11P)
- Standard color : Red

Optional Configuration

Position Indication Unit (Potentiometer kit, PIU)

High resolution potentiometer with precisely machined gearing directly engaged with drive shaft provides continuous monitoring of position of valve and actuator.

TMC3 Electronic Modulating Card

- Auto Calibration for Easy Setup
- 10 Bit Microprocessor controller for precise positioning and control
- 4-20mA, 1-5mA, 0-10 VDC, 1-5 VDC, 0-135 Ohm or Command Signal Potentiometer
- TMC3 can be programmed to Fail in Place, Fail CW, or Fail CCW on loss of command signal
- Characterized Control options: Linear, Quick Opening (Square Root), or Equal Percentage (Square)
- OnBoard 4-20 mA transmitter (standard)

AC/DC 24V Control Unit

Dip Switch

Mode	1	2
DC	ON	OFF
AC	OFF	ON

Performance

Type (Model)	Maximum Output Torque	Operating Time 60/50 Hz	Mounting Size	Full Load Amps			Locked Rotor Amps			Duty Cycle	Number of Handle Turns	Weight
				AC 1PH. 50/60Hz		AC/DC	AC 1PH. 50/60Hz		AC/DC			
	In-Lbs.	90°	ISO5211	110V	220V	24V	110V	220V	24V	S2	N	Lbs.
WE-500	530	12/14	F03/F05/F07	0.4	0.2	0.8	0.5	0.25	2.5	70%	8	6.61

Standard Specification

Enclosure..... Weatherproof enclosure IP67, NEMA 4, 4X
Power Supply..... 110/220V AC 1PH, 50/60Hz, ± 10%, 24V AC/DC
Duty cycle..... 70%
Motor..... Class F Reversible motor
Limit switches..... Open/Close, SPDT, 5A 125 VAC, 3A 250 VAC, 0.4A125 VDC, 0.2A 250 VDC
Additional limit switches..... Open/Close, SPDT, 5A 1252 VAC, 3A 250 VAC, 0.4A 125 VDC, 0.2A 250 VDC
Space heater..... 2W (110/220V AC) Anti-condensation
Manual override..... Drive Nut (hexagon design)
Cable conduit..... Two 1/2" NPT
Movement angle..... 320° ±10°
Ambient temperature..... -4°F - 158°F (optional -40° Low Temp Kit)
External coating..... Polyester powder coating

Options Specification

Potentiometer unit (1K)
(TMC) Electronic Modulating Card
4-20mA, 1-5mA, 0-10 VDC, 1-5 VDC,
0-135 Ohm Command Signal
Current position transmitter
(0utput 4~20mA DC)
Multi(24VAC/DC)
DC motor (24VDC)
Local control unit
- remote/local/stop
- open/close

Dimensions

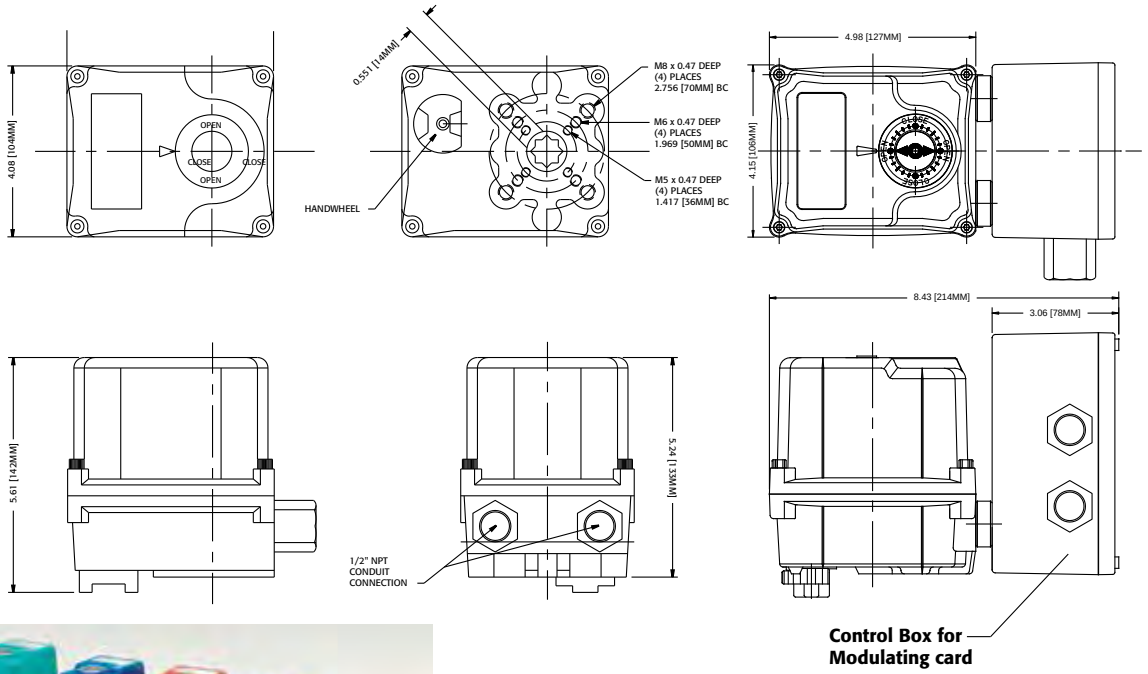

BUTTERFLY VALVES
BALL VALVES
DAMPER VALVES
PLUG VALVES

Electric Actuators WE/XE

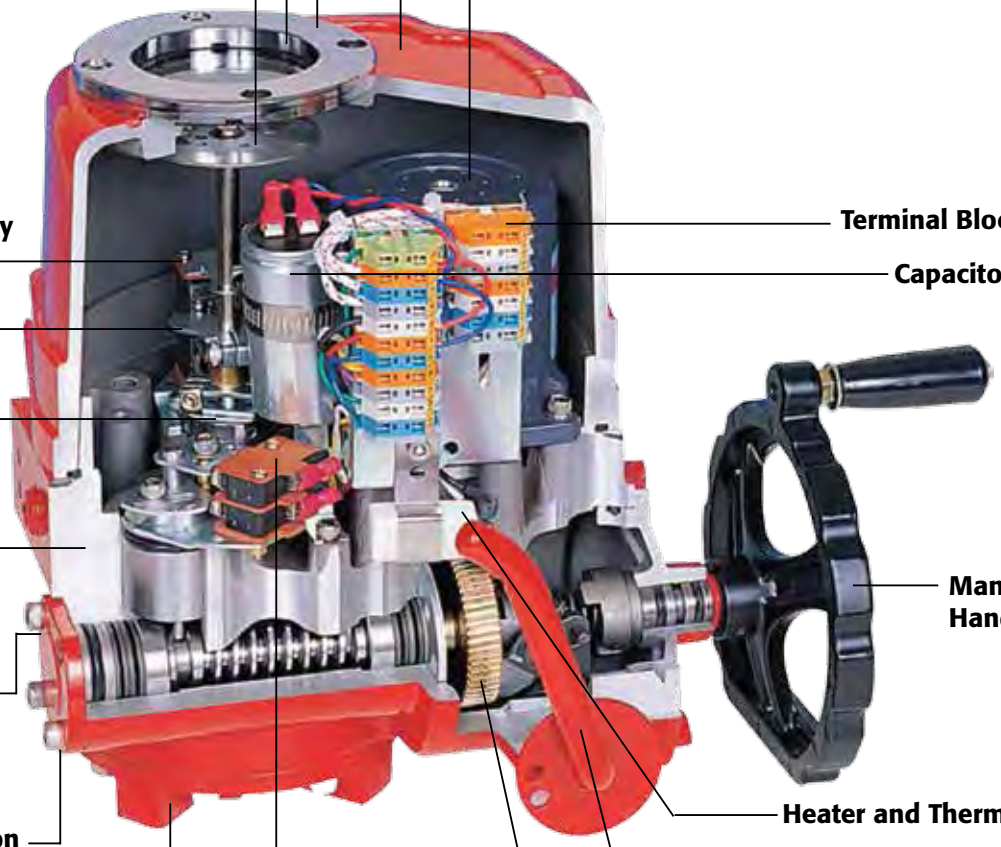

Window cover

Window

Position indicator
Option: illuminated red (close), green (open), yellow (over torque)

Actuator Cover
High corrosion-resistance due to anodizing on the inside and outside and polyester powder coating on the outside

Motor
Available in 1 Phase / 3 Phase, all motors are custom built for high-torque, low current draw and the highest duty cycle ratings offered. Fan Cooled Motor standard on model WE/XE 690 and larger

Limit Switch & Auxiliary Switch Set (standard)

Close Cam

Open Cam

Actuator Body

Mechanical Stops (rear side)

Dual Conduit Connection (rear)

Torque Switch System (except WE/XE-690)

Easy Mounting Base standard to ISO5211

Terminal Block

Capacitor

Manual Handwheel

Heater and Thermostat

Manual Override

Double reduction worm gear assembly is self locking with minimum blacklash

WE-690 - 25900

Terminal block

- Extra terminals for customer's convenience
- Spring Loaded Terminal Strip Provides Secure Connection

Heater

- Ceramic housing with thermostat to eliminate condensation (7-10 watt Standard).
- Optional High Wattage Heater for Low Temp applications to -40°

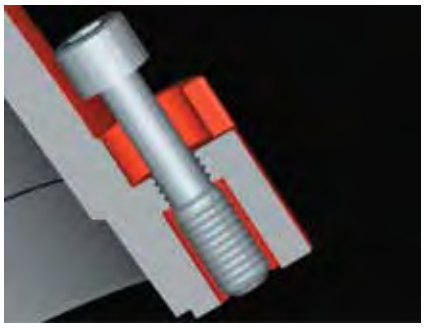

Captive cover bolt

- Cover bolts are specially designed to prevent loosening during maintenance or installation
- All external bolts are stainless steel for rust prevention

Indicator sustained by spring

- Direction of visual indicator is set by factory
- To change its direction simply grip the indicator plate and rotate to the new position
- Spring beneath indicator plate sustains the set position
- No need to loosen screw and tighten it again

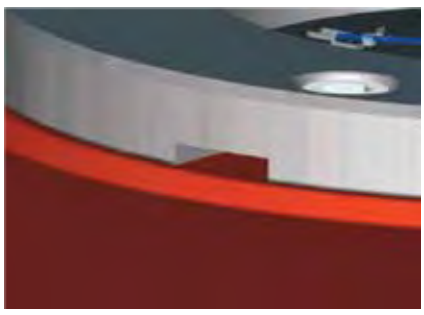

Slot on window cover for draining water

- A drain slot is provided to eliminate water buildup on window

WE/XE Series

WE NEMA 4, 4X & 6

XE NEMA 4, 4X, 6 & 7

SE NEMA 4, 4X, 6 & 9 IP68

Acutator Model	Output Torque	90° Cycle Time (sec)	Motor Size	Full Load Amps					Locked Rotor Amps					Handwheel Turns	Weight
				AC/DC	1 Phase		3 Phase		AC/DC	1 Phase		3 Phase			
WE / XE	In-Lbs.	60 / 50 Hz	Watts	24V	110V/60Hz	220V/60Hz	380V	440V	24V	110V/60Hz	220V/60Hz	380V	440V	N	Lbs.
-690	690	13 / 16	15	5	1.2	0.6	N/A	N/A	12.8	1.4	0.7	N/A	N/A	10	16.4
-1350	1350	21 / 25	40	6	2	1	0.28	0.36	16.9	2.5	1.2	0.75	0.66	11	36.7
-1700	1700	21 / 25	40	7.4	2.3	1.1	0.28	0.36	16.9	2.5	1.2	0.75	0.66	11	36.7
-2640	2640	26 / 31	40	8.9	2.3	1.3	0.27	0.34	30.8	2.9	1.4	1	0.87	13.5	48.6
-4400	4400	26 / 31	90	N/A	4.5	1.9	0.42	0.47	N/A	5	2.4	1.73	1.5	13.5	50.8
-5200	5200	26 / 31	90	N/A	4.5	2	0.42	0.47	N/A	5	2.4	1.73	1.5	13.5	50.8
-6900	6900	31 / 37	180	N/A	5.1	2.4	0.61	0.67	N/A	7.3	3.8	2.73	2.38	16.5	64
-10500	10500	31 / 37	180	N/A	5.4	3.4	0.61	0.67	N/A	7.3	3.8	2.73	2.38	16.5	64
-17500	17500	95 / 112	180	N/A	5.8	2.4	0.61	0.67	N/A	7.3	3.8	2.73	2.38	49.5	167
-25900	25900	95 / 112	180	N/A	6.3	3.4	0.61	0.67	N/A	7.3	3.8	2.73	2.38	49.5	167

Rev.20130924

Standard Specifications

Enclosure.....Weatherproof enclosure, IP67, TYPE 4, 4X, 6
AWWA.....Conforms to AWWA C540-93 requirements
Power supply.....110/220V AC 1PH, 220/380/440/460/480VAC, 3 Phase, 50/60Hz, ±10%
Control power supply.....110/220V AC 1PH, 50/60Hz, ±10%
Duty cycle(on-off).....70% Max 1800 start/hour
Duty cycle(modulating).....70% Max 1800 start/hour
Motor.....Class F Reversible Induction motor
Limit switches.....Open / Close, SPDT, 16A 1/2HP 125/250VAC, 0.6A 125VDC, 0.3A 250VDC
Additional limit switches.....Open / Close, SPDT, 16A 1/2HP 125/250VAC, 0.6A 125VDC, 0.3A 250VDC
Torque switches.....Open / Close, SPDT, 16A 1/2HP 125/250VAC, 0.6A 125VDC, 0.3A 250VDC (except WE/XE-690)
Stall protection.....Built-in thermal protection, Open 302°F (150°C) / Close 207°F (97°C)
Travel angle.....90° ± 10°
Indicator.....Continuous position indicator
Manual override.....Declutching mechanism
Self locking.....Provided by double worm gearing
Mechanical stopper.....Open / Close (external adjustable screws)
Space heater.....7-10W (110/220V AC) Anti-condensation
Cable Conduit.....Two 3/4" NPT
Lubrication.....Grease moly (EP type)
Terminal block.....Spring loaded lever push type
Materials.....Steel, Aluminium alloy, AI bronze, Polycarbonate
Ambient temperature.....-4°F —158°F (optional -40° Low Temp Kit)
Ambient humidity.....90% RH Max. (non-condensing)
External coating.....Anodizing treatment before Dry powder, Polyester, Munsell no. 5R 3.5/12

Options Specifications

ATEX II 2 G
EEx d IIB T4

Explosion-Proof enclosure II 2 G, E Ex d IIB T4, IP67	ATEX certification
Designed to comply with NEMA 7 Explosion Proof	
Watertight enclosure (IP68 10M 72HR)	SE/XE Series
Potentiometer unit (1K ~10K)	WE/XE Series
Proportional control unit (input, output 0~10V DC, 4~20mA DC)	WE/XE Series
Semi-Integral control unit (Local/Remote Selector Switches)	except WE/XE-690
Intelligent Digital control unit (Local/Remote Selector Switches)	except WE/XE-690
Current position transmitter (output 4-20mA DC)	WE/XE Series
Extension 120º, 180º, 270º turn	except WE/XE-17500, 25900
Duty Cycle 70% max (in Ambient temperature)	except WE/XE-690
DC motor (24V DC)	WE/XE-690C—WE/XE-2640C
AC/DC 24V control	WE/XE-690A—WE/XE-2640A
Lever plate actuator	except WE/XE-690
Signal lamp unit (red-close, green-open, yellow-over torque)	
Fire Proofing Actuator 1050 ±5ºC/50 min	Consult factory
Fire Proofing Actuator 250 ±5ºC/150 min	Consult factory

Explosion Proof Enclosure
- ATEX Certification
- Designed to comply with NEMA 7 Explosion Proof

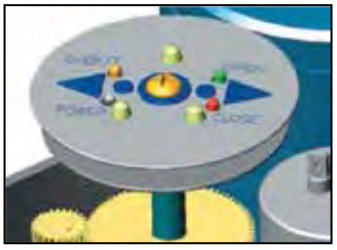

Signal LED Unit
Large indicator with monitoring lamps (Over torque, open and close)

Fire Proofing Acuator

Removable Drive Bushing

High Speed Electric Actuators

Model	Output Torque	Speed (60Hz)	Torque Switch Setting
WE-690*HS2	290 In-Lbs	4.5 seconds	N/A
WE-690*HS1	400 In-Lbs	7.0 seconds	N/A
WE-1350*HS2	840 In-Lbs	7.0 seconds	1,350 In-Lbs
WE-1350*HS1	1,200 In-Lbs	10.5 seconds	1,350 In-Lbs
WE-2640*HS2	1,390 In-Lbs	8.5 seconds	2,640 In-Lbs
WE-2640*HS1	2,050 In-Lbs	13.0 seconds	2,640 In-Lbs
WE-4400*HS2	2,350 In-Lbs	8.5 seconds	4,400 In-Lbs
WE-4400*HS1	3,500 In-Lbs	13.0 seconds	4,400 In-Lbs
WE-6900*HS2	4,500 In-Lbs	10.5 seconds	6,900 In-Lbs
WE-10500*HS1	6,700 In-Lbs	15.5 seconds	10,500 In-Lbs
WE-17500*HS2	12,000 In-Lbs	31.0 seconds	17,500 In-Lbs
WE-25900*HS1	18,000 In-Lbs	47.0 seconds	25,900 In-Lbs

Motor specifications remain the same.
*Must specify voltage - see part number matrix on back cover.

Modulating Options for WE-500-25900

Modulating Cards

TMC3 Electronic Modulating Card

- Auto Calibration for Easy Setup
- 10 Bit Microprocessor controller for precise positioning and control
- 4-20mA, 1-5mA, 0-10 VDC, 1-5 VDC, 0-135 Ohm or Command Signal Potentiometer
- TMC3 Can be programmed to Fall in Place, Fail CW, or Fail CCW on loss of command signal
- Characterized Control-Linear, quick opening (Square root), or Equal Percentage (Square)
- OnBoard 4-20 mA transmitter (standard)

TDC Electronic Modulating Card

- 450 Point Resolution, 16 Bit Micro Processor
- Auto Calibration
- Adaptive Control Feature (continuously adjusts for load and actuator conditions and positions to ±0.1°)
- Dynamic Breaking
- 4-20mA, 1-5V, 0-5V, 0-10V
- Programmed to Fail in place, Fail CW, or Fail CCW on loss of command signal
- 4-20mA Feedback Transmitter (Optional)

EPC Electronic AS-i Network Card

- AS-i Version 2.1
- 120 VAC or 24VDC Power
- Emergency Override-Normal Operation is overridden when actuator is driven to either Ch or CCh position on command
- Built in Emergency Position Command (EPC) overrides normal operation and automatically operates the valve into either the open or closed position (normally this is the closed position) as defined in the user specifications
- Signal Sentinel continuously monitors the EPC system offering additional failsafe backup in the event of an unexpected local event

Boiler Feedwater Application

- Control signal 4-20mA, specify these parts: LRC-100, POT-102 & Extended Bracket.
- Control signal 0-135 ohm, specify these parts: TDC-100, XMA-108, POT-102 & Extended Bracket

Other Network Cards Available Upon Request

Special Application

Intelligent Digital Control Unit

- Light, compact and integral design
- Wide range of electric power application (AC 220V~AC480V/3 Phase)
- Built-in auto phase discriminator (easy and convenient wiring)
- Digital indicator with number, bar graph, menu and (3) LED lamps
- Separate terminal chamber (Reliable against water, vibration, temperature, etc.)
- Easy application for WE-Series Actuators
- Various options available

Semi-Integral Control Unit

- Light, compact and integrated design (IMS, Local/Remote control)
- Wide range of electric power application (AC 115V~AC480V/1 Phase or 3 Phase)
- Phase protection monitoring by LED in case of reverse wiring
- Easy application for WE-Series Actuators
- Various options available

LED lamp signal	
White	:Power
Blue	:Remote
Yellow	:Fault
Red	:Open/Opening
Green	:Close/Closing

Dimensional Drawing

WE/XE-690, 1350, 1700, 2640, 4400, 5200, 6900, 10500

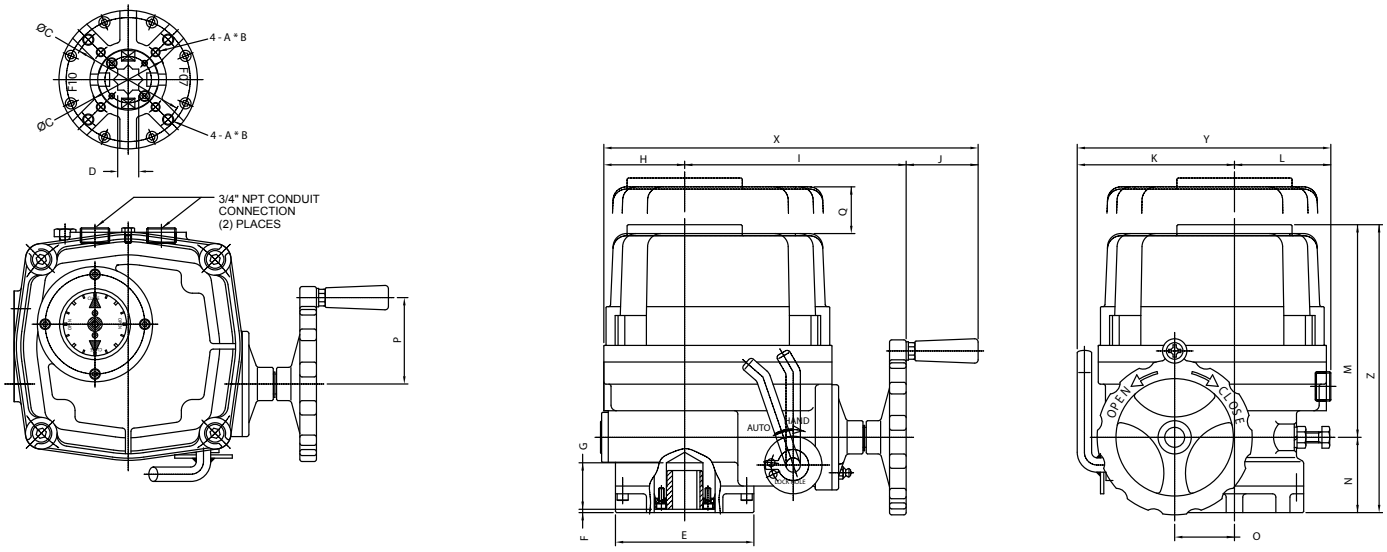

WE/XE-17500, 25900

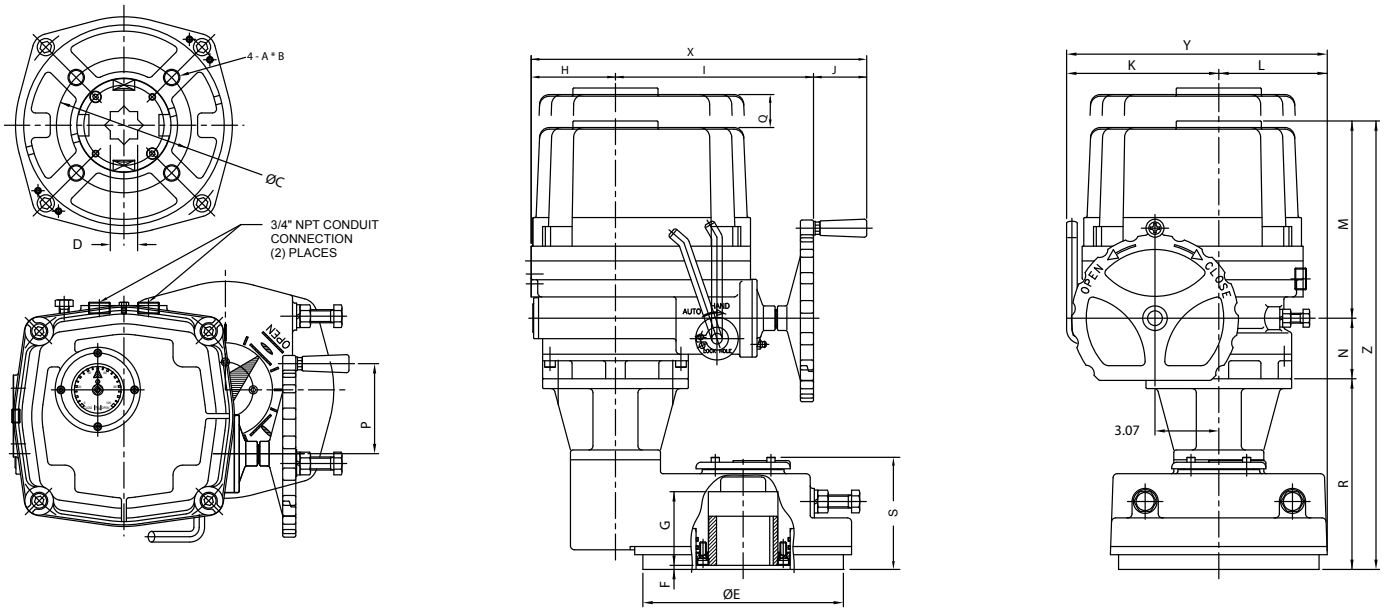

Dimensions

Units (inches)

Model WE/XE	ISO 5211	A	B	C	D sq	E	F	G	H	I	J	K	L	M	N	O	P	Q	R	S	X	Y	Z
-690	F07	M8	0.47	2.756	0.669	3.46	0.12	1.26	1.97	6.18	2.01	3.94	2.76	6.57	2.09	1.57	2.36	4.72	-	-	10.16	6.69	9.25
-1350	F07/F10	M8/M10	0.47/0.59	2.756/4.016	0.748	4.92	0.12	1.65	2.87	7.87	2.56	5.59	3.43	7.56	2.68	2.13	3.07	6.30	-	-	13.31	9.02	10.55
-1700	F07/F10	M8/M10	0.47/0.59	2.756/4.016	0.748	4.92	0.12	1.65	2.87	7.87	2.56	5.59	3.43	7.56	2.68	2.13	3.07	6.30	-	-	13.31	9.02	10.55
-2640	F10/F12	M10/M12	0.59/0.71	4.016/4.921	1.063	5.83	0.12	1.93	3.23	8.70	2.56	6.30	3.90	8.70	2.72	2.56	3.07	7.09	-	-	14.49	10.20	11.42
-4400	F10/F12	M10/M12	0.59/0.71	4.016/4.921	1.063	5.83	0.12	1.93	3.23	8.70	2.56	6.30	3.90	8.70	2.72	2.56	3.07	7.09	-	-	14.49	10.20	11.97
-5200	F10/F12	M10/M12	0.59/0.71	4.016/4.921	1.063	5.83	0.12	1.93	3.23	8.70	2.56	6.30	3.90	8.70	2.72	2.56	3.07	7.09	-	-	14.49	10.20	11.97
-6900	F14	M16	0.95	5.512	1.417	7.01	0.12	2.24	4.06	9.53	2.56	7.32	4.37	9.49	2.91	3.07	4.33	8.27	-	-	16.14	11.69	12.99
-10500	F14	M16	0.95	5.512	1.417	7.01	0.12	2.24	4.06	9.53	2.56	7.32	4.37	9.49	2.91	3.07	4.33	8.27	-	-	16.14	11.69	12.99
-17500	F16	M20	1.18	6.496	1.417	9.65	0.20	3.54	4.06	9.53	2.56	7.32	5.24	9.49	2.91	3.07	4.33	8.27	9.17	5.24	16.14	12.56	22.17
-25900	F16	M20	1.18	6.496	1.417	9.65	0.20	3.54	4.06	9.53	2.56	7.32	5.24	9.49	2.91	3.07	4.33	8.27	9.17	5.24	16.14	12.56	22.17

Dimensional Drawing

WE-1350, 1700, 2640, 4400, 5200, 6900, 10500 *Intelligent Digital Control Unit*

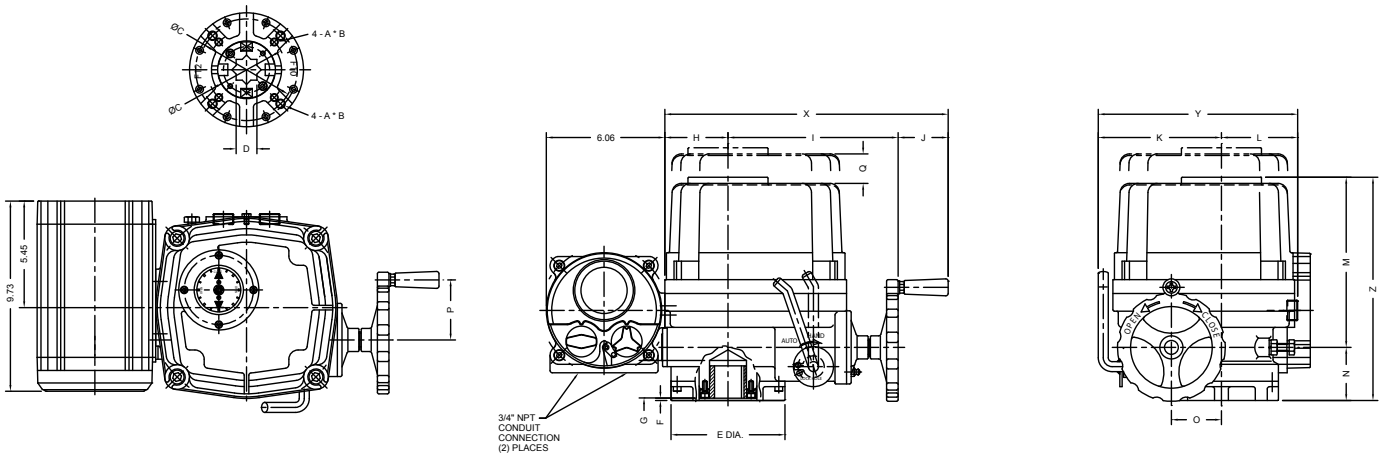

WE-17500, 25900 *Intelligent Digital Control Unit*

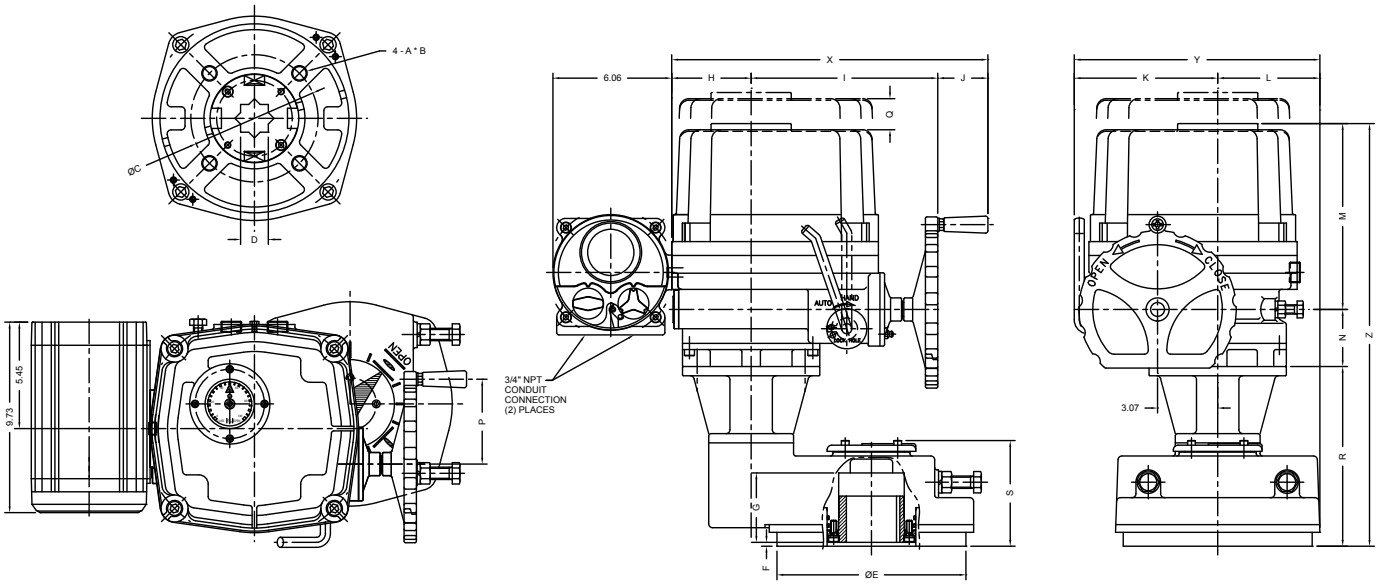

Dimensions

Units (inches)

Model WE	ISO 5211	A	B	C	D sq	E	F	G	H	I	J	K	L	M	N	O	P	Q	R	S	X	Y	Z
-1350	F07/F10	M8/M10	0.47/0.59	2.756/4.016	0.748	4.92	0.12	1.65	2.87	7.87	2.56	5.59	3.43	7.56	2.68	2.13	3.07	6.30	-	-	13.31	9.02	10.55
-1700	F07/F10	M8/M10	0.47/0.59	2.756/4.016	0.748	4.92	0.12	1.65	2.87	7.87	2.56	5.59	3.43	7.56	2.68	2.13	3.07	6.30	-	-	13.31	9.02	10.55
-2640	F10/F12	M10/M12	0.59/0.71	4.016/4.921	1.063	5.83	0.12	1.93	3.23	8.70	2.56	6.30	3.90	8.70	2.72	2.56	3.07	7.09	-	-	14.49	10.20	11.42
-4400	F10/F12	M10/M12	0.59/0.71	4.016/4.921	1.063	5.83	0.12	1.93	3.23	8.70	2.56	6.30	3.90	8.70	2.72	2.56	3.07	7.09	-	-	14.49	10.20	11.97
-5200	F10/F12	M10/M12	0.59/0.71	4.016/4.921	1.063	5.83	0.12	1.93	3.23	8.70	2.56	6.30	3.90	8.70	2.72	2.56	3.07	7.09	-	-	14.49	10.20	11.97
-6900	F14	M16	0.95	5.512	1.417	7.01	0.12	2.24	4.06	9.53	2.56	7.32	4.37	9.49	2.91	3.07	4.33	8.27	-	-	16.14	11.69	12.99
-10500	F14	M16	0.95	5.512	1.417	7.01	0.12	2.24	4.06	9.53	2.56	7.32	4.37	9.49	2.91	3.07	4.33	8.27	-	-	16.14	11.69	12.99
-17500	F16	M20	1.18	6.496	1.417	9.65	0.20	3.54	4.06	9.53	2.56	7.32	5.24	9.49	2.91	3.07	4.33	8.27	9.17	5.24	16.14	12.56	22.17
-25900	F16	M20	1.18	6.496	1.417	9.65	0.20	3.54	4.06	9.53	2.56	7.32	5.24	9.49	2.91	3.07	4.33	8.27	9.17	5.24	16.14	12.56	22.17

Dimensional Drawing

WE-1350, 1700, 2640, 4400, 5200, 6900, 10500 *Semi-integral Control Unit*

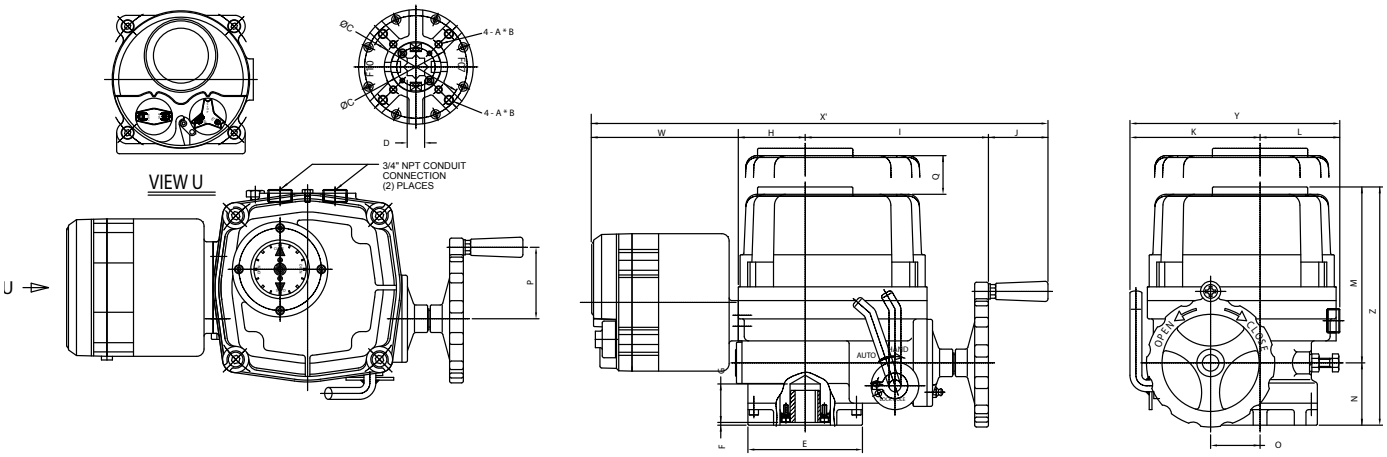

WE-17500, 25900 *Semi-integral Control Unit*

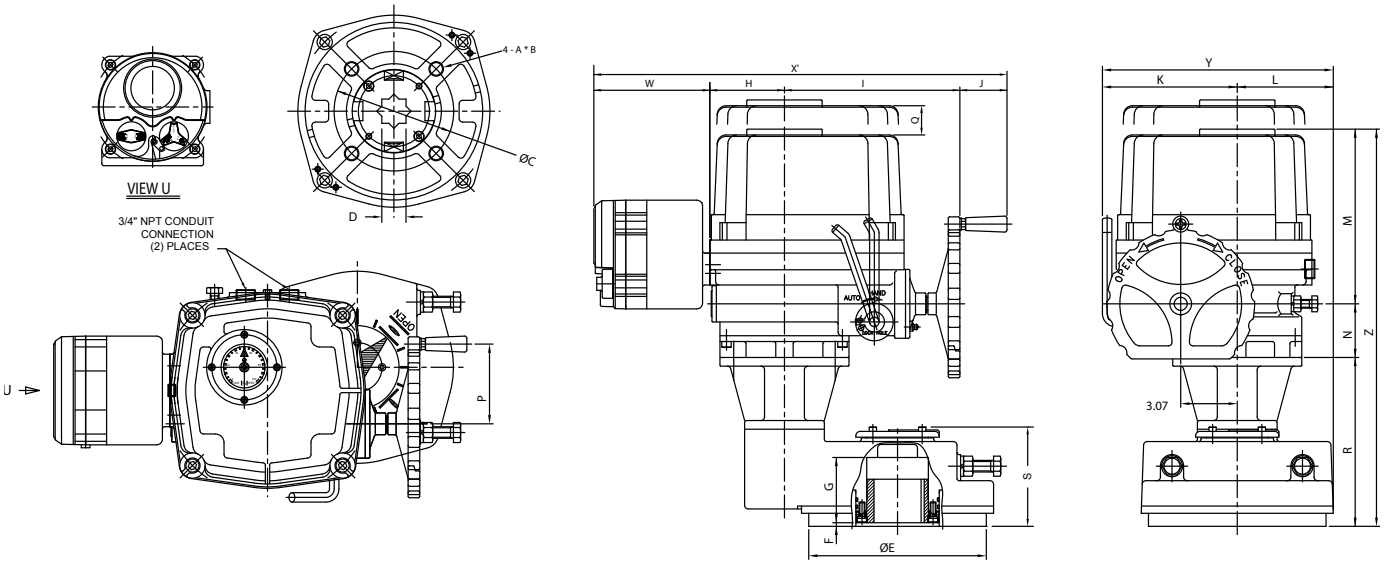

Dimensions

Units (inches)

Model WE	ISO 5211	A	B	C	D sq	E	F	G	H	I	J	K	L	M	N	O	P	Q	R	S	W	X	Y	Z
-1350	F07/F10	M8/M10	0.47/0.59	2.756/4.016	0.748	4.92	0.12	1.65	2.87	7.87	2.56	5.59	3.43	7.56	2.68	2.13	3.07	6.30	-	-	6.30	19.61	9.02	10.55
-1700	F07/F10	M8/M10	0.47/0.59	2.756/4.016	0.748	4.92	0.12	1.65	2.87	7.87	2.56	5.59	3.43	7.56	2.68	2.13	3.07	6.30	-	-	6.30	19.61	9.02	10.55
-2640	F10/F12	M10/M12	0.59/0.71	4.016/4.921	1.063	5.83	0.12	1.93	3.23	8.70	2.56	6.30	3.90	8.70	2.72	2.56	3.07	7.09	-	-	6.30	14.49	10.20	11.42
-4400	F10/F12	M10/M12	0.59/0.71	4.016/4.921	1.063	5.83	0.12	1.93	3.23	8.70	2.56	6.30	3.90	8.70	2.72	2.56	3.07	7.09	-	-	6.30	20.79	10.20	11.97
-5200	F10/F12	M10/M12	0.59/0.71	4.016/4.921	1.063	5.83	0.12	1.93	3.23	8.70	2.56	6.30	3.90	8.70	2.72	2.56	3.07	7.09	-	-	6.30	20.79	10.20	11.97
-6900	F14	M16	0.95	5.512	1.417	7.01	0.12	2.24	4.06	9.53	2.56	7.32	4.37	9.49	2.91	3.07	4.33	8.27	-	-	6.30	22.44	11.69	12.99
-10500	F14	M16	0.95	5.512	1.417	7.01	0.12	2.24	4.06	9.53	2.56	7.32	4.37	9.49	2.91	3.07	4.33	8.27	-	-	6.30	22.44	11.69	12.99
-17500	F16	M20	1.18	6.496	1.417	9.65	0.20	3.54	4.06	9.53	2.56	7.32	5.24	9.49	2.91	3.07	4.33	8.27	9.17	5.24	6.30	22.44	12.56	22.17
-25900	F16	M20	1.18	6.496	1.417	9.65	0.20	3.54	4.06	9.53	2.56	7.32	5.24	9.49	2.91	3.07	4.33	8.27	9.17	5.24	6.30	22.44	12.56	22.17

Wiring drawings are available upon request.

Wiring Connection

WE/XE-1350 thru 25900 *Two Position 115 VAC/1 Ph* SE 1080

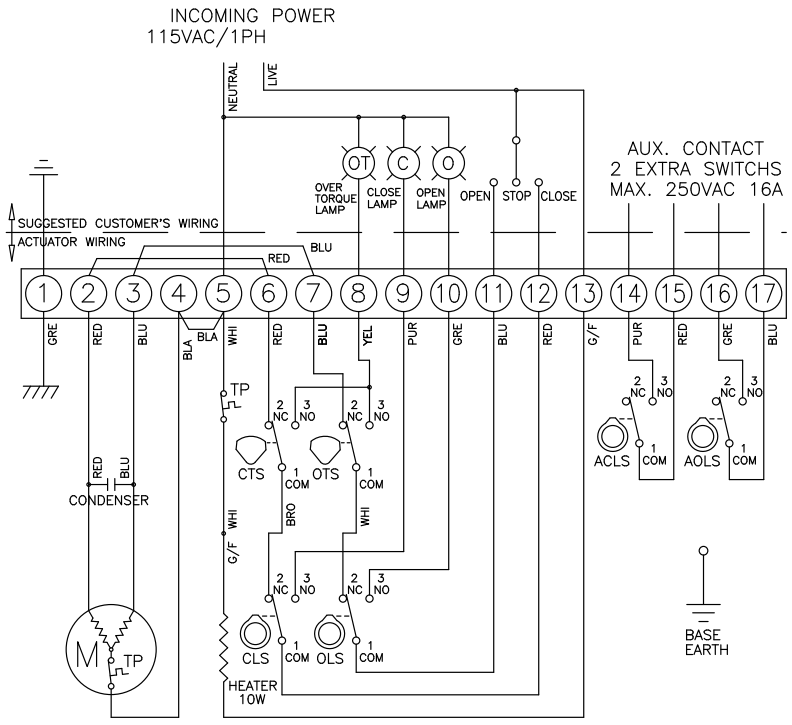

TORQUE AND LIMIT SWITCH OPERATION		
SWITCH	CLOSE ← INTERMEDIATE → OPEN	
CLS 1–2		
CLS 1–3		
OLS 1–2		
OLS 1–3		
ACLS 1–2		
ACLS 1–3		
AOLS 1–2		
AOLS 1–3		
CTS 1–3	* CLOSING TORQUE SWITCH INTERRUPTS CONTROL IF MECHANICAL OVERLOAD OCCURS DURING CLOSING CYCLE	
OTS 1–3	* OPENING TORQUE SWITCH INTERRUPTS CONTROL IF MECHANICAL OVERLOAD OCCURS DURING OPENING CYCLE	

SYMBOL	DESCRIPTION	RATING
CLS	CLOSE LIMIT SWITCH	250VAC 10A
OLS	OPEN LIMIT SWITCH	250VAC 10A
CTS	CLOSE TORQUE SWITCH	250VAC 10A
OTS	OPEN TORQUE SWITCH	250VAC 10A
ACLS	AUX. CLOSE LIMIT SWITCH	250VAC 16A
AOLS	AUX. OPEN LIMIT SWITCH	250VAC 16A
TP	THERMAL PROTECTOR	250VAC 15A

*EACH ACTUATOR SHOULD BE POWERED THROUGH IT'S OWN INDIVIDUAL SWITCH OR RELAY CONTACTS TO PREVENT CROSS FEED BETWEEN TWO OR MORE ACTUATORS.

WEM/XEM-1350 thru 25900 *Proportional 115 VAC/1 Ph* SE 1052

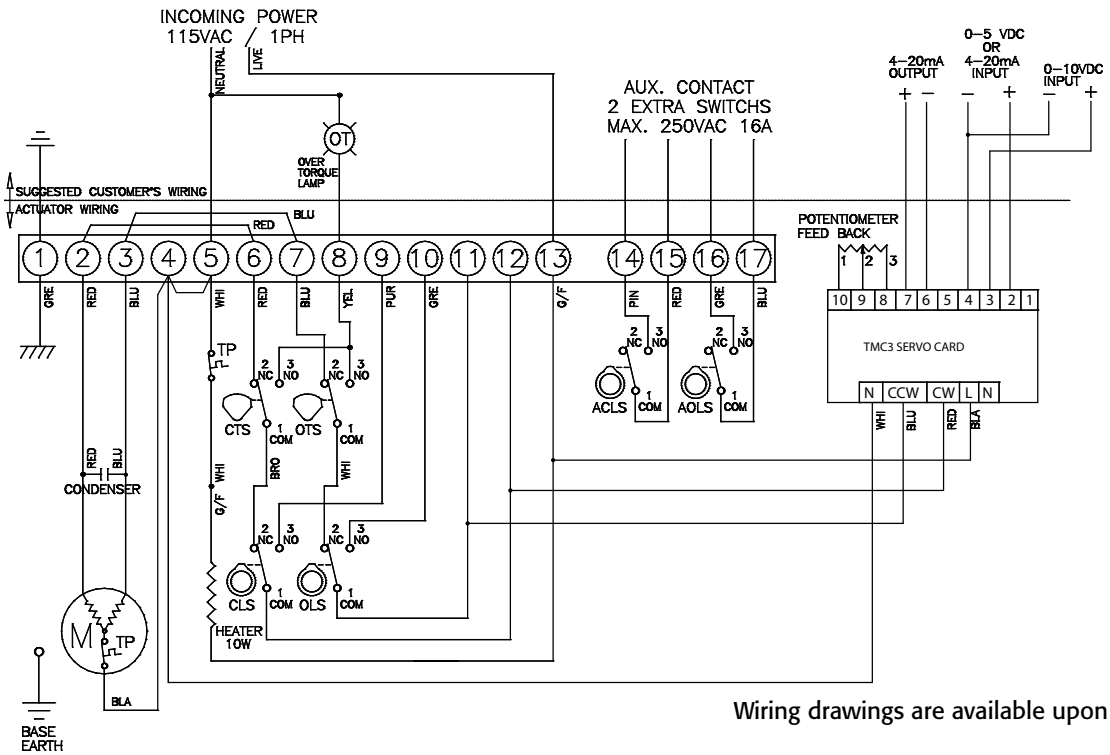

Wiring drawings are available upon request.

Wiring Connection

Digital Control Unit *3 Phase/Proportional* SE 1222

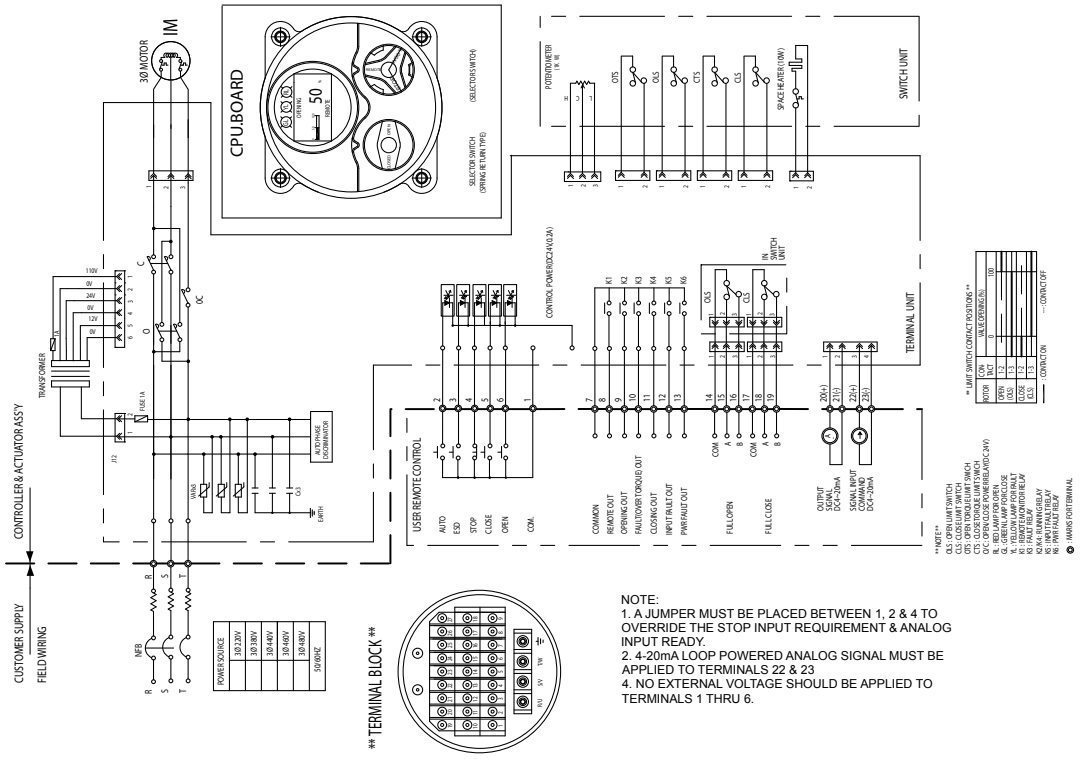

Digital Control Unit *3 Phase/2 Position* SE 1301

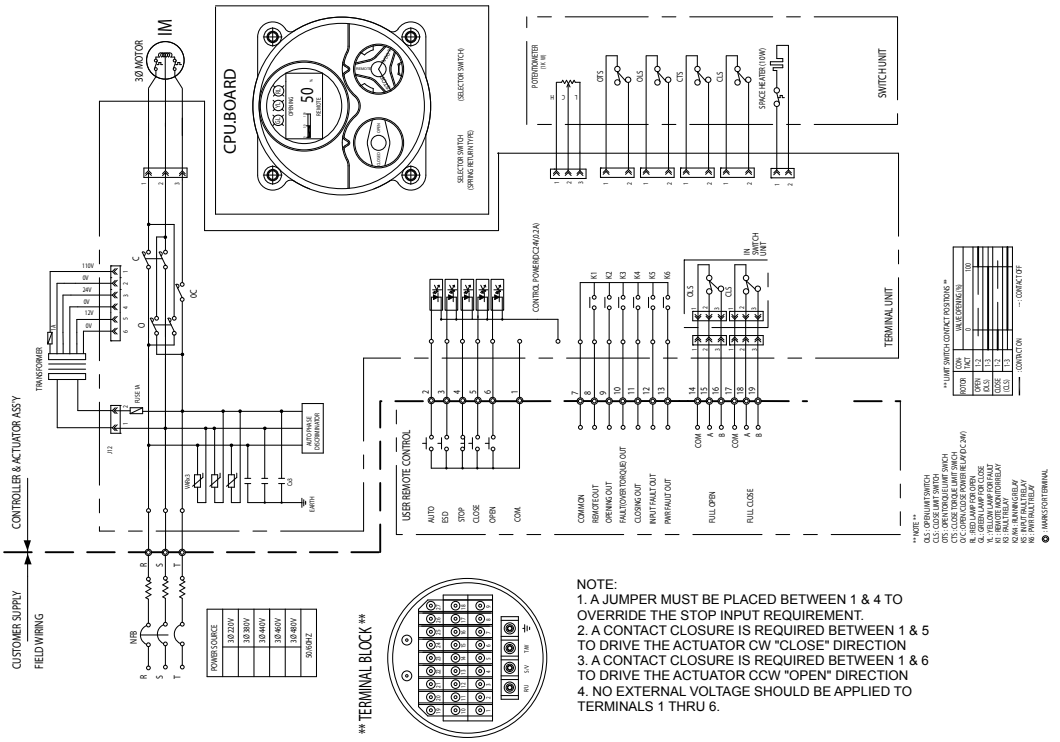

Wiring Connection

Semi-integral Unit 1 Phase/Proportional SE 1176

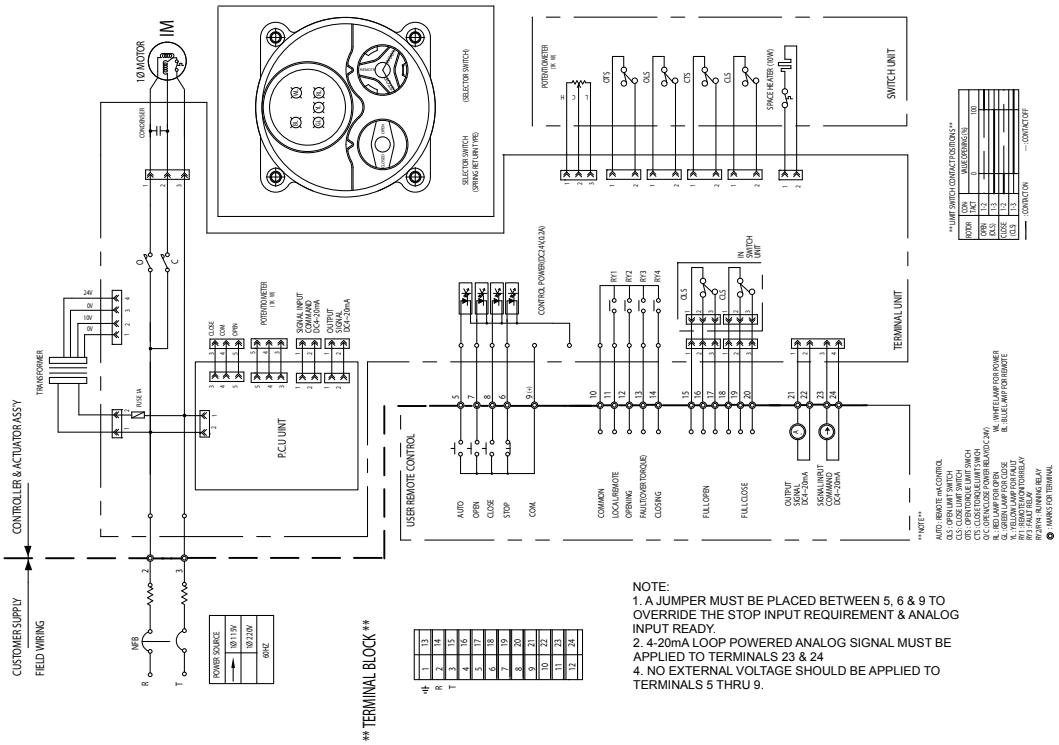

NOTE:
1. A JUMPER MUST BE PLACED BETWEEN 5, 6 & 9 TO OVERRIDE THE STOP INPUT REQUIREMENT & ANALOG INPUT READY.
2. 4-20mA LOOP POWERED ANALOG SIGNAL MUST BE APPLIED TO TERMINALS 23 & 24
4. NO EXTERNAL VOLTAGE SHOULD BE APPLIED TO TERMINALS 5 THRU 9.

Semi-integral Unit 1 Phase/2 Position SE 1097

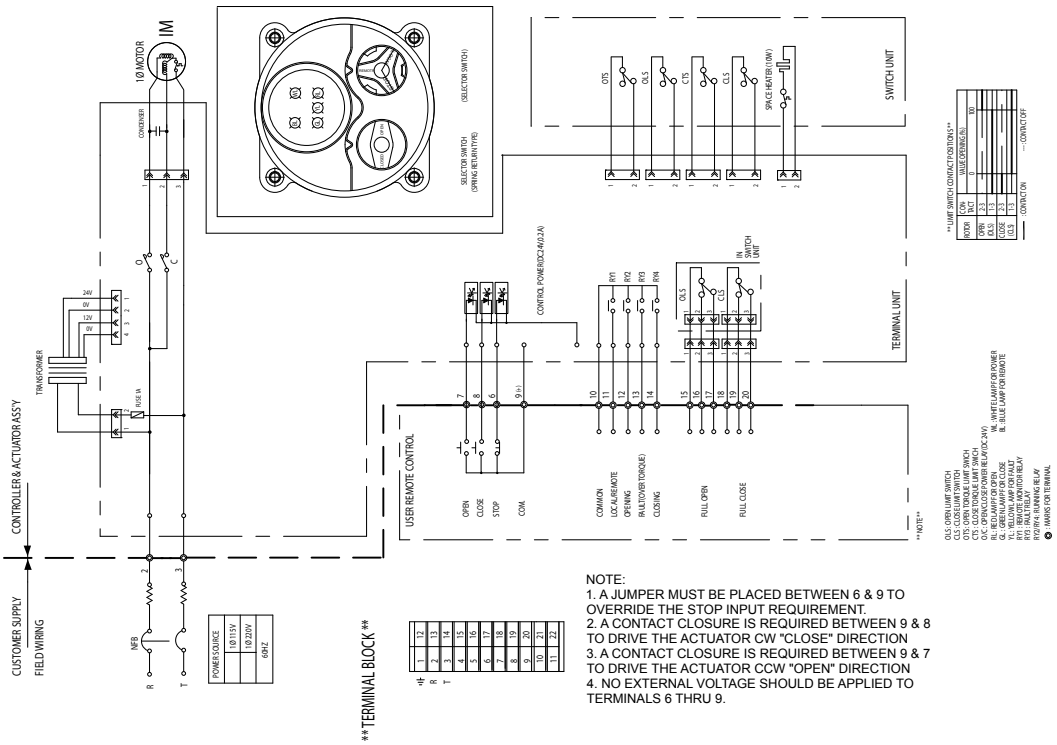

NOTE:
1. A JUMPER MUST BE PLACED BETWEEN 6 & 9 TO OVERRIDE THE STOP INPUT REQUIREMENT.
2. A CONTACT CLOSURE IS REQUIRED BETWEEN 9 & 8 TO DRIVE THE ACTUATOR CW "CLOSE" DIRECTION
3. A CONTACT CLOSURE IS REQUIRED BETWEEN 9 & 7 TO DRIVE THE ACTUATOR CCW "OPEN" DIRECTION
4. NO EXTERNAL VOLTAGE SHOULD BE APPLIED TO TERMINALS 6 THRU 9.

WE-53000 and WE-80000

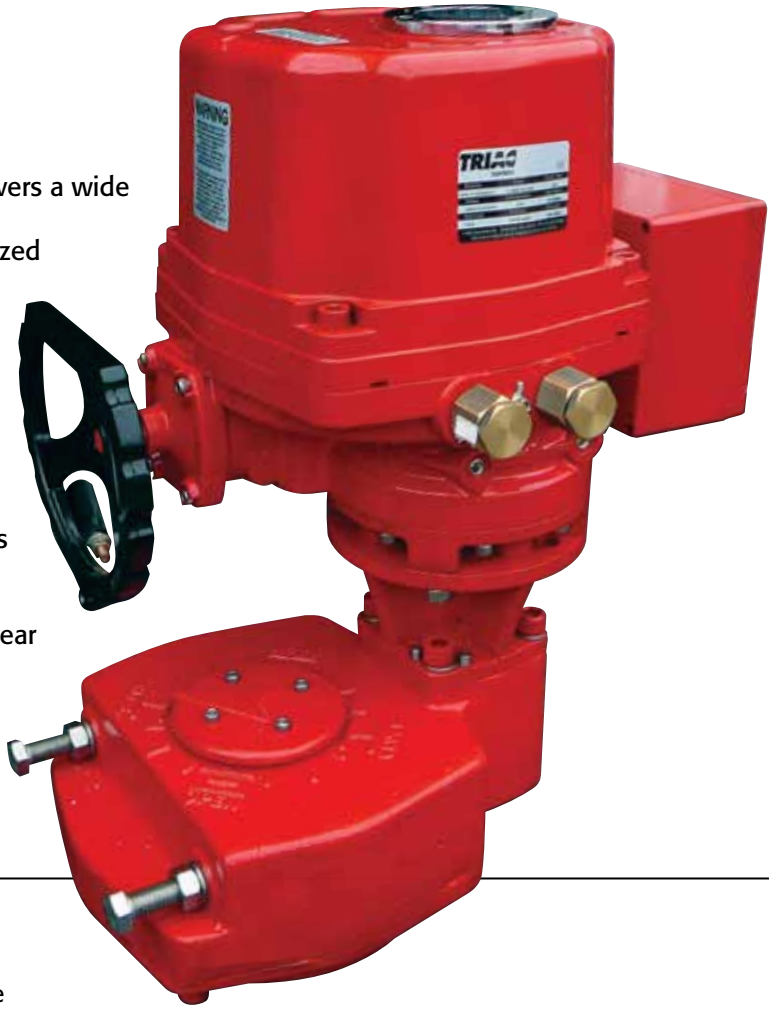

Features

- Compact, robust and lightweight construction covers a wide range of torques up to 80000 In-lbs.
- Polyester powder coated exterior and hard anodized aluminum interior provides excellent protection from the most severe industrial environments.
- Double worm gear design prevents any valve movement from dynamic forces within the pipeline.
- Standard ISO 5211 mounting configuration provides direct mounting option to any ISO 5211 valve.
- Weatherproof enclosure with O-ring seal provides NEMA 4, 4X and 6 (IP67) protection.
- Declutchable manual override with hand wheel.
- Mechanical torque switches prevent motor and gear set damage during excessive torque scenarios.
- Large visual indicator allows for positive visual position indentification from greater distances.
- Digitized control components.

Standard Construction

- Manual override
- External Mechanical Stopper
- Two Conduit entries PF 3/4"
- Removable drive bushing and ISO5211 mounting base
- Standard four limit switches. Two for each travel end (open/close)
- Captive cover bolt
- Space heater
- Limit switches for tight, easy setting
- Spring loaded push type terminal
- Standard color : Red

Technical Information

Type (Model)	Maximum Output Torque	Operating Time 60/50 Hz	Mounting Size	Motor Insulation Class	Rated Current(A) 60Hz			Duty Cycle	Number of Handle Turns	Weight	Maximum Bore Size (mm)	
				AC 1PH. 50/60Hz	1 Phase	3 Phase	3 Phase					
	In-Lbs.	90°	ISO5211		220V	380V	440V	S2		Lbs.	Key (ø)	Square (¤)
WE-53000 WE-80000	53000 80000	149 sec.	F25/30	F	3.15 3.85	1.8 2.0	2.2 2.4	30%	39	335	120	100

Standard Specification

Enclosure..... Weatherproof enclosure IP67, NEMA 4, 4X & 6, O-ring Sealed
Power Supply..... 220VAC/1PH/60Hz, 380/440/ VAC/3Ph/60Hz ± 10%, 24VDC
Duty cycle..... 30%
Motor..... Squirrel Cage induction motor
Limit switches..... 2 each for Open/Close, SPDT, 250 VAC, 10A Rating
Torque switches..... 1 each for Open/Close, SPDT, 250 VAC, 10A Rating
Space heater..... 5W (220VAC) Anti-condensation
Manual override..... Declutchable
Cable conduit..... Two PF 3/4" TAP
Movement angle..... 90° ± 5°
Ambient temperature..... -4°F to 158°F (optional -40° Low Temp Kit)
Ambient Humidity..... 90% RH Max (Non-Condensing)
Position Indicator..... Continuous mechanical indicator with arrow
Self locking..... Provided by double worm gearing (no brake)
Mechanical Stopper..... 1 for each travel end (open/close), external & adjustable
Stall protection/set temp..... Built in thermal protection, Open 302°F (150°C) / Close 207°F (97°C)
Terminal Block..... Spring loaded lever push type
External coating..... Polyester powder coating
Lubrication..... EP type grease
Anti Vibration..... XYZ 10g, 0.2-34Hz, 30 minutes

Dimensions

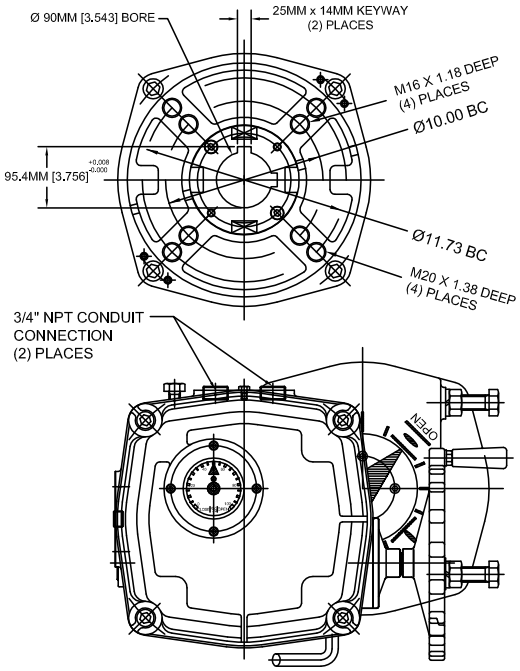

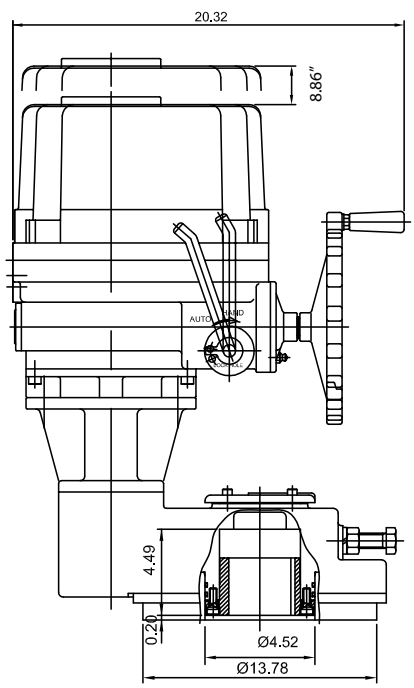

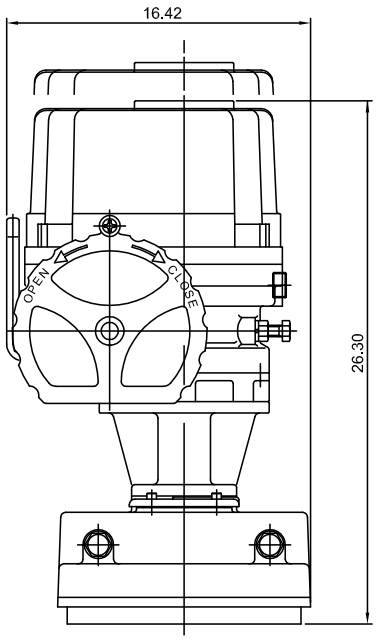

TRIAC CONTROLS

Triac WE / XE Series Part Number Reference

Model	
WE	Weather Proof, IP67, TYPE 4, 4X, 6
XE	Explosion Proof Design, ATEX & IECEx Ex d IIB T4, IP67
FE	Fire Proof Unit (1050ºF for 50 Min)
SE	Submersible unit (IP68, 10 meters for 72 Hours)

Control	
Blank	(2) Position Control (Open / Close)
M	Standard Modulating Control Card (TMC3)
D	TDC-100 Modulating Card (Provides 450 points of resolution)
P	Profibus DP
R	Modbus (RS485)
L	Boiler Feed (4-20mA)
S	Boiler Feed (0-135ohm)

Actuator	
Size	
-350	350 In-Lbs
-350HS	270 In-Lbs
-500	500 In-Lbs
-690	690 In-Lbs
-1350	1350 In-Lbs
-1700	1700 In-Lbs
-2640	2640 In-Lbs
-4400	4400 In-Lbs
-5200	5200 In-Lbs
-6900	6900 In-Lbs
-10500	10500 In-Lbs
-17500	17500 In-Lbs
-25900	25900 In-Lbs
-53000	53000 In-Lbs
-80000	80000 In-Lbs

Motor		
X	115VAC/1PH	Place holder only - Omit when at end of part number
A	24V AC/DC	(N/A 4400 - 25900)
B	12VDC	
C	24VDC*	(N/A 4400 - 25900)
	*Requires additional relays for customer supplied wiring	
D	24VAC/1PH	(N/A 4400 - 25900)
E	220VAC/1PH	
F	220VAC/3PH	(N/A 500, 690)
G	380VAC/3PH	(N/A 500, 690)
H	440VAC/3PH	(N/A 500, 690)
J	460VAC/3PH	(N/A 500, 690)
K	480VAC/3PH	(N/A 500, 690)

Options		
X	No options	Place holder only - Omit when at end of part number
2	ADM-100 Control Board - 24 VDC On/Off	
B	Semi-integral Control Unit	(N/A 500, 690)
C	Intelligent Digital Control Unit	(N/A 500, 690)
D	Local / Remote Control Switches	(Only 500, 690)
E	Electronic Speed Control Module - 115 VAC only	
F	2 Wire Control & Speed Control - 115 VAC only	
G	End of travel time delay (same in both directions)	
HS1/HS2	See High Speed Options	
R	2 Wire Control, Relay - 115 VAC control voltage	
S	2 Wire Control, Relay - 24 VAC control voltage	
T	2 Wire Control, Relay - 24 VDC control voltage	

Miscellaneous Options Note: Add all miscellaneous options to end of part number		
Blank	No options	
T	4-20mA Transmitter	
N	1000 Ohm Potentiometer	
O	5000 Ohm Potentiometer	
P	10K Ohm Potentiometer	
X	120º Operation	(N/A 17500 or 25900)
Y	180º Operation	(N/A 17500 or 25900)
Z	270º Operation	(N/A 17500 or 25900)
L	-40º Low Temp Kit	
I	Position Indicator Lamps (Open, Close, Torque)	(N/A 500, 690)
S	(2) additional limit switches (6 total)	(N/A 500, 690)
	Floor Drive Mounting Configuration - See Floor Drive Catalog	

Examples

WEM-1350
(Weather Proof Housing, Modulating Control, model size 1350, 115VAC / 1PH)

WEM-1350XXT
(Weather Proof Housing, Modulating Control, model size 1350, 115VAC / 1PH, 4-20mA Transmitter)

AT Controls reserves the right to change product designs and technical/dimensional specifications without notice.

A-T Controls, Inc.

9955 International Blvd. PHONE (513) 247-5465
Cincinnati, Ohio 45246 FAX (513) 247-5462
www.atcontrols.com sales@atcontrols.com

WE-20150508
Copyright 2013 A-T Controls, Inc.
LIT0021

CLA-VAL™

12" Model 581 KC
3" Model 581 KC

Series 581

Silent Globe Check Valve

FM APPROVED

- **Operates Horizontally or Vertically**
- **Watertight Seating**
- **Field Replaceable Parts**
- **Factory Mutual Approved – Various Sizes**
- **Optional Resilient Seat**

The Cla-Val Series 581 Silent Globe Check Valve has a spring-loaded poppet that allows the valve to close before flow reversal occurs, resulting in a silent, non-slam closure. It is a truly silent check valve. For ease of installation, the valve can be installed in vertical or horizontal positions with flow up or flow down. Silent Globe Check Valves are available in 2 1/2" to 42" sizes, with either a 125 lb. or 250 lb. pressure class rating. Silent Globe Check Valves shall be coated with NSF fusion bonded epoxy coating on valve interior and exterior.

Constructed of a cast iron body with bronze trim, the Cla-Val Silent Globe Check Valve offers watertight shutoff with metal-to-metal seating. ~~For special applications, stainless steel trim and Buna-N® resilient seats are available as options.~~ All materials conform to ASTM specifications, ensuring long lasting reliable performance. As a confirmation of Cla-Val's commitment to quality, 2 1/2" to 12" 125 lb. class Series 581 valves are Factory Mutual approved.

SPECIFICATIONS

The silent globe check valve shall consist of a heavy cast iron body, bronze seat, bronze disc, and stainless steel spring. The valve disc shall be center guided at both ends with an integral shaft and shall be spring loaded for silent operation. The spring shall be helical or conical and stone tumbled to achieve a micro-finish to resist mineral deposits. For ease of maintenance, the seat and disc shall be replaceable in the field.

Check valve shall be capable of silent operation when installed in vertical or horizontal positions with either flow up or flow down. The flow area through the body shall be equal to or greater than the cross-section area of the equivalent pipe size. Sizes 2 1/2" to 10" shall allow bolting a wafer style butterfly valve directly to the outlet flange without a spool piece.

All materials of construction shall conform to ASTM specifications as follows:

***Valve Body:** Cast Iron ASTM A126 Class B

Disc & Seat: Bronze ASTM B584

Spring: Stainless Steel ASTM A313.5
Stone Tumbled & Stress Relieved.

Sizes: 3" thru 10" shall accept a direct connected Butterfly Valve for isolation use and space saving in the pump station.

The valve shall be a Cla-Val Series 581 Silent Globe Check Valve.

~~**Note:** Cla-Val Series 581 Silent Globe Check Valve available in all 316 Stainless Steel Material.~~

Series 581 Pressure Loss Curve
(Typical)

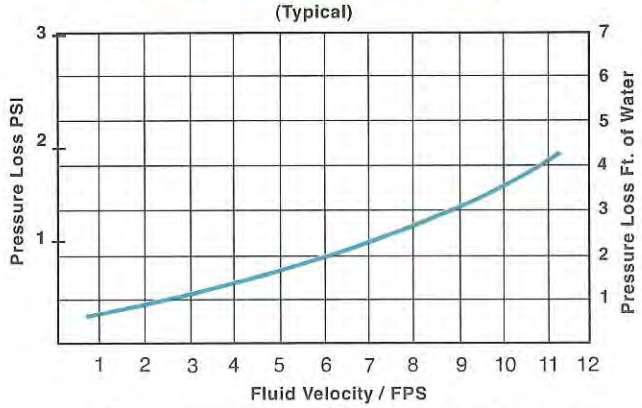

PRESSURE / TEMPERATURE RATINGS
WAFER AND GLOBE STYLE SILENT CHECK VALVES

TEMP DEG F.	MAXIMUM NON-SHOCK WATER SERVICE PRESSURE							
	GRAY IRON 125 LB. CLASS		DUCTILE IRON 150 LB. CLASS		GRAY IRON 250 LB. CLASS		DUCTILE IRON 300 LB. CLASS	
	2" - 12"	14" - 42"	2" - 12"	14" - 42"	2" - 12"	14" - 42"	2" - 12"	14" - 42"
0 -150°	200	150	300	250	400	300	500	400
200°	190	135	280	230	370	280	460	370
250°	*	*	270	220	*	*	440	355
TEST PRES.	300	230	450	375	600	450	750	600

* Ductile Iron Recommended For Hot Water Service Above 200° F.

CLA-VAL™

ACS
10/4/15

FM
* APPROVED

Silent Globe Check Valve
SERIES 581

*CHECK 12" QTY'S
VAULT "C" IS NOT ONLY
INSTALLED.
-PI- 00-000005
~~-CV-00-000012~~
-CV-00-000022

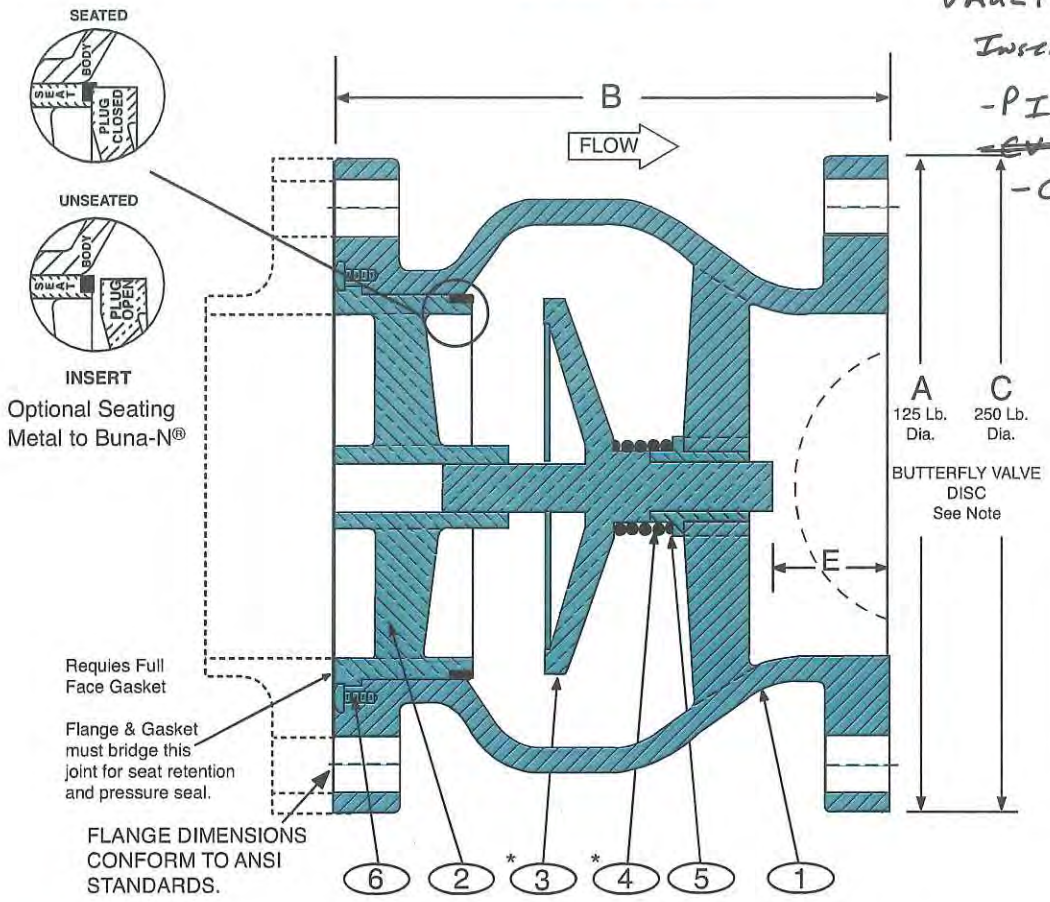

Note: Plug 3 & spring 4 compressed are shown in Open Position.

Dimensions (In Inches)

ANSI CLASS 125 and 250							
Model	Size	Weight Lbs		A 125 Dia.	B	C 250 Dia.	E
		125	250				
581	2 1/2	24	30	7	5 1/2	7 1/2	1
581	3*	29	36	7 1/2	6	8 1/4	1 3/8
581	4*	42	59	9	7 1/4	10	1 3/4
581	5*	52	78	10	8 1/2	11	2
581	6*	73	103	11	9 3/4	12 1/2	2 1/2
581	8*	126	179	13 1/2	12 1/2	15	3 1/4
581	10*	205	253	16	15 1/2	17 1/2	4 1/4
581	12*	306	401	19	14 1/4	20 1/2	
581	14	380	511	21	15 3/4	23	Spool
581	16	501	697	23 1/2	17 5/8	29 1/2	
581	18	724	959	25	18 3/4	28	Piece
581	20	890	1180	27 1/2	20 5/8	30 1/2	
581	24	1220	1680	32	24	36	is
581	30	2000	2375	38 3/4	29 1/4	43	
581	36	4421	5511	46	45	50	Needed
581	42	7203	8663	53	50	57	

* FM Approved

Detail No.	Name	Material Description
1	Body	Cast Iron ASTM A126, Class B
2	Seat	Bronze ASTM B584**
3	Plug	Bronze ASTM B584
4	Spring	Stainless Steel T302 ASTM A313.5
5	Bushing	Bronze ASTM B584
6	Screw	Stainless Steel T316 ASTM A276

**~~Optional Resilient Seat Available However Valve is not FM Approved~~

Temp. Rating	MAXIMUM SERVICE PRESSURE ANSI BI6.1 FLG. RATINGS			
	125 LB. CLASS		250 LB. CLASS	
	2" - 12"	14" - 42"	2" - 12"	14" - 42"
0-150° F	200	150	400	300
200° F	190	135	370	280
Test Pressure	300	230	600	450

NOTE: Butterfly Valve Disc sizes 3" to 10" designed to allow bolting a wafer style butterfly valve directly to the outlet flange without a spool piece.

CLA-VAL P.O. Box 1325 • Newport Beach, CA 92659-0325 • Phone: 949-722-4800 • Fax: 949-548-5441 • E-mail: claval@cla-val.com • Website cla-val.com
©Copyright Cla-Val 2011 Printed in USA Specifications subject to change without notice.

Technical Bulletin

EPOXY PROTECTIVE COATING

Epoxy resin powders were created and developed specifically for the application of thin film corrosion protection to metal or other substrates. Epoxy resin coatings are suitable for continuous exposure to a wide range of corrosive elements. Of particular interest for control valves is the high resistance to various water conditions. They also provide resistance to certain acids, chemicals, solvents and alkalis. They have excellent adhesion to almost any prepared surface. They are sufficiently flexible to be used to protect steel springs from corrosion and have an impact strength that allows retainability and restoration of surface coating under normal drop conditions.

Since the early 1970's the application process used by Cla-Val is the fusion method. This method of applying epoxy resins utilizes the principal of covering a suitably cleaned and preheated part with a one-part dry powdered resin. The dry powdered resin fuses itself to the heated part. A curing period in an oven at 400 degrees F completes the process. No volatile solvents are required and thus there are no pinholes left by evaporation of such materials. The coating is applied by electrostatic spray or flock spray to a nominal thickness recommended by the coating manufacturer.

Cla-Val valves specified with epoxy coating applied at the factory fully conform to the standards below. Applied to the inside and outside of all ferrous parts, this coating option is indicated with "KC" as a suffix to the valve catalog number.

CERTIFICATION

This is to confirm that Cla-Val uses AKZO Nobel R4-HJF42R (Blue) epoxy powder coating material for our factory applied protective coating. Our coating application process conforms to all applicable requirements of the American Water Works Association Standard C550 entitled "Protective Interior Coatings for Valves and Hydrants."

The AKZO Nobel R4-HJF42R (Blue) epoxy powder coating material is certified as a protective barrier material and approved by NSF Standard 61 - Drinking Water System Components - Health Effects (Nov. 16, 1995).

The AKZO Nobel R4-HJF42R (Blue) epoxy powder coating material is formulated with ingredients which are listed in or cited by the suppliers as in compliance with Federal Drug Administration Document, Title 21 of the Federal Regulations on Food Additives, Section 175.300, "Resinous and Polymeric Coatings."

CLA-VAL
AUTOMATIC CONTROL VALVES

581

Place this manual with personal responsible for maintenance of this valve

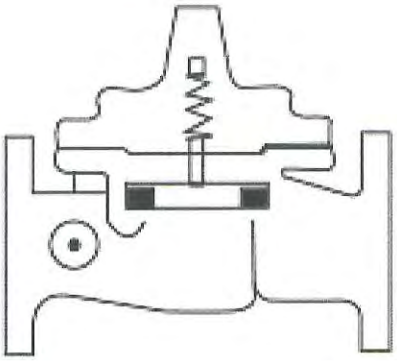

INSTALLATION

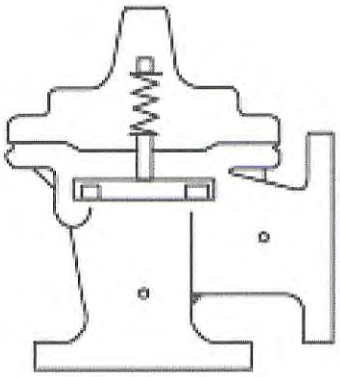

OPERATION

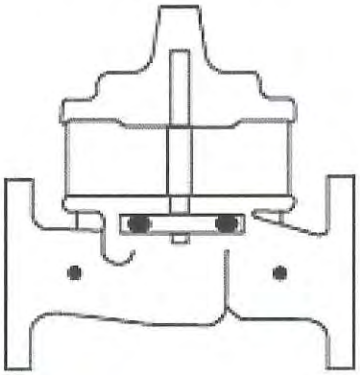

MAINTENANCE

CLA-VAL™

CLA-VAL ¥ P.O. BOX 1325 ¥ NEWPORT, CA 92659-0325 ¥ (949) 722-4800 ¥ FAX: (949) 548-5441
CLA-VAL CANADA LTD. ¥ 4687 Christie Drive ¥ Beamsville, Ontario, LOR 1B4 Canada ¥ (905) 563-4963

CLA-VAL

— SERIES — 580 & 581
SILENT CHECK VALVES

OPERATION:
Cla-Val Silent Check Valves operate automatically, to open... when pump flow starts and close silently ...when pump flow stops.

INSTALLATION:
Silent Check Valves, Wafer and Globe style must be installed between flat faced iron or steel flanges per ANSI B16.5 or Awwa 207, utilizing a full faced gasket to bridge the joint between the seat O.D. (2) and the body (1) flange face. In this manner a pressure seal at this joint is made (see **Note 1**). Install the valve so that the nameplate data is plainly read and the flow arrow points in the flow direction.

MAINTENANCE:
Cla-Val Silent Check Valves are ruggedly designed for years of trouble-free service. Therefore, regular maintenance is not required. However, during initial start-up period the following problems may surface (due to mis-application) that can be easily resolved:

A. No Flow thru Valve:
1. Observe that the flow arrow name plate, on the valve body, is pointing in the direction of flow.
2. Check that the down stream shut-off valve is full open.

B. Valve Chatters:
1. Confirm that the flow velocity is a minimum 3'/Sec.
2. Check that there is a minimum of 3 diameters of straight pipe installed up stream of the silent check valve.

C. Valve Leakage:
1. Confirm a full face gasket is installed per Note 1.

Series 581
Globe Style
Check Valve
2" thru 42"

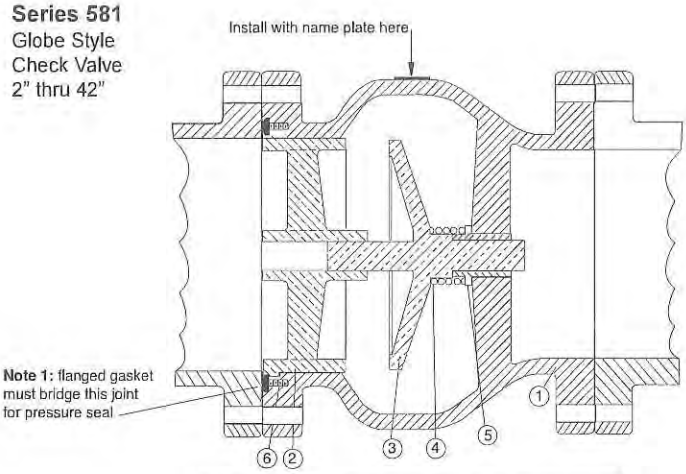

Detail	Description	Material
1	Body	Cast Iron
2	Seat*	Bronze or SS
3	Disc*	Bronze or SS (Optional Buna-N®)
4	Spring*	Stainless Steel
5	Bushing*	Bronze
6	Screw*	Stainless Steel (3" & larger valves)

Note 2: All size 2" and 2 1/2" valves have threaded seats in liev of screws

* Recommended Spare Part Kit

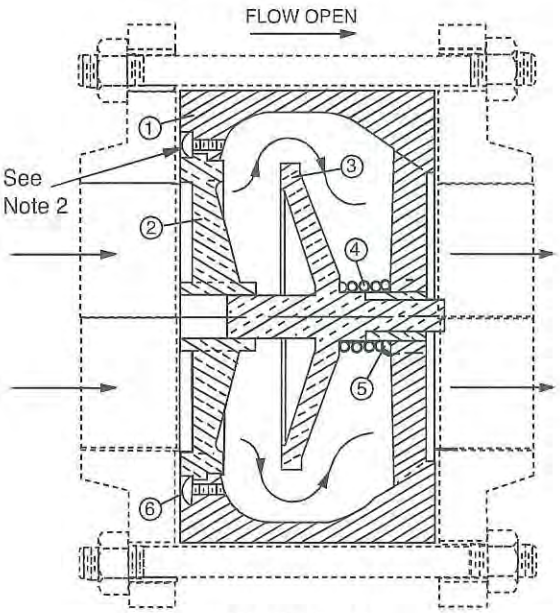

SERIES 580
WAFER STYLE CHECK VALVE
2" THRU 10"

TO REMOVE VALVE FROM PIPELINE FOR INSPECTION:

1. Shut off pump and pressure upstream and shut off isolation valve downstream to completely isolate check valve. A skilled pipe fitter should be used for this work.
2. Lay valve to rest on its downstream side and remove cap screws as shown in Fig. 3. **Note** that 2" and 2-1/2" valves threaded seats in lieu of cap screws.
3. Grip seat spokes by hand to pull out seats or push down the disc and release quickly to allow force of the spring to pop out the seat.
4. With seat removed, check that all internal parts are freely removable from valve body.
5. Examine all parts for wear/damage and order replacement PARTS KITS as shown below.

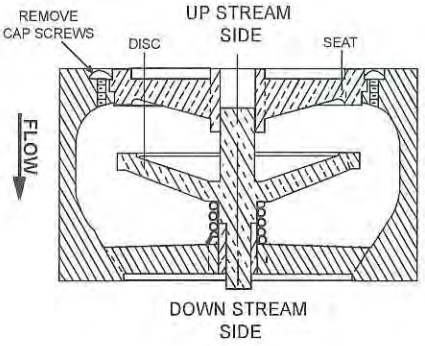

FIG. 3

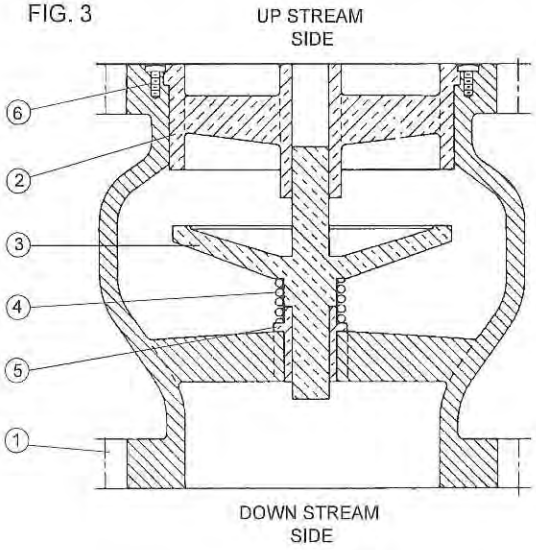

Detail	Description	Material
1	Body	Cast Iron
2	Seat*	Bronze or SS
3	Disc*	Bronze or SS (Optional Buna-N®)
4	Spring*	Stainless Steel
5	Bushing*	Bronze
6	Screw*	Stainless Steel (3" & larger valves)

Note 2: All size 2" and 2 1/2" valves have threaded seats in liev of screws

* Recommended Spare Part Kit

Silent Check Valve Spare Part Kits

Series 580 Wafer Style		
Model	Size	Kits
580	2"	A B C D
580	2 1/2"	A B C D
580	3"	A B C D
580	4"	A B C D
580	5"	A B C D
580	6"	A B C D
580	8"	A B C D
580	10"	A B C D

Series 581 Globe Style		
Model	Size	Kits
581	2"	A B C D
581	2 1/2"	A B C D
581	3"	A B C D
581	4"	A B C D
581	5"	A B C D
581	6"	A B C D
581	8"	A B C D
581	10"	A B C D
581	12"	A B C D
581	14"	A B C D

A- Kit Includes Detail 2 Bronze Seat & Detail 3 Disc
B- Kit Includes Detail 2 Stainless Steel Seat & Detail 3 Disc
C- Kit Includes Detail 2 Stainless Steel Seat, Detail 3 Disc, Detail 4 Spring, & Detail 5 Bronze Bushing
D- Kit Includes Detail 2 Stainless Steel Seat, Detail 3 Disc, Detail 4 Spring, & Detail 5 Stainless Steel Bushing

CLA-VAL P.O. Box 1325 • Newport Beach, CA 92659-0325 • Phone: 949-722-4800 • Fax: 949-548-5441 • E-mail: claval@cla-val.com • Website cla-val.com
©copyright Cla-Val 2001 Printed in USA Specification subject to change without notice.

Cla-Val Product Identification

How to Order

Proper Identification

For ordering repair kits, replacement parts, or for inquiries concerning valve operation it is important to properly identify Cla-Val products already in service. Include all nameplate data with your inquiry. Pertinent product data includes valve function, size, material, pressure rating, end details, type of pilot controls used and control adjustment ranges.

Identification Plates

For product identification, cast in body markings are supplemented by identification plates as illustrated on this page. The plates, depending on type and size of product, are mounted in the most practical position. **It is extremely important that these identification plates are not painted over, removed, or in any other way rendered illegible.**

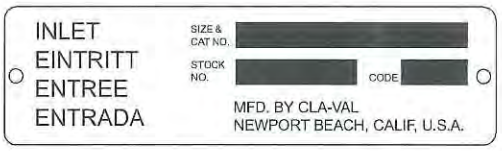

This brass plate appears on valves sized $2^1/_2$" and larger and is located on the top of the inlet flange.

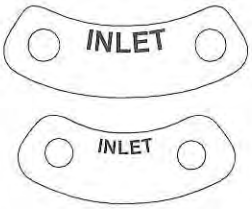

These two brass plates appear on $^3/_8$", $^1/_2$", and $^3/_4$" size valves and are located on the valve cover.

This brass plate appears on altitude valves only and is found on top of the outlet flange.

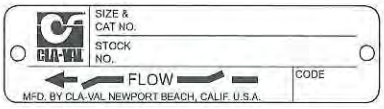

These two brass plates appear on 1" through 3" size screwed valves or 1" through 2" flanged valves . It is located on only one side of the valve body.

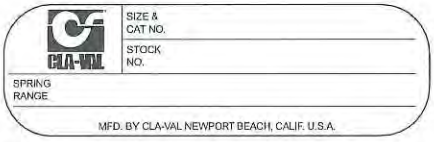

This tag is affixed to the cover of the pilot control valve. The adjustment range appears in the spring range section.

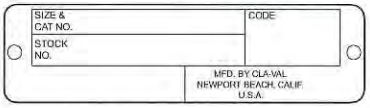

This brass plate is used to identify pilot control valves. The adjustment range is stamped into the plate.

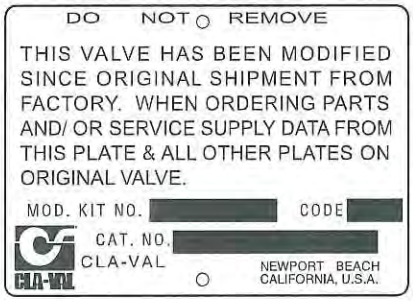

This aluminum plate is included in pilot system modification kits and is to be wired to the new pilot control system after installation.

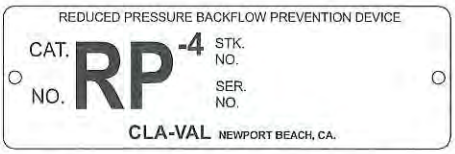

This brass plate is on our backflow prevention assemblies. It is located on the side of the number two check (2" through 10"). The serial number of the assembly is also stamped on the top of the inlet flange of the number one check.

HOW TO ORDER

There are many valves and controls manufactured by Cla-Val that are not listed due to the sheer volume. For information not listed, please contact your local Cla-Val office or our factory office located at:

P. O. Box 1325
Newport Beach, California 92659-0325
(949) 722-4800
FAX (949) 548-5441

SPECIFY WHEN ORDERING

- Model Number
- Globe or Angle Pattern
- Adjustment Range (As Applicable)
- Valve Size
- Screwed or Flanged
- Body and Trim Materials
- Optional Features
- Pressure Class

UNLESS OTHERWISE SPECIFIED

- Globe or angle pattern are the same price
- Ductile iron body and bronze trim are standard
- X46 Flow Clean Strainer or X43 "Y" Strainer are included
- CK2 Isolation Valves are included in price on 4" and larger valve sizes (6" and larger on 600 Series)

LIMITED WARRANTY

Automatic valves and controls as manufactured by Cla-Val are warranted for three years from date of shipment against manufacturing defects in material and workmanship which develop in the service for which they are designed, provided the products are installed and used in accordance with all applicable instructions and limitations issued by Cla-Val.

We will repair or replace defective material, free of charge, which is returned to our factory, transportation charges prepaid, provided that, after inspection, the material is found to have been defective at time of shipment. This warranty is expressly conditioned on the purchaser's giving Cla-Val immediate written notice upon discovery of the defect.

Components used by Cla-Val but manufactured by others, are warranted only to the extent of that manufacturer's guarantee.

This warranty shall not apply if the product has been altered or repaired by others, and Cla-Val shall make no allowance or credit for such repairs or alterations unless authorized in writing by Cla-Val.

DISCLAIMER OF WARRANTIES AND LIMITATIONS OF LIABILITY

The foregoing warranty is exclusive and in lieu of all other warranties and representations, whether expressed, implied, oral or written, including but not limited to any implied warranties or merchantability or fitness for a particular purpose. All such other warranties and representations are hereby cancelled.

Cla-Val shall not be liable for any incidental or consequential loss, damage or expense arising directly or indirectly from the use of the product. Cla-Val shall not be liable for any damages or charges for labor or expense in making repairs or adjustments to the product. Cla-Val shall not be liable for any damages or charges sustained in the adaptation or use of its engineering data and services. No representative of Cla-Val may change any of the foregoing or assume any additional liability or responsibility in connection with the product. The liability of Cla-Val is limited to material replacements F.O.B. Newport Beach, California.

TERMS OF SALE

ACCEPTANCE OF ORDERS

All orders are subject to acceptance by our main office at Newport Beach, California.

CREDIT TERMS

Credit terms are net thirty (30) days from date of invoice.

PURCHASE ORDER FORMS

Orders submitted on customer's own purchase order forms will be accepted only with the express understanding that no statements, clauses, or conditions contained in said order form will be binding on the Seller if they in any way modify the Seller's own terms and conditions of sales.

PRODUCT CHANGES

The right is reserved to make changes in pattern, design or materials when deemed necessary, without prior notice.

PRICES

All prices are F.O.B. Newport Beach, California unless expressly stated otherwise on our acknowledgement of the order. Prices are subject to change without notice. The prices at which any order is accepted are subject to adjustment to the Seller's price in effect at the time of shipment. Prices do not include sales, excise, municipal, state or any other Government taxes. Minimum order charge $75.00.

RESPONSIBILITY

We will not be responsible for delays resulting from strikes, accidents, negligence of carriers, or other causes beyond our control. Also, we will not be liable for any unauthorized product alterations or charges accruing there from.

RISK

All goods are shipped at the risk of the purchaser after they have been delivered by us to the carrier. Claims for error, shortages, etc., must be made upon receipt of goods.

EXPORT SHIPMENTS

Export shipments are subject to an additional charge for export packing.

RETURNED GOODS

1. Customers must obtain written approval from Cla-Val prior to returning any material.
2. Cla-Val reserves the right to refuse the return of any products.
3. Products more than six (6) months old cannot be returned for credit.
4. Specially produced, non-standard models cannot be returned for credit.
5. Rubber goods such as diaphragms, discs, o-rings, etc., cannot be returned for credit, unless as part of an unopened vacuum sealed repair kit which is less than six months old.
6. Goods authorized for return are subject to a 35% ($75 minimum) restocking charge and a service charge for inspection, reconditioning, replacement of rubber parts, retesting, repainting and repackaging as required.
7. Authorized returned goods must be packaged and shipped prepaid to Cla-Val, 1701 Placentia Avenue, Costa Mesa, California 92627.

CLA-VAL

CLA-VAL
PO Box 1325 Newport Beach CA 92659-0325
Phone: 949-722-4800 • Fax: 949-548-5441

CLA-VAL CANADA
4687 Christie Drive
Beamsville, Ontario
Canada LOR 1B4
Phone: 905-563-4963
Fax: 905-563-4040

CLA-VAL EUROPE
Chemin des Mésanges 1
CH-1032 Romanel/
Lausanne, Switzerland
Phone: 41-21-643-15-55
Fax: 41-21-643-15-50

www.cla-val.com

COPYRIGHT CLA-VAL 2003 Printed in USA
Specifications subject to change without notice.

Represented By:

E-Product I.D. (R-4/02)

Kirtland Air Force Base
Bulk Fuels Facility
Mid Plum Pump & Treat System

I&C Controls Submittal

Engineer: CB&I Federal Services LLC
6380 S. Fiddlers Green Circle, Suite 300
Greenwood Village, CO 80111

General Contractor: RMCI
6211 Chappell Rd NE
Albuquerque, NM 87113

Contractor: Corbins Electric
4829 S 38th Street
Phoenix, AZ 85040

Sub Contractor: I&C Solutions
4485 Irving Blvd NW
Albuquerque, NM 87114
(505) 821-8960

The intent of the design was for the RAPID contract to have a remote I/O rack, connected by Ethernet over radio to the permanent treatment system building's controller. It is our understanding that a controller is not necessary to achieve this.

However, a controller in the pump house doesn't prevent the system from running.

It may be more cost effective to remove the controller included. This is left up to the Contractor as either solution is viable.

Submittal includes the following

Flow transmitters
Level Transmitters
Leak Detection Devices for Vaults and Pipe
Control Panels

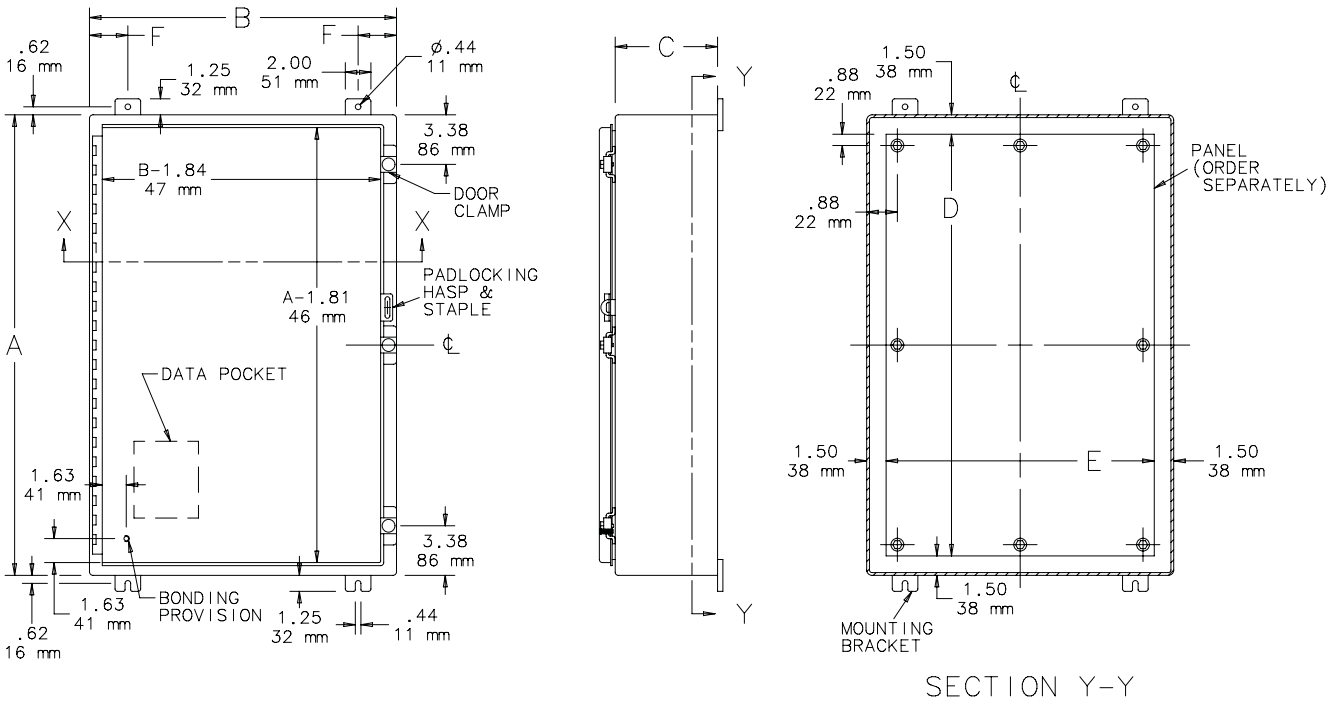
B
F
F
.62
16 mm
1.25
32 mm
2.00
51 mm
ø.44
11 mm
3.38
86 mm
B-1.84
47 mm
DOOR
CLAMP
X
X
PADLOCKING
HASP &
STAPLE
A-1.81
46 mm
A
DATA POCKET
1.63
41 mm
3.38
86 mm
1.63
41 mm
BONDING
PROVISION
1.25
32 mm
.44
11 mm
.62
16 mm
C
Y
Y
1.50
38 mm
.88
22 mm
PANEL
(ORDER
SEPARATELY)
.88
22 mm
D
1.50
38 mm
E
1.50
38 mm
1.50
38 mm
MOUNTING
BRACKET
SECTION Y-Y

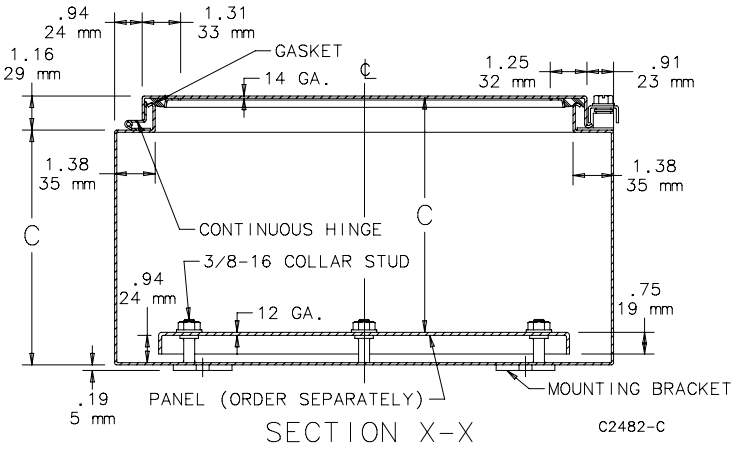
.94
24 mm
1.31
33 mm
1.16
29 mm
GASKET
14 GA.
1.25
32 mm
.91
23 mm
1.38
35 mm
1.38
35 mm
C
CONTINUOUS HINGE
C
3/8-16 COLLAR STUD
.94
24 mm
12 GA.
.75
19 mm
.19
5 mm
PANEL (ORDER SEPARATELY)
MOUNTING BRACKET
SECTION X-X
C2482-C

BOM #3

800T/H 30.5 mm Trigger Action E-Stops

Allen-Bradley

Product Summary

800T Type 4/13 Metal

Non-Illuminated
- 45 mm plastic head
- 60 mm plastic head
- 63 mm metal head

Illuminated
- 45 mm plastic head
- 60 mm plastic head

Key Release
- 45 mm plastic head

800H Type 4/4X/13 Plastic

Non-Illuminated
- 45 mm plastic head
- 60 mm plastic head

Illuminated
- 45 mm plastic head
- 60 mm plastic head

30.5 mm E-Stops in a state-of-the-art, tamper-resistant design

Time-Tested, Industry Proven

The Allen-Bradley® 800T/H push button product lines are designed and constructed to perform consistently in the most demanding industrial environments. This legacy of leadership continues with the introduction of the innovative 800T/H Trigger Action E-Stop devices.

Global Acceptance

Trigger action functionality provided in a 30.5 mm form factor delivers E-Stop operators that meet global requirements and are more than up to the task for installation in heavy duty applications. The twist release design conforms to functional safety guidelines where intentional action is required to reset the E-Stop device.

Tamper Resistance

Tamper resistance is provided by front-of-panel mounting. The mounting nut installs from back of panel, and is inaccessible when the control cabinet door is closed during normal machine operation. Additionally, the 800T/H Trigger Action E-Stop mushroom caps are factory installed and non-removable, further increasing tamper resistance.

State-of-the-Art Illumination

LED illumination is standard for illuminated devices, using state-of-the-art super bright LED technology. Full voltage or transformer type input is available. Full voltage devices employ the new Universal LED technology, accepting a wide range of 12...130V AC/DC input supply voltage.

Trigger Action E-Stop Units, Non-Illuminated

Trigger Action E-Stop Units, Illuminated

Trigger Action E-Stop Units, Key Release

Features and Benefits

Trigger Action Function

- Contacts can't be teased without latching of operator
- Complies with EN ISO 13850 and EN 60947-5-5
- Positive opening with direct drive contact blocks
- Allows use of standard contact blocks such as 800T-XA (1-NO, 1-NC)

Fixed Mushroom Cap

- Safety red color
- 45 mm, 60 mm and 63 mm (metal) options
- Non-removable for tamper resistance
- Integral "E-STOP" legend available as an option

Twist Release Function

- Conforms to functional safety guidelines
- Intentional action required for E-Stop resetting

Front-of-Panel Mounting

- Operator installs from front of panel and is secured with back-of-panel mounting nut
- E-Stop operator cannot be tampered with during normal machine operation with control cabinet closed

Yellow Bushing

- 800H bushing molded from yellow plastic material further enhances compliance for yellow background of installations

Reliable Contact Block Latching

- Tool-less installation of latch mechanism – snaps onto operator
- Contact block mounting screws secure latch mechanism to operator – latch cannot be removed while contact blocks are installed

Trigger Action E-Stop Units, Non-Illuminated

- 2-position
- Twist Release
- Red mushroom head

Add Required 5/5 NO/NC contacts

Head Type	Contact Configuration	Type 4/13 Metal Catalog Number ⌗	Type 4/4X/13 Plastic Catalog Number ⌗
45 mm Plastic	No Contacts	800T-TFXT6	800H-TFRXT6
	1-NO, 1-NC	800T-TFXT6A	800H-TFRXT6A
	1-SMCB ↗	800TC-TFXT6D4S	800HC-TFRXT6D4S
60 mm Plastic ✪	No Contacts	800T-TFXJT6	800H-TFRXJT6
	1-NO, 1-NC	800T-TFXJT6A	800H-TFRXJT6A
	1-SMCB ↗	800TC-TFXJT6D4S	800HC-TFRXJT6D4S
63 mm Anodized Aluminum ✧	No Contacts	800T-TFXLT6	–
	1-NO, 1-NC	800T-TFXLT6A	–
	1-SMCB ↗	800TC-TFXLT6D4S	–

Trigger Action E-Stop Units, Illuminated

- 2-position
- Twist Release
- Red mushroom head
- LED illumination

Head Type	Contact Configuration	Type	Voltage	Type 4/13 Metal Catalog Number ⌗	Type 4/4X/13 Plastic Catalog Number ⌗
45 mm Plastic	No Contacts	Operator Only		800T-TFXTS00R	800H-TFRXTS00R
	1-NO, 1-NC	Universal	12...130V AC/DC	800T-TFXTQH2RA	800H-TFRXTQH2RA
	1-SMCB ↗			800TC-TFXTQH2RD4S	800HC-TFRXTQH2RD4S
	1-NO, 1-NC	Transformer	120V AC	800T-TFXTPH16RA	800H-TFRXTPH16RA
	1-SMCB ↗			800TC-TFXTPH16RD4S	800HC-TFRXTPH16RD4S
60 mm Plastic ✪	No Contacts	Operator Only		800T-TFXJTS00R	800H-TFRXJTS00R
	1-NO, 1-NC	Universal	12...130V AC/DC	800T-TFXJTQH2RA	800H-TFRXJTQH2RA
	1-SMCB ↗			800TC-TFXJTQH2RD4S	800HC-TFRXJTQH2RD4S
	1-NO, 1-NC	Transformer	120V AC	800T-TFXJTPH16RA	800H-TFRXJTPH16RA
	1-SMCB ↗			800TC-TFXJTPH16RD4S	800HC-TFRXJTPH16RD4S

Trigger Action E-Stop Units, Key Release

- 2-position
- Familiar DO18 key
- Red mushroom head

Head Type	Contact Configuration	Type 4/13 Metal Catalog Number ⌗
45 mm Plastic	No Contacts	800T-TFXK6
	1-NO, 1-NC	800T-TFXK6A
	1-SMCB ↗	800TC-TFXK6D4S

⌗ For finger-safe contact block terminals, order 800TC or 800HC
✪ To order a device with "E-STOP" printed on the cap add the letter "E" after "J"; for example: 800T-TFXJET6
✧ To order a device with "E-STOP" engraved on the cap add the letter "E" after "L"; for example: 800T-TFXLET6
↗ Self-Monitoring Contact Block

Synetcom
Your Industrial Wireless Source

BOM #5

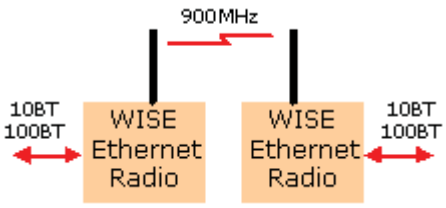

900 MHz Ethernet PLC Radios - Industrial Wireless Ethernet bridges link SCADA network equipment up to 25 miles away

- home
- services
- customers
- white papers
- contact us

Synetcom
Your Industrial Wireless Source

View Specs

Industrial Wireless Ethernet 900 MHz PLC Radio Modem - 900 MHz FHSS Industrial Wireless Ethernet Radio Modem System

Models: WISE-B-900 (170 KB/s)

Approvals: Class 1, Division 2, Groups A,B,C,D Class 1, Zone 2, Group IIC

Extend Ethernet connections to PLC locations not serviced by your company network with Synetcom's 900 MHz Industrial Wireless PLC Radio Modem product. Connect PLC, RTU, Wireless I/O, data acquisition and remote control equipment with the WISE-B-900 PLC Ethernet Radio - build reliable long distance, license free wireless industrial SCADA systems.

Synetcom's 900 MHz Ethernet Radio systems are designed for reliable high data throughput even if the radio path is not ideal. Higher transmit power and better receiver sensitivity enable Ethernet connections to remote PLC and RTU locations that you could not reach in the past.

For higher data throughput on line of site links, see our 2.4 GHz Ethernet Radio products.

Features

- 900 MHz Frequency Hopping Spread Spectrum FHSS PLC radio
- Wireless networking of PLCs
- Wireless networking of industrial data acquisition and remote control equipment
- Radio is IP addressable
- Wireless Ethernet bridge between PLC, RTU, sensors, controllers and HMI computers
- Long Range - up to 25 miles with 20 dB fade margin - high throughput sustained
- Advanced ARQ, CRC error control, hopping algorithm
- Excellent immunity to interference and multipath fading
- Ethernet Radio repeaters for >25 miles
- Rugged packaging for industrial use - 14GA metal enclosure
- -30°C to + 70°C

900 MHz Industrial Wireless Ethernet PLC Radio

Synetcom's 900 MHz Ethernet PLC Radio is a rugged, long range 900 MHz radio that connects PLC, RTU, I/O and other SCADA equipment. The radio is designed to provide high speed wireless connectivity between PLCs and PLC networks - without compromising reliability and performance. Typical uses include Ethernet bridging, SCADA device networking, PLC networking and industrial wireless data acquisition and control.

The product can function as a high speed bridge between two Ethernet networks, or it can provide wireless networking between an HMI computer + master PLC and multiple remote slave PLCs. Complex data acquisition and control systems can be built using repeaters to extend

Applications

- Wireless Networking of PLCs

- Industrial Wireless Ethernet SCADA systems

- Wireless PLC Data Acquisition

- Wireless PLC Remote Control

- Long Distance Wireless PLC

range and coverage.

Data Throughput and Range

The 900 MHz Ethernet PLC Radio operates with data throughput significantly higher than other industrial (FHSS) Ethernet radios:

WISE-B-900: 150 KB/s (25 miles with 11 dBi gain antennas)

Maximum throughput occurs on a point-to-point link. Error-free data transmission is assured via CRC error checking and ARQ (automatic retransmission of packets with bit errors).

Why doesn't the radio transmit at 10 MB/s? Industrial Ethernet applications often demand long range and high reliability which is obtained only by operating the link more slowly - a limitation of physics, not the radio design.

For example, faster commodity 802.11 Ethernet bridges or routers offer a higher throughout but only over short distances (1-2 miles under ideal conditions) with the same reliability our radios deliver at 25 miles.

Comparison to 2.4 GHz

Our 2.4 GHz Industrial Ethernet Radios typically operate at 220 KB/s or faster by design. Actual data throughput may be compromised if there are obstructions in the radio path. The 900 MHz Wireless Ethernet Modem is less affected by obstructions.

Ethernet Links

Transmission Range:
Synetcom specifies a 25 mile range (900 MHz Ethernet PLC Radio) that includes a 20 dB margin (if the signal fades as much as 20 dB - a factor of 1/100 - the link continues to operate).

Obstructions in the line of sight path reduces range, depending on the type of obstruction. Contact our factory for assistance.

900 MHz Ethernet PLC radio modem specifications>

www.synetcom.com
(310) 379-2000
23879 Madison Street
Torrance, CA 90505

home
services
customers
white papers
contact us

900 MHz PLC radio page 1>

900 MHz Industrial Wireless Ethernet PLC Radio Modem Specifications:

Model - WISE-B-900 PLC Radio
PLC Radio Data Rate - 170 Kbps; Maximum Throughput - 150 KB/s
PLC Interface - 10Base-T
PLC Radio Network Topologies - Point-to-Point or Multipoint
RF Output Power - 500 mW (.5 watt)
RF Modulation - Frequency Hopping Spread Spectrum (FHSS)
Frequency Range - 902 MHz to 928 MHz
Power - 9VDC to 30VDC (external AC power supply included)
Enclosure Material - Aluminum
Enclosure Size - 7.9" x 5.7" x 2.1" (201 x 144 x 53 mm)
Operating Temperature -30º C to +70ºC; 0 to 95% humidity, non-condensing
Licensing Type Certified; License-free operation under FCC Part 15

Industry Approvals: Class 1, Division 2, Groups A,B,C,D Class 1, Zone 2, Group IIC

PLC 900 MHz Radio Connectors

o Power 2-Pin
o RS-232 RJ-11 Configuration Port
o Sync In RJ-11
o Sync Out RJ-11
o 10BT RJ-45
o Antenna RVS TNC

PLC 900 MHz Radio Indicators

Radio Power, Ethernet Link Status, TX, RX, Ethernet Radio Link Status

900 MHz PLC Radio (back view)

back to 900 MHz PLC Radio page 1>

Synetcom
Your Industrial Wireless Source
www.synetcom.com
(310) 379-2000
23879 Madison Street
Torrance, CA 90505

KATHREIN
SCALA DIVISION

TY-900
Yagi Antenna

The Kathrein-Scala TY series are rugged broadband yagi antennas fabricated of 6061/T6 aluminum rod and seamless drawn pipe, anodized for maximum reliability and corrosion resistance. The hardware and fastenings are stainless steel. The internal balun, coax feed and connector are sealed in a foam potting system to prevent moisture penetration and assure long service life in severe environmental conditions. The heavy aluminum mounting casting allows installation for V or H polarization.

- The TY-900 is specifically designed for professional fixed-station applications in the 890–960 MHz band.

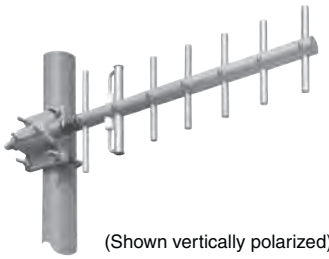

(Shown vertically polarized)

Specifications:

Frequency range	890–960 MHz
Gain	12 dBi
Impedance	50 ohms
VSWR	< 1.5:1 maximum (1.35:1 typical)
Polarization	Horizontal or vertical
Front-to-back ratio	>20 dB
Maximum input power	100 watts (at 50°C)
H-plane beamwidth	48 degrees (half-power)
E-plane beamwidth	40 degrees (half-power)
Connector	N female
Weight	3 lb (1.4 kg)
Dimensions	23 x 7 inches (584 x 178 mm)
Wind load Front/Side	at 93 mph (150kph) 3 lbf / 4 lbf (11 N) / (17 N)
Wind survival rating*	150 mph (240 kph)
Shipping dimensions	28 x 10 x 4.5 inches (710 x 254 x 114 mm)
Shipping weight	5.0 lb (2.3 kg)
Mounting	For masts of 1.25 to 2.375 inch (32 to 60 mm) OD.
See reverse for order information.	

* Mechanical design is based on environmental conditions as stipulated in TIA-222-G-2 (December 2009) and/or ETS 300 019-1-4 which include the static mechanical load imposed on an antenna by wind at maximum velocity. See the Engineering Section of the catalog for further details.

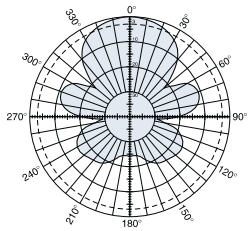

H-plane
Horizontal pattern – V-polarization
Vertical pattern – H-polarization

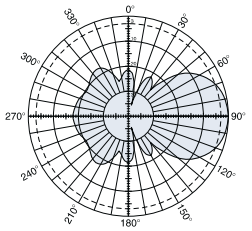

E-plane
Horizontal pattern – H-polarization
Vertical pattern – V-polarization

10065-E

Kathrein Inc., Scala Division Post Office Box 4580 Medford, OR 97501 (USA) Phone: (541) 779-6500 Fax: (541) 779-3991
Email: communications@kathrein.com Internet: www.kathrein-scala.com

KATHREIN
SCALA DIVISION

TY-900
Yagi Antenna

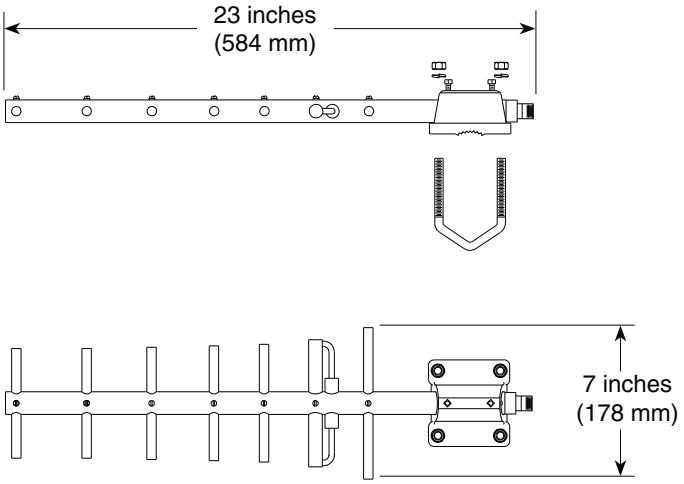

Order Information:

Model	Description
TY-900	Yagi antenna with N connector

All specifications are subject to change without notice. The latest specifications are available at www.kathrein-scala.com.

Kathrein Inc., Scala Division Post Office Box 4580 Medford, OR 97501 (USA) Phone: (541) 779-6500 Fax: (541) 779-3991
Email: communications@kathrein.com Internet: www.kathrein-scala.com

ALL DESIGN, OPERATIVE AND PROCESS DATA PERTAINING TO THE ARTICLE SHOWN ON THIS SHEET IS THE PROPERTY OF POLYPHASER CORPORATION. THE INFORMATION IS NOT TO BE COPIED, REPRODUCED, REVEALED TO OR APPROPRIATED BY OTHERS WITHOUT THE EXPRESS WRITTEN CONSENT OF POLYPHASER CORPORATION.

These commodities or technology are exported from the U.S. in accordance with the Export Administration Regulations. Diversion contrary to U.S. law prohibited.

REVISIONS				
REV LTR	DATE	ENG	MKTG	Q.A.
F	03/05/07 CM	AD	–	–

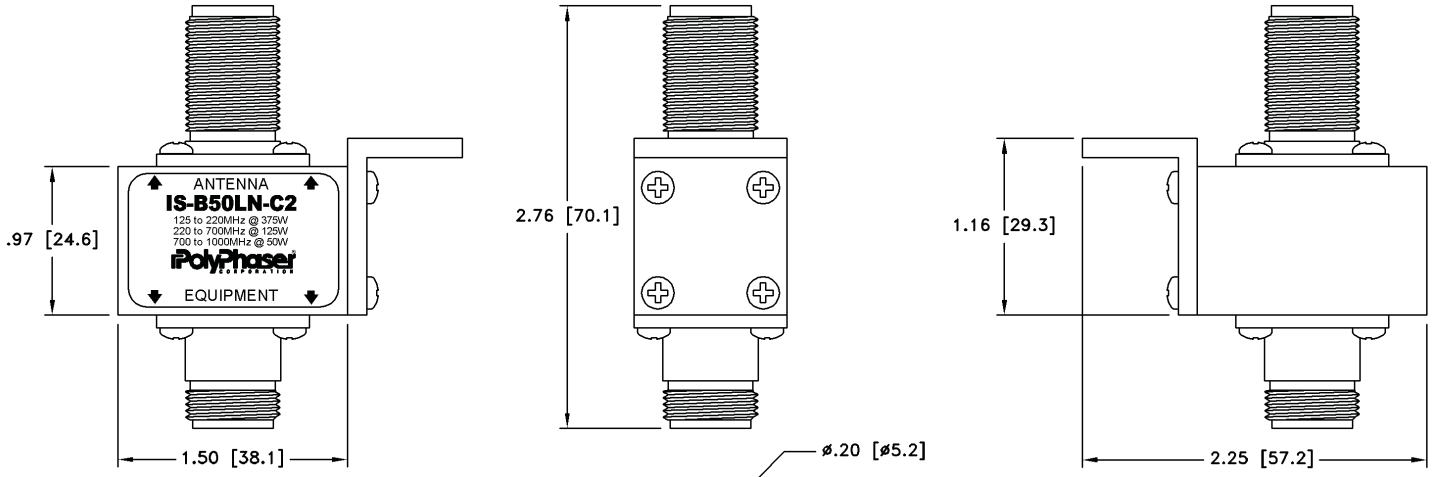

MAXIMUM CHARACTERISTICS

APPLICATION:
BULKHEAD MOUNT

FREQUENCY RANGE:
125MHz TO 1GHz

VSWR:
≤1.1:1 OVER FREQUENCY RANGE

INSERTION LOSS:
≤0.1dB OVER FREQUENCY RANGE

MAX POWER:
375W @ 125MHz DECREASING TO 50W @ 1GHz

TURN-ON:
600Vdc±20%

THROUGHPUT ENERGY:
≤220µJ FOR 8/20µs WAVEFORM

OPERATING TEMPERATURE:
−55°C TO +50°C

STORAGE TEMPERATURE:
−55°C TO +85°C

RELATIVE HUMIDITY:
90% AT 40°C

VIBRATION
1G AT 5Hz TO 100Hz

CUSTOMER APPROVAL: _____ DATE: _____

ALL DIMENSIONS SHOWN ABOVE ARE FOR REFERENCE ONLY.

DRAFTER: M. JOHNSON	DATE: 07/11/94	PolyPhaser	
MECH ENGINEER: – – – –	DATE: – – –	P.O. BOX 9000 MINDEN, NV 89423 TEL: 775-782-2511 FAX: 775-782-4476	
ELEC ENGINEER: K. BARTEL	DATE: 05/01/95	DWG NO/PART NO/DESCRIPTION: IS-B50LN-C2 CUSTOMER PRINT	
MARKETING: – – – –	DATE: – – –		
QUALITY DEPT: R. MATHEUS	DATE: 05/01/95	CAGE CODE: 61114	FILE NAME: -C1
		SCALE: 1/1	SHEET: 1 OF 1

FSJ4-50B Product Detail

Cable and Connectors >> Coaxial Cable >> Transmission Line >> 1/2" Superflexible, 50 Ohm

Product Description

Part Number: FSJ4-50B
Manufacturer: CommScope / Andrew
List Price: $4.54
My Price: Login >>

QTY: 1 Add to Cart

Email

1/2" Superflex 50 Ohm Coax Cable

Catalog Description

1/2" Superflexible 50 Ohm Foam HELIAX® Coaxial Cable, corrogated copper. FSJ4-50B is Riser Rated. FSJ4RK-50B - is non-halogenated, fire retarden.

Specifications

Attenuation (dB)/100 Ft.	
30 MHz	0.557
150 MHz	1.28
450 MHz	2.31
824 MHz	3.23
960 MHz	3.52
1500 MHz	4.54
2000 MHz	5.37
2300 MHz	5.83
5800 MHz	10.27
General Characteristics	
Max. Frequency	10.2 GHz
Propagation Velocity	81%
Overall Diameter(in)	.52
Dielectric	Closed Cell Foam Polyethylene
Outer Conductor	Helical Corrugated Solid Copper
Inner Conductor	Copper Clad Aluminum
Min. Bending Radius(in)	1.25"
Warranty	10 Year
Shipping Method	Less Than 350 Ft - UPS
Jacket Material	Black Polyethylene
Ship Weight (lbs.)	.14
Shipping	Parcel Freight

Similar Products

Product Specifications

F4PDMV2-C

7-16 DIN Male for 1/2 in FSJ4-50B cable

CHARACTERISTICS

General Specifications

Interface	7-16 DIN Male
Body Style	Straight
Brand	HELIAX®
Mounting Angle	Straight

Electrical Specifications

Connector Impedance	50 ohm
Operating Frequency Band	0 – 7500 MHz
Cable Impedance	50 ohm
3rd Order IMD	-120 dBm @ 910 MHz
3rd Order IMD Test Method	Two +43 dBm Carriers
RF Operating Voltage, maximum (vrms)	884.00 V
dc Test Voltage	2500 V
Outer Contact Resistance	1.50 mOhm
Inner Contact Resistance	0.80 mOhm
Insulation Resistance, minimum	5000 MOhm
Average Power	1.0 kW @ 900 MHz
Peak Power, maximum	15.60 kW
Insertion Loss, typical	0.05 dB
Shielding Effectiveness	-110 dB

Mechanical Specifications

Outer Contact Attachment Method	Crush-flare
Inner Contact Attachment Method	Captivated
Outer Contact Plating	Trimetal
Inner Contact Plating	Silver
Attachment Durability	25 cycles
Interface Durability	500 cycles
Interface Durability Method	IEC 169-4:9.5
Connector Retention Tensile Force	890 N | 200 lbf
Connector Retention Torque	5.42 N-m | 48.00 in lb
Insertion Force	200.17 N | 45.00 lbf

www.commscope.com

©2009 CommScope, Inc. All rights reserved.
All trademarks identified by ® or ™ are registered trademarks or trademarks, respectively, of CommScope.
All specifications are subject to change. See www.commscope.com for the most current information.

Product Specifications

F4PDMV2-C

Insertion Force Method	IEC 169-1:15.2.4
Pressurizable	No
Coupling Nut Proof Torque	24.86 N-m | 220.00 in lb
Coupling Nut Retention Force	1000.85 N | 225.00 lbf
Coupling Nut Retention Force Method	MIL-C-39012C-3.25, 4.6.22

Dimensions

Nominal Size	1/2 in
Diameter, maximum	34.54 mm | 1.36 in
Length	50.01 mm | 1.97 in
Weight	136.08 g | 0.30 lb

Environmental Specifications

Operating Temperature	-55 °C to +85 °C (-67 °F to +185 °F)
Storage Temperature	-55 °C to +85 °C (-67 °F to +185 °F)
Immersion Depth	1 m
Immersion Test Mating	Mated
Immersion Test Method	IEC 60529:2001, IP68
Water Jetting Test Mating	Mated
Water Jetting Test Method	IEC 60529:2001, IP66
Moisture Resistance Test Method	MIL-STD-202F, Method 106F
Mechanical Shock Test Method	MIL-STD-202F, Method 213B, Test Condition C
Thermal Shock Test Method	MIL-STD-202, Method 107, Test Condition A-1, Low Temperature -55 °C
Vibration Test Method	MIL-STD-202F, Method 204D, Test Condition B
Corrosion Test Method	MIL-STD-1344A, Method 1001.1, Test Condition A

Standard Conditions

Attenuation, Ambient Temperature	20 °C | 68 °F
Average Power, Ambient Temperature	40 °C | 104 °F

Return Loss

Frequency Band	VSWR	Return Loss (dB)
0–2200 MHz	1.03	36.00
2200–2700 MHz	1.05	33.00
2700–3000 MHz	1.05	32.00

Regulatory Compliance/Certifications

Agency	Classification
RoHS 2002/95/EC	Compliant by Exemption
China RoHS SJ/T 11364-2006	Above Maximum Concentration Value (MCV)

©2009 CommScope, Inc. All rights reserved.
All trademarks identified by ® or ™ are registered trademarks or trademarks, respectively, of CommScope.
All specifications are subject to change. See www.commscope.com for the most current information.

Product Specifications

F4PDMV2-C

* Footnotes

Immersion Depth	Immersion at specified depth for 24 hours
Insertion Loss, typical	0.05√freq (GHz) (not applicable for elliptical waveguide)

800.949.7079
order online today at www.talleycom.com

ANDREW®
www.commscope.com

©2009 CommScope, Inc. All rights reserved.
All trademarks identified by ® or ™ are registered trademarks or trademarks, respectively, of CommScope.
All specifications are subject to change. See www.commscope.com for the most current information.

BOM #6

Product: 1492-REC15G

Description: 1492 DIN Rail Receptacle

Representative Photo Only
(actual product may vary based on configuration selections)

DIN Rail Receptacle	
Current Rating	15A
Options	Ground Fault Current Interrupt

CERTIFICATIONS AND APPROVALS	
cULus	UL 508A (file# E54866)
For UL Certifications Directory:	http://database.ul.com/cgi-bin/XYV/template/LISEXT/1FRAME/index.htm

SDN-P DIN Rail Series

The SDN DIN Rail power supplies provide industry leading performance. Sag Immunity, transient suppression and noise tolerant, the SDN series ensures compatibility in demanding applications. Power factor correction to meet European directives, hazardous location approvals and optional redundant accessories allow the SDN series to be used in a wide variety of applications. Wide operation temperature range, high tolerance to shock and vibration and reliable design make the SDN series the preferred choice of users.

Applications

- Industrial/Machine Control
- Process Control
- Conveying Equipment
- Material Handling
- Vending Machines
- Packaging Equipment
- DeviceNet™
- Amusement Park Equipment
- Semiconductor Fabrication Equipment

Features

- Power Factor Correction (per EN61000-3-2)
- Auto Select 115/230 Vac, 50/60 Hz Input
- Improved metal mounting clip
- DC OK Signal
- Adjustable Voltage
- Parallel Capability standard on all units
- Industrial grade design
  - -10°C to 60°C operation without derating. Indefinite short circuit, overvoltage and overtemperature protection.
  - Powers high inrush loads without shutdown or foldback
  - Rugged metal case and DIN connector
- Narrow width on rail for space critical applications
- User-friendly front panel
  - Large, rugged, accessible, multiple connection screw terminations
  - Easy installation
- 12 Vdc and 48 Vdc single phase models available
- Highly efficient >90% switching technology
- High MTBF and reliability

Accessories

- Chassis Mount Bracket (SDN-PMBRK2)

Certifications and Compliances *

All Models

- c UL us Listed, Ind. Control Equipment, E61379
  - UL 508, CSA C22.2 No. 107.1
- c UL us UL Recognized Component, ITE, E137632
  - UL 60950-1/CSA C22.2 No. 60950-1, 2nd Edition
- c UL us UL Recognized Component, Haz. Loc., E234790
  - ISA 12.12.01, CSA C22.2 No. 213
  - Class I, Division 2, Groups A, B, C, D
- CE - Low Voltage Directive
  - IEC/EN60950-1, 2nd Edition
- Sag Immunity: SEMI F47
- RoHS Compliant

Models SDN 2.5-24-100P, SDN 4-24-100LP

- Class 2 per UL 1310, CSA C22.2 No. 223

Models SDN 2.5-24-100P, SDN 4-24-100LP, SDN 5-24-100P, SDN 10-24-100P

- Ex ATEX Directive
  - EN50021, Ex II 3 G, Ex nC IIC Gc

Related Products

- SDP™ Series
- SCP Series
- SCL Series
- SDU UPS

* Refer to user manual for installation requirements when used in hazardous locations.

SDN-P Specifications (Single Phase), 24 Vdc Output

Description	Catalog Number			
	SDN 2.5–24–100P	SDN 4–24–100LP	SDN 5–24–100P	SDN 10–24–100P
Input				
Nominal Voltage	115/230 Vac, Auto select			
–AC Range	85-264 Vac	85-132/176-264 Vac		
–DC Range [1]	90 - 375 Vdc	210 - 375 Vdc		
–Frequency	47 - 63 Hz			
Nominal Current [2]	1.3 / 0.7 A	2.1 / 1.0 A	2.2 / 1.0 A	5 / 2 A typ.
–Inrush current max.	typ. < 25 A	typ. < 20 A		typ. < 40 A
Efficiency (Losses [3])	> 87.5% typ. (8.6 W)	> 88% typ. (13.1 W)	> 88% typ. (16.4 W)	> 88% typ. (32.7 W)
Power Factor Correction	Units Fulfill EN61000-3-2			
Output				
Nominal Voltage	24 Vdc (22.5 - 28.5 Vdc adj.)	24 Vdc (22.5 - 28.5 Vdc adj.)	24 Vdc (22.5 - 28.5 Vdc adj.)	
–Tolerance	< ±2% overall (combination Line, load, time and temperature related changes)			
–Ripple [4]	< 50 mVpp			
Overvoltage Protection	< 33 Vdc	< 27 Vdc	< 33 Vdc	
Nominal Current	2.5 A (60 W)	3.8 A (92 W)	5 A (120 W)	10 A (240 W)
–Current Limit	Fold Forward (Current rises, voltage drops to maintain constant power during overload up to max peak current)			
Holdup Time [5]	> 20 ms @ full load			
Parallel Operation	Single or Parallel use is selectable via Front Panel Switch (SDN 2.5, 4 should not be used in parallel as Class 2 rating would be violated.)			
General				
EMC: –Emissions	EN61000-6-3, -4; Class B EN55011, EN55022 Radiated and Conducted including Annex A. EN61000-3-2			
–Immunity	EN61000-6-1, -2; EN61000-4-2 Level 4, EN61000-4-3 Level 3; EN61000-4-6 Level 3; EN61000-4-4 Level 4 input and Level 3 output; EN61000-4-5 Isolation Class 4, EN61000-4-11;			
Temperature	Storage: -25°C...+85°C Operation. -10°-60°C full power with operation to 70°C possible with a linear derating to half power from 60°C to 70°C (Convection cooling, no forced air required). Operation up to 50% load permissible with sideways or front side up mounting orientation.			
Humidity	The relative humidity is < 90% RH, noncondensing; IEC 68-2-2, 68-2-3.			
MTBF:	> 820,000 hours	> 640,000 hours		> 600,000 hours
– Standard	Bellcore Issue 6 Method 1 Case 3 @ 40°C			
Warranty	5 year limited warranty			
General Protection/Safety	Protected against continuous short-circuit, overload, open-circuit. Protection Class 1 (IEC536), degree of protection IP20 (IEC 529) Safe low voltage: SELV (acc. EN60950)			
Status Indicators	Green LED and DC OK signal (N.O. Solid State Contact rated 200 mA / 60 Vdc)			
Installation				
Fusing –Input	Internally fused. External 10 A slow acting fusing for the input is recommended to protect input wiring.			
–Output	Outputs are capable of providing high currents for short periods of time for inductive load startup or switching. Fusing may be required for wire/loads if 2x Nominal O/P current rating cannot be tolerated. Continuous current overload allows for reliable fuse tripping.			
Mounting	Simple snap-on system for DIN Rail TS35/7.5 or TS35/15 or chassis-mounted (optional screw mounting set SDN-PMBRK2 required).			
Connections	Input: IP20-rated screw terminals, connector size range: 16-10 AWG (1.5-6 mm²) for solid conductors. 16-12 AWG (0.5-4 mm²) for flexible conductors. Output: Two connectors per output, connector size range: 16-10 AWG (1.5 - 6 mm²) for solid conductors.			
Case	Fully enclosed metal housing with fine ventilation grid to keep out small parts.			
–Free Space	25 mm above and below, 25 mm left and right, 10 mm in front		25 mm above and below, 25 mm left and right, 15 mm in front	70 mm above and below, 25 mm left and right, 15 mm in front
H x W x D inches (mm)	4.88. x 1.97 x 4.55 (124.0 x 50.0 x 116.0)	4.88 x 2.56 x 4.55 (124.0 x 65.0 x 116.0)		4.88 x 3.26 x 4.55 (124.0 x 83.0 x 116.0)
Weight lbs (kg)	1.6 (.73)	2.4 (1.10)		3.3 (1.50)

1. Not UL listed for DC input.
2. Input current ratings are conservatively specified with low input, worst case efficiency and power factor.
3. Losses are heat dissipation in watts at full load, nominal input line.
4. Ripple/noise is stated as typical values when measured with a 20 MHz, bandwidth scope and 50 Ohm resistor.
5. Full load, 100 Vac Input @ T_{amb} = +25°C

Contact **Technical Services** at **(800) 377-4384** with any questions.
Visit our website at www.solahd.com.

SDN-P Series Dimensions

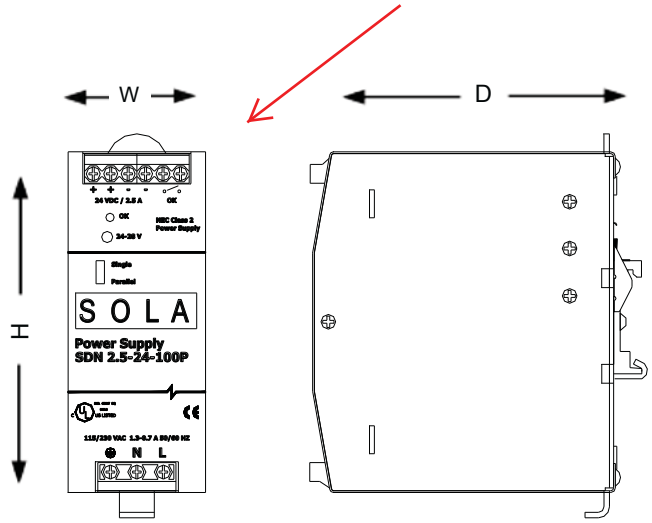

Catalog Number	Dimensions – inches (mm)		
	H	W	D
12 Vdc			
SDN 9–12–100P	4.88 (124.0)	2.56 (65.0)	4.55 (116.0)
SDN 16–12–100P	4.88 (124.0)	3.23 (83.0)	4.55 (116.0)
24 Vdc			
SDN 2.5–24–100P	4.88 (124.0)	1.97 (50.0)	4.55 (116.0)
SDN 4–24–100LP	4.88 (124.0)	2.56 (65.0)	4.55 (116.0)
SDN 5–24–100P	4.88 (124.0)	2.56 (65.0)	4.55 (116.0)
SDN 10–24–100P	4.88 (124.0)	3.26 (83.0)	4.55 (116.0)
48 Vdc			
SDN 5–48–100P	4.88 (124.0)	3.23 (83.0)	4.55 (116.0)

SDN-P Series Mounting

DIN Rail Mounting

Snap on the DIN Rail:

1. Tilt unit slightly backwards
2. Put it onto the DIN Rail
3. Push downwards until stopped
4. Push at the lower front edge to lock
5. Shake the unit slightly to ensure that the retainer has locked

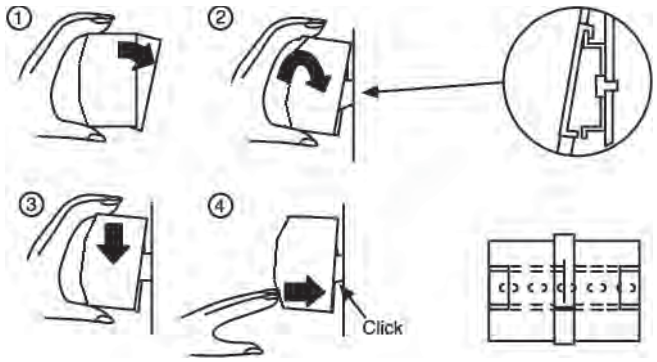

Alternative Panel Mount: Using the optional SDN-PMBRK2 accessory, the unit can be screw mounted to a panel.

Detachment from DIN Rail:

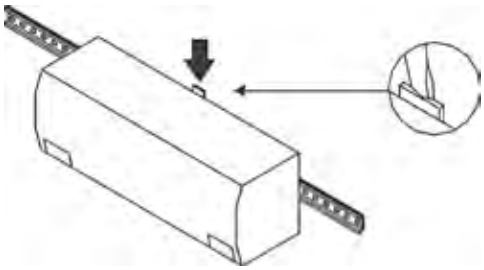

Chassis Mounting

Instead of snapping a SolaHD SDN™ unit on the DIN Rail, you can also attach it using the screw mounting set SDN-PMBRK2.

This set consists of two metal brackets, which replace the existing two aluminum profiles.

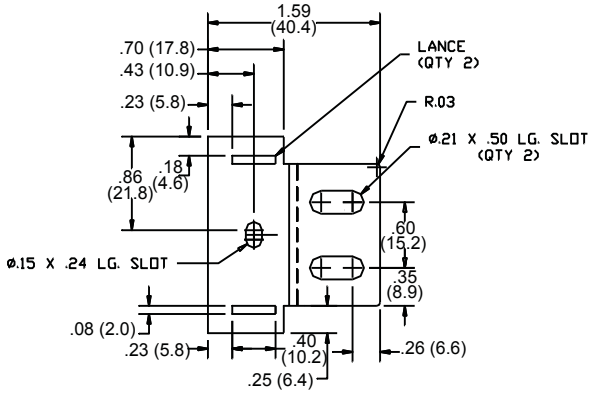

Dimensions - in. (mm)

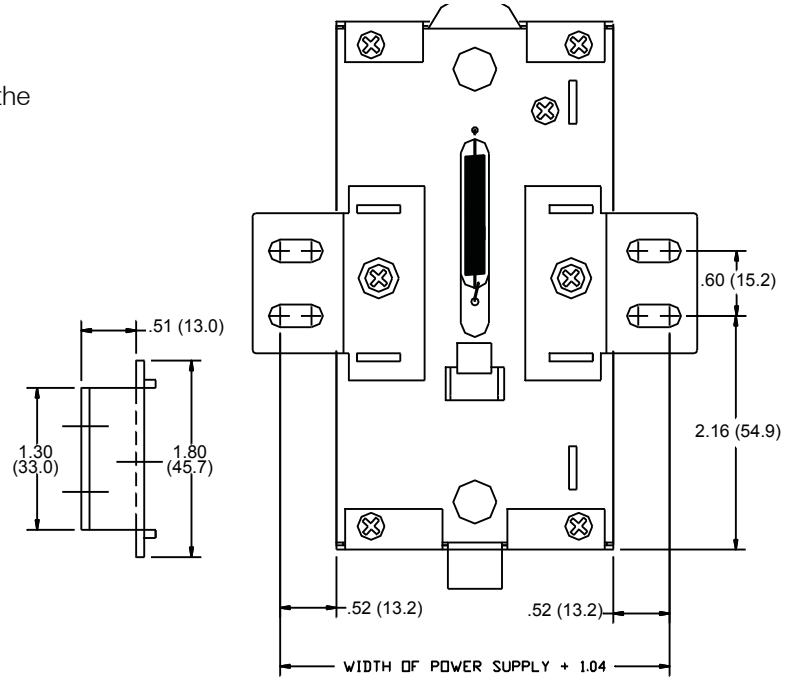

BOM #8

Product: 1492-H5

Description: 1492-H Finger-Safe Terminal Blocks

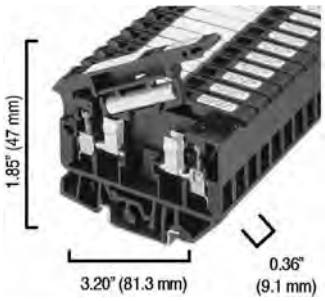

Representative Photo Only (actual product may vary based on configuration selections)

BASE DATA

Electrical Standards	UL
Type of Device	Finger-Safe Terminal Block
Base Block Type	Single Circuit Fuse Block

DETAIL DATA

Features	LED Blown Fuse Indicator
Wire Range	#30 - #12 AWG
Color	Black (Standard)
Bulk Pack	No Bulk Pack (Single Block)

CERTIFICATIONS AND APPROVALS

UR	UL 486E, UL 1059; Reference File: E40735
CSA	CSA C22.2 No. 65, No. 158; On Website, Name: Rockwell, Keyword Search: 1492
IEC	EN 60947-1, EN 60947-7-1(Feed-Through), -2(Ground), -3(Fuse)
Short Circuit Current Rating	This terminal block carries a minimum of 10kA SCCR rating for all protection methods. Please see the table for other possible elevated ratings.
For CSA Certifications:	http://directories.csa-international.org/directorymain.asp
For UL Certifications Directory:	http://database.ul.com/cgi-bin/XYV/template/LISEXT/1FRAME/index.htm

BOM #9

Product: 1492-J3

Description: 1492 IEC Screw Terminal Blocks

Representative Photo Only (actual product may vary based on configuration selections)

BLOCK STYLE	
Base Block Style	Standard Feed-Through Blocks

BASE DATA	
Base Block Type	One-Circuit Feed-Through Block

DETAIL DATA	
Features	Standard Feedthrough
Maximum Wire Size & Rating	UL: 30-12 AWG (25A @600V AC/DC)\nCSA: 26-12 AWG (20A @600V AC/DC)\nIEC: 2.5mm² (24A @800V AC/DC)\nEEx e II: 2.5mm²/20-14 AWG (21A @ 550V AC/DC)
Color	Gray (Standard)

CERTIFICATIONS AND APPROVALS	
UR	UL 486E, UL 1059; Reference File: E40735, E187022
CSA	CSA C22.2 No. 65, No. 158; On Website, Name: Rockwell, Keyword Search: 1492
IEC	EN 60947-1, EN 60947-7-1(Feed-Through), -2(Ground), -3(Fuse)
ATEX	http://www.rockwellautomation.com/products/certification/ex/excert.html
Short Circuit Current Rating	This terminal block carries a minimum of 10kA SCCR rating for all protection methods. Please see the table for other possible elevated ratings.
For CSA Certifications:	http://directories.csa-international.org/directorymain.asp
For UL Certifications Directory:	http://database.ul.com/cgi-bin/XYV/template/LISEXT/1FRAME/index.htm

Selection Guide

BOM #11

Allen-Bradley

CompactLogix System

Catalog Numbers 1769-L16ER-BB1B, 1769-L18ER-BB1B, 1769-L18ERM-BB1B, 1769-L24ER-QB1B, 1769-L24ER-QBFC1B, 1769-L27ERM-QBFC1B, 1769-L30ER, 1769-L30ER-NSE, 1769-L30ERM, 1769-L33ER, 1769-L33ERM, 1769-L36ERM, 1769-AENTR, 1768-L43, 1768-L43S, 1768-L45, 1768-L45S

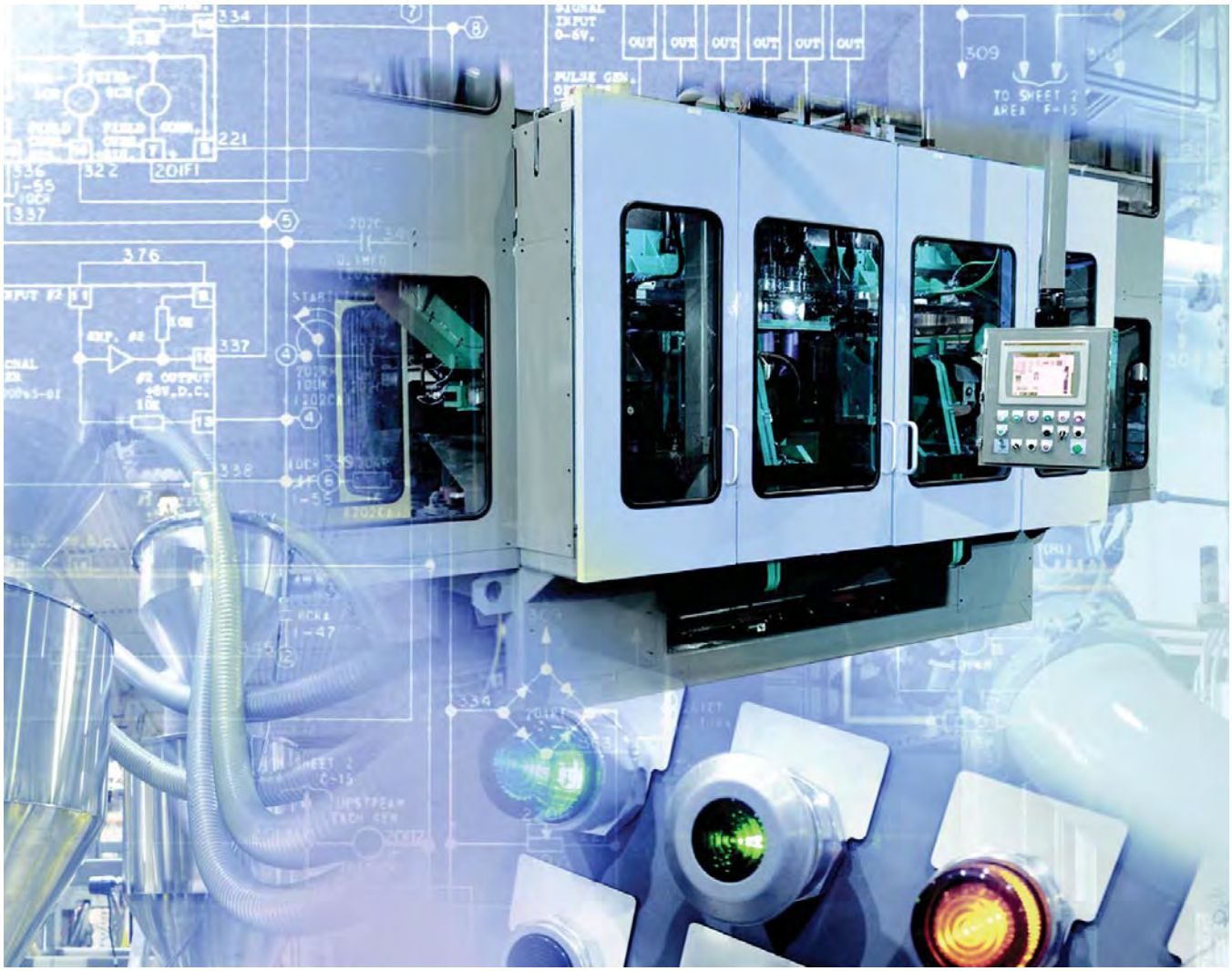

1734 POINT I/O Modules
1769 Compact I/O Modules
1768 Integrated Motion Modules
1768 and 1769 Communication Modules
1768 and 1769 CompactLogix Controllers
1768 and 1769 Compact Power Supplies

LISTEN. THINK. SOLVE.®

Logix Controllers Comparison

Characteristic	**ControlLogix** 1756-71, 1756-L72, 1756-L73, 1756-L73XT, 1756-L74, 1756-L75 **GuardLogix** 1756-L72S, 1756-L73S, 1756-L73SXT	**CompactLogix** 1769-L30ER, 1769-L30ER-NSE, 1769-L30ERM, 1769-L33ER, 1769-L33ERM, 1769-L36ERM	**CompactLogix** 1769-L24ER-BB1B, 1769-L24ER-QBFC1B, 1769-L27ERM-QBFC1B	**CompactLogix** 1769-L16ER-BB1B, 1769-L18ER-BB1B, 1769-L18ERM-BB1B	**CompactLogix** 1768-L43, 1768-L45 **Compact GuardLogix** 1768-L43S, 1768-L45S	**SoftLogix 5800™** 1789-L10, 1789-L30, 1789-L60
Controller tasks: • Continuous • Periodic • Event	32; 100 programs/task	32; 100 programs/task	32; 100 programs/task	32; 100 programs/task	• 1768-L43: 16; 32 programs/task • 1768-L45: 30; 32 programs/task	32; 100 programs/task
Event tasks	All event triggers	All event triggers	All event triggers	All event triggers, plus embedded inputs	All event triggers	All event triggers, plus outbound and Windows events
User memory	• 1756-L71: 2 MB • 1756-L72: 4 MB • 1756-L72S: 4 MB + 2 MB safety • 1756-L73, 1756-L73SXT, 1756-L73XT: 8 MB • 1756-L73S: 8 MB + 4 MB safety • 1756-L74: 16 MB • 1756-L75: 32 MB	• 1769-L30ER, 1769-L30ER-NSE, 1769-L30ERM: 1MB • 1769-L33ER, 1769-L33ERM: 2 MB • 1769-L36ERM: 3 MB	• 1769-L24ER: 750 KB • 1769-L27ERM: 1 MB	• 1769-L16ER: 384 KB • 1769-L18ER, 1769-L18ERM: 512 KB	• 1768-L43: 2 MB • 1768-L43S: 2 MB + 0.5 MB safety • 1768-L45: 3 MB • 1768-L45S: 3 MB + 1 MB safety	• 1789-L10: 2 MB; 1 controller; no motion • 1789-L30: 64 MB; 3 controllers • 1789-L60: 64 MB; 6 controllers
Memory card	Secure Digital	Secure Digital	Secure Digital	Secure Digital	CompactFlash	None
Built-in ports	1 USB	2 EtherNet/IP 1 USB	2 EtherNet/IP 1 USB	2 EtherNet/IP 1 USB	1 RS-232	Depends on personal computer
Communication options	• EtherNet/IP (standard and safety) • ControlNet (standard and safety) • DeviceNet (standard and safety) • DH+ • Remote I/O • SynchLink	• Dual-port EtherNet/IP(1) • DeviceNet	• Dual-port EtherNet/IP(1) • DeviceNet	• Dual-port EtherNet/IP(1)	• EtherNet/IP (standard and safety) • ControlNet (standard and safety) • DeviceNet (standard)	• EtherNet/IP • ControlNet • DeviceNet
Controller connections	500	256	256	256	250	250
Network connections	Per module: • 128 ControlNet (CN2/B) • 40 ControlNet (CNB) • 256 EtherNet/IP; 128 TCP (EN2*x*) • 128 EtherNet/IP; 64 TCP (ENBT)	• 1769-L30ER, 1769-L30ER-NSE, 1769-L30ERM: 256 EtherNet/IP; 120 TCP • 1769-L33ER, 1769-L33ERM: 256 EtherNet/IP; 120 TCP • 1769-L36ERM: 256 EtherNet/IP; 120 TCP	• 1769-L24ER: 256 EtherNet/IP; 120 TCP • 1769-L27ERM: 256 EtherNet/IP; 120 TCP	• 1769-L16ER: 256 EtherNet/IP; 120 TCP • 1769-L18ER, 1769-L18ERM: 256 EtherNet/IP; 120 TCP	Per module: • 48 ControlNet • 128 EtherNet/IP; 64 TCP	Per module: • 48 ControlNet • 128 EtherNet/IP; 64 TCP
EtherNet/IP nodes in a single Logix Designer application, max	N/A	• 1769-L30ER, 1769-L30ER-NSE, 1769-L30ERM: 16 • 1769-L33ER, 1769-L33ERM: 32 • 1769-L36ERM: 48	• 1769-L24ER: 8 • 1769-L27ERM: 16	• 1769-L16ER: 4 • 1769-L18ER, 1769-L18ERM: 8	N/A	N/A
Controller redundancy	Full support	Backup via DeviceNet	Backup via DeviceNet	—	Backup via DeviceNet	—
Integrated motion	• Integrated motion on an EtherNet/IP network • SERCOS interface • Analog options	Integrated motion on an EtherNet/IP network	Integrated motion on an EtherNet/IP network	Integrated motion on an EtherNet/IP network	SERCOS interface	• SERCOS interface • Analog encoder input
Programming languages	• Standard task: all languages • Safety task: relay ladder, safety application instructions	• Relay ladder • Structured text • Function block • SFC	• Relay ladder • Structured text • Function block • SFC	• Relay ladder • Structured text • Function block • SFC	• Standard task: all languages • Safety task: relay ladder, safety application instructions	• Relay ladder • Structured text • Function block • SFC • External routines (C/C++)

(1) CompactLogix™ 5370 controllers have two EtherNet/IP ports to connect to an EtherNet/IP network. The ports carry the same network traffic as part of the controller's embedded switch. The controller uses only one IP address.

Select a CompactLogix System

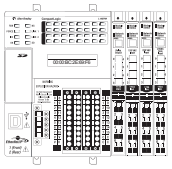

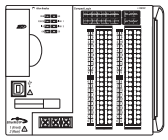

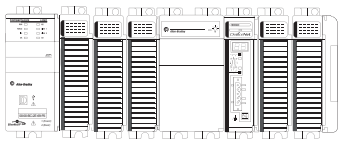

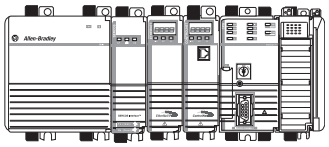

1 [CompactLogix Controllers](#) Page 7

Select:
- A controller with sufficient memory
- A memory card

2 [CompactLogix Communication Options](#) Page 13

Select:
- Networks
- Communication interfaces
- Associated cables and network equipment

3 [CompactLogix Integrated Motion](#) Page 16

Select:
- A CompactLogix 5370 controller for integrated motion on an EtherNet/IP network
- A 1768 CompactLogix controller for SERCOS motion
- Drives, motors, and accessories (use the Motion Analyzer tool)

4 [Compact GuardLogix Integrated Safety](#) Page 20

Select:
- A 1768 Compact GuardLogix® controller for integrated safety

5 [Additional Local I/O Modules](#) Page 24

Select:
- 1734 POINT I/O™ or 1769 Compact I/O™ modules
- Associated cables and accessories

6 [CompactLogix Power Supplies](#) Page 30

Select:
- One 1769 power supply for each CompactLogix 5370 L3 controller
- One 1768 power supply for each 1768 CompactLogix controller
- Additional 1769 power supplies as needed

Optional

[Programming Software](#) Page 31

CompactLogix Controllers Overview

The CompactLogix system is designed to provide a Logix solution for small and mid-size applications. Typically, these applications are machine-level control applications. A simple system can consist of a standalone controller with a single bank of I/O modules and DeviceNet communication. In a more complex system, add other networks, motion control, and safety control. As part of the Integrated Architecture™ system, the CompactLogix controllers use the same programming software, network protocol, and information capabilities as all Logix controllers, providing a common development environment for all control disciplines.

- The CompactLogix 5370 L3 controllers deliver scalable, affordable control ideal for applications from small standalone equipment to high-performance indexing tables, process skids, case packers and erectors, and packaging. The CompactLogix 5370 L3 controllers also provide a truly integrated motion solution.
- The CompactLogix 5370 L2 controllers combine the power of the Logix architecture with the flexibility of Compact I/O modules. From small standalone equipment to higher performance applications, these controllers are ideal for assembly machines, hoisting systems, process skids, indexing tables, and packaging.
- The CompactLogix 5370 L1 controllers combine the power of the Logix architecture with the flexibility of POINT I/O. Ideal for small to mid-size machines, these controllers offer value to customers looking for the benefits of Integrated Architecture in a lower cost system.

CompactLogix 5370 System on an EtherNet/IP Network

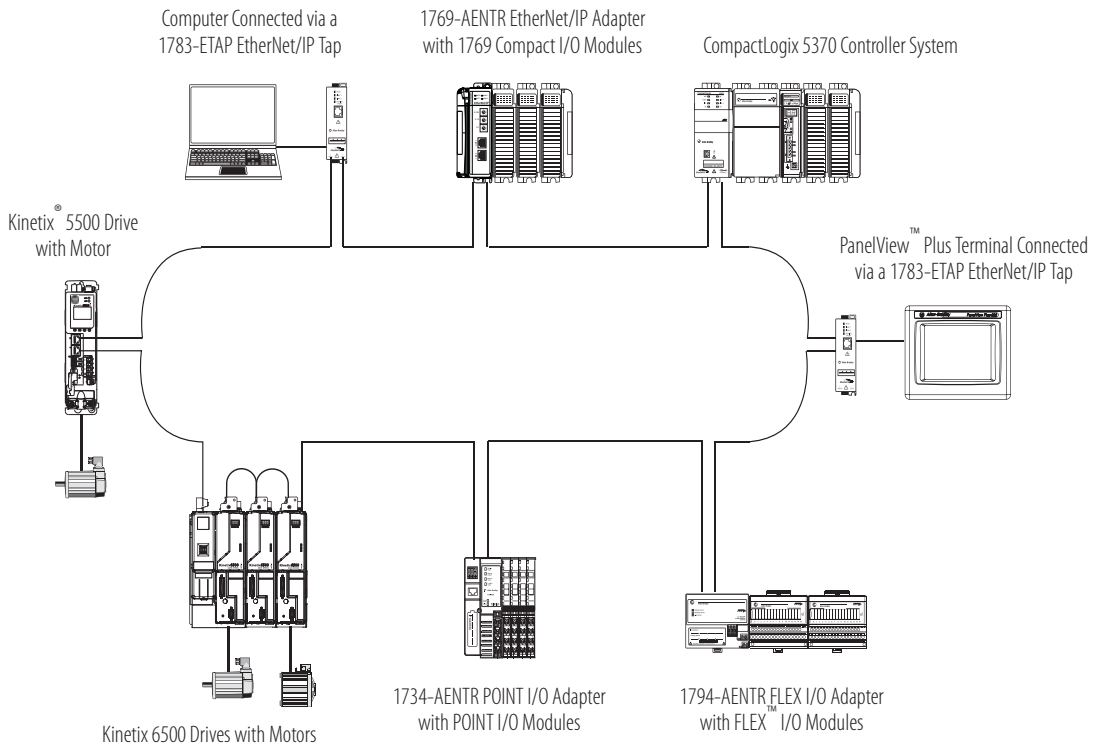

The CompactLogix 5370 L2 and L3 controllers support DeviceNet connectivity.

CompactLogix 5370 System on an DeviceNet Network

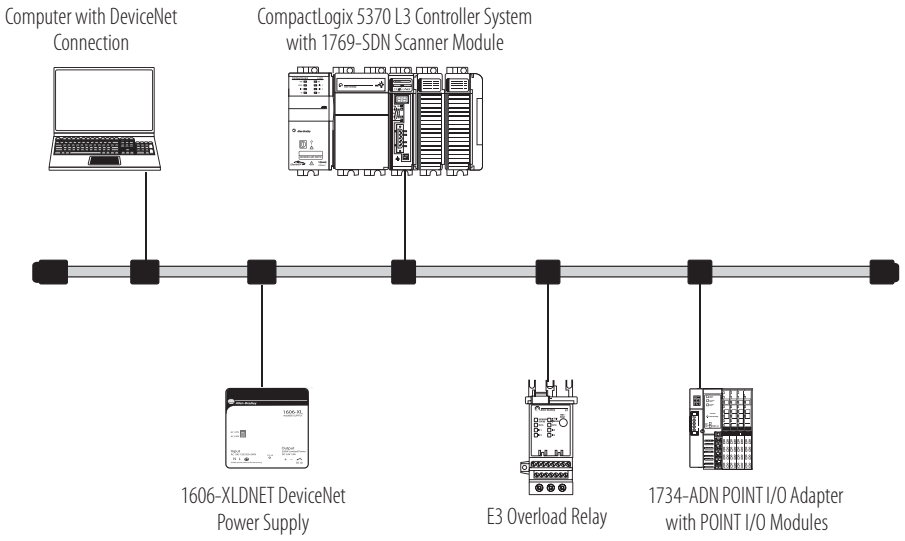

1768 CompactLogix System

The 1768 CompactLogix system combines a 1768 backplane for communication and motion support and a 1769 backplane for I/O support. The 1768 controller is designed for integrated motion, integrated safety, and more complex communication requirements than the other CompactLogix controllers. The 1768 controller has one serial port. Add 1768 modules for motion control, EtherNet/IP communication, and ControlNet communication.

1768 CompactLogix System on an EtherNet/IP Network

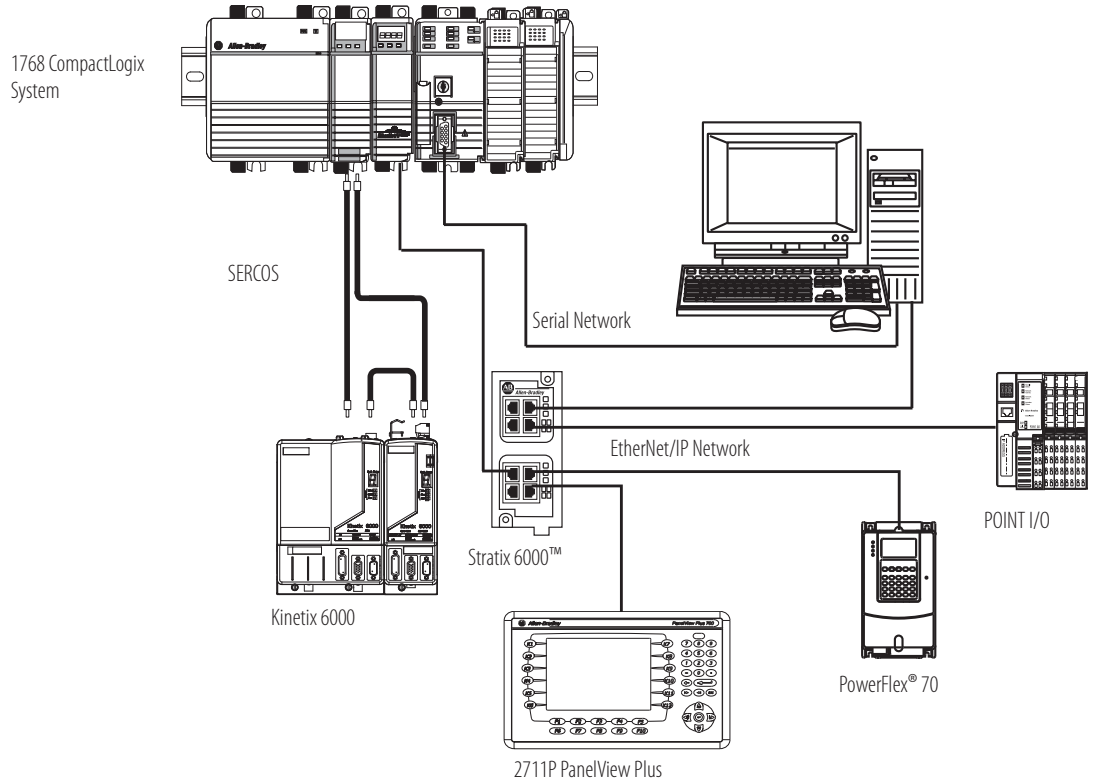

1768 Compact GuardLogix Safety System

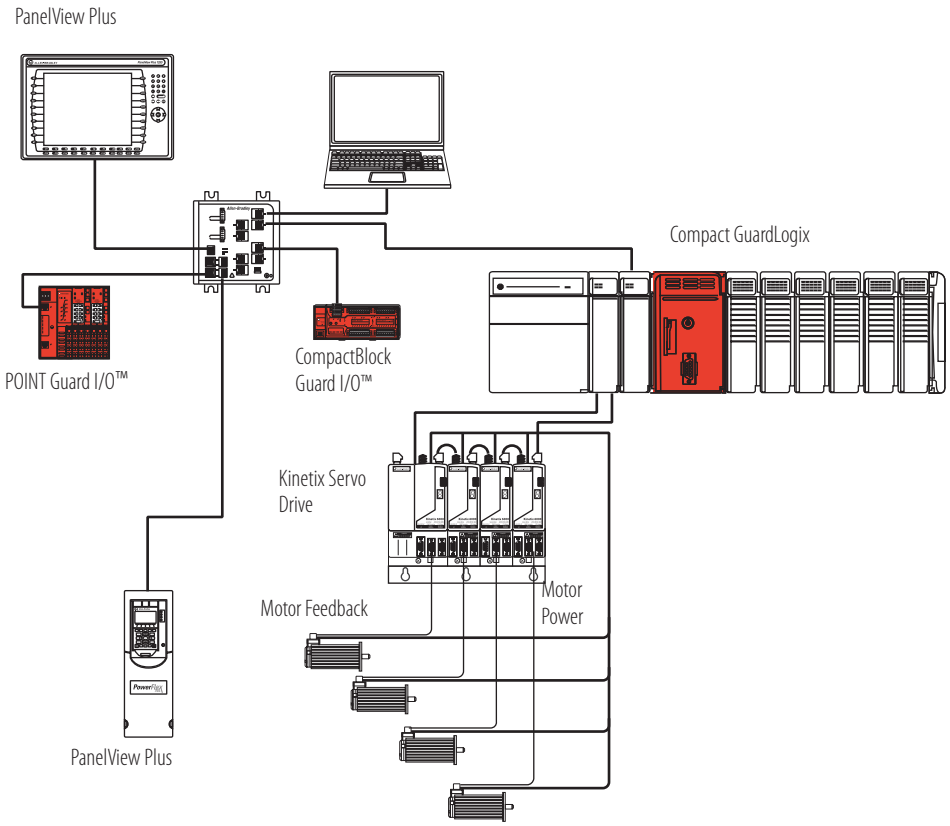

CompactLogix Controllers

The CompactLogix platform brings together the benefits of the Logix platform— common programming environment, common networks, common control engine—in a small footprint with high performance. Combined with Compact I/O modules, the CompactLogix platform is perfect for tackling smaller, machine-level control applications, with or without simple motion, with unprecedented power and scalability. A CompactLogix platform is ideal for systems that require standalone and system-connected control over EtherNet/IP, ControlNet, or DeviceNet networks.

For detailed specifications, see CompactLogix Controllers Specifications Technical Data, publication 1769-TD005.

Characteristic	CompactLogix 5370 L1 Controllers	CompactLogix 5370 L2 Controllers	CompactLogix 5370 L3 Controllers	1768 Controllers
Controller application	Small applications Embedded 1734 I/O modules	Small applications Embedded 1769 I/O modules	General purpose	Integrated safety Integrated SERCOS motion
Controller tasks	32; 100 programs/task	32; 100 programs/task	32; 100 programs/task	• 1768-L43: 16; 32 programs/task • 1768-L45: 30; 32 programs/task
Event tasks	Consumed tag, EVENT instruction, embedded inputs, remote I/O, axis, and motion event triggers	Consumed tag, EVENT instruction, remote I/O, axis, and motion event triggers	Consumed tag, EVENT instruction, remote I/O, axis, and motion event triggers	Consumed tag, EVENT instruction, remote I/O, axis, and motion event triggers
User memory	• 1769-L16ER-BB1B: 384 KB • 1769-L18ER-BB1B, 1769-L18ERM-BB1B: 512 KB	• 1769-L24ER-QB1B, 1769-L24ER-QBFC1B: 750 KB • 1769-L27ERM-QBFC1B: 1 MB	• 1769-L30ER, 1769-L30ERM, 1769-L30ER-NSE: 1MB • 1769-L33ER, 1769-L33ERM: 2 MB • 1769-L36ERM: 3 MB	• 1768-L43: 2 MB • 1768-L43S: 2 MB + 0.5 MB safety • 1768-L45: 3 MB • 1768-L45S: 3 MB + 1 MB safety
Built-in ports	• 2 EtherNet/IP(1) • 1 USB	• 2 EtherNet/IP(1) • 1 USB	• 2 EtherNet/IP(1) • 1 USB	• 1 port RS- 232 serial (DF1 or ASCII)
Communication options	• Dual-port EtherNet/IP	• Dual-port EtherNet/IP • DeviceNet	• Dual-port EtherNet/IP • DeviceNet	• EtherNet/IP (standard and safety) • ControlNet (standard and safety) • DeviceNet (standard)

(1) CompactLogix 5370 controllers have two EtherNet/IP ports to connect to an EtherNet/IP network. The ports carry the same network traffic as part of the controller's embedded switch. The controller uses only one IP address.

For information on estimating memory requirements for you application, see Logix5000 Controllers Execution Time and Memory Use Reference Manual, publication 1756-RM087.

The intent of the design was for the RAPID contract to have a remote I/O rack, connected by Ethernet over radio to the permanent treatment system building's controller. It is our understanding that a controller is not necessary to achieve this.
However, a controller in the pump house doesn't prevent the system from running.
It may be more cost effective to remove the controller pictured here.

CompactLogix 5

In a CompactLogix 5370 L3 controller s
the left and the right of the power sup
on each side of the power supply. The

- dual EtherNet/IP ports for ring t
- USB port for firmware download and programming.

Characteristic	1769-L30ER	1769-L30ERM	1769-L30ER-NSE	1769-L33ER	1769-L33ERM	1769-L36ERM
Available user memory	1 MB	1 MB	1 MB No capacitor	2 MB	2 MB	3 MB
Memory card	1784-SD1 (1 GB), shipped with controller 1784-SD2 (2 GB)					
Communication ports	• 2 EtherNet/IP • 1 USB					
EtherNet/IP connections	• 256 EtherNet/IP • 120 TCP	• 256 EtherNet/IP • 120 TCP	• 256 EtherNet/IP • 120 TCP	• 256 EtherNet/IP • 120 TCP	• 256 EtherNet/IP • 120 TCP	• 256 EtherNet/IP • 120 TCP
EtherNet/IP nodes in a single Logix Designer application, max	16			32		48
Integrated motion on an EtherNet/IP network	—	Supports up to 4 axes	—	—	Supports up to 8 axes	Supports up to 16 axes
Module expansion capacity	8 1769 modules 1 bank of modules			16 1769 modules 2 banks of modules		30 1769 modules 3 banks of modules
Battery	None					
Power supply distance rating	4 modules			4 modules		4 modules
Programming software support	• RSLogix 5000 software, version 20 - For controllers that use firmware revision 20.*xxx*. • Logix Designer application, version 21 or later - For controllers that use firmware revision 21.*xxx* or later.					

These controllers replace previous catalog numbers.

New Controller[1]	Replaces Previous Controller[2]	Differences
1769-L30ER 1769-L30ERM 1769-L30ER-NSE	1769-L31 1769-L32C[3] 1769-L32E	• Additional memory • Integrated motion on EtherNet/IP support (1769-L30ERM, 1769-L33ERM, 1769-L36ERM) • USB port instead of RS-232 port • Dual-port EtherNet/IP support • SD card instead of CompactFlash card
1769-L33ER 1769-L33ERM	1769-L35CR[3] 1769-L35E	
1769-L36ERM	Any previous 1769-L3*x* controller	

(1) IMPORTANT: Typically, you can use any of the new controllers listed in each row as replacements for any of the previous controllers listed in the corresponding cell to the right. For example, you can replace a 1769-L32E with a 1769-L30ER, 1769-L30ERM, or 1769-L30ER-NSE controller.
In some rare cases, system configuration prevents controller replacement as shown above. For example, if your system uses a 1769-L32E controller with 12 expansion modules, you cannot replace that controller with a 1769-L30ER, 1769-L30ERM, or 1769-L30ER-NSE controller. Those controllers support no more than 8 expansion modules. You must replace the 1769-L32E controller with a 1769-L33ER, 1769-L33ERM, or 1769-L36ERM controller.
We recommend that before you upgrade your controllers, consider your application requirements to verify that the replacements listed above apply.

(2) These catalog numbers are still available for sale, see page 12 for details. Please contact your local Rockwell Automation sales office for ordering information.

(3) Requires converting from ControlNet connections to EtherNet/IP connections.

CompactLogix Communication Options

You can configure your system for information exchange between a range of devices and computing platforms and operating systems. Select a CompactLogix controller with integrated communication or the appropriate communication module.

For detailed specifications, see:

- CompactLogix Controllers Specifications Technical Data, publication 1769-TD005.
- CompactLogix Communication Modules Specifications Technical Data, publication 1769-TD007.

EtherNet/IP Communication Options

The Ethernet Industrial network protocol (EtherNet/IP) is an open industrial-networking standard that supports both real-time I/O messaging and message exchange. The EtherNet/IP network uses off-the-shelf Ethernet communication chips and physical media.

Dual-port EtherNet/IP support embeds switch technology directly in the controller to so the controller can operate on star, linear, or ring EtherNet/IP topologies.

Cat. No.	Description	Communication Rate	Logix Resources[1]	TCP/IP Connections
1769-L16ER-BB1B,	CompactLogix 5370 L1 controller with integrated EtherNet/IP dual-port, POINT I/O form factor	10/100 Mbps	4 nodes 256 EtherNet/IP connections	120
1769-L18ER-BB1B, 1769-L18ERM-BB1B			8 nodes 256 EtherNet/IP connections	
1769-L24ER-BB1B, 1769-L24ER-QBFC1B	CompactLogix 5370 L2 controller with integrated EtherNet/IP dual-port, Compact I/O form factor	10/100 Mbps	8 nodes 256 EtherNet/IP connections	120
1769-L27ERM-QBFC1B		10/100 Mbps	16 nodes 256 EtherNet/IP connections	
1769-L30ER, 1769-L30ERM	CompactLogix 5370 L3 controller with integrated EtherNet/IP dual-port	10/100 Mbps	16 nodes 256 EtherNet/IP connections	120
1769-L33ER, 1769-L33ERM			32 nodes 256 EtherNet/IP connections	
1769-L36ERM			48 nodes 256 EtherNet/IP connections	
1769-AENTR	1769 EtherNet/IP adapter	10/100 Mbps	128 EtherNet/IP connections	96
1768-ENBT	1768 EtherNet/IP communication bridge module	10/100 Mbps	128 EtherNet/IP connections	64
1768-EWEB	1768 Ethernet web server module	10/100 Mbps	128 EtherNet/IP connections	64

(1) The number of nodes listed for CompactLogix 5370 controllers represents the maximum number of EtherNet/IP nodes you can include in a Logix Designer application project for those controller. For example, in a Logix Designer application project that uses a 1769-L18ERM-BB1B controller, you can add as many as 8 EtherNet/IP nodes to the project.

Serial Communication Options

These CompactLogix controllers support serial communication.

Cat. No.	Serial Options
1769-L16ER-BB1B, 1769-L18ER-BB1B, 1769-L18ERM-BB1B	1734-232ASC module for an RS-232 serial interface 1734-485 ASC module for an RS-422 and RS-485 serial device
1769-L24ER-BB1B, 1769-L24ER-QBFC1B	1769-ASCII module for an ASCII interface to RS-232, RS-422, and RS-485 devices 1769-SM2 module for a Modbus RTU interface
1769-L27ERM-QBFC1B	
1769-L30ER, 1769-L30ERM	
1769-L33ER, 1769-L33ERM	
1769-L36ERM	
1768-L43, 1768-L43S, 1768-L45, 1768-L45S	Built-in serial port 1769-ASCII module for an ASCII interface to RS-232, RS-422, and RS-485 devices 1769-SM2 module for a Modbus RTU interface

Modbus Support

To access a Modbus TCP network, connect through the embedded Ethernet port of the CompactLogix 5370 controllers and execute a specific ladder-logic routine. For more information, see Knowledgebase document 470365 at http://www.rockwellautomation.com/knowledgebase/.

To access a Modbus RTU network, connect through the serial port (if available) and execute a specific ladder-logic routine. For more information, see Using Logix5000 Controllers as Masters or Slaves on Modbus Application Solution, publication CIG-AP129.

1734 Specialty I/O Modules

Cat. No.	Description	Wiring Base	POINTBus Current
1734-232ASC 1734-485ASC	The 1734-232ASC and 1734-485ASC serial interface modules offer a serial-link communication interface solution for peripheral products with RS-232 (only 1734-232ASC), RS-485, and RS-422 ports (only 1734-485ASC.)	1734-TB, 1734-TBS	75 mA
1734-ARM	The 1734-ARM address reserve module reserves address and slot numbers to maintain a numbering scheme of an existing system. The 1734-ARM has no module configuration and does not communicate I/O data.	1734-TB, 1734-TBS	75 mA
1734-CTM 1734-VTM	The common terminal module (1734-CTM) and voltage term66inal module (1734-VTM) expand the termination capabilities of POINT I/O modules. Install the modules to provide support for higher density (8 channel) POINT I/O modules.	1734-TB, 1734-TBS, 1734-TOP, 1734-TOPS	75 mA
1734-SSI	The 1734-SSI module collects serial data from absolute-position, encoding sensors that use standard Synchronous Serial Interface (SSI) protocol.	1734-TB, 1734-TBS	110 mA

1769 Compact I/O Modules

The 1769 Compact I/O modules can be installed on the CompactLogix 5370 L2 and L3 controllers and 1768 CompactLogix controllers. The modules mechanically lock together by means of a tongue-and-groove design and have an integrated communication bus that is connected from module to module by a moveable bus connector.

Each I/O module includes a built-in removable terminal block with finger-safe cover for connections to I/O sensors and actuators. The terminal block is behind a door at the front of the module. I/O wiring can be routed from beneath the module to the I/O terminals.

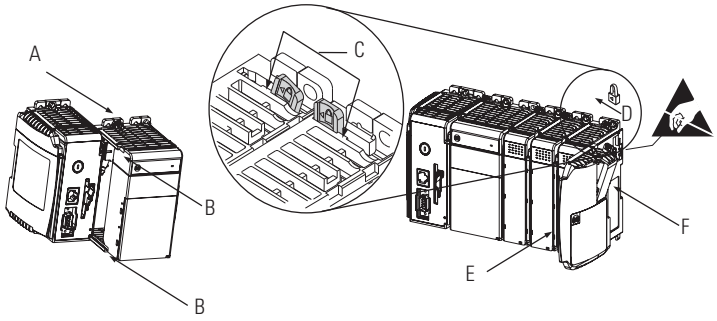

For detailed specifications, see 1769 Compact I/O Modules Specifications Technical Data, publication 1769-TD006.

Power Supply Distance Ratings

Check each module's specification table for the power supply distance rating. This indicates how many slot positions the module can be from the power supply.

1769 AC Digital Modules

Cat. No.	Inputs/Outputs	Voltage Category	Operating Voltage Range	Backplane Current	Power Supply Distance Rating
1769-IA8I	8 inputs, individually isolated	100/120V AC	79…132V AC, 47…63 Hz	90 mA @ 5.1V(1)	8
1769-IA16	16 inputs	100/120V AC	79…132V AC, 47…63 Hz	115 mA @ 5.1V	8
1769-IM12	12 inputs	200/240V AC	159…265V AC, 47…63 Hz	100 mA @ 5.1V	8
1769-OA8	8 outputs	100/240V AC	85…265V AC 47…63 Hz	145 mA @ 5.1V	8
1769-OA16	16 outputs	100/240V AC	85…265V AC 47…63 Hz	225 mA @ 5.1V	8

(1) Maximum is 190 mA.

1769 DC Digital Modules

Cat. No.	Inputs/Outputs	Voltage Category	Operating Voltage Range	Backplane Current	Power Supply Distance Rating
1769-IG16	16 inputs	5V DC TTL	4.5…5.5V DC	120 mA @ 5.1V	8
1769-IQ16	16 inputs	24V DC sink/source	10…30V DC @ 30 °C (86 °F) 10…26.4V DC @ 60 °C (140 °F)	115 mA @ 5.1V	8
1769-IQ16F	16 inputs, high-speed	24V DC sink/source	10…30V DC @ 30 °C (86 °F) 10…26.4V DC @ 60 °C (140 °F)	100 mA @ 5.1V	8
1769-IQ32	32 inputs	24V DC sink/source	10…30V DC @ 30 °C (86 °F) 10…26.4V DC @ 60 °C (140 °F)	170 mA @ 5.1V	8
1769-IQ32T	32 inputs	24V DC sink/source	20.4…26.4V DC @ 60 °C (140 °F)	170 mA @ 5.1V	8
1769-IQ6XOW4	6 inputs 4 outputs	24V DC sink/source input AC/DC normally open relay contact outputs	10…30V DC @ 30 °C (86 °F) 10…26.4V DC @ 60 °C (140 °F)	105 mA @ 5.1V 50 mA @ 24V	8
1769-OB8	8 outputs	24V DC source	20.4…26.4V DC	145 mA @ 5.1V	8
1769-OB16	16 outputs	24V DC source	20.4…26.4V DC	200 mA @ 5.1V	8
1769-OB16P	16 outputs, protected	24V DC source	20.4…26.4V DC	160 mA @ 5.1V	8
1769-OB32	32 outputs	24V DC source	20.4…26.4V DC	300 mA @ 5.1V	6
1769-OB32T	32 outputs	24V DC source	10.2…26.4V DC	220 mA @ 5.1V	8
1769-OG16	16 outputs	5V DC TTL	4.5…5.5V DC	200 mA @ 5.1V	8
1769-OV16	16 outputs	24V DC sink	20.4…26.4V DC	200 mA @ 5.1V	8
1769-OV32T	32 outputs	24V DC sink	10.2…26.4V DC	300 mA @ 5.1V	8

1769 Contact Output Modules

Cat. No.	Inputs/Outputs	Operating Voltage Range	Backplane Current	Power Supply Distance Rating
1769-OW8	8 outputs	5…265V AC 5…125V DC	125 mA @ 5.1V 100 mA @ 24V	8
1769-OW8I	8 outputs, individually isolated	5…265V AC 5…125V DC	125 mA @ 5.1V 100 mA @ 24V	8
1769-OW16	16 outputs	5…265V AC 5…125V DC	205 mA @ 5.1V 180 mA @ 24V	8

1769 Analog Modules

Cat. No.	Inputs/Outputs	Range	Resolution	Backplane Current	Power Supply Distance Rating
1769-IF4	4 inputs, differential or single-ended	±10V, 0…10V, 0…5V, 1…5V 0…20 mA, 4…20 mA	14 bits (unipolar) 14 bits plus sign (bipolar)	120 mA @ 5.1V 60 mA @ 24V	8
1769-IF4I	4 inputs, differential or single-ended, individually isolated	±10V, 0…10V, 0…5V, 1…5V 0…20 mA, 4…20 mA	16 bits (unipolar) 15 bits plus sign (bipolar)	145 mA @ 5.1V 125 mA @ 24V	8
1769-IF8	8 inputs, differential or single-ended	±10V, 0…10V, 0…5V, 1…5V 0…20 mA, 4…20 mA	16 bits (unipolar) 15 bits plus sign (bipolar)	120 mA @ 5.1V 70 mA @ 24V	8
1769-IF16C	16 inputs, single-ended	0…20 mA, 4…20 mA	16 bits (unipolar) 15 bits plus sign (bipolar)	190 mA @ 5.1V 70 mA @ 24V	8
1769-IF16V	16 inputs, differential	±10V, 0…10V, 0…5V, 1…5V	16 bits (unipolar) 15 bits plus sign (bipolar)	190 mA @ 5.1V 70 mA @ 24V	8
1769-IF4XOF2	4 differential or single-ended inputs 2 single-ended outputs	0…10V 0…20 mA	Input: 8 bits plus sign Output: 8 bits plus sign	120 mA @ 5.1V 160 mA @ 24V	8
1769-IF4FXOF2F	4 fast differential or single-ended inputs 2 fast single-ended outputs	±10V, 0…10V, 0…5V, 1…5V 0…20 mA, 4…20 mA	Input: 14 bits (unipolar) 14 bits plus sign (bipolar) Output: 13 bits (unipolar) 13 bits plus sign (bipolar)	220 mA @ 5.1V 120 mA @ 24V	8
1769-OF2	2 outputs, single-ended	±10V, 0…10V, 0…5V, 1…5V 0…20 mA, 4…20 mA	14 bits (unipolar) 14 bits plus sign (bipolar)	120 mA @ 5.1V 120 mA @ 24V	8
1769-OF4	4 outputs, single-ended	±10V, 0…10V, 0…5V, 1…5V 0…20 mA, 4…20 mA	15 bits plus sign unipolar and bipolar	120 mA @ 5.1V 170 mA @ 24V	8
1769-OF4CI	4 outputs, differential, individually isolated	0…20 mA 4…20 mA	16 bits (unipolar)	140 mA @ 5.1V 145 mA @ 24V	8
1769-OF4VI	4 outputs, differential, individually isolated	±10V 0…10V 0…5V 1…5V	15 bits plus sign (bipolar)	145 mA @ 5.1V 75 mA @ 24V	8
1769-OF8C	8 outputs, single-ended	0…20 mA 4…20 mA	16 bits (unipolar)	140 mA @ 5.1V 145 mA @ 24V	8
1769-OF8V	8 outputs, single-ended	±10V 0…10V 0…5V 1…5V	16 bits plus sign (bipolar)	145 mA @ 5.1V 125 mA @ 24V	8

1769 Analog RTD and Thermocouple Modules

Cat. No.	Inputs/Outputs	Sensors Supported	Backplane Current	Power Supply Distance Rating
1769-IR6	6 RTD inputs	100, 200, 500, 1000 Ω Platinum 385 100, 200, 500, 1000 Ω Platinum 3916 120 Ω Nickel 618 120 Ω Nickel 672 10 Ω Nickel-iron 518 0…150 Ω, 0…500 Ω, 0…1000 Ω, 0…3000 Ω	100 mA @ 5.1V 45 mA @ 24V	8
1769-IT6	6 thermocouple inputs	Thermocouple types B, C, E, J, K, N, R, S, T ±50V, ±100V	100 mA @ 5.1V 45 mA @ 24V	8(1)

(1) To reduce the effects of electrical noise, install the 1769-IT6 module at least two slots away from the AC power supplies.

1769 Specialty I/O Modules

Cat. No.	Description	Backplane Current	Power Supply Distance Rating
1769-ARM	Use a 1769-ARM address reserve module to reserve module slots. After creating an I/O configuration and user program, you can remove and replace any I/O module in the system with a 1769-ARM module once you inhibit the removed module in the Logix Designer application.	60 mA @ 5.1V	8
1769-ASCII	The 1769-ASCII module, a general purpose two-channel ASCII interface, provides a flexible network interface to a wide variety of RS-232, RS-485, and RS-422 ASCII devices. The module provides the communication connections to the ASCII device.	425 mA @ 5.1V	4
1769-BOOLEAN	Use the 1769-BOOLEAN module in applications that require repeatability, such as material handling and packaging, when there is a requirement to activate an output based on an input's transition. If the Boolean expression is true, the output is directed to the ON state. If the Boolean expression is false, the output channel is directed to the OFF state. There are four operators that you can configure as OR, AND, XOR, or none.	220 mA @ 5.1V	8
1769-HSC	Use the 1769-HSC when you need: • a counter module that is capable of reacting to high-speed input signals. • to generate rate and time-between-pulses (pulse interval) data. • as many as two channels of quadrature or four channels of pulse/count inputs.	245 mA @ 5.1V	4
1769-SM1	The Compact I/O to DPI/SCANport™ module connects to PowerFlex 7-class drives, other DPI-based host devices, and SCANport-based host devices such as 1305 and 1336 PLUS II drives.	280 mA @ 5.1V	6
1769-SM2	The Compact I/O to DSI/Modbus module connects to PowerFlex 4-class drives and to other Modbus RTU slave devices, such as PowerFlex 7-class drives with 20-COMM-H RS485 HVAC adapters.	350 mA @ 5.1V	4

1769 Expansion Cables

If you divide 1769 modules into multiple banks, make sure:

- each bank needs its own power supply.
- use expansion cables to connect the banks.
- the last I/O bank requires an end cap.

Vertical

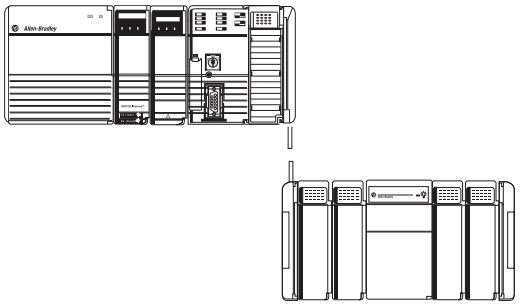

Horizontal

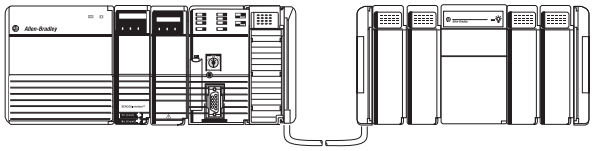

How you orient I/O banks determines the expansion cables you need to connect the I/O banks.

If you add a	And connect the chassis	Use this cable[1]
Second bank	Right to left	1769-CRL*x*
	Right to right	1769-CRR*x*
Third bank	Right to left	1769-CRL*x*
	Right to right	1769-CRR*x*
	Left to left	1769-CLL*x*

(1) Where *x* = 1 for 1 ft (305 mm) or 3 for 3.28 ft (1 m).

1769 End Caps

The final 1769 Compact I/O bank requires an end cap on the end without the expansion cable. The CompactLogix 5370 L2 controller comes with a right-end cap, so you do not need to order one separately.

- Right end cap, catalog number 1769-ECR
- Left end cap, catalog number 1769-ECL

1769 Wiring Systems

As an alternative to buying removable terminal blocks (RTBs) and connecting the wires yourself, you can buy a wiring system of:

- interface modules (IFMs) that provide the output terminal blocks for digital I/O modules. Use the pre-wired cables that match the I/O module to the IFM.
- analog interface modules (AIFMs) that provide the output terminal blocks for analog I/O modules. Use the pre-wired cables that match the I/O module to the AIFM.
- I/O module-ready cables. One end of the cable assembly is an RTB that plugs into the front of the I/O module. The other end has individually color-coded conductors that connect to a standard terminal block.

Removable Terminal Kits

You can order removable terminal kits with the CompactLogix 5370 L1 and L2 controllers separately. The kits are used to connect wiring to the controllers. describes the kits.

Cat. Nos.	Controllers Supported	Description
1769-RTB45	CompactLogix 5370 L1	• Four 10-pin connectors used to connect wiring to the controllers' embedded digital I/O module. • One 5-pin connector used to connect an external 24V DC power source to the controller.
1769-RTB40DIO	CompactLogix 5370 L2	Four 10-pin connectors used to connect wiring to the controllers' embedded digital I/O module.
1769-RTB40AIO	1769-L24ER-QBFC1B and 1769-L27ERM-QBFC1B	Four 10-pin connectors used to connect wiring to the controllers' embedded analog I/O module.

CompactLogix Power Supplies

Select power supplies based on the controller and the number of additional I/O banks.

For a	Select
CompactLogix 5370 L3 controller	• One 1769 power supply for the controller and local I/O modules • One 1769 power supply for each additional bank of I/O modules
CompactLogix 5370 L2 controller	No power supply as it is integral to the controller package
CompactLogix 5370 L1 controller	No power supply as it is integral to the controller package
1768 CompactLogix controller	• One 1768 power supply for the controller and 1768 modules • One 1769 power supply for each additional bank of I/O modules

Power Supplies

Cat. No.	Description	Voltage Category	Operating Voltage Range
1769-PA2	1769 Compact I/O expansion power supply	120V/220V AC	85...265V AC
1769-PB2		24V DC	19.2...31.2V DC
1769-PA4		120V/220V AC	85...265V AC or 170...265V AC (switch selectable) 47...63 Hz
1769-PB4		24V DC	19.2...31.2V DC
1768-PA3	1768 CompactLogix power supply	120V/220V AC	85...265V AC or 108...132V DC
1768-PB3		24V DC	16.8...31.2V DC

For detailed specifications, see Compact Power Supplies Specifications Technical Data, publication 1769-TD008.

Allen-Bradley, Compact GuardLogix, Compact I/O, CompactBlock Guard I/O, CompactLogix, ControlLogix, FactoryTalk, GuardLogix, Integrated Architecture, Kinetix, Logix5000, PanelView, POINT Guard I/O, POINT I/O, POINTBus, PowerFlex, Rockwell Software, Rockwell Automation, RSLinx, RSLogix, RSNetWorx, SCANport, SoftLogix, Stratix 6000, Stratix 8000, Studio 5000, Studio 5000 Logix Designer, and Ultra are trademarks of Rockwell Automation, Inc.

Trademarks not belonging to Rockwell Automation are property of their respective companies.

www.rockwellautomation.com

Power, Control and Information Solutions Headquarters

Americas: Rockwell Automation, 1201 South Second Street, Milwaukee, WI 53204-2496 USA, Tel: (1) 414.382.2000, Fax: (1) 414.382.4444
Europe/Middle East/Africa: Rockwell Automation NV, Pegasus Park, De Kleetlaan 12a, 1831 Diegem, Belgium, Tel: (32) 2 663 0600, Fax: (32) 2 663 0640
Asia Pacific: Rockwell Automation, Level 14, Core F, Cyberport 3, 100 Cyberport Road, Hong Kong, Tel: (852) 2887 4788, Fax: (852) 2508 1846

Publication 1769-SG001P-EN-P - January 2014
Supersedes Publication 1769-SG001O-EN-P - January 2013

Copyright © 2014 Rockwell Automation, Inc. All rights reserved. Printed in the U.S.A.

CompactLogix Power Supplies Specifications

1768 CompactLogix Power Supplies Catalog Numbers 1768-PA3, 1768-PB3

1769 Compact I/O Power Supplies Catalog Numbers 1769-PA2, 1769-PB2, 1769-PA4, 1769-PB4

Topic	Page
1768 CompactLogix Power Supplies	3
1769 Compact I/O Power Supplies	7

Environmental Specifications - 1768 and 1769 Power Supplies

Attribute	1768-PA3, 1769-PB3 1769-PA2, 1769-PB2, 1769-PA4, 1769-PB4
Temperature, operating IEC 60068-2-1 (Test Ad, Operating Cold), IEC 60068-2-2 (Test Bd, Operating Dry Heat), IEC 60068-2-14 (Test Nb, Operating Thermal Shock)	0…60 °C (32…140 °F)
Temperature, storage IEC 60068-2-1 (Test Ab, Unpackaged Nonoperating Cold), IEC 60068-2-2 (Test Bb, Unpackaged Nonoperating Dry Heat), IEC 60068-2-14 (Test Na, Unpackaged Nonoperating Thermal Shock)	-40…85 °C (-40…185 °F)
Relative humidity IEC 60068-2-30 (Test Db, Unpackaged Nonoperating Damp Heat)	5…95% noncondensing
Vibration IEC 60068-2-6 (Test Fc, Operating)	5 g @ 10…500 Hz
Shock, operating IEC 60068-2-27 (Test Ea, Unpackaged Shock)	30 g
Shock, nonoperating IEC 60068-2-27 (Test Ea, Unpackaged Shock)	50 g

Important User Information

Solid state equipment has operational characteristics differing from those of electromechanical equipment. Safety Guidelines for the Application, Installation and Maintenance of Solid State Controls (publication SGI-1.1 available from your local Rockwell Automation sales office or online at http://www.rockwellautomation.com/literature/) describes some important differences between solid state equipment and hard-wired electromechanical devices. Because of this difference, and also because of the wide variety of uses for solid state equipment, all persons responsible for applying this equipment must satisfy themselves that each intended application of this equipment is acceptable.

In no event will Rockwell Automation, Inc. be responsible or liable for indirect or consequential damages resulting from the use or application of this equipment.

The examples and diagrams in this manual are included solely for illustrative purposes. Because of the many variables and requirements associated with any particular installation, Rockwell Automation, Inc. cannot assume responsibility or liability for actual use based on the examples and diagrams.

No patent liability is assumed by Rockwell Automation, Inc. with respect to use of information, circuits, equipment, or software described in this manual.

Reproduction of the contents of this manual, in whole or in part, without written permission of Rockwell Automation, Inc., is prohibited.

Throughout this manual, when necessary, we use notes to make you aware of safety considerations.

WARNING	Identifies information about practices or circumstances that can cause an explosion in a hazardous environment, which may lead to personal injury or death, property damage, or economic loss.
IMPORTANT	Identifies information that is critical for successful application and understanding of the product.
ATTENTION	Identifies information about practices or circumstances that can lead to personal injury or death, property damage, or economic loss. Attentions help you identify a hazard, avoid a hazard, and recognize the consequence
SHOCK HAZARD	Labels may be on or inside the equipment, for example, a drive or motor, to alert people that dangerous voltage may be present.
BURN HAZARD	Labels may be on or inside the equipment, for example, a drive or motor, to alert people that surfaces may reach dangerous temperatures.

Rockwell Automation, Rockwell Software, Allen-Bradley, TechConnect, Compact I/O, and CompactLogix are trademarks of Rockwell Automation, Inc.

Trademarks not belonging to Rockwell Automation are property of their respective companies.

1768 CompactLogix Power Supplies

The 1768 backplane requires one 1768 power supply. The power supply is a dual input supply that operates in multiple ranges. The power supply also offers a 24V dc external power source. The power supply sends 24V dc to the controller in slot 0.

- The controller converts the 24V dc to 5V dc and 24V dc and distributes it as needed.
  - 5V and 24V power to 1769 I/O modules on the right side of the controller
  - 24V power to 1768 modules on the left side of the controller

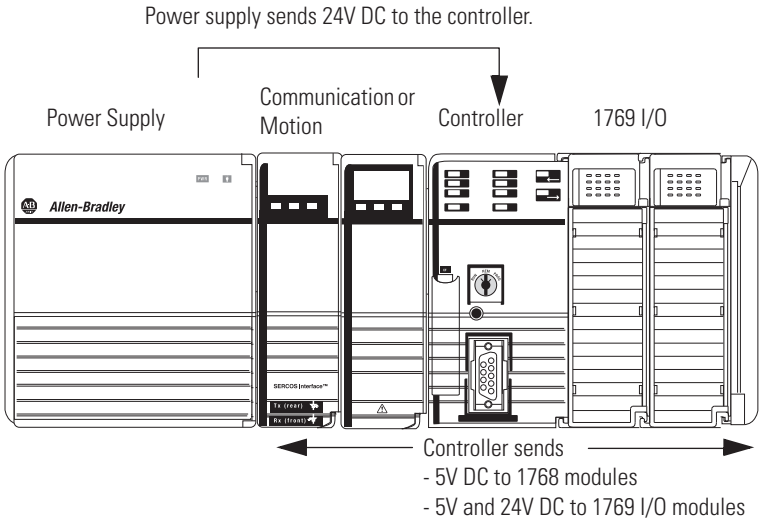

The 1768 modules do not have a distance rating to the 1768 power supply. For the 1769 I/O modules in the 1768 system, the distance rating is from the controller and not the 1768 power supply.

Technical Specifications - 1768 CompactLogix Power Supplies

Attribute	1768-PA3	1768-PB3
Input voltage range	85…265V AC 108…132V DC	16.8...31.2V DC
Input voltage, nom	120V/220V AC	24V DC
Input frequency range	47…63 Hz	DC
Input power, max	120VA/120 W	112 W
Output power, max	90 W 24V DC to backplane: 3.5 24V DC to user-accessible terminal block: 0.25 A	
Output power, min	6 W 24V DC to backplane: 0.25 A 24V DC to user-accessible terminal block: 0.0 A	
Power dissipation	30 W	22 W
Inrush current, max	50 A @ 85…132V AC 80 A @ 195…265V AC	50 A @ 16.8...31.2V DC(1)

Technical Specifications - 1768 CompactLogix Power Supplies

Attribute	1768-PA3	1768-PB3
Isolation voltage	250V, reinforced insulation type, input to system and 24V DC AUX Tested at 4250V DC for 60 s 150V, basic insulation type, 24V DC AUX to system Tested at 2200V dc for 60 s	
Internal overcurrent protection	Non-replaceable fuse is soldered in place	
Recommended external overcurrent protection	4…6 A @ 28.5…36.7 A^2S	8...12 A @ 166...250 A^2S
Overcurrent protection	15 A, user supplied	
Weight, approx.	0.98 kg (2.15 lb)	1.01 kg (2.22 lb)
Dimensions (HxWxD), approx.	131.25 x 132.75 x 105.50 mm (5.17 x 5.23 x 4.15 in.)	
Module location	DIN rail or panel mount	
Mounting screw torque	1.16 N•m (10 lb•in) - use M4 or #8 screws	
Wire category	1 - on power ports[2]	
Wire size, input power terminal	14 AWG (2.5 mm^2) solid or stranded copper wire rated at 75 °C (167 °F) or greater, 1.2 mm (3/64 in.) insulation maximum	
Wire size, output power terminal	14 AWG (2.5 mm^2)…22 AWG (0.25 mm^2) solid or stranded copper wire rated at 75 °C (167 °C) or greater, 1.2 mm (3/64 in.) insulation max	
Conductor screw torque	0.6 N•m (5 lb•in)	
North American temperature code	T4	
Output #1: 24V DC to backplane		
Ride-through interval time, min	25 ms @ 90 W	5 ms @ 90 W
Full power hold-up interval	5 ms @ 90 W	
Extended hold-up interval	8...12 s @ 1.25 W	
Output #2: 24V DC to front panel terminal block		
Voltage	18...27.60V @ front panel	
Output disable	Disable output during hold-up periods	
Enclosure type rating	None (open-style)	

(1) Does not include X-capacitor charging current.

(2) Use this conductor category information for planning conductor routing as described in the system level installation manual. See the Industrial Automation Wiring and Grounding Guidelines, publication 1770-4.1.

Certifications - 1768 CompactLogix Power Supplies

Certification[1]	1768-PA3, 1768-PB3
c-UL-us	UL Listed Industrial Control Equipment, certified for US and Canada. See UL File E65584. UL Listed for Class I, Division 2 Group A,B,C,D Hazardous Locations, certified for U.S. and Canada. See UL File E194810.
CE	European Union 89/336 EEC EMC Directive, compliant with: • EN 50082-2; Industrial Immunity • EN 61326-1; Meas./Control/Lab., Industrial Requirements • EN 61000-6-2; Industrial Immunity • EN 61000-6-4; Industrial Emissions • EN 61131-2; Programmable Controllers (Clause 8, Zone A & B) European Union 73/23/EEC LVD Directive, compliant with: • EN 1010-1; Meas./Control/Lab
C-Tick	Australian Radiocommunications Act, compliant with: AS/NZS CISPR 11; Industrial Emissions

(1) When marked. See the Product Certification link at http://www.ab.com for Declarations of Conformity, Certificates, and other certification details.

Power Requirements and Transformer Sizing - 1768 CompactLogix Power Supplies

1768-PA3 Power Dissipation

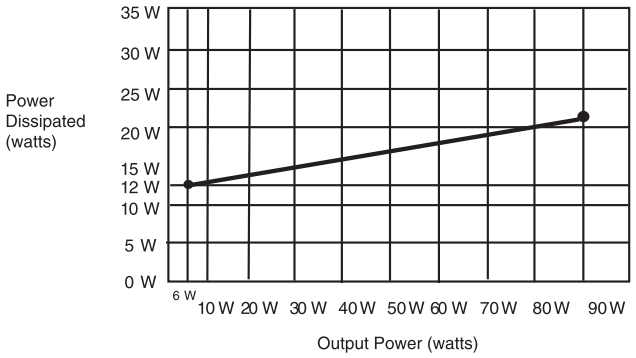

1768-PA3 Input Power Requirements

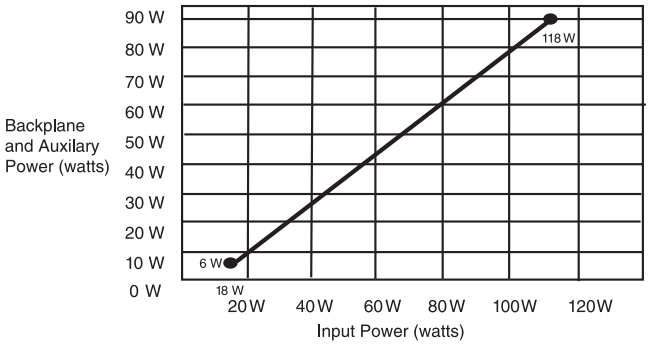

1768-PB3 Power Dissipation

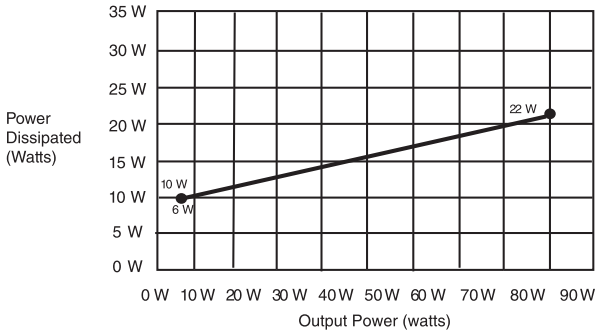

1768-PB3 Input Power Requirements

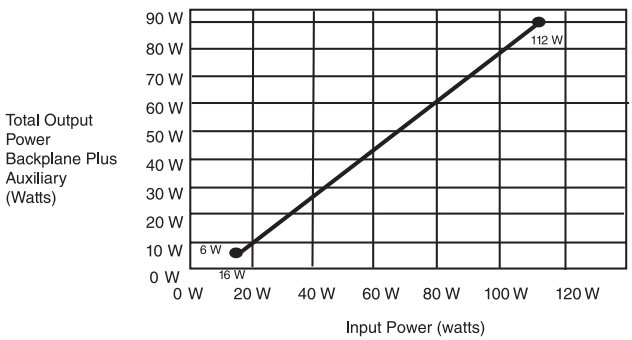

Mounting Dimensions - 1768 CompactLogix Power Supplies

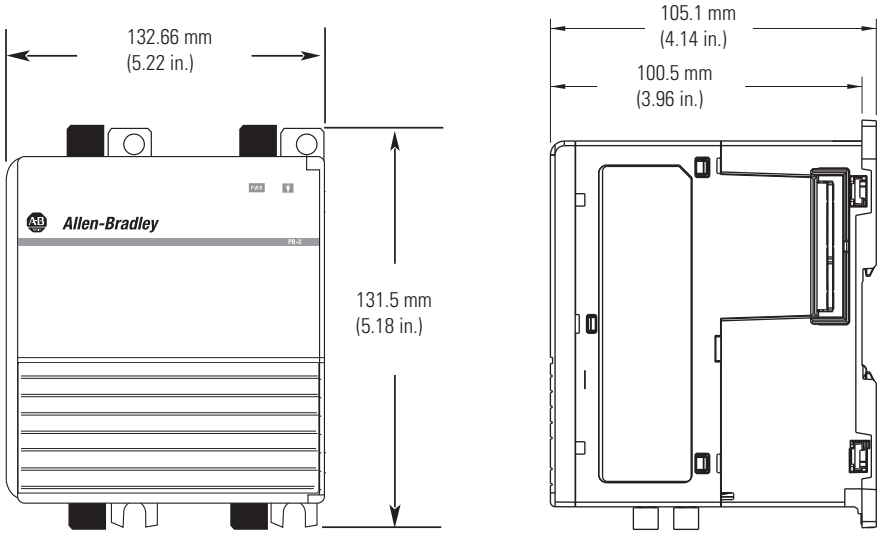

1769 Compact I/O Power Supplies

Each 1769-L3*x* controller and additional bank of I/O modules requires a 1769 power supply. Place 1769 I/O modules to the left or right of the 1769 power supply. As many as eight I/O modules can be placed on each side of the power supply.

Each 1769 module also has a power supply distance rating (the number of modules from the power supply). Each module must be located within its distance rating. See the specifications for the module to determine its distance rating.

Technical Specifications - 1769 Compact I/O Power Supplies

Attribute	1769-PA2	1769-PB2	1769-PA4	1769-PB4
Input voltage range	85…265V AC	19.2...31.2V DC	85…265V AC or 170...265V AC, switch selectable	19.2...31.2V DC
Input voltage, nom	120V/220V AC	24V DC	120V/220V AC	24V DC
Power consumption	100 VA @ 120V AC 130 VA @ 240V AC	50 VA @ 24V DC	200 VA @ 120V AC 240 VA @ 240V AC	100 VA @ 24V DC
Power dissipation	8 W @ 60° C (140° F)	7.5 W @ 60° C (140° F)	18 W @ 60° C (140° F)	14.5 W @ 60° C (140° F)
Current capacity @ 5V	2.0 A	2.0 A	4.0 A	4.0 A
Current capacity @ 24V	0.8 A	0.8 A	2.0 A	2.0 A
Inrush current, max	25 A @ 132V AC	30 A @ 31.2V DC	25 A @ 132V AC	30 A @ 31.2V DC
Isolation voltage	265V (continuous), reinforced insulation type (IEC Class 1 grounding required) Routine tested @ 2596V DC for 1 s, AC power input to system and AC power input to 24V DC user power	75V (continuous), reinforced insulation type (IEC Class 1 grounding required) Routine tested at 1697V DC for 1 s, DC power input to system	265V (continuous), reinforced insulation type (IEC Class 1 grounding required) Routine tested at 2596V DC for 1 s, AC power input to system	75V (continuous), reinforced insulation type (IEC Class 1 grounding required) Routine tested at 1697V DC for 1 s, DC power input to system
Fuse type	Wickmann 19195-3.15A Littelfuse 02183.15MXP	Wickmann 19193-6.3A Littelfuse 021706.3MXP	Wickmann 19195-3.15A Littelfuse 02183.15MXP	Wickmann 19193-6.3A Littelfuse 021706.3MXP
Weight, approx.	525 g (1.16 lb)		630 g (1.39 lb)	
Dimensions (HxWxD), approx.	118 x 70 x 87 mm (4.65 x 2.76 x 3.43 in.)			
Module location	DIN rail or panel mount			
Mounting screw torque	1.16 N•m (10 lb•in) - use M4 or #8 screws			
Power supply distance rating	8 8 I/O modules can be connected on either side of the power supply for a maximum of 16 modules			
Wire category[1]	1 - on power ports	2 - on power ports	1 - on power ports	2 - on power ports
Wire size	14 AWG (2.5 mm^2) solid copper wire rated at 90 °C (194 °F) or greater, 1.2 mm (3/64 in.) insulation max			
North American temperature code	T3C			
IEC temperature code	—	T4	—	T4
Enclosure type rating	None (open-style)			

[1] Use this conductor category information for planning conductor routing as described in the system level installation manual. See the Industrial Automation Wiring and Grounding Guidelines, publication 1770-4.1.

Certifications - 1769 Compact Power Supplies

Certification[1]	1769-PA2, 1769-PA4	1769-PB2, 1769-PB4
c-UL-us	UL Listed for Class 1, Division 2 Group A,B,C,D Hazardous Locations, certified for U.S. and Canada. See UL File E10314	
CE	European Union 2004/108/EC EMC Directive, compliant with: • EN 61000-6-2; Industrial Immunity • EN 61000-6-4; Industrial Emissions	
C-Tick	Australian Radiocommunications Act, compliant with: AS/NZS CISPR 11; Industrial Emissions	
	—	European Union 94/9/EC ATEX Directive, compliant with: • EN 60079-15; Potentially Explosive Atmospheres, Protection "n" (Zone 2) • EN 60079-0; General Requirements (Zone 2)

(1) When marked. See the Product Certification link at http://www.ab.com for Declarations of Conformity, Certificates, and other certification details.

Power Requirements and Transformer Sizing - 1769 CompactLogix Power Supplies

1769-PA2 Output Derating

User +24V Current Draw at 0 A

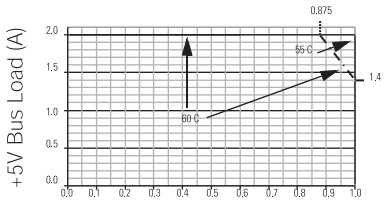

User +24V Current Draw at 0.2 A

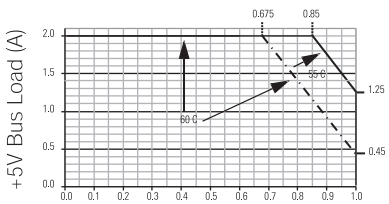

User +24V Current Draw at 0.25 A

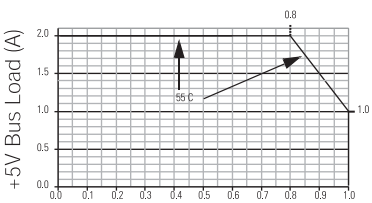

1769-PA2 Power Disspation

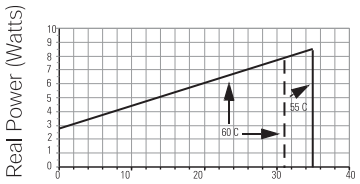

Bus +5V, +24V, and User Load (Watts)

1769-PB2 Output Derating

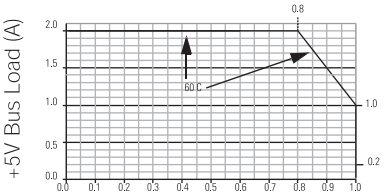

1769-PB2 Power Dissipation

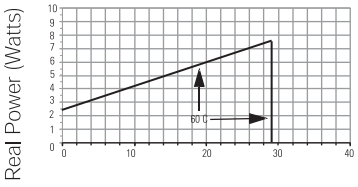

Bus +5V, +24V, and User Load (Watts)

1769-PA4 Output Derating

Total Output: 68 W @ 55 °C (131 °F) or below
61 W @ 60 °C (140 °F) or below

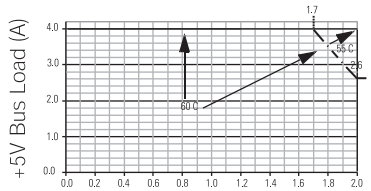

1769-PB4 Output Derating

Total Output: 68 W @ 55 °C (131 °F) or below
61 W @ 60 °C (140 °F) or below

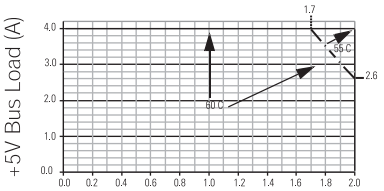

1769-PA4 Power Disspation

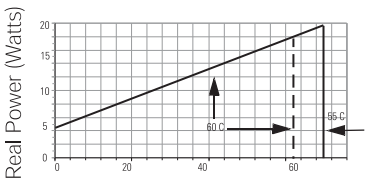

Bus +5V, +24V, and User Load (Watts)

1769-PB4 Power Disspation

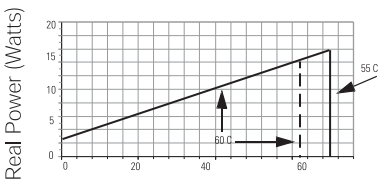

Bus +5V, +24V, and User Load (Watts)

Mounting Dimensions - 1769 CompactLogix Power Supplies

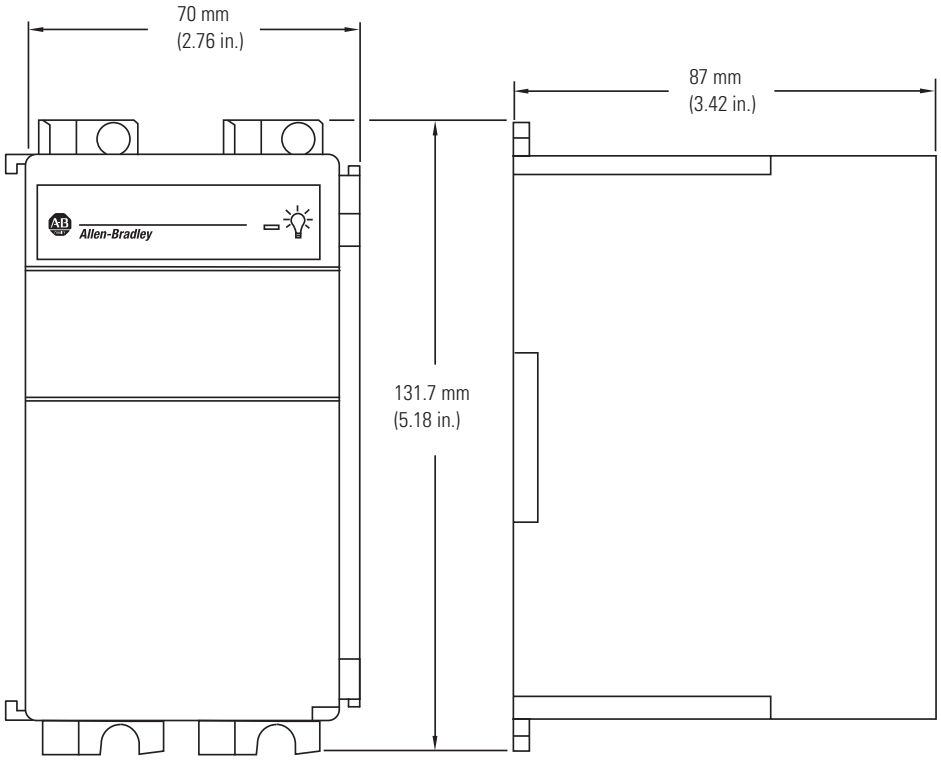

Notes:

Rockwell Automation Support

Rockwell Automation provides technical information on the Web to assist you in using its products. At http://www.rockwellautomation.com/support/, you can find technical manuals, a knowledge base of FAQs, technical and application notes, sample code and links to software service packs, and a MySupport feature that you can customize to make the best use of these tools.

For an additional level of technical phone support for installation, configuration, and troubleshooting, we offer TechConnect support programs. For more information, contact your local distributor or Rockwell Automation representative, or visit http://www.rockwellautomation.com/support/.

Installation Assistance

If you experience an anomoly within the first 24 hours of installation, review the information that is contained in this manual. You can contact Customer Support for initial help in getting your product up and running.

United States or Canada	1.440.646.3434
Outside United States or Canada	Use the Worldwide Locator at http://www.rockwellautomation.com/support/americas/phone_en.html, or contact your local Rockwell Automation representative.

New Product Satisfaction Return

Rockwell Automation tests all of its products to ensure that they are fully operational when shipped from the manufacturing facility. However, if your product is not functioning and needs to be returned, follow these procedures.

United States	Contact your distributor. You must provide a Customer Support case number (call the phone number above to obtain one) to your distributor to complete the return process.
Outside United States	Please contact your local Rockwell Automation representative for the return procedure.

Documentation Feedback

Your comments will help us serve your documentation needs better. If you have any suggestions on how to improve this document, complete this form, publication RA-DU002, available at http://www.rockwellautomation.com/literature/.

www.rockwellautomation.com

Power, Control and Information Solutions Headquarters

Americas: Rockwell Automation, 1201 South Second Street, Milwaukee, WI 53204 USA, Tel: (1) 414.382.2000, Fax: (1) 414.382.4444
Europe/Middle East/Africa: Rockwell Automation, Vorstlaan/Boulevard du Souverain 36, 1170 Brussels, Belgium, Tel: (32) 2 663 0600, Fax: (32) 2 663 0640
Asia Pacific: Rockwell Automation, Level 14, Core F, Cyberport 3, 100 Cyberport Road, Hong Kong, Tel: (852) 2887 4788, Fax: (852) 2508 1846

Publication 1769-TD008A-EN-P - January 2010

Copyright © 2010 Rockwell Automation, Inc. All rights reserved. Printed in the U.S.A.

BOM #12

Product: 1492-GS1G200

Description: 1492-GS High Density Mini Circuit Breakers (Toggle Style)

Representative Photo Only (actual product may vary based on configuration selections)

MINIATURE CIRCUIT BREAKER DATA	
Electrical Standards	UL
Number of Poles	1 pole
Magnetic Trip Range	G-Trip Characteristics - Inductive Loads (AC)
Amp Rating	20.0 A
Optional Auxiliary Contact	No Contact

CERTIFICATIONS AND APPROVALS	
UL	1077, Guide No. QVNU2, File No. E65138
CSA	22.2 NO. 235
EN	60934
CE	Marked
For UL Certifications Directory:	http://database.ul.com/cgi-bin/XYV/template/LISEXT/1FRAME/index.htm

Specifications ❶

Cat. No.	1492-GS																	
Description	High-density circuit breaker (supplementary protector) with universal mounting foot for Allen-Bradley and DIN rail mounting																	
Maximum Voltage Ratings	277/480V AC 50/60 Hz 65V DC																	
Standard Current Ratings Internal Resistance per Pole	**A** **Ω**	0.2 26	0.5 4.2	0.8 1.6	1.0 1.1	1.5 0.47	2.0 0.25	2.5 0.20	3.0 0.13	4.0 0.08	5.0 0.06	6.0 0.05	8.0 0.01	10.0 0.01	12.0 0.01	15.0 0.01	16.0 0.01	20.0 0.005	25.0 0.004
Dielectric Strength	1960V AC																	
Shock and Vibration Specifications	Shock: 25 G, 11 ms duration Vibration: 5 G (10…500 Hz)																	
Insulation Resistance	Greater than 100 MΩ @ 500V DC																	
Current Capacity of Auxiliary Contacts (N.O., N.C.)	1.0 A AC or DC (resistive load)																	
Voltage Rating of Auxiliary Contacts	277V AC 65V DC																	
Operating Life	6000 cycles @ rated current (UL 1077)																	
Temperature Range	–40…+149°F (–40…+65°C)																	
Wire Size	#22…#10 AWG (0.5…6 mm²)																	
Recommended Wire Strip Length	0.51" (13.0 mm) for Mail Terminals 0.41" (10.4 mm) for Auxiliary Terminals																	
Recommended Tightening Torque	5 lb-in. (0.565 Nm)																	

❶ Performance Data — See page Important-2.

Approvals

- UL 1077
- CSA 22.2 NO. 235
- VDE 0631 (IEC 60934)

In North America, the Cat. No. 1492-GS circuit breaker is rated as a Supplementary Protector with a short-circuit current rating. Internationally, it is rated by IEC as a Circuit Breaker for Equipment with an interrupt rating

Electrical Characteristics

Poles	Rated Current (A)	Voltage Rating		Short-Circuit Current Rating ❶ Interrupt Rating *I*cn (IEC only)
		AC	DC	
UL 1077 Supplementary Protector Rating				
1	0.2…5	277	—	0.4 kA, U2
1	6…25	277	—	0.7 kA, U2
2, 3	0.2…5	277/480	—	0.4 kA, U2
2, 3	6…25	277/480	—	0.5 kA, U2
1, 2, 3	0.2…5	—	65	0.4 kA, U2
1, 2, 3	6…25	—	65	0.8 kA, U2
1	0.2…16	277	—	5 kA, C1
1	18…25	277	—	2 kA, C1
2, 3	0.2…16	277/480	—	5 kA, C1
2, 3	18…25	277/480	—	2 kA, C1
1	0.2…25	—	65	2 kA, C1
CSA 22.2 #235 Supplementary Protector Ratings				
1	0.2…16	277	—	5 kA, C1
1	18…25	277	—	2 kA, C1
2, 3	0.2…16	277/480	—	5 kA, C1
2, 3	18…25	277/480	—	2 kA, C1
1	0.2…25	—	65	2 kA, C1
IEC 60934 Circuit Breaker for Equipment Ratings				
1	0.2…5	250	—	0.4 kA
1	6…25	250	—	0.8 kA
2, 3	0.2…5	240/415	—	0.4 kA
2, 3	6…25	240/415	—	0.8 kA
1	0.2…5	—	65	0.4 kA
1	6…25	—	65	0.8 kA

❶ The short-circuit current rating is followed by a letter and number designating the test conditions and any calibrations and dielectric tests following the short-circuit test. These designations are defined as follows (see ❷ also):
C — Indicates that the short-circuit test was conducted with series overcurrent protection
U — Indicates that the short-circuit test was conducted without series overcurrent protection
1 — Indicates that a recalibration and dielectric test was not conducted as part of the short-circuit test
2 — Indicates that a recalibration and dielectric test was conducted as part of the short-circuit test

❷ These alphanumeric designations were established by UL. CSA has not yet adopted them; however, the test conditions are equivalent to UL and the coding is appropriate.

http://raise.rockwellautomation.com/raconfig/rtcache/jpg/1492gs.jpg[10/7/2015 4:09:21 PM]

BOM #13

Compact Modular Fuse Holders

COOPER Bussmann

DIN-Rail Mount Fuse Holders Protect Your Electrical System and Simplify Installation

- Colour coded for simple visual identification: yellow for **PV (1000Vdc)**, red for **IEC (690Vac)** and **black** for **UL (600Vac/dc)** applications.
- CHPV Models, with 1000Vdc rating for use with solar gPV fuse links, are suitable for photovoltaic applications of any size.
- Tested to a wide range of standards: IEC, cULus, CCC, CSA and UR, allowing for use across global applications.
- World class space-saving footprint - smaller than any other Modular Fuse Holder, reducing required installation space.
- Toolless DIN-Rail mounting improves ease of use and reduces installation time and costs.
- Rated for use with 75ºC or 90ºC wire, fine stranded wire, spade terminals and with comb-bus bars. Use any higher temperature rated wire with appropriate derating.

PV IEC UL

For more information visit www.cooperbussmann.com/ModularFuseHolders

Modular Fuse Holder Selection Table (10 x 38, Photovoltaic and Class CC)

Series & Size	Catalogue Number		Rated Voltage & Rated Current	Agency Markings	Number of Poles	Terminal Rating	Rated Breaking Capactiy	Cooper Bussmann Fuse Links
	With Indicator	Without Indicator						
CHM 10x38 and Midget	CHM1DIU	CHM1DU	IEC 690Vac/32A UL 600Vac/30A;	IEC 60269-2 UR; CSA; CCC	1	IEC: 1 to 25mm² 70°C PVC/Copper Cable Solid, Stranded, Fine Stranded, Spade Lug, Comb Bus Bar; Single and Dual	IEC 120kA rms sym UL 200kA rms sym CCC 100kA rms sym	IEC: C10 Series UL: FNQ, KLM, FNM, KTK, BAF, FWA, PVM, AGU, BAN, FWC.
	CHM2DIU	CHM2DU			2			
	CHM3DIU	CHM3DU			3			
	CHM4DIU	CHM4DU			4			
	CHM1DNIU	CHM1DNU		IEC 60269-2	1-pole + 1 neutral			
	CHM3DNIU	CHM3DNU			3-pole + 1 neutral			
	CHM1DI-48U	N/A	IEC 48Vdc/32A UL 48Vdc/30A;	IEC 60269-2; UR; CSA; CCC	1			
	N/A	CHM1DNXU	IEC 690Vac/32A	IEC 60269-2	1 neutral		N/A	N/A
CHPV Photovoltaic	CHPV1IU	CHPV1U	IEC 1000Vdc/32A UL 1000Vdc/30A;	IEC 60269-1 UR; CSA; CCC UL4248-18	1		33kA	Solar PV series, PVM, PV-xxA10F
	CHPV2IU	CHPV2U			2			
CHCC Class CC	CHCC1DIU	CHCC1DU	UL 600Vac/dc 30A	UL; CSA; CCC	1	Cable 75°C and 90°C Cu cable	200kA rms sym	LP-CC, FNQ-R, KTK-R
	CHCC2DIU	CHCC2DU			2			
	CHCC3DIU	CHCC3DU			3			
	N/A	CHCC1DI-48U	UL 48Vdc/30A		1			

Features

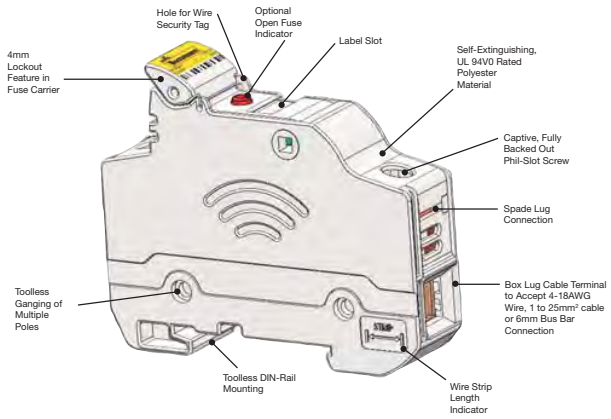

Specifications

Temperature Operating Range:
-20°C to +120°C (non-indicating)
-20°C to +90°C (indicating)
Flammability: Self-extinguishable UL 94V0 rated

Comb Bus Bar & Power Feed Accessories Make Installation Easier

- Distributes power in single- or three-phase configurations
- Cut-to-length solution does not compromise finger-safe protection
- Single-phase bus bars rated to 1000Vdc and 100A in end-fed configuration (200A for center-fed configuration)
- Three-phase bus bars rated to 600Vac/dc and 100A in end-fed configuration (200A for center-fed configuration)
- Power feed terminals for single-phase and three-phase service

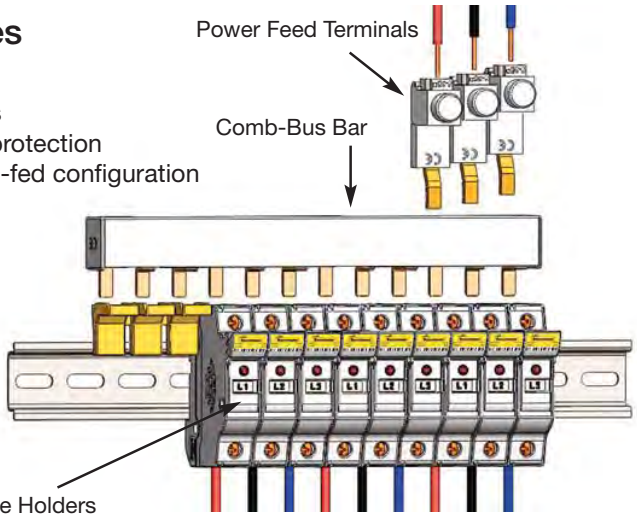

© 2012 Cooper Bussmann
www.cooperbussmann.com

COOPER Bussmann

Time-Current Characteristic Curves–Average Melt

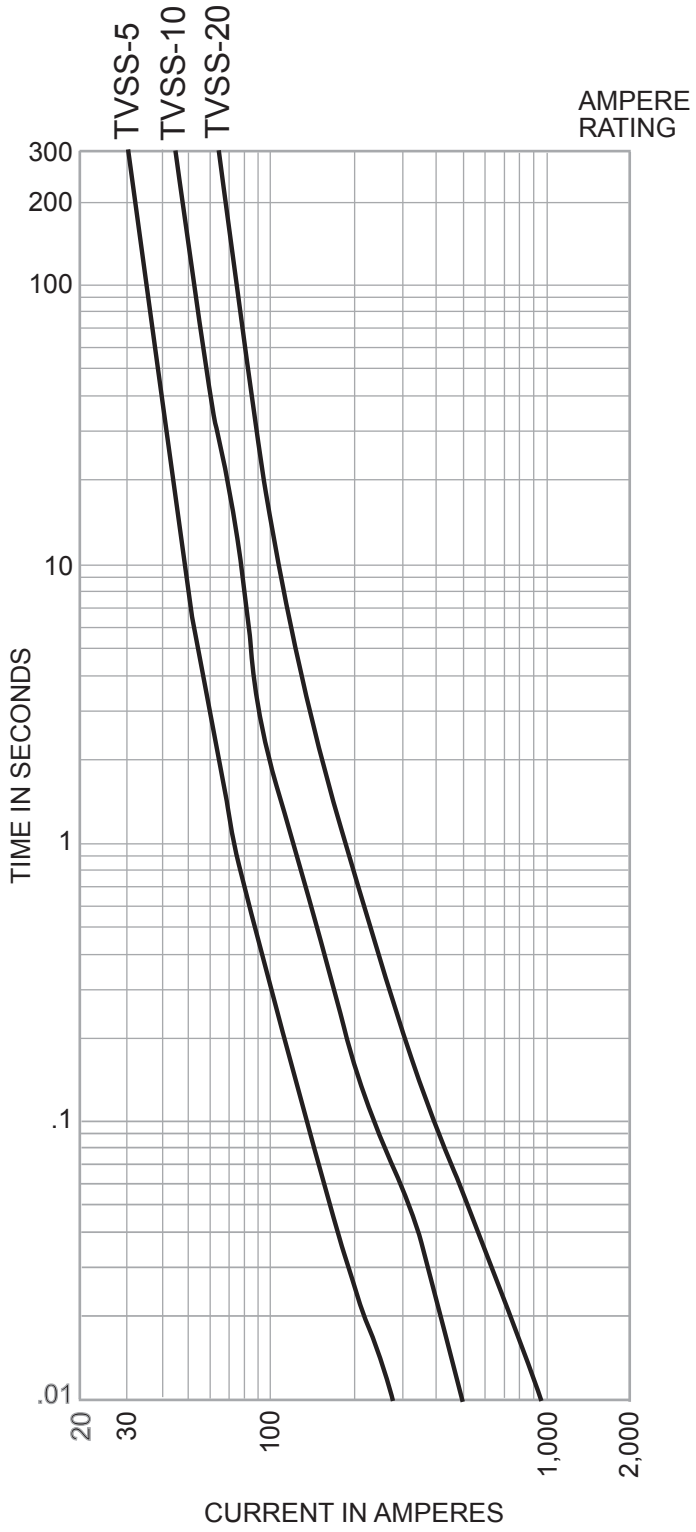

Time-Current Characteristic Curves–Peak Let-Through

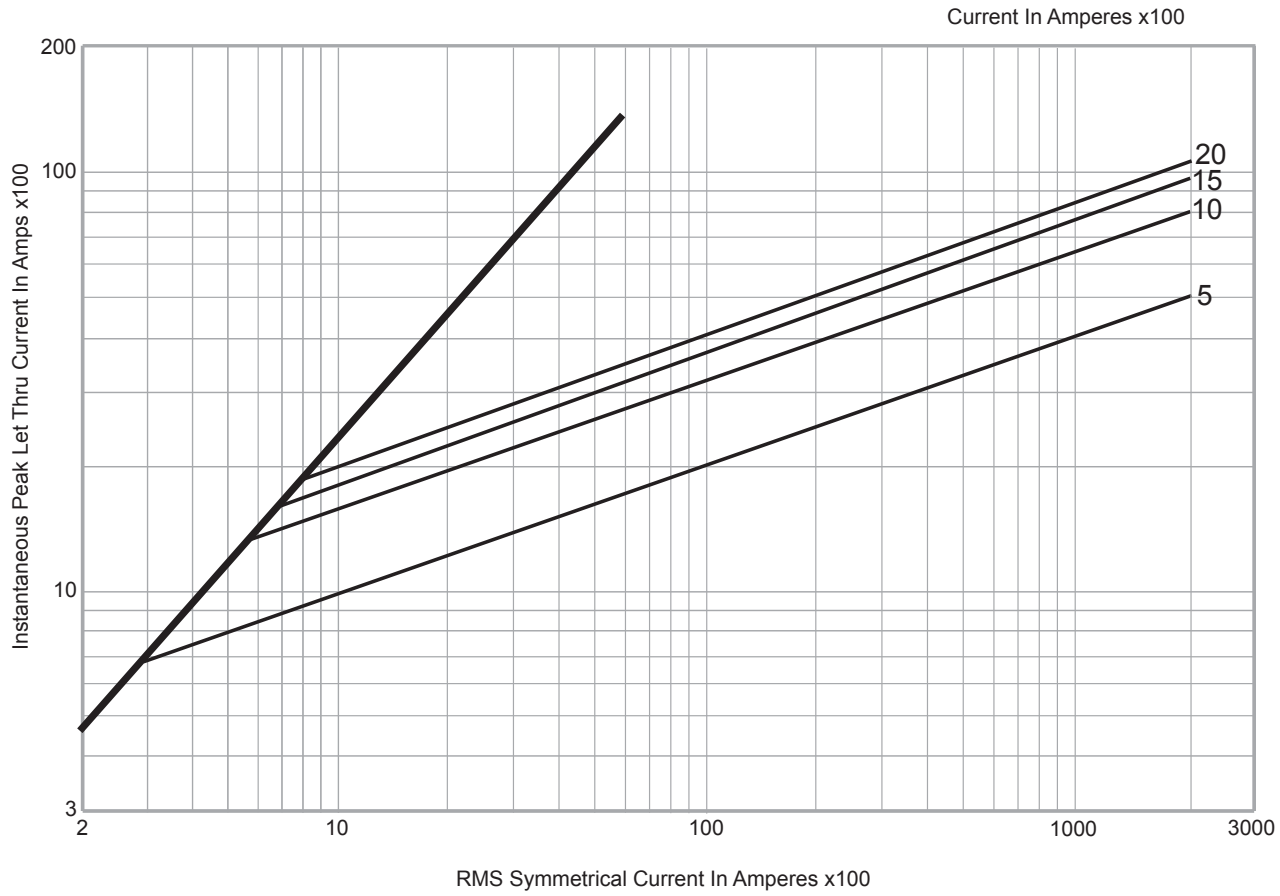

The only controlled copy of this Data Sheet is the electronic read-only version located on the Bussmann Network Drive. All other copies of this document are by definition uncontrolled. This bulletin is intended to clearly present comprehensive product data and provide technical information that will help the end user with design applications. Bussmann reserves the right, without notice, to change design or construction of any products and to discontinue or limit distribution of any products. Bussmann also reserves the right to change or update, without notice, any technical information contained in this bulletin. Once a product has been selected, it should be tested by the user in all possible applications.

DIN-Rail TVS Series

Status LED

OFF - Suppressor Non-Operational (power may be on)
GREEN - Suppressor Operational (power on)

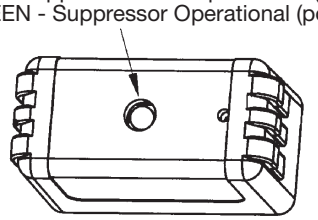

Specifications

Description: DIN-Rail mount voltage surge protection system for AC or DC voltage using diode or MOV technology.

Construction:

Suppressor: Case: 20% glass filled PES (Polyethersulfone)
Terminals: 110 Copper
Terminal Plating: Electroless tin

Holder: Case: 15% glass filled PBT (Polybutylene Terephthalate)
Interface Clips: CDA 7025
Interface Clip Plating: Electroless tin
Contact Lubricant: Fluoroether grease
Box Lug: Copper
DIN-Rail Springs: Stainless steel

Ratings*:

Volts: — 12Vdc (2kA surge current)
— 24Vdc (2kA surge current)
— 48Vdc (2kA surge current)
— 120Vac (7kA-18kA surge current)
— 240Vac (7kA-18kA surge current)

* See Catalog Numbers table for all specifications pertaining to specific voltage ratings.

Agency Information: UL Recognized (UL 1449) for AC products, (UL 497B) for DC products, CSA Approved.

Dimensions -in

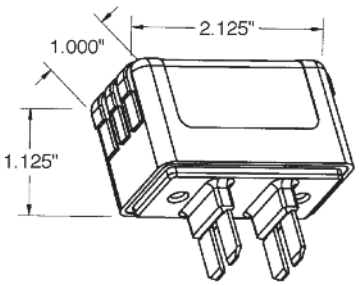

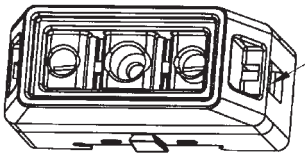

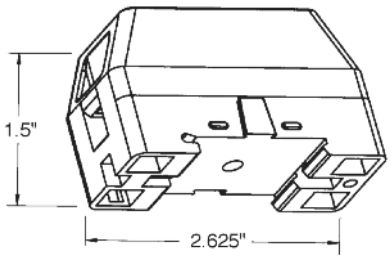

Product Specifications:

1. All TVS devices have non-polarized electrical connections as shown.
2. Suppressor voltage characteristics per chart.
3. Suppressor to provide non-interrupted service.
4. Enclosure material is 94V0 flame and explosion resistant.
5. Product markings show manufacturer, part number and safety warnings as required.
6. Mechanical dimensions as noted.
7. Suppressor Status LED as shown.
8. AC units operate on either 50 or 60Hz.

Catalog Numbers

Catalog Numbers	Voltage Application	MCOV	Technology	SVR 500A, 8x20μs	Surge Current Rating	Agency Information	Label Color
TVS12DCD	12Vdc	14Vdc	SASD	36Vdc	2kA	UL 497B	Red
TVS24DCD	24Vdc	28Vdc	SASD	58Vdc	2kA	UL 497B	White
TVS48DCD	48Vdc	57Vdc	SASD	90Vdc	2kA	UL 497B	Black
TVS120ACD	120Vac	140Vac	SASD	330Vac	7kA	UL 1449	Blue
TVS120ACM	120Vac	140Vac	MOV	500Vac	18kA	UL 1449	Grey
TVS240ACD	240Vac	280Vac	SASD	600Vac	7kA	UL 1449	Blue
TVS240ACM	240Vac	280Vac	MOV	800Vac	18kA	UL 1449	Grey

Data Sheet: 9006

BOM #15

Product: 1492-GH100

Description: 1492-GH High Density Mini Circuit Breakers (Push to Set)

Representative Photo Only (actual product may vary based on configuration selections)

MINIATURE CIRCUIT BREAKER DATA	
Electrical Standards	UL
Amp Rating	10.0 A

CERTIFICATIONS AND APPROVALS	
UL	1077, Guide No. QVNU2, File No. E65138
CSA	22.2 NO. 235
VDE	0631 (EN 60934)
CE	Marked
For UL Certifications Directory:	http://database.ul.com/cgi-bin/XYV/template/LISEXT/1FRAME/index.htm

BOM #16

SOLAHD

Dry Contact Relay Kit

RELAYCARD-SDU

Instruction Manual

While every precaution has been taken to ensure accuracy and completeness in this manual, SolaHD assumes no responsibility, and disclaims all liability for damages resulting from use of this information or for any errors or omissions.

©2009 SolaHD. All rights reserved throughout the world. Specifications are subject to change without notice.

®SolaHD name and logo are registered trademarks of EGS Electrical Group, LLC. All names referred to are trademarks or registered trademarks of their respective owners.

Table of Contents

What's Included 4

Installation 4

Product Description 5–6

Notes 7

What's Included

- One dry contact relay box
- One interface cable (DB-9 connector)
- One 12 V dc power interconnection cable
- Four M3 mounting screws

Installation

⚠ DANGER **Only qualified personnel should install or service this system. Electrical safety precautions must be followed when installing or servicing this equipment. To prevent risk of electrical shock, turn off and lock out all power sources to the unit before making electrical connections.**

1. Using the four M3 screws provided, mount the dry relay box on the right side of the SDU UPS. If mounting on a separate chassis, the hole diameter for the relay box is 0.378 in. (3.5 mm).

2. Plug the 12 V dc power interconnection cable into the 12 V dc input of the relay box. Plug the other end of the power interconnection cable into the aux dc output (or Vout) of the SDU UPS.

3. Plug the DB-9 connector cable into the RS232 communication port of the SDU UPS. Plug the other end of the connector into the remote port of the dry contact relay.

Product Description

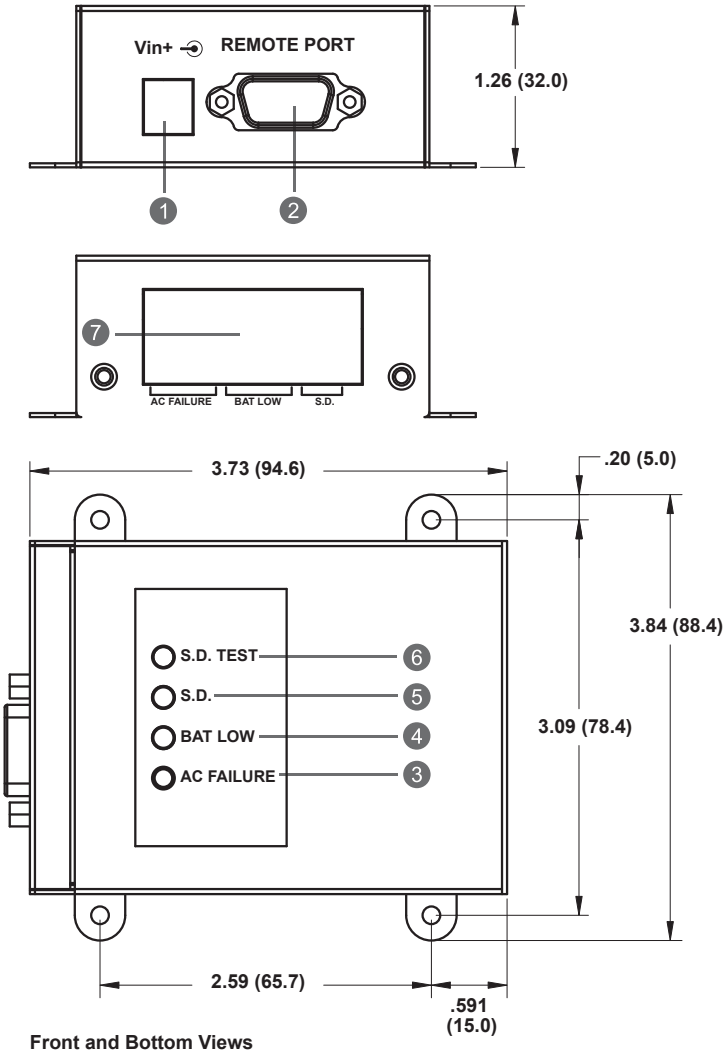

Front and Bottom Views
All dimensions are in inches (mm)

1. **Vin:** Input connector used to provide the dry contact relay with 12 V dc input power.
2. **Remote Port:** This communication port is used for linking to the SDU UPS.

   NOTE: The provided connection cable is used only for this dry contact relay.
3. **Ac Failure Indicator:** This yellow LED is illuminated when ac voltage is abnormal.
4. **Battery Low Indicator:** This green LED is illuminated when battery capacity is low.
5. **Shut Down Indicator (S.D.):** When the dry contact relay receives the shut down signal for 1 second, the red LED is illuminated and the SDU UPS goes into shut down mode.

Product Description continued from page 5

6. Shut Down Test Button (S.D. Test): Provides the dry contact relay a shut down signal to test the shut down function when the UPS is operating in the battery mode. Push this button for 1 second and the red LED is illuminated. The SDU UPS goes into shut down mode after 3 minutes.

7. 8 Pole Terminal Blocks

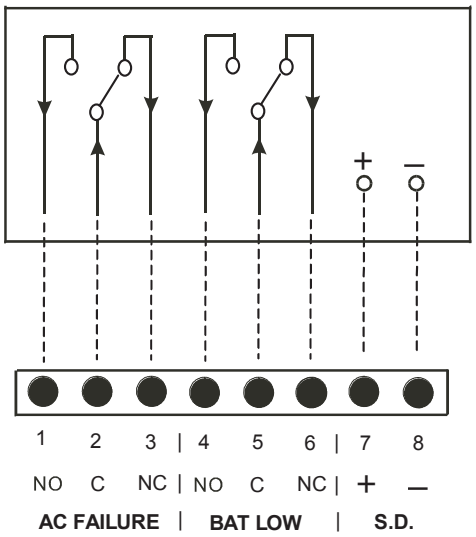

Table 1: Terminal Blocks—Layout and Operation

+UPS State		External Input	DCB LED Display			Terminal Blocks			
O = Occur X = Does not occur		O = Enable X = Disable	O = LED On X = LED Off			O = Close X = Open			
Ac Failure	BAT Low	S.D.	Yellow	Green	Red	Pin 1–2	Pin 2–3	Pin 4–5	Pin 5–6
X	X	X	X	X	X	X	O	X	O
O	X	X	O	X	X	O	X	X	O
O	O	X	X	O	X	O	X	O	X
O	X	O	X	X	O	X	O	X	O

Notes

1. Suitable electric wire = AWG 22–12 (IEC 2.5 mm).

2. Contact maximum current = 1.0 A @ 250 V ac.

3. Shut down input signal (range = +5 V to +12 V) can be provided by enabling terminals 7 and 8 for remote shut down control, assured by an external remote device.

Technical Support
U.S.: (800) 377-4384
International: (847) 268-6000
E-mail: www.tech@solahd.com
Web site: www.solahd.com

Part Number: A272-081 Rev 7
May 20, 2009

SDU Series, DIN Rail AC UPS

The SDU DIN Rail UPS combines an industry leading compact design with a wide operation temperature range and unique installation options. The SDU series provides economical protection from damaging impulses and power interruptions. These units include easy to wire screw terminations for critical devices needing battery back up such as computer based control systems.

E179213

Applications

- Programmable Logic Controllers
- Factory Automation
- Robotics
- Conveying Equipment
- Computer-based Control Systems

Features

- Lightweight, compact industrial design
- Wide operation temperature range (0ºC to 50ºC)
- Cold start capability
- Phone/dataline surge protection
- Software and cable included for easy installation
- Simulated sinewave output
- RS232 communication port
- USB communication port (optional)
- Form C dry contact relay (optional)
- Panel/wall mounting brackets (optional)
- Remote turn-on and shut-off capabilities
- Two year limited warranty

Certifications and Compliances

120V Models

- c UL us UL Recognized Component, UPS Equipment
  - UL 60950-1/CSA C22.2 No. 60950-1
  - Suitable for UL 508, CSA C22.2 No. 107.1 Ind. Control Equipment Applications with no derating
    - Overvoltage Cat III, Pollution Degree III

230V Models

- CE
  - EN62040-1-1

Related Products

- Portable MCR Power Conditioners
- STV Surge Protective Devices
- SDN DIN Rail Power Supplies
- STFV Plus Active Tracking® Filters

Selection Table

Capacity (VA/W)	Catalog Number	Volts, Frequency In/Out	Typical Back–up Time (minutes) *	Input/Output Connections	Approx. Ship Weight – lbs (kg)
500/300	**SDU 500**	120 Vac, 50/60 Hz	4	IP20 touch proof, screw terminals. Wire range: 10 ~ 24 AWG.	10.7 (4.70)
850/510	**SDU 850**		2		11.4 (5.00)
500/300	**SDU 500–5**	230 Vac, 50/60 Hz	4		11.5 (5.20)
850/510	**SDU 850–5**		2		11.9 (5.40)

* At full load.

SDU Accessories

Catalog Number	Description	Approx. Ship Weight – lbs (kg)
RELAYCARD–SDU	Dry contact I/O relay box, IP20 touch proof screw terminals, wire size range 12~22 AWG (IEC 2.5mm); N.O./N.C. form "C" contact. Relay contact signal for "On Battery", "Low Battery" and "UPS Shutdown".	1.0 (0.45)
UPSMON–USB	RS232 to USB adapter cable	1.0 (0.45)
SDU–PMBRK	Mounting brackets to secure UPS to wall, back of panel or enclosure.	1.0 (0.45)

Specifications

Catalog Number	SDU 500	SDU 850	SDU 500–5	SDU 850–5
Capacity (VA/Watts)	500/300	850/510	500/300	850/510
Load Power Factor	0.6			
Dimensions – inches (mm)				
Unit (H x W x D) – in. (mm)	4.88 x 11.1 x 4.55 (124.0 x 281.0 x 116.0)			
Weight – lbs (kg)	10.7 (4.70)	11.4 (5.00)	11.5 (5.20)	11.9 (5.40)
Input Parameters				
Voltage	120 V (+10%, -20%)		230 V (+/- 20%)	
Frequency	50 +/- 5 Hz or 60 Hz +/- 6 Hz (auto sensing)			
Output AC Parameters				
Voltage (Battery Mode)	Step sinewave			
	+/- 5%			
Frequency (On Battery)	50 or 60 Hz			
	+/- 0.3 Hz			
Overload Protection	UPS automatic shutdown if overload exceeds 105% of nominal at 20 seconds, 120% at 10 seconds, 130% at 3 seconds			
Short Circuit	UPS output cut off immediately			
Battery Parameters				
Battery Type	Sealed, non-spillable, maintenance-free lead acid batteries			
Transfer Time	4 - 6 ms typical			
Back–up Time * (minutes)	4.5/18	2.5/10	4.5/18	2.5/10
Recharge Time	8 hours to 90% capacity after full discharge			
Environmental				
Operating Temperature	0°C to 50°C			
Storage Temperature	-15°C to 60°C			
Relative Humidity	1% to 95%, non-condensing			
Ambient Operation	1-95% humidity non-condensing, 0-50°C up to 5,000 ft. (1500m)			
Audible Noise	< 40dBA (1 meter from surface)			
Standards				
EMC	FCC Part 15, Subpart B, Class A; EMC: EN50091-2, EN61000-3-2, EN61000-3-3, IEC60801-2, IEC60801-3, IEC60801-4, IEC61000-2-2			
Elevation	5000 ft. without derating			
Shock & Vibration	According to the International Safe Transit Association standard ISTA 2A.			
Mounting	To be mounted on DIN TS35/7.5 or TS35/15 rail system. Chassis mounting permissible via optional brackets. Unit handles normal shock and vibration of industrial use and transportation without coming off rail.			

* At full load/half load.

BOM #19
TAGS: LSHY-4001
LSHY-4002
LSHY-5001
LSHY-5002
LSHY-6001
LSHY-7001
LSHY-7002

Warrick

Series 16DM

Series 16DM DPDT Load Contact, Solid State Plug-In Module

Part No. 16DMB1B0
Unit Price $267
Lead Time (Days) 5

Image is of actual product

Model	16DM
Mode of Operation	Direct
Sensitivity	10 K
Control Style	Plug-In Module
Socket Style	DIN Mount
Standoff Style	N/A
Enclosure	None
Contact Design	2 Normally Open & 2 Normally Closed (non-powered)
Contact Rating	5 Amp Resistive 1/10 horse power
Secondary Voltage	12 VAC
Terminal Style	Screw Connector
Number of Channels	1
Minimum Temperature (°F)	-40
Maximum Temperature (°F)	150
Protection	Non-Intrinsically Safe
Approvals	UL 508 General Purpose
Minimum Qty (per Release)	1
Weight (Lbs)	1.1

Options

Warrick® Series 16DM Controls

Installation and Operation Bulletin

This bulletin should be used by experienced personnel as a guide to the installation of series 16DM controls. Selection or installation of equipment should always be accompanied by competent technical assistance. We encourage you to contact Gems Sensors Inc. or its representative if further information is required.

	Specifications
Control Design:	Solid-State components enclosed in clear Lexan plug-in style housing. Housing carries no NEMA rating
Contact Design:	2 SPDT (2 form C): Two Normally Open (N.O.) and two Normally Closed (N.C.), non-powered contacts
Contact Ratings:	5 A @ 120, 240 VAC resistive, 1/8 H.P. @ 120 or 240 VAC
Contact Life:	Mechanical: 5 million operations - Electrical: 100,000 operations minimum at rated load
Supply Voltage	24, 120, or 240 VAC Models - Factory Set. Plus 10%, minus 15%, 50/60 Hz
Supply Current:	120, 240, 24 VAC, Relay energized 4.4 VA
Secondary	12 VAC RMS Voltage on probes. 1.5 milli-amp Current
Circuit:	Models operate from 0 to 1,000,000 OHM maximum
Sensitivity:	specific resistance - Factory set
	-40° To 150°F Ambient
Temperature:	All connections #6-32 screw type with pressure clamps
Terminals:	Standard, 0.5 seconds on rising level.
Time Delays:	Additional time delays on rising and/or falling level available as option.
Listings:	U.L. Listing, Industrial Motor Control (508). 240 and 208 volt units are not U.L. limit control recognized.

Installation

1. Install octal socket in appropriate enclosure using two #6 or #8 metal screws.
   a) Install rail mount socket on appropriate rail (DIN mount) in appropriate enclosure, if applicable.
2. Wire control per wiring diagram, following N.E.C. and local codes.
3. Install control module in socket.

Sensitivities vs Maximum Probe Wire Distance*

Sensitivity Character	Sensitivity (K Ohms)	Distance (Ft.)
A or K	4.7	10,000
B or L	10	5,700
C or M	26	2,200
D or N	50	1,075
E or P	100	570
F or R	470	270
G or S	1,000	38

* Based on type MTW or THHN wire, #14 or #16 Awg

Dimensions

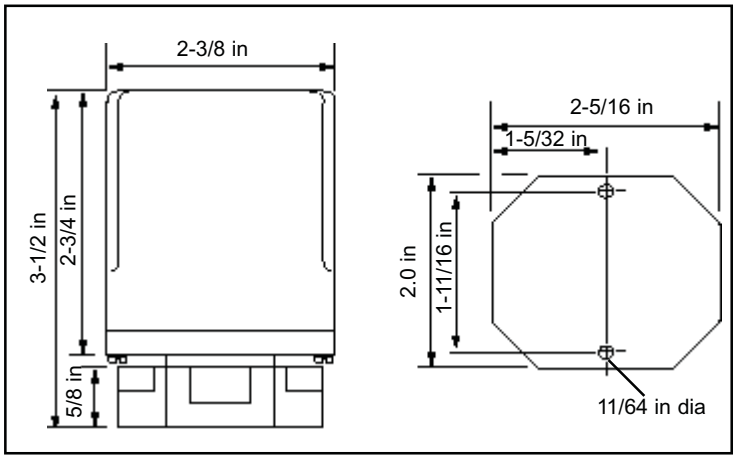

Use copper (60/70° C) wire only. Torque to 20 inch pounds.

Wiring Diagram

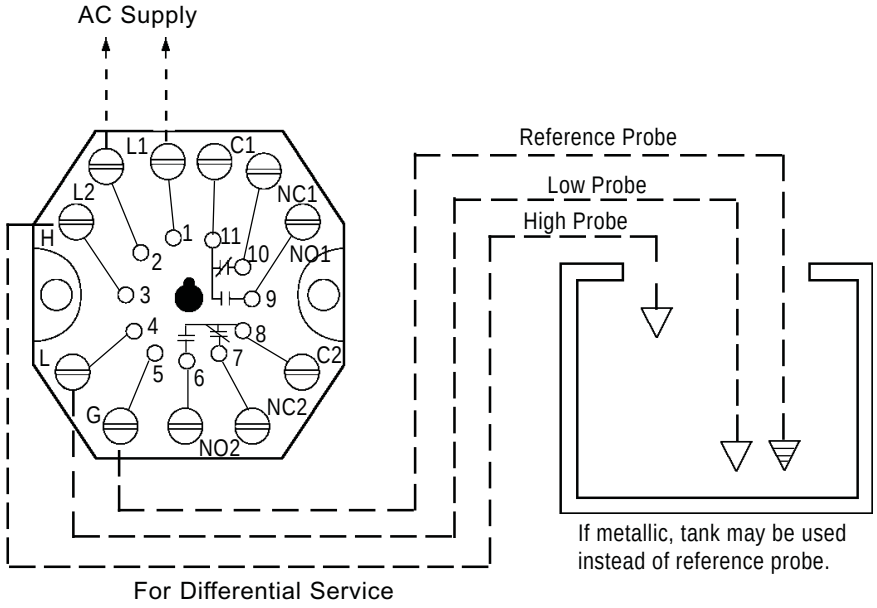

Note: For Single Level Service, use "H" and "G" Connections

Operation

Direct Mode - Single Level Service:
When the liquid rises to the electrode on terminal 3, the control energizes, changing state of the load contacts. **(LED will be lit)** The control remains energized until the liquid level recedes below electrode on terminal 3. The control then de-energizes, **(LED will not be lit)** returning load to original state.

Inverse Mode - Single Level Service:
Control energizes with power, changing state of the load contacts. **(LED will be lit)** When the liquid rises to the electrode on terminal 3, the control de-energizes, returning the load contacts to shelf state. **(LED will not be lit)** The control remains de-energized until liquid level recedes below the electrode connected to terminal 3. The control then energizes.

Direct Mode - Differential Service:
When the liquid rises to the electrode on terminal 3, the control energizes, changing state of the load contacts. **(LED will be lit)** The control remains energized until the liquid level recedes below electrode on terminal 4. The control then de-energizes, **(LED will not be lit)** returning the load contacts to original state.

Inverse Mode - Differential Service:
Control energizes with power, **(LED will be lit)** changing state of the load contacts. When the liquid rises to the electrode on terminal 3, the control de-energizes, returning load contacts to shelf state. **(LED will not be lit)** The control remains de-energized until the liquid level recedes below the electrode on terminal 4. The control then energizes.

Optional

Time Delays: With time delay on increasing level, the liquid must be in contact with the short electrode for the full duration of the time delay before control will operate. With delay on decreasing level, the liquid must be below long electrode for the full duration of the time delay before control will operate. In single level service, terminals 3 and 4 must be jumpered together to achieve time delays on both increasing and decreasing levels or just decreasing level.

16DM B 1 B **-XX-XX**

Time Delay: (decreasing level) 1-20 sec.
Time Delay: (increasing level) 1-20 sec.
Enclosure: 0-none, 1-NEMA 1, 4-NEMA 4, 7-NEMA 7, 12-NEMA 12
Socket Style: A - 11 Pin Octal, B - 11 Pin DIN Mount, M - None, Module Only
Supply Voltage: 1- 120 VAC, 2- 240 VAC, 3- 24 VAC, 8- 208/240 VAC*
Mode/Sensitivity:
Direct A- 4.7K, B- 10K, C- 26K, D- 50K, E- 100K, F- 470K, G- 1M
Inverse K- 4.7K, L- 10K, M- 26K, N- 50K, P- 100K, R- 470K, S- 1M

*187 Vmin to 255 Vmax VAC

Gems Sensors Inc.
One Cowles Road
Plainville, CT 06062-1198
Tel: 860-793-4579
Fax: 860-793-4580

Product: 700-HK32A1

BOM #21

Description: 700-HK General Purpose Slim Line Relay

Representative Photo Only
(actual product may vary based on configuration selections)

CONTROL RELAY DATA

Contact Rating	8 Amp Contact (Slim Line Relay)
Contact Configuration	DPDT Contact Arrangement
Coil Voltage	120V 50/60Hz
Relay Option	No Additional Options

CERTIFICATIONS AND APPROVALS

CE	Marked
UL	Listed with socket, Guide No. NLDX, File No. E3125
UR	Recognized, Guide No. NLDX2, File No. E3125
CSA	
For UL Certifications Directory:	http://database.ul.com/cgi-bin/XYV/template/LISEXT/1FRAME/index.htm

		Cat. No. 700-HK...			
Electrical Ratings					
Rated Thermal Current (I^{th})		1-Pole, 1 CO, SPDT — 16 A		2-Pole, 2 CO, DPDT — 8 A	
Rated Insulation Voltage (U_i)		250V IEC, 300V UL/CSA			
Contacts	Inductive V AC	120V AC	AC-15, 6.2 A B300 Pilot Duty, 3 A A300 (700-HKM_) 1/3 Hp (0.24 kW) 1-phase	120V AC	AC-15, 2.9 A B300 Pilot Duty, 3.0 A 1/4 Hp (0.18 kW), 1-phase
		240V AC	AC-15, 3.1 A B300 Pilot Duty, 1.5 A A300 (700-HKM_) 3/4 Hp (0.55 kW), 1-phase	240V AC	AC-15, 1.4 A B300 Pilot Duty, 1.5 A 1/2 Hp (0.37 kW), 1-phase
		230V AC	0.55 kW, 1-phase	230V AC	0.37 kW, 1-phase
	Inductive V DC	24V DC	DC-13, 5.0 A	24V DC	DC-13, 3.0 A
		125V DC	DC-13, 0.2 A R300 Pilot Duty, 0.22 A	125V DC	DC-13, 0.2 A R300 Pilot Duty, 0.22 A
		250V DC	DC-13, 0.1 A R300 Pilot Duty, 0.11 A	5 A, 250V AC	DC-13, 0.1 A R300 Pilot Duty, 0.11 A
	Resistive	230V AC	AC-1, 16 A	230V AC	AC-1, 8 A
		277V AC	16 A, General Use	277V AC	8 A, General Use
	Make, Break & Continuous	30V DC	DC-1, 12 A 10 A, Resistive	30V DC	DC-1, 6 A 6 A, Resistive
Min. Permissible Contact Ratings		300 mW (5V/60 mA or 60V/5 mA) for AgNi Contacts (700-HK3_) 50 mW (5V/10 mA or 25V/2 mA) for AgNi + Gold Contacts (700-HKX_) 500 mW (100V/5 mA or 5V/100 mA) for $AgSnO_2$ Contacts (700-HKM_)			
Permissible Coil Voltage Variation	Pickup: holding Voltage: Must Dropout Voltage:	80...110% of Nominal Voltage at 50/60 Hz, 73...110% of Nominal Voltage at DC 80% of Nominal V AC at 50/60 Hz, 40% of Nominal V DC 20% of Nominal V AC at 50/60 Hz, 10% Nominal V DC			
Power Consumption		1.2V A (V AC Coils), 0.5 W (V DC Coils)			
Coil Voltages		See Overview/Product Selection			
Design Specification/Test Requirements					
Dielectric Withstand Voltage	Between Open Contacts (VRMS)	1000V AC			
	Contact to Coil (VRMS)	1600V AC			
Mechanical					
Degree of Protection		IP 20 (guarded terminal sockets), RT II — Flux-proof (Relay)			
Mechanical Life Operations		10 x 10^6			
Electrical Life Cycles		230V AC, 16 A Resistive: 100 000 min. 277V AC, 16 A Resistive: 30 000 min. 30V DC, 10 A Resistive: 30 000 min. B300, R300, Hp (kW): 6000 min. A300 (700-HKM_): 100,000 min.		230V AC, 8 A Resistive: 100 000 min. 277V AC, 8 A Resistive: 30 000 min. 30V DC, 6 A Resistive: 30 000 min. B300, R300, Hp (kW): 6000 min.	
Switching Frequency		Mechanical: 18,000 cycles/hr. Electrical: 900 cycles/hr.			
Operating Time at Nominal Voltage at 20 °C (ms)	Pickup	15 ms max.			
	Dropout	5 ms max.			
Vibration	Operational	10...2000 Hz, 0.76 mm (0.03 in.) 2.5 G			
	Non-Operational	10...2000 Hz, 0.76 mm (0.03 in.) 5.0 G			
Shock	Operational	15 G			
	Non-Operational	50 G			
Environmental					
Temperature	Operating	–40...+70 °C (–40...+158 °F)			
	Storage	–40...+85 °C (–40...+185 °F)			
Altitude		2000 m (6560 ft)			
Construction					
Insulating Material		Molded High Dielectric Material			
Enclosure		Transparent Dust Cover			
Contact Material		700-HK3_: Silver nickel (AgNi); 700-HKX_: Silver Nickel + Gold Plating (AgNi + Au); 700-HKM_: Silver Tin Oxide ($AgSnO_2$)			
Terminal Markings on Socket		In accordance with EN 50005			
Sockets			**1-Pole**		**2-Pole**
	Screw Terminal	700-HN121 (10 A @ 70 °C) 700-HN221 (16 A @ 50 °C, 12 A @ 70 °C)		700-HN122 (2 x 5 A @ 70 °C) 700-HN222 (2 x 8 A @ 70 °C)	
	Spring Clamp (Available September 2006)	700-HN223 (15 A @ 40 °C with 2 conductors per terminal) (10 A @ 70 °C with 1 conductor per terminal)		700-HN224 (2 x 8 A@ 70 °C)	
Approvals					
Certifications		CSA Certified, File 75088, UL Recognized, File E3125 Guide NLDX2/NLCX8, cULus Listed with Allen-Bradley sockets (File No. 3125 Guide NLDX/NLDX7), CE Marked			
Standards		EN61810-1, CSA 22.2 No. 14, UL 508			

http://raise.rockwellautomation.com/raconfig/rtcache/jpg/700-hk%20specs.jpg[10/7/2015 4:14:36 PM]

BOM #22 and 23

Spring-Clamp Connection Terminal Blocks

Plug-in Style Blocks (Cat. Nos. 1492-L3P, -LDG3P) and Analog Loop Control Block (Cat. No. 1492-LDAG3)

	1492-L3P			1492-LDG3P			1492-LDAG3		
Dimensions are not intended to be used for manufacturing purposes. **Note:** Height dimension is measured from top of rail to top of terminal block.	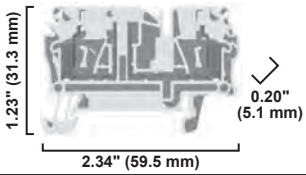			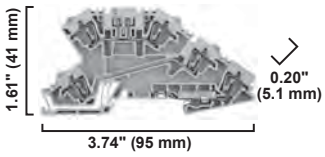					
Specifications	*Single Circuit Plug-In Component Block for a Variety of Components*			*Terminal Block with slot for Plug-In Component, Feed-Through Circuit and 1 Ground Connection*			*Analog Loop Control Terminal Block with 2 Feed-Through Circuits and 1 Ground Connection*		
Certifications	cULus	CSA	IEC	cULus	CSA	IEC	cULus	CSA	IEC
Voltage Rating	600V AC/DC		500V AC/DC	300V AC/DC		250V AC/DC	300V AC/DC		250V AC/DC
Maximum Current	20 A		24 A	10 A		20 A	10 A		24 A
Wire Range (Rated Cross Section)	#30…12 AWG		4 mm²	#26…12 AWG		2.5 mm²	#26…12 AWG		2.5 mm²
Wire Strip Length	0.39 in. (10 mm)			0.31 in. (8 mm)			0.31 in. (8 mm)		
Density	59 pcs/f (/196 pcs/m)			59 pcs/ft (196 pcs/m)			59 pcs/ft (196 pcs/m)		
Housing Temperature Range	–58…+248 °F (–50…+120 °C)			–58…+248 °F (–50…+120 °C)			–58…+248 °F (–50…+120 °C)		
Terminal Blocks	**Cat. No.**		**Pkg Qty.**	**Cat. No.**		**Pkg Qty.**	**Cat. No.**		**Pkg Qty.**
Color Grey	**1492-L3P**		25	**1492-LDG3P**		25	**1492-LDAG3**		25
Accessories	**Cat. No.**		**Pkg Qty.**	**Cat. No.**		**Pkg Qty.**	**Cat. No.**		**Pkg Qty.**
Mounting Rails 1 m Symmetrical DIN (Steel)	**199-DR1**		10	**199-DR1**		10	**199-DR1**		10
1 m Symmetrical DIN (Aluminum)	**1492-DR5**		10	**1492-DR5**		10	**1492-DR5**		10
1 m Hi-Rise Symmetrical DIN (Aluminum)	**1492-DR6**		2	**1492-DR6**		2	**1492-DR6**		2
1 m Angled Hi-Rise Sym. DIN (Steel)	**1492-DR7**		2	**1492-DR7**		2	**1492-DR7**		2
End Barrier	**1492-EBL3**		50	**1492-EBLDAG3**		20	**1492-EBLDAG3**		20
End Anchors and Retainers Screwless End Retainer	**1492-ERL35**		20	**1492-ERL35**		20	**1492-ERL35**		20
DIN Rail — Normal Duty	**1492-EAJ35**		100	**1492-EAJ35**		100	**1492-EAJ35**		100
DIN Rail — Heavy Duty	**1492-EAHJ35**		50	**1492-EAHJ35**		50	**1492-EAHJ35**		50
Jumpers Plug-In Center Jumper — 50-pole	**1492-CJK5-50**		10	**1492-CJLJ5-50**		10	**1492-CJLJ5-50**		10
Plug-In Center Jumper — 10-pole	**1492-CJK5-10**		20	**1492-CJLJ5-10**		20	**1492-CJLJ5-10**		20
Plug-In Center Jumper — 9-pole	**1492-CJK5-9**		20	**1492-CJLJ5-9**		20	**1492-CJLJ5-9**		20
Plug-In Center Jumper — 8-pole	**1492-CJK5-8**		20	**1492-CJLJ5-8**		20	**1492-CJLJ5-8**		20
Plug-In Center Jumper — 7-pole	**1492-CJK5-7**		20	**1492-CJLJ5-7**		20	**1492-CJLJ5-7**		20
Plug-In Center Jumper — 6-pole	**1492-CJK5-6**		20	**1492-CJLJ5-6**		20	**1492-CJLJ5-6**		20
Plug-In Center Jumper — 5-pole	**1492-CJK5-5**		20	**1492-CJLJ5-5**		20	**1492-CJLJ5-5**		20
Plug-In Center Jumper — 4-pole	**1492-CJK5-4**		60	**1492-CJLJ5-4**		60	**1492-CJLJ5-4**		60
Plug-In Center Jumper — 3-pole	**1492-CJK5-3**		60	**1492-CJLJ5-3**		60	**1492-CJLJ5-3**		60
Plug-In Center Jumper — 2-pole	**1492-CJK5-2**		60	**1492-CJLJ5-2**		60	**1492-CJLJ5-2**		60
Other Accessories Disconnect Plug	**1492-DPL**		50	**1492-DPL**		50	—		—
Component Plug	**1492-CPL**		50	**1492-CPL**		50	—		—
Fuse Plug Without Blown Fuse Indicator	**1492-FPK2**		20	**1492-FPK2**		20	—		—
10…36V Blown Fuse Indicator	**1492-FPK224**		20	**1492-FPK224**		20	—		—
35…70V Blown Fuse Indicator	**1492-FPK248**		20	**1492-FPK248**		20	—		—
60…150V Blown Fuse Indicator	**1492-FPK2120**		20	**1492-FPK2120**		20	—		—
140…250V Blown Fuse Indicator	**1492-FPK2250**		20	**1492-FPK2250**		20	—		—
Reducing Sleeves 28…24 AWG (0.13…0.2 mm²) White	1492-PSL3-2		100	—		—	—		—
Reducing Sleeves 22…20 AWG (0.25…0.5 mm²) Grey	**1492-PSL3-5**		100	—		—	—		—
Reducing Sleeves 18 AWG (0.75…1.0 mm²) Dark Grey	**1492-PSL3-10**		100	—		—	—		—
Test Plug	**1492-TPL5**		25	**1492-TP23**		20	—		—
Electrical Warning Plate	**1492-EWPL5**		20	—		—	—		—
Group Marking Carrier	**1492-GM35**		25	**1492-GM35**		25	**1492-GM35**		25
Marking Systems Snap-In Marker Cards	**1492-M5X10** (144/card)		5	**1492-M5X10** (144/card)		5	**1492-M5X10** (144/card)		5
Snap-In Marker Cards	**1492-M5X5** (200/card)		5	**1492-M5X5** (200/card)		5	**1492-M5X5** (200/card)		5

12

Panduct® Type F Narrow Slot Wiring Duct

- Narrow slot/finger design provides more slots to fit the spacing of high-density terminal blocks and other hardware
- Material: Lead-free PVC
- UL recognized continuous use temperature: 122°F (50°C)
- UL 94 flammability rating of V-0
- Conforms with NFPA 79-2007 section 13.3.1 requirement for flame retardant material
- Provided with mounting holes
- Base and cover length is 6 feet

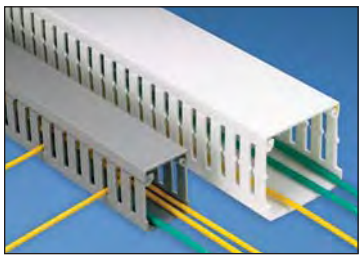

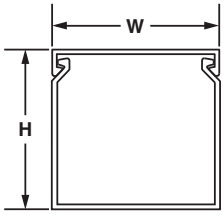

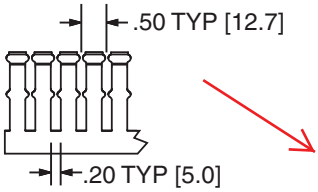

Multiple slot restrictors present with 2" and greater duct wall height.

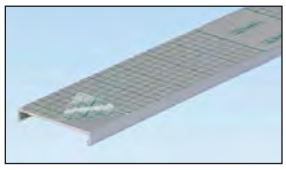

To order cover with protective film add "-F" to part number. 6" cover not available with film.

NEW!

Base Part Number	Duct Size (W x H)* In.	Duct Size (W x H)* mm	Slot Width In.	Slot Width mm	Cover Part Number	Std. Pkg. Qty.	Base Ctn. Qty.	Cover Ctn. Qty.
F.5X.5LG6	0.69 x 0.60	17.5 x 15.2	0.20	5.0	C.5LG6	6	120	120
F.5X1LG6	0.69 x 1.06	17.5 x 26.9	0.20	5.0	C.5LG6	6	120	120
F.75X.75LG6	0.93 x 0.82	23.6 x 20.9	0.20	5.0	C.75LG6	6	120	120
F.75X1.5LG6	0.93 x 1.57	23.6 x 39.9	0.20	5.0	C.75LG6	6	120	120
F1X1LG6	1.26 x 1.13	32.0 x 28.7	0.20	5.0	C1LG6	6	120	120
F1X1.5LG6	1.26 x 1.62	32.0 x 41.1	0.20	5.0	C1LG6	6	120	120
F1X2LG6	1.26 x 2.12	32.0 x 53.8	0.20	5.0	C1LG6	6	120	120
F1X3LG6	1.26 x 3.12	32.0 x 79.2	0.20	5.0	C1LG6	6	120	120
F1X4LG6	1.26 x 4.10	32.0 x 104.1	0.20	5.0	C1LG6	6	60	120
F1.5X1LG6	1.75 x 1.12	44.5 x 28.4	0.20	5.0	C1.5LG6	6	120	120
F1.5X1.5LG6	1.75 x 1.62	44.5 x 41.1	0.20	5.0	C1.5LG6	6	120	120
F1.5X2LG6	1.75 x 2.12	44.5 x 53.8	0.20	5.0	C1.5LG6	6	120	120
F1.5X3LG6	1.75 x 3.12	44.5 x 79.2	0.20	5.0	C1.5LG6	6	120	120
F1.5X4LG6	1.75 x 4.10	44.5 x 104.1	0.20	5.0	C1.5LG6	6	60	120
F2X1LG6	2.25 x 1.12	57.2 x 28.4	0.20	5.0	C2LG6	6	120	120
F2X1.5LG6	2.25 x 1.62	57.2 x 41.1	0.20	5.0	C2LG6	6	120	120
F2X2LG6	2.25 x 2.12	57.2 x 53.8	0.20	5.0	C2LG6	6	120	120
F2X3LG6	2.25 x 3.12	57.2 x 79.2	0.20	5.0	C2LG6	6	60	120
F2X4LG6	2.25 x 4.10	57.2 x 104.1	0.20	5.0	C2LG6	6	60	120
F2X5LG6	2.25 x 5.10	57.2 x 129.5	0.20	5.0	C2LG6	6	60	120
F2.5X3LG6	2.75 x 3.12	69.9 x 79.2	0.20	5.0	C2.5LG6	6	120	120
F3X1LG6	3.25 x 1.12	82.6 x 28.4	0.20	5.0	C3LG6	6	120	120
F3X2LG6	3.25 x 2.12	82.6 x 53.8	0.20	5.0	C3LG6	6	120	120
F3X3LG6	3.25 x 3.12	82.6 x 79.2	0.20	5.0	C3LG6	6	60	120
F3X4LG6	3.25 x 4.10	82.6 x 104.1	0.20	5.0	C3LG6	6	60	120
F3X5LG6	3.25 x 5.10	82.6 x 129.5	0.20	5.0	C3LG6	6	60	120
F4X2LG6	4.25 x 2.12	108.0 x 53.8	0.20	5.0	C4LG6	6	60	120
F4X3LG6	4.25 x 3.12	108.0 x 79.2	0.20	5.0	C4LG6	6	60	120
F4X4LG6	4.25 x 4.10	108.0 x 104.1	0.20	5.0	C4LG6	6	60	120
F4X5LG6	4.25 x 5.10	108.0 x 129.5	0.20	5.0	C4LG6	6	60	120
F6X4LG6	6.25 x 4.15	158.8 x 105.4	0.20	5.0	C6LG6	6	60	120

Part number shown for LG (Light Gray). For other color availability see color selection guide, page C1.48.
Base and cover sold separately.
*"H" dimension includes duct and cover.

THIS COPY IS PROVIDED ON A RESTRICTED BASIS AND IS NOT TO BE USED IN ANY WAY DETRIMENTAL TO THE INTERESTS OF PANDUIT CORP.

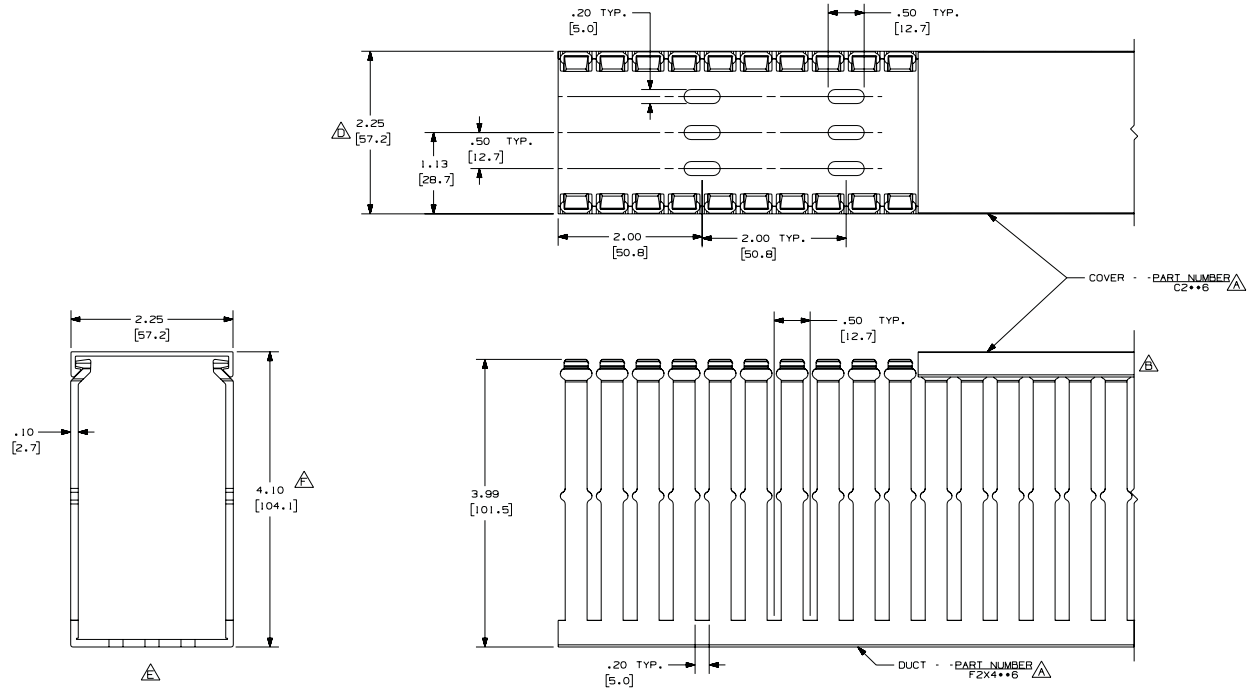

NOTES:

1. ALL DIMENSIONS ARE REFERENCE ONLY.
2. DIMENSIONS IN PARENTHESIS ARE METRIC.
3. THE ** DENOTE COLOR.
4. DUCT AND COVER AREA AVAILABLE IN 6 FT [1828.8] LENGTHS

REV	DATE	BY	CHK	DESCRIPTION
--	.....	...	...	G. ADDED LENGTH NOTE F. CORRECTED DIMENSION
2	7-23-07	JCST	MKBE	E. DELETED DIMENSION D. ADDED DIMENSION
--	.....	...	...	C. CHANGED DRAWING SIZE
1	9-24-04	JCST	MKBE	B. CHANGED VIEW A. ADDED TOP VIEW, NOTES, AND LABELS
R	3-20-03	JCST	JGG	DRAWING RELEASED

CAD FILENAME/LAYERS: D11000CL_DC/00C

PANDUIT CORP. TINLEY PARK, ILLINOIS

WIRING DUCT - TYPE F DUCT WITH COVER
2 X 4
MARKETING DRAWING

DRAWN BY	MAT'L:	SCALE
JCST	PVC	FULL
DATE: 3-20-03		DRAWING NO. 36897-774
CHECKED BY: JGG		SIZE C

BOM #25

Mounting rails allow many blocks to be fastened in a panel with only a few screws to anchor the rail to the panel. Mounting rails allow easy installation and removal of a block in a row.

Cat. No.	Description	Pkg Qty.	Dimensions*
199-DR1	Symmetrical Rail 35 mm x 7.5 mm 3.28 ft (1 m) long Zinc-Plated Clear Chromated Steel EN60715 **DIN #3**	10	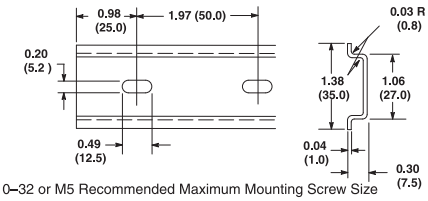 #10–32 or M5 Recommended Maximum Mounting Screw Size
199-DR2	Same as Cat. No. 199-DR1, but length = 2 m	20	
199-DR4	Heavy Duty Symmetrical Rail 35 mm x 15 mm 3.28 ft (1 m) long Zinc-Plated Clear Chromated Steel EN60715 **DIN #3**	5	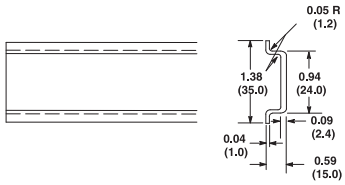
1492-DR3	Mini 15 mm x 5.5 mm Rail 3.28 ft (1 m) long Zinc-Plated Clear Chromated Steel EN60715 **DIN #2**	5	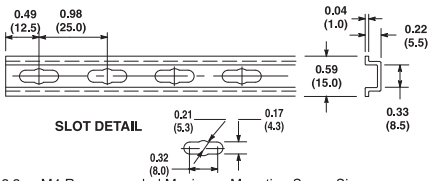 #8-3 2 or M4 Recommended Maximum Mounting Screw Size
1492-DR5	Symmetrical Rail 35 mm x 7.5 mm 3.28 ft (1 m) long Copper-Free Aluminum EN60715 For Bul. 1492 Terminal Blocks Only **DIN #3**	10	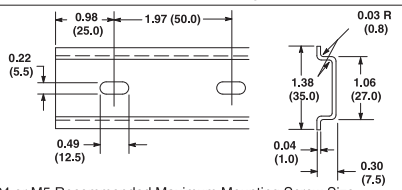 #12–24 or M5 Recommended Maximum Mounting Screw Size
❄ **1492-DR6**	Symmetrical Rail 35 mm x 7.5 mm 2.26 in. (57.4 mm) high 3.28 ft (1 m) long Copper-Free Aluminum For Bul. 1492 Terminal Blocks Only **DIN #3**	2	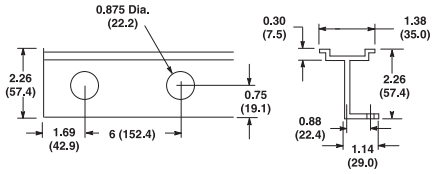 Wire insulator plug for wire access through rail — use Heyco UB875
❄ **1492-DR7**	Symmetrical Rail 35 mm x 7.5 mm 2.80 in. (71.0 mm) high 3.28 ft (1 m) long Angled 30° Zinc-Plated, Chromated Steel **DIN #3**	2	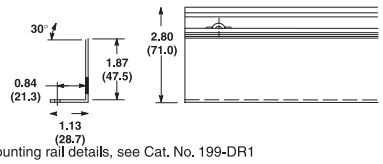 For mounting rail details, see Cat. No. 199-DR1
1492-DR8	Symmetrical Rail 35 mm x 15 mm 3.28 ft (1 m) long Copper EN60715 **DIN #3**	5	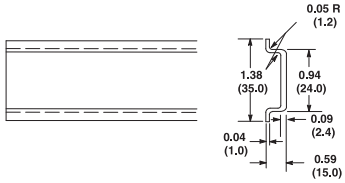
‡ **1492-DR9**	Symmetrical Rail 35 mm x 15 mm 3.28 ft (1 m) long Zinc-Plated Clear Chromated Steel EN60715 **DIN #3**	5	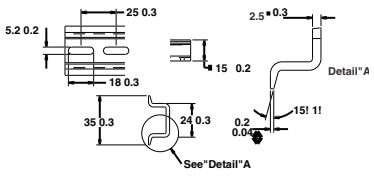

* Dimensions shown in inches (millimeters). Dimensions are not intended to be used for manufacturing purposes.
❄ 0.218 x 0.50 in. (5.5 x 12.7 mm) slotted mounting holes every 3 in. (76.2 mm) starting 1.69 in. (42.9 mm) from end.
‡ Dimensions in millimeters.

12

BOM #26

ELECTRIC HEATERS

115/230 Volt
100/200 Watt

115/230 Volt
400/800 Watt

115/230 Volt
1300 Watt

INDUSTRY STANDARDS

UL 508A Component Recognized; File No. E61997

CSA Certified, CSA File No. LR42186
CE

APPLICATION

Protect mechanical, electrical and electronic equipment from low temperatures, condensation and corrosion with this thermostatically controlled, fan-driven heater that maintains a stable enclosure temperature.
Fan draws cool air from the bottom of the enclosure and passes this air across the thermostat and heating element before being released into enclosure cavity. Heated air is discharged through the top of the heater unit.

SPECIFICATIONS

- Aluminum housing
- Thermostat range adjustable from 0 F to 100 F (-18 C to 38 C)
- Four 10-32 x self-tapping screws are included with each heater
- Ball bearing fan
- Terminal strip with clamp connector that accepts both solid and stranded wire

FINISH

- Brushed aluminum

⚠ CAUTION

These electric heaters are not designed for use in dusty, dirty, corrosive, or hazardous locations. Portions of the heater can get hot. Adequate protection must be taken to protect people from potential burns, and to protect other components from this heat. Pentair Technical Products recommends this heater only be installed in a totally-enclosed metal enclosure.

DO NOT INSTALL HEATERS ON WOOD PANELS. Heat sensitive components should not be placed near the heater discharge area since this air can be quite warm. The clearance range defines the space that must be kept free of these components for proper and safe operation of the heater.

Performance Data **100 and 200 Watt Heaters**

CATALOG NUMBERS	DAH1001A	DAH1002A	DAH2001A	DAH2002A
ELECTRICAL DATA				
Rated Voltage	**115**	**230**	**115**	**230**
Frequency (Hz)	50/60	50/60	50/60	50/60
Power Consumption (Watts)	100	100	200	200
Nominal Current (Amps)	0.98	0.49	1.89	0.95
HEATING PERFORMANCE				
Watts	**100**	**100**	**200**	**200**
UNIT CONSTRUCTION				
Weight (lb./kg)	1.6/0.73	1.6/0.73	1.6/0.73	1.6/0.73
X (in./mm)	4.00/102	4.00/102	6.00/152	6.00/152

Performance Data **400 and 800 Watt Heaters**

CATALOG NUMBERS	DAH4001B	DAH4002B	DAH8001B	DAH8002B
ELECTRICAL DATA				
Rated Voltage	**115**	**230**	**115**	**230**
Frequency (Hz)	50/60	50/60	50/60	50/60
Power Consumption (Watts)	400	400	800	800
Nominal Current (Amps)	3.72	1.86	7.37	3.69
HEATING PERFORMANCE				
Watts	**400**	**400**	**800**	**800**
UNIT CONSTRUCTION				
Weight (lb./kg)	2.2/1.00	2.2/1.00	2.2/1.00	2.2/1.00
X (in./mm)	6.00/152	6.00/152	8.00/203	8.00/203

Performance Data **1300 Watt Heaters**

CATALOG NUMBERS	DAH13001C	DAH13002C
ELECTRICAL DATA		
Rated Voltage	**115**	**230**
Frequency (Hz)	50/60	50/60
Power Consumption (Watts)	1300	1300
Nominal Current (Amps)	11.5	5.7
HEATING PERFORMANCE		
Watts	**1300**	**1300**
UNIT CONSTRUCTION		
Weight (lb./kg)	3.4/1.54	3.4/1.54
X (in./mm)	8.00/203	8.00/203

Dimensions and Clearance Range Drawing for DAH1001A, -2A and DAH2001A, -2A

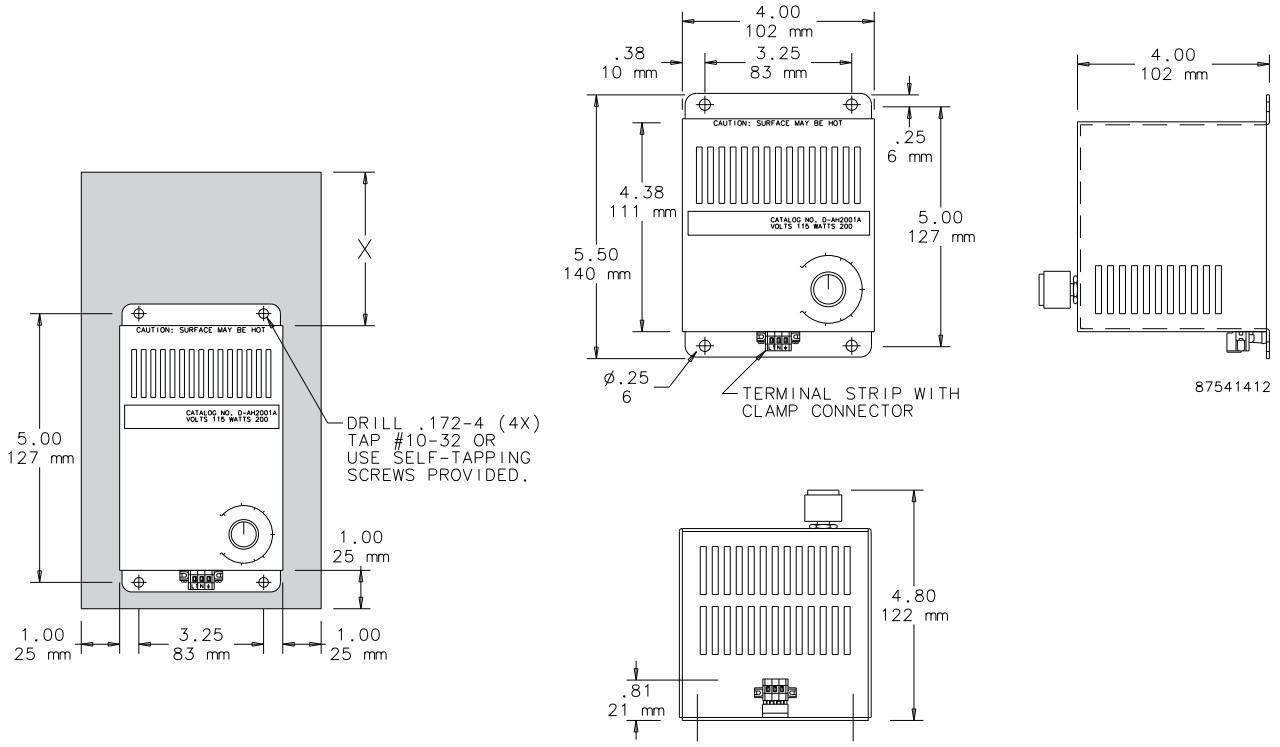

Dimensions and Clearance Range Drawing for DAH4001B, -2B and DAH8001B, -2B

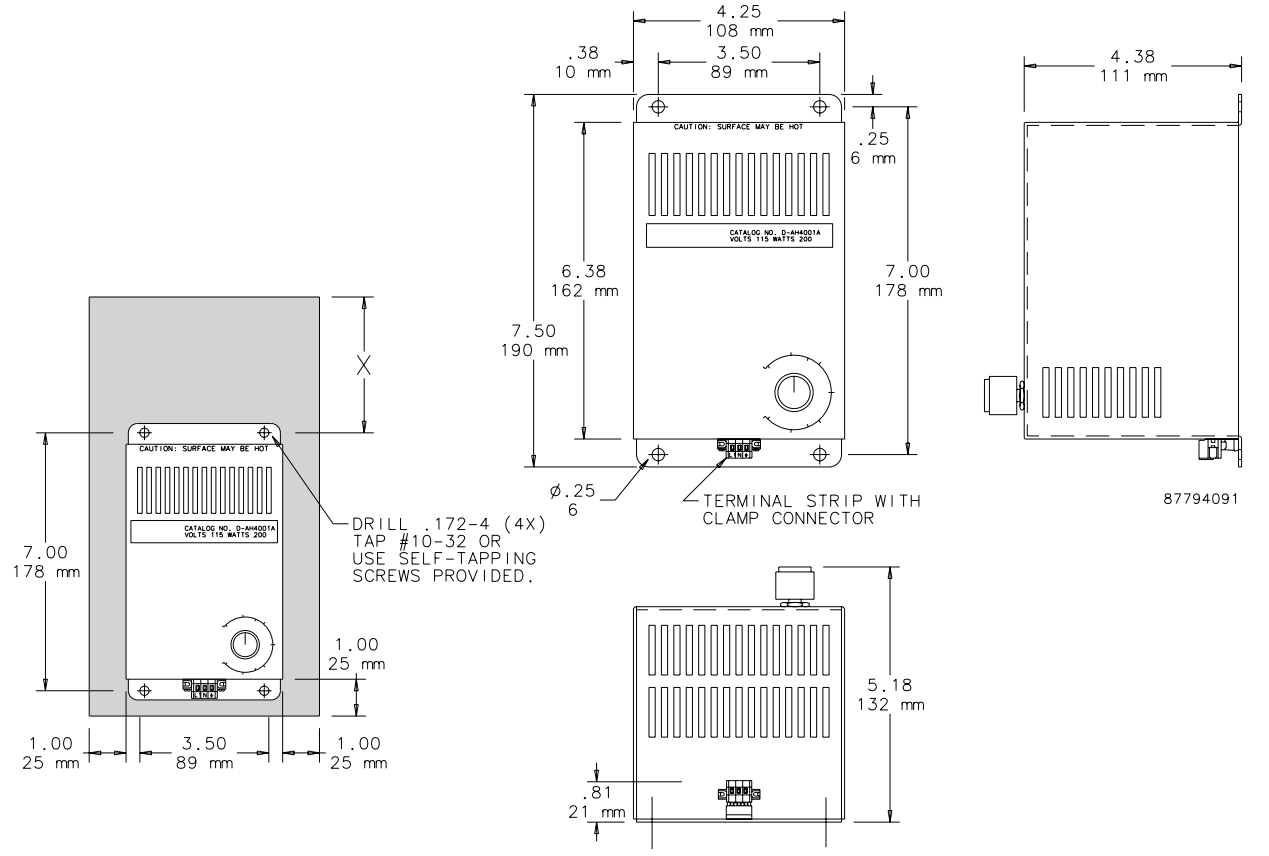

Dimensions and Clearance Range Drawing for DAH13001C and DAH13002C

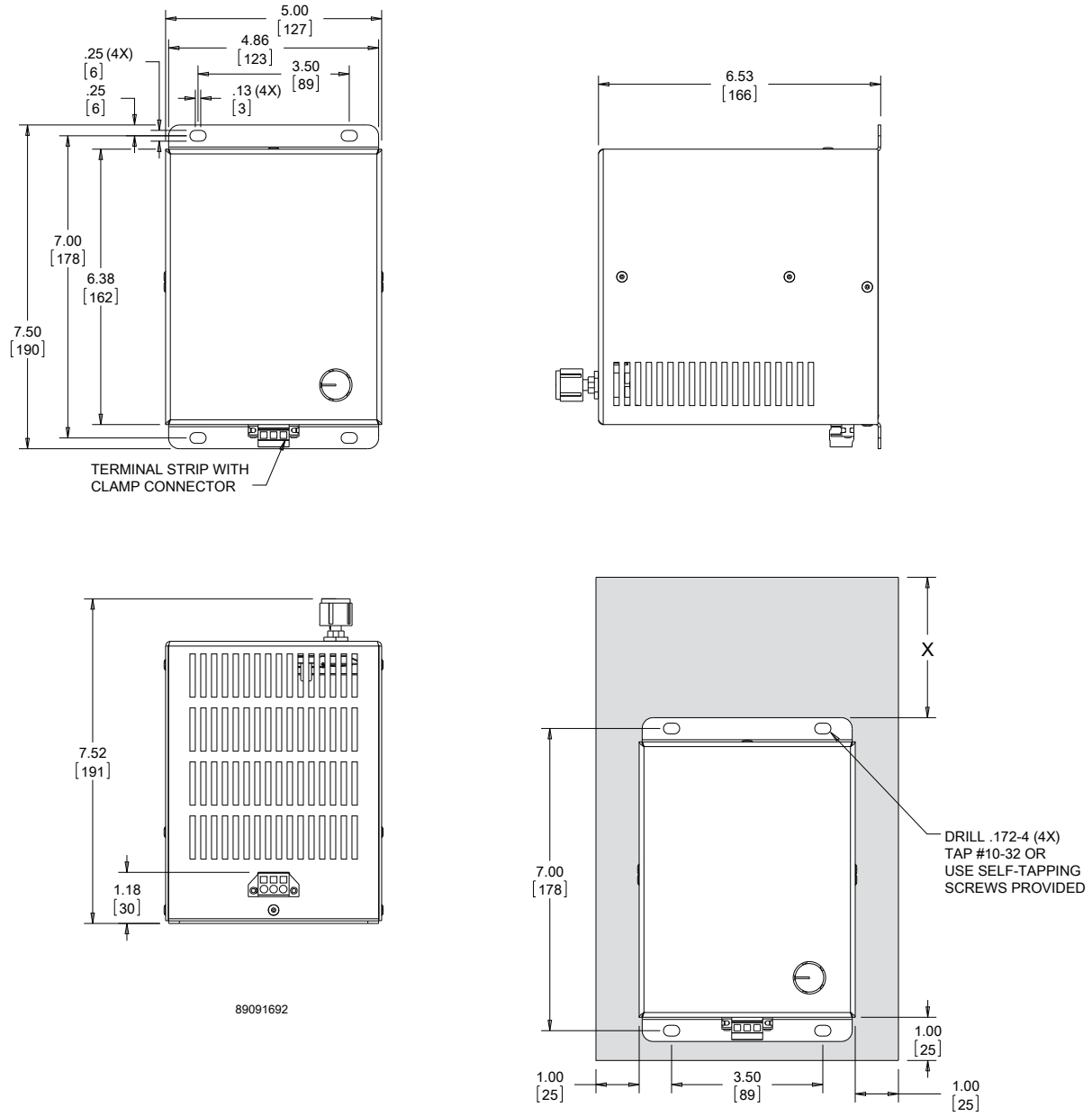

TIGG Carbon Vessel Manual

ACTIVATED CARBON VESSEL SYSTEM OPERATION & MAINTENANCE MANUAL

For

KIRTLAND AFB,NM

TIGG Corporation
1 Willow Ave
Oakdale, PA 15071
Ph: (724)703-3020
Fax: (724)703-3026
September 2015

TABLE OF CONTENTS

1.0 INTRODUCTION 1

2.0 EQUIPMENT SUMMARY 2
2.1 Design Basis 2
2.2 Carbon Vessel 3
2.3 Piping 3
2.4 Valves 3
2.5 Gaskets 3
2.6 Underdrains 3
2.7 Rupture Disk 3
2.8 Hose Adapters 3

3.0 PROCESS DESCRIPTION 4
3.1 Mode of Operation 4
3.2 Startup Procedures / Backwash Determination 4
3.2.1 Initial Carbon Fill 5
3.2.2 Backwashing to Segregate carbon 5
3.2.3 Deaerating/Prewetting 5
3.3 Initial Operation 6
3.4 Effluent Sampling/Change-out Determination 6
3.5 Suspended Solids Accumulation/Backwashing 7
3.6 Maintenance 7
3.7 Shutdown 7
3.8 Minimum Safety Precautions 8
3.9 Troubleshooting 8
3.9.1 General 8
3.9.2 Excessive Carbon Loses 9
3.9.3 High Pressure Drop in the Vessel 9
3.9.4 Poor Adsorption and Inefficient Carbon Usage 9
3.9.5 Carbon in the Effluent Line 10

4.0 System Pressure Drop 10

5.0 GAC Specificatiom 10

6.0 DETAILED CARBON CHANGE-OUT PROCEDURE 10
6.1 Removing Spent Carbon 10
6.1.1 Connections 10
6.1.2 Carbon Transfer 11

1.0 INTRODUCTION

The following sections discuss the design, process conditions and recommended operating procedures for a ***Liquid Phase Carbon Adsorption System***.

The system utilizes granular activated carbon for the adsorption of volatile and semi-volatile organic compounds for the treatment potable water following initial filtration for removal of suspended solids. The system is provided with two carbon adsorption vessels. It is intended that most of the time two vessels will treat the water in series operational mode. However, the vessels can also be operated in parallel mode if desired.

Scope of Supply

TIGG CORPORATION is supplying two, 10' diameter x 10' long straight side carbon adsorption vessels. These vessels are designed and constructed in accordance with ASME section VIII Division I with a pressure rating of 125 psi. See the Appendix for a drawing of the vessels.

Vessels are lined with Plasite 4110 as manufactured by Plasite Protective Coatings. Each vessel was tested for pinhole free lining by spark testing methods and then heat cured to meet NSF requirements.

The underdrain system consists of 8" stainless steel, schedule 10 headers with 1-1/2" stainless schedule 10, 0.01" slotted pipe for laterals on the bottom of the vessel. An 8" stainless steel, schedule 10 inlet distributor is provided at the top of the vessel.

A piping skid is supplied with the vessels with a total of four customer hookup points. These points are Inlet Water, Treated water, Inlet Backwash and Effluent backwash. The inlet and treated water lines are 8" Schedule 40 carbon steel with 8" butterfly valves. The 8" valves are manually gear operated hand wheels. The backwash inlet and effluent lines are 8" schedule 40 carbon steel pipe with 8" diameter butterfly valves. The 8" valves are operated manually by gear operated hand wheels.

It is the responsibility of the contractor to hook up the piping past the flanged pipe rack supplied. A total system assembly can be seen on the System General Arrangement drawing. Other than the process piping supplied on the referenced drawing, a stainless steel carbon fill line with a pressure relief rupture disk is supplied on each vessel and a 4" carbon discharge pipe is supplied for a carbon slurry discharge. Also, a 2" carbon steel vent line is provided for venting the vessel manually and an air relief valve with 3/4" vent line for continuous automatic venting.

A tie-in point for utility water connection (3/4") is provided via a fitting on the carbon fill pipe. The connection can be used for carbon slurry water supply. Also, a compressed air connection (3/4") for the purposes of aiding carbon transfers is provided on the same line. The compressed air connection has a ball valve and threaded fitting for attaching the customer's preferred hose coupling. See System General Arrangement drawing for the depiction of the assembly.

The pressure relief system on each vessel consists of a 2" graphite rupture disk designed for 125 psig working pressure. The discharge from the rupture disk terminates in a threaded fitting for attaching a hose connection. One spare rupture disk is provided with the system.

Each carbon vessel will contain 20,000 lbs of TIGG NSF 12 x 40 coconut carbon for the removal and treatment of organic compounds.

Installation Requirements

The installation contractor shall be responsible for off loading of the vessels, setting the vessels on a firm foundation appropriately compacted for the weight of the vessels, and setting the vessels in place.

When the fixed bed carbon system is delivered to the jobsite, it should be checked thoroughly to ensure that all required items have been received and the filter equipment is free of any shipping damage ***prior to signing the bill of lading***.

All equipment will arrive at the job site via flat bed trailer. The vessels will arrive on their sides. The pipe rack, peripheral piping sections and miscellaneous parts will be directly secured to the truck bed of the trailer.

The vessels should be rigged for lifting by qualified workers. The vessels should be removed from the truck in a horizontal position by a dual block crane. Lift a vessel from the truck by the lifting lugs on the top head ***and*** the tailing pick point located by strapping the vessel legs high and tight. Vessels should never be rigged and maneuvered into an upright position by the tilt up method, as severe damage to the vessel legs could result.

- Remove tanks from truck and set upright on legs in a stable location
- Place valve rack between the vessels.
- Install 8" pipe connections from the tank to the valve rack (note: install lower pipe first) Repeat for all connections.
- Install the carbon discharge pipe (SS pipe) on the outside of the tank.

In addition, the contractor shall supply and install the influent supply, effluent discharge, backwash supply, and backwash discharge piping to the vessels.

Utility piping to be provided includes, uncontaminated water @ 100 gpm and 30 psig for hydraulic carbon transfer; uncontaminated water @ up to 710 gpm and 30 psig for a period of 10-15 minutes for backwash.

The Treatment Plant shall have the capability of managing 7100- 10,650 gallons of backwash water per event and 8000 gallons of slurry transfer water generated during carbon transfer operations.

2.0 EQUIPMENT SUMMARY

2.1 Design Basis

The design basis for this operation is as follows:

Influent type	Pre-filtered raw water
Flow rate	750 gpm Series flow 1500 gpm maximum, parallel flow
Temperature	75°F maximum 33°F minimum
Pressure	125 psig
Carbon fill	20,000 lbs per vessel
Superficial contact time	10 *min @ 550 gpm*
Backwash rate	700- 710 gpm for solids removal
Contaminants	influent water: ppb organic constituents

2.2 Carbon Vessel

Vessel Nomenclature	GAC1, GAC2
Outer Diameter	120 in
Straight Side	120 in
Design Pressure	125 psig
Design Temperature	33-75° F
Material	SA 516-70 Carbon Steel
Lining	Plasite Protective Coatings 4110 Heat Cured
Exterior Paint	Sherwin Williams Kemkromik epoxy (or equal).
Approximate Weight	18,500 *lbs empty; 113,000 lbs full (carbon & water)*

2.3 Piping

Piping associated with the carbon vessels is constructed with Sch 40 carbon steel materials. TIGG System General Arrangement drawing (see Appendix) depicts the external pipe provided with the carbon vessels.

2.4 Valves - Process

Butterfly valves with manual gear operator (8") are provided.

2.5 Gaskets

Flange gaskets are EPDM rubber 1/8"tk per ANSI bolt pattern.

2.6 Underdrains

An underdrain system consists of stainless steel sch 10 slotted pipe with 0.01 slot size.

2.7 Rupture Disk

Rupture disks on the carbon vessels are 2" graphite disks with a burst pressure rating of 125psi. They are referenced on the P&ID dwg. Rupture disks were placed on the 4" carbon fill line to relieve any excess pressure build-up on the adsorber. The rupture disks will rupture at 125 psig. At no time should the adsorbers be operated at pressure greater than 125 psig. If the pressure is excessive and causes rupture disk to burst, immediately stop flow to the adsorber and carefully release any residual pressure through the 2" vent line. Once the system pressure is reduced, the rupture disk will need to be replaced.

2.8 Hose Adapters

Hose adapters on the carbon discharge, and drain, carbon fill pipelines are PT Coupling Co. "Part A" Cam-Lok style adapters.

Spare parts that may be required include rupture discs, underdrain nozzles, pressure gages, and valves if required. These parts may be ordered through TIGG.

3.0 PROCESS DESCRIPTION AND OPERATING PROCEDURES

The carbon adsorption system provided by TIGG Corporation consists of two vessels (GAC 1 & 2) and a pipe rack shown on the drawing. This system is to be employed as a polishing treatment system following primary filtration where the flow would be 1500 GPM (maximum) parallel mode or 750 GPM series operating mode. When running maximum flow, the vessels must be run in parallel. Each vessel is rated for 750 gpm maximum flow.

In order to achieve good organic compound removal and more efficient use of the carbon bed, it is recommended that the system be used in series mode at a typical flow of 550 gpm. Series flow will achieve maximum utilization of the activated carbon, thereby reducing annual costs. With the two adsorbers in series, the lead adsorber is used to remove the majority of organic constituents. The second adsorber is used to assure that the system meets treatment objectives as the organic mass transfer zone is maintained with the lead adsorber. The carbon in the lead adsorber will be eventually become saturated with organics. At his time, the lead adsorber must be taken out of service to allow the carbon bed to be exchanged with fresh carbon. The lag vessel is then put into service as the lead vessel.

By sampling and analyzing the residual organic constituents in the outlet of the adsorbers, the laboratory results can be plotted over time to develop a breakthrough curve for the organic constituents. This information is employed to assist the operating personnel in achieving maximum utilization of the activated carbon. In addition, three, ¼" sample ports are provided on the vertical side of each vessel so that the presence of organic constituents can be observed migrating down through the carbon bed.

Parallel flow can be employed by opening the specific inlet and outlet valves on the adsorbers as detailed in Table 2 of the Appendix. Parallel flow through the adsorbers is advantageous when the organic constituents present are readily adsorbable or a larger flow rate is desired. However, the maximum utilization of the carbon is reduced by operating the adsorbers in parallel. Also, the piping system is designed to allow the operation of each adsorber individually. This will enable one adsorber to be taken off-line for service while the other adsorber remains in operation.

The mode and valve operation on this versatile pipe system can be seen on the valve sequencing Tables in the Appendix.

3.1 Mode of Operation

Please refer to the Tables in the Appendix for the various modes of operation. The vessels can be operated in the following manner:

- Series GAC 1 to GAC 2, or GAC 2 to GAC 1
- Parallel, GAC 1 & GAC 2 on line
- GAC 1 on line with GAC 2 in either idle, backwash, spent carbon unloading, or fresh carbon loading mode
- GAC 2 on line with GAC 1 in either idle, backwash, spent carbon unloading, or fresh carbon loading mode

3.2 STARTUP PROCEDURES

The following steps outline the procedures to follow prior to placing the vessels in service. Tables in the Appendix identify the valve number and function description for the valves associated with each GAC vessel.

3.2.1 Initial Carbon Fill

Initially, carbon must be loaded into the vessels at the site. Fresh carbon will arrive in bulk containers (i.e., sacks). In order to protect the liquid collector (under drain) system, ***uncontaminated water must be added to the vessel prior to adding the carbon***. A sufficient amount of water should be added

such that the water level is at least 2 feet above the collector, or approximately 2200 gallons. Water can be added through the top manway. When adding clean uncontaminated water, all valves shall remain closed except for the vent valve.

After water has been added to the vessel, the adsorber is now ready to be filled with carbon. Proceed with the carbon filling as outlined below:

- Position the bulk carbon container near the adsorber to be filled. The fork lift or crane operator should elevate the sack over the manway on top of the vessel.
- Once this is done, the operator can slightly open the drawstring on the bulk bag and slowly start the transfer of carbon into the vessel. It should take about 18 sacks to fill the vessel.
- After the transfer of carbon is complete, the manway on the adsorber can be replaced and bolted in place.

Subsequent carbon exchanges following the initial fill will be done in the following manner: carbon will be loaded into the vessels via slurry method by TIGG's subcontractor. The carbon will arrive in bulk trailers.

In order to protect the liquid collector (under drain) system, ***uncontaminated water must be added to the vessel prior to adding the carbon***. A sufficient amount of water should be added such that the water level is at least 2 feet above the collector, or approximately 3,000 gallons. Water can be added through the 4" carbon fill line via the 3/4" connection on side of the carbon adsorber or by opening the manway on top of the vessel and letting a hose drape over for filling. When adding city or clean uncontaminated water, all valves shall remain closed except for the vent valve and the fresh water supply valve (3/4").

After the above procedure has been completed, the adsorber is now ready to be filled with carbon. The necessary valve sequences for filling the respective carbon vessel are provided in Tables in the Appendix. Proceed with the carbon filling as outlined below:

- The subcontractor should position the bulk trailer near the adsorber to be filled. The driver will connect all necessary hoses and will operate all the valves on the bulk trailer.
- Fill the trailer with approximately 5000 gallons of treated water.
- Connect a flexible hose with quick connect coupling between the bulk trailer and the adsorbers fill line 4" Cam-Lok fitting.
- Connect a temporary compressed air line to the bulk trailer and regulate the compressed air at 150scfm and 18 psig. Once this is done, the driver will open the bulk trailer starting the transfer of carbon.
- If the transfer of the carbon slurry is proceeding too slowly, there may be an issue with displacement of air in the vessel. In that case, it may be advantageous to displace the air through the backwash effluent line by opening valve 9 (Adsorber #2) or 10 (Adsorber #1) to vent the tank.
- Once the air flow is evidenced through the transfer hose, all of the replacement carbon should have been transferred from the bulk trailer into the adsorber. After the transfer is complete, disconnect the temporary compressed air and carbon transfer hoses. The 2" drain on the adsorber or by draining through the backwash effluent line can be used to displace the transfer water if the volume of water exceeds the capacity of the adsorber.

The adsorber is not ready to be placed on line. It is essential that two actions be taken prior to placing an adsorber in service. They are:

1) The carbon particles have been classified/segregated (Section 3.2.2); and,

2) All of the air has been removed from the carbon pores (Section 3.2.3).

If these steps are not completed, premature breakthrough of the organics can occur and thus there may be poor utilization of the carbon.

3.2.2 Backwashing to Segregate the Carbon

It is recommended that the carbon should be segregated in each bed prior to the adsorbers being placed on-line. This is important so that the carbon particles will always return to their same relative position in the bed after each backwashing operation. If the bed is not segregated, the carbon particles could change position and the adsorption zone (where adsorption is occurring) may be disturbed. This may result in poor utilization of the carbon and early breakthrough of organics. If backwashing of the beds is not feasible during initial operations, then proceed to section 3.2.3 below, prewetting the carbon.

Initial backwashing should be performed at a rate of 6 to 8 gpm/ft^2 or 480-630 gpm for 10 to 15 minutes until the backwash is clear of carbon fines. ***Uncontaminated*** water is preferred for this and all subsequent backwashing operations.

Backwashing of each vessel is accomplished by isolating the vessel to be backwashed. To isolate the vessel, close the treated water effluent valves and the influent valves. Once the vessel has been isolated the vessel can be backwashed. To initiate backwash, open the backwash discharge valve for the adsorber to be backwashed, (see Tables 3 & 5). Start the back wash pump and open the backwash supply valve slowly for the adsorber to be backwashed to prevent shocking the carbon bed and losing carbon. If possible, observe the backwash effluent stream to confirm that carbon is not being washed out of the vessel. If carbon, other than fines, is being washed out of the bed, close the supply valve slightly to reduce the flow to the vessel.

After backwashing is complete, close the backwash supply valve, shut down the pump and close the backwash discharge valve.

Subsequent to backwashing, the system is ready to be deaerated/prewetted as described in the following section.

3.2.3 Deaerating / Prewetting

As discussed previously, it is necessary to ensure that the carbon bed is properly deaerated prior to placing the unit in service. This is required to ensure proper flow though the bed to eliminate channeling, reduce pressure drop, and prevent premature breakthrough.

A bed of carbon consists of the following:

Void volume	-	40%
Pore volume	-	40%
Carbon skeleton	-	20%

A relatively long time is required for water to enter the pores and displace the air since the pores in dry carbon are filled with air and some adsorbed oxygen. Approximately 90% of the pores may be filled with water after 24 hours at ambient temperature (70° F).

In order to have the carbon pre-wetted, the adsorber should remain filled with water for at least 24-48 hours with the 3/4" vent line valve open on the carbon fill line. Having this valve open will permit trapped air to escape. After the carbon is pre-wetted, the bed should be backwashed for 10 to 15 minutes, prior to being placed on-line. It may be beneficial to repeat the backwash cycle after 2 or 3 days operation in order to remove any remaining air which collects in the bed.

3.3 Initial Operation

Assuming the vessels have been filled with carbon, properly pre-wetted and segregated as described in the preceding sections, the system is ready to be placed on-line for treating the contaminated water. The vessels should now be topped off with water and readied for operation by closing vent valves and opening the process inlet and outlet valves to the adsorbers required for treatment. (see Table 1).

Prior to introducing water into the adsorbers, ensure that the adsorber's influent valves are open on the vessels. Pressurize the influent line with the supply pumps and then slowly open the discharge valves to process water. **CAUTION - Sudden opening and closing of the valves could cause pre-mature failure of the rupture disks. Again please refer to the Appendix to identify the mode of operation and the associated valve positioning.**
Note: Before any water is processed, it is recommended practice that all the pipes on the pipe rack are filled with fresh water and high point vents be used to remove air from the piping. If air is allowed to stay in the piping, pressure drop through the piping system may increase.

3.4 Effluent Sampling / Change-out Determination

During operation, water samples should be taken on a regular basis from the discharge water and sample ports to monitor the mass transfer zone (MTZ) in each adsorber. After several cycles, it should be possible to determine how the MTZ moves and to predict when carbon exchange is required. If the MTZ is short, the concentration of the contaminants at the sample port will eventually equal the concentration in the influent.

The long term frequency for sampling the effluent of each vessel can be determined after the carbon in the adsorber has been changed two or three times. The effluent concentration of the contaminants should be plotted as a function of gallons treated. Assuming the influent concentration is essentially constant, it will be possible to determine when sampling should begin prior to the expected time to remove the spent carbon.

Once it has been determined that the carbon in the vessel is saturated with contaminants, then the lag vessel should be placed into lead service. Make sure the effluent valve on the standby adsorber is open, and then slowly open the inlet valve on the vessel to allow the process flow to enter the vessel. Once the lag vessel is on-line as the lead, the spent vessel can be taken out of service. The spent vessel is then isolated and the procedures should be followed for carbon change-out (section 7).

3.5 Suspended Solids / Backwashing

If there are suspended solids in the influent these may be filtered by the carbon bed. If this occurs they will collect on top of the bed and the pressure drop across the bed will increase. When the differential pressure drop across the system is roughly 10 psi above the initial clean bed pressure drop, the vessels should be backwashed. This operation should remove the solids and the differential pressure drop should return to normal. If it is necessary to backwash a vessel, the valve positions should be adjusted to block the vessel out of the process stream and open the valves to the backwash feed and return lines. The backwash flow rate should be approximately 710 gpm but should be adjusted such that the carbon bed is expanded but no carbon exits the bed. For each vessel, with 20,000 pounds of carbon, there is sufficient space above the carbon bed for 10 – 20% percent expansion. Experience will determine the required backwash period. When backwashing is completed, the pump must be shut off and

the vessel with fresh carbon can be placed on-line.

3.6 MAINTENANCE

The fixed bed carbon system is designed to require minimal maintenance. The following items should be inspected with regard to the carbon vessels, ancillary piping, valves and gages.

1) Internal inspection of a vessel should be performed each time carbon is removed.
2) Inspect the lining to verify it has not been damaged. If damage has occurred or been compromised in any way, it must be repaired prior to putting the vessel back in service.
3) Inspect the underdrain nozzles in the collector to insure they are intact and not plugged.
4) Pressure gages should be checked periodically to insure proper operation.
5) Piping and valves should be periodically inspected for signs of wear and/or leakage.

3.7 SHUTDOWN

The adsorption system is designed to operate continuously, 24 hours per day, 365 days per year. A short-term shutdown, as discussed below, is defined as a shutdown period that is expected to last less than 48 to 72 hours.

3.7.1 Short-Term Shutdown

A short-term shutdown is most likely to occur during weekend shutdown or routine maintenance of the system. During a short-term shutdown, the adsorbers may remain filled with water unless work is being performed on the adsorbers themselves. It may be necessary to close the inlet/outlet valves to prevent any siphoning or drainage from the vessels.

3.7.2 Long-Term Shutdown

A long-term shutdown is most likely to occur during spent carbon change-out, changes in the system configuration, major maintenance, etc. During a long-term shutdown the adsorbers should be completely drained to minimize potential for biological growth and bed septic condition.

The adsorbers are drained of excess water draining the vessels through the effluent water pipe until no water continues to run. After that water is allowed to drain, open the bottom 1” brass ball valve to drain the remaining water from the vessel. This drain should remain open for some time to allow water draining from the carbon to exit. **Do not open** the bottom 3” stainless steel ball valve at this time as carbon will be removed by doing so.

3.8 MINIMUM SAFETY PRECAUTIONS

All electrical, mechanical and rotating machinery constitute a potential hazard, particularly for those not familiar with the design, construction and operation. Accordingly, adequate safeguards (including use of protective equipment when necessary) should be taken with this equipment to safeguard the public (including minors) from injury and to prevent damage to the equipment, its’ associated system and the premises. Refer to the site specific health and safety plan (prepared by others) for site specific health risks and safety precautions to be undertaken when operating and maintaining this equipment.

The operation, maintenance and repair of this equipment should be undertaken only by personnel qualified to do so. All such personnel should be thoroughly familiar with the

equipment, the associated system and controls, and the procedures set forth in this manual. Proper care, procedures and tools must be used in handling, lifting, installing, operating, maintaining and repairing this equipment to prevent personal injury and/or property damage.

WET ACTIVATED CARBON CAN REDUCE OXYGEN LEVELS IN CONFINED SPACES. USE AND COMPLY WITH ALL APPLICABLE CONFINED SPACE ENTRY PROCEDURES WHEN ENTERING ADSORBER VESSELS CONTAINING WET CARBON, OR FROM WHICH CARBON HAS BEEN REMOVED.

Contaminated water may contain chemicals or biological contaminants which could be harmful if exposed to the skin, inhaled or ingested. Accordingly, personnel who may be exposed directly to the mists produced by water jets or compressed air should wear appropriate OSHA protective equipment.

3.9 TROUBLESHOOTING

This section is intended to identify a portion of the more common problems which may be encountered during the operation of a granular activated carbon system. The following "cause and effect" discussion is not intended to be all inclusive since situations and circumstances will vary with each individual system by virtue of design, operating philosophy, etc. Therefore, this section should only be considered as a guideline for troubleshooting.

3.9.1 General

The problems which arise generally fall under the following categories:

- Excessive carbon losses
- High pressure drop
- Poor adsorption and inefficient carbon usage

3.9.2 Excessive Carbon Losses

Generally, it is reasonable to expect 3% to 5% carbon loss for the following reason:

1) The fines in fresh carbon (up to 5%) may be washed out during the backwashing operation.

2) Backwashing causes the carbon particles to become rounded over time. Experience shows that the mean particle diameter can decrease 5 to 10 percent due to abrasion. This results in a reduction in the volume of carbon in the system because smaller, more rounded granules tend to pack more efficiently.

3.9.3 High Pressure Drop in the Adsorber

High pressure drop in the adsorber can be caused by:

1) Air in the carbon bed,

2) Suspended solids in the influent,

3) Plugging of the collector (under drain), and/or

4) Excessive carbon fines.

3.9.3.1 Air in the Carbon Bed

As discussed in Section 6.3, air in the carbon bed is generally caused by inadequate wetting of the carbon granules. Adherence to the startup procedures should eliminate this as a potential problem.

3.9.3.2 Suspended Solids in the Influent

If suspended solids are present in the influent water they will generally be filtered on top of the carbon bed. If this becomes a serious problem, causing excess pressure buildup and relatively frequent backwash cycles, pretreatment of the influent stream may be required.

3.9.3.3 Plugging of the Collector (Under drain)

Openings in the underdrain nozzles are designed such that small carbon particles may pass through without plugging. In some cases the characteristics of the water are such that oils, bacterial growth, etc. may migrate through the carbon and plug the underdrain nozzles. Usually a vigorous backwash will alleviate the problem.

3.9.4 Poor Adsorption and Inefficient Carbon Usage

Poor adsorption and inefficient carbon usage may be caused by the following:

1) Channeling caused by air and /or suspended solids in the carbon bed - Refer to Sections 4.2.1 and 4.2.2
2) Carbon saturation from organics - Change the carbon.
3) Increase in influent concentration of organics - Compare influent analyses.
4) Change in types of organics in the influent - Compare influent analyses.
5) Presence of non-adsorbable organics - Compare influent analyses.
6) Change of pH of influent water - Compare influent analyses.
7) Backwashing without segregating the carbon prior to startup - Refer to Section 4.2.

3.9.5 Carbon in the Effluent Line

Carbon may pass into the effluent line if the slotted pipe laterals fail(s). If carbon is detected, the particle size should be determined. If the particle size is greater than 0.012 inch, it is probable that a lateral pipe has been damaged or loosened from the header pipe.

4.0 SYSTEM PRESSURE DROP

Pressure drop when running 500 gpm through each vessel will be approximately 5 psi. Total pressure drop across the system operating in series can be approximately 15 psig total. The system should be backwashed if the total system pressure drop reaches 25 psig.

5.0 GAC SPECIFICATION – See Appendix, for carbon specs

6.0 DETAILED CARBON CHANGE-OUT PROCEDURE

When contaminant saturation has been identified in a vessel, the vessel will be taken off-line and isolated from the process stream as identified in Section 4.4. The carbon in the vessel must then be removed and replaced with fresh carbon. When it is determined that carbon should be removed from a vessel, the procedure discussed in the following sections should be followed.

6.1 Removing Spent Carbon in a Slurry Form

There are two options to remove the carbon as slurry. One option is to use air as the motive force. The other is to use water as the motive force.

6.1.1 Connections

The carbon slurry outlet line located on the bottom center of each vessel should be connected with a hose to a receiving container prior to carbon removal. For this size adsorber the container is usually a bulk trailer. The container should have a drain for removing the excess water from the carbon (prior to transportation).

A 3/4" water connection is provided for fresh water supply to aid in the slurry process. This is normally the fill line when the vessel is being filled but can serve to introduce carbon flush water also.

6.1.2 Carbon Transfer

To ensure a proper transfer of carbon from the adsorber, it is necessary to isolate the vessel from the process stream and to close any vent valves. This is required for pressurization of the adsorber vessel.

6.1.2.1 Carbon Transfer from Adsorber – using compressed air or pressure blower

To initiate the carbon transfer process for an Adsorber follow the steps detailed below:

1) Prepare for carbon removal by closing all valves and any other sample or flush valves that maybe open at that time.

2) With the vessel full of water, add pressurized air to the top head by connecting an air hose to the 3/4" ball valve on the carbon fill line. When the top of the vessel reaches 10-15 psi, open the carbon discharge valve (4" full port carbon discharge ball valve) and carbon should begin to flow through the transfer line.

3) There should be sufficient water in the vessel to remove the majority of the spent carbon. However, some carbon may remain in the adsorber due to the angle of repose of the carbon, which is 25 to 30 degrees. This remaining carbon is called the carbon heel. This amount may be as much as 2,000 to 3,000 pounds. The remaining carbon can be removed by either introducing water into the vessel through the underdrain via the backwash lines (carbon effluent) or by flushing it out with a hose by accessing the vessel through one of the manways.

4) Close the 3/4" ball valve in the fill line and open the 2" vent valve as soon as air exits the discharge line.

5) When pressure in the vessel is essentially atmospheric, prepare to add water for a period of

5 to 10 minutes. This should cause the carbon bed heal to slump.

6) Close the carbon discharge valve and open the backwash valve to introduce water to the vessel.

7) After 5 minutes, close the backwash valve to isolate the adsorber

8) Close vent valve.

9) Open the air supply valve to pressurize the vessel as in step 2. Open the carbon discharge valve and transfer the balance of the carbon to the trailer.

10) When the carbon removal process is completed, close the carbon discharge valve and prepare to add fresh carbon as described in Section 3.2.1.

Note: After completing steps 1 through 10, there is still the possibility of a portion of spent carbon remaining in the bottom head. Therefore, open the manway to inspect the vessel. Depending on the quantity and location of the carbon, it may be necessary to use a hose to wash it into the bottom of the head and/or repeat the above backwashing/air pressure steps after closing the manway.

6.1.2.2 Carbon Transfer from Adsorber – using total water slurry

To initiate the carbon transfer process for an Adsorber follow the steps detailed below:

1) Prepare for carbon removal by closing all valves and any other sample or flush valves.

2) Complete a backwash of the vessels as described in Section 4.2.2

3) Insure the vessel is full of water. Open the 8" influent valve and push approximately 100 gpm of clean or treated water through the vessel. A pressure of 10 – 20 psi at this flow rate should transfer the carbon to the bulk trailer. The carbon discharge valve will need to be opened after the pressure on the tank has been allowed to build to this level or slightly higher. Carbon will usually be pushed out at a rate of 1-3 lbs carbon/gal of water. However, there must be continuous flow. Once all the carbon is out of the vessel, an inspection through the manway may result in a wash down of any hanging carbon and a repeat of this step to push the remaining carbon back to the bulk trailer.

Also, during this process, the bulk trailer will need to be drained at a rate similar to the fill of 100 gpm. Usually the draining will require frequent stopping and starting of the feed to the 4" discharge line. This stopping and starting can be accomplished by closing the carbon discharge valve. When this occurs, the pressure on the pump must be either maintained so as not to rupture the pressure disk or it must be shut down to avoid over pressurization.

4) When the carbon removal process is completed, close the carbon discharge valve and all the process valves and prepare to add fresh carbon as described in Section 3.2.1.

Note: After completing steps 1 through 3 there is still the possibility of a portion of spent carbon remaining in the bottom head. Therefore, open the manway to inspect the vessel. Depending on the quantity and location of the carbon, it may be necessary to use a hose to wash it into the bottom of the head and/or repeat the above backwashing/air pressure steps after closing the manway.

APPENDIX

P&ID DRAWING

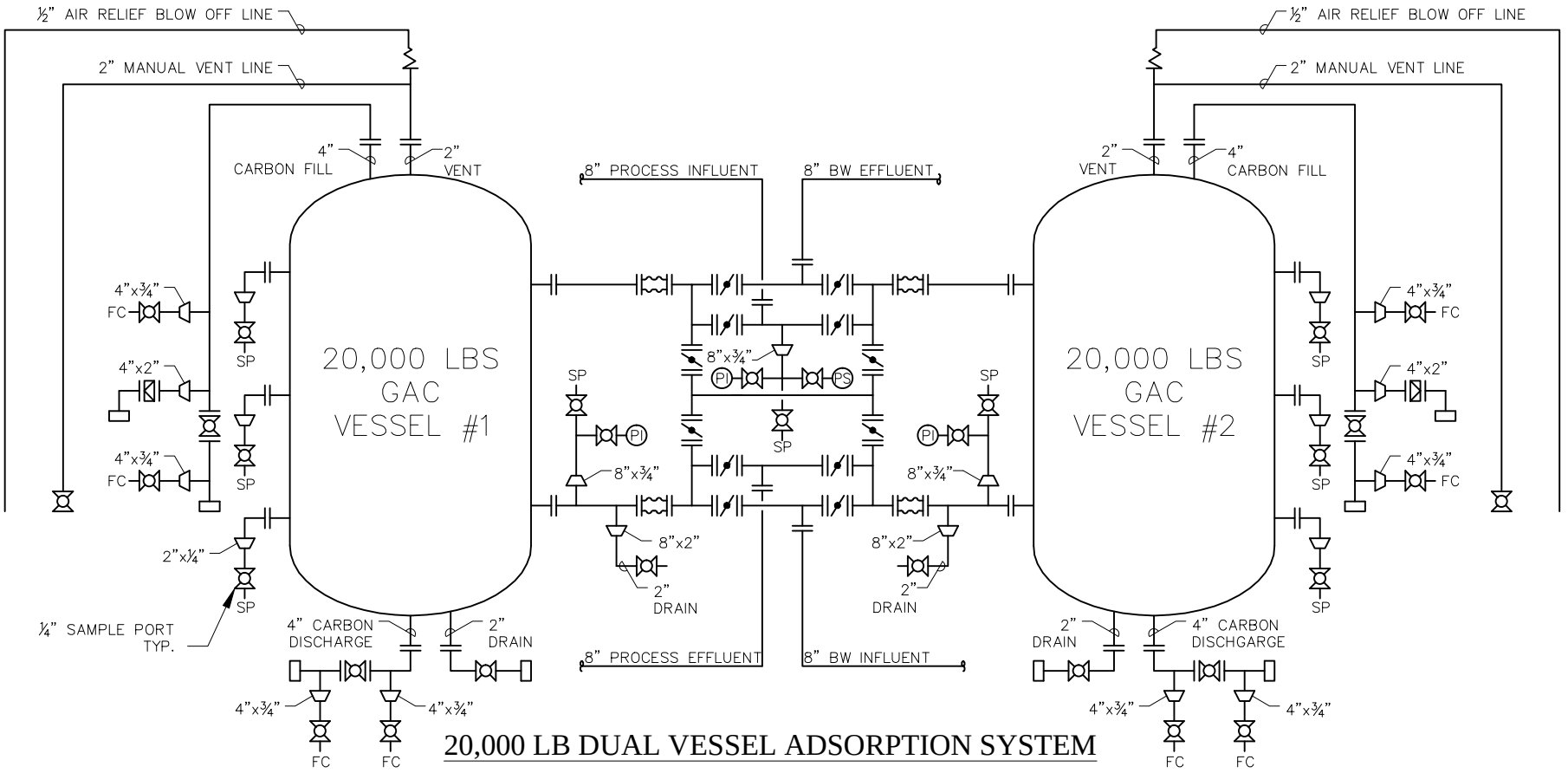

20,000 LB DUAL VESSEL ADSORPTION SYSTEM

LEGEND

BALL VALVE	FC — FLUSH CONNECTION	SP — SAMPLE PORT	
EXPANSION JOINT	REDUCER	RUPTURE DISK	PS — PRESSURE SWITCH
AIR RELIEF VALVE	QUICK CONNECT CAM LOCK FITTING	MANUALLY OPERATED BUTTERFLY VALVE	PI — PRESSURE GUAGE

NO.	REVISION	BY	DATE

PROJECT
CB&I
EXTRACTION & TREATMENT SYSTEM

PROJ. NO.	CS GROU150024
P.O. NO.	1116799-00 OP

THIS DRAWING AND DESIGN ARE THE PROPERTY OF TIGG CORP. AND SHALL NOT BE REPRODUCED IN WHOLE OR IN PART, NOR EMPLOYED FOR ANY PURPOSE OTHER THAN SPECIFICALLY PERMITTED IN WRITING BY TIGG CORP. THIS DRAWING LOANED SUBJECT TO RETURN ON DEMAND.

DRAWN BY	JB
DESIGN BY	JB
CHKD. BY	JI
DATE	2/17/15
SCALE	NTS

TIGG LLC.

KIRKLAND AFB
P&ID

C15-004-001

REV. 6

GENERAL ARRANGEMENT DRAWING

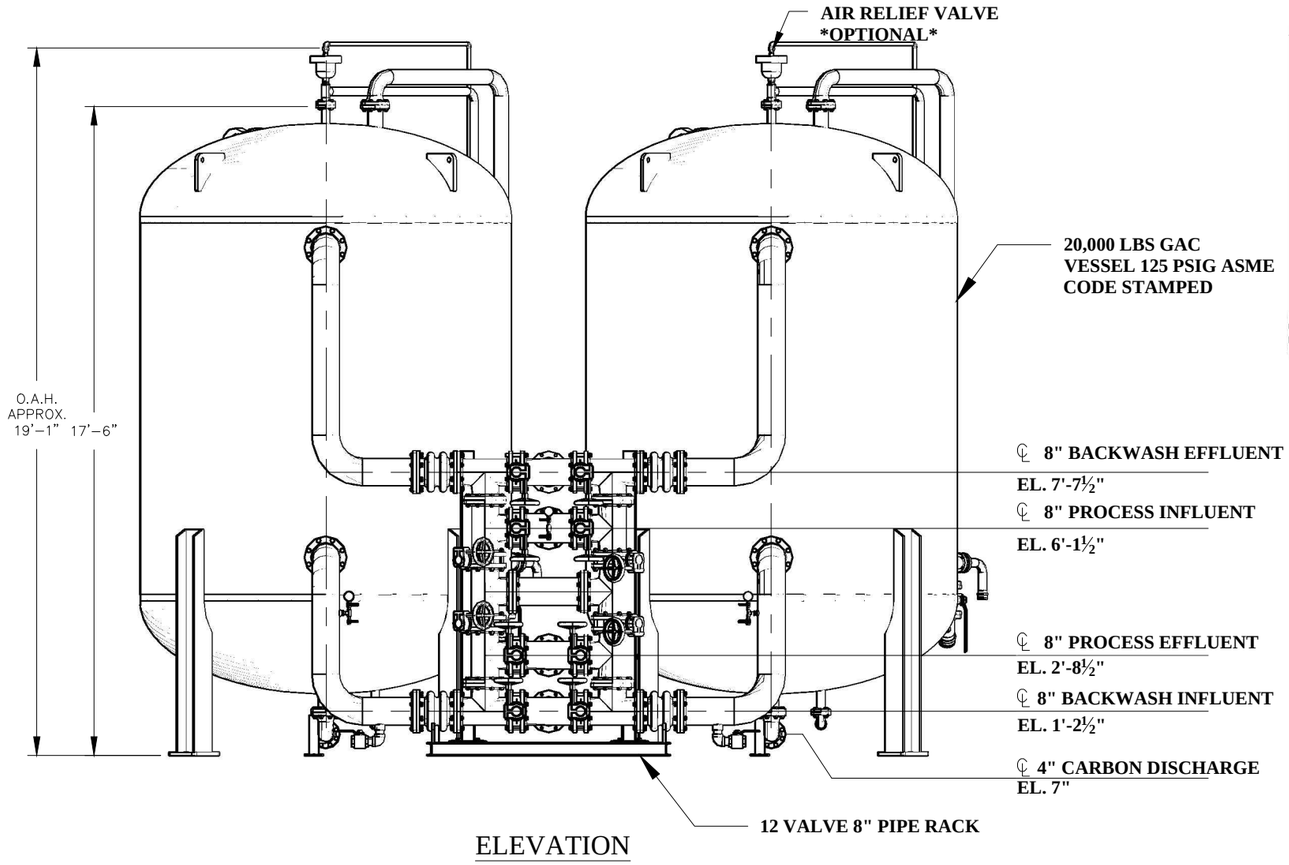

ELEVATION

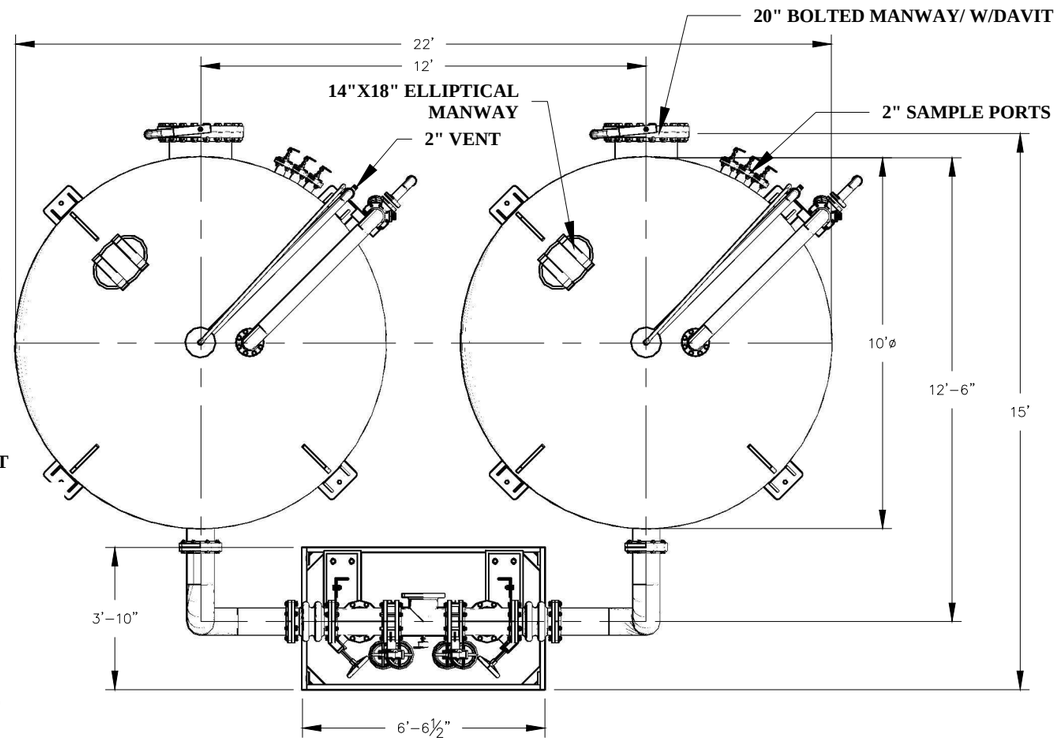

PLAN

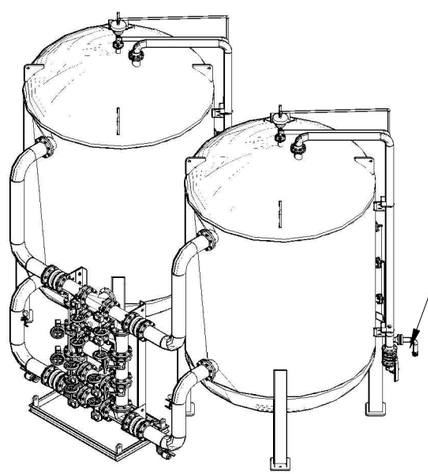

EMPTY VESSEL WT. (1):	13,000 LBS
VESSEL OPERATING WT. (1):	79,000 LBS
PIPE RACK OPERATING WT:	12,000 LBS
SYSTEM OPERATING WT.:	170,000 LBS

FOR REFERENCE ONLY

NO.	REVISION	BY	DATE
3	ADD ADD 2" MANUAL VENT & EFFLUENT DRAIN	JB	3/21/14
2	ADD EXPANSION JOINTS	JB	1/10/13
1	ADD SAMPLE PORTS TO VESSEL	RC	12/19/12

PROJECT
CP–20K–10
(SYSTEM)

PROJ. NO.	SALES
P.O. NO.	

THIS DRAWING AND DESIGN ARE THE PROPERTY OF TIGG CORP. AND SHALL NOT BE REPRODUCED IN WHOLE OR IN PART, NOR EMPLOYED FOR ANY OTHER PURPOSE OTHER THAN SPECIFICALLY PERMITTED IN WRITING BY TIGG CORP. THIS DRAWING IS LOANED SUBJECT TO RETURN ON DEMAND.

DRAWN BY	JB
DESIGN BY	JB
CHKD. BY	BB
DATE	2/9/10
SCALE	NTS

TIGG LLC.

SYSTEM GENERAL ARRANGEMENT

DWG. NO. CP–20K–10–1003 REV. 3

VESSEL DRAWINGS

MARK	SERVICE	DESCRIPTION	LOCATION
N6	AIR RELIEF	2" 150# FFSO FLANGE	TOP HEAD
N5	DRAIN	2" 150# FFSO FLANGE	BOTTOM HEAD
N4	CARBON DISCHARGE	4" 150# FFSO FLANGE	BOTTOM HEAD
N3	CARBON FILL/PRES. RELIEF	4" 150# FFSO FLANGE	TOP HEAD
N2	OUTLET	8" 150# FFSO FLANGE	SHELL
N1	INLET	8" 150# FFSO FLANGE	SHELL
M2	MANWAY	20" 150# FFSO W/ DAVIT	SHELL
M1	MANWAY	14"x18" ELL. MANWAY	TOP HEAD

NOZZLE SCHEDULE

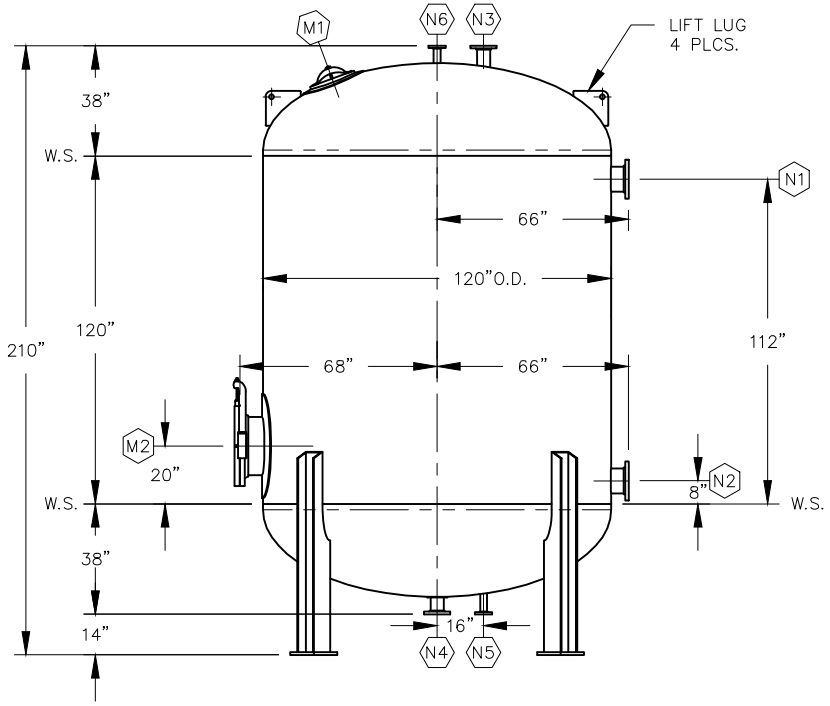

ELEVATION

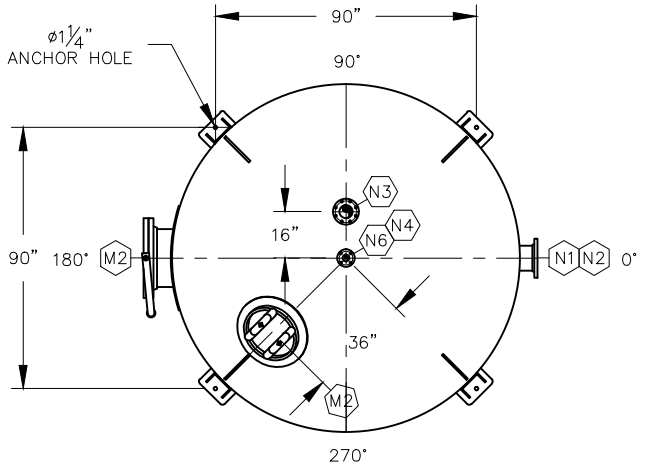

PLAN

NO.	REVISION	BY	DATE
1	REVISE FLANGE TYPE & LINING	JB	7/5/11

VESSEL STANDARDS

VESSEL MATERIALS : SA-516-70	VESSEL ACCESS : 20" BOLTED MANWAY W/ DAVIT
LINING : NSF APPROVED VINYL ESTER	LIQUID DRAIN ASSEMBLY : 2" 150# FFSO FLANGE
EXTERIOR PAINT : EPOXY BASE / URETHANE TOP COAT	TOTAL VOLUME : 1055 FT^3
HEAD THICKNESS : ½" NOM.	SHIP WT. EMPTY : 11783 LBS
SHELL THICKNESS : ½" NOM.	MAX. OPERATING PRESSURE : 125 PSIG/-15 PSIG (VAC.)
INTERNALS : PVC	MAX. OPERATING TEMPERATURE. : 150°F

PROJECT

CP-20K-10

PROJ. NO.	SALES
P.O. NO.	

THIS DRAWING AND DESIGN ARE THE PROPERTY OF TIGG CORP. AND SHALL NOT BE REPRODUCED IN WHOLE OR IN PART, NOR EMPLOYED FOR ANY PURPOSE OTHER THAN SPECIFICALLY PERMITTED IN WRITING BY TIGG CORP. THIS DRAWING LOANED SUBJECT TO RETURN ON DEMAND.

DRAWN BY	JB
DESIGN BY	BB
CHKD. BY	BB
DATE	2/28/11
SCALE	NTS

TIGG corporation

PLAN & ELEVATION

CP-20K-10-1001 REV. 1

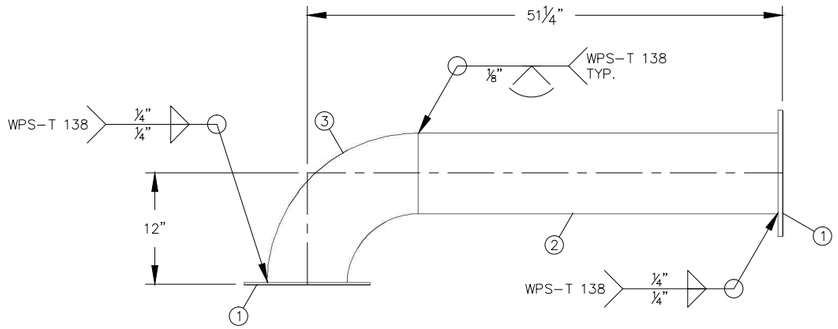

DISCHARGE FLANGE CONNECTION

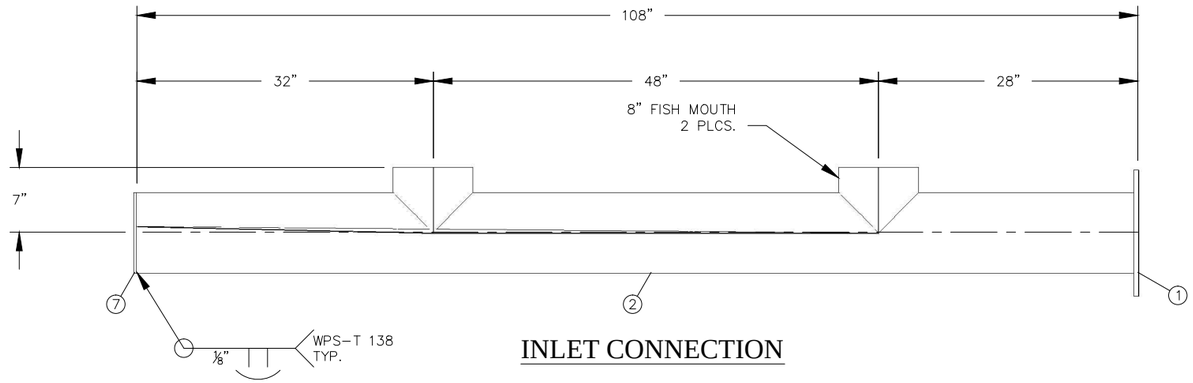

INLET CONNECTION

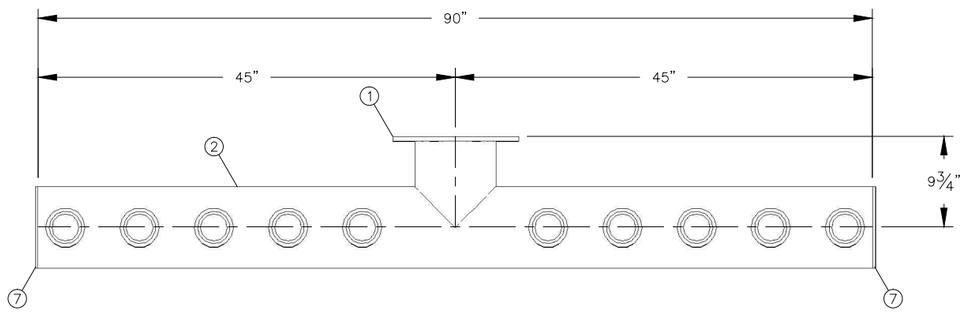

DISCHARGE LATERAL CONNECTION

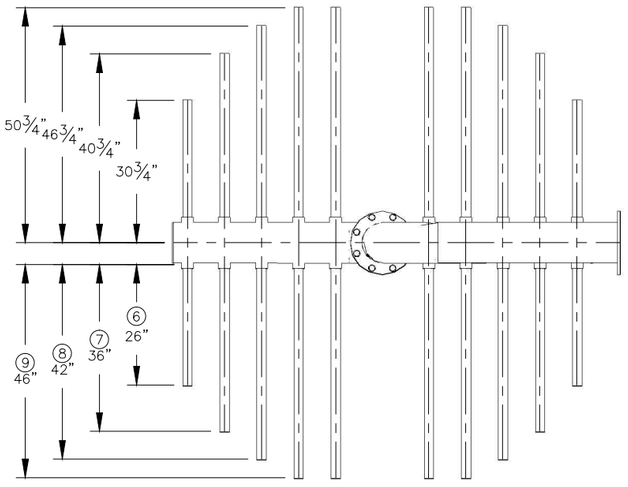

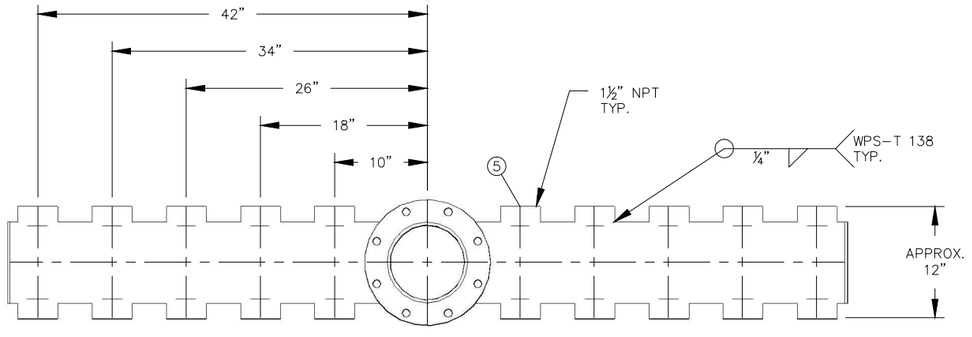

DISCHARGE LATERAL CONNECTION

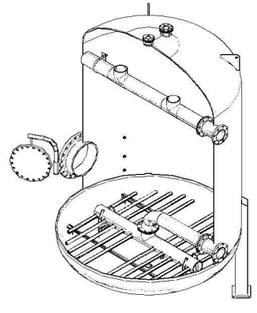

ITEM	QTY.	DESCRIPTION	MATERIAL
	1	8" U–BOLT	304SS
	20	1½" U–BOLT	304SS
	48	¾"ø WASHER	304SS
	24	¾"ø HEAVY HEX NUT	18–8 OR BETTER
	24	¾"ø x2" BOLT	18–8 OR BETTER
	3	8" 150# FULL FACE GASKET	NEOPRENE
9	8	1½" WEDGE WIRE 0.010"SLOTTED PIPE 46" LONG	SA–182 304L
8	4	1½" WEDGE WIRE 0.010"SLOTTED PIPE 42" LONG	SA–182 304L
7	4	1½" WEDGE WIRE 0.010"SLOTTED PIPE 36" LONG	SA–182 304L
6	4	1½" WEDGE WIRE 0.010"SLOTTED PIPE 26" LONG	SA–182 304L
5	20	1½" NPT 3000# HALF COUPLING	SA–182 304L
4	3	8⅝"ø x¼" END PLATE	SA–240 304L
3	1	8" SCH 10 90° LR ELBOW	SA–312 304L
2	22'	8" SCH 10 PIPE	SA–312 304L
1	4	8" 150# FABRICATED FLANGE ½" TK.	SA–240 304L

BILL OF MATERIALS

NO.	REVISION	BY	DATE

RELEASED FOR FABRICATION

PROJECT

CP–20K–10

PROJ. NO.	PLANT STANDARDS
P.O. NO.	

THIS DRAWING AND DESIGN ARE THE PROPERTY OF TIGG CORP. AND SHALL NOT BE REPRODUCED IN WHOLE OR IN PART, NOR EMPLOYED FOR ANY PURPOSE OTHER THAN SPECIFICALLY PERMITTED IN WRITING BY TIGG CORP. THIS DRAWING LOANED SUBJECT TO RETURN ON DEMAND.

DRAWN BY	JB
DESIGN BY	BB
CHKD. BY	
DATE	3/11/11
SCALE	NTS

TIGG corporation

VESSEL INTERNALS
(STAINLESS STEEL)

DWG. NO. CP–20K–10–2004(SS) REV. 0

VALVE POSITION TABLES
SERIES & PARALLEL FLOW

TABLE 1- SERIES FLOW

VESSEL V1 TO VESSEL V2

VALVE POSITIONS

OPEN VALVES	CLOSED VALVES
2	1
3	4
6	5
7	8
	9
	10
	11
	12
	13
	14
	15
	16

VESSEL V2 TO VESSEL V1

VALVE POSITIONS

OPEN VALVES	CLOSED VALVES
1	2
4	3
5	6
8	7
	9
	10
	11
	12
	13
	14
	15
	16

TABLE 2-PARALLEL FLOW

VESSEL V1 & VESSEL V2 OPERATING

VALVE POSITIONS

OPEN VALVES	CLOSED VALVES
1	3
2	4
7	5
8	6
	9
	10
	11
	12
	13
	14
	15
	16

PARALLEL FLOW

VESSEL V1 ON-LINE, VESSEL V2 IDLE

VALVE POSITIONS

OPEN VALVES	CLOSED VALVES
2	1
8	3
	4
	5
	6
	7
	9
	10
	11
	12
	13
	14
	15-16

TABLE 3 VESSEL V1 ON-LINE, VESSEL V-2 BACKWASH

VALVE POSITIONS

OPEN VALVES	CLOSED VALVES
2	1
	3
8	4
9	5
11	6
	7
	10
	12
	13
	14
	15
	16

PARALLEL FLOW

TABLE 4 VESSEL V-1 ON-LINE, VESSEL V2 UNLOADING CARBON

VALVE POSITIONS

OPEN VALVES	CLOSED VALVES
2	1
8	3
15	4
	5
	6
	7
	9
	10
	11
	12
	13
	14
	16

VESSEL V1 ON-LINE, VESSEL V-2 LOADING CARBON

VALVE POSITIONS

OPEN VALVES	CLOSED VALVES
2	1
8	3
13	4
	5
	6
	7
	9
	10
	11
	12
	14
	15
	16

PARALLEL FLOW

VESSEL V2 ON-LINE, V1 IDLE

VALVE POSITIONS

OPEN VALVES	CLOSED VALVES
1	2
7	3
	4
	5
	6
	8
	9
	10
	11
	12
	13
	14
	15-18

TABLE 5 VESSEL V-2 ON-LINE, VESSEL V-1 BACKWASH

VALVE POSITIONS

OPEN VALVES	CLOSED VALVES
1	2
7	3
	4
10	5
12	6
	8
	9
	11
	13
	14
	15
	16

PARALLEL FLOW

TABLE 6 VESSEL V-2 ON-LINE, V-1 UNLOADING CARBON

VALVE POSITIONS

OPEN VALVES	CLOSED VALVES
1	2
7	3
16	4
	5
	6
	8
	9
	10
	11
	12
	13
	14
	15

VESSEL V-2 ON-LINE, V-1 LOADING CARBON

VALVE POSITIONS

OPEN VALVES	CLOSED VALVES
1	2
7	3
14	4
	5
	6
	8
	9
	10
	11
	12
	13
	15
	16

VESSEL MEDIA

TIGG 5DC 1240 NSF

Virgin Liquid Phase Coconut Based Activated Carbon

www.TIGG.com

DESCRIPTION

TIGG 5DC 1240 NFS is a coconut-based activated carbon specially designed to remove low concentrations of contaminants in potable water applications. This activated carbon combines high microporosity and high surface area to permit effective removal of THMs, chlorinated hydrocarbons and other contaminants.

TYPICAL PROPERTIES	TIGG 5DC 1240 NSF
U.S Sieve, 90 wt% min	12 x 40
Iodine Number, mg/g, min	1100
Apparent Density, (dense packing)	
g/cc	0.48 - 0.50
lbs/ft^3	29 - 31
Total Surface Area, m2/g	1150 - 1200
Ash (ASTM-2866), % w/w	3.0
Abrasion No. - min	85

TYPICAL APPLICATIONS

In TIGG liquid phase potable water treatment equipment, TIGG 5DC 1240 NSF will effectively remove organics listed above as well as chlorine, phenols, pesticides, taste & odor, etc. TIGG 5DC 1240 NSF meets AWWA Standard B-600-74, ANSI/NSF Standard 61 for drinking water applications.

Standard packaging of the activated carbon is in 1000 pound supersaks.

Wet drained activated carbon adsorbs oxygen from the air. Therefore, when workers need to enter a vessel containing wet activated carbon, they should follow confined space/low oxygen level procedures. Activated carbon dust does not present an explosion hazard.

800-925-0011
www.TIGG.com
www.TIGGtanks.com

TIGG Corporation
1 Willow Avenue
Oakdale, PA 15071

TIGG Corporation
Purifying Air & Water

PRESSURE GAGE INFORMATION

XSEL™ Process Gauge - Stainless Steel
Type 232.34 - Dry Case
Type 233.34 - Liquid-filled Case

WIKA Datasheet 23X.34

Applications

- For applications with high dynamic pressure pulsations or vibration a liquid filled case and socket restrictor are available
- Suitable for corrosive environments and gaseous or liquid media that will not obstruct the pressure system
- Process industry: chemical/petrochemical, power stations, mining, on and offshore, environmental technology, mechanical engineering and plant construction

Special features

- Excellent load-cycle stability and shock resistance
- Solid front thermoplastic case
- Positive pressure ranges to 30,000 psi
- XSEL™ Process Gauge with 5 year warranty on gauge and 10 year warranty on pressure system (see terms and condition
- All lower mount connection gauges are factory prepared for liquid filling

(LBM: must install membrane prior to field filling)

Bourdon Tube Pressure Gauge Model 232.34

Standard Features

Design
ASME B40.100

Sizes
4½" & 6" (115 & 160 mm) dial size

Accuracy class
± 0.5% of span (ASME B40.100 Grade 2A)
± 1.0% of span (ASME B40.100 Grade 1A)
(for 20,000 psi range and above)

Ranges
Vacuum / Compound to 200 psi
Pressure from 15 psi to 30,000 psi
or other equivalent units of pressure or vacuum

Working pressure

Steady:	full scale value
Fluctuating:	0.9 x full scale value
Short time:	1.5 x full scale value

Operating temperature
Ambient: -40°F to +150°F (-40°C to +66°C) - dry
-4°F to +150°F (-20°C to +66°C) - glycerine filled
-40°F to +150°F (-40°C to +66°C) - silicone filled
Medium: max. +212°F (+100°C) (See Note 1 on reverse)

Temperature error
Additional error when temperature changes from reference temperature of 68°F (20°C) ±0.4% for every 18°F (10°C) rising or falling. Percentage of span.

Weather protection
Weather resistant (NEMA 3 / IP54) - without membrane
Weather tight (NEMA 4X / IP65) - dry case or filled case with membrane installed

Pressure connection
Material: 316L stainless steel
Lower mount (LM) or lower back mount (LBM)
1/4" or 1/2" NPT with M4 internal tap

Restrictor
Material: Stainless steel (0.6 mm)

Bourdon tube
Material: 316L stainless steel
≤ 1,000 PSI: C-type
≥ 1,500 PSI: helical type

Movement
Stainless steel. Internal stop pin at 1.3 x full scale
Overload and underload stops - standard
Dampened movement - optional

Dial
White aluminum with black lettering, stop pin at 6 o'clock

Pointer
Black aluminum, adjustable

Case
Black fiberglass-reinforced thermoplastic (POCAN)
Solid front, blowout back
Turret-style case with built in rear flange lugs

WIKA®
Part of your business

Window
Clear acrylic with Buna-N gasket

Case filling
Glycerine 99.7% - Type 233.34

Optional extras

- Silicone dampened movement
- Panel mounting adaptor kit (field assembled)
- Silicone case filling
- Halocarbon case filling
- Cleaned for oxygen service
- Instrument glass or safety glass window
- Drag pointer (maximum reading indicator)
- Alarm contacts switches (magnetic or inductive)
- Special process connections
- Custom dial layout
- External zero adjustment (4.5" size only)

Note 1: The maximum continuous media temperature for this gauge is 212°F. However, higher temperatures can be maintained safely for short term exposure per table to the right. The user should consider temperature error and gauge component degradation when exposing gauge to any media or ambient temperature above 212°F. For continuous use in either ambient or media temperatures above 212°F, a diaphragm seal or other heat dissipating means is recommended. Consult factory for technical inquiries and application assistance.

Short term, intermittent maximum media temperature limits
(Optional glass window required for all these temperatures)

500°F (260 °C) -	Dry Gauge
250°F (130°C) -	Liquid filled gauge
300°F (150°C) -	Dampened movement gauge

Dimensions

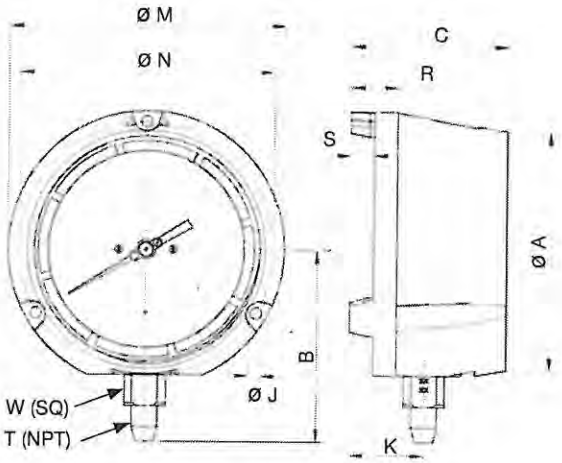

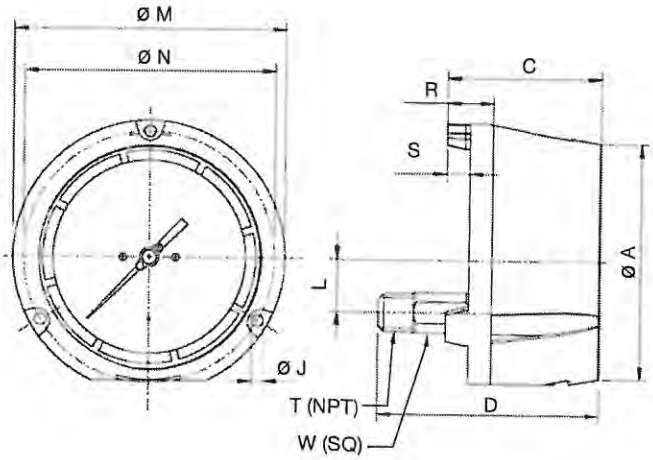

Size		A	B	C	D	J	K	L	M	N	R	S	T	W	Weight[1]	
4.5"	mm	128	103	84	120.3	6.3	40	28.5	148	136.5	25	12.5		22	2 lb.	dry
	in	5	4.06	3.31	4.74	0.248	1.57	1.12	5.83	5.37	0.99	0.49	1/2"	0.87	3 lb.	filled
6"	mm	164	122.5	88	123.4	7.1	40.2	28.5	190	177.8	25.4	12.7		22	3 lb.	dry
	in	6.46	4.82	3.46	4.86	0.28	1.58	1.12	7.5	7	1	0.5	1/2"	0.87	4 lb.	filled

[1] Weight without optional accessories

WIKA Datasheet 23X.34 06/2010

Ordering information
Pressure gauge model / Nominal size / Scale range / Size of connection / Optional extras required
Specifications and dimensions given in this leaflet represent the state of engineering at the time of printing.
Modifications may take place and materials specified may be replaced by others without prior notice.

WIKA Instrument Corporation
1000 Wiegand Boulevard
Lawrenceville, GA 30043
Tel (770) 513-8200 Toll-free 1-888-WIKA-USA
Fax (770) 338-5118
E-Mail info@wika.com
www.wika.com

BUTTERFLY VALVE & OPERATOR INFORMATION

Bray CONTROLS

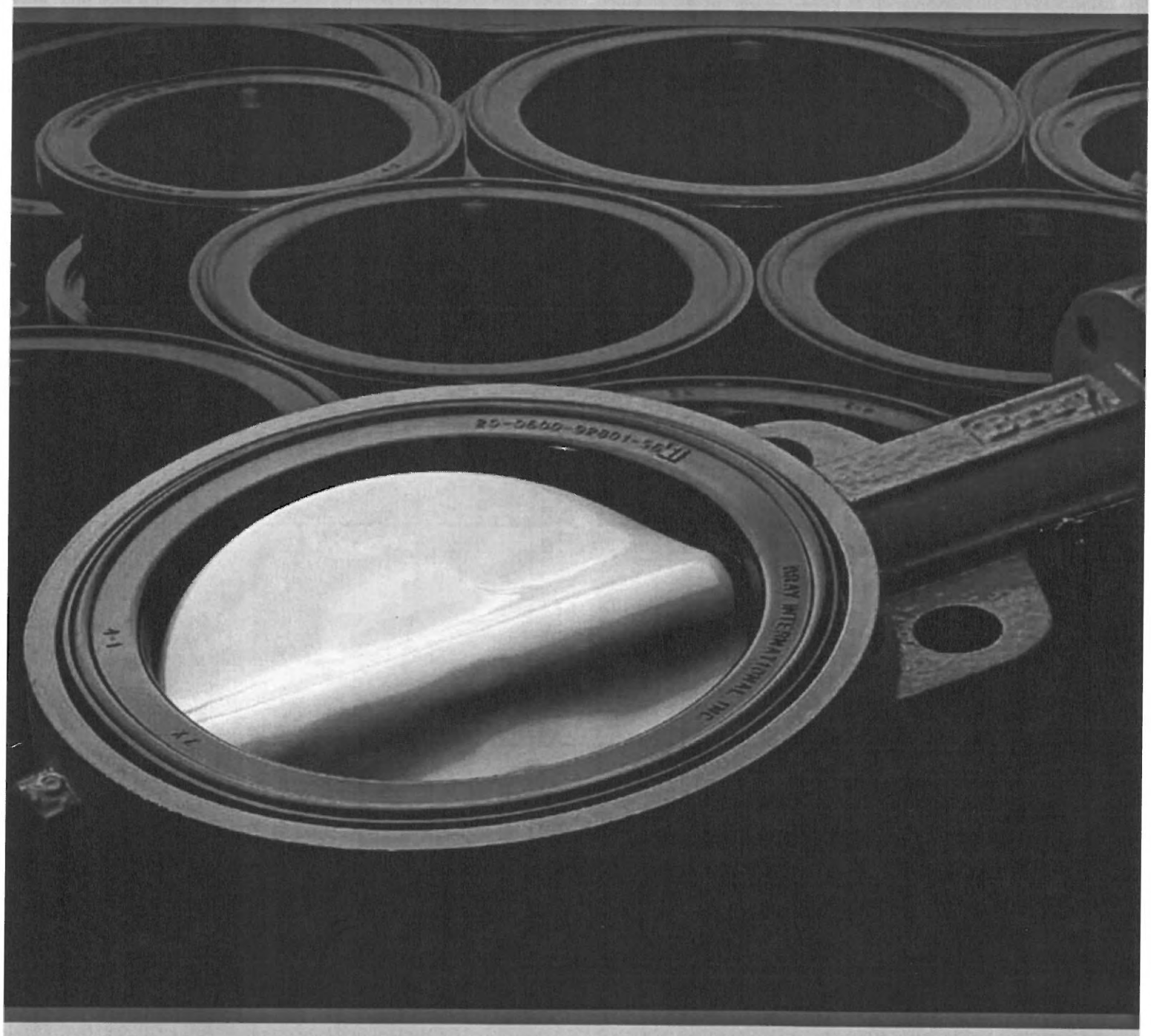

RESILIENT SEATED

Butterfly Valves

SERIES 30/31 2"-20" (50mm-500mm)

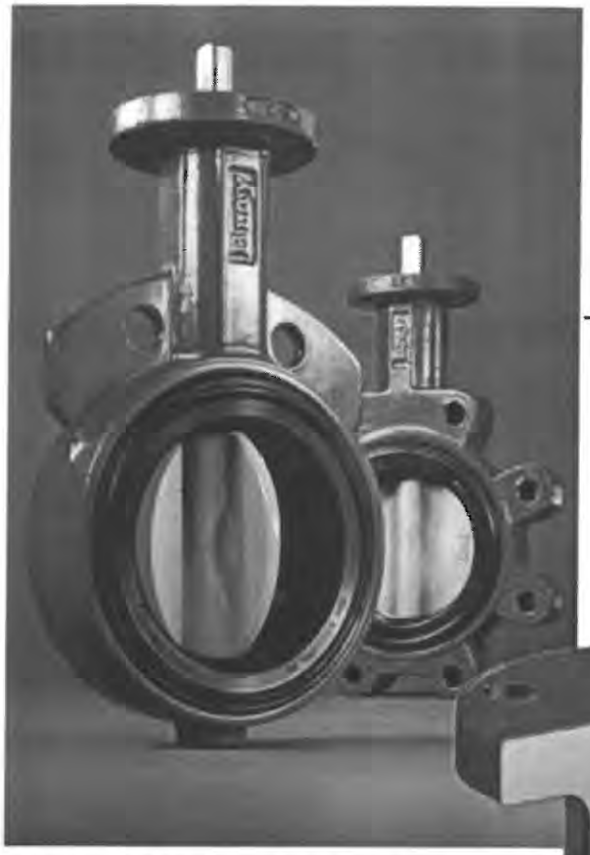

PRESSURE RATINGS		
BIDIRECTIONAL BUBBLE-TIGHT SHUT-OFF – Standard Disc* Downstream Flanges/Disc in Closed Position		
S30/31 Standard Disc*	2-12" (50-300mm)	175 psi (12 Bar)
	14-20" (350-500mm)	150 psi (10.3 Bar)
DEAD-END SERVICE – Lug Bodies/Standard Disc* No Downstream Flanges/Disc in Closed Position		
S31	2-12" (50-300mm)	75 psi (5.2 Bar)
	14-20" (350-500mm)	50 psi (3.4 Bar)
BODY: 250 psi (17.2 Bar) CWP		

*For low pressure application, Bray offers a standard reduced disc diameter to decrease seating torques and extend seat life, thus increasing the valve's performance and reducing actuator costs.

VELOCITY LIMITS For On/Off Services:	
Fluids 30 ft/sec (9 m/s)	**Gases** 175 ft/sec (54 m/s)

High strength through-stem design allows easy disassembly and reduced disc to stem failure.

PRIMARY & SECONDARY SEALS: These seals prevent line media from coming in contact with the stem or body. *Primary* Seal is achieved by an interference fit of the molded seat flat with the disc hub. *Secondary* Seal is created because the stem diameter is greater than the diameter of the seat stem hole.

STEM: Precision double "D" disc to stem connection drives the disc without the need for screws or pins. The close tolerance, double "D" connection that drives the valve disc is an exclusive feature of the Bray valve. Disassembly of the Bray stem is just a matter of pulling the stem out of the disc.

SEAT: Bray's tonque and groove seat design lowers torque and provides complete isolation of flowing media from the body. The seat also features a molded O-ring which eliminates the use of flange gaskets.

STEM RETAINING ASSEMBLY: The stem is retained in the body by means of a unique Stainless Steel Spirolox® retaining ring, a thrust washer and two C-rings, manufactured from brass as standard, stainless steel upon request. The retaining ring may be easily removed with a standard hand tool. The stem retaining assembly prevents unintentional removal of the stem during field service.

STEM BUSHING: Non-corrosive, heavy duty acetal bushing absorbs actuator side thrust.

STEM SEAL: Double "U" cup seal design is self-adjusting and gives positive sealing in both directions.

NECK: Extended neck length allows for 2" of piping insulation and is easily accessible for mounting actuators.

DISC: Casting is spherically machined and hand polished to provide a bubble-tight shut off, minimum torque, and longer seat life.

BODY: One-piece wafer or lug style. Polyester coating for excellent corrosion resistance. Nylon 11 coating is available as an option.

Spirolox® designation is a registered trademark of Kaydon Ring and Seal, Inc.

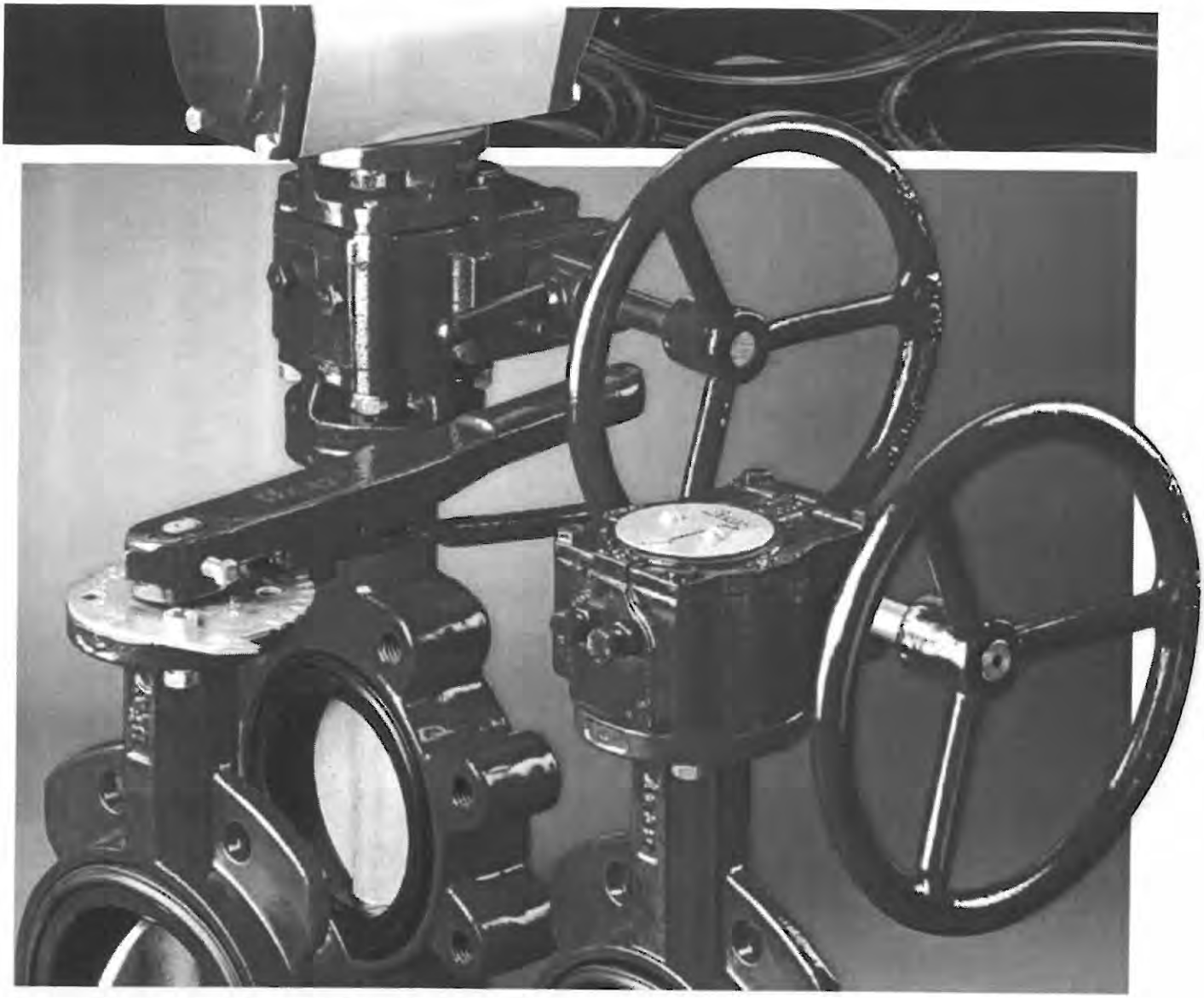

MANUAL OPERATORS

Bray Controls offers three operators for manual control of valve position. All manual operators mount directly to Bray valves, and all are epoxy coated for excellent corrosion, abrasion and impact resistance.

MANUAL OPERATORS	
SERIES 1 - Handle	1"-12" (25mm -300mm)
SERIES 4 - Gear Operator	2"-48" (50mm -1200mm)
SERIES 5 - Declutchable Gear Operator	2"-36" (50mm -900mm)

SERIES 1 HANDLE & NOTCH PLATE Bray offers two handles for on-off and throttling service – one for resilient seated valves from 1"-12" (25mm-300mm), and a high torque handle for high pressure valves from 2 1/2"- 8" (65mm-200mm). These quarter turn handles have a locking spring and a directional pointer for valve disc position indication. Bolted notch plates are offered. For resilient seated valves a 10 position plate is standard. For high pressure valves an 8 position plate is standard. Both contain on-off stops to prevent over rotation of the valve. Optionally available are an infinite position plate, a 180° notch plate, a memory stop, a padlock kit, and a 2" square nut version.

SERIES 4 GEAR OPERATOR For heavy duty on-off and throttling service of 2"-48" (50mm-1200mm) valves, the Series 4 is self lubricated for smooth, trouble-free operation. The rugged, cast iron body with O-ring body seals is weatherproof to IP65. A self-locking worm and worm gear drive holds the valve in the desired position. Features include a readily accessible handwheel, a valve position indicator and mechanical travel stops which permit field adjustment of valve movement to specific degrees of rotation. Optionally available are chainwheel accessories, padlock kits and 2" square nut versions. A Gear Operator with a Stainless Steel housing is also available for valve sizes 1"-16".

SERIES 5 DECLUTCHABLE GEAR OPERATOR Available for 2"-36" (50mm-900mm) valves. This operator is excellent for the safe handling of spring return actuators. During pneumatic operation, the worm of the gear unit is disengaged. Should the valve require opening or closing in the event of power loss, manual rotation of the declutch lever will provide a camming action and engage the worm to the segmented worm gear, allowing rotation of the valve using the handwheel. The Series 5 can be installed in the field with existing Bray pneumatic actuators.

Bray CONTROLS

OPERATION AND MAINTENANCE MANUAL

RESILIENT SEATED BUTTERFLY VALVES

20/21, 22/23, 30/31, 3A/3AH, 31H, 31U, 32/33, 35/36, 36H

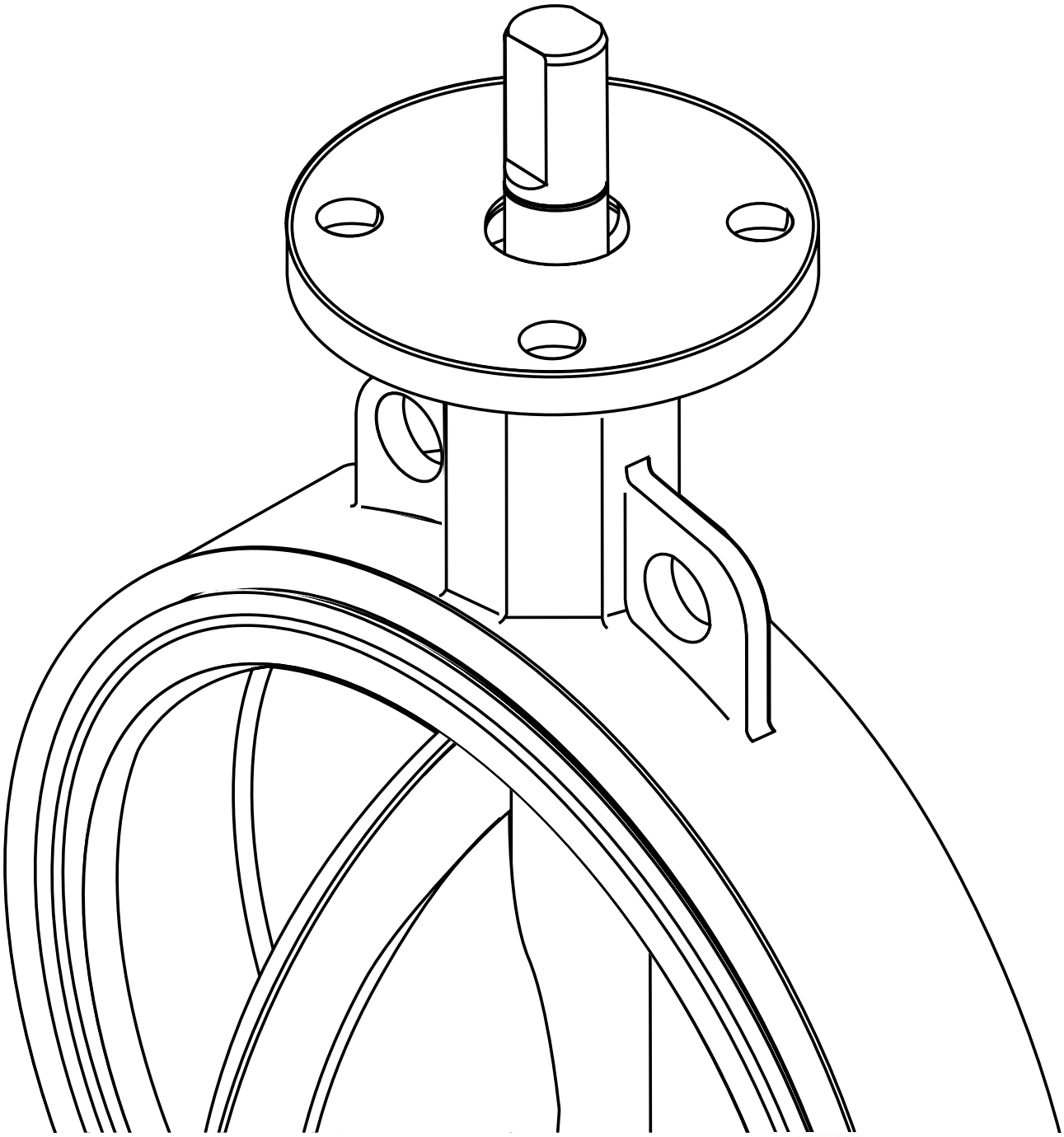

The High Performance Company

Table Of Contents:

PAGE

Safety Instructions: Definition Of Terms 1

Introduction 1

Shipment & Storage 1

Installation Considerations 2

Valves With Spring Return Actuators 2

- Fail Open Assembly 2
- Fail Closed Assembly 2

Valve Location And Orientation In Piping 2

- Valve Orientation Diagrams 4-6

Installation Procedure 6-9

- PTFE Seated Butterfly Valves in Plastic Flanges 9

Maintenance & Repair 9

Appendix 'A' - S20/21 Disassembly/Assembly Instructions 10-11

Appendix 'B' - S22/23 Disassembly/Assembly Instructions 12-13

Appendix 'C' - S30/31 Disassembly/Assembly Instructions 14-15

Appendix 'D' - S3A/3AH Disassembly/Assembly Instructions 16-17

Appendix 'E' - S31H Disassembly/Assembly Instructions 18-19

Appendix 'F' - S31U Disassembly/Assembly Instructions 20-21

Appendix 'G' - S32/33 Disassembly/Assembly Instructions 22-24

Appendix 'H' - S35/36 (Taper Pin Disc/Stem Connection)
Disassembly/Assembly Instructions 25-27

Appendix 'I' - S35/36 (Internal Spline or Keyed Disc/Stem Connection)
Disassembly/Assembly Instructions 28-33

Appendix 'J' - S36H Disassembly/Assembly Instructions 34-36

FOR INFORMATION ON THESE PRODUCTS AND OTHER BRAY PRODUCTS
PLEASE VISIT US AT OUR WEB PAGE - www.bray.com

SAFETY INSTRUCTIONS - DEFINITION OF TERMS

READ AND FOLLOW THESE INSTRUCTIONS
SAVE THESE INSTRUCTIONS

WARNING	indicates a potentially hazardous situation which, if not avoided, **could** result in death or serious injury.
CAUTION	indicates a potentially hazardous situation which, if not avoided, may result in minor or moderate injury.
NOTICE	used without the safety alert symbol indicates a potential situation which, if not avoided, may result in an undesirable result or state, including property damage.

Introduction

Historical Experience

Based on over twenty years experience in the butterfly industry, Bray can state without question the majority of all field problems for resilient seated butterfly valves are directly related to poor installation procedures. For this reason, it is very important all distributor salespeople educate their customers regarding proper installation of resilient seated butterfly valves.

Butterfly Valve Seat / Disc Function

Before reviewing the proper installation, maintenance, and repair procedures for resilient seated butterfly valves, let's discuss the seat-disc function of a butterfly valve. The seat in a resilient seated butterfly valve has molded o-rings on its flange face. **As a result, no gaskets are required as these o-rings serve the function of a gasket.** The flange face and molded o-rings of the seat extend beyond the body face-to-face to ensure sealing at the flange faces. The seat material, which extends past the face is compressed in installation and flows toward the center of the valve seat I.D.

In essence, the elastomer seat acts as a liquid, and the displaced elastomer moves toward the point of least resistance. The seat I.D. of all resilient seated butterfly valves is smaller than the disc O.D. This difference, the disc-seat interference, plus the increased interference due to the elastomer movement toward the seat center after installation, has been engineered so as to be the basis for pressure rating capability and the related seating/unseating torques. **Any change in this interference due to improper installation directly affects the pressure rating and seating/unseating torques.**

Finally, unlike many valve types, the resilient seated butterfly valve's disc actually extends beyond the face of the valve body at given angles of opening (say, 30° or more) when installed between flanges.

CAUTION

It is very important before installation to ensure the critical chord dimension of the disc at the full open position is less than the adjacent pipe flange I.D.

Shipment & Storage

A. The seat, disc, stem and bushing of the resilient seated butterfly valve should be coated with silicone lubricant unless specified otherwise as recommended by Bray Technical Bulletin 1028.

B. The disc should be positioned at 10° open. **Note**: See page 2 for special considerations for valves with spring return actuators.

C. Valves should be stored indoors with a preferred temperature range from 40° F (4°C) to 85° F (29°C).

D. When valves are stored for a long time, open and close the valves once every 3 months.

E. Ship and store valves so that no heavy loads are applied to the bodies.

Installation Considerations – Piping and Valve Orientation and Placement

Piping and Flanged Compatibilities

Piping

These valves have been engineered so that the critical disc chord dimension at the full open position will clear the adjacent inside diameter of most types of piping, including Schedule 40, lined pipe, heavy wall, etc.

Metal Flanges

Resilient seated butterfly valves have been designed to be suitable for all types of flanges (ASME, DIN, JIS and other international flange standards), whether flat-faced, raised face, slip-on, weld-neck, etc. Proper alignment of any butterfly valve between flanges is critical to good performance of the valve. The flange bolts must also be evenly tightened around the circumference of the valve, providing consistent flange compression of the molded o-ring in the seat face.

Since Bray does not recommend the use of gaskets between flanges on resilient seated butterfly valves, a uniform flange face is critical to proper valve sealing. Most weld-neck and slip-on flanges conforming to ASME specifications have an appropriate flange face. Types A and B butt-weld stub-end flanges also provide a suitable mating surface for the molded o-ring.

It should be noted that Type C butt-weld stub-end flanges have an "as formed" flange face. The varying surface of this flange face can create sealing problems between any resilient-seated butterfly valve and the flange face. For this reason, Type C flanges are not recommended for use with resilient-seating butterfly valves.

Non-Metallic Flanges

When non-metallic flanges, such as plastic or PVC, are used with resilient seated butterfly valves, care must be taken not to over-tighten the flange bolts. The inherent flexibility of these non-metallic flange materials allow them to be over-tightened relatively easily. Flexing caused by this over-tightening can actually reduce the compression of the valve between the flanges, causing leaks between the valve and the flange face. Proper alignment and firm, even, but not excessive tightening of flange bolts are especially important with non-metallic flanges. In some cases, non-metallic flanges of low quality will not mate tightly with butterfly valves regardless of the care taken during installation.

Valves with Spring Return Actuators

1. Fail Closed Assemblies

The resilient seated butterfly valve disc is shipped in the full closed position since no air pressure is present to compress the springs and open the disc.

CAUTION

Installing the valve with the disc in the full closed position may create an increase in the valve seating torque, which may prevent the valve from opening.

It is recommended that the actuator be removed and the disc be opened to approximately 10° before and during installation.

2. Fail Open Assemblies

The resilient seated butterfly valve disc is shipped in the full open position since no air pressure is present to compress the springs and close the valve disc. As a result, the disc edge is exposed to possible damage, which will cause premature valve failure.

CAUTION

Use caution when handling and installing the valve to prevent damage to the disc edge. It is recommended that the actuator be removed and the disc closed before and during installation.

3. Valve Location

a. Resilient seated butterfly valves should be installed if possible a minimum of 6 pipe diameters from other line elements, i.e., elbows, pumps, valves, etc. of course, 6 pipe diameters are not always practical, but it is important to achieve as much distance as possible.

b. Where the resilient seated butterfly valve is connected to a check valve or pump, use an expansion joint between them to ensure the disc does not interfere with the adjacent equipment.

4. Valve Orientation

a. In general, Bray recommends the resilient seated valve be installed with the stem in the vertical position and the actuator mounted vertically directly above the valve; however, there are those applications as discussed below where the stem should be horizontal. **NOTE:** Bray does not recommend valves be installed in an upside-down position.

b. For slurries, sludge, mine tailing, pulp stock, dry cement, and any media with sediment or particles, Bray recommends the resilient seated valve be installed with the stem in the horizontal position with the lower disc edge opening in the down-stream direction.

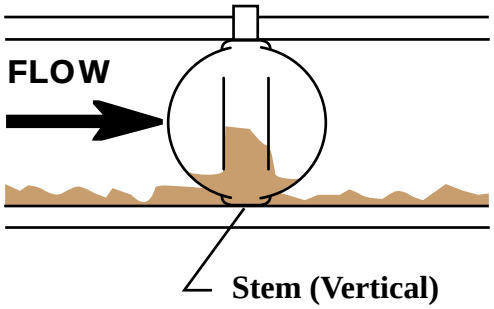

INCORRECT INSTALLATION

Sludge builds up on disc

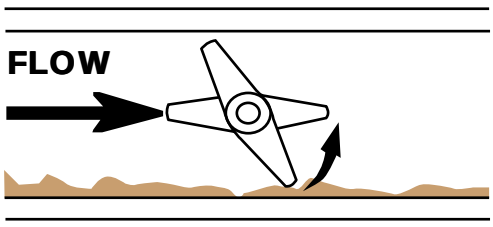

Stem (Horizontal)

CORRECT INSTALLATION

Sludge passes under disc

Valve Orientation (Continued)

c. Resilient seated butterfly valve located at the discharge of a pump should be oriented as follows:

	INCORRECT INSTALLATION	CORRECT INSTALLATION
i.) For centrifugal Pump – Pump shaft horizontal and stem vertical	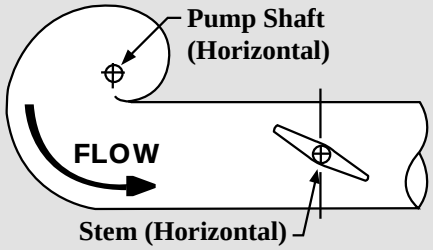	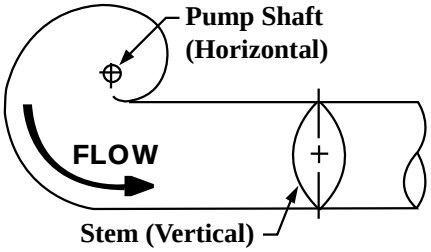
ii.) Centrifugal Pump – Pump shaft vertical & stem horizontal	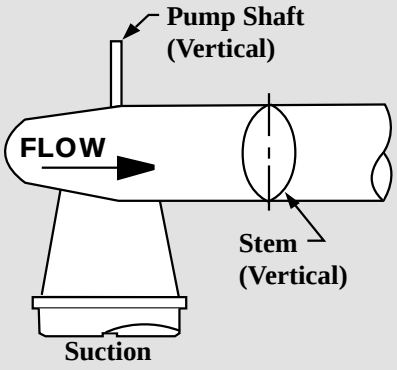	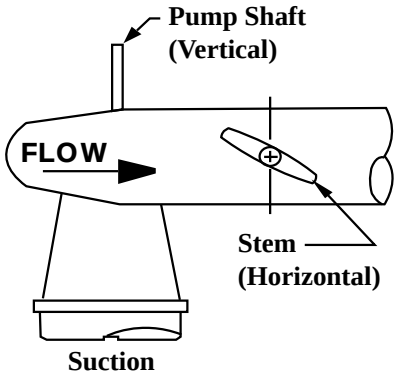
iii.) Axial Pump – Pump shaft vertical & stem vertical	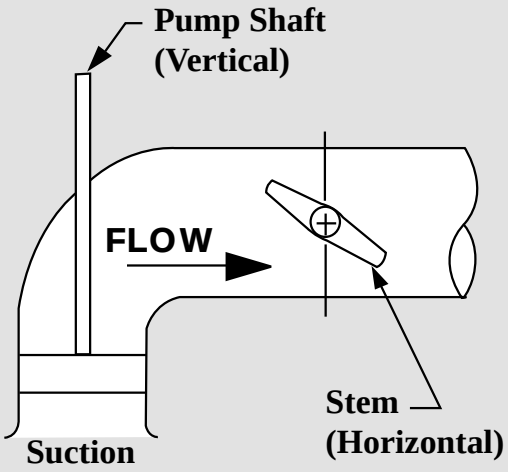	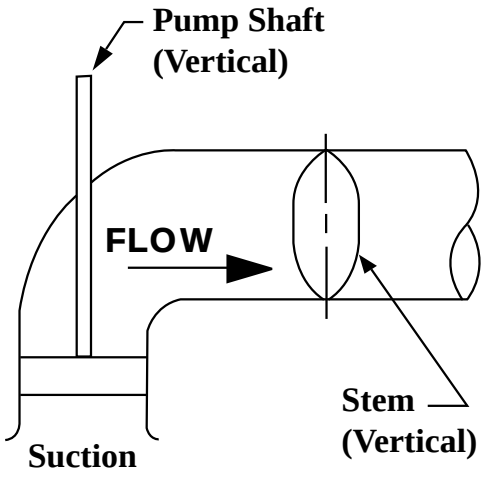

Valve Orientation (Continued)

d. Butterfly valves located downstream of a bend or pipe reducer should be oriented as follows:

	INCORRECT INSTALLATION	CORRECT INSTALLATION
i.) Bend	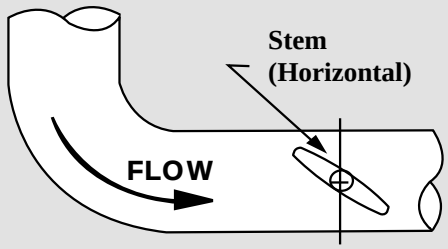	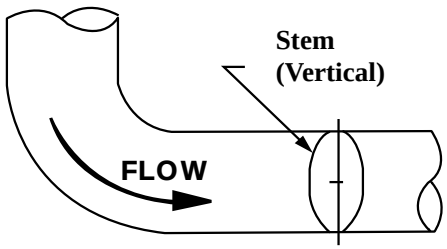
ii.) Tee	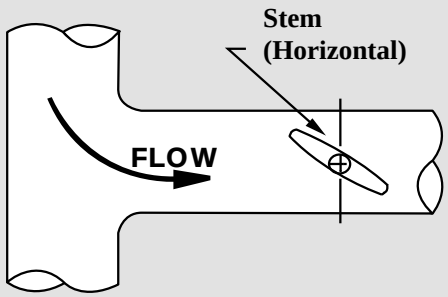	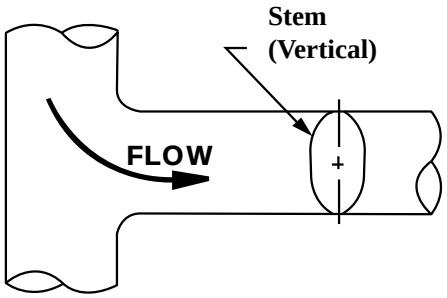
iii.) Pipe Reducer	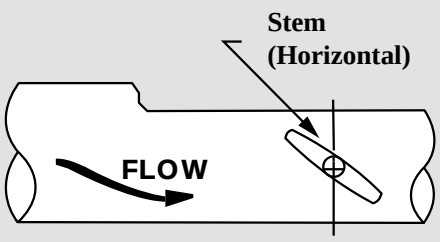	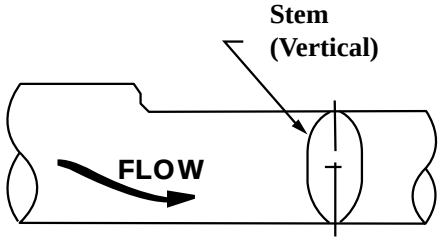

Valve Orientation (Continued)

e. Butterfly valves in combination for control/isolation applications should be installed as follows:

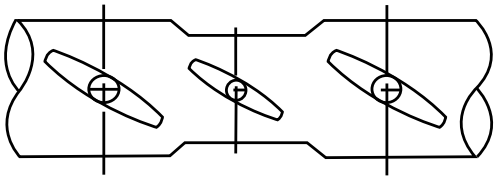

INCORRECT INSTALLATION

Combination with all valve stems in the same direction accelerates possible noise, vibration, & erosion problems.

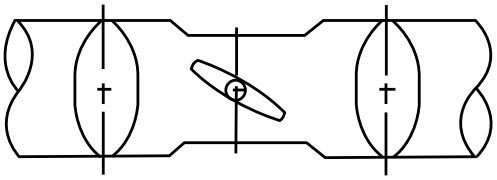

CORRECT INSTALLATION

Combination with the stem of the control valve at right angle to those of other valves tends to cancel the drift of the fluid, and reduces noises, vibration, and erosion.

Installation Procedure

A. General Installation

1. Make sure the pipeline and pipe flange faces are clean. Any foreign material such as pipe scale, metal chips, welding slag, welding rods, etc., can obstruct disc movement or damage the disc or seat.
2. The Bray elastomer seat has molded o-rings on the face of the seat. **As a result, no gaskets are required as these o-rings serve the function of a gasket.**
3. Align the piping and then spread the pipe flanges a distance apart so as to permit the valve body to be easily dropped between the flanges without contacting the pipe flanges ***(see figure 1 page 6).***
4. Check to see that the valve disc has been positioned to a partially open position, with the disc edge about 1/2 inch to 3/8 inch inside the face of the seat, (approximately 10° open) ***(see figure 1 page 6)*** **Note: See page 2 for special consideration for valves with spring return actuators.**
5. Insert the valve between the flanges as shown in figure 1 of page 6, taking care not to damage the seat faces. Always pick the valve up by the locating holes or by using a nylon sling on the neck of the body.

WARNING

Never pick up the valve by the actuator or operator mounted on top of the valve.

Figure 1 – Insert Resilient Seated Butterfly Valve Between Flanges

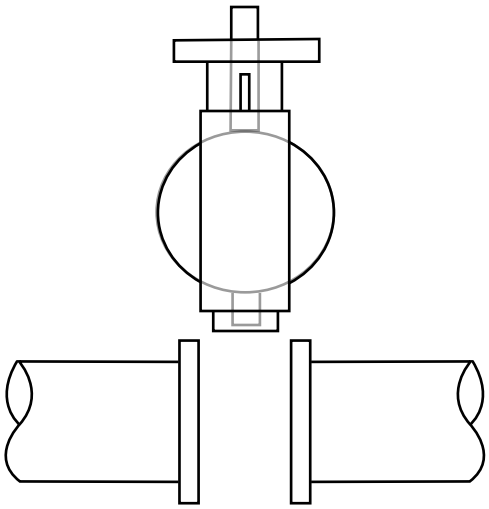

INCORRECT INSTALLATION

CAUTION

Pipe not spread, disc opened beyond valve body face; Results; Disc edge damaged when it hits pipe flange.

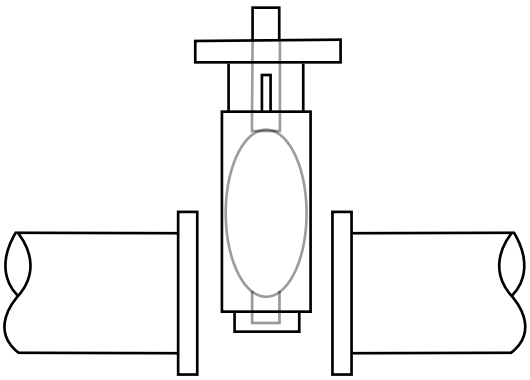

CORRECT INSTALLATION

Pipe spread and aligned, disc rotated; Results; no undesirable beginning seating/ unseating torque, disc edge protected.

6. Place the valve between the flanges, center it, and then span the valve body with all flange bolts, but do not tighten the bolts. Carefully open the disc to the full open position, making sure the disc does not hit the adjacent pipe I.D. Now systematically remove jack bolts or other flange spreaders, and hand-tighten the flange bolts as shown in **Figure 2** below. Very slowly close the valve disc to ensure disc edge clearance from the adjacent pipe flange I.D. Now open the disc to full open and tighten all flange bolts per specification as shown in **Figure 2**. Finally, repeat a full close to full open rotation of the disc to ensure proper clearances ***(See figures 3 & 4 page 7)***.

Figure 2 – Flange Bolt Tightening Pattern

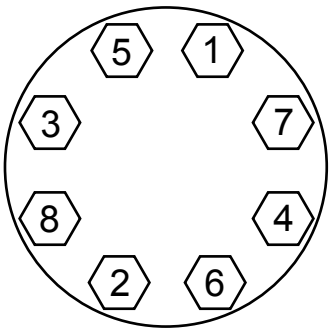

Figure 3 – Initial Centering & Flanging of Valve

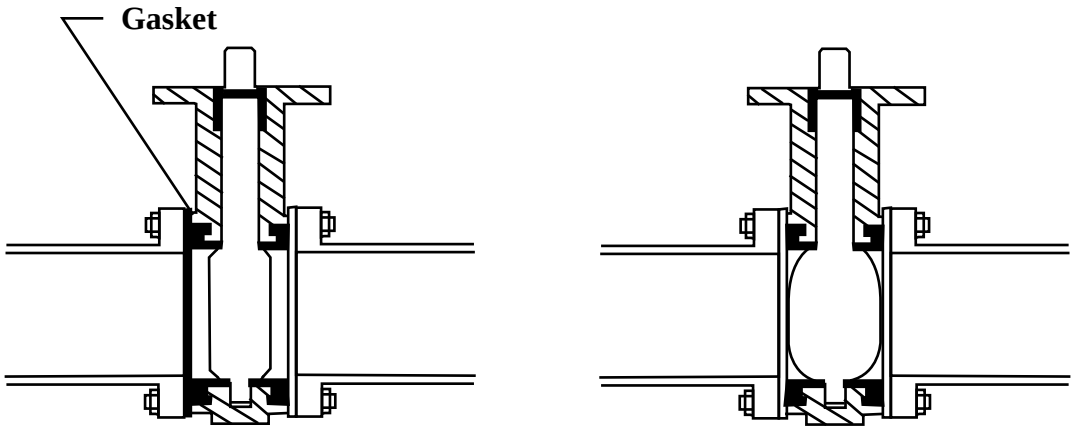

INCORRECT INSTALLATION

Disc in closed position; gaskets used; Results – Seat distorted and over-compressed causing high initial unseating torque problems.

CORRECT INSTALLATION

Bolts snugged, not torqued tight, disc edge within body face-to-face but not fully closed, no flange gaskets; Results: No disc edge damage, proper sealing allowed.

Figure 4 – Final Aligning & Tightening of Flange Bolts

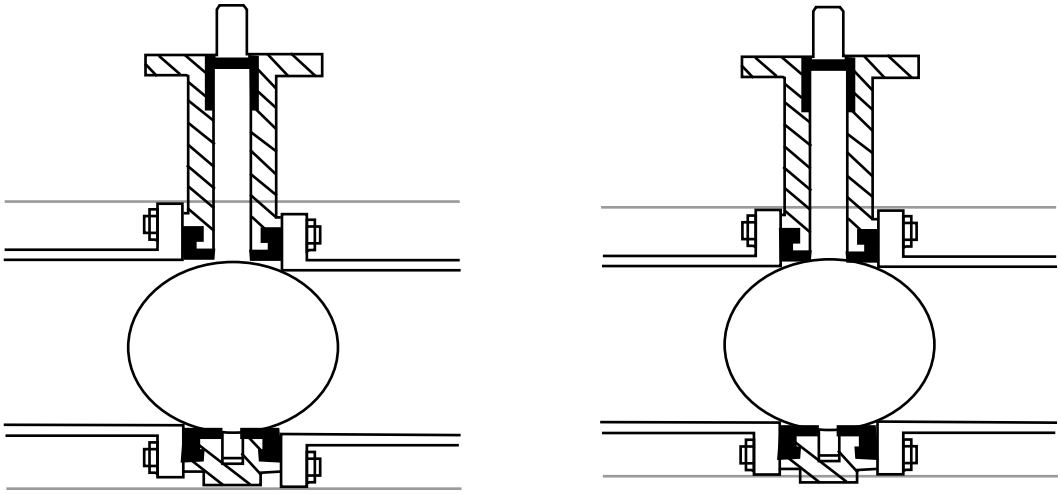

INCORRECT INSTALLATION

Piping misaligned; Results Disc O.D. strikes pipe I.D. causing disc edge damage, increased torque & leakage. Seat face o-rings will not seal properly with incorrectly aligned piping.

CORRECT INSTALLATION

Piping aligned properly when bolts tightened, disc in full open position; Results – disc clears adjacent pipe I.D., seat face seals properly, no excessive initial torque.

When resilient seated butterfly valves are to be installed between ASME welding type flanges, care should be taken to abide by the following procedure to ensure no damage will occur to the seat:

1. Place the valve between the flanges with the flange bores and valve body aligned properly. The disc should be in the 10° open position.
2. Span the body with the bolts.
3. Take this assembly of flange-body-flange and align it properly to the pipe.
4. Tack weld the flanges to the pipe.
5. When tack welding is complete, remove the bolts and the valve from the pipe flanges and complete the welding of the flanges. Be sure to let the pipe and flanges cool before installing the valve.

CAUTION

Never complete the welding process (after tacking) with the valve between pipe flanges. This causes severe seat damage due to heat transfer.

Installation of Bray PTFE Seated Butterfly Valves in Plastic Flanges.

Bray recommends the following guidelines when PTFE Seated Valves are installed between plastic flanges:

1. The valve body should be coated with epoxy, not nylon. The extra thickness of the nylon coating slightly reduces the seat compression, and every advantage to maximize seat compression should be taken with plastic flanges.
2. The plastic flange can be either one piece construction, or two piece construction comprised of a stub end and a backup ring.
3. The plastic flange style can be butt-weld, socket or slip-on, but butt-weld and socket are preferred.
4. The plastic flange face must be flat. Concave and convex flange faces are not acceptable. This includes flange faces that were originally flat but later distorted into a concave shape by over tightening the flange bolts.
5. The plastic flange face surface may have grooves or serrations, provided the grooves do not exceed .100" (2.54 mm) in width or .020" (.508 mm) in depth. If the grooves are less than .100" (2.54 mm) in width, the groove depth must not exceed the width. However, fine conentric or "phonograph record" grooves are acceptable regardless of the groove depth.
6. Flange gaskets must not be used with PTFE seats, since they create an uncontrolled over compression that can buckle the PTFE and damage the seat. If a damaged face, a flange gasket can appear to cure the leak to atmosphere, while simultaneously damaging the PTFE seat and creating a second leak across the disc or up the stem hole. Leaks across the plastic flange must be cured without the use of gaskets, by proper selection and installation of the flange.
7. The bolts holding plastic flanges should be installed in strict conformance to the recommended practices of the plastic flange manufacturer. This usually involves aligning the flanges accurately, using lubricated bolts, and tightening the bolts in the proper sequence and to the specified torque. Uniform stress across the flange prevents leakage.

Maintenance and Repair

The many Bray features minimize wear and maintenance requirements. No routine lubrication is required. **All components – stem, disc, seat, bushing, stem seal, etc., are field replaceable, no adjustment is required**. If components require replacement, the valve may be removed from the line by placing the disc in the near closed position, then supporting the valve and removing the flange bolts.

WARNING No valve maintenance, including removal of manual or power actuators, should be performed until the piping system is completely depressurized.

Appendix C

Disassembly/Assembly Instructions

Series 30/31 Resilient Seated Butterfly Valves

Disassembly –

1. Remove the handle, gear operator, or power actuator from actuator mounting flange.
2. Remove the "Spirolox"® retaining ring and the two C-ring stem retainers from the stem hole.
3. Then remove the stem, bushing and seal.
4. Remove the disc from the seat, protecting the disc edge at all times.
5. Push the seat into an oval shape, and then remove the seat from the body.

Assembly –

1. Push the valve seat into an oval and push it into the body with seat stem holes aligned to body stem holes.

NOTICE	When installing the seat the larger hole should be on top and the smaller hole should be on bottom.

2. Insert stem seal and bushing.
3. Push stem into the stem hole of the body until the bottom of the stem is flush with the inner top edge of the seat.
4. Install a light coating of silicone or grease on the I.D. of seat. Insert the disc into the seat by lining up the disc holes with the stem holes of the seat.

   Note: The broached double "D" flats in the disc must be toward the bottom of the valve body.

5. With a downward pressure and rotating the stem back and forth, push the stem until the stem touches the bottom of the body stem hole.
6. Make certain that when pushing the stem through the disc bottom, the broached flats of stem and disc are aligned.
7. Replace the stem bushing and two stem retainers, then replace the "Spirolox"® retaining ring back into position.
8. Replace handle, manual gear operator or power actuator on the actuator mounting flange.

SERIES 30/31

RESILIENT SEATED BUTTERFLY VALVES

1 BODY (S30 WAFER STYLE SHOWN)
2 SEAT
3 DISC
4 STEM
5 STEM SEAL
6 STEM BUSHING
7 STEM RETAINER
8 THRUST WASHER
9 RETAINING RING

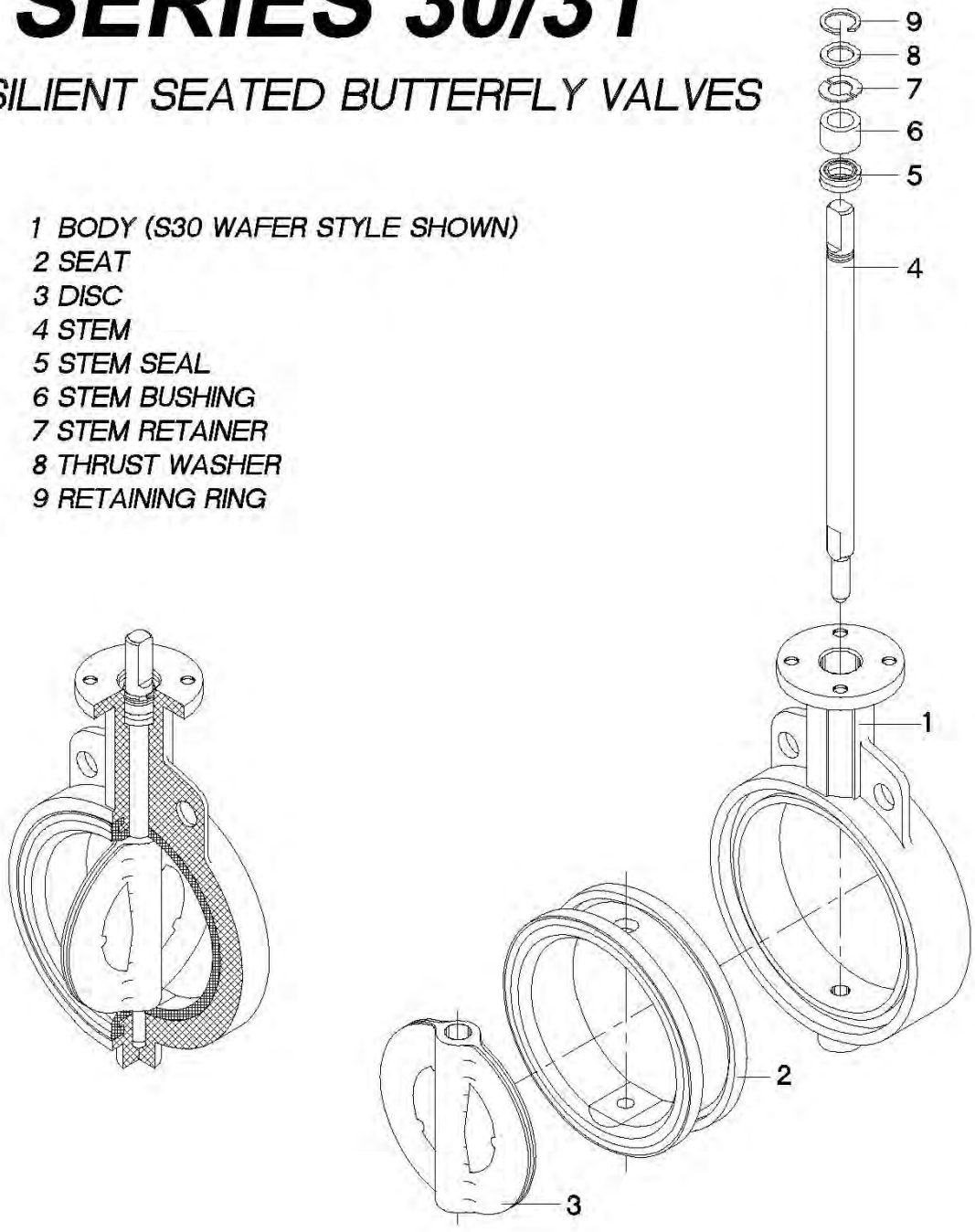

STAINLESS STEEL BALL VALVE INFORMATION

Series 50

Flanged Full Port Ball Valve

SHARPE®

Valves, Automation & Controls

Features

- Full port
- Class 150
- Locking device
- Blow-out proof stem
- NACE MR-0175
- ISO 5211 mounting pad
- Wall thickness ASME B16.34
- Face to face dimensions ASME B16.10
- Flange dimensions ASME B16.5
- Pressure test B16.34 (Optional API 598)

Toll Free (877) 774-2773 | Local (708) 562-9221 | Fax (708) 562-0890 | www.sharpevalves.com

Dimensions

1/2" - 2"

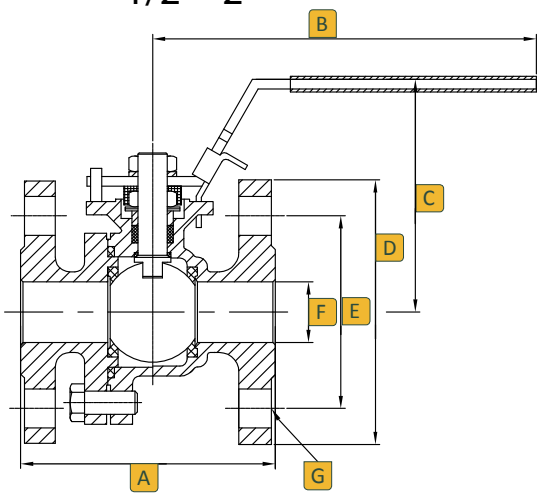

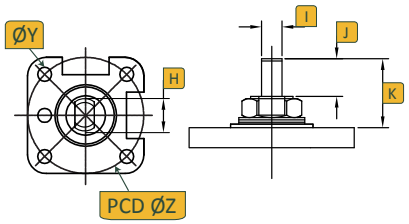

2-1/2" - 4"

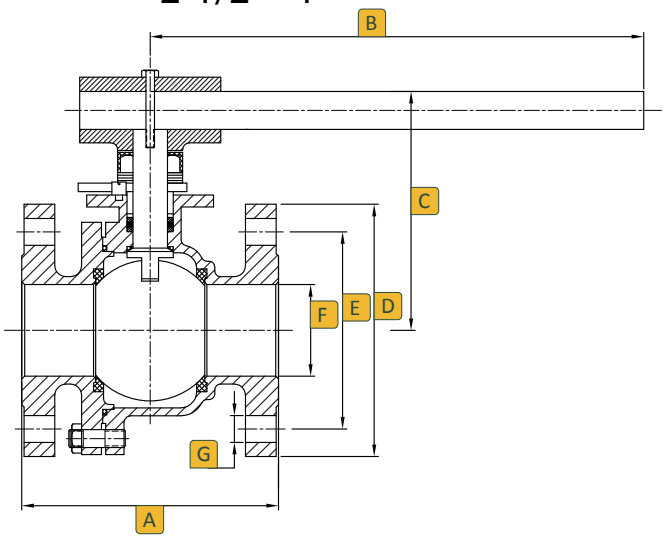

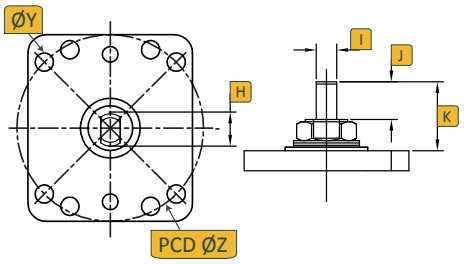

6" & 8"

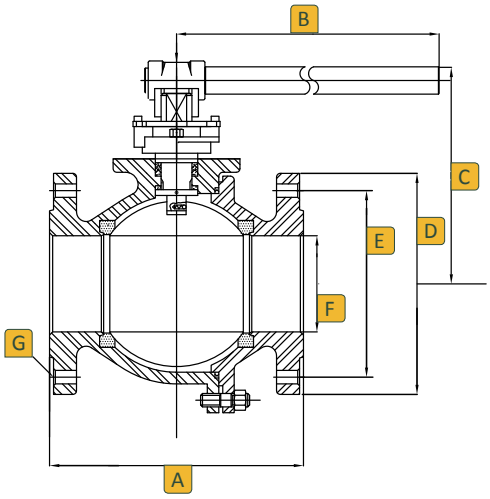

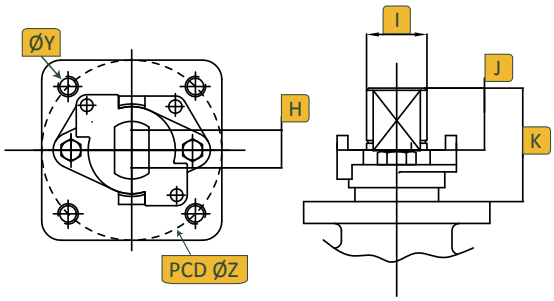

Size	A	B	C	D	E	F	G	H	I	J	K	ØY	ØZ
1/2	4.25	4.75	3.60	3.50	2.38	0.59	4-0.630	3/8-24 UNF	0.22	0.39	0.73	M6	1.969
3/4	4.62	4.75	3.75	3.88	2.75	0.787	4-0.630	3/8-24 UNF	0.22	0.34	0.70	M6	1.969
1	5.00	6.22	3.75	4.25	3.12	0.984	4-0.630	7/16-20 UNF	0.30	0.60	0.85	M6	1.969
1-1/2	6.50	9.00	4.50	5.00	3.88	1.496	4-0.630	9/16-18 UNF	0.35	0.68	1.18	M8	2.756
2	7.00	9.00	4.80	6.00	4.75	1.969	4-0.748	9/16-18 UNF	0.35	0.65	1.18	M8	2.756
2-1/2	7.48	13.74	6.70	7.01	5.50	2.56	4-0.750	1-14 UNS	0.75	0.66	1.87	M10	4.02
3	7.99	13.74	7.00	7.48	6.00	3.15	4-0.750	1-14 UNS	0.75	0.69	1.87	M10	4.02
4	8.98	13.74	7.70	9.02	7.50	3.94	4-0.750	1-14 UNS	0.75	0.69	1.91	M10	4.02
6	15.50	25.59	10.50	10.98	8.50	6.00	8-0.875	1.72	1.02	1.46	3.58	M12	4.92
8	18.00	55.12	13.38	13.50	10.63	8.00	8-0.875	1.72	1.02	1.46	3.58	M12	4.92

SHARPE - SERIES 50 | 2-Piece Flanged Ball Valve
Toll Free (877) 774-2773 | Local (708) 562-9221 | Fax (708) 562-0890 | www.sharpevalves.com

SHARPE - SERIES 50 | 2-Piece Flanged Ball Valve
Toll Free (877) 774-2773 | Local (708) 562-9221 | Fax (708) 562-0890 | www.sharpevalves.com

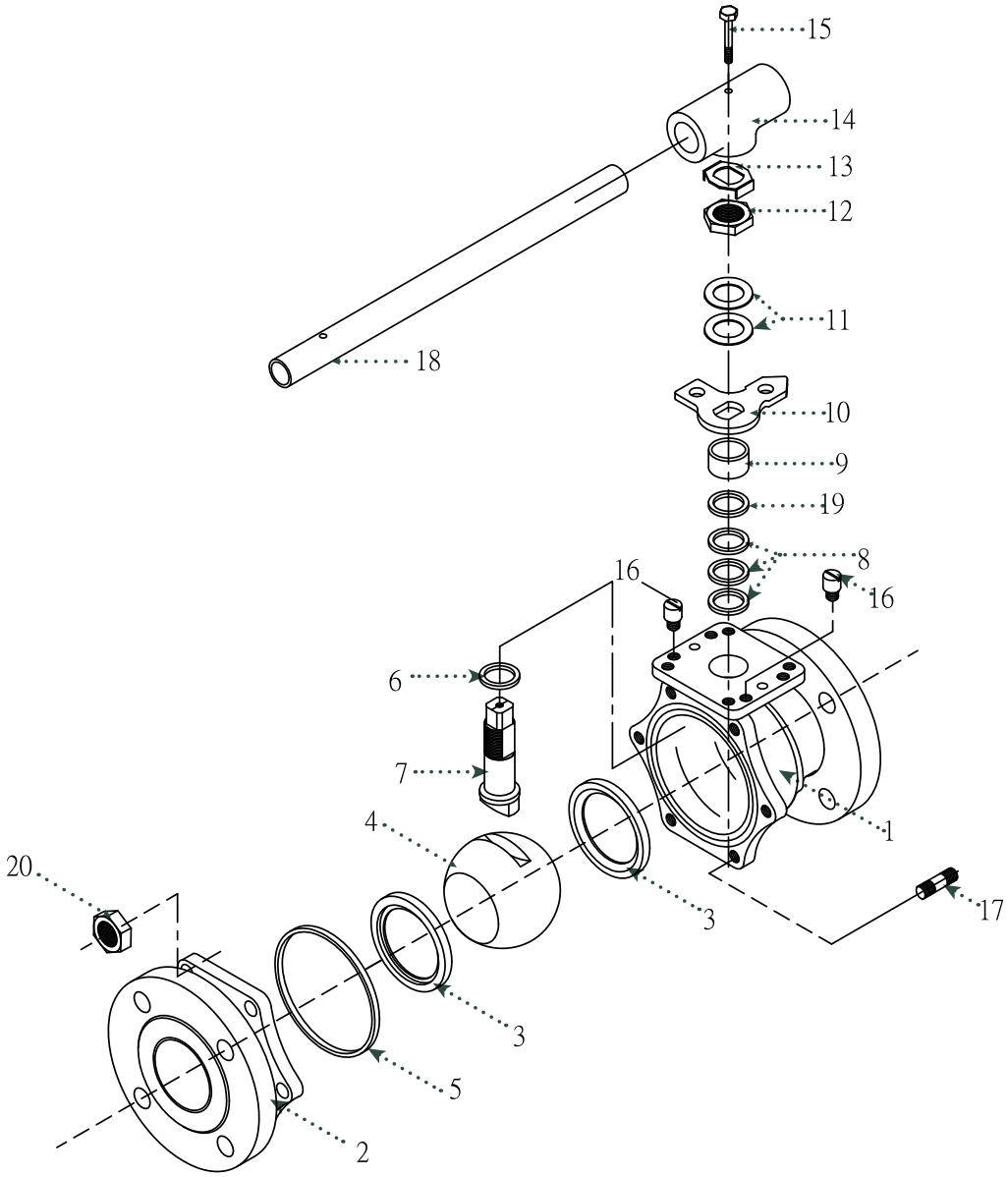

No.	Part Name	Qty	Material
1	Body	1	316 Stainless Steel, ASTM A351 or Carbon Steel, ASTM A216 WCB
2	Body Ends	1	316 Stainless Steel, ASTM A351 or Carbon Steel, ASTM A216 WCB
3	Seat	2	PTFE, RTFE, or TFM
4	Ball	1	316 Stainless Steel
5	Body Seal	1	RTFE, PTFE or MG1241
6	Thrust Washer	1	RTFE, PTFE or MG1241
7	Stem	1	316 Stainless Steel
8	Stem Seal	2	RTFE, PTFE or MG1241
9	Gland	1	304 Stainless Steel
10	Stopper	1	304 Stainless Steel
11	Belleville Washer	2	301 Stainless Steel
12	Packing Nut	1	304 Stainless Steel
13	Lock Tab	1	304 Stainless Steel
14	Wrench Block	1	304 Stainless Steel
15	Hex Head Bolt	1	304 Stainless Steel
16	Stop Pin	2	304 Stainless Steel
17	Body Bolts	6/8	304 Stainless Steel
18	Handle	1	304 Stainless Steel
19	Flat Washer	1	304 Stainless Steel
20	Body Bolts	6/8	304 Stainless Steel

Size	CV	Port	Weight LB
1/2	26	0.59	4
3/4	50	0.78	6
1	94	1.00	8
1-1/2	260	1.50	15
2	480	2.00	20
2-1/2	750	2.55	36
3	1300	3.00	45
4	2300	4.00	75
6	5400	6.00	135
8	10000	7.88	290

Class 150 Temperature / Pressure Rating

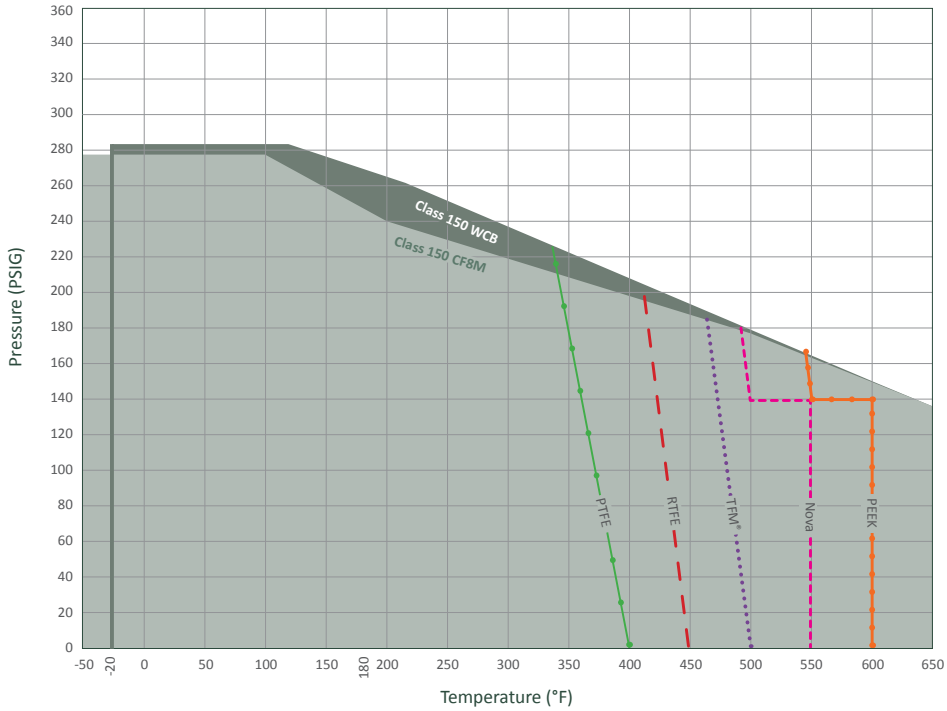

Ordering

Fig: 1/2 - 50 - 11 - 6 - N
Description: 1/2" - 5011 - 316 Body - Nova Seat

Size	Series	Class		Body		Seat		Options	
1/2	50	11	150#	2	Alloy 20	R	RTFE	X	Oxygen Service
3/4				3	Monel	N	Nova	OH	Oval Handle
1				4	Carbon Steel	T	PTFE	F	Fugitive Emissions, Certified ANSI 593.00.01
1-1/2				5	Hastelloy C	P	PEEK	E	Extended Stem
2				6	Stainless Steel	M	TFM	L	Lockable Extended Stem
2-1/2								D	Leak Detection Stem
3								GO	Gear Operator
4								7	17-4PH Stem
6								A	Nace
8									

Due to continuous development of our product range, we reserve the right to change the dimensions and information for this product as required.

RUPTURE DISK INFORMATION

MONO Type

the best choice for low and intermediate burst ratings

- Sizes 1/2" thru 24" diameters
- Designed to fit ASME B16.5 Class 150 flanges (Higher ratings to fit Class 300 flanges are furnished in the INVERTED and DUPLEX Type Disks)
- Burst ratings 0.25 to 150 psig
- 0% manufacturing range
- Operating pressures to 90% of the disk's marked burst pressure (Contact ZOOK for operating ratio for burst pressures below 40 psig)
- Temperature ratings –290°F to +700°F (–179°C to +371°C). Maximum temperature rating without insulation is 430°F (221°C) or 700°F (371°C) with insulation. Contact ZOOK for higher temperature ratings. The specified temperature shall be at the disk location at the time when the disk is expected to rupture
- Counterbored side of the disk contacts the process media
- Vacuum supports are available for ratings below 25 psig
- May be configured to withstand high back pressure generated in closed piping systems – request Bak-Pressure™ bulletin
- Stocked MONO Disks, ready for immediate shipment
  Sizes: 1", 1-1/2", 2", 3", 4", 6", 8" to fit ASME B16.5 Class 150 flanges
  Burst Ratings: 10, 15, 20, 25, 30, 40, 50, 75, 100, 125, 150 psig @ 72°F (22°C)

Note: Sizes 6" and 8" with burst ratings 125 and 150 psig @ 72°F (22°C) are stocked in INVERTED type

- ASME UD marking available

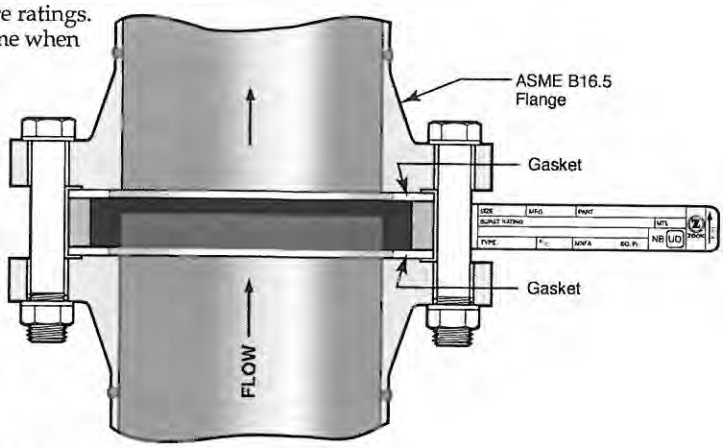

Certified Flow Resistance Factor (K_{rgl})

Support Style	K_{rgl}
MONO – no support	0.26
MONO – with bar	2.40
MONO – with cross	5.40
MONO – with ring	6.44
MONO – with plate	15.70

Required Vacuum Support Style for Full Vacuum Service

Size	Burst Rating	Support Style
1"	below 25 psig	MONO – with ring
1-1/2"	below 25 psig	MONO – with bar
2" - 14"	9 to 25 psig	MONO – with bar
2" - 14"	5 to below 9 psig	MONO – with cross
2" - 14"	below 5 psig	MONO – with plate

Contact ZOOK for sizes 16" and larger

Specifications – ASME B16.5 Class 150

Nominal Disk Sizes	Minimum net flow area (MNFA) Sq. inches					Disk Dimensions				Burst Ratings psig	
	Full Bore	Vacuum support style				Diameter		Thickness*			
		Ring	Bar	Cross	Plate	I.D.	O.D.	Standard Disk	Insulated Unit	Min.	Max.
1/2"	0.30	N/A	N/A	N/A	N/A	0.622"	1-3/4"	5/8"	1-3/4"	25	150
3/4"	0.53	N/A	N/A	N/A	N/A	0.824"	2-1/8"	5/8"	1-3/4"	25	150
1"	0.78	0.44	0.60	0.47	0.32	1"	2-1/2"	7/8"	2-1/4"	10	150
1-1/2"	1.76	N/A	1.34	1.05	0.72	1-1/2"	3-1/4"	7/8"	2-1/4"	7	150
2"	3.14	N/A	2.39	1.86	1.30	2"	4"	7/8"	2-1/4"	3	150
3"	7.06	N/A	5.56	4.31	2.95	3"	5-1/4"	7/8"	2-1/4"	2	150
4"	12.56	N/A	10.56	8.81	5.47	4"	6-3/4"	7/8"	2-1/4"	1.5	150
6"	28.27	N/A	22.27	17.27	12.05	6"	8-5/8"	7/8"	2-1/4"	1	100
8"	50.02	N/A	40.26	31.82	21.14	8"	10-7/8"	1-1/8"	2-3/4"	0.50	100
10"	78.53	N/A	63.53	50.78	32.66	10"	13-1/4"	1-1/2"	3-3/8"	0.25	100
12"	113.09	N/A	89.09	69.09	47.24	12"	16"	2"	4-3/8"	0.25	75
14"	137.88	N/A	108.06	83.31	58.07	13-1/4"	17-5/8"	2-1/4"	4-7/8"	0.25	50
16"	182.65	N/A	144.52	112.65	84.49	15-1/4"	20-1/8"	2-1/2"	5-3/8"	0.25	50
18"	233.70	N/A	181.95	153.70	104.31	17-1/4"	21-1/2"	2-3/4"	5-7/8"	0.25	50
20"	291.03	N/A	233.28	184.53	122.49	19-1/4"	23-3/4"	3"	6-3/8"	0.25	40
24"	424.55	N/A	354.80	294.05	190.61	23-1/4"	28-1/8"	3"	6-3/8"	0.25	25

125

*Standard disk thickness does not include gaskets.
Insulated unit thickness includes all gaskets

Note: Maximum pressure rating of ASME B16.5 Class 150 flanges is 290 psig @ 100°F (38°C). The maximum pressure rating is lower at higher temperatures. Reference ASME/ANSI B16.5

AIR RELEASE VALVE INFORMATION

Pressure Air Release Valves

Dimensions and Weights

MODEL	INLET NPT	TRIM	HEIGHT	WIDTH	WEIGHT (lbs)
PL10	1" NPT	S/S	9 1/8"	9 3/4"	22
PL10A	2" NPT	S/S	9 1/8"	9 3/4"	22
PL20	2" NPT	S/S	10 1/2"	10 1/8"	45
PL20A	3" NPT	S/S	12 1/4"	10 1/8"	54
PL21	2" 125# Flg.	S/S	14"	10 1/8"	51
PL22	2" 250# Flg.	S/S	14 1/4"	10 1/8"	56
P250	2 1/2" NPT	IBBT	11 1/8"	11 1/2"	58
P251	2 1/2" 125# Flg.	IBBT	14 1/8"	11 1/2"	68
P252	2 1/2" 250# Flg.	IBBT	14 5/16"	11 1/2"	70
P30	3" NPT	IBBT	13 1/2"	12 1/2"	87
P31	3" 125# Flg.	IBBT	16 3/16"	12 1/2"	100
P32	3" 250# Flg.	IBBT	16 9/16"	12 1/2"	103
P40	4" NPT	IBBT	16 5/8"	4 1/4"	132
P41	4" 125# Flg.	IBBT	18 7/8"	14 1/4"	145
P42	4" 250# Flg.	IBBT	19 3/16"	14 1/4"	158

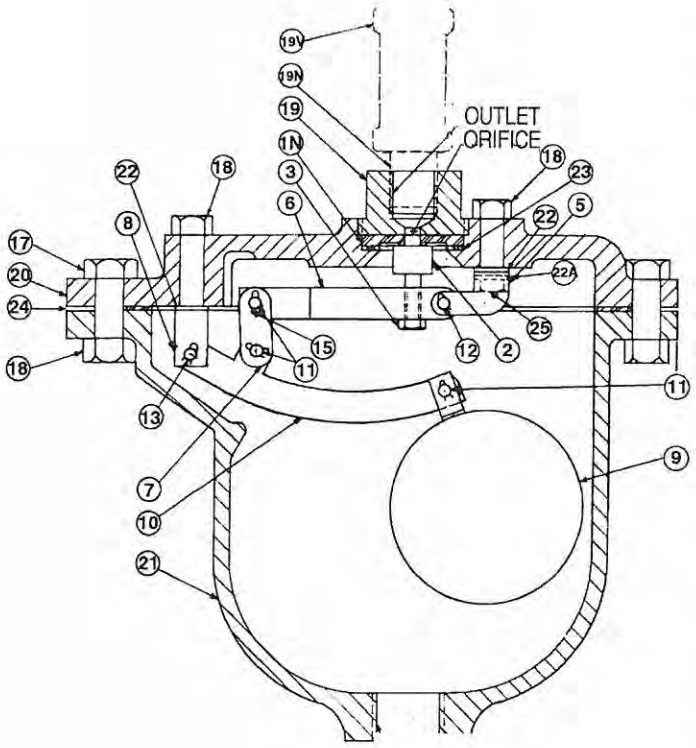

CRISPIN Pressure Air Release Valves operate by means of a compound lever system. This lever system multiplies the weight of the float so that the force pulling the rubber valve away from the orifice is greater than the force or system pressure holding it closed. The pressure at which it will operate is determined by the orifice size. The orifice size will vary inversely to the pressure, that is, as the operating pressure increases the orifice must be smaller, as the operating pressure decreases the orifice can be larger. A valve with an orifice size small enough to permit operation at 300 psig will still function at pressures less than 300 PSIG.

Where pressure air release valves are used on systems other than water, the specific gravity of the liquid must be considered (re. catalog sheet: "Air Release Valves For Liquids Other Than Water"). The specific gravity affects the float buoyancy and, subsequently, valve performance. For example, a valve applied on a petroleum application would require a float of lighter weight in order to provide a buoyancy equivalent to that of the float in water.

Pressure Air Release Valves

PL SERIES

Pressure Air Release Valve Parts Lists:

1" and 2" Valves

PART NO.	ITEM	MATERIAL
1N*	SEAT	PVC
1P*	SEAT	Stainless Steel
2	VALVE	BUNA-N Rubber
3	PLUNGER NUT	Stainless Steel
5	VALVE FULCRUM	Stainless Steel
6	VALVE LEVER	Stainless Steel
7	LINK	Stainless Steel
8	BALL FULCRUM	Stainless Steel
9	BALL FLOAT	Stainless Steel
10	BALL LEVER	Stainless Steel
11	BEARING PIN	Stainless Steel
12	BEARING PIN	Stainless Steel
13	BEARING PIN	Stainless Steel
15	PIN CLIP	Stainless Steel
17	BOLT	Steel
18	NUT	Steel
19	TOP	Cast Iron
19N**	NIPPLE	Steel
~~19V**~~	~~VACUUM CHECK~~	~~Brass~~
20	FLANGE	Cast Iron
21**	BODY	Cast Iron
21F**	BODY-125* ANSI Flanged	Cast Iron
~~21FH**~~	~~BODY-250* ANSI Flanged~~	~~Cast Iron~~
22	FULCRUM WASHER	Fiber
22A	FULCRUM WASHER	Fibre
23	SEAT GASKET	Fibre
24	FLANGE GASKET	Armstrong
25	BOLT	Stainless Steel
26	NUT	Stainless Steel

2 1/2", 3" and 4" Valves

PART NO.	ITEM	MATERIAL
1N*	SEAT	PVC
1P*	SEAT	Stainless Steel
2	VALVE	BUNA-N Rubber
3	PLUNGER NUT	Brass
4	PLUNGER	Brass
5	VALVE FULCRUM	Stainless Steel
6	VALVE LEVER	Stainless Steel
7	LINK	Stainless Steel
8	BALL FULCRUM	Stainless Steel
9	BALL FLOAT	Stainless Steel
10	BALL LEVER	Stainless Steel
11	BEARING PIN	Brass
12	BEARING PIN	Brass
13	SCREW	Stainless Steel
14	NUT	Steel
15	PIN CLIP	Stainless Steel
16	SCREW	Stainless Steel
17	BOLT	Steel
18	NUT	Steel
19	TOP	Cast Iron
19N**	NIPPLE	Steel
19V**	VACUUM CHECK	Brass
20	FLANGE	Cast Iron
21**	BODY	Cast Iron
21F**	BODY-125* ANSI FLANGED	Cast Iron
21FH**	BODY-250* ANSI FLANGED	Cast Iron
22	FULCRUM WASHER	Fibre
23	SEAT GASKET	BUNA-N
24	FLANGE GASKET	Armstrong

* Part No. 1P is interchangeable with Part No. 1N and is optional at customer's request
** Part No.'s 19N, 19V, 21, 21F & 21FH are at customer's option

Submittal Sheet for Crispin PL Series

1"–2" Pressure Air Release Valve

Manufactured in compliance with ANSI/AWWA C512 **Date: October, 2001**

Specifications

The Pressure Air Release Valve(s) shall be installed at high points selected by the engineer to vent the accumulation of air and other gases with the line under pressure.

The valve(s) shall operate through a compound lever system and shall have a 5/16 " orifice with valve sealing faces of an adjustable Buna-N rubber valve and stainless steel or PVC. It shall operate at 150 PSIG, and be capable of passing 152 scfm. of air.

The valve(s) shall be _____" ~~NPT screwed or~~ ANSI Class (125, 250) flanged inlet connection and shall have a cast iron body, top and inlet flange (where required), a stainless steel float and trim. Valves which use a needle to seal the orifice will not be acceptable.

The valve(s) shall be Crispin Model PL 21 Pressure Air Valve(s), Type N (PVC seat and Buna-N rubber valve) or or Type P (stainless steel seat and Buna-N rubber valve) as manufactured by Crispin-Multiplex Manufacturing Co., Berwick, PA.

~~Option: A~~ Vacuum Check Valve shall be supplied on the outlet to eliminate the possibility of air entering the system where the pressure decreases, or if a vacuum is drawn.

~~Option:~~ Where pressures are greater than 300 PSIG, the valve(s) shall be ANSI Class _____ flanged inlet connection and shall have a (steel, stainless steel, or ductile iron) body, top and inlet flange.

Standard operating pressure for Crispin Air Valves is 20 to 150 PSIG. Please check one of the following if your operating needs differ:

____ 2 to 40 PSIG ____ 151 to 300 PSIG

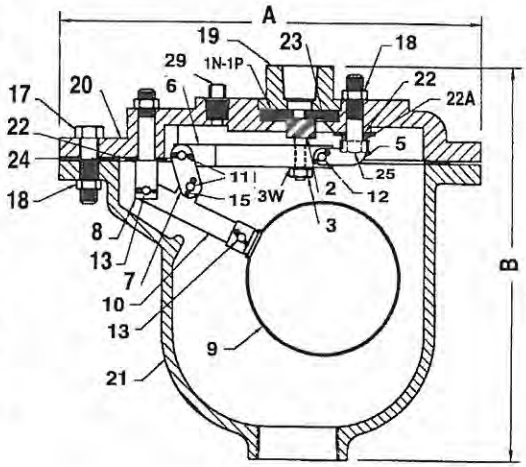

Pressure Air Valve Parts List

ITEM	DESCRIPTION	MATERIAL	ASTM
*1N	SEAT	PVC	1784
*1P	SEAT	STAINLESS STEEL	A240
2	VALVE PLUNGER	BUNA–N RUBBER & S/S	D2000
3	PLUNGER NUT	STAINLESS STEEL	A194
3W	LOCK WASHER	STAINLESS STEEL	A240
5	VALVE FULCRUM	STAINLESS STEEL	A240
6	VALVE LEVER	STAI N LESS STEEL	A240
7	LINK	STAINLESS STEEL	A240
8	BALL FULCRUM	STAINLESS STEEL	A582
9	BALL FLOAT	STAINLESS STEEL	A240
10	BALL LEVER	STAINLESS STEEL	A240
11	BEARING PIN	STAINLESS STEEL	A582
12	BEARING PIN	STAINLESS STEEL	A582
13	BEARING PIN	STAINLESS STEEL	A582
15	COTTER PIN	STAINLESS STEEL	A313
17	BOLT	STEEL	A307
18	NUT	STEEL	A563
19	TOP	CAST IRON	A126 CL.B
20	FLANGE	CAST IRON	A126 CL.B
21	BODY	CAST IRON	A126 CL.B
22	FULCRUM WASHER	FIBER	N/A
22A	FULCRUM WASHER	FIBER	N/A
23	SEAT GASKET	BUNA–N RUBBER	D2000
24	FLANGE GASKET	ARMSTRONG N–8092	N/A
25	BOLT	STAINLESS STEEL	A193
29	PLUG	BRASS	B505

* Parts are interchangable and optional at customer's request

Size Specifications

MODEL	INLET SIZE	OUTLET SIZE	A	B	WT.
PL10	1" NPT	1/2" NPT	9.75	9.00	22
PL10A	2" NPT	1/2" NPT	9.75	9.00	23
PL20	2" NPT	1/2" NPT	10.25	10.50	45
†PL20A	3" NPT	1/2" NPT	10.13	12.25	54
**PL21	2" 125# FLG	1/2" NPT	10.25	14.00	51
**PL22	2" 250# FLG	1/2" NPT	10.25	14.25	53

† Indicates 3" valve with 3"inlet
** Includes ANSI CL. 125 or 250 companion FLG & NPL

PL10 & PL10A Orifice Options

DIAMETER	MAX. PRESSURE	DISCHARGE RATE
5/16	100 PSIG	105 SCFM
1/4	150 PSIG	98 SCFM
3/16	200 PSIG	72 SCFM
5/32	250 PSIG	61.1 SCFM
1/8	300 PSIG	46.7 SCFM

PL20 & PL20A Orifice Options

DIAMETER	MAX. PRESSURE	DISCHARGE RATE
3/8	100 PSIG	152 SCFM
5/16	150 PSIG	152 SCFM
1/4	200 PSIG	127 SCFM
3/16	250 PSIG	88 SCFM
5/32	300 PSIG	73 SCFM

SUBMITTAL SHEET FOR PL SERIES

Crispin Valve, 600 Fowler Ave., Berwick, PA 18603 • 1-800-AIR-VALV • T: (570) 752-4524 • F: (570) 752-4962 • WWW.CRISPINVALVE.COM • sales@crispinvalve.com

Crispin Pressure Air Release Valves

OPERATION

The CRISPIN Pressure Air Release Valve allows air to be released from a system while the system is in operation and under pressure. This is accomplished by the mechanics of the simple or compound lever system inside the valve.

The buoyancy of the float raises the linkage to seal the orifice as the valve body fills upon start-up. As accumulating air displaces the liquid in the valve body, the water level drops. The weight of the float multiplied by the lever system begins to pull the resilient seal away from the seat. This releases a quantity of air that allows more liquid to enter the valve body and, in turn, raises the float to again seat the orifice. The valve will continue to function in this fashion as long as air accumulates.

MAINTENANCE

The valve should be inspected periodically for leakage, particularly at the seat area.

SEAT REPLACEMENT

Isolate or remove the valve from the system. Remove the top (Part No. 1S) which secures the seat (Part No. lN-PVC Seat or Part No. lP- stainless steel seat) in place. Mark the location of the top in relation to the top flange (Part No. 20). With the proper size wrench, turn the top counter-clockwise.

Once the top is removed, the seat will be exposed. Remove the seat and the seat gasket (Part No. 23) and make the required replacement.

It is always best to coat the threads of the top with a suitable thread sealer prior to reassembling the valve. Turn the top into the flange thread (Part No. 20) until it is snug and as close as possible to the original mark. Tighten the top one-quarter turn.

INTERNAL REPAIRS:

The top flange (Part No. 20) must be removed for internal repair. Simply remove the flange nuts and bolts after isolating the valve from the system.

REPLACING VALVE PLUNGER

The valve plunger (Part No. 2–Buna-N Rubber) should be replaced when it begins to deteriorate because of age (4 to 5 years).

The linkage is easily disassembled by removing the pin clips from the bearing pins, then removing the bearing pins.

Now replace the valve plunger (Valve and Lever Assembly Part No. 6) and reconnect the bearing pins and clips.

Crispin Pressure Air Release Valves (continued)

ADJUSTING THE VALVE

The valve plunger is adjusted by removing the top flange, then turning the flange upside down, exposing the lever mechanism. The float is extended away from the valve orifice in order to pull the plunger away from the orifice. A light dusting of powder is spread over the valve seat and the float is allowed to relax.

While extending the float again, observe the powder pattern on the rubber valve, and make appropriate adjustments to permit its full face contact with the valve seat. Secure the plunger by locking the nut or screw.

Replace the flange, being careful not to allow the linkage to toggle over, which would prevent its functioning. This is done by placing either the valve body over the linkage with the flange inverted and resting on a table, or by holding the linkage closed with a screwdriver while replacing the flange on the body. Secure the flange nuts and bolts.

INSTALLATION

The CRISPIN Pressure Air Valve shall be installed at the high points in the line and mounted vertically. The inlet of the valve should be at the same elevation or greater than the elevation at the top of the pipe, with the piping to the inlet on a continuous upward slope. Valves should be protected from freezing.

For more detailed information on valve sizing, etc., please refer to the CRISPIN Catalog and/or Technical Reference No. 5.

Troubleshooting

Seat Leakage

—If a low volume leak persists with the rubber valve against the orifice, then the rubber valve should be adjusted or replaced.

—Replace the rubber valve if the valve has been in operation longer than five years.

—Inspect the valve seating area for foreign particles that could be preventing the valve from seating.

—Internal pressure should be adequate to provide a drip tight seat.

—If problem continues, please consult the factory.

** These valves are intended for use on municipal waste water systems or approved industrial applications.*

UTILITY BALL VALVE INFORMATION

SHARPE® VALVES

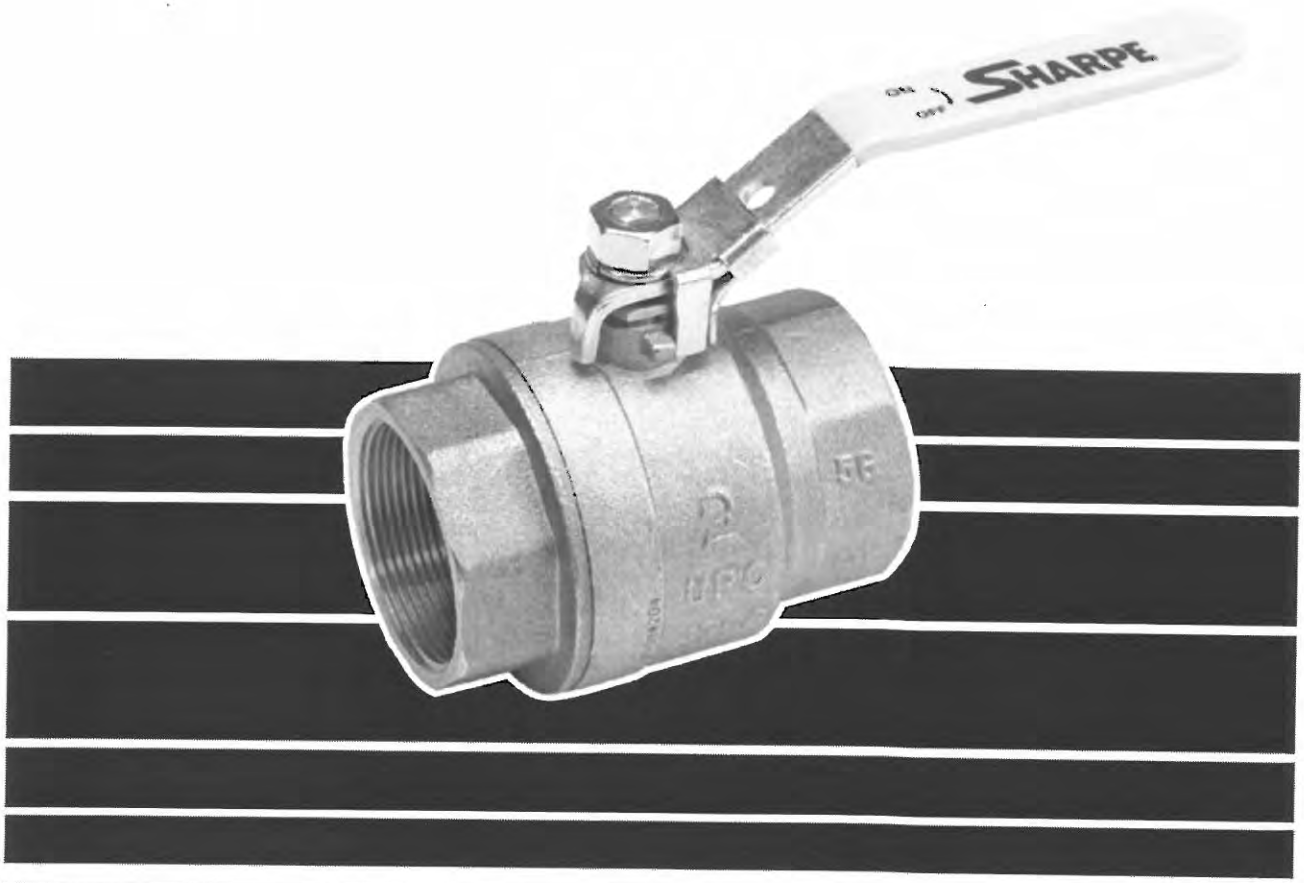

SERIES 10
BRASS FULL PORT
BALL VALVE

SERIES 10 BRASS FULL PORT BALL VALVE

1/4" - 4" 600 WOG
BLOWOUT PROOF STEM
LOCKING DEVICE HANDLES
OVAL HANDLES AVAILABLE

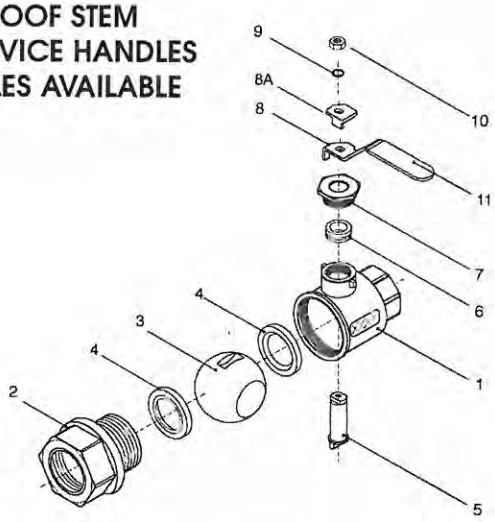

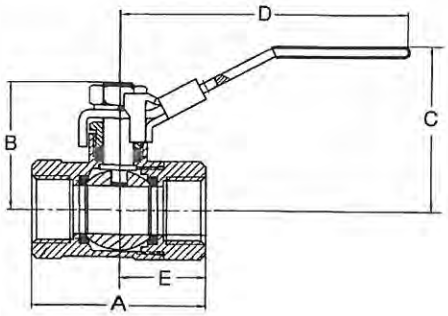

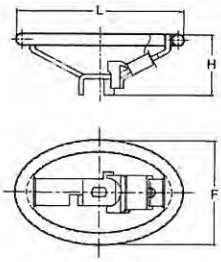

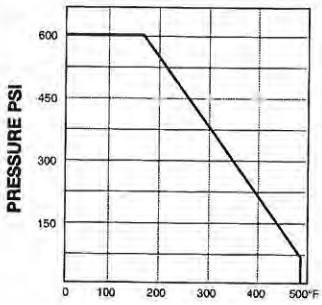

VALVE PARTS AND IDENTIFICATION

PART NO.	PART	QTY.	MATERIAL
1	Body	1	Forged Brass
2	Cap	1	Forged Brass
3	Ball	1	Chrome Plated Brass
4	Ball Seat	2	PTFE
5	Stem	1	Brass
6	Stem Packing	1	PTFE
7	Gland Packing	1	Brass
8	Handle	1	Galvanized Steel
8A	Locking Device	1	Galvanized Steel
9	Handle Washer	1	Steel
10	Handle Nut	1	Steel
11	Handle Sleeve	1	Plastic

*See Dimensions

DIMENSIONS

SIZE	A	B	C	D	E	L	F	H	PORT	WEIGHT
1/4"	1.70	1.38	1.85	3.46	0.85	3.62	2.30	1.34	0.39	0.33
3/8"	1.70	1.38	1.85	3.46	0.85	3.62	2.30	1.34	0.39	0.33
1/2"	2.10	1.58	1.99	3.46	1.05	3.62	2.30	1.34	0.59	0.52
3/4"	2.32	1.77	2.38	4.64	1.19	3.78	2.36	1.69	0.75	0.78
1"	2.90	2.00	2.54	4.64	1.45	3.78	2.36	1.69	1.00	1.10
1-1/4"	3.26	2.37	2.82	5.90	1.63	4.65	3.50	1.93	1.25	1.72
1-1/2"	3.63	2.75	3.03	5.90	1.81	4.65	3.50	1.93	1.50	2.28
2"	4.40	3.23	3.45	5.90	2.20	4.65	3.50	1.93	2.00	3.55
2-1/2"	6.00	3.94	4.59	9.05	3.00	-	-	-	2.50	7.50
3"	6.50	4.45	4.86	9.05	3.25	-	-	-	3.00	9.06
4"	7.76	5.32	5.66	10.00	3.88	-	-	-	4.00	16.30

HOW TO ORDER

VALVE SIZE	VALVE SERIES	BODY & END PLUG	BALL & STEM	SEAT	ENDS	OPTIONS
1/4" 1-1/2" 3/8" 2" 1/2" 2-1/2" 3/4" 3" 1" 4" 1-1/4"	10	1 = Brass	1 = Brass	T = Teflon	TE = Threaded	OH = Oval Handle

3/4" 10 1 1 T TE

SHARPE® VALVES
A Division of Smith-Cooper International, LLC

Toll Free: 1-877-7SHARPE
(877) 774-2773
Fax: (708) 562-9250
Email: info@sharpevalves.com
www.sharpevalves.com
1260 Garnet Drive
Northlake, Illinois 60164 U.S.A.

Due to continuous development of our product range we reserve the right to change the dimensions and information contained in the leaflet as required.
Teflon® is a registered trademark of E.I. DuPont.

Rev. 1/09

PRESSURE SWITCH INFORMATION

Series A1F Compact OEM Pressure Switch

Specifications - Installation and Operating Instructions

A1F

A1F with A-447

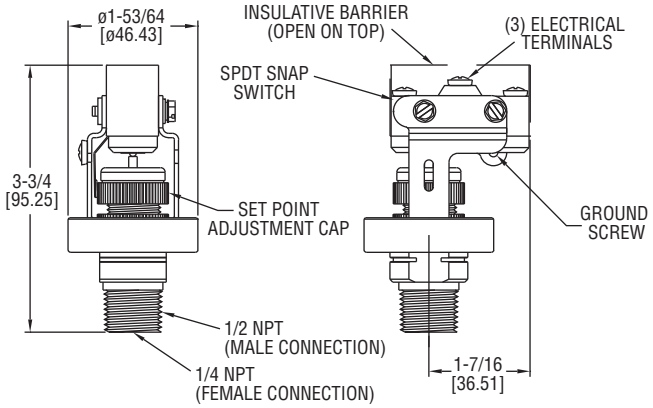

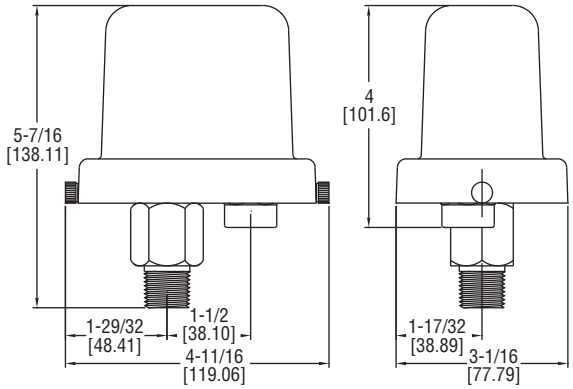

The Series A1F Compact OEM Pressure Switch is ideal for panel mounting wherever a high-quality, economical open-case or weatherproof control is required.

INSTALLATION

1. Location: Select a location where the temperature limits of -40 to 180°F (-40 to 82°C) will not be exceeded. Locate the switch as close as possible to the pressure source. Long lengths of piping will not affect accuracy of the actuation point but will slightly add to response time.

2. Mounting and Processing Connection: Avoid mounting surfaces with excess vibration which could cause false actuation when pressure is near setpoint. The switch should be mounted within 20° of vertical for proper operation. Mount the switch by connecting it to the process piping using either 1/4″ NPT female or 1/2″ male connection. Pipe joint compound or TFE thread tape should be used to prevent leakage.

3. Electrical Connections: The SPDT snap switch includes normally open, normally closed and common connections. The common and normally open contacts will close and the common and normally closed contacts will open when pressure increases to the setpoint. The actions will reverse when pressure decreases below the setpoint minus the deadband. A green grounding screw is provided on the switch bracket. All wiring should be in accordance with local codes.

SETPOINT ADJUSTMENT

1. Determine the setpoint pressure. The approximate actuation point can be set by turning the adjustment cap up or down, aligning the top of the O-ring, located above the cap, with the appropriate scale graduation.
2. Connect tubing or piping from the pressure port on bottom of switch to one leg of a tee. Connect the second leg to a pressure test gage of known accuracy and in an appropriate range. The third leg should be connected to a controllable source of pressure.
3. Connect a volt/ohm meter or other circuit tester to the snap action terminals to indicate when switching occurs.
4. Slowly apply pressure to the system and note the pressure at which switching occurs.
5. Operate the switch through several cycles to confirm proper actuation point.
6. Remove test apparatus and attach switch to pressure source and control circuit wiring. Place switch in service.

SPECIFICATIONS

Service: Compatible liquids and gases.
Wetted Materials:
Pressure Chamber: 316 SS.
Diaphragm: Fluorocarbon.
Temperature Limit: -40 to 175°F (-40 to 80°C).
Pressure Limits: 750 psig (51 bar).
Enclosure Rating: No rating for open construction. Installed properly within an optional A-447 enclosure meets NEMA 4X standards.
Switch Type: SPDT snap switch.
Electrical Rating: 15A @ 120/240/480 VAC, 1/8 HP @ 125 VAC, 1/4 HP @ 250 VAC.
Electrical Connection: Screw terminals.
Process Connection: 1/4″ female NPT and 1/2″ male NPT.
Mounting Orientation: Within 20° of vertical.
Set Point Adjustment: Knurled screw cap with indicating scale.
Deadband: Fixed, See deadband chart.
Weight: 10.5 oz (297 g).

DWYER INSTRUMENTS, INC.
P.O. BOX 373 • MICHIGAN CITY, INDIANA 46361, U.S.A.
Phone: 219/879-8000 www.dwyer-inst.com
Fax: 219/872-9057 e-mail: info@dwyer-inst.com

Example of how to order:

A1F	-	O	-	SS	-	1	-	4
1		2		3		4		5

1. Diaphragm Designation:
F - Fluorocarbon

2. Enclosure Designation:
O - Open Construction No Enclosure

3. Housing Material Designation:
SS - 316SS

4. Switch Designation:
1 - SPDT Snap Action Switch

5. Operating Pressure Range Designation:
1 - 2 to 15 psig
2 - 4 to 75 psig
3 - 8 to 225 psig
4 - 16 to 450 psig

Series A1F Deadband Chart-psig (bar)

Range	Deadband at Minimum Range	Deadband at Maximum Range
2 to 15 (0.14 to 1.03)	2 (0.14)	3 (0.21)
4 to 75 (0.28 to 5.17)	4 (0.27)	15 (1.0)
8 to 225 (0.55 to 15.5)	8 (0.55)	25 (1.7)
16 to 450 (1.1 to 31.0)	15 (1.0)	50 (3.5)

MAINTENANCE

Upon final installation of the Series A1F Compact OEM Pressure Switch, no routine maintenance is required. A periodic check of the system calibration is recommended. The Series A1F is not field serviceable and should be returned if repair is needed (field repair should not be attempted and may void warranty). Be sure to include a brief description of the problem plus any relevant application notes. Contact customer service to receive a return goods authorization number before shipping.

©Copyright 2008 Dwyer Instruments, Inc.
Printed in U.S.A. 7/08 FR# 89-440838-10 Rev.2

DWYER INSTRUMENTS, INC.
P.O. BOX 373 • MICHIGAN CITY, INDIANA 46361, U.S.A.
Phone: 219/879-8000 www.dwyer-inst.com
Fax: 219/872-9057 e-mail: info@dwyer-inst.com

GWTS Equipment

Corrected calibration for FIT-3001, Feb 2016

Tag Name / ID: **FIT-3001**	**Transducer/Transmitter Calibration/Verification**	Manufacture **Seimens/McCrometer**
Contract ID **15-056** / ISA S20 Sheet		Model Number **7MF4433-1EA22/VH03-A1SF3**
Ambient Conditions Temperature **60** °C (°F) Pressure **n/a** mm Hg Humidity **n/a** %	Loop Number **3000** ☐ Initial Calibration ☑ Verification	Serial Number **1X-C314-9002789/15-1854** Calibration Range 0 to 160 DP **0** to **250** **gpm**

1. Visual Inspection: Mechanical connections ☑ Finish ☑ Nameplate/ID Tag ☑ Mounted at correct height ☑
2. Electrical: Conduit Connections ☑ Terminal/Wire Labels ☑ Conduit ID ☐
3. Calibration Proof test at: zero
4. Action: Direct ☑ Indirect ☐ Linear ☐ Non-linear ☐ Square Root ☑
5. Loop Voltage **24 VDC** 4-Wire ☐ 2-Wire ☑
6. Load Impedance **N/A** ohms max @ 24 vdc

Calibration Points

%	Input DP	Expected Output (mADC)	Meter EU GPM	As Found Data: Output Increase	As Found Data: Output Decrease	As Found Data: Maximum Output Error	As Left Data: Output Increase	As Left Data: Output Decrease	As Left Data: Maximum Output Error
0	**0.00**	**4.00**	**0.00**	0	0	± 0	0	0	± 0
10	-					±			±
20	-					±			±
25		**8.00**	**62.50**	0	0	± 0	0	0	± 0
30	-					±			±
40	-					±			±
50	**40.04**	**12.00**	**125.00**	0	0	± 0	0	0	± 0
60	-		-			±			±
70	-		-			±			±
75		**16.00**	**187.50**	0	0	± 0	0	0	± 0
80	-		-			±			±
90	-		-			±			±
100	**160.16**	**20.00**	**250.00**	0	0	± 0	0	0	± 0

Test Equipment Used	Model No:	Serial No:	Calibration/Certification Date
☑ Fluke 789	789	14970085	February 7, 2016
☑ Emerson Filed Calibrator	375	12061955	N/A
☐			
☐			
☐			
☐			
☐			
☐			
☐			

Comments Mcrometer Vcone Fitted with Seimens DP transmimtter and setup per New Vcone cal parameteres
Zero of transmitter performed in field after media introduced to flow meter and stablized
Span verifed in field with actual field conditions and flow rate and visual DP recorded in Hart Communicator

Print Name: Robbie Satriana DCN 2/4/2016
Signed By: Robbie Satriana Date 2/4/2016
Approved By: Preston Patterson Date 2/4/2016

02-04-16

I&C Solutions LLC
4485 Irving Blvd
Albuquerque, NM 87114
505-821-8960 fax 505-821-8970

V-Cone® Application Sizing

Serial #	15-1854	Fluid	WATER
Tag		Fluid State	LIQUID
P.O. Ref.	462-056614	End User	
Model	VH03-A1SF3	Market	Other
		Application	Other

Mark/App Code ZZZ

Description	Wafer-Cone 3"
Note	

C_d	0.8872	
P_f	150	psiG
T_f	75	°F
ρ	62.13	lb/ft3
μ	0.9353	cP
G		
Z		
Y		
k		
C_P		
Mw	18.015	
P_b		
T_b		
Z_b		
P_{atm}	14.696	psi
P_c	3198.8	psi
T_c	705.16	°F
F_a	1.000	
aPE	D 6.7e-06	d 6.7e-06
P_v	0.4302	psi
P_{loss}	2.818	psi

⇐ Entered value.

q	max. Flowrate	250	GPM
Re	max. Reynolds	2.901e+05	
V	max. Velocity	12.14	fps
ΔP	max. Dp	160.16	inWC
ΔP	min. Dp	1.6016	inWC
D	Meter I.D.	2.9000	in
d	Cone O.D.	2.2038	in
β	Beta Ratio	0.6500	
	Turn Down	10	

McCrometer Eng. AlBa

	Re	Cd	Velocity fps	Gas. Exp. Y	ΔP inWC	Flowrate GPM
1	2.901e+05	0.8872	12.14		160.16	250.00
2	2.611e+05	0.8872	10.93		129.73	225.00
3	2.321e+05	0.8872	9.715		102.50	200.00
4	2.031e+05	0.8872	8.500		78.479	175.00
5	1.741e+05	0.8872	7.286		57.658	150.00
6	1.451e+05	0.8872	6.072		40.041	125.00
7	1.160e+05	0.8872	4.857		25.625	100.00
8	8.703e+04	0.8872	3.643		14.415	75.000
9	5.802e+04	0.8872	2.429		6.4065	50.000
10	2.901e+04	0.8872	1.214		1.6016	25.000

Table based on one flow condition (P, T ,Z , k ...) V40 Version 2.0

Record Start Date	6/16/2015
Print Date	07-09-2015

McCROMETER

Corrected calibration for FIT 3108, Feb 2016

Tag Name / ID: FIT-3108	**Transducer/Transmitter Calibration/Verification**	Manufacture: Endress Hauser/McCrometer
Contract ID: N/A; ISA S20 Sheet		Model Number: DP141-200-02/VH03-A1SF3
Ambient Conditions Temperature 60 °C (°F) Pressure n/a mm Hg Humidity n/a %	Loop Number: 3000 ☐ Initial Calibration ☑ Verification	Serial Number: E15-01717/15-1022 Calibration Range 0 to 161 DP 0 to 500 gpm

1. Visual Inspection: Mechanical connections ☑ Finish ☑ Nameplate/ID Tag ☑ Mounted at correct height ☑
2. Electrical: Conduit Connections ☑ Terminal/Wire Labels ☑ Conduit ID ☐
3. Calibration Proof test at: zero
4. Action: Direct ☑ Indirect ☐ Linear ☐ Non-linear ☐ Square Root ☑
5. Loop Voltage 24 VDC 4-Wire ☐ 2-Wire ☑
6. Load Impedance N/A ohms max @ 24 vdc

Calibration Points

%	Input DP	Expected Output (mADC)	Meter EU GPM	As Found Data: Output Increase	As Found Data: Output Decrease	As Found Data: Maximum Output Error	As Left Data: Output Increase	As Left Data: Output Decrease	As Left Data: Maximum Output Error
0	**0.00**	**4.00**	**0.00**	0	0	± 0	0	0	± 0
10	-					±			±
20	-					±			±
25		**8.00**	**125.00**	0	0	± 0	0	0	± 0
30	-					±			±
40	-					±			±
50	**40.13**	**12.00**	**250.00**	0	0	± 0	0	0	± 0
60	-		-			±			±
70	-		-			±			±
75		**16.00**	**375.00**	0	0	± 0	0	0	± 0
80	-		-			±			±
90	-		-			±			±
100	**160.58**	**20.00**	**500.00**	0	0	± 0	0	0	± 0

Test Equipment Used	Model No:	Serial No:	Calibration/Certification Date
☐ Fluke 789	789	14970085	February 7, 2016
☑ Emerson Filed Calibrator	375	12061955	N/A
☐			
☐			
☐			
☐			
☐			
☐			
☐			

Comments: This was a rescale only from 0-400GPM to 0-500GPM directed by customer, performed a zero only

Span verifed in field with actual field conditions and flow rate and visual DP recorded in Hart Communicator

Print Name: Robbie Satriana DCN 2/2/2016
Signed By: Robbie Satriana Date 2/2/2016
Approved By: Preston Patterson Date 2/2/2016

I&C Solutions LLC
4485 Irving Blvd
Albuquerque, NM 87114
505-821-8960 fax 505-821-8970

V-Cone® Application Sizing

Serial #	15-1022	Fluid	WATER
Tag		Fluid State	LIQUID
P.O. Ref.	518506	End User	
Model	VM04QE03F-E1HS-V3	Market	
		Application	
			Mark/App Code

Description	4" VM meter
Note	

C_d	0.8104	
P_f	175	psiG
T_f	70	°F
ρ	62.18	lb/ft3
μ	0.9957	cP
G		
Z		
Y		
k		
C_P		
Mw	18.015	
P_b		
T_b		
Z_b		
P_{atm}	14.696	psi
P_c	3198.8	psi
T_c	705.16	°F
F_a	1.000	
aPE	D 6.7e-06	d 6.7e-06
P_v	0.3633	psi
P_{loss}	2.587	psi

⇐ Entered value.

q	max. Flowrate	500	GPM
Re	max. Reynolds	3.922e+05	
V	max. Velocity	12.56	fps
ΔP	max. Dp	160.58	inWC
ΔP	min. Dp	1.6058	inWC
D	Meter I.D.	4.0330	in
d	Cone O.D.	2.9460	in
β	Beta Ratio	0.6829	
	Turn Down	10	

McCrometer Eng. MaBa

	Re	Cd	Velocity fps	Gas. Exp. Y	ΔP inWC	Flowrate GPM
1	3.922e+05	0.8104	12.56		160.58	500.00
2	3.530e+05	0.8104	11.30		130.07	450.00
3	3.138e+05	0.8104	10.05		102.77	400.00
4	2.745e+05	0.8104	8.790		78.683	350.00
5	2.353e+05	0.8104	7.534		57.808	300.00
6	1.961e+05	0.8104	6.279		40.145	250.00
7	1.569e+05	0.8104	5.023		25.693	200.00
8	1.177e+05	0.8104	3.767		14.452	150.00
9	7.844e+04	0.8104	2.511		6.4231	100.00
10	3.922e+04	0.8104	1.256		1.6058	50.000

Table based on one flow condition (P, T ,Z , k ...) V40 Version 2.0

Record Start Date	3/31/2015
Print Date	01-25-2016

McCROMETER

Corrected Calibration for FIT 3102, Feb 016

Tag Name / ID: **FIT-3102**	**Transducer/Transmitter Calibration/Verification**	Manufacture **Endress Hauser/McCrometer**
Contract ID **N/A** / ISA S20 Sheet		Model Number **DD141-200-02/VH03-A1SF3**
Ambient Conditions Temperature **60** °C (°F) Pressure **n/a** mm Hg Humidity **n/a** %	Loop Number **3000** ☐ Initial Calibration ☑ Verification	Serial Number **E15-01718/15-1023** Calibration Range 0 to 159 DP **0** to **500** **gpm**

1. Visual Inspection: Mechanical connections ☑ Finish ☑ Nameplate/ID Tag ☑ Mounted at correct height ☑
2. Electrical: Conduit Connections ☑ Terminal/Wire Labels ☑ Conduit ID ☐
3. Calibration Proof test at: zero
4. Action: Direct ☑ Indirect ☐ Linear ☐ Non-linear ☐ Square Root ☑
5. Loop Voltage **24 VDC** 4-Wire ☐ 2-Wire ☑
6. Load Impedance **N/A** ohms max @ 24 vdc

Calibration Points

%	Input DP	Expected Output (mADC)	Meter EU GPM	As Found Data: Output Increase	As Found Data: Output Decrease	As Found Data: Maximum Output Error	As Left Data: Output Increase	As Left Data: Output Decrease	As Left Data: Maximum Output Error
0	**0.00**	**4.00**	**0.00**	0	0	± 0	0	0	± 0
10	-					±			±
20	-					±			±
25		**8.00**	**125.00**	0	0	± 0	0	0	± 0
30	-					±			±
40	-					±			±
50	**39.81**	**12.00**	**250.00**	0	0	± 0	0	0	± 0
60	-		-			±			±
70	-		-			±			±
75		**16.00**	**375.00**	0	0	± 0	0	0	± 0
80	-		-			±			±
90	-		-			±			±
100	**159.24**	**20.00**	**500.00**	0	0	± 0	0	0	± 0

Test Equipment Used	Model No:	Serial No:	Calibration/Certification Date
☐ Fluke 789	789	14970085	February 7, 2016
☑ Emerson Filed Calibrator	375	12061955	N/A
☐			
☐			
☐			
☐			
☐			
☐			
☐			

Comments This was a rescale only from 0-400GPM to 0-500GPM directed by customer, performed a zero only

Span verifed in field with actual field conditions and flow rate and visual DP recorded in Hart Communicator

Print Name: Robbie Satriana DCN 2/2/2016
Signed By: Robbie Satriana Date 2/2/2016
Approved By: Preston Patterson Date 2/2/2016

02-04-16

I&C Solutions LLC
4485 Irving Blvd
Albuquerque, NM 87114
505-821-8960 fax 505-821-8970

V-Cone® Application Sizing

Serial #	15-1023
Tag	
P.O. Ref.	518505
Model	VM04QE03F-E1HS-V3

Fluid	WATER	
Fluid State	LIQUID	
End User		
Market		Mark/App Code
Application		

Description	4" VM meter
Note	

C_d	0.8138	
P_f	175	psiG
T_f	70	°F
ρ	62.18	lb/ft3
μ	0.9957	cP
G		
Z		
Y		
k		
C_P		
Mw	18.015	
P_b		
T_b		
Z_b		
P_{atm}	14.696	psi
P_c	3198.8	psi
T_c	705.16	°F
F_a	1.000	
aPE	D 6.7e-06	d 6.7e-06
P_v	0.3633	psi
P_{loss}	2.565	psi

⇐ Entered value.

q	max. Flowrate	500	GPM
Re	max. Reynolds	3.922e+05	
V	max. Velocity	12.56	fps
ΔP	max. Dp	159.24	inWC
ΔP	min. Dp	1.5924	inWC
D	Meter I.D.	4.0330	in
d	Cone O.D.	2.9460	in
β	Beta Ratio	0.6829	
	Turn Down	10	

McCrometer Eng. MaBa

	Re	Cd	Velocity fps	Gas. Exp. Y	ΔP inWC	Flowrate GPM
1	3.922e+05	0.8138	12.56		159.24	500.00
2	3.530e+05	0.8138	11.30		128.98	450.00
3	3.138e+05	0.8138	10.05		101.91	400.00
4	2.745e+05	0.8138	8.790		78.027	350.00
5	2.353e+05	0.8138	7.534		57.325	300.00
6	1.961e+05	0.8138	6.279		39.810	250.00
7	1.569e+05	0.8138	5.023		25.479	200.00
8	1.177e+05	0.8138	3.767		14.332	150.00
9	7.844e+04	0.8138	2.511		6.3696	100.00
10	3.922e+04	0.8138	1.256		1.5924	50.000

Table based on one flow condition (P, T ,Z , k ...) V40 Version 2.0

Record Start Date	3/31/2015
Print Date	01-25-2016

McCROMETER

RUPERT PLUMBING AND HEATING

PIPE FABRICATION

40 05 13-2.1: Product Data—Part 2 additional items

ars 10/6/15

This section contains the following:

- 3 way valve –revised for two separate valves—one 6" and one 2"

ACS 10/6/15

Technical Data

Components & Materials

Carbon Steel bodies on Valve sizes 1/2" – 4" are Black Phosphate Coated.

All Stainless Steel bodies are solution annealed/ normalized.

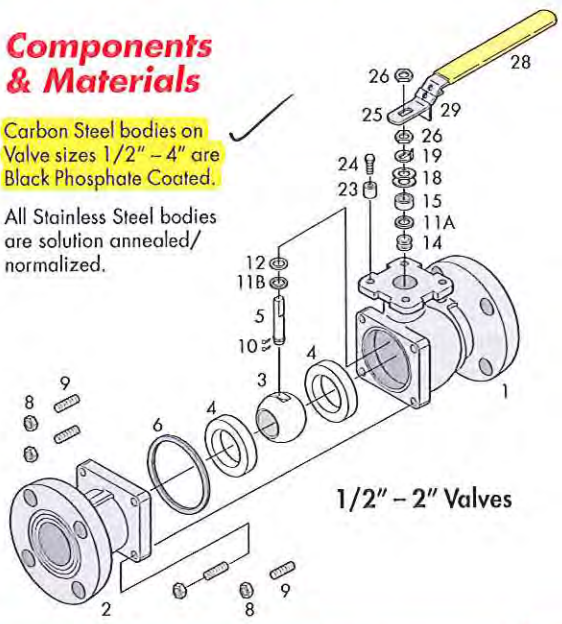

1/2" – 2" Valves

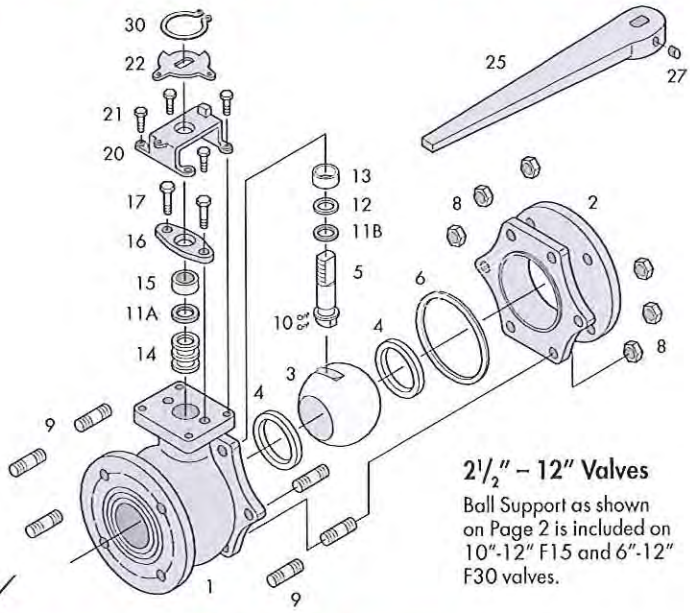

2½" – 12" Valves

Ball Support as shown on Page 2 is included on 10"-12" F15 and 6"-12" F30 valves.

Item	Name	Stainless Steel	Carbon Steel	Qty.
1	Body	ASTM A351 Gr CF8M	ASTM A216 Gr WCB	1
2	End Cap	ASTM A351 Gr CF8M	ASTM A216 Gr WCB	1
3	Ball	ASTM A351 Gr CF8M	ASTM A351 Gr CF8M	1
4	Seat	TFM 1600	TFM 1600	2
5	Stem	ASTM A479 Type 316	ASTM A479 Type 316	1
6	Body Seal	Spiral Wound (316/Graphite)	Spiral Wound (316/Graphite)	1
8	Body Nut	ASTM A194 Gr 8	ASTM A194 2H	*
9	Body Stud	ASTM A193 B8	ASTM A193 B7	*
10	Anti-Static Device	SS304	SS304	2
11 A	Packing Protector	PEEK	PEEK	1
11 B	Thrust Washer Protector	PEEK	PEEK	1
12	Thrust Washer	Tek-Fil	Tek-Fil	1
13	Stem Bearing	15% RPTFE	15% RPTFE	1
14	Stem Packing	RPTFE/Graphite	RPTFE/Graphite	3/1
15	Packing Gland	ASTM A167 Type 304	ASTM A167 Type 304	1
16	Packing Follower	ASTM A351 Gr CF8M	ASTM A216 Gr WCB	1
17	Gland Bolt	SS304	SS304	2
18	Belleville Washer	SS301	SS301	2
19	Tab Lock Washer	SS304	SS304	1
20	Travel Stop Housing	CF8M	WCB	1
21	Housing Bolt	SS304	Alloy Steel	4
22	Travel Stop	SS304	Zinc Plated Carbon Steel	1
23	Travel Stop Sleeve	ASTM A167 Type 304	ASTM A167 Type 304	1
24	Travel Stop Bolt	SS304	SS304	1
25	Handle	SS304/**Ductile Iron	SS304/**Ductile Iron	1
26	Lock Nut	ASTM A167 Type 304	ASTM A167 Type 304	2
27	Handle Bolt	Carbon Steel	Carbon Steel	1
28	Handle Sleeve	Vinyl through 2"	Vinyl through 2"	1
29	Locking Device	SS304	SS304	1
30	Snap Ring	Nickel Plated Carbon Steel	Nickel Plated Carbon Steel	2

*Quantity depends on valve size. ** 2-½" and larger valves.

Flow-Tek offers the seat, body seal, thrust washer and stem packing as recommended spare parts. These parts are available as a packaged repair kit.

Specifications

End Connections meet ASME Class 150/300.
Flanges meet ASME B16.5 raised face.
Face to Face Dimensions meet ASME B16.10 long pattern.
All Valves meet ASME B16.34, API 608, & MSS-SP 72.
All Valves are certified to API 607 4th Edition (with Graphite Stem Packing).
NACE MR0175–Consult Factory.

All Valves are Hydrostatically Pressure Tested (Shell) and Air Pressure Tested (Seat) to the following in psi:
Class 150: Shell 450 [CS] 425 [SS] Seat 80
Class 300: Shell 1125 [CS] 1100 [SS] Seat 80
Valves meet or exceed ASME Class VI shutoff.

Pressure / Temperature

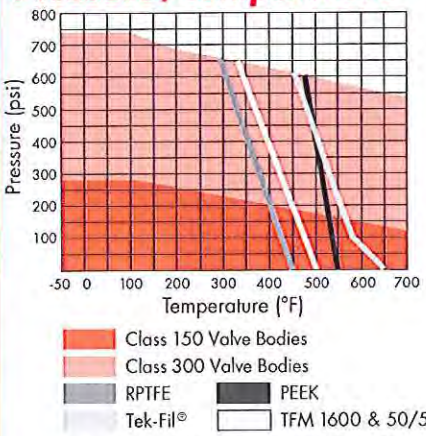

Note: Carbon Steel valves limited to -20°F.

Steam Service Pressure Ratings: WSP

Valve	TFM Seats PSI	°F	Tek-Fil Seats PSI	°F	PEEK Seats PSI	°F
Class 150	150	365	190	450	170	500
Class 300	150	365	425	450	425	500

Vacuum Service to 29.9 inches Hg. gauge.

Dimensions

MODEL F15 – Class 150

SIZE ins (mm)	A	øB	C	C1	D	E	øF	N	øS	øT	C_V	TORQUE * lbs-in (kg-Nm)	WEIGHT lbs. (kg.)
1/2	4.25	0.59	2.60	1.54	6.50	1.79	3.50	4	2.38	0.62	32	36	4
15	108.0	15.0	66.0	39.0	165.0	45.5	88.9		60.5	15.8	28	4	2
3/4	4.62	0.79	2.91	1.67	6.50	2.01	3.88	4	2.75	0.62	60	65	5
20	117.0	20.0	73.9	42.4	165.0	51.0	98.6		69.9	15.8	52	7	2
1	5.00	0.98	3.43	2.05	7.87	2.13	4.25	4	3.12	0.62	105	95	10
25	127.0	24.9	87.0	52.0	199.9	54.0	108.0		79.0	15.8	91	11	4.5
1-1/2	6.50	1.49	4.23	2.60	9.84	2.76	5.00	4	3.88	0.62	275	230	14
40	165.0	37.9	107.0	66.0	249.9	70.0	127.0		98.6	15.8	238	26	6
2	7.00	1.97	4.53	2.95	10.43	3.07	6.00	4	4.75	0.75	500	390	20.5
50	177.8	50.0	115.0	74.9	264.9	78.0	152.0		120.7	19.0	433	44	9
2-1/2	7.50	2.56	6.22	3.39	15.35	3.08	7.00	4	5.50	0.75	780	500	36
65	190.5	65.0	158.0	86.0	389.9	78.0	177.8		139.7	19.0	675	56	16
3	8.00	2.99	6.54	3.66	15.35	3.74	7.50	4	6.00	0.75	1,150	650	45
80	203.0	76.0	166.0	93.0	389.9	95.0	190.5		152.0	19.0	995	73	20
4	9.00	3.99	7.20	4.39	15.35	4.47	9.00	8	7.50	0.75	2,100	1,505	65
100	228.6	101.0	182.9	111.5	389.9	113.5	228.6		190.5	19.0	1,817	170	29.5
6	15.50	5.98	11.22	7.17	15.35	7.62	11.00	8	9.50	0.88	5,000	3,250	157
150	393.7	151.9	284.9	182.0	389.9	193.6	279.0		241.0	22.0	4,325	367	71
8	18.00	7.87	12.72	7.80	38.98	8.35	13.50	8	11.75	0.88	9,800	4,750	290
200	457.0	199.9	323.0	193.0	990.0	212.0	342.9		298.5	22.0	8,304	537	132
10	21.00	9.84	13.70	9.88	38.98	10.47	16.00	12	14.25	1.00	15,000	13,700	500
250	533.0	249.9	348.0	251.0	990.0	265.9	406.0		362.0	25.0	12,975	1,548	227
12	24.00	11.81	15.28	11.46	38.98	12.01	19.00	12	17.00	1.00	21,000	19,700	700
300	609.6	300.0	388.0	291.0	990.0	305.0	482.6		431.8	25.0	18,165	2,226	318

Face to Face dimensions meet ASME B16.10 long pattern.
*Torque at maximum rated pressure, clean water, TFM 1600 seating material. Other seat materials exhibit different torques. Please refer to TB 1005 for specific torques.

MODEL F30 – Class 300

SIZE ins (mm)	A	øB	C	C1	D	E	øF	N	øS	øT	C_V	TORQUE * lbs-in (kg-Nm)	WEIGHT lbs. (kg.)
1/2	5.50	0.59	2.60	1.57	6.50	2.44	3.75	4	2.62	0.62	32	40	5
15	139.7	15.0	66.0	39.9	165.0	62.0	95.0		66.6	15.8	28	5	2
3/4	6.00	0.79	2.91	1.67	6.50	2.72	4.62	4	3.25	0.75	60	70	7
20	152.0	20.0	73.9	42.0	165.0	69.0	117.0		82.6	19.0	52	8	3
1	6.50	0.98	3.43	2.05	7.87	2.91	4.88	4	3.50	0.75	105	108	10
25	165.0	24.9	87.0	52.0	199.9	73.9	124.0		88.9	19.0	91	12	5
1-1/2	7.50	1.49	4.23	2.60	9.84	3.27	6.12	4	4.50	0.88	275	270	19
40	190.5	37.9	107.0	66.0	249.9	83.0	155.5		114.0	22.0	238	31	9
2	8.50	1.97	4.53	2.95	10.43	3.94	6.50	8	5.00	0.75	500	445	25
50	215.9	50.0	115.0	74.9	264.9	100.0	165.0		127.0	19.0	433	50	11
2-1/2	9.50	2.56	6.22	3.39	15.35	4.18	7.50	8	5.88	0.88	780	600	44
65	241.0	65.0	158.0	86.0	389.9	106.0	190.5		149.0	22.0	675	68	20
3	11.12	2.99	6.54	3.72	15.35	5.57	8.25	8	6.62	0.88	1,150	850	61
80	282.5	76.0	166.0	94.5	389.9	141.5	209.6		168.0	22.0	995	96	27.7
4	12.00	3.99	7.20	4.35	15.35	5.96	10.00	8	7.88	0.88	2,100	2,600	96
100	304.8	101.0	182.9	110.5	389.9	151.0	254.0		200.0	22.0	1,817	294	44
6	15.88	5.98	11.22	7.19	38.98	7.60	12.50	12	10.62	0.88	5,000	5,300	243
150	403.0	151.9	285.0	182.6	990.0	193.0	317.5		269.8	22.0	4,325	599	110
8	19.75	7.87	12.72	8.64	38.98	9.33	15.00	12	13.00	1.00	9,800	7,600	430
200	501.7	199.9	323.0	219.5	990.0	237.0	381.0		330.0	25.0	8,304	859	195
10	22.38	9.84	13.70	9.69	38.98	11.18	17.50	16	15.25	1.12	15,000	17,800	610
250	568.5	249.9	348.0	246.0	990.0	284.0	444.5		387.0	28.5	12,975	2,011	277
12	25.50	11.81	15.28	11.26	38.98	12.80	20.50	16	17.75	1.25	21,000	24,800	950
300	647.7	300.0	388.0	286.0	990.0	325.0	520.7		450.9	31.8	18,165	2,802	431

SECURE MOUNT

SIZE ins (mm)	H	J	Fo	BC DIA.	K	L	M	øP	U UNC
1/2	1.17	1.17	F04	1.65	0.31	0.61	0.25	0.37	#10-24
15	29.7	29.7		41.9	7.9	15.5	6.0	9.4	
3/4	1.17	1.17	F04	1.65	0.31	0.61	0.25	0.37	#10-24
20	29.7	29.7		41.9	7.9	15.5	6.0	9.4	
1	1.39	1.39	F05	1.97	0.43	0.82	0.31	0.43	1/4-20
25	35.0	35.0		50.0	10.9	20.8	7.9	10.9	
1-1/2	1.95	1.95	F07	2.76	0.55	0.95	0.37	0.62	5/16-18
40	49.5	49.5		70.0	14.0	24.0	9.0	15.8	
2	1.95	1.95	F07	2.76	0.55	0.95	0.37	0.62	5/16-18
50	49.5	49.5		70.0	14.0	24.0	9.0	15.8	
2-1/2-4	3.54	1.87	F10	–	1.75	3.10	0.67	1.10	1/2-13
65-100	89.9	47.5			44.5	78.7	17.0	27.9	
6	3.37	3.37	F12	4.77	1.61	3.58	1.02	1.71	1/2-13
150	85.6	85.6		121.0	40.9	90.9	25.9	43.0	
8[1]	3.37	3.37	F12	4.77	2.13[1]	3.58[1]	1.02	1.71	1/2-13
200	85.6	85.6		121.0	54.0	90.9	25.9	43.0	
10-12[2]	4.53	4.53	F16	6.40	2.15	3.86[2]	1.38	1.97[2]	5/8-11
250-300	115.0	115.0		162.6	54.6	98.0	35.0	50.0	

[1] For 8" F30: K=1.61, L=3.42 [2] For 10" F30: L=3.82, P=2.165

NOTE 1: Ball Support as shown on Page 2 is included on 10"-12" F15 and 6"-12" F30 valves.
NOTE 2: 2½", 3" & 4" valves feature a NAMUR stem slot for ease of limit switch mounting.

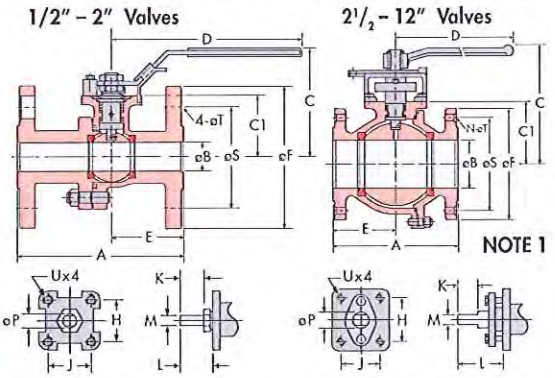

All statements, technical information, and recommendations in this bulletin are for general use only. Consult Flow-Tek representatives or factory for the specific requirements and material selection for your intended application. The right to change or modify product design or product without prior notice is reserved.

Flow-Tek® is a registered trademark of Flow-Tek, Inc.
© 2010 Flow-Tek, Inc.
F-2400_EN_F15-30_2010-10

Flow-Tek®
A Subsidiary of BRAY INTERNATIONAL, Inc.
8323 N. Eldridge Pkwy #100 Houston, Texas 77041
832.912.2300 Fax: 832.912.2301
www.flow-tek.com

BRAY SERIES 70

MODULATING ACTUATOR - SERVO PRO

For precision control of valve position. The Bray Series 70 Electric Actuator can be equipped with a Servo for precise control of valve position. The Servo consists of a microprocessor controlled circuit board and a feedback potentiometer assembly, which both fit entirely within the standard Series 70 actuator housing. The circuit board has terminal blocks for customer field wiring, and other terminals for internal connections to the actuator components. The feedback potentiometer is driven by a gear set connected to the actuator output drive. Also available are Servos capable of serial BUS communication, such as DeviceNet.

VOLTAGE SPIKE PROTECTION: Voltage spikes that can damage electrical equipment are very common in industrial locations. Large voltage spikes can be caused by switching power loads, such as large motor drives, at the customer location. The output stage triacs of the Servo Pro are protected against damage from voltage spikes by a special combination of:

- Limit Switch Circuitry
- Metal Oxide Varistor (MOV)
  For Transient Voltage Suppression
- Zero Crossing Detection

DeviceNet Servo PRO: Bray also offers the Series 70 with the most advanced serial BUS communication Servo on the market. The Bray DeviceNet Servo Pro is fully ODVA (Open DeviceNet Vendor Association) compliant. Benefits include greatly simplified field wiring and installation, advanced control and diagnostics in real-time from a remote location, and full network integration. Please contact your Bray representative for more information.

SERVO PRO FEATURES / SPECIFICATIONS

Servo is available for modulating service, continuous duty actuators only.

Power Input	24 , 120 or 220 VAC, 50/60 Hz (power must match motor)
Power Consumption	2 Watts (not including actuator power)
Input Signal	Standard: 4-20 mADC Configurable: 1. 0-10 VDC 2. 2-10 VDC 3. 10K Ohm or greater potentiometer,
Calibration	Single Button Autocalibration
Indicators	Power: Green LED Status: Flashing Red / Green LED Motor: Red LED (Close), Green LED (Open)
Control Modes	Standard: Full Range, Direct Acting Configurable: Reverse Acting, Split Range
Fail Position (Loss Of Input Signal)	Standard: Fail Closed Configurable: Fail Open
Control Characteristic	Linear
Duty Cycle	100%
Internal Feedback	10K Ohm Potentiometer, gear driven
Retransmission Output	Standard: 4-20 mADC Configurable: 0-5 VDC, 0-10 VDC, 2-10 VDC Retransmission Output is designed to drive an isolated 250–500 Ohm resistive load.
Speed Control	Standard: Full Speed (Speed Control is Disabled) Configurable: Bidirectional–Independent Open and Close Trim Pots adjustment

"Standard" is the way the Servo is set at the factory.

"Configurable" means the customer, or the factory, can modify the Servo by setting DIP switche(s).

WATERPROOF ENCLOSURE
S70-003 TO S70-065

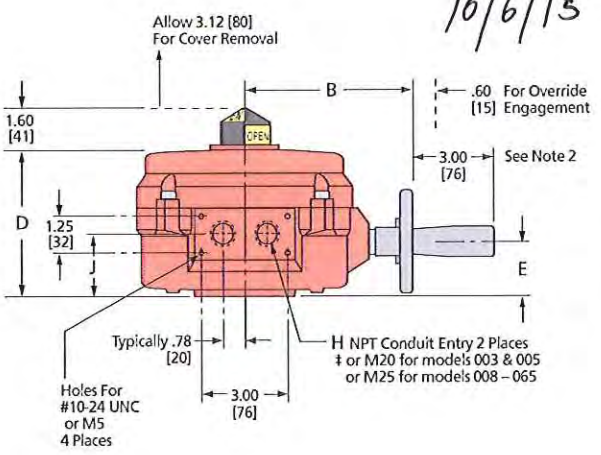

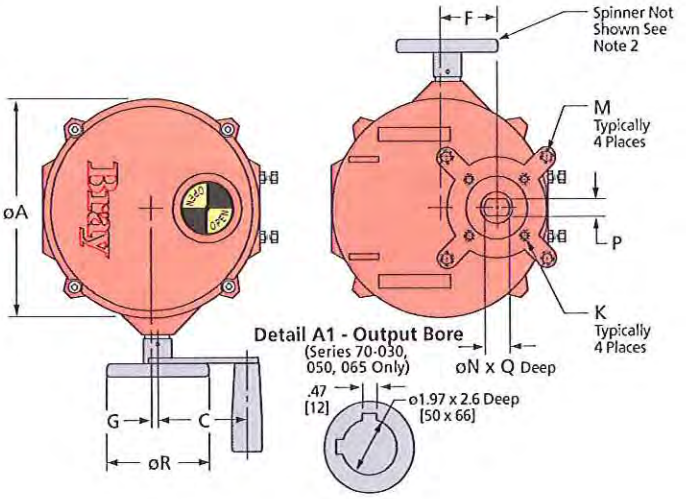

IMPERIAL DIMENSIONS - Inches

Actuator Series	A	B	C	D	E	F	G	H	J	K (UNC) x B.C.	M (UNC) x B.C.	N	P	Q	øR	S	T	U	Weight lbs
S70-003 S70-005	7.5	5.6	3.0	5.1	1.9	1.94	.19	1/2‡	2.0	5/16-18 x ø2.76 F07	—	.75	.51	1.75	3.5	–	–	–	12
S70-008 S70-012 S70-020	10.1	7.8	3.7	6.5	2.5	2.69	.56	3/4‡	2.6	5/16-18 x ø2.76 F07	1/2-13 x ø4.92 F12	1.18	.87	2.20	8	–	–	–	28
S70-030 S70-050 S70-065	12.1	9.5	5.6	7.2	2.9	3.19	.56	3/4‡	3.1	1/2-13 x ø4.92 F12	3/4-10 x ø6.50 F16	See Detail A1			12	–	–	–	48

METRIC DIMENSIONS - Millimeters

Actuator Series	A	B	C	D	E	F	G	H	J	K (UNC) x B.C.	M (UNC) x B.C.	N	P	Q	øR	S	T	U	Weight kgs
S70-003 S70-005	191	142	76	130	48	49.3	4.8	1/2‡	51	5/16-18 x ø2.76 F07	—	19	13	44	89	–	–	–	6
S70-008 S70-012 S70-020	257	198	94	165	64	68.3	14.2	3/4‡	66	5/16-18 x ø2.76 F07	1/2-13 x ø4.92 F12	30	22	56	203	–	–	–	13
S70-030 S70-050 S70-065	307	241	142	183	74	81	14.2	3/4‡	79	1/2-13 x ø4.92 F12	3/4-10 x ø6.50 F16	See Detail A1			305	–	–	–	22

Notes:

‡ The duty cycle for intermittent on-off operation is 25%. The continuous duty actuator with Servo is rated for 100% modulating operation.
2) Handwheel Spinner shown in drawing is available as an option.
3) K & M Dimensions are also available in M8, M12, and M20.
4) N Dimension is also available with Double Square (Star) drive.

Drawings are for reference only. Please refer to Bray ES drawings on the Bray website, www.bray.com. Bray reserves the right to change product dimensions without notice.

SR Drawing #70-003/065-im - August 2012- Rev. 0

Inquire/P.O. No.:_____

Customer/Project: _____

Bray Order No.: _____

Bray SERIES 70

2ND GENERATION ELECTRIC ACTUATOR

OPERATION AND MAINTENANCE MANUAL

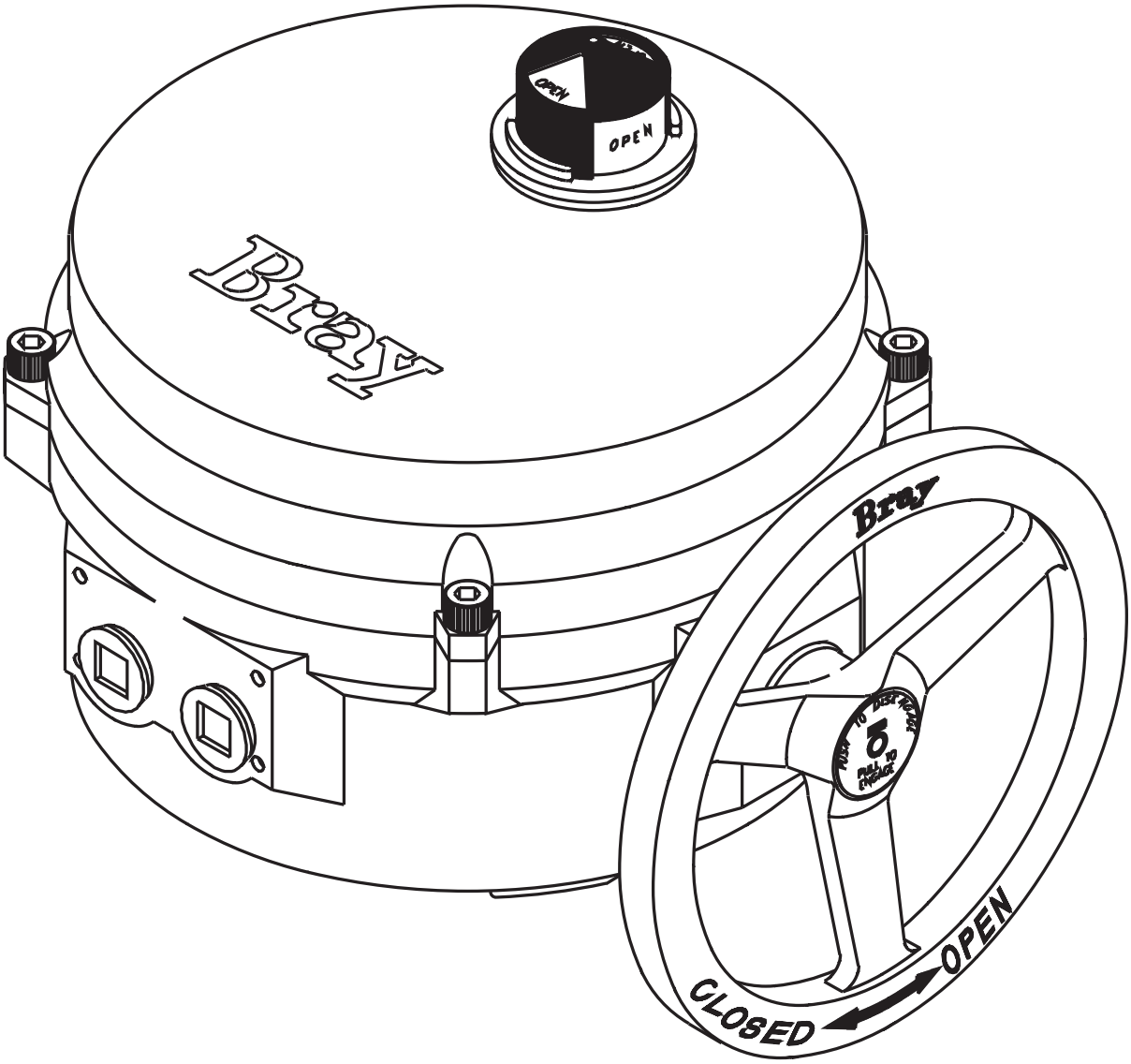

The High Performance Company

Table of Contents

Safety Instructions - Definition of Terms . . . 2
Hazard-Free Use . . . 2
Qualified Personnel . . . 2
Part Numbering System Reference Chart . . . 3
Introduction . . . 3
- Principle of Operation . . . 3
- Electrical Operation . . . 3
- General Electrical Schematic . . . 3
- Mechanical Operation . . . 3
- Manual Override Operation (Declutchable) . . . 4
- Pre-Installation Storage . . . 4

Installation . . . 4
- Mounting to a Valve . . . 4
- Field Wiring . . . 4
- Multiple Actuator (Parallel) Wiring . . . 5
- Actuator Diagram without I.R.B. . . . 5
- Travel Limit Switch and Mechanical Travel Stop Adjustment . . . 5
- S70 On/Off Actuator with Interposing Relay Board (I.R.B.) . . . 5
- Close Travel Switch Adjustment . . . 6
- Open Travel Switch Adjustment . . . 6

Disassembly and Assembly . . . 7
- Procedure . . . 7

Field or Factory Installable Options . . . 8
- Torque Switches . . . 8
- Torque Switch Mechanism . . . 8
- Heater . . . 9
  - Installation Procedure . . . 9
- Servo-Pro Module . . . 9
  - Installation Procedure . . . 10
  - Servo Calibration . . . 10
- External Signal Feedback Potentiometer . . . 11
  - Installation Procedure . . . 11
  - Set the Potentiometer . . . 11
- Auxiliary Switches . . . 11
  - Installation Procedure . . . 11
- Auxiliary Switch Configuration Chart . . . 12
- Typical Wiring Diagram: On/Off Service . . . 13
- Typical Wiring Diagram: Modulating Service . . . 14
- Adjustments, Calibration and Status LED of Servo Pro . . . 15
- Receptacles (Quick Connectors) . . . 16
- Spinner . . . 17
- Local Control Station (Single Phase Powered Actuators) . . . 17

Appendix A . . . 18
- Basic Tools . . . 18

Appendix B . . . 19
- Actuator Troubleshooting Chart . . . 19
- S70 Servo Pro Troubleshooting Chart . . . 20

Appendix C - Exploded Views . . . 21
- Series 70 - Housing Size 6 . . . 21
- Series 70 - Housing Size 12 . . . 22
- Series 70 - Housing Size 30 . . . 23
- Series 70 - Housing Size 180 for 3:1 Gear Box . . . 24
- Series 70 - 3:1 Gear Box . . . 25

For information on this product and other Bray products please visit us at our web page - www.bray.com

Safety Instructions - Definition of Terms

READ AND FOLLOW THESE INSTRUCTIONS
SAVE THESE INSTRUCTIONS

WARNING	indicates a potentially hazardous situation which, if not avoided, **could** result in death or serious injury.
CAUTION	indicates a potentially hazardous situation which, if not avoided, may result in minor or moderate injury.
NOTICE	used without the safety alert symbol indicates a potential situation which, if not avoided, may result in an undesirable result or state, including property damage.

HAZARD-FREE USE

This device left the factory in proper condition to be safely installed and operated in a hazard-free manner. The notes and warnings in this document must be observed by the user if this safe condition is to be maintained and hazard-free operation of the device assured.

Take all necessary precautions to prevent damage to the actuator due to rough handling, impact, or improper storage. Do not use abrasive compounds to clean the actuator, or scrape metal surfaces with any objects.

The control systems in which the actuator is installed must have proper safeguards to prevent injury to personnel, or damage to equipment, should failure of system components occur.

QUALIFIED PERSONNEL

- A qualified person in terms of this document is one who is familiar with the installation, commissioning and operation of the device and who has appropriate qualifications, such as:
- Is trained in the operation and maintenance of electric equipment and systems in accordance with established safety practices
- Is trained or authorized to energize, de-energize, ground, tag and lock electrical circuits and equipment in accordance with established safety practices
- Is trained in the proper use and care of personal protective equipment (PPE) in accordance with established safety practices
- Is trained in first aid
- In cases where the device is installed in a potentially explosive (hazardous) location – is trained in the operation, commissioning, operation and maintenance of equipment in hazardous locations

WARNING

The actuator must only be installed, commissioned, operated and repaired by qualified personnel.

The device generates large mechanical force during normal operation.

All installation, commissioning, operation and maintenance must be performed under strict observation of all applicable codes, standards and safety regulations.

Reference is specifically made here to observe all applicable safety regulations for actuators installed in potentially explosive (hazardous) locations.

PART NUMBERING SYSTEM REFERENCE CHART

Series	Torque Code	Speed	Product	Style	Voltage	Trim
70	AAA	X	113	Y	Z	536

Housing Size	Part Number	Torque (In.Lbs)	Speed, ¼ Turn (Seconds)	Supply (Z Voltage)
6	70-003**X**-113**YZ**-536	300	30/15	0/2/4
6	70-006**X**-113**YZ**-536	600	30	0/3/4
12	70-008**X**-113**YZ**-536	800	30/15/6	0/4/8
12	70-012**X**-113**YZ**-536	1200	30/15/6	0/4/9
12	70-020**X**-113**YZ**-536	2000	30/15	0/2/3/4/5/6/7/8
30	70-030**X**-113**YZ**-536	3000	30/18	0/2/4/5/6/7/8
30	70-050**X**-113**YZ**-536	5000	30/18	0/2/3/4/5/6/7/8
30	70-065**X**-113**YZ**-536	6500	30	0/2/4/5/6/7/8
180	70-13**WX**-113**YZ**-536	13000	110	0/4
180	70-18**WX**-113**YZ**-536	18000	110	0/4

Use this chart as a guide to interpret the S70 electric actuator part number.
Note: Not all combinations are possible.

W - DESIGNATES THE OUTPUT BORE DIAMETER

0	2.5 Inches
1	1.97 Inches

X - DESIGNATES THE SPEED

X:	0	1	2	3	4	5	6
Sec:	60	30	15/18	10	6	8	110

Y - DESIGNATES STYLE

A	Basic Unit - Declutchable
C	24VAC Unit with 24VAC Servo
D	With Interposing Relay Board*

*Only available for 120VAC or 220VAC On/Off units

Z - DESIGNATES THE VOLTAGE

Z:	0	1	2	3	4	5	6	7	8	9
Voltage:	120VAC	12VDC	24VDC	24VAC	220VAC	380V 3-PH	400V 3-PH	440V 3-PH	480V 3-PH	208V 3-PH

INTRODUCTION

The Bray Series 70 is a quarter turn electric actuator with manual override for use on any quarter turn valve requiring up to 18000 in.lb of torque. Operating speeds vary between 6 to 110 seconds.

PRINCIPLE OF OPERATION

The Series 70 actuator is divided into two internal sections; the power center below the switchplate, and the control center above the switchplate. Below the switchplate the capacitor and gearmotor with its spur geartrain drive a non-backdriveable worm gear output. The override mechanism for manual operation is also housed here. Above the switchplate is where user required, readily accessible components are placed. The camshaft assembly, limit switches, terminal strips, torque switches, heater, and servo are all placed here for easy access. External to the unit are adjustable mechanical travel stops, a large easy to read indicator, the unique manual override handwheel and dual conduit entry ports. The external coating is a high quality polyester powder coat which has exceptional UV as well as chemical resistance.

ELECTRICAL OPERATION

The motors used in the Bray Series 70 are either permanent induction split capacitor design (single phase AC power), SCI (Three Phase AC Power) or PM (DC Power). Travel limit switches are mechanical form (SPDT) with contacts rated at 10 amp (0.8 PF), 1/2 HP 125/250 VAC. In cases where the torque capacity of the unit is exceeded to the point where the motor stalls and overheats, a thermal protector switch built into the motor windings will automatically disconnect the motor power. Once the motor cools sufficiently the thermal protector switch will reset. Optional torque switches are available in all units to prevent the possibility of stalling the motor, thus reducing the necessity for an inoperable thermal cooldown period. Torque switches installed by Bray are factory adjusted to the output torque rating of the unit using electronic torque testing equipment.

NOTICE

Torque switches are not field adjustable. Adjustment of torque switches in the field will void warranty.

GENERAL ELECTRICAL SCHEMATIC

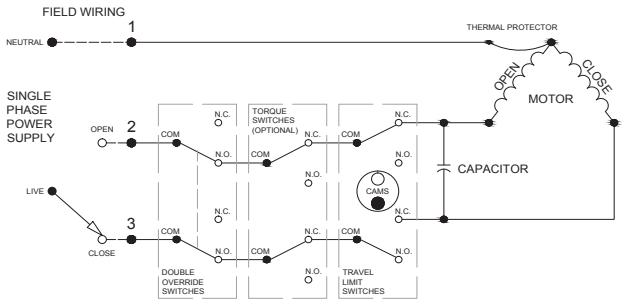

NOTE: *this is only a reference. For the actual wiring diagram refer to the diagram placed inside the actuator cover.*

MECHANICAL OPERATION

Mechanically, the ratio of the gearmotor determines the speed of the unit. The gearmotor utilizes high efficiency spur gears with various ratios for the different speeds. Initial gear reduction through the spur gears is then transferred to the worm shaft. The final gear reduction and output is through a non-backdriveable worm gear set. Positioning is determined by an indicator-cam shaft linked to the output shaft. In the declutchable condition the manual override drives the worm shaft when engaged.

MANUAL OVERRIDE OPERATION (DECLUTCHABLE)

The manual override operates similar to a watch adjusting knob. To engage the manual override, simply pull the handwheel to its outermost position. A yellow stripe is revealed for visual indication that the unit cannot run electrically. The two handwheel positions, engaged and disengaged, are held in place with the use of spring plungers. The handwheel remains in position until physically moved. Rotating the handwheel in the clockwise direction will rotate the output shaft in the same clockwise (closed) direction and vice-versa.

⚠ CAUTION

A label on the handwheel hub warns users not to exceed a specific rim pull force, for each size of actuator. If the rim pull force is exceeded, the roll pin securing the handwheel onto the manual override shaft is designed to shear, thus preventing more serious internal gearing damage.

PRE-INSTALLATION STORAGE

Actuators are not weatherproof until properly installed on the valve or prepared for storage. Bray cannot accept responsibility for deterioration caused on-site once the cover is removed.

⚠ NOTICE

Units are shipped with two metal screw-in plugs to prevent foreign matter from entering the unit. To prevent condensation from forming inside these units, maintain a near constant external temperature and store in a well-ventilated, clean, dry room away from vibration.

For units with an internal heater, power should be supplied to the heater via conduit entry and appropriate sealing gland.

Store units on a shelf or wooden pallet in order to protect against floor dampness.

Keep units covered to protect against dust and dirt.

INSTALLATION

MOUNTING TO A VALVE

All Bray Series 70 electric actuators are suitable for direct mounting on Bray butterfly valves. With proper mounting hardware, the S70 actuator can be installed onto other quarter-turn valves or devices.

⚠ NOTICE

The standard mounting position for the actuator is to orient the unit with its handwheel in a vertical plane and parallel to the pipeline. If the actuator is to be mounted on a vertical pipe, it is recommended that the unit be positioned with the conduit entries on the bottom to prevent condensation from entering the actuator by way of the conduit. In all cases, the conduit should be positioned to prevent drainage into the actuator.

The actuator should be mounted to the valve as follows:

1. Manually operate the actuator until the output shaft of the actuator is in line with the valve stem. If possible, select an intermediate position (i.e. valve disc/stem and actuator both half open).
2. Place the proper adapter, if required, onto the valve stem. It is recommended that a small amount of grease be applied to the adapter to ease assembly.
3. Mount the actuator onto the valve stem. It may be necessary to swing or manually override the actuator to align the bolt patterns.
4. Install the furnished mounting studs by threading them all the way into the actuator base.
5. Fasten in place with the furnished hex nuts and lock washers.

FIELD WIRING

⚠ WARNING

Turn off all power and lock out service panel before installing or modifying any electrical wiring.

Each actuator is provided with two (2) conduit entries (one for power and one for control).

1. The motor full load current is noted on the nameplate of the actuator. The terminal strip will accept wire sizes ranging from 14 to 22 AWG (14 to 24 AWG for the servo).

⚠ NOTICE

18 AWG minimum wire is recommended for all field wiring.

***Note** that the optional heaters use approximately 0.5 amps at 110 volts.*

2. **All actuators have their applicable wiring diagram attached to the inside of the cover.** Field wiring should be terminated at the actuator terminal strip in accordance with **this** wiring diagram.

NOTICE

The conduit connections must be properly sealed to maintain the weatherproof integrity of the actuator enclosure.

MULTIPLE ACTUATOR (PARALLEL) WIRING

CAUTION

Do not connect more than one S70 actuator which do not have I.R.B. installed to a single SPDT switch. A voltage is present on the opposite winding to the powered one. If this winding is connected to another as shown in the INCORRECT diagram it will interfere with the motor performance. Use a multiple pole switch as shown in the CORRECT diagram.

ACTUATOR DIAGRAM WITHOUT I.R.B.

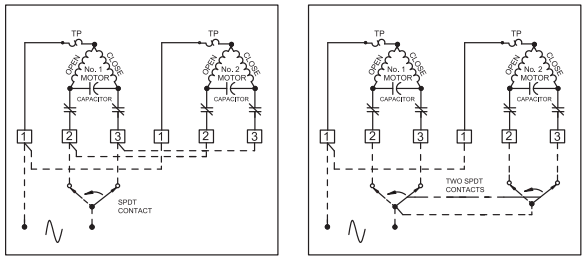

INCORRECT CORRECT

CAUTION

Do not reverse motor instantaneously when it is still running. Reversing direction to actuator motor when it is running can cause damage to motor, switches and gearing. Directional control switching can be done by PLC in 20ms or by a small relay in 46ms. Therefore time delay of 1s has to be incorporated into the control scheme to avoid damage.

TRAVEL LIMIT SWITCH AND MECHANICAL TRAVEL STOP ADJUSTMENT

CAUTION

The electrical travel switches **must** be set to activate (depress) prior to reaching the mechanical travel stops. The cams are color coded (green for open, red for closed).

NOTE: *Manual travel stops are designed to prevent manual overtravel from turning the handwheel, not to stop the electric motor. The travel stops have an adjustment range of approximately 10-degrees.*

S70 ON/OFF ACTUATOR WITH INTERPOSING RELAY BOARD (I.R.B.)

The back feeding of one actuator by another one wired in parallel is eliminated by using the I.R.B.

If actuator is running Open and customer switches “instantaneously” to run Closed, the Open relay will take time to ‘drop-out’ and the Close relay will take time to ‘pull-in’ this time lapse is ~ 40ms. The time delay provided by the I.R.B. will protect the switches and gears from the controller’s instantaneous command signal reversal.

Current draws and field wirings are not affected by adding I.R.B.

S70 120VAC I.R.B., auxiliary switch, heater, and torque switch option are UL certified units.

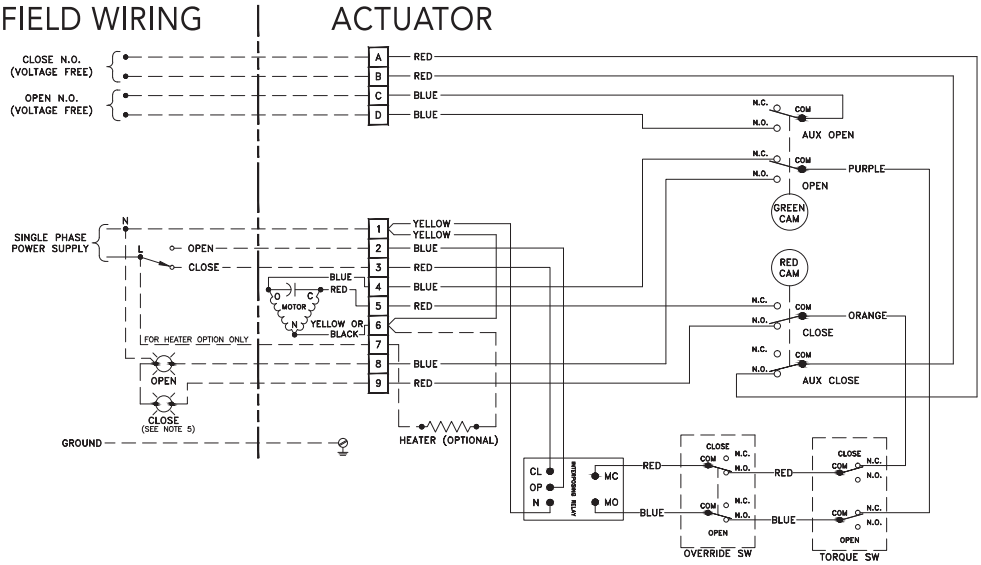

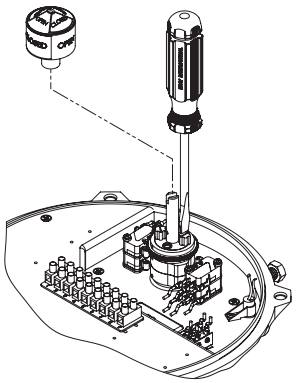

CLOSE TRAVEL SWITCH ADJUSTMENT

1. Loosen the mechanical stop for the closed position and back it off so that it does not interfere with actuator travel (closed stop located on right when viewed from travel stop side of actuator).
2. Remove the indicator rotor by pulling up it straight up away from the indicator shaft. This will expose the machined groove on the end of the cam shaft, which is the reference to the valve disc position.

NOTE: *For Housing Size 180, ignore steps 2 and 6. The valve position indicator plate on the lower gearbox is the reference to the valve position.*

3. Manually operate the actuator handwheel clockwise until the valve reaches the desired fully closed position.
4. Rotate the red adjusting knob by hand or with a flat head screwdriver until the cam lobe just activates (depresses) the switch from a clockwise direction.

NOTICE: *All continuous duty actuators have a cam locking screw. Cam locking screw must be slackened before cam adjustments and re-tightened after cam adjustments.*

NOTE: *It is possible that the rotation of one cam will move the other cam. If this occurs, hold the other knobs or cams during adjustment.*

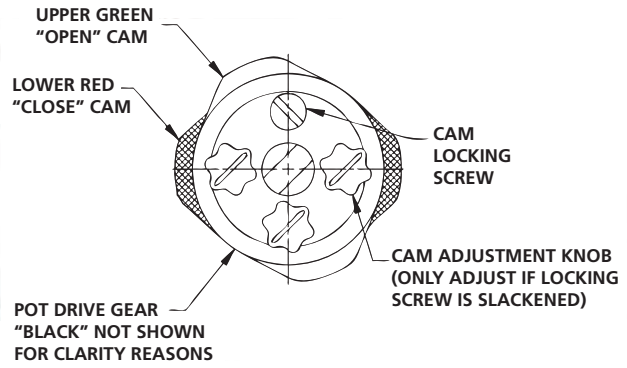

5. With the travel switch in the closed position, rotate the handwheel clockwise ½ turn for Housing Size 6, 1 turn for Housing Size 12, ½ turn for Housing Size 30, and 2 turns for Housing Size180. Adjust the closed travel stop bolt until it bottoms against the output gear and lock it in position with the locknut.
6. After all travel switch adjustments have been completed, replace the indicator rotor and secure the actuator cover.

OPEN TRAVEL SWITCH ADJUSTMENT

1. Loosen the mechanical stop for the open position and back it off, so that it does not interfere with actuator travel. The open stop is located on the left, when viewed from travel stop side of actuator.
2. Remove the indicator rotor by pulling it straight up away from the indicator shaft. This will expose the machined groove on the end of the cam shaft, which is the reference to the valve disc position.

NOTE: *For Housing Size180, ignore steps 2 and 6. The valve position indicator plate on the lower gearbox is the reference to the valve position.*

3. Manually operate the actuator handwheel counterclockwise until the valve reaches the desired open position.
4. Rotate the green adjusting knob until the cam lobe just activates (depresses) the switch from a counterclockwise direction.

NOTICE: *All continuous duty actuators have a cam locking screw. Cam locking screw must be slackened before cam adjustments and re-rightened after cam adjustments.*

NOTE: *It is possible that the rotation of one cam will move the other cam. If this occurs, hold the other knobs or cams during adjustment.*

5. With the travel switch in the open position, rotate the handwheel counterclockwise ½ turn for Housing Size 6, 1 turn for Housing Size 12, ½ turn for Housing Size 30, and 2 turns for Housing Size 180. Adjust the open travel stop bolt until it bottoms against the output gear and lock in position with the locknut.
6. After all travel stop adjustments have been completed, replace indicator rotor and secure the actuator cover.

DISASSEMBLY AND ASSEMBLY

Tools required:

See Appendix A for a complete list of basic tools.

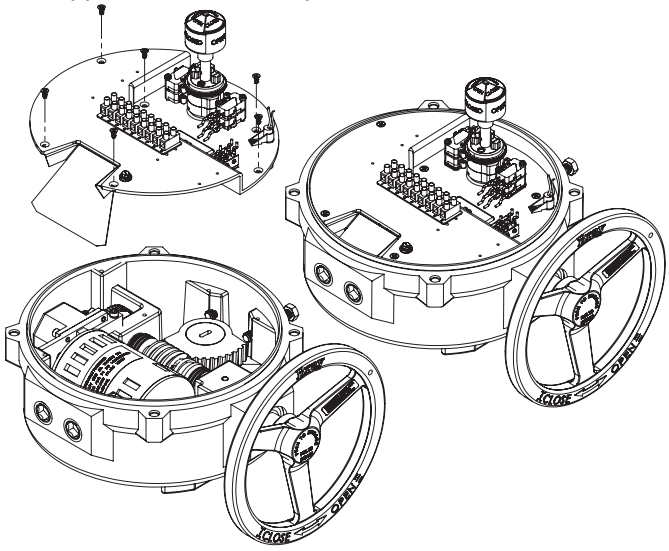

NOTE 1: *Assembly is the opposite of removal*

NOTE 2: *Pictures shown for Housing Size 6 are typical for all sizes*

PROCEDURE

⚠ WARNING

Turn off all power and lock out service panel before installing or modifying any electrical wiring.

1. Disconnect motor wires from the main terminal strip (motor neutral, open, and close).
2. Remove the switchplate by unscrewing the seven Phillips head mounting screws. The switchplate should lift out as an assembly with the camshaft attached.

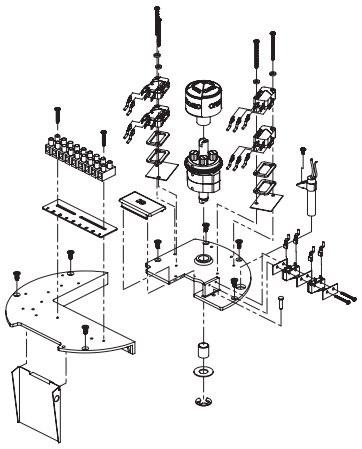

3. The switchplate can be independently disassembled.
4. To remove the Gearmotor, first disconnect the motor leads which run to the capacitor, and unscrew the mounting screws for Housing Size 6 (two lower, one upper) for other Housing Sizes (four lower, one upper). The motor can now be removed vertically out of the unit. **Note:** do not misplace the alignment pin.
5. To remove the worm shaft spur gear, remove the spring pin using a 3/32” punch, then slide the gear off the end of the worm shaft for Housing Sizes 6 and 12. Remove bowed E-clip retainer for Housing Size 30-180.
6. To remove the output drive worm gear, back off both mechanical travel stops. Remove the retaining ring and thrust washer, then lift the output drive worm gear out of its base.
7. The handwheel is held by a spring pin.

⚠ CAUTION

Further disassembly of the unit requires special tools and procedures, and thus will not be covered in this manual.

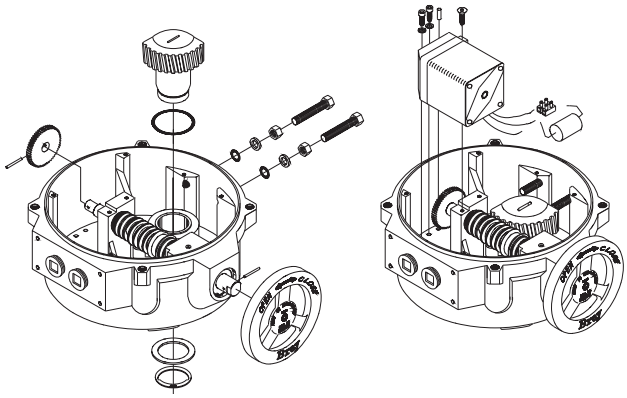

FIELD OR FACTORY INSTALLABLE OPTIONS

TORQUE SWITCHES

Torque switches are a factory installed and calibrated option available for all Series 70 units. Installation is simple, but due to the requirement for special calibration equipment, it is not recommended for field installation. In fact, modifying the factory torque setting voids the actuator warranty. Removal of the switchplate invalidates factory calibration

The unique mechanism is extremely accurate and has excellent repeatability. The worm is pinned to the worm shaft, which is held in position with a stack of disc springs at both ends. The torque transmitted through the worm to the output worm gear acts directly against the disc springs, which compress proportionately. The worm and worm shaft shift longitudinally as a result.

A specially designed drive lever and pin is incorporated into the worm, providing the profile for the torque switching mechanism. A drive lever & pin rides in the worm gear torque sensor groove, and in turn drives a cam. The cam then actuates its electrical switch, which interrupts the power to the motor winding when the torque exceeds the setting. The motor can still be powered to run in the opposite direction, the switch will release automatically.

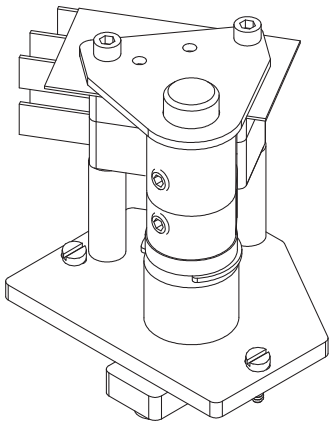

Switching Mechanism

TORQUE SWITCH MECHANISM

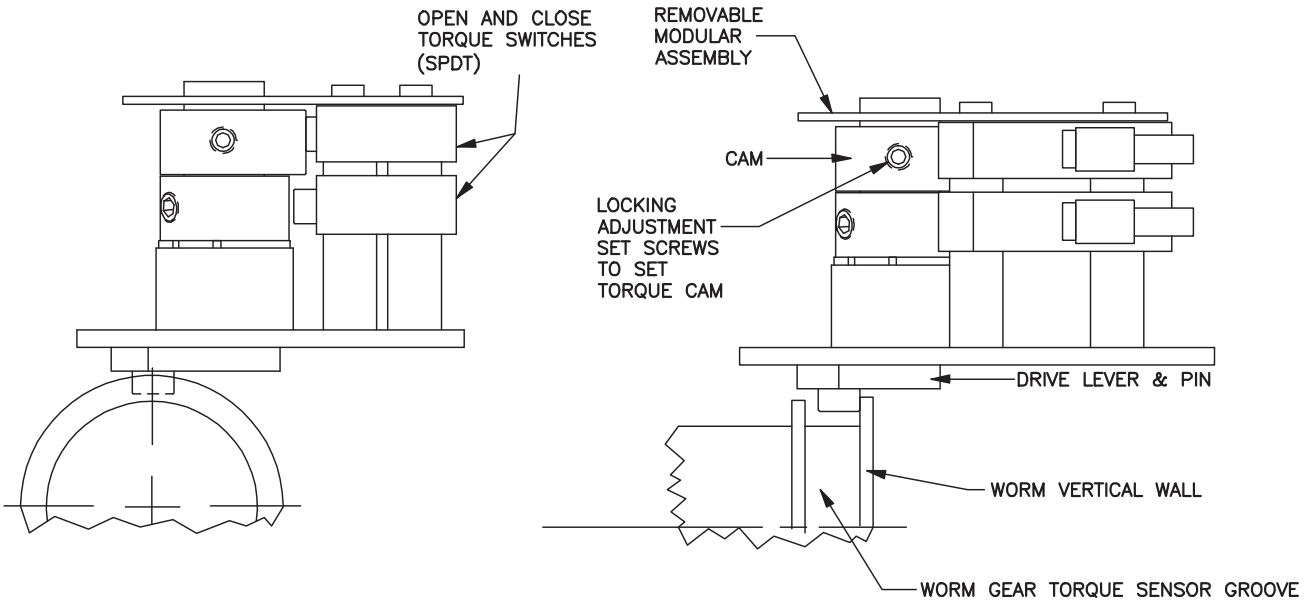

HEATER

To prevent condensation from forming inside the actuator, Bray offers an optional heater. The heater is a PTC (Positive Temperature Coefficient) style which has a unique temperature - resistance characteristic. The heater self-regulates by increasing its electrical resistance relative to its temperature. The heater does not require external thermostats or switches to control its heat output. It is constructed of a polycrystalline ceramic, sandwiched between two conductors, and wrapped inside a thermally conductive electrical insulator.

Connect the heater wires to the terminal strip as indicated on the wiring diagram.

***NOTE:** The heater must have a constant power supply to be effective.*

⚠ WARNING

The heater surface can reach temperatures in excess of 200 degrees Celsius

Heater Kit Consists of:

1. Heater with flying leads
2. Heater Mounting Bracket
3. #10 pan head screw, Phillips drive

Tools required:

- For terminal wiring: Screwdriver, 3/16” tip flat blade
- For heater mounting screw: Screwdriver, No.1 Phillips

INSTALLATION PROCEDURE

The heater is mounted through a hole provided in the switchplate.

Before servicing unit, switch all power off at the service panel and lock the service disconnecting means to prevent power from being switched on accidentally. When the service disconnecting means cannot be locked, securely fasten a prominent warning device, such as a tag, to the service panel.

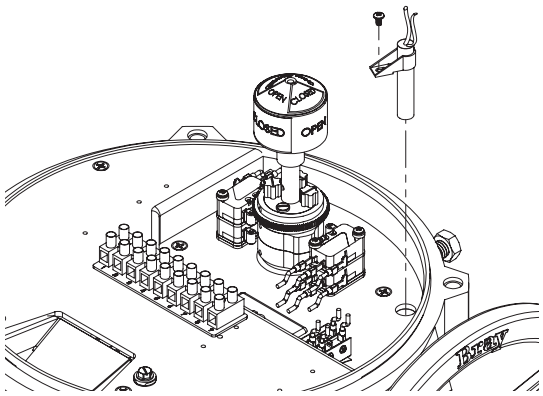

Disconnect all power to the unit.

1. Place the heater snugly into its mounting bracket until approx. 1/2 to 1” is left above the bracket as shown in diagram.
2. Slip the heater into its mounting hole.
3. Align the fastening hole in the bracket with the threaded screw hole in the plate. Fasten the heater to the switchplate.
4. Connect the heater wires to the terminal strip as indicated on the wiring diagram.

SERVO-PRO MODULE

Servo kits can be field installed on any continuous duty actuator (30, 60, or 110 sec. operation speed) to provide proportional positioning in response to a control signal. Intermittent duty actuators are not adaptable for servo control.

Servo Kit Consists of:

1. One servo module
2. Four #6 cross drive pan head screw (two for servo, two for feedback potentiometer)
3. One potentiometer assembly
4. Two #6 type A internal lockwashers (for pot)
5. One wiring diagram sticker for attaching to inside of actuator’s cover
6. One wiring diagram sticker for servo units with torque switches

Tools required:

- For actuator terminals wiring Screwdriver, 3/16” flatblade
- For servo terminals: Screwdriver, No.1 Phillips
- For servo and pot mounting screws: Screwdriver, No.2 Phillips

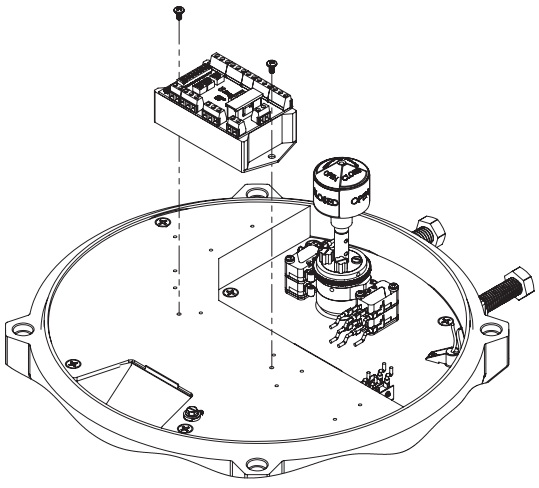

INSTALLATION PROCEDURE

- Disconnect all power to the unit.
- Remove the on/off duty, 9 point terminal strip and its marker

1. Disconnect all wiring to the terminal strip.
2. All wiring in the actuator is color coded to facilitate wiring, and does not need to be tagged or marked.
3. Field wiring should be marked if it is not already color coded.

Mount the servo module

4. Secure the servo card module onto switchplate with the 2X #6 screws.

Install the potentiometer assembly

5. The potentiometer installs next to the camshaft where there are two threaded holes provided.
6. The potentiometer assembly must be mounted in the correct orientation, with the actuator in its fully open (counter clockwise) position, the indicator shaft should be in-line with raised green rib on pot gear.
7. Push the assembly towards the cam to mesh the pot gears. Then tighten the mounting screws.

Note: *On Housing Size 180, the raised green rib on pot gear should be aligned with arrow on lower gear box's position indicator plate.*

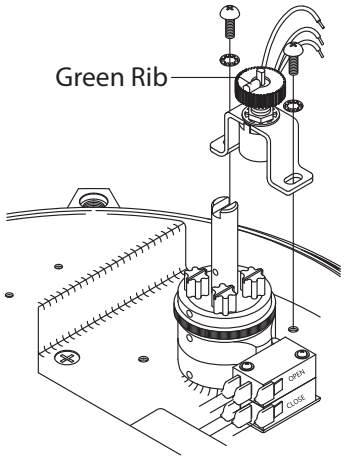

8. Rotate the actuator handwheel so that the red cam lobe is facing the body of the potentiometer. Make sure that the cam is not touching the potentiometer assembly. Readjust the assembly position if necessary.

Wire the potentiometer to the servo

9. Connect the potentiometer wires into the terminal strip on the servo module.
10. Wire according to the wiring diagram provided.

Wire the servo to the actuator

11. Wire according to the wiring diagram provided.
12. See the servo calibration instructions.

SERVO CALIBRATION

The calibration procedure defines the limits of operation of the Series 70 Actuator between the fully open valve position and the fully closed valve position. The cams on the Series 70 Actuator define the fully open and closed positions of the valve and may be set at any degree of opening. The only requirement is that the open cam limit setting must set at a higher degree of opening than the closed cam limit setting. In other words, the "Open" position must be more open than the "Closed" position.

Calibration is performed as follows:

1. Adjust the Open and Closed limit switch cams on the Series 70 Actuator to the desired position.
2. Engage the handwheel and move the Series 70 Actuator to its mid position.

NOTE: *An analog signal source is not required for calibration. Press and hold the "Calibrate" Set pushbutton for a minimum of 2 seconds. When the servo status LED begins to flag rapidly, release the button. The servo will now seek both travel limits and record these values to its nonvolatile memory. Following a successful calibration, the status LED will begin to flash a slow single green flash. If the calibration is unsuccessful, the status LED will alternately flash red and green. If this occurs, make sure the cams and the potentiometer are set correctly.*

This completes the "Self Calibration" procedure.

After completing the calibration procedure, it is good practice to apply the fully closed and fully open Command Signals, and verify that the S70 Actuator moves to the proper positions.

* Refer to Servo Pro Version 3.0 Operation & Maintenance Manual for more details

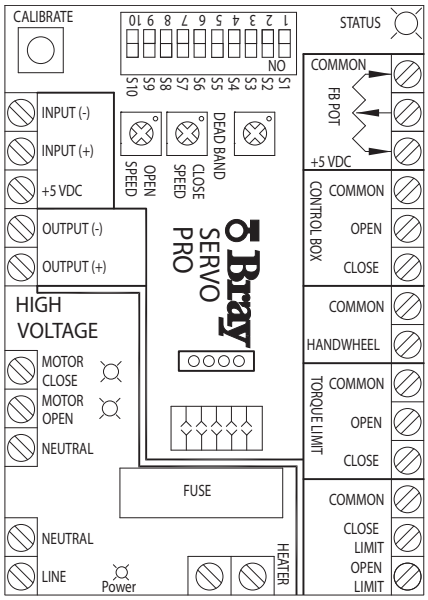

EXTERNAL SIGNAL FEEDBACK POTENTIOMETER

Potentiometers for external feedback can be field installed on all continuous duty actuators. Actuators which are not continuous duty do not have a pot gear fitted on their indicator shafts & must be fitted with a new shaft which has a pot drive gear for feedback pot (see Options: Auxiliary Switches).

Feedback Potentiometer Kit consists of:

- One potentiometer assembly
- Two #6 cross drive pan head screws
- Two #6 internal lockwashers
- One 4 point terminal strip
- One terminal strip marker for feedback pot
- One small wiring diagram sticker for the additional potentiometer

Tools Required:

- For terminal wiring Screwdriver, 3/16″ tip flat blade
- For pot mounting screws Screwdriver, No.2 Phillips

INSTALLATION PROCEDURE

1. The potentiometer installs next to the camshaft where there are two threaded holes provided for it.
2. The potentiometer assembly must be mounted in the correct orientation, with the actuator in its fully open (counter clockwise) position, the indicator shaft should be in-line with raised green rib on pot gear.

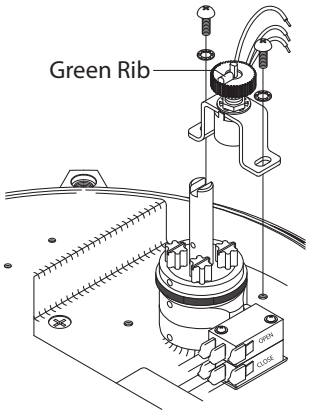

3. Push the assembly towards the cam to mesh the pot gears. Then tighten the mounting screws.
4. Rotate the actuator handwheel so that the red cam lobe is facing the body of the potentiometer. Make sure that the cam is not touching the potentiometer assembly. Readjust the assembly position if necessary.
5. Fit the 4 point terminal strip and marker in the kit. Before laying down the marker, cut it to obtain a marker as illustrated: opposite
6. Wire the pot to the terminal strip using the small stick-on wiring diagram provided.
7. Adhere the wiring diagram sticker to the inside of the cover.

SET THE POTENTIOMETER

1. Manually operate the actuator handwheel until the unit is in the fully closed position.
2. Rotate the black potentiometer drive gear adjustment knob, to engage the potentiometer gear at the closed position.
3. Manually operate the actuator to the fully open position.

AUXILIARY SWITCHES

Auxiliary switches are available, refer to chart on next page.

NOTES:

1. All auxiliary switches have voltage-free contacts.
2. Housing Sizes 6, 12, and 30 have double lobe cams. Housing Size 180 has single lobe cams.
3. Main limit switches are one OPEN and one CLOSE switch.
4. Auxiliary switches are one OPEN and one CLOSE switch, which are fixed to activate 3° before the main switches.
5. Adjustable auxiliary switches are adjustable to any position.

INSTALLATION PROCEDURE

1. Cut terminal strip marker to length needed with letters facing up.
2. Mount terminal strip and marker to switchplate using two #4-40 screws.

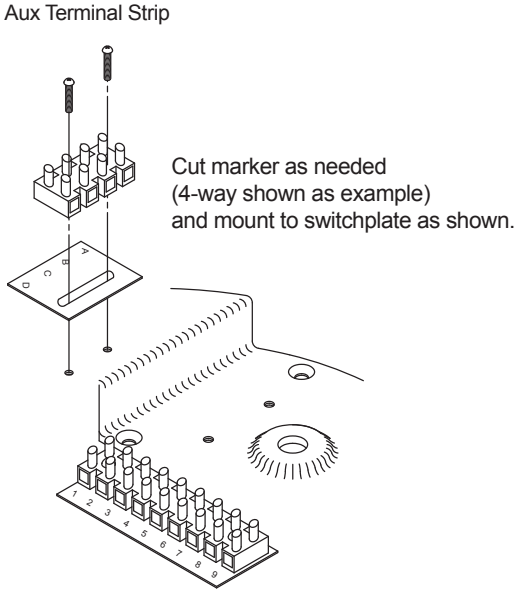

AUXILIARY SWITCH CONFIGURATION CHART

CONFIGURATION	HOUSING SIZE 6	HOUSING SIZES 12 & 30	HOUSING SIZE 180
1. ON/OFF (Intermittent Duty Motor) with Main Switches (Standard OPEN and CLOSE switches)	2 Switch 2 Cams Standard Assembly P/N	2 Switch 2 Cams Standard Assembly P/N	N/A
2. ON/OFF (Continuous Duty Motor) with Main Switches (Standard OPEN and CLOSE Switches	2 Switch 2 Cams & Pot Gear Standard Assembly P/N	2 Switch 2 Cams & Pot Gear Standard Assembly P/N	N/A
3. ON/OFF (Intermittent Duty Motor) with Main and 1 set of Auxiliary Switches	4 Switch 2 Cams Kit PN/ 70-0006-22980-536	4 Switch 2 Cams Kit PN/ 70-0012-22960-536	4 Switch 2 Cams & Pot Gear Standard Assembly P/N
4. ON/OFF (Continuous Duty Motor) with Main and 1 set of Auxiliary Switches	4 Switch 2 Cams & Pot Gear Kit P/N 70-0006-22980-536	4 Switch 2 Cams & Pot Gear Kit P/N 70-0012-22960-536	4 Switch 2 Cams & Pot Gear Standard Assembly P/N
5. ON/OFF with Main, 1 set of Auxiliary, and 1 Adjustable Auxiliary Switches	5 Switch 3 Cams Kit P/N 70-0006-22983-536	5 Switch 3 Cams Kit P/N 70-0012-22963-536	N/A
6. ON/OFF with Main, 1 set of Auxiliary, and 1 set of Adjustable Auxiliary Switches	6 Switch 3 Cams Kit P/N 70-0006-22984-536	6 Switch 3 Cams Kit P/N 70-0012-22964-536	N/A
7. ON/OFF with Main, 1 set of Auxiliary, and 2 adjustable Auxiliary Switches	For use with control station only. See Factory	6 Switch 4 Cams Kit P/N 70-0012-22961-536	6 Switch 4 Cams & Pot Gear
8. ON/OFF with Main, 1 set of Auxiliary, and 2 sets of adjustable Auxiliary Switches	N/A	8 Switch 4 Cams Kit P/N 70-0012-22962-536	N/A
9. Servo with Main, 1 set of Auxiliary, and 1 adjustable Auxiliary Switches	N/A	5 Switch 3 Cams & 1 Pot Gear Kit P/N 70-0012-22966-536	5 Switch 3 Cams & 1 Pot Gear
10. Servo with Main, 1 set of Auxiliary, and 2 Adjustable Auxiliary Switches	N/A	N/A	6 Switch 4 Cams & Pot Gear
11. ON/OFF with Main and 1 Adjustable Auxiliary Switch	3 Switches 3 Cams Kit P/N 70-0006-22988-536	3 Switch 3 Cams Kit P/N 70-0012-22968-536	N/A
12. Servo with Main and 1 Adjustable Auxiliary Switch	N/A	3 Switch 3 Cams & 1 Pot Gear Kit P/N 70-0012-22971-536	N/A

TYPICAL WIRING DIAGRAM: ON/OFF SERVICE

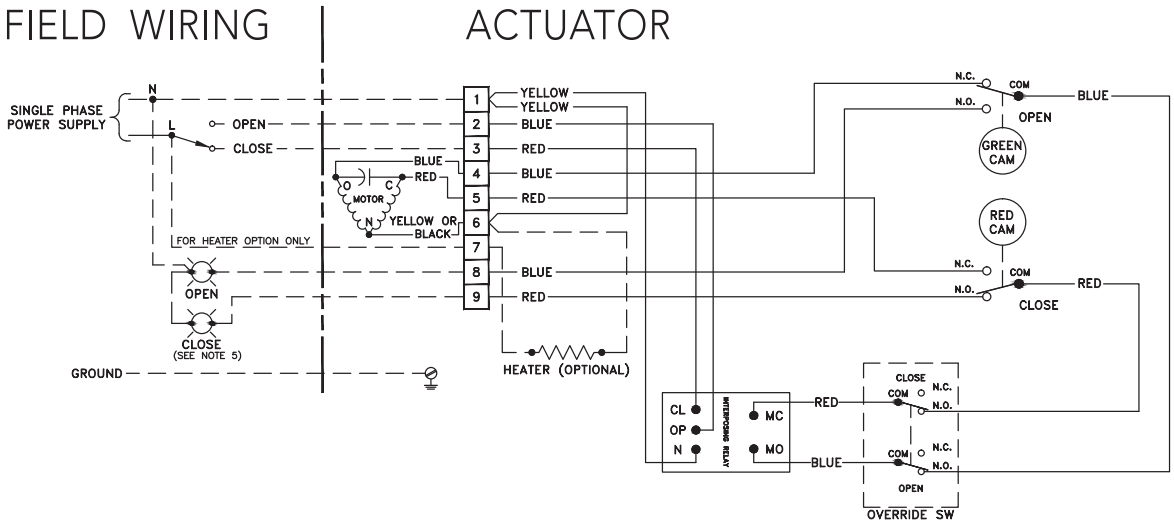

Wiring diagram for basic unit with Form-C (SPDT) travel limit switches, I.R.B., and double override switches. (Drawn for actuator in its fully closed condition.)

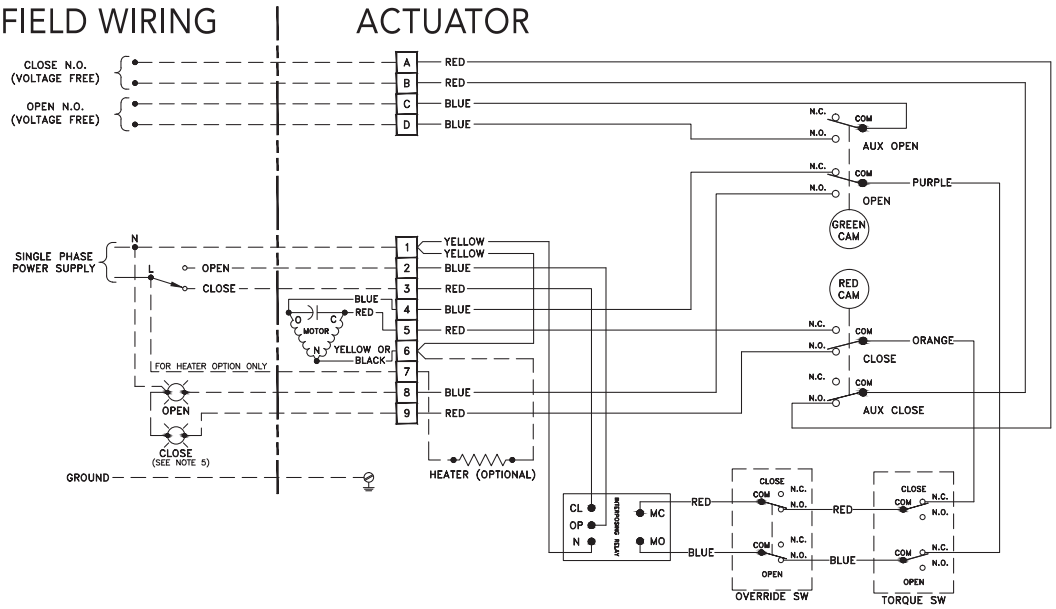

Wiring diagram for unit with Form-C (SPDT) travel limit switches, “Voltage Free” Auxiliary open/close switches, I.R.B., double override switches and torque switches. (Drawn for actuator in its fully closed condition.)

Actuator Form-C Switches, SPDT

Housing Size: 6
V3-Sw

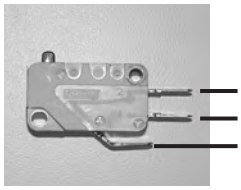

Housing Size:12, 30 & 180
V3-Sw with Lever

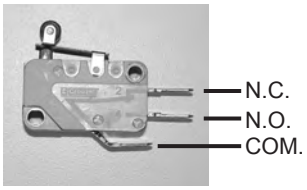

TYPICAL WIRING DIAGRAM: MODULATING SERVICE

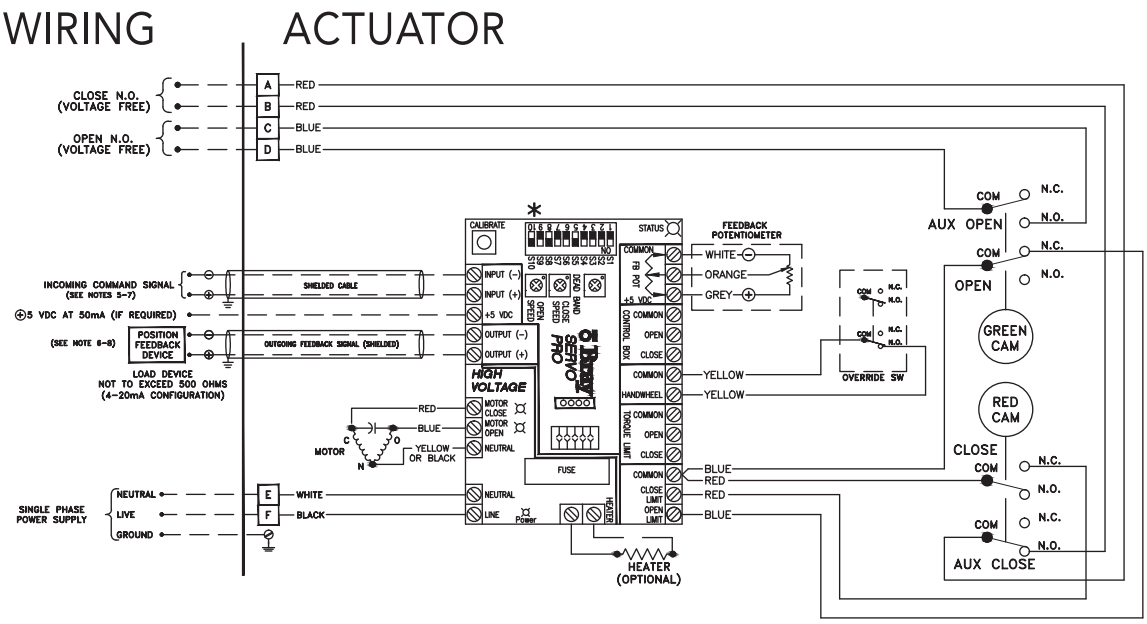

Wiring diagram for unit with Form-C (SPDT) travel limit switches, “Voltage Free” Auxiliary open/close switches, Servo and double override switches. (Drawn for actuator in its full closed position.)

Warning: Turn ALL Power Off prior to adjusting DIP switches.

SWITCH	COMMAND INPUT			
	4-20 mA DC	**0-5 VDC ***	**0-10 VDC**	**2-10 VDC**
1	Off	On	On	On
2	Off	Off	On	On
3	Off	Off	Off	On
	OUTPUT			
	4-20 mA DC	**0-5 VDC**	**0-10 VDC**	**2-10 VDC**
4	Off	On	On	N/A
5	On	Off	Off	N/A
6	Off	On	Off	N/A
	Forward Acting	**Reverse Acting**		
7	Off	On		
	Fail in Last Position	**Fail Enable ****		
8	Off	On		
	Fail Close	**Fail Open**		
9	Off	On		
	Torque Switch Enable	**Torque Switch Disable**		
10	Off	On		

*To control servo with a remote potentiometer, set the Command Input to 0-5VDC (see Command Signal Connector section; page 8 Servo Pro Manual).

**Fail position is the position that the servo will travel to when the control signal is removed. It does not apply to 0-5VDC or 0-10VDC Command Signals.

ADJUSTMENTS, CALIBRATION AND STATUS LED OF SERVO PRO

A. Adjust the open and close speed of your actuator (The fastest closing speed of your actuator is printed on the label of the unit):

1. Use the Close Speed trim pot to adjust the closing speed of your actuator (pot in the fully CCW position equals fastest close speed).
2. Use the Open Speed trim pot to adjust the opening speed of your actuator (pot in the fully CCW position equals fastest open speed).

B. Calibrate the Servo:

1. Manually position your actuator somewhere in mid position; away from the travel limits.
2. Disengage your handwheel (push it back in towards the actuator), hold down the Calibration push button for two seconds and release, the servo will begin to drive the actuator in the close direction and then in the open direction in order to save these limits to memory.
3. Following a successful calibration the servo's Status LED will begin to flash the normal operation code, an unsuccessful calibration will yield a Red-Green-Red-Green flash immediately following the attempted calibration (for more information on the Status LED flash codes see the Status LED Flash Code Table).

Status LED

The "Status LED" is a bi-color LED which provides detailed information regarding the operation of the S70 Servo Pro. Table 2 below illustrates the different combinations of LED flash codes and their corresponding conditions. Following the table is a more descriptive explanation of the Flash Code. Whenever the LED is flashing green, regardless of the flash code, the servo will operate, but not necessarily optimally. Whenever the LED flash codes are RED, the servo will not operate. An example is an engaged handwheel, the Status LED will flash a single red flash code and will not operate.

Table 2: Status LED Flash Codes

Green Status LED warning and information Flash Codes:

#	Indication	Reason	Solution
1	Steady Green Flash	Normal Operation	Servo Functioning Ok
2	2 Green Flashes	Calibration Defaults Loaded	Adjust travel limits, push autocalibration PB
3	3 Green Flashes	Reverse Acting Mode	If you would like your servo to not operate in reverse acting mode, set DIP switch 7 accordingly
4	4 Green Flashes	2-10VDC Input Command Signal Selected	If you require a different configuration, set DIP switches 1, 2, and 3 accordingly
5	1 Red Flashes	Handwheel engaged	Push the Handwheel in towards the actuator
6	2 Red Flashes	Command Signal Failure	Set DIP switches accordingly, send servo appropriate signal
7	3 Red Flashes	Feedback Pot Fault	Position the feedback Pot correctly, see Feedback Pot calibration
8	4 Red Flashes	Limit Switch Fault	Check wiring of limit switches, ensure that both switches are not tripped simultaneously
9	5 Red Flashes	Torque Switch Fault	Ensure that DIP switch 10 is positioned correct, check wiring of torque switches, reverse direction of actuator, correct over torque condition
10	6 Red Flashes	Feedback Pot Wired In Reverse	Correctly wire the Feedback Pot

***Note:** A flashing green LED provides status and warning information. The servo will operate normally in this state. Some flash codes indicate a warning, where the servo has recovered automatically such as the detection of an invalid calibration. In this case, a default calibration is automatically loaded that will allow the Servo to operate, but may not be a perfect match to the actuator. The servo should be re-calibrated as soon as possible.*

RECEPTACLES (QUICK CONNECTORS)

Unless otherwise specified, power receptacles will be 5-pin mini style standard duty with a black anodized aluminum finish. They conform to ANSI B93.55M except in wire color. Euro receptacles will be used for low power instrument and signal cable since they can be supplied shielded. Wiring diagrams for plug-in receptacles for either the Bray Series 70 or the local control station will be provided as a separate diagram. Units ordered with pin connector receptacles factory installed are wired and tested. Cordsets which fit these receptacles may be ordered in several lengths.

Receptacle Kit consists of:

1. Receptacle(s), male pin and male thread 1/2"-NPT, in the quantity, style, and number of pins ordered
2. Reducing bushing 3/4" to 1/2" NPT for installation in Housing Sizes 12 - 180 and control stations
3. Wiring diagram (SK-# below)

Tools required:

- For terminal wiring: Screwdriver, 3/16" tip flat blade
- For Mini or Euro receptacle: Wrench, 1"

Installation procedure:

1. Screw the receptacle into the actuator conduit entry using Teflon tape or similar.
2. Wire to the terminal strip according to the wiring diagram or the field wiring requirements.

Wiring Schematic for Optional Pin Connector Receptacles

REQUIREMENTS				RECEPTACLES REQ'D		NO L.C.S.[1] DIAGRAM	WITH L.C.S.[1] DIAGRAM
ON - OFF UNITS (INTERMITTENT OR CONTINUOUS)							
POWER	———			ONE MINI		SK-960517	SK-960515
POWER	———	POSITION INDICATION[2]		ONE MINI	ONE EURO	SK-960717	SK-960513
POWER	———	POSITION INDICATION[3]		ONE MINI	ONE EURO	SK-960516	SK-960716[5]
POWER	———		FEEDBACK POTENTIOMETER	ONE MINI	ONE EURO	SK-960718	SK-960720
POWER	———	POSITION INDICATION[3]	FEEDBACK POTENTIOMETER	ONE MINI	6-PIN EURO[4]	SK-960719	N/A

Custom configurations are possible - consult the factory.

[1] L.C.S.: Local Control Station , WHICH implies mounted to the actuator

[2] Travel indication is wired to the supply voltage

[3] Travel indication wiring is voltage free

[4] A 6-pin EURO connector is required for this application, consult factory for price and availability.

[5] The Local Control Station comes standard with 120 Volt lamp bulbs, for other voltages consult factory.

Note: *the Control Station lights must be wired to the same voltage as the remote end of travel indication.*

Euro receptacles use 22 AWG wire rated at 250V, 4 Amp. Pin configuration interfaces with European standards.

Mini receptacles use 18 AWG wire rated at 300 V, 9 Amp. Pin configuration conforms to ANSI B93.55M.

*** For requirements beyond these ratings consult the factory.**

SPINNER

A spinner is available to ease and speed the manual override of the Bray Series 70 actuator. The Housing Size 6 units mount the spinner on a lever which screws onto the back of the handwheel. The Housing Size 12-180 units mount the spinner on the rim of the handwheel. Note that care should be exercised in the use of spinner equipped handwheels. Rapid operation of the handwheel to close the valve may cause water hammer. Also, rapid travel into a travel stop may cause damage.

Spinner Kit Consists of:	
For Housing Size 6	**For Housing Sizes 12-180**
Spinner and lever assembly	Spinner handle
Flat head socket cap screw, #10-32UNF x 3/8	Socket head shoulder bolt, 1/4-20UNC x .75

Tools required:

- For socket head shoulder bolt and flat head capscrew
- Hex key, 1/8" for Housing Size 6
- Hex key, 3/16" for Housing Sizes 12-180

Installation procedure:

- For Housing Size 6 units simply position the lever onto the back of the handwheel then screw the flat head cap screw in to place from behind.

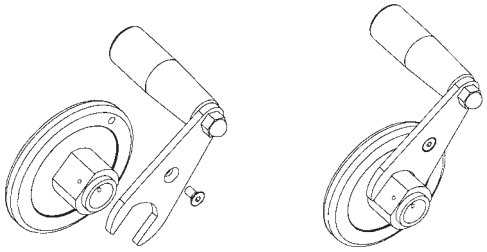

- For Housing Size 12-180 units, put the socket head shoulder bolt through the spinner handle and screw it firmly into the handwheel rim.

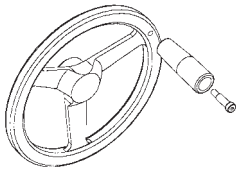

LOCAL CONTROL STATION (SINGLE PHASE POWERED ACTUATORS)

Bray's local control station gives the user the ability to locally override the actuator electrically. The station is open / stop / close operation in the local control mode. Red and green end of travel indication lights are also provided. Depending on how it is wired the control station can be used on the on - off units and the servo controlled modulating units. Optional key operated locking switches are available.

Note: *The control station used with On - Off S70 and that used with modulating S70 have different contact blocks internally, the correct part number must be used to ensure you order the correct unit (see price sheet).*

Local Control Station Kit consists of:

1. Local control station assembly
2. Four socket head cap screws, #10-24UNC x 4.50 long, for mounting the station to the actuator
3. A gasket for sealing the station to the actuator
4. Wiring diagram

Tools required:

- For tapping control station mounting holes on actuator, #10-24UNC Tap.
- For wiring Screwdriver, 3/16" flat blade.
- For mounting and cover screws Hex key, 5/32"

Installation procedure:

1. Tap #10-24UNC holes using the cored holes on the side of actuator.
2. Adhere the gasket to the control box.
3. Mount the control box to the actuator using the 4 long socket head capscrews.

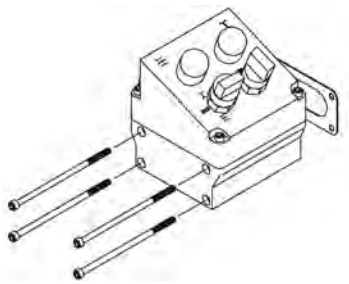

4. Wire the control box to the actuator in accordance to the wiring diagram provided. The local control station contains no terminal strips, and all wiring is direct to the switches and lights via 2" x 3/4" NPT holes in bottom of housing. Ordering the control station with optional pin connector receptacles will eliminate the necessity of field wiring. The units will be completely factory wired and tested.

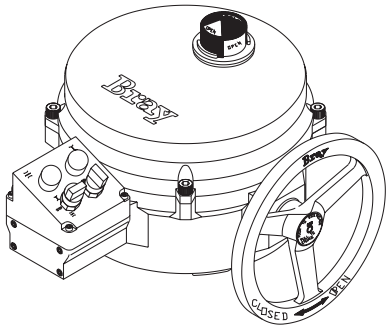

Note: *The inclined cover of the local control station can be mounted in any of its four symmetrical positions. If field wiring is required, first mount the base to the actuator, then remove the cover to gain access for wiring.*

**Local Control Station requires a dedicated set of auxiliary switches for control station use only. Two additional adjustable auxiliary switches are needed for remote indication of open/close position in ON/OFF configurations*

APPENDIX A

BASIC TOOLS

Common To All Units	
Terminal connections, cam adjustment	Screwdriver, ¼" tip flat tip blade
All switches, terminal strip, torque switch plate	Screwdriver, No.1 Phillips
Switchplate screws, capacitor	Screwdriver, No. 2 Phillips
Servo trimmer pots	Screwdriver, ⅛" flat tip for trim pots
Housing Size 6	
Mounting nuts	Wrench, ½ "
Cover captivated capscrews	Hex key, ¼"
Travel stop adjusting bolts	Wrench, 7⁄16"
Travel stop jam nuts	Wrench, 7⁄16"
Motor mount socket flat head capscrew	Hex key, 3⁄32"
Motor mount socket head capscrew	Hex key, 9⁄64"
Conduit Entry Plug	Hex key, ⅜"
Housing Size 12	
Mounting nuts (small pattern)	Wrench, ½"
Mounting nuts (large pattern)	Wrench, ¾"
Cover captivated capscrews	Hex key, 5⁄16"
Travel stop adjusting bolts	Wrench, 9⁄16"
Travel stop nuts	Wrench, 9⁄16"
Motor mount socket head capscrew	Hex key, 5⁄32"
Conduit Entry Plug	Hex key, 9⁄16"
Housing Size 30	
Mounting nuts, travel stop jam nuts	Wrench, ¾"
Cover captivated capscrews	Hex key, ⅜"
Travel stop adjusting studs	Wrench, ¾"
Motor mount socket head shoulder bolt	Hex key, 5⁄32"
Motor mount socket head cap screws	Hex key, 3⁄16"
Conduit Entry Plug	Hex key, 9⁄16"
Housing Size 180	
Mounting nuts, travel stop jam nuts	Wrench, ¾"
Cover captivated capscrews	Hex key, ⅜"
Travel stop adjusting studs	Wrench, 5⁄16"
Motor mount socket head shoulder bolt	Hex key, 5⁄32"
Motor mount socket head cap screws	Hex key, 3⁄16"
Conduit Entry Plug	Hex key, 9⁄16"

APPENDIX B

ACTUATOR TROUBLESHOOTING CHART

Problem	Possible Cause	Solutions
Actuator does not operate	Override is engaged	Push handwheel in all the way
	Wiring is incorrect	Check wiring and power supply
	Actuator motor has reached its thermal shutdown temperature	Allow time to cool
Actuator operates in reverse directions	Field wiring is reversed	Rewire field wiring
Actuator does not fully close valve (or open valve)	Limit switches are depressed	Readjust travel limit switches
	Mechanical travel stop is stopping actuator	Adjust mechanical travel stops
	Valve torque requirement is higher than actuator output	Manually override out of seat, try angle seating or larger actuator
	Optional torque switches are activating	Valve torque exceeds actuator torque rating - consult factory
	Voltage power supply is low	Check power source.
Engaging override handwheel does not shut off motor	Override pin is corroded or damaged	Clean and check for smooth operation of the override switch pin
	Override switch is damaged	Replace switch
Disengaging override hand-wheel does not restart motor	Not completely disengaged	Push handwheel in as far as possible (no yellow showing)
	Override pin is damaged or and does not activate switch	Replace override pin
	Incorrect wiring of override switch	Check wiring
Motor runs but worm and gear segment do not	Worm gear segment is not meshing with worm	Remove switchplate and inspect, adjust travel stops to prevent gear disengaging
	Pin/Key on Worm/Motor drive gear sheared	Replace Pin/Key on drive gear
Corrosion inside unit	Condensation forming	Test heater wiring, should have constant power
	Water leaking in	Check all seals and possible water entry through conduit

S70 SERVO PRO TROUBLESHOOTING CHART

Refer to the Servo Pro Operation Manual for more information.

Problem	Possible Cause	Solutions
Actuator moves back and forth near setpoint (hunts)	Signal is fluctuating beyond deadband setting	Increase the deadband using the Deadband trim pot.
	Signal has interference	Shield signal from interference
Actuator does not travel fully open or fully closed	Travel limit switches are not set correctly	Set travel limit switches for 90° operation
	Servo DIP switches are not set correctly	See Quick Setup Instructions on page 5
	Mechanical travel stops are not set correctly	Set mechanical travel stops for 90° operation
Actuator motor does not run and green servo power light is off	Power is disconnected	Connect power
Actuator motor does not run and green servo power light is on	Limit switches or torque switches are triggered	Ensure that there is continuity between the two wires going to each switch
	Handwheel is engaged	Push handwheel in (disengage)
	Servo is not wired correctly	Check servo wiring to all points
	Motor has thermally tripped	Allow motor to cool down
Actuator does not properly respond to command signal	Potentiometer gear is not engaged	Engage and adjust pot. gear
	Command signal DIP switch selection is not correct	Set the DIP switches correctly
	Command signal polarity is incorrect	Wire the command signal correctly
Actuator runs in one direction only	Wiring is incorrect	Correct Wiring
	Potentiometer wired backwards	Reverse white and gray wires, see wiring diagram inside cover
	Limit switch or torque switch is triggered	Ensure that there is continuity between the wires coming from the switches. If your actuator has reached its travel limit, reverse direction. If one of your torque switches has tripped, reverse the actuator direction and correct the over torque condition.
	Command signal DIP switch selection is not correct	Set the DIP switches correctly

APPENDIX C - EXPLODED VIEWS

SERIES 70 - HOUSING SIZE 6

ON / OFF

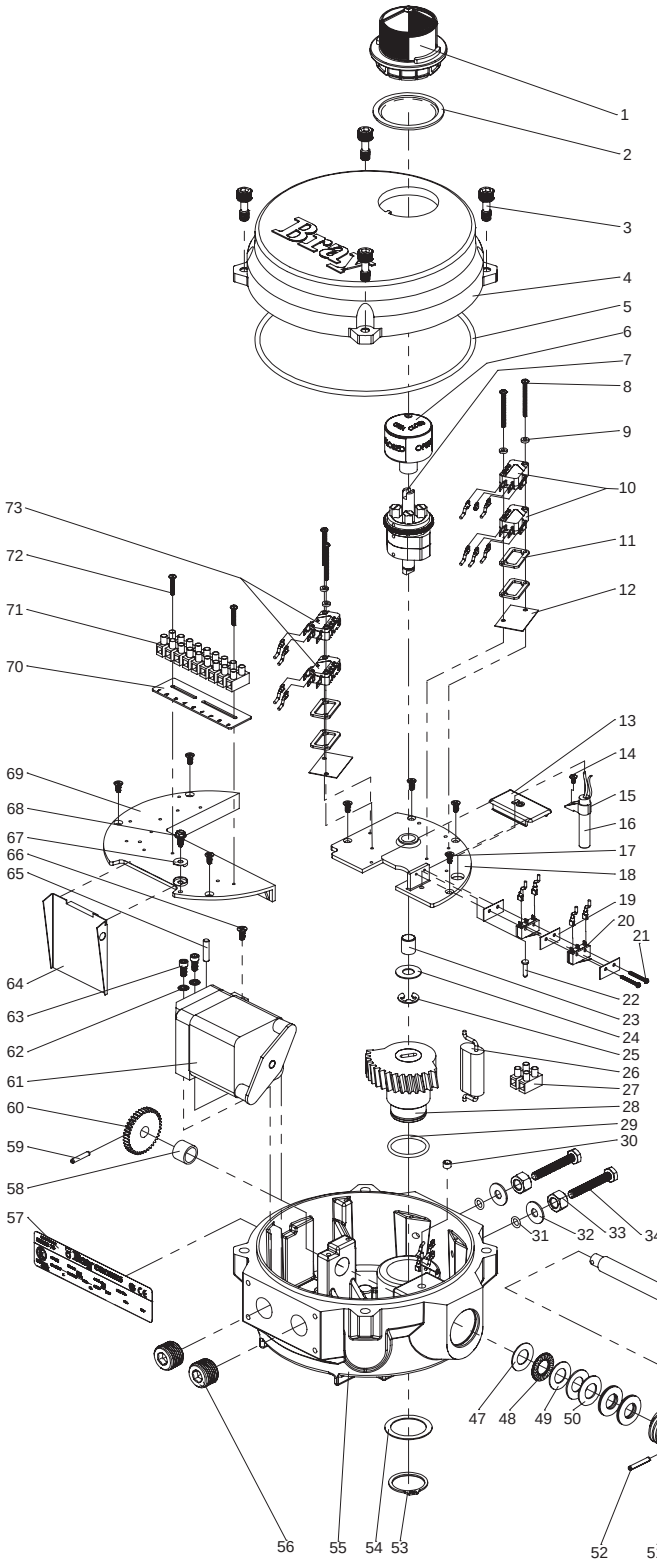

1 POSITION INDICATOR COVER
2 POSITION INDICATOR SEAL
3 COVER FASTENING SCREWS
4 COVER
5 O-RING
6 INDICATOR ROTOR
7 INDICATOR SHAFT ASSEMBLY
8 SWITCH MOUNTING SCREW
9 FIBER WASHER
10 LIMIT OPEN/CLOSE SWITCHES
11 SWITCH SPACER
12 SWITCH INSULATOR
13 TORQUE SWITCH COVER
14 PAN HEAD SCREW
15 HEATER MOUNTING BRACKET
16 HEATER
17 FLAT HEAD SCREW
18 SWITCH PLATE, FIXED
19 INSULATOR
20 OVERRIDE SWITCH (SPDT FORM C)
21 SCREW, PAN HEAD
22 OVERRIDE SWITCH TRIGGER PIN
23 BUSHING
24 THRUST WASHER
25 RETAINING RING
26 CAPACITOR
27 TERMINAL STRIP
28 OUTPUT WORM GEAR SEGMENT
29 O-RING
30 OVERRIDE SPRING PIN
31 O-RING
32 NYLON FLAT WASHER
33 LOCK NUT
34 TRAVEL STOP BOLT
35 WORM SHAFT
36 OVERRIDE DRIVE PIN
37 SPRING PLUNGER
38 MANUAL OVERRIDE SHAFT
39 MANUAL OVERRIDE SLEEVE
40 O-RING
41 O-RING
42 RETAINING RING
43 HANDWHEEL
44 HANDWHEEL WARNING LABEL
45 SPRING PIN
46 MANUAL OVERRIDE BUSHING
47 THRUST WASHER
48 THRUST ROLLER BEARING
49 THRUST WASHER
50 DISC SPRING
51 WORM
52 PIN, SLOT SPRING
53 RETAINING RING
54 THRUST WASHER
55 BASE
56 CONDUIT ENTRY PLUG
57 NAME TAG
58 BUSHING
59 DRIVE GEAR PIN
60 DRIVE GEAR
61 GEAR MOTOR
62 LOCK WASHER
63 SOCKET HEAD CAP SCREW
64 CONDUIT WIRE DEFLECTOR
65 DOWEL PIN
66 FLAT HEAD SCREW
67 WASHER, GROUND TERMINAL
68 GROUND SCREW
69 SWITCH PLATE REMOVABLE
70 TERMINAL STRIP TAG: 1-9
71 TERMINAL STRIP
72 PAN HEAD SCREW
73 AUX OPEN/CLOSE SWITCHES

Item 73 is optional.
Items 14,15, and 16 are optional.
Item 13 is installed in units when torque switches are not required.

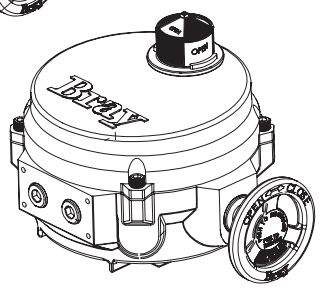

SERIES 70 - HOUSING SIZE 12

ON / OFF

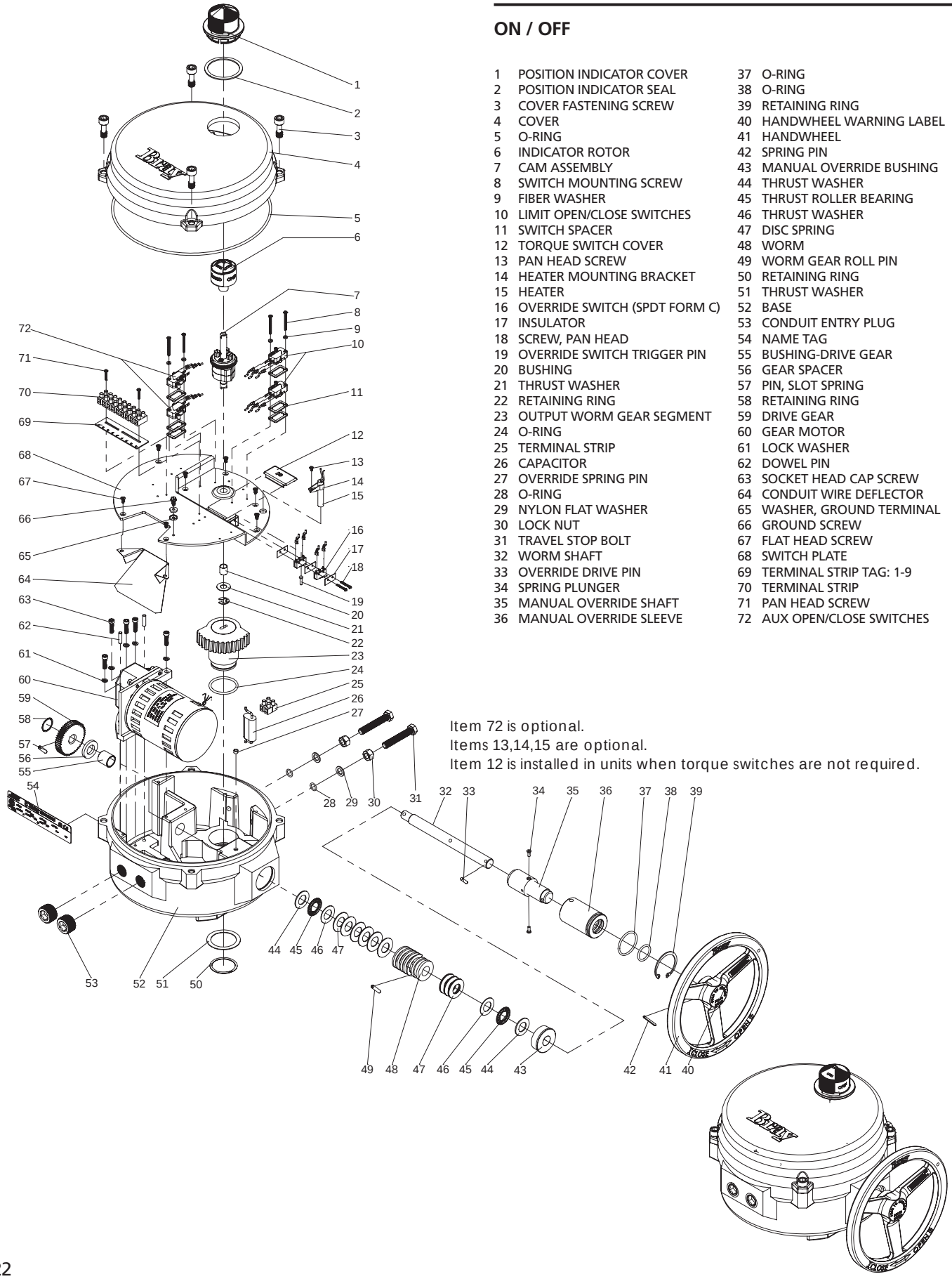

1	POSITION INDICATOR COVER	37	O-RING
2	POSITION INDICATOR SEAL	38	O-RING
3	COVER FASTENING SCREW	39	RETAINING RING
4	COVER	40	HANDWHEEL WARNING LABEL
5	O-RING	41	HANDWHEEL
6	INDICATOR ROTOR	42	SPRING PIN
7	CAM ASSEMBLY	43	MANUAL OVERRIDE BUSHING
8	SWITCH MOUNTING SCREW	44	THRUST WASHER
9	FIBER WASHER	45	THRUST ROLLER BEARING
10	LIMIT OPEN/CLOSE SWITCHES	46	THRUST WASHER
11	SWITCH SPACER	47	DISC SPRING
12	TORQUE SWITCH COVER	48	WORM
13	PAN HEAD SCREW	49	WORM GEAR ROLL PIN
14	HEATER MOUNTING BRACKET	50	RETAINING RING
15	HEATER	51	THRUST WASHER
16	OVERRIDE SWITCH (SPDT FORM C)	52	BASE
17	INSULATOR	53	CONDUIT ENTRY PLUG
18	SCREW, PAN HEAD	54	NAME TAG
19	OVERRIDE SWITCH TRIGGER PIN	55	BUSHING-DRIVE GEAR
20	BUSHING	56	GEAR SPACER
21	THRUST WASHER	57	PIN, SLOT SPRING
22	RETAINING RING	58	RETAINING RING
23	OUTPUT WORM GEAR SEGMENT	59	DRIVE GEAR
24	O-RING	60	GEAR MOTOR
25	TERMINAL STRIP	61	LOCK WASHER
26	CAPACITOR	62	DOWEL PIN
27	OVERRIDE SPRING PIN	63	SOCKET HEAD CAP SCREW
28	O-RING	64	CONDUIT WIRE DEFLECTOR
29	NYLON FLAT WASHER	65	WASHER, GROUND TERMINAL
30	LOCK NUT	66	GROUND SCREW
31	TRAVEL STOP BOLT	67	FLAT HEAD SCREW
32	WORM SHAFT	68	SWITCH PLATE
33	OVERRIDE DRIVE PIN	69	TERMINAL STRIP TAG: 1-9
34	SPRING PLUNGER	70	TERMINAL STRIP
35	MANUAL OVERRIDE SHAFT	71	PAN HEAD SCREW
36	MANUAL OVERRIDE SLEEVE	72	AUX OPEN/CLOSE SWITCHES

Item 72 is optional.
Items 13,14,15 are optional.
Item 12 is installed in units when torque switches are not required.

SERIES 70 - HOUSING SIZE 30

ON / OFF

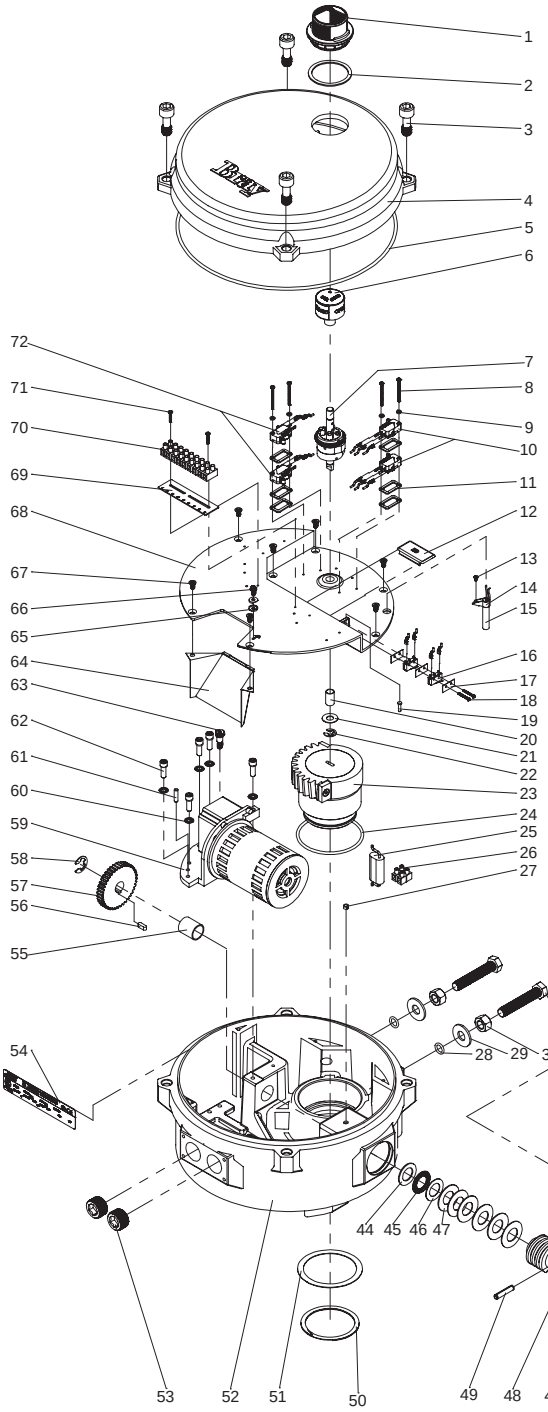

1 POSITION INDICATOR COVER
2 POSITION INDICATOR SEAL
3 COVER FASTENING SCREW
4 COVER
5 O-RING
6 INDICATOR ROTOR
7 CAM ASSEMBLY
8 SWITCH MOUNTING SCREW
9 FIBER WASHER
10 LIMIT OPEN/CLOSE SWITCHES
11 SWITCH SPACER
12 TORQUE SWITCH COVER
13 PAN HEAD SCREW
14 HEATER MOUNTING BRACKET
15 HEATER
16 OVERRIDE SWITCH (SPDT FORM C)
17 INSULATOR
18 SCREW, PAN HEAD
19 OVERRIDE SWITCH TRIGGER PIN
20 BUSHING
21 THRUST WASHER
22 RETAINING RING
23 WORM SEGMENT WITH PADS
24 O-RING
25 CAPACITOR
26 TERMINAL STRIP
27 OVERRIDE SPRING PIN
28 O-RING
29 NYLON FLAT WASHER
30 LOCK NUT
31 TRAVEL STOP BOLT
32 WORM SHAFT
33 OVERRIDE DRIVE PIN
34 SPRING PLUNGER
35 MANUAL OVERRIDE SHAFT
36 MANUAL OVERRIDE SLEEVE
37 O-RING
38 O-RING
39 RETAINING RING, INTERNAL
40 SPRING PIN
41 HANDWHEEL WARNING LABEL
42 HANDWHEEL
43 MANUAL OVERRIDE BUSHING
44 THRUST WASHER
45 THRUST ROLLER BEARING
46 THRUST WASHER
47 DISC SPRING
48 WORM
49 WORM GEAR ROLL PIN
50 RETAINING RING, EXT.
51 THRUST WASHER
52 BASE
53 CONDUIT ENTRY PLUG
54 NAME TAG
55 BUSHING
56 DRIVE GEAR KEY
57 DRIVE GEAR
58 RETAINING RING, BOWED E-RING
59 MOTOR ASSEMBLY
60 LOCK WASHER
61 DOWEL PIN
62 SOCKET HEAD CAP SCREW
63 SOCKET HEAD SHOULDER SCREW
64 WIRE ENTRY GUARD
65 WASHER, GROUND TERMINAL
66 GROUND SCREW
67 FLAT HEAD SCREW
68 SWITCH PLATE
69 TERMINAL STRIP TAG: 1-9
70 TERMINAL STRIP
71 PAN HEAD SCREW
72 AUX OPEN/CLOSE SWITCHES

Item 72 is optional.
Items 13,14,15 are optional.
Item 12 is installed in units when torque switches are not required.

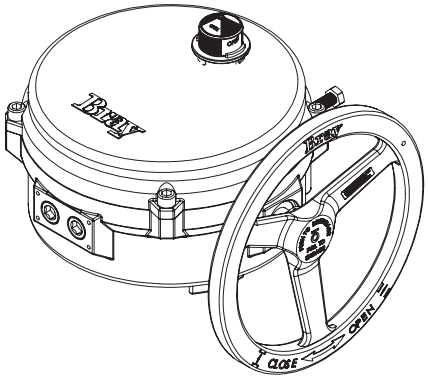

SERIES 70 - HOUSING SIZE 180 FOR 3:1 GEAR BOX

ON / OFF

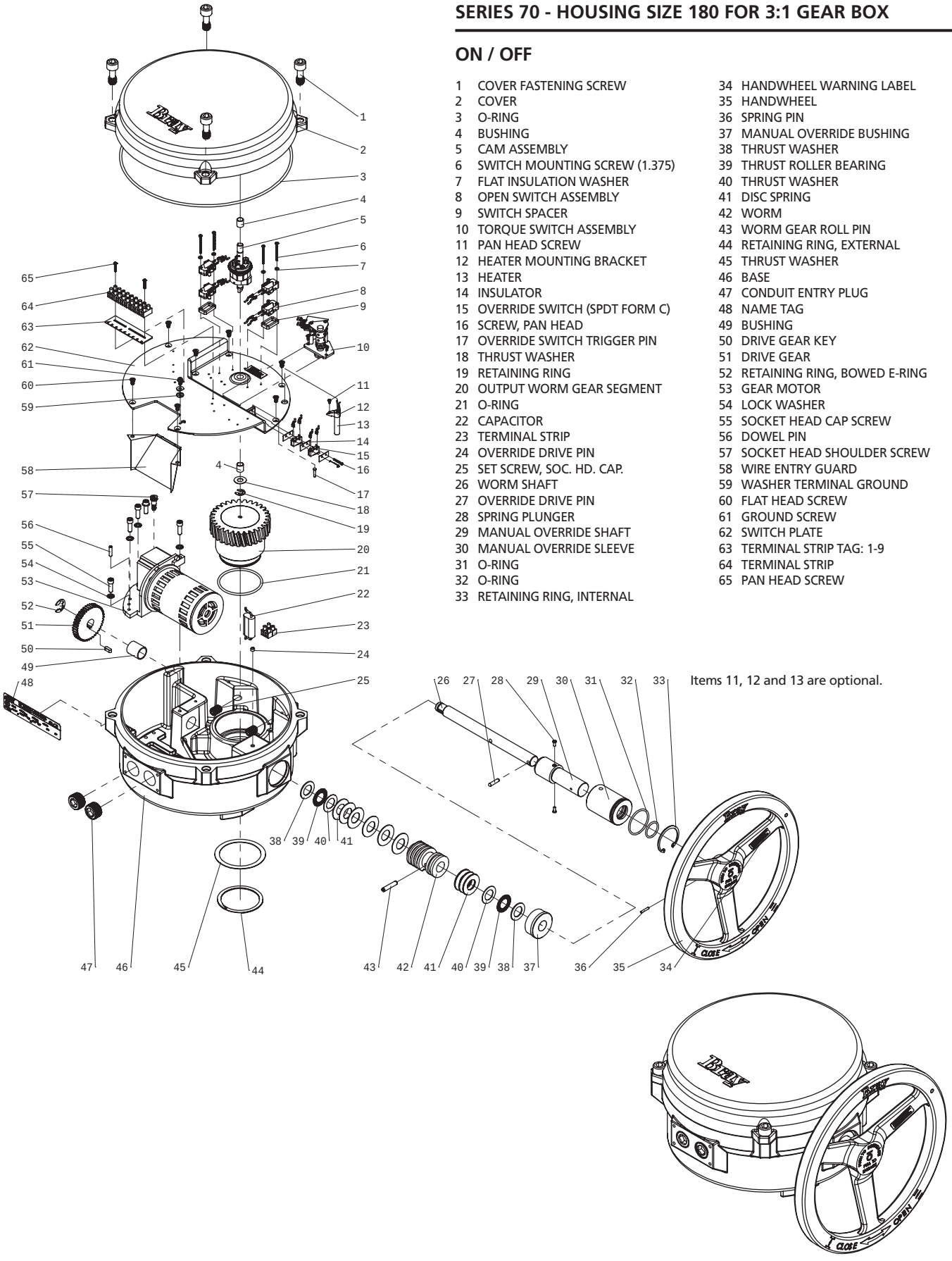

1 COVER FASTENING SCREW
2 COVER
3 O-RING
4 BUSHING
5 CAM ASSEMBLY
6 SWITCH MOUNTING SCREW (1.375)
7 FLAT INSULATION WASHER
8 OPEN SWITCH ASSEMBLY
9 SWITCH SPACER
10 TORQUE SWITCH ASSEMBLY
11 PAN HEAD SCREW
12 HEATER MOUNTING BRACKET
13 HEATER
14 INSULATOR
15 OVERRIDE SWITCH (SPDT FORM C)
16 SCREW, PAN HEAD
17 OVERRIDE SWITCH TRIGGER PIN
18 THRUST WASHER
19 RETAINING RING
20 OUTPUT WORM GEAR SEGMENT
21 O-RING
22 CAPACITOR
23 TERMINAL STRIP
24 OVERRIDE DRIVE PIN
25 SET SCREW, SOC. HD. CAP.
26 WORM SHAFT
27 OVERRIDE DRIVE PIN
28 SPRING PLUNGER
29 MANUAL OVERRIDE SHAFT
30 MANUAL OVERRIDE SLEEVE
31 O-RING
32 O-RING
33 RETAINING RING, INTERNAL
34 HANDWHEEL WARNING LABEL
35 HANDWHEEL
36 SPRING PIN
37 MANUAL OVERRIDE BUSHING
38 THRUST WASHER
39 THRUST ROLLER BEARING
40 THRUST WASHER
41 DISC SPRING
42 WORM
43 WORM GEAR ROLL PIN
44 RETAINING RING, EXTERNAL
45 THRUST WASHER
46 BASE
47 CONDUIT ENTRY PLUG
48 NAME TAG
49 BUSHING
50 DRIVE GEAR KEY
51 DRIVE GEAR
52 RETAINING RING, BOWED E-RING
53 GEAR MOTOR
54 LOCK WASHER
55 SOCKET HEAD CAP SCREW
56 DOWEL PIN
57 SOCKET HEAD SHOULDER SCREW
58 WIRE ENTRY GUARD
59 WASHER TERMINAL GROUND
60 FLAT HEAD SCREW
61 GROUND SCREW
62 SWITCH PLATE
63 TERMINAL STRIP TAG: 1-9
64 TERMINAL STRIP
65 PAN HEAD SCREW

Items 11, 12 and 13 are optional.

SERIES 70 - 3:1 GEAR BOX

ON / OFF

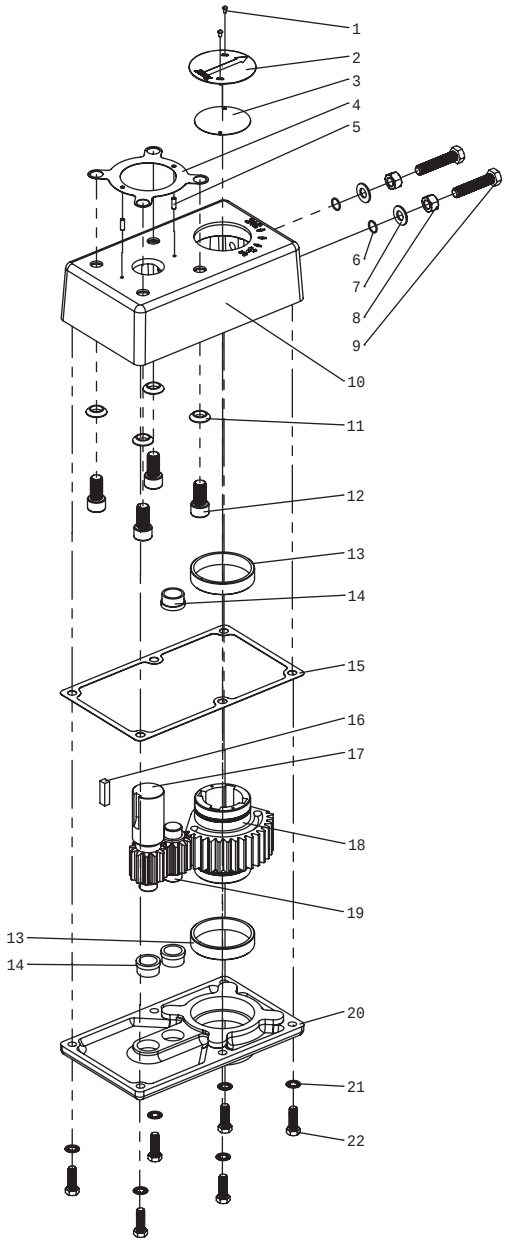

1 FASTENING SCREW
2 POSITION INDICATOR PLATE
3 POSITION INDICATOR GASKET
4 ACTUATOR/GEAR BOX GASKET
5 DOWEL PIN
6 O-RING
7 WASHER, FLAT, NYLON
8 NUT, HEX
9 BOLT, HEX HEAD
10 COVER
11 WASHER, CONICAL
12 ACTUATOR/GEAR BOX FASTENING SCREW
13 OUTPUT GEAR BEARING
14 IDLER/INPUT GEAR BEARING
15 COVER GASKET
16 INPUT GEAR KEY
17 INPUT GEAR
18 OUTPUT GEAR
19 IDLER GEAR
20 BASE
21 LOCK WASHER
22 BASE FASTENING SCREW

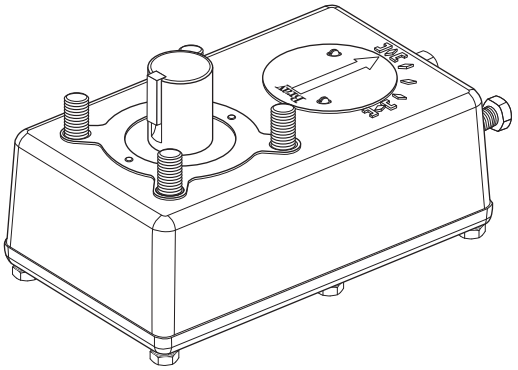

FI/FQI 3120

elster
Vital Connections

evoQ$_4$ Electromagnetic Meter - LF Low Flow

Sizes 1 ½" and 2"

EvoQ$_4$ Low Flow brings stable, accurate measurement to mid-size meter applications.

Specification

Performance		1 ½"	(DN40)	2"	(DN50)
> 95% accuarcy	GPM (m³/h)	0.25	(0.057)	0.25	(0.057)
98.5% - 101.5% accuracy	GPM (m³/h)	1.0-130	(0.227-30)	1.0-170	(0.227-39)
Maximum flow*	GPM (m³/h)	130	(30)	170	(39)
Max. operating pressure	psi (bar)	175	(12)	175	(12)

* Flow in excess of maximum does not affect performance at flows within limits

Materials

Body	Stainless steel grade 304
Flow tube	Stainless steel grade 316
Liner	Polyethylene epoxy
Electrodes	Stainless steel grade 316
Flanges	Epoxy coated cast iron
Register	Stainless steel with glass lens
Register housing/lid	UV-resistant plastic
Environmental class	IP68 hermetically sealed unit waterproof to 30 ft depth

Features

Improved low flow performance
No moving parts
0.5 second sample rate
Floating flanges
Pulse, Encoder, or Remote
AWWA lay lengths
IP68 sealed
NSF61 listed
10 year continuous life

Benefits

Detect smaller leaks
No accuracy degradation
Suitable for billing apps
Easy to install
Integrate with AMR / AMI
No spool pieces or pipe work
Submersible and reliable
Approved for potable water
Eliminate maintenance visits

Operation

The evoQ$_4$ Low Flow is a battery powered electromagnetic water meter that is suitable for a wide range of metering applications. Using Faraday's law of electromagnetic induction, two magnets provide a magnetic field within the pipe; two electrodes measure the induced voltage that is proportional to the flow of conductive water through the field in the pipe. Every 0.5 seconds the measurement is taken and the totalized volume is calculated and updated on the LCD display. The meter is designed for 10 years of continuous operation with no battery changes necessary.

Application

The meter is for use with potable cold water up to 120 °F. The meter will typically register at +/-0.75% accuracy at normal and high flows and better than 95% accuracy at extended low flows. The evoQ$_4$ product line is suited for metering utility customer services for potable water. With the addition of outputs described below, the meter can fulfill a number of distribution management roles as well. The meter is particularly suited to replacing AWWA C700 and C712 mechanical meters for utility billing.

Outputs

The evoQ$_4$ LF can be fitted with one of the output modules available for the meter product line. These modules are common among all sizes and variants of evoQ$_4$. Current modules include pulse (with two pulse channels), Elster protocol encoder, Sensus protocol encoder, the combined pulse + Sensus encoder module, and the remote display interface module. Please see individual specification sheets for these modules.

Connections

The evoQ$_4$ LF comes in AWWA C700 / C712 meter lay lengths. The oval flanges are epoxy coated cast iron to reduce weight and prevent corrosion and conform to ANSI B16.1 Class 125 standards. Full face gaskets are provided with each meter. Allow for 5 pipe diameters of straight pipe upstream and 3 pipe diameters of straight pipe downstream for optimum performance.

LCD

Bright, large and easy-to-read LCD incorporating totalized volume and a reference flow-rate indicator. Alarm functions provide in-situ status ensuring no loss in measuring continuity. An IP68 seal ensures the meter electronics are safely protected providing long term reliability.

Display functions

1. **Low-Battery** – The indicator blinks when the meter has approximately 3 months working life remaining.
2. **End of Life Battery** – Measurement stopped. The indicator appears permanently when the meter life expires. Data is displayed for up to 9 months.
3. **No-Water** – The indicator blinks when there is an empty pipe condition.
4. **Flow Rate** – If water is flowing in the reverse direction a minus sign is displayed to the left of the value.
5. **Net Volume** – Any reverse flow is subtracted from the volume display. The top line displays billable units with the multiplier shown in upper right corner. Measurement resolution is provided in the lower right for testing.

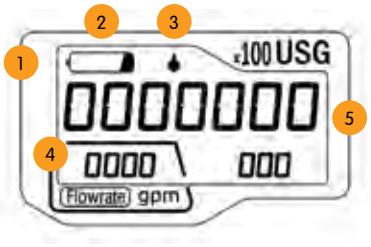

USG

x100

Cuft

x10

m³

Dimensions and net weight

Meter size	A in (mm)	B in (mm)	C in (mm)	Weight lbs (kg)
1 ½"	13 (330)	5 ½ (140)	6 (152)	9.0 (4.1)
2" x 17"	17 (432)	6 ¼ (159)	6 (152)	11.5 (5.2)

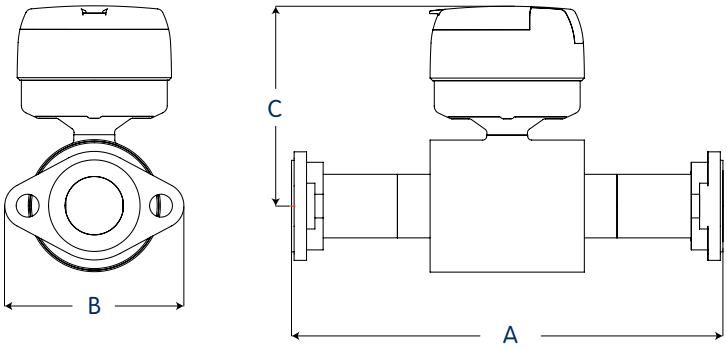

elster
Vital Connections

NSF

United States
Elster AMCO Water, LLC
10 SW 49th Avenue, Building 100
Ocala, FL 34474
T +1 800 874 0890
F +1 352 368 1950
watermeters@us.elster.com

Canada
Elster Canadian Meter Company Inc.
1100 Walker's Line, Suite 101
Burlington, Ontario L7N 2G3
T +1 866 703 7581
F +1 905 634 6705
watermeters@ca.elster.com

Caribbean
Elster AMCO Water, Inc.
P.O. Box 225, Carretera 112 KM 2.3
Isabela, PR 00662
T +1 787 872 2006
F +1 787 872 5427
prwatermeters@pr.elster.com

© 2015 by Elster. All rights reserved.
The company's policy is one of continuous product improvement and the right is reserved to modify the specifications contained herein without notice. These products have been manufactured with current technology and in accordance with applicable AWWA Standards.

www.elsteramcowater.com

Lit Ref: evoQ4LF/03-15

evoQ$_4$ Electromagnetic Meter Sensus Encoder Module

Specification

Protocol	Sensus V frame
Encoded digits	6 most significant v_6 v_8-8 most significant
Encoder ID	10 digit fixed
Power source	Lithium battery (10 yr)
Environmental rating (with appropriate splice kit)	NEMA 6P / IP68
Cable lengths (bare wire)	30 feet, 90 feet
Optional connectors (25')	Itron In Line Connector™ Nicor Connector™
Compatibility	MegaNet™ Enc MTU Itron™ 60W, 60W-R, 200W, 100W Datamatic™ Firefly, MOSAIC Others, contact AMI provider tech support
Materials module	ABS Resin 3 conductor AWG 22 cable

Operation

The Elster AMCO Water evoQ4 Sensus Protocol encoder module is designed for use with 3 wire radio endpoints. The 3 wire to 2 wire adapter module is necessary to allow the encoder to interface with 2 wire endpoints such as wall or pit pads for touch reading or AMR devices that utilize a 2 wire coupler integrated into the radio module.

The encoder reading is obtained through the normal means of interrogation of the reading point via radio endpoint.

The Sensus (also called V frame) protocol is transmitted from the encoder module and reported to the interrogating device.

Reading resolution is determined by the version of Sensus protocol encoder module used and the programming set in the handheld. Either 6 digit or 8 digit reads are transmitted.

evoQ4 size and units	1.5"-4" USG	6"-12" USG	1.5"-4" CuFt	6"-12" CuFt	1.5"-4" M3	6"-12" M3
Resolution						
6 Digit Sensus encoder module	123456 x 1000 USG	123456 x 1000 USG	123456 x 100 CuFt	123456 x 100 CuFt	123456 x 1 M3	123456 x 1 M3
8 Digit Sensus encoder module	12345678 x 10 USG	12345678 x 10 USG	12345678 x 1 CuFt	12345678 x 1 CuFt	12345678 x 10 Litre	12345678 x 10 Litre

1. Lift the lid, using a small screwdriver blade, carefully remove the pulser clip.

2. Remove the blank cover by lifting up...

3. ...and then slide out.

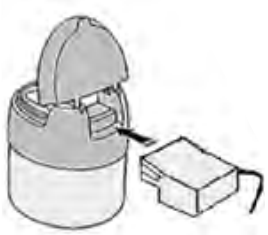

4. Fit the Encoder unit in the opposite manner to the cover removal.

5. Replace the securing clip (lugs uppermost).

WARNING: Take care not to dislodge the rubber gasket on the underside of the unit when fitting / removing.

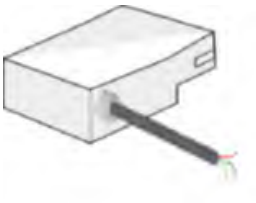

Generic Wire Diagram:

Red: Data
White: V+ (power)
Black: V0 (ground)

elster
Vital Connections

www.elsteramcowater.com

United States
Elster AMCO Water, LLC
10 SW 49th Avenue, Building 100
Ocala, FL 34474
T +1 800 874 0890
F +1 352 368 1950
watermeters@us.elster.com

Canada
Elster Canadian Meter Company Inc.
1100 Walker's Line, Suite 101
Burlington, Ontario L7N 2G3
T +1 866 703 7581
F +1 905 634 6705
watermeters@ca.elster.com

Caribbean
Elster AMCO Water, Inc.
P.O. Box 225, Carretera 112 KM 2.3
Isabella, PR 00662
T +1 787 872 2006
F +1 787 872 5427
prwatermeters@pr.elster.com

© 2013 by Elster. All rights reserved.
The company's policy is one of continuous product improvement and the right is reserved to modify the specifications contained herein without notice. These products have been manufactured with current technology and in accordance with applicable AWWA Standards.

Lit Ref: evoQ$_4$ENCS/05-13

EA_Water module 3.0

AMI network management

Solutions for advanced water AMI

Utilities and consumers have become increasingly aware of the need to conserve water and monitor its consumption. With the improved capabilities of the EA_Water 3.0 module, the utility can deploy modules faster, obtain more precise billing data, and offer improved customer service.

Elster supports all major water meter suppliers' encoded or digital registers.

Reduce inventory and streamlined installation

The EA_Water module is compatible with most all major brands of water meters. Utilities no longer have to plan inventory for each brand of water meter because the module's compatibility can be set at the time of installation. Also, account information is captured at the time of installation, allowing the installer to quickly deploy the module in the field without having to match up the correct unit to the address.

The integral water module and the Elster water meter can be shipped from the factory pre-installed. Remote mounting options allow units to be wall- or pipe-mounted with up to 100 feet (30 meters) of wire

Improved network communications

The EA_Water module supports two-way communication within the EnergyAxis mesh local area network (EA_LAN). The module automatically finds the optimal path to the first hop toward the EA_ Gatekeeper, giving the EA_Water module the same robust network coverage as other devices within the EA_LAN.

Using the time signals obtained from the EA_LAN, water meter intervals are synchronized with real time, giving the utility an accurate view of data simply not possible with devices that merely bubble-up at various, uncoordinated times.

Secure by design

As with other network elements within the EnergyAxis System, the EA_Water 3.0 module has security built in and not patched on. Supporting AES-128 bit encryption, the EA_Water module protects its data and communications with enterprise strength technology.

To ensure secure upgrades, the EA_Water 3.0 uses advanced techniques when implementing over-the-air (OTA) upgrades of its firmware. Even if the utility does not implement all of the security features of the EA_LAN, the firmware image and communication link are secured by AES-128 bit encryption. When the OTA process is complete and verified, the EA_Water modue will automatically resume operation as it was programmed to do prior to the upgrade.

- Pit mounted or remote mounted (shown)
- As a network element within Elster's EnergyAxis® System, the EA_Water 3.0 offers enhanced network communications for advanced water AMI.
- Elster takes water AMI to the next level, supporting encrypted two-way communications, OTA upgradeability, and automatic communication pathway optimization.

About the EnergyAxis System

Over 80 EnergyAxis systems deployed worldwide, with over 4.5 million smart endpoints, are being used every day for both advanced metering infrastructure and distribution automation applications. EnergyAxis is a utility-grade, Internet protocol (IP) based two-way communications system based on a dynamic, flexible, and scalable architecture.

The EnergyAxis System provides a layered end-to-end security architecture based on NIST, NEMA, and FIPS approved standards. EnergyAxis supports AES-128 bit encryption for any inter-network device communication session.

Water meter compatibility

Fully compatible with current digital and encoded registers from the following manufacturers:

- AMCO (Elster)
- Badger
- Hersey
- Metron Farnier
- Neptune
- Sensus

EA_Water 3.0 module specifications

- Unlicensed frequeny hopping spread spectrum (FHSS) RF technology
- 902 MHz to 928 MHz communication range
- Compliant with FCC Rules, Part 15 and Industry Canada RSS-210
- Temperature range of -40 °C to +65 °C
- Remote housing meets IP67
- Pit housing meets IP68
- Multiple operation mode:
  - fixed network
  - hybrid (mobile/fixed)

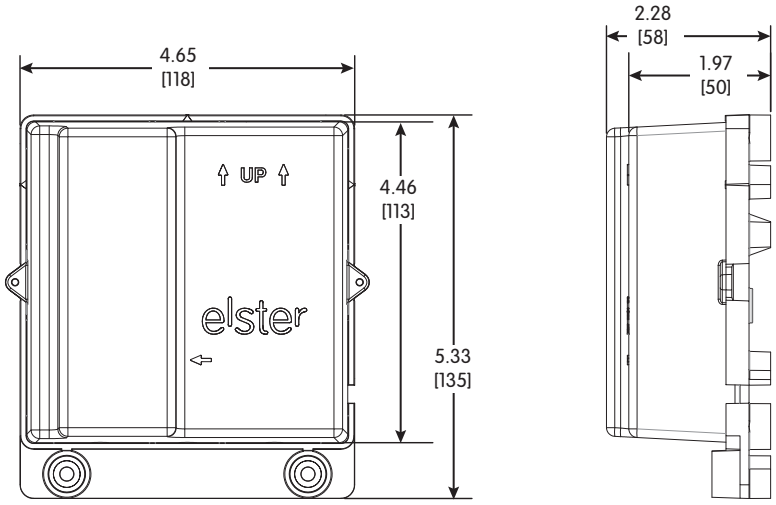

Approximate dimensions in inches [millimeters]

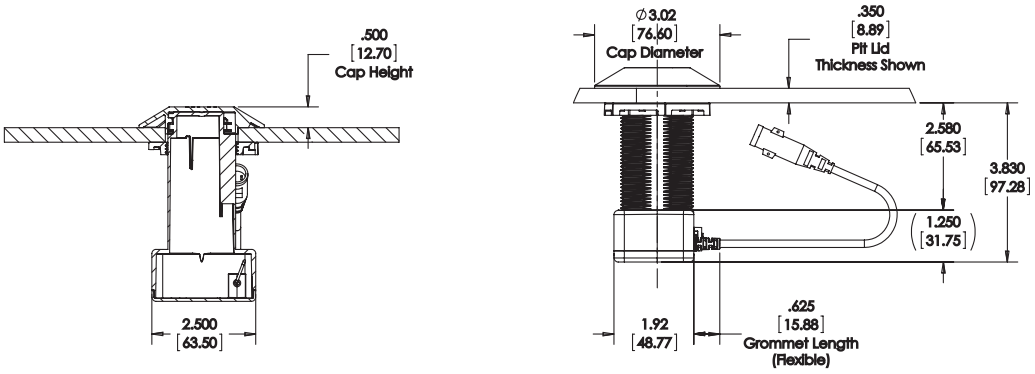

Approximate dimensions in inches [millimeters]

elster
Vital Connections

Elster
208 S Rogers Lane
Raleigh, NC 27610-2144
United States

T +1 800 257 9754 (Elster sales information)
T +1 800 338 5251 (Elster product support)
T +1 905 634 4895 (Canada)

© 2012 by Elster. All rights reserved.

Information contained herein is subject to change without notice. Product specifications may change. Contact your Elster representative for the most current product information. Printed in the United States.

www.elster.com

DS42-1056C

James, Cooke & Hobson, Inc.

Sales Engineers / Process Equipment

Submittal Data

Kirtland AFB Phase 4 Treatment Plant
Albuquerque, NM

Cla-Val Model 36 Combination Air Valve

Albuquerque • El Paso • Phoenix

Submittals

June 9, 2015

Albuquerque, New Mexico

Cla-Val Model 36 combination air valve
1” NPT inlet and outlet
Model 361-CAV564.3

Prepared for: Albuquerque Pump and Pipe
4300 Ellison Street NE
Albuquerque, NM 87109

Prepared by: JCH/ James, Cooke & Hobson
Kendra Brown
3810 Academy Parkway S. NE
Albuquerque, NM 87109

Table of Contents

1. Project references
    a. Equipment Supplier/ Local Representative/ Parts & Service Contact
    b. Manufacturer

2. Submittal Data

Project References

1. Equipment Supplier & Source for Parts and Repairs:
   JCH/ James, Cooke & Hobson, Inc.
   3810 Academy Parkway S, NE
   Albuquerque, NM 87109
   Website: www.jchinc.com
   Email: sales@jchinc.com
   (505) 344-7100

   Order number: N/A

2. Manufacturer:
   Cla-Val
   1701 Placentia Ave.
   Costa Mesa, CA 92627-4475
   Website: www.cla-val.com
   800-942-6326

Series 36
Combination Air Release and Vacuum Valve

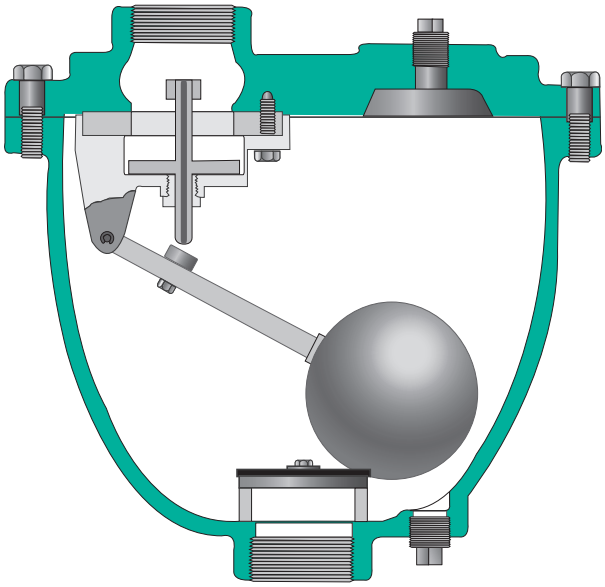

- **Stainless Steel T316 Standard**
- **Stainless Steel T316 Floats Guaranteed**
- **Fully Ported Valves - No Restrictions**
- **Easily Serviced Without Removal From Pipeline**
- **Engineered For Drip Tight Seal At Low Pressures**

The Cla-Val Series 36 Air and Vacuum Valve is a multipurpose valve that combines the operation of both the Model 34 Air Release Valve and Model 35 Air and Vacuum Valve. It functions to exhaust large quantities of air in the pipeline during the filling cycle and to admit air, as necessary, to prevent potentially dangerous vacuum from forming when being emptied either intentionally or as a result of pipeline breakage.

Note: See Sizing Guide Pages 14 & 15

Installation

The Series 36 Combination Air Valve should be installed at high points at grade changes within the pipeline.

Mount the unit in the vertical position on top of the pipeline with an isolation valve installed below each valve in the event servicing is required. A vault with adequate venting and drainage should also be provided.

Design / Purchase Specifications

The combination air valve shall combine the operating features of both an air and vacuum valve and an air release valve in one housing. The air and vacuum valve portion shall automatically exhaust large quantities of air during the filling of the pipeline and automatically allow air to reenter the pipeline when the internal pressure of the pipeline approaches a negative value due to column separation, draining of the pipeline, or other emergency. The air release valve portion shall automatically release small amounts of air from the pipeline while it is under pressure.

The inlet and outlet of the valve shall have the same cross-section area. The float shall be guided by a stainless steel guide shaft and seat drip tight against a synthetic rubber seal. 4" and larger valves shall have dual guided shafts of hexagonal cross section and a protective discharge hood.

The float shall be of all stainless steel construction and capable of withstanding maximum system surge pressure without failure. The body and cover shall be concentrically located and of cast iron and the valve internal parts shall be of T316 stainless steel or Buna-N® rubber.

The Combination Air Release and Vacuum Valve shall be manufactured per ANSI/AWWA C512-04 Series 36 from Cla-Val., Newport Beach, CA, U.S.A.

Design Specifications

Size Inlet/Outlet
1" 2", 3", 4" NPT or Flanged
3" through 8"
125 lb. flange & ANSI
300 lb. flange & ANSI

Pressure Ratings (see note)
150 psi
300 psi

Temperature Range
Water to 180°F

Note: Specify when operating pressure is below 10 PSI

Materials
Body and Cover:
Cast Iron ASTM A 126, Class B

Float:
Stainless Steel T316

Plug:
Stainless Steel T316

Internal Parts:
Stainless Steel T316

Seal: Buna-N® Rubber

Note: Manufactured to meet ANSI/AWWA C512-04

When Ordering, Please Specify

1. Model Number
2. Inlet/Outlet Size
3. Inlet Pressure Rating
4. Orifice Size

Optional:
For Anti-Shock Air Valve shut-off, order with arrestor check device (suffix "AC").
See Data Sheet Page 34 & 35

CLA-VAL

Series 36

Combination Air Valve – Single Body Style

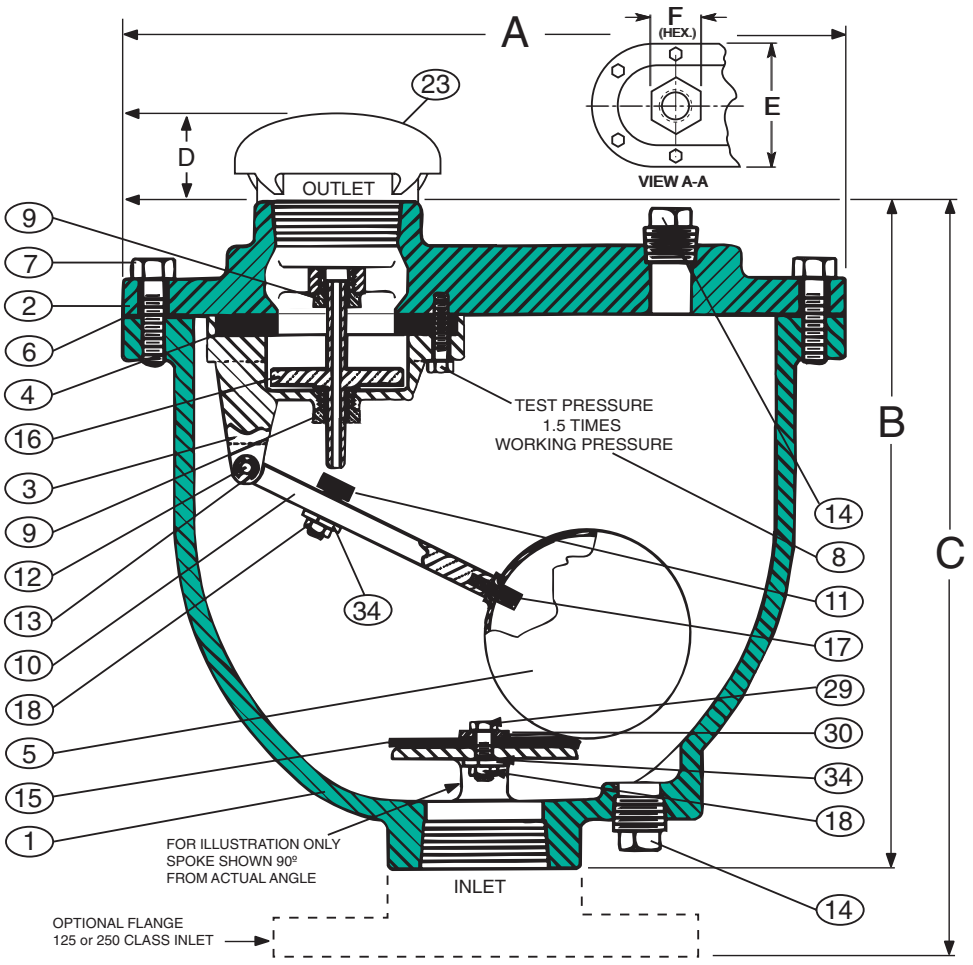

Detail No.	Part Name	Material
1	Body	Cast Iron ASTM A126, Class B
2	Cover	Cast Iron ASTM A126, Class B
3	Baffle	Cast Iron ASTM A126, Class B
4	Seat	Buna-N®
5	Float	Stainless Steel T316, ASTM A276
6	Gasket	Lexide NK - 511 (Non-Asbestos)
7	Cover Bolt	Alloy Steel ASTM A449, Grade 5
8	Retaining Screw	Stainless Steel T316, ASTM A276
9	Guide Bushing	Stainless Steel T316, ASTM A276
10	Float Arm	Stainless Steel T316, ASTM A276

Detail No.	Part Name	Material
11	Orifice Button	Stainless Steel T316 & Buna-N®
12	Pivot Pin	Stainless Steel T316, ASTM A276
13	Retaining Ring	Stainless Steel PH 15-7 MO
14	Pipe Plug	Malleable Iron
15	Cushion	Buna-N®
16	Plug	Stainless Steel T316, ASTM A276
17	Float Retainer	Stainless Steel T316, ASTM A276
18	Lock Nut	Stainless Steel T316, ASTM A276
23	Screened Hood	Optional-Screened Outlet Hood
29	Cushion Retainer	Stainless Steel T316, ASTM A276
30	Washer (internal)	Stainless Steel T316, ASTM A276
34	Washer (external)	Stainless Steel T316, ASTM A276

Note 1: All Stainless Steel Parts Austenitic
Note 2: Manufactured to meet ANSI/AWWA C512-04

Valve Size	Model No.	A	B	C	D Approx.	E	F	Inlet Size	Outlet Size	Orifice Size	CWP PSI	Inlet** Flange	Screened Hood	Wt. Lbs.
1"	361-CAV564.3	11 3/8"	10 1/2"	12"	2"	7"	2"	1" N.P.T	1" N.P.T	3/32"	300	SPK-001F	SPK-1H	40
2"	362-CAV332.3	14"	13"	15"	3"	8"	3"	2" N.P.T	2" N.P.T	3/32"	300	SPK-002F	SPK-2H	71
3"	363-CAV332.3	16"	15"	17"	4"	9 5/8"	4 3/8"	3" N.P.T.	3" N.P.T	3/32"	300	SPK-003F	SPK-3H	112
4"	364-CAV332.3	18 1/2	17"	19"	5"	11"	5 3/8"	4" N.P.T	4" N.P.T	3/32"	300	SPK-004F	SPK-4H	170

©Copyright Cla-Val 2007 Printed in USA Specifications subject to change without notice.

RUPERT

PLUMBING AND HEATING

PIPE FABRICATION

Weamco Startup Strainer

Shown on 140705-001-PI-03-400003 DETAIL 1

Cone Strainers

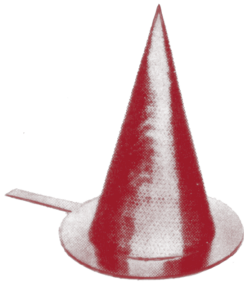

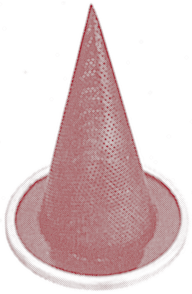

LENGTH L C						
LINE SIZE	STD. LGTH.	75%	100%	150%	200%	300%
2	4	–	4	6	8	11
3	6	–	6	9	12	18
4	8	–	8	10	13	20
6	11	–	11	13	18	27
8	12	–	12	17	23	34
10	12	12	14	22	29	44
12	12	12	16	26	35	50
14	14	14	18	27	36	53
16	16	16	21	31	40	60
18	18	18	24	35	46	68
20	20	20	26	39	51	76
24	23	23	31	45	60	90
30	29	29	38	57	76	114
36	33	33	44	66	88	126

STANDARD MATERIAL IS
PERFORATED 1/8" DIAMETER
HOLES ON 3/16" CENTERS
40% OPEN AREA
CARBON STEEL

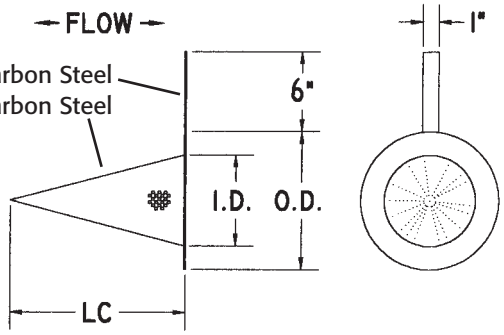

TYPE CP

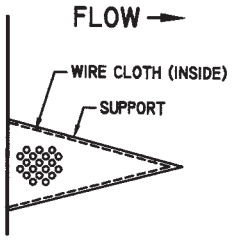

TYPE CWI
Wire Cloth Inside
*Perforated Support

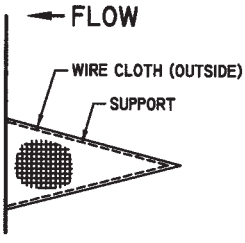

TYPE CWO
Wire Cloth Outside
*Perforated Support

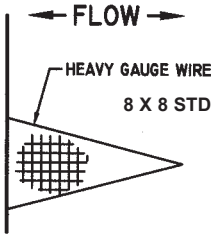

TYPE CW
1 Ply Heavy
Wire
(Customers' Choice)

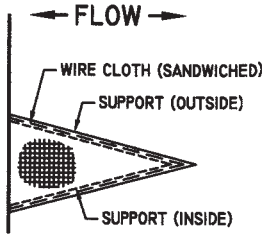

TYPE CTP
Expanded Support
Inside and Outside

* Expanded metal support available

REFERENCE STRAINER DESIGN SELECTION AND CONSTRUCTION SECTION FOR OPTIONAL MATERIALS. (Reference Bulletin AC112 for Wire Cloth, Perforated and expanded metal availability.)

Available with any type
temporary strainer

Percent open areas shown are compared to the cross sectional flow area of Standard Weight Pipe. All dimensions are in inches. Standard length designed to fit weld neck flange plus long radius weld elbow. OD is designed to fit inside flange bolt hole circle. Full face is available, add FF to type of strainer. ID is designed to fit inside standard weight pipe for 150# and 300# rating, extra strong pipe for 600# rating. Advise pipe wall or schedule for higher pressure ratings. See Bulletins BP112 and FP112 for additional Temporary Strainer information.

WEAMCO METRIC
(918) 445-1141
(800) 331-3790
Fax: (918) 445-4617
sales@weamco.com
www.weamco.com

RUPERT

PLUMBING AND HEATING

PIPE FABRICATION

Butterfly Valves

Resilient Seated Butterfly Valves

ABZ VALVE | A GFT COMPANY

Figures 101/108/102

Sizes
2" - 12"
Rated Up To 175 PSI

ABZ VALVES & CONTROLS
PO Box 157 • 113 W. Main • Madison, KS 66860
620-437-2440 • FAX 620-437-2435
www.abzvalve.com • info@abzvalve.com

ABZ Precision Built Butterfly Valves

Resil-O-Seat™ Seated Valves for Chemical and Abrasion Resistance Applications.

The figures 101/102/108 provide excellent flexibility with a variety of trim materials. These are available for a wide selection of applications.

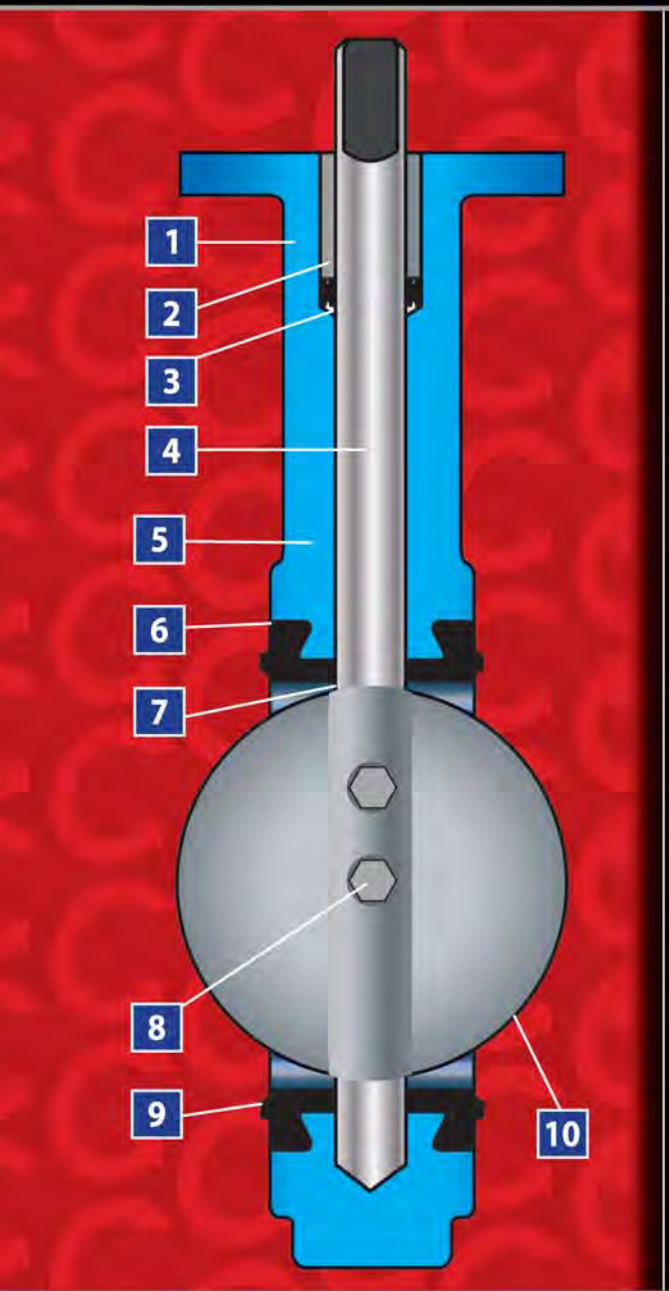

1 Body machined to high tolerances. Guaranteed standard dimensions for interchangeability of parts and actuators.

2 Top bushings protect the stem from side thrust of operators. They are made of impact and corrosion resistant materials.

3 Special double-V-shape of stem seal self-adjusts to protect the stem area for either vacuum or pressure use.

4 Stem extends through disc and aligns with socket in body. Stem end has standard dimensions for operator interchangeability.

5 Long neck allows for insulation requirements.

6 The special snap-in Resil-O-Seat™ design fixes seat in place without bonding. The Resil-O-Seat™ is 100% field replaceable - no special tools required.

7 Stem and body are isolated from the line media by the interference fit of the primary seal created between the disc and seat.

8 Stainless steel cap screws securely hold disc to stem. O-ring seal prevents leakage into the stem area and creates a positive connection.

9 Resil-O-SeatTM forms a seal against all standard ANSI 125/150 flanges. Gasketing requirements are eliminated.

10 Disc edge is individually processed through machining and hand buffing for a smooth edge, providing a bubble tight shutoff and maximum seat life.

101 is a wafer style body
108 is semi-lug style body
102 is a full lug style body

ABZ VALVE

FIGURES 101/108/102

Valve Dimensions

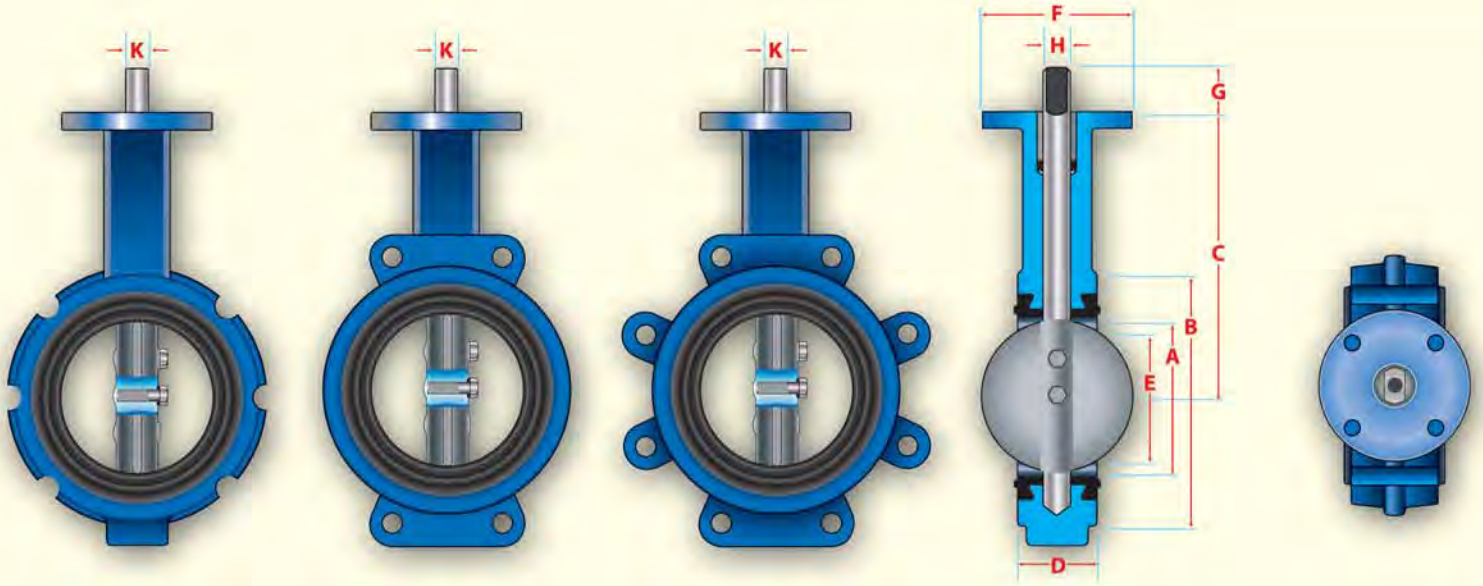

All standard seats are Food Grade with the exception of Viton

Valve Size	DIMENSIONS									TOP PLATE DRILLING			TAPPED LUG DATA				WEIGHT (POUNDS)		
	A	B	C	D	E	F	G	H	K	Bolt Circle	No. Holes	Hole Dia.	Bolt Circle	No. Holes 102	No. Holes 108	Tap	101	108	102
2	2 1/8	4 1/8	5 1/2	1 5/8	1 11/16	4	1 1/4	9/16	3/8	3 1/4	4	7/16	4 3/4	4	4	5/8-11 UNC	7	8	8
2 1/2	2 9/16	4 7/8	6	1 3/4	2 3/16	4	1 1/4	9/16	3/8	3 1/4	4	7/16	5 1/2	4	4	5/8-11 UNC	8	9	9
3	3 1/8	5 3/8	6 1/4	1 3/4	2 7/8	4	1 1/4	9/16	3/8	3 1/4	4	7/16	6	4	4	5/8-11 UNC	9	10	10
4	4 1/8	6 7/8	7	2	3 7/8	4	1 1/4	5/8	7/16	3 1/4	4	7/16	7 1/2	8	4	5/8-11 UNC	13	17	20
5	5 3/16	7 5/8	7 1/2	2 1/8	5	4	1 1/4	5/8	7/16	3 1/4	4	7/16	8 1/2	8	4	3/4-10 UNC	19	20	23
6	6 1/8	8 3/4	8	2 1/8	6	4	1 1/4	5/8	7/16	3 1/4	4	7/16	9 1/2	8	4	3/4-10 UNC	20	24	27
8	8 1/8	11	9 1/2	2 1/2	8	6	1 1/4	3/4	1/2	5	4	9/16	11 3/4	8	4	3/4-10 UNC	36	38	43
10	10 1/8	13 3/8	10 3/4	2 1/2	10 1/16	6	1 1/4	7/8	5/8	5	4	9/16	14 1/4	12	4	7/8-9 UNC	49	55	63
12	12 1/8	16 1/8	12 1/4	3	11 15/16	6	2	1 1/8	1/4	5	4	9/16	17	12	4	7/8-9 UNC	70	82	90

STANDARD CONSTRUCTION SPECIFICATIONS:

Body: Cast Iron, Ductile Iron (Lug) and Aluminum (Wafer)

Disc: 316 Stainless Steel, Aluminum Bronze, Ductile Iron, Epoxy Coated Ductile Iron

Stem: 316 Stainless Steel, 416 Stainless Steel, Carbon Steel

Resilient Seat: EPDM, Buna-N, Viton, Natural Rubber, White Buna, White Neoprene.

Stem Bushing: Teflon® – Graphite Impregnated

Stem Packing: Buna-N and Viton

Additional materials are available for a wide selection of applications.

NOTES:

1. Dimension "K" not applicable to 12" size. The 12" stem is round with ¼" Key.
2. The figures 101, 102 and 108 cannot be used on pipe or flange with an inside diameter less than the "E" dimension.
3. Valves are rated up to 175 PSI bi-directional service and 85 PSI end of line rating. Undercut disc is rated up to 50 PSI bi-directional service and 25 PSI end of line rating. Preferred direction is with disc bolts on downstream side of disc.
4. Designed in accordance with sections of API 609 Catagory A, ASME 16.1/16.5, ASME 16.34 and MSS SP67. Design tested in accordance with API 598.
5. Compatible with ANSI Class 125/150 flange standards.

Rated Flow Coefficient (Cv) - Figure 101/108/102

Valve Size	ANGLE OF DISC OPENING								
	10°	20°	30°	40°	50°	60°	70°	80°	90°
2	1.67	7.7	17	29	48	74	115	145	195
2 1/2	2.50	11.0	25	44	69	109	174	237	307
3	3.33	15.7	37	64	105	165	276	377	487
4	5.00	27.7	63	110	177	278	472	671	827
5	8.33	43.7	99	177	276	443	752	1,083	1,325
6	13.33	58.7	136	242	385	616	1,075	1,521	1,883
8	20.00	107.3	247	434	687	1,094	1,821	2,671	3,239
10	31.67	174.0	394	696	1,092	1,770	2,983	4,288	5,210
12	47.0	251.7	578	1,002	1,665	2,654	4,398	6,466	8,026

Cv is defined as the volume of water in U.S.G.P.M. that will flow through a given restriction or valve opening with a pressure drop of one (1) p.s.i. at room temperature. Recommended control angles are between 25°-70° open.

Torque Chart - Figure 101/108/102

Valve Size	NORMAL CONDITIONS					SEVERE CONDITIONS				
	Δ P=0	Δ P=50	Δ P=100	Δ P=150	Δ P=175	Δ P=0	Δ P=50	Δ P=100	Δ P=150	Δ P=175
2	221	230	240	250	254	373	384	400	406	410
2 1/2	269	283	288	302	311	454	464	475	486	497
3	322	341	365	379	392	540	568	589	611	634
4	480	514	542	576	590	816	848	886	918	936
5	653	706	754	806	854	1,102	1,162	1,220	1,274	1,301
6	907	1,008	1,109	1,210	1,260	1,529	1,642	1,756	1,868	1,926
8	1,512	1,714	1,915	2,112	2,215	2,549	2,776	3,002	3,229	3,343
10	2,318	2,621	2,900	3,224	3,372	3,910	4,250	4,590	4,931	5,101
12	3,125	3,629	4,138	4,637	6,112	5,270	5,838	6,404	6,971	7,258

Undercut disc available.

All torques shown in inch lbs. 20% Safety factor already included.

ABZ VALVES & CONTROLS, INC.
A Global Flow Technologies Company
P.O. Box 157 • 113 West Main • Madison, KS 66860
PHONE: 620-437-2440 • FAX: 620-437-2435
www.abzvalve.com • www.globalflowtech.com
info@abzvalve.com

The data presented in this bulletin is for general information only. Manufacture is not responsible for compatibility or acceptability of these products in relation to system requirements. Patents and Patents Pending in U.S. and foreign countries. All rights reserved. Printed in U.S.A. ABZ reserves the right to change product designs and specifications without notice. Copyright 2008.

Certified System ISO 9001-2008

RUPERT

PLUMBING AND HEATING

PIPE FABRICATION

40 05 13-2.1: Product Data—Part 2 additional items

This section contains the following:

- Backflow preventer
- Ball Valves
- Sump pump
- Tank Vent
- Wye Strainer

RUPERT

PLUMBING AND HEATING

PIPE FABRICATION

BACKFLOW PREVENTER

"Apollo" Valves

SUBMITTAL SHEET

LEAD FREE*

Model RP4A & RPLF4A

Reduced Pressure Principle **Backflow Preventer**
– A Series –

Job Name:	
Job Location:	
Engineer:	
Contractor:	
Tag:	
PO Number:	
Representative:	
Wholesale Distributor:	

SPECIFICATIONS

The Apollo® Model RP4A and RPLF4A Lead Free* Reduced Pressure Backflow Preventer A Series provide maximum protection of the potable water supply due to back-siphonage or backpressure from substances that are hazardous to the potable water supply. The top accessed modular check valve cartridges provide captured springs, replaceable seats, and reversible silicone seat discs. This **Made in America** assembly features ball valve shutoffs with stainless steel handles and nuts as standard and carries the **five-year** Apollo® factory warranty.

FEATURES

- Low pressure loss documented by independent approval agencies
- Easily removable modular check valve cartridge
- Captured stainless steel springs
- Ball valve shutoffs w/ SS handles & nuts standard
- Top-mounted test cocks for easy testing
- Modular relief valve
- Chloramine-resistant elastomers
- No special tools required
- **Made in the USA**
- Horizontal installation

PERFORMANCE RATING

- Maximum Working Pressure: 175 psi
- Temperature Range: 33 ° F – 180 ° F

APPROVALS

- ASSE 1013
- CSA B64.4
- IAPMO
- Approved by the Foundation for Cross-Connection Control and Hydraulic Research at the University of Southern California

STANDARD MATERIALS LIST

Part Name	Material
Body, Caps	Bronze C84400 or C89836 Lead Free*
BV Shutoffs, Test cocks	Bronze C84400 or C87800 Lead Free*
Check Valve Cartridges	Glass-Filled PPO
Springs	300 Series Stainless Steel
Seat Discs	Chloramine-resistant Silicone
O-rings	Chloramine-resistant EPDM

DIMENSIONS

Model Number	Size (in.)	Dimensions (in.)						Wt. (lbs.)
		A	B	C	D	E	F	
4A-203-A2F	1/2"	10-7/8	7-3/8	7-1/8	2-7/8	3-1/4	3-7/8	6.9
4A-204-A2F	3/4"	12-5/8	8-1/2	7-3/8	3-1/8	3-1/2	3-7/8	8.2
4A-205-A2F	1"	14-5/8	9-1/2	8	3-1/4	4	4	11.7
4A-206-A2F	1-1/4"	17-1/2	11-3/4	9-7/8	5-1/8	4-1/2	5-3/8	13.6
4A-207-A2F	1-1/2"	18	11-5/8	9-7/8	5-1/8	4-1/2	5-3/8	17.4
4A-208-A2F	2"	20-1/8	12-3/4	11	5-7/8	5	6	24.5

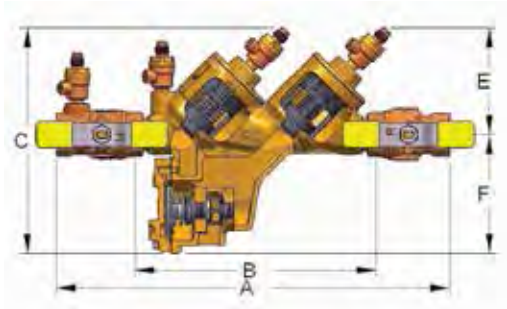

** LEAD FREE: The wetted surfaces of this product shall contain no more than 0.25% lead by weighted average. Complies with Federal Public Law 111-380. ANSI 3rd party approved and listed.*

Apollo Valves, Manufactured by **Conbraco Industries, Inc.**
701 Matthews Mint-Hill Road, Matthews, NC 28105 USA
www.**apollovalves**.com | (704) 841-6000

This specification is provided for reference only. Conbraco Industries Inc. reserves the right to change any portion of this specification without notice and without incurring obligation to make such changes to Conbraco products previously or subsequently sold. Please visit our website @ www.apollovalves.com for the most current information.

AALBERTS INDUSTRIES

"Apollo" Valves

SUBMITTAL SHEET

LEAD FREE*

— Model RP4A & RPLF4A —

Reduced Pressure Principle **Backflow Preventer**
– A Series –

FACTORY CODE

4A [XX]	2 X	X	XX	F	X	
	Y-STRAINER	**SIZE**	**SHUT-OFF VALVES**			**OPTIONS**
4A = Non-Lead Free 4ALF = Lead Free*	☐ 0 = None (Standard) ☐ 1 = With Y-Strainer (Shipped loose)	☐ 3 = 1/2" ☐ 4 = 3/4" ☐ 5 = 1" ☐ 6 = 1-1/4" ☐ 7 = 1-1/2" ☐ 8 = 2"	☐ A2 = w/ball valves (Standard) ☐ A4 = w/union end ball valves	☐ Blank = NPT testcocks ☐ F = SAE testcocks	☐ Blank = Standard SS Handle ☐ LL = Locking lever handles (1/2" - 2")	

FLOW CURVES

● Meter Rated Flow

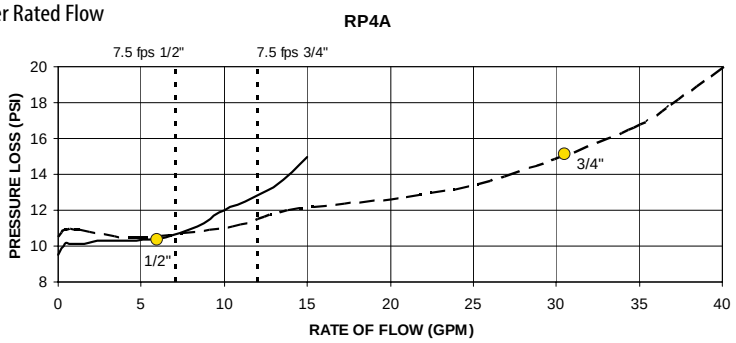

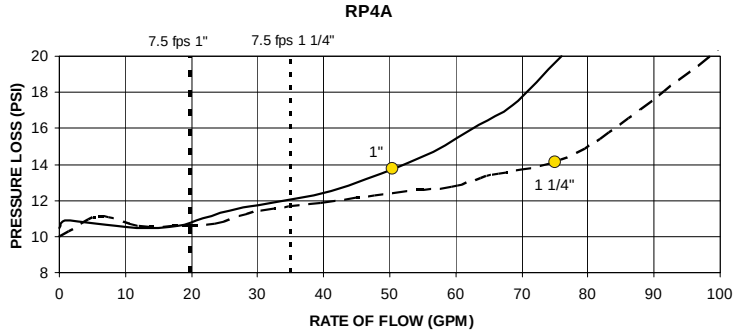

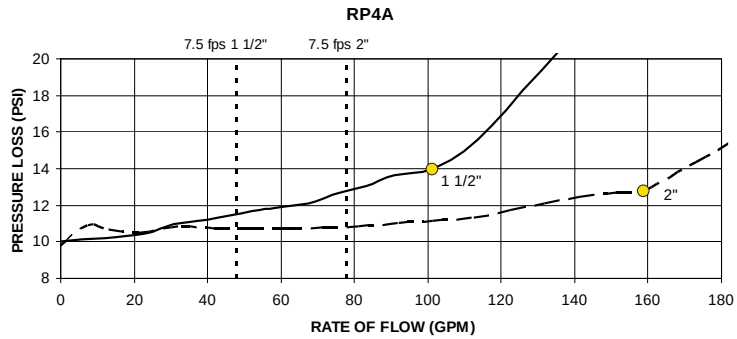

** LEAD FREE: The wetted surfaces of this product shall contain no more than 0.25% lead by weighted average. Complies with Federal Public Law 111-380. ANSI 3rd party approved and listed.*

Curves developed from independent approval agencies actual tests – Consult factory for details.

● indicates rated flow as determined by approval agencies, 7.5 ft/sec is the typical maximum Plumbing system flow rate.

Apollo Valves, Manufactured by **Conbraco Industries, Inc.**
701 Matthews Mint-Hill Road, Matthews, NC 28105 USA
www.**apollovalves**.com | (704) 841-6000

This specification is provided for reference only. Conbraco Industries Inc. reserves the right to change any portion of this specification without notice and without incurring obligation to make such changes to Conbraco products previously or subsequently sold. Please visit our website @ www.apollovalves.com for the most current information.

AALBERTS INDUSTRIES

RUPERT

PLUMBING AND HEATING

PIPE FABRICATION

BALL VALVES

"Apollo" Valves

SUBMITTAL SHEET

LEAD FREE

77CLF Series

Bronze Full Port **Ball Valve**

Job Name:	
Job Location:	
Engineer:	
Contractor:	
Tag:	
PO Number:	
Representative:	
Wholesale Distributor:	

DESCRIPTION

The Apollo® 77CLF "Contractor Series" 2 piece ball valve features a de-zincification resistant, Lead Free* bronze body, premium "multi-fill" MPTFE seats and stem packing, and a Lead Free* "Solid Ball" design that delivers true full-port flow performance. Cast and machined in Apollo's South Carolina manufacturing plants using proven Lead Free* materials.

FEATURES

- Easily Identifiable White Handle and Blue "Lead Free" Hang Tag
- EZ-Solder™ Lead Free Bronze
- Lead Free* Brass & Bronze Materials
- NSF/ANSI 61 Section 8, Annex F & G
- Multi-Fill PTFE Seats & Seals.
- Manufactured and 100% Factory Tested in the USA

PERFORMANCE RATING

- Maximum Pressure: 600 psi CWP, 150 SWP
- Maximum Temperature: 500°F
- Vacuum service to 29 in. Hg

APPROVALS

- MSS SP-110; Ball Valves
- NSF/ANSI 61 Section 8, Annex F & G
- NSF/ANSI 372 Lead Free
- ANSI 3rd Party Approval to 0.25% Lead Max.
- CSA B51 CRN: OC10908.5C
- IAPMO R&T / UPC - IGC 157
- City of Los Angeles DBS

OPTIONS (For 1/4" to 2")

- (-01) Standard
- (-04) 2-1/4" Stem Extension
- (-07) Tee Handle
- (-10) S.S. Handle and Nut
- (-11) Therma-Seal™ Insulating Tee Handle
- (-27) Locking Handle
- (-92) Standard lever with Balancing Stop
- (-94) 2-1/4" Stem Extension with Balancing Stop

MODELS

- 77CLF100/200 Series - Standard Trim
- 77CLF140/240 Series - 316 SS Ball & Stem

STANDARD MATERIALS LIST

Part Name	Material
Gland	B16 Brass
Nut	Zinc Plated Steel
Packing	MPTFE
Seat	MPTFE
Stem	C27451 Lead Free* Brass
Ball	C27451 Lead Free* Brass Cr. Plated or B283, C37700
Retainer	C27451 Lead Free* Brass or B283, C37700 (1/4"-1/2")
	B584-C89836 Lead Free* Bronze (3/4"-2 1/2")
Body	B584-C89836 Lead Free* Bronze
Handle	Zinc Plated Steel w/ Vinyl Grip

– **Continued on the next page.**

** LEAD FREE: The wetted surfaces of this product shall contain no more than 0.25% lead by weighted average. Complies with Federal Public Law 111-380. ANSI 3rd party approved and listed.*

Apollo Valves, Manufactured by **Conbraco Industries, Inc.**
701 Matthews Mint-Hill Road, Matthews, NC 28105 USA
www.**apollovalves**.com | (704) 841-6000

This specification is provided for reference only. Conbraco Industries Inc. reserves the right to change any portion of this specification without notice and without incurring obligation to make such changes to Conbraco products previously or subsequently sold. Please visit our website @ www.apollovalves.com for the most current information.

AALBERTS INDUSTRIES

"Apollo" Valves

SUBMITTAL SHEET

LEAD FREE

77CLF Series

Bronze Full Port **Ball Valve**

NPT

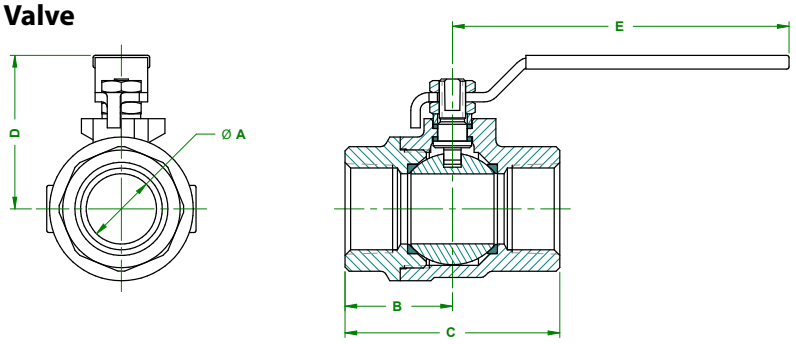

Solder

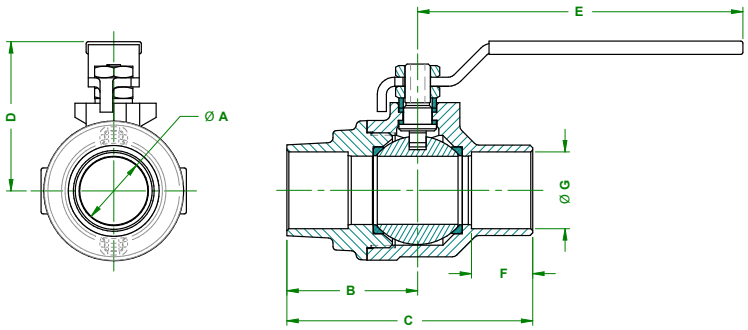

DIMENSIONS

LF Part Number	Size (in.)	Dimensions (in.)								Wt. *** (lbs.)
		A	B	C	D	E	F	G	Cv	
NPT										
77CLF-101-01	1/4"	0.37	0.95	1.97	1.76	3.74	-	-	4.5	0.6
77CLF-102-01	3/8"	0.37	1.07	2.09	1.76	3.74	-	-	7.2	0.6
77CLF-103-01	1/2"	0.50	1.15	2.25	1.79	3.74	-	-	15.5	0.6
77CLF-104-01	3/4"	0.75	1.32	2.65	2.00	4.88	-	-	35.6	1.1
77CLF-105-01	1"	1.00	1.53	3.07	2.19	4.88	-	-	68.1	1.8
77CLF-106-01	1-1/4"	1.25	2.04	4.08	3.13	7.06	-	-	125.0	4.4
77CLF-107-01	1-1/2"	1.50	2.12	4.23	3.29	7.06	-	-	177.0	4.6
77CLF-108-01	2"	2.00	2.43	4.85	3.83	7.06	-	-	389.0	7.9
77CLF-109-01	2-1/2"	2.50	3.12	6.37	4.51	8.06			503.0	16.2
SOLDER										
77CLF-202-01	3/8"	0.37	1.30	2.21	1.76	3.74	0.41	0.50	7.2	0.6
77CLF-203-01	1/2"	0.50	1.41	2.56	1.76	3.74	0.50	0.63	15.5	0.6
77CLF-204-01	3/4"	0.75	1.64	3.03	2.00	4.88	0.75	0.88	35.6	1.0
77CLF-205-01	1"	1.00	1.92	3.61	2.19	4.88	0.90	1.13	68.1	1.6
77CLF-206-01	1-1/4"	1.25	2.36	4.44	3.13	7.06	0.97	1.38	125.0	3.9
77CLF-207-01	1-1/2"	1.50	2.63	4.89	3.29	7.06	1.09	1.63	177.0	4.3
77CLF-208-01	2"	2.00	3.17	6.06	3.83	7.06	1.34	2.13	389.0	7.6
77CLF-209-01	2-1/2"	2.50	3.77	7.14	4.51	8.06	1.43	2.63	503.0	15.9

*** *Weights based on Standard Configuration*

Apollo Valves, Manufactured by **Conbraco Industries, Inc.**
701 Matthews Mint-Hill Road, Matthews, NC 28105 USA
www.**apollovalves**.com | (704) 841-6000

This specification is provided for reference only. Conbraco Industries Inc. reserves the right to change any portion of this specification without notice and without incurring obligation to make such changes to Conbraco products previously or subsequently sold. Please visit our website @ www.apollovalves.com for the most current information.

AALBERTS INDUSTRIES

RUPERT

PLUMBING AND HEATING

PIPE FABRICATION

TANK VENT

REFERENCE DRAWING 140705-001-PI-03-400002.

MODEL # 4006-CR-6"

Free Vents
Model 4000 & 4100

The Enardo Models 4000 and 4100 are designed to be used on tanks containing non-volatile liquids. Enardo Free Vents offer efficient flow capacity to protect the tank from positive or negative overpressure. They allow vapors to flow freely in and out of the storage tank.

The 4000 and 4100 are designed to protect against rain, dirt, insects and other foreign matter from entering the vent.

Available in aluminum, carbon steel and stainless steel.

Approved Equal to turn-down vent.

Model 4000

Model 4100

Features and Benefits

- Enardo Free Vents are built of corrrosion resistant materials. A wire mesh screen prevents foreign matter from entering the tank or pipe opening.
- Convient 150 lb. flange connections for quick and easy installation
- As with all Enardo products, every Enardo Free Vent is factory inspected to meet all critical requirements and special needs.
- Rugged forged design provides years of trouble free service life.
- Available in API, ANSI, DIN and JIS flanges.

Vent Flange Sizes

Model Numbers	Sizes Available mm (In.)
Series 4000 & Series 4100	50 (2), 80 (3), 100 (4), 150 (6), 200 (8), 250 (10), and 300 (12)

Materials of Construction

Materials Available
Aluminum, Carbon Steel, 304 Stainless Steel, 316 Stainless Steel, Special

ENARDO Vents

Free Vents
Model 4000 & 4100

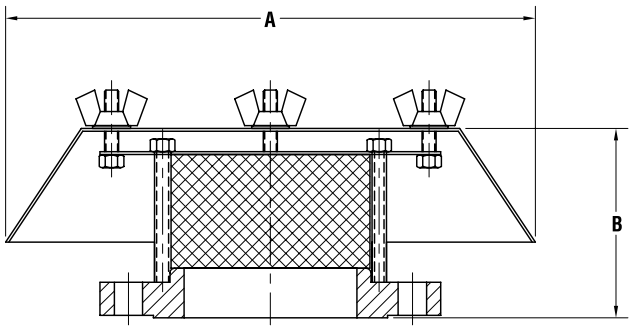

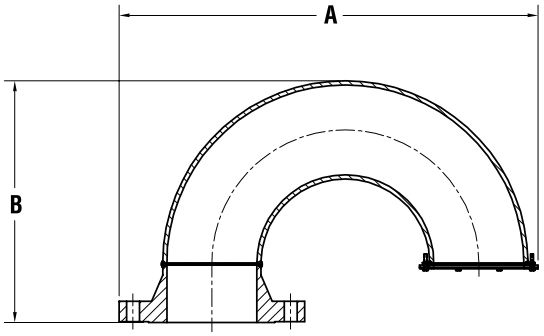

Model 4000 Dimensions and Weights

Model	150 Lb. Flange Size in. (mm)	A Width in. (mm)	B Height in. (mm)	Approx. Ship. Wt. lb. (kg)
4000	2 (50)	9 (228.6)	3-1/4 (82.5)	11 (5)
4000	3 (80)	9 (228.6)	3-1/4 (82.5)	14 (6.4)
4000	4 (100)	16-1/2 (419.1)	5 (127)	18 (8.2)
4000	6 (150)	16-1/2 (419.1)	5 (127)	28 (12.7)
4000	8 (200)	24-1/2 (662.3)	6-9/16 (166.7)	42 (19)
4000	10 (250)	24-1/2 (662.3)	6-9/16 (166.7)	60 (27.3)
4000	12 (300)	24-1/2 (662.3)	6-9/16 (166.7)	95 (43.2)

Larger sizes are available on special order.

Model 4100 Dimensions and Weights

Model	150 Lb. Flange Size in. (mm)	A Width in. (mm)	B Height in. (mm)	Approx. Ship. Wt. lb. (kg)
4100	2 (50)	11 (279.4)	6 (169.9)	8 (3.6)
4100	3 (80)	15-1/4 (387.4)	9 (228.6)	20 (9.1)
4100	4 (100)	19-1/2 (495.3)	11-1/4 (285.8)	35 (15.9)
4100	6 (150)	27-1/2 (698.5)	15-13/16 (401.6)	70 (31.8)
4100	8 (200)	35-3/4 (908.1)	20-5/16 (515.9)	135 (61.4)
4100	10 (250)	44 (1117.6)	24-3/8 (619.1)	235 (106.8)
4100	12 (300)	52-1/2 (1333.5)	27-7/8 (708)	350 (159)

Key to Enardo Series 4100 Free Vent Model Number

□□ □□ — □ □ — □

Series
40 = 4000
41 = 4100

Connection Size
2", 3", 4", 6", 8", 10" and 12" (50, 80, 100, 150, 200, 250, 300 mm)

Material
A. Aluminum
C. Carbon Steel
4. 304 Stainless Steel
6. 316 Stainless Steel
X. Special

Flange Type
F. Flat Face
R. Raised Face

Options
1. Protective Coating
2. Special Features

Example:

4 1 0 4 — C R — 1

Indicates a Free Vent with a 4" ANSI 150 lb. raised face flange connection made with carbon steel materials.

ENARDO • 4470 S. 70th East Ave. • Tulsa, OK 74145-4607 • 1-800-336-2736 U.S. and Canada • **www.enardo.com**

RUPERT

PLUMBING AND HEATING

PIPE FABRICATION

WYE STRAINER

"Y" Strainers

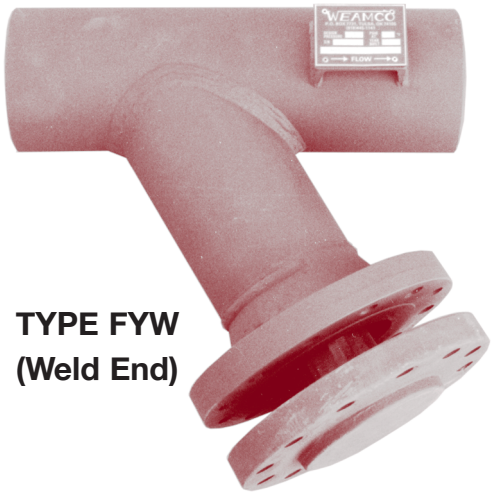

TYPE FYW
(Weld End)

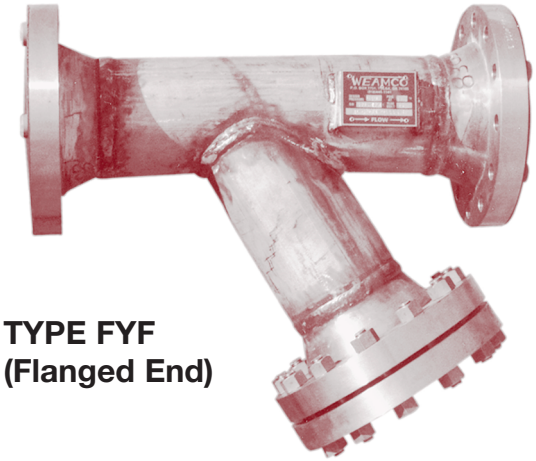

TYPE FYF
(Flanged End)

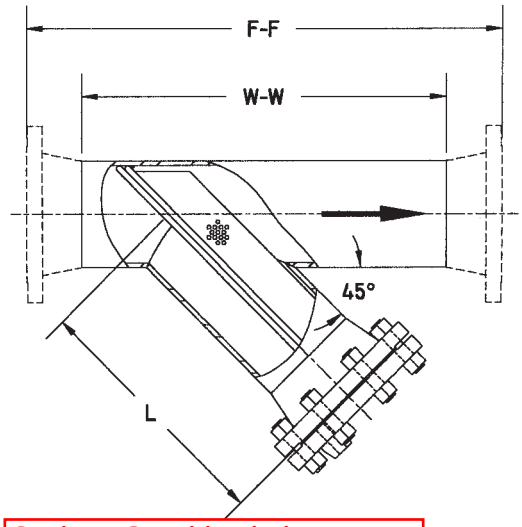

Carbon Steel body is approved equal to bronze body

SIZE	O.D.	TYPE FYW W-W	TYPE FYF F-F	L	BLOWDOWN (NPT)
4	4 1/2	18 1/2	26	12	3/4
6	6 5/8	20 1/4	30	16	3/4
8	8 5/8	26	37	20	1
10	10 3/4	33 1/2	46	23	1
12	12 3/4	38 1/4	51	26	1 1/2
14	14	42 1/2	56	29	1 1/2
16	16	47 1/2	62	32	1 1/2
18	18	53	68	36	1 1/2
20	20	57 1/2	73	39	2
24	24	63 1/2	80	43	2

Larger sizes on application

Dimensions are in inches.

WEAMCO "Y" Strainers can be fabricated from any commercially available pipe including carbon steel, low and intermediate alloy steels and stainless steel. The F-F dimensions shown for the Type FYF Strainer is applicable for any flange rating or facing 150# ANSI thru 300# ANSI. Higher pressures on application. Special Dimensions available to match your piping requirements.
Std. Design ASME/ANSI B31.4

INFORMATION REQUIRED

1. Quantity
2. Line Size
3. Weamco type
4. Flange Rating and Face
5. Housing material *
6. Housing Pipe Schedule
7. Basket material *
8. Mesh liner if required
9. Additional Features

*Carbon Steel is standard. Other materials are available.

EXAMPLE: 2 – 6" 300# RF WEAMCO type FYW, C.S. housing,
Std. Wt. 304 SS basket, 1" NPT blowdown, 300# R.F.

Standard Basket – Perforated 1/8" Diameter holes on 3/16" Centers

(Other Patterns, wire mesh and liners available,
see WEAMCO Bulletin AC 112 or Consult Factory)

WEAMCO METRIC
(918) 445-1141
(800) 331-3790
Fax: (918) 445-4617
sales@weamco.com
www.weamco.com

SDU Series, DIN Rail AC UPS

The SDU DIN Rail UPS combines an industry leading compact design with a wide operation temperature range and unique installation options. The SDU series provides economical protection from damaging impulses and power interruptions. These units include easy to wire screw terminations for critical devices needing battery back up such as computer based control systems.

E179213

Applications

- Programmable Logic Controllers
- Factory Automation
- Robotics
- Conveying Equipment
- Computer-based Control Systems

Features

- Lightweight, compact industrial design
- Wide operation temperature range (0ºC to 50ºC)
- Cold start capability
- Phone/dataline surge protection
- Software and cable included for easy installation
- Simulated sinewave output
- RS232 communication port
- USB communication port (optional)
- Form C dry contact relay (optional)
- Panel/wall mounting brackets (optional)
- Remote turn-on and shut-off capabilities
- Two year limited warranty

Certifications and Compliances

120V Models

- c UL us UL Recognized Component, UPS Equipment
  - UL 60950-1/CSA C22.2 No. 60950-1
  - Suitable for UL 508, CSA C22.2 No. 107.1 Ind. Control Equipment Applications with no derating
    - Overvoltage Cat III, Pollution Degree III

230V Models

- CE
  - EN62040-1-1

Related Products

- Portable MCR Power Conditioners
- STV Surge Protective Devices
- SDN DIN Rail Power Supplies
- STFV Plus Active Tracking® Filters

Selection Table

Capacity (VA/W)	Catalog Number	Volts, Frequency In/Out	Typical Back–up Time (minutes) *	Input/Output Connections	Approx. Ship Weight – lbs (kg)
500/300	**SDU 500**	120 Vac, 50/60 Hz	4	IP20 touch proof, screw terminals. Wire range: 10 ~ 24 AWG.	10.7 (4.70)
850/510	**SDU 850**		2		11.4 (5.00)
500/300	**SDU 500–5**	230 Vac, 50/60 Hz	4		11.5 (5.20)
850/510	**SDU 850–5**		2		11.9 (5.40)

* At full load.

SDU Accessories

Catalog Number	Description	Approx. Ship Weight – lbs (kg)
RELAYCARD–SDU	Dry contact I/O relay box, IP20 touch proof screw terminals, wire size range 12~22 AWG (IEC 2.5mm); N.O./N.C. form "C" contact. Relay contact signal for "On Battery", "Low Battery" and "UPS Shutdown".	1.0 (0.45)
UPSMON–USB	RS232 to USB adapter cable	1.0 (0.45)
SDU–PMBRK	Mounting brackets to secure UPS to wall, back of panel or enclosure.	1.0 (0.45)

Contact **Technical Services** at **(800) 377-4384** with any questions.
Visit our website at www.solahd.com.

Specifications

Catalog Number	SDU 500	SDU 850	SDU 500–5	SDU 850–5
Capacity (VA/Watts)	500/300	850/510	500/300	850/510
Load Power Factor	0.6			
Dimensions – inches (mm)				
Unit (H x W x D) – in. (mm)	4.88 x 11.1 x 4.55 (124.0 x 281.0 x 116.0)			
Weight – lbs (kg)	10.7 (4.70)	11.4 (5.00)	11.5 (5.20)	11.9 (5.40)
Input Parameters				
Voltage	120 V (+10%, -20%)		230 V (+/- 20%)	
Frequency	50 +/- 5 Hz or 60 Hz +/- 6 Hz (auto sensing)			
Output AC Parameters				
Voltage (Battery Mode)	Step sinewave			
	+/- 5%			
Frequency (On Battery)	50 or 60 Hz			
	+/- 0.3 Hz			
Overload Protection	UPS automatic shutdown if overload exceeds 105% of nominal at 20 seconds, 120% at 10 seconds, 130% at 3 seconds			
Short Circuit	UPS output cut off immediately			
Battery Parameters				
Battery Type	Sealed, non-spillable, maintenance-free lead acid batteries			
Transfer Time	4 - 6 ms typical			
Back–up Time * (minutes)	4.5/18	2.5/10	4.5/18	2.5/10
Recharge Time	8 hours to 90% capacity after full discharge			
Environmental				
Operating Temperature	0°C to 50°C			
Storage Temperature	-15°C to 60°C			
Relative Humidity	1% to 95%, non-condensing			
Ambient Operation	1-95% humidity non-condensing, 0-50°C up to 5,000 ft. (1500m)			
Audible Noise	< 40dBA (1 meter from surface)			
Standards				
EMC	FCC Part 15, Subpart B, Class A; EMC: EN50091-2, EN61000-3-2, EN61000-3-3, IEC60801-2, IEC60801-3, IEC60801-4, IEC61000-2-2			
Elevation	5000 ft. without derating			
Shock & Vibration	According to the International Safe Transit Association standard ISTA 2A.			
Mounting	To be mounted on DIN TS35/7.5 or TS35/15 rail system. Chassis mounting permissible via optional brackets. Unit handles normal shock and vibration of industrial use and transportation without coming off rail.			

* At full load/half load.

SOLA HD

Uninterruptible Power Systems

SDU Series
500, 850, 500-5, 850-5

Instruction Manual

While every precaution has been taken to ensure accuracy and completeness in this manual, SolaHD assumes no responsibility, and disclaims all liability for damages resulting from use of this information or for any errors or omissions.

©2008 SolaHD. All rights reserved throughout the world. Specifications are subject to change without notice.

®SolaHD name and logo are registered trademarks of EGS Electrical Group, LLC. All names referred to are trademarks or registered trademarks of their respective owners.

Aunque se han tomado todas las precauciones para asegurar la exactitud y acuciosidad de este manual, SolaHD no asume responsabilidad alguna, y rechaza toda responsabilidad por daños que pudieran resultar debido al uso de esta información o por cualquier error u omisión.

©2008 SolaHD. Todos los derechos reservados en el mundo entero. Las especificaciones pueden cambiar sin previo aviso.

El nombre y el logotipo de ®SolaHD son marcas registradas de EGS Electrical Group, LLC. Todos los nombre mencionados son marcas comerciales o registradas de sus respectivos titulares.

Bien que toutes les précautions aient été prises afin d'assurer que les renseignements du présent manuel sont complets et exacts, Sola/Hevi-Duty n'assume aucune responsabilité, et décline toute responsabilité pour des dommages découlant de l'utilisation de cette information ou de toute erreur ou omission.

©2008 SolaHD Tous droits réservés mondialement. Les caractéristiques techniques sont sujettes à modification sans préavis.

Le nom et le logo ®SolaHD sont des marques déposées de EGS Electrical Group, LLC. Tous les noms évoqués sont des marques de commerce ou des marques déposées de leurs propriétaires respectifs.

Table of Contents/Índice/Table des matières

English

1.0 Important Safety Instructions 4–5
2.0 Warnings Defined 5
3.0 Introduction 6
4.0 System Description 7–8
5.0 Installation Instructions 9
6.0 Operating Instructions 9–10
7.0 Battery Overload Alarms 10
8.0 PIN-Out Configuration for DB9 Connector 11
9.0 Battery Backup Times 11
10.0 Troubleshooting 12
11.0 Storage 12
12.0 Specifications 13
13.0 Conditions for Safe Use of SDU 500 & 850 14–15
14.0 Product Registration & Warranty Information 15

Español

1.0 Instrucciones importantes de seguridad 16–17
2.0 Definición de advertencias 17
3.0 Introducción 18
4.0 Descripción de sistema 19–20
5.0 Instrucciones de instalación 21
6.0 Instrucciones de operación 21–22
7.0 Tiempo de autonomía de la batería (Alarma) 23
8.0 Configuración de disposición de las clavijas del conector DB9 23
9.0 Tiempo de reserva de la batería 24
10.0 Almacenamiento 24
11.0 Solución de problemas 25
12.0 Especificaciones 26
13.0 Registro del Producto y Información sobre la Garantía 27

Français

1.0 Instructions importantes sur la sécurité 28–29
2.0 Définition des avertissements 29
3.0 Introduction 30
4.0 Description du système 31–32
5.0 Instructions d'installation 33
6.0 Instructions d'utilisation 33–34
7.0 Alarmes de la batterie de secours 35
8.0 Configuration des broches de sortie du connecteur DB9 35
9.0 Temps de secours de batterie 36
10.0 Entreposage 36
11.0 Dépannage 37
12.0 Spécifications 38
13.0 Enregistrement du produit et information sur la garantie 39

1.0 Important Safety Instructions

This manual contains important safety instructions that should be followed during the installation of the Uninterruptible Power System (UPS). Please read all safety, installation, and operating instructions before attempting to install or operate the UPS. Please adhere to all warnings on the unit and in this manual during installation and operation.

The UPS is designed for Industrial or Commercial use and can be installed and operated by individuals without previous training.

1.1 Safety Precautions—Warnings

- To prevent the risk of fire or electric shock, install the UPS in a temperature and humidity controlled ventilated enclosure, free of conductive contaminants, moisture, flammable liquids, gases, and corrosive substances.

- Operate the UPS only from a properly grounded (earthed) ac supply.
- To reduce the risk of electric shock, do not remove the cover, as it has no user-serviceable parts inside. Some components are live, even when ac power is disconnected. For service, contact a qualified technician.

Although your UPS has been designed and manufactured to assure personal safety, improper use can result in electrical shock or fire. To ensure safety, please observe the following rules:

- Turn OFF UPS and disconnect the ac supply before cleaning. Do not use liquid or aerosol cleaners. A dry cloth is recommended to remove dust from the surface of your UPS.
- Do not install or operate the UPS in or near water.
- Do not place the UPS on an unstable cart, stand, or table.
- Do not place the UPS under direct sunlight or close to heat-emitting sources.
- To allow proper ventilation of the UPS, do not block or cover the top and bottom sides of the unit.
- Never block or insert any objects into the ventilation holes or other openings of the UPS. Keep all vents free of dust accumulation that could restrict airflow.

- Follow all warnings and instructions marked on the UPS. Do not attempt to service the UPS, as it has no user-serviceable parts inside. Refer all repairs to qualified service personnel.
- Do not dispose of batteries in a fire; they may explode.
- Do not open or damage the battery. Released electrolyte is harmful to the skin and eyes and may be toxic.

If your UPS demonstrates any of the following conditions, turn OFF the UPS, disconnect the ac supply and contact your local distributor, SolaHD representative or SolaHD Technical Support at 1-800-377-4384.

- Liquid has been spilled on the UPS.
- The circuit breaker opens frequently.
- The UPS does not operate in accordance with the user manual.

1.2 Conditions of Use

Your UPS provides conditioned power to connected equipment. The maximum load must not exceed that shown on UPS rating label. If uncertain, contact your distributor or SolaHD Technical Support at 1-800-377-4384.

U.S. Only: For Conditions of Acceptability in accordance with UL 508A, see “13.0 Conditions for Safe Use of SDU 500 & 850”.

2.0 Warnings Defined

⚠ DANGER **Danger:** Indicates an imminently hazardous situation that, if not avoided, will result in death or serious injury. This signal word is limited to the most extreme situations.

⚠ WARNING **Warning:** Indicates a potentially hazardous situation that, if not avoided, could result in death or serious injury.

⚠ CAUTION **Caution:** Indicates a potentially hazardous situation that, if not avoided, may result in minor or moderate injury. It may also be used to alert against unsafe practices.

3.0 Introduction

Congratulations on your choice of the SDU Uninterruptible Power System (UPS). The SDU is a compact, “Off-Line” DIN rail mountable UPS, which provides conditioned power to sensitive electronic equipment. It supplies connected equipment with stepped approximation to sinewave power to simulate the power generated by the utility.

The SDU is a powerful, microprocessor-controlled UPS. Input voltage range is 80% to 110% (ideal protection for the critical connected loads). Battery charging occurs automatically when ac power is applied, no need to switch ON the UPS. When power fails, the UPS can be automatically turned OFF, as long as the connected loads are not operating to save the battery energy. The SDU also includes an automatic self-test feature to test the UPS function and battery. If the battery is no longer useful, the unit will sound an alarm and an LED indicator will illuminate.

NOTE: This equipment has been tested and found to comply with the limits for a Class A digital device, pursuant to Part 15 of the FCC Rules. These limits are designed to provide reasonable protection against harmful interference in an industrial installation. This equipment uses, generates and can radiate radio frequency energy and, if not installed and used in accordance with the instructions, may cause harmful interference with radio communications. However, there is no guarantee that interference will not occur in a particular installation. If this equipment does cause harmful interference to radio or television reception, which can be determined by turning the equipment OFF and ON, the user is encouraged to try to correct the interference by one or more of the following measures:

- Reorient or relocate the receiving antenna.
- Increase the separation between the UPS and the receiver.
- Connect the UPS into a circuit different from that which the receiver is connected.
- Consult the dealer or an experienced radio/TV technician for help.

4.0 System Description

4.1 Front Panel

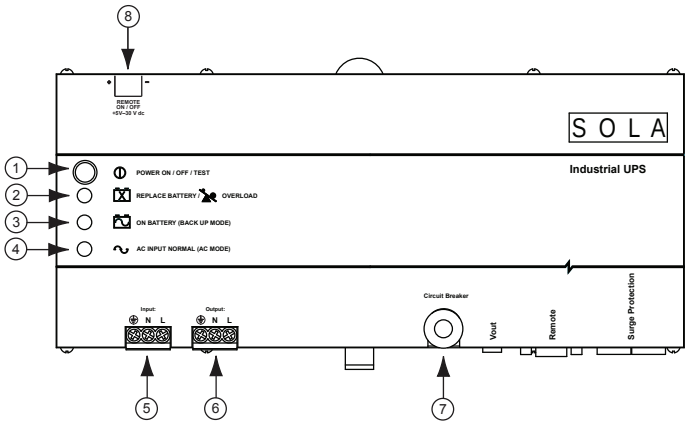

1. **Power ON/OFF/Test Button:** Press the button for more than one second to turn the UPS ON. Press the button for less than one second to activate the self-testing. Press for more than five seconds to turn OFF.
2. **Battery Warning/Overload Indicator (Red LED):** The LED flashes when the battery needs to be recharged and tested. The LED will illuminate when the unit is subjected to an overload condition. If the unit shuts down due to overload, the LED and alarm will continue for two minutes.
3. **ON Battery Indicator (Yellow LED)**: The LED illuminates when the UPS is supplying battery power to the loads.
4. **Ac Input Normal Indicator (Green LED):** The LED illuminates when the line input voltage is normal.
5. **IP20-rated Input Screw Terminals** (see table below)
6. **IP20-rated Output Screw Terminals** (see table below)

Screw	M3.0; Current rating = 30 A, Ac 300 V
Insulation Withstands Volts	Ac 2000 V min.
PCB Hole Diameter	1.8 mm, wire strip length = 8 mm
Wire Range	10–24 AWG
Screw Torque	5.5 lb.-in.

7. **Input Circuit Breaker:** Protection from ac overload and short circuit.
8. **Remote ON/OFF:** The remote switch provides the same functions as the front panel switch including ON/OFF/Test functions with Green Mode enabled or disabled.

4.2 Bottom Panel

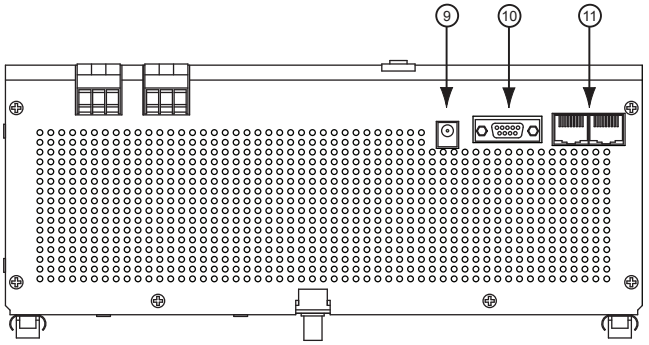

9. **V Output:** Output terminal providing 12 V power source to the optional relay card.
10. **Remote:** RS232 communication port; DB-9 connector.
11. **Tel/Surge Protection:** Data line surge protection for phones (UL497A).

4.3 What's Included

The SDU UPS is shipped with the following items:

- User manual
- UPSMON software CD

  NOTE: Monitoring/diagnostic software is included on the UPSMON CD. The software is compatible with Windows NT and Windows 2000 (including XP operating systems).
- UPSMON DB-9 serial cable
- RJ-11 cord
- Electrical shock warning label

4.4 Accessories

- **UPSMON-USB:** RS232 to USB adapter cable
- **RELAYCARD-SDU:** Dry contact relay box
- **SDU-PMBRK:** Mounting brackets to secure the UPS to the wall, back of the panel or enclosure

5.0 Installation Instructions

1. **Placement:** Install the UPS in a protected area with adequate airflow and free of excessive dust. Do not operate the UPS outdoors.
2. **Connect to Utility:** To power up the UPS, connect the ac input connector to the utility power.
3. **Charge the Battery:** The UPS charges its battery whenever it is connected to utility power. For best results, charge the battery for four hours during initial use.
4. **Connect the Loads:** Connect the loads to the output hardwire connector.
5. **Apply the Electrical Shock Warning Label:** Apply the electrical shock warning label to the panel, in a way that is clearly visible to the user.

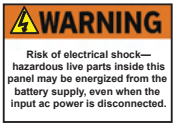

6.0 Operating Instructions

1. **Output Connector:** The output connector will provide protection from surges and power failures to the critical loads.
2. **Switch ON Green Mode Enabled:** After connecting the UPS to the utility power, press the ON button until you hear the first beep, then release the button immediately. The Green Mode is enabled, i.e. if a load less than forty watts (or no load) is connected and the UPS operates in the Backup Mode. The UPS will enter into the Green Mode status after three minutes of backup time; the green light will flash every three to five seconds and after a short period of time; and the unit will enter a “power save” status by shutting down to prevent deep discharge of the battery. To reactivate the unit, power the unit OFF then ON again or reapply utility power.
3. **Switch ON Green Mode Disabled:** After connecting the UPS to the utility power, press the ON button and keep pressing it until you hear two short beeps “Bi-Bip”, then release the button immediately. The Green Mode is now disabled. Any kind of load, whether smaller than forty watts or larger, will not affect the normal operation of the UPS under Ac or Battery Mode.
4. **Switch OFF:** To switch OFF the UPS, press and hold the Power ON/OFF/Test button until the “Ac Power Normal” LED or “ON Battery” LED turns OFF.

5. **Self-test:** Use the self-test to verify both the operation of the UPS and the condition of the battery. In normal utility power, push the Power ON/OFF/Test button for less than one second; the UPS will perform a self-test. During the self-test, the UPS runs in Backup Mode. If the UPS passes the self-test, it returns to “Ac Input Normal” operation.
6. **Remote ON/OFF:** To ensure the remote ON/OFF function, connect a remote push-button switch in series with 5–30 V dc voltage source to the ON/OFF terminal as shown below.

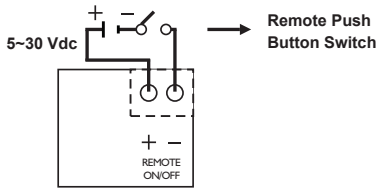

The remote switch provides the same functions as the front panel switch including ON/OFF/Test functions with Green Mode enabled or disabled. If the Green Mode is not needed, a remote toggle switch can be used.

7.0 Battery Overload Alarms

1. **ON Battery (slow beeping):** When in ON Battery Mode, the yellow LED illuminates and the UPS sounds an audible alarm. The alarm stops when the UPS returns to Ac Input Normal operation.
2. **Low Battery (rapid beeping):** In ON Battery Mode when the battery energy runs low, the UPS beeps rapidly until the UPS shuts down from battery exhaustion or returns to Ac Input Normal operation.
3. **Overload (continuous alarm):** When the UPS is overloaded (the connected loads exceed the maximum rated capacity), the UPS sounds a continuous alarm and LED to warn of an overload condition. Reduce the load to eliminate the overload.

8.0 PIN-Out Configuration for DB9 Connector

Female Connector PIN No.	RS-232 Signal	Open Collector Signal
1	---	---
2	TX	---
3	RD	Remote shutdown*
4	DTR (+12 V)	---
5	GND	GND
6	---	Ac failure
7	RTS (-12 V)	---
8	---	Battery low
9	TX	---

DTR = Data terminal ready

RTS = Request to send

RD = Transmitted data

GND = Signal Ground

TX = Received data

*When a remote shutdown signal is applied for one second, the UPS will shut down in three minutes.

9.0 Battery Backup Times

	SDU 500, SDU 500-5	SDU 850, SDU 850-5
VA/Watts	500/300	850/510
Battery	YUASA NP7-12	YUASA REW45-12
Load Level	Backup Time (Minutes)	Backup Time (Minutes)
10%	130	80
20%	55	37
30%	36	20
40%	23	13
50%	18	10
60%	13	7
70%	10	5
80%	9	4
90%	6	3
100%	5	2.5

10.0 Troubleshooting

Problem	Probable Cause	Required Action
UPS is not ON; LED will not light	UPS is OFF or the ON/OFF/Test button was not pushed for 1+ seconds	Press the ON/OFF/Test button for more than 2 seconds
	Battery voltage is less than 10 V	Recharge the UPS for at least 4 hours. If the unit still does not start, check the input fuse.
	Other failure	Call SolaHD Technical Support
	Load is less than 20 W in Backup Mode	Normal condition
UPS is always in Backup Mode	Loose ac input power connection	Tighten the ac power connection
	Circuit breaker trips	Reset the breaker
	Line voltage too high, too low, or blackout	Normal condition
	Other failure	Call SolaHD Technical Support
Backup time is too short	Battery is not fully charged	Recharge the UPS for at least 4 hours
	Other failure	Call SolaHD Technical Support
Continuous beep & LED overload indication	Overload condition	Remove the overload
Red LED is flashing	Battery failure	Recharge the UPS for at least 8 hours. Perform UPS self-test.

⚠ CAUTION **Do not attempt to open the UPS or replace the battery. Call SolaHD Technical Support for further instructions.**

11.0 Storage

11.1 Storage Conditions

Store the UPS covered and upright in a cool, dry location, with its battery fully charged. Before storing, charge the UPS for at least four hours. Remove any accessories in the accessory slot and disconnect any cables connected to the computer interface port to avoid unnecessary draining of the battery.

11.2 Extended Storage

During extended storage in environments where the ambient temperature is -15 to +30 °C (+5 to +86 °F), charge the UPS battery every six months.

During extended storage in environments where the ambient temperature is +30 to +45 °C (+86 to +113 °F), charge the UPS battery every three months.

12.0 Specifications

Description	Catalog Number			
	SDU 500	SDU 850	SDU 500-5	SDU 850-5
INPUT				
Capacity VA/Watts	500/300	850/510	500/300	850/510
Voltage (Single Phase)	120 V + 10%, -20%		230 V +/ -20%	
Frequency	50 or 60 Hz, +/ -10% (auto-sensing)			
OUTPUT				
Voltage (on battery)	Simulated sine wave			
	120 V +/-5%		230 V +/-5%	
Frequency (on battery)	50 or 60 Hz, +/-0.5% auto-sensing			
Transfer Time	<4 milliseconds			
PROTECTION				
Unit Input	Circuit breaker for overload and short circuit protection			
Overload Protection	UPS automatic shutdown if overload exceeds 105% of nominal at 20 s, 120% at 10 s, 130% at 3 s			
Short Circuit	UPS output cut off immediately			
BATTERY				
Type	Sealed, maintenance-free, lead acid batteries			
Typical Recharge Time (to 90% of full capacity)	8 hours			
Backup Time (at full load)	4 min.	2 min.	4 min.	2 min.
ALARM				
ON Battery	Slow beeping every 4 seconds			
Battery Low	Rapid beeping every second			
Overload	Continuous beeping sound			
ENVIRONMENT				
Ambient Operation	0–95% humidity, non-condensing. 50˚C up to 10,000 ft. (3000 m).			
Audible Noise	<40 dBA (1 m from surface)			
WEIGHT & DIMENSIONS				
Net Weight, lb. (kg)	10.7 (4.7)	11.4 (5.0)	11.5 (5.2)	11.9 (5.4)
H x W x D, in. (mm)	4.88 x 11.1 x 4.55 (124 x 281 x 116)			
SAFETY/APPROVALS				
	UL 1778 C-UL Recognized* for industrial applications in accordance with UL 508A without derating. Overvoltage Category 3, Pollution Degree 3. FCC Part 15, Subpart B, Class A.		CE Marked; LVD: EN62040-1-1; EMC: EN50091-2, EN61000-3-2, EN61000-3-3, IEC801-2, IEC801-3, IEC801-4, IEC1000-2-2	

*For Conditions of Acceptability in accordance with UL 508A, see “13.0 Conditions for Safe Use of SDU 500 & 850”.

13.0 Conditions for Safe Use of SDU 500 & 850

NOTE: Applicable for U.S. only.

Considerations shall be given to the following:

1. The equipment shall be installed in compliance with the enclosure, mounting, spacing, casualty, and segregation requirements of the ultimate application.
2. The equipment has been judged on the basis of the required spacings for use in Overvoltage Category III and Pollution Degree 3 and in the Second Edition of the Standard for Uniterruptible Power Supply Equipment, UL 1778, par. 23 and table 23.1, which would cover the component itself if submitted for unrestricted listing.
3. The suitability of grounding connection shall be determined in the end-use product.
4. The equipment is provided with means for permanent mounting, the suitability of assembly shall be determined in the end-use product.
5. Equipment is considered acceptable for use in a maximum ambient of 50°C.
6. The equipment inside live parts are energized from the battery supply even when the input ac power is disconnected.
7. For CNR investigation, total harmonic distortion of 44.8% and maximum single harmonic of 33.1%.
8. The equipment was investigated under 20 amperes branch circuit in accordance with the National Electrical Code, ANSI/NFPA 70, to reduce the risk of fire, connect only to a circuit provided with 20 amperes maximum branch circuit over current protection.
9. Use No. 18 AWG, 90°C copper wire and 9 lb.-in. Torque force when connecting to terminal block.
10. Polarity Identification in UPS unit for filed wiring terminals: Provided with label adjacent to the unit supply connections. See below for details.

Input			Output		
⏚	N	L	⏚	N	L

11. The following tests were additionally conducted at specified conditions as noted below, in accordance with the Standard for Industrial Control Equipment, UL 508A, 17th Edition.

    Temperature Test: Models SDU 850 and SDU 500 were mounted in an enclosure (150% of the dimensions of the device, overall 420 by 180 by 160 mm), in accordance with par. 42.6 of UL 508A. The suitability usage of industrial control equipment shall be considered in end application.

    Breakdown of Components Test: Model SDU 850 had been conducted through a 30-ampere non-time-delay fuse, in accordance with par. 57.5 of UL 508A.

12. **The products, Models SDU 850 and SDU 500 were evaluated based on Pollution Degree 3 and Overvoltage Category III criteria and a minimum end use ambient of 40°C, so that these devices do not have to be derated when installed within an industrial control panel.**

14.0 Product Registration & Warranty Information

14.1 Product Registration

To register your product for updates and information on service and support:

- Visit the Technical Support section of our Web site at: http://www.solahd.com/support/registration.htm
- Click on the Product Registration link and fill in the form. This will register your product with SolaHD.

14.2 Warranty Information

Please see “Terms and Conditions of Sale”.

1.0 Instrucciones importantes de seguridad

Este manual contiene instrucciones importantes de seguridad que deberán seguirse durante la instalación del Sistema de Energía Eléctrica Ininterrumpible (UPS). Por favor lea este manual completamente antes de intentar instalar u operar este UPS.

Lea todas las instrucciones de seguridad, instalación y operación antes de operar el UPS. Cumpla con todas las advertencias indicadas en la unidad y en este manual. Siga todas las instrucciones de operación y deuso.

Este equipo está diseñado para uso Industrial o Comercial. Este equipo puede ser instalado y operado por personas no capacitadas previamente para hacer estas funciones.

1.1 Precauciones de seguridad—Advertencia

- Para evitar el riesgo de incendio o choque eléctrico, instale el UPS en una habitación con temperatura y humedad controladas, libre de contaminantes conductivos, humedad, líquidos inflamables, gases y sustancias corrosivas.

- Opere el UPS únicamente desde una fuente de suministro de CA debidamente conectada a tierra (unida a tierra).
- Para reducir el riesgo de choque eléctrico, no retire la cubierta, ya que la unidad no contiene piezas que el usuario puede reemplazar o reparar. Algunos de los componentes tienen energía eléctrica, aún cuando la energía de CA está desconectada. Para obtener servicio, póngase en contacto con un técnico calificado.

Aunque su UPS ha sido diseñado y fabricado para garantizar la seguridad personal del usuario, el uso indebido del mismo puede resultar en un choque eléctrico o incendio. Para garantizar su seguridad, por favor observe las siguientes normas:

- Apague el UPS y desconecte el suministro de energía de CA antes de limpiarlo. No utilice limpiadores líquidos o aerosol. Se recomienda utilizar un trapo seco para quitar el polvo de la superfi cie de su UPS.
- No instale ni opere su UPS en o cerca del agua.
- No coloque el UPS en un carro, soporte o mesa inestable.
- No coloque el UPS bajo la luz directa del sol o cerca de fuentes emisoras de calor.

- Para permitir una ventilación adecuada del UPS, no bloquee ni cubra los lados superior e inferior de la unidad.
- Nunca bloquee ni inserte ningún objeto en los orifi cios de ventilación u otras aberturas del UPS. Mantenga todas las aberturas de ventilación libre de acumulaciones de polvo que puedan restringir el fl ujo del aire.
- Siga todas las advertencias e instrucciones marcadas en el UPS. No intente darle servicio al UPS, ya que este no contiene ninguna pieza que usted pueda reparar o reemplazar. Refi era todas las reparaciones al personal de servicio técnico califi cado.
- No deseche la batería o las baterías en el fuego. La batería podría explotar.
- No abra ni dañe la batería. El electrolito derramado es peligroso para la piel y los ojos. Podría ser tóxico.

Si su UPS exhibe cualquiera de las siguientes condiciones, apague el UPS, desconecte el suministro de energía de CA y póngase en contacto con su distribuidor local, representante de SolaHD o Servicios Técnicos de SolaHD.

- Se ha derramado o vertido líquido en el UPS.
- El cortacircuito se abre frecuentemente.
- El UPS no funciona de acuerdo con el manual del usuario.

1.2 Condiciones de Uso

Su UPS le proporciona energía eléctrica acondicionada al equipo conectado. La carga máxima no deberá exceder la capacidad indicada en la etiqueta o placa del UPS. Si no está seguro, póngase en contacto con su distribuidor o SolaHD.

2.0 Definición de advertencias

⚠ PELIGRO — **Peligro:** Indica una situación de riesgo inminente que, si no se evita, causará lesiones graves o letales. Esta palabra de señal se utilizará sólo en las situaciones más extremas.

⚠ ADVERTENCIA — **Advertencia:** Indica una situación potencialmente riesgosa, que si no se evita, podría causar lesiones graves o letales.

⚠ PRECAUCIÓN — **Precaución:** Indica una situación potencialmente riesgosa, que si no se evita, podría causar lesiones leves o moderadas. También se puede utilizar para indicar prácticas poco seguras.

3.0 Introducción

Felicitaciones por su elección de un Sistema de Energía Eléctrica Ininterrumpible (UPS) de la Serie SDU Sola. Éste proporciona energía eléctrica acondicionada a los equipos electrónicos sensibles.

La Serie SDU es un UPS compacto “Fuera de línea”, montable en Riel DIN. El mismo le proporciona al equipo conectado una aproximación escalonada de alimentación eléctrica sinusoidal para simular la energía generada por la fuente pública.

La unidad SDU es un potente UPS controlado por microprocesador. La gama del voltaje de entrada es de un 80% a un 110%, una protección ideal para las cargas críticas conectadas. La recarga de la batería se realiza automáticamente cuando se conecta el suministro de energía de CA, no es necesario encender (poner en ON) el UPS. Cuando se corta la energía eléctrica, puede apagarse automáticamente el UPS si ninguna de las cargas conectadas está funcionando, para conservar la energía de la batería. La unidad SDU incluye una función de autocomprobación automática que verifi ca el funcionamiento del UPS y la batería.

Si se detecta que la batería ya no funciona, la unidad se pone en alarma y un indicador LED se ilumina.

NOTA: Este equipo ha sido sometido a prueba y se ha determinado que cumple con los límites para un dispositivo digital de Clase A, según la parte 15 de las Normas de la FCC. Estos límites están diseñados para proporcionar una protección razonable contra las interferencias dañinas en una instalación industrial. Este equipo utiliza, genera y puede emitir energía de radiofrecuencia y, si no se instala y se utiliza de acuerdo con las instrucciones, es posible que pueda causar interferencia dañina con las comunicaciones por radio. Sin embargo, no hay ninguna garantía de que la interferencia no se producirá en una instalación en particular. Si este equipo produce interferencia dañina en la recepción de las señales de radio o televisión, lo cual puede determinarse apagando y encendiendo el equipo, el usuario debe tratar de corregir la interferencia mediante una o más de las siguientes medidas:

- Vuelva a orientar o ubicar la antena de recepción.
- Aumente la separación entre el UPS y el receptor.
- Conecte el UPS en un circuito diferente al que esté conectado el receptor.
- Consulte con su distribuidor o un técnico especializado en radio/televisión para obtener ayuda.

4.0 Descripción de sistema

4.1 Panel frontal

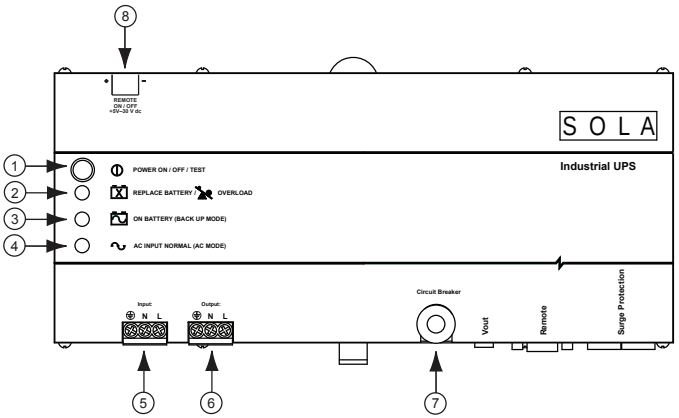

1. **Botón "POWER ON/OFF/TEST" (Encendido/Apagado/Prueba):** Presione el botón durante más de 1 segundo para encender el UPS. Presione el botón durante menos de 1 segundo para activar la autocomprobación del UPS. Presione el botón durante más de 5 segundos para apagar.
2. **Indicador (LED ROJO) "BATTERY WARNING/OVERLOAD" (Advertencia de Batería/Sobrecarga):** El LED destella cuando es necesario recargar y comprobar la batería del UPS. El LED se enciende cuando la unidad está en condición de sobrecarga. Si la unidad se apaga debido a una condición de sobrecarga, el LED y la alarma permanecerán activados durante 2 minutos.
3. **Indicador (LED AMARILLO) "ON-BATTERY" (En Batería):** El LED se enciendecuando el UPS suministra energía de la batería a las cargas.
4. **Indicador (LED VERDE) "AC INPUT NORMAL" (Entrada de CA Normal):** El LED se enciende cuando el voltaje de entrada de línea es normal.
5. Terminales de entrada con tornillos de capacidad IP20 (vea la tabla abajo)
6. Terminales de salida con tornillos de capacidad IP20 (vea la tabla abajo)

Tornillo	M3.0, capacidad de corriente = 30 Amp CA 300V
Voltaje no disruptivo del aislamiento	CA 2000 V mín.
Diámetro de agujero PCB	1.8 mm, longitud de alambre pelado = 8 mm
Gama de tamaños de alambre	10 a 24 AWG
Par torsor para los tornillos	5.5 libras - pulgada

7. **Cortacircuito de entrada:** Protección contra sobrecargas de CA y cortocircuitos.
8. **Encendido/Apagado Remoto:** El interruptor remoto proporciona las mismas funciones que el interruptor en el panel frontal, incluyendo las funciones ON/OFF/TEST con la modalidad verde habilitada o no habilitada.

4.2 Panel inferior

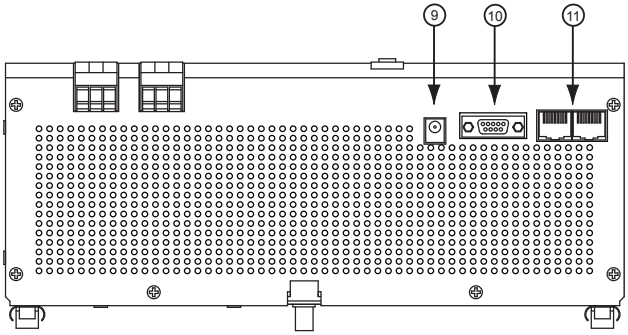

9. **V Out (salida de voltaje):** Terminal de salida que proporciona un suministro de energía de 12 voltios a la tarjeta opcional de relés.
10. **Remoto:** Puerto de comunicación RS-232 con conector DB9.
11. **Protección contra sobretensiones en la línea de teléfono:** Protección contra sobretensiones para línea de datos telefónica (UL497A).

4.3 Qué se incluye

El UPS SDU se envía con los siguientes artículos:

• Manual del usuario del SDU

• CD con el software UPSMON

NOTA: Junto con la unidad se suministran un CD UPSMON que incluye un software de monitoreo y diagnóstico. El programa es compatible con Windows NT y Windows 2000 (incluyendo el Protocolo XP).

• Cable serie UPSMON

• Cordón RJ-11

• Etiqueta de advertencia de descarga eléctrica

4.4 Accesorios

• **UPSMON-USB:** Cable de adaptación de RS232 a USB

• **RELAYCARD-SDU:** Caja de relés de contacto seco

• **SDU-PMBRK:** Soportes de montaje para sujetar el UPS en la pared, detrás de un panel o en un recinto

5.0 Instrucciones de instalación

1. **Ubicación:** Instale el UPS en una zona protegida con un fl ujo de aire adecuado y libre de polvo excesivo. No opere el UPS en el exterior.
2. **Conecte el UPS a la fuente eléctrica pública:** Acople el conector de entrada de CA a la fuente de energía eléctrica pública para energizar el UPS.
3. **Cargue la batería:** El UPS recarga su batería siempre que está conectado a la fuente de energía pública. Para obtener los mejores resultados, cargue la batería durante 4 horas en el uso inicial de la unidad.
4. **Conecte las cargas:** Acople las cargas al conector cableado de salida.
5. **Aplicar la etiqueta de advertencia de descarga eléctrica:** Aplicar la etiqueta de advertencia de descarga eléctrica al grupo de una manera que sea claramente visible para el usuario.

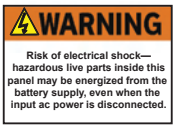

6.0 Instrucciones de operación

1. **Conector de salida:** El Conector de salida proporcionará protección contra sobretensiones e interrupciones del suministro eléctrico a las cargas críticas suyas.
2. **Encendido con el 'Modo verde' habilitado:** Luego de conectar el UPS (Sistema de Energía Eléctrica Ininterrumpible) al suministro de energía pública, presione el botón de encendido (ON) hasta que escuche el primer pitido después de transcurridos menos de 3 segundos, y luego suéltelo de inmediato. El modo Verde se encuentra habilitado, por ejemplo, si una carga inferior a 40 vatios (o ninguna carga) está conectada y el UPS funciona en el modo de respaldo, el UPS pasará al estado de modo verde luego de transcurridos 3 minutos del tiempo de respaldo; la luz verde destellará cada 3 a 5 segundos y tras un corto período de tiempo, la unidad pasará al modo de 'ahorro de energía' y se desactivará para impedir que la batería se descargue demasiado. Para reactivar la unidad, apague y encienda la unidad, o reconecte el suministro de energía pública al UPS y la energía se encenderá nuevamente.

3. **Encendido con el 'Modo verde' inhabilitado:** Luego de conectar el UPS (Sistema de Energía Eléctrica Ininterrumpible) al suministro de energía pública, presione el botón de encendido (ON) y continúe presionándolo hasta que escuche dos pitidos cortos; luego suéltelo de inmediato y el modo verde quedará inhabilitado. Ningún tipo de carga, ya sea menor o mayor que 40 vatios, afectará de manera alguna el funcionamiento normal del UPS bajo el modo batería o CA.

4. **Apagado:** Para apagar el UPS, presione y no suelte el botón Power ON/OFF/ Test (Encendido / Apagado /Prueba) hasta que se apague el LED "AC INPUT NORMAL" (Entrada de CA Normal) o el LED "ON BATTERY" (En Batería).

5. **Autocomprobación:** Utilice la autocomprobación para verifi car el funcionamiento del UPS y la condición de la batería.Con el suministro de energía pública, presione el botón Power ON/OFF/Test (Encendido/Apagado/Prueba) durante menos de 1 segundo y el UPS realizará la función de autocomprobación. Durante la autocomprobación, el UPS funciona en la modalidad de respaldo (en batería). Si el UPS pasa la autocomprobación, éste regresa al funcionamiento de Entrada de CA Normal ("AC INPUT NORMAL").

6. **Encendido/Apagado Remoto:** Para asegurar la función CON./DESC. alejada, conecte un interruptor de botón alejado en serie con fuente del voltaje de 5~30 VDC con el terminal con./desc. según lo demostrado en la figura siguiente.

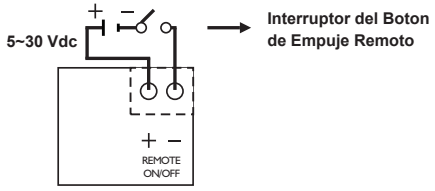

El interruptor remoto proporciona las mismas funciones que el interruptor en el panel frontal, incluyendo las funciones ON/OFF/TEST con la modalidad verde habilitada o no habilitada. Si no necesita el modo verde, se puede usar uninterruptor de palanca.

7.0 Tiempo de autonomía de la batería (Alarma)

1. **"EN BATERÍA" (pitidos lentos):** Cuando la unidad está en la modalidad EN BATERÍA, el LED AMARILLO se enciende y el UPS emite una alarma audible. La alarma cesa cuando el UPS regresa al funcionamiento con ENTRADA DE CA NORMAL (AC INPUT NORMAL).
2. **"BATERÍA BAJA" (pitidos rápidos):** En la modalidad EN BATERÍA, cuando la carga de energía de la batería está baja, el UPS emite pitidos rápidos hasta que el UPS se apaga porque la batería ya no tiene carga o el UPS regresa al funcionamiento con ENTRADA DE CA NORMAL (AC INPUT NORMAL).
3. **"SOBRECARGA" (alarma continua):** Cuando el UPS está en condición de sobrecarga (las cargas conectadas ex-ceden la capacidad nominal máxima de la unidad), el UPS emite un sonido de alarma continuo y un LED se enciende y permanece encendido para advertir sobre la condición de sobrecarga. Disminuya la carga para eliminar la condición de sobrecarga.

8.0 Configuración de disposición de las clavijas del conector DB9

Número de clavija del conector hembra DB9	Señal RS-232	Señal de colector abierto
1	---	---
2	TX	---
3	RD	Desactivación Remota*
4	DTR (+12 V)	---
5	GND	GND
6	---	Fallo de CA
7	RTS (-12 V)	---
8	---	Batería Baja
9	TX	---

DTR = Terminal de datos listo

RTS = Petición para enviar

RD = Datos transmitidos

GND = Señal de Tierra

TX = Datos recibidos

*Cuando se aplica la señal de desactivación remota durante 1 segundo, el UPS se desactivará (o apagará) al cabo de 3 minutos.

9.0 Tiempo de reserva de la batería

	SDU 500, SDU 500-5	SDU 850, SDU 850-5
VA/Watts	500/300	850/510
Batería	YUASA NP7-12	YUASA REW45-12
Nivel de la carga	Tiempo de reserva (Minutos)	Tiempo de reserva (Minutos)
10%	130	80
20%	55	37
30%	36	20
40%	23	13
50%	18	10
60%	13	7
70%	10	5
80%	9	4
90%	6	3
100%	5	2.5

10.0 Almacenamiento

10.1 Condiciones de almacenamiento

Almacene el UPS cubierto y en posición vertical en un lugar seco y frío, con su batería plenamente cargada. Antes de almacenarlo, cargue el UPS durante 4 horas como mínimo. Retire todo accesorio de la ranura de accesorios y desconecte todo cable que esté conectado al puerto interfaz para computadora, a fi n de impedir el drenaje innecesario de la batería.

10.2 Almacenamiento prolongado

Durante los almacenamientos prolongados en los entornos donde la temperatura ambiente es de -15 a +30°C (+5 a +86°F), cargue la batería del UPS cada 6 meses.Durante los almacenamientos prolongados en los entornos donde la temperatura ambiente es de +30 +45°C (+86 +113°F), cargue la batería del UPS cada 3 meses.

11.0 Solución de problemas

Problema	Causa probable	Acción a tomar
El UPS no enciende; el LED está apagado	El UPS está apagado o no se ha presionado el botón On/Off/Test (Encendido/Apagado/Prueba) la cantidad de tiempo suficiente	Presione el botón On/Off/Test (Encendido/Apagado/Prueba) durante más de 2 segundos
	Voltaje de batería inferior a 10V	Recargue el UPS durante 4 horas como mínimo. Si la unidad no enciende, verifi que el fusible de entrada
	Otra avería	Llame a Servicios Técnicos
	Carga inferior a 20 vatios en modalidad de respaldo (en batería)	Condición normal
El UPS permanece en la modalidad de respaldo (en batería)	Conexión de entrada de energía de CA suelta o floja	Apriete la conexión de energía de CA
	El cortacircuito se dispara	Reponga el cortacircuito
	Voltaje de línea demasiado alto, demasiado bajo o se produjo un apagón	Condición normal
	Otra avería	Llame a Servicios Técnicos
Tiempo de respaldo demasiado corto	La batería no está totalmente cargada	Recargue el UPS durante 4 horas como mínimo
	Otra avería	Llame a Servicios Técnicos
Pitido continuo y se enciende el LED de indicación de sobrecarga	Condición de sobrecarga	Elimine la sobrecarga
LED rojo intermitente	Fallo de la batería	Recargue el UPS durante 8 horas como mínimo, luego realice la autocomprobación del UPS

⚠ PRECAUCIÓN **No intente abrir el UPS ni reemplazar la batería. Llame a Servicios Técnicos para obtener más explicaciones.**

12.0 Especificaciones

Descripción	Modelo			
	SDU 500	SDU 850	SDU 500-5	SDU 850-5
ENTRADA				
Capacidad VA/Vatios	500/300	850/510	500/300	850/510
Voltaje (Monofásico)	120 V + 10%, -20%		230 V +/-20%	
Frecuencia	50 ó 60Hz +/-10% (autodetección)			
SALIDA				
Voltaje (en batería)	Onda sinusoidal simulada			
	120 V +/-5%		230 V +/-5%	
Frecuencia (en batería)	50 ó 60Hz; +/-0.5% autodetección			
Tiempo de transferencia	<4 milisegundos			
PROTECCIÓN				
Entrada de la unidad	Cortacircuito para proteger contra sobrecargas y cortocircuitos			
Protección contra sobrecargas	El UPS se apaga automáticamente si la sobrecarga excede el 105% del valor nominal a 20 segundos, 120% a 10 segundos, 130% a 3 segundos			
Cortocircuito	La salida del UPS se corta automáticamente			
BATERÍA				
Tipo	Baterías selladas de plomo y ácido que no requieren mantenimiento			
Tiempo de recarga típico (hasta el 90% de plena capacidad)	8 horas			
Tiempo de autonomía en minutos a plena carga	4 min.	2 min.	4 min.	2 min.
ALARMA				
En batería	Pitidos lentos a cada 4 segundos			
Batería baja	Pitidos rápidos cada segundo			
Sobrecarga	Sonido de pitido continuo			
AMBIENTE				
Operación ambiental	0-95% de humedad sin condensación; 50°C hasta 10,000 pies (3000 m)			
Ruido audible	<40 dBA (a 1 metro de la superficie)			
PESO/DIMENSIONES				
Peso neto, lb. (kg)	10.7 (4.7)	11.4 (5.0)	11.5 (5.2)	11.9 (5.4)
Altura x Anchura x Profundidad, pulg. (mm)	4.88 x 11.1 x 4.55 (124 x 281 x 116)			
SEGURIDAD/APROBACIONES				
	Clasificación UL 1778 C-UL, reconocida para aplicaciones industriales de acuerdo con UL508 sin ninguna corrección. Categoría 3 de sobrevoltaje, grado 3 de contaminación. Parte 15, Subparte B, Clase A de la FCC.		Clasificación CE; LVD: EN62040-1-1;EMC: EN50091-2, EN61000-3-2, EN61000-3-3, IEC801-2, IEC801-3, IEC801-4, IEC1000-2-2	

13.0 Registro del producto y información sobre la garantía

13.1 Registro del producto

A fin de registrar su producto para obtener actualizaciones e información sobre servicio y apoyo:

- Visite la sección Apoyo Técnico o nuestro sitio Web en: http://www.solahd.com/support/registration.htm
- Haga clic en el enlace de Registro de Productos y complete el formulario. Así, su producto quedará registrado con SolaHD. Vous pourrez ainsi enregistrer votre produit chez SolaHD.

13.2 Información sobre la garantía

Sírvase consultar “Términos y Condiciones”.

1.0 Instructions importantes sur la sécurité

Ce manuel contient des instructions importantes sur la sécurité, qui doivent être respectées lors de l'installation de l'UPS. Veuillez lire attentivement ce manuel avant de commencer à installer ou utiliser cet UPS.

Lire toutes les instructions sur la sécurité, l'installation et le fonctionnement avant d'utiliser l'UPS. Respecter tous les avertissements indiqués sur l'appareil et dans ce manuel. Suivre toutes les instructions d'utilisation et celles destinées à l'utilisateur.

Cet équipement est conçu pour un usage industriel ou commercial. Cet équipement peut être installé et utilisé par des personnes n'ayant reçu aucune formation préalable.

1.1 Mesures de sécurité—avertissements

- Afin d'éviter les risques d'incendie ou de décharge électrique, installer l'UPS dans une enceinte dont la température et l'humidité sont contrôlées, exempte de contaminants conducteurs, d'humidité, de liquides et gaz infl ammables et de substances corrosives.

- Utiliser l'UPS seulement à partir d'une source d'alimentation en courant alternatif correctement mise à la terre.
- Afin de réduire les risques de décharge électrique, ne pas enlever le couvercle, car aucune pièce réparable par l'utilisateur ne se trouve à l'intérieur. Certains composants sont sous tension, même lorsque l'alimentation c.a est coupée. Pour obtenir du service, contacter un technicien qualifié.

Bien que l'UPS ait été conçu et fabriqué pour assurer la sécurité personnelle, une utilisation incorrecte peut entraîner une décharge électrique ou un incendie. Afin d'assurer la sécurité, observer les règles suivantes :

- Mettre l'UPS hors tension et couper l'alimentation c.a avant de le nettoyer. Ne pas utiliser de nettoyants liquides ou aérosols. On recommande d'utiliser un chiffon sec pour enlever la poussière de la surface de l'UPS.
- Ne pas installer ou utiliser l'UPS dans ou à proximité d'un plan d'eau.
- Ne pas placer l'UPS sur un chariot, un support ou une table instable.
- Ne pas placer l'UPS sous les rayons directs du soleil ou à proximité d'une source de chaleur.

- Pour assurer une ventilation adéquate de l'UPS, ne pas bloquer ou recouvrir le dessus et les côtés inférieurs de l'appareil.
- Ne jamais bloquer ou insérer un quelconque objet dans les trous de ventilation ou dans les autres ouvertures de l'UPS. Faire en sorte qu'aucune poussière susceptible de restreindre le débit d'air ne s'accumule sur aucun des évents.
- Suivre tous les avertissements et les instructions apposés sur l'UPS. Ne pas tenter de réparer l'UPS, aucune pièce réparable par l'utilisateur ne se trouve à l'intérieur. Consulter du personnel qualifi é pour effectuer des réparations.
- Ne pas jeter la ou les batteries dans un feu. La batterie pourrait exploser.
- Ne pas ouvrir ou endommager la batterie. Une fuite d'électrolyte est nocive pour la peau et les yeux. Ca peut être toxique.

Si votre UPS présente une des anomalies suivantes, mettre l'UPS hors tension, couper l'alimentation c.a. et contacter votre distributeur local, un représentant SolaHD ou les services techniques de SolaHD.

- En cas de liquide versé sur l'UPS.
- Le disjoncteur déclenche fréquemment.
- L'UPS ne fonctionne pas suivant les indications du manuel de l'utilisateur.

1.2 Conditions d'utilisation

Votre UPS fournit une l'alimentation conditionnée à l'équipement raccordé. La charge maximale ne doit pas excéder celle indiquée sur l'étiquette. En cas de doute, contacter votre distributeur ou SolaHD.

2.0 Définition des avertissements

⚠ DANGER **Danger:** Indique une situation éminemment dangereuse qui, si elle n'est pas évitée, peut causer la mort ou des blessures graves. Ce signal n'est utilisé que pour les situations les plus dangereuses.

⚠ AVERTISSEMENT **Avertissement:** Indique une situation potentiellement dangereuse qui, si elle n'est pas évitée, peut causer la mort ou des blessures graves.

⚠ ATTENTION **Attention:** Indique une situation potentiellement dangereuse qui, si elle n'est pas évitée, peut causer des blessures légères ou modérées. Elle peut aussi être utilisée pour mettre en garde contre les pratiques non sécuritaires.

3.0 Introduction

Félicitations pour avoir choisi l'UPS de Sola, série SDU. Il assure une l'alimentation conditionnée aux l'équipements électroniques sensibles.

L'UPS de la série SDU est compact, « autonome », montable sur rail DIN. Il fournit à l'équipement raccordé une approximation par étape de puissance d'ondes sinusoïdales pour simuler la puissance générée par le fournisseur d'électricité.

Le SDU est un UPS puissant commandé par microprocesseur. La plage de tension d'entrée se situe entre 80 % et 110 %, une protection idéale pour les charges critiques raccordées. La recharge de la batterie est automatique lorsque l'alimentation c.a. est appliquée; aucun besoin de mettre l'UPS sous tension. En cas de panne de courant, l'UPS peut être mis HORS TENSION automatiquement si aucune des charges raccordées ne fonctionne, afi n d'économiser l'énergie de la batterie. Le SDU inclut une fonction d'auto-vérifi cation du fonctionnement de l'UPS et de la batterie. Si la batterie n'est plus utile, l'appareil déclenche une alarme et la DÉL s'allume.

REMARQUE : Cet équipement a été mis à l'essai et déclaré conforme aux limites prévues pour un appareil numérique de classe A, conformément à la partie 15 du règlement de la FCC. Ces limites ont pour but d'assurer une protection raisonnable contre une interférence nuisible dans une installation résidentielle. Cet équipement utilise, génère et peut émettre de l'énergie en radiofréquence et, s'il n'est pas installé et utilisé conformé-ment aux directives, il peut causer un brouillage nuisible dans les communications radio. Cependant, il est impossible de garantir qu'aucune interférence ne se produira dans une installation particulière. Si cet équipement cause un brouillage de la réception de radio ou de télévision (que vous pouvez déterminer en éteignant puis en rallumant l'appareil), l'utilisateur est prié d'essayer d'éviter le brouillage au moyen de l'une ou de plusieurs des mesures suivantes :

- Réorienter ou déplacer l'antenne de réception.
- Éloigner davantage l'UPS du récepteur.
- Raccorder l'UPS à un circuit différent de celui du récepteur.
- Consulter le concessionnaire ou un technicien en radio / télévision qualifié pour obtenir de l'aide.

4.0 Description du système

4.1 Panneau avant

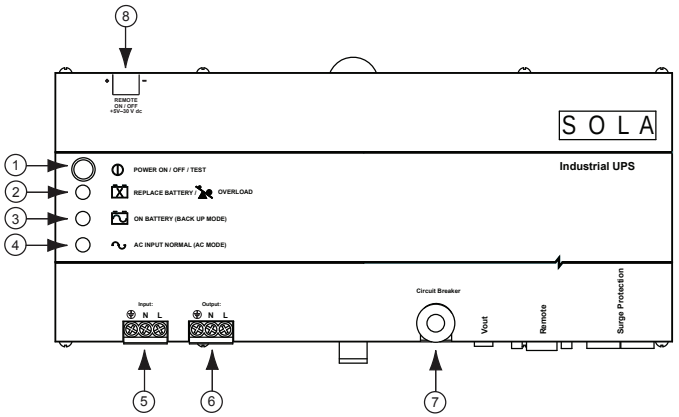

1. **Bouton « POWER ON/OFF/TEST » :** Appuyer sur le bouton pendant plus d'une (1) seconde pour mettre l'UPS sous tension. Appuyer sur le bouton pendant moins d'une seconde pour activer l'auto-vérification de l'UPS.Appuyerpendant plus de 5 secondes pour mettre hors tension.
2. **Voyant « BATTERYWARNING / OVERLOAD » (DÉL ROUGE) :** La DÉLclignote lorsque la batterie de l'UPS doit être rechargée et vérifiée. La DÉL s'allume lorsque l'appareil est en surcharge. Si l'appareil s'éteint suite à une surcharge, la DÉL et l'alarme sont activées pendant 2 minutes.
3. **Voyant « ON BATTERY » (DÉL JAUNE) :** La DÉL s'illumine lorsque l'UPS alimente les charges en courant de la batterie.
4. **Voyant «AC INPUT NORMAL » (DÉL VERTE) :** La DÉL s'allume lorsque la tension d'entrée de ligne est normale.
5. **Bornes à vis d'entrée classifiées IP-20** (voir le tableau ci-dessous)
6. **Bornes à vis de sortie classifiées IP-20** (voir le tableau ci-dessous)

Vis	M3.0, courant nominal = 30A c.a. 300 V
L'isolation résiste à la tension	c.a. 2000 V min
Diamètre du trou PCB	1,8 mm, longueur de dénudage de câble = 8 mm
Calibre du fil	10 ~ 24AWG
Couple de serrage des vis	5,5 lb - po

7. **Disjoncteur du circuit d'entrée :** Protection contre une surcharge de c.a. et des courts-circuits.
8. **Commande à distance marche/arrêt :** La commande à distance marche/arrêt offre les mêmes fonctions que L'interrupteur marche/arrêt sur le panneau.

4.2 Panneau inférieur

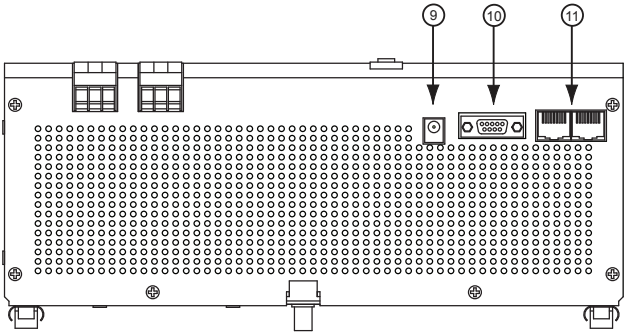

9. **Sortie V :** Borne de sortie fournissant une source d'alimentation de 12 V à la carte de relais en option.
10. **Distant :** Port de communication RS 232, connecteur DB9.
11. **Protection contre Téléphone/surtension :** Protection contre la surtension de ligne de données pour téléphone (UL497A).

4.3 Ce qui est inclus

L'UPS SDU est expédié avec les articles suivants :

• Manuel utilisateur du SDU

• CD delogiciel UPSMON

REMARQUE : Le logiciel de surveillance / diagnostic est inclus sur le CD UPSMON. Le programme est compatible avec Windows NT et Windows 2000, incluant le protocole XP.

• Câble série UPSMON DB-9

• Cordon RJ-11

• Etiquette indiquant Choc électrique de mise en garde

4.4 Accessoires

• **UPSMON-USB :** RS232 à câble adaptateur USB

• **RELAYCARD-SDU :** Boîte à relais avec contact sec

• **SDU-PMBRK :** Supports de montage pour fixer solidement l'UPS à un mur, à l'arrière d'un panneau ou dans une enceinte

5.0 Instructions d'installation

1. **Placement :** Installer l'UPS dans une zone protégée, avec une circulation d'air adéquate et exempte de poussière excessive. Ne pas utiliser l'UPS à l'extérieur.
2. **Branchement à la source d'alimentation électrique :** Brancher le connecteur d'entrée de c.a. au secteur pour mettre l'UPS sous tension.
3. **Recharge de la batterie :** L'UPS recharge sa batterie dès qu'il est branché au secteur. Pour obtenir de meilleurs résultats, recharger la batterie pendant 4 heures avant son utilisation initiale.
4. **Raccordement des charges :** Raccorder les charges au connecteur câblé de sortie.
5. **Appliquer l'étiquette indiquant la mise en garde contre le choc électrique :** Appliquer l'étiquette indiquant la mise en garde contre le choc électrique sur le panneau de façon à être clairement visible à l'utilisateur.

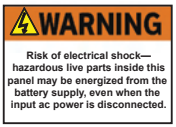

6.0 Instructions d'utilisation

1. **Connecteur de sortie :** Le connecteur de sortie protège vos charges critiques contre les surtensions et les pannes de courant.
2. **Mise en marche avec le « Mode vert » activé :** Après avoir connecté l'UPS à l'alimentation secteur, appuyer sur le bouton de mise en marche « ON » jusqu'à ce que le premier bip se fasse entendre après moins de trois secondes, puis relâcher immédiatement le bouton. Le mode vert est activé, c.-à-d. que si une charge inférieure à 40 watts (ou aucune charge) est connectée et que l'UPS fonctionne en mode de secours; l'UPS passe en mode vert après avoir été trois minutes en mode de secours; le voyant vert clignote à toutes les trois ou cinq secondes, puis, après une brève période, passe en mode « économie d'énergie » en s'éteignant pour éviter une décharge excessive de la batterie. Pour réactiver l'appareil, le mettre hors tension puis sous tension ou remettre l'alimentation secteur vers l'appareil après que l'alimentation secteur soit revenue.

3. **Mise en marche avec le « Mode vert » désactivé :** Après avoir connecté l'UPS à l'alimentation secteur, appuyer sur le bouton de mise en marche « ON » jusqu'à ce que deux bi-bip courts se fassent entendre, puis relâcher immédiatement le bouton; le mode vert est désactivé. Toute charge, qu'elle soit inférieure à 40 watts ou plus, ne modifiera pas le fonctionnement normal de l'UPS en mode c.a. ou de batterie.

4. **Mise hors tension :** Pour mettre l'UPS hors tension, maintenir enfoncé le bouton POWER ON /OFF / TEST, jusqu'à ce que la DÉL « AC POWER NORMAL » ou « ON BATTERY » s'éteigne.

5. **Auto-vérification :** Utiliser l'auto-vérification pour contrôler le fonctionnement de l'UPS et l'état de la batterie. Si l'alimentation secteur est normale, appuyer sur le bouton POWER ON / OFF / TEST pendant moins d'une (1) seconde et l'UPS exécute une autovérification. Pendant l'auto-vérification, l'UPS fonctionne en mode de secours. Si l'UPS réussit l'auto-vérification, elle reprend son mode de fonctionnement « AC INPUT NORMAL ».

6. **Commande à distance marche/arrêt :** Pour assurer la fonction commande a distance marche/arrêt, connecter un interrupteur a bouton poussoir en série avec une source de tension continue 5~30Vdc au bornes « On/Off » comme indiqué sur la figure suivante :

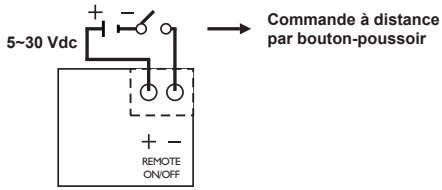

La commande à distance marche/arrêt offre les mêmes fonctions que L'interrupteur marche/arrêt sur le panneau. Si le mode vert n'est pas nécessaire, un interrupteur à bascule marche/arrêt peut être utilisé au lieu de l'interrupteur à bouton poussoir.

7.0 Alarmes de la batterie de secours

1. **« ON BATTERY » (bip lent) :** Lorsqu'en mode ON BATTERY, la DÉL JAUNE s'allume et l'UPS émet une alarme audible. L'alarme arrête lorsque l'UPS retourne au mode de fonc-tionnementAC INPUT NORMAL.
2. **« LOW BATTERY » (bip rapide) :** En mode ONBATTERY,lorsque l'énergie de la batterie faiblit,l'UPS émet un bip rapide jusqu'à ce que l'UPS arrête de fonctionner en raison de l'épuisement de la batterie ou qu'il retourne au mode de fonctionnementAC INPUT NORMAL.
3. **« OVERLOAD » (alarme continue) :** Lorsque l'UPS est surchargé (les charges raccordées excèdent la capacité nominale maximale), l'UPS émet un son d'alarme continu et la DÉL indique une condition de surcharge. Réduire la charge pour éliminer la surcharge.

8.0 Configuration des broches de sortie du connecteur DB9

Connecteur UPS DB9 femelle, broche no	Signal RS-232	Signal de collecteur ouvert
1	---	---
2	TT	---
3	RD	Coupure à distance*
4	DTR (+12 V)	---
5	TERRE	TERRE
6	---	Défaillance c.a.
7	RTS (-12 V)	---
8	---	Batterie faible
9	TT	---

DTR = Terminal prêt
RTS = Demande d'émission
RD = Données transmises
TERRE = Retour commun du signal
TT = Données reçues
*Cuando se aplica la señal de desactivación remota durante 1 segundo, el UPS se desactivará (o apagará) al cabo de 3 minutos.

9.0 Temps de secours de batterie

	SDU 500, SDU 500-5	SDU 850, SDU 850-5
VA/Watts	500/300	850/510
Batterie	YUASA NP7-12	YUASA REW45-12
Niveau de charge	Temps de secours (Minutes)	Temps de secours (Minutes)
10%	130	80
20%	55	37
30%	36	20
40%	23	13
50%	18	10
60%	13	7
70%	10	5
80%	9	4
90%	6	3
100%	5	2.5

10.0 Entreposage

10.1 Conditions d'entreposage

Entreposer l'UPS en le recouvrant, en le plaçant en position verticale dans un endroit frais et sec, avec la batterie à pleine charge. Avant d'entreposer, charger l'UPS pendant au moins 4 heures. Enlever tous les accessoires de la fente aux accessoires et débrancher tous les câbles connectés au port de l'interface ordinateur, afi n d'éviter une décharge inutile de la batterie.

10.2 Entreposage de longue durée

Lors d'un entreposage prolongé dans un environnement où la température ambiante est de -15 à +30 °C (+5 à +86 °F), recharger la batterie tous les 6 mois.

Lors d'un entreposage prolongé dans un environnement où la température ambiante est de +30 à +45 °C (+86 à +113 °F), recharger la batterie tous les 3 mois.

11.0 Dépannage

Probléme	Cause Probable	Action Corrective
UPS hors tension, la DÉL ne s'allume pas	L'UPS est hors tension ou le bouton ON / OFF / TEST n'a pas été enfoncé suffi samment longtemps	Appuyer sur POWER / ON / OFF / TEST pendant plus de 2 secondes
	La tension de la batterie est inférieure à 10 V	Recharger l'UPS pendant au moins 4 heures. Si l'appareil ne se met toujours pas en marche, vérifi er le fusible d'entrée.
	Autre défaillance	Appeler les services techniques
	La charge est inférieure à 20 W en mode de secours	Condition normale
L'UPS est toujours en mode de secours	Desserrer la connexion de l'alimentation d'entrée de c.a.	Resserrer la connexion d'alimentation c.a.
	Déclenchement du disjoncteur	Réenclencher le disjoncteur
	La tension de ligne est trop élevée, trop faible ou en panne	Condition normale
	Autre défaillance	Appeler les services techniques
Temps de fonctionnement en secours trop court	La batterie n'est pas complètement chargée	Recharger l'UPS pendant au moins 4 heures
	Autre défaillance	Appeler le service technique
Bip continu et indication de DÉL de surcharge	Condition de surcharge	Éliminer la surcharge
La DÉL rouge clignote	Défaillance de la batterie	Recharger l'UPS pendant au moins 8 heures, effectuer l'auto-vérifi cation de l'UPS.

⚠ ATTENTION **Ne pas essayer d'ouvrir l'UPS ou de remplacer la batterie. Appeler les servic-es techniques pour obtenir des explications supplémentaires.**

12.0 Spécifications

Description	Modèle			
	SDU 500	SDU 850	SDU 500-5	SDU 850-5
ENTRÉE				
Capacité V A / Watts	500/300	850/510	500/300	850/510
Tension (Monophasé)	120 V + 10%, -20%		230 V +/-20%	
Fréquence	50 ou 60 Hz +/-10 % (auto-détection)			
SORTIE				
Tension (sur batterie)	Onde sinusoïdale simulée			
	120 V +/-5%		230 V +/-5%	
Fréquence (sur batterie)	50 ou 60 Hz, +/-0,5% auto-détection			
Temps de transfert	< 4 millisecondes			
PROTECTION				
Entrée de l'appareil	Disjoncteur protégeant contre les surcharges et les courts-circuits			
Protection contre les surcharges	Coupure automatique UPS si la surcharge dépasse 105 % de la charge nominale à 20 secondes, 120 % à 10 secondes, 130 % à 3 secondes			
Court-circuit	La sortie UPS est coupée immédiatement			
BATTERIE				
Type	Accumulateurs au plomb, sans entretien et hermétiques			
Temps typique de recharge (à 90 % de la pleine charge)	8 heures			
Durée en utilisation secours – minutes à pleine charge	4 min.	2 min.	4 min.	2 min.
ALARME				
Sur la batterie	Bip lent toutes les 4 secondes			
Batterie faible	Bip rapide chaque seconde			
Surcharge	Bip continu			
ENVIRONNEMENT				
Fonctionnement à température ambiante	0 à 95 % d'humidité, sans condensation50 °C jusqu'à 3000 m (10 000 pi)			
Bruit audible	< 40 dBA (1 mètre de la surface)			
POIDS / DIMENSIONS				
Poids net en kg (livres)	4,7 (10,7)	5,0 (11,4)	5,2 (11,5)	5,4 (11,9)
H x L x P, mm (po)	124 x 281 x 116 (4,88 x 11,1 x 4,55)			
SÉCURITÉ / AUTORISATIONS				
	Reconnu UL 1778 C-UL pour les applications industrielles, conformément à UL508, sans déclassement. Surtension de catégorie 3, degré de pollution : 3. FCC, partie 15, sous-partie B, classe A.		Marqué CE; LVD: EN62040-1-1;EMC: EN50091-2, EN61000-3-2, EN61000-3-3, IEC801-2, IEC801-3, IEC801-4, IEC1000-2-2	

13.0 Enregistrement du produit et information sur la garantie

13.1 Enregistrement du produit

Pour enregistrer votre produit afin de recevoir des mises à jour et de l'information sur le service et le soutien :

- Visiter la section du Soutien technique sur notre site Web au : http://www.solahd.com/support/registration.htm
- Cliquer sur le lien d'enregistrement du produit et remplir le formulaire. Vous pourrez ainsi enregistrer votre produit chez SolaHD.

13.2 Informations sur la garantie

Veuillez voir le « Termes et conditions générales de Sale » .

SOLAHD

Technical Support
U.S.: (800) 377-4384
International: (847) 268-6000
E-mail: www.solahd.com

Servicio Técnico
EE.UU. (800) 377-4384
Internacional: (847) 268-6000
Correo electrónico: www.solahd.com

Assistance technique
États-Unis: (800) 377-4384
International: (847) 268-6000
Courriel: www.solahd.com

EMERSON
Industrial Automation

Part Number: A272-080 Rev 8
May 30, 2008

SOLA HD

Dry Contact Relay Kit

RELAYCARD-SDU

Instruction Manual

While every precaution has been taken to ensure accuracy and completeness in this manual, SolaHD assumes no responsibility, and disclaims all liability for damages resulting from use of this information or for any errors or omissions.

©2009 SolaHD. All rights reserved throughout the world. Specifications are subject to change without notice.

®SolaHD name and logo are registered trademarks of EGS Electrical Group, LLC. All names referred to are trademarks or registered trademarks of their respective owners.

Table of Contents

What's Included 4

Installation 4

Product Description 5–6

Notes 7

What's Included

- One dry contact relay box
- One interface cable (DB-9 connector)
- One 12 V dc power interconnection cable
- Four M3 mounting screws

Installation

⚠ DANGER **Only qualified personnel should install or service this system. Electrical safety precautions must be followed when installing or servicing this equipment. To prevent risk of electrical shock, turn off and lock out all power sources to the unit before making electrical connections.**

1. Using the four M3 screws provided, mount the dry relay box on the right side of the SDU UPS. If mounting on a separate chassis, the hole diameter for the relay box is 0.378 in. (3.5 mm).

2. Plug the 12 V dc power interconnection cable into the 12 V dc input of the relay box. Plug the other end of the power interconnection cable into the aux dc output (or Vout) of the SDU UPS.

3. Plug the DB-9 connector cable into the RS232 communication port of the SDU UPS. Plug the other end of the connector into the remote port of the dry contact relay.

Product Description

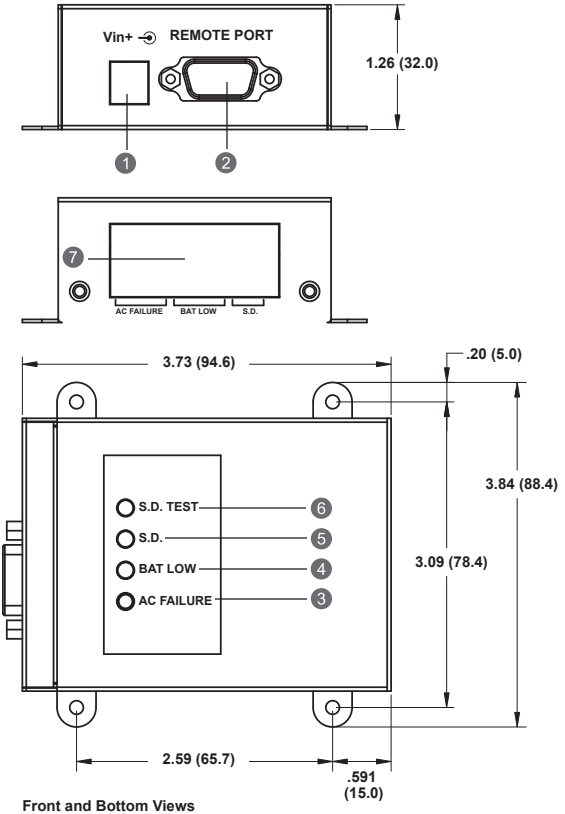

Front and Bottom Views
All dimensions are in inches (mm)

1. **Vin:** Input connector used to provide the dry contact relay with 12 V dc input power.
2. **Remote Port:** This communication port is used for linking to the SDU UPS.

   NOTE: The provided connection cable is used only for this dry contact relay.
3. **Ac Failure Indicator:** This yellow LED is illuminated when ac voltage is abnormal.
4. **Battery Low Indicator:** This green LED is illuminated when battery capacity is low.
5. **Shut Down Indicator (S.D.):** When the dry contact relay receives the shut down signal for 1 second, the red LED is illuminated and the SDU UPS goes into shut down mode.

Product Description continued from page 5

6. Shut Down Test Button (S.D. Test): Provides the dry contact relay a shut down signal to test the shut down function when the UPS is operating in the battery mode. Push this button for 1 second and the red LED is illuminated. The SDU UPS goes into shut down mode after 3 minutes.

7. 8 Pole Terminal Blocks

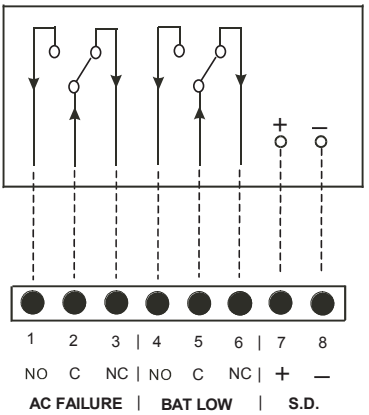

Table 1: Terminal Blocks—Layout and Operation

+UPS State		External Input	DCB LED Display			Terminal Blocks			
O = Occur X = Does not occur		O = Enable X = Disable	O = LED On X = LED Off			O = Close X = Open			
Ac Failure	BAT Low	S.D.	Yellow	Green	Red	Pin 1–2	Pin 2–3	Pin 4–5	Pin 5–6
X	X	X	X	X	X	X	O	X	O
O	X	X	O	X	X	O	X	X	O
O	O	X	X	O	X	O	X	O	X
O	X	O	X	X	O	X	O	X	O

Notes

1. Suitable electric wire = AWG 22–12 (IEC 2.5 mm).

2. Contact maximum current = 1.0 A @ 250 V ac.

3. Shut down input signal (range = +5 V to +12 V) can be provided by enabling terminals 7 and 8 for remote shut down control, assured by an external remote device.

SOLAHD

Technical Support
U.S.: (800) 377-4384
International: (847) 268-6000
E-mail: www.tech@solahd.com
Web site: www.solahd.com

EMERSON™
Industrial Automation

Part Number: A272-081 Rev 7
May 20, 2009

Series A1F Compact OEM Pressure Switch

Specifications - Installation and Operating Instructions

A1F

A1F with A-447

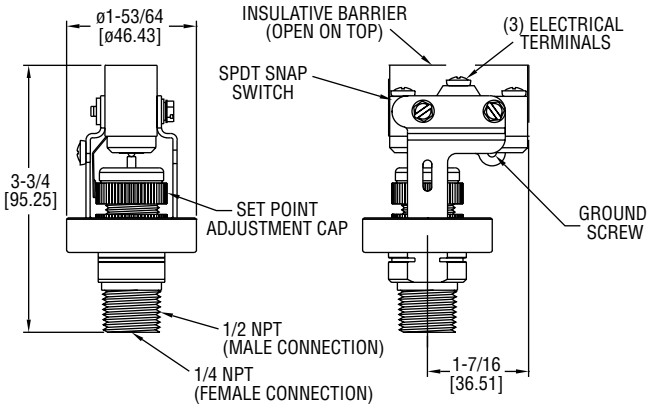

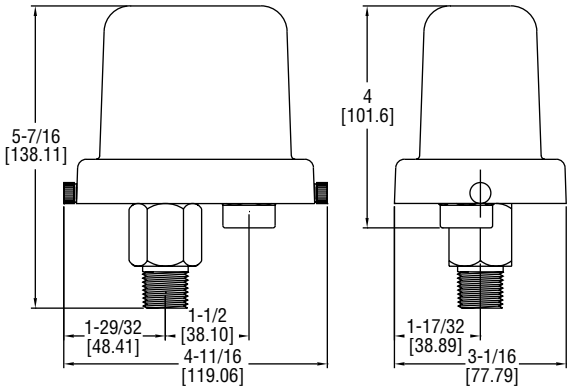

The **SERIES A1F** Compact OEM Pressure Switch is ideal for panel mounting wherever a high-quality, economical open-case or weatherproof control is required.

INSTALLATION

1. Location: Select a location where the temperature limits of -40 to 180°F (-40 to 82°C) will not be exceeded. Locate the switch as close as possible to the pressure source. Long lengths of piping will not affect accuracy of the actuation point but will slightly add to response time.

2. Mounting and Processing Connection: Avoid mounting surfaces with excess vibration which could cause false actuation when pressure is near setpoint. The switch should be mounted within 20° of vertical for proper operation. Mount the switch by connecting it to the process piping using either 1/4″ NPT female or 1/2″ male connection. Pipe joint compound or TFE thread tape should be used to prevent leakage.

3. Electrical Connections: The SPDT snap switch includes normally open, normally closed and common connections. The common and normally open contacts will close and the common and normally closed contacts will open when pressure increases to the setpoint. The actions will reverse when pressure decreases below the setpoint minus the deadband. A green grounding screw is provided on the switch bracket. All wiring should be in accordance with local codes.

SPECIFICATIONS

Service: Compatible liquids and gases.
Wetted Materials: Pressure Chamber: 316 SS; Diaphragm: Fluorocarbon.
Temperature Limit: -40 to 175°F (-40 to 80°C).
Pressure Limits: 500 psig (34 bar).
Enclosure Rating: No rating for open construction. Installed properly within an optional A-447 enclosure meets NEMA 4X standards.
Switch Type: SPDT snap switch.
Electrical Rating: 15A @ 120/240/480 VAC, 1/8 HP @ 125 VAC, 1/4 HP @ 250 VAC.
Electrical Connection: Screw terminals.
Process Connection: 1/4″ female NPT and 1/2″ male NPT.
Mounting Orientation: Within 20° of vertical.
Set Point Adjustment: Knurled screw cap with indicating scale.
Deadband: Fixed, See deadband chart.
Weight: 10.5 oz (297 g).

MERCOID A DIVISION OF DWYER INSTRUMENTS, INC.
P.O. BOX 373 • MICHIGAN CITY, INDIANA 46360, U.S.A.
Phone: 219/879-8000 www.dwyer-inst.com
Fax: 219/872-9057 e-mail: info@dwyermail.com

SETPOINT ADJUSTMENT

1. Determine the setpoint pressure. The approximate actuation point can be set by turning the adjustment cap up or down, aligning the top of the O-ring, located above the cap, with the appropriate scale graduation.
2. Connect tubing or piping from the pressure port on bottom of switch to one leg of a tee. Connect the second leg to a pressure test gage of known accuracy and in an appropriate range. The third leg should be connected to a controllable source of pressure.
3. Connect a volt/ohm meter or other circuit tester to the snap action terminals to indicate when switching occurs.
4. Slowly apply pressure to the system and note the pressure at which switching occurs.
5. Operate the switch through several cycles to confirm proper actuation point.
6. Remove test apparatus and attach switch to pressure source and control circuit wiring. Place switch in service.

Example of how to order:

A1F - O - SS - 1 - 4
1 2 3 4 5

1. Diaphragm Designation:
   F - Fluorocarbon
2. Enclosure Designation:
   O - Open Construction No Enclosure
3. Housing Material Designation:
   SS - 316SS
4. Switch Designation:
   1 - SPDT Snap Action Switch
5. Operating Pressure Range Designation:
   1 - 2 to 15 psig
   2 - 4 to 75 psig
   3 - 8 to 225 psig
   4 - 16 to 450 psig

DEADBAND CHART-PSIG (BAR)		
Range	Deadband at Minimum Range	Deadband at Maximum Range
2 to 15 (0.14 to 1.03)	2 (0.14)	3 (0.21)
4 to 75 (0.28 to 5.17)	4 (0.27)	15 (1.0)
8 to 225 (0.55 to 15.5)	8 (0.55)	25 (1.7)
16 to 450 (1.1 to 31.0)	15 (1.0)	50 (3.5)

MAINTENANCE

Upon final installation of the Series A1F Compact OEM Pressure Switch, no routine maintenance is required. A periodic check of the system calibration is recommended. The Series A1F is not field serviceable and should be returned if repair is needed (field repair should not be attempted and may void warranty). Be sure to include a brief description of the problem plus any relevant application notes. Contact customer service to receive a return goods authorization number before shipping.

©Copyright 2015 Dwyer Instruments, Inc.
Printed in U.S.A. 12/15 FR# 440838-10 Rev. 3

MERCOID A DIVISION OF DWYER INSTRUMENTS, INC.
P.O. BOX 373 • MICHIGAN CITY, INDIANA 46360, U.S.A.
Phone: 219/879-8000 **www.dwyer-inst.com**
Fax: 219/872-9057 **e-mail: info@dwyermail.com**

KAFB-7 Injection Well Equipment

© Siemens AG 2011

Tags PIT-9013

SITRANS P DS III
Technical description

Overview

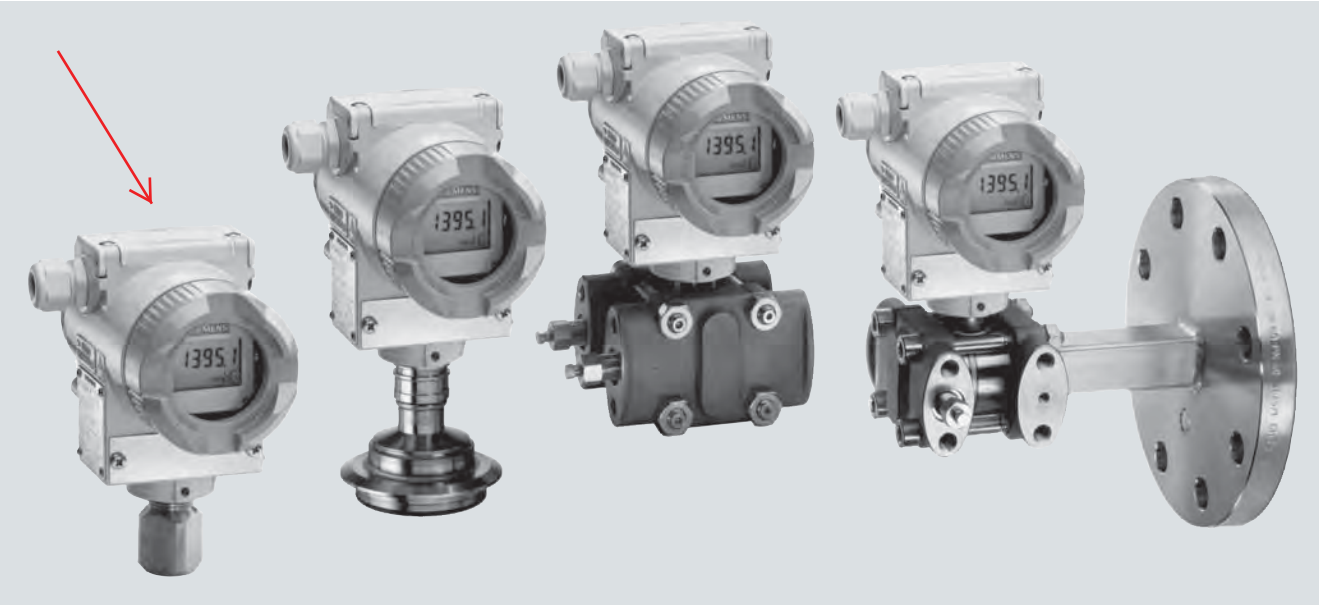

SITRANS P DS III pressure transmitters are digital pressure transmitters featuring extensive user-friendliness and high accuracy. The parameterization is performed using control keys or via HART communication, PROFIBUS-PA or FOUNDATION Fieldbus interface.

Extensive functionality enables the pressure transmitter to be precisely adapted to the plant's requirements. Operation is very simple in spite of the numerous setting options.

Transmitters with type of protection "Intrinsic safety" and "Explosion-proof" may be installed within potentially explosive atmospheres (zone 1) or in zone 0. The transmitters are provided with an EC type examination certificate and comply with the corresponding harmonized European standards (ATEX).

The transmitters can be equipped with various designs of remote seals for special applications such as the measurement of highly viscous substances.

Various versions of the DS III pressure transmitters are available for measuring:

- Gauge pressure
- Absolute pressure
- Differential pressure
- Level
- Volume level
- Mass level
- volume flow
- Mass flow

Benefits

- High quality and service life
- High reliability even under extreme chemical and mechanical loads
- For aggressive and non-aggressive gases, vapors and liquids
- Extensive diagnosis and simulation functions
- Separate replacement of measuring cell and electronics without recalibration
- Minimum conformity error
- Small long-term drift
- Wetted parts made of high-grade materials (e.g. stainless steel, Hastelloy, gold, Monel, tantalum)
- Infinitely adjustable span from 0.15 psi to 10153 psi (0.01 bar to 700 bar) for DS III with HART communication
- Nominal measuring range from 14.5 psi to 10153 psi (1 bar to 700 bar) for DS III PA (PROFIBUS PA) and FF (FOUNDATION Fieldbus)
- High measuring accuracy
- Parameterization over control keys and HART communication, PROFIBUS PA communication or FOUNDATION Fieldbus interface.

Application

The pressure transmitters of the DS III series, can be used in industrial areas with extreme chemical and mechanical loads. Electromagnetic compatibility in the range 10 kHz to 1 GHz makes the DS III pressure transmitters suitable for locations with high electromagnetic emissions.

Pressure transmitters with type of protection "Intrinsic safety" and "Explosion-proof" may be installed within potentially explosive atmospheres (zone 1) or in zone 0. The pressure transmitters are provided with an EC type examination certificate and comply with the corresponding harmonized European standards (ATEX).

Pressure transmitters with the type of protection "Intrinsic safety" for use in zone 0 may be operated with power supply units of category "ia" and "ib".

The transmitters can be equipped with various designs of remote seals for special applications such as the measurement of highly viscous substances.

The pressure transmitter can be operated locally over 3 control buttons or programmed externally over HART communication or over PROFIBUS PA or FOUNDATION Fieldbus interface.

© Siemens AG 2011

Pressure transmitter for gauge pressure

Measured variable: Gauge pressure of aggressive and non-aggressive gases, vapors and liquids.

Span (infinitely adjustable)
for DS III HART: 0.15 psi to 10153 psi (0.01 bar to 700 bar)

Nominal measuring range
for DS III PA and FF: 14.5 psi to 10153 psi (1 bar to 700 bar)

Pressure transmitters for absolute pressure

Measured variable: Absolute pressure of aggressive and non-aggressive gases, vapors and liquids.

Span (infinitely adjustable)
for DS III HART: 0.12 ... 1450 psi a (8.3 mbar a ... 100 bar a)

Nominal measuring range
for DS III PA and FF: 3.63...1450 psi a (250 mbar a...100 bar a)

There are two series:

- Gauge pressure series
- Differential pressure series

Pressure transmitters for differential pressure and flow

Measured variables:

- Differential pressure
- Small positive or negative pressure
- Flow q ~ √Δp (together with a primary differential pressure device (see Chap.ter "Flow Meters"))

Span (infinitely adjustable)
for DS III HART: 0.0145 ... 435 psi (1 mbar ... 30 bar)

Nominal measuring range
for DS III PA and FF: 0.29 ... 435 psi (20 mbar ... 30 bar)

Pressure transmitters for level

Measured variable: Level of aggressive and non-aggressive liquids in open and closed vessels.

Span (infinitely adjustable)
for DS III HART: 0.363 ... 72.5 psi (25 mbar ... 5 bar)

Nominal measuring range
for DS III PA and FF: 3.63 ... 72.5 psi (250 mbar ... 5 bar)

Nominal diameter of the mounting flange

- DN 80 or DN 100
- 3 inch or 4 inch

In the case of level measurements in open containers, the low-pressure connection of the measuring cell remains open (measurement "compared to atmospheric").

In the case of measurements in closed containers, the lower-pressure connection has to be connected to the container in order to compensate the static pressure.

The wetted parts are made from a variety of materials, depending on the degree of corrosion resistance required.

Design

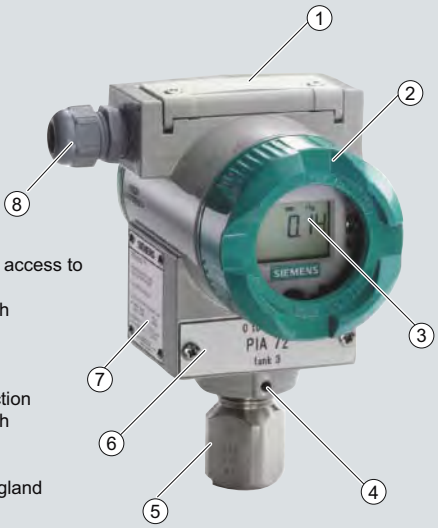

1 Plastic cover as access to the input keys
2 Screw cover with viewing pane
3 Digital display
4 Locking screw
5 Process connection
6 Screw cover with viewing pane
7 Rating plate
8 Inlet with cable gland

Front view

The transmitter consists of various components depending on the order. The possible versions are listed in the ordering information. The components described below are the same for all transmitters.

The rating plate (7, Figure "Front view") with the Order No. is located on the side of the housing. The specified number together with the ordering information provide details on the optional design details and on the possible measuring range (physical properties of built-in sensor element).

The approval label is located on the opposite side.

The housing is made of die-cast aluminium or stainless steel precision casting. A round cover (6) is screwed on at the front and rear of the housing. The front cover can be fitted with a viewing pane so that the measured values can be read directly on the digital display. The inlet (8) for the electrical connection is located either on the left or right side. The unused opening on the opposite side is sealed by a blanking plug. The protective earth connection is located on the rear of the housing.

The electrical connections for the power supply and screen are accessible by unscrewing the rear cover. The bottom part of the housing contains the measuring cell with process connection (5). The measuring cell is prevented from rotating by a locking screw (4). As the result of this modular design, the measuring cell and the electronics can be replaced separately from each other. The set parameter data are retained.

At the top of the housing is a plastic cover (1), which hides the input keys.

Example for an attached measuring point label

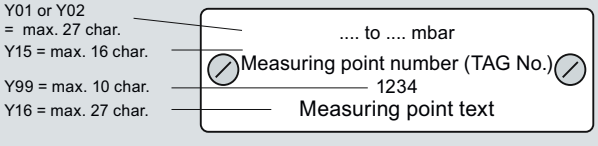

© Siemens AG 2011

Function

Operation of electronics with HART communication

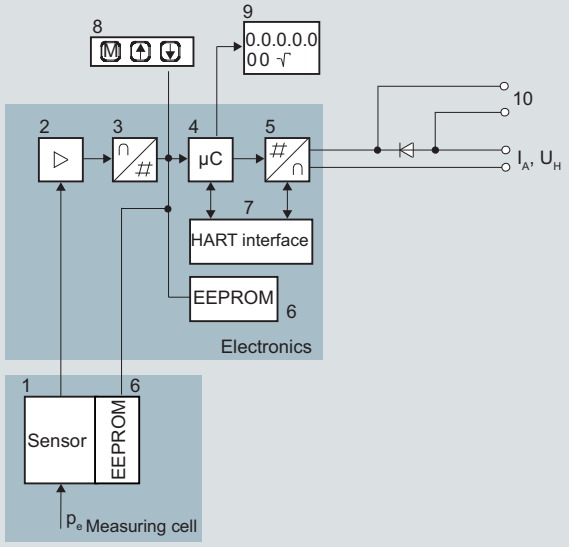

1 Measuring cell sensor
2 Instrument amplifier
3 Analog-to-digital converter
4 Microcontroller
5 Digital-to-analog converter
6 One non-volatile memory each in the measuring cell and electronics
7 HART interface
8 Three input keys (local operation)
9 Digital display
10 Diode circuit and connection for external ammeter
I_A Output current
U_H Power supply
P_e Input variable

Function diagram of electronics

The bridge output voltage created by the sensor (1, Figure "Function diagram of the electronics") is amplified by the measuring amplifier (2) and digitized in the analog-to-digital converter (3). The digital information is evaluated in a microcontroller, its linearity and temperature response corrected, and converted in a digital-to-analog converter (5) into an output current of 4 to 20 mA.

The diode circuit (10) protects against incorrect polarity.

The data specific to the measuring cell, the electronics data, and the parameter data are stored in the two non-volatile memories (6). The one memory is coupled to the measuring cell, the other to the electronics. As the result of this modular design, the electronics and the measuring cell can be replaced separately from each other.

Using the 3 input keys (8) you can parameterize the pressure transmitter directly at the measuring point. The input buttons can also be used to control the view of the results, the error messages and the operating modes on the digital display (9).

The HART modem (7) permits parameterization using a protocol according to the HART specification.

The pressure transmitters with spans ≤ 63 bar measure the input pressure compared to atmosphere, transmitters with spans ≥ 160 bar compared to vacuum.

Operation of electronics with PROFIBUS PA communication

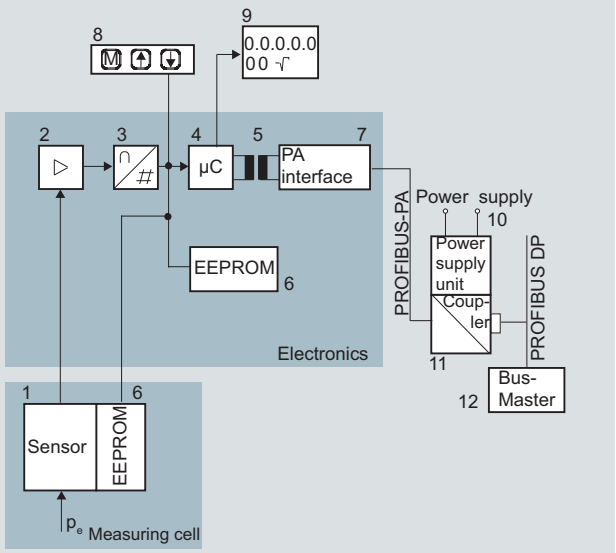

1 Measuring cell sensor
2 Instrument amplifier
3 Analog-to-digital converter
4 Microcontroller
5 Electrical isolation
6 One non-volatile memory each in the measuring cell and electronics
7 PROFIBUS-PA interface
8 Three input keys (local operation)
9 Digital display
10 Power supply
11 DP/PA coupler or link
12 Bus master
p_e Input variable

Function diagram of electronics

The bridge output voltage created by the sensor (1, Figure "Function diagram of the electronics") is amplified by the measuring amplifier (2) and digitized in the analog-to-digital converter (3). The digital information is evaluated in the microcontroller, its linearity and temperature response corrected, and provided on the PROFIBUS PA through an electrically isolated PA interface (7).

The data specific to the measuring cell, the electronics data, and the parameter data are stored in the two non-volatile memories (6). The one memory is coupled to the measuring cell, the other to the electronics. As the result of this modular design, the electronics and the measuring cell can be replaced separately from each other.

Using the three input buttons (8) you can parameterize the pressure transmitter directly at the measuring point. The input buttons can also be used to control the view of the results, the error messages and the operating modes on the digital display (9).

The results with status values and diagnostic values are transferred by cyclic data transmission on the PROFIBUS PA. Parameterization data and error messages are transferred by acyclic data transmission. Special software such as SIMATIC PDM is required for this.

© Siemens AG 2011

Operation of electronics with FOUNDATION Fieldbus communication

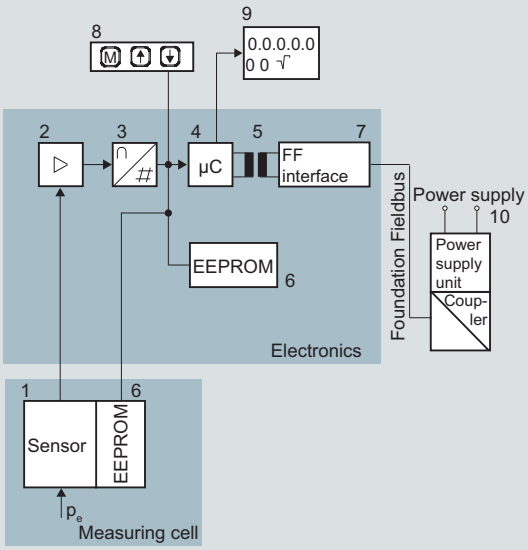

1	Measuring cell sensor	8	Three input keys (local operation)
2	Instrument amplifier	9	Digital display
3	Analog-to-digital converter	10	Power supply
4	Microcontroller		
5	Electrical isolation	p_e	Input variable
6	One non-volatile memory each in the measuring cell and electronics		
7	FF interface		

Function diagram of electronics

The bridge output voltage created by the sensor (1, Figure "Function diagram of electronics") is amplified by the measuring amplifier (2) and digitized in the analog-to-digital converter (3). The digital information is evaluated in the microcontroller, its linearity and temperature response corrected, and provided on the FOUNDATION Fieldbus through an electrically isolated FOUNDATION Fieldbus interface (7).

The data specific to the measuring cell, the electronics data, and the parameter data are stored in the two non-volatile memories (6). The one memory is coupled to the measuring cell, the other to the electronics. As a result of this modular design, the electronics and the measuring cell can be replaced separately from each other.

Using the three input buttons (8) you can parameterize the pressure transmitter directly at the measuring point. The input buttons can also be used to control the view of the results, the error messages and the operating modes on the digital display (9).

The results with status values and diagnostic values are transferred by cyclic data transmission on the FOUNDATION Fieldbus. Parameterization data and error messages are transferred by acyclic data transmission. Special software such as National Instruments Configurator is required for this.

Mode of operation of the measuring cells

Measuring cell for gauge pressure

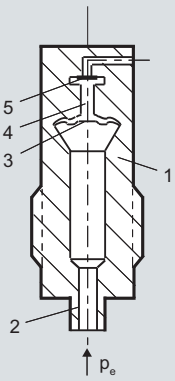

1	Measuring cell
2	Process connection
3	Seal diaphragm
4	Filling liquid
5	Silicon pressure sensor
p_e	Pressure as input variable

Measuring cell for gauge pressure, function diagram

The pressure p_e is applied through the process connection (2, Figure "Measuring cell for gauge pressure, function diagram) to the measuring cell (1). This pressure is subsequently transmitted further through the seal diaphragm (3) and the filling liquid (4) to the silicon pressure sensor (5) whose measuring diaphragm is then flexed. This changes the resistance of the four piezo-resistors fitted in the diaphragm in a bridge circuit. This change in resistance results in a bridge output voltage proportional to the absolute pressure.

Measuring cell for gauge pressure with front-flush diaphragm

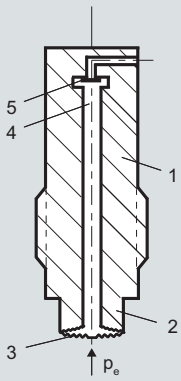

1	Measuring cell
2	Process connection
3	Seal diaphragm
4	Filling liquid
5	Silicon pressure sensor
p_e	Pressure as input variable

Measuring cell for gauge pressure, with front-flush diaphragm for paper industry, function diagram

The pressure $_p$e is applied through the process connection (2, Figure "Measuring cell for gauge pressure, with front-flush diaphragm for paper industry, function diagram") to the measuring cell (1). This pressure is subsequently transmitted further through the seal diaphragm (3) and the filling liquid (4) to the silicon pressure sensor (5) whose measuring diaphragm is then flexed. This changes the resistance of the four piezo-resistors fitted in the diaphragm in a bridge circuit. This change in resistance results in a bridge output voltage proportional to the absolute pressure.

© Siemens AG 2011

Measuring cell for absolute pressure from gauge pressure series

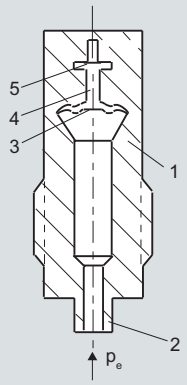

1 Measuring cell
2 Process connection
3 Seal diaphragm
4 Filling liquid
5 Silicon absolute pressure sensor
p_e Absolute pressure as input variable

Measuring cell for absolute pressure from the pressure series, function diagram

The absolute pressure $_p$e is transmitted through the seal diaphragm (3, Figure "Measuring cell for absolute pressure from pressure series, gauge pressure, function diagram ") and the filling liquid (4) to the silicon absolute pressure sensor (5) whose measuring diaphragm is then flexed. This changes the resistance of the four piezo-resistors fitted in the diaphragm in a bridge circuit. This change in resistance results in a bridge output voltage proportional to the absolute pressure.

Measuring cell for absolute pressure from differential pressure series

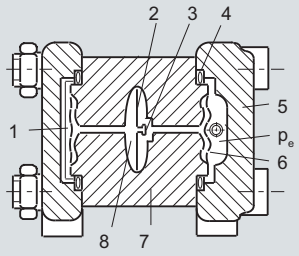

1 Reference vacuum
2 Overload diaphragm
3 Silicon pressure sensor
4 O-ring
5 Process flange
6 Seal diaphragm
7 Body of measuring cell
8 Filling liquid
p_e Absolute pressure as input variable

Measuring cell for absolute pressure from differential pressure series, function diagram

The input pressure p_e is transmitted through the seal diaphragm (6, Figure "Measuring cell for absolute pressure from differential pressure series, function diagram") and the filling liquid (8) to the silicon pressure sensor (3).

The difference in pressure between the input pressure p_e and the reference vacuum (1) on the low-pressure side of the measuring cell flexes the measuring diaphragm. This changes the resistance of the four piezo-resistors fitted in the diaphragm in a bridge circuit. This change in resistance results in a bridge output voltage proportional to the absolute pressure.

An overload diaphragm is installed to provide protection from overloads. If the measuring limits are exceeded, the overload diaphragm (2) is flexed until the seal diaphragm rests on the body of the measuring cell (7), thus protecting the silicon pressure sensor from overloads.

Measuring cell for differential pressure and flow

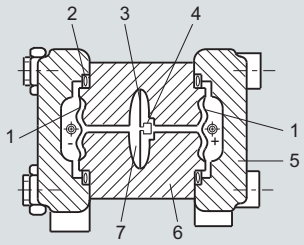

1 Seal diaphragm
2 O-ring
3 Overload diaphragm
4 Silicon pressure sensor
5 Process flange
6 Body of measuring cell
7 Filling liquid

Measuring cell for differential pressure and flow, function diagram

The differential pressure is transmitted through the seal diaphragms (1, Figure "Measuring cell for differential pressure and flow, function diagram") and the filling liquid (7) to the silicon pressure sensor (4).

The measuring diaphragm is flexed by the applied differential pressure. This changes the resistance of the four piezo-resistors fitted in the diaphragm in a bridge circuit. This change in resistance results in a bridge output voltage proportional to the absolute pressure.

An overload diaphragm is installed to provide protection from overloads. If the measuring limits are exceeded, the overload diaphragm (2) is flexed until the seal diaphragm rests on the body of the measuring cell (7), thus protecting the silicon pressure sensor from overloads.

Measuring cell for level

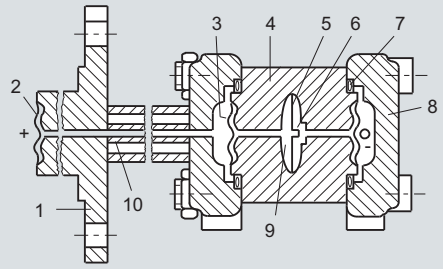

1 Flange with tube
2 Seal diaphragm on mounting flange
3 Seal diaphragm
4 Body of measuring cell
5 Overload diaphragm
6 Silicon pressure sensor
7 O-ring
8 Process flange
9 Filling liquid
10 Capillary with filling liquid of mounting flange

Measuring cell for level, function diagram

The input pressure (hydrostatic pressure) acts hydraulically on the measuring cell through the seal diaphragm on the mounting flange (2, Figure "Measuring cell for level, function diagram"). This differential pressure is subsequently transmitted further through the measuring cell (3) and the filling liquid (9) to the silicon pressure sensor (6) whose measuring diaphragm is then flexed.

This changes the resistance of the four piezo-resistors fitted in the diaphragm in a bridge circuit.

This change in resistance results in a bridge output voltage proportional to the differential pressure.

An overload diaphragm is installed to provide protection from overloads. If the measuring limits are exceeded, the overload diaphragm (2) is flexed until the seal diaphragm rests on the body of the measuring cell (7), thus protecting the silicon pressure sensor from overloads.

© Siemens AG 2011

Parameterization DS III

Depending on the version, there are a range of options for parameterizing the pressure transmitter and for setting or scanning the parameters.

Parameterization using the pushbuttons (local operation)

With the input buttons you can easily set the most important parameters without any additional equipment.

Parameterization using HART communication

Parameterization using HART communication is performed with a HART communicator or a PC.

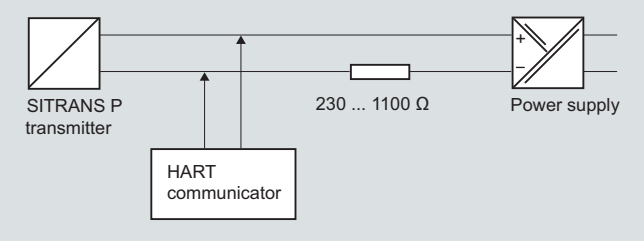

Communication between a HART communicator and a pressure transmitter

When parameterizing with the HART communicator, the connection is made directly to the 2-wire cable.

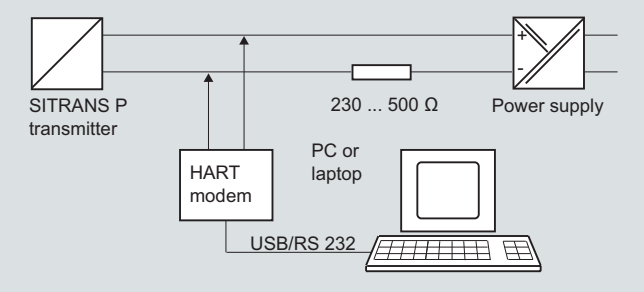

HART communication between a PC communicator and a pressure transmitter

When parameterizing with a PC, the connection is made through a HART modem.

The signals needed for communication in conformity with the HART 5.x or 6.x protocols are superimposed on the output current using the Frequency Shift Keying (FSK) method.

Adjustable parameters, DS III HART

Parameters	Pushbuttons (DS III HART)	HART communication
Start of scale	x	x
Full-scale value	x	x
Electrical damping	x	x
Start-of-scale value without application of a pressure ("Blind setting")	x	x
Full-scale value without application of a pressure ("Blind setting")	x	x
Zero adjustment	x	x
current transmitter	x	x
Fault current	x	x
Disabling of buttons, write protection	x	x[1)]
Type of dimension and actual dimension	x	x
Linear or square root output	x[2)]	x[2)]
Characterizer setup		x
Freely-programmable LCD		x
Diagnostic functions		x

[1)] Cancel apart from write protection
[2)] Only differential pressure

Diagnostic functions for DS III HART

- Zero correction for position
- Event counter
- Transmitter alarms
- Saturation alarm
- Min/Max registers
- Simulation functions
- Maintenance timer

Available physical units of display for DS III HART

Table style: Technical specifications 2

Physical variable	Physical dimensions
Pressure (setting can also be made in the factory)	Pa, MPa, kPa, bar, mbar, torr, atm, psi, g/cm^2, kg/cm^2, inH_2O, inH_2O (4 °C), mmH_2O, ftH_2O (20 °C), inHg, mmHg
Level (height data)	m, cm, mm, ft, in
Volume	m^3, dm^3, hl, yd^3, ft^3, in^3, US gallon, Imp. gallon, bushel, barrel, barrel liquid
Mass	g, kg, t, lb, Ston, Lton, oz
volume flow	m^3/d, m^3/h, m^3/s, l/min, l/s, ft^3/d, ft^3/min, ft^3/s, US gallon/min, US gallon/s
Mass flow	t/d, t/h, t/min, kg/d, kg/h, kg/min, kg/s, g/d, g/h, g/min, g/s, lb/d, lb/h, lb/min, lb/s, LTon/d, LTon/h, STon/d, STon/h, STon/min
Temperature	K, °C, °F, °R
Miscellaneous	%, mA

Parameterization through PROFIBUS PA interface

Fully digital communication through PROFIBUS PA, profile 3.0, is particularly user-friendly. The PROFIBUS puts the DS III PA is in connection with a process control system, e.g. SIMATIC PSC 7. Communication is possible even in a potentially explosive environment.

For parameterization through PROFIBUS you need suitable software, e.g. SIMATIC PDM (Process Device Manager).

Parameterization through FOUNDATION Fieldbus interface

Fully digital communication through FOUNDATION Fieldbus is particularly user-friendly. Through the FOUNDATION Fieldbus the DS III FF is connected to a process control system. Communication is possible even in a potentially explosive environment.

For parameterization through the FOUNDATION Fieldbus you need suitable software, e.g. National Instruments Configurator.

Adjustable parameters for DS III PA and FF

Parameters	Push-buttons	PROFIBUS PA and FOUNDATION Fieldbus interface
Electrical damping	x	x
Zero adjustment (correction of position)	x	x
Buttons and/or function disabling	x	x
Source of measured-value display	x	x
Physical dimension of display	x	x
Position of decimal point	x	x
Bus address	x	x
Linear or square root output	x	x
Characterizer setup		x
Freely-programmable LCD		x
Diagnostics functions		x

© Siemens AG 2011

SITRANS P DS III
Technical description

Diagnostic functions for DS III PA and FF

- Event counter
- Min/Max registers
- Maintenance timer
- Simulation functions
- Zero correction for position
- Transmitter alarms
- Saturation alarm

Physical dimensions available for the display

Physical variable	Physical dimensions
Pressure (setting can also be made in the factory)	MPa, kPa, Pa, bar, mbar, torr, atm, psi, g/cm^2, kg/cm^2, mmH_2O, mmH_2O (4 °C), inH_2O, in$H_2$0 (4 °C), ftH_2O (20 °C), mmHg, inHg
Level (height data)	m, cm, mm, ft, in, yd
Volume	m^3, dm^3, hl, yd^3, ft^3, in^3, US gallon, Imp. gallon, bushel, barrel, barrel liquid
volume flow	m^3/s, m^3/min, m^3/h, m^3/d, l/s, l/min, l/h, l/d, Ml/d, ft^3/s, ft^3/min, ft^3/h, ft^3/d, US gallon/s, US gallon/min, US gallon/h, US gallon/d, bbl/s, bbl/min, bbl/h, bbl/d
Mass flow	g/s, g/min, g/h, g/d, kg/s, kg/min, kg/h, kg/d, t/s, t/min, t/h, /t/d, lb/s, lb/min, lb/h, lb/d, STon/s, STon/min, STon/h, STon/d, LTon/s, LTon/min, LTon/h, LTon/d
Total mass flow	t, kg, g, lb, oz, LTon, STon
Temperature	K, °C, °F, °R
Miscellaneous	%

© Siemens AG 2015

Selection and Ordering data		Article No.
Pressure transmitter for gauge pressure, SITRANS P DS III with HART	↗	7MF4033 -
↗ Click on the Article No. for the online configuration in the PIA Life Cycle Portal.		
Measuring cell filling	**Measuring cell cleaning**	
Silicone oil	normal	1
Inert liquid[1]	grease-free to cleanliness level 2	3
Measuring span (min. ... max.)		
0.01 ... 1 bar	(0.15 ... 14.5 psi)	B
0.04 ... 4 bar	(0.58 ... 58 psi)	C
0.16 ... 16 bar	(2.32 ... 232 psi)	D
0.63 ... 63 bar	(9.14 ... 914 psi)	E
1.6 ... 160 bar	(23.2 ... 2320 psi)	F
4.0 ... 400 bar	(58.0 ... 5802 psi)	G
7.0 ... 700 bar	(102.0 ...10153 psi)	J
Wetted parts materials		
Seal diaphragm	Process connection	
Stainless steel	Stainless steel	A
Hastelloy	Stainless steel	B
Hastelloy	Hastelloy	C
Version as diaphragm seal [2) 3) 4) 5)]		Y
Process connection		
• Connection shank G½B to EN 837-1		0
• Female thread ½-14 NPT		1
• Stainless steel oval flange with process connection (Oval flange has no female thread)		
- Mounting thread $^{7}/_{16}$-20 UNF to IEC 61518		2
- Mounting thread M10 to DIN 19213		3
- Mounting thread M12 to DIN 19213		4
• Male thread M20 x 1.5		5
• Male thread ½ -14 NPT		6
Non-wetted parts materials		
• Housing made of die-cast aluminium		0
• Housing stainless steel precision casting[6)]		3
Version		
• Standard versions		1
• International version, English label inscriptions, documentation in 5 languages on CD (no Order code selectable)		2
Explosion protection		
• None		A
• With ATEX, Type of protection:		
- "Intrinsic safety (Ex ia)"		B
- "Explosion-proof (Ex d)"[7)]		D
- "Intrinsic safety and flameproof enclosure" (Ex ia + Ex d)"[8)]		P
- "Ex nA/ic (Zone 2)"[9)]		E
- "Intrinsic safety, explosion-proof enclosure and dust explosion protection (Ex ia + Ex d + Zone 1D/2D)"[8)10)]		R
• FM + CSA intrinsic safe (is)		F
• FM + CSA (is + ep) + Ex ia + Ex d (ATEX)[10)]		S
• With FM + CSA, Type of protection:		
- "Intrinsic Safe und Explosion Proof (is + xp)"[7)]		NC
Electrical connection / cable entry		
• Screwed gland Pg 13.5 (adapter)[11)]		A
• Screwed gland M20 x1 .5		B
• Screwed gland ½-14 NPT		C
• Han 7D plug (plastic housing) incl. mating connector[11)]		D
• M12 connectors (stainless steel)[11)12)]		F

Selection and Ordering data	Article No.
Pressure transmitter for gauge pressure, SITRANS P DS III with HART	7MF4033 -
Display	
• Without display	0
• Without visible display (display concealed, setting: mA)	1
• With visible display (setting: mA)	6
• with customer-specific display (setting as specified, Order code "Y21" or "Y22" required)	7

Power supply units see Chap. 7 "Supplementary Components".

Included in delivery of the device:
- Brief instructions (Leporello)
- CD-ROM with detailed documentation

1) For oxygen application, add Order code E10.

2) When the manufacture's certificate (calibration certificate) has to be ordered for transmitters with diaphragm seals according to IEC 60770-2, it is recommended only to order this certificate exclusively with the diaphragm seals. The measuring accuracy of the total combination is certified here.

3) If the acceptance test certificate 3.1.is ordered for the transmitter with mounted diaphragm seals this certificate must also be ordered with the respective remote seals.

4) The diaphragm seal is to be specified with a separate order number and must be included with the transmitter order number, for example 7MF403.-..Y..-.... and 7MF4900-1...-.B

5) The standard measuring cell filling of configurations with remote seals (Y) is silicone oil.

6) Not in conjunction with Electrical connection "Screwed gland Pg 13.5" and "Han7D plug".

7) Without cable gland, with blanking plug

8) With enclosed cable gland Ex ia and blanking plug

9) Configurations with HAN and M12 connectors are only available in Ex ic.

10) Only in connection with IP65.

11) Only in connection with Ex approval A, B or E.

12) M12 delivered without cable socket

Tags LT-9010

In-Situ

Innovations in Water Monitoring

Spec Sheet

Level TROLL® 400, 500 & 700 Data Loggers

Get water level data the way you want it, when you want it with industry-leading water level/pressure and temperature data loggers. By partnering with In-Situ, you receive durable Level TROLL® Data Loggers that provide years of service, accurate results, intuitive software, and real-time functionality.

Be Effective

- **Increase productivity:** Reduce training and installation time with In-Situ intuitive software platform and integrated components. Patented twist-lock connectors, included on Level TROLL Loggers and RuggedCable® Systems, ensure error-free deployments.
- **Streamline analysis and reporting:** Automate water level corrections and post-processing, graph data, and accelerate report generation with Win-Situ® Software. Easily export data to Excel,® a web-based management service, or data analysis software.
- **Set up real-time networks:** Access data 24/7 and receive event notifications when you connect data loggers to Tube and Cube systems, radios, or other third-party data collection platforms. Get decision quality data when, where, and how you need it with HydroVu Data Services. Control gates, pumps, alarms, and other equipment by using built-in Modbus/RS485, SDI-12, or 4-20 mA communication protocols.

Be Reliable

- **Deploy in all environments:** Install loggers in fresh water, saltwater, and contaminated waters. Solid titanium and sealed construction outperforms and outlasts coated data loggers.
- **Log accurate data:** Get optimal accuracy under all operating conditions. Sensors undergo NIST®-traceable factory calibration across the full pressure and temperature range. For applications requiring the highest levels of accuracy, use a vented (gauged) system.
- **Get long-lasting operation:** Reduce trips to the field with low-power loggers that typically operate for 10 years.

Be In-Situ

- Receive **free**, 24/7 technical support and online resources.
- Order data loggers and accessories from the In-Situ website.
- Get guaranteed 7-day service for maintenance (U.S.A. only).

Applications

- **Aquifer characterization: slug tests & pumping tests**
- **Coastal: tide/harbor levels & wetland/estuary research**
- **Hydrologic events: crest stage gages, storm surge monitoring, & flood control systems**
- **Long-term, real-time groundwater & surface water monitoring**
- **Mining & remediation**

CALL OR CLICK TO PURCHASE OR RENT

1-800-446-7488 (toll-free in U.S.A. and Canada)
1-970-498-1500 (U.S.A. and international)

WWW.IN-SITU.COM

Level TROLL® 400, 500 & 700 Data Loggers

Spec Sheet

General	Level TROLL 400	Level TROLL 500	Level TROLL 700	Level BaroTROLL
Temperature ranges[1]	Operational: -20-80° C (-4-176° F) Storage: -40-80° C (-40-176° F) Calibrated: -5-50° C (23-122° F)	Operational: -20-80° C (-4-176° F) Storage: -40-80° C (-40-176° F) Calibrated: -5-50° C (23-122° F)	Operational: -20-80° C (-4-176° F) Storage: -40-80° C (-40-176° F) Calibrated: -5-50° C (23-122° F)	Operational: -20-80° C (-4-176° F) Storage: -40-80° C (-40-176° F) Calibrated: -5-50° C (23-122° F)
Diameter	1.83 cm (0.72 in.)	1.83 cm (0.72 in.)	1.83 cm (0.72 in.)	1.83 cm (0.72 in.)
Length	21.6 cm (8.5 in.)	21.6 cm (8.5 in.)	21.6 cm (8.5 in.)	21.6 cm (8.5 in.)
Weight	197 g (0.43 lb)	197 g (0.43 lb)	197 g (0.43 lb)	197 g (0.43 lb)
Materials	Titanium body; Delrin® nose cone	Titanium body; Delrin nose cone	Titanium body; Delrin nose cone	Titanium body; Delrin nose cone
Output options	Modbus/RS485, SDI-12, 4-20 mA	Modbus/RS485, SDI-12, 4-20 mA	Modbus/RS485, SDI-12, 4-20 mA	Modbus/RS485, SDI-12, 4-20 mA
Battery type & life[2]	3.6V lithium; 10 years or 2M readings	3.6V lithium; 10 years or 2M readings	3.6V lithium; 10 years or 2M readings	3.6V lithium; 10 years or 2M readings
External power	8-36 VDC	8-36 VDC	8-36 VDC	8-36 VDC
Memory *Data records*[3] *Data logs*	2.0 MB 130,000 50 logs	2.0 MB 130,000 50 logs	4.0 MB 260,000 50 logs	1.0 MB 65,000 2 logs
Fastest logging rate	2 per second	2 per second	4 per second	1 per minute
Fastest output rate	Modbus: 2 per second SDI-12 & 4-20 mA: 1 per second	Modbus: 2 per second SDI-12 & 4-20 mA: 1 per second	Modbus: 2 per second SDI-12 & 4-20 mA: 1 per second	Modbus: 2 per second SDI-12 & 4-20 mA: 1 per second
Log types	Linear, Fast Linear, and Event	Linear, Fast Linear, and Event	Linear, Fast Linear, Linear Average, Event, Step Linear, True Logarithmic	Linear
Sensor Type/Material	**Piezoresistive; titanium**	**Piezoresistive; titanium**	**Piezoresistive; titanium**	**Piezoresistive; titanium**
Range	Absolute (non-vented) 30 psia: 11 m (35 ft) 100 psia: 60 m (197 ft) 300 psia: 200 m (658 ft) 500 psia: 341 m (1120 ft)	Gauged (vented) 5 psig: 3.5 m (11.5 ft) 15 psig: 11 m (35 ft) 30 psig: 21 m (69 ft) 100 psig: 70 m (231 ft) 300 psig: 210 m (692 ft) 500 psig: 351 m (1153 ft)	Absolute (non-vented) 30 psia: 11 m (35 ft) 100 psia: 60 m (197 ft) 300 psia: 200 m (658 ft) 500 psia: 341 m (1120 ft) 1000 psia: 693 m (2273 ft) Gauged (vented) 5 psig: 3.5 m (11.5 ft) 15 psig: 11 m (35 ft) 30 psig: 21 m (69 ft) 100 psig: 70 m (231 ft) 300 psig: 210 m (692 ft) 500 psig: 351 m (1153 ft)	30 psia (usable up to 16.5 psi; 1.14 bar)
Accuracy[4]	±0.05% full scale (FS) ±0.1% FS	±0.05% FS ±0.1% FS	±0.05% FS ±0.1% FS	±0.05% FS ±0.1% FS
Resolution	±0.005% FS or better	±0.005% FS or better	±0.005% FS or better	±0.005% FS or better
Units of measure	Pressure: psi, kPa, bar, mbar, mmHg, inHg, cmH20, inH20 Level: in., ft, mm, cm, m	Pressure: psi, kPa, bar, mbar, mmHg, inHg, cmH20, inH20 Level: in., ft, mm, cm, m	Pressure: psi, kPa, bar, mbar, mmHg, inHg, cmH20, inH20 Level: in., ft, mm, cm, m	Pressure: psi, kPa, bar, mbar, mmHg, inHg, cmH20, inH20
Temperature Sensor	**Silicon**	**Silicon**	**Silicon**	**Silicon**
Accuracy	±0.1° C	±0.1° C	±0.1° C	±0.1° C
Resolution	0.01° C or better	0.01° C or better	0.01° C or better	0.01° C or better
Units of measure	Celsius or Fahrenheit	Celsius or Fahrenheit	Celsius or Fahrenheit	Celsius or Fahrenheit
Warranty	**3 years**	**3 years**	**3 years**	**3 years**
Notes	[1] Temperature range for non-freezing liquids. [2] Typical battery life when used within the factory-calibrated temperature range. [3] 1 data record = date/time plus 2 parameters logged (no wrapping) from device within the factory-calibrated temperature range. [4] Across factory-calibrated pressure range. [5] Across factory-calibrated pressure and temperature ranges. [6] Up to 5-year (total) extended warranties are available for all sensors—call for details. Delrin is a registered trademark of E.I. du Pont de Nemours and Company. Specifications are subject to change without notice.			

Every Application & Budget

Use maintenance-free, non-vented systems for long-term monitoring and at flood-prone or high-humidity sites. Pair with Tube and Cube Telemtry System and HydroVu for automtatic barometric compensation.

Use high-accuracy, vented systems to conduct aquifer tests and to view barometrically compensated water level data in real time.

Forgot to set a level reference at the beginning of a deployment? Automate level corrections by using Win-Situ Software's post-level correction Wizard.

BaroTROLL® Data Logger

When using a non-vented system, collect barometric pressure and temperature data with a titanium BaroTROLL Data Logger in order to post correct data for barometric pressure fluctuations.

Calculating barometric efficiency? Use the BaroTROLL Logger with vented systems.

CALL OR CLICK TO PURCHASE
1-800-446-7488 (toll-free in U.S.A. and Canada)
1-970-498-1500 (U.S.A. and international)
WWW.IN-SITU.COM
221 East Lincoln Avenue, Fort Collins, CO 80524 USA

Copyright © 2013 In-Situ Inc. All rights reserved. Nov. 2015 (T3; 2K)

Tags LT-9010

In-Situ Inc.

Innovations in Water Monitoring

In-Situ® RuggedCable® Systems

Durable, Direct-Read Cable

RuggedCable Systems are custom-built to endure harsh environments and to last for years. RuggedCable Systems include:

- Titanium twist-lock connectors for quick, reliable connections to instrument body, TROLL® Com Communication Device, desiccant, and other accessories (2-year warranty)
- Metal shield beneath the cable jacket to prevent electrical interferences
- Kellems® grip for secure instrument deployment
- Small desiccant for vented systems (only for storage)

Use RuggedCable Systems with:

- Aqua TROLL® 100, 200, and 400 Instruments
- BaroTROLL® Instruments
- Con TROLL® PRO System
- Level TROLL® 300, 500, and 700 Instruments
- RDO® PRO Probe (twist-lock models)
- TROLL® 9500 Water Quality Instruments
- TROLL® Link Telemetry Systems, MultiHop Radios, and TROLL® Net Hub

Customizable Cable

When ordering, consider the following options:

- **Vented or non-vented cable:** Vented cable is used with vented pressure/level sensors for gauged measurements. The cable vent tube ensures that atmospheric pressure is the reference pressure applied to the sensor diaphragm. Non-vented cable may be used with non-vented instruments for absolute measurements. Compensate absolute measurements with barometric pressure data by using a BaroTROLL® Instrument and Win-Situ® Baro Merge™ Software.
- **Jacket options:** Tefzel® (vented) or thermoplastic polyurethane (TPU; vented or non-vented)
- **Customized lengths:** Up to 1,219 m (4,000 ft) 600Ft Cable
- **Cable termination:** Twist-lock termination (female connector) on one or both cable ends. Other custom configurations are available—call for details.
- ~~**Cable reels:** Plastic or steel reel~~

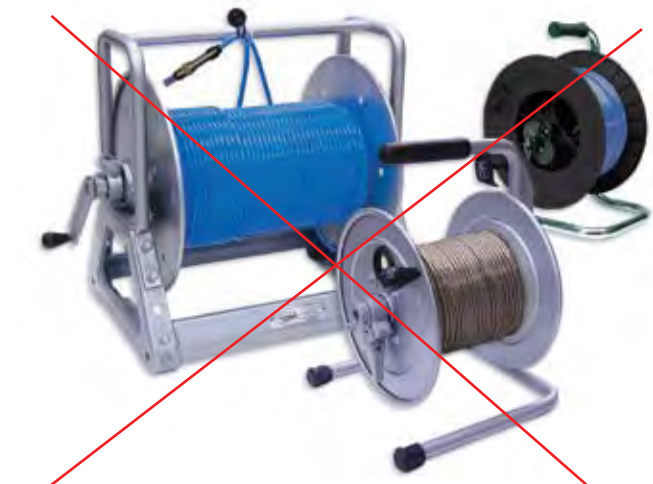

Steel and plastic reels available

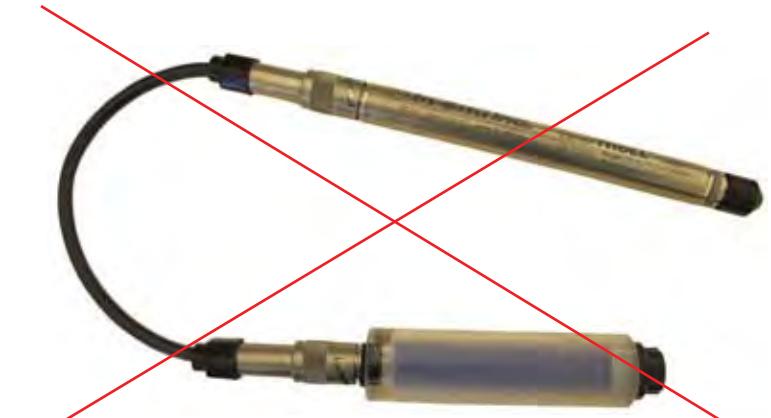

Extra large desiccant connected to RuggedCable System and Level TROLL Instrument

Titanium twist-lock connectors

In-Situ® RuggedCable® Systems

Specifications

Specifications	RuggedCable Systems
Operating temp. range	-25° to 80° C (-13° to 176° F)
Jacket options	• TPU (thermoplastic polyurethane) • Tefzel® (ETFE fluoropolymer; generic equivalent to Teflon®)
Vent options	• Non-vented (absolute) • Vented (gauged) with desiccant (used to mitigate moisture/humidity)
Conductors	6 conductors, 24 AWG, polypropylene insulation
Cable diameter	• TPU: 6.7 mm (0.265 in) • Tefzel: 6.35 mm (0.25 in)
Connector diameter	18. 5 mm (0.73 in)
Weight	• Non-vented, TPU: 16 kg/300 m (35.6 lbs/1,000 ft) • Non-vented, Tefzel: 14 kg/300 m (32 lbs/1,000 ft) • Vented, TPU: 14 kg/300 m (32 lbs/1,000 ft) • Vented, Tefzel: 14 kg/300 m (32 lbs/1,000 ft)
Minimum bend radius	2X cable diameter (13.5 mm; 0.54 in)
Break strength	127 kg (280 lbs)
Maximum cable length	1,219 m (4,000 ft) for RS485
Desiccant pack (required for vented systems)	Large and extra large desiccant packs available with titanium, ABS, or stripped-and-tinned termination.
Warranty	2 years

RuggedCable Selection Guide

Application	Jacket Type	Cable Type
Aquifer characterization	TPU or Tefzel	Vented
Crest stage gaging	TPU	Non-vented
Dewatering	TPU	Vented or non-vented
Flood and storm surge monitoring	TPU	Non-vented
Landfill monitoring	Tefzel	Non-vented
Municipal and industrial monitoring (SCADA)	TPU	Non-vented
Remediation projects	Tefzel	Vented
River, lake, and reservoir monitoring	TPU	Vented or non-vented
Saltwater/brackish water	TPU or Tefzel	Vented or non-vented
Stormwater monitoring	TPU	Vented or non-vented
Tide/harbor monitoring	TPU or Tefzel	Vented
Wetland and estuary monitoring	TPU or Tefzel	Vented or non-vented

Specifications are subject to change without notice.

Accessories

- Large desiccant for low-humidity environments or for deployments where maintenance occurs frequently.
- Extra large desiccant for high-humidity environments or for depolyments where maintenance occurs infrequently. Desiccates six times more saturated air than the large desiccant.
- Titanium cable extenders are used to join two lengths of cable without signal loss. The cable extender seals the cables, provides a weight-bearing connection, and maintains venting.
- Plastic and steel reels

Large desiccant with titanium twist-lock connector for standard deployments

Economical large plastic desiccant

Extra large desiccant with titanium twist-lock connector for high-humidity sites, remote sites, or applications that require fast sampling rates.

Outboard desiccant for use with stripped-and-tinned RuggedCable Systems

Titanium cable extender

Kellems is a registered trademark of Hubbell Incorporated.
Teflon and Tefzel are registered trademarks of E.I. Du Pont de Nemours and Co.

In-Situ Inc.

Call to purchase or rent—www.in-situ.com
221 East Lincoln Avenue, Fort Collins, Colorado, U.S.A. 80524
1-800-446-7488 (toll-free in U.S.A. and Canada)
1-970-498-1500 (U.S.A. and international)
Copyright © 2012 In-Situ Inc. All rights reserved. Sept. 2012 (web)

In-Situ Inc.

Information Sheet

Catalog No. 0053310

SHORT STRIPPED & TINNED CABLE with Male Twist-Lock Connector for Level TROLL®

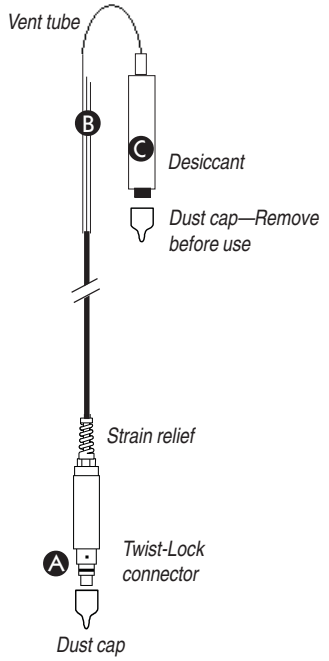

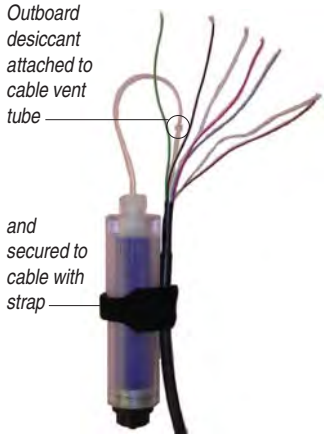

TIP: *The desiccant may be removed from the vent tube, if needed, for better access to the conductor wires. Pull the vent tube extender off the cable vent tube to remove. After connecting and trimming wires, attach desiccant vent tube to cable vent tube and secure desiccant to cable with hook-and-loop strap, as shown here.*

Connects a Level TROLL's RuggedCable™ to a controller or logger for communication via:

- Analog (4-20 mA)
- SDI-12
- RS485 Modbus
- RS232 Modbus (with a customer-supplied converter)

A Male Twist-Lock connector mates with female Twist-Lock connector on the RuggedCable

B Stripped & tinned wires on opposite end for wiring to PLC or logger

C Removable, refillable outboard desiccant protects cable vent tube from condensation in high-humidity environments

SPECIFICATIONS

Materials	PVC, titanium, nylon, Viton®
Dimensions	13.33 cm (5.25 in) long, 19 mm (0.75 in) O.D.
Environmental Rating	IP67 when connected, not designed for submersion
Cable	0.9 m (3 ft) vented TPU (Thermoplastic Polyurethane)
Conductors	6 conductors, 24 AWG, polypropylene insulation
Desiccant pack	Clear acrylic, nylon, HDPE membrane
Desiccant	approx. 22 g silica gel, type 4
Max. recommended cable lengths	SDI-12 61 m (200 ft) Modbus 1259 m (4000 ft) 4-20 mA 1259 m (4000 ft)

CONNECTIONS

Refer to wiring diagrams on back of sheet. Trim back and insulate unused wires. The shield should be wired to a chassis ground or earth ground.

Power Connections. The Red wire provides power for Modbus and SDI-12 modes. The Brown wire provides power for the 4-20 mA mode. If power is present on the Brown wire and not on the Red wire, the device enters the 4-20 mA mode automatically and stays in the 4-20 mode until power is removed from the Brown wire or is applied to the Red wire. The Red wire has priority — if power is applied to both wires at the same time, the device will operate in Modbus or SDI-12 modes but not in 4-20.

Communications. The device automatically switches between Modbus and SDI-12 modes depending on which of the two interfaces has activity. Modbus and SDI-12 cannot be used at the same time — whichever one is currently in use will block communication on the other.

To communicate with the device using Win-Situ® 5 software through a serial COM port: Disconnect the RuggedCable from the short stripped and tinned cable connector. Attach a TROLL Com to the RuggedCable. Connect the TROLL Com's DB9-pin connector to a serial port on a PC running Win-Situ 5.

(over)

SHORT STRIPPED & TINNED CABLE

Level TROLL Connections

ANALOG (4-20 mA) 2 WIRE

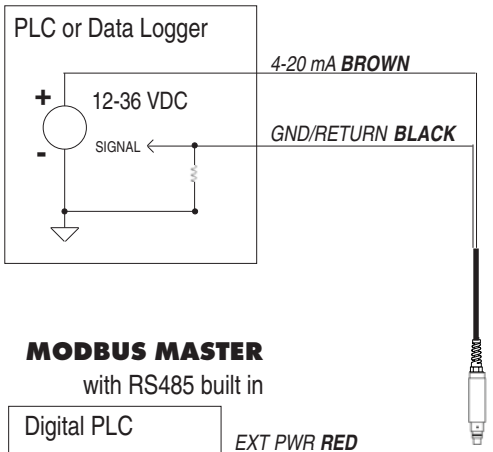

SDI-12 3 WIRE

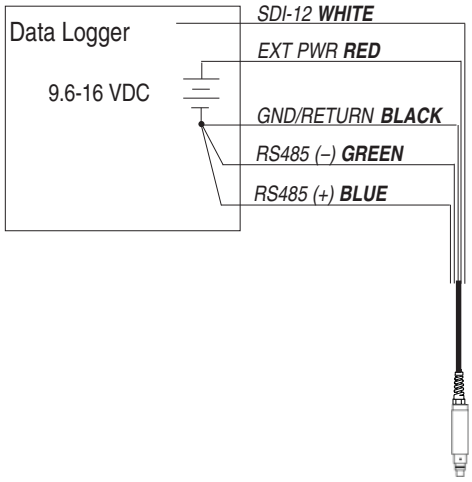

MODBUS MASTER

with RS485 built in

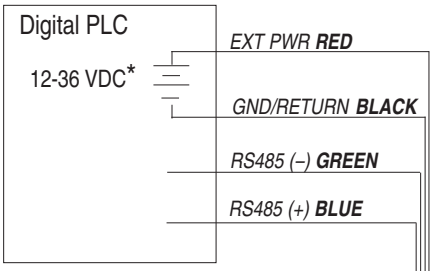

* Optional but highly recommended

MODBUS MASTER

with RS232 built in (converter required)

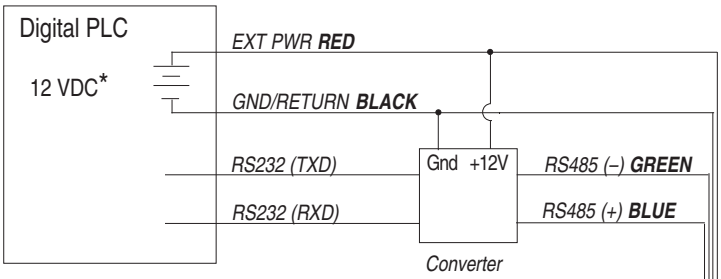

* Voltage limited by converter

Signal	Color
Gnd/Return	BLACK
Ext Power	RED
4-20 mA	BROWN
RS485(–)	GREEN
RS485(+)	BLUE
SDI-12	WHITE

CONVERTER

Port-Powered RS485 converter, such as B&B Electronics Model 485SD9TB

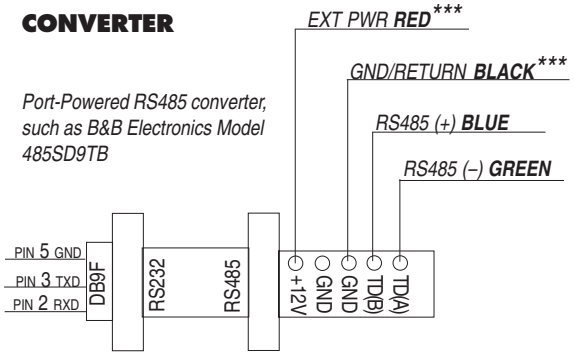

*** Required if port power is not available

1 800 446 7488
(toll-free, US and Canada) or 970 498 1500 **www.in-situ.com**

In-Situ Inc.

Due to continuing product development this information is subject to change without notice. In-Situ and the In-Situ logo, Win-Situ, TROLL, BaroTROLL, RuggedReader, RuggedCable and RDO are trademarks or registered trademarks of In-Situ Inc. Viton is a registered trademark of DuPont Dow Elastomers.
Copyright © 2005-2007 by In-Situ Inc. All rights reserved.

0053312 rev. 004 09/07

Panel Materials for CP-100

CONCEPT, TYPE 4 AND 12

INDUSTRY STANDARDS

Wall-mounting brackets required to maintain UL/CSA external mounting requirement.

CONCEPT solid single-door, door with window and flush-mount models

UL 508A Listed; Type 4, 12; File No. E61997
cUL Listed per CSA C22.2 No. 94; Type 4, 12; File No. E61997

NEMA/EEMAC Type 4, 12, 13
CSA, File No. 42186: Type 4, 12
VDE IP66
IEC 60529, IP66

CONCEPT two-door models

UL 508A Listed; Type 12; File No. E61997
cUL Listed per CSA C22.2 No. 94; Type 12; File No. E61997

NEMA/EEMAC Type 12
CSA, File No. 42186, Type 12
VDE IP 55
IEC 60529, IP55

APPLICATION

CONCEPT Enclosures are ideal for machine control applications. With streamlined styling, flush quarter-turn latches and an attractive, durable finish. Available in solid or window single-door and two-door landscape, flush-mount and sloped-top versions for application and mounting flexibility. Two-door landscape models provide full-width access and easy panel installation.

SPECIFICATIONS

- 18, 16 or 14 gauge steel
- Seams continuously welded and ground smooth
- Corner-formed doors
- Simple easy-to-remove and install hinge pins with captivation clip
- High-torque threadless studs and fasteners on door
- Minimum-width body flange provides maximum door opening
- Door opens 210 degrees
- External formed body flange
- Panel mounting studs fit optional CONCEPT panels and other accessories
- Mounting holes in back of body for direct mounting or optional external mounting brackets
- Removable door with hidden hinges for clean, aesthetic appearance
- Seamless foam-in-place gasket
- Quarter-turn slotted latch(es)
- Door alignment device on doors wider than 30 in.
- Four hinges on 60-in.-high enclosures
- Grounding stud on body; bonding provision on door (except window-door models)
- Provisions on door for optional high-impact thermoplastic data pocket
- Hardware kit with panel mounting nuts, panel grounding hardware and sealing washers
- Installation instructions provided

Single-Door and Window-Door Models:

- 3-point latch system on enclosures with height equal to or greater than 42-in. with quarter-turn, slotted latch

Flush-Mount Models:

- Mounting frame extends completely around enclosure

Two-Door Models:

- Overlapping door design provides full-width access
- Three-point latch system on right-hand hinged door with quarter-turn, slotted latch

FINISH

Two standard finishes are available: ANSI 61 gray or RAL 7035 textured light-gray polyester powder paint inside and out.

ACCESSORIES

Door Stop Kit
Handles
Lock Inserts
CONCEPT Panels
Mounting-Bracket Kits
See also the Popular Cooling Products and Accessories tables following the Standard Product tables

MODIFICATION AND CUSTOMIZATION

Hoffman excels at modifying and customizing products to your specifications. Contact your local Hoffman sales office or distributor for complete information.

BULLETIN: CW1

Catalog Number	AxBxC in./mm	Finish	Door Ga.	Body Ga.	CONCEPT Panel	Conductive CONCEPT Panel	Panel Size D x E in./mm	Mounting G x H in./mm	Latches qty.	Latches style	J in./mm
CSD36248LG	36.00 x 24.00 x 8.00 914 x 610 x 203	RAL 7035 Lt. Gray	14	16	CP3624	CP3624G	34.20 x 22.20 869 x 564	34.50 x 22.50 876 x 572	2	Quarter-turn	5.00 127
CSD36308	36.00 x 30.00 x 8.00 914 x 762 x 203	ANSI 61 Gray	14	14	CP3630	CP3630G	34.20 x 28.20 869 x 716	34.50 x 28.50 876 x 724	2	Quarter-turn	5.00 127
CSD36308LG	36.00 x 30.00 x 8.00 914 x 762 x 203	RAL 7035 Lt. Gray	14	14	CP3630	CP3630G	34.20 x 28.20 869 x 716	34.50 x 28.50 876 x 724	2	Quarter-turn	5.00 127
CSD36368	36.00 x 36.00 x 8.00 914 x 914 x 203	ANSI 61 Gray	14	14	CP3636	CP3636G	34.20 x 34.20 869 x 869	34.50 x 34.50 876 x 876	2	Quarter-turn	5.00 127
CSD36368LG	36.00 x 36.00 x 8.00 914 x 914 x 203	RAL 7035 Lt. Gray	14	14	CP3636	CP3636G	34.20 x 34.20 869 x 869	34.50 x 34.50 876 x 876	2	Quarter-turn	5.00 127
CSD42248	42.00 x 24.00 x 8.00 1067 x 610 x 203	ANSI 61 Gray	14	14	CP2442	CP2442G	22.20 x 40.20 564 x 1021	40.50 x 22.50 1029 x 572	1	3-point	21.00 533
CSD42248LG	42.00 x 24.00 x 8.00 1067 x 610 x 203	RAL 7035 Lt. Gray	14	14	CP2442	CP2442G	22.20 x 40.20 564 x 1021	40.50 x 22.50 1029 x 572	1	3-point	21.00 533
CSD42308	42.00 x 30.00 x 8.00 1067 x 762 x 203	ANSI 61 Gray	14	14	CP4230	CP4230G	40.20 x 28.20 1021 x 716	40.50 x 28.50 1029 x 716	1	3-point	21.00 533
CSD42308LG	42.00 x 30.00 x 8.00 1067 x 762 x 203	RAL 7035 Lt. Gray	14	14	CP4230	CP4230G	40.20 x 28.20 1021 x 716	40.50 x 28.50 1029 x 716	1	3-point	21.00 533
CSD42368	42.00 x 36.00 x 8.00 1067 x 914 x 203	ANSI 61 Gray	14	14	CP4236	CP4236G	40.20 x 34.20 1021 x 869	40.50 x 34.50 1029 x 876	1	3-point	21.00 533
CSD42368LG	42.00 x 36.00 x 8.00 1067 x 914 x 203	RAL 7035 Lt. Gray	14	14	CP4236	CP4236G	40.20 x 34.20 1021 x 869	40.50 x 34.50 1029 x 876	1	3-point	21.00 533
CSD48248	48.00 x 24.00 x 8.00 1219 x 610 x 203	ANSI 61 Gray	14	14	CP4824	CP4824G	46.20 x 22.20 1174 x 564	46.50 x 22.50 1181 x 572	1	3-point	24.00 610
CSD48248LG	48.00 x 24.00 x 8.00 1219 x 610 x 203	RAL 7035 Lt. Gray	14	14	CP4824	CP4824G	46.20 x 22.20 1174 x 564	46.50 x 22.50 1181 x 572	1	3-point	24.00 610
CSD48308	48.00 x 30.00 x 8.00 1219 x 762 x 203	ANSI 61 Gray	14	14	CP3048	CP3048G	28.20 x 46.20 716 x 1174	46.50 x 28.50 1181 x 724	1	3-point	24.00 610
CSD48308LG	48.00 x 30.00 x 8.00 1219 x 762 x 203	RAL 7035 Lt. Gray	14	14	CP3048	CP3048G	28.20 x 46.20 716 x 1174	46.50 x 28.50 1181 x 724	1	3-point	24.00 610
CSD48368	48.00 x 36.00 x 8.00 1219 x 914 x 203	ANSI 61 Gray	14	14	CP4836	CP4836G	46.20 x 34.20 1174 x 876	46.50 x 34.50 1181 x 876	1	3-point	24.00 610
CSD48368LG	48.00 x 36.00 x 8.00 1219 x 914 x 203	RAL 7035 Lt. Gray	14	14	CP4836	CP4836G	46.20 x 34.20 1174 x 876	46.50 x 34.50 1181 x 876	1	3-point	24.00 610
CSD60368	60.00 x 36.00 x 8.00 1524 x 914 x 203	ANSI 61 Gray	14	14	CP6036	CP6036G	58.20 x 34.20 1478 x 869	58.50 x 34.50 1486 x 876	1	3-point	30.00 762
CSD60368LG	60.00 x 36.00 x 8.00 1524 x 914 x 203	RAL 7035 Lt. Gray	14	14	CP6036	CP6036G	58.20 x 34.20 1478 x 869	58.50 x 34.50 1486 x 876	1	3-point	30.00 762
CSD161210	16.00 x 12.00 x 10.00 406 x 305 x 254	ANSI 61 Gray	16	18	CP1612	CP1612G	14.20 x 10.20 361 x 259	14.50 x 10.50 368 x 267	1	Quarter-turn	8.00 203
CSD161210LG	16.00 x 12.00 x 10.00 406 x 305 x 254	ANSI 61 Gray	16	18	CP1612	CP1612G	14.20 x 10.20 361 x 259	14.50 x 10.50 368 x 267	1	Quarter-turn	8.00 203
CSD161610	16.00 x 16.00 x 10.00 406 x 406 x 254	RAL 7035 Lt. Gray	16	18	CP1616	CP1616G	14.20 x 14.20 361 x 361	14.50 x 14.50 368 x 368	1	Quarter-turn	8.00 203
CSD161610LG	16.00 x 16.00 x 10.00 406 x 406 x 254	RAL 7035 Lt. Gray	16	18	CP1616	CP1616G	14.20 x 14.20 361 x 361	14.50 x 14.50 368 x 368	1	Quarter-turn	8.00 203
CSD162010	16.00 x 20.00 x 10.00 406 x 508 x 254	ANSI 61 Gray	16	18	CP2016	CP2016G	18.20 x 14.20 462 x 361	14.50 x 18.50 368 x 470	1	Quarter-turn	8.00 203
CSD162010LG	16.00 x 20.00 x 10.00 406 x 508 x 254	RAL 7035 Lt. Gray	16	18	CP2016	CP2016G	18.20 x 14.20 462 x 361	14.50 x 18.50 368 x 470	1	Quarter-turn	8.00 203
CSD201610	20.00 x 16.00 x 10.00 508 x 406 x 254	ANSI 61 Gray	16	18	CP2016	CP2016G	18.20 x 14.20 462 x 361	18.50 x 14.50 470 x 368	1	Quarter-turn	10.00 254
CSD201610LG	20.00 x 16.00 x 10.00 508 x 406 x 254	RAL 7035 Lt. Gray	16	18	CP2016	CP2016G	18.20 x 14.20 462 x 361	18.50 x 14.50 470 x 368	1	Quarter-turn	10.00 254
CSD202010	20.00 x 20.00 x 10.00 508 x 508 x 254	ANSI 61 Gray	16	18	CP2020	CP2020G	18.20 x 18.20 462 x 462	18.50 x 18.50 470 x 470	1	Quarter-turn	10.00 254
CSD202010LG	20.00 x 20.00 x 10.00 508 x 508 x 254	RAL 7035 Lt. Gray	16	18	CP2020	CP2020G	18.20 x 18.20 462 x 462	18.50 x 18.50 470 x 470	1	Quarter-turn	10.00 254
CSD202410	20.00 x 24.00 x 10.00 508 x 610 x 254	ANSI 61 Gray	16	18	CP2420	CP2420G	22.20 x 18.20 564 x 462	18.50 x 22.50 470 x 572	1	Quarter-turn	10.00 254
CSD202410LG	20.00 x 24.00 x 10.00 508 x 610 x 254	RAL 7035 Lt. Gray	16	18	CP2420	CP2420G	22.20 x 18.20 564 x 462	18.50 x 22.50 470 x 572	1	Quarter-turn	10.00 254
CSD241210	24.00 x 12.00 x 10.00 610 x 305 x 254	ANSI 61 Gray	16	18	CP2412	CP2412G	22.20 x 10.20 564 x 259	22.50 x 10.50 572 x 267	1	Quarter-turn	12.00 305
CSD241210LG	24.00 x 12.00 x 10.00 610 x 305 x 254	RAL 7035 Lt. Gray	16	18	CP2412	CP2412G	22.20 x 10.20 564 x 259	22.50 x 10.50 572 x 267	1	Quarter-turn	12.00 305
CSD241610	24.00 x 16.00 x 10.00 610 x 406 x 254	ANSI 61 Gray	16	18	CP2416	CP2416G	22.20 x 14.20 564 x 361	22.50 x 14.50 572 x 368	1	Quarter-turn	12.00 305
CSD241610LG	24.00 x 16.00 x 10.00 610 x 406 x 254	RAL 7035 Lt. Gray	16	18	CP2416	CP2416G	22.20 x 14.20 564 x 361	22.50 x 14.50 572 x 368	1	Quarter-turn	12.00 305
CSD242010	24.00 x 20.00 x 10.00 610 x 508 x 254	ANSI 61 Gray	16	18	CP2420	CP2420G	22.20 x 18.20 564 x 462	22.50 x 18.50 572 x 470	1	Quarter-turn	12.00 305
CSD242010LG	24.00 x 20.00 x 10.00 610 x 508 x 254	RAL 7035 Lt. Gray	16	18	CP2420	CP2420G	22.20 x 18.20 564 x 462	22.50 x 18.50 572 x 470	1	Quarter-turn	12.00 305
CSD242410	24.00 x 24.00 x 10.00 610 x 610 x 254	ANSI 61 Gray	14	16	CP2424	CP2424G	22.20 x 22.20 564 x 564	22.50 x 22.50 572 x 572	2	Quarter-turn	5.00 127
CSD242410LG	24.00 x 24.00 x 10.00 610 x 610 x 254	RAL 7035 Lt. Gray	14	16	CP2424	CP2424G	22.20 x 22.20 564 x 564	22.50 x 22.50 572 x 572	2	Quarter-turn	5.00 127

Synetcom
Your Industrial Wireless Source

BOM #4

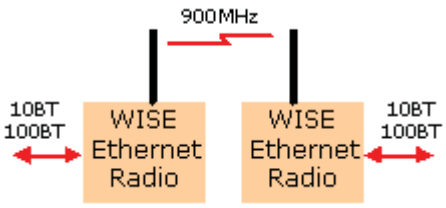

900 MHz Ethernet PLC Radios - Industrial Wireless Ethernet bridges link SCADA network equipment up to 25 miles away

- home
- services
- customers
- white papers
- contact us

Synetcom
Your Industrial Wireless Source

View Specs

Industrial Wireless Ethernet 900 MHz PLC Radio Modem - 900 MHz FHSS Industrial Wireless Ethernet Radio Modem System

Models: WISE-B-900 (170 KB/s)

Approvals: Class 1, Division 2, Groups A,B,C,D Class 1, Zone 2, Group IIC

Extend Ethernet connections to PLC locations not serviced by your company network with Synetcom's 900 MHz Industrial Wireless PLC Radio Modem product. Connect PLC, RTU, Wireless I/O, data acquisition and remote control equipment with the WISE-B-900 PLC Ethernet Radio - build reliable long distance, license free wireless industrial SCADA systems.

Synetcom's 900 MHz Ethernet Radio systems are designed for reliable high data throughput even if the radio path is not ideal. Higher transmit power and better receiver sensitivity enable Ethernet connections to remote PLC and RTU locations that you could not reach in the past.

For higher data throughput on line of site links, see our 2.4 GHz Ethernet Radio products.

Features

- 900 MHz Frequency Hopping Spread Spectrum FHSS PLC radio
- Wireless networking of PLCs
- Wireless networking of industrial data acquisition and remote control equipment
- Radio is IP addressable
- Wireless Ethernet bridge between PLC, RTU, sensors, controllers and HMI computers
- Long Range - up to 25 miles with 20 dB fade margin - high throughput sustained
- Advanced ARQ, CRC error control, hopping algorithm
- Excellent immunity to interference and multipath fading
- Ethernet Radio repeaters for >25 miles
- Rugged packaging for industrial use - 14GA metal enclosure
- -30°C to + 70°C

900 MHz Industrial Wireless Ethernet PLC Radio

Synetcom's 900 MHz Ethernet PLC Radio is a rugged, long range 900 MHz radio that connects PLC, RTU, I/O and other SCADA equipment. The radio is designed to provide high speed wireless connectivity between PLCs and PLC networks - without compromising reliability and performance. Typical uses include Ethernet bridging, SCADA device networking, PLC networking and industrial wireless data acquisition and control.

The product can function as a high speed bridge between two Ethernet networks, or it can provide wireless networking between an HMI computer + master PLC and multiple remote slave PLCs. Complex data acquisition and control systems can be built using repeaters to extend

Applications

- Wireless Networking of PLCs

- Industrial Wireless Ethernet SCADA systems

- Wireless PLC Data Acquisition

- Wireless PLC Remote Control

- Long Distance Wireless PLC

range and coverage.

Data Throughput and Range

The 900 MHz Ethernet PLC Radio operates with data throughput significantly higher than other industrial (FHSS) Ethernet radios:

WISE-B-900: 150 KB/s (25 miles with 11 dBi gain antennas)

Maximum throughput occurs on a point-to-point link. Error-free data transmission is assured via CRC error checking and ARQ (automatic retransmission of packets with bit errors).

Why doesn't the radio transmit at 10 MB/s? Industrial Ethernet applications often demand long range and high reliability which is obtained only by operating the link more slowly - a limitation of physics, not the radio design.

For example, faster commodity 802.11 Ethernet bridges or routers offer a higher throughout but only over short distances (1-2 miles under ideal conditions) with the same reliability our radios deliver at 25 miles.

Comparison to 2.4 GHz

Our 2.4 GHz Industrial Ethernet Radios typically operate at 220 KB/s or faster by design. Actual data throughput may be compromised if there are obstructions in the radio path. The 900 MHz Wireless Ethernet Modem is less affected by obstructions.

Ethernet Links

Transmission Range:
Synetcom specifies a 25 mile range (900 MHz Ethernet PLC Radio) that includes a 20 dB margin (if the signal fades as much as 20 dB - a factor of 1/100 - the link continues to operate).

Obstructions in the line of sight path reduces range, depending on the type of obstruction. Contact our factory for assistance.

900 MHz Ethernet PLC radio modem specifications>

www.synetcom.com
(310) 379-2000
23879 Madison Street
Torrance, CA 90505

home
services
customers
white papers
contact us

900 MHz PLC radio page 1>

900 MHz Industrial Wireless Ethernet PLC Radio Modem Specifications:

Model - WISE-B-900 PLC Radio
PLC Radio Data Rate - 170 Kbps; Maximum Throughput - 150 KB/s
PLC Interface - 10Base-T
PLC Radio Network Topologies - Point-to-Point or Multipoint
RF Output Power - 500 mW (.5 watt)
RF Modulation - Frequency Hopping Spread Spectrum (FHSS)
Frequency Range - 902 MHz to 928 MHz
Power - 9VDC to 30VDC (external AC power supply included)
Enclosure Material - Aluminum
Enclosure Size - 7.9" x 5.7" x 2.1" (201 x 144 x 53 mm)
Operating Temperature -30º C to +70ºC; 0 to 95% humidity, non-condensing
Licensing Type Certified; License-free operation under FCC Part 15

Industry Approvals: Class 1, Division 2, Groups A,B,C,D Class 1, Zone 2, Group IIC

PLC 900 MHz Radio Connectors

o Power 2-Pin
o RS-232 RJ-11 Configuration Port
o Sync In RJ-11
o Sync Out RJ-11
o 10BT RJ-45
o Antenna RVS TNC

PLC 900 MHz Radio Indicators

Radio Power, Ethernet Link Status, TX, RX, Ethernet Radio Link Status

900 MHz PLC Radio (back view)

back to 900 MHz PLC Radio page 1>

Synetcom
Your Industrial Wireless Source
www.synetcom.com
(310) 379-2000
23879 Madison Street
Torrance, CA 90505

KATHREIN
SCALA DIVISION

TY-900
Yagi Antenna

The Kathrein-Scala TY series are rugged broadband yagi antennas fabricated of 6061/T6 aluminum rod and seamless drawn pipe, anodized for maximum reliability and corrosion resistance. The hardware and fastenings are stainless steel. The internal balun, coax feed and connector are sealed in a foam potting system to prevent moisture penetration and assure long service life in severe environmental conditions. The heavy aluminum mounting casting allows installation for V or H polarization.

- The TY-900 is specifically designed for professional fixed-station applications in the 890–960 MHz band.

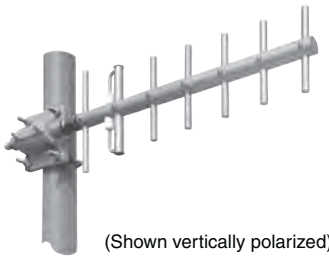

(Shown vertically polarized)

Specifications:

Frequency range	890–960 MHz
Gain	12 dBi
Impedance	50 ohms
VSWR	< 1.5:1 maximum (1.35:1 typical)
Polarization	Horizontal or vertical
Front-to-back ratio	>20 dB
Maximum input power	100 watts (at 50°C)
H-plane beamwidth	48 degrees (half-power)
E-plane beamwidth	40 degrees (half-power)
Connector	N female
Weight	3 lb (1.4 kg)
Dimensions	23 x 7 inches (584 x 178 mm)
Wind load Front/Side	at 93 mph (150kph) 3 lbf / 4 lbf (11 N) / (17 N)
Wind survival rating*	150 mph (240 kph)
Shipping dimensions	28 x 10 x 4.5 inches (710 x 254 x 114 mm)
Shipping weight	5.0 lb (2.3 kg)
Mounting	For masts of 1.25 to 2.375 inch (32 to 60 mm) OD.
See reverse for order information.	

* Mechanical design is based on environmental conditions as stipulated in TIA-222-G-2 (December 2009) and/or ETS 300 019-1-4 which include the static mechanical load imposed on an antenna by wind at maximum velocity. See the Engineering Section of the catalog for further details.

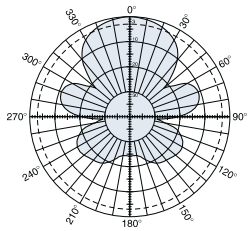

H-plane
Horizontal pattern – V-polarization
Vertical pattern – H-polarization

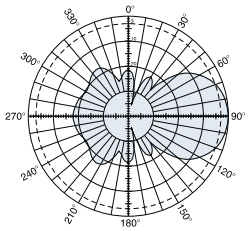

E-plane
Horizontal pattern – H-polarization
Vertical pattern – V-polarization

10065-E

Kathrein Inc., Scala Division Post Office Box 4580 Medford, OR 97501 (USA) Phone: (541) 779-6500 Fax: (541) 779-3991
Email: communications@kathrein.com Internet: www.kathrein-scala.com

KATHREIN
SCALA DIVISION

TY-900
Yagi Antenna

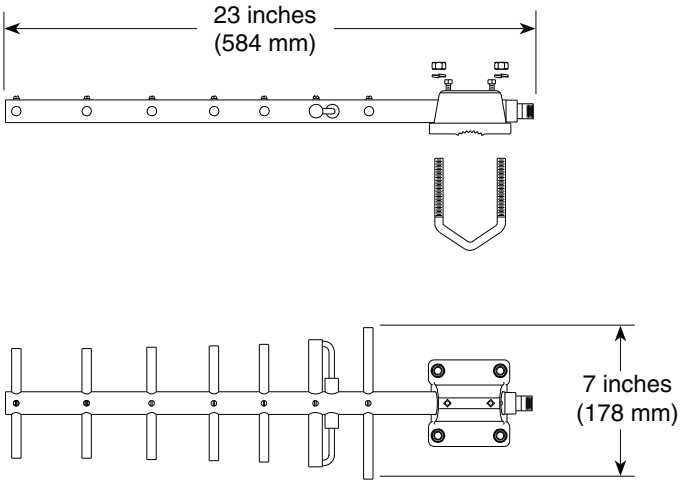

Order Information:

Model	Description
TY-900	Yagi antenna with N connector

All specifications are subject to change without notice. The latest specifications are available at www.kathrein-scala.com.

Kathrein Inc., Scala Division Post Office Box 4580 Medford, OR 97501 (USA) Phone: (541) 779-6500 Fax: (541) 779-3991
Email: communications@kathrein.com Internet: www.kathrein-scala.com

ALL DESIGN, OPERATIVE AND PROCESS DATA PERTAINING TO THE ARTICLE SHOWN ON THIS SHEET IS THE PROPERTY OF POLYPHASER CORPORATION. THE INFORMATION IS NOT TO BE COPIED, REPRODUCED, REVEALED TO OR APPROPRIATED BY OTHERS WITHOUT THE EXPRESS WRITTEN CONSENT OF POLYPHASER CORPORATION.

These commodities or technology are exported from the U.S. in accordance with the Export Administration Regulations. Diversion contrary to U.S. law prohibited.

REVISIONS				
REV LTR	DATE	ENG	MKTG	Q.A.
F	03/05/07 CM	AD	–	–

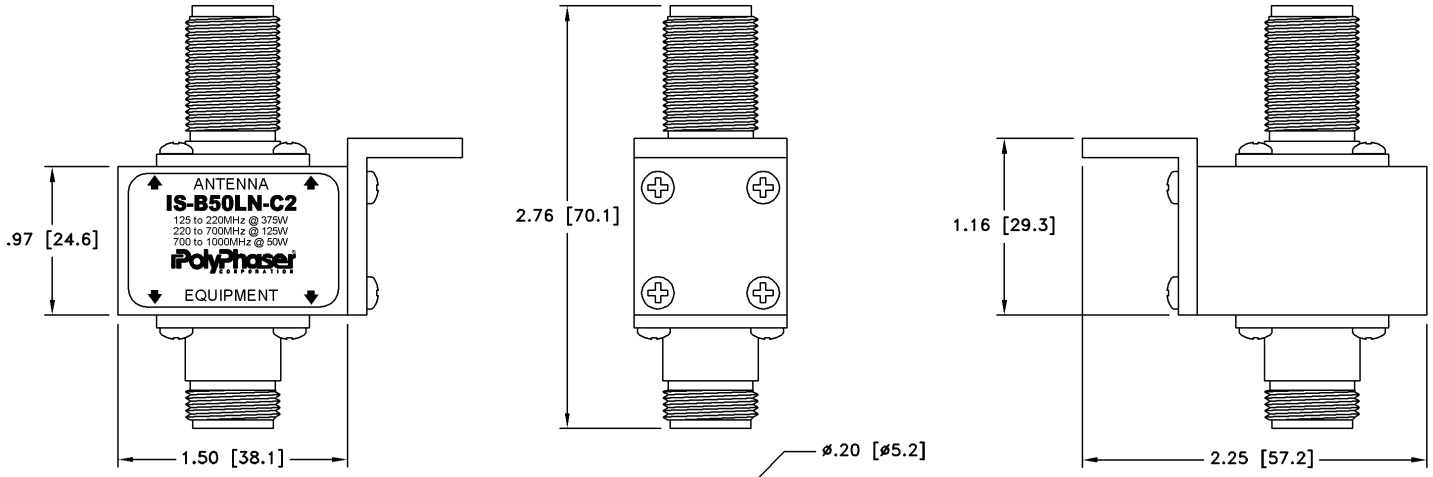

MAXIMUM CHARACTERISTICS

APPLICATION:
BULKHEAD MOUNT

FREQUENCY RANGE:
125MHz TO 1GHz

VSWR:
≤1.1:1 OVER FREQUENCY RANGE

INSERTION LOSS:
≤0.1dB OVER FREQUENCY RANGE

MAX POWER:
375W @ 125MHz DECREASING TO 50W @ 1GHz

TURN-ON:
600Vdc±20%

THROUGHPUT ENERGY:
≤220µJ FOR 8/20µs WAVEFORM

OPERATING TEMPERATURE:
−55°C TO +50°C

STORAGE TEMPERATURE:
−55°C TO +85°C

RELATIVE HUMIDITY:
90% AT 40°C

VIBRATION
1G AT 5Hz TO 100Hz

CUSTOMER APPROVAL: _____ DATE: _____

ALL DIMENSIONS SHOWN ABOVE ARE FOR REFERENCE ONLY.

DRAFTER: M. JOHNSON	DATE: 07/11/94	PolyPhaser	
MECH ENGINEER: – – – –	DATE: – – –	P.O. BOX 9000 MINDEN, NV 89423 TEL: 775-782-2511 FAX: 775-782-4476	
ELEC ENGINEER: K. BARTEL	DATE: 05/01/95	DWG NO/PART NO/DESCRIPTION: IS-B50LN-C2 CUSTOMER PRINT	
MARKETING: – – – –	DATE: – – –		
QUALITY DEPT: R. MATHEUS	DATE: 05/01/95	CAGE CODE: 61114	FILE NAME: -C1
		SCALE: 1/1	SHEET: 1 OF 1

FSJ4-50B Product Detail

Cable and Connectors >> Coaxial Cable >> Transmission Line >> 1/2" Superflexible, 50 Ohm

Product Description

Part Number: FSJ4-50B
Manufacturer: CommScope / Andrew
List Price: $4.54
My Price: Login >>

QTY: 1 Add to Cart

Email

1/2" Superflex 50 Ohm Coax Cable

Catalog Description

1/2" Superflexible 50 Ohm Foam HELIAX® Coaxial Cable, corrogated copper. FSJ4-50B is Riser Rated. FSJ4RK-50B - is non-halogenated, fire retarden.

Specifications

Attenuation (dB)/100 Ft.	
30 MHz	0.557
150 MHz	1.28
450 MHz	2.31
824 MHz	3.23
960 MHz	3.52
1500 MHz	4.54
2000 MHz	5.37
2300 MHz	5.83
5800 MHz	10.27
General Characteristics	
Max. Frequency	10.2 GHz
Propagation Velocity	81%
Overall Diameter(in)	.52
Dielectric	Closed Cell Foam Polyethylene
Outer Conductor	Helical Corrugated Solid Copper
Inner Conductor	Copper Clad Aluminum
Min. Bending Radius(in)	1.25"
Warranty	10 Year
Shipping Method	Less Than 350 Ft - UPS
Jacket Material	Black Polyethylene
Ship Weight (lbs.)	.14
Shipping	Parcel Freight

Similar Products

Product Specifications

F4PDMV2-C

7-16 DIN Male for 1/2 in FSJ4-50B cable

CHARACTERISTICS

General Specifications

Interface	7-16 DIN Male
Body Style	Straight
Brand	HELIAX®
Mounting Angle	Straight

Electrical Specifications

Connector Impedance	50 ohm
Operating Frequency Band	0 – 7500 MHz
Cable Impedance	50 ohm
3rd Order IMD	-120 dBm @ 910 MHz
3rd Order IMD Test Method	Two +43 dBm Carriers
RF Operating Voltage, maximum (vrms)	884.00 V
dc Test Voltage	2500 V
Outer Contact Resistance	1.50 mOhm
Inner Contact Resistance	0.80 mOhm
Insulation Resistance, minimum	5000 MOhm
Average Power	1.0 kW @ 900 MHz
Peak Power, maximum	15.60 kW
Insertion Loss, typical	0.05 dB
Shielding Effectiveness	-110 dB

Mechanical Specifications

Outer Contact Attachment Method	Crush-flare
Inner Contact Attachment Method	Captivated
Outer Contact Plating	Trimetal
Inner Contact Plating	Silver
Attachment Durability	25 cycles
Interface Durability	500 cycles
Interface Durability Method	IEC 169-4:9.5
Connector Retention Tensile Force	890 N | 200 lbf
Connector Retention Torque	5.42 N-m | 48.00 in lb
Insertion Force	200.17 N | 45.00 lbf

www.commscope.com

©2009 CommScope, Inc. All rights reserved.
All trademarks identified by ® or ™ are registered trademarks or trademarks, respectively, of CommScope.
All specifications are subject to change. See www.commscope.com for the most current information.

Product Specifications

F4PDMV2-C

Insertion Force Method	IEC 169-1:15.2.4
Pressurizable	No
Coupling Nut Proof Torque	24.86 N-m | 220.00 in lb
Coupling Nut Retention Force	1000.85 N | 225.00 lbf
Coupling Nut Retention Force Method	MIL-C-39012C-3.25, 4.6.22

Dimensions

Nominal Size	1/2 in
Diameter, maximum	34.54 mm | 1.36 in
Length	50.01 mm | 1.97 in
Weight	136.08 g | 0.30 lb

Environmental Specifications

Operating Temperature	-55 °C to +85 °C (-67 °F to +185 °F)
Storage Temperature	-55 °C to +85 °C (-67 °F to +185 °F)
Immersion Depth	1 m
Immersion Test Mating	Mated
Immersion Test Method	IEC 60529:2001, IP68
Water Jetting Test Mating	Mated
Water Jetting Test Method	IEC 60529:2001, IP66
Moisture Resistance Test Method	MIL-STD-202F, Method 106F
Mechanical Shock Test Method	MIL-STD-202F, Method 213B, Test Condition C
Thermal Shock Test Method	MIL-STD-202, Method 107, Test Condition A-1, Low Temperature -55 °C
Vibration Test Method	MIL-STD-202F, Method 204D, Test Condition B
Corrosion Test Method	MIL-STD-1344A, Method 1001.1, Test Condition A

Standard Conditions

Attenuation, Ambient Temperature	20 °C | 68 °F
Average Power, Ambient Temperature	40 °C | 104 °F

Return Loss

Frequency Band	VSWR	Return Loss (dB)
0–2200 MHz	1.03	36.00
2200–2700 MHz	1.05	33.00
2700–3000 MHz	1.05	32.00

Regulatory Compliance/Certifications

Agency	Classification
RoHS 2002/95/EC	Compliant by Exemption
China RoHS SJ/T 11364-2006	Above Maximum Concentration Value (MCV)

©2009 CommScope, Inc. All rights reserved.
All trademarks identified by ® or ™ are registered trademarks or trademarks, respectively, of CommScope.
All specifications are subject to change. See www.commscope.com for the most current information.

BOM #5

Product: 1492-REC15G

Description: 1492 DIN Rail Receptacle

Representative Photo Only
(actual product may vary based on configuration selections)

DIN Rail Receptacle	
Current Rating	15A
Options	Ground Fault Current Interrupt

CERTIFICATIONS AND APPROVALS	
cULus	UL 508A (file# E54866)
For UL Certifications Directory:	http://database.ul.com/cgi-bin/XYV/template/LISEXT/1FRAME/index.htm

SDN-P DIN Rail Series

The SDN DIN Rail power supplies provide industry leading performance. Sag Immunity, transient suppression and noise tolerant, the SDN series ensures compatibility in demanding applications. Power factor correction to meet European directives, hazardous location approvals and optional redundant accessories allow the SDN series to be used in a wide variety of applications. Wide operation temperature range, high tolerance to shock and vibration and reliable design make the SDN series the preferred choice of users.

Applications

- Industrial/Machine Control
- Process Control
- Conveying Equipment
- Material Handling
- Vending Machines
- Packaging Equipment
- DeviceNet™
- Amusement Park Equipment
- Semiconductor Fabrication Equipment

Features

- Power Factor Correction (per EN61000-3-2)
- Auto Select 115/230 Vac, 50/60 Hz Input
- Improved metal mounting clip
- DC OK Signal
- Adjustable Voltage
- Parallel Capability standard on all units
- Industrial grade design
  - -10°C to 60°C operation without derating. Indefinite short circuit, overvoltage and overtemperature protection.
  - Powers high inrush loads without shutdown or foldback
  - Rugged metal case and DIN connector
- Narrow width on rail for space critical applications
- User-friendly front panel
  - Large, rugged, accessible, multiple connection screw terminations
  - Easy installation
- 12 Vdc and 48 Vdc single phase models available
- Highly efficient >90% switching technology
- High MTBF and reliability

Accessories

- Chassis Mount Bracket (SDN-PMBRK2)

Certifications and Compliances *

All Models

- c UL us Listed, Ind. Control Equipment, E61379
  - UL 508, CSA C22.2 No. 107.1
- c UL us UL Recognized Component, ITE, E137632
  - UL 60950-1/CSA C22.2 No. 60950-1, 2nd Edition
- c UL us UL Recognized Component, Haz. Loc., E234790
  - ISA 12.12.01, CSA C22.2 No. 213
  - Class I, Division 2, Groups A, B, C, D
- CE - Low Voltage Directive
  - IEC/EN60950-1, 2nd Edition
- Sag Immunity: SEMI F47
- RoHS Compliant

Models SDN 2.5-24-100P, SDN 4-24-100LP

- Class 2 per UL 1310, CSA C22.2 No. 223

Models SDN 2.5-24-100P, SDN 4-24-100LP, SDN 5-24-100P, SDN 10-24-100P

- Ex ATEX Directive
  - EN50021, Ex II 3 G, Ex nC IIC Gc

Related Products

- SDP™ Series
- SCP Series
- SCL Series
- SDU UPS

* Refer to user manual for installation requirements when used in hazardous locations.

SDN-P Specifications (Single Phase), 24 Vdc Output

Description	Catalog Number			
	SDN 2.5–24–100P	SDN 4–24–100LP	SDN 5–24–100P	SDN 10–24–100P
Input				
Nominal Voltage	115/230 Vac, Auto select			
–AC Range	85-264 Vac	85-132/176-264 Vac		
–DC Range [1]	90 - 375 Vdc	210 - 375 Vdc		
–Frequency	47 - 63 Hz			
Nominal Current [2]	1.3 / 0.7 A	2.1 / 1.0 A	2.2 / 1.0 A	5 / 2 A typ.
–Inrush current max.	typ. < 25 A	typ. < 20 A		typ. < 40 A
Efficiency (Losses [3])	> 87.5% typ. (8.6 W)	> 88% typ. (13.1 W)	> 88% typ. (16.4 W)	> 88% typ. (32.7 W)
Power Factor Correction	Units Fulfill EN61000-3-2			
Output				
Nominal Voltage	24 Vdc (22.5 - 28.5 Vdc adj.)	24 Vdc (22.5 - 28.5 Vdc adj.)	24 Vdc (22.5 - 28.5 Vdc adj.)	
–Tolerance	< ±2% overall (combination Line, load, time and temperature related changes)			
–Ripple [4]	< 50 mVpp			
Overvoltage Protection	< 33 Vdc	< 27 Vdc	< 33 Vdc	
Nominal Current	2.5 A (60 W)	3.8 A (92 W)	5 A (120 W)	10 A (240 W)
–Current Limit	Fold Forward (Current rises, voltage drops to maintain constant power during overload up to max peak current)			
Holdup Time [5]	> 20 ms @ full load			
Parallel Operation	Single or Parallel use is selectable via Front Panel Switch (SDN 2.5, 4 should not be used in parallel as Class 2 rating would be violated.)			
General				
EMC: –Emissions	EN61000-6-3, -4; Class B EN55011, EN55022 Radiated and Conducted including Annex A. EN61000-3-2			
–Immunity	EN61000-6-1, -2; EN61000-4-2 Level 4, EN61000-4-3 Level 3; EN61000-4-6 Level 3; EN61000-4-4 Level 4 input and Level 3 output; EN61000-4-5 Isolation Class 4, EN61000-4-11;			
Temperature	Storage: -25°C...+85°C Operation. -10°-60°C full power with operation to 70°C possible with a linear derating to half power from 60°C to 70°C (Convection cooling, no forced air required). Operation up to 50% load permissible with sideways or front side up mounting orientation.			
Humidity	The relative humidity is < 90% RH, noncondensing; IEC 68-2-2, 68-2-3.			
MTBF:	> 820,000 hours	> 640,000 hours		> 600,000 hours
– Standard	Bellcore Issue 6 Method 1 Case 3 @ 40°C			
Warranty	5 year limited warranty			
General Protection/Safety	Protected against continuous short-circuit, overload, open-circuit. Protection Class 1 (IEC536), degree of protection IP20 (IEC 529) Safe low voltage: SELV (acc. EN60950)			
Status Indicators	Green LED and DC OK signal (N.O. Solid State Contact rated 200 mA / 60 Vdc)			
Installation				
Fusing –Input	Internally fused. External 10 A slow acting fusing for the input is recommended to protect input wiring.			
–Output	Outputs are capable of providing high currents for short periods of time for inductive load startup or switching. Fusing may be required for wire/loads if 2x Nominal O/P current rating cannot be tolerated. Continuous current overload allows for reliable fuse tripping.			
Mounting	Simple snap-on system for DIN Rail TS35/7.5 or TS35/15 or chassis-mounted (optional screw mounting set SDN-PMBRK2 required).			
Connections	Input: IP20-rated screw terminals, connector size range: 16-10 AWG (1.5-6 mm²) for solid conductors. 16-12 AWG (0.5-4 mm²) for flexible conductors. Output: Two connectors per output, connector size range: 16-10 AWG (1.5 - 6 mm²) for solid conductors.			
Case	Fully enclosed metal housing with fine ventilation grid to keep out small parts.			
–Free Space	25 mm above and below, 25 mm left and right, 10 mm in front		25 mm above and below, 25 mm left and right, 15 mm in front	70 mm above and below, 25 mm left and right, 15 mm in front
H x W x D inches (mm)	4.88. x 1.97 x 4.55 (124.0 x 50.0 x 116.0)	4.88 x 2.56 x 4.55 (124.0 x 65.0 x 116.0)		4.88 x 3.26 x 4.55 (124.0 x 83.0 x 116.0)
Weight lbs (kg)	1.6 (.73)	2.4 (1.10)		3.3 (1.50)

1. Not UL listed for DC input.
2. Input current ratings are conservatively specified with low input, worst case efficiency and power factor.
3. Losses are heat dissipation in watts at full load, nominal input line.
4. Ripple/noise is stated as typical values when measured with a 20 MHz, bandwidth scope and 50 Ohm resistor.
5. Full load, 100 Vac Input @ T_{amb} = +25°C

Contact **Technical Services** at **(800) 377-4384** with any questions.
Visit our website at www.solahd.com.

SDN-P Series Dimensions

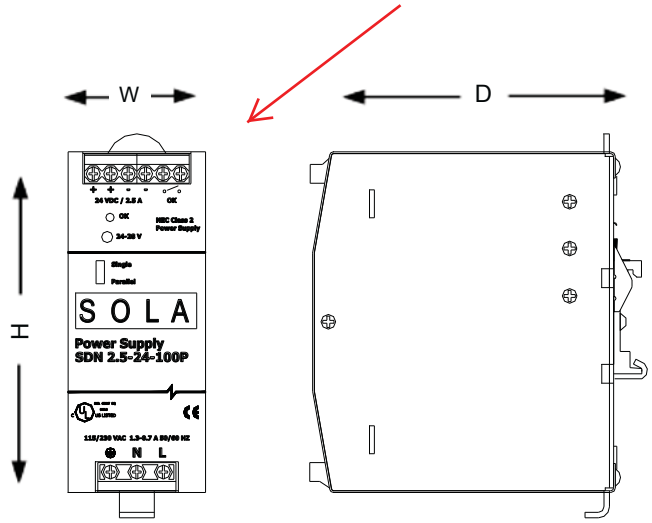

Catalog Number	Dimensions – inches (mm)		
	H	W	D
12 Vdc			
SDN 9–12–100P	4.88 (124.0)	2.56 (65.0)	4.55 (116.0)
SDN 16–12–100P	4.88 (124.0)	3.23 (83.0)	4.55 (116.0)
24 Vdc			
SDN 2.5–24–100P	4.88 (124.0)	1.97 (50.0)	4.55 (116.0)
SDN 4–24–100LP	4.88 (124.0)	2.56 (65.0)	4.55 (116.0)
SDN 5–24–100P	4.88 (124.0)	2.56 (65.0)	4.55 (116.0)
SDN 10–24–100P	4.88 (124.0)	3.26 (83.0)	4.55 (116.0)
48 Vdc			
SDN 5–48–100P	4.88 (124.0)	3.23 (83.0)	4.55 (116.0)

Contact **Technical Services** at **(800) 377-4384** with any questions.
Visit our website at www.solahd.com.

BOM #7

SOLAHD

Dry Contact Relay Kit

RELAYCARD-SDU

Instruction Manual

While every precaution has been taken to ensure accuracy and completeness in this manual, SolaHD assumes no responsibility, and disclaims all liability for damages resulting from use of this information or for any errors or omissions.

©2009 SolaHD. All rights reserved throughout the world. Specifications are subject to change without notice.

®SolaHD name and logo are registered trademarks of EGS Electrical Group, LLC. All names referred to are trademarks or registered trademarks of their respective owners.

Table of Contents

What's Included 4

Installation 4

Product Description 5–6

Notes 7

What's Included

- One dry contact relay box
- One interface cable (DB-9 connector)
- One 12 V dc power interconnection cable
- Four M3 mounting screws

Installation

⚠ DANGER **Only qualified personnel should install or service this system. Electrical safety precautions must be followed when installing or servicing this equipment. To prevent risk of electrical shock, turn off and lock out all power sources to the unit before making electrical connections.**

1. Using the four M3 screws provided, mount the dry relay box on the right side of the SDU UPS. If mounting on a separate chassis, the hole diameter for the relay box is 0.378 in. (3.5 mm).

2. Plug the 12 V dc power interconnection cable into the 12 V dc input of the relay box. Plug the other end of the power interconnection cable into the aux dc output (or Vout) of the SDU UPS.

3. Plug the DB-9 connector cable into the RS232 communication port of the SDU UPS. Plug the other end of the connector into the remote port of the dry contact relay.

Product Description

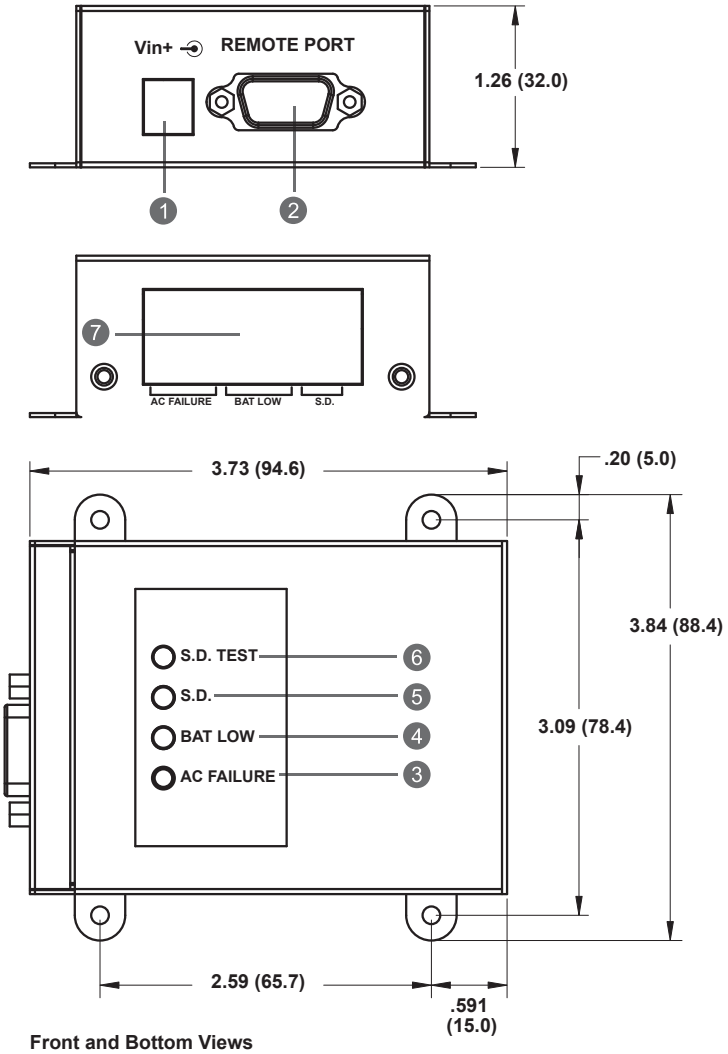

Front and Bottom Views
All dimensions are in inches (mm)

1. **Vin:** Input connector used to provide the dry contact relay with 12 V dc input power.
2. **Remote Port:** This communication port is used for linking to the SDU UPS.

   NOTE: The provided connection cable is used only for this dry contact relay.
3. **Ac Failure Indicator:** This yellow LED is illuminated when ac voltage is abnormal.
4. **Battery Low Indicator:** This green LED is illuminated when battery capacity is low.
5. **Shut Down Indicator (S.D.):** When the dry contact relay receives the shut down signal for 1 second, the red LED is illuminated and the SDU UPS goes into shut down mode.

Product Description continued from page 5

6. Shut Down Test Button (S.D. Test): Provides the dry contact relay a shut down signal to test the shut down function when the UPS is operating in the battery mode. Push this button for 1 second and the red LED is illuminated. The SDU UPS goes into shut down mode after 3 minutes.

7. 8 Pole Terminal Blocks

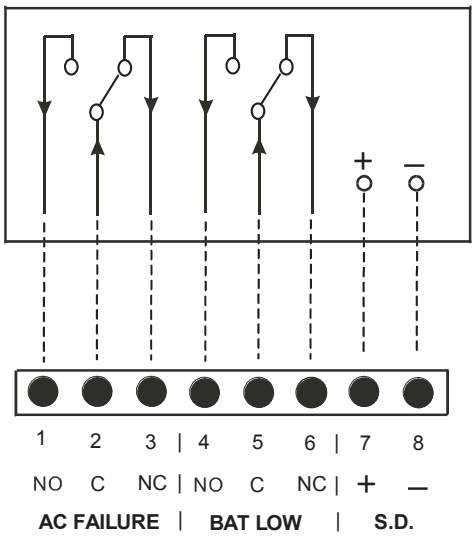

Table 1: Terminal Blocks—Layout and Operation

+UPS State		External Input	DCB LED Display			Terminal Blocks			
O = Occur X = Does not occur		O = Enable X = Disable	O = LED On X = LED Off			O = Close X = Open			
Ac Failure	BAT Low	S.D.	Yellow	Green	Red	Pin 1–2	Pin 2–3	Pin 4–5	Pin 5–6
X	X	X	X	X	X	X	O	X	O
O	X	X	O	X	X	O	X	X	O
O	O	X	X	O	X	O	X	O	X
O	X	O	X	X	O	X	O	X	O

Notes

1. Suitable electric wire = AWG 22–12 (IEC 2.5 mm).

2. Contact maximum current = 1.0 A @ 250 V ac.

3. Shut down input signal (range = +5 V to +12 V) can be provided by enabling terminals 7 and 8 for remote shut down control, assured by an external remote device.

Technical Support
U.S.: (800) 377-4384
International: (847) 268-6000
E-mail: www.tech@solahd.com
Web site: www.solahd.com

Part Number: A272-081 Rev 7
May 20, 2009

BOM #8

Selection Guide

Allen-Bradley

CompactLogix System

Catalog Numbers 1769-L16ER-BB1B, 1769-L18ER-BB1B, 1769-L18ERM-BB1B, 1769-L24ER-QB1B, 1769-L24ER-QBFC1B, 1769-L27ERM-QBFC1B, 1769-L30ER, 1769-L30ER-NSE, 1769-L30ERM, 1769-L33ER, 1769-L33ERM, 1769-L36ERM, 1769-AENTR, 1768-L43, 1768-L43S, 1768-L45, 1768-L45S

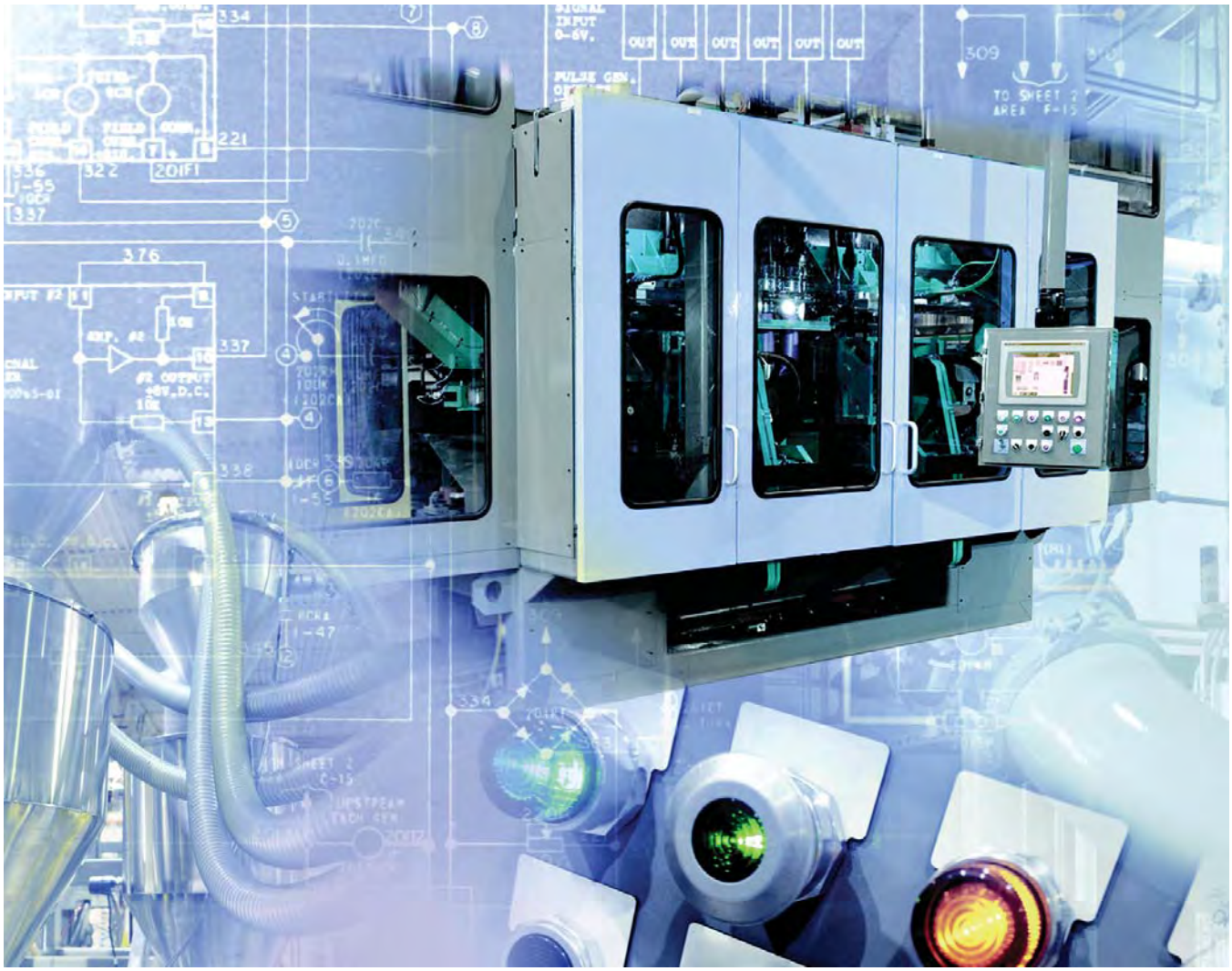

1734 POINT I/O Modules
1769 Compact I/O Modules
1768 Integrated Motion Modules
1768 and 1769 Communication Modules
1768 and 1769 CompactLogix Controllers
1768 and 1769 Compact Power Supplies

LISTEN. THINK. SOLVE.®

CompactLogix Communication Options

You can configure your system for information exchange between a range of devices and computing platforms and operating systems. Select a CompactLogix controller with integrated communication or the appropriate communication module.

For detailed specifications, see:

- CompactLogix Controllers Specifications Technical Data, publication 1769-TD005.
- CompactLogix Communication Modules Specifications Technical Data, publication 1769-TD007.

EtherNet/IP Communication Options

The Ethernet Industrial network protocol (EtherNet/IP) is an open industrial-networking standard that supports both real-time I/O messaging and message exchange. The EtherNet/IP network uses off-the-shelf Ethernet communication chips and physical media.

Dual-port EtherNet/IP support embeds switch technology directly in the controller to so the controller can operate on star, linear, or ring EtherNet/IP topologies.

Cat. No.	Description	Communication Rate	Logix Resources[1]	TCP/IP Connections
1769-L16ER-BB1B,	CompactLogix 5370 L1 controller with integrated EtherNet/IP dual-port, POINT I/O form factor	10/100 Mbps	4 nodes 256 EtherNet/IP connections	120
1769-L18ER-BB1B, 1769-L18ERM-BB1B			8 nodes 256 EtherNet/IP connections	
1769-L24ER-BB1B, 1769-L24ER-QBFC1B	CompactLogix 5370 L2 controller with integrated EtherNet/IP dual-port, Compact I/O form factor	10/100 Mbps	8 nodes 256 EtherNet/IP connections	120
1769-L27ERM-QBFC1B		10/100 Mbps	16 nodes 256 EtherNet/IP connections	
1769-L30ER, 1769-L30ERM	CompactLogix 5370 L3 controller with integrated EtherNet/IP dual-port	10/100 Mbps	16 nodes 256 EtherNet/IP connections	120
1769-L33ER, 1769-L33ERM			32 nodes 256 EtherNet/IP connections	
1769-L36ERM			48 nodes 256 EtherNet/IP connections	
1769-AENTR	1769 EtherNet/IP adapter	10/100 Mbps	128 EtherNet/IP connections	96
1768-ENBT	1768 EtherNet/IP communication bridge module	10/100 Mbps	128 EtherNet/IP connections	64
1768-EWEB	1768 Ethernet web server module	10/100 Mbps	128 EtherNet/IP connections	64

(1) The number of nodes listed for CompactLogix 5370 controllers represents the maximum number of EtherNet/IP nodes you can include in a Logix Designer application project for those controller. For example, in a Logix Designer application project that uses a 1769-L18ERM-BB1B controller, you can add as many as 8 EtherNet/IP nodes to the project.

1734 Specialty I/O Modules

Cat. No.	Description	Wiring Base	POINTBus Current
1734-232ASC 1734-485ASC	The 1734-232ASC and 1734-485ASC serial interface modules offer a serial-link communication interface solution for peripheral products with RS-232 (only 1734-232ASC), RS-485, and RS-422 ports (only 1734-485ASC.)	1734-TB, 1734-TBS	75 mA
1734-ARM	The 1734-ARM address reserve module reserves address and slot numbers to maintain a numbering scheme of an existing system. The 1734-ARM has no module configuration and does not communicate I/O data.	1734-TB, 1734-TBS	75 mA
1734-CTM 1734-VTM	The common terminal module (1734-CTM) and voltage term66inal module (1734-VTM) expand the termination capabilities of POINT I/O modules. Install the modules to provide support for higher density (8 channel) POINT I/O modules.	1734-TB, 1734-TBS, 1734-TOP, 1734-TOPS	75 mA
1734-SSI	The 1734-SSI module collects serial data from absolute-position, encoding sensors that use standard Synchronous Serial Interface (SSI) protocol.	1734-TB, 1734-TBS	110 mA

1769 Compact I/O Modules

The 1769 Compact I/O modules can be installed on the CompactLogix 5370 L2 and L3 controllers and 1768 CompactLogix controllers. The modules mechanically lock together by means of a tongue-and-groove design and have an integrated communication bus that is connected from module to module by a moveable bus connector.

Each I/O module includes a built-in removable terminal block with finger-safe cover for connections to I/O sensors and actuators. The terminal block is behind a door at the front of the module. I/O wiring can be routed from beneath the module to the I/O terminals.

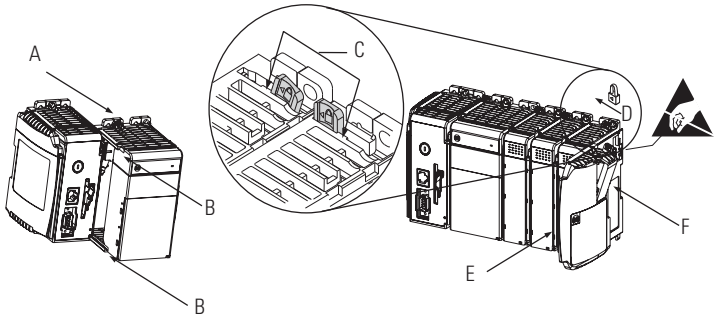

For detailed specifications, see 1769 Compact I/O Modules Specifications Technical Data, publication 1769-TD006.

Power Supply Distance Ratings

Check each module's specification table for the power supply distance rating. This indicates how many slot positions the module can be from the power supply.

1769 AC Digital Modules

Cat. No.	Inputs/Outputs	Voltage Category	Operating Voltage Range	Backplane Current	Power Supply Distance Rating
1769-IA8I	8 inputs, individually isolated	100/120V AC	79…132V AC, 47…63 Hz	90 mA @ 5.1V(1)	8
1769-IA16	16 inputs	100/120V AC	79…132V AC, 47…63 Hz	115 mA @ 5.1V	8
1769-IM12	12 inputs	200/240V AC	159…265V AC, 47…63 Hz	100 mA @ 5.1V	8
1769-OA8	8 outputs	100/240V AC	85…265V AC 47…63 Hz	145 mA @ 5.1V	8
1769-OA16	16 outputs	100/240V AC	85…265V AC 47…63 Hz	225 mA @ 5.1V	8

(1) Maximum is 190 mA.

1769 DC Digital Modules

Cat. No.	Inputs/Outputs	Voltage Category	Operating Voltage Range	Backplane Current	Power Supply Distance Rating
1769-IG16	16 inputs	5V DC TTL	4.5…5.5V DC	120 mA @ 5.1V	8
1769-IQ16	16 inputs	24V DC sink/source	10…30V DC @ 30 °C (86 °F) 10…26.4V DC @ 60 °C (140 °F)	115 mA @ 5.1V	8
1769-IQ16F	16 inputs, high-speed	24V DC sink/source	10…30V DC @ 30 °C (86 °F) 10…26.4V DC @ 60 °C (140 °F)	100 mA @ 5.1V	8
1769-IQ32	32 inputs	24V DC sink/source	10…30V DC @ 30 °C (86 °F) 10…26.4V DC @ 60 °C (140 °F)	170 mA @ 5.1V	8
1769-IQ32T	32 inputs	24V DC sink/source	20.4…26.4V DC @ 60 °C (140 °F)	170 mA @ 5.1V	8
1769-IQ6XOW4	6 inputs 4 outputs	24V DC sink/source input AC/DC normally open relay contact outputs	10…30V DC @ 30 °C (86 °F) 10…26.4V DC @ 60 °C (140 °F)	105 mA @ 5.1V 50 mA @ 24V	8
1769-OB8	8 outputs	24V DC source	20.4…26.4V DC	145 mA @ 5.1V	8
1769-OB16	16 outputs	24V DC source	20.4…26.4V DC	200 mA @ 5.1V	8
1769-OB16P	16 outputs, protected	24V DC source	20.4…26.4V DC	160 mA @ 5.1V	8
1769-OB32	32 outputs	24V DC source	20.4…26.4V DC	300 mA @ 5.1V	6
1769-OB32T	32 outputs	24V DC source	10.2…26.4V DC	220 mA @ 5.1V	8
1769-OG16	16 outputs	5V DC TTL	4.5…5.5V DC	200 mA @ 5.1V	8
1769-OV16	16 outputs	24V DC sink	20.4…26.4V DC	200 mA @ 5.1V	8
1769-OV32T	32 outputs	24V DC sink	10.2…26.4V DC	300 mA @ 5.1V	8

1769 Contact Output Modules

Cat. No.	Inputs/Outputs	Operating Voltage Range	Backplane Current	Power Supply Distance Rating
1769-OW8	8 outputs	5…265V AC 5…125V DC	125 mA @ 5.1V 100 mA @ 24V	8
1769-OW8I	8 outputs, individually isolated	5…265V AC 5…125V DC	125 mA @ 5.1V 100 mA @ 24V	8
1769-OW16	16 outputs	5…265V AC 5…125V DC	205 mA @ 5.1V 180 mA @ 24V	8

1769 Analog Modules

Cat. No.	Inputs/Outputs	Range	Resolution	Backplane Current	Power Supply Distance Rating
1769-IF4	4 inputs, differential or single-ended	±10V, 0…10V, 0…5V, 1…5V 0…20 mA, 4…20 mA	14 bits (unipolar) 14 bits plus sign (bipolar)	120 mA @ 5.1V 60 mA @ 24V	8
1769-IF4I	4 inputs, differential or single-ended, individually isolated	±10V, 0…10V, 0…5V, 1…5V 0…20 mA, 4…20 mA	16 bits (unipolar) 15 bits plus sign (bipolar)	145 mA @ 5.1V 125 mA @ 24V	8
1769-IF8	8 inputs, differential or single-ended	±10V, 0…10V, 0…5V, 1…5V 0…20 mA, 4…20 mA	16 bits (unipolar) 15 bits plus sign (bipolar)	120 mA @ 5.1V 70 mA @ 24V	8
1769-IF16C	16 inputs, single-ended	0…20 mA, 4…20 mA	16 bits (unipolar) 15 bits plus sign (bipolar)	190 mA @ 5.1V 70 mA @ 24V	8
1769-IF16V	16 inputs, differential	±10V, 0…10V, 0…5V, 1…5V	16 bits (unipolar) 15 bits plus sign (bipolar)	190 mA @ 5.1V 70 mA @ 24V	8
1769-IF4XOF2	4 differential or single-ended inputs 2 single-ended outputs	0…10V 0…20 mA	Input: 8 bits plus sign Output: 8 bits plus sign	120 mA @ 5.1V 160 mA @ 24V	8
1769-IF4FXOF2F	4 fast differential or single-ended inputs 2 fast single-ended outputs	±10V, 0…10V, 0…5V, 1…5V 0…20 mA, 4…20 mA	Input: 14 bits (unipolar) 14 bits plus sign (bipolar) Output: 13 bits (unipolar) 13 bits plus sign (bipolar)	220 mA @ 5.1V 120 mA @ 24V	8
1769-OF2	2 outputs, single-ended	±10V, 0…10V, 0…5V, 1…5V 0…20 mA, 4…20 mA	14 bits (unipolar) 14 bits plus sign (bipolar)	120 mA @ 5.1V 120 mA @ 24V	8
1769-OF4	4 outputs, single-ended	±10V, 0…10V, 0…5V, 1…5V 0…20 mA, 4…20 mA	15 bits plus sign unipolar and bipolar	120 mA @ 5.1V 170 mA @ 24V	8
1769-OF4CI	4 outputs, differential, individually isolated	0…20 mA 4…20 mA	16 bits (unipolar)	140 mA @ 5.1V 145 mA @ 24V	8
1769-OF4VI	4 outputs, differential, individually isolated	±10V 0…10V 0…5V 1…5V	15 bits plus sign (bipolar)	145 mA @ 5.1V 75 mA @ 24V	8
1769-OF8C	8 outputs, single-ended	0…20 mA 4…20 mA	16 bits (unipolar)	140 mA @ 5.1V 145 mA @ 24V	8
1769-OF8V	8 outputs, single-ended	±10V 0…10V 0…5V 1…5V	16 bits plus sign (bipolar)	145 mA @ 5.1V 125 mA @ 24V	8

1769 Expansion Cables

If you divide 1769 modules into multiple banks, make sure:

- each bank needs its own power supply.
- use expansion cables to connect the banks.
- the last I/O bank requires an end cap.

Vertical

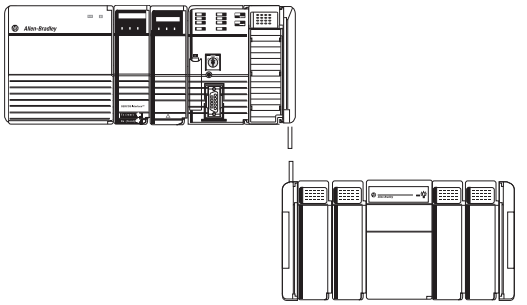

Horizontal

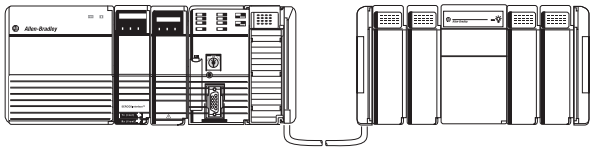

How you orient I/O banks determines the expansion cables you need to connect the I/O banks.

If you add a	And connect the chassis	Use this cable[1]
Second bank	Right to left	1769-CRL*x*
	Right to right	1769-CRR*x*
Third bank	Right to left	1769-CRL*x*
	Right to right	1769-CRR*x*
	Left to left	1769-CLL*x*

(1) Where *x* = 1 for 1 ft (305 mm) or 3 for 3.28 ft (1 m).

1769 End Caps

The final 1769 Compact I/O bank requires an end cap on the end without the expansion cable. The CompactLogix 5370 L2 controller comes with a right-end cap, so you do not need to order one separately.

- Right end cap, catalog number 1769-ECR
- Left end cap, catalog number 1769-ECL

CompactLogix Power Supplies

Select power supplies based on the controller and the number of additional I/O banks.

For a	Select
CompactLogix 5370 L3 controller	• One 1769 power supply for the controller and local I/O modules • One 1769 power supply for each additional bank of I/O modules
CompactLogix 5370 L2 controller	No power supply as it is integral to the controller package
CompactLogix 5370 L1 controller	No power supply as it is integral to the controller package
1768 CompactLogix controller	• One 1768 power supply for the controller and 1768 modules • One 1769 power supply for each additional bank of I/O modules

Power Supplies

Cat. No.	Description	Voltage Category	Operating Voltage Range
1769-PA2	1769 Compact I/O expansion power supply	120V/220V AC	85...265V AC
1769-PB2		24V DC	19.2...31.2V DC
1769-PA4		120V/220V AC	85...265V AC or 170...265V AC (switch selectable) 47...63 Hz
1769-PB4		24V DC	19.2...31.2V DC
1768-PA3	1768 CompactLogix power supply	120V/220V AC	85...265V AC or 108...132V DC
1768-PB3		24V DC	16.8...31.2V DC

For detailed specifications, see Compact Power Supplies Specifications Technical Data, publication 1769-TD008.

CompactLogix Power Supplies Specifications

1768 CompactLogix Power Supplies Catalog Numbers 1768-PA3, 1768-PB3

1769 Compact I/O Power Supplies Catalog Numbers 1769-PA2, 1769-PB2, 1769-PA4, 1769-PB4

Topic	Page
1768 CompactLogix Power Supplies	3
1769 Compact I/O Power Supplies	7

Environmental Specifications - 1768 and 1769 Power Supplies

Attribute	1768-PA3, 1769-PB3 1769-PA2, 1769-PB2, 1769-PA4, 1769-PB4
Temperature, operating IEC 60068-2-1 (Test Ad, Operating Cold), IEC 60068-2-2 (Test Bd, Operating Dry Heat), IEC 60068-2-14 (Test Nb, Operating Thermal Shock)	0…60 °C (32…140 °F)
Temperature, storage IEC 60068-2-1 (Test Ab, Unpackaged Nonoperating Cold), IEC 60068-2-2 (Test Bb, Unpackaged Nonoperating Dry Heat), IEC 60068-2-14 (Test Na, Unpackaged Nonoperating Thermal Shock)	-40…85 °C (-40…185 °F)
Relative humidity IEC 60068-2-30 (Test Db, Unpackaged Nonoperating Damp Heat)	5…95% noncondensing
Vibration IEC 60068-2-6 (Test Fc, Operating)	5 g @ 10…500 Hz
Shock, operating IEC 60068-2-27 (Test Ea, Unpackaged Shock)	30 g
Shock, nonoperating IEC 60068-2-27 (Test Ea, Unpackaged Shock)	50 g

Important User Information

Solid state equipment has operational characteristics differing from those of electromechanical equipment. Safety Guidelines for the Application, Installation and Maintenance of Solid State Controls (publication SGI-1.1 available from your local Rockwell Automation sales office or online at http://www.rockwellautomation.com/literature/) describes some important differences between solid state equipment and hard-wired electromechanical devices. Because of this difference, and also because of the wide variety of uses for solid state equipment, all persons responsible for applying this equipment must satisfy themselves that each intended application of this equipment is acceptable.

In no event will Rockwell Automation, Inc. be responsible or liable for indirect or consequential damages resulting from the use or application of this equipment.

The examples and diagrams in this manual are included solely for illustrative purposes. Because of the many variables and requirements associated with any particular installation, Rockwell Automation, Inc. cannot assume responsibility or liability for actual use based on the examples and diagrams.

No patent liability is assumed by Rockwell Automation, Inc. with respect to use of information, circuits, equipment, or software described in this manual.

Reproduction of the contents of this manual, in whole or in part, without written permission of Rockwell Automation, Inc., is prohibited.

Throughout this manual, when necessary, we use notes to make you aware of safety considerations.

WARNING	Identifies information about practices or circumstances that can cause an explosion in a hazardous environment, which may lead to personal injury or death, property damage, or economic loss.
IMPORTANT	Identifies information that is critical for successful application and understanding of the product.
ATTENTION	Identifies information about practices or circumstances that can lead to personal injury or death, property damage, or economic loss. Attentions help you identify a hazard, avoid a hazard, and recognize the consequence
SHOCK HAZARD	Labels may be on or inside the equipment, for example, a drive or motor, to alert people that dangerous voltage may be present.
BURN HAZARD	Labels may be on or inside the equipment, for example, a drive or motor, to alert people that surfaces may reach dangerous temperatures.

Rockwell Automation, Rockwell Software, Allen-Bradley, TechConnect, Compact I/O, and CompactLogix are trademarks of Rockwell Automation, Inc.

Trademarks not belonging to Rockwell Automation are property of their respective companies.

1769 Compact I/O Power Supplies

Each 1769-L3*x* controller and additional bank of I/O modules requires a 1769 power supply. Place 1769 I/O modules to the left or right of the 1769 power supply. As many as eight I/O modules can be placed on each side of the power supply.

Each 1769 module also has a power supply distance rating (the number of modules from the power supply). Each module must be located within its distance rating. See the specifications for the module to determine its distance rating.

Technical Specifications - 1769 Compact I/O Power Supplies

Attribute	1769-PA2	1769-PB2	1769-PA4	1769-PB4
Input voltage range	85…265V AC	19.2...31.2V DC	85…265V AC or 170...265V AC, switch selectable	19.2...31.2V DC
Input voltage, nom	120V/220V AC	24V DC	120V/220V AC	24V DC
Power consumption	100 VA @ 120V AC 130 VA @ 240V AC	50 VA @ 24V DC	200 VA @ 120V AC 240 VA @ 240V AC	100 VA @ 24V DC
Power dissipation	8 W @ 60° C (140° F)	7.5 W @ 60° C (140° F)	18 W @ 60° C (140° F)	14.5 W @ 60° C (140° F)
Current capacity @ 5V	2.0 A	2.0 A	4.0 A	4.0 A
Current capacity @ 24V	0.8 A	0.8 A	2.0 A	2.0 A
Inrush current, max	25 A @ 132V AC	30 A @ 31.2V DC	25 A @ 132V AC	30 A @ 31.2V DC
Isolation voltage	265V (continuous), reinforced insulation type (IEC Class 1 grounding required) Routine tested @ 2596V DC for 1 s, AC power input to system and AC power input to 24V DC user power	75V (continuous), reinforced insulation type (IEC Class 1 grounding required) Routine tested at 1697V DC for 1 s, DC power input to system	265V (continuous), reinforced insulation type (IEC Class 1 grounding required) Routine tested at 2596V DC for 1 s, AC power input to system	75V (continuous), reinforced insulation type (IEC Class 1 grounding required) Routine tested at 1697V DC for 1 s, DC power input to system
Fuse type	Wickmann 19195-3.15A Littelfuse 02183.15MXP	Wickmann 19193-6.3A Littelfuse 021706.3MXP	Wickmann 19195-3.15A Littelfuse 02183.15MXP	Wickmann 19193-6.3A Littelfuse 021706.3MXP
Weight, approx.	525 g (1.16 lb)		630 g (1.39 lb)	
Dimensions (HxWxD), approx.	118 x 70 x 87 mm (4.65 x 2.76 x 3.43 in.)			
Module location	DIN rail or panel mount			
Mounting screw torque	1.16 N•m (10 lb•in) - use M4 or #8 screws			
Power supply distance rating	8 8 I/O modules can be connected on either side of the power supply for a maximum of 16 modules			
Wire category[1]	1 - on power ports	2 - on power ports	1 - on power ports	2 - on power ports
Wire size	14 AWG (2.5 mm^2) solid copper wire rated at 90 °C (194 °F) or greater, 1.2 mm (3/64 in.) insulation max			
North American temperature code	T3C			
IEC temperature code	—	T4	—	T4
Enclosure type rating	None (open-style)			

[1] Use this conductor category information for planning conductor routing as described in the system level installation manual. See the Industrial Automation Wiring and Grounding Guidelines, publication 1770-4.1.

Certifications - 1769 Compact Power Supplies

Certification[1]	1769-PA2, 1769-PA4	1769-PB2, 1769-PB4
c-UL-us	UL Listed for Class 1, Division 2 Group A,B,C,D Hazardous Locations, certified for U.S. and Canada. See UL File E10314	
CE	European Union 2004/108/EC EMC Directive, compliant with: • EN 61000-6-2; Industrial Immunity • EN 61000-6-4; Industrial Emissions	
C-Tick	Australian Radiocommunications Act, compliant with: AS/NZS CISPR 11; Industrial Emissions	
	—	European Union 94/9/EC ATEX Directive, compliant with: • EN 60079-15; Potentially Explosive Atmospheres, Protection "n" (Zone 2) • EN 60079-0; General Requirements (Zone 2)

(1) When marked. See the Product Certification link at http://www.ab.com for Declarations of Conformity, Certificates, and other certification details.

Power Requirements and Transformer Sizing - 1769 CompactLogix Power Supplies

1769-PA2 Output Derating

User +24V Current Draw at 0 A

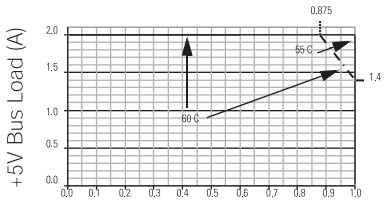

User +24V Current Draw at 0.2 A

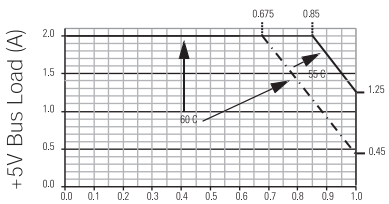

User +24V Current Draw at 0.25 A

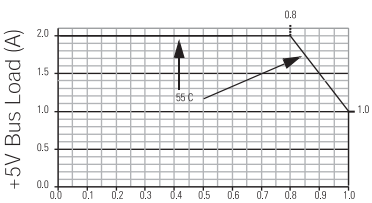

1769-PA2 Power Disspation

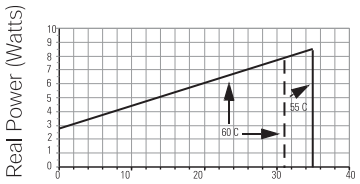

Bus +5V, +24V, and User Load (Watts)

1769-PB2 Output Derating

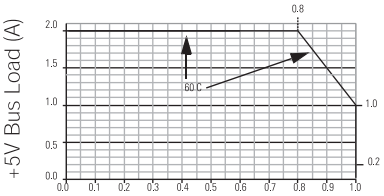

1769-PB2 Power Dissipation

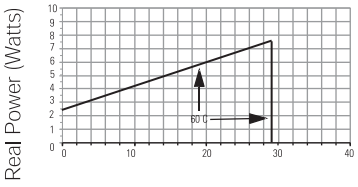

Bus +5V, +24V, and User Load (Watts)

1769-PA4 Output Derating

Total Output: 68 W @ 55 °C (131 °F) or below
61 W @ 60 °C (140 °F) or below

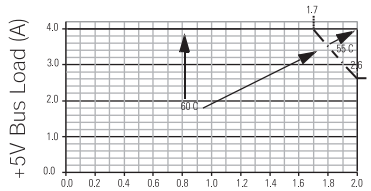

1769-PB4 Output Derating

Total Output: 68 W @ 55 °C (131 °F) or below
61 W @ 60 °C (140 °F) or below

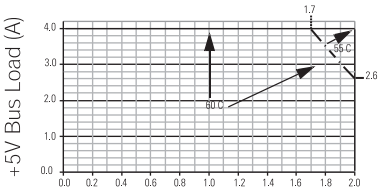

1769-PA4 Power Disspation

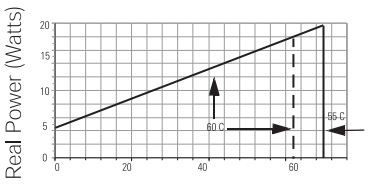

Bus +5V, +24V, and User Load (Watts)

1769-PB4 Power Disspation

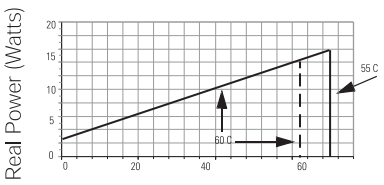

Bus +5V, +24V, and User Load (Watts)

Mounting Dimensions - 1769 CompactLogix Power Supplies

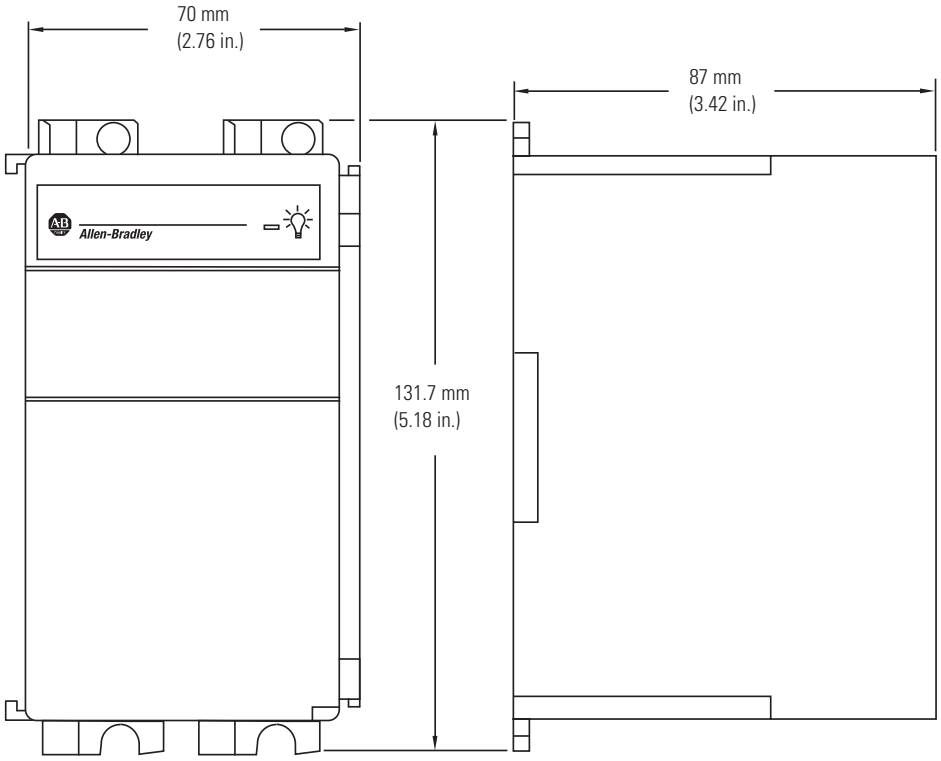

BOM #9

Panduct® Type F Narrow Slot Wiring Duct

- Narrow slot/finger design provides more slots to fit the spacing of high-density terminal blocks and other hardware
- Material: Lead-free PVC
- UL recognized continuous use temperature: 122°F (50°C)
- UL 94 flammability rating of V-0
- Conforms with NFPA 79-2007 section 13.3.1 requirement for flame retardant material
- Provided with mounting holes
- Base and cover length is 6 feet

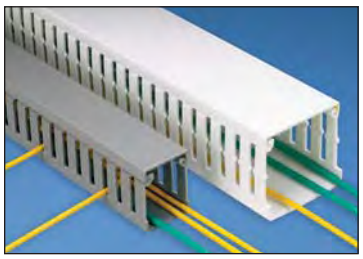

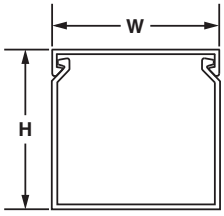

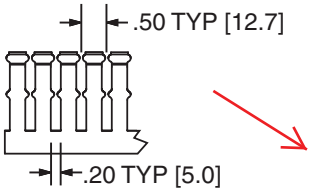

Multiple slot restrictors present with 2" and greater duct wall height.

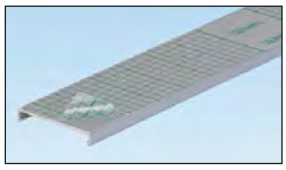

To order cover with protective film add "-F" to part number. 6" cover not available with film.

NEW!

Base Part Number	Duct Size (W x H)* In.	Duct Size (W x H)* mm	Slot Width In.	Slot Width mm	Cover Part Number	Std. Pkg. Qty.	Base Ctn. Qty.	Cover Ctn. Qty.
F.5X.5LG6	0.69 x 0.60	17.5 x 15.2	0.20	5.0	C.5LG6	6	120	120
F.5X1LG6	0.69 x 1.06	17.5 x 26.9	0.20	5.0	C.5LG6	6	120	120
F.75X.75LG6	0.93 x 0.82	23.6 x 20.9	0.20	5.0	C.75LG6	6	120	120
F.75X1.5LG6	0.93 x 1.57	23.6 x 39.9	0.20	5.0	C.75LG6	6	120	120
F1X1LG6	1.26 x 1.13	32.0 x 28.7	0.20	5.0	C1LG6	6	120	120
F1X1.5LG6	1.26 x 1.62	32.0 x 41.1	0.20	5.0	C1LG6	6	120	120
F1X2LG6	1.26 x 2.12	32.0 x 53.8	0.20	5.0	C1LG6	6	120	120
F1X3LG6	1.26 x 3.12	32.0 x 79.2	0.20	5.0	C1LG6	6	120	120
F1X4LG6	1.26 x 4.10	32.0 x 104.1	0.20	5.0	C1LG6	6	60	120
F1.5X1LG6	1.75 x 1.12	44.5 x 28.4	0.20	5.0	C1.5LG6	6	120	120
F1.5X1.5LG6	1.75 x 1.62	44.5 x 41.1	0.20	5.0	C1.5LG6	6	120	120
F1.5X2LG6	1.75 x 2.12	44.5 x 53.8	0.20	5.0	C1.5LG6	6	120	120
F1.5X3LG6	1.75 x 3.12	44.5 x 79.2	0.20	5.0	C1.5LG6	6	120	120
F1.5X4LG6	1.75 x 4.10	44.5 x 104.1	0.20	5.0	C1.5LG6	6	60	120
F2X1LG6	2.25 x 1.12	57.2 x 28.4	0.20	5.0	C2LG6	6	120	120
F2X1.5LG6	2.25 x 1.62	57.2 x 41.1	0.20	5.0	C2LG6	6	120	120
F2X2LG6	2.25 x 2.12	57.2 x 53.8	0.20	5.0	C2LG6	6	120	120
F2X3LG6	2.25 x 3.12	57.2 x 79.2	0.20	5.0	C2LG6	6	60	120
F2X4LG6	2.25 x 4.10	57.2 x 104.1	0.20	5.0	C2LG6	6	60	120
F2X5LG6	2.25 x 5.10	57.2 x 129.5	0.20	5.0	C2LG6	6	60	120
F2.5X3LG6	2.75 x 3.12	69.9 x 79.2	0.20	5.0	C2.5LG6	6	120	120
F3X1LG6	3.25 x 1.12	82.6 x 28.4	0.20	5.0	C3LG6	6	120	120
F3X2LG6	3.25 x 2.12	82.6 x 53.8	0.20	5.0	C3LG6	6	120	120
F3X3LG6	3.25 x 3.12	82.6 x 79.2	0.20	5.0	C3LG6	6	60	120
F3X4LG6	3.25 x 4.10	82.6 x 104.1	0.20	5.0	C3LG6	6	60	120
F3X5LG6	3.25 x 5.10	82.6 x 129.5	0.20	5.0	C3LG6	6	60	120
F4X2LG6	4.25 x 2.12	108.0 x 53.8	0.20	5.0	C4LG6	6	60	120
F4X3LG6	4.25 x 3.12	108.0 x 79.2	0.20	5.0	C4LG6	6	60	120
F4X4LG6	4.25 x 4.10	108.0 x 104.1	0.20	5.0	C4LG6	6	60	120
F4X5LG6	4.25 x 5.10	108.0 x 129.5	0.20	5.0	C4LG6	6	60	120
F6X4LG6	6.25 x 4.15	158.8 x 105.4	0.20	5.0	C6LG6	6	60	120

Part number shown for LG (Light Gray). For other color availability see color selection guide, page C1.48.
Base and cover sold separately.
*"H" dimension includes duct and cover.

Product: 700-HK32A1-3-4

Description: 700-HK General Purpose Slim Line Relay

BOM #11

Representative Photo Only
(actual product may vary based on configuration selections)

CONTROL RELAY DATA

Contact Rating	8 Amp Contact (Slim Line Relay)
Contact Configuration	DPDT Contact Arrangement
Coil Voltage	120V 50/60Hz
Relay Option	No Additional Options

CERTIFICATIONS AND APPROVALS

CE	Marked
UL	Listed with socket, Guide No. NLDX, File No. E3125
UR	Recognized, Guide No. NLDX2, File No. E3125
CSA	
For UL Certifications Directory:	http://database.ul.com/cgi-bin/XYV/template/LISEXT/1FRAME/index.htm

		Cat. No. 700-HK...			
Electrical Ratings					
Rated Thermal Current (I^{th})		1-Pole, 1 CO, SPDT — 16 A		2-Pole, 2 CO, DPDT — 8 A	
Rated Insulation Voltage (U_i)		250V IEC, 300V UL/CSA			
Contacts	Inductive V AC	120V AC	AC-15, 6.2 A B300 Pilot Duty, 3 A A300 (700-HKM_) 1/3 Hp (0.24 kW) 1-phase	120V AC	AC-15, 2.9 A B300 Pilot Duty, 3.0 A 1/4 Hp (0.18 kW), 1-phase
		240V AC	AC-15, 3.1 A B300 Pilot Duty, 1.5 A A300 (700-HKM_) 3/4 Hp (0.55 kW), 1-phase	240V AC	AC-15, 1.4 A B300 Pilot Duty, 1.5 A 1/2 Hp (0.37 kW), 1-phase
		230V AC	0.55 kW, 1-phase	230V AC	0.37 kW, 1-phase
	Inductive V DC	24V DC	DC-13, 5.0 A	24V DC	DC-13, 3.0 A
		125V DC	DC-13, 0.2 A R300 Pilot Duty, 0.22 A	125V DC	DC-13, 0.2 A R300 Pilot Duty, 0.22 A
		250V DC	DC-13, 0.1 A R300 Pilot Duty, 0.11 A	5 A, 250V AC	DC-13, 0.1 A R300 Pilot Duty, 0.11 A
	Resistive	230V AC	AC-1, 16 A	230V AC	AC-1, 8 A
		277V AC	16 A, General Use	277V AC	8 A, General Use
	Make, Break & Continuous	30V DC	DC-1, 12 A 10 A, Resistive	30V DC	DC-1, 6 A 6 A, Resistive
Min. Permissible Contact Ratings		300 mW (5V/60 mA or 60V/5 mA) for AgNi Contacts (700-HK3_) 50 mW (5V/10 mA or 25V/2 mA) for AgNi + Gold Contacts (700-HKX_) 500 mW (100V/5 mA or 5V/100 mA) for $AgSnO_2$ Contacts (700-HKM_)			
Permissible Coil Voltage Variation	Pickup: holding Voltage: Must Dropout Voltage:	80...110% of Nominal Voltage at 50/60 Hz, 73...110% of Nominal Voltage at DC 80% of Nominal V AC at 50/60 Hz, 40% of Nominal V DC 20% of Nominal V AC at 50/60 Hz, 10% Nominal V DC			
Power Consumption		1.2V A (V AC Coils), 0.5 W (V DC Coils)			
Coil Voltages		See Overview/Product Selection			
Design Specification/Test Requirements					
Dielectric Withstand Voltage	Between Open Contacts (VRMS)	1000V AC			
	Contact to Coil (VRMS)	1600V AC			
Mechanical					
Degree of Protection		IP 20 (guarded terminal sockets), RT II — Flux-proof (Relay)			
Mechanical Life Operations		10 x 10^6			
Electrical Life Cycles		230V AC, 16 A Resistive: 100 000 min. 277V AC, 16 A Resistive: 30 000 min. 30V DC, 10 A Resistive: 30 000 min. B300, R300, Hp (kW): 6000 min. A300 (700-HKM_): 100,000 min.		230V AC, 8 A Resistive: 100 000 min. 277V AC, 8 A Resistive: 30 000 min. 30V DC, 6 A Resistive: 30 000 min. B300, R300, Hp (kW): 6000 min.	
Switching Frequency		Mechanical: 18,000 cycles/hr. Electrical: 900 cycles/hr.			
Operating Time at Nominal Voltage at 20 °C (ms)	Pickup	15 ms max.			
	Dropout	5 ms max.			
Vibration	Operational	10...2000 Hz, 0.76 mm (0.03 in.) 2.5 G			
	Non-Operational	10...2000 Hz, 0.76 mm (0.03 in.) 5.0 G			
Shock	Operational	15 G			
	Non-Operational	50 G			
Environmental					
Temperature	Operating	–40...+70 °C (–40...+158 °F)			
	Storage	–40...+85 °C (–40...+185 °F)			
Altitude		2000 m (6560 ft)			
Construction					
Insulating Material		Molded High Dielectric Material			
Enclosure		Transparent Dust Cover			
Contact Material		700-HK3_: Silver nickel (AgNi); 700-HKX_: Silver Nickel + Gold Plating (AgNi + Au); 700-HKM_: Silver Tin Oxide ($AgSnO_2$)			
Terminal Markings on Socket		In accordance with EN 50005			
Sockets			**1-Pole**		**2-Pole**
	Screw Terminal	700-HN121 (10 A @ 70 °C) 700-HN221 (16 A @ 50 °C, 12 A @ 70 °C)		700-HN122 (2 x 5 A @ 70 °C) 700-HN222 (2 x 8 A @ 70 °C)	
	Spring Clamp (Available September 2006)	700-HN223 (15 A @ 40 °C with 2 conductors per terminal) (10 A @ 70 °C with 1 conductor per terminal)		700-HN224 (2 x 8 A@ 70 °C)	
Approvals					
Certifications		CSA Certified, File 75088, UL Recognized, File E3125 Guide NLDX2/NLCX8, cULus Listed with Allen-Bradley sockets (File No. 3125 Guide NLDX/NLDX7), CE Marked			
Standards		EN61810-1, CSA 22.2 No. 14, UL 508			

http://raise.rockwellautomation.com/raconfig/rtcache/jpg/700-hk%20specs.jpg[10/7/2015 4:14:36 PM]

Product: 1492-J3

Description: 1492 IEC Screw Terminal Blocks

BOM #12

Representative Photo Only (actual product may vary based on configuration selections)

BLOCK STYLE	
Base Block Style	Standard Feed-Through Blocks
BASE DATA	
Base Block Type	One-Circuit Feed-Through Block
DETAIL DATA	
Features	Standard Feedthrough
Maximum Wire Size & Rating	UL: 30-12 AWG (25A @600V AC/DC)\nCSA: 26-12 AWG (20A @600V AC/DC)\nIEC: 2.5mm² (24A @800V AC/DC)\nEEx e II: 2.5mm²/20-14 AWG (21A @ 550V AC/DC)
Color	Gray (Standard)
CERTIFICATIONS AND APPROVALS	
UR	UL 486E, UL 1059; Reference File: E40735, E187022
CSA	CSA C22.2 No. 65, No. 158; On Website, Name: Rockwell, Keyword Search: 1492
IEC	EN 60947-1, EN 60947-7-1(Feed-Through), -2(Ground), -3(Fuse)
ATEX	http://www.rockwellautomation.com/products/certification/ex/excert.html
Short Circuit Current Rating	This terminal block carries a minimum of 10kA SCCR rating for all protection methods. Please see the table for other possible elevated ratings.
For CSA Certifications:	http://directories.csa-international.org/directorymain.asp
For UL Certifications Directory:	http://database.ul.com/cgi-bin/XYV/template/LISEXT/1FRAME/index.htm

Bulletin 931 Analog Signal Conditioners

BOM #14

Analog Signal

Analog Signal Conditioners are designed for use with Rockwell Automation I/O systems to provide reduced installation and maintenance costs in process applications. The products are available with single, 2-way or 3-way isolation and provide the following functionality.

- Isolation of analog measurement and control signals
- Conversion of analog signals from Voltage to Current (i.e., 0-10V to 4-20 mA)
- Amplification, linearization and transmission of low-level sensor signals (i.e., mV signals from thermocouples)
- Transmission of analog signals over long distances
- Provide local status indications and alarms via relay contact closures based on the analog signals
- Multiple products are approved to be used in hazardous location environments - UL (Class 1, Div 2) and ATEX (Zone 2)

Typical Applications

- Feed and Conveyor Control
- Boiler and Heat Control
- Water & Effl uent Treatment
- Machine Speed and Power
- Product Thickness and Alignment
- Batching, Mixing and Weighing
- Crystallization Control
- Valve Position Control
- Tanks and Silos – Inventory Control
- Chemical Dosing
- Safety Interlocks and Shutdown
- Pollution Control
- Refrigeration and Storage
- Dust Control

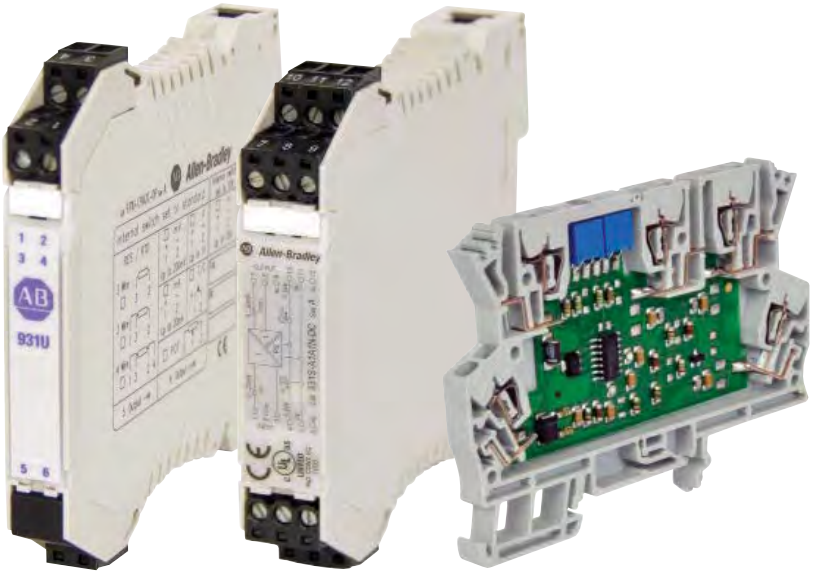

Rockwell Automation is pleased to introduce the Allen-Bradley® Bulletin 931 Analog Signal Conditioner product line. This new offering provides a wide range of products for use wherever temperature, pressure, speed, weight, level, and flow are measured and controlled as part of a continuous or batch production process.

Your facility or working environment needs to operate in a specific manner to reach maximum efficiency and profitability. The Bulletin 931 Analog Signal Conditioners are designed to help you convert, isolate and amplify signals in your applications and can isolate between multiple field measurement devices on a common power supply to help prevent interference that can occur due to ground loops or common mode noise.

In addition, these DIN rail-mounted analog signal conditioners are compatible with all types of integrated PLC and DCS I/O systems and can be integrated with our PlantPAx™ Process Automation System to leverage a single control platform for batch, drives, motion control, process and safety.

Catalog Number	Description	Width (mm)	Input Ratings	Output Ratings	Power
Current/Voltage					
931H-A1A1N-IP	Passive Isolator, 1 Channel	6.0	0(4)...20 mA	0(4)...20 mA	ILP[4]
931H-A2A2N-DC	Active Isolator, 3 Way,	6.1	4...20 mA	4...20 mA	AUX
931H-C2C2D-DC	Active Converter, 3 Way	6.1	0...20 mA, 4…20mA, 0…10 VDC	0...20 mA, 4…20mA, 0…10 VDC	AUX
931S-A1A1N-DC	Active Converter, 3 Way	17.5	0(4)...20 mA	0(4)...20 mA	AUX
931S-A1A1N-IP1	Passive Isolator, 1 Channel	17.5	0(4)...20 mA	0(4)...20 mA	ILP[4]
931S-A1A1N-IP2	Passive Isolator, 2 Channel	17.5	0(4)...20 mA	0(4)...20 mA	ILP[4]
931S-A2A2N-DC	Active Isolator	12.5	4...20 mA	4...20 mA	AUX
931S-A2A5N-0P	Passive Isolator, Splitter	17.5	4...20 mA	(2x) 4...20 mA	OLP[5]
931S-C1A2D-0P	Passive Converter	17.5	0...20 mA, 4…20mA, 0…5 VDC, 0…10 VDC	4...20 mA	OLP[5]
931S-C3C3J-DC	Active Converter, 3 Way,	12.5	0...22mA[3], 0…10 VDC[3]	0…22mA[3], 0...10 VDC[3]	AUX
931S-C4C5D-BC	Active Converter, 3 Way	12.5	±0.1mA…±100mA[3], ±20mV…±200VDC[3]	0...±20 mA, 0…+10 VDC	AUX[1]
Temperature - RTD					
931H-P2C1D-DC	Active Converter, PT100/RTD	6.1	PT100, 2 or 3 conds (0…100°C)	0...20 mA, 4…20mA, 0…5 VDC, 0…10 VDC	AUX
931H-P2A2N-0P	Active Converter, PT100/RTD	6.0	PT100, 2 or 3 conds (0...200°C)	4...20 mA	OLP[5]
931S-P1C2D-DC	Active Converter, 3 Way, RTD	17.5	Pt100, Ni100 2, 3 or 4 conds; Pot.: 0...100kΩ; Res.: 0...4.5kΩ	0...20 mA, 4…20mA, 0…10 VDC	AUX
Temperature - Thermocouple					
931H-T1C1D-DC	Thermocouple, Type J	6.1	Type J (0…700°C)	0...20 mA, 4…20mA, 0…5 VDC, 0…10 VDC	AUX
931H-T2C1D-DC	Thermocouple, Type K	6.1	Type K, (0…1000°C)	0...20 mA, 4…20mA, 0…5 VDC, 0…10 VDC	AUX
931S-T9C2D-DC	Universal Thermocouple, 3 Way	17.5	Type K, J, T, E, N, R, S, B (-200…+1820°C)	0...20 mA, 4…20mA, 0…10 VDC	AUX
Line Monitoring					
931S-A3A2D-0P	Passive Converter, Monitoring	22.5	0…1A or 0…5A or 0…10A (AC)	4...20 mA	OLP[5]
931S-A3C2D-DC	Active Converter, Monitoring	22.5	0…1A or 0…5A or 0…10A (AC)	0...20 mA, 4…20mA, 0…10 VDC	AUX
931S-A4C2D DCHall	Active Isolator, Hall-Effect Monitoring	22.5	0…20A or 0…25A or 0…30A (AC/DC)	0...20 mA, 4…20mA, 0…10 VDC	AUX
931S-C2R1D-DC2R	Isolator, 3 Way, Limit Value Monitoring	17.5	0...20 mA, 4…20mA, 0…10 VDC	2 Relays	AUX
931S-V1R1D-MC1R	Isolator, 3 Way, Monitoring	17.5	24…70 / 70…140 / 140…210 / 210…260 V (AC/DC)	1 Relay	ILP[4]
Application Specific					
931S-B1C6D-DC	Bridge Converter, 3 Way	17.5	-500 mV...+500 mV (Excitation = +10 VDC, +5 VDC or 4.8...10.2 VDC adjustable)	0...20mA, 4…20mA, 20…0mA, 20…4mA, 0…5VDC, 0….10VDC, 5…0 VDC, 10…0 VDC	AUX
931S-F1C2D-DC	Frequency Converter, 3 Way	12.5	2 or 3 wire PNP/NPN, NAMUR initiator, push-pull step	0...20 mA, 4…20mA, 0…10 VDC	AUX
931H-A2C2D-DCHart	Active Isolator, 3 Way, Hart	6.1	4...20 mA (HART)	0...20 mA, 4…20mA, 0…10 VDC (HART)	AUX
Universal					
931U-C9A2C-0P[6]	Active Converter, Universal	12.5	Current/Voltage: -10…20mA; -5…10Vdc / -10…20mA; -5…10V / -100…200mV; TC: B, C, E, J, K, L, N, R, S, T, W3, W5 (-200…+2300°C); RTD: Pt100/200, Ni100, Cu100 2/3/4 cond. (-200…+850°C)	4...20 mA	OLP[5]
U-C9C7C-BC[6]	Active Converter, 3 Way, Universal	45.0	Current/Voltage: -20…50mA; -200…500mV , -20…50 VDC; TC: B, E, J, K, L, N, R, S, T; RTD: PT100, PT1000, Ni100, Ni1000, Cu10, Cu25, Cu50, Cu100 2/3/4 cond; Pot: 100Ω…100kΩ; Res.: 10Ω…5kΩ Freq.: 2Hz…100kHz	0…20mA, -10…10 VDC (programmable); 2 Relays	AUX[2]
931U-CABLE	Programming Cable	NA	NA	NA	NA
Accessories					
931H-EB1	End Barrier	1.5	NA	NA	NA

BOM #15

*All non-marked AUX are 24VDC

[1] 22…230V AC/DC
[2] 18…264V AC/DC
[3] These ranges are scalable
[4] Input Loop Powered
[5] Output Loop Powered
[6] Software Programmable

Rockwell Automation offers a breadth of quality Allen-Bradley® components to fit your specific needs. In order to assist you with your component selection, we offer a variety of configuration and selection tools.

Local Distributor
Call 1.800.223.3354 to contact your local Distributor today.
http://www.rockwellautomation.com/distributor/

On-Line Product Directory
Our extensive product portfolio is designed to improve your processes through every stage of your manufacturing cycle.
http://www.rockwellautomation.com/products/

Product Selection Toolbox
Our powerful range of product selection and system configuration tools assist you in choosing and applying our products.
http://www.rockwellautomation.com/en/e-tools/

Catalogs
Within our catalogs you'll find an extensive selection of essential Allen-Bradley component products.
http://www.ab.com/catalogs/

Allen-Bradley, LISTEN. THINK. SOLVE., and PlantPAx are trademarks of Rockwell Automation, Inc. Trademarks not belonging to Rockwell Automation are property of their respective companies.

www.rockwellautomation.com

Power, Control and Information Solutions Headquarters

Americas: Rockwell Automation, 1201 South Second Street, Milwaukee, WI 53204-2496 USA, Tel: (1) 414.382.2000, Fax: (1) 414.382.4444
Europe/Middle East/Africa: Rockwell Automation NV, Pegasus Park, De Kleetlaan 12a, 1831 Diegem, Belgium, Tel: (32) 2 663 0600, Fax: (32) 2 663 0640
Asia Pacific: Rockwell Automation, Level 14, Core F, Cyberport 3, 100 Cyberport Road, Hong Kong, Tel: (852) 2887 4788, Fax: (852) 2508 1846

Publication 931-PP001C-EN-P – August 2012
Supersedes Publication 931-PP001B-EN-P – January 2010

Copyright © 2012 Rockwell Automation, Inc. All Rights Reserved. Printed in USA.

BOM #16

Spring-Clamp Connection Terminal Blocks

Plug-in Style Blocks (Cat. Nos. 1492-L3P, -LDG3P) and Analog Loop Control Block (Cat. No. 1492-LDAG3)

	1492-L3P			1492-LDG3P			1492-LDAG3		
Dimensions are not intended to be used for manufacturing purposes. **Note:** Height dimension is measured from top of rail to top of terminal block.	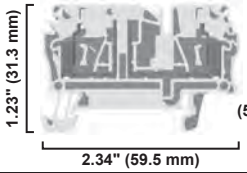			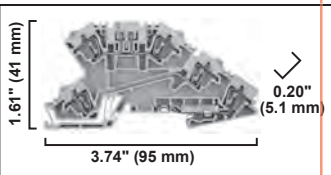			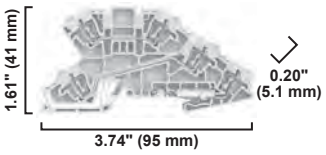		
Specifications	*Single Circuit Plug-In Component Block for a Variety of Components*			*Terminal Block with slot for Plug-In Component, Feed-Through Circuit and 1 Ground Connection*			*Analog Loop Control Terminal Block with 2 Feed-Through Circuits and 1 Ground Connection*		
Certifications	cULus	CSA	IEC	cULus	CSA	IEC	cULus	CSA	IEC
Voltage Rating	600V AC/DC		500V AC/DC	300V AC/DC		250V AC/DC	300V AC/DC		250V AC/DC
Maximum Current	20 A		24 A	10 A		20 A	10 A		24 A
Wire Range (Rated Cross Section)	#30…12 AWG		4 mm²	#26…12 AWG		2.5 mm²	#26…12 AWG		2.5 mm²
Wire Strip Length	0.39 in. (10 mm)			0.31 in. (8 mm)			0.31 in. (8 mm)		
Density	59 pcs/f (/196 pcs/m)			59 pcs/ft (196 pcs/m)			59 pcs/ft (196 pcs/m)		
Housing Temperature Range	–58…+248 °F (–50…+120 °C)			–58…+248 °F (–50…+120 °C)			–58…+248 °F (–50…+120 °C)		
Terminal Blocks	**Cat. No.**		**Pkg Qty.**	**Cat. No.**		**Pkg Qty.**	**Cat. No.**		**Pkg Qty.**
Color Grey	**1492-L3P**		25	BOM #18		25	**1492-LDAG3**		25
Accessories	**Cat. No.**		**Pkg Qty.**	**Cat. No.**		**Pkg Qty.**	**Cat. No.**		**Pkg Qty.**
Mounting Rails 1 m Symmetrical DIN (Steel)	**199-DR1**		10	**199-DR1**		10	**199-DR1**		10
1 m Symmetrical DIN (Aluminum)	**1492-DR5**		10	BOM #17		10	**1492-DR5**		10
1 m Hi-Rise Symmetrical DIN (Aluminum)	**1492-DR6**		2	**1492-DR6**		2	**1492-DR6**		2
1 m Angled Hi-Rise Sym. DIN (Steel)	**1492-DR7**		2	**1492-DR7**		2	**1492-DR7**		2
End Barrier	**1492-EBL3**		50	**1492-EBLDAG3**		20	**1492-EBLDAG3**		20
End Anchors and Retainers Screwless End Retainer	**1492-ERL35**		20	**1492-ERL35**		20	**1492-ERL35**		20
DIN Rail — Normal Duty	**1492-EAJ35**		100	**1492-EAJ35**		100	**1492-EAJ35**		100
DIN Rail — Heavy Duty	**1492-EAHJ35**		50	**1492-EAHJ35**		50	**1492-EAHJ35**		50
Jumpers Plug-In Center Jumper — 50-pole	**1492-CJK5-50**		10	**1492-CJLJ5-50**		10	**1492-CJLJ5-50**		10
Plug-In Center Jumper — 10-pole	**1492-CJK5-10**		20	**1492-CJLJ5-10**		20	**1492-CJLJ5-10**		20
Plug-In Center Jumper — 9-pole	**1492-CJK5-9**		20	**1492-CJLJ5-9**		20	**1492-CJLJ5-9**		20
Plug-In Center Jumper — 8-pole	**1492-CJK5-8**		20	**1492-CJLJ5-8**		20	**1492-CJLJ5-8**		20
Plug-In Center Jumper — 7-pole	**1492-CJK5-7**		20	**1492-CJLJ5-7**		20	**1492-CJLJ5-7**		20
Plug-In Center Jumper — 6-pole	**1492-CJK5-6**		20	**1492-CJLJ5-6**		20	**1492-CJLJ5-6**		20
Plug-In Center Jumper — 5-pole	**1492-CJK5-5**		20	**1492-CJLJ5-5**		20	**1492-CJLJ5-5**		20
Plug-In Center Jumper — 4-pole	**1492-CJK5-4**		60	**1492-CJLJ5-4**		60	**1492-CJLJ5-4**		60
Plug-In Center Jumper — 3-pole	**1492-CJK5-3**		60	**1492-CJLJ5-3**		60	**1492-CJLJ5-3**		60
Plug-In Center Jumper — 2-pole	**1492-CJK5-2**		60	**1492-CJLJ5-2**		60	**1492-CJLJ5-2**		60
Other Accessories Disconnect Plug	**1492-DPL**		50	**1492-DPL**		50	—		—
Component Plug	**1492-CPL**		50	**1492-CPL**		50	—		—
Fuse Plug Without Blown Fuse Indicator	**1492-FPK2**		20	**1492-FPK2**		20	—		—
10…36V Blown Fuse Indicator	**1492-FPK224**		20	**1492-FPK224**		20	—		—
35…70V Blown Fuse Indicator	**1492-FPK248**		20	**1492-FPK248**		20	—		—
60…150V Blown Fuse Indicator	**1492-FPK2120**		20	**1492-FPK2120**		20	—		—
140…250V Blown Fuse Indicator	**1492-FPK2250**		20	**1492-FPK2250**		20	—		—
Reducing Sleeves 28…24 AWG (0.13…0.2 mm²) White	1492-PSL3-2		100	—		—	—		—
Reducing Sleeves 22…20 AWG (0.25…0.5 mm²) Grey	**1492-PSL3-5**		100	—		—	—		—
Reducing Sleeves 18 AWG (0.75…1.0 mm²) Dark Grey	**1492-PSL3-10**		100	—		—	—		—
Test Plug	**1492-TPL5**		25	**1492-TP23**		20	—		—
Electrical Warning Plate	**1492-EWPL5**		20	—		—	—		—
Group Marking Carrier	**1492-GM35**		25	**1492-GM35**		25	**1492-GM35**		25
Marking Systems Snap-In Marker Cards	**1492-M5X10** (144/card)		5	**1492-M5X10** (144/card)		5	**1492-M5X10** (144/card)		5
Snap-In Marker Cards	**1492-M5X5** (200/card)		5	**1492-M5X5** (200/card)		5	**1492-M5X5** (200/card)		5

ELECTRIC HEATERS

BOM #19

115/230 Volt
100/200 Watt

115/230 Volt
400/800 Watt

115/230 Volt
1300 Watt

INDUSTRY STANDARDS

UL 508A Component Recognized; File No. E61997

CSA Certified, CSA File No. LR42186
CE

APPLICATION

Protect mechanical, electrical and electronic equipment from low temperatures, condensation and corrosion with this thermostatically controlled, fan-driven heater that maintains a stable enclosure temperature.
Fan draws cool air from the bottom of the enclosure and passes this air across the thermostat and heating element before being released into enclosure cavity. Heated air is discharged through the top of the heater unit.

SPECIFICATIONS

- Aluminum housing
- Thermostat range adjustable from 0 F to 100 F (-18 C to 38 C)
- Four 10-32 x self-tapping screws are included with each heater
- Ball bearing fan
- Terminal strip with clamp connector that accepts both solid and stranded wire

FINISH

- Brushed aluminum

⚠ CAUTION

These electric heaters are not designed for use in dusty, dirty, corrosive, or hazardous locations. Portions of the heater can get hot. Adequate protection must be taken to protect people from potential burns, and to protect other components from this heat. Pentair Technical Products recommends this heater only be installed in a totally-enclosed metal enclosure.

DO NOT INSTALL HEATERS ON WOOD PANELS. Heat sensitive components should not be placed near the heater discharge area since this air can be quite warm. The clearance range defines the space that must be kept free of these components for proper and safe operation of the heater.

Performance Data **100 and 200 Watt Heaters**

CATALOG NUMBERS	DAH1001A	DAH1002A	DAH2001A	DAH2002A
ELECTRICAL DATA				
Rated Voltage	**115**	**230**	**115**	**230**
Frequency (Hz)	50/60	50/60	50/60	50/60
Power Consumption (Watts)	100	100	200	200
Nominal Current (Amps)	0.98	0.49	1.89	0.95
HEATING PERFORMANCE				
Watts	**100**	**100**	**200**	**200**
UNIT CONSTRUCTION				
Weight (lb./kg)	1.6/0.73	1.6/0.73	1.6/0.73	1.6/0.73
X (in./mm)	4.00/102	4.00/102	6.00/152	6.00/152

Performance Data **400 and 800 Watt Heaters**

CATALOG NUMBERS	DAH4001B	DAH4002B	DAH8001B	DAH8002B
ELECTRICAL DATA				
Rated Voltage	**115**	**230**	**115**	**230**
Frequency (Hz)	50/60	50/60	50/60	50/60
Power Consumption (Watts)	400	400	800	800
Nominal Current (Amps)	3.72	1.86	7.37	3.69
HEATING PERFORMANCE				
Watts	**400**	**400**	**800**	**800**
UNIT CONSTRUCTION				
Weight (lb./kg)	2.2/1.00	2.2/1.00	2.2/1.00	2.2/1.00
X (in./mm)	6.00/152	6.00/152	8.00/203	8.00/203

Performance Data **1300 Watt Heaters**

CATALOG NUMBERS	DAH13001C	DAH13002C
ELECTRICAL DATA		
Rated Voltage	**115**	**230**
Frequency (Hz)	50/60	50/60
Power Consumption (Watts)	1300	1300
Nominal Current (Amps)	11.5	5.7
HEATING PERFORMANCE		
Watts	**1300**	**1300**
UNIT CONSTRUCTION		
Weight (lb./kg)	3.4/1.54	3.4/1.54
X (in./mm)	8.00/203	8.00/203

Dimensions and Clearance Range Drawing for DAH1001A, -2A and DAH2001A, -2A

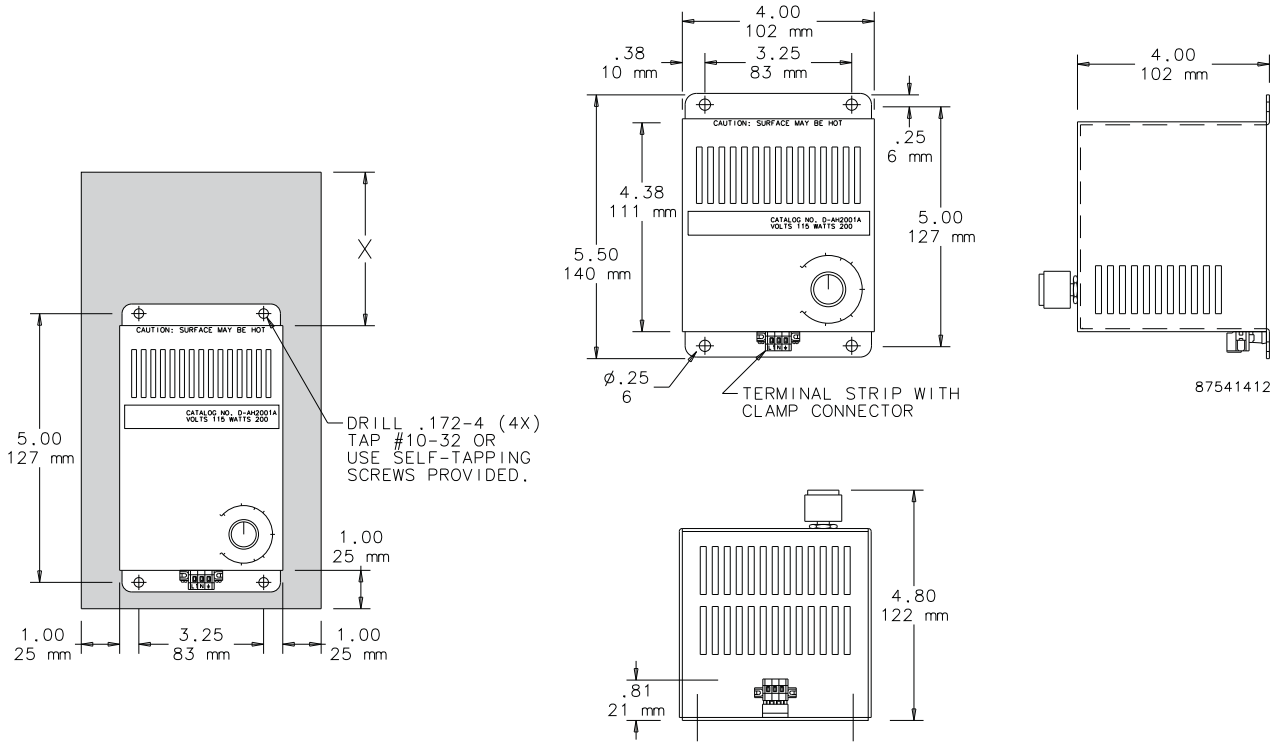

Dimensions and Clearance Range Drawing for DAH4001B, -2B and DAH8001B, -2B

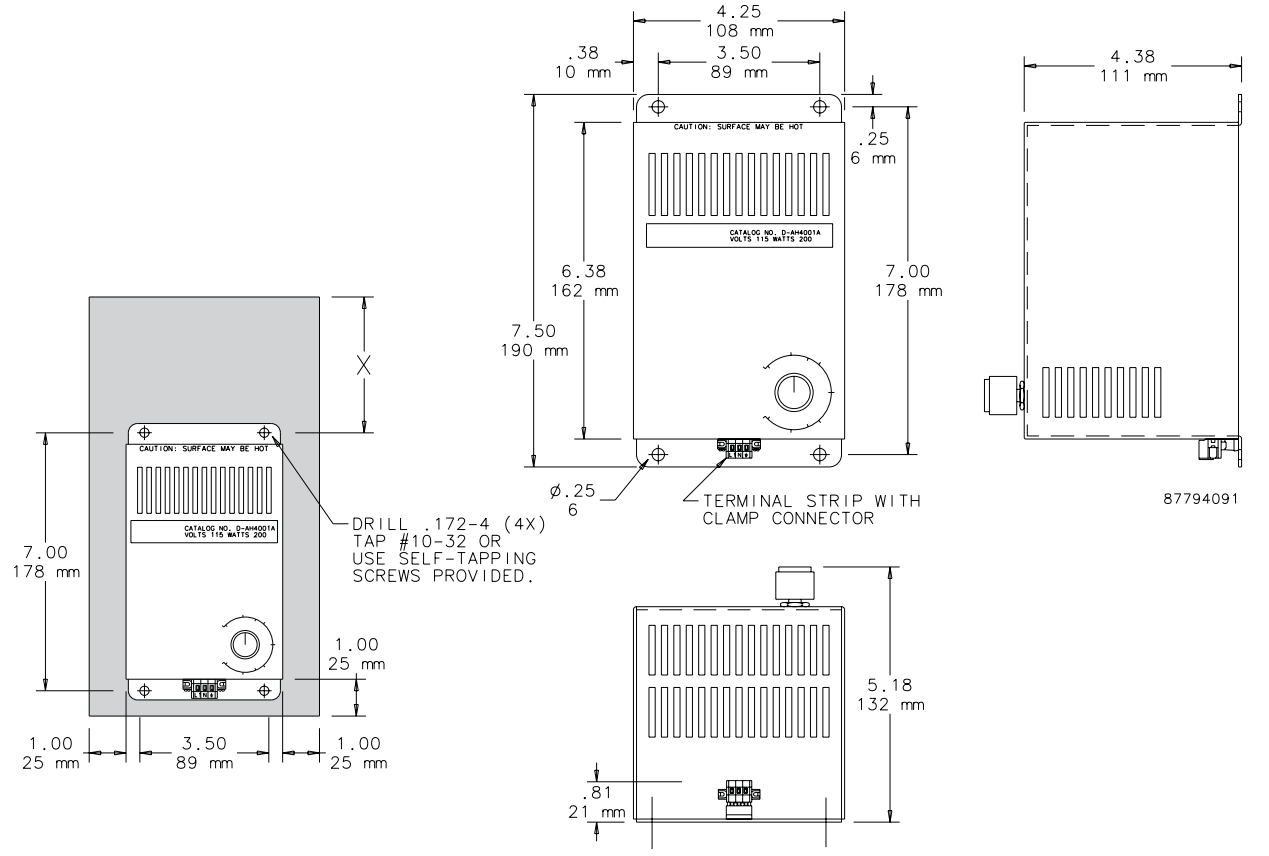

Dimensions and Clearance Range Drawing for DAH13001C and DAH13002C

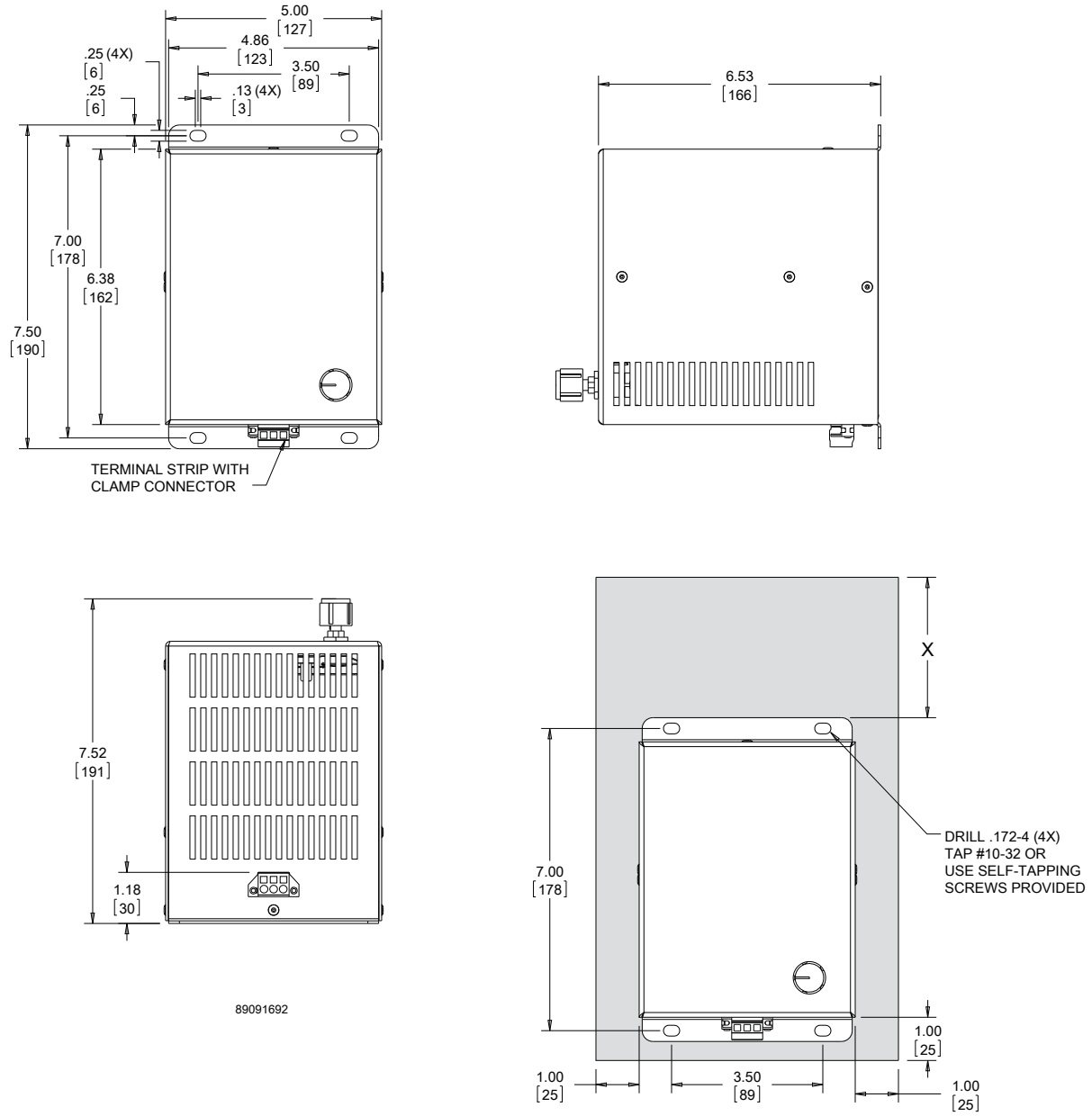

BOM #20

Product: 1492-GS1G200

Description: 1492-GS High Density Mini Circuit Breakers (Toggle Style)

Representative Photo Only (actual product may vary based on configuration selections)

MINIATURE CIRCUIT BREAKER DATA	
Electrical Standards	UL
Number of Poles	1 pole
Magnetic Trip Range	G-Trip Characteristics - Inductive Loads (AC)
Amp Rating	20.0 A
Optional Auxiliary Contact	No Contact

CERTIFICATIONS AND APPROVALS	
UL	1077, Guide No. QVNU2, File No. E65138
CSA	22.2 NO. 235
EN	60934
CE	Marked
For UL Certifications Directory:	http://database.ul.com/cgi-bin/XYV/template/LISEXT/1FRAME/index.htm

Specifications ❶

Cat. No.	1492-GS																	
Description	High-density circuit breaker (supplementary protector) with universal mounting foot for Allen-Bradley and DIN rail mounting																	
Maximum Voltage Ratings	277/480V AC 50/60 Hz 65V DC																	
Standard Current Ratings Internal Resistance per Pole	**A** **Ω**	0.2 26	0.5 4.2	0.8 1.6	1.0 1.1	1.5 0.47	2.0 0.25	2.5 0.20	3.0 0.13	4.0 0.08	5.0 0.06	6.0 0.05	8.0 0.01	10.0 0.01	12.0 0.01	15.0 0.01	16.0 0.01	20.0 0.005	25.0 0.004
Dielectric Strength	1960V AC																	
Shock and Vibration Specifications	Shock: 25 G, 11 ms duration Vibration: 5 G (10…500 Hz)																	
Insulation Resistance	Greater than 100 MΩ @ 500V DC																	
Current Capacity of Auxiliary Contacts (N.O., N.C.)	1.0 A AC or DC (resistive load)																	
Voltage Rating of Auxiliary Contacts	277V AC 65V DC																	
Operating Life	6000 cycles @ rated current (UL 1077)																	
Temperature Range	–40…+149°F (–40…+65°C)																	
Wire Size	#22…#10 AWG (0.5…6 mm²)																	
Recommended Wire Strip Length	0.51" (13.0 mm) for Mail Terminals 0.41" (10.4 mm) for Auxiliary Terminals																	
Recommended Tightening Torque	5 lb-in. (0.565 Nm)																	

❶ Performance Data — See page Important-2.

Approvals

- UL 1077
- CSA 22.2 NO. 235
- VDE 0631 (IEC 60934)

In North America, the Cat. No. 1492-GS circuit breaker is rated as a Supplementary Protector with a short-circuit current rating. Internationally, it is rated by IEC as a Circuit Breaker for Equipment with an interrupt rating

Electrical Characteristics

Poles	Rated Current (A)	Voltage Rating		Short-Circuit Current Rating ❶ Interrupt Rating *I*cn (IEC only)
		AC	DC	
UL 1077 Supplementary Protector Rating				
1	0.2…5	277	—	0.4 kA, U2
1	6…25	277	—	0.7 kA, U2
2, 3	0.2…5	277/480	—	0.4 kA, U2
2, 3	6…25	277/480	—	0.5 kA, U2
1, 2, 3	0.2…5	—	65	0.4 kA, U2
1, 2, 3	6…25	—	65	0.8 kA, U2
1	0.2…16	277	—	5 kA, C1
1	18…25	277	—	2 kA, C1
2, 3	0.2…16	277/480	—	5 kA, C1
2, 3	18…25	277/480	—	2 kA, C1
1	0.2…25	—	65	2 kA, C1
CSA 22.2 #235 Supplementary Protector Ratings				
1	0.2…16	277	—	5 kA, C1
1	18…25	277	—	2 kA, C1
2, 3	0.2…16	277/480	—	5 kA, C1
2, 3	18…25	277/480	—	2 kA, C1
1	0.2…25	—	65	2 kA, C1
IEC 60934 Circuit Breaker for Equipment Ratings				
1	0.2…5	250	—	0.4 kA
1	6…25	250	—	0.8 kA
2, 3	0.2…5	240/415	—	0.4 kA
2, 3	6…25	240/415	—	0.8 kA
1	0.2…5	—	65	0.4 kA
1	6…25	—	65	0.8 kA

❶ The short-circuit current rating is followed by a letter and number designating the test conditions and any calibrations and dielectric tests following the short-circuit test. These designations are defined as follows (see ❷ also):
C — Indicates that the short-circuit test was conducted with series overcurrent protection
U — Indicates that the short-circuit test was conducted without series overcurrent protection
1 — Indicates that a recalibration and dielectric test was not conducted as part of the short-circuit test
2 — Indicates that a recalibration and dielectric test was conducted as part of the short-circuit test

❷ These alphanumeric designations were established by UL. CSA has not yet adopted them; however, the test conditions are equivalent to UL and the coding is appropriate.

http://raise.rockwellautomation.com/raconfig/rtcache/jpg/1492gs.jpg[10/7/2015 4:09:21 PM]

BOM #20

COOPER Bussmann

Compact Modular Fuse Holders

COOPER Bussmann

DIN-Rail Mount Fuse Holders Protect Your Electrical System and Simplify Installation

- Colour coded for simple visual identification: yellow for **PV (1000Vdc)**, red for **IEC (690Vac)** and **black** for **UL (600Vac/dc)** applications.
- CHPV Models, with 1000Vdc rating for use with solar gPV fuse links, are suitable for photovoltaic applications of any size.
- Tested to a wide range of standards: IEC, cULus, CCC, CSA and UR, allowing for use across global applications.
- World class space-saving footprint - smaller than any other Modular Fuse Holder, reducing required installation space.
- Toolless DIN-Rail mounting improves ease of use and reduces installation time and costs.
- Rated for use with 75ºC or 90ºC wire, fine stranded wire, spade terminals and with comb-bus bars. Use any higher temperature rated wire with appropriate derating.

PV IEC UL

For more information visit www.cooperbussmann.com/ModularFuseHolders

Modular Fuse Holder Selection Table (10 x 38, Photovoltaic and Class CC)

Series & Size	Catalogue Number		Rated Voltage & Rated Current	Agency Markings	Number of Poles	Terminal Rating	Rated Breaking Capactiy	Cooper Bussmann Fuse Links
	With Indicator	Without Indicator						
CHM 10x38 and Midget	CHM1DIU	CHM1DU	IEC 690Vac/32A UL 600Vac/30A;	IEC 60269-2 UR; CSA; CCC	1	IEC: 1 to 25mm² 70°C PVC/Copper Cable Solid, Stranded, Fine Stranded, Spade Lug, Comb Bus Bar; Single and Dual	IEC 120kA rms sym UL 200kA rms sym CCC 100kA rms sym	IEC: C10 Series UL: FNQ, KLM, FNM, KTK, BAF, FWA, PVM, AGU, BAN, FWC.
	CHM2DIU	CHM2DU			2			
	CHM3DIU	CHM3DU			3			
	CHM4DIU	CHM4DU			4			
	CHM1DNIU	CHM1DNU		IEC 60269-2	1-pole + 1 neutral			
	CHM3DNIU	CHM3DNU			3-pole + 1 neutral			
	CHM1DI-48U	N/A	IEC 48Vdc/32A UL 48Vdc/30A;	IEC 60269-2; UR; CSA; CCC	1			
	N/A	CHM1DNXU	IEC 690Vac/32A	IEC 60269-2	1 neutral		N/A	N/A
CHPV Photovoltaic	CHPV1IU	CHPV1U	IEC 1000Vdc/32A UL 1000Vdc/30A;	IEC 60269-1 UR; CSA; CCC UL4248-18	1		33kA	Solar PV series, PVM, PV-xxA10F
	CHPV2IU	CHPV2U			2			
CHCC Class CC	CHCC1DIU	CHCC1DU	UL 600Vac/dc 30A	UL; CSA; CCC	1	Cable 75°C and 90°C Cu cable	200kA rms sym	LP-CC, FNQ-R, KTK-R
	CHCC2DIU	CHCC2DU			2			
	CHCC3DIU	CHCC3DU			3			
	N/A	CHCC1DI-48U	UL 48Vdc/30A		1			

Features

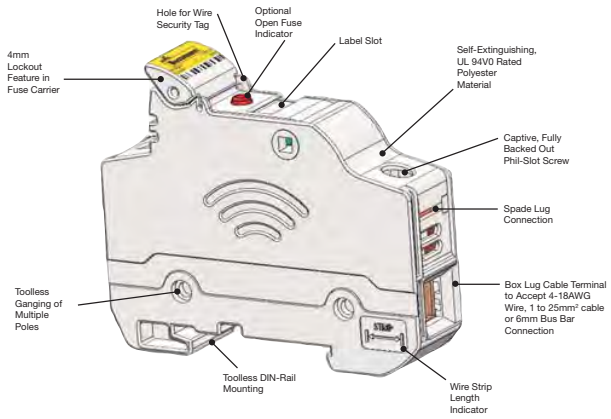

Specifications

Temperature Operating Range:
-20°C to +120°C (non-indicating)
-20°C to +90°C (indicating)
Flammability: Self-extinguishable UL 94V0 rated

Comb Bus Bar & Power Feed Accessories Make Installation Easier

- Distributes power in single- or three-phase configurations
- Cut-to-length solution does not compromise finger-safe protection
- Single-phase bus bars rated to 1000Vdc and 100A in end-fed configuration (200A for center-fed configuration)
- Three-phase bus bars rated to 600Vac/dc and 100A in end-fed configuration (200A for center-fed configuration)
- Power feed terminals for single-phase and three-phase service

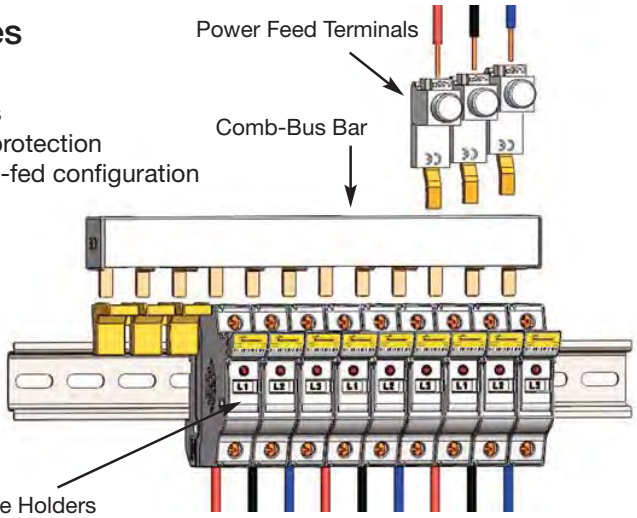

© 2012 Cooper Bussmann
www.cooperbussmann.com

COOPER Bussmann

Time-Current Characteristic Curves–Average Melt

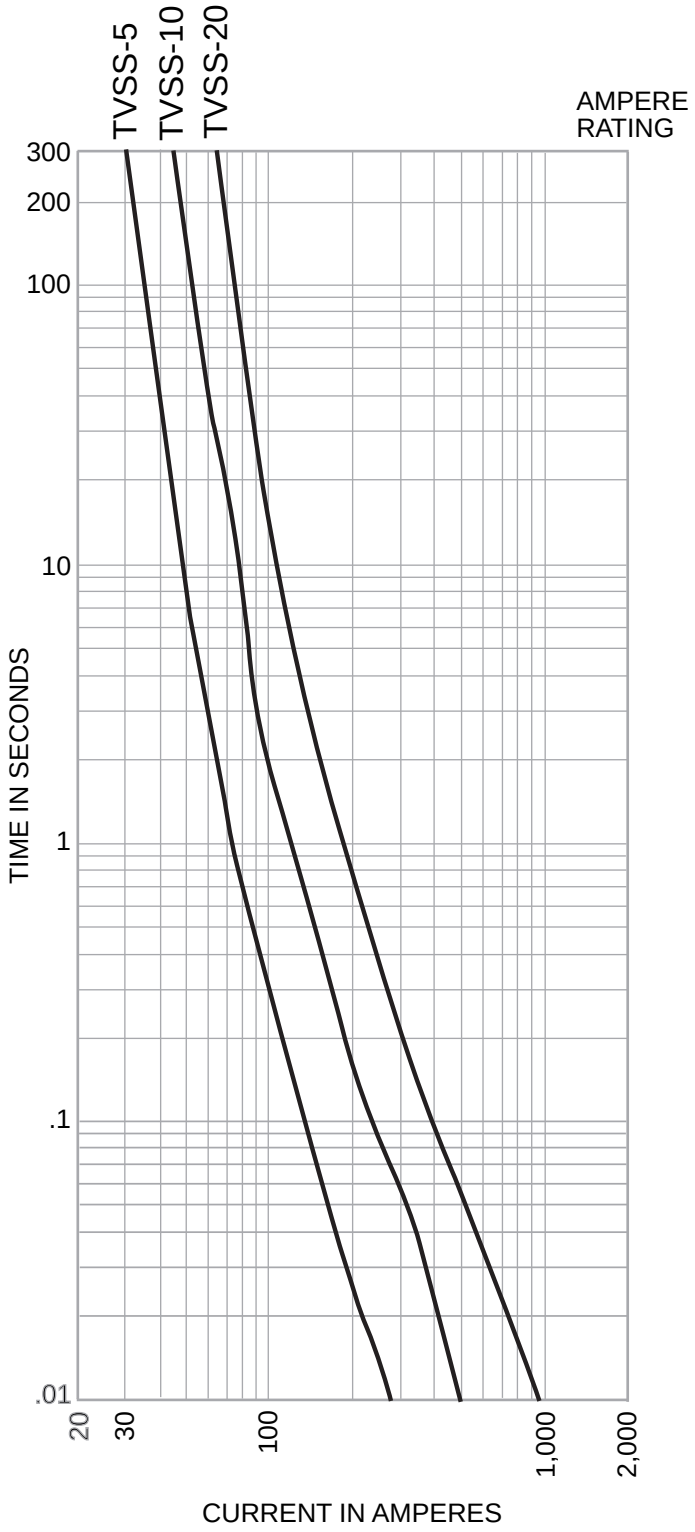

Time-Current Characteristic Curves–Peak Let-Through

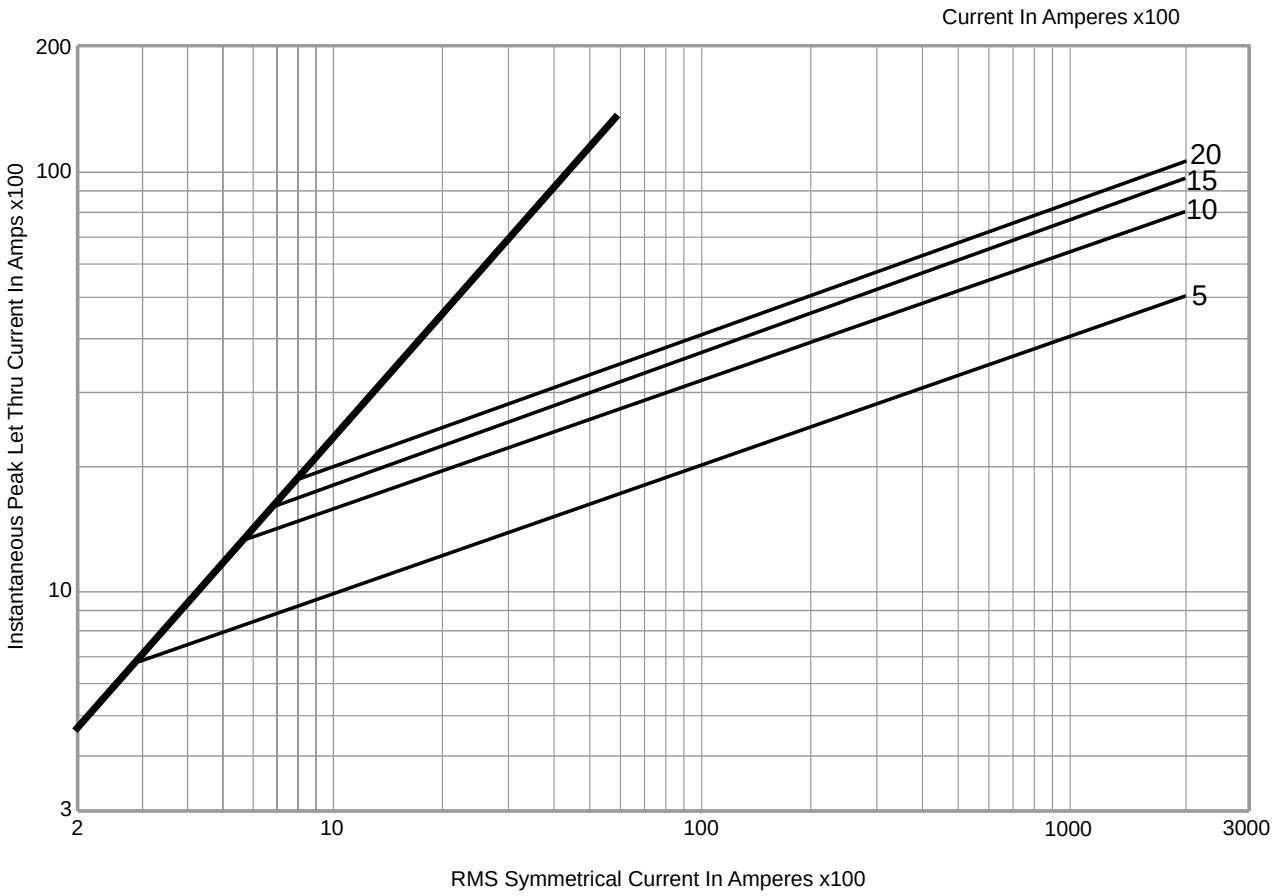

The only controlled copy of this Data Sheet is the electronic read-only version located on the Bussmann Network Drive. All other copies of this document are by definition uncontrolled. This bulletin is intended to clearly present comprehensive product data and provide technical information that will help the end user with design applications. Bussmann reserves the right, without notice, to change design or construction of any products and to discontinue or limit distribution of any products. Bussmann also reserves the right to change or update, without notice, any technical information contained in this bulletin. Once a product has been selected, it should be tested by the user in all possible applications.

Time-Current Characteristic Curves–Average Melt

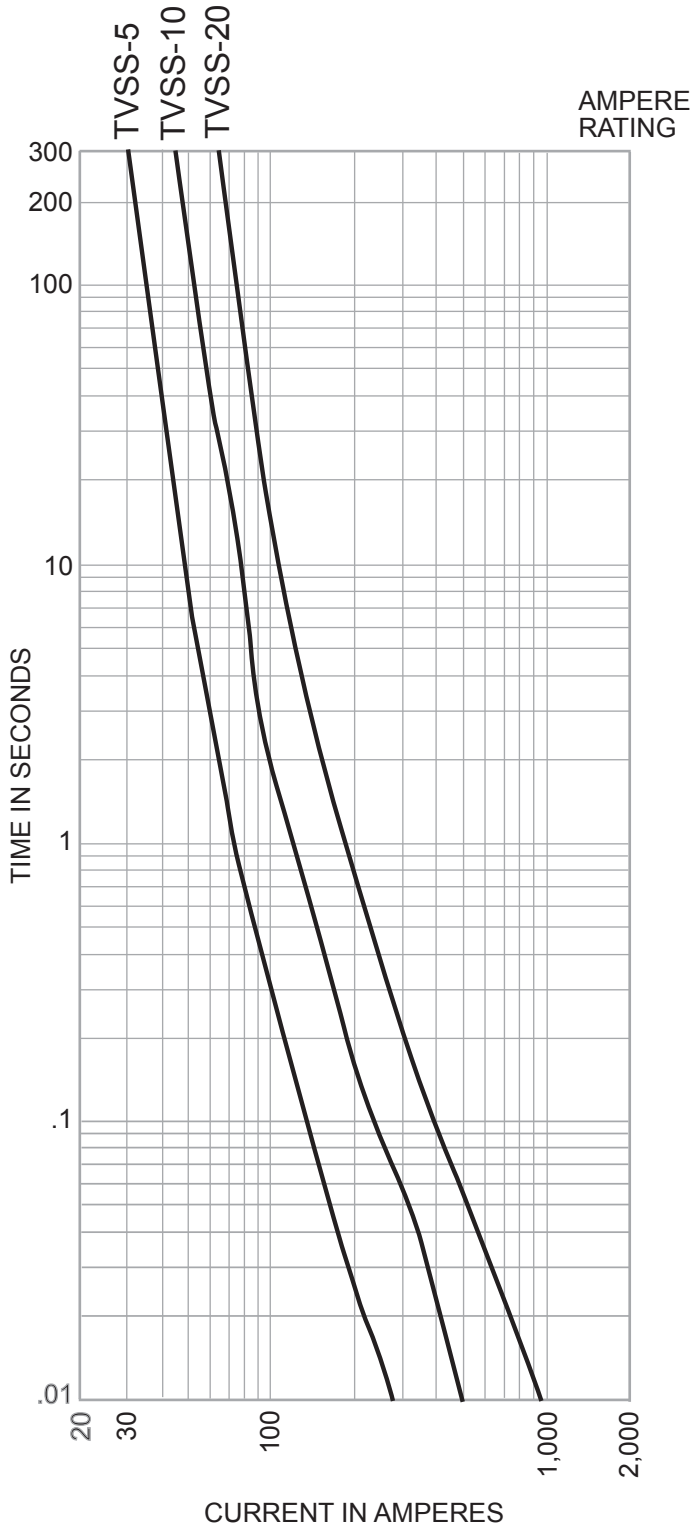

Time-Current Characteristic Curves–Peak Let-Through

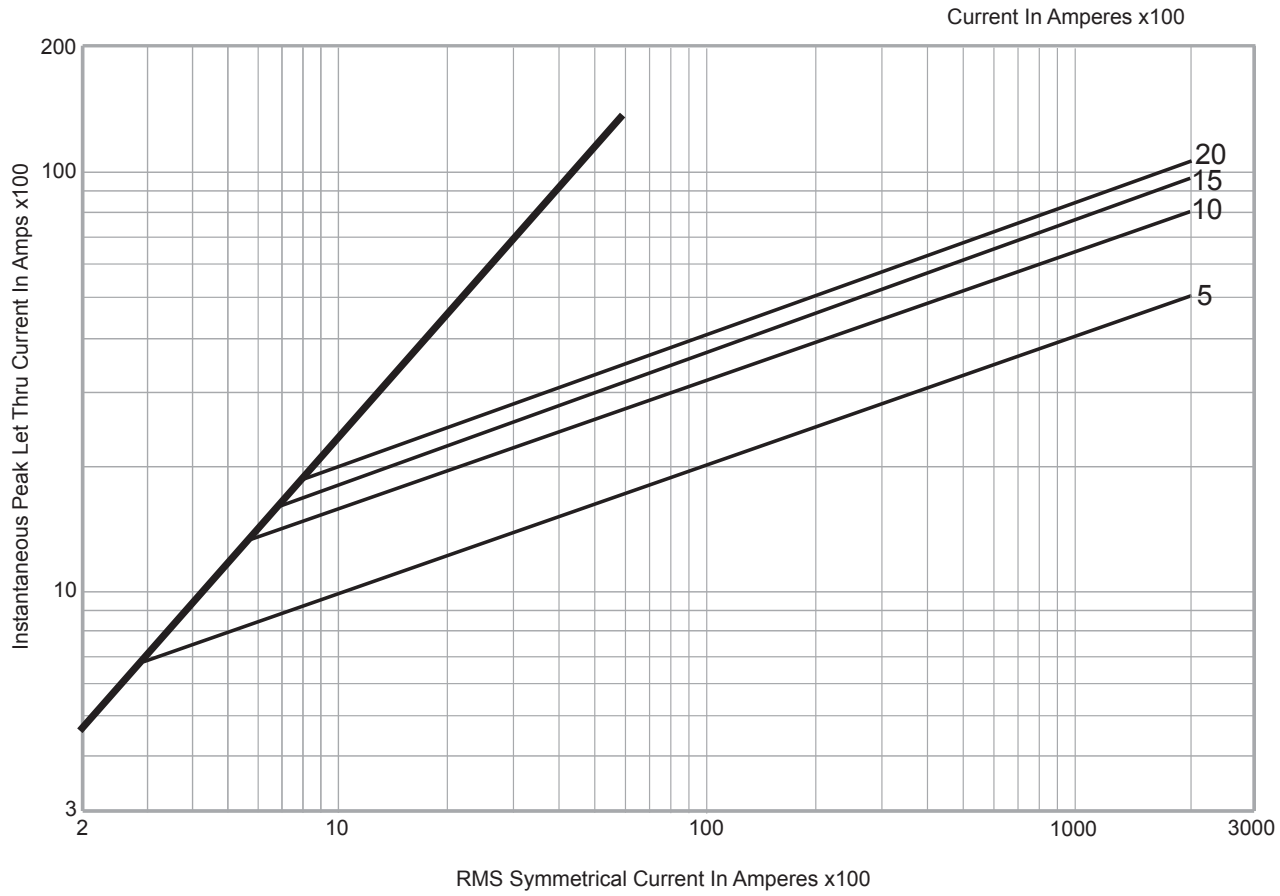

The only controlled copy of this Data Sheet is the electronic read-only version located on the Bussmann Network Drive. All other copies of this document are by definition uncontrolled. This bulletin is intended to clearly present comprehensive product data and provide technical information that will help the end user with design applications. Bussmann reserves the right, without notice, to change design or construction of any products and to discontinue or limit distribution of any products. Bussmann also reserves the right to change or update, without notice, any technical information contained in this bulletin. Once a product has been selected, it should be tested by the user in all possible applications.

DIN-Rail TVS Series

Status LED

OFF - Suppressor Non-Operational (power may be on)
GREEN - Suppressor Operational (power on)

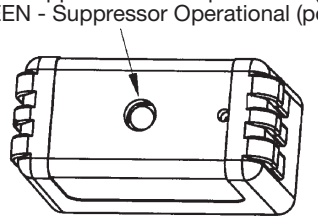

Specifications

Description: DIN-Rail mount voltage surge protection system for AC or DC voltage using diode or MOV technology.

Construction:

Suppressor: Case: 20% glass filled PES (Polyethersulfone)
Terminals: 110 Copper
Terminal Plating: Electroless tin

Holder: Case: 15% glass filled PBT (Polybutylene Terephthalate)
Interface Clips: CDA 7025
Interface Clip Plating: Electroless tin
Contact Lubricant: Fluoroether grease
Box Lug: Copper
DIN-Rail Springs: Stainless steel

Ratings*:

Volts: — 12Vdc (2kA surge current)
— 24Vdc (2kA surge current)
— 48Vdc (2kA surge current)
— 120Vac (7kA-18kA surge current)
— 240Vac (7kA-18kA surge current)

* See Catalog Numbers table for all specifications pertaining to specific voltage ratings.

Agency Information: UL Recognized (UL 1449) for AC products, (UL 497B) for DC products, CSA Approved.

Dimensions -in

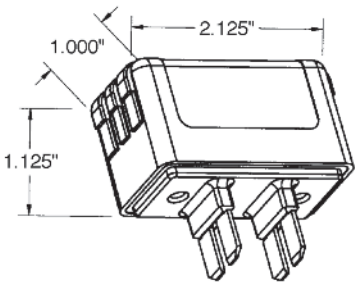

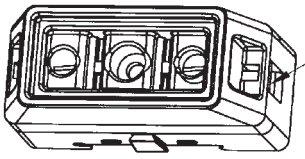

Power Terminals
14AWG - 4AWG
Dual 10AWG

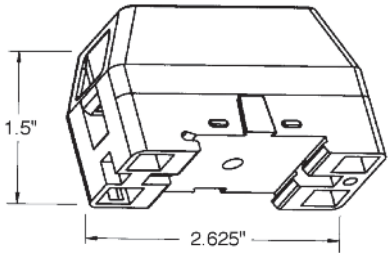

Product Specifications:

1. All TVS devices have non-polarized electrical connections as shown.
2. Suppressor voltage characteristics per chart.
3. Suppressor to provide non-interrupted service.
4. Enclosure material is 94V0 flame and explosion resistant.
5. Product markings show manufacturer, part number and safety warnings as required.
6. Mechanical dimensions as noted.
7. Suppressor Status LED as shown.
8. AC units operate on either 50 or 60Hz.

Catalog Numbers

Catalog Numbers	Voltage Application	MCOV	Technology	SVR 500A, 8x20μs	Surge Current Rating	Agency Information	Label Color
TVS12DCD	12Vdc	14Vdc	SASD	36Vdc	2kA	UL 497B	Red
TVS24DCD	24Vdc	28Vdc	SASD	58Vdc	2kA	UL 497B	White
TVS48DCD	48Vdc	57Vdc	SASD	90Vdc	2kA	UL 497B	Black
TVS120ACD	120Vac	140Vac	SASD	330Vac	7kA	UL 1449	Blue
TVS120ACM	120Vac	140Vac	MOV	500Vac	18kA	UL 1449	Grey
TVS240ACD	240Vac	280Vac	SASD	600Vac	7kA	UL 1449	Blue
TVS240ACM	240Vac	280Vac	MOV	800Vac	18kA	UL 1449	Grey

Data Sheet: 9006

BOM #23

Product: 1492-MCGAT115

Description: 1492-MC Circuit Breaker

Representative Photo Only (actual product may vary based on configuration selections)

CIRCUIT BREAKER DATA	
Voltage Rating	120 V AC
Type of Device	Ground Fault Circuit Interrupters (GFCI), Panel mounting
AIC Rating	With Self Test Capability
Number of Poles	1 Pole
Continuous Ampere Rating	15 Amps

CERTIFICATIONS AND APPROVALS	
UL	489 Listed Circuit Breaker (CSA 22.2 No. 5.1)
UL	Guide No. DIVQ, File No. E197878
For UL Certifications Directory:	http://database.ul.com/cgi-bin/XYV/template/LISEXT/1FRAME/index.htm

BOM #24

Product: 1492-GH100

Description: 1492-GH High Density Mini Circuit Breakers (Push to Set)

Representative Photo Only (actual product may vary based on configuration selections)

MINIATURE CIRCUIT BREAKER DATA	
Electrical Standards	UL
Amp Rating	10.0 A

CERTIFICATIONS AND APPROVALS	
UL	1077, Guide No. QVNU2, File No. E65138
CSA	22.2 NO. 235
VDE	0631 (EN 60934)
CE	Marked
For UL Certifications Directory:	http://database.ul.com/cgi-bin/XYV/template/LISEXT/1FRAME/index.htm

Product: 1492-JG3

Description: 1492 IEC Screw Terminal Blocks

BOM #25

Representative Photo Only
(actual product may vary based on configuration selections)

BLOCK STYLE	
Base Block Style	Grounding Blocks
BASE DATA	
Base Block Type	One-Circuit Feed-Through Ground Block
DETAIL DATA	
Features	Standard Feedthrough
Maximum Wire Size & Rating	UL: 22-12 AWG\nCSA: 22-12 AWG\nIEC: 2.5mm²\nEEx e II: 2.5mm²/20-14 AWG
Color	Green / Yellow Stripe (Standard)
CERTIFICATIONS AND APPROVALS	
UR	UL 486E, UL 1059; Reference File: E40735, E187022
CSA	CSA C22.2 No. 65, No. 158; On Website, Name: Rockwell, Keyword Search: 1492
IEC	EN 60947-1, EN 60947-7-1(Feed-Through), -2(Ground), -3(Fuse)
ATEX	http://www.rockwellautomation.com/products/certification/ex/excert.html
Short Circuit Current Rating	This terminal block carries a minimum of 10kA SCCR rating for all protection methods. Please see the table for other possible elevated ratings.
For CSA Certifications:	http://directories.csa-international.org/directorymain.asp
For UL Certifications Directory:	http://database.ul.com/cgi-bin/XYV/template/LISEXT/1FRAME/index.htm

BOM #26

Product: 1492-EBJ3-Y

Description: 1492 Terminal Block Accessories

ACCESSORY ITEMS

Accessories	End Barriers, Partition Plates, and Terminal Covers

SDU Series, DIN Rail AC UPS

The SDU DIN Rail UPS combines an industry leading compact design with a wide operation temperature range and unique installation options. The SDU series provides economical protection from damaging impulses and power interruptions. These units include easy to wire screw terminations for critical devices needing battery back up such as computer based control systems.

E179213

Applications

- Programmable Logic Controllers
- Factory Automation
- Robotics
- Conveying Equipment
- Computer-based Control Systems

Features

- Lightweight, compact industrial design
- Wide operation temperature range (0ºC to 50ºC)
- Cold start capability
- Phone/dataline surge protection
- Software and cable included for easy installation
- Simulated sinewave output
- RS232 communication port
- USB communication port (optional)
- Form C dry contact relay (optional)
- Panel/wall mounting brackets (optional)
- Remote turn-on and shut-off capabilities
- Two year limited warranty

Certifications and Compliances

120V Models

- c UL us UL Recognized Component, UPS Equipment
  - UL 60950-1/CSA C22.2 No. 60950-1
  - Suitable for UL 508, CSA C22.2 No. 107.1 Ind. Control Equipment Applications with no derating
    - Overvoltage Cat III, Pollution Degree III

230V Models

- CE
  - EN62040-1-1

Related Products

- Portable MCR Power Conditioners
- STV Surge Protective Devices
- SDN DIN Rail Power Supplies
- STFV Plus Active Tracking® Filters

Selection Table

Capacity (VA/W)	Catalog Number	Volts, Frequency In/Out	Typical Back–up Time (minutes) *	Input/Output Connections	Approx. Ship Weight – lbs (kg)
500/300	**SDU 500**	120 Vac, 50/60 Hz	4	IP20 touch proof, screw terminals. Wire range: 10 ~ 24 AWG.	10.7 (4.70)
850/510	**SDU 850**		2		11.4 (5.00)
500/300	**SDU 500–5**	230 Vac, 50/60 Hz	4		11.5 (5.20)
850/510	**SDU 850–5**		2		11.9 (5.40)

* At full load.

SDU Accessories

Catalog Number	Description	Approx. Ship Weight – lbs (kg)
RELAYCARD–SDU	Dry contact I/O relay box, IP20 touch proof screw terminals, wire size range 12~22 AWG (IEC 2.5mm); N.O./N.C. form "C" contact. Relay contact signal for "On Battery", "Low Battery" and "UPS Shutdown".	1.0 (0.45)
UPSMON–USB	RS232 to USB adapter cable	1.0 (0.45)
SDU–PMBRK	Mounting brackets to secure UPS to wall, back of panel or enclosure.	1.0 (0.45)

Specifications

Catalog Number	SDU 500	SDU 850	SDU 500–5	SDU 850–5
Capacity (VA/Watts)	500/300	850/510	500/300	850/510
Load Power Factor	0.6			
Dimensions – inches (mm)				
Unit (H x W x D) – in. (mm)	4.88 x 11.1 x 4.55 (124.0 x 281.0 x 116.0)			
Weight – lbs (kg)	10.7 (4.70)	11.4 (5.00)	11.5 (5.20)	11.9 (5.40)
Input Parameters				
Voltage	120 V (+10%, -20%)		230 V (+/- 20%)	
Frequency	50 +/- 5 Hz or 60 Hz +/- 6 Hz (auto sensing)			
Output AC Parameters				
Voltage (Battery Mode)	Step sinewave			
	+/- 5%			
Frequency (On Battery)	50 or 60 Hz			
	+/- 0.3 Hz			
Overload Protection	UPS automatic shutdown if overload exceeds 105% of nominal at 20 seconds, 120% at 10 seconds, 130% at 3 seconds			
Short Circuit	UPS output cut off immediately			
Battery Parameters				
Battery Type	Sealed, non-spillable, maintenance-free lead acid batteries			
Transfer Time	4 - 6 ms typical			
Back–up Time * (minutes)	4.5/18	2.5/10	4.5/18	2.5/10
Recharge Time	8 hours to 90% capacity after full discharge			
Environmental				
Operating Temperature	0°C to 50°C			
Storage Temperature	-15°C to 60°C			
Relative Humidity	1% to 95%, non-condensing			
Ambient Operation	1-95% humidity non-condensing, 0-50°C up to 5,000 ft. (1500m)			
Audible Noise	< 40dBA (1 meter from surface)			
Standards				
EMC	FCC Part 15, Subpart B, Class A; EMC: EN50091-2, EN61000-3-2, EN61000-3-3, IEC60801-2, IEC60801-3, IEC60801-4, IEC61000-2-2			
Elevation	5000 ft. without derating			
Shock & Vibration	According to the International Safe Transit Association standard ISTA 2A.			
Mounting	To be mounted on DIN TS35/7.5 or TS35/15 rail system. Chassis mounting permissible via optional brackets. Unit handles normal shock and vibration of industrial use and transportation without coming off rail.			

* At full load/half load.

BOM #28

Wireless module - RAD-900-IFS - 2901540

Please be informed that the data shown in this PDF Document is generated from our Online Catalog. Please find the complete data in the user's documentation. Our General Terms of Use for Downloads are valid (http://phoenixcontact.com/download)

Bidirectional, Radioline 900 MHz transceiver for wireless transmission of serial and I/O data

Product Description

Radioline is the new wireless system for large systems. Special features include extremely easy assignment of inputs and outputs by simply turning the thumbwheel - without any programming. Radioline transmits I/O signals (I/O mode) or serial data (serial mode) and is therefore very versatile. Alternatively, I/O signals can now also be connected to controllers directly using the Modbus protocol (PLC/Modbus RTU mode).
In addition, you can implement various network structures: from a simple point-to-point connection to complex mesh networks. Thanks to the latest Trusted Wireless technology, Radioline is the ideal choice for industrial use.

Product Features

- Extended temperature range, -40°C ... +70°C
- Range of several kilometers thanks to adjustable data rates for the wireless interface (16 ... 500 kbps)
- Integrated RS-232/RS-485 interface
- Quick and easy startup without programming
- High degree of reliability due to Trusted Wireless 2.0 technology (AES encryption, frequency hopping method, and coexistence management)
- Mesh networks of up to 250 devices

Key Commercial Data

Packing unit	1 pc
Weight per Piece (excluding packing)	350.0 g
Custom tariff number	85176200
Country of origin	United States

Technical data

Note

Trade restriction	The products are offered exclusively for export outside the EU and the European Economic Area.

Dimensions

Wireless module - RAD-900-IFS - 2901540

Technical data

Dimensions

Width	35 mm
Height	99 mm
Depth	114.5 mm

Ambient conditions

Degree of protection	IP20
Ambient temperature (operation)	-40 °C ... 70 °C
	-40 °F ... 158 °F
Ambient temperature (storage/transport)	-40 °C ... 85 °C
	-40 °F ... 185 °F
Permissible humidity (operation)	20 % ... 85 %
Permissible humidity (storage/transport)	20 % ... 85 %
Altitude	2000 m
Vibration (operation)	in accordance with IEC 60068-2-6: 5g, 10 Hz ... 150 Hz
Shock	16g, 11 ms

General

Overvoltage category	II
Assembly instructions	on standard DIN rail NS 35 in accordance with EN 60715
Pollution degree	2
Housing material	PA 6.6-FR
Flammability rating according to UL 94	V0
Export note	The products are offered exclusively for export outside the European Economic Area (EEA).

Supply

Supply voltage range	10.8 V DC ... 30.5 V DC
Max. current consumption	328 mA (@24 V DC)
Nominal power consumption	1.7 W (30 dBm)
Power consumption	8.4 W (peak; 30 dBm)
Transient surge protection	Yes

Wireless interface

Antenna connection	RSMA (female)
Direction	Bi-directional
Frequency	900 MHz
Frequency range	902 MHz ... 928 MHz
Data rate	16 kbps (adjustable)
	125 kbps (adjustable)
	250 kbps (adjustable)

Wireless module - RAD-900-IFS - 2901540

Technical data

Wireless interface

	500 kbps (adjustable)
Receiver sensitivity	-112 dBm (16 kbps)
	-105 dBm (125 kbps)
	-102 dBm (250 kbps)
	-95 dBm (500 kbps)
Transmission power	max. 1 W (adjustable)
Range	± 32 km (The range may be considerably above or below that stated, and depends on the environment, antenna technology, and the product used)
Security	128-bit data encryption

Serial interface

Interface 1	RS-232
Connection method	COMBICON plug-in screw terminal block
	D-SUB 9 (socket)
	3-conductor
Transmission speed	0.3 … 115.2 kbps
Interface 2	RS-485
Connection method	COMBICON plug-in screw terminal block
	2-wire
Termination resistor	390 Ω (switchable via DIP switches)
	150 Ω (switchable via DIP switches)
	390 Ω (switchable via DIP switches)
Transmission speed	0.3 … 115.2 kbps

RSSI output

Number of outputs	1
Voltage output signal	0 V ... 3 V

RF link relay output

Number of outputs	1
Contact type	PDT
Contact material	PdRu, gold-plated
Maximum switching voltage	30 V AC/DC
Max. switching current	500 mA
Electrical service life	5 x 10^5 cycles with 0.5 A @ 30 V DC

Connection data

Connection method	Screw connection
Conductor cross section solid min.	0.2 mm²
Conductor cross section solid max.	2.5 mm²

Wireless module - RAD-900-IFS - 2901540

Technical data

Connection data

Conductor cross section flexible min.	0.2 mm²
Conductor cross section flexible max.	2.5 mm²
Conductor cross section AWG min.	24
Conductor cross section AWG max.	14
Stripping length	7 mm
Tightening torque	0.6 Nm
Screw thread	M3

Status indicator

Status display	Green LED (supply voltage, PWR)
	Green LED (bus communication, DAT)
	Red LED (periphery error, ERR)
	3 x green, 1 x yellow LED (LED bar graph receive quality, RSSI)
	Green LED (receive data, RX)
	Green LED (transmit data, TX)

Approvals and conformance

Conformance	FCC Directive, Part 15.247
UL, USA / Canada	Class I, Div. 2, Groups A, B, C, D
Standards/regulations	EN 300328
	EN 61000-6-2
	EN 61000-6-4
	EN 50371
	EN 60950-1

Standards and Regulations

Electromagnetic compatibility	Conformance with EMC Directive 2004/108/EC
Standards/regulations	EN 300328
	EN 61000-6-2
	EN 61000-6-4
	EN 50371
	EN 60950-1
Shock	16g, 11 ms
Flammability rating according to UL 94	V0
Interface description	Trusted Wireless
Security	128-bit data encryption
Vibration (operation)	in accordance with IEC 60068-2-6: 5g, 10 Hz ... 150 Hz
Conformance	FCC Directive, Part 15.247
	ISC Directive RSS 210

Wireless module - RAD-900-IFS - 2901540

Technical data

Standards and Regulations

UL, USA	Class I, Zone 2, AEx nA nC IIC T4
UL, USA / Canada	Class I, Div. 2, Groups A, B, C, D
UL, Canada	Class I, Zone 2, Ex nA nC nL IIC T4 Gc X
CSA	CSA C22.2

Classifications

eCl@ss

eCl@ss 4.0	27230207
eCl@ss 4.1	27230207
eCl@ss 5.0	27230207
eCl@ss 5.1	27242208
eCl@ss 6.0	27242208
eCl@ss 7.0	27242208

ETIM

ETIM 3.0	EC001423
ETIM 4.0	EC000310
ETIM 5.0	EC000310

UNSPSC

UNSPSC 6.01	30211506
UNSPSC 7.0901	43223108
UNSPSC 11	39121008
UNSPSC 12.01	43223108
UNSPSC 13.2	43223108

Approvals

Approvals

Approvals

UL Listed / cUL Listed / cULus Listed

Ex Approvals

UL Listed / cUL Listed / cULus Listed

Wireless module - RAD-900-IFS - 2901540

Approvals

Approvals submitted

Approval details

UL Listed

cUL Listed

cULus Listed

Drawings

Block diagram

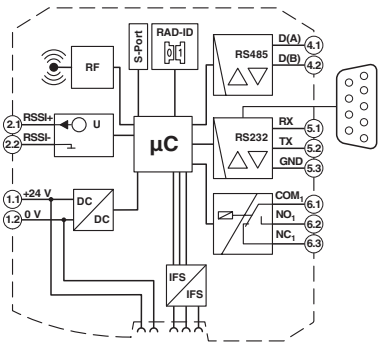

Dimensional drawing

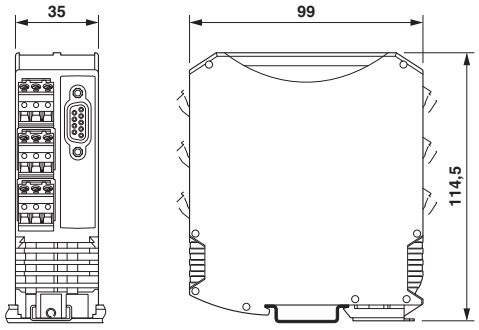

Phoenix Contact 2015 © - all rights reserved
http://www.phoenixcontact.com

BOM #29

I/O extension module - RAD-AO4-IFS - 2901538

Please be informed that the data shown in this PDF Document is generated from our Online Catalog. Please find the complete data in the user's documentation. Our General Terms of Use for Downloads are valid (http://phoenixcontact.com/download)

Analog I/O extension module with 4 analog current/voltage outputs (0/4 mA ... 20 mA, 0...10 V), with screw connection, incl. DIN rail connector

Product Features

- Channel-to-channel electrical isolation
- Extended temperature range, -40°C ... +70°C
- Easy module replacement even during operation (hot swap)
- Suitable for ATEX zone 2
- Easy startup via thumbwheel

Key Commercial Data

Packing unit	1 pc
Weight per Piece (excluding packing)	220.0 g
Custom tariff number	85389091
Country of origin	Germany

Technical data

Note

Utilization restriction	EMC: class A product, see manufacturer's declaration in the download area

Dimensions

Width	17.5 mm
Height	99 mm
Depth	114.5 mm

Ambient conditions

I/O extension module - RAD-AO4-IFS - 2901538

Technical data

Ambient conditions

Degree of protection	IP20
Ambient temperature (operation)	-40 °C ... 70 °C (>55°C derating)
	-40 °F ... 158 °F (>131°F derating)
Ambient temperature (storage/transport)	-40 °C ... 85 °C
	-40 °F ... 185 °F
Permissible humidity (operation)	20 % ... 85 %
Permissible humidity (storage/transport)	20 % ... 85 %
Altitude	2000 m
Vibration (operation)	in accordance with IEC 60068-2-6: 5g, 10 Hz ... 150 Hz
Shock	16g, 11 ms

General

Overvoltage category	II
Mounting position	any
Assembly instructions	on standard DIN rail NS 35 in accordance with EN 60715
Pollution degree	2
Housing material	PA 6.6-FR
Flammability rating according to UL 94	V0
MTTF	999 Years (Telcordia standard, 25°C temperature, 21% operating cycle (5 days a week, 8 hours a day))
	404 Years (Telcordia standard, 40°C temperature, 34.25% operating cycle (5 days a week, 12 hours a day))
	156 Years (Telcordia standard, temperature 40 °C, operating cycle 100 % (7 days a week, 24 hours a day))

Supply

Supply voltage range	19.2 V DC ... 30.5 V DC (TBUS)
Max. current consumption	≤ 115 mA (At 24 V DC, at 25°C)
Transient surge protection	Yes

Analog outputs

Number of outputs	4
Voltage output signal	0 V ... 10 V
Max. voltage output signal	approx. 10.83 V
Load	≥ 10 kΩ
Precision	typ. 0.5 % (Voltage output)
Current output signal	0 mA ... 20 mA
	4 mA ... 20 mA
Max. current output signal	approx. 21.67 mA
Load	≤ 500 Ω

I/O extension module - RAD-AO4-IFS - 2901538

Technical data

Analog outputs

Precision	≤ 0.02 % (at 25 °C)
Resolution	16 bit
Temperature coefficient, typical	0.0025 %/K (at -40 °C ... +70 °C)
Behavior of the outputs (adjustable via DIP switch)	Hold / Reset
Protective circuit	Transient protection of outputs

Electrical isolation

Analog I/O	50 V (Rated insulation voltage (in each case between the TBUS analog outputs / supply, reinforced insulation according to EN 61010))

Test voltage

Analog I/O	1.5 kV AC (50 Hz, 1 min.)

Connection data

Connection method	Screw connection
Conductor cross section solid min.	0.2 mm²
Conductor cross section solid max.	2.5 mm²
Conductor cross section flexible min.	0.2 mm²
Conductor cross section flexible max.	2.5 mm²
Conductor cross section AWG min.	24
Conductor cross section AWG max.	14
Stripping length	7 mm
Tightening torque	0.6 Nm
Screw thread	M3

Status indicator

Status display	Green LED (supply voltage, PWR)
	Green LED (bus communication, DAT)
	Red LED (periphery error, ERR)

Approvals and conformance

Conformance	CE-compliant
IECEx	Ex nA IIC T4 Gc
UL, USA / Canada	UL 508 Listed
Standard designation	EMC Directive 2004/108/EC
Standards/regulations	EN 61000-6-2
Standard designation	EMC Directive 2004/108/EC
Standards/regulations	EN 61000-6-4
Standard designation	Ex Directive (ATEX)
Standards/regulations	EN 60079-0

I/O extension module - RAD-AO4-IFS - 2901538

Technical data

Approvals and conformance

Standard designation	Ex Directive (ATEX)
Standards/regulations	EN-60079-15

Standards and Regulations

Electromagnetic compatibility	Conformance with EMC Directive 2004/108/EC
Standard designation	EMC Directive 2004/108/EC
Standards/regulations	EN 61000-6-2
Standard designation	EMC Directive 2004/108/EC
Standards/regulations	EN 61000-6-4
Standard designation	Ex Directive (ATEX)
Standards/regulations	EN 60079-0
Standard designation	Ex Directive (ATEX)
Standards/regulations	EN-60079-15
Shock	16g, 11 ms
Noise emission	EN 61000-6-4
Noise immunity	EN 61000-6-2
Flammability rating according to UL 94	V0
Vibration (operation)	in accordance with IEC 60068-2-6: 5g, 10 Hz ... 150 Hz
Conformance	CE-compliant
IECEx	Ex nA IIC T4 Gc
UL, USA / Canada	UL 508 Listed
	Class I, Div. 2, Groups A, B, C, D T4A
	Class I, Zone 2, IIC T4

Classifications

eCl@ss

eCl@ss 4.0	27230207
eCl@ss 4.1	27230207
eCl@ss 5.0	27230207
eCl@ss 5.1	27242208
eCl@ss 6.0	27242208
eCl@ss 7.0	27242208
eCl@ss 8.0	27242601

ETIM

ETIM 3.0	EC001423
ETIM 4.0	EC000310

I/O extension module - RAD-AO4-IFS - 2901538

Classifications

ETIM

ETIM 5.0	EC001596

UNSPSC

UNSPSC 6.01	30211506
UNSPSC 7.0901	43223108
UNSPSC 11	39121008
UNSPSC 12.01	43223108
UNSPSC 13.2	43223108

Approvals

Approvals

Approvals

UL Listed / cUL Listed / EAC / cULus Listed

Ex Approvals

ATEX / IECEx / UL Listed / cUL Listed / cULus Listed

Approvals submitted

Approval details

UL Listed

cUL Listed

EAC

cULus Listed

I/O extension module - RAD-AO4-IFS - 2901538

Drawings

Schematic diagram

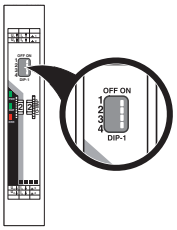

DIP switches

Schematic diagram

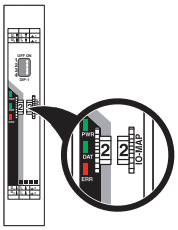

Thumb wheel

I/O extension module - RAD-AO4-IFS - 2901538

Block diagram

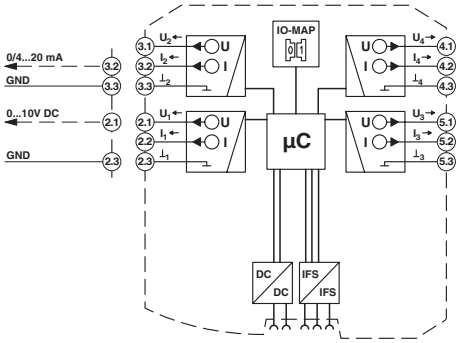

Functional drawing

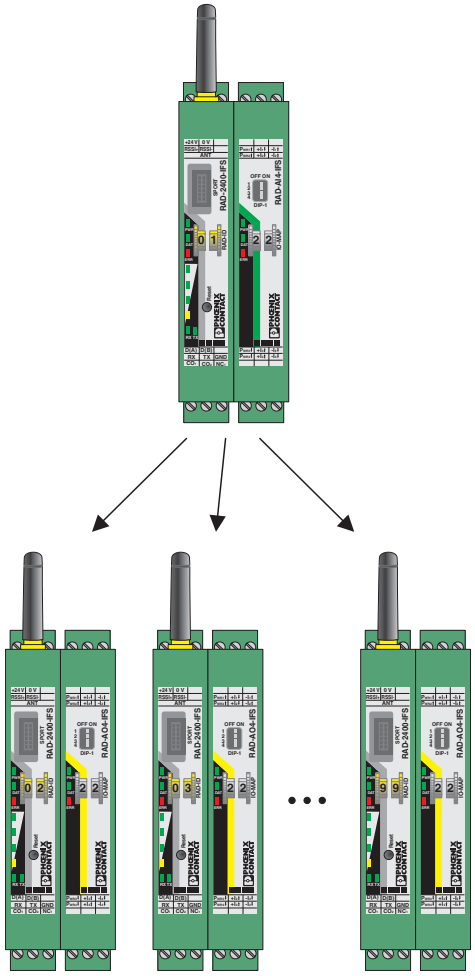

Assignment of analog inputs and analog outputs

I/O extension module - RAD-AO4-IFS - 2901538

Dimensional drawing

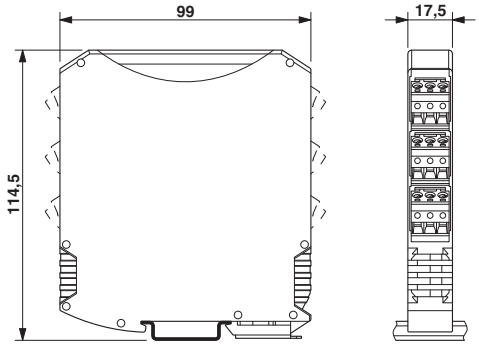

Schematic diagram

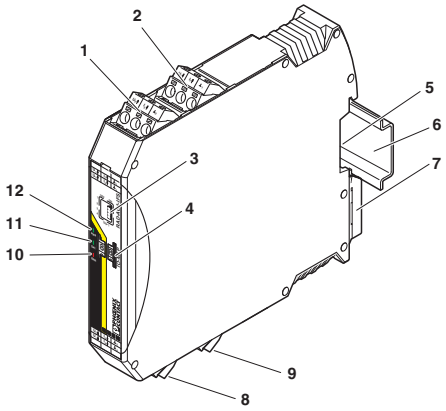

Function elements

I/O extension module - RAD-AO4-IFS - 2901538

Application drawing

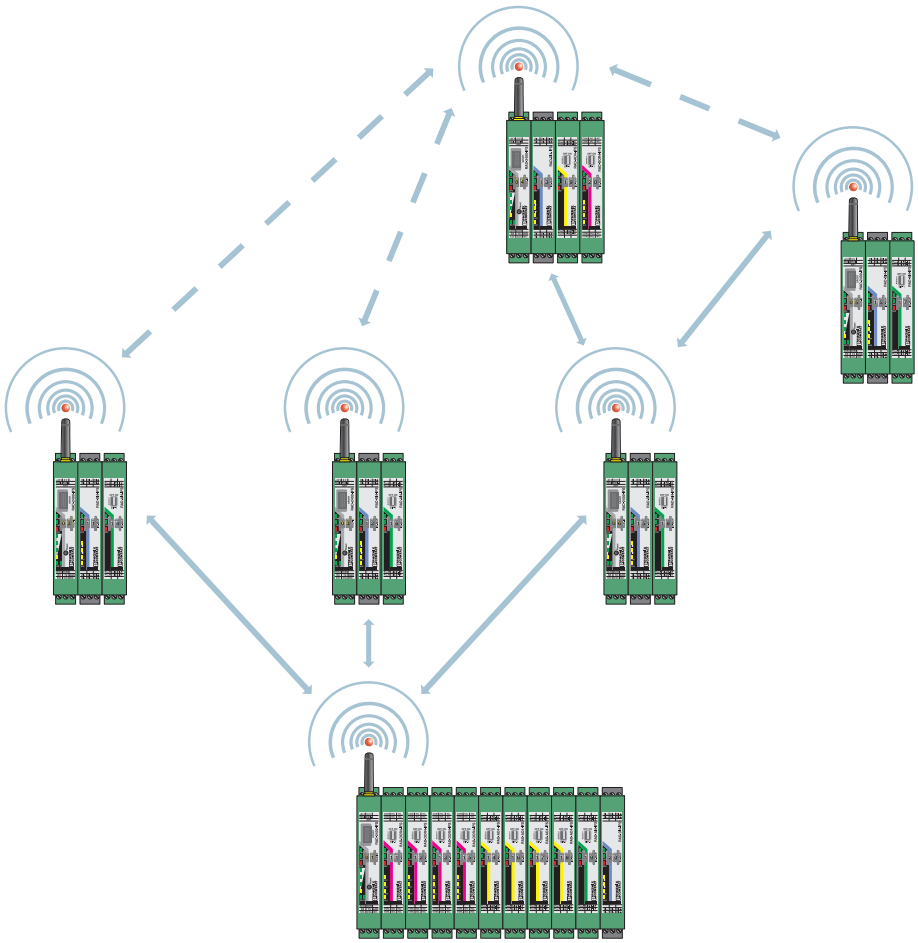

Wireless module in I/O data mode

I/O extension module - RAD-AO4-IFS - 2901538

Application drawing

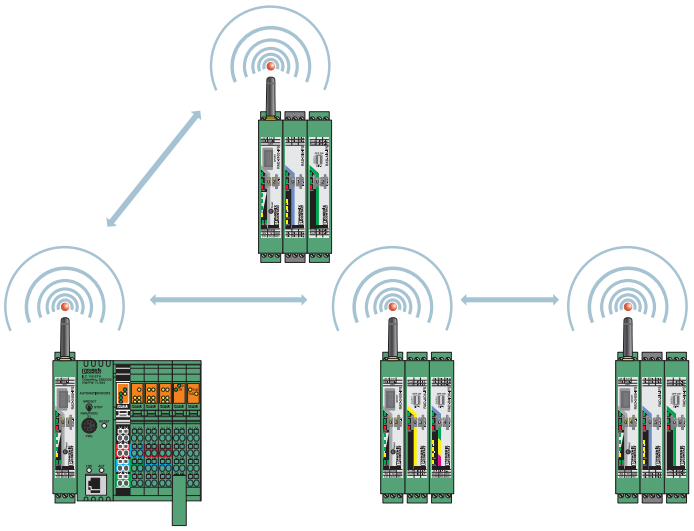

Wireless module in PLC/Modbus RTU mode

Phoenix Contact 2015 © - all rights reserved
http://www.phoenixcontact.com

Panel Materials for CP-101

CONTINUOUS HINGE WITH CLAMPS, TYPE 12

INDUSTRY STANDARDS

UL 508A Listed; Type 12, 13; File No. E61997
cUL Listed per CSA C22.2 No. 94; Type 12, 13; File No. E61997

NEMA/EEMAC Type 12 and 13
CSA, File No. 42186: Type 12
IEC 60529, IP65

APPLICATION

For applications requiring a bright white interior to increase control visibility, this enclosure includes a padlocking hasp and staple for security and screw-down clamps for secure closure.

SPECIFICATIONS

- Enclosure bodies are 14 or 16 gauge steel. Doors are 14 gauge steel.
- Seams continuously welded and ground smooth
- External wall-mounting brackets
- Formed external return flanges around all sides of enclosure opening
- Screw-down door clamps
- Removable heavy-gauge continuous hinge pin
- Hasp and staple for padlocking
- Data pocket is high-impact thermoplastic
- Collar studs provided for mounting optional panels
- Bonding provision on door

FINISH

White inside with ANSI 61 gray finish outside.

ACCESSORIES

See also Accessories.
Drip Shield Kit for Type 12 Enclosures
Electric Heater
Fast-Operating Clamp Assembly
Compact Cooling Fans
Steel and Stainless Steel Window Kits

MODIFICATION AND CUSTOMIZATION

Hoffman excels at modifying and customizing products to your specifications. Contact your local Hoffman sales office or distributor for complete information.

BULLETIN: A12

Standard Product

Catalog Number	AxBxC in./mm	Body Gauge	Panel	Conductive Panel	Panel Size D x E in./mm	F in./mm	Number of Clamps	Data Pocket
A122406LP	12.00 x 24.00 x 6.00 305 x 610 x 152	16	A12P24	A12P24G	9.00 x 21.00 229 x 533	3.00 76	2	Small
A161206LP	16.00 x 12.00 x 6.00 406 x 305 x 152	16	A16P12	A16P12G	13.00 x 9.00 330 x 229	1.25 32	2	Small
A161606LP	16.00 x 16.00 x 6.00 406 x 406 x 152	16	A16P16	A16P16G	13.00 x 13.00 330 x 330	3.00 76	2	Small
A162006LP	16.00 x 20.00 x 6.00 406 x 508 x 152	16	A20P16	A20P16G	17.00 x 13.00 432 x 330	3.00 76	2	Small
A201206LP	20.00 x 12.00 x 6.00 508 x 305 x 152	16	A20P12	A20P12G	17.00 x 9.00 432 x 229	1.25 32	2	Small
A201606LP	20.00 x 16.00 x 6.00 508 x 406 x 152	16	A20P16	A20P16G	17.00 x 13.00 432 x 330	3.00 76	2	Small
A202006LP	20.00 x 20.00 x 6.00 508 x 508 x 152	16	A20P20	A20P20G	17.00 x 17.00 432 x 432	3.00 76	2	Small
A202406LP	20.00 x 24.00 x 6.00 508 x 610 x 152	16	A24P20	A24P20G	21.00 x 17.00 533 x 432	3.00 76	2	Small
A241206LP	24.00 x 12.00 x 6.00 610 x 305 x 152	16	A12P24	A12P24G	9.00 x 21.00 229 x 533	1.25 32	2	Small
A241606LP	24.00 x 16.00 x 6.00 610 x 406 x 152	16	A24P16	A24P16G	21.00 x 13.00 533 x 330	3.00 76	2	Small
A242006LP	24.00 x 20.00 x 6.00 610 x 508 x 152	16	A24P20	A24P20G	21.00 x 17.00 533 x 432	3.00 76	2	Small
A242406LP	24.00 x 24.00 x 6.00 610 x 610 x 152	16	A24P24	A24P24G	21.00 x 21.00 533 x 533	3.00 76	2	Small
A301606LP	30.00 x 16.00 x 6.00 762 x 406 x 152	14	A30P16	A30P16G	27.00 x 13.00 686 x 330	3.00 76	2	Small
A302006LP	30.00 x 20.00 x 6.00 762 x 508 x 152	14	A30P20	A30P20G	27.00 x 17.00 686 x 432	3.00 76	2	Small
A302406LP	30.00 x 24.00 x 6.00 762 x 610 x 152	14	A30P24	A30P24G	27.00 x 21.00 686 x 533	3.00 76	2	Large
A362406LP	36.00 x 24.00 x 6.00 914 x 610 x 152	14	A36P24	A36P24G	33.00 x 21.00 838 x 533	3.00 76	2	Large
A363006LP	36.00 x 30.00 x 6.00 914 x 762 x 152	14	A36P30	A36P30G	33.00 x 27.00 838 x 686	3.00 76	2	Large
A122408LP	12.00 x 24.00 x 8.00 305 x 610 x 203	16	A12P24	A12P24G	9.00 x 21.00 229 x 533	3.00 76	2	Small
A161208LP	16.00 x 12.00 x 8.00 406 x 305 x 203	16	A16P12	A16P12G	13.00 x 9.00 330 x 229	1.25 32	2	Small
A161608LP	16.00 x 16.00 x 8.00 406 x 406 x 203	16	A16P16	A16P16G	13.00 x 13.00 330 x 330	3.00 76	2	Small

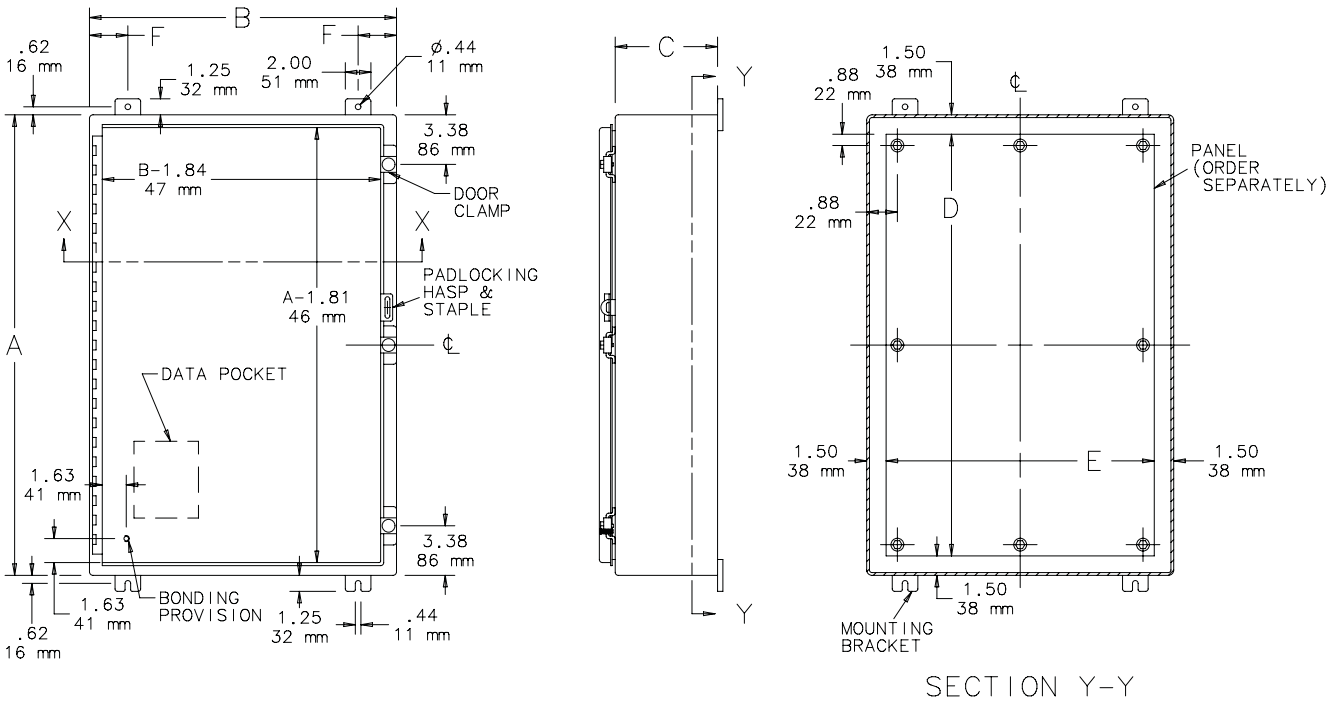
B
F
F
.62
16 mm
1.25
32 mm
2.00
51 mm
ø.44
11 mm
3.38
86 mm
B-1.84
47 mm
DOOR
CLAMP
X
X
PADLOCKING
HASP &
STAPLE
A-1.81
46 mm
A
DATA POCKET
1.63
41 mm
3.38
86 mm
1.63
41 mm
BONDING
PROVISION
1.25
32 mm
.44
11 mm
.62
16 mm
C
Y
Y
1.50
38 mm
.88
22 mm
PANEL
(ORDER
SEPARATELY)
.88
22 mm
D
1.50
38 mm
E
1.50
38 mm
1.50
38 mm
MOUNTING
BRACKET
SECTION Y-Y

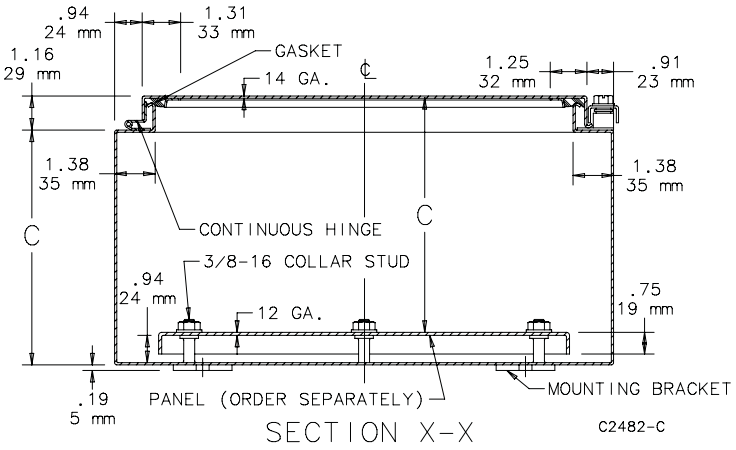
.94
24 mm
1.31
33 mm
1.16
29 mm
GASKET
14 GA.
1.25
32 mm
.91
23 mm
1.38
35 mm
1.38
35 mm
C
CONTINUOUS HINGE
C
3/8-16 COLLAR STUD
.94
24 mm
12 GA.
.75
19 mm
.19
5 mm
PANEL (ORDER SEPARATELY)
MOUNTING BRACKET
SECTION X-X
C2482-C

BOM #4

Product: 1492-EBJ3-Y

Description: 1492 Terminal Block Accessories

ACCESSORY ITEMS

Accessories	End Barriers, Partition Plates, and Terminal Covers

Product: 1492-JG3

Description: 1492 IEC Screw Terminal Blocks

BOM #5

Representative Photo Only
(actual product may vary based on configuration selections)

BLOCK STYLE	
Base Block Style	Grounding Blocks
BASE DATA	
Base Block Type	One-Circuit Feed-Through Ground Block
DETAIL DATA	
Features	Standard Feedthrough
Maximum Wire Size & Rating	UL: 22-12 AWG\nCSA: 22-12 AWG\nIEC: 2.5mm²\nEEx e II: 2.5mm²/20-14 AWG
Color	Green / Yellow Stripe (Standard)
CERTIFICATIONS AND APPROVALS	
UR	UL 486E, UL 1059; Reference File: E40735, E187022
CSA	CSA C22.2 No. 65, No. 158; On Website, Name: Rockwell, Keyword Search: 1492
IEC	EN 60947-1, EN 60947-7-1(Feed-Through), -2(Ground), -3(Fuse)
ATEX	http://www.rockwellautomation.com/products/certification/ex/excert.html
Short Circuit Current Rating	This terminal block carries a minimum of 10kA SCCR rating for all protection methods. Please see the table for other possible elevated ratings.
For CSA Certifications:	http://directories.csa-international.org/directorymain.asp
For UL Certifications Directory:	http://database.ul.com/cgi-bin/XYV/template/LISEXT/1FRAME/index.htm

BOM #6

Product: 1492-GS1G150

Description: 1492-GS High Density Mini Circuit Breakers (Toggle Style)

Representative Photo Only (actual product may vary based on configuration selections)

MINIATURE CIRCUIT BREAKER DATA	
Electrical Standards	UL
Number of Poles	1 pole
Magnetic Trip Range	G-Trip Characteristics - Inductive Loads (AC)
Amp Rating	15.0 A
Optional Auxiliary Contact	No Contact

CERTIFICATIONS AND APPROVALS	
UL	1077, Guide No. QVNU2, File No. E65138
CSA	22.2 NO. 235
EN	60934
CE	Marked
For UL Certifications Directory:	http://database.ul.com/cgi-bin/XYV/template/LISEXT/1FRAME/index.htm

BOM #7

Power supply unit - UNO-PS/1AC/24DC/ 60W - 2902992

Please be informed that the data shown in this PDF Document is generated from our Online Catalog. Please find the complete data in the user's documentation. Our General Terms of Use for Downloads are valid (http://phoenixcontact.com/download)

Primary-switched UNO POWER power supply for DIN rail mounting, input: 1-phase, output: 24 V DC/60 W

Product Description

UNO POWER power supplies with basic functionality
Thanks to their high power density, compact UNO POWER power supplies are the ideal solution for loads up to 100 W, particularly in compact control boxes. The power supply units are available in various performance classes and overall widths. Their high degree of efficiency and low idling losses ensure a high level of energy efficiency.

Product Features

- Flexible mounting by simply snapping onto the DIN rail
- More space in the control cabinet with up to 20 % higher power density
- Maximum energy efficiency, thanks to over 90 % efficiency and extremely low idling losses under 0.3 W

Key Commercial Data

Packing unit	1 pc
Weight per Piece (excluding packing)	240.0 g
Custom tariff number	85044030
Country of origin	Germany

Technical data

Dimensions

Width	35 mm
Height	90 mm
Depth	84 mm

Ambient conditions

Degree of protection	IP20
Ambient temperature (operation)	-25 °C ... 70 °C (> 55° C derating : 2.5%/K)

Power supply unit - UNO-PS/1AC/24DC/ 60W - 2902992

Technical data

Ambient conditions

Ambient temperature (storage/transport)	-40 °C ... 85 °C
Max. permissible relative humidity (operation)	≤ 95 % (at 25 °C, non-condensing)
Noise immunity	EN 61000-6-2:2005

Input data

Nominal input voltage range	100 V AC ... 240 V AC
Input voltage range	85 V AC ... 264 V AC
AC frequency range	45 Hz ... 65 Hz
Inrush surge current	< 30 A (typical)
Power failure bypass	> 20 ms (120 V AC)
	> 85 ms (230 V AC)
Input fuse	2.5 A (slow-blow, internal)
Choice of suitable circuit breakers	6 A ... 16 A (Characteristics B, C, D, K)
Type of protection	Transient surge protection
Protective circuit/component	Varistor

Output data

Nominal output voltage	24 V DC ±1 %
Nominal output current	2.5 A (-25°C ... 55°C)
Derating	55 °C ... 70 °C (2.5%/K)
Connection in parallel	Yes, for redundancy and increased capacity
Connection in series	Yes
Control deviation	< 1 % (change in load, static 10 % ... 90 %)
	< 2 % (Dynamic load change 10 % ... 90 %, 10 Hz)
	< 0.1 % (change in input voltage ±10 %)
Residual ripple	< 30 mV_{PP} (with nominal values)
Output power	60 W
Typical response time	< 1 s
Maximum power dissipation in no-load condition	< 0.3 W
Power loss nominal load max.	< 7 W

General

Net weight	0.2 kg
Efficiency	> 90 % (for 230 V AC and nominal values)
Insulation voltage input/output	4 kV AC (type test)
	3 kV AC (routine test)
Protection class	II (in closed control cabinet)
MTBF (IEC 61709, SN 29500)	> 785000 h (40°C)
Mounting position	horizontal DIN rail NS 35, EN 60715

Power supply unit - UNO-PS/1AC/24DC/ 60W - 2902992

Technical data

General

Assembly instructions	Alignable: 0 mm horizontally, 30 mm vertically
Electromagnetic compatibility	Conformance with EMC Directive 2004/108/EC
Low Voltage Directive	Conformance with LV directive 2006/95/EC
Standard – Electrical equipment of machines	EN 60204-1
Standard - Electrical safety	IEC 60950-1/VDE 0805 (SELV)
Standard – Electronic equipment for use in electrical power installations and their assembly into electrical power installations	EN 50178/VDE 0160 (PELV)
Standard – Safety extra-low voltage	IEC 60950-1 (SELV) and EN 60204-1 (PELV)
Standard - Safe isolation	DIN VDE 0100-410
Standard – Limitation of mains harmonic currents	EN 61000-3-2
Approval - requirement of the semiconductor industry with regard to mains voltage dips	EN 61000-4-11
Information technology equipment - safety (CB scheme)	CB Scheme
UL approvals	UL Listed UL 508
	UL/C-UL Recognized UL 60950
	NEC Class 2 as per UL 1310
	UL ANSI/ISA-12.12.01 Class I, Division 2, Groups A, B, C, D T4A (Hazardous Location)

Connection data, input

Connection method	Screw connection
Conductor cross section solid min.	0.2 mm²
Conductor cross section solid max.	2.5 mm²
Conductor cross section flexible min.	0.2 mm²
Conductor cross section flexible max.	2.5 mm²
Conductor cross section AWG min.	24
Conductor cross section AWG max.	14
Stripping length	8 mm
Screw thread	M3

Connection data, output

Connection method	Screw connection
Conductor cross section solid min.	0.2 mm²
Conductor cross section solid max.	2.5 mm²
Conductor cross section flexible min.	0.2 mm²
Conductor cross section flexible max.	2.5 mm²
Conductor cross section AWG min.	24
Conductor cross section AWG max.	14
Stripping length	8 mm

Power supply unit - UNO-PS/1AC/24DC/ 60W - 2902992

Technical data

Connection data, output

Screw thread	M3

Standards and Regulations

Electromagnetic compatibility	Conformance with EMC Directive 2004/108/EC
Shock	30g in each direction, according to IEC 60068-2-27
Noise immunity	EN 61000-6-2:2005
Connection in acc. with standard	CUL
Standards/regulations	EN 61000-4-3
	EN 61000-4-4
	EN 61000-4-6
Standard – Electrical equipment of machines	EN 60204-1
Standard - Electrical safety	IEC 60950-1/VDE 0805 (SELV)
Standard – Electronic equipment for use in electrical power installations and their assembly into electrical power installations	EN 50178/VDE 0160 (PELV)
Standard – Safety extra-low voltage	IEC 60950-1 (SELV) and EN 60204-1 (PELV)
Standard - Safe isolation	DIN VDE 0100-410
Standard – Limitation of mains harmonic currents	EN 61000-3-2
UL approvals	UL Listed UL 508
	UL/C-UL Recognized UL 60950
	NEC Class 2 as per UL 1310
	UL ANSI/ISA-12.12.01 Class I, Division 2, Groups A, B, C, D T4A (Hazardous Location)
Vibration (operation)	< 15 Hz, amplitude ±2.5 mm (according to IEC 60068-2-6)
Low Voltage Directive	Conformance with LV directive 2006/95/EC
Approval - requirement of the semiconductor industry with regard to mains voltage dips	EN 61000-4-11
Information technology equipment - safety (CB scheme)	CB Scheme

Classifications

eCl@ss

eCl@ss 4.0	27040702
eCl@ss 4.1	27040702
eCl@ss 5.0	27049002
eCl@ss 5.1	27049002
eCl@ss 6.0	27049002
eCl@ss 7.0	27049002
eCl@ss 8.0	27049002
eCl@ss 9.0	27040701

Power supply unit - UNO-PS/1AC/24DC/ 60W - 2902992

Classifications

ETIM

ETIM 3.0	EC001039
ETIM 4.0	EC000599
ETIM 5.0	EC002540

UNSPSC

UNSPSC 6.01	30211502
UNSPSC 7.0901	39121004
UNSPSC 11	39121004
UNSPSC 12.01	39121004
UNSPSC 13.2	39121004

Approvals

Approvals

Approvals

UL Recognized / UL Listed / cUL Recognized / cUL Listed / IECEE CB Scheme / EAC / EAC / cULus Recognized / cULus Listed

Ex Approvals

UL Listed / cUL Listed / cULus Listed

Approvals submitted

Approval details

UL Recognized

UL Listed

cUL Recognized

Power supply unit - UNO-PS/1AC/24DC/ 60W - 2902992

Approvals

cUL Listed

IECEE CB Scheme

EAC

EAC

cULus Recognized

cULus Listed

Drawings

Block diagram

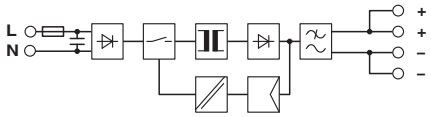

Phoenix Contact 2015 © - all rights reserved
http://www.phoenixcontact.com

BOM #8

Wireless module - RAD-900-IFS - 2901540

Please be informed that the data shown in this PDF Document is generated from our Online Catalog. Please find the complete data in the user's documentation. Our General Terms of Use for Downloads are valid (http://phoenixcontact.com/download)

Bidirectional, Radioline 900 MHz transceiver for wireless transmission of serial and I/O data

Product Description

Radioline is the new wireless system for large systems. Special features include extremely easy assignment of inputs and outputs by simply turning the thumbwheel - without any programming. Radioline transmits I/O signals (I/O mode) or serial data (serial mode) and is therefore very versatile. Alternatively, I/O signals can now also be connected to controllers directly using the Modbus protocol (PLC/Modbus RTU mode).
In addition, you can implement various network structures: from a simple point-to-point connection to complex mesh networks. Thanks to the latest Trusted Wireless technology, Radioline is the ideal choice for industrial use.

Product Features

- Extended temperature range, -40°C ... +70°C
- Range of several kilometers thanks to adjustable data rates for the wireless interface (16 ... 500 kbps)
- Integrated RS-232/RS-485 interface
- Quick and easy startup without programming
- High degree of reliability due to Trusted Wireless 2.0 technology (AES encryption, frequency hopping method, and coexistence management)
- Mesh networks of up to 250 devices

Key Commercial Data

Packing unit	1 pc
Weight per Piece (excluding packing)	350.0 g
Custom tariff number	85176200
Country of origin	United States

Technical data

Note

Trade restriction	The products are offered exclusively for export outside the EU and the European Economic Area.

Dimensions

Wireless module - RAD-900-IFS - 2901540

Technical data

Dimensions

Width	35 mm
Height	99 mm
Depth	114.5 mm

Ambient conditions

Degree of protection	IP20
Ambient temperature (operation)	-40 °C ... 70 °C
	-40 °F ... 158 °F
Ambient temperature (storage/transport)	-40 °C ... 85 °C
	-40 °F ... 185 °F
Permissible humidity (operation)	20 % ... 85 %
Permissible humidity (storage/transport)	20 % ... 85 %
Altitude	2000 m
Vibration (operation)	in accordance with IEC 60068-2-6: 5g, 10 Hz ... 150 Hz
Shock	16g, 11 ms

General

Overvoltage category	II
Assembly instructions	on standard DIN rail NS 35 in accordance with EN 60715
Pollution degree	2
Housing material	PA 6.6-FR
Flammability rating according to UL 94	V0
Export note	The products are offered exclusively for export outside the European Economic Area (EEA).

Supply

Supply voltage range	10.8 V DC ... 30.5 V DC
Max. current consumption	328 mA (@24 V DC)
Nominal power consumption	1.7 W (30 dBm)
Power consumption	8.4 W (peak; 30 dBm)
Transient surge protection	Yes

Wireless interface

Antenna connection	RSMA (female)
Direction	Bi-directional
Frequency	900 MHz
Frequency range	902 MHz ... 928 MHz
Data rate	16 kbps (adjustable)
	125 kbps (adjustable)
	250 kbps (adjustable)

Wireless module - RAD-900-IFS - 2901540

Technical data

Wireless interface

	500 kbps (adjustable)
Receiver sensitivity	-112 dBm (16 kbps)
	-105 dBm (125 kbps)
	-102 dBm (250 kbps)
	-95 dBm (500 kbps)
Transmission power	max. 1 W (adjustable)
Range	± 32 km (The range may be considerably above or below that stated, and depends on the environment, antenna technology, and the product used)
Security	128-bit data encryption

Serial interface

Interface 1	RS-232
Connection method	COMBICON plug-in screw terminal block
	D-SUB 9 (socket)
	3-conductor
Transmission speed	0.3 … 115.2 kbps
Interface 2	RS-485
Connection method	COMBICON plug-in screw terminal block
	2-wire
Termination resistor	390 Ω (switchable via DIP switches)
	150 Ω (switchable via DIP switches)
	390 Ω (switchable via DIP switches)
Transmission speed	0.3 … 115.2 kbps

RSSI output

Number of outputs	1
Voltage output signal	0 V ... 3 V

RF link relay output

Number of outputs	1
Contact type	PDT
Contact material	PdRu, gold-plated
Maximum switching voltage	30 V AC/DC
Max. switching current	500 mA
Electrical service life	5 x 10^5 cycles with 0.5 A @ 30 V DC

Connection data

Connection method	Screw connection
Conductor cross section solid min.	0.2 mm²
Conductor cross section solid max.	2.5 mm²

Wireless module - RAD-900-IFS - 2901540

Technical data

Connection data

Conductor cross section flexible min.	0.2 mm²
Conductor cross section flexible max.	2.5 mm²
Conductor cross section AWG min.	24
Conductor cross section AWG max.	14
Stripping length	7 mm
Tightening torque	0.6 Nm
Screw thread	M3

Status indicator

Status display	Green LED (supply voltage, PWR)
	Green LED (bus communication, DAT)
	Red LED (periphery error, ERR)
	3 x green, 1 x yellow LED (LED bar graph receive quality, RSSI)
	Green LED (receive data, RX)
	Green LED (transmit data, TX)

Approvals and conformance

Conformance	FCC Directive, Part 15.247
UL, USA / Canada	Class I, Div. 2, Groups A, B, C, D
Standards/regulations	EN 300328
	EN 61000-6-2
	EN 61000-6-4
	EN 50371
	EN 60950-1

Standards and Regulations

Electromagnetic compatibility	Conformance with EMC Directive 2004/108/EC
Standards/regulations	EN 300328
	EN 61000-6-2
	EN 61000-6-4
	EN 50371
	EN 60950-1
Shock	16g, 11 ms
Flammability rating according to UL 94	V0
Interface description	Trusted Wireless
Security	128-bit data encryption
Vibration (operation)	in accordance with IEC 60068-2-6: 5g, 10 Hz ... 150 Hz
Conformance	FCC Directive, Part 15.247
	ISC Directive RSS 210

Wireless module - RAD-900-IFS - 2901540

Technical data

Standards and Regulations

UL, USA	Class I, Zone 2, AEx nA nC IIC T4
UL, USA / Canada	Class I, Div. 2, Groups A, B, C, D
UL, Canada	Class I, Zone 2, Ex nA nC nL IIC T4 Gc X
CSA	CSA C22.2

Classifications

eCl@ss

eCl@ss 4.0	27230207
eCl@ss 4.1	27230207
eCl@ss 5.0	27230207
eCl@ss 5.1	27242208
eCl@ss 6.0	27242208
eCl@ss 7.0	27242208

ETIM

ETIM 3.0	EC001423
ETIM 4.0	EC000310
ETIM 5.0	EC000310

UNSPSC

UNSPSC 6.01	30211506
UNSPSC 7.0901	43223108
UNSPSC 11	39121008
UNSPSC 12.01	43223108
UNSPSC 13.2	43223108

Approvals

Approvals

Approvals

UL Listed / cUL Listed / cULus Listed

Ex Approvals

UL Listed / cUL Listed / cULus Listed

Wireless module - RAD-900-IFS - 2901540

Approvals

Approvals submitted

Approval details

UL Listed

cUL Listed

cULus Listed

Drawings

Block diagram

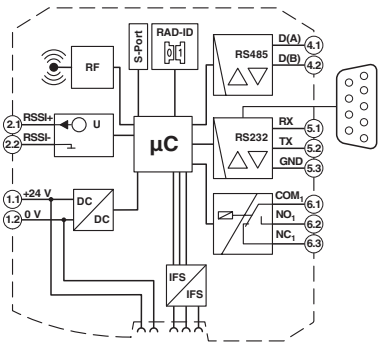

Dimensional drawing

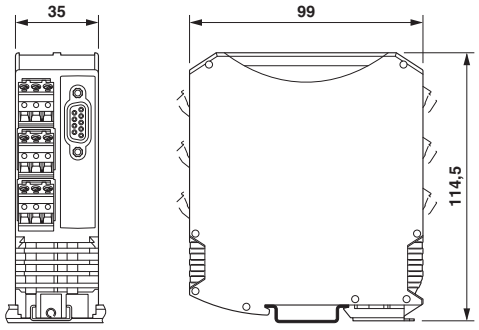

Phoenix Contact 2015 © - all rights reserved
http://www.phoenixcontact.com

BOM #9

I/O extension module - RAD-AI4-IFS - 2901537

Please be informed that the data shown in this PDF Document is generated from our Online Catalog. Please find the complete data in the user's documentation. Our General Terms of Use for Downloads are valid (http://phoenixcontact.com/download)

Analog extension module with 4 analog current inputs (0/4 mA ... 20 mA), with screw connection, incl. DIN rail connector

Product Features

- Channel-to-channel electrical isolation
- Extended temperature range, -40°C ... +70°C
- Easy module replacement even during operation (hot swap)
- Suitable for ATEX zone 2
- Easy startup via thumbwheel

Key Commercial Data

Packing unit	1 pc
Weight per Piece (excluding packing)	220.0 g
Custom tariff number	85389091
Country of origin	Germany

Technical data

Note

Utilization restriction	EMC: class A product, see manufacturer's declaration in the download area

Dimensions

Width	17.5 mm
Height	99 mm
Depth	114.5 mm

Ambient conditions

I/O extension module - RAD-AI4-IFS - 2901537

Technical data

Ambient conditions

Degree of protection	IP20
Ambient temperature (operation)	-40 °C ... 70 °C (>55°C derating)
	-40 °F ... 158 °F (>131°F derating)
Ambient temperature (storage/transport)	-40 °C ... 85 °C
	-40 °F ... 185 °F
Permissible humidity (operation)	20 % ... 85 %
Permissible humidity (storage/transport)	20 % ... 85 %
Altitude	2000 m
Vibration (operation)	in accordance with IEC 60068-2-6: 5g, 10 Hz ... 150 Hz
Shock	16g, 11 ms

General

Overvoltage category	II
Mounting position	any
Assembly instructions	on standard DIN rail NS 35 in accordance with EN 60715
Pollution degree	2
Housing material	PA 6.6-FR
Flammability rating according to UL 94	V0
MTTF	771 Years (Telcordia standard, 25°C temperature, 21% operating cycle (5 days a week, 8 hours a day))
	351 Years (Telcordia standard, 40°C temperature, 34.25% operating cycle (5 days a week, 12 hours a day))
	136 Years (Telcordia standard, temperature 40 °C, operating cycle 100 % (7 days a week, 24 hours a day))

Supply

Supply voltage range	19.2 V DC ... 30.5 V DC (TBUS)
Max. current consumption	≤ 120 mA (At 24 V DC, at 25°C)
Transient surge protection	Yes

Analog inputs

Number of inputs	4
Current input signal	0 mA ... 20 mA (can be set via DIP switches)
	4 mA ... 20 mA (can be set via DIP switches)
Max. current input signal	22 mA
Input resistance current input	< 70 Ω
Precision	≤ 0.02 % (at 25 °C)
Temperature coefficient, typical	0.0025 %/K (at -40 °C ... +70 °C)
Supply voltage	≥ 12 V DC (For passive sensors (via terminal PWR1, +I1))
Resolution	16 (Bit)

I/O extension module - RAD-AI4-IFS - 2901537

Technical data

Analog inputs

Protective circuit	Overload protection, short-circuit protection

Electrical isolation

Analog I/O	50 V (Rated insulation voltage (in each case between the TBUS analog outputs / supply, reinforced insulation according to EN 61010))

Test voltage

Analog I/O	1.5 kV AC (50 Hz, 1 min.)

Connection data

Connection method	Screw connection
Conductor cross section solid min.	0.2 mm²
Conductor cross section solid max.	2.5 mm²
Conductor cross section flexible min.	0.2 mm²
Conductor cross section flexible max.	2.5 mm²
Conductor cross section AWG min.	24
Conductor cross section AWG max.	14
Stripping length	7 mm
Tightening torque	0.6 Nm
Screw thread	M3

Status indicator

Status display	Green LED (supply voltage, PWR)
	Green LED (bus communication, DAT)
	Red LED (periphery error, ERR)

Approvals and conformance

Conformance	CE-compliant
IECEx	Ex nA IIC T4 Gc
UL, USA / Canada	UL 508 Listed
Standard designation	EMC Directive 2004/108/EC
Standards/regulations	EN 61000-6-2
Standard designation	EMC Directive 2004/108/EC
Standards/regulations	EN 61000-6-4
Standard designation	Ex Directive (ATEX)
Standards/regulations	EN 60079-0
Standard designation	Ex Directive (ATEX)
Standards/regulations	EN-60079-15

Standards and Regulations

Electromagnetic compatibility	Conformance with EMC Directive 2004/108/EC

I/O extension module - RAD-AI4-IFS - 2901537

Technical data

Standards and Regulations

Standard designation	EMC Directive 2004/108/EC
Standards/regulations	EN 61000-6-2
Standard designation	EMC Directive 2004/108/EC
Standards/regulations	EN 61000-6-4
Standard designation	Ex Directive (ATEX)
Standards/regulations	EN 60079-0
Standard designation	Ex Directive (ATEX)
Standards/regulations	EN-60079-15
Shock	16g, 11 ms
Noise emission	EN 61000-6-4
Noise immunity	EN 61000-6-2
Flammability rating according to UL 94	V0
Vibration (operation)	in accordance with IEC 60068-2-6: 5g, 10 Hz ... 150 Hz
Conformance	CE-compliant
IECEx	Ex nA IIC T4 Gc
UL, USA / Canada	UL 508 Listed
	Class I, Div. 2, Groups A, B, C, D T4A
	Class I, Zone 2, IIC T4

Classifications

eCl@ss

eCl@ss 4.0	27230207
eCl@ss 4.1	27230207
eCl@ss 5.0	27230207
eCl@ss 5.1	27242208
eCl@ss 6.0	27242208
eCl@ss 7.0	27242208
eCl@ss 8.0	27242601

ETIM

ETIM 3.0	EC001423
ETIM 4.0	EC000310
ETIM 5.0	EC001596

UNSPSC

UNSPSC 6.01	30211506
UNSPSC 7.0901	43223108

I/O extension module - RAD-AI4-IFS - 2901537

Classifications

UNSPSC

UNSPSC 11	39121008
UNSPSC 12.01	43223108
UNSPSC 13.2	43223108

Approvals

Approvals

Approvals

UL Listed / cUL Listed / EAC / cULus Listed

Ex Approvals

ATEX / IECEx / UL Listed / cUL Listed / cULus Listed

Approvals submitted

Approval details

UL Listed

cUL Listed

EAC

cULus Listed

Drawings

I/O extension module - RAD-AI4-IFS - 2901537

Schematic diagram

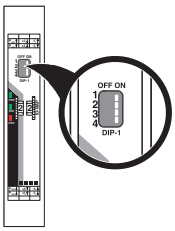

DIP switches

Schematic diagram

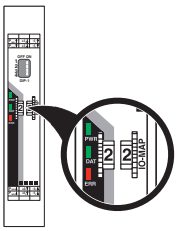

Thumb wheel

Block diagram

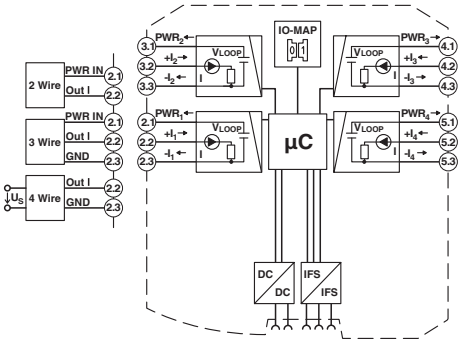

Functional drawing

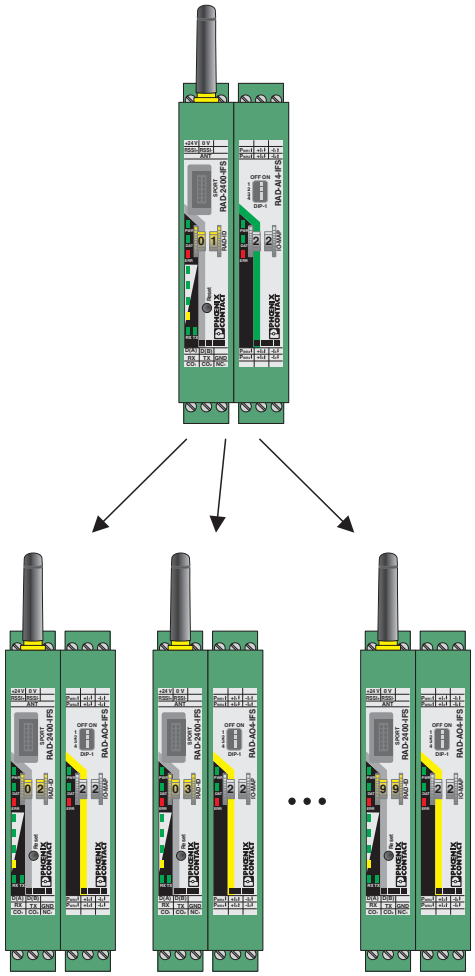

Assignment of analog inputs and analog outputs

I/O extension module - RAD-AI4-IFS - 2901537

Dimensional drawing

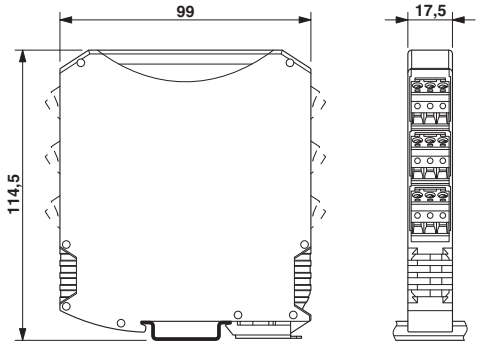

Schematic diagram

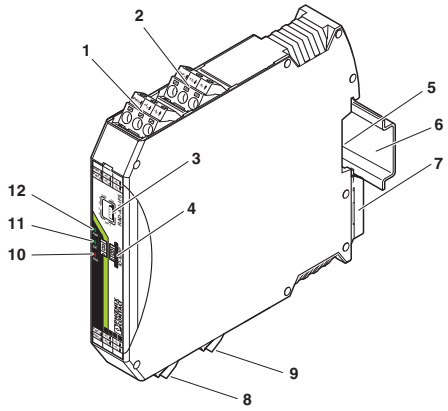

Function elements

I/O extension module - RAD-AI4-IFS - 2901537

Application drawing

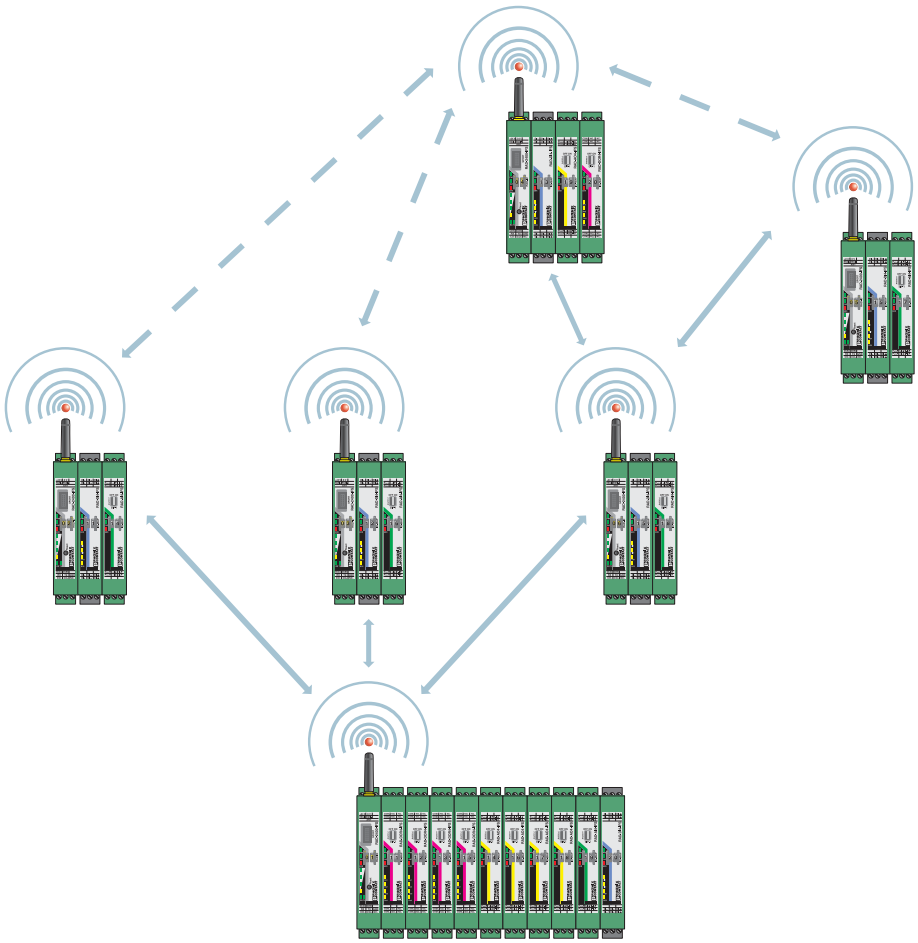

Wireless module in I/O data mode

I/O extension module - RAD-AI4-IFS - 2901537

Application drawing

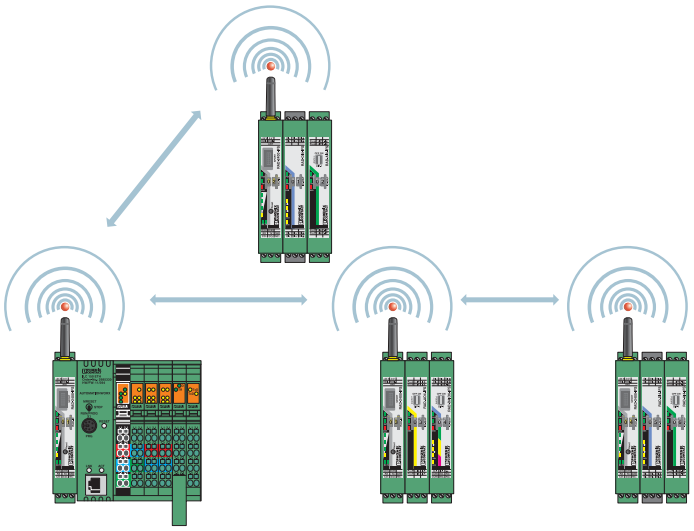

Wireless module in PLC/Modbus RTU mode

Phoenix Contact 2015 © - all rights reserved
http://www.phoenixcontact.com

BOM #10

Product: 1492-H5

Description: 1492-H Finger-Safe Terminal Blocks

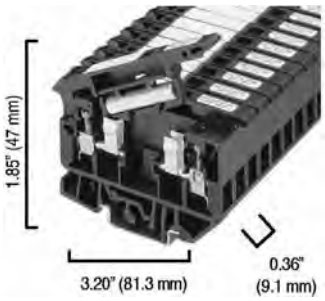

Representative Photo Only (actual product may vary based on configuration selections)

BASE DATA

Electrical Standards	UL
Type of Device	Finger-Safe Terminal Block
Base Block Type	Single Circuit Fuse Block

DETAIL DATA

Features	LED Blown Fuse Indicator
Wire Range	#30 - #12 AWG
Color	Black (Standard)
Bulk Pack	No Bulk Pack (Single Block)

CERTIFICATIONS AND APPROVALS

UR	UL 486E, UL 1059; Reference File: E40735
CSA	CSA C22.2 No. 65, No. 158; On Website, Name: Rockwell, Keyword Search: 1492
IEC	EN 60947-1, EN 60947-7-1(Feed-Through), -2(Ground), -3(Fuse)
Short Circuit Current Rating	This terminal block carries a minimum of 10kA SCCR rating for all protection methods. Please see the table for other possible elevated ratings.
For CSA Certifications:	http://directories.csa-international.org/directorymain.asp
For UL Certifications Directory:	http://database.ul.com/cgi-bin/XYV/template/LISEXT/1FRAME/index.htm

BOM #11

Spring-Clamp Connection Terminal Blocks

Plug-in Style Blocks (Cat. Nos. 1492-L3P, -LDG3P) and Analog Loop Control Block (Cat. No. 1492-LDAG3)

	1492-L3P			1492-LDG3P			1492-LDAG3		
Dimensions are not intended to be used for manufacturing purposes. **Note:** Height dimension is measured from top of rail to top of terminal block.	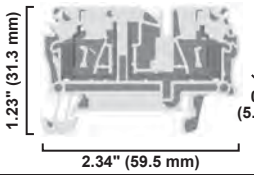			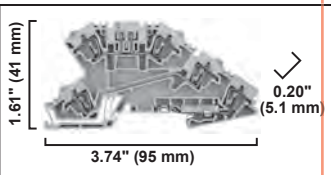			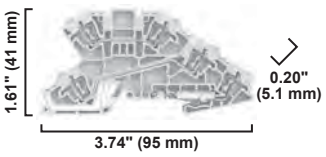		
Specifications	*Single Circuit Plug-In Component Block for a Variety of Components*			*Terminal Block with slot for Plug-In Component, Feed-Through Circuit and 1 Ground Connection*			*Analog Loop Control Terminal Block with 2 Feed-Through Circuits and 1 Ground Connection*		
Certifications	cULus	CSA	IEC	cULus	CSA	IEC	cULus	CSA	IEC
Voltage Rating	600V AC/DC		500V AC/DC	300V AC/DC		250V AC/DC	300V AC/DC		250V AC/DC
Maximum Current	20 A		24 A	10 A		20 A	10 A		24 A
Wire Range (Rated Cross Section)	#30…12 AWG		4 mm²	#26…12 AWG		2.5 mm²	#26…12 AWG		2.5 mm²
Wire Strip Length	0.39 in. (10 mm)			0.31 in. (8 mm)			0.31 in. (8 mm)		
Density	59 pcs/f (/196 pcs/m)			59 pcs/ft (196 pcs/m)			59 pcs/ft (196 pcs/m)		
Housing Temperature Range	–58…+248 °F (–50…+120 °C)			–58…+248 °F (–50…+120 °C)			–58…+248 °F (–50…+120 °C)		
Terminal Blocks	**Cat. No.**		**Pkg Qty.**	**Cat. No.**		**Pkg Qty.**	**Cat. No.**		**Pkg Qty.**
Color Grey	**1492-L3P**		25	**1492-L**		25	**1492-LDAG3**		25
Accessories	**Cat. No.**		**Pkg Qty.**	**Cat. No.**		**Pkg Qty.**	**Cat. No.**		**Pkg Qty.**
Mounting Rails 1 m Symmetrical DIN (Steel)	**199-DR1**		10	**199-DR1**		10	**199-DR1**		10
1 m Symmetrical DIN (Aluminum)	**1492-DR5**		10	**1492-DR5**		10	**1492-DR5**		10
1 m Hi-Rise Symmetrical DIN (Aluminum)	**1492-DR6**		2	**149**		2	**1492-DR6**		2
1 m Angled Hi-Rise Sym. DIN (Steel)	**1492-DR7**		2	**1492-DR7**		2	**1492-DR7**		2
End Barrier	**1492-EBL3**		50	**1492-EBLDAG3**		20	**1492-EBLDAG3**		20
End Anchors and Retainers Screwless End Retainer	**1492-ERL35**		20	**1492-ERL35**		20	**1492-ERL35**		20
DIN Rail — Normal Duty	**1492-EAJ35**		100	**1492-EAJ35**		100	**1492-EAJ35**		100
DIN Rail — Heavy Duty	**1492-EAHJ35**		50	**1492-EAHJ35**		50	**1492-EAHJ35**		50
Jumpers Plug-In Center Jumper — 50-pole	**1492-CJK5-50**		10	**1492-CJLJ5-50**		10	**1492-CJLJ5-50**		10
Plug-In Center Jumper — 10-pole	**1492-CJK5-10**		20	**1492-CJLJ5-10**		20	**1492-CJLJ5-10**		20
Plug-In Center Jumper — 9-pole	**1492-CJK5-9**		20	**1492-CJLJ5-9**		20	**1492-CJLJ5-9**		20
Plug-In Center Jumper — 8-pole	**1492-CJK5-8**		20	**1492-CJLJ5-8**		20	**1492-CJLJ5-8**		20
Plug-In Center Jumper — 7-pole	**1492-CJK5-7**		20	**1492-CJLJ5-7**		20	**1492-CJLJ5-7**		20
Plug-In Center Jumper — 6-pole	**1492-CJK5-6**		20	**1492-CJLJ5-6**		20	**1492-CJLJ5-6**		20
Plug-In Center Jumper — 5-pole	**1492-CJK5-5**		20	**1492-CJLJ5-5**		20	**1492-CJLJ5-5**		20
Plug-In Center Jumper — 4-pole	**1492-CJK5-4**		60	**1492-CJLJ5-4**		60	**1492-CJLJ5-4**		60
Plug-In Center Jumper — 3-pole	**1492-CJK5-3**		60	**1492-CJLJ5-3**		60	**1492-CJLJ5-3**		60
Plug-In Center Jumper — 2-pole	**1492-CJK5-2**		60	**1492-CJLJ5-2**		60	**1492-CJLJ5-2**		60
Other Accessories Disconnect Plug	**1492-DPL**		50	**1492-DPL**		50	—		—
Component Plug	**1492-CPL**		50	**1492-CPL**		50	—		—
Fuse Plug Without Blown Fuse Indicator	**1492-FPK2**		20	**1492-FPK2**		20	—		—
10…36V Blown Fuse Indicator	**1492-FPK224**		20	**1492-FPK224**		20	—		—
35…70V Blown Fuse Indicator	**1492-FPK248**		20	**1492-FPK248**		20	—		—
60…150V Blown Fuse Indicator	**1492-FPK2120**		20	**1492-FPK2120**		20	—		—
140…250V Blown Fuse Indicator	**1492-FPK2250**		20	**1492-FPK2250**		20	—		—
Reducing Sleeves 28…24 AWG (0.13…0.2 mm²) White	1492-PSL3-2		100	—		—	—		—
Reducing Sleeves 22…20 AWG (0.25…0.5 mm²) Grey	**1492-PSL3-5**		100	—		—	—		—
Reducing Sleeves 18 AWG (0.75…1.0 mm²) Dark Grey	**1492-PSL3-10**		100	—		—	—		—
Test Plug	**1492-TPL5**		25	**1492-TP23**		20	—		—
Electrical Warning Plate	**1492-EWPL5**		20	—		—	—		—
Group Marking Carrier	**1492-GM35**		25	**1492-GM35**		25	**1492-GM35**		25
Marking Systems Snap-In Marker Cards	**1492-M5X10** (144/card)		5	**1492-M5X10** (144/card)		5	**1492-M5X10** (144/card)		5
Snap-In Marker Cards	**1492-M5X5** (200/card)		5	**1492-M5X5** (200/card)		5	**1492-M5X5** (200/card)		5

BOM #13

BOM #16

12

Product: 1492-J3

Description: 1492 IEC Screw Terminal Blocks

BOM #14

Representative Photo Only (actual product may vary based on configuration selections)

BLOCK STYLE	
Base Block Style	Standard Feed-Through Blocks
BASE DATA	
Base Block Type	One-Circuit Feed-Through Block
DETAIL DATA	
Features	Standard Feedthrough
Maximum Wire Size & Rating	UL: 30-12 AWG (25A @600V AC/DC)\nCSA: 26-12 AWG (20A @600V AC/DC)\nIEC: 2.5mm² (24A @800V AC/DC)\nEEx e II: 2.5mm²/20-14 AWG (21A @ 550V AC/DC)
Color	Gray (Standard)
CERTIFICATIONS AND APPROVALS	
UR	UL 486E, UL 1059; Reference File: E40735, E187022
CSA	CSA C22.2 No. 65, No. 158; On Website, Name: Rockwell, Keyword Search: 1492
IEC	EN 60947-1, EN 60947-7-1(Feed-Through), -2(Ground), -3(Fuse)
ATEX	http://www.rockwellautomation.com/products/certification/ex/excert.html
Short Circuit Current Rating	This terminal block carries a minimum of 10kA SCCR rating for all protection methods. Please see the table for other possible elevated ratings.
For CSA Certifications:	http://directories.csa-international.org/directorymain.asp
For UL Certifications Directory:	http://database.ul.com/cgi-bin/XYV/template/LISEXT/1FRAME/index.htm

McCROMETER

The Flow Measurement Specialists

ACCURACY TEST

This flow meter has been wet flow calibrated in an NIST traceable flow laboratory per the manufacturer's specification for the model and size listed below. The final reading on mechanical totalizers is the result of final form testing (totalizers with electronic displays are reset to zero after testing.)

Totalizer Reading: 18350

METER SIZE: 10"

MODEL: MJL7-10

Cal. for pipe ID: 10.22

Serial No.: 20140402

Date: 2-17-14

Form 507

CERTIFIED TEST REPORT

CUSTOMER: MCCALLS METER SALES & SERVICE

MODEL NO: MLI1-10

METER SERIAL NO: 20140402

CONFIGURATION

METER INSIDE DIAMETER: 10.22

DIAL: GAL X 1000 2000 GPM

GEARS: 25 / 36

TOTALIZER GEARS: 24L / 36L

ACTUAL METER INDEX: 0.6189

TEST FACILITY: Volumetric

CALIBRATION DATA

	FLOW RATE GPM	% ACCURACY
1	2036.67	99.46
2	1036.40	99.54
3	263.30	100.38

TEST DATE: 2/17/2014

CERTIFIED BY: Paul Hobbs

PRINT DATE: 2/17/2014

This calibration was performed on a primary or secondary test facility, traceable to the National Institute of Standards and Technology, USA. The estimated flow measurement uncertainty of the calibration facilities are:
Primary +/- 0.15% Secondary +/- 0.5%

McCROMETER
3255 WEST STETSON AVENUE
HEMET, CA 92545 USA
PHONE (951) 652-6811 / FAX (951) 652-3078
WEB SITE: http://www.mccrometer.com E-MAIL: customerservice@mccrometer.com

20140402

Printed by Don Hawley
2/17/2014 5:31:46 PM
Version 1.0 (3/9/2007)

30119-04 Rev. 3.1/03-13

WATER SPECIALTIES™
PROPELLER METER

2"-20"
MAIN LINE METERS
MODELS
ML04, ML08, ML12, ML16, ML20, ML22, MLI1

OPERATION AND MAINTENANCE MANUAL
PARTS LIST

FEATURING:
*MODEL CN06-2 INDICATOR-TOTALIZER
*CERAMIC BEARING CARTRIDGE PROPELLER
* ONE PIECE SEPARATOR/SPINDLE AND THREADED REVERSE THRUST BEARING CARTRIDGE

McCROMETER
3255 WEST STETSON AVENUE
HEMET, CALIFORNIA 92545 U.S.A.

PHONE: 951-652-6811
FAX: 951-652-3078
VISIT OUR WEBSITE: www.mccrometer.com

ASR Resources, LLC

V-Smart Control Valve
Installation, Operation & Maintenance Manual

Kirtland AFB Project

December 2015

Project Overview

The Kirtland AFB groundwater remediation well project utilizes (1) 4” multi-port V-Smart down hole control valve. This valve was installed by CB&I in December 2015. Installation included one set of continuous length dual line hydraulic hose connected to a Nema-3R enclosed hydraulic power unit (HPU). The HPU includes a front door mounted control panel which features a local/remote selector switch, push buttons for local operation, pump run and open/closed lights.

Valve Installation

The V-Smart valve has 4” female NPT threads in both the upper and lower integral couplings. The lower coupling is plugged. Care must be exercised when tightening the valve onto the column pipe. When using chain-type wrenches, be careful to avoid marring the surface of the valve coupling. The chain-type wrench should only be positioned on the upper coupling, while avoiding the hydraulic fittings. It should never be positioned on the sliding sleeve section of the valve or on the lower coupling.

Hydraulic Power Unit Installation

The hydraulic power unit is mounted in a Nema-3R enclosure with a hinged lockable door for easy access.

CONTINENTAL
HYDRAULICS
OPEN

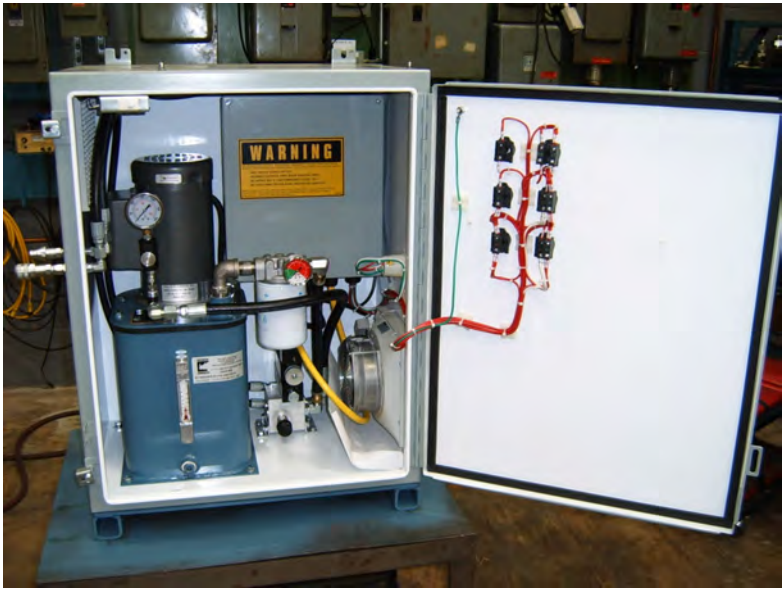

The 120VAC pump should be wired per the wiring diagram and checked for proper rotation by observing the motor shaft direction located at the top of the pump. An enclosure-mounted fan provides ventilation. The pump enclosure has two hydraulic hose fittings located on the left side of the enclosure for the open and closed hydraulic hose connections.

Fill the reservoir with the supplied food grade mineral oil until full as indicated on the level indicating gage located on the side of the pump reservoir. Remove the filler cap located on the top of the reservoir and fill using a flexible oil funnel or a small drill pump with a filler hose.

Adding Fluid to Reservoir

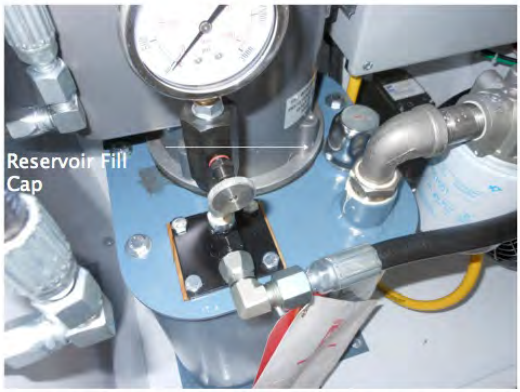

Remove cap by turning left and lifting up.
Use approved USDA Food Grade mineral oil ONLY.

Checking Reservoir Level

Maintain FULL level in oil level site glass

Hydraulic power unit hose connections

Once the hydraulic power unit reservoir is filled, connect the hydraulic hoses via the quick disconnect fittings.

After connecting the fittings, start the hydraulic power unit at the front cabinet control panel by placing the selector switch in the local (HAND) setting and pushing pump start button. Remove the open fitting plug on the valve end of the hose set, then push the pump open button and allow the oil to discharge into a clean bucket to remove any air that may have been trapped during removal of the valve from the well. Repeat for the closed hose. Run each hose for at least two minutes then cap the valve end of the hoses to keep the hoses full and air-free. This is required since the hoses are likely still partially full of oil from the last use.

Energizing the HPU Cabinet

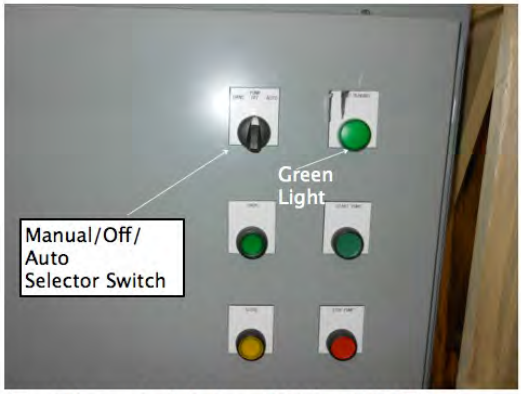

Turn Selector Switch from "OFF" to "HAND" or "AUTO". The HPU fan will run but green "PUMP RUNNING" light will not illuminate.

Manual HPU Pump Start

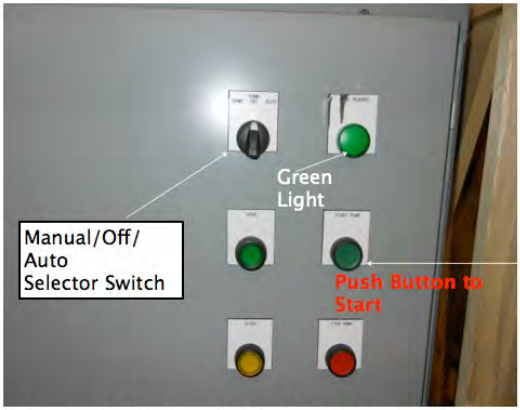

While in "HAND" push "START PUMP". The green "PUMP RUNNING" light will illuminate.

Open V-Smart Valve

Push green "OPEN" button and hold to open V-Smart valve to desired set point. It will illuminate while engaged.

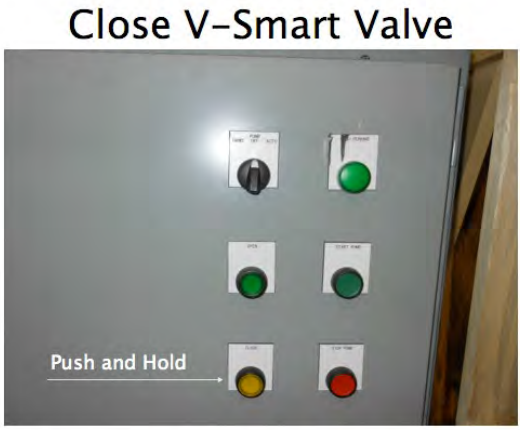

Push yellow "CLOSE" button and hold to close V-Smart valve to desired set point. It will illuminate while engaged.

V-Smart valve connections

Once the valve is connected to the column pipe and lowered into position above the well-head, the hydraulic hoses can be attached to the valve. First, identify the correct valve fittings for the open and closed hydraulic connections. The open fitting, marked "O", is to the right (with the valve in a vertical position) with the closed fitting, marked "C" on the left. While holding the open hose fitting in a vertical position to prevent oil from leaking, remove the "open" fitting cap on the valve and "open" plug on the hose fitting. Start the pump at the control panel by placing the selector switch in the local (HAND) setting and push the pump start button. Push and release the "open" button briefly to make sure oil is flowing at the top of the hose fitting, then quickly connect the open hose fitting (marked with green tape) to the open fitting on the valve and loosely tighten the fitting. Push the open button on the hydraulic power unit one more time to make sure oil is flowing past the fitting and to eliminate any air at the fitting connection, then tighten. Repeat the same process for the closed hose (marked with red tape).

With the selector switch still in the local (HAND) setting and the pump running, press and hold the open push button while the valve moves to the open position (valve sleeve will rise up exposing the injection ports). Once the valve reaches the end of travel, release the push button. [Note: The pressure relief valve on the hydraulic pump is set for 900 psi and will automatically bypass pressure once the valve reaches end of travel.] Repeat the procedure for the closed position. Run the valve several times full open and closed in the local (HAND) mode to verify operation. While running the valve, observe that there are no leaks at the fitting connections on the valve, at the internal hydraulic hose fittings inside the valve, or at the quick disconnect fittings where the two hose sections are connected and tighten fittings as required.

Pump Stop

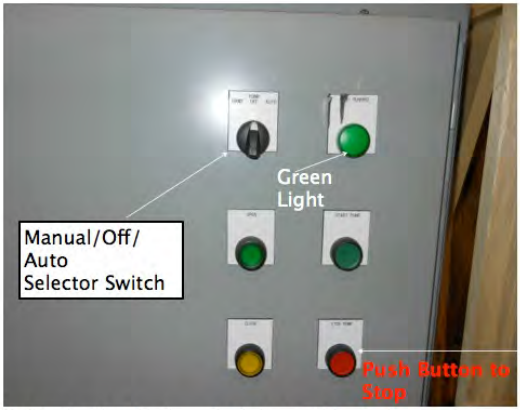

While in "HAND" push "STOP PUMP". The green "PUMP RUNNING" light will power off.

De-energizing the HPU Cabinet

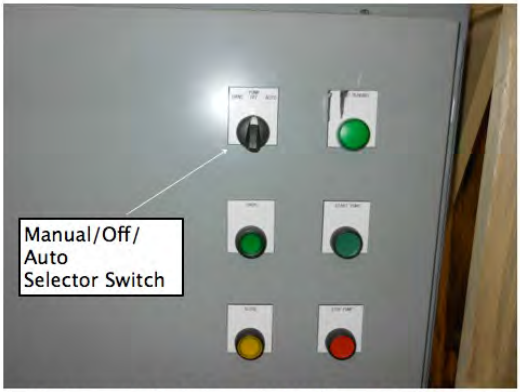

Turn Selector Switch from "HAND" or "AUTO" to "OFF". The HPU fan will run shut down.

At this point the hoses can be disconnected at the quick disconnect fittings, where the hoses are connected at the HPU, with hose ends bagged and taped to prevent any foreign debris from getting into the fittings. The valve can be installed in the well casing with the hoses taped along each section of joint pipe. The hoses can be reconnected with the quick disconnect fittings to the HPU unit at start up.

Start up

The pump is factory set to relieve pressure back to the reservoir in excess of 900 psi as verified on the pump gage. This pressure setting only be changed if directed by ASR Resources.

Adjusting System Pressure

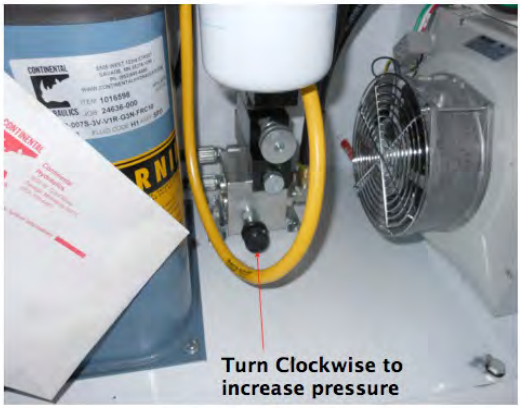

Warning: Do not exceed 1200 PSI Gauge pressure

With the hoses re-connected to the HPU, start the pump at the control panel by placing the selector switch in the local (HAND) setting and pushing the pump start button. Verify all above ground isolation valves are closed for the “dry run” operation prior to pressurizing the column pipe. Press and hold the open push button for 2 minutes while the valve moves to the open position. Repeat the procedure for the closed position. Run the valve several times full open and closed in the local (HAND) mode to verify operation. With the selector switch in the remote (AUTO) setting, open and close the valve via the PLC or computer (supplied by others) to verify operation. The valve is now ready to operate either manually in the local (HAND) mode or remotely in the (AUTO) setting to commence pumping or injection operation. Once the valve is operating in a flowing condition the speed control hydraulic needle valves can be adjusted to the desired setting to speed up or slow down the valve travel response time. The needle valve speed control adjustments typically address all speed of operation requirements. If larger adjustments need to be made, the internal flow control adjustment knob, which is factory pre-set, can be rotated to provide the required response time.

Internal Flow Control Adjustment

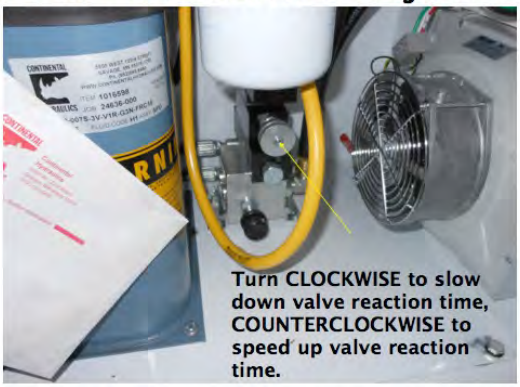

This flow control is factory set. It should not be readjusted unless external needle valve adjustments to not provide sufficient speed range settings.

V-Smart Valve Maintenance

There are no owner-serviceable components on the V-Smart valve itself. Any valve repairs will require the valve to be returned to ASR Resources for disassembly, repair, re-assembly and testing.

HPU Pump Maintenance

Oil Filter Replacement

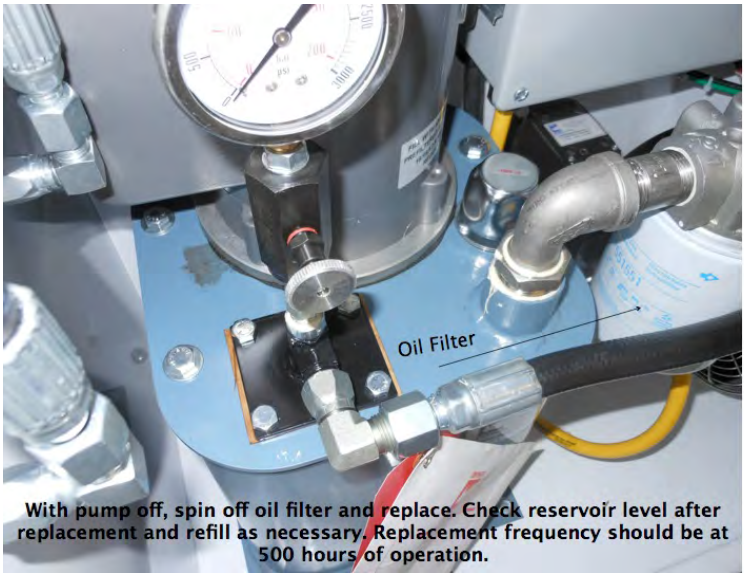

Cooling Air Filter

Filter pad may be cleaned with soft soap and water

Cooling Fan Maintenance

Advisory: Cooling Fan Starter control is thermostat, do not attempt to service when power unit is active.

Troubleshooting

Pump does not develop pressure - Confirm wiring and pump rotation is correct. Confirm internal pressure adjustment knob has not been changed. Rotate clockwise to increase pressure

Pump shows pressure on the internal gage but no pressure on the external hose gages - Make sure flow control needle valves in the hose assembly are not fully closed.

Valve operates too slow or too fast - Adjust external flow control needle valves in the hose assembly. If required, adjust internal flow limiting knob.

Reservoir level drops during operation - A leak is present in the between the HPU and the valve. If not above ground leaks are noted, the valve will need to be pulled.

V-Smart drawing and flow performance data, HPU drawing, Wiring Diagram, Bill of Materials are located in the valve submittal documents.

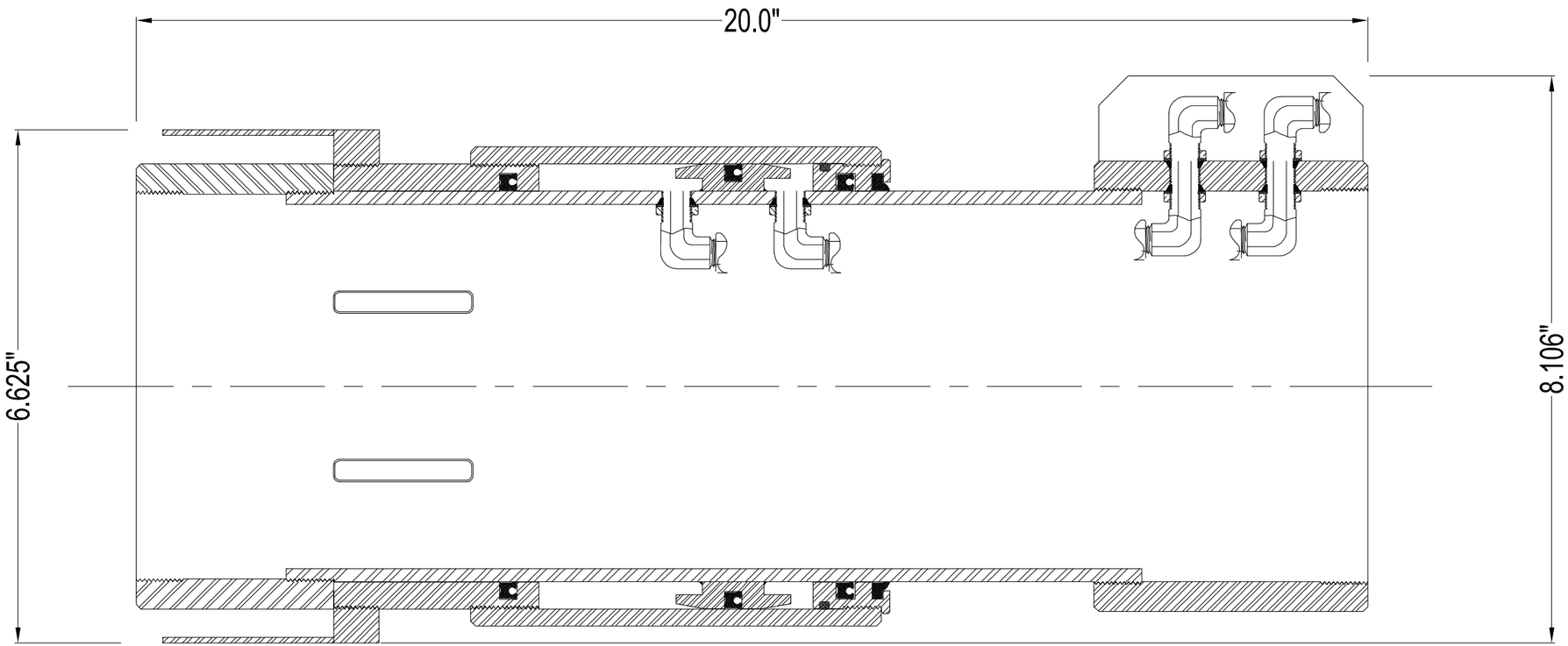

4" V-SMART OVERALL DRAWING

NOTES:
1.) UPPER AND LOWER THREADS - NPT

ASR Resources, LLC
7345 S Durango Dr. STE B107-176
Las Vegas, NV 89113
702-525-0250

4" V-SMART VALVE

DRAWN BY: SRP 03/21/2016
CHECKED BY: MRP 03/21/2016

CONTRACT NUMBER

DRAWING NUMBER NO.
SHEET 1 OF 1

ASR Resources, LLC (702) 525-0250

V-Smart Valve

CONSULTANT/CONTACT

PROJECT 4" valve for Kirtland AFB

SIZE		PORTS	DATE 9/21/2015
4.0 in.	X	4	

Web: www.ASRRESOURCES.COM

E-mail: cactuscontrols@cox.net

DROP PIPE DIAMETER	= 4.0 in.	Cv @ 100% FLOW	= 30.43
WELL SET DEPTH	= 530.0 ft.	WELL HEAD PRESSURE	= 25.0 psi.
DYNAMIC WATER LEVEL	= 500.0 ft.		

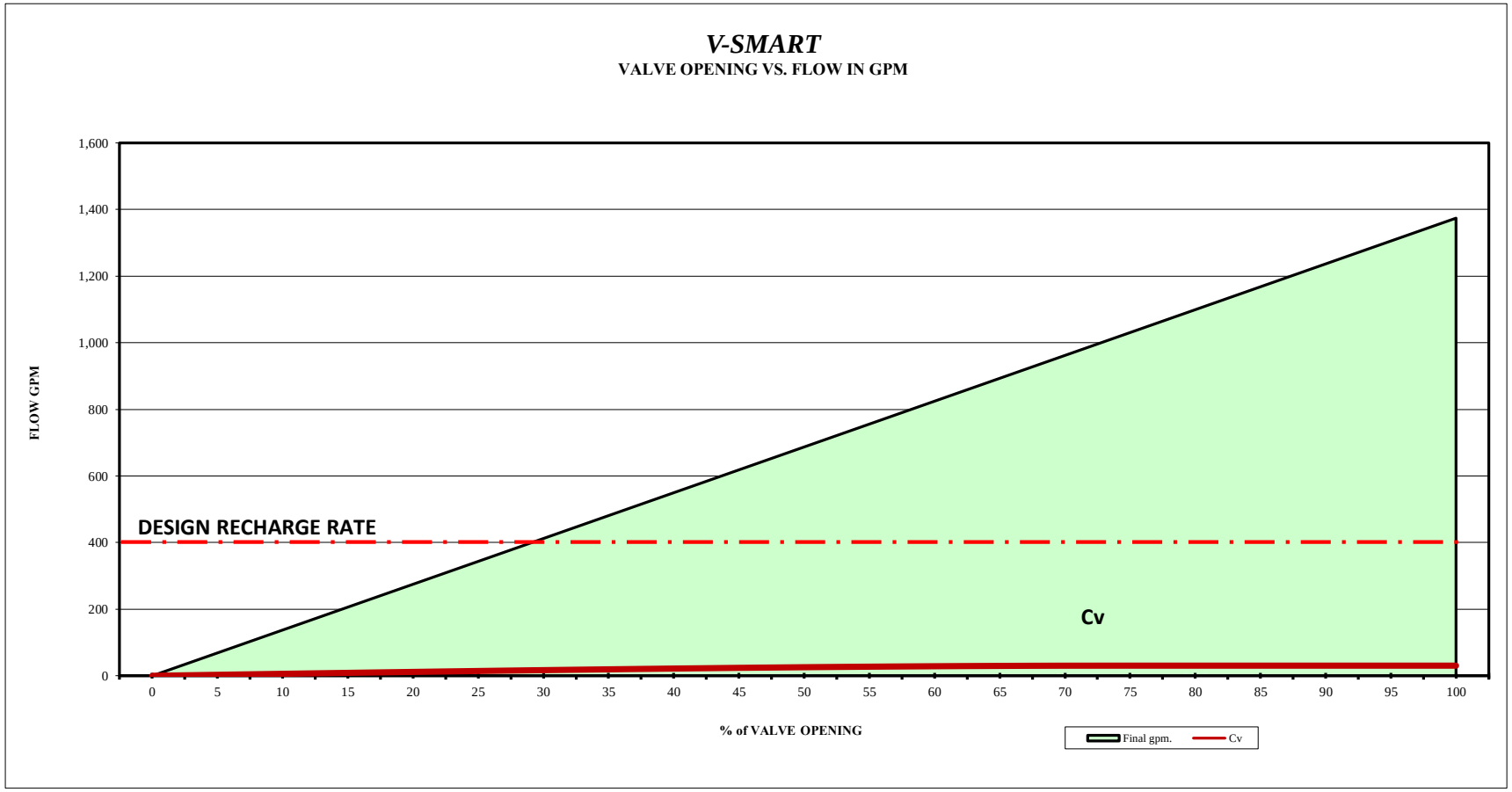

ASR Resources, LLC (702) 525-0250

V-Smart Valve

CONSULTANT/CONTACT

PROJECT 4" valve for Kirtland AFB

SIZE 4.0 in. X PORTS 4

DATE 9/21/2015

Web: www.ASRRESOURCES.COM

E-mail: cactuscontrols@cox.net

VELOCITIES IN THE PIPING SYSTEMS

DURING RECHARGE

% OPEN	GPM	VELOCITY - THRU DROP PIPE Vdp	V-SMART VALVE Vv	VALVE PORTS Vp	VALVE SHROUD Vc	WELL CASING Vc	
0	0 gpm.	0.0 fps.	0.0 fps.	0.0 fps.	0.0 fps.	0.0 fps.	
5	69 gpm.	1.1 fps.	1.9 fps.	129.7 fps.	0.3 fps.	0.1 fps.	
10	137 gpm.	2.1 fps.	3.8 fps.	129.7 fps.	0.6 fps.	0.3 fps.	
15	203 gpm.	3.2 fps.	5.7 fps.	129.7 fps.	0.9 fps.	0.4 fps.	
20	268 gpm.	4.2 fps.	7.5 fps.	129.7 fps.	1.2 fps.	0.5 fps.	
25	331 gpm.	5.1 fps.	9.2 fps.	129.7 fps.	1.4 fps.	0.6 fps.	
30	391 gpm.	6.1 fps.	10.9 fps.	129.7 fps.	1.7 fps.	0.7 fps.	
35	448 gpm.	7.0 fps.	12.5 fps.	129.7 fps.	2.0 fps.	0.8 fps.	←— Qr
40	501 gpm.	7.8 fps.	14.0 fps.	129.7 fps.	2.2 fps.	0.9 fps.	
45	550 gpm.	8.6 fps.	15.4 fps.	129.7 fps.	2.4 fps.	1.0 fps.	
50	594 gpm.	9.2 fps.	16.6 fps.	129.7 fps.	2.6 fps.	1.1 fps.	
55	631 gpm.	9.8 fps.	17.6 fps.	129.7 fps.	2.7 fps.	1.2 fps.	
60	662 gpm.	10.3 fps.	18.5 fps.	129.7 fps.	2.9 fps.	1.3 fps.	
65	685 gpm.	10.7 fps.	19.1 fps.	129.7 fps.	3.0 fps.	1.3 fps.	
70	699 gpm.	10.9 fps.	19.5 fps.	129.7 fps.	3.0 fps.	1.3 fps.	
75	702 gpm.	10.9 fps.	19.6 fps.	129.7 fps.	3.1 fps.	1.3 fps.	
80	702 gpm.	10.9 fps.	19.6 fps.	129.7 fps.	3.1 fps.	1.3 fps.	
85	702 gpm.	10.9 fps.	19.6 fps.	129.7 fps.	3.1 fps.	1.3 fps.	
90	702 gpm.	10.9 fps.	19.6 fps.	129.7 fps.	3.1 fps.	1.3 fps.	
95	702 gpm.	10.9 fps.	19.6 fps.	129.7 fps.	3.1 fps.	1.3 fps.	
100	702 gpm.	10.9 fps.	19.6 fps.	129.7 fps.	3.1 fps.	1.3 fps.	

FROM VALVE TO WELLHEAD DURING PUMPING

GPM	VELOCITY - THRU WELL CASING Vc	V-SMART VALVE Vv	DROP PIPE Vp	
0 gpm.	0.0 fps.	0.0 fps.	0.0 fps.	
30 gpm.	0.1 fps.	0.8 fps.	0.8 fps.	
60 gpm.	0.1 fps.	1.7 fps.	1.5 fps.	
90 gpm.	0.2 fps.	2.5 fps.	2.3 fps.	
120 gpm.	0.2 fps.	3.3 fps.	3.0 fps.	
150 gpm.	0.3 fps.	4.2 fps.	3.8 fps.	
180 gpm.	0.3 fps.	5.0 fps.	4.5 fps.	
210 gpm.	0.4 fps.	5.9 fps.	5.3 fps.	
240 gpm.	0.5 fps.	6.7 fps.	6.0 fps.	
270 gpm.	0.5 fps.	7.5 fps.	6.8 fps.	
300 gpm.	0.6 fps.	8.4 fps.	7.6 fps.	
330 gpm.	0.6 fps.	9.2 fps.	8.3 fps.	
360 gpm.	0.7 fps.	10.0 fps.	9.1 fps.	
390 gpm.	0.7 fps.	10.9 fps.	9.8 fps.	
420 gpm.	0.8 fps.	11.7 fps.	10.6 fps.	Qp ⟶
450 gpm.	0.9 fps.	12.6 fps.	11.3 fps.	
480 gpm.	0.9 fps.	13.4 fps.	12.1 fps.	
510 gpm.	1.0 fps.	14.2 fps.	12.9 fps.	
540 gpm.	1.0 fps.	15.1 fps.	13.6 fps.	
570 gpm.	1.1 fps.	15.9 fps.	14.4 fps.	
600 gpm.	1.1 fps.	16.7 fps.	15.1 fps.	

ASR Resources, LLC (702) 525-0250

V-Smart Valve

CONSULTANT/CONTACT

PROJECT 4" valve for Kirtland AFB

SIZE		PORTS
4.0 in.	X	4

DATE 9/21/2015

Web: www.ASRRESOURCES.COM

E-mail: cactuscontrols@cox.net

FRICTION LOSS IN THE PIPING SYSTEM

DURING RECHARGE

%		FRICTION LOSS - THRU DROP PIPE	V-SMART VALVE	VALVE PORTS	WELL CASING	VALVE SHROUD	LOSS TOTAL	
OPEN	GPM	FLdp	FLv	Fp *	FLc	FLT	FLT	
0	0 gpm.	0.0 ft.	0.0 ft.	0.0 ft.	0.0 ft.	0.0 ft.	**0.0 ft.**	
5	69 gpm.	1.9 ft.	0.0 ft.	530.9 ft.	0.0 ft.	0.0 ft.	**1.9 ft.**	
10	137 gpm.	6.7 ft.	0.0 ft.	526.0 ft.	0.0 ft.	0.1 ft.	**6.8 ft.**	
15	203 gpm.	13.9 ft.	0.1 ft.	518.6 ft.	0.0 ft.	0.2 ft.	**14.2 ft.**	
20	268 gpm.	23.3 ft.	0.1 ft.	509.1 ft.	0.0 ft.	0.3 ft.	**23.7 ft.**	
25	331 gpm.	34.4 ft.	0.1 ft.	497.8 ft.	0.0 ft.	0.4 ft.	**35.0 ft.**	
30	391 gpm.	46.8 ft.	0.2 ft.	485.1 ft.	0.0 ft.	0.6 ft.	**47.6 ft.**	
35	448 gpm.	60.2 ft.	0.3 ft.	471.5 ft.	0.0 ft.	0.7 ft.	**61.2 ft.**	←— Qr
40	501 gpm.	74.0 ft.	0.3 ft.	457.4 ft.	0.1 ft.	0.9 ft.	**75.3 ft.**	
45	550 gpm.	87.9 ft.	0.4 ft.	443.4 ft.	0.1 ft.	1.1 ft.	**89.4 ft.**	
50	594 gpm.	101.2 ft.	0.4 ft.	429.8 ft.	0.1 ft.	1.2 ft.	**102.9 ft.**	
55	631 gpm.	113.4 ft.	0.5 ft.	417.4 ft.	0.1 ft.	1.4 ft.	**115.4 ft.**	
60	662 gpm.	123.9 ft.	0.5 ft.	406.7 ft.	0.1 ft.	1.5 ft.	**126.0 ft.**	
65	685 gpm.	132.0 ft.	0.6 ft.	398.5 ft.	0.1 ft.	1.6 ft.	**134.2 ft.**	
70	699 gpm.	136.9 ft.	0.6 ft.	393.4 ft.	0.1 ft.	1.7 ft.	**139.3 ft.**	
75	702 gpm.	138.0 ft.	0.6 ft.	392.3 ft.	0.1 ft.	1.7 ft.	**140.4 ft.**	
80	702 gpm.	138.0 ft.	0.6 ft.	392.3 ft.	0.1 ft.	1.7 ft.	**140.4 ft.**	
85	702 gpm.	138.0 ft.	0.6 ft.	392.3 ft.	0.1 ft.	1.7 ft.	**140.4 ft.**	
90	702 gpm.	138.0 ft.	0.6 ft.	392.3 ft.	0.1 ft.	1.7 ft.	**140.4 ft.**	
95	702 gpm.	138.0 ft.	0.6 ft.	392.3 ft.	0.1 ft.	1.7 ft.	**140.4 ft.**	
100	702 gpm.	138.0 ft.	0.6 ft.	392.3 ft.	0.1 ft.	1.7 ft.	**140.4 ft.**	

* The remaining energy in the well is removed by the velocity across the ports

FROM VALVE TO WELLHEAD DURING PUMPING

	FRICTION LOSS - THRU DROP PIPE	V-SMART VALVE	LOSS TOTAL	
GPM	FLdp	FLv	SYSTEM	
0 gpm.	0.00 ft.	0.00 ft.	**0.00 ft.**	
30 gpm.	0.40 ft.	0.00 ft.	**0.41 ft.**	
60 gpm.	1.46 ft.	0.01 ft.	**1.46 ft.**	
90 gpm.	3.08 ft.	0.01 ft.	**3.10 ft.**	
120 gpm.	5.25 ft.	0.02 ft.	**5.28 ft.**	
150 gpm.	7.94 ft.	0.03 ft.	**7.97 ft.**	
180 gpm.	11.12 ft.	0.05 ft.	**11.17 ft.**	
210 gpm.	14.79 ft.	0.06 ft.	**14.85 ft.**	
240 gpm.	18.94 ft.	0.08 ft.	**19.02 ft.**	
270 gpm.	23.55 ft.	0.10 ft.	**23.65 ft.**	
300 gpm.	28.61 ft.	0.12 ft.	**28.74 ft.**	
330 gpm.	34.13 ft.	0.15 ft.	**34.28 ft.**	
360 gpm.	40.09 ft.	0.17 ft.	**40.26 ft.**	
390 gpm.	46.49 ft.	0.20 ft.	**46.69 ft.**	
Qp —→ 420 gpm.	53.32 ft.	0.23 ft.	**53.55 ft.**	
450 gpm.	60.58 ft.	0.26 ft.	**60.84 ft.**	
480 gpm.	68.26 ft.	0.29 ft.	**68.56 ft.**	
510 gpm.	76.36 ft.	0.33 ft.	**76.69 ft.**	
540 gpm.	84.88 ft.	0.37 ft.	**85.25 ft.**	
570 gpm.	93.81 ft.	0.40 ft.	**94.22 ft.**	
600 gpm.	103.15 ft.	0.44 ft.	**103.59 ft.**	

ASR Resources, LLC (702) 525-0250

V-Smart Valve

CONSULTANT/CONTACT

PROJECT 4" valve for Kirtland AFB

SIZE 4.0 in. X PORTS 4

DATE 9/21/2015

Web: www.ASRRESOURCES.COM

E-mail: cactuscontrols@cox.net

INPUT DATA

MINIMUM DEPTH TO WATER	MDTW =	400.0 ft.	NUMBER OF PORTS	=	4
STATIC WATER LEVEL	=	475.0 ft.	PORT DIMENSIONS	=	0.50 in. x 1.700 in.
DYNAMIC WATER LEVEL	=	500.0 ft.	VALVE ID	=	3.826 in.
WELL HEAD PRESSURE	=	25.0 psi.	VALVE LENGTH	=	21.0 in.
PUMP SET DEPTH	=	530.0 ft.	VALVE to SCREEN	=	10.0 ft.
VALVE SET DEPTH (~ 10' above Pump)	=	520.0 ft.	VALVE SIZE	=	4.0 in.
HAZEN WILLIAMS FRICTION FACTOR	C =	130	"K" Value	=	0.70
Qr @ MDTW w/ 100% OPEN VALVE	=	1,274 gpm.	DESIGN PUMPING RATE	Qp =	400 gpm.
WELL HEAD = total head =	h =	532.8 ft. TOTAL.	DESIGN RECHARGE RATE	Qr =	400 gpm.

		Normal Size	SCHEDULE	LENGTH	ID	OD	Coup. OD
DROP PIPE	=	4.0 in.	40		4.026 in.	4.500 in.	
SHROUD	=	8.0 in.	40	4.0 in.	7.981 in.	8.625 in.	5.790 in.
CASING	=	12.0 in.	10		12.390 in.	12.750 in.	

FRICTION LOSS IN FEET HEAD = (4.727*L)*(Q/449)^1.85/((C^1.85)*((D/12)^4.855))

% OPEN	Qr FINAL (gpm)	DELTA $(2gh)^{1/2}$	AREA 1 PORT	AREA	AREA	Cv $Q_g/h^{1/2}$	h = FRICT. LOSS	g=32.2 $(2gh)^{1/2}$	Q_c $K*Ao(2gh)^{1/2}$	Q_g	VEL. @ PORT	DTW	Qr @ DTW 100% Open
0	0 gpm.	185.227	0.0 si.	0.0 si.	0.000 sf.	0.00	0.000 ft.	185	0.00 cfs.	0 gpm.	0.0 fps.	475.0 ft.	1,374 gpm.
5	69 gpm.	184.896	0.0 si.	0.2 si.	0.001 sf.	2.97	1.903 ft.	185	0.15 cfs.	69 gpm.	129.7 fps.	471.3 ft.	1,369 gpm.
10	137 gpm.	184.031	0.1 si.	0.3 si.	0.002 sf.	5.91	6.861 ft.	185	0.31 cfs.	137 gpm.	129.7 fps.	467.5 ft.	1,364 gpm.
15	203 gpm.	182.685	0.1 si.	0.5 si.	0.004 sf.	8.81	14.526 ft.	185	0.46 cfs.	206 gpm.	129.7 fps.	463.8 ft.	1,359 gpm.
20	268 gpm.	180.877	0.2 si.	0.7 si.	0.005 sf.	11.63	24.733 ft.	185	0.61 cfs.	275 gpm.	129.7 fps.	460.0 ft.	1,354 gpm.
25	331 gpm.	178.612	0.2 si.	0.9 si.	0.006 sf.	14.35	37.373 ft.	185	0.77 cfs.	343 gpm.	129.7 fps.	456.3 ft.	1,350 gpm.
30	391 gpm.	175.889	0.3 si.	1.0 si.	0.007 sf.	16.96	52.365 ft.	185	0.92 cfs.	412 gpm.	129.7 fps.	452.5 ft.	1,345 gpm.
35	448 gpm.	172.696	0.3 si.	1.2 si.	0.008 sf.	19.42	69.645 ft.	185	1.07 cfs.	481 gpm.	129.7 fps.	448.8 ft.	1,340 gpm.
40	501 gpm.	169.018	0.3 si.	1.4 si.	0.009 sf.	21.73	89.161 ft.	185	1.22 cfs.	550 gpm.	129.7 fps.	445.0 ft.	1,335 gpm.
45	550 gpm.	164.831	0.4 si.	1.5 si.	0.011 sf.	23.84	110.869 ft.	185	1.38 cfs.	618 gpm.	129.7 fps.	441.3 ft.	1,330 gpm.
50	594 gpm.	160.102	0.4 si.	1.7 si.	0.012 sf.	25.73	134.729 ft.	185	1.53 cfs.	687 gpm.	129.7 fps.	437.5 ft.	1,325 gpm.
55	631 gpm.	154.789	0.5 si.	1.9 si.	0.013 sf.	27.36	160.708 ft.	185	1.68 cfs.	756 gpm.	129.7 fps.	433.8 ft.	1,320 gpm.
60	662 gpm.	148.835	0.5 si.	2.0 si.	0.014 sf.	28.70	188.776 ft.	185	1.84 cfs.	824 gpm.	129.7 fps.	430.0 ft.	1,315 gpm.
65	685 gpm.	142.168	0.6 si.	2.2 si.	0.015 sf.	29.70	218.905 ft.	185	1.99 cfs.	893 gpm.	129.7 fps.	426.3 ft.	1,310 gpm.
70	699 gpm.	134.685	0.6 si.	2.4 si.	0.017 sf.	30.30	251.072 ft.	185	2.14 cfs.	962 gpm.	129.7 fps.	422.5 ft.	1,304 gpm.
75	702 gpm.	126.249	0.6 si.	2.6 si.	0.018 sf.	30.43	285.253 ft.	185	2.30 cfs.	1,030 gpm.	129.7 fps.	418.8 ft.	1,299 gpm.
80	702 gpm.	116.658	0.7 si.	2.7 si.	0.019 sf.	30.43	321.427 ft.	185	2.45 cfs.	1,099 gpm.	129.7 fps.	415.0 ft.	1,294 gpm.
85	702 gpm.	105.605	0.7 si.	2.9 si.	0.020 sf.	30.43	359.577 ft.	185	2.60 cfs.	1,168 gpm.	129.7 fps.	411.3 ft.	1,289 gpm.
90	702 gpm.	92.572	0.8 si.	3.1 si.	0.021 sf.	30.43	399.682 ft.	185	2.76 cfs.	1,237 gpm.	129.7 fps.	407.5 ft.	1,284 gpm.
95	702 gpm.	76.562	0.8 si.	3.2 si.	0.022 sf.	30.43	441.728 ft.	185	2.91 cfs.	1,305 gpm.	129.7 fps.	403.8 ft.	1,279 gpm.
100	702 gpm.	55.047	0.9 si.	3.4 si.	0.024 sf.	30.43	485.698 ft.	185	3.06 cfs.	1,374 gpm.	129.7 fps.	400.0 ft.	1,274 gpm.

Initial Construction Warranty Information

GUARANTEE
OF
ELECTRICAL MATERIALS AND WORKMANSHIP

As part of the consideration for the electrical contract identified below, the undersigned **WILSON ELECTRIC** hereby guarantees to the OWNER of the premises, for a period of one (1) year limited from date, that the electrical work performed under said contract was performed in a workmanlike manner and that the electrical material purchased and installed by the undersigned thereunder was, when installed, free of inherent manufacturing or mechanical defects, all to the extent and on the conditions herein specifically set forth, that is:

1) The undersigned Qualified Electrical Contractor shall replace, without cost or charge to the OWNER for either labor or materials, such individual parts of the electrical material or apparatus installed under said contract as may become defective or unserviceable within the period of the guarantee by reason of any failure of the undersigned in performing the work in a workmanlike manner or by reason of inherent manufacturing or mechanical defect in any electrical material or apparatus purchased and installed by the undersigned; provided:
   (a) The OWNER notifies the Contractor, in writing, of any failure or default within ten (10) days of the date such failure or default becomes apparent;
   (b) There shall be no responsibility on the Contractor to replace light bulbs, globes, stolen or vandalized materials or workmanship;
   (c) NO person, firm, or corporation other than the undersigned Qualified Electrical Contractor has, during or since the completion of the work performed or attempted to perform any of the work included in said contract or repaired or attempted to repair any of the electrical work performed by the undersigned thereunder;
   (d) The defect or failure was not caused or affected by the improper use or operation of the electrical facilities installed under said contract.
2) The undersigned Qualified Electrical Contractor's liability shall be fixed by the terms hereof and this express guarantee excludes and supersedes all implied guarantees or warranties.
3) This guarantee shall pass with the title of the premises to the new owner or owners thereof.

IN WITNESS WHEREOF, this guarantee has been executed this, **2/12/2016**

CONTRACT WITH: Mick Rich Contractors
CONTRACT DATE: 09/01/2015
PROJECT: KAFB Bulk Fuel Facility Phase IV Mid-Plume Pump & Treatment System

Matthew Walstrom

WILSON ELECTRIC
501 General Somervell St. SE Suite B
Albuquerque, NM 87123
Phone: 505-271-8773
Fax: 505-271-0246

Fliteway Technologies, Inc.
2129 East Birchwood Ave., Cudahy, WI 53110
(414) 483-5600 • 1-800-236-3580 • FAX (414) 483-1957

WARRANTY

ONE YEAR LIMITED WARRANTY- Fliteway Technologies, Inc. remediation equipment is warranted by Fiteway to the original user against defects in workmanship or materials under normal use for one year after date of shipment. Exceptions to this are positive displacement vacuum pumps and blowers which have 18 Month warranties direct from the original manufacturer (Roots and Sutorbilt only). Any part determined by Fliteway Technologies, Inc. to be defective in material or workmanship and returned to Fliteway Technologies, Inc., shipping costs prepaid, will be repaired or replaced at Fliteway's option, as the exclusive remedy. See PROMPT DISPOSITION below for limited warranty claim procedures. This limited warranty gives the purchaser specific legal rights which may vary from state to state.

LIMITATIONS OF LIABILITY- To the extent allowable under applicable law, Fliteway's liability (or incidental and consequential damages is expressly disclaimed. Fliteway's liability in all events is limited to, and shall not exceed, the purchase price.

PRODUCT SUITABILITY - Many states and localities have regulations and codes governing sales, construction, installation, and/or use of products for certain purposes, which may vary from those in neighboring areas. While Fliteway Technologies, Inc. attempts to assure that its products comply with such codes, it cannot guarantee compliance, and cannot be responsible for how the product is installed or used. Before purchase and use of a product, please determine local and national codes and regulations, review the product application, and verify that the product, installation and use comply with those regulations and codes.

PROMPT DISPOSITION - Fliteway Technologies, Inc. will make every effort for a prompt correction or other adjustment with respect to any product which proves to be defective within the limited warranty. For any product believed to be defective within limited warranty, first write or call Fliteway Technologies, Inc. giving the model and serial number of tile unit and describing the nature of the defect. Title and risk of loss pass to the buyer on delivery to common carrier. If product was damaged in transit to you, file a claim with carrier. Freight of postage charges on returns to the factory are at the customer's expense. If returned product is returned under warranty, the manufacturer will cover return freight.

Ultra Painting Inc.

State Labor and Industrial Reg. # 0046720050604

ultrapainting@aol.com

Bonding rate 3%

Phone: (505) 792-5153 Fax: (505) 792-7226

Date: 24 February 2016

To: Mick Rich Contractors

From: Andrew Sanchez

RE: Warranty

Please accept this as a warranty that Ultra Painting Inc. will guarantee out workmanship and material for a one year period after the final acceptance date.

Project: KAFB Bulk Fuel Facility

Final Acceptance Date: 24 February 2016

Expiration Date: 24 February 2017

Scope of work: Painting- Subcontractor

Address: P.O. Box 3835

Corrales, New Mexico 87048

Signed:

Andrew Sanchez

Date: 24 February 2016

Rupert Plumbing & Heating Co., Inc.

1401 Candelaria Rd. NE Albuquerque, New Mexico 87107
Phone (505) 247-8138 Fax (505) 764-9704

February 25, 2016

PROJECT WARRANTY

Project: KAFB Bulk Fuels Facility

Rupert Plumbing and Heating Co Inc guarantees that this installation is free from mechanical defects. Rupert Plumbing agrees to repair any part of the installation which may fail within a period of one year after date of final acceptance or occupancy, whichever occurs first, provided that such failure is due to defects in materials or workmanship.

Rupert Plumbing and Heating Co Inc

Michael Rupert

FAIRWAY INC.
DOORS & FRAMES
6820 Academy Parkway East, NE • Albuquerque, New Mexico 87109
Phone: (505) 343-9044 • Fax: (505) 344-2321

CUSTOMER: **Mick Rich Contractors**
DATE: **February 25, 2016**
PROJECT: **KAFB Bulk Fuels Facility**
REGARDING: **Warranty**

Please find attached the requested warranty documents for doors and frames supplied at the above listed project.

Fairway Inc. agrees to replace hardware that may prove to be defective in workmanship or materials, which would include replacement of hardware because of defective work, within a period of one (1) year from date of the Certificate of Occupancy, with the exception of the items listed below. Damages caused by natural disaster, or unusual abuse and neglect by others are excluded from this warranty. The following costs and expenses are not covered by the provisions of this limited warranty; labor costs for the removal and reinstallation of products; shipping and freight expenses required to return the material.

Exit Device:	3 years
Lock Set:	7 years
Door Closure:	10 years

Thank you for the opportunity to work with your firm on this project. If you have any questions, please feel free to call our office.

Respectfully submitted,

Fairway, Inc.

CURRIES

ASSA ABLOY

WARRANTY

WARRANTY

We warrant our products against defects in workmanship and materials for a period of one year, as follows:

(a) There are no warranties, express or implied, which extend beyond those described herein, and there is no implied warranty or merchantability.

(b) If our products should prove to be defective, our only responsibility will be to either repair or replace the defective item(s), and we will have no liability or obligation for any damages of any kind beyond such repair or replacement.

(c) Our obligation to repair or replace any defective item terminates one year after the product has been delivered by us to the customer, and also terminates at any time anyone other than our company performs any work of repair, service, or replacement on the item without our prior written consent.

(d) We assume no liability to pay any costs of labor or material for repair, service or replacement of any CURRIES product which has been incurred by anyone other than us.

(e) CURRIES is committed to providing the highest quality products and services to its customers as possible. Errors can occur on occasion. We request our distributors to act as "final" quality control on our hollow metal. A simple double check procedure by an assembly person prior to modifying a door or welding a frame should be performed on every unit of product that leaves a distributor's place of business. This simple action can prevent a considerable amount of potential field problems.

CURRIES Division of ASSA ABLOY Door Group, LLC

CURRIES • 1502 12th Street NW • Mason City, IA 50401-1814
Mailing Address: P.O. Box 1647 • Mason City, IA 50402-1647
Phone: 641-423-1334 • Fax: 641-424-8305 • Website: www.curries.com

ASSA ABLOY, the global leader in door opening solutions

***EverGuard*® Roofing**
512 Veranda Road NW
Albuquerque, NM 87107
Tel 505-821-9543
Fax 505-821-9081
dave@everguardroofing.com

KAFB Bulk Fuel Facility

EPDM Warranty

EverGuard Roofing a subcontractor for Mick Rich Contractors does hereby warrant that all labor and materials furnished and work performed in conjunction with Mick Rich Contractors for the above referenced project will be free from defects due to defective materials or workmanship for a period of two years from the date of Substantial Completion.

This obligation includes the repair or replacement of membrane or accessories and the cost or furnishing of labor to repair roof leaks provided that EverGuard Roofing has authorized the repair and that only EverGuard Roofing personnel perform the repair.

EverGuard Roofing shall in no instance be held liable for any damage whatsoever arising from causes not fully within its control, including:

- Damage caused by natural disasters, including but not limited to lightning, hurricanes, gales, hail, tornadoes or similar natural disasters. Falling snow or ice, are excluded.
- Vandalism, intentional acts, negligence or failure of Owner to use reasonable care
- Damage caused by any unauthorized modifications or alterations of the roof or installing any structures, fixtures, or utilities on or through the roof, damage caused by unauthorized components used in installation or repair, or by additional equipment added to or made part of roof under warranty or damage caused by chemicals not normally found in nature.
- The contents or other parts of the buildings are not covered by this warranty.
- Moisture entering the roof system through walls, copings, structural defects or any part of the building structure
- All remediation or abatement for any reason are excluded
- This warranty does not supersede the terms of the roof warranty from Firestone. All limitations listed in the Firestone warranty apply to this warranty. This warranty does not offer any additional coverage not offered in the Firestone warranty.

This limited warranty is void if any repairs, alterations, or modification of the roof are done by anyone other than EverGuard Roofing.

Should a leak or defect develop during the warranty period due to improper materials and/or workmanship, Firestone should be contacted at **800-830-5612** as soon as possible, Also please call 505-821-1895 to report any leaks to **Everguard Roofing**.

01/04/2016
Date _____

_____
David Simmons
Vice President
Everguard Roofing, LLC

RED SHIELD WARRANTY

RED SHIELD ROOFING SYSTEM LIMITED WARRANTY

Warranty No: RO086339 **FBPCO #** DD3780 **Square Footage:** 4160 **s.f.**
Building Owner: US ARMY CORPS OF ENGINEER ALBUQUERQUE DI
Building Identification: KAFB BULK FUEL FACILITY
Building Address: 5202 RANDOLPH AVENUE SE, ALBUQUERQUE, NM, 87101-0000
Warranty Period Of: TWENTY (20) Years, Beginning On: 01/04/16
Roofing Contractor: EVERGUARD ROOFING, LLC (08760)

For the warranty period indicated above, Firestone Building Products Company, LLC ("Firestone"), an Indiana limited liability company, warrants to the Building Owner ("Owner") named above that Firestone will, subject to the Terms, Conditions and Limitations set forth below, repair any leak in the Firestone Roofing System ("System").

TERMS, CONDITIONS AND LIMITATIONS

1. **Products Covered.** The System shall mean only the Firestone brand roofing membranes, Firestone brand roofing insulations, Firestone brand roofing metal, and other Firestone brand roofing accessories when installed in accordance with Firestone technical specifications by a Firestone-licensed applicator.
2. **Notice**. In the event any leak should occur in the System, the Owner must give notice in writing or by telephone to Firestone within thirty (30) days of any occurrence of a leak. Written notice may be sent to Firestone at the street address or fax number shown on the reverse side of this Limited Warranty. Evidence of this notice shall be the receipt by Owner of a Firestone Leak Notification Acknowledgement. By so notifying Firestone, the Owner authorizes Firestone or its designee to investigate the cause of the leak.
3. **Investigation**. If upon investigation, Firestone determines that the leak is not excluded under the Terms, Conditions and Limitations set forth in this Red Shield Roofing System Limited Warranty (the "Limited Warranty"), the Owner's sole and exclusive remedy and Firestone's total liability shall be limited to the repair of the leak. Should the investigation reveal that the leak is excluded under the Terms, Conditions and Limitations, the Owner shall be responsible for payment of the investigation costs. Failure by Owner to pay for these costs shall render this Limited Warranty null and void. Firestone will advise the Owner of the type and/or extent of repairs required to be made at the Owner's expense that will permit this Limited Warranty to remain in effect for the unexpired portion of its term. Failure by the Owner to properly make these repairs in a reasonable manner using a Firestone-licensed applicator and within 60 days shall render this Limited Warranty null and void.
4. **No Dollar Limit (NDL).** There is no dollar limit placed on warranted leak repairs to the extent such repairs are covered by this Limited Warranty.
5. **Disputes**. Any dispute, controversy or claim between the Owner and Firestone concerning this Limited Warranty shall be settled by mediation. In the event that the Owner and Firestone do not resolve the dispute, controversy or claim in mediation, the Owner and Firestone agree that neither party will commence or prosecute any suit, proceeding, or claim other than in the courts of Hamilton County in the state of Indiana or the United States District Court, Southern District of Indiana, Indianapolis Division. Each party irrevocably consents to the jurisdiction and venue of the above-identified courts.
6. **Payment Required**. Firestone shall have no obligation under this Limited Warranty unless and until Firestone and the licensed applicator have been paid in full for all materials, supplies, services, approved written change orders, warranty costs and other costs which are included in, or incidental to, the System. In the event that repairs not covered by this Limited Warranty are necessary in the future, Firestone reserves the right to suspend this Limited Warranty until such repairs have been completed and the licensed applicator and/or Firestone has been paid in full for such repairs.
   Exclusions. Firestone shall have no obligation under this Limited Warranty, or any other liability, now or in the future if a leak or damage is caused by: (a) Natural forces, disasters, or acts of God including, but not limited to, fires, hurricanes, tornadoes, hail, wind-blown debris, lightning, earthquakes, volcanic activity, atomic radiation, insects or animals; (b) Winds of peak gust speed at or in excess of 55 MPH calculated at ten(10) meters above ground using available meteorological data;(c) Act(s), conduct or omission(s) by any person, or act(s) of war, terrorism or vandalism, which damage the System or which impair the System's ability to resist leaks; (d) Failure by the Owner to use reasonable care in maintaining the System, said maintenance to include, but not be limited to, those items listed on the reverse side of this Limited Warranty entitled "Building Envelope Care and Maintenance Guide"; (e) Deterioration or failure of building components, including, but not limited to, the roof substrate, walls, mortar, HVAC units, skylights etc.; (f) Construction generated moisture, condensation or infiltration of moisture in, from, through, or around the walls, copings, rooftop hardware or equipment, skylights, building structure or underlying or surrounding materials; (g) Acid, oil, harmful chemicals, or the reaction between them; (h) Alterations or repairs to the System that are not completed in accordance with Firestone's published specifications, not completed by an approved contractor, and/or not completed with proper notice to Firestone; (i) The design of the roofing system: Firestone does not undertake any analysis of the architecture or engineering required to evaluate what type of System is appropriate for a building and makes no warranty express or implied as to the suitability of its Products for any particular structure; such a determination is the responsibility of the architect, engineer or design professional; (j) Improper selection of materials for the roof assembly or the failure to accurately calculate wind uplift and/or roof loads;(k) Deterioration to metal roofing materials and accessories caused by marine salt water, atmosphere, or by regular spray of either salt or fresh water; or, (l) Change in building use or purpose.
7. **Transfer**. This Limited Warranty shall be transferable subject to Owner's payment of the current transfer fee set by Firestone.
8. **Term.** The term of this Limited Warranty shall be for the period set forth above and such term shall not be extended under any circumstances.
9. **Roof Access**. During the term of this Limited Warranty, Firestone's designated representative or employees shall have free access to the roof during regular business hours. In the event that roof access is limited due to security or other restrictions, Owner shall reimburse Firestone for all reasonable cost incurred during inspection and/or repair of the System that are due to delays associated with said restrictions. Owner shall be responsible for the damage caused by, removal and replacement of any overburdens, superstrata or overlays, either permanent or temporary, excluding accepted stone ballast or pavers, as necessary to expose the system for inspection and/or repair.
10. **Waiver**. Firestone's failure to enforce any of the terms or conditions stated herein shall not be construed as a waiver of such provision or of any other terms and conditions of this Limited Warranty.
11. **Governing Law**. This Limited Warranty shall be governed by and construed in accordance with the laws of the State of Indiana without regard to that State's rules on conflict of laws.
12. **Severability**. If any portion of this Limited Warranty is held by a court of competent jurisdiction to be invalid, void or unenforceable, the remaining provisions shall nevertheless continue in full force.

FIRESTONE DOES NOT WARRANT PRODUCTS INCORPORATED OR UTILIZED IN THIS INSTALLATION THAT WERE NOT FURNISHED BY FIRESTONE. FIRESTONE SPECIFICALLY DISCLAIMS LIABILITY UNDER ANY THEORY OF LAW ARISING OUT OF THE INSTALLATION OF, PERFORMANCE OF, OR DAMAGES SUSTAINED BY OR CAUSED BY, PRODUCTS NOT FURNISHED BY FIRESTONE.

THIS LIMITED WARRANTY SUPERSEDES AND IS IN LIEU OF ALL OTHER WARRANTIES OF MERCHANTABILITY AND FITNESS FOR A PARTICULAR PURPOSE, AND FIRESTONE HEREBY DISCLAIMS ALL SUCH WARRANTIES. THIS LIMITED WARRANTY SHALL BE THE OWNER'S SOLE AND EXCLUSIVE REMEDY AGAINST FIRESTONE, AND FIRESTONE SHALL NOT BE LIABLE FOR ANY CONSEQUENTIAL, SPECIAL, INCIDENTAL OR OTHER DAMAGES INCLUDING, BUT NOT LIMITED TO, LOSS OF PROFITS OR DAMAGES TO THE BUILDING OR ITS CONTENTS OR THE ROOF DECK. THIS LIMITED WARRANTY CANNOT BE AMENDED, ALTERED OR MODIFIED IN ANY WAY EXCEPT IN WRITING SIGNED BY AN AUTHORIZED OFFICER OF FIRESTONE. NO OTHER PERSON HAS ANY AUTHORITY TO BIND FIRESTONE WITH ANY REPRESENTATION OR WARRANTY WHETHER ORAL OR WRITTEN.

FIRESTONE BUILDING PRODUCTS COMPANY, LLC
By: **Chris Huettig**

Authorized Signature: _____

Title: **Director, Quality Building Services**

BUILDING ENVELOPE CARE AND MAINTENANCE GUIDE
(For Red Shield Warranted Roofing Systems)

Congratulations on your purchase of a Firestone Roofing System! Your roof is a valuable asset that should be properly maintained. **Firestone Building Products recommends that all roofs and roofing systems receive periodic inspections and maintenance to ensure that they perform as designed.**

1. The roof should be inspected at least twice yearly and after any severe storms. A record of all inspection and maintenance activities should be maintained, including a listing of the date and time of each activity as well as the identification of the parties performing the activity.
2. Proper maintenance and good roofing practice require that ponded water (defined as water standing on the roof forty-eight hours after it stops raining) not be allowed on the roof. Roofs should have slope to drain, and all drain areas must remain clean. Bag and remove all debris from the roof since such debris can be quickly swept into drains by rain. This will allow for proper water run-off and avoid overloading the roof.
3. The Firestone Roofing System should not be exposed to acids, solvents, greases, oil, fats, chemicals and the like. If the Firestone Roofing System is in contact with any such materials, these contaminants should be removed immediately and any damaged areas should be inspected by a Firestone Licensed Applicator and repaired if necessary.
4. The Firestone Roofing System is designed to be a waterproofing membrane and not a traffic surface. Roof traffic other than periodic traffic to maintain rooftop equipment and conduct periodic inspections should be prohibited. In any areas where periodic roof traffic may be required to service rooftop equipment or to facilitate inspection of the roof, protective walkways should be installed by a Firestone Licensed Applicator as needed to protect the roof surface from damage.
5. Firestone recommends periodic maintenance for some roofing membranes:
   a. **Smooth-surfaced Firestone APP membranes** should be coated with an approved liquid coating, such as Firestone Aluminum Roof Coating or Firestone AcryliTop applied in accordance with Firestone specifications, in order to maximize the service life of the membrane. If this coating is not applied as part of the initial roofing installation, it should be applied within the first five years after the roof is installed to help protect the membrane from surface crazing and cracking. In addition, this coating should be maintained as needed to re-coat any areas that have blistered, peeled or worn through.
   b. **Granule-surfaced Firestone APP and SBS membranes** do not normally need surface maintenance other than periodic inspection for contaminants, cuts or punctures. If areas of granular loss are discovered during inspection, these areas should be coated with Firestone AcryliTop or other Firestone-approved coating applied in accordance with Firestone specifications.
   c. **Gravel-surfaced Firestone BUR membranes** do not normally need surface maintenance other than periodic inspection for contaminants or damage. If areas of gravel loss are discovered during inspection, gravel shall be reinstalled into hot asphalt to protect the surface of the membrane. Coatings on smooth surface BUR membranes shall be maintained as needed to re-coat any areas that have blistered, peeled or worn through.
   d. **Firestone EPDM and TPO roofing membranes** do not normally need surface maintenance other than periodic inspection for contaminants, cuts or punctures. Occasionally, approved liquid roof coatings, such as Firestone AcryliTop, are applied to the surface of EPDM membranes in order to provide a lighter surface color. Such coatings do not need to be maintained to assure the performance of the underlying EPDM roof membrane, but some maintenance and re-coating may be necessary in order to maintain a uniform surface appearance.
   e. **Firestone Una-Clad metal roofing panels and trim** do not normally need surface maintenance other than periodic inspection for contaminants or damage. In addition, periodic cleaning of the surface may be needed to remove dirt and maintain the aesthetic appearance of the coated metal. Simple washing with plain water using hoses or pressure spray equipment is usually adequate. If cleaning with agents other than water is contemplated, several precautions should be observed: (1) do not use wire brushes, abrasives, or similar cleaning tools which will mechanically abrade the coating surface, and (2) cleaning agents should be tested in an inconspicuous area before use on a large scale.
6. All metal work, including counter-flashings, drains, skylights, equipment curbs and supports, and other Firestone brand rooftop accessories should be properly maintained at all times. Particular attention should be paid to sealants at joints in metal work and flashings. If cracking or shrinkage is observed, the joint sealant should be removed and replaced with new sealant.
7. Any alterations to the roof, including but not limited to roof curbs, pipe penetrations, roof-mounted accessories, and tie-ins to building additions must be performed by a licensed Firestone Licensed Applicator and reported to Firestone. Additional information and reporting forms for roof alterations are available at www.firestonebpco.com.
8. Should you experience a leak:
   (a) Check for the obvious: clogged roof drains, loose counterflashings, broken skylights, open grills or vents, broken water pipes.
   (b) Note conditions resulting in leakage. Heavy or light rain, wind direction, temperature and time of day that the leak occurs are all-important clues to tracing roof leaks. Note whether the leak stops shortly after each rain or continues to drip until the roof is dry. If you are prepared with the facts, the diagnosis and repair of the leak can proceed more rapidly.
   (c) Contact Firestone Warranty Claims at 1-800-830-5612 as soon as possible...but please don't call until you are reasonably sure that the Firestone Roofing System is the cause of the leak.

Firestone feels that the preceding requirements will assist you, the building owner, in maintaining a watertight roof for many years. Your roof is an investment, and maintenance is essential to maximize your return on this important investment.

Firestone
BUILDING PRODUCTS
NOBODY COVERS YOU BETTER.©
250 West 96th Street – Indianapolis, IN 46260
1-800-428-4442 * 1-317-575-7000 * FAX 1-317-575-7100
www.firestonebp.com

One Year Certificate of Warranty

The undersigned **SubContractor** absolutely and unconditionally warrants and guarantees the materials for its portion of the work to be and remain free from defects for a period of one year from the date of execution of the **Certificate of Substantial Completion,** as required by the Contract Documents for the project, unless a longer guarantee period is specifically called for in the plans and specifications.

Supplier: **ACCENT LANDSCAPE CONTRACTORS, INC.**

Materials Supplied: **Landscape & Irrigation**

The work was installed and/or supplied for **Mick Rich Contractors (contractor)** at **Kirtland AFB, NM (Owner), Mid-Plume Treat System**. The Supplier hereby agrees to repair or replace any or all of its product, together with any other adjacent work which may be displaced in so doing, that may prove to be defective within a period of one year from the date of execution of **Certificate of Substantial Completion,** without any expense whatsoever to the Owner, ordinary wear and tear and unusual abuse or neglect expected.

In the event of the Suppliers failure to comply with the above-mentioned conditions and within ten (10) calendar days after being notified in writing by the Owner, Supplier does hereby authorize Owner to proceed to have said defects repaired and made good at Suppliers sole expense and Supplier will reimburse the Owner upon demand. Repair or replacement of work will carry an additional one year warranty from the date of said repairs or replacement.

Supplier: **ACCENT LANDSCAPE CONTRACTORS, INC.**

By: Jose L. Aguilar

Its: Vice President

Date: 2-23-16

Sworn to and subscribed before me this 23 day of February, 2016

Notary Public: Veronica Ruiz

My Commission Expires: May 22, 2019

Official Seal
VERONICA RUIZ
Notary Public
State of New Mexico
My Commission Expires 5-22-19

90 Cutler Drive • P.O. Box 540445
North Salt Lake, Utah 84054-0445
Phone: (800) 825-1948 • Fax: (801) 292-4164
www.vfcinc.com
www.z-pen.com

"Lightning Protection and Grounding Solutions for Industry"

Atlanta, GA
P:(252) 213-9900

Dallas, TX
1240 Texan Trail
Ste 108
Grapevine, TX 76501
P: (817) 488-4788
F: (817) 488-4757

Denver, CO
1500 W. Hampden Ave
Ste 4J
Sheridan, CO 80110
P: (303) 649-4905
F: (303) 649-4906

Hamilton, NJ
200 Whitehead Rd
Bldg A Ste 219
Hamilton, NJ 08619
P: (609) 781-0382

Las Vegas, NV
Local Representative
P: (702) 461-7739

Phoenix, AZ
425 South 48th Street
Ste 110
Tempe, AZ 85281
P: (480) 966-0175
F: (480) 966-0184

Raleigh / Durham, NC
112-A Wheaton Dr
Youngsville, NC 27596
P: (919) 556-0685
F: (919) 556-0636

Salt Lake City, UT
90 Cutler Drive
North Salt Lake, UT 84054
P: (801) 292-2956
F: (801) 292-4164

San Antonio, TX
Local Installer
P: (214) 316-3126

Seattle, WA
P:(303) 243-2586

Torrance, CA
3547 Voyager Street
Ste 204
Torrance, CA 90503
P: (800) 962-2610

Spare Parts List

Depending upon the size of the facility, it may prudent to maintain an inventory of spare parts. If desired, please contact VFC. for recommendations, specific to the facility, of a spare parts list.

Warranty

All VFC materials are warranted for a period of 1-year from the date of installation, against defects in manufacturing quality. Additional project specifications or contract requirements may apply. In the event of a warranty request, please notify VFC at the earliest possible convenience by fax for replacement of the individual item or items. This warranty does not cover adhesives, sealants, or chemicals that may or may not have been used in the installation of the system, whether or not they were supplied by VFC. For warranty information on these products, please see their individual manufacturers.

Manufacturer Contact List

VFC (Headquarters)
90 Cutler Drive
P.O. Box 540445
*Email*service@vfcinc.com
North Salt Lake, UT 84054
*Internet:*http://www.vfcinc.com
U.S.A.

Phone: (801) 292-2956
Fax: (801) 292-4164

Beaty Masonry Company LLC
6219 Corona Ave, NE
Albuquerque, NM 87113
Ph : 505-856-1800

Letter of Transmittal

To: Jeff Henderson
Mick Rich Contractors, Inc.
8401 Firestone Lane NE
Albuquerque, NM 87113
Ph: (505)823-9782 Fax: (505)823-9783

Transmittal #: 4
Date: 2/24/2016
Job: 02-1529 KAFB Bulk Fuel Facility

Subject: Closeout

WE ARE SENDING YOU
☑ Attached
☐ Under separate cover via None the following items:

☐ Shop drawings ☐ Prints ☐ Plans ☐ Samples
☐ Copy of letter ☐ Change order ☐ Specifications ☐ Other

Document Type	Copies	Date	No.	Description
Warranty Letter	1	2/24/16		For closeout

THESE ARE TRANSMITTED as checked below:

☐ For approval ☐ Approved as submitted ☐ Resubmit ___ copies for approval
☑ For your use ☐ Approved as noted ☐ Submit ___ copies for distribution
☑ As requested ☐ Returned for corrections ☐ Return ___ corrected prints
☐ For review and comment ☐ Other
☐ FOR BIDS DUE ☐ PRINTS RETURNED AFTER LOAN TO US

Remarks:

Copy To:

From: Lydia Honan (Beaty Masonry Company, LLC) **Signature:** Lydia Honan

If enclosures are not as noted, kindly notify us at once.

BEATY MASONRY COMPANY, LLC

SUBCONTRACTOR'S STATEMENT OF WARRANTY

February 24, 2016

Mick Rich Contractors
8401 Firestone Lane NE
Albuquerque, NM 87113

Project: KAFB Bulk Fuels Facility
Kirtland Air Force Base
5202 Randolph Ave. SE
Albuquerque, NM 87117
(Beaty Job #1529)

Beaty Masonry Company, LLC. ("Beaty") hereby warrants all materials and workmanship provided on the above-referenced project for a period of one (1) year from the Date of Substantial Completion. Beaty agrees to repair, at no charge to the Owner, any defective materials and/or workmanship as required during this period.

Beaty Masonry Company, LLC

Tim Stephenson
President

The Genuine. The Original.

OVERHEAD DOOR®

RHX®

Commercial Operator Limited Warranty

The authorized distributor of Overhead Door Corporation products, whose name appears below ("Seller") warrants to the original purchaser of the model RHX® Trolley or RHX® Hoist commercial door operator ("Product"), subject to all of the terms and conditions hereof, that the Product and all components thereof will be free from defects in materials and workmanship under normal use for the following components thereof will be free from defects in materials and workmanship under normal use for the following period(s), measured from the date of installation:

- Two (2) years

Seller's obligation under this warranty is specifically limited to repairing or replacing, at its option, any part which is determined by Seller to be defective during the applicable warranty period. Any labor charges are excluded and will be the responsibility of the purchaser.

This warranty is made to the original purchaser of the Product only, and is not transferable or assignable. This warranty applies only to an operator which is installed in commercial or industrial building applications. This warranty does not apply to any unauthorized alteration or repair of the Product, or to any Product or component which has been damaged or deteriorated due to misuse, neglect, accident, failure to provide necessary maintenance, normal wear and tear, or acts of God or any other cause beyond the reasonable control of Seller.

THIS WARRANTY IS EXCLUSIVE AND IN LIEU OF ANY OTHER WARRANTIES, EITHER EXPRESS OR IMPLIED, INCLUDING BUT NOT LIMITED TO ANY IMPLIED WARRANTY OF MERCHANTABILITY OR FITNESS FOR A PARTICULAR PURPOSE.

IN NO EVENT SHALL SELLER BE RESPONSIBLE FOR, OR LIABLE TO ANYONE FOR, SPECIAL, INDIRECT, COLLATERAL, PUNITIVE, INCIDENTAL OR CONSEQUENTIAL DAMAGES, even if Seller has been advised of the possibility of such damages. Such excluded damages include, but are not limited to, loss of goodwill, loss of profits, loss of use, cost of any substitute product, interruption of business, or other similar indirect financial loss.

Claims under this warranty must be made promptly after discovery, within the applicable warranty period, and in writing to the Seller or to the authorized distributor or installer whose name and address appear below. The purchaser must allow Seller a reasonable opportunity to inspect any Product claimed to be defective prior to removal or any alteration of its condition. Proof of the purchase and/or installation date, and identification as the original purchaser, may be required.

ORIGINAL PURCHASER Mick Rich

INSTALLATION ADDRESS KAFB

SELLER: Overhead Door Company

SELLER'S ADDRESS: 5656 Pasadena Ave NE, Albuquerque, NM 87113

FACTORY ORDER #: 749346

DATE OF INSTALLATION: 12-15-15

SIGNATURE OF SELLER: Chris Duggins

Digitally signed by Chris Duggins
DN: cn=Chris Duggins, o=Overhead Door of Albuquerque, ou, email=chris.duggins@dhpace.com, c=US
Date: 2016.02.23 16:41:22 -07'00'

C900-832

Air Distribution Technologies
Terms and Conditions

Air Distribution Technologies Global Terms and Conditions of Sale

GLOBAL TERMS AND CONDITIONS OF SALE

1. **Applicability**. These Global Terms and Conditions of Sale (these "**Terms**") are the only terms that govern the sale of the goods ("**Goods**") by the seller ("**Seller**") and the buyer ("**Buyer**"), each of which is identified in the accompanying quotation, credit application, proposal, order acknowledgement, or invoice (the "**Sales Confirmation**"). These Terms and the Sales Confirmation comprise the entire agreement between the parties (collectively, this "**Agreement**") and supersede all prior or contemporaneous understandings, agreements, negotiations, representations and warranties, and communications, both written and oral. These Terms prevail over any of Buyer's general terms and conditions of purchase, regardless whether or when Buyer submitted its purchase order or such terms. Seller's fulfillment of Buyer's order does not constitute, and shall not be deemed to constitute, acceptance of any of Buyer's terms and conditions and does not serve to modify or amend these Terms.

2. **Cancellation**. Cancellation or modifications of orders are subject to Seller's prior written consent in each instance.

3. **Price**. Unless otherwise set forth in the Sales Confirmation, the price of the Goods is based on the prices quoted in Seller's product catalog. All stated prices are exclusive of any taxes, fees, duties, and levies, however designated or imposed, including but not limited to value-added and withholding taxes that are levied or based upon the amounts paid under this Agreement (collectively, "Taxes"). Any Taxes related to the Goods purchased pursuant to this Agreement are the responsibility of Buyer (excluding taxes based on Seller's net income), unless Buyer presents an exemption certificate acceptable to Seller and the applicable taxing authorities. If possible, Seller will bill Taxes as a separate item on the invoice presented to Buyer. If any exemption certificate presented by Buyer is held to be invalid, then Buyer shall pay Seller the amount of the Tax and any penalties and interest related thereto.

4. **Payment; Taxes**. Unless otherwise set forth in the Sales Confirmation, Buyer shall pay all invoiced amounts within thirty (30) days following the date of Seller's invoice. Unpaid amounts shall accrue interest at a rate equal to the lesser of one and one-half percent (1.5%) per month and the maximum rate permitted by applicable law, from due date until paid, plus Seller's reasonable costs of collection. Seller reserves all other rights granted to a seller under the Uniform Commercial Code ("UCC") for Buyer's failure to pay for the Goods or any other breach by Buyer of these Terms. In addition to all other remedies available to Seller (which Seller does not waive by the exercise of any rights hereunder), Seller may suspend the delivery of any Goods if Buyer fails to pay any amounts when due and such failure continues for five (5) days following Buyer's receipt of notice thereof. Buyer may not withhold payment of any amounts due and payable as a set-off of any claim or dispute with Seller, regardless of whether relating to Seller's breach, bankruptcy, or otherwise.

5. **Delivery; Shipping.**

   Seller will deliver the Goods within a reasonable time after receiving Buyer's purchase order, subject to their availability. Seller shall not be liable for any delays, loss, or damage in transit. Unless otherwise set forth in the Sales Confirmation, Seller shall deliver the Goods, EX WORKS (Incoterms® 2010) at the location specified in the Sales Confirmation (the "**Delivery Location**"), using Seller's standard methods for packaging and shipping same. Buyer shall take delivery of the Goods within three (3) days of Seller's notice that the Goods have been delivered to the Delivery Location. If Buyer fails to take delivery of the Goods within this three (3) day period Buyer shall pay Seller for the Goods and all storage expenses incurred by Seller. Seller may, in its sole discretion, without liability or penalty, make partial shipments of Goods to Buyer. Each shipment will constitute a separate sale, and Buyer shall pay for the units shipped whether such shipment is in whole or partial fulfillment of Buyer's purchase order.

   The quantity of any installment of the Goods, as recorded by Seller on the dispatch from Seller's place of business, is conclusive evidence of the quantity received by Buyer upon delivery, unless Buyer provides conclusive evidence to the contrary. Seller shall not be liable for any non-delivery of the Goods to the Delivery Location, unless Buyer gives written notice to Seller of such non-delivery within five (5) days following the date that Buyer would, in the ordinary course of business, have received the Goods. Seller's liability for any non-delivery of the Goods shall be limited to replacing the Goods within a reasonable time or adjusting the invoice respecting such Goods to reflect the actual quantity delivered.

6. **Title; Risk Of Loss**.

   (a) Title passes to Buyer upon delivery of the Goods at the Delivery Location. As collateral security for the payment of the purchase price of the Goods, Buyer hereby grants to Seller a lien on, and security interest in, and to all of the right, title, and interest of Buyer in, to, and under the Goods, wherever located, and whether now existing or hereafter arising or acquired from time to time, and in all accessions thereto and replacements or modifications thereof, as well as all proceeds (including insurance proceeds) of the foregoing. The security interest granted under this provision constitutes a purchase money security interest under the Uniform Commercial Code as adopted in the State of Texas.

   (b) Risk of loss or damage to the Goods passes to Buyer in accordance with the applicable Incoterm. If Buyer fails to accept delivery of any of the Goods on the date set forth in Seller's notice that Seller has delivered the Goods to the Delivery Location, or if Seller is unable to deliver the Goods to the Delivery Location on such date because Buyer has failed to provide appropriate instructions, documents, licenses, or authorizations, then: (i) risk of loss to the Goods shall pass to Buyer; (ii) the Goods shall be deemed to have been delivered to Buyer; and (iii) Seller, at its option, may store the Goods until Buyer takes possession of them, at which time Buyer shall be liable for all costs and expenses resulting from such failure (including but not limited to the cost of storage and insurance).

7. **Inspection; Rejection of Goods**

   (a) As used in this Section 7, "**Nonconforming Goods"** means only the following: (i) the items shipped are different from those identified in Buyer's purchase order; or (ii) the labels or packaging of the items incorrectly identifies them. Buyer shall inspect the Goods within five (5) days following receipt thereof (the "**Inspection Period**"). If, prior to the end of the Inspection Period, Buyer fails to notify Seller in writing of any Nonconforming Goods and to furnish Seller such written evidence or other documentation as reasonably required by Seller, then Buyer will be deemed to have accepted the Goods.

   (b) If Buyer timely and properly notifies Seller of any Nonconforming Goods, then Seller shall, in its sole discretion, (i) replace such Nonconforming Goods with conforming Goods or (ii) credit or refund the purchase price for such Nonconforming Goods, together with any reasonable shipping and handling expenses incurred by Buyer in connection therewith. Buyer shall ship, at Seller's expense and risk of loss, the Nonconforming Goods to the Delivery Location. If Seller exercises its option to replace Nonconforming Goods, then after receiving Buyer's shipment of Nonconforming Goods pursuant to Seller's instructions, Seller shall, at Seller's expense and risk of loss, deliver the replaced Goods to the Delivery Location.

   (c) Buyer acknowledges and agrees that the remedies set forth in this Section 7 are Buyer's exclusive remedies for the delivery of Nonconforming Goods, and except as set forth in this Section 7, Buyer has no right to return the Goods to Seller without Seller's written authorization

8. **Limited Warranty**.

   (a) Unless otherwise set forth in the Sales Confirmation, Seller warrants to Buyer, for a period of twelve (12) months following the date of delivery to the Delivery Location (the "**Warranty Period**"), that the Goods will be free from defects in material and workmanship. Notwithstanding the foregoing, the Warranty Period for consumable Goods shall in no event exceed recommended replacement intervals set forth in the Instructions (hereinafter defined). If, prior to the expiration of the Warranty Period, Buyer informs Seller in writing of any breach of this limited warranty, then Seller may repair or replace the Goods that gave rise to such breach or, in Seller's sole and exclusive discretion, refund the amounts that Buyer paid for such Goods.

   (b) The foregoing limited warranties do not apply to (i) any defect in Goods not manufactured by Seller; and (ii) any Goods manufactured according to Buyer's specifications.

   (c) Buyer shall bear the costs of access, de-installation, re-installation and transportation of the Goods to Seller and back to Buyer. Any repair or replacement pursuant to this limited warranty shall not extend the Warranty Period. Seller does not warrant the Goods, or any repaired or replacement parts, against normal wear and tear. This limited warranty and remedy are expressly conditioned upon: (i) Buyer's payment of the purchase price in full, (ii) Buyer giving written notice of the defect, reasonably described, to Seller within ten (10) days of the time when Buyer discovers or ought to have discovered the defect, (iii) the storage, installation, operation, use, and maintenance of the Goods in compliance with the published specifications and instructions provided by Seller or its suppliers or subcontractors (the "**Instructions**"), (iv) the existence of proper records of Buyer's operation and maintenance of the Goods during the Warranty Period, (v) Buyer providing Seller with a reasonable opportunity to examine the Goods and the aforementioned records, and (vi) the absence of any unauthorized modification or repair of the Goods.

   (d) Before any test may be used to evaluate the Goods, Buyer shall: (i) provide Seller with reasonable written notification of such test, (ii) allow Seller to be present during such test, and (iii) receive Seller's consent to the conditions of such test, which consent will not be unreasonably withheld. If a test is performed on the Goods, and Seller has not consented to the conditions of such test, then this limited warranty shall be void.

   (e) **THE REMEDIES SET FORTH IN THIS SECTION 8 ARE BUYER'S SOLE AND EXCLUSIVE REMEDIES FOR ANY FAILURE OF SELLER TO COMPLY WITH ITS OBLIGATIONS UNDER THIS AGREEMENT, INCLUDING ANY BREACH OF THE LIMITED WARRANTY SET FORTH IN THIS SECTION 8**. Correcting any defect in the manner set forth in this Section 8 shall constitute complete fulfillment of Seller's obligations and liabilities under the Agreement following the delivery of the Goods, regardless of whether a claim is based in contract law, tort law (including negligence, strict liability or otherwise), or other legal theory. **THE LIMITED WARRANTY SET FORTH IN THIS SECTION 8 IS EXCLUSIVE AND IN LIEU OF ALL OTHER WARRANTIES, WHETHER STATUTORY, EXPRESS, OR IMPLIED. EXCEPT AS SET FORTH IN THIS SECTION 8, SELLER MAKES NO EXPRESS OR IMPLIED WARRANTIES, INCLUDING, BUT NOT LIMITED TO ANY WARRANTIES OF MERCHANTABILITY, NON-INFRINGEMENT, OR FITNESS FOR A PARTICULAR PURPOSE, OR ANY WARRANTIES ARISING FROM COURSE OF DEALING OR USAGE OF TRADE**. Any other oral or written statements, whether contained in general advertising or other printed material, do not constitute warranties, and Buyer agrees that it is not entering into the Agreement in reliance upon any such statements.

9. **Indemnification**. Buyer shall defend, indemnify, and hold harmless Seller and its parent company, their respective subsidiaries, affiliates, successors, and assigns and their respective directors, officers, shareholders, and employees from and against any loss, injury, death, damage, liability, claim, deficiency, action, judgment, interest, award, penalty, fine, cost, fees (including import and export customs fees), or expense (including reasonable attorney and professional fees and costs, and the cost of enforcing any right to indemnification hereunder and the cost of pursuing any insurance providers) arising out of or occurring in connection with the negligence or willful misconduct of Buyer or its employees or agents, including but not limited to: (i) any misuse or modification of the Goods by Buyer or its employees or agents, (ii) any act (or failure to act) by Buyer or its employees or agents in contravention of any safety procedures or instructions that Seller provides to Buyer or its employees or agents, or (iii) the failure to store, install, operate, or maintain the Goods in accordance with the Instructions.
10. **Infringement**.

    (a) Seller will defend, at its own expense, any action against Buyer brought by a third party to the extent that the action is based upon a claim that the Goods infringe any U.S. patents or copyrights, or misappropriate any trade secrets, of a third party. Seller will pay those costs and damages finally awarded against Buyer in any such action that are specifically attributable to such claim or those costs and damages agreed to in a monetary settlement of such action.

    (b) The foregoing obligations are conditioned on Buyer (i) notifying Seller promptly in writing of such action, (ii) making no admission of liability and giving Seller sole control of the defense thereof and any related settlement negotiations, and (iii) cooperating and, at Seller's request and expense, assisting in such defense.

    (c) If the Goods become, or in Seller's opinion are likely to become, the subject of an infringement claim, Seller may, at its option and expense, either (i) procure for Buyer the right to continue using such Goods, (ii) replace or modify such Goods so that they become non-infringing, or (iii) accept return of such Goods and refund Buyer the amounts actually paid by Buyer to Seller for such Goods.

    (d) Notwithstanding the foregoing, Seller will have no obligation under this Section 10 or otherwise with respect to any infringement claim based upon any: (i) misuse or modification of the Goods by Buyer or its employees or agents, (ii) use of the Goods in combination with other materials, goods, products, or services for which the Good were not intended to be used, (iii) failure of Buyer to implement any update provided by Seller that would have prevented the claim, (iv) Goods that Seller made to Buyer's specifications or designs.

(e) **THIS SECTION 10 STATES SELLER'S ENTIRE LIABILITY AND BUYER'S EXCLUSIVE REMEDY FOR INFRINGEMENT CLAIMS AND ACTIONS.**

11. **Limitation of Liability**.

    (a) **IN NO EVENT WILL SELLER BE LIABLE FOR ANY INDIRECT, SPECIAL, INCIDENTAL, EXEMPLARY, OR CONSEQUENTIAL DAMAGES, INCLUDING BUT NOT LIMITED TO ANY LOSS OF USE OR UNDER-UTILIZATION OF LABOR OR FACILITIES, LOSS OF REVENUE OR ANTICIPATED PROFITS, LOST DATA, AND COSTS OF PROCUREMENT OF SUBSTITUTE GOODS, REGARDLESS OF THE FORM OF ACTION, WHETHER IN CONTRACT, TORT, OR OTHERWISE, EVEN IF SELLER HAS BEEN ADVISED OF THE POSSIBILITY OF SUCH DAMAGES. SELLER'S TOTAL LIABILITY FOR ALL CLAIMS ARISING OUT OF, OR RELATING TO, THE GOODS SHALL BE LIMITED TO GENER¬AL MONEY DAMAGES IN AN AMOUNT NOT TO EXCEED THE TOTAL PURCHASE PRICE FOR THE GOODS GIVING RISE TO THE CLAIM.**

    (b) The limitation of liability set forth in this Section 11 shall not apply to: (i) liability resulting from Seller's negligence or willful misconduct or (ii) death or bodily injury resulting from Seller's acts or omissions.

12. **Design Changes**. Seller reserves the right to alter, modify, or redesign its products without any obligation to replace previous shipments to Buyer.

13. **No License**. The sale of the Goods shall not confer upon Buyer any license, express or implied, under any patents, trademarks, trade names, or other proprietary rights owned or controlled by Seller, its subsidiaries, affiliates, or suppliers; it being specifically understood and agreed that all such rights are reserved to Seller, its subsidiaries, affiliates, or suppliers. Without limiting the foregoing, Buyer will not, without Seller's prior written consent, use any trademark or trade name of Seller in connection with any the Goods, other than with respect to the resale of the Goods pre-marked or packaged by or on behalf of Seller.

14. **Termination**. In addition to any other remedies that Seller may have, Seller may terminate this Agreement with immediate effect upon written notice to Buyer, if Buyer: (i) fails to pay any amount when due under this Agreement and such failure continues for five (5) days after Buyer's receipt of written notice of nonpayment; (ii) has not otherwise performed or complied with any of these Terms, in whole or in part; or (iii) becomes insolvent, files a petition for bankruptcy or commences or has commenced against it proceedings relating to bankruptcy, receivership, reorganization or assignment for the benefit of creditors.

15. **Confidentiality**. All non-public, confidential, or proprietary information of Seller, including but not limited to specifications, samples, patterns, designs, plans, drawings, documents, data, business operations, customer lists, pricing, discounts or rebates, that Seller discloses to Buyer, whether disclosed orally or disclosed or accessed in written, electronic or other form or media, and regardless of whether marked, designated, or otherwise identified as "confidential," in connection with the Agreement is confidential, solely for the use of performing the Agreement, and may not be disclosed or copied unless authorized in advance by Seller in writing. Upon Seller's request, Buyer shall promptly return all documents and other materials received from Seller. Seller shall be entitled to injunctive relief for any violation of this Section 15, without having to post bond or establish the insufficiency of a remedy at law. This Section 15 does not apply to information that is: (a) in the public domain; (b) known to Buyer at the time of disclosure; or (c) rightfully obtained by Seller on a non-confidential basis from a third party.

16. **Force Majeure**. Seller shall not be liable for any failures or delays caused by strikes, differences with workers, or any causes beyond the reasonable control of Seller, including but not limited to fires, floods, accidents, action of any governmental authority, war, insurrection or riots, or short¬ages of labor, energy, raw materials, production facilities, or transportation. Where delays or failures are caused by labor difficulties, Seller shall not be obligated to seek or obtain any settlement that, in Seller's sole judgment, is not in Seller's best interest.

17. **Compliance**. Each party shall comply with all applicable laws, regulations, and ordinances. Without limiting the foregoing, in no event shall Buyer take any action(s) contrary to the export and import laws and regulations in effect as of the date of shipment of the Goods of any country involved in the transactions contemplated by the Agreement.

18. **Governing Law and Jurisdiction**.

    (a) If both parties are US residents, exclusive jurisdiction and venue for any action, suit, or proceeding concerning the Agreement or other documents related thereto shall be governed, enforced, and construed in accordance with the internal laws of the State of Texas, without giving effect to any choice or conflict of law provision or rule (whether of the State of Texas or any other jurisdiction) that would cause the application of the laws of any jurisdiction other than those of the State of Texas. Any legal suit, action, or proceeding arising out of or relating to the Sales Confirmation, these Terms, or the documents related thereto shall be instituted in the United States District Court for the Northern District of Texas, Dallas Division, or the courts of the State of Texas serving the City of Richardson and County of Collin. Each party irrevocably submits to the exclusive jurisdiction of such courts in any such suit, action, or proceeding. Each party waives its rights to a jury trial of any claim or cause of action based upon, or arising out of, the Order, these Terms, or the documents related thereto, or their respective subject matter.

    (b) If neither party is a Chinese entity and Seller is not a U.S. entity, then any controversy or claim arising out of or relating to this Agreement including, but not limited to, its breach, existence, validity, legality, enforceability, interpretation, performance, nullity, termination or expiration, (a "**Controversy**") will be settled by binding arbitration; and notwithstanding its place of execution or performance, this Agreement will be governed by, and construed under and in accordance with, the Laws of the State of New York, USA, irrespective of any laws regarding choice or conflict of laws that direct the application of the laws of another jurisdiction. The place of arbitration will be New York, New York, under the rules prescribed by the International Centre for Dispute Resolution ("**ICDR**") in accordance with its ICDR Rules. Unless the parties agree to a single arbitrator, the arbitration will be heard and determined by three arbitrators, who will be appointed pursuant to the ICDR Rules. The arbitration proceedings will be conducted in the English language. The award will be rendered in writing with the reasons detailed. The award may be in the nature of money damages, injunctive relief, or specific performance as decided by the arbitrator. Either party may initiate arbitration by notifying the other in writing. The arbitrator's ruling and award from such arbitration is final; the parties consent to judgment upon the award; and the award may be entered in any court of competent jurisdiction.

    (c) If either party is a Chinese entity, the laws of China govern this Agreement, irrespective of any laws regarding choice or conflict of laws that direct the application of the laws of another jurisdiction. The Controversy will be submitted to the China International Economic and Trade Arbitration Commission in Shanghai ("**CIETAC**") for final resolution by arbitration in accordance with the rules and procedures of CIETAC. The CIETAC tribunal will consist of three (3) arbitrators. The parties will at all times comply with, and observe all requirements and rulings of, CIETAC made in relation to any Controversy submitted to CIETAC for resolution. Submission of evidentiary documents may be in copies without the need of notarization unless specifically ordered by the CIETAC tribunal. Any interim decisions or orders by the CIETAC tribunal will be binding, and sanctions may be given on failures of any party in implementing such interim decision or order. Any award or determination by the CIETAC tribunal is final and binding on both parties. The arbitration proceedings will be conducted in the English language. The United Nations Convention on Contracts for the International Sale of Goods does not apply to the Agreement or the documents related thereto.

19. **Choice of Language**. It is by the express intention of the parties hereto that the present Agreement and all its related documents be drafted in English. Il est de l'intention expresse des parties à la présente Convention (connaissement, bon de commande, bon de conditionnement ou facture) et tout document s'y rattachant soient écrit en langue anglaise.

20. **Survival**. In addition to any other term whose context may so require, the terms contained in Sections 1, 4, 6, 7, 8, 9, 10, 11, 15, 18, 19, 20, and 21 will survive any cancellation of the Sales Confirmation.

21. **Miscellaneous**. Buyer acknowledges that is has not been induced to purchase any the Goods from Seller by any representation or warranty not expressly set forth in this Agreement. These Terms and the Sales Confirmation constitute the entire agreement of the parties and supersede all existing agree¬ments and all other oral or written communications between them concerning its subject matter. None of the Terms may be added to, modified, superseded, or otherwise altered, except by a written docu¬ment signed by an authorized representative of Seller that specifically references these Terms and states that it modifies them. If there is a conflict between the provisions of the Sales Confirmation and these Terms, then the terms of the Sales Confirmation shall govern. No waiver by Seller of any of the provisions of these Terms is effective unless explicitly set forth in writing that specifically references these Terms and is signed by Seller. No failure to exercise, or delay in exercising, any rights, remedy, power, or privilege arising from these Terms operates or may be construed as a waiver thereof. No single or partial exercise of any right, remedy, power, or privilege hereunder precludes any other or further exercise thereof or the exercise of any other right, remedy, power or privilege. The Section headings contained in these Terms are intended for convenience of reference only and shall not affect the inter¬pretation of any provision. If any provision of this Agreement is held to be prohibited or unenforceable, such provision will be changed and interpreted to accomplish the objectives of such provision to the greatest extent possible under applicable law and the remaining provisions will continue in full force and effect. Buyer may not assign this Agreement or any quotation or order for the Goods, in whole or in part, without Seller's prior written consent.

Rev. 06/17/13 ADTI GLOBAL TERMS AND CONDITIONS OF SALE

©Copyright 2013 Air Distribution Technologies, All rights reserved.

Scoggin Mechanical Industries, Inc.

HVAC – Commercial / Industrial Lic. 377350 MM-98 GB-98
3300 Princeton Dr. NE, Suite 4, Albuquerque, NM 87107

Office 505-433-4114 Fax 505-433-4783

PO Box 6615 Albuquerque, NM 87197

Date: 02-10-2016

Company/Client: U.S. Army Corps of Engineer District

Address: Albuquerque District Albuquerque, NM

Attention:

Project: KAFB Bulk Fuel Facility Phase IV Mid-Plume Pump & Treat System

5202 Randolph Avenue SE Albuquerque, NM 87117

Dear Sir,

Scoggin Mechanical Industries (SMII) scope of work for the referenced project was completed 02-10-2016, per our records. As of this date construction is sufficiently complete to provide beneficial use and otherwise has been completed in accordance with the Contract Documents.

General Terms of Our Warranty:

1. SMII is responsible for repair or replacement of any equipment we identify as being either defective or of poor workmanship.
2. Owner/End User is responsible for preventive maintenance, inspections, calibration, operation and other general maintenance tasks.
3. Warranty work will be performed during regular working hours, and is subject to availability of technicians on a first call, first response basis.
4. If we determine the problem is outside the scope of warranty and we provide work, a service call becomes billable to you.
5. SMII is not responsible for warranty coverage on any system repaired by others, abused, altered, misused, damaged by fire, flood, or force of nature, or which has not been reasonably and properly maintained.
6. Warranty requests are handled by calling 505-433-4114.
7. Please be advised that, pursuant to SMII's completion of our scope of work for this project the applicable warranty for this project will begin as of 02-10-2016, and will continue through 02-10-2017. Should you disagree with this date, please advise us within ten days of the date of this letter.

Sincerely,

Scoggin Mechanical Industries, Inc.

CENTURY CLUB CONSTRUCTION
8201 Golf Course Rd NW Suite D3-295, Albuquerque, NM 87120
Office (505) 344-1096 Fax (505) 847-3612

December 21, 2015

Mr. Mick Rich
Owner
Mick Rich Contractors, Inc
8401 Firestone Lane NE
Albuquerque, NM 87113

RE: Letter of Warranty for KAFB Bulk Fuel Facility

Mr. Rich,

As of December 20th, 2015, the above referenced project has been inspected and deemed Substantially Complete. This shall establish the beginning of the One Year Warranty Period. Century Club Construction, LLC shall warranty all materials and labor for the next year, ending on December 20th, 2016.

If you have any further questions, please call me on my cell phone, (505) 850-6190.

Sincerely,

Jeff Webster

President
Century Club Construction, LLC
8201 Golf Course Rd NW, Suite D3-295
Albuquerque, NM 87120
Office (505) 344-1096
Fax (505) 847-3612

jeff@centuryclubconstruction.com

Fliteway Technologies, Inc.

Operations and Maintenance Manual

QI4508 Rev 6

CB & I Federal Services
Pump and Treat Groundwater System
Bulk Fuels Facility
Kirtland AFB

2129 East Birchwood Ave. Cudahy, WI 53110

(414) 483-5600 1-800-236-3580 FAX (414) 483-1957

Fliteway Technologies, Inc.
2129 East Birchwood Ave.• Cudahy, WI 53110
(414) 483-5600 • 1-800-236-3580 • FAX (414) 483-1957

Q14508 Rev 6

CB&I Federal Services

Pump and Treat Groundwater Treatment System, Kirtland Air Force Base, Bulk Fuels Facility

- **One (1) Groundwater Treatment Feed Tank**
  - 6150 gallon steel tank, 122” Outer Diameter x 125” High
  - Interior Epoxy Coating for Potable Water
  - Exterior Polyurethane
  - Openings per drawing Tank Data Sheet supplied by customer
  - Conic roof
  - ¼” plate wall thickness
  - 24” man way
  - ~~One (1) Rosemount Liquid Level Transmitter [3051L-2-A-G0-M-D-21-A-J] (LIT-3101)~~
  - ~~Two (2) Flotech L-6EPS-S-S-S-3A Liquid level switches [L6EPS-S-S-3-A] (LSH-3100 LSL-3100)~~
  - Seismic calculations for anchoring the Tank

- **One (1) Feed Pump Skid**

  - Steel Base Skid (approximately 6’ by 10’) with Forklift pockets and Bolt down Tabs

  - Two (2) Gould ANSI Centrifugal Pumps (P-112A P-112B)
    - Gould ANSI Model 3196 MTI 2x3-6 with 15 HP TEFC Motors (Inverter Rated) each rated for 200 GPM at 100 TDH
    - Pumps plumbed in Parallel with 4” Steel piping with Valves, Flex connectors,
    - Ashcroft Pressure Gauges [P/N 45-1259-S-SL-04-60-#] (PI-3102) and Sample ports

  - Two (2) VFD’s installed in NEMA4 (High Voltage) Enclosure mounted and wired on Feed Pump Skid
    - One (1) 36” by 36” NEMA 4 Weigmann Enclosure and vent fan
    - Two (2) 20HP Allen-Bradley VFD’s [20BD027A0AYNAND0] (SIC-3102A SIC-3102B)
      - Each with HIM Module [20-HIM-A3] and Ether/IP COMM card [20-COMM-ER]
    - Two (2) 5% Line Reactors [1321-3R35-C]
    - Two (2) each ISC Model LR6304FAC15 Multi-Round Liquid Bag Filter Housings each with:
    - Carbon Steel housing (holds six (6) #2 size 7” by 32” Filter Bags
    - Each Rated for 1,200 GPM with 26.4 sq. ft. filtering area
    - 4” Flanged Inlet / Discharge Ports
    - 1” NPT drain
    - Buna N Seals on lid and baskets, differential, drain, and vent ports
    - Two part epoxy finish

- Davit cover lift
- Heavy Duty Legs
- HH Pressure Switch [Dwyer A1F-O-SS-1-2 with weather cover A-447] (PSH-3102)
- Two (2) Differential Pressure Indicators [45-1130SL-25-30#] across the bag filters (PDI-3102A/B)
- Bag Filters plumbed in Parallel with 4" Steel piping with Valves, Flex connectors, Ashcroft Pressure Gauges [P/N 45-1259-S-SL-04-60-#] (PI-3103) and Sample ports
- One (1) McCrometer 4" Flow Meter [P/N VM04QE03F-E1HS-V3] (40 to 900 GPM) with Local Display Transmitter and 4-20mA Output (FIT-3102)

- One (1) NEMA 4 Junction Box (Low Voltage) prewired with terminal strips to facilitate wiring to System Control Panels

- **One (1) Treated Water Storage Tank**
  - 6150 gallon steel tank, 122" Outer Diameter x 125" High
  - Interior Epoxy Coating for Potable Water
  - Exterior Polyurethane
  - Openings per drawing Tank Data Sheet supplied by customer
  - Conic roof
  - ¼" plate wall thickness
  - 24" man way
  - One (1) Rosemount Liquid Level Transmitter [P/N 3051L-2-A-G0-M-D-21-A-J] (LIT-3107)
  - Two (2) Flotech 6EPS-S-S-S-3A Liquid level switches [P/N L6EPS-S-S-3-A] (LSH-3106 LSL-3106)
  - Seismic calculations for anchoring the Tank

- **One (1) Treated Water Pump Skid**

  - Steel Base Skid (approximately 6' by 10') with Forklift pockets and Bolt down Tabs

  - One (1) Gould ANSI Centrifugal Pump (P-118)
    - Gould ANSI Model 3196 MTI 3x4-8G with 40 HP TEFC Motor (Inverter Rated) rated for 400 GPM at 180 TDH
    - Pump plumbed with 4" Steel piping with Valves, Flex connectors, Ashcroft [P/N 45-1259-S-SL-04-100-#] (PI-3108) Pressure Gauges and Sample ports

  - One (1) VFD Installed in NEMA4 (High Voltage) Enclosure mounted and wired on Treated Water Pump Skid
    - One (1) 36" by 36" NEMA 4 Weigmann Enclosure and vent fan
    - One (1) 50HP Allen-Bradley VFD [20BD065A0AYNAND0] (SIC-3108)
      - With HIM Module [20-HIM-A3] and Ether/IP COMM card [20-COMM-ER]
    - One (1) 5% Line Reactor [1321-3R80-C]

  - Two (2) each ISC Model LR6304FAC15 Multi-Round Liquid Bag Filter Housings each with:
    - Carbon Steel housing (holds six (6) #2 size 7" by 32" Filter Bags
    - Each Rated for 1,200 GPM with 26.4 sq. ft. filtering area
    - 4" Flanged Inlet / Discharge Ports
    - 1" NPT drain
    - Buna N Seals on lid and baskets, differential, drain, and vent ports
    - Two part epoxy finish

- Davit cover lift
- Heavy Duty Legs
- HH Pressure Switch [Dwyer A1F-O-SS-1-2 with weather cover A-447] (PSH-3108)
- Two (2) Differential Pressure indicators [45-1130SL-25-30#] across the bag filters (PDI-3108A/B)
- Bag Filters plumbed in Parallel with 4" Steel piping with Valves, Flex connectors, Ashcroft Pressure Gauges [P/N 45-1259-S-SL-04-100-#] (PI-3102) and Sample ports
- ~~One (1) McCrometer 4" Flow Meter [VM04QE03F-E1HS-V3] (40 to 900 GPM) with Local Display Transmitter and 4-20mA Output (FIT-3108)~~

- One (1) NEMA 4 Junction Box (Low Voltage) prewired with terminal strips to facilitate wiring to System Control Panel.

One (1) Air Compressor System
One (1) **Mattei Model AC-15 LX Air Compressor rated for 106 CFM at 115 PSIG**
- **20 HP 460 VAC Three Phase TEFC Motor**
- After Cooler
- Standard AC-15 Control Panel
- One (1) 1" Pressure Regulator [Norgen R17-801-RGLA]
- One (1) 1" Particulate Filter [Norgen F17-800-M3DA]
- One (1) 1" Coalescing Filter [Norgen F46-801-M0DA]
- One (1) Electronic Auto Drain
- Plumbed and tested.

- **Two (2) Day Factory functional and wet testing of System including temporary electrical connections from skid junction boxes to shop power**

- **Four (4) Day On-Site Installation Assistance**

- **Four (4) Day On-Site Startup Assistance**

Q14508R5 -CB&I

ITEM	MANUFACTURER	MODEL	FLITEWAY ASSIGNED SERIAL NUMBER	MANUFACTURER ASSIGNED SERIAL NUMBER
GROUNDWATER TREATMENT FEED TANK				
~~ROSEMOUNT TRANSMITTER~~	~~ROSEMOUNT~~	~~3051L2AG0MD21AJ~~	~~N/A~~	~~2493096~~
FEED PUMP SKID				
GOULDS CENTRIFUGAL PUMPS #1	GOULDS	3196 MTI 2X3-6	N/A	N723H146-1
PUMP MOTOR #1 -	BALDOR	09P011Z602	N/A	Z1407180103
GOULDS CENTRIFUGAL PUMPS #2	GOULDS	3196 MTI 2X3-6	N/A	N723H146-2
PUMP MOTOR #2 -	BALDOR	09P011Z602	N/A	Z1407180148
~~McCROMETER FLOW METER~~	~~McCROMETER~~	~~VM04QE03F-E1HS-V3~~	~~N/A~~	~~15-1023~~
TREATED WATER STORAGE TANK				
~~ROSEMOUNT TRANSMITTER~~	~~ROSEMOUNT~~	~~3051L2AG0MD21AJ~~	~~N/A~~	~~2493097~~
TREATMENT WATER PUMP SKID				
GOULDS CENTRIFUGAL PUMPS	GOULDS	3196 MTI 3X4-8G	N/A	N723H145
PUMP MOTOR	BALDOR	12H0114292G1	N/A	C1501290072
~~McCROMETER FLOW METER~~	~~McCROMETER~~	~~VM04QE03F-E1HS-V3~~	~~N/A~~	~~15-1022~~
MATTEI AIR COMPRESSOR	MATTEI	AC-15 LX	N/A	EZVPGF-2014

Fliteway Technologies, Inc.
2129 East Birchwood Ave., Cudahy, WI 53110
(414) 483-5600 • 1-800-236-3580 • FAX (414) 483-1957

WARRANTY

ONE YEAR LIMITED WARRANTY- Fliteway Technologies, Inc. remediation equipment is warranted by Fiteway to the original user against defects in workmanship or materials under normal use for one year after date of shipment. Exceptions to this are positive displacement vacuum pumps and blowers which have 18 Month warranties direct from the original manufacturer (Roots and Sutorbilt only). Any part determined by Fliteway Technologies, Inc. to be defective in material or workmanship and returned to Fliteway Technologies, Inc., shipping costs prepaid, will be repaired or replaced at Fliteway's option, as the exclusive remedy. See PROMPT DISPOSITION below for limited warranty claim procedures. This limited warranty gives the purchaser specific legal rights which may vary from state to state.

LIMITATIONS OF LIABILITY- To the extent allowable under applicable law, Fliteway's liability (or incidental and consequential damages is expressly disclaimed. Fliteway's liability in all events is limited to, and shall not exceed, the purchase price.

PRODUCT SUITABILITY - Many states and localities have regulations and codes governing sales, construction, installation, and/or use of products for certain purposes, which may vary from those in neighboring areas. While Fliteway Technologies, Inc. attempts to assure that its products comply with such codes, it cannot guarantee compliance, and cannot be responsible for how the product is installed or used. Before purchase and use of a product, please determine local and national codes and regulations, review the product application, and verify that the product, installation and use comply with those regulations and codes.

PROMPT DISPOSITION - Fliteway Technologies, Inc. will make every effort for a prompt correction or other adjustment with respect to any product which proves to be defective within the limited warranty. For any product believed to be defective within limited warranty, first write or call Fliteway Technologies, Inc. giving the model and serial number of tile unit and describing the nature of the defect. Title and risk of loss pass to the buyer on delivery to common carrier. If product was damaged in transit to you, file a claim with carrier. Freight of postage charges on returns to the factory are at the customer's expense. If returned product is returned under warranty, the manufacturer will cover return freight.

Fliteway Technologies, Inc.

Bill of Materials

2129 East Birchwood Ave. Cudahy, WI 53110

(414) 483-5600 1-800-236-3580 FAX (414) 483-1957

Warehouse 18 *** INDENTED B.O.M. REPORT *** Batch Qty. 1

From WTQ14508 GRD TK to WTQ14508 GRD Scrap/Yield OFF

Level	Seq	Stock Code	Description	Category Code/Description	Scrap/ Yield %	Inst.	Lead Time	U/M	Usage Qty.
**Top Assembly*		18-WTQ14508 GRD TK	GRNDWTR TRMT FEED TANK CB&I KI	04 Distributed Goods	100.00	N			
1	001	00-TK-6150	TANK, 6150 GAL. SW 122"DIA X 1	01 Soil Remediation		N		EA	1.000
1	002	00-EC-3051L2AG0MD2	ROSEMOUNT TRANSMITTER -250 TO	01 Soil Remediation		N		EA	1.000
1	003	00-FS-L6EPS-S-S-3A	FLOAT SWITCH 304SS 1" FLOTECT	01 Soil Remediation		N		EA	2.000

** END OF REPORT **

Warehouse 18 *** INDENTED B.O.M. REPORT *** Batch Qty. 1

From WTQ14508 FD SKD to WTQ14508 FD Scrap/Yield OFF

Level	Seq	Stock Code	Description	Category Code/Description	Scrap/ Yield %	Inst.	Lead Time	U/M	Usage Qty.
**Top Assembly*		18-WTQ14508 FD SKD	FEED PUMP SKID CB&I KIRTLAND A	04 Distributed Goods	100.00	N			
1	001	00-ST-C7X12.25	CHANNEL, 7" X 12.25	01 Soil Remediation		N		FT	40.000
1	002	00-ST-72X120X3/16	DIAMOND PLATE 72 X 120 X 3/16"	01 Soil Remediation		N		IN	120.000
1	003	00-ST-RT4X2X.25	STEEL,RECT TUBING, 4X2X1/4	01 Soil Remediation		N		FT	20.000
1	004	00-ST-SQT1.5X1/4	SQUARE TUBE 1-1/2 X 1-1/2 X 1/	01 Soil Remediation		N		FT	15.000
1	005	00-ST-SQT2X2X1/4	SQUARE TUBE 2 X 2 X 1/4"	01 Soil Remediation		N		FT	12.000
1	006	00-IF-LR6304FAC15	BAG FILTER 4" CARBON STEEL (6)	01 Soil Remediation		N		EA	2.000
1	007	00-IF-PO10P2SH	FILTER BAGS, 10 MICRON #2 7X32	01 Soil Remediation		N		EA	25.000
1	008	04-WP-3196 MTI 2X3	PUMP GOULDS 3196 MTi2X3-6 200G	04 Distributed Goods		N		EA	2.000
1	009	00-FM-VM04QE03F-E1	FLOW METER 4" 40-400GPM 4-20mA	01 Soil Remediation		N		EA	1.000
1	010	00-GU-451130SL-30#	DIFF PRESS 0-30 45-1130SL-25-S	01 Soil Remediation		N		EA	2.000
1	011	00-GU-45-1259-60#	PRESS GAUGE 0-60 ASCRFT 45-125	01 Soil Remediation		N		EA	2.000
1	012	00-VA-4" BUTTERFLY	BUTTERFLY VALVE 4" GEAR LUG EP	01 Soil Remediation		N		EA	6.000
1	013	00-PF-4 F	FLANGE, 4" WELD-ON (SLIP) 150#	01 Soil Remediation		N		EA	27.000
1	014	00-PF-4X6 EXP JNTS	EXPANSION JOINTS 4"X6" EPDM RB	01 Soil Remediation		N		EA	2.000
1	015	00-ST-PIPEB4SCHD40	STEEL PIPE,BLACK,4 in,SCHED 40	01 Soil Remediation		N		FT	15.000
1	016	00-PF-4 90	ELBOW 4" 90 CS STD LR WELD	01 Soil Remediation		N		EA	7.000
1	017	00-PF-4 T	TEE,4" CS STD WELD	01 Soil Remediation		N		EA	3.000
1	018	00-EX-IMC3/4	CONDUIT IMC 3/4"	03 Electrical		N		FT	5.000
1	019	00-EF-3/4-UA	CONDUIT FLEX 3/4"	03 Electrical		N		EA	4.000
1	020	00-EF-1/2-UA	CONDUIT, FLEX 1/2"	03 Electrical		N		FT	12.000
1	021	00-EF-K05091	FITTING, 1/2 90 LIQUIDTITE	03 Electrical		N		EA	2.000
1	022	00-EF-K07591	FITTING, 3/4 90 LIQUIDTITE	03 Electrical		N		EA	2.000
1	023	00-EF-K0751	FITTING, 3/4" STRAIGHT LIQUIDT	03 Electrical		N		EA	2.000
1	024	00-PF-3 FLNG SLIP	FLANGE 3 150# CS RF SLIP ON	01 Soil Remediation		N		EA	2.000
1	025	00-PF-4X2 RB WELD	REDUCER BUSHING 4X2" CS STD CO	01 Soil Remediation		N		EA	2.000
1	026	00-PF-4X3 RB WELD	REDUCER BUSHING 4X3" CS STD CO	01 Soil Remediation		N		EA	2.000
1	027	00-PF-2 FLNG WELD	FLANGE 2 WELD NECK 150# CS STD	01 Soil Remediation		N		EA	2.000

** END OF REPORT **

Warehouse 15 *** INDENTED B.O.M. REPORT *** Batch Qty. 1

From CQ14508R5 FEED to CQ14508R5 FEE Scrap/Yield OFF

Level	Seq	Stock Code	Description	Category Code/Description	Scrap/ Yield %	Inst.	Lead Time	U/M	Usage Qty.
**Top Assembly*		15-CQ14508R5 FEED	CONTROL PANEL FEED PUMP CB&I K	03 Electrical	100.00	N			
1	001	00-EB-N412363612C	ENCLOSURE SUBPANEL,SWNG DR,PAD	03 Electrical		N		EA	1.000
1	002	00-EB-NP3636C	SUB PANEL WIEGMANN	03 Electrical		N		EA	1.000
1	003	00-EB-N412MFK	FOOT KIT	03 Electrical		N		EA	1.000
1	004	00-EB-N41214TWPL	HANDLE, WING PDLK	03 Electrical		N		EA	2.000
1	005	00-EB-N412121206C	ENCLOSURE 12X12X6	03 Electrical		N		EA	1.000
1	006	00-EB-NP1212C	SUB-PANEL 12X12	03 Electrical		N		EA	1.000
1	007	00-VFD-20BD027A0AY	VAR FRQ PWRFLX 27A 20HP 20BD02	03 Electrical		N		EA	2.000
1	008	00-VFD-1321-3R35-C	LINE REACTOR 35A ALLEN BRADLEY	03 Electrical		N		EA	2.000
1	009	00-VFD-20HIMA3	HIM MODULE LCD DISPLAY NUMERIC	03 Electrical		N		EA	2.000
1	010	00-VFD-20COMM-ER	COMMUNICATIONS CARD A-B DUAL-P	03 Electrical		N		EA	2.000
1	011	00-EC-G3P-040	CIRCUIT BREAKER 40A 3P 480VAC	03 Electrical		N		EA	2.000
1	012	00-EH-4WT46	FAN FOR PANELS 115 CFM 115V	03 Electrical		N		EA	1.000
1	013	00-EH-4YD78	FILTER GUARD ASSY, ALUM 4-45/6	03 Electrical		N		EA	2.000
1	014	00-EH-3RP12	CORDSET, AXIAL FAN, 36"	03 Electrical		N		EA	1.000
1	015	00-EC-GDL 1	FUSE,1AMP, FERRAZ SHAWMUT	03 Electrical		N		EA	1.000
1	016	00-EC-57.904.6355	FUSEHOLDER 1P GLASS ABB	03 Electrical		N		ea	1.000
1	017	00-EC-011419-00	THERMOSTAT, 32-140F N.O. DIN M	03 Electrical		N		EA	1.000
1	018	00-EC-1D374	GROUND BAR KIT PK7GTA	03 Electrical		N		EA	1.000
1	019	00-PS-A1F-O-SS-1-2	PRESSURE SWITCH 4-75 PSIG	03 Electrical		N		EA	1.000
1	020	00-PS-A-447	WEATHERPROOF HOUSING A1F PRESS	03 Electrical		N		EA	1.000

** END OF REPORT **

Warehouse 18 *** INDENTED B.O.M. REPORT *** Batch Qty. 1

From WTQ14508 TRT TK to WTQ14508 TRT Scrap/Yield OFF

Level	Seq	Stock Code	Description	Category Code/Description	Scrap/ Yield %	Inst.	Lead Time	U/M	Usage Qty.
**Top Assembly*		18-WTQ14508 TRT TK	TREATED WATER STRG TANK CB&I K	04 Distributed Goods	100.00	N			
1	001	00-TK-6150	TANK, 6150 GAL. SW 122"DIA X 1	01 Soil Remediation		N		EA	1.000
1	002	00-EC-3051L2AG0MD2	ROSEMOUNT TRANSMITTER -250 TO	01 Soil Remediation		N		EA	1.000
1	003	00-FS-L6EPS-S-S-3A	FLOAT SWITCH 304SS 1" FLOTECT	01 Soil Remediation		N		EA	2.000

** END OF REPORT **

Warehouse 18 *** INDENTED B.O.M. REPORT *** Batch Qty. 1

From WTQ14508 TRT SK to WTQ14508 TRT Scrap/Yield OFF

Level	Seq	Stock Code	Description	Category Code/Description	Scrap/ Yield %	Inst.	Lead Time	U/M	Usage Qty.
**Top Assembly*		18-WTQ14508 TRT SK	TREATED WATER PUMP SKID CB&I K	04 Distributed Goods	100.00	N			
1	001	00-ST-C7X12.25	CHANNEL, 7" X 12.25	01 Soil Remediation		N		FT	40.000
1	002	00-ST-72X120X3/16	DIAMOND PLATE 72 X 120 X 3/16"	01 Soil Remediation		N		IN	120.000
1	003	00-ST-RT4X2X.25	STEEL,RECT TUBING, 4X2X1/4	01 Soil Remediation		N		FT	20.000
1	004	00-ST-SQT1.5X1/4	SQUARE TUBE 1-1/2 X 1-1/2 X 1/	01 Soil Remediation		N		FT	15.000
1	005	00-ST-SQT2X2X1/4	SQUARE TUBE 2 X 2 X 1/4"	01 Soil Remediation		N		FT	12.000
1	006	00-IF-LR6304FAC15	BAG FILTER 4" CARBON STEEL (6)	01 Soil Remediation		N		EA	2.000
1	007	00-IF-PO10P2SH	FILTER BAGS, 10 MICRON #2 7X32	01 Soil Remediation		N		EA	25.000
1	008	04-WP-3196 MTI 3X4	PUMP GOULDS 3196 MTi 3X4-8G 40	01 Soil Remediation		N		EA	1.000
1	009	00-FM-VM04QE03F-E1	FLOW METER 4" 40-400GPM 4 20mA	01 Soil Remediation		N		EA	1.000
1	010	00-GU-451130SL-30#	DIFF PRESS 0-30 45-1130SL-25-S	01 Soil Remediation		N		EA	2.000
1	011	00-GU-45-1259-100#	PRESS GAGE 0-100 ASCRFT 45-125	01 Soil Remediation		N		EA	2.000
1	012	00-VA-4" BUTTERFLY	BUTTERFLY VALVE 4" GEAR LUG EP	01 Soil Remediation		N		EA	5.000
1	013	00-PF-4 F	FLANGE, 4" WELD-ON (SLIP) 150#	01 Soil Remediation		N		EA	21.000
1	014	00-PF-4X6 EXP JNTS	EXPANSION JOINTS 4"X6" EPDM RB	01 Soil Remediation		N		EA	1.000
1	015	00-PF-3 FLNG SLIP	FLANGE 3 150# CS RF SLIP ON	01 Soil Remediation		N		EA	1.000
1	016	00-PF-4X3 RB WELD	REDUCER BUSHING 4X3" CS STD CO	01 Soil Remediation		N		EA	1.000
1	017	00-ST-PIPEB4SCHD40	STEEL PIPE,BLACK,4 in,SCHED 40	01 Soil Remediation		N		FT	15.000
1	018	00-PF-4 90	ELBOW 4" 90 CS STD LR WELD	01 Soil Remediation		N		EA	7.000
1	019	00-PF-4 T	TEE,4" CS STD WELD	01 Soil Remediation		N		EA	2.000
1	020	00-EX-IMC-1/2	CONDUIT IMC 1/2"	03 Electrical		N		FT	10.000
1	021	00-EX-IMC1	CONDUIT IMC 1"	03 Electrical		N		FT	4.000
1	022	00-EF-1/2-UA	CONDUIT, FLEX 1/2"	03 Electrical		N		FT	10.000
1	023	00-EF-1-UA	CONDUIT, FLEX 1"	03 Electrical		N		FT	3.000
1	024	00-EF-K05091	FITTING, 1/2 90 LIQUIDTITE	03 Electrical		N		EA	6.000
1	025	00-EF-K0501	FITTING, 1/2" STRAIGHT LIQUIDT	03 Electrical		N		EA	2.000
1	026	00-EF-K10041	FITTING, 1" 45 LIQUIDTITE	03 Electrical		N		EA	2.000
1	027	00-EF-K10091	FITTING, 1" 90 LIQUID-TIGHT	03 Electrical		N		EA	1.000
1	028	00-EF-K1001	FITTING, 1" STRAIGHT LIQUIDITE	03 Electrical		N		EA	1.000

** END OF REPORT **

Warehouse 15 *** INDENTED B.O.M. REPORT *** Batch Qty. 1

From CQ14508R5 WATER to CQ14508R5 WA Scrap/Yield OFF

Level	Seq	Stock Code	Description	Category Code/Description	Scrap/ Yield %	Inst.	Lead Time	U/M	Usage Qty.
**Top Assembly*		15-CQ14508R5 WATER	CONTROL PANEL TRT WATER CB&I K	03 Electrical	100.00	N			
1	001	00-EB-N412363612C	ENCLOSURE SUBPANEL,SWNG DR,PAD	03 Electrical		N		EA	1.000
1	002	00-EB-NP3636C	SUB PANEL WIEGMANN	03 Electrical		N		EA	1.000
1	003	00-EB-N412MFK	FOOT KIT	03 Electrical		N		EA	1.000
1	004	00-EB-N41214TWPL	HANDLE, WING PDLK	03 Electrical		N		EA	2.000
1	005	00-EB-N412121206C	ENCLOSURE 12X12X6	03 Electrical		N		EA	1.000
1	006	00-EB-NP1212C	SUB-PANEL 12X12	03 Electrical		N		EA	1.000
1	007	00-VFD-20BD065A0AY	VAR FRQ PWRFLX 65A 50HP 20BD06	03 Electrical		N		EA	1.000
1	008	00-VFD-1321-3R80-C	LINE REACTOR 80A ALLEN BRADLEY	03 Electrical		N		EA	1.000
1	009	00-VFD-20HIMA3	HIM MODULE LCD DISPLAY NUMERIC	03 Electrical		N		EA	1.000
1	010	00-VFD-20COMM-ER	COMMUNICATIONS CARD A-B DUAL-P	03 Electrical		N		EA	1.000
1	011	00-EC-G3P-080	CIRCUIT BREAKER MCCB 80A 3P 48	03 Electrical		N		EA	1.000
1	012	00-EH-4WT46	FAN FOR PANELS 115 CFM 115V	03 Electrical		N		EA	1.000
1	013	00-EH-4YD78	FILTER GUARD ASSY, ALUM 4-45/6	03 Electrical		N		EA	2.000
1	014	00-EH-3RP12	CORDSET, AXIAL FAN, 36"	03 Electrical		N		EA	1.000
1	015	00-EC-GDL 1	FUSE,1AMP, FERRAZ SHAWMUT	03 Electrical		N		EA	1.000
1	016	00-EC-57.904.6355	FUSEHOLDER 1P GLASS ABB	03 Electrical		N		ea	1.000
1	017	00-EC-011419-00	THERMOSTAT, 32-140F N.O. DIN M	03 Electrical		N		EA	1.000
1	018	00-EC-1D374	GROUND BAR KIT PK7GTA	03 Electrical		N		EA	1.000
1	019	00-PS-A1F-O-SS-1-2	PRESSURE SWITCH 4-75 PSIG	03 Electrical		N		EA	1.000
1	020	00-PS-A-447	WEATHERPROOF HOUSING A1F PRESS	03 Electrical		N		EA	1.000

** END OF REPORT **

Warehouse 14 *** INDENTED B.O.M. REPORT *** Batch Qty. 1
From AQ14508R5 to AQ14508R5 Scrap/Yield OFF

Level	Seq	Stock Code	Description	Category Code/Description	Scrap/ Yield %	Inst.	Lead Time	U/M	Usage Qty.
**Top Assembly*		14-AQ14508R5	AC-15LX CB&I KIRTLAND AFB, NM	04 Distributed Goods	100.00	N			
1	001	04-MA-AC-15 LX	MATTEI COMPRESSOR 20HP 460/3/6	04 Distributed Goods		N		EA	1.000
1	002	04-FR-4959K5	REGULATOR, AIR 1" W/PRESS GAUG	01 Soil Remediation		N		EA	1.000
1	003	04-FR-4959K999A	PARTICULATE FILTER F17-800-M3D	01 Soil Remediation		N		EA	1.000
1	004	04-FR-4959K999B	COALESCING FILTER F46-801-M0DA	01 Soil Remediation		N		EA	1.000
1	005	00-PF-G-1 CN	NIPPLE, 1" GALV CLOSE	01 Soil Remediation		N		ea	3.000
1	006	00-PF-G-1 90	ELBOW, 1" GALV	01 Soil Remediation		N		ea	1.000
1	007	00-PF-G-1 U	UNION, 1" GALV	01 Soil Remediation		N		ea	1.000
1	008	00-PF-G-1X3 N	NIPPLE, 1X3 GALV	01 Soil Remediation		N		ea	3.000

** END OF REPORT **

Fliteway Technologies, Inc.

Submittal Drawings

2129 East Birchwood Ave. Cudahy, WI 53110

(414) 483-5600 1-800-236-3580 FAX (414) 483-1957

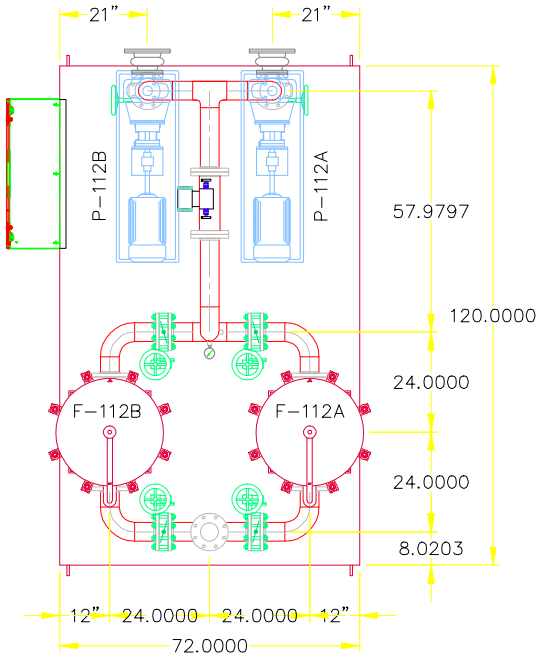

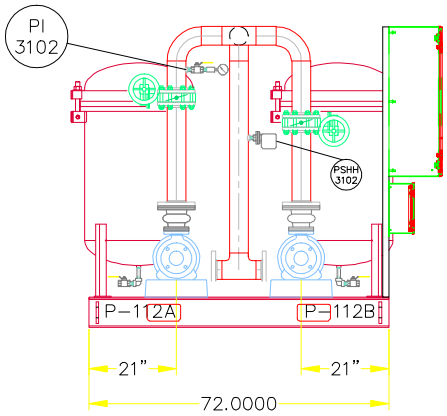

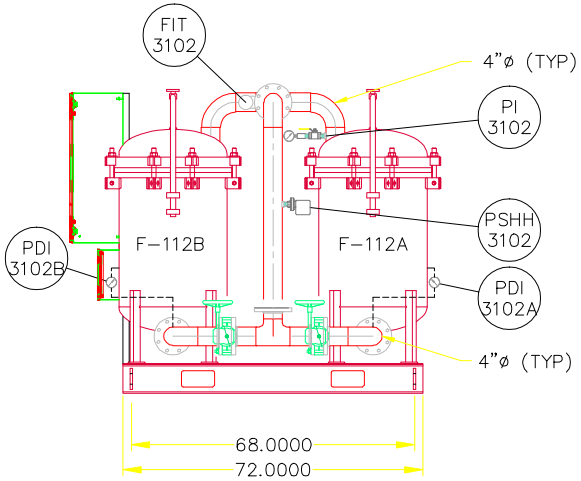

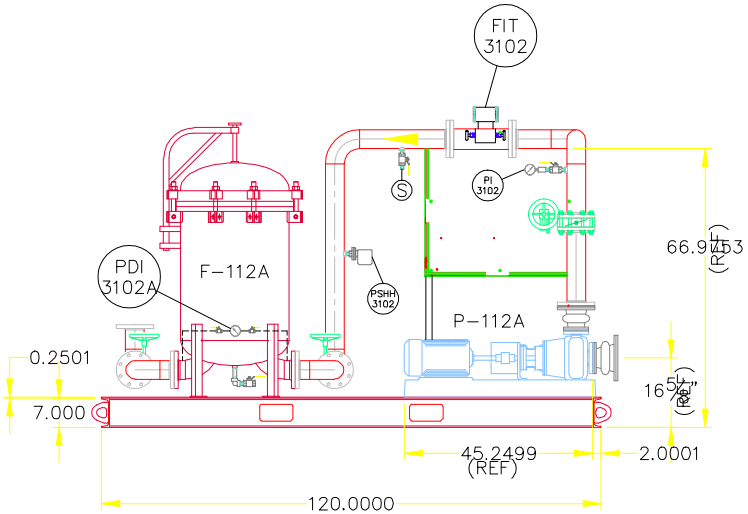

THIS DRAWING IS THE PROPERTY OF
Fliteway Technologies, Inc
2129 EAST BIRCHWOOD AVE
CUDAHY WI, 53110
414.483.5600 414.483.1957
AND IS NOT TO BE REPRODUCED
WITHOUT WRITTEN PERMISSION

6'X10' FEED PUMP SKID

CB&I WATER TREATMENT

3/19/15	SIZE	FSCM NO.	DWG NO. Q14508
	SCALE NONE		SHEET 1 OF 1

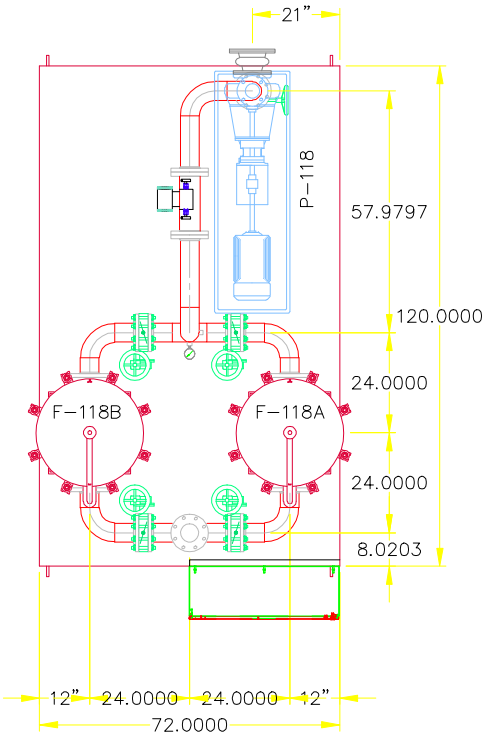

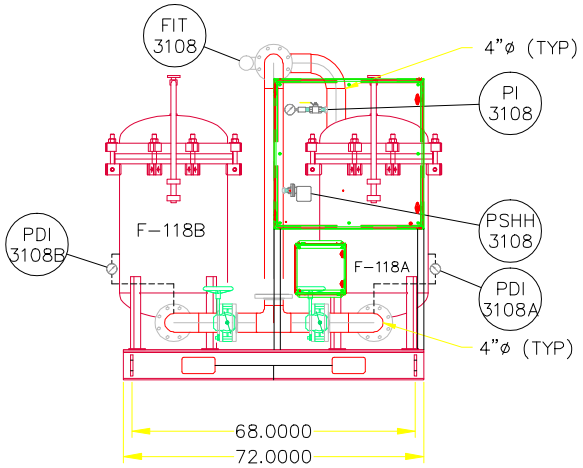

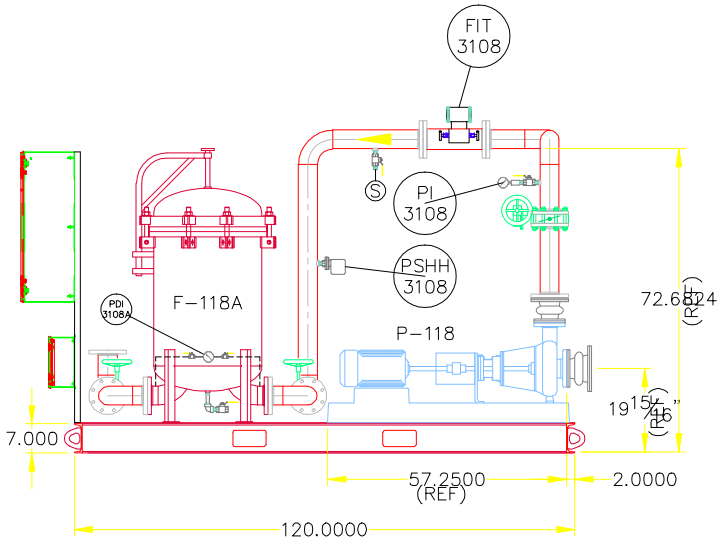

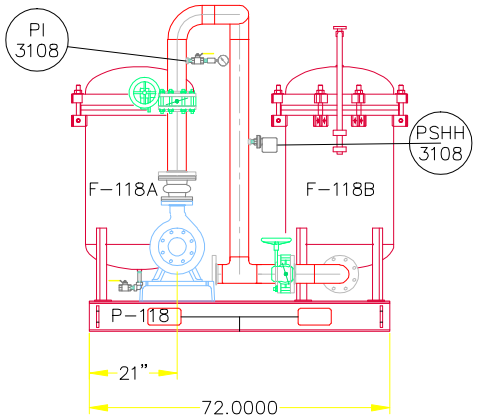

THIS DRAWING IS THE PROPERTY OF
Fliteway Technologies, Inc
2129 EAST BIRCHWOOD AVE
CUDAHY WI, 53110
414.483.5600 414.483.1957

AND IS NOT TO BE REPRODUCED
WITHOUT WRITTEN PERMISSION

3/19/15

6'X10' TREATED WATER PUMP SKID

CB&I WATER TREATMENT

SIZE	FSCM NO.	DWG NO.
		Q14508

SCALE NONE

SHEET 1 OF 1

FEED PUMP SKID

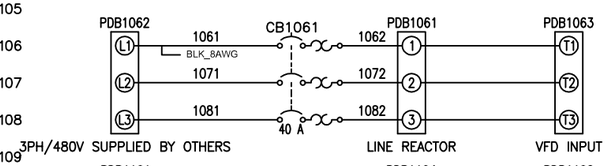

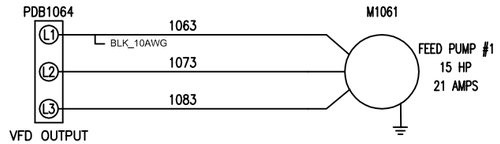

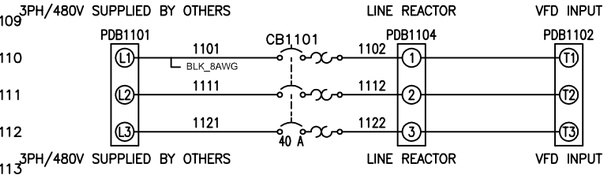

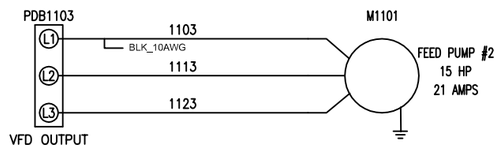

HIGH VOLTAGE PANEL

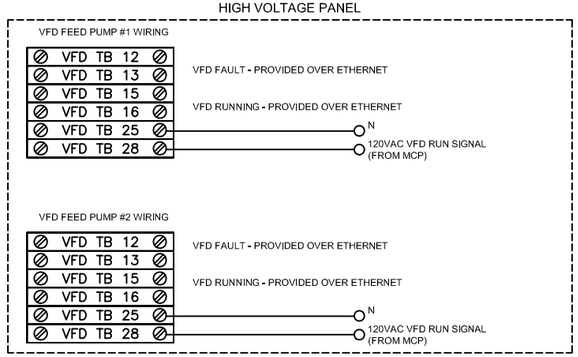

LOW VOLTAGE JUNCTION BOX

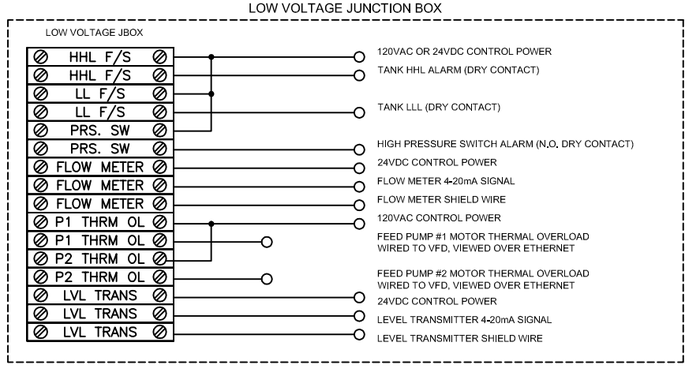

TREAT WATER PUMP SKID

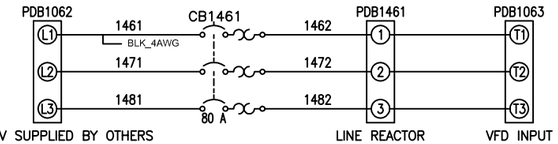

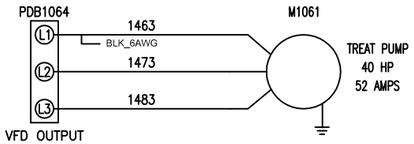

HIGH VOLTAGE PANEL

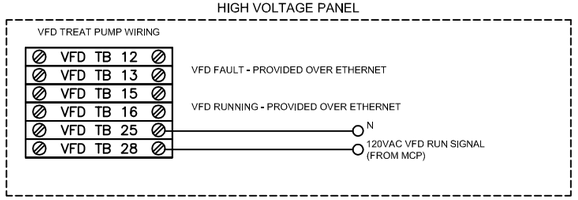

LOW VOLTAGE JUNCTION BOX

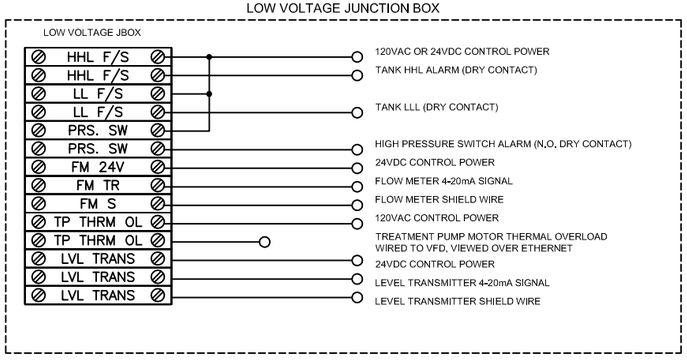

THIS PRINT AND ITS CONTENTS ARE THE PROPERTY OF FLITEWAY AND MUST NOT BE USED FOR ANY PURPOSE NOT AUTHORIZED BY FLITEWAY. DO NOT DISCLOSE, REPRODUCE OR OTHERWISE USE THIS PRINT OR ITS CONTENTS IN ANY MANNER DETRIMENTAL TO THE INTEREST OF FLITEWAY WITHOUT FLITEWAY'S PRIOR WRITTEN CONSENT. FLITEWAY RESERVES ALL RIGHTS OF DESIGN AND INVENTION TO THE EXTENT PERMITTED BY LAW.

CAD SYSTEM	UNITS
ACADE	IN
SCALE	FORMAT
1:1	D

Fliteway Technologies, Inc.
2129 East Birchwood Ave.
Cudahy, WI 53110

DRAWN BY	Q #	DESCRIPTION
Josh	Q14508	AS BUILT

DESIGNED FOR: CB&I Federal Services

Drawing Number

PLOTTED : 09-16-2015

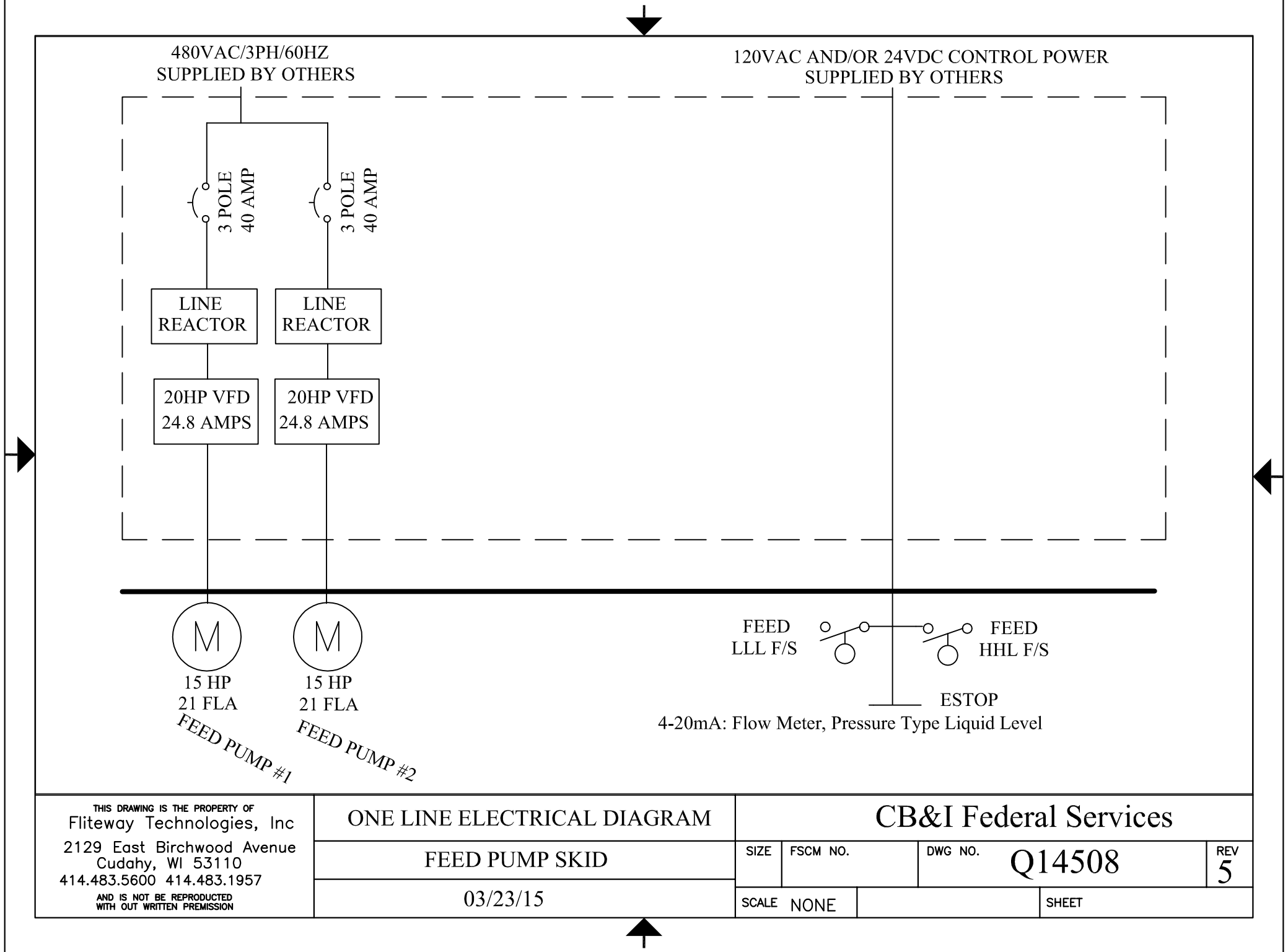

THIS DRAWING IS THE PROPERTY OF
Fliteway Technologies, Inc
2129 East Birchwood Avenue
Cudahy, WI 53110
414.483.5600 414.483.1957
AND IS NOT BE REPRODUCTED
WITH OUT WRITTEN PREMISSION

ONE LINE ELECTRICAL DIAGRAM

FEED PUMP SKID

03/23/15

CB&I Federal Services

SIZE	FSCM NO.	DWG NO.	REV
		Q14508	5

SCALE NONE

SHEET

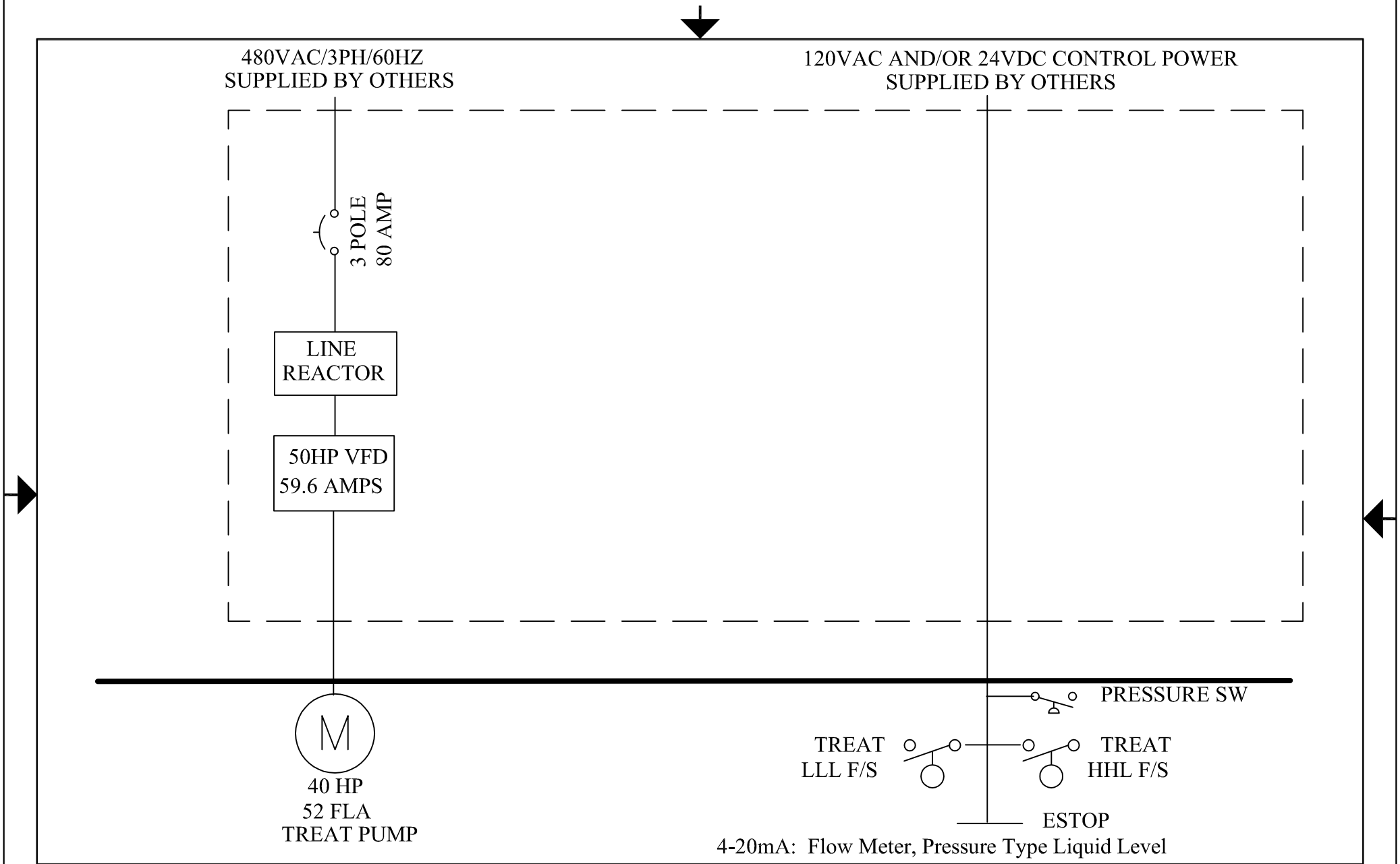

THIS DRAWING IS THE PROPERTY OF
Fliteway Technologies, Inc
2129 East Birchwood Avenue
Cudahy, WI 53110
414.483.5600 414.483.1957
AND IS NOT BE REPRODUCTED
WITH OUT WRITTEN PREMISSION

ONE LINE ELECTRICAL DIAGRAM

TREAT PUMP SKID

03/23/15

CB&I Federal Services

SIZE	FSCM NO.	DWG NO.	REV
		Q14508	5

SCALE NONE

SHEET

480VAC/3PH/60HZ
SUPPLIED BY OTHERS

120VAC CONTROL POWER
SUPPLIED BY OTHERS

SELF-PROTECTED
(TYPE E) MANUAL
COMBINATION
STARTER

M

20 HP
AIR COMPRESSOR
27 FLA

AUTO-DRAIN

SOLENOID

THIS DRAWING IS THE PROPERTY OF
Fliteway Technologies, Inc
2129 East Birchwood Avenue
Cudahy, WI 53110
414.483.5600 414.483.1957
AND IS NOT BE REPRODUCTED
WITH OUT WRITTEN PREMISSION

ONE LINE ELECTRICAL DIAGRAM

COMPRESSORSKID

03/23/15

CB&I Federal Services

SIZE	FSCM NO.	DWG NO.	REV
		Q14508	5

SCALE NONE

SHEET

Fliteway Technologies, Inc.

Test Data

2129 East Birchwood Ave. Cudahy, WI 53110

(414) 483-5600 1-800-236-3580 FAX (414) 483-1957

VFd tested OK

Pressure tested @ 15 PSI no Leaks SJH

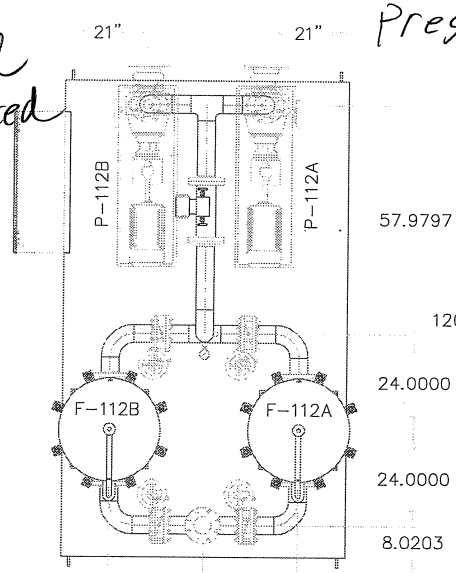

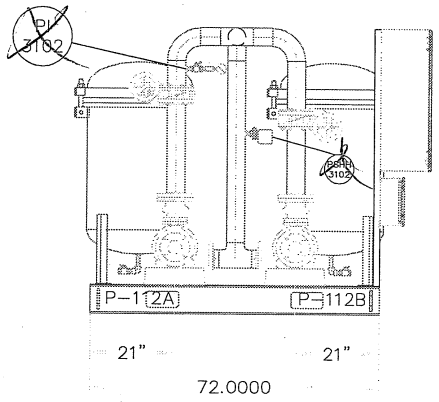

MOTOR Rotation needs to Be Checked Before couplers are Installed.

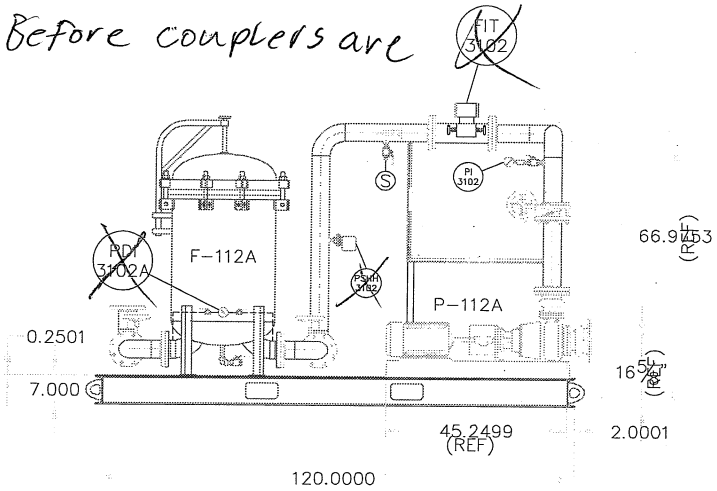

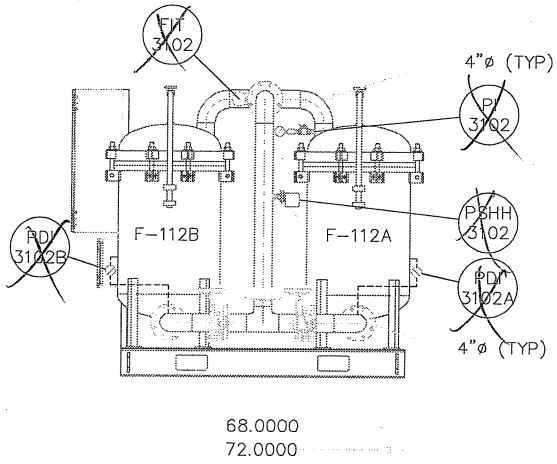

tested By: Sean Higgins
01 July 15

THIS DRAWING IS THE PROPERTY OF
Fliteway Technologies, Inc
2129 EAST BIRCHWOOD AVE
CUDAHY WI, 53110
414.483.5600 414.483.1957
AND IS NOT TO BE REPRODUCED WITHOUT WRITTEN PERMISSION

3/19/15	6'X10' FEED PUMP SKID
	CB&I WATER TREATMENT
SIZE	FSCM NO. DWG NO. Q14508
SCALE NONE	SHEET 1 OF 1

Pressure tested @ 15PSI no Leaks SJH

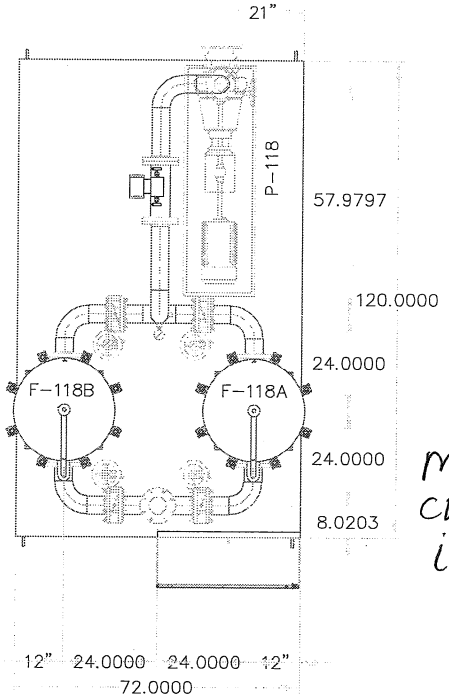

VFD tested OK

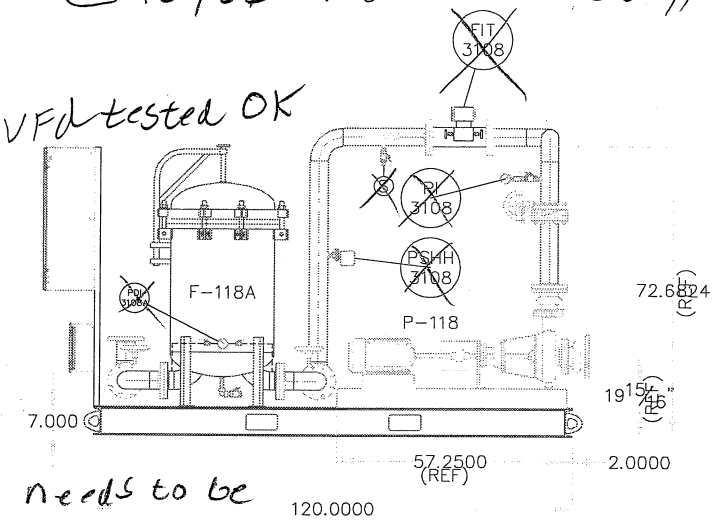

Motor rotation needs to be checked Before couplers are installed

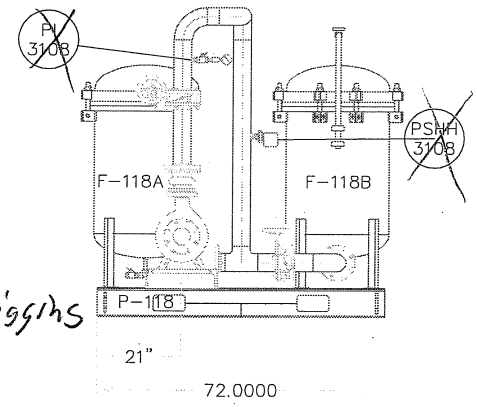

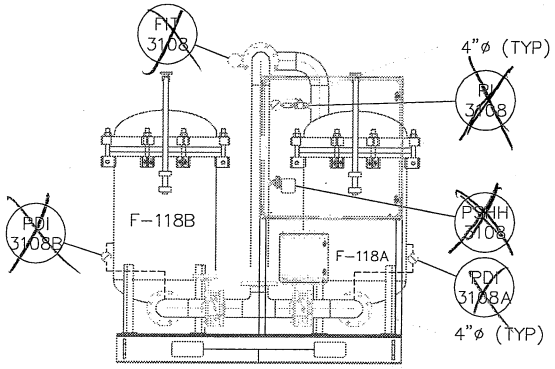

tested By: Sean Higgins
01 July 15

THIS DRAWING IS THE PROPERTY OF
Fliteway Technologies, Inc
2129 EAST BIRCHWOOD AVE
CUDAHY WI, 53110
414.483.5600 414.483.1957
AND IS NOT TO BE REPRODUCED WITHOUT WRITTEN PERMISSION

3/19/15

6'X10' TREATED WATER PUMP SKID

CB&I WATER TREATMENT

SIZE	FSCM NO.	DWG NO.
		Q14508

SCALE NONE

SHEET 1 OF 1

Fliteway Technologies, Inc.

Groundwater Treatment Feed Tank

2129 East Birchwood Ave. Cudahy, WI 53110

(414) 483-5600 1-800-236-3580 FAX (414) 483-1957

6000 GAL. WATER STORAGE TANKS (T-110 & T-116)
(10.17'DIA. x 11'HGT.) AWWA-D100-11
FOR
EDB INTERIM MEASURE
KIRTLAND, AFB

TANK - DRAWING LOG						
INDEX	DWG #	CUST DWG #	DESCRIPTION	REVISION #	STATUS	DATE
1	CS01		COVER SHEET	2	P	04/14/2015
2	E01		GENERAL ARRANGEMENT	1	P	03/23/2015
3	E02		TANK ORIENTATION	2	P	04/14/2015
4	E03		SHELL LAYOUT	2	P	04/14/2015
5	E04		X-RAY MAP	1	P	03/23/2015
6	E05		SHELL WELD MAP	1	P	03/23/2015
7	E06		BOTTM WELD MAP	1	P	03/23/2015
8	E07		ROOF WELD MAP	1	P	03/23/2015
9	E08		DIESEL TEST VACUUM	1	P	03/23/2015
10	E09		WELD MAP	2	P	04/14/2015
11	BL01		BOTTOM LAYOUT	1	P	03/23/2015
12	BL02		BOTTOM PLATE	1	P	03/23/2015
13	RL01		ROOF LAYOUT	1	P	03/23/2015
14	RL02		ROOF PLATE DETAILS	1	P	03/23/2015
15	TM01		TOP MEMBER	1	P	03/23/2015
16	PL01		SHELL COURSE PLATES	1	P	03/23/2015
17	SM01	I	24" SHELL MANWAY	1	P	03/23/2015
18	SN01	E	6" DISCHARGE NOZZLE	2	P	04/14/2015
19	SN02	G	4" LEVEL NOZZLE	2	P	04/14/2015
20	SN03	F	2" DRAIN NOZZLE	2	P	04/14/2015
21	SN04	H	4" LEVEL NOZZLE	2	P	04/14/2015
22	SN05	J	2" LEVEL NOZZLE	2	P	04/14/2015
23	SN06	K	4" SPARE NOZZLE	2	P	04/14/2015
24	SN07	L	4" SPARE NOZZLE	2	P	04/14/2015
25	SN08	M	6" SPARE NOZZLE	2	P	04/14/2015
26	RN01	A	6" FILL NOZZLE	2	P	04/14/2015
27	RN02	B	6" FILL NOZZLE	2	P	04/14/2015
28	RN03	C	6" VENT NOZZLE	2	P	04/14/2015
29	RN04	D	6" SPARE NOZZLE	2	P	04/14/2015
30	LL01		LIFTING LUGS	1	P	03/23/2015
31	NP01		NAMEPLATE & G. LUGS	1	P	03/23/2015

STATUS CODE	
STATUS	DESCRIPTION
P	PRELIMINARY
A	APPROVED
REF	REFERENCE ONLY
R	RESENT TO CUSTOMER
D	DONE

REV.	BY	DATE	DESCRIPTION
2	MEM	04/14/2015	REVISE FLANGE FACE
1	EJ	03/23/2015	UPDATED TANK -- DRAWING LOG REVISED TITLE BLOCK
0	EJ	02/16/2015	INITIAL ISSUE

BMT ACQUISITION, LLC
ENGINEERS - FABRICATORS - CONSTRUCTORS

8301 BROADWAY BLVD SE
ALBUQUERQUE, NM 87105-7453
PHONE: 505-563-4800
FAX: 505-563-4799
http://www.bmt-tank.com

T-110
&
T-116

COVER SHEET
6,000 GAL. WATER STORAGE TANKS
(10.17'DIA. X 11'HGT.) AWWA-D100-11

CUSTOMER:
FLITEWAY TECH., INC

PROJECT:
EDB INTERIM MEASURE

DRAWN:	JOB No.:
EJ	30883
CHECKED: GAV	
DATE: 02/16/2015	SHEET No.: CS01
REVISION: 2	

DESIGN PARAMETERS

GOVERNING STANDARD:	AWWA-D-100	INTERNAL PRESSURE:	0 PSI	MIN. DESIGN METAL TEMP.:	25 °F	C.A. SHELL:	0 IN
EDITION:	11TH EDITION	EXTERNAL PRESSURE:	0 PSI	JOINT EFFICIENCY:	0.85	C.A. BOTTOM:	0 IN
APPENDIX(ICS):		SPECIFIC GRAVITY:	1.0	BOTTOM SEAMS:	LWTSO	C.A. ROOF:	0 IN
CAPACITY TO TOP OF SHELL:	6679 GALLONS	WIND:	E= C I= 1.15 V= 100 MPH	FIXED ROOF SEAMS:	LWTSO	C.A. STRUCTURE:	0 IN
DESIGN LIQUID LEVEL:	10.08 FT	SEISMIC:	SUG= 3 SC= D TL= 6.0 Ss= 0.47 S1= 0.14	FLOATING ROOF SEAMS:	--		
MAX OPERATING TEMPERATURE:	100 °F	ALLOWABLE STRESS:	15,000 PSI	SHELL SEAMS	DBW		

RADIOGRAPH:	SPOT PER CODE		
ANCHORAGE:	NONE		
WINDGIRDER:	NONE		
WORKING CAPACITY:	6123 GALLONS		
DESIGN BY: GAV	DATE 02/16/2015		
CHECK BY: GAV	DATE		

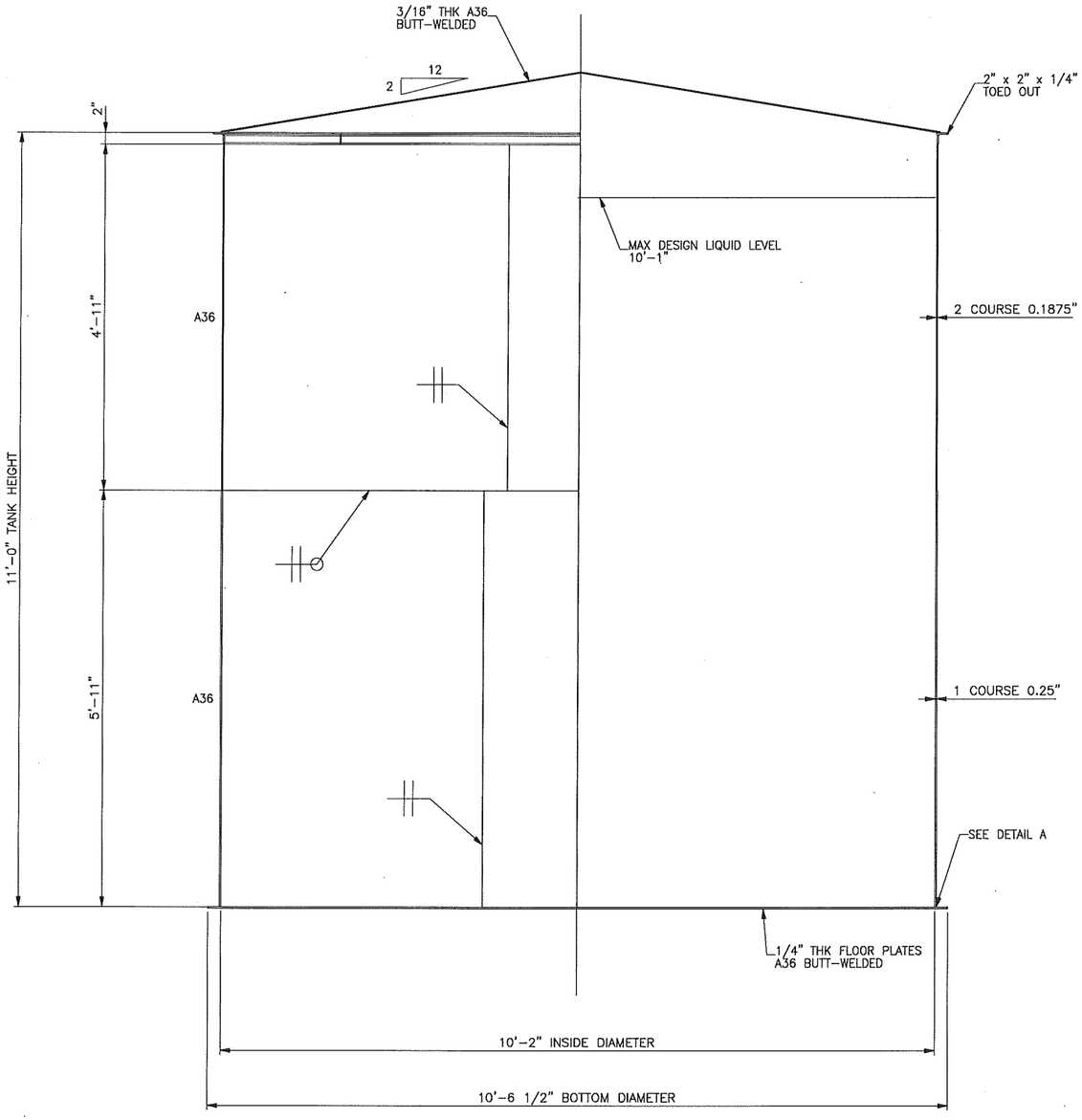

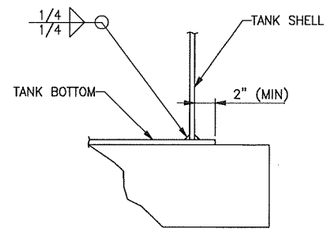

DETAIL A

REV.	BY	DATE	DESCRIPTION
1	EJ	03/23/2015	REVISED TITLE BLOCK
0	EJ	02/16/2015	INITIAL ISSUE

BMT ACQUISITION, LLC
ENGINEERS – FABRICATORS – CONSTRUCTORS

8301 BROADWAY BLVD SE
ALBUQUERQUE, NM 87105-7453
PHONE: 505-563-4800
FAX: 505-563-4799
http://www.bmt-tank.com

T-110
&
T-116

GENERAL ARRANGEMENT
6,000 GAL. WATER STORAGE TANKS
(10.17'DIA. X 11'HGT.) AWWA-D100-11

CUSTOMER: FLITEWAY TECH., INC

PROJECT: EDB INTERIM MEASURE

DRAWN: EJ	JOB No.: 30883
CHECKED: GAV	
DATE: 02/16/2015	SHEET No.: E01
REVISION: 1	

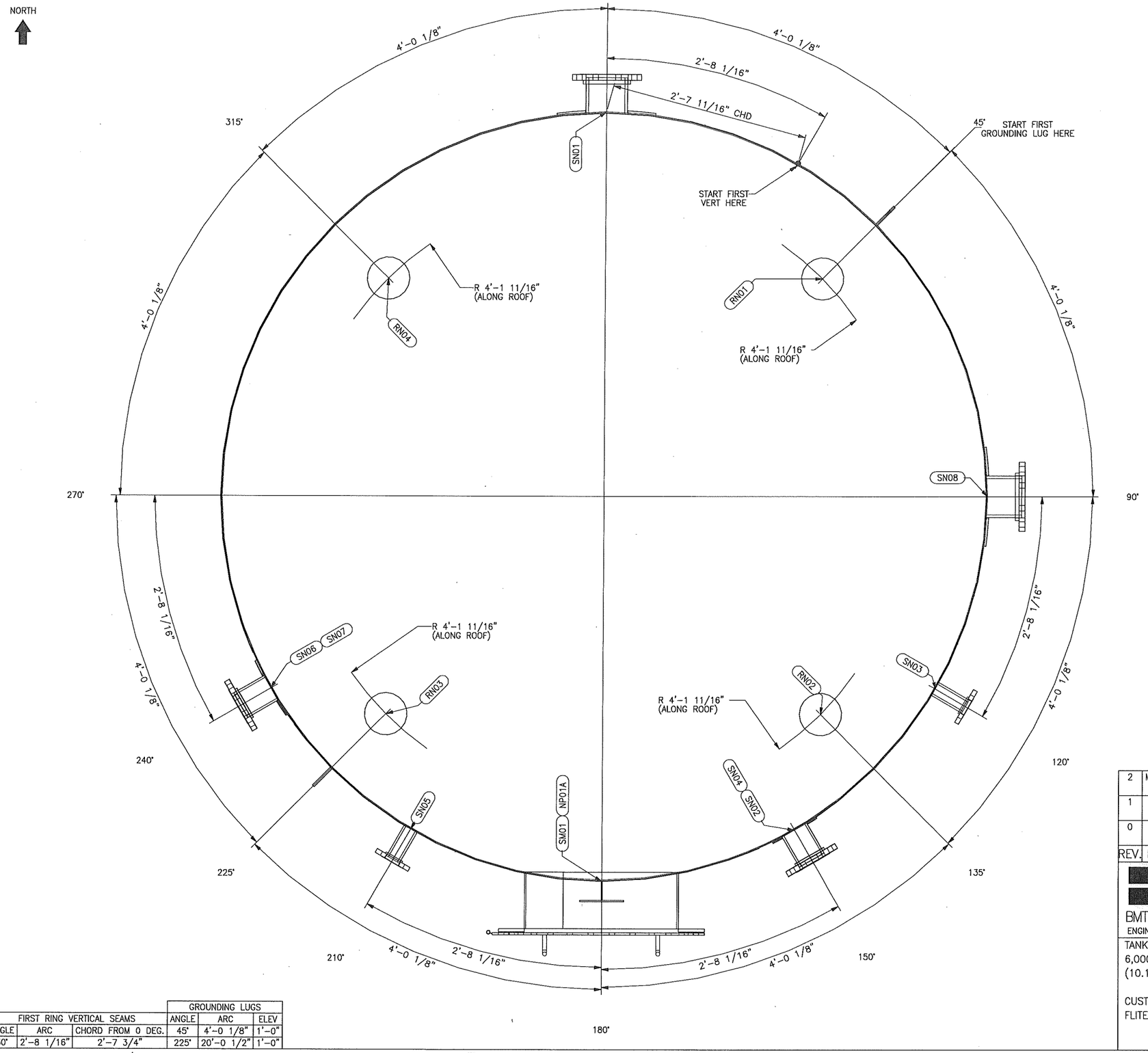

PLAN VIEW APPURTENANCE								
MARK	CUST. MARK	DESCRIPTION	OUTSIDE PROJ	INSIDE PROJ	ORIENT	RADIUS	REMARKS	REF DWG
RN01	A	6" FILL NOZZLE	6"	0"	45°	4'-1"		RN01
RN02	B	6" FILL NOZZLE	6"	0"	135°	4'-1"		RN02
RN03	C	6" VENT NOZZLE	6"	0"	225°	4'-1"		RN03
RN04	D	6" SPARE NOZZLE	6"	0"	315°	4'-1"		RN04

NOTE 1: RADIUS SHOWN IS HORIZONTAL

ELEVATION VIEW APPURTENANCE								
MARK	CUST. MARK	DESCRIPTION	OUTSIDE PROJ	INSIDE PROJ	ORIENT	ELEVATION	REMARKS	REF DWG
NP01A		NAME PLATE	---	---	180°	4'-0"		NP01
NP01B		GROUNDING LUGS	4"	0"	SEE TABLE	1'-0"		NP01
PS01		LIFTING LUG	---	---	120°	10'-6 3/4"		ERROR
PS02		LIFTING LUG	---	---	300°	10'-6 3/4"		ERROR
SM01	I	24" SHELL MANWAY	8"	0"	180°	1'-6"	W/ HINGE	SM01
SN01	E	6" DISCHARGE NOZZLE	6"	0"	0°	1'-0"		SN01
SN02	G	4" LEVEL NOZZLE	6"	0"	150°	8'-4"		SN02
SN03	F	2" DRAIN NOZZLE	6"	0"	120°	6"		SN03
SN04	H	4" LEVEL NOZZLE	6"	0"	150°	2'-1"		SN04
SN05	J	2" LEVEL NOZZLE	6"	0"	210°	2'-1"		SN05
SN06	K	4" SPARE NOZZLE	6"	0"	240°	8'-4"		SN06
SN07	L	4" SPARE NOZZLE	6"	0"	240°	2'-1"		SN07
SN08	M	6" SPARE NOZZLE	6"	0"	90°	1'-0"		SN08

NOTE 2: ELEVATIONS SHOWN FROM TOP OF TANK BOTTOM AT THE LOCATION OF THE APPURTENANCE.

NOTE 3: ARC DIMENSIONS CALCULATED ON THE OUTSIDE OF THE FIRST SHELL COURSE.

NOTE 4: CHORD DIMENSIONS CALCULATED ON OUTSIDE OF THE FIRST SHELL COURSE.

FIRST RING VERTICAL SEAMS			GROUNDING LUGS		
ANGLE	ARC	CHORD FROM 0 DEG.	ANGLE	ARC	ELEV
30°	2'-8 1/16"	2'-7 3/4"	45°	4'-0 1/8"	1'-0"
			225°	20'-0 1/2"	1'-0"

REV.	BY	DATE	DESCRIPTION
2	MEM	04/14/2015	REVISE NOZZLE ORIENTATION
1	EJ	02/16/2015	
0	EJ	02/16/2015	INITIAL ISSUE

BMT ACQUISITION, LLC
ENGINEERS – FABRICATORS – CONSTRUCTORS
8301 BROADWAY BLVD SE
ALBUQUERQUE, NM 87105-7453
PHONE: 505-563-4800
FAX: 505-563-4799
http://www.bmt-tank.com

T-110 & T-116

TANK ORIENTATION
6,000 GAL. WATER STORAGE TANKS
(10.17'DIA. X 11'HGT.) AWWA-D100-11

CUSTOMER: FLITEWAY TECH., INC

PROJECT: EDB INTERIM MEASURE

DRAWN: EJ
CHECKED: GAV
DATE: 02/16/2015
REVISION: 2

JOB No.: 30883

SHEET No.: E02

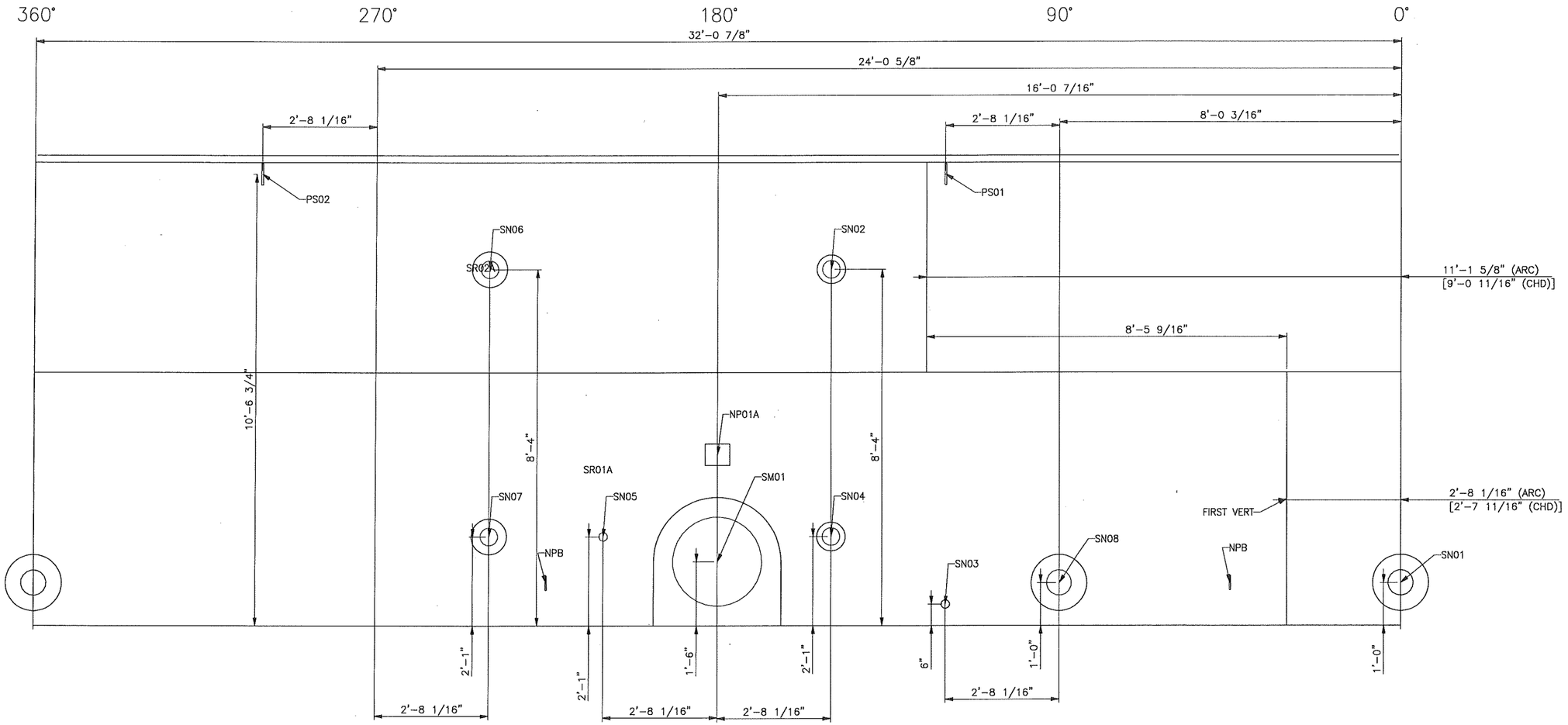

GROUNDING LUGS		
ANGLE	ARC	ELEV
45°	4'-0 1/8"	1'-0"
225°	20'-0 1/2"	1'-0"

ELEVATION VIEW APPURTENANCE

MARK	CUST. MARK	DESCRIPTION	OUTSIDE PROJ	INSIDE PROJ	ORIENT	ELEVATION	REMARKS	REF DWG
NP01A		NAME PLATE	--	--	180°	4'-0"		NP01
NP01B		GROUNDING LUGS	4"	0"	SEE TABLE	1'-0"		NP01
PS01		LIFTING LUG	--	--	120°	10'-6 3/4"		ERROR
PS02		LIFTING LUG	--	--	300°	10'-6 3/4"		ERROR
SM01	I	24" SHELL MANWAY	8"	0"	180°	1'-6"	W/ HINGE	SM01
SN01	E	6" DISCHARGE NOZZLE	6"	0"	0°	1'-0"		SN01
SN02	G	4" LEVEL NOZZLE	6"	0"	150°	8'-4"		SN02
SN03	F	2" DRAIN NOZZLE	6"	0"	120°	6"		SN03
SN04	H	4" LEVEL NOZZLE	6"	0"	150°	2'-1"		SN04
SN05	J	2" LEVEL NOZZLE	6"	0"	210°	2'-1"		SN05
SN06	K	4" SPARE NOZZLE	6"	0"	240°	8'-4"		SN06
SN07	L	4" SPARE NOZZLE	6"	0"	240°	2'-1"		SN07
SN08	M	6" SPARE NOZZLE	6"	0"	90°	1'-0"		SN08

NOTE 1: SHELL PLATE IS TO BE STACKED FLUSH INSIDE.
NOTE 2: ELEVATIONS SHOWN FROM TOP OF TANK BOTTOM AT THE LOCATION OF THE APPURTENANCE.
NOTE 3: ARC DIMENSIONS CALCULATED ON THE OUTSIDE OF THE FIRST SHELL RING.

REV.	BY	DATE	DESCRIPTION
2	MEM	04/14/2015	REVISED NOZZLE ORIENTATINO AND SHELL VERT
1	EJ	03/23/2015	RELOCATED ALL NOZZLES REVISED B.O.M. & TITLE BLOCK
0	EJ	02/16/2015	INITIAL ISSUE

BMT ACQUISITION, LLC
ENGINEERS – FABRICATORS – CONSTRUCTORS
8301 BROADWAY BLVD SE
ALBUQUERQUE, NM 87105-7453
PHONE: 505-563-4800
FAX: 505-563-4799
http://www.bmt-tank.com

T-110
&
T-116

SHELL LAYOUT
VIEWED FROM OUTSIDE
6,000 GAL. WATER STORAGE TANKS
(10.17'DIA. X 11'HGT.) AWWA-D100-11
CUSTOMER: FLITEWAY TECH., INC
PROJECT: EDB INTERIM MEASURE

DRAWN:	JOB No.:
EJ	30883
CHECKED: GAV	
DATE: 02/16/2015	SHEET No.: E03
REVISION: 2	

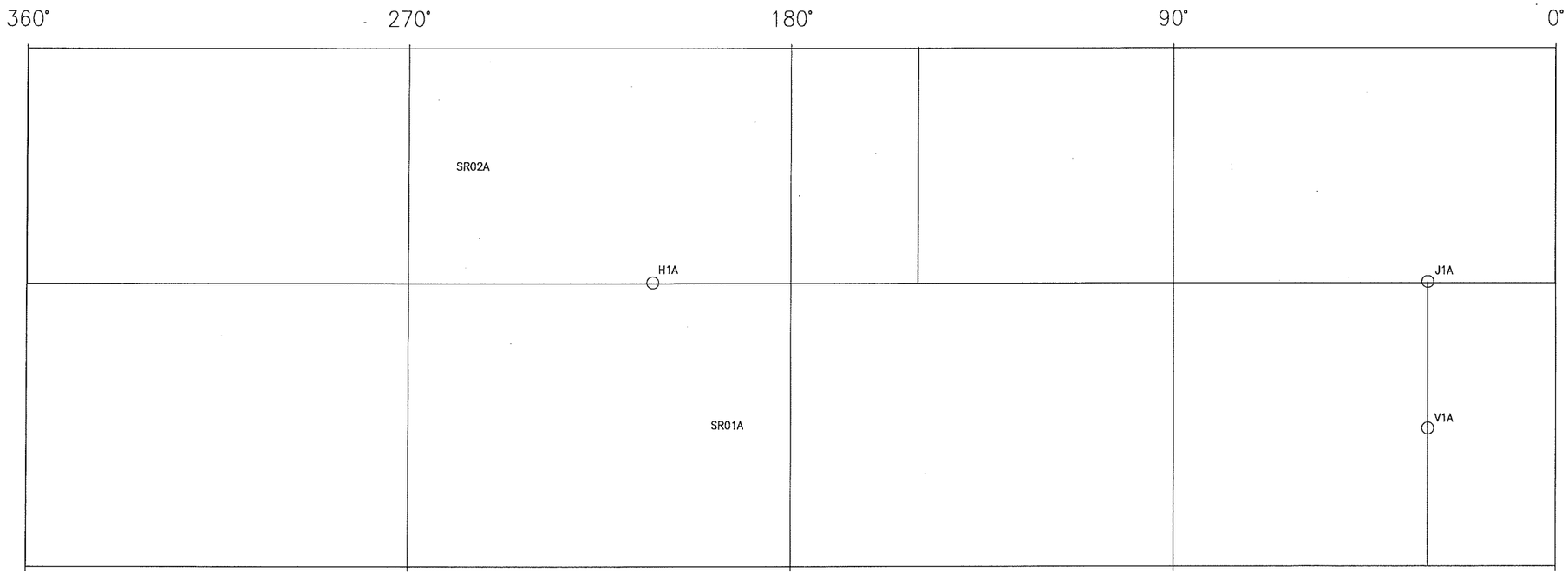

PLATE DIMENSIONS		
PLATE MARK	ARC LENGTH	CHORD LENGTH
SR01A	384 3/4"	1/8"
SR02A	384 1/2"	1/8"

NOTE 1: ARC LENGTHS ARE VERT TO VERT AT OUTSIDE OF SHELL.
NOTE 2: CHORD LENGTHS ARE VERT TO VERT AT OUTSIDE OF SHELL.

X-RAY LIST			
WELDER'S NUMBER/NAME	WELDER'S NUMBER/NAME	WELDER'S NUMBER/NAME	WELDER'S NUMBER/NAME

NOTE 1: MANDATORY X-RAYS PER API 650 ARE SHOWN.
NOTE 2: VERTICAL JOINTS REQUIRE AN X-RAY IN THE FIRST 10'-0" FOR EACH WELDER FOR EACH THICKNESS AND, WITHOUT REGARD TO THE NUMBER OF WELDERS, EACH ADDITIONAL 100'-0" OR MAJOR FRACTION OF 100'-0" OF THE SAME THICKNESS.
NOTE 3: HORIZONTAL JOINTS REQUIRE AN X-RAY IN THE FIRST 10'-0" AND ONE X-RAY FOR EACH 200'-0" OR MAJOR FRACTION OF 200'-0" FOR EACH THICKNESS WITHOUT REGARD TO THE NUMBER OF WELDERS.

WELD MARK LEGEND	
MARK	DESCRIPTION
○	X-RAY LOCATION
⊠	X-RAY ACCEPTABLE
●	X-RAY UNACCEPTABLE
● ○	X-RAY REPAIR
● ⊠	REPAIR ACCEPTABLE
+	TRACER LOCATION
✳	TRACER ACCEPTABLE

REV.	BY	DATE	DESCRIPTION
1	EJ	03/23/2015	REVISED TITLE BLOCK
0	EJ	02/16/2015	INITIAL ISSUE

BMT ACQUISITION, LLC
ENGINEERS – FABRICATORS – CONSTRUCTORS
8301 BROADWAY BLVD SE
ALBUQUERQUE, NM 87105-7453
PHONE: 505-563-4800
FAX: 505-563-4799
http://www.bmt-tank.com

T-110
&
T-116

X-RAY MAP
VIEWED FROM OUTSIDE
6,000 GAL. WATER STORAGE TANKS
(10.17'DIA. X 11'HGT.) AWWA-D100-11
CUSTOMER: FLITEWAY TECH., INC
PROJECT: EDB INTERIM MEASURE

DRAWN:	JOB No.:
EJ	30883
CHECKED: GAV	
DATE: 02/16/2015	SHEET No.: E04
REVISION: 1	

SEAM	WELDER		REMARKS	SEAM	WELDER		REMARKS
	INSIDE	OUTSIDE			INSIDE	OUTSIDE	
1H1				1V1			
2H1				2V1			

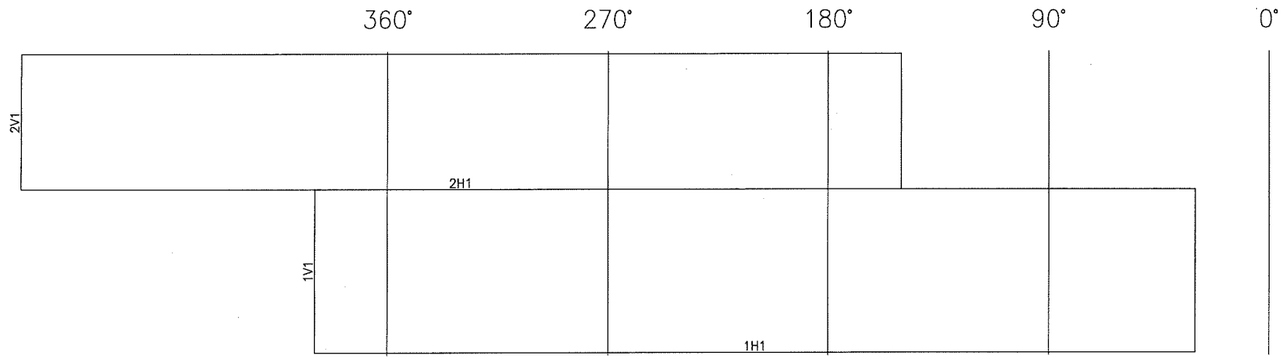

POSITION OF WELD
(H– HORIZONTAL)
(V– VERTICAL)

SHELL RING NUMBER → 3 V 12 ← CONSECUTIVE NUMBER TO REPRESENT WELD SEAM FOR THAT SPECIFIC RING AND POSITION.

SEAM IDENTIFICATION KEY

LOOKING FROM OUTSIDE TO INSIDE

CODE:_____ NOMINAL DIAMETER: 10'–2"

NOMINAL HEIGHT: 11'–0"

FIELD FOREMAN:_____

WELDER:_____ WELDER:_____

WELDER:_____ WELDER:_____

WELDER:_____ WELDER:_____

DATE:_____

REV.	BY	DATE	DESCRIPTION
1	EJ	03/23/2015	REVISED TITLE BLOCK
0	EJ	02/16/2015	INITIAL ISSUE

BMT ACQUISITION, LLC
ENGINEERS – FABRICATORS – CONSTRUCTORS

8301 BROADWAY BLVD SE
ALBUQUERQUE, NM 87105–7453
PHONE: 505–563–4800
FAX: 505–563–4799
http://www.bmt–tank.com

T–110
&
T–116

SHELL WELD MAP
ROLL–OUT
6,000 GAL. WATER STORAGE TANKS
(10.17'DIA. X 11'HGT.) AWWA–D100–11
CUSTOMER: FLITEWAY TECH., INC
PROJECT: EDB INTERIM MEASURE

DRAWN:	JOB No.:
EJ	30883
CHECKED: GAV	
DATE: 02/16/2015	SHEET No.: E05
REVISION: 1	

SEAM	WELDER	REMARKS
HS1		

WELDER INFORMATION	
FULL NAME	INITIALS

MARK LOCATIONS	
LEAK	○
REPAIRED	⊠
RETESTED	⊠

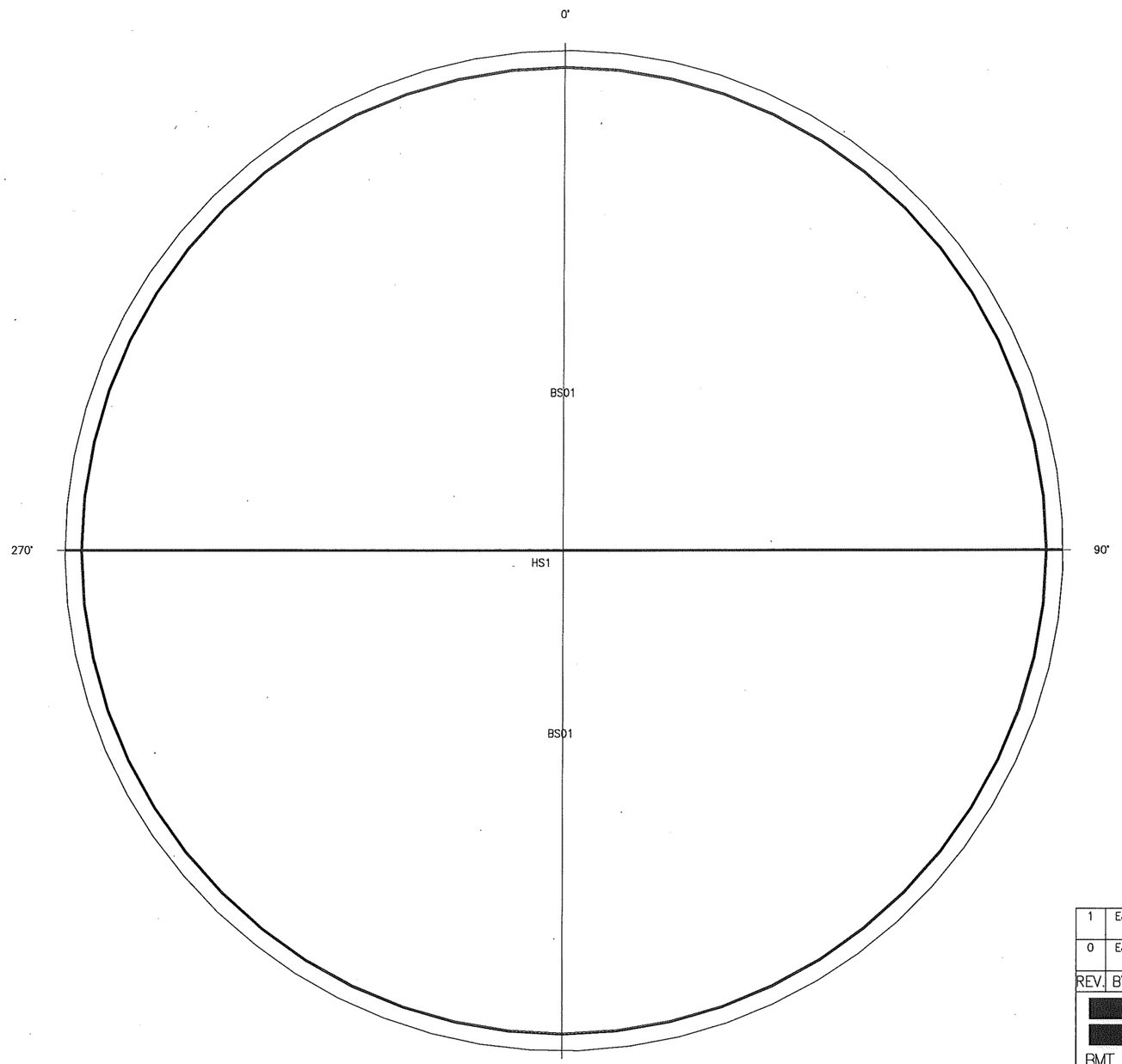

PLAN VIEW

POSITION OF WELD
(H– HORIZONTAL)
(V– VERTICAL)

H 12 ← CONSECUTIVE NUMBER TO REPRESENT LINEAR WELD FOR THAT SPECIFIC BOTTOM PLATES AND POSITION

SEAM IDENTIFICATION KEY

REV.	BY	DATE	DESCRIPTION
1	EJ	03/23/2015	CHANGED BOTTOM PLATE ORIENTATION REVISED TITLE BLOCK
0	EJ	02/16/2015	INITIAL ISSUE

BMT ACQUISITION, LLC
ENGINEERS – FABRICATORS – CONSTRUCTORS

8301 BROADWAY BLVD SE
ALBUQUERQUE, NM 87105-7453
PHONE: 505-563-4800
FAX: 505-563-4799
http://www.bmt-tank.com

T-110
&
T-116

BOTTOM WELD MAP
6,000 GAL. WATER STORAGE TANKS
(10.17'DIA. X 11'HGT.) AWWA-D100-11

CUSTOMER:
FLITEWAY TECH., INC

PROJECT:
EDB INTERIM MEASURE

DRAWN:	JOB No.:
EJ	30883
CHECKED: GAV	
DATE: 02/16/2015	SHEET No.:
REVISION: 1	E06

SEAM	WELDER	REMARKS
VS1		

WELDER INFORMATION	
FULL NAME	INITIALS

MARK LOCATIONS	
LEAK	○
REPAIRED	⊠
RETESTED	⊠

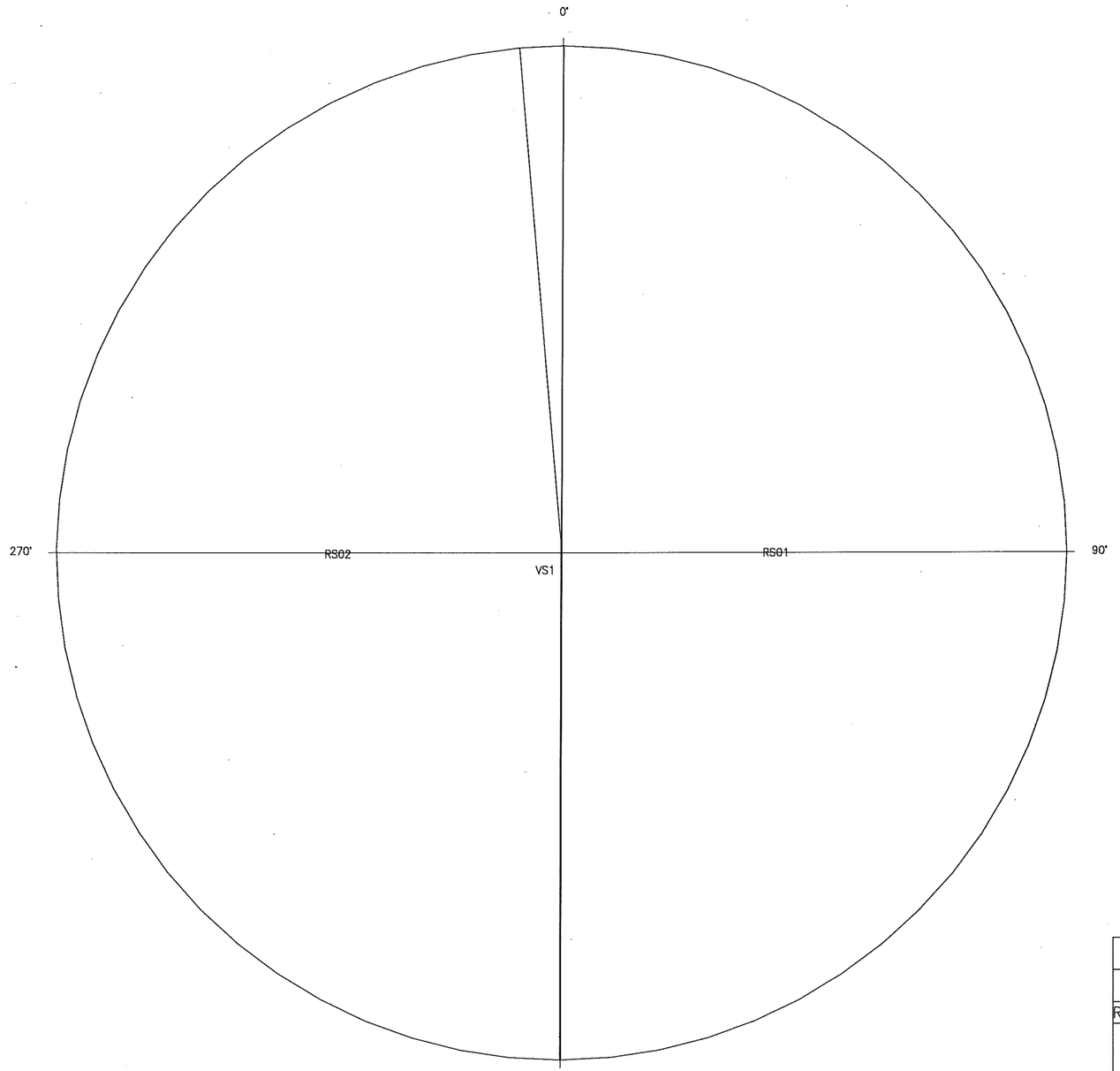

PLAN VIEW

POSITION OF WELD
(H– HORIZONTAL)
(V– VERTICAL)

V 12 ← CONSECUTIVE NUMBER TO REPRESENT LINEAR WELD FOR THAT SPECIFIC BOTTOM PLATES AND POSITION

SEAM IDENTIFICATION KEY

REV.	BY	DATE	DESCRIPTION
1	EJ	03/23/2015	REVISED TITLE BLOCK
0	EJ	02/16/2015	INITIAL ISSUE

BMT ACQUISITION, LLC
ENGINEERS – FABRICATORS – CONSTRUCTORS

8301 BROADWAY BLVD SE
ALBUQUERQUE, NM 87105–7453
PHONE: 505–563–4800
FAX: 505–563–4799
http://www.bmt-tank.com

T–110
&
T–116

ROOF WELD MAP
6,000 GAL. WATER STORAGE TANKS
(10.17'DIA. X 11'HGT.) AWWA–D100–11

CUSTOMER:
FLITEWAY TECH., INC

PROJECT:
EDB INTERIM MEASURE

DRAWN:	JOB No.:
EJ	30883
CHECKED: GAV	
DATE: 02/16/2015	SHEET No.: E07
REVISION: 1	

NORTH

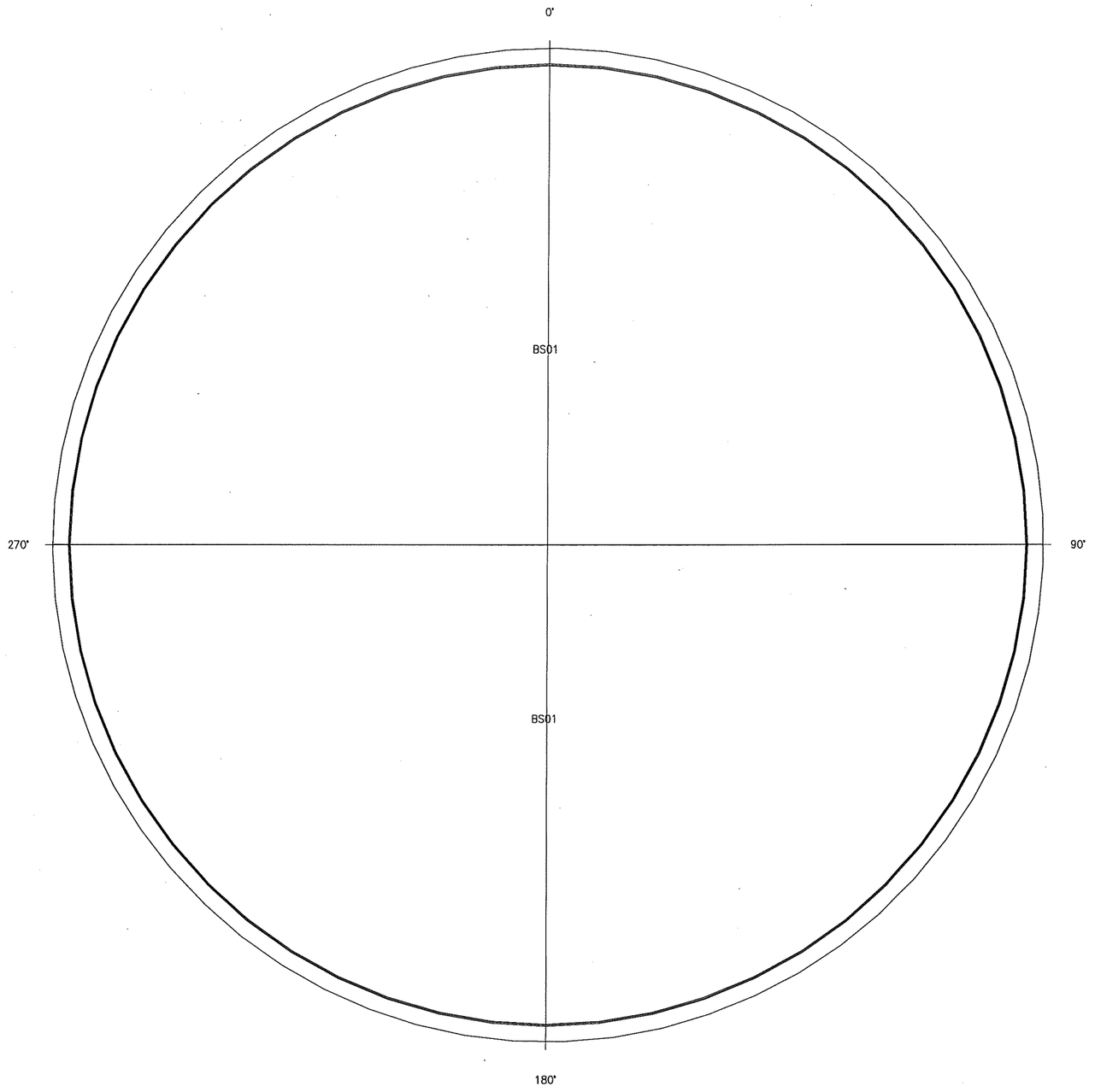

PLAN VIEW

WELDER INFORMATION	
FULL NAME	INITIALS

MARK LOCATIONS	
LEAK	○
REPAIRED	⊠
RETESTED	⊠

DATE:_____

NOTES:_____

CUSTOMER (WITNESS):_____
SIGNATURE

FIELD FOREMAN:_____
SIGNATURE

REV.	BY	DATE	DESCRIPTION
1	EJ	03/23/2015	CHANGED BOTTOM PLATE ORIENTATION REVISED TITLE BLOCK
0	EJ	02/16/2015	INITIAL ISSUE

BMT ACQUISITION, LLC
ENGINEERS – FABRICATORS – CONSTRUCTORS

8301 BROADWAY BLVD SE
ALBUQUERQUE, NM 87105-7453
PHONE: 505-563-4800
FAX: 505-563-4799
http://www.bmt-tank.com

T-110
&
T-116

DIESEL TEST VACUUM
6,000 GAL. WATER STORAGE TANKS
(10.17'DIA. X 11'HGT.) AWWA-D100-11

CUSTOMER:
FLITEWAY TECH., INC

PROJECT:
EDB INTERIM MEASURE

DRAWN: EJ	JOB No.: 30883
CHECKED: GAV	
DATE: 02/16/2015	SHEET No.: E08
REVISION: 1	

NORTH

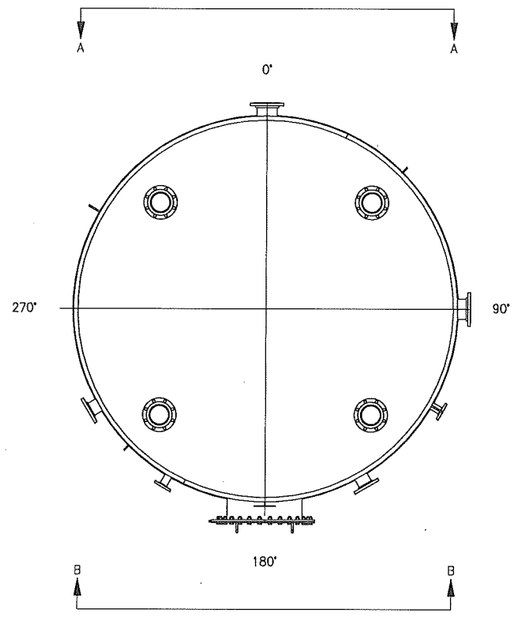

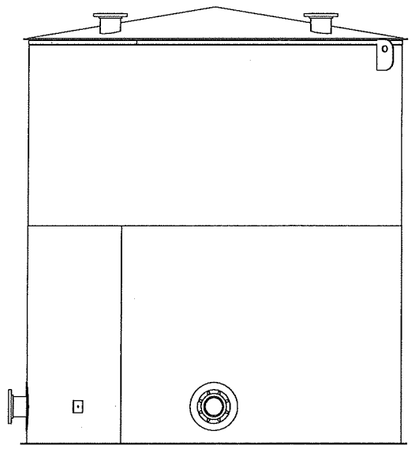

VIEW A–A

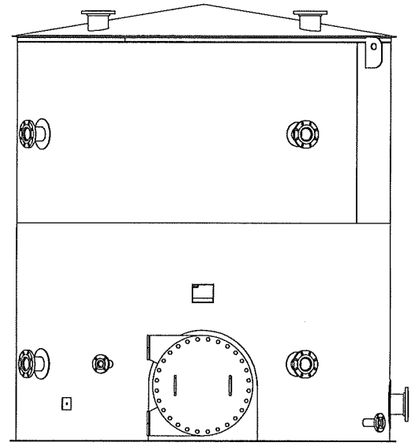

VIEW B–B

REV.	BY	DATE	DESCRIPTION
2	MEM	04/14/2015	REVISE NOZZLE ORIENTATION
1	EJ	03/23/2015	RELOCATED ALL NOZZLES REVISED TITLE BLOCK
0	EJ	02/16/2015	INITIAL ISSUE

BMT ACQUISITION, LLC
ENGINEERS – FABRICATORS – CONSTRUCTORS

8301 BROADWAY BLVD SE
ALBUQUERQUE, NM 87105–7453
PHONE: 505–563–4800
FAX: 505–563–4799
http://www.bmt-tank.com

T–110
&
T–116

WELD MAP
6,000 GAL. WATER STORAGE TANKS
(10.17'DIA. X 11'HGT.) AWWA–D100–11

CUSTOMER:
FLITEWAY TECH., INC

PROJECT:
EDB INTERIM MEASURE

DRAWN: EJ	JOB No.: 30883
CHECKED: GAV	
DATE: 02/16/2015	SHEET No.: E09
REVISION: 2	

NORTH

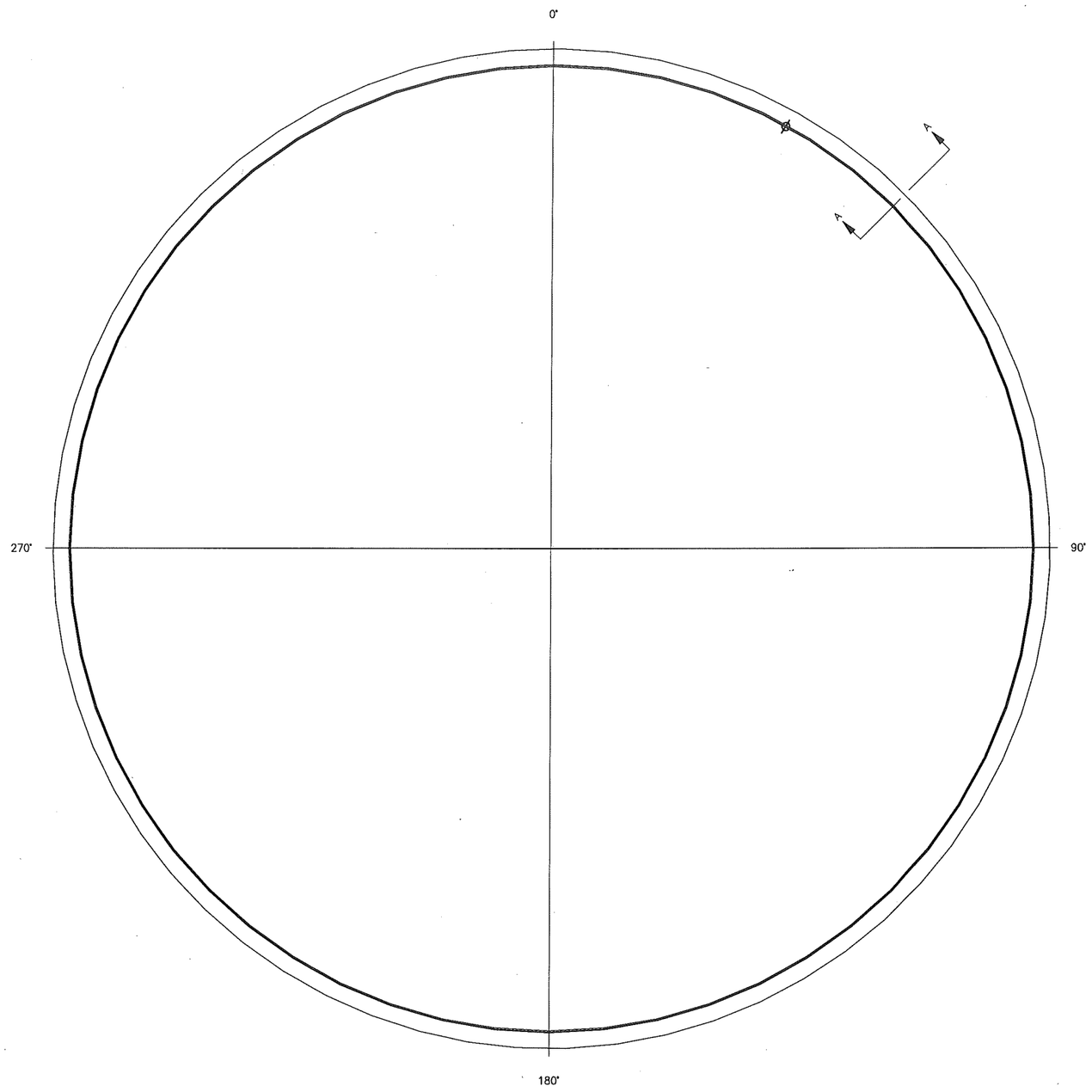

10'-6 1/2" BUTT-WELDED BOTTOM

NOTE 1: LINEAR FEET OF WELD IS 10'-6 1/2"

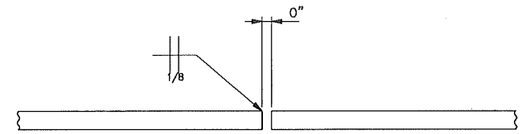

TYPICAL BUTT JOINT

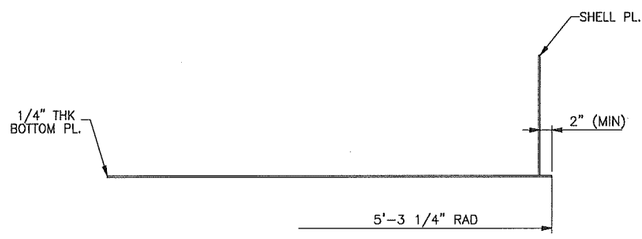

SECTION A-A

REV.	BY	DATE	DESCRIPTION
1	EJ	03/23/2015	CHANGED BOTTOM PLATE ORIENTATION REVISED TITLE BLOCK
0	EJ	02/16/2015	INITIAL ISSUE

BMT ACQUISITION, LLC
ENGINEERS - FABRICATORS - CONSTRUCTORS

8301 BROADWAY BLVD SE
ALBUQUERQUE, NM 87105-7453
PHONE: 505-563-4800
FAX: 505-563-4799
http://www.bmt-tank.com

T-110
&
T-116

BOTTOM LAYOUT
AND DETAILS
6,000 GAL. WATER STORAGE TANKS
(10.17'DIA. X 11'HGT.) AWWA-D100-11
CUSTOMER: FLITEWAY TECH., INC
PROJECT: EDB INTERIM MEASURE

DRAWN: EJ	JOB No.: 30883
CHECKED: GAV	
DATE: 02/16/2015	SHEET No.: BL01
REVISION: 1	

WORK INSTRUCTIONS								
RECV	CUT ROLL	FIT	WELDED	READY TO COAT	SENT TO VENDOR	COATING COMPLETE	READY TO SHIP	SHIPPED

BILL OF MATERIALS								
QTY	SHPG MARK	ASSY QTY	ASSY MARK	DESCRIPTION	LENGTH	SPEC MATL	REMARKS	LBS WEIGHT
2	BS01			BOTTOM PL. 1/4" x 63 3/16" x	10'-6 1/2"	A36		[889]

BILL OF MATERIALS LISTED FOR (1) TANK - (2) TANKS REQUIRED.
NOTE 1.- CUTTING RADIUS IS 5'-3 1/4"
NOTE 2.- TOTAL WEIGHT PLATES SHOWN = 889 LBS

RAW MATERIAL					
QTY	MK	PLATES	DESCRIPTION	CUT LENGTH	WEIGHT
1	BRAW-01	BS01, NIL	PL. 1/4" x 96" x 17'-5 7/8"	611 13/16"	[1427]

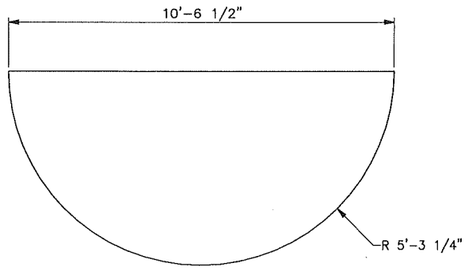

BS01 (2 REQD)

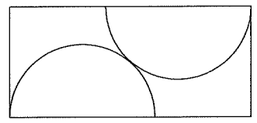

SEE RAW MATERIAL TABLE

REV.	BY	DATE	DESCRIPTION
1	EJ	03/23/2015	REVISED TITLE BLOCK
0	EJ	02/16/2015	INITIAL ISSUE

BMT ACQUISITION, LLC
ENGINEERS - FABRICATORS - CONSTRUCTORS
8301 BROADWAY BLVD SE
ALBUQUERQUE, NM 87105-7453
PHONE: 505-563-4800
FAX: 505-563-4799
http://www.bmt-tank.com

T-110
&
T-116

BOTTOM PLATE
DETAILS
6,000 GAL. WATER STORAGE TANKS
(10.17'DIA. X 11'HGT.) AWWA-D100-11
CUSTOMER: FLITEWAY TECH., INC
PROJECT: EDB INTERIM MEASURE

DRAWN:	JOB No.:
EJ	30883
CHECKED: GAV	
DATE: 02/16/2015	SHEET No.:
REVISION: 1	BL02

NORTH

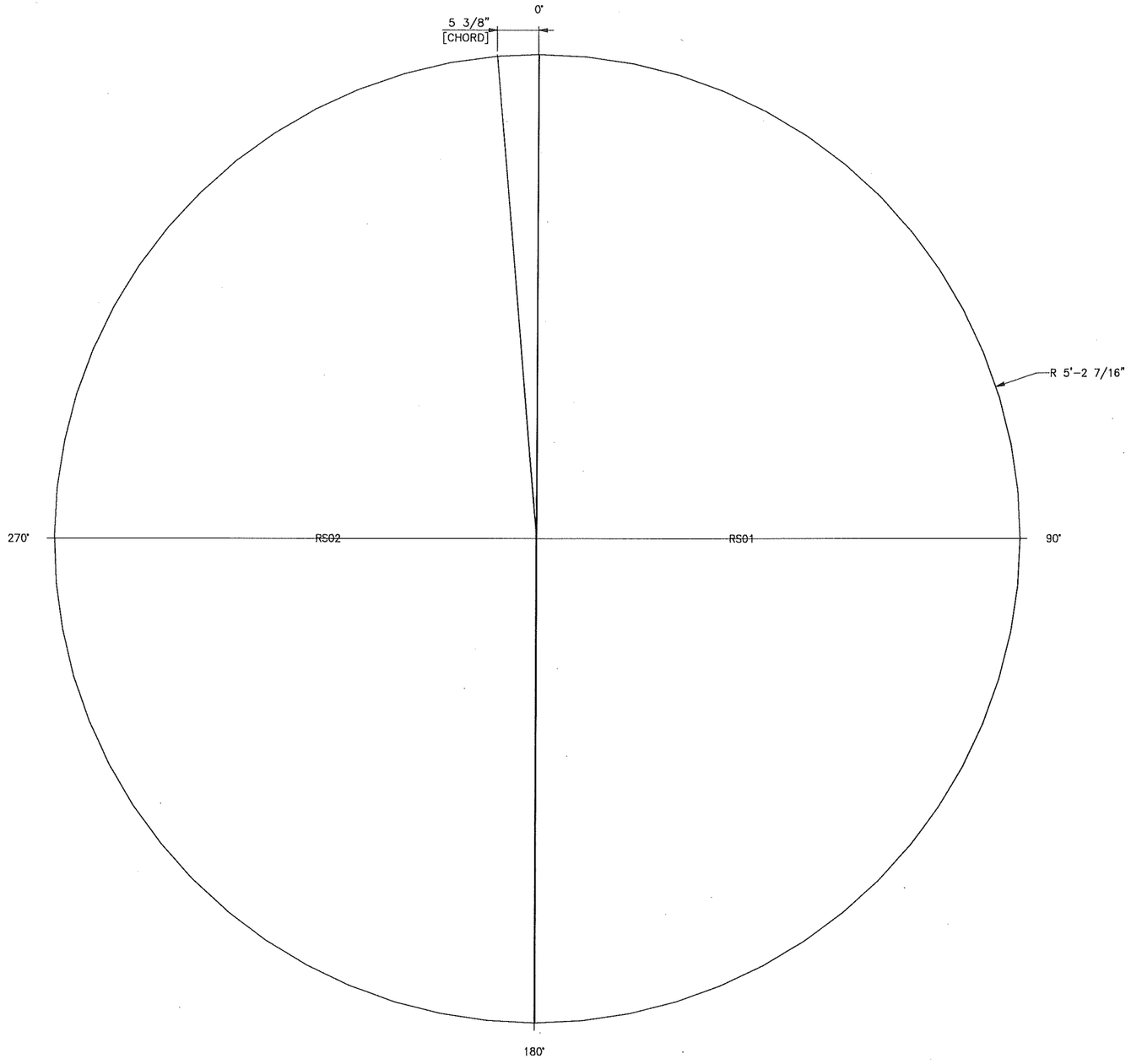

BUTT-WELDED ROOF FOR 10'-2" DIA TANK

NOTE 1: LINEAR FEET OF WELD IS 10'-4 13/16"

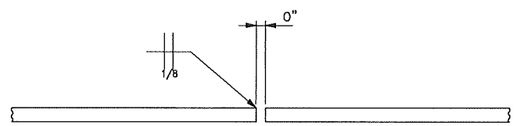

TYPICAL BUTT JOINT

REV.	BY	DATE	DESCRIPTION
1	EJ	03/23/2015	REVISED TITLE BLOCK
0	EJ	02/16/2015	INITIAL ISSUE

BMT ACQUISITION, LLC
ENGINEERS - FABRICATORS - CONSTRUCTORS

8301 BROADWAY BLVD SE
ALBUQUERQUE, NM 87105-7453
PHONE: 505-563-4800
FAX: 505-563-4799
http://www.bmt-tank.com

T-110
&
T-116

ROOF LAYOUT
AND DETAILS
6,000 GAL. WATER STORAGE TANKS
(10.17'DIA. X 11'HGT.) AWWA-D100-11
CUSTOMER: FLITEWAY TECH., INC
PROJECT: EDB INTERIM MEASURE

DRAWN: EJ	JOB No.: 30883
CHECKED: GAV	
DATE: 02/16/2015	SHEET No.: RL01
REVISION: 1	

WORK INSTRUCTIONS								
RECV	CUT ROLL	FIT	WELDED	READY TO COAT	SENT TO VENDOR	COATING COMPLETE	READY TO SHIP	SHIPPED

BILL OF MATERIALS								
QTY	SHPG MARK	ASSY QTY	ASSY MARK	DESCRIPTION	LENGTH	SPEC MATL	REMARKS	LBS WEIGHT
1	RS01			ROOF PL. 3/16" x 62 7/16" x	10'-4 13/16"	A36		[325]
1	RS02			ROOF PL. 3/16" x 62 7/16" x	10'-4 9/16"	A36		[316]

BILL OF MATERIALS LISTED FOR (1) TANK - (2) TANKS REQUIRED.
NOTE 1.- CUTTING RADIUS IS 5'-2 7/16"
NOTE 2.- TOTAL WEIGHT PLATES SHOWN = 641 LBS

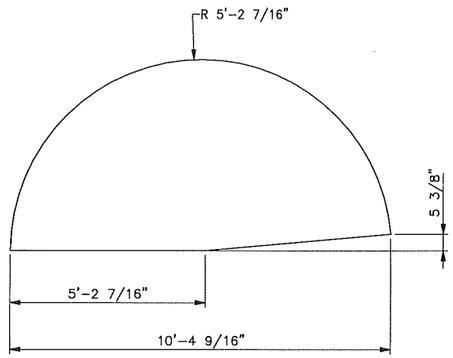

RS02 (1 REQD)

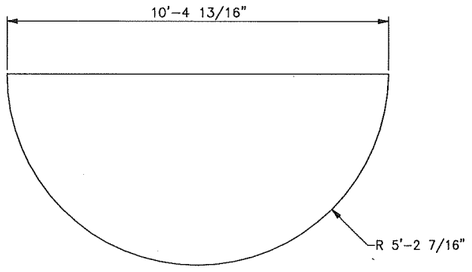

RS01 (1 REQD)

RAW MATERIAL					
QTY	MK	PLATES	DESCRIPTION	CUT LENGTH	WEIGHT
1	RRAW-01	rs01	PL. 3/16" x 96" x 17'-1 5/8"	603 3/16"	[1049]

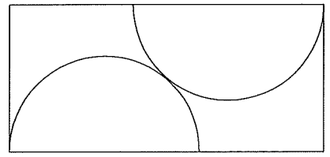

SEE RAW MATERIAL TABLE

REV.	BY	DATE	DESCRIPTION
1	EJ	03/23/2015	REVISED TITLE BLOCK
0	EJ	02/16/2015	INITIAL ISSUE

BMT ACQUISITION, LLC
ENGINEERS - FABRICATORS - CONSTRUCTORS
8301 BROADWAY BLVD SE
ALBUQUERQUE, NM 87105-7453
PHONE: 505-563-4800
FAX: 505-563-4799
http://www.bmt-tank.com

T-110
&
T-116

ROOF PLATE DETAILS
6,000 GAL. WATER STORAGE TANKS
(10.17'DIA. X 11'HGT.) AWWA-D100-11

CUSTOMER: FLITEWAY TECH., INC
PROJECT: EDB INTERIM MEASURE

DRAWN:	JOB No.:
EJ	30883
CHECKED: GAV	
DATE: 02/16/2015	SHEET No.: RL02
REVISION: 1	

WORK INSTRUCTIONS								
RECV	CUT ROLL	FIT	WELDED	READY TO COAT	SENT TO VENDOR	COATING COMPLETE	READY TO SHIP	SHIPPED

BILL OF MATERIALS								
QTY	SHPG MARK	ASSY QTY	ASSY MARK	DESCRIPTION	LENGTH	SPEC MATL	REMARKS	LBS WEIGHT
2	TM01			ANGLE 2" x 2" x 1/4" x	18'-0"	A36	ROLL	[101]

BILL OF MATERIALS LISTED FOR (1) TANK - (2) TANKS REQUIRED.
NOTE 1: ALL ROLLED MEMBERS ARE CUT FROM 20'-0" STOCK LENGTHS.

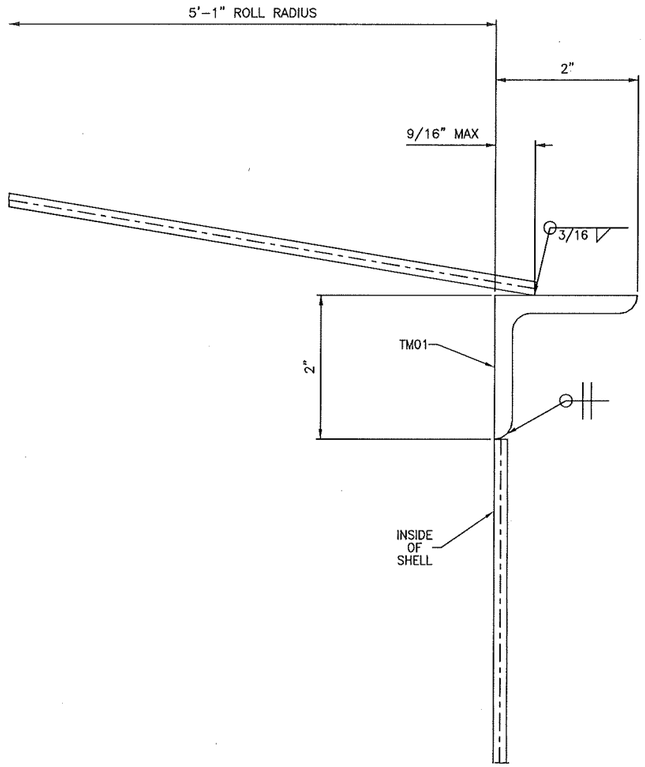

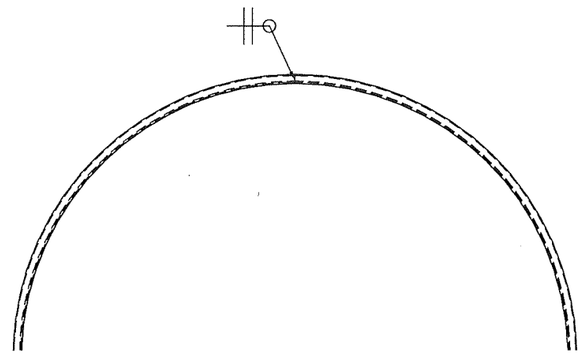

SEGMENT TO SEGMENT WELDING DETAIL

REV.	BY	DATE	DESCRIPTION
1	EJ	03/23/2015	REVISED TITLE BLOCK
0	EJ	02/16/2015	INITIAL ISSUE

BMT ACQUISITION, LLC
ENGINEERS - FABRICATORS - CONSTRUCTORS

8301 BROADWAY BLVD SE
ALBUQUERQUE, NM 87105-7453
PHONE: 505-563-4800
FAX: 505-563-4799
http://www.bmt-tank.com

T-110
&
T-116

TOP MEMBER
DETAIL
6,000 GAL. WATER STORAGE TANKS
(10.17'DIA. X 11'HGT.) AWWA-D100-11
CUSTOMER: FLITEWAY TECH., INC
PROJECT: EDB INTERIM MEASURE

DRAWN: EJ	JOB No.: 30883
CHECKED: GAV	
DATE: 02/16/2015	SHEET No.: TM01
REVISION: 1	

WORK INSTRUCTIONS								
RECV	CUT ROLL	FIT	WELDED	READY TO COAT	SENT TO VENDOR	COATING COMPLETE	READY TO SHIP	SHIPPED

BILL OF MATERIALS								
QTY	SHPG MARK	ASSY QTY	ASSY MARK	DESCRIPTION	LENGTH	SPEC MATL	REMARKS	LBS WEIGHT
1	SR01A			SHELL PL. 0.2500" x 71" x	31'-11 15/16"	A36	ROLL	[1933]
1	SR02A			SHELL PL. 0.1875" x 59" x	31'-11 3/4"	A36	ROLL	[1204]

BILL OF MATERIALS LISTED FOR (1) TANK - (2) TANKS REQUIRED.
NOTE 1: DIMENSIONS SHOWN ARE BEFORE ROLLING.
NOTE 2: ALL DETAIL DIMENSIONS ARE ROUNDED TO THE NEAREST 1/16".
NOTE 3: ROLL ALL SHELL PLATES TO 5'-1" INSIDE RADIUS.
NOTE 4: FABRICATION TOLERANCE FOR BEVEL ANGLE AT PLATE EDGE IS -5', +5'.
NOTE 5: 1/8" DEDUCTED FROM LENGTH FOR WELD GAP.
NOTE 6: TOTAL WEIGHT PLATES SHOWN = 3137 LBS
NOTE 7: THE LENGTH OF THE PLATES IS CALCULATED USING THE CENTER OF DIAMETER OF THE TANK (ALIGN CENTERS).

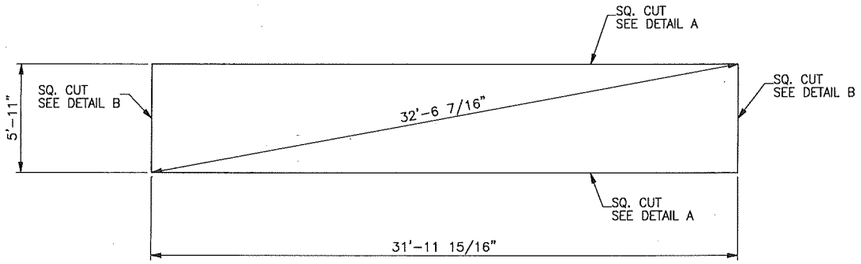

MK. SR01A (1 REQ'D)

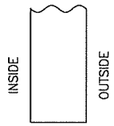

DETAIL A

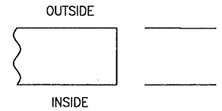

DETAIL B

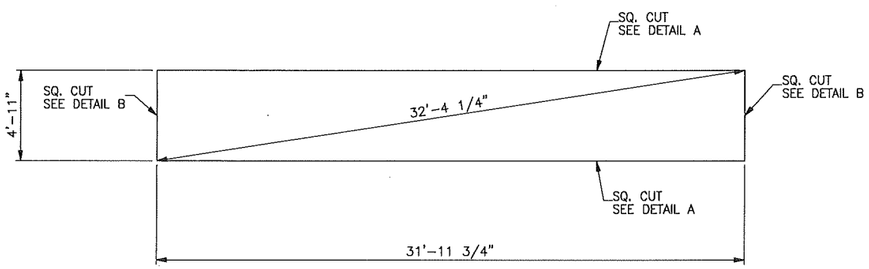

MK. SR02A (1 REQ'D)

REV.	BY	DATE	DESCRIPTION
1	EJ	03/23/2015	REVISED TITLE BLOCK
0	EJ	02/16/2015	INITIAL ISSUE

BMT ACQUISITION, LLC
ENGINEERS - FABRICATORS - CONSTRUCTORS

8301 BROADWAY BLVD SE
ALBUQUERQUE, NM 87105-7453
PHONE: 505-563-4800
FAX: 505-563-4799
http://www.bmt-tank.com

T-110
&
T-116

SHELL COURSE PLATES
6,000 GAL. WATER STORAGE TANKS
(10.17'DIA. X 11'HGT.) AWWA-D100-11

CUSTOMER: FLITEWAY TECH., INC

PROJECT: EDB INTERIM MEASURE

DRAWN: EJ	JOB No.: 30883
CHECKED: GAV	
DATE: 02/16/2015	SHEET No.: PL01
REVISION: 1	

NOTES

1.– AFTER INSTALLATION, AIR TEST REPAD WELDS TO 15 PSI PER API–650–5.3.4.
2.– AFTER THE REINFORCING PAD(S) HAVE BEEN TESTED, THE 1/4" DRILLED AND TAPED HOLE(S) MUST REMAIN OPEN (NO PLUGS, GREASE, PAINT OR ANY OTHER FOREIGN MATERIAL PLUGGING THE 1/4" TEST HOLE).
3.– GASKETED FACES SHALL BE MACHINE FINISHED TO PROVIDE A MINIMUM GASKET BEARING WIDTH OF 3/4".
4.– BOLT HOLES TO STRADDLE TANKS VERTICAL CENTERLINE.

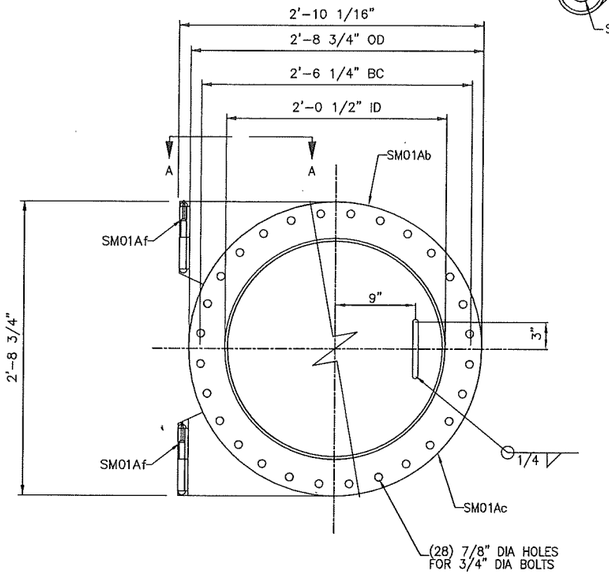

FLANGE/COVER ASSY

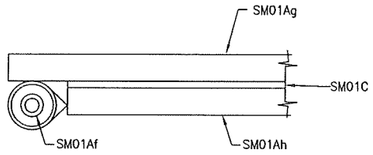

SECTION A–A

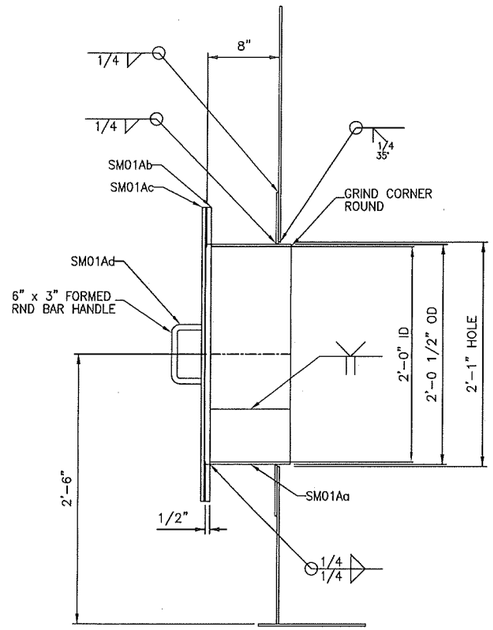

24" SHELL MANWAY, MK. SM01A

DETAIL FOR MANWAY

K

WORK INSTRUCTIONS								
RECV	CUT ROLL	FIT	WELDED	READY TO COAT	SENT TO VENDOR	COATING COMPLETE	READY TO SHIP	SHIPPED

BILL OF MATERIALS								
QTY	SHPG MARK	ASSY QTY	ASSY MARK	DESCRIPTION	LENGTH	SPEC MATL	REMARKS	LBS WEIGHT
1	SM01A			24" SHELL MANWAY				[224]
		1	SM01Aa	PL. 1/4" x 9" x	6'–4 3/8"	A36	ROLL	46
		1	SM01Ab	FLANGE PL 1/2" x 24 1/2" ID x 32 3/4" OD		A36		52
		1	SM01Ac	COVER PL 3/8" x 32 3/4" OD		A36		90
		2	SM01Ad	RND BAR 5/8" DIA x	1'–0"	A36	BEND	2
		4	SM01Ae	MACHINE BOLT 3/4" DIA W/HN (SHIPPING) x	2"	A325	W/ H. NUTS	2
		2	SM01Af	NARROW–PROFILE WELD–ON LIFT–OFF HINGE		A36	MC#3636A6	4
		2	SM01Ag	PL 1/2" x 9 1/4" x	1'–5 1/2"	A36		16
		2	SM01Ah	PL 3/8" x 9 1/4" x	1'–4 3/8"	A36		12
28	SM01B			MACHINE BOLT 3/4" DIA W/HN (SERVICE) x	2"	A325	W/ H. NUTS	[16]
1	SM01C			GASKET 1/8" THK x 24" ID x 32 3/4" OD		NEOPRENE		[1]
1	SM01D			REPAD PL. 0.2500" x 24 13/16" ID x 36" OD		A36	ROLL	[36]

BILL OF MATERIALS LISTED FOR (1) TANK – (2) TANK REQUIRED.

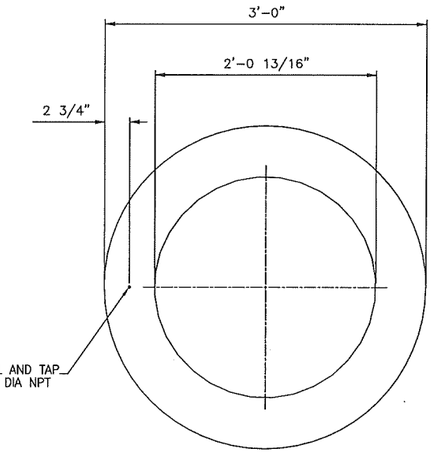

ROLL TO 5'–1 1/4" RAD

MK. SM01B

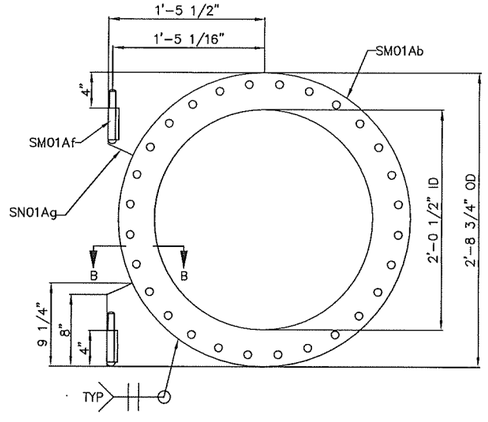

MK. SM01Ab & SM01Ag

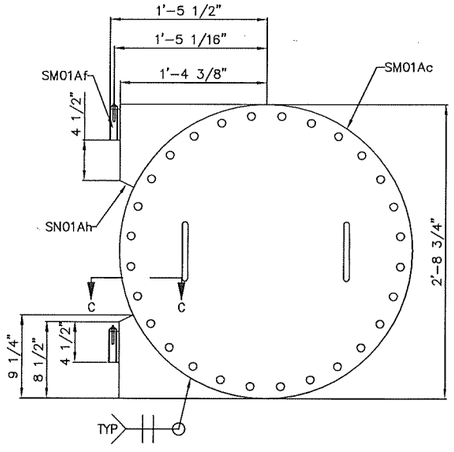

MK. SM01Ac & SM01Ah

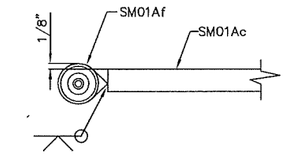

SECTION C–C

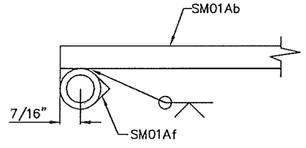

SECTION B–B

REV.	BY	DATE	DESCRIPTION
1	EJ	03/23/2015	REVISED TITLE BLOCK
0	EJ	02/16/2015	INITIAL ISSUE

BMT ACQUISITION, LLC
ENGINEERS – FABRICATORS – CONSTRUCTORS

8301 BROADWAY BLVD SE
ALBUQUERQUE, NM 87105–7453
PHONE: 505–563–4800
FAX: 505–563–4799
http://www.bmt–tank.com

T–110 & T–116

24" SHELL MANWAY W/HINGE
6,000 GAL. WATER STORAGE TANKS
(10.17'DIA. X 11'HGT.) AWWA–D100–11

CUSTOMER: FLITEWAY TECH., INC

PROJECT: EDB INTERIM MEASURE

DRAWN:	JOB No.:
EJ	30883
CHECKED: GAV	
DATE: 02/16/2015	SHEET No.: SM01
REVISION: 1	

WORK INSTRUCTIONS								
RECV	CUT ROLL	FIT	WELDED	READY TO COAT	SENT TO VENDOR	COATING COMPLETE	READY TO SHIP	SHIPPED

BILL OF MATERIALS								
QTY	SHPG MARK	ASSY QTY	ASSY MARK	DESCRIPTION	LENGTH	SPEC MATL	REMARKS	LBS WEIGHT
1	SN01A			6" SHELL NOZZLE				[31]
		1	SN01Aa	6" SCH 80 PIPE x	5 3/4"	A53-B		14
		1	SN01Ab	6" - 150# R.F. S.O. FLANGE		A105		17
1	SN01B			REPAD PL. 0.2500" x 6 3/4" ID x 15 3/4" OD		A36	ROLL	[12]

BILL OF MATERIALS LISTED FOR (1) TANK - (2) TANKS REQUIRED.

NOTES:
1.- AFTER INSTALLATION, AIR TEST REPAD WELDS TO 15 PSI PER API-650 PARA 7.3.4.
2.- AFTER THE REINFORCING PAD(S) HAVE BEEN TESTED, THE 0" DRILLED AND TAPPED HOLE(S) MUST REMAIN OPEN (NO PLUGS, GREASE, PAINT OR ANY OTHER FOREIGN MATERIAL PLUGGING THE 0" TEST HOLE).

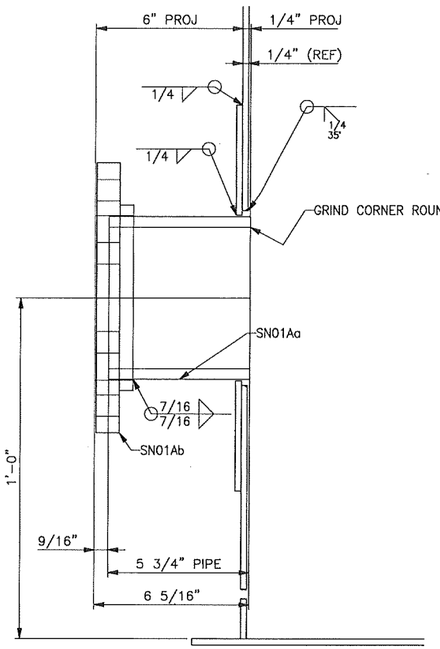

6" NOZZLE, MK. SN01A

6 5/8" NOZZLE OD
7 1/8" HOLE OPENING

DETAIL FOR NOZZLE E

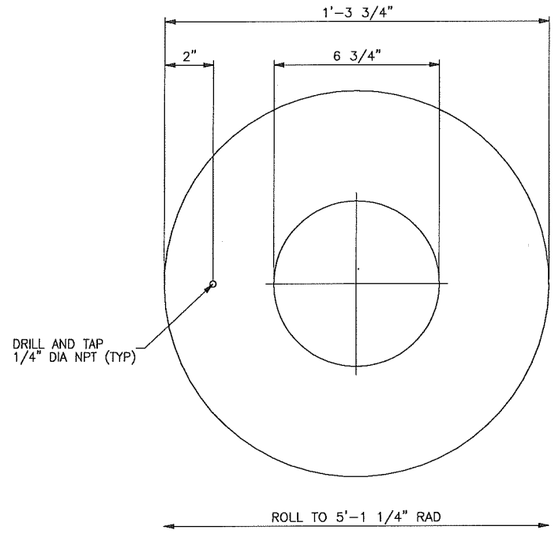

MK. SN01AB

REV.	BY	DATE	DESCRIPTION
2	MEM	04/14/2015	REVISED FLANGE FACE
1	EJ	03/23/2015	REVISED DWG REVISED BOM & TITLE BLOCK
0	EJ	02/16/2015	INITIAL ISSUE

BMT ACQUISITION, LLC
ENGINEERS - FABRICATORS - CONSTRUCTORS

8301 BROADWAY BLVD SE
ALBUQUERQUE, NM 87105-7453
PHONE: 505-563-4800
FAX: 505-563-4799
http://www.bmt-tank.com

T-110
&
T-116

6" DISCHARGE NOZZLE
6,000 GAL. WATER STORAGE TANKS
(10.17'DIA. X 11'HGT.) AWWA-D100-11

CUSTOMER: FLITEWAY TECH., INC

PROJECT: EDB INTERIM MEASURE

DRAWN: EJ	JOB No.: 30883
CHECKED: GAV	
DATE: 02/16/2015	SHEET No.: SN01
REVISION: 2	

WORK INSTRUCTIONS								
RECV	CUT ROLL	FIT	WELDED	READY TO COAT	SENT TO VENDOR	COATING COMPLETE	READY TO SHIP	SHIPPED

BILL OF MATERIALS								
QTY	SHPG MARK	ASSY QTY	ASSY MARK	DESCRIPTION	LENGTH	SPEC MATL	REMARKS	LBS WEIGHT
1	SN02A			4" SHELL NOZZLE				[20]
		1	SN02Aa	4" SCH 80 PIPE x	5 3/4"	A53-B		8
		1	SN02Ab	4" - 150# R.F. S.O. FLANGE		A105		12
1	SN02B			REPAD PL. 0.1875" x 4 5/8" ID x 8" OD		A36	ROLL	[2]

BILL OF MATERIALS LISTED FOR (1) TANK - (2) TANKS REQUIRED.

NOTES:
1.- AFTER INSTALLATION, AIR TEST REPAD WELDS TO 15 PSI PER API-650 PARA 7.3.4.
2.- AFTER THE REINFORCING PAD(S) HAVE BEEN TESTED, THE 0" DRILLED AND TAPPED HOLE(S) MUST REMAIN OPEN (NO PLUGS, GREASE, PAINT OR ANY OTHER FOREIGN MATERIAL PLUGGING THE 0" TEST HOLE).

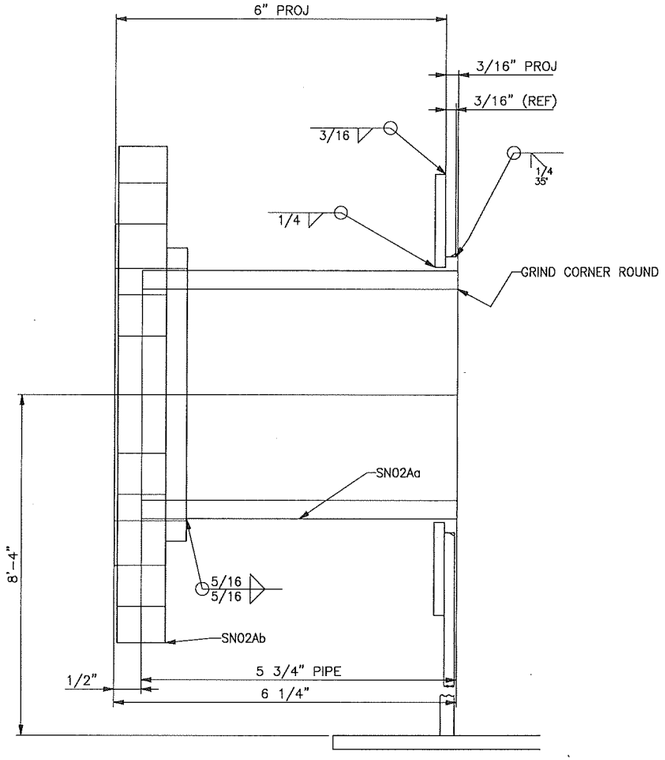

4" NOZZLE, MK. SN02A

4 1/2" NOZZLE OD
5" HOLE OPENING

DETAIL FOR NOZZLE G

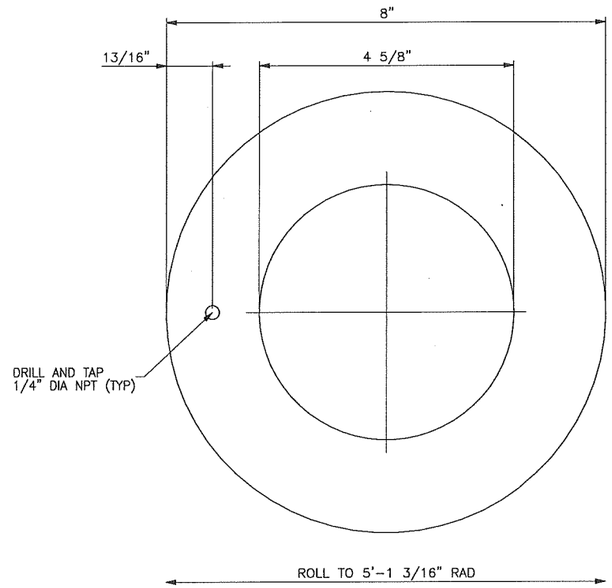

MK. SN02AB

REV.	BY	DATE	DESCRIPTION
2	MEM	04/14/2015	REVISE FLANGE FACE
1	EJ	03/23/2015	REVISE DWG REVISED BOM & TITLE BLOCK
0	EJ	02/16/2015	INITIAL ISSUE

BMT ACQUISITION, LLC
ENGINEERS - FABRICATORS - CONSTRUCTORS

8301 BROADWAY BLVD SE
ALBUQUERQUE, NM 87105-7453
PHONE: 505-563-4800
FAX: 505-563-4799
http://www.bmt-tank.com

T-110
&
T-116

4" LEVEL NOZZLE
6,000 GAL. WATER STORAGE TANKS
(10.17'DIA. X 11'HGT.) AWWA-D100-11

CUSTOMER:
FLITEWAY TECH., INC

PROJECT:
EDB INTERIM MEASURE

DRAWN:	JOB No.:
EJ	30883
CHECKED: GAV	
DATE: 02/16/2015	SHEET No.: SN02
REVISION: 2	

WORK INSTRUCTIONS								
RECV	CUT ROLL	FIT	WELDED	READY TO COAT	SENT TO VENDOR	COATING COMPLETE	READY TO SHIP	SHIPPED

BILL OF MATERIALS								
QTY	SHPG MARK	ASSY QTY	ASSY MARK	DESCRIPTION	LENGTH	SPEC MATL	REMARKS	LBS WEIGHT
1	SN03A			2" SHELL NOZZLE				[9]
		1	SN03Aa	2" SCH 160 PIPE x	5 3/4"	A53-B		4
		1	SN03Ab	2" - 150# R.F. S.O. FLANGE		A105		5

BILL OF MATERIALS LISTED FOR (1) TANK - (2) TANKS REQUIRED.

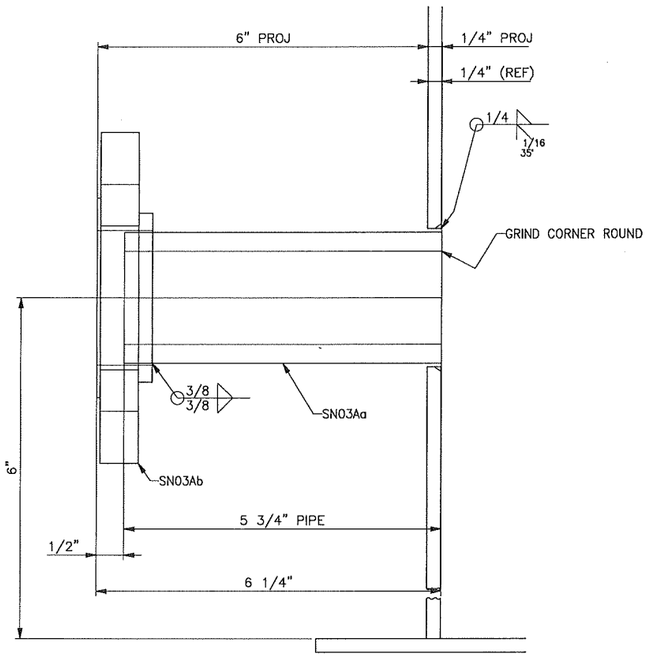

2" NOZZLE, MK. SN03A

2 3/8" NOZZLE OD
2 1/2" HOLE OPENING

DETAIL FOR NOZZLE F

REV.	BY	DATE	DESCRIPTION
2	MEM	04/14/2015	REVISE FLANGE FACE
1	EJ	03/23/2015	REVISE TITLE BLOCK
0	EJ	02/16/2015	INITIAL ISSUE

BMT ACQUISITION, LLC
ENGINEERS - FABRICATORS - CONSTRUCTORS

8301 BROADWAY BLVD SE
ALBUQUERQUE, NM 87105-7453
PHONE: 505-563-4800
FAX: 505-563-4799
http://www.bmt-tank.com

T-110
&
T-116

2" DRAIN NOZZLE
6,000 GAL. WATER STORAGE TANKS
(10.17'DIA. X 11'HGT.) AWWA-D100-11

CUSTOMER: FLITEWAY TECH., INC

PROJECT: EDB INTERIM MEASURE

DRAWN:	JOB No.:
EJ	30883
CHECKED: GAV	
DATE: 02/16/2015	SHEET No.:
REVISION: 2	SN03

WORK INSTRUCTIONS								
RECV	CUT ROLL	FIT	WELDED	READY TO COAT	SENT TO VENDOR	COATING COMPLETE	READY TO SHIP	SHIPPED

BILL OF MATERIALS								
QTY	SHPG MARK	ASSY QTY	ASSY MARK	DESCRIPTION	LENGTH	SPEC MATL	REMARKS	LBS WEIGHT
1	SN04A			4" SHELL NOZZLE				[20]
		1	SN04Aa	4" SCH 80 PIPE x	5 13/16"	A53-B		8
		1	SN04Ab	4" - 150# R.F. S.O. FLANGE		A105		12
1	SN04B			REPAD PL. 0.2500" x 4 5/8" ID x 8" OD		A36	ROLL	[3]

BILL OF MATERIALS LISTED FOR (1) TANK - (2) TANKS REQUIRED.

NOTES:
1.- AFTER INSTALLATION, AIR TEST REPAD WELDS TO 15 PSI PER API-650 PARA 7.3.4.
2.- AFTER THE REINFORCING PAD(S) HAVE BEEN TESTED, THE 0" DRILLED AND TAPPED HOLE(S) MUST REMAIN OPEN (NO PLUGS, GREASE, PAINT OR ANY OTHER FOREIGN MATERIAL PLUGGING THE 0" TEST HOLE).

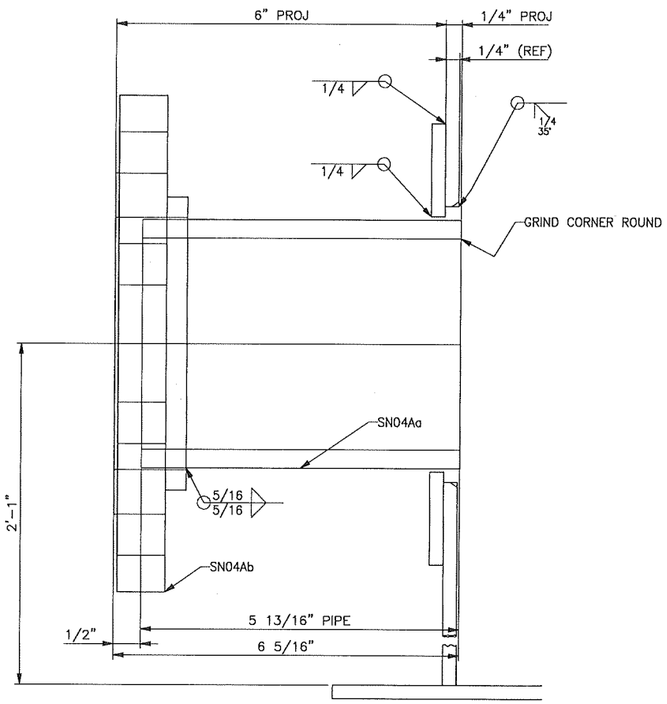

4" NOZZLE, MK. SN04A

4 1/2" NOZZLE OD
5" HOLE OPENING

DETAIL FOR NOZZLE H

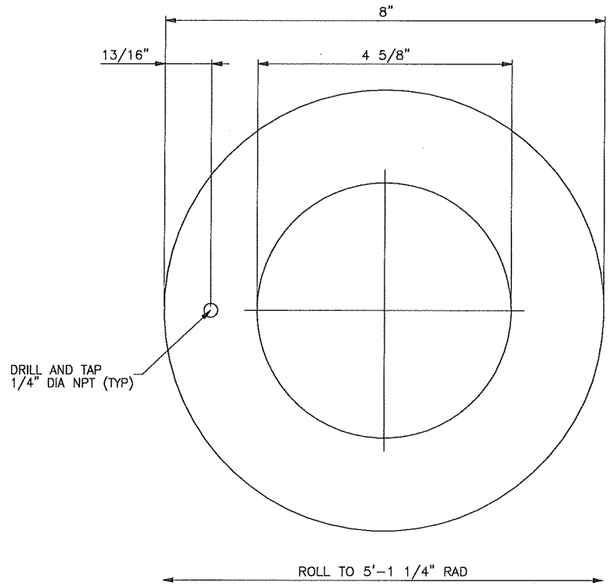

MK. SN04AB

REV.	BY	DATE	DESCRIPTION
2	MEM	04/14/2015	REVISE FLANGE FACE
1	EJ	03/23/2015	REVISE DWG REVISED BOM & TITLE BLOCK
0	EJ	02/16/2015	INITIAL ISSUE

BMT ACQUISITION, LLC
ENGINEERS - FABRICATORS - CONSTRUCTORS

8301 BROADWAY BLVD SE
ALBUQUERQUE, NM 87105-7453
PHONE: 505-563-4800
FAX: 505-563-4799
http://www.bmt-tank.com

T-110
&
T-116

4" LEVEL NOZZLE
6,000 GAL. WATER STORAGE TANKS
(10.17'DIA. X 11'HGT.) AWWA-D100-11

CUSTOMER: FLITEWAY TECH., INC

PROJECT: EDB INTERIM MEASURE

DRAWN:	JOB No.:
EJ	30883
CHECKED: GAV	
DATE: 02/16/2015	SHEET No.: SN04
REVISION: 2	

WORK INSTRUCTIONS								
RECV	CUT ROLL	FIT	WELDED	READY TO COAT	SENT TO VENDOR	COATING COMPLETE	READY TO SHIP	SHIPPED

BILL OF MATERIALS								
QTY	SHPG MARK	ASSY QTY	ASSY MARK	DESCRIPTION	LENGTH	SPEC MATL	REMARKS	LBS WEIGHT
1	SN05A			2" SHELL NOZZLE				[9]
		1	SN05Aa	2" SCH 160 PIPE x	5 3/4"	A53-B		4
		1	SN05Ab	2" - 150# R.F. S.O. FLANGE		A105		5

BILL OF MATERIALS LISTED FOR (1) TANK - (2) TANKS REQUIRED.

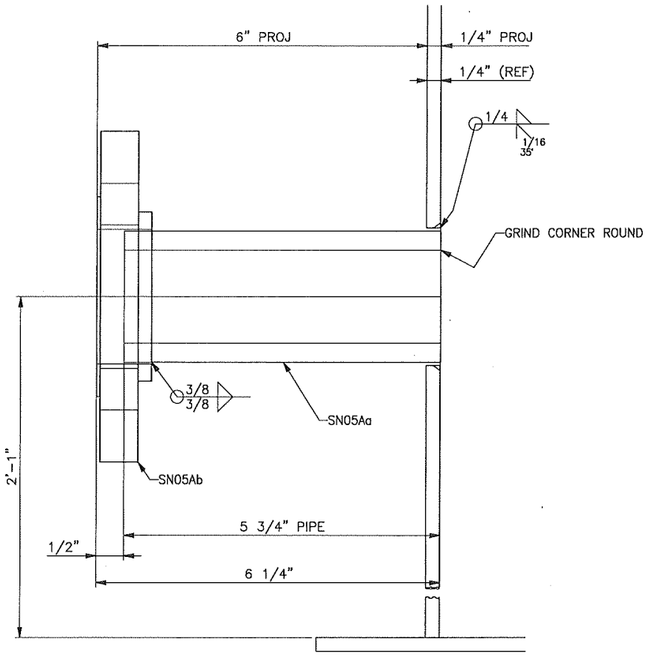

2" NOZZLE, MK. SN05A

2 3/8" NOZZLE OD
2 1/2" HOLE OPENING

DETAIL FOR NOZZLE J

REV.	BY	DATE	DESCRIPTION
2	MEM	04/14/2015	REVISE FLANGE FACE
1	EJ	03/23/2015	REVISE DWG REVISED BOM & TITLE BLOCK
0	EJ	02/16/2015	INITIAL ISSUE

BMT ACQUISITION, LLC
ENGINEERS - FABRICATORS - CONSTRUCTORS

8301 BROADWAY BLVD SE
ALBUQUERQUE, NM 87105-7453
PHONE: 505-563-4800
FAX: 505-563-4799
http://www.bmt-tank.com

T-110
&
T-116

2" LEVEL NOZZLE
6,000 GAL. WATER STORAGE TANKS
(10.17'DIA. X 11'HGT.) AWWA-D100-11

CUSTOMER:
FLITEWAY TECH., INC

PROJECT:
EDB INTERIM MEASURE

DRAWN: EJ	JOB No.: 30883
CHECKED: GAV	
DATE: 02/16/2015	SHEET No.: SN05
REVISION: 2	

WORK INSTRUCTIONS								
RECV	CUT ROLL	FIT	WELDED	READY TO COAT	SENT TO VENDOR	COATING COMPLETE	READY TO SHIP	SHIPPED

BILL OF MATERIALS								
QTY	SHPG MARK	ASSY QTY	ASSY MARK	DESCRIPTION	LENGTH	SPEC MATL	REMARKS	LBS WEIGHT
1	SN06A			4" SHELL NOZZLE				[20]
		1	SN06Aa	4" SCH 80 PIPE x	5 3/4"	A53-B		8
		1	SN06Ab	4" – 150# R.F. S.O. FLANGE		A105		12
1	SN06B			REPAD PL. 0.1875" x 4 5/8" ID x 10" OD		A36	ROLL	[4]

BILL OF MATERIALS LISTED FOR (1) TANK – (2) TANKS REQUIRED.

NOTES:
1.– AFTER INSTALLATION, AIR TEST REPAD WELDS TO 15 PSI PER API–650 PARA 7.3.4.
2.– AFTER THE REINFORCING PAD(S) HAVE BEEN TESTED, THE 0" DRILLED AND TAPPED HOLE(S) MUST REMAIN OPEN (NO PLUGS, GREASE, PAINT OR ANY OTHER FOREIGN MATERIAL PLUGGING THE 0" TEST HOLE).

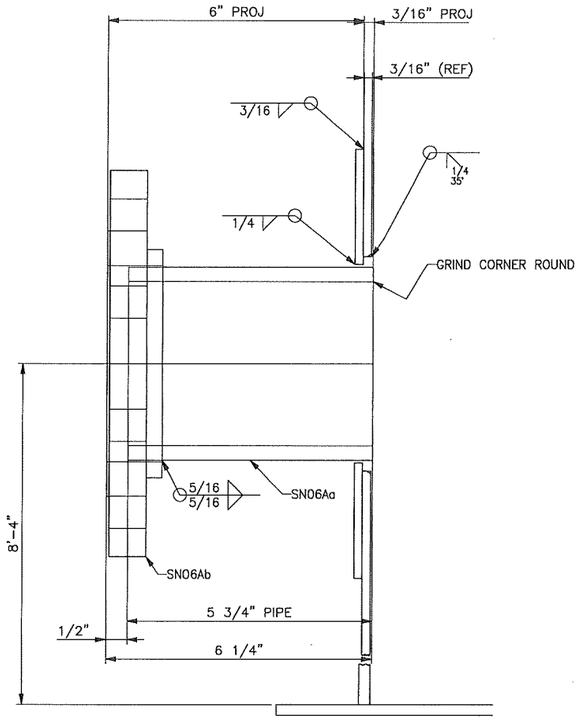

4" NOZZLE, MK. SN06A

4 1/2" NOZZLE OD
5" HOLE OPENING

DETAIL FOR NOZZLE K

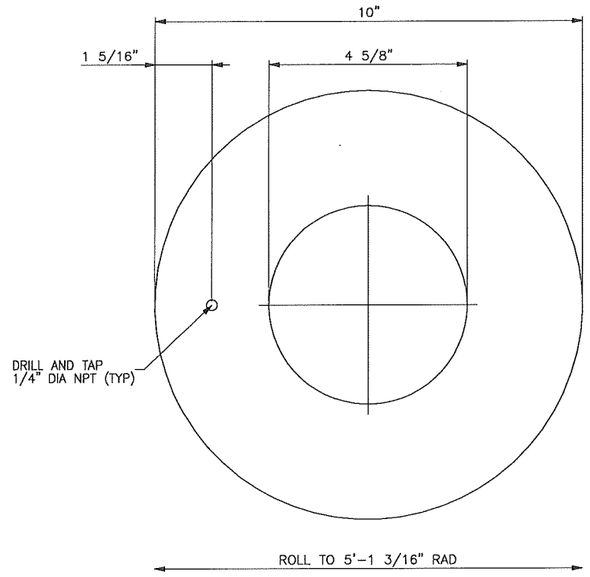

MK. SN06AB

REV.	BY	DATE	DESCRIPTION
2	MEM	04/14/2015	REVISE FLANGE FACE
1	EJ	03/23/2015	REVISE DWG REVISED BOM & TITLE BLOCK
0	EJ	02/16/2015	INITIAL ISSUE

BMT ACQUISITION, LLC
ENGINEERS – FABRICATORS – CONSTRUCTORS

8301 BROADWAY BLVD SE
ALBUQUERQUE, NM 87105–7453
PHONE: 505–563–4800
FAX: 505–563–4799
http://www.bmt–tank.com

T–110
&
T–116

4" SPARE NOZZLE
6,000 GAL. WATER STORAGE TANKS
(10.17'DIA. X 11'HGT.) AWWA–D100–11

CUSTOMER: FLITEWAY TECH., INC

PROJECT: EDB INTERIM MEASURE

DRAWN:	JOB No.:
EJ	30883
CHECKED: GAV	
DATE: 02/16/2015	SHEET No.: SN06
REVISION: 2	

WORK INSTRUCTIONS								
RECV	CUT ROLL	FIT	WELDED	READY TO COAT	SENT TO VENDOR	COATING COMPLETE	READY TO SHIP	SHIPPED

BILL OF MATERIALS								
QTY	SHPG MARK	ASSY QTY	ASSY MARK	DESCRIPTION	LENGTH	SPEC MATL	REMARKS	LBS WEIGHT
1	SN07A			4" SHELL NOZZLE				[20]
		1	SN07Aa	4" SCH 80 PIPE x	5 13/16"	A53-B		8
		1	SN07Ab	4" – 150# R.F. S.O. FLANGE		A105		12
1	SN07B			REPAD PL. 0.2500" x 4 5/8" ID x 10" OD		A36	ROLL	[5]

BILL OF MATERIALS LISTED FOR (1) TANK – (2) TANKS REQUIRED.

NOTES:
1.– AFTER INSTALLATION, AIR TEST REPAD WELDS TO 15 PSI PER API–650 PARA 7.3.4.
2.– AFTER THE REINFORCING PAD(S) HAVE BEEN TESTED, THE 0" DRILLED AND TAPPED HOLE(S) MUST REMAIN OPEN (NO PLUGS, GREASE, PAINT OR ANY OTHER FOREIGN MATERIAL PLUGGING THE 0" TEST HOLE).

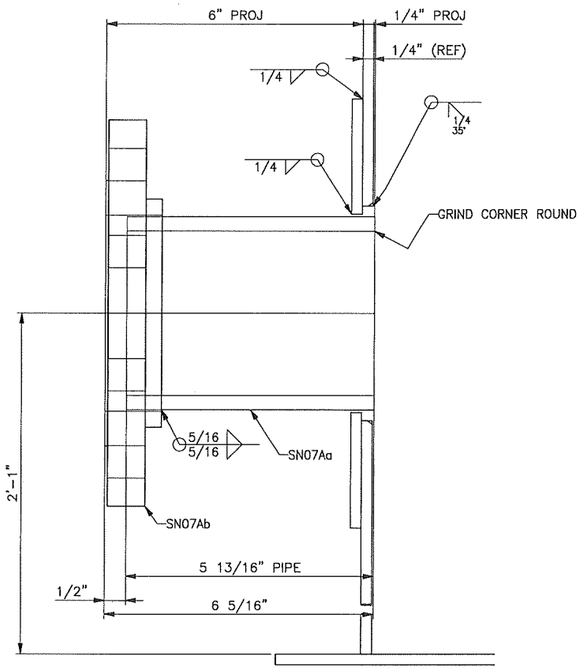

4" NOZZLE, MK. SN07A

4 1/2" NOZZLE OD
5" HOLE OPENING

DETAIL FOR NOZZLE L

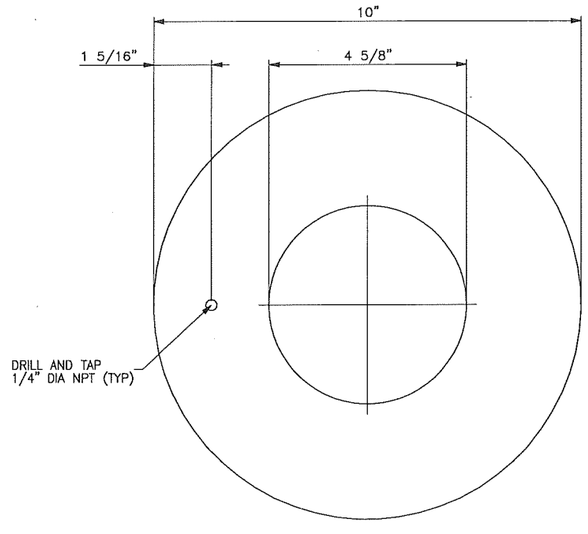

MK. SN07AB

REV.	BY	DATE	DESCRIPTION
2	MEM	04/14/2015	REVISE FLANGE FACE
1	EJ	03/23/2015	RESISE DWG REVISED BOM & TITLE BLOCK
0	EJ	02/16/2015	INITIAL ISSUE

BMT ACQUISITION, LLC
ENGINEERS – FABRICATORS – CONSTRUCTORS

8301 BROADWAY BLVD SE
ALBUQUERQUE, NM 87105–7453
PHONE: 505–563–4800
FAX: 505–563–4799
http://www.bmt-tank.com

T–110
&
T–116

4" SPARE NOZZLE
6,000 GAL. WATER STORAGE TANKS
(10.17'DIA. X 11'HGT.) AWWA–D100–11

CUSTOMER: FLITEWAY TECH., INC

PROJECT: EDB INTERIM MEASURE

DRAWN:	JOB No.:
EJ	30883
CHECKED: GAV	
DATE: 02/16/2015	SHEET No.: SN07
REVISION: 2	

WORK INSTRUCTIONS								
RECV	CUT ROLL	FIT	WELDED	READY TO COAT	SENT TO VENDOR	COATING COMPLETE	READY TO SHIP	SHIPPED

BILL OF MATERIALS								
QTY	SHPG MARK	ASSY QTY	ASSY MARK	DESCRIPTION	LENGTH	SPEC MATL	REMARKS	LBS WEIGHT
1	SN08A			6" SHELL NOZZLE				[31]
		1	SN08Aa	6" SCH 80 PIPE x	5 3/4"	A53-B		14
		1	SN08Ab	6" – 150# R.F. S.O. FLANGE		A105		17
1	SN08B			REPAD PL. 0.2500" x 6 3/4" ID x 15 3/4" OD		A36	ROLL	[12]

BILL OF MATERIALS LISTED FOR (1) TANK – (2) TANKS REQUIRED.

NOTES:
1.– AFTER INSTALLATION, AIR TEST REPAD WELDS TO 15 PSI PER API-650 PARA 7.3.4.
2.– AFTER THE REINFORCING PAD(S) HAVE BEEN TESTED, THE 0" DRILLED AND TAPPED HOLE(S) MUST REMAIN OPEN (NO PLUGS, GREASE, PAINT OR ANY OTHER FOREIGN MATERIAL PLUGGING THE 0" TEST HOLE).

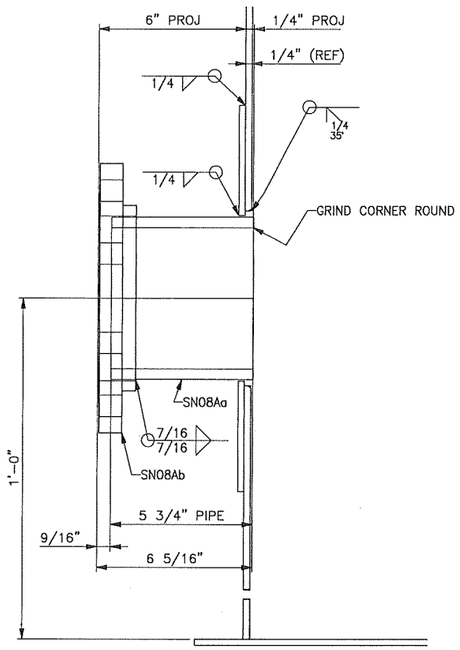

6" NOZZLE, MK. SN08A

6 5/8" NOZZLE OD
7 1/8" HOLE OPENING

DETAIL FOR NOZZLE M

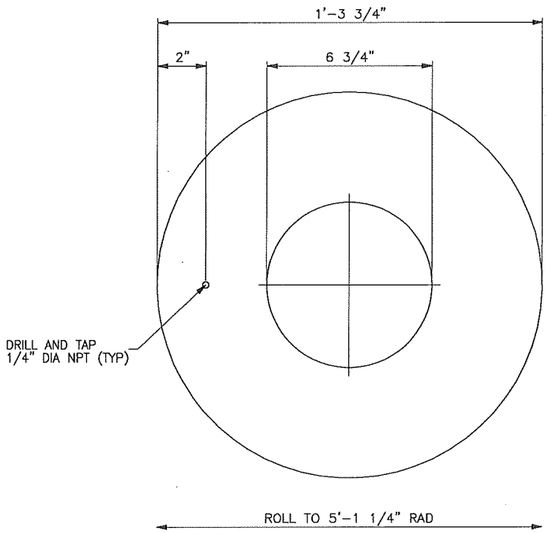

MK. SN08AB

REV.	BY	DATE	DESCRIPTION
2	MEM	04/14/2015	REVISE FLANGE FACE
1	EJ	03/23/2015	REVISE DWG REVISED BOM & TITLE BLOCK
0	EJ	02/16/2015	INITIAL ISSUE

BMT ACQUISITION, LLC
ENGINEERS – FABRICATORS – CONSTRUCTORS

8301 BROADWAY BLVD SE
ALBUQUERQUE, NM 87105-7453
PHONE: 505-563-4800
FAX: 505-563-4799
http://www.bmt-tank.com

T-110
&
T-116

6" SPARE NOZZLE
6,000 GAL. WATER STORAGE TANKS
(10.17'DIA. X 11'HGT.) AWWA-D100-11

CUSTOMER:
FLITEWAY TECH., INC

PROJECT:
EDB INTERIM MEASURE

DRAWN: EJ	JOB No.: 30883
CHECKED: GAV	
DATE: 02/16/2015	SHEET No.: SN08
REVISION: 2	

WORK INSTRUCTIONS								
RECV	CUT ROLL	FIT	WELDED	READY TO COAT	SENT TO VENDOR	COATING COMPLETE	READY TO SHIP	SHIPPED

BILL OF MATERIALS								
QTY	SHPG MARK	ASSY QTY	ASSY MARK	DESCRIPTION	LENGTH	SPEC MATL	REMARKS	LBS WEIGHT
1	RN01A			6" ROOF NOZZLE				[27]
		1	RN01Aa	6" SCH 40 PIPE x	6 5/16"	A53-B		10
		1	RN01Ab	6" - 150# R.F. S.O. FLANGE		A105		17

BILL OF MATERIALS LISTED FOR (1) TANK - (2) TANKS REQUIRED.

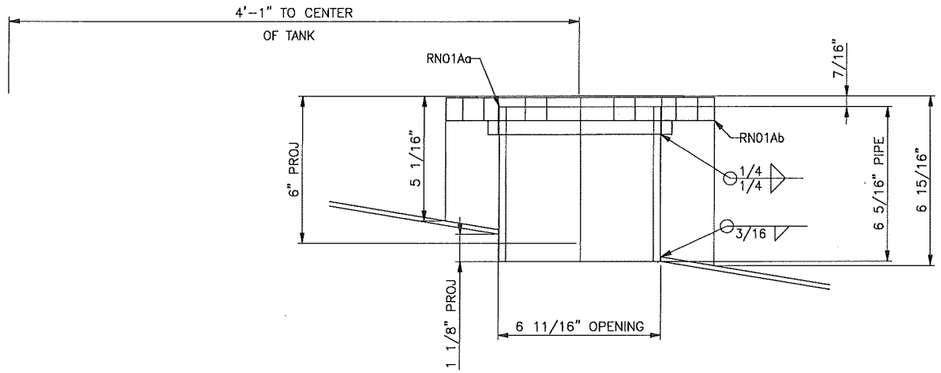

6" NOZZLE, MK. RN01A
DETAIL FOR NOZZLE
A

REV.	BY	DATE	DESCRIPTION
2	MEM	04/14/2015	REVISE FLANGE FACE
1	EJ	03/23/2015	REVISED DWG. REVISED B.O.M. & TITLE BLOCK
0	EJ	02/16/2015	INITIAL ISSUE

BMT ACQUISITION, LLC
ENGINEERS - FABRICATORS - CONSTRUCTORS

8301 BROADWAY BLVD SE
ALBUQUERQUE, NM 87105-7453
PHONE: 505-563-4800
FAX: 505-563-4799
http://www.bmt-tank.com

T-110
&
T-116

6" FILL NOZZLE
6,000 GAL. WATER STORAGE TANKS
(10.17'DIA. X 11'HGT.) AWWA-D100-11

CUSTOMER:
FLITEWAY TECH., INC

PROJECT:
EDB INTERIM MEASURE

DRAWN: EJ	JOB No.: 30883
CHECKED: GAV	
DATE: 02/16/2015	SHEET No.: RN01
REVISION: 2	

WORK INSTRUCTIONS								
RECV	CUT ROLL	FIT	WELDED	READY TO COAT	SENT TO VENDOR	COATING COMPLETE	READY TO SHIP	SHIPPED

BILL OF MATERIALS								
QTY	SHPG MARK	ASSY QTY	ASSY MARK	DESCRIPTION	LENGTH	SPEC MATL	REMARKS	LBS WEIGHT
1	RN02A			6" ROOF NOZZLE				[27]
		1	RN02Aa	6" SCH 40 PIPE x	6 5/16"	A53-B		10
		1	RN02Ab	6" - 150# R.F. S.O. FLANGE		A105		17

BILL OF MATERIALS LISTED FOR (1) TANK - (2) TANKS REQUIRED.

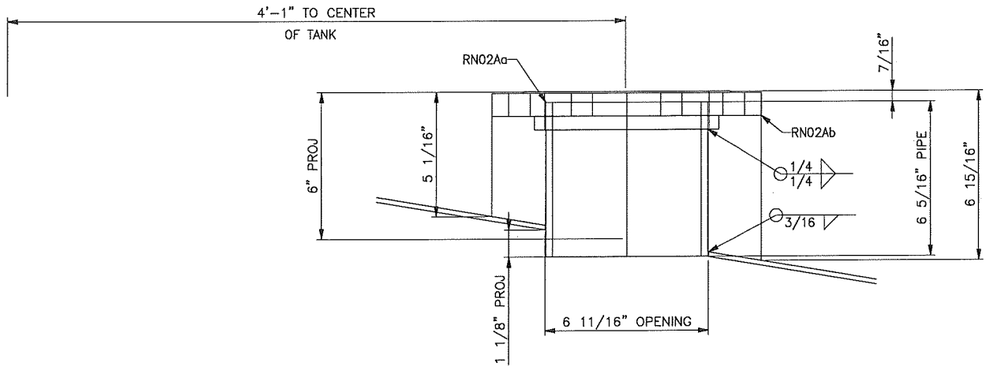

6" NOZZLE, MK. RN02A
DETAIL FOR NOZZLE
B

REV.	BY	DATE	DESCRIPTION
2	MEM	04/14/2015	REVISE FLANGE FACE
1	EJ	03/23/2015	REVISED DWG. REVISED B.O.M. & TITLE BLOCK
0	EJ	02/16/2015	INITIAL ISSUE

BMT ACQUISITION, LLC
ENGINEERS - FABRICATORS - CONSTRUCTORS

8301 BROADWAY BLVD SE
ALBUQUERQUE, NM 87105-7453
PHONE: 505-563-4800
FAX: 505-563-4799
http://www.bmt-tank.com

T-110
&
T-116

6" FILL NOZZLE
6,000 GAL. WATER STORAGE TANKS
(10.17'DIA. X 11'HGT.) AWWA-D100-11

CUSTOMER:
FLITEWAY TECH., INC

PROJECT:
EDB INTERIM MEASURE

DRAWN: EJ	JOB No.: 30883
CHECKED: GAV	
DATE: 02/16/2015	SHEET No.: RN02
REVISION: 2	

WORK INSTRUCTIONS								
RECV	CUT ROLL	FIT	WELDED	READY TO COAT	SENT TO VENDOR	COATING COMPLETE	READY TO SHIP	SHIPPED

BILL OF MATERIALS								
QTY	SHPG MARK	ASSY QTY	ASSY MARK	DESCRIPTION	LENGTH	SPEC MATL	REMARKS	LBS WEIGHT
1	RN03A			6" ROOF NOZZLE				[27]
		1	RN03Aa	6" SCH 40 PIPE x	6 5/16"	A53-B		10
		1	RN03Ab	6" – 150# R.F. S.O. FLANGE		A105		17

BILL OF MATERIALS LISTED FOR (1) TANK – (2) TANKS REQUIRED.

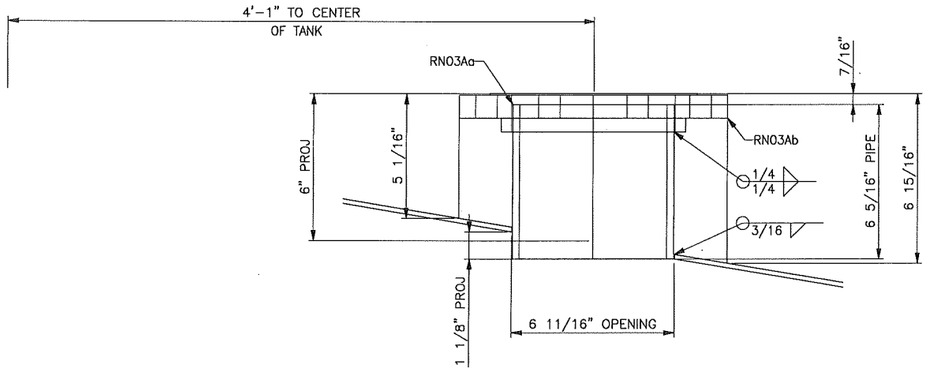

6" NOZZLE, MK. RN03A
DETAIL FOR NOZZLE
C

REV.	BY	DATE	DESCRIPTION
2	MEM	04/14/2015	REVISE FLANGE FACE
1	EJ	03/23/2015	REVISED DWG. REVISED B.O.M. & TITLE BLOCK
0	EJ	02/16/2015	INITIAL ISSUE

BMT ACQUISITION, LLC
ENGINEERS – FABRICATORS – CONSTRUCTORS

8301 BROADWAY BLVD SE
ALBUQUERQUE, NM 87105-7453
PHONE: 505-563-4800
FAX: 505-563-4799
http://www.bmt-tank.com

T-110
&
T-116

6" VENT NOZZLE
6,000 GAL. WATER STORAGE TANKS
(10.17'DIA. X 11'HGT.) AWWA-D100-11

CUSTOMER:
FLITEWAY TECH., INC

PROJECT:
EDB INTERIM MEASURE

DRAWN: EJ	JOB No.: 30883
CHECKED: GAV	
DATE: 02/16/2015	SHEET No.: RN03
REVISION: 2	

WORK INSTRUCTIONS								
RECV	CUT ROLL	FIT	WELDED	READY TO COAT	SENT TO VENDOR	COATING COMPLETE	READY TO SHIP	SHIPPED

BILL OF MATERIALS								
QTY	SHPG MARK	ASSY QTY	ASSY MARK	DESCRIPTION	LENGTH	SPEC MATL	REMARKS	LBS WEIGHT
1	RN04A			6" ROOF NOZZLE				[27]
		1	RN04Aa	6" SCH 40 PIPE x	6 5/16"	A53-B		10
		1	RN04Ab	6" ~ 150# R.F. S.O. FLANGE		A105		17

BILL OF MATERIALS LISTED FOR (1) TANK - (2) TANKS REQUIRED.

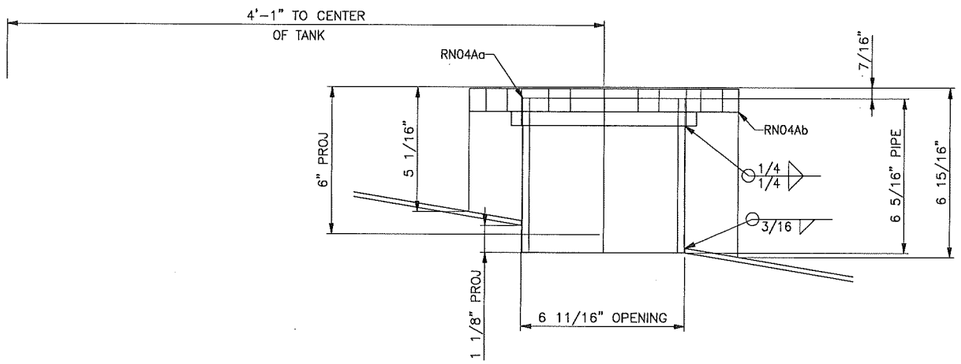

6" NOZZLE, MK. RN04A
DETAIL FOR NOZZLE
D

REV.	BY	DATE	DESCRIPTION
2	MEM	04/14/2015	REVISE FLANGE FACE
1	EJ	03/23/2015	REVISED DWG. REVISED B.O.M. & TITLE BLOCK
0	EJ	02/16/2015	INITIAL ISSUE

BMT ACQUISITION, LLC
ENGINEERS - FABRICATORS - CONSTRUCTORS
8301 BROADWAY BLVD SE
ALBUQUERQUE, NM 87105-7453
PHONE: 505-563-4800
FAX: 505-563-4799
http://www.bmt-tank.com

T-110
&
T-116

6" SPARE NOZZLE
6,000 GAL. WATER STORAGE TANKS
(10.17'DIA. X 11'HGT.) AWWA-D100-11

CUSTOMER:
FLITEWAY TECH., INC

PROJECT:
EDB INTERIM MEASURE

DRAWN:	JOB No.:
EJ	30883
CHECKED: GAV	
DATE: 02/16/2015	SHEET No.: RN04
REVISION: 2	

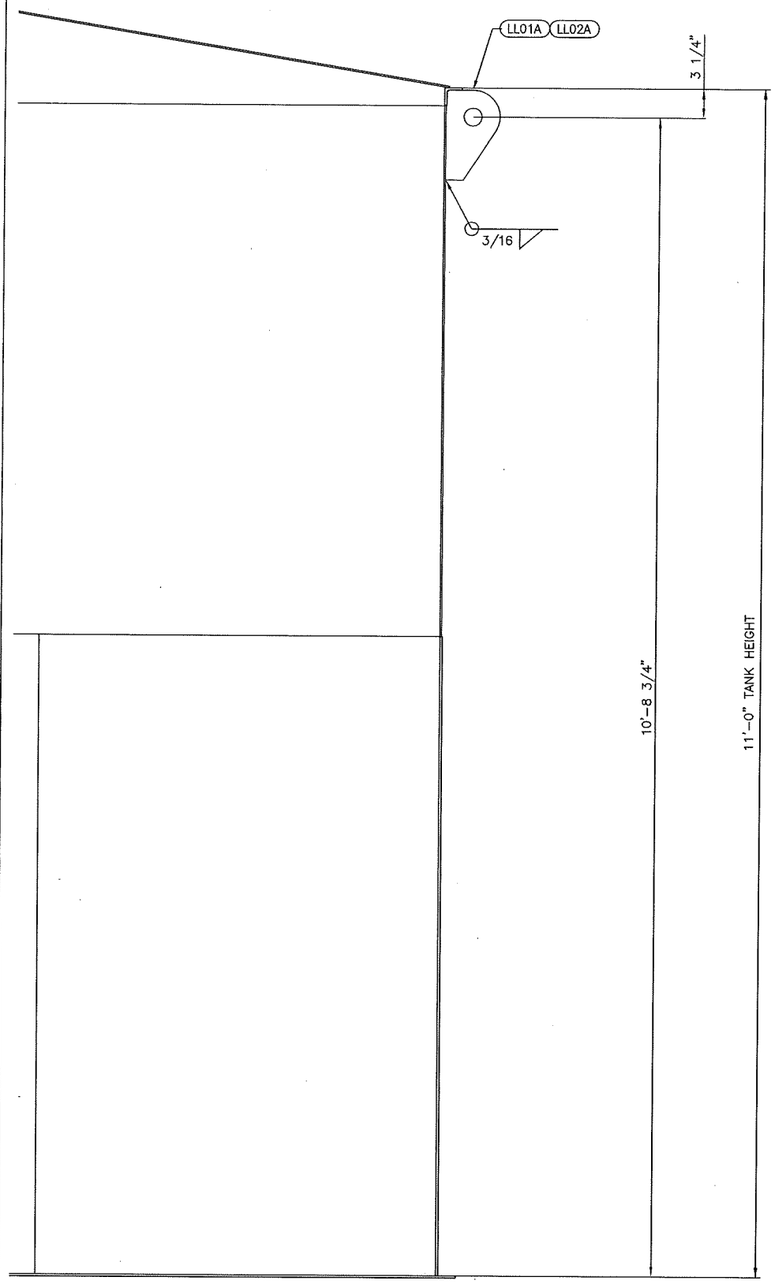

ELEVATION
TYP ELEV FOR ALL LIFTING LUGS

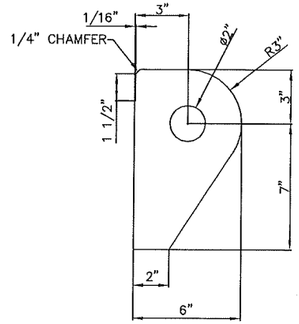

LL01A & LL02A

WORK INSTRUCTIONS

RECV	CUT ROLL	FIT	WELDED	READY TO COAT	SENT TO VENDOR	COATING COMPLETE	READY TO SHIP	SHIPPED

BILL OF MATERIALS

QTY	SHPG MARK	ASSY QTY	ASSY MARK	DESCRIPTION	LENGTH	SPEC MATL	REMARKS	LBS WEIGHT
1	LL01A			LIFTING LUG				[6]
		1	LL01Aa	FB 1/2" x 6" x	10"	A36		6
1	LL02A			LIFTING LUG				[6]
		1	LL02Aa	FB 1/2" x 6" x	10"	A36		6

BILL OF MATERIALS LISTED FOR (1) TANK – (2) TANK REQUIRED.

NOTE:

1.– LIFTING LUG CAPACITY = 17,000 LBS/EACH

REV.	BY	DATE	DESCRIPTION
1	EJ	03/23/2015	REVISED TITLE BLOCK
0	EJ	02/16/2015	INITIAL ISSUE

BMT ACQUISITION, LLC
ENGINEERS – FABRICATORS – CONSTRUCTORS

8301 BROADWAY BLVD SE
ALBUQUERQUE, NM 87105–7453
PHONE: 505–563–4800
FAX: 505–563–4799
http://www.bmt-tank.com

T–110
&
T–116

LIFTING LUGS
6,000 GAL. WATER STORAGE TANK
(10.17'DIA. X 11'HGT.) AWWA–D100–11

CUSTOMER:
FLITEWAY TECH., INC

PROJECT:
EDB INTERIM MEASURE

DRAWN: EJ	JOB No.: 30883
CHECKED: GAV	
DATE: 02/16/2015	SHEET No.: LL01
REVISION: 1	

AWWA-D-100
BMT ACQUISITION, LLC
ALBUQUERQUE, NM

APPENDIX	AWWA D-100	YEAR COMPLETED	2015
EDITION	11TH EDITION	NOMINAL HEIGHT	11FT
NOMINAL DIAMETER	10.17FT	DESIGN LIQUID LEVEL	10.08FT
MAXIMUM CAPACITY	6123.0 GALS	DESIGN METAL TEMP.	25'F
DES. SPEC. GRAVITY	1.0	MAX. OPERATING TEMP.	100'F
MANUFACTURER'S #	30883	PURCHASERS TANK #	T-110

FABRICATED BY BMT ACQUISITION, LLC

COURSES	THK.	MATERIAL
SHELL RING 1	1/4"	A36
SHELL RING 2	3/16"	A36
ROOF	3/16"	A36
BOTTOM	1/4"	A36

T-110 TANK ONLY

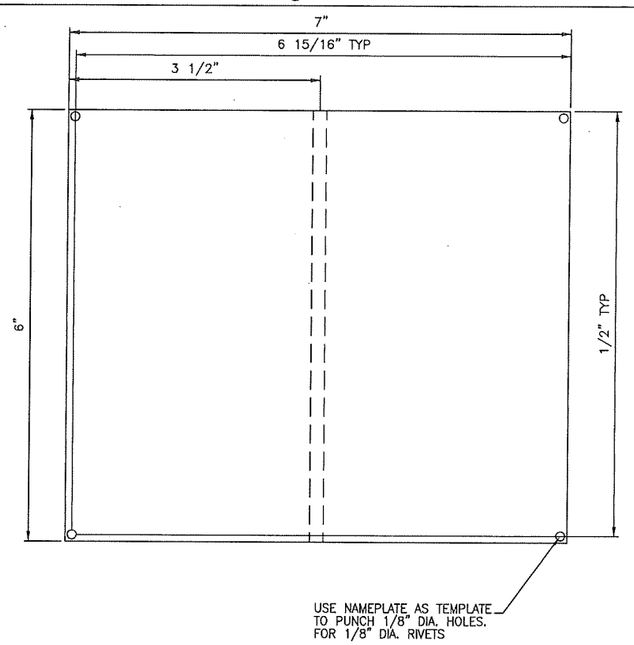

WORK INSTRUCTIONS

RECV	CUT ROLL	FIT	WELDED	READY TO COAT	SENT TO VENDOR	COATING COMPLETE	READY TO SHIP	SHIPPED

BILL OF MATERIALS

QTY	SHPG MARK	ASSY QTY	ASSY MARK	DESCRIPTION	LENGTH	SPEC MATL	REMARKS	LBS WEIGHT
1	NP01A			NAMEPLATE ASSEMBLY				[6]
		1	NP01Aa	PL. 3/16" x 6" x	7"	A36		3
		1	NP01Ab	PL. 3/16" x 3" x	6"	A36		2
		4	NP01Ac	1/8" DIA. RIVETS				0
		1	NP01Ad	NAME PLATE NAMEPLATE		SS		1
2	NP01B			GROUNDING LUG				[4]
		1	NP01Ba	PL. 3/8" x 4" x	4"	A36		2

BILL OF MATERIALS LISTED FOR (1) TANK - (2) TANKS REQUIRED.

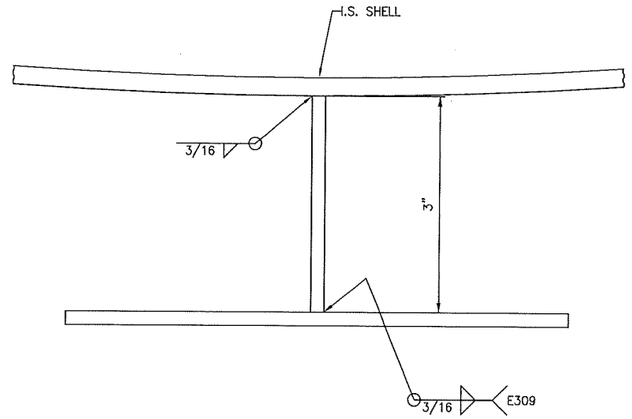

NAMEPLATE BRACKET

AWWA-D-100
BMT ACQUISITION, LLC
ALBUQUERQUE, NM

APPENDIX	AWWA D-100	YEAR COMPLETED	2015
EDITION	11TH EDITION	NOMINAL HEIGHT	11FT
NOMINAL DIAMETER	10.17FT	DESIGN LIQUID LEVEL	10.08FT
MAXIMUM CAPACITY	6123.0 GALS	DESIGN METAL TEMP.	25'F
DES. SPEC. GRAVITY	1.0	MAX. OPERATING TEMP.	100'F
MANUFACTURER'S #	30883	PURCHASERS TANK #	T-116

FABRICATED BY BMT ACQUISITION, LLC

COURSES	THK.	MATERIAL
SHELL RING 1	1/4"	A36
SHELL RING 2	3/16"	A36
ROOF	3/16"	A36
BOTTOM	1/4"	A36

T-116 TANK ONLY

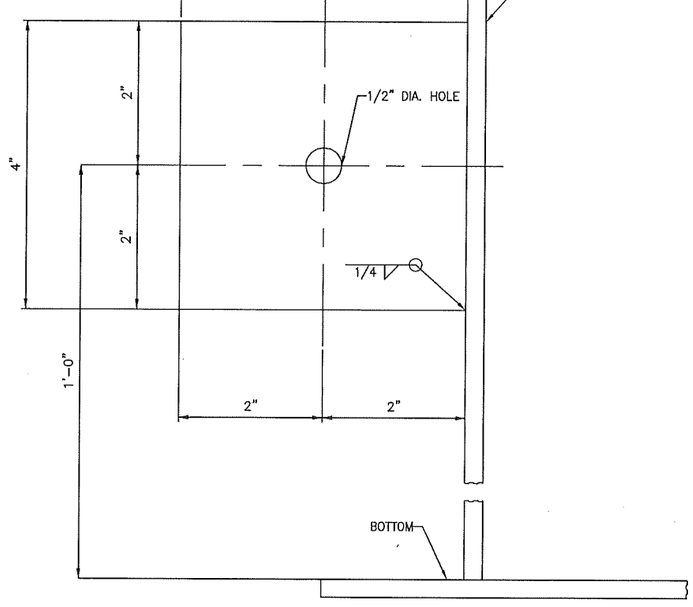

GROUNDING LUG
(2) REQ'D

REV.	BY	DATE	DESCRIPTION
1	EJ	03/23/2015	REVISED TITLE BLOCK
0	EJ	02/16/2015	INITIAL ISSUE

BMT ACQUISITION, LLC
ENGINEERS - FABRICATORS - CONSTRUCTORS
8301 BROADWAY BLVD SE
ALBUQUERQUE, NM 87105-7453
PHONE: 505-563-4800
FAX: 505-563-4799
http://www.bmt-tank.com

T-110 & T-116

NAMEPLATE & G. LUGS
6,000 GAL. WATER STORAGE TANKS
(10.17'DIA. X 11'HGT.) AWWA-D100-11

CUSTOMER: FLITEWAY TECH., INC
PROJECT: EDB INTERIM MEASURE

DRAWN:	JOB No.:
EJ	30883
CHECKED: GAV	
DATE: 02/16/2015	SHEET No.: NP01
REVISION: 1	

BMT 30883

TANK CALCULATIONS

6,000 Gal. Water Storage Tanks
T-102 & T-108
(10.17´Dia. x 11´Hgt.) AWWA-D100
For
EDB Interim Measure
Kirtland, AFB

PROJECT ENGINEER

CB&I

☑ FOR APPROVAL ONLY
BROWN-MINNEAPOLIS TANK
ENGINEERING DIVISION

DESIGN ENGINEER

BMT Acquisition, LLC

BROWN-MINNEAPOLIS TANK
ENGINEERS - FABRICATORS - CONSTRUCTORS

10.17´Dia. x 11´ Hgt - FBSSCRT
6000 Gal. Water Tanks

Customer:
Fliteway Technologies, Inc.
Job Number:
30883
Date: 02-18-2015 Rev.: 0

Standard Compliant Errors

Standard Compliant Errors

BROWN-MINNEAPOLIS TANK
ENGINEERS - FABRICATORS - CONSTRUCTORS

10.17´Dia. x 11´ Hgt - FBSSCRT
6000 Gal. Water Tanks

Customer:
Fliteway Technologies, Inc.
Job Number:
30883
Date: 02-18-2015 Rev.: 0

Comments

Comments
Shell
Joint efficiency for all shell courses = 85%. X-rays are required. Quantity of x-rays shall be per Sec. 11.5.
Roof
Roof is butt welded
Wind
Anchorage of the tank for wind is not required
Seismic
Tank is self-anchored
Available freeboard is adequate.
Tank is stable against sliding.
Anchor Bolt and Anchor Chair
Tank is not anchored

BROWN-MINNEAPOLIS TANK
ENGINEERS - FABRICATORS - CONSTRUCTORS

10.17´Dia. x 11´ Hgt - FBSSCRT
6000 Gal. Water Tanks

Customer:
Fliteway Technologies, Inc.
Job Number:
30883
Date: 02-18-2015 Rev.: 0

Design Data

Tank Diameter	10'- 2.0000" (Inside)
Tank Height	11'- 0.0000"
High Liquid Level	10'- 1.0000"
Normal Liquid Level	10'- 1.0000"
Low Liquid Level	0'- 0.0000"
Total Capacity	6,123 gallons
	146 barrels
Working Capacity	6,123 gallons
	146 barrels

Design Standard	AWWA D-100-11
Design Metal Temperature	25 °F
Operating Temperature	100 °F
Design Temperature	100 °F
Roof Live Load	20.00 psf
Roof Design Snow Load	25.00 psf
Additional Roof Loads	0.00 psf
Wind:	
Velocity	100 mph
Importance Factor	1.15
Exposure	C
Seismic:	
Site Class	D
Importance Factor	1.50
Use Group	III
Ss Value	47.00 %
S_1 Value	14.00 %
Vertical Acceleration	0.00 g
Transitional Period (T_L)	6
Specific Gravity	1.000

BROWN-MINNEAPOLIS TANK
ENGINEERS - FABRICATORS - CONSTRUCTORS

Internal Pressure (Design)	Atmospheric
(Operating)	Atmospheric
External Pressure (Design)	Atmospheric
(Operating)	Atmospheric

Corrosion Allowance:

Bottom	0.0000 in
Shell Courses 1 - 1	0.0000 in
Courses 2 - 2	0.0000 in
Roof	0.0000 in
Compression Ring	0.0000 in

All Calculations are to be in the Corroded Condition

10.17´Dia. x 11´ Hgt - FBSSCRT
6000 Gal. Water Tanks

Customer:
Fliteway Technologies, Inc.
Job Number:
30883
Date: 02-18-2015 Rev.: 0

Summary

Total Weight of Tank: 4,748 lbs
Total Operating Weight: 55,826 lbs
Total Testing Weight: 55,826 lbs

Bottom

Flat Bottom:
0.2500 in (A36) PL (weight: 884 lbs)

Outside projection = 2.0000 in

Tank bottom is butt welded.

Shell

Shell Course 01: 0.2500 in (A36) PL x 71.0000 in wide (weight: 1,929 lbs)

Shell Course 02: 0.1875 in (A36) PL x 59.0000 in wide (weight: 1,203 lbs)

Self-Supporting Cone Roof

0.1875 in (A36) PL (weight: 630 lbs)

Roof Slope: 2.0000 in 12 ø: 9.4623° Roof Rise: 0.8472 ft

Roof is butt welded

Compression Ring

L2 x2 x1/4 per Detail d (A36)
Weight: 102 lbs

2 inches Vertical leg of rim angle is butt welded to the top of the shell with the horizontal leg turned out

10.17´Dia. x 11´ Hgt - FBSSCRT
6000 Gal. Water Tanks

Customer:
Fliteway Technologies, Inc.
Job Number:
30883
Date: 02-18-2015 Rev.: 0

Shell Nozzles

24"Dia. Shell Manway - K

24" API-650 Shell Manhole w/Blind Flange
Elevation: 30.0000 in
Orientation: 0.0000°

Nozzle Neck: Plate
Material Grade: A36
Wall Thickness: 0.2500 in

Flange Material:
A36

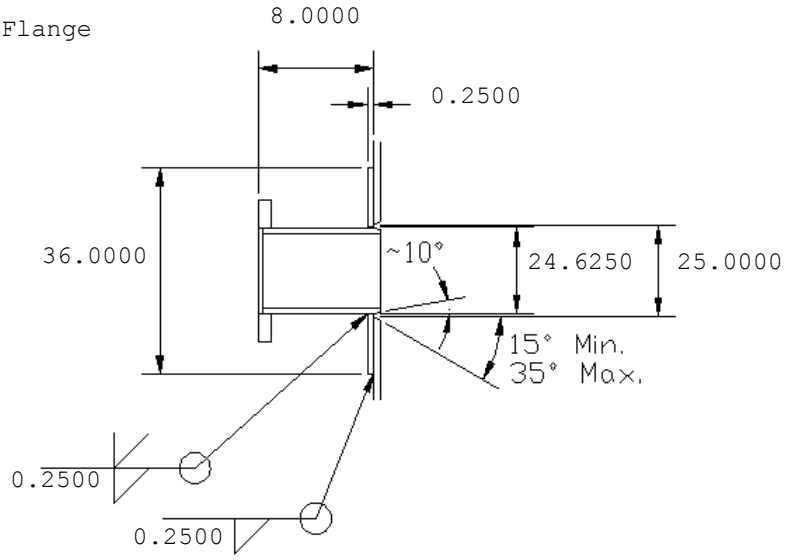

Reinforcing Pad Material:
A36

Flange Thickness: 0.5000 in
Machining Allowance: 0.1875 in

Blind Flange Material Grade: A36

Thickness: 0.3750 in

4"Discharge Nozzle - F

4" 150# SO Flanged Nozzle
Elevation: 6.0000 in
Orientation: 135.0000°

Nozzle Neck: SCH80 Pipe
Material Grade: A53-B
Wall Thickness: 0.3370 in

Flange Material:
A105

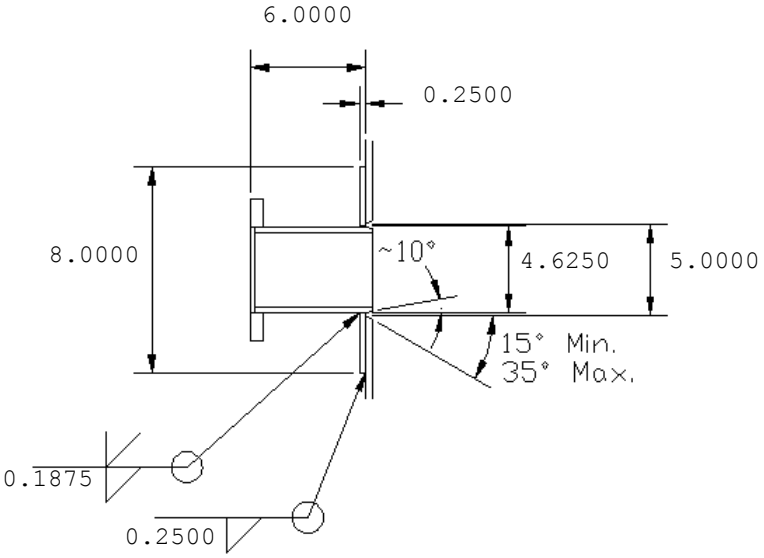

Reinforcing Pad Material:
A36

BROWN-MINNEAPOLIS TANK
ENGINEERS - FABRICATORS - CONSTRUCTORS

10.17´Dia. x 11´ Hgt - FBSSCRT
6000 Gal. Water Tanks

Customer:
Fliteway Technologies, Inc.
Job Number:
30883
Date: 02-18-2015 Rev.: 0

4" Discharge Nozzle - G

4" 150# SO Flanged Nozzle
Elevation: 6.0000 in
Orientation: 180.0000°

Nozzle Neck: SCH80 Pipe
Material Grade: A53-B
Wall Thickness: 0.3370 in

Flange Material:
A105

Reinforcing Pad Material:
A36

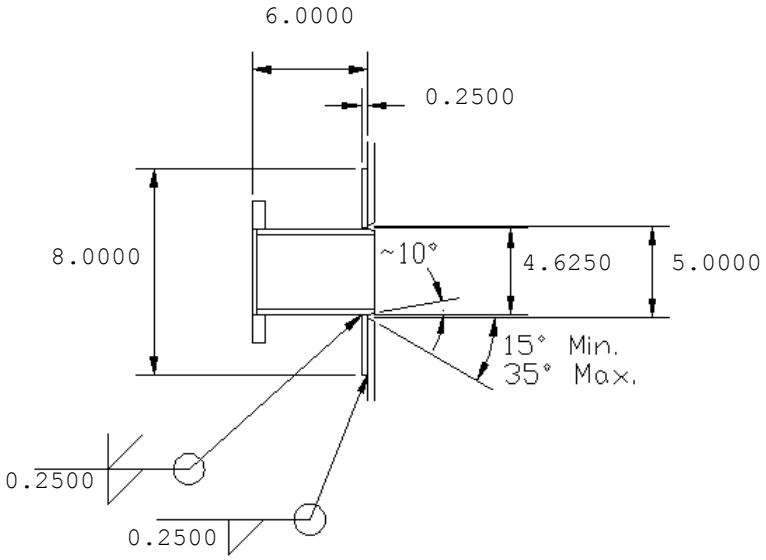

2" Drain Nozzle - H

2" 150# SO Flanged Nozzle
Elevation: 6.0000 in
Orientation: 90.0000°

Nozzle Neck: 160 Pipe
Material Grade: A53-B
Wall Thickness: 0.3430 in

Flange Material:
A105

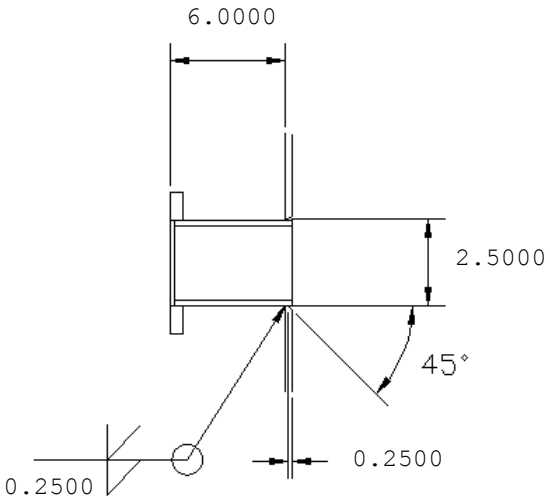

BROWN-MINNEAPOLIS TANK
ENGINEERS - FABRICATORS - CONSTRUCTORS

2" Level Nozzle - I

2" 150# SO Flanged Nozzle
Elevation: 6.0000 in
Orientation: 315.0000°

Nozzle Neck: 160 Pipe
Material Grade: A53-B
Wall Thickness: 0.3430 in

Flange Material:
A105

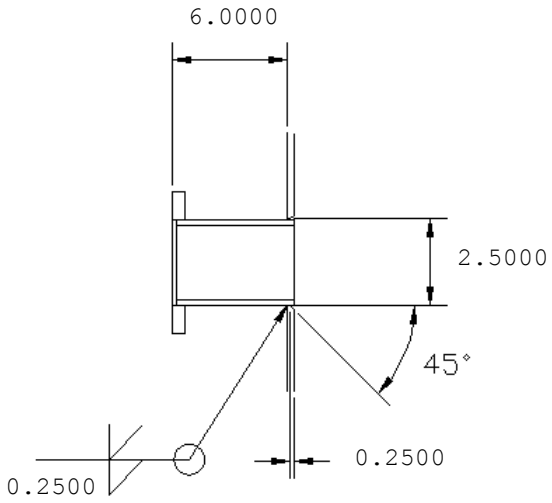

2" Level Nozzle - J

2" 150# SO Flanged Nozzle
Elevation: 10.0000 in
Orientation: 330.0000°

Nozzle Neck: 160 Pipe
Material Grade: A53-B
Wall Thickness: 0.3430 in

Flange Material:
A105

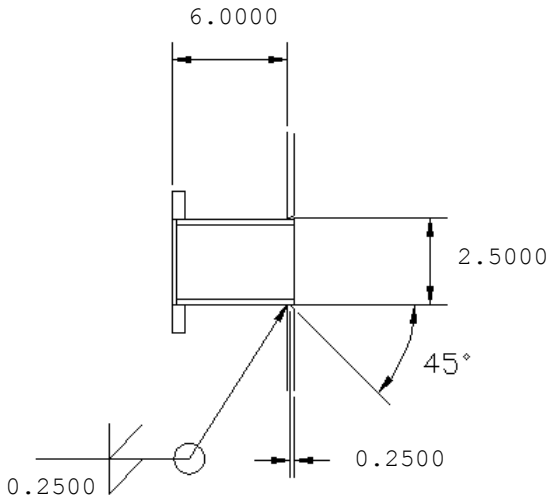

10.17´Dia. x 11´ Hgt - FBSSCRT
6000 Gal. Water Tanks

Customer:
Fliteway Technologies, Inc.
Job Number:
30883
Date: 02-18-2015 Rev.: 0

4" Spare Nozzle - L

4" 150# SO Flanged Nozzle
Elevation: 10.0000 in
Orientation: 45.0000°

Nozzle Neck: SCH80 Pipe
Material Grade: A53-B
Wall Thickness: 0.3370 in

Flange Material:
A105

Reinforcing Pad Material:
A36

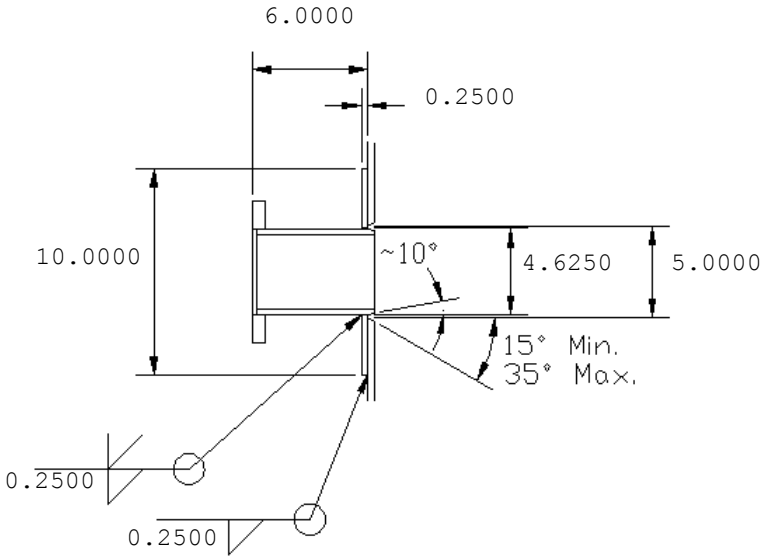

BROWN-MINNEAPOLIS TANK
ENGINEERS - FABRICATORS - CONSTRUCTORS

Bottom Design

Flat Bottom

Material Grade: A36
Thickness (tb): 0.2500 in
Corrosion Allowance (CA): 0.0000 in

Minimum required outside projection = 1.0000 in

Actual outside projection (p) = 2.0000 in

Minimum thickness per Section 3.10 = 0.2500 in

Tank bottom is butt welded.

Shell Design

Per Eq. 3-40

$$t = \frac{2.6\ hp\ D\ G}{sE} + CA$$

where
Diameter (D) = 10.1667 ft
Specific Gravity (G) = 1.000
Joint Efficiency (E) = 0.85

Shell Course 01

Material Grade:	A36	
Allowable Stress (s):		psi
Shell Height:	5.9167	ft
Corrosion Allowance (CA):	0.0000	in
Liquid Height (hp):	10.0833	ft

$$t = \frac{(2.6)(10.0833)(10.1667)(1.0000)}{(15000.0000)(0.8500)} + 0.0000 = 0.0209 \text{ in}$$

(Per Table 16 - min. t = 0.1875 in)
Actual t = 0.2500 in

Shell Course 02

Material Grade:	A36	
Allowable Stress (s):		psi
Shell Height:	4.9167	ft
Corrosion Allowance (CA):	0.0000	in
Liquid Height (hp):	4.1667	ft

$$t = \frac{(2.6)(4.1667)(10.1667)(1.0000)}{(15000.0000)(0.8500)} + 0.0000 = 0.0086 \text{ in}$$

(Per Table 16 - min. t = 0.1875 in)
Actual t = 0.1875 in

10.17´Dia. x 11´ Hgt - FBSSCRT
6000 Gal. Water Tanks

Customer:
Fliteway Technologies, Inc.
Job Number:
30883
Date: 02-18-2015 Rev.: 0

Self-Supporting Cone Roof (Sec. 3.6.2)(per API-650)

Material Grade:	A36
Roof Thickness (t_r):	0.1875 in
Corrosion Allowance (CA):	0.0000 in
Tank Diameter (D):	10.1667 ft

Roof is butt welded

Roof Slope: 2.0000 in 12
ø: 9.4623°
Roof Rise: 0.8472 ft

Live Load (L_v):	20.0000 lbf/ft²
Snow Load (S):	25.0000 lbf/ft²
Dead Load (D_L):	7.6575 lbf/ft²
Ext. Pressure (P_e):	0.0000 lbf/ft²

Per R.1(e)(1), $T = D_L + (L_v \text{ or } S) + 0.4P_e =$
$7.6575 + 25.0000 + (0.4)(0.0000) = 32.6575$ lbf/ft²

Per R.1(e)(2), $T = D_L + 0.4(L_v \text{ or } S) + P_e =$
$7.6575 + (0.4)(25.0000) + 0.0000 = 17.6575$ lbf/ft²

Use greater of (1) or (2), T = 32.6575 lbf/ft²

Minimum thickness per AWWA D-100 Section 3.10 =0.1792 in

Per 5.10.5.1:

$$t_r = \frac{D}{400.0000 \sin ø}\sqrt{\left\{\frac{T}{45.0000}\right\}} + CA =$$

$$\frac{10.1667}{400.0000 \sin(9.4623)}\sqrt{\left\{\frac{32.6575}{45.0000}\right\}} + 0.0000 = 0.1317 \text{ in}$$

Per 5.10.5.2:

$$A_r = \frac{D^2}{3000.0000 \sin ø}\left\{\frac{T}{45.0000}\right\} =$$

$$\frac{(10.1667)^2}{3000.0000 \sin(9.4623)}\left\{\frac{32.6575}{45.0000}\right\} = 0.1521 \text{ in}^2$$

Compression Ring

L2 x2 x1/4 per Detail d

2 inches Vertical leg of rim angle is butt welded to the top of the shell with the horizontal leg turned out

Material: A36

API-650 Figure F-2

R_c = 61.0000 in

Roof Angle (ø) = 9.4623°

$R_2 = R_c/(\sin ø) = 61.0000/(\sin 9.4623) = 371.0485$ in

t_h = 0.1875 in

$w_h = 0.3 \sqrt{(R_2 t_h)} = 0.3 \sqrt{(371.0485 * 0.1875)} = 2.5023$ in
not to exceed 12.0000 in
therefore w_h = 2.5023 in

Available area from roof $(A_r) = t_h w_h = 0.1875 * 2.5023 = 0.4692$ in²

t_c = 0.1875 in

$w_c = 0.6 \sqrt{(R_c t_c)} = 0.6 \sqrt{(61.0000 * 0.1875)} = 2.0292$ in

Distance from top of angle to top of shell (b) = 2.0000 in
Available area from shell $(A_s) = (w_c - b)t_c = (2.0292 - 2.0000) * 0.1875 = 0.0055$ in²

t_a = 0.2500 in
Horizontal projection of angle (a_1) = 1.7500 in
Maximum horizontal projection = $16t_a = 16 * 0.2500 = 4.0000$ in
therefore a_1 = 1.7500 in
Vertical projection of angle (a_2) = 2.0000 in
Maximum vertical projection = w_c = 2.0292 in
therefore a_2 = 2.0000 in
Available area from compression ring $(A_c) = (a_1 + a_2)t_a =$
$(1.7500 + 2.0000)0.2500 = 0.9375$ in²

Total available area $(A_t) = A_r + A_s + A_c = 0.4692 + 0.0055 + 0.9375 = 1.4121$ in²

Wind Calculations

Wind velocity (V) = 100 mph
Tank diameter (D) = 10.1667 ft
Tank height (H) = 11.0000 ft
Importance factor (I) = 1.15
Exposure C

Calculation are in the corroded condition

Calculate average shell thickness:

For each shell course, WT = W x T

(Shell courses are numbered from bottom to top)

Shell Course	W (ft)	Tactual (in)	WT
Angle	0.1667	0.2500	0.0417
2	4.9167	0.1875	0.9219
1	5.9167	0.2500	1.4792
Total:	11.0000		2.4427

Average thickness (t) = WT/W = 2.4427/11.0000 = 0.2221 in

Determine Pw per 3.1.4

For Shell:
Centroid of shell C_s = 5.5000 ft
z = C_s but not less than 15.0000 ft
z = 15.00 ft from bottom of tank
Per ASCE7, zg = 900.0000 ft
α = 9.50
K_z = 2.01 (15.00/900.0000)^(2/9.50) = 0.8489
Per Eq. 3-2, $q_z = 0.00256 K_z I V^2$ = (0.00256)(0.8489)(1.1500)(100.0000)² = 24.9911 lbf/ft²
Per Table 2, C_f = 0.60
G = 1.00
Per Eq. 3-1, $P_w = q_z G C_f$ = (24.9911)(1.00)(0.6000) = 14.9947 lbf/ft²
but not less than 30.0000C_f = (30.00)(0.6000) = 18.0000 lbf/ft²
Therefore, P_{ws} = 18.0000 lbf/ft²

For roof:
Roof height H_r = 0.8472 ft
Centroid of roof $C_r = H + H_r/3 = 11.0000 + 0.8472/3 = 11.2824$ ft
$z = C_r$ but not less than 15.0000 ft
z = 15.00 ft from bottom of tank
Per ASCE7, z_g = 900.0000 ft
$\alpha = 9.50$
$K_z = 2.01\ (15.00/900.0000)^{(2/9.50)} = 0.8489$
Per Eq. 3-2, $q_z = 0.00256 K_z I V^2 = (0.00256)(0.8489)(1.1500)(100.0000)^2 = 24.9911$ lbf/ft²
Per Table 2, C_f = 0.60
G = 1.00
Per Eq. 3-1, $P_w = q_z G C_f = (24.9911)(1.00)(0.60) = 14.9947$ lbf/ft²
but not less than $30.0000 C_f = (30.00)(0.60) = 18.0000$ lbf/ft²
Therefore, P_{wr} = 18.0000 lbf/ft²

Overturning moment:
Roof exposed area, A_r = 4.3067 ft²
Overturning Moment (Mw) = $P_{ws} D H C_s + P_{wr} A_r C_r$ =
$= (18.0000)(10.1667)(11.0000)(5.5000) +$
$(18.0000)(4.3067)(11.2824) = 11946.1216$ ft-lbs

Check for tank stability without anchors:
Weight of shell and roof supported by shell (DL) = 3864.0380 lbs
MDL = DL * D/3 = 3864.0380 * 10.1667 / 3 = 13094.7955 ft-lbs

Anchorage of the tank for wind is not required

Determine if intermediate wind girder is required:

For distance 11.0000 ft from top of tank, average thickness (t) = 0.2221 in

Per Eq. 3-36: $h = \dfrac{10625000 t}{Paw (D/t)^{1.5}} =$

$\dfrac{(10625000)(0.2221)}{(18.0000)(10.1667/0.2221)^{1.5}} = 423.1418$ ft

h > H

Wind girder is not required. Iteration requirements of 3.5.2.1 have been met.

Customer:
Fliteway Technologies, Inc.
Job Number:
30883
Date: 02-18-2015 Rev.: 0

Weights

	New (lbf)	Corroded (lbf)
Product:	51078.2212	51078.2212
Total Shell Plates:	3131.9433	3131.9433
Total Bottom Plates:	884.0854	884.0854
Total Roof Plates:	630.2076	630.2076
Total Live Load:	1623.5925	1623.5925
Total Snow Load:	2029.4907	2029.4907
Total Additional Dead Load:	0.0000	0.0000
Shell Insulation:	0.0000	0.0000
Roof Insulation:	0.0000	0.0000
Total Rafters:	0.0000	0.0000
Total Roof and Framing:	630.2076	630.2076
Total Shell Appurtenances:	0.0000	0.0000
Total Roof Appurtenances:	0.0000	0.0000
Total Roof Appurtenances acting on Shell	0.0000	0.0000
Live Load acting on Shell:	1623.5925	1623.5925
Snow Load acting on Shell:	2029.4907	2029.4907
Total of Roof acting on Shell:	630.2076	630.2076
Total of Roof Structural acting on Shell:	0.0000	0.0000
Total Compression Ring and Shell Stiffener	101.8871	101.8871

Seismic Calculations

Tank diameter (D): 10.1667 ft
Product Height (H): 10.0833 ft
Specific Gravity (G): 1.0000

Tank is self-anchored

Mapped spectral response acceleration (S_s): 0.4700 g
Mapped spectral response acceleration (S_1): 0.1400 g

Vertical earthquake acceleration coefficient (A_v): 0.0625 g

Site Class per Table 25 : D
Seismic Use Group per 13.2.1 : III

From Table 26, F_a = 1.4240
From Table 27, F_v = 2.2400
From Table 24, I_E = 1.5000
From Table 28, R_i = 2.5000
From Table 28, R_c = 1.5000

Scaling factor per 13.2.7.3, U = 2/3

Per Eq. 13-7, $S_{DS} = UF_aS_s = (2/3)(1.4240)(0.4700) = 0.4462$
Per Eq. 13-8, $S_{D1} = UF_vS_1 = (2/3)(2.2400)(0.1400) = 0.2091$

$q = 32.2000\ ft/s^2$

13.5.1 First Mode Sloshing Wave Period

Per Eq. 13-22: $T_c = 2\pi \sqrt{\frac{D}{\{3.68g \tanh\left(\frac{3.68H}{D}\right)\}}} =$

$$2\pi \sqrt{\frac{10.1667}{\{(3.68)(32.2000)\tanh\left(\frac{(3.68)(10.0833)}{10.1667}\right)\}}} = 1.8417$$

Per Eq. 13-9, $S_{ai} = S_{DS} = 0.4462$

Impulsive spectral acceleration parameter:

Per Eq. 13-17: $A_i = \frac{S_{ai} I_E}{1.4 R_i} = \frac{(0.4462)(1.50)}{1.4(2.5000)} = 0.1912$

and $A_i \geq \frac{0.36 S_1 I_E}{R_i} = \frac{0.36(0.1400)(1.50)}{2.5000} = 0.0302$

Therefore, $A_i = 0.1912$

Convective spectral acceleration parameter:

From Figure 19, $T_L = 6.0000$
Per 13.2.7.3.2, $K = 1.5$

$T_c \leq T_L$, Per Eq. 13-12

$S_{ac} = \frac{K S_{D1}}{T_c} = \frac{(1.5)(0.2091)}{1.8417} = 0.1703$

However, $S_{ac} \leq S_{DS}$
Therefore, $S_{ac} = 0.1703$

Per Eq. 13-18, $A_c = \frac{S_{ac} I_E}{1.4 R_c} = \frac{(0.1703)(1.5000)}{(1.4)(1.5000)} = 0.1216$

Per 13.5.2.2.1

D/H = 10.1667/10.0833 = 1.0083

Weights:
W_s = 3234 lbs
W_f = 884 lbs
W_r = Roof weight = 630 lbs
W_T = 51078 lbs

D/H < 1.333

Per Eq. 13-25, $W_i = (1.0 - 0.218 D/H) W_T = (1.0 - 0.218 * 1.0083)(51078) = 39851$ lbs

Per Eq. 13-26, $W_c = 0.230 D/H \tanh(3.67 H/D) W_T =$
$(0.230)(1.0083)[\tanh(3.67/1.0083)](51078) = 11829$ lbs

Per 13.5.3.1, Eq. 13-31

$$V_f = \sqrt{\{[A_i(W_s + W_r + W_f + W_i)]^2 + [A_c W_c]^2\}} = \sqrt{\{[(0.1912)(3234 + 630 + 884 + 39851)]^2 + [(0.1216)(11829)]^2\}} = 8649 \text{ lbs}$$

Per 13.5.2.2.2

$D/H < 1.333$

Per Eq. 13-29, $X_i = [0.5 - 0.094D/H]H = [0.5 - (0.094)(1.0083)](10.0833) = 4.0860$ ft

Per Eq. 13-30, $$X_c = \left[1.0 - \frac{\cosh(3.67H/D) - 1}{3.67H/D \sinh(3.67H/D)}\right] H =$$

$$\left[1.0 - \frac{\cosh(3.67/1.0083) - 1}{(3.67/1.0083)\sinh(3.67/1.0083)}\right](10.0833) = 7.4549 \text{ ft}$$

Per 13.5.3.2.2

$D/H < 1.333$

Per Eq. 13-34, $X_{imf} = [0.500 + 0.600D/H]H = [0.500 + (0.060)(1.0083)](10.0833) = 5.6517$ ft

Per Eq. 13-35, $$X_{cmf} = \left[1.0 - \frac{\cosh(3.67H/D) - 1.937}{3.67H/D \sinh(3.67H/D)}\right] H =$$

$$\left[1.0 - \frac{\cosh(3.67/1.0083) - 1.937}{(3.67/1.0083)\sinh(3.67/1.0083)}\right](10.0833) = 7.5913 \text{ ft}$$

Per 13.5.2.1, Eq. 13-23

$$M_s = \sqrt{\{[A_i(W_iX_i + W_sX_s + W_rH_t)]^2 + [A_c(W_cX_c)]^2\}} = \sqrt{\{[0.1912(39851*4.0860 + 3234*4.8461 + 630*11.0000)]^2 + [0.1216(11829*7.4549)]^2\}} = 37046 \text{ ft-lbs}$$

Per 13.5.2.2, Eq. 13-32

$$M_{mf} = \sqrt{\{[A_i(W_iX_{imf} + W_sX_s + W_rH_t)]^2 + [A_c(W_cX_{cmf})]^2\}} = \sqrt{\{[0.1912(39851*5.6517 + 3234*4.8461 + 630*11.0000)]^2 + [0.1216(11829*7.5913)]^2\}} = 48633 \text{ ft-lbs}$$

Self-anchored tank (new condition)

Per 13.5.4.2.1

W_s = 3234 lbs
w_{rs} = 19.7313 lbf/ft
t_b = 0.2500 in
t_s = 0.2500 in
$w_t = W_s/(\pi D) + w_{rs} = 3234/(\pi * 10.1667) + 19.7313 = 120.9798$ lbf/ft

Per Eq. 13-37,
$w_L = 7.9 t_b \sqrt{(F_y HG)} =$
$(7.9)(0.2500)\sqrt{[(36000.0000)(10.0833)(1.0000)]} = 1189.9273$ lbf/ft
$\leq 1.28HDG = (1.28)(10.0833)(10.1667)(1.0000) = 131.2178$ lbf/ft
therefore, $w_L = 131.2178$ lbf/ft

$$J \text{ per Eq. 13-36} = \frac{M_s}{D^2[w_t(1.0 - 0.4A_v) + w_L]} =$$

$$\frac{37046}{(10.1667)^2[120.9798(1.0 - (0.4)(0.0625)) + 131.2178]} = 1.438$$

Shell compression per Eq. 13-40 where J > 0.785

$$\sigma_c = \left[\frac{w_t(1 + 0.4A_v) + w_L}{0.607 - 0.18667(J)^{2.3}} - w_L \right] \frac{1}{12t_s} =$$

$$\left[\frac{120.9798(1 + (0.4)(0.0625)) + 131.2178}{0.607 - 0.18667(1.44)^{2.3}} - 131.2178 \right] \frac{1}{(12)(0.2500)}$$

$$= 438.8808 \text{ psi}$$

Allowable Compression Stresses in Shell per 13.5.4.2.4

$R = 12D/2 = 12 * 10.1667/2 = 61.0000$ in
$(t/R)_c$ for Material Class 2 = 0.0035372 (per 3.4.3.1)

For new condition:
$t/R = 0.2500/61.0000 = 0.0041$

$(t/R)c < t/R \leq 0.125$
Per Eq. 3-13, $F_L = 6925.00 + 886000(t/R)^2 =$
$6925.00 + 886000(0.0041)^2 = 10556.1475$ psi

$P = 0.4330HG = (0.4330)(10.0833)(1.0000) = 4.3661$ psi
$E = 29000000$ psi

$(P/E)(R/t)^2 = (4.3661/29000000)(61.0000/0.2500)^2 = 0.0090$

For $(P/E)(R/t)^2 \leq 0.064$ per Eq. 13-50
$\Delta Cc = 0.72[(P/E)(R/t)^2]^{0.84}$
$= 0.72[(0.0090)^2]^{0.84} = 0.0137$

Per Eq. 13-49
$\Delta\sigma_{cr} = \Delta C_c E t/R = (0.0137)(29000000)(0.2500)/61.0000 = 1630.8670$

Per Eq. 13-47
$\sigma_e = 1.333(\sigma_a + \Delta\sigma_{cr}/2) =$
$1.333(10556.1475 + 1630.8670/2) = 15158.3176$ psi

Freeboard requirements per 13.5.4.4

For $T_c \leq T_L$ per Eq. 13-55
$A_f = KS_{D1}/T_c = (1.5)(0.2091)/1.8417 = 0.1703$

Per Eq. 13-52, Wave Height : $\delta_s = 0.5DA_f = (0.5)(10.1667)(0.1703) = 0.8656$ ft

Available freeboard is adequate.

Per Table 29, minimum freeboard $= 1.0\delta_s = (1.0)(0.8656) = 0.8656$ ft

Tank resistance to sliding per Eq. 13-57
$V_s = \tan 30(W_s + W_r + W_f + W_p)(1.0 - 0.4A_v) =$
$\tan 30(3234 + 630 + 884 + 51078)(1.0 - 0.4 * 0.0625) = 31426$ lbs
$V_f = 8649$ lbs

Tank is stable against sliding.

Hoop Stress per 13.5.4.2.3

G = 1.00
D = 10.1667 ft
H = 10.0833 ft
Ai = 0.1912
Ac = 0.1216
Av = 0.0625
D/H = 1.0083

Shell Course 01

Y = 10.0833 ft

For D/H < 1.333 and Y ≥ 0.75D, Eq. 13-45

$N_i = 1.39A_iGD^2 = (1.39)(0.1912)(1.00)(10.1667)^2 = 27.4734$ lbf/in

Eq. 13-46

$$N_c = \frac{0.98A_cGD^2\cosh[3.68(H - Y)/D]}{\cosh[3.68H/D]} =$$

$$\frac{(0.98)(0.1216)(1.0000)(10.1667)^2\cosh[3.68(10.0833 - 10.0833)/10.1667]}{\cosh[(3.68)(10.0833/10.1667)]}$$

$$= 0.6401 \text{ lbf/in}$$

$N_h = 2.60DYG = (2.60)(10.1667)(10.0833)(1.00) = 266.5361$ lbf/in

Shell thickness (t) = 0.2500 in

Per Eq. 13-42, $\sigma_s = [\sqrt{\{N_i^2 + N_c^2 + (A_vN_h)^2\}}]/(t) =$
$[\sqrt{\{(27.4734)^2 + (0.6401)^2 + (0.0625 * 266.5361)^2\}}]/(0.2500)$
$= 128.5240$ psi

$\sigma_T = N_h/t + \sigma_s = 266.5361/(0.2500) + 128.5240 = 1194.6684$ psi

Allowable stress = 1.333SE = (1.333)(15000.0000)(0.8500) = 16995.7500 psi

Minimum required thickness = $(\sigma_T * t)/Sa =$
$(1194.6684 * 0.2500)/16995.7500 = 0.0176$ in

Shell Course 02

Y = 4.1667 ft

For D/H < 1.333 and Y < 0.75D, Eq. 13-44

$$N_i = 2.77 A_i G D^2 \left[\frac{Y}{0.75D} - 0.5 \left(\frac{Y}{0.75D} \right)^2 \right] =$$

$$(2.77)(0.1912)(1.00)(10.1667)^2 \left[\frac{4.1667}{(0.75)(10.1667)} - 0.5 \left(\frac{4.1667}{(0.75)(10.1667)} \right)^2 \right]$$

$$= 21.7433 \text{ lbf/in}$$

Eq. 13-46

$$N_c = \frac{0.98 A_c G D^2 \cosh[3.68(H - Y)/D]}{\cosh[3.68H/D]} =$$

$$\frac{(0.98)(0.1216)(1.0000)(10.1667)^2 \cosh[3.68(10.0833 - 4.1667)/10.1667]}{\cosh[(3.68)(10.0833/10.1667)]}$$

$$= 2.7623 \text{ lbf/in}$$

$N_h = 2.60DYG = (2.60)(10.1667)(4.1667)(1.00) = 110.1389$ lbf/in

Shell thickness (t) = 0.1875 in

Per Eq. 13-42, $\sigma_s = [\sqrt{\{N_i^2 + N_c^2 + (A_v N_h)^2\}}]/(t) =$
$[\sqrt{\{(21.7433)^2 + (2.7623)^2 + (0.0625 * 110.1389)^2\}}]/(0.1875)$
$= 122.5201$ psi

$\sigma_T = N_h/t + \sigma_s = 110.1389/(0.1875) + 122.5201 = 709.9275$ psi

Allowable stress = 1.333SE = (1.333)(15000.0000)(0.8500) = 16995.7500 psi

Minimum required thickness = $(\sigma_T * t)/Sa =$
$(709.9275 * 0.1875)/16995.7500 = 0.0078$ in

Shell Nozzles

2" Drain Nozzle - H

Description: 2" 150# SO Flanged Nozzle
Elevation: 6.0000 in
Orientation: 90.0000°
Corrosion Allowance: Cn = 0.0000 in

Nozzle Neck: 160 Pipe
Material Grade: A53-B
Outside Diameter: d = 2.3750 in
Wall Thickness: t_n = 0.3430 in
Outside Projection: Po = 6.0000 in
Inside Projection: Pi = 0.0000 in

Flange Material Grade: A105

Calculate Required Shell Thickness at Nozzle

For Design: tr = 2.6000 * (9.5833 + 0.0000) * 10.1667 * 1.0000/[0.8500 * 15000.0000]
= 0.0199 in

Hoop Stress at Nozzle

Y = 9.5833 ft

D/H < 1.333 and Y ≥ 0.75D

Per Eq. 13-45, $N_i = 1.39A_iGD^2 = (1.39)(0.1912)(1.00)(10.1667)^2 = 27.4734$ lbf/in

Per Eq. 13-46, $N_c = \dfrac{0.98AcGD^2\cosh[3.68(H - Y)/D]}{\cosh[3.68H/D]} =$

$$\frac{(0.98)(0.1216)(1.0000)(10.1667)^2\cosh[3.68(10.0833 - 9.5833)/10.1667]}{\cosh[(3.68)(10.0833/10.1667)]}$$

= 0.6506 lbf/in

$N_h = 2.60DYG = (2.60)(10.1667)(9.5833)(1.00) = 253.3194$ lbf/in

Shell thickness: t = 0.2500 in

Per Eq. 13-42, $\sigma_T = [N_h + \sqrt{\{N_i^2 + N_c^2 + (A_vN_h)^2\}}]/t =$
$[253.3194 + \sqrt{\{(27.4734)^2 + (0.6506)^2 + (0.0625 * 253.3194)^2\}}]/0.2500$
= 1140.1228 psi

BROWN-MINNEAPOLIS TANK
ENGINEERS - FABRICATORS - CONSTRUCTORS

Allowable stress: Sa = 16995.7500 psi

Minimum required thickness = (σ_T * t)/Sa =
(1140.1228 * 0.2500)/16995.7500 = 0.0168 in

Required shell thickness for Nozzle Calculations: t_r = 0.0199 in

Reinforcement of Nozzle for Design:
Diameter of Hole in Shell: D_1 = 2.3750 in
Required Area: $A_r = t_r D_s$ = 0.0199 * 2.3750 = 0.0472 in²

Available Reinforcement from shell:
Diameter of Shell available: D_s = 2.3750 in
Shell corrosion allowance: C_s = 0.0000 in
Available Area: $A_{as} = 2(D_s - D_1/2)(t - C_s - t_r)$ =
2 * (2.3750 - 2.3750/2)* (0.2500 - 0.0000 - 0.0199) = 0.5466 in²

Check nozzle attachment strength paths:
Required strength: $W_r = (A_r - A_{as})S_a$ =
(0.0472 - 0.5466) * 15000.0000 = -7490.6413 lbs

Nozzle neck:
Allowable stress: S_n = 15000.0000 psi

Outside fillet weld:
Weld size: W_o = 0.2500 in
Allowable stress: S_o = 15000.0000 psi

Shell Groove weld:
Weld size: W_g = 0.2500 in
Allowable stress: S_g = 15000.0000 psi

Check attachment strength: Outside fillet weld, Groove weld
W_a = {0.60 * S_o * π * d * 0.707(W_o) +
0.850 * 0.70 * S_g * π * d * (W_g - C_s)}/2 =
{0.60 * 15000.0000 * π * 2.3750 * 0.707(0.2500) +
0.850 * 0.70 * 15000.0000 * π * 2.3750 * (0.2500 - 0.0000)}/2 =
14258.5110 lbs

Check attachment strength: Nozzle neck, Outside fillet weld
W_a = {0.80 * 0.875 * S_n * π * (t_n - C_n) * (d - t_n - C_n) +
0.60 * S_o * π * d * 0.707(W_o)}/2 =
{0.80 * 0.875 * 15000.0000 * π * (0.3430 - 0.0000) * (2.3750 - 0.3430 - 0.0000) +
0.60 * 15000.0000 * π * 2.3750 * 0.707(0.2500)}/2 =
17429.9947 lbs

Nozzle reinforcement calculations are not required.

2" Level Nozzle - I

Description: 2" 150# SO Flanged Nozzle
Elevation: 6.0000 in
Orientation: 315.0000°
Corrosion Allowance: Cn = 0.0000 in

Nozzle Neck: 160 Pipe
Material Grade: A53-B
Outside Diameter: d = 2.3750 in
Wall Thickness: t_n = 0.3430 in
Outside Projection: Po = 6.0000 in
Inside Projection: Pi = 0.0000 in

Flange Material Grade: A105

Calculate Required Shell Thickness at Nozzle

For Design: tr = 2.6000 * (9.5833 + 0.0000) * 10.1667 * 1.0000/[0.8500 * 15000.0000]
= 0.0199 in

Hoop Stress at Nozzle

Y = 9.5833 ft

D/H < 1.333 and Y ≥ 0.75D

Per Eq. 13-45, $N_i = 1.39A_iGD^2 = (1.39)(0.1912)(1.00)(10.1667)^2 = 27.4734$ lbf/in

Per Eq. 13-46, $N_c = \dfrac{0.98A_cGD^2\cosh[3.68(H - Y)/D]}{\cosh[3.68H/D]} =$

$$\frac{(0.98)(0.1216)(1.0000)(10.1667)^2\cosh[3.68(10.0833 - 9.5833)/10.1667]}{\cosh[(3.68)(10.0833/10.1667)]}$$

= 0.6506 lbf/in

$N_h = 2.60DYG = (2.60)(10.1667)(9.5833)(1.00) = 253.3194$ lbf/in

Shell thickness: t = 0.2500 in

Per Eq. 13-42, $\sigma_T = [N_h + \sqrt{\{N_i^2 + N_c^2 + (A_vN_h)^2\}}]/t =$
$[253.3194 + \sqrt{\{(27.4734)^2 + (0.6506)^2 + (0.0625 * 253.3194)^2\}}]/0.2500$
= 1140.1228 psi

Allowable stress: Sa = 16995.7500 psi

Minimum required thickness = $(\sigma_T * t)/Sa =$
$(1140.1228 * 0.2500)/16995.7500 = 0.0168$ in

Required shell thickness for Nozzle Calculations: t_r = 0.0199 in

Reinforcement of Nozzle for Design:
Diameter of Hole in Shell: D_1 = 2.3750 in
Required Area: $A_r = t_r D_s$ = 0.0199 * 2.3750 = 0.0472 in²

Available Reinforcement from shell:
Diameter of Shell available: D_s = 2.3750 in
Shell corrosion allowance: C_s = 0.0000 in
Available Area: $A_{as} = 2(D_s - D_1/2)(t - C_s - t_r)$ =
2 * (2.3750 - 2.3750/2)* (0.2500 - 0.0000 - 0.0199) = 0.5466 in²

Check nozzle attachment strength paths:
Required strength: $W_r = (A_r - A_{as})S_a$ =
(0.0472 - 0.5466) * 15000.0000 = -7490.6413 lbs

Nozzle neck:
Allowable stress: S_n = 15000.0000 psi

Outside fillet weld:
Weld size: W_o = 0.2500 in
Allowable stress: S_o = 15000.0000 psi

Shell Groove weld:
Weld size: W_g = 0.2500 in
Allowable stress: S_g = 15000.0000 psi

Check attachment strength: Outside fillet weld, Groove weld
W_a = {0.60 * S_o * π * d * 0.707(W_o) +
0.850 * 0.70 * S_g * π * d * (W_g - C_s)}/2 =
{0.60 * 15000.0000 * π * 2.3750 * 0.707(0.2500) +
0.850 * 0.70 * 15000.0000 * π * 2.3750 * (0.2500 - 0.0000)}/2 =
14258.5110 lbs

Check attachment strength: Nozzle neck, Outside fillet weld
W_a = {0.80 * 0.875 * S_n * π * (t_n - C_n) * (d - t_n - C_n) +
0.60 * S_o * π * d * 0.707(W_o)}/2 =
{0.80 * 0.875 * 15000.0000 * π * (0.3430 - 0.0000) * (2.3750 - 0.3430 - 0.0000) +
0.60 * 15000.0000 * π * 2.3750 * 0.707(0.2500)}/2 =
17429.9947 lbs

Nozzle reinforcement calculations are not required.

2" Level Nozzle - J

Description: 2" 150# SO Flanged Nozzle
Elevation: 10.0000 in
Orientation: 330.0000°
Corrosion Allowance: Cn = 0.0000 in

Nozzle Neck: 160 Pipe
Material Grade: A53-B
Outside Diameter: d = 2.3750 in
Wall Thickness: t_n = 0.3430 in
Outside Projection: Po = 6.0000 in
Inside Projection: Pi = 0.0000 in

Flange Material Grade: A105

Calculate Required Shell Thickness at Nozzle

For Design: tr = 2.6000 * (9.2500 + 0.0000) * 10.1667 * 1.0000/[0.8500 * 15000.0000]
= 0.0192 in

Hoop Stress at Nozzle

Y = 9.2500 ft

D/H < 1.333 and Y ≥ 0.75D

Per Eq. 13-45, $N_i = 1.39A_iGD^2 = (1.39)(0.1912)(1.00)(10.1667)^2 = 27.4734$ lbf/in

Per Eq. 13-46, $N_c = \dfrac{0.98AcGD^2\cosh[3.68(H - Y)/D]}{\cosh[3.68H/D]} =$

$$\frac{(0.98)(0.1216)(1.0000)(10.1667)^2\cosh[3.68(10.0833 - 9.2500)/10.1667]}{\cosh[(3.68)(10.0833/10.1667)]}$$

= 0.6695 lbf/in

$N_h = 2.60DYG = (2.60)(10.1667)(9.2500)(1.00) = 244.5083$ lbf/in

Shell thickness: t = 0.2500 in

Per Eq. 13-42, $\sigma_T = [N_h + \sqrt{\{N_i^2 + N_c^2 + (A_vN_h)^2\}}]/t =$
$[244.5083 + \sqrt{\{(27.4734)^2 + (0.6695)^2 + (0.0625 * 244.5083)^2\}}]/0.2500$
= 1103.7958 psi

Allowable stress: Sa = 16995.7500 psi

Minimum required thickness = $(\sigma_T * t)/Sa =$
(1103.7958 * 0.2500)/16995.7500 = 0.0162 in

Required shell thickness for Nozzle Calculations: t_r = 0.0192 in

BROWN-MINNEAPOLIS TANK
ENGINEERS - FABRICATORS - CONSTRUCTORS

Reinforcement of Nozzle for Design:
Diameter of Hole in Shell: D_1 = 2.3750 in
Required Area: $A_r = t_r D_s$ = 0.0192 * 2.3750 = 0.0455 in²

Available Reinforcement from shell:
Diameter of Shell available: D_s = 2.3750 in
Shell corrosion allowance: C_s = 0.0000 in
Available Area: $A_{as} = 2(D_s - D_1/2)(t - C_s - t_r)$ =
2 * (2.3750 - 2.3750/2)* (0.2500 - 0.0000 - 0.0192) = 0.5482 in²

Check nozzle attachment strength paths:
Required strength: $W_r = (A_r - A_{as})S_a$ =
(0.0455 - 0.5482) * 15000.0000 = -7539.8799 lbs

Nozzle neck:
Allowable stress: S_n = 15000.0000 psi

Outside fillet weld:
Weld size: W_o = 0.2500 in
Allowable stress: S_o = 15000.0000 psi

Shell Groove weld:
Weld size: W_g = 0.2500 in
Allowable stress: S_g = 15000.0000 psi

Check attachment strength: Outside fillet weld, Groove weld
W_a = {0.60 * S_o * π * d * 0.707(W_o) +
0.850 * 0.70 * S_g * π * d * (W_g - C_s)}/2 =
{0.60 * 15000.0000 * π * 2.3750 * 0.707(0.2500) +
0.850 * 0.70 * 15000.0000 * π * 2.3750 * (0.2500 - 0.0000)}/2 =
14258.5110 lbs

Check attachment strength: Nozzle neck, Outside fillet weld
W_a = {0.80 * 0.875 * S_n * π * (t_n - C_n) * (d - t_n - C_n) +
0.60 * S_o * π * d * 0.707(W_o)}/2 =
{0.80 * 0.875 * 15000.0000 * π * (0.3430 - 0.0000) * (2.3750 - 0.3430 - 0.0000) +
0.60 * 15000.0000 * π * 2.3750 * 0.707(0.2500)}/2 =
17429.9947 lbs

Nozzle reinforcement calculations are not required.

24"Dia. Shell Manway - K

Description: 24" API-650 Shell Manhole w/Blind Flange
Elevation: 30.0000 in
Orientation: 0.0000°
Corrosion Allowance: Cn = 0.0000 in

Nozzle Neck: Plate
Material Grade: A36
Outside Diameter: d = 24.5000 in
Wall Thickness: t_n = 0.2500 in
Outside Projection: Po = 8.0000 in
Inside Projection: Pi = 0.0000 in

Reinforcing Pad:
Material Grade: A36
Thickness: tp = 0.2500 in
Outside Diameter: Dp = 36.0000 in

Flange Material Grade: A36

Thickness: 0.5000 in
Machining Allowance: 0.1875 in

Blind Flange Material Grade: A36

Thickness: 0.3750 in

Calculate Required Shell Thickness at Nozzle

For Design: tr = 2.6000 * (7.5833 + 0.0000) * 10.1667 * 1.0000/[0.8500 * 15000.0000]
= 0.0157 in

Hoop Stress at Nozzle

Y = 7.5833 ft

D/H < 1.333 and Y < 0.75D

Per Eq. 13-44, $N_i = 2.77 A_i G D^2 \left[\frac{Y}{0.75D} - 0.5 \left(\frac{Y}{0.75D} \right)^2 \right] =$

$(2.77)(0.1912)(1.00)(10.1667)^2 \left[\frac{7.5833}{(0.75)(10.1667)} - 0.5 \left(\frac{7.5833}{(0.75)(10.1667)} \right)^2 \right]$

= 27.3737 lbf/in

Per Eq. 13-46, $N_c = \frac{0.98AcGD^2\cosh[3.68(H - Y)/D]}{\cosh[3.68H/D]} =$

$$\frac{(0.98)(0.1216)(1.0000)(10.1667)^2\cosh[3.68(10.0833 - 7.5833)/10.1667]}{\cosh[(3.68)(10.0833/10.1667)]}$$

$= 0.9206$ lbf/in

$N_h = 2.60DYG = (2.60)(10.1667)(7.5833)(1.00) = 200.4528$ lbf/in

Shell thickness: $t = 0.2500$ in

Per Eq. 13-42, $\sigma_T = [N_h + \sqrt{\{N_i^2 + N_c^2 + (A_vN_h)^2\}}]/t =$
$[200.4528 + \sqrt{\{(27.3737)^2 + (0.9206)^2 + (0.0625 * 200.4528)^2\}}]/0.2500$
$= 922.2740$ psi

Allowable stress: Sa = 16995.7500 psi

Minimum required thickness = $(\sigma_T * t)/Sa =$
$(922.2740 * 0.2500)/16995.7500 = 0.0136$ in

Required shell thickness for Nozzle Calculations: $t_r = 0.0157$ in

Reinforcement of Nozzle for Design:
Diameter of Hole in Shell: $D_1 = 24.5000$ in
Required Area: $A_r = t_rD_s = 0.0157 * 24.5000 = 0.3852$ in²

Available Reinforcement from shell:
Diameter of Shell available: $D_s = 24.5000$ in
Shell corrosion allowance: $C_s = 0.0000$ in
Available Area: $A_{as} = 2(D_s - D_1/2)(t - C_s - t_r) =$
$2 * (24.5000 - 24.5000/2)* (0.2500 - 0.0000 - 0.0157) = 5.7398$ in²

Available Reinforcement from nozzle neck per Sec. 3.13:
Reduction factor: F_n 1.0000

Available Reinforcement from outside projection:
Projection: L_o = lesser of P_o or $4t_n = 1.0000$ in
Available Area: $A_{ano} = 2F_nL_o(t_n - C_n) =$
$2 * 1.0000 * 1.0000 * (0.2500 - 0.0000) = 0.5000$ in²

Available Reinforcement from portion in shell:
Available Area: $A_{an} = 2F_n(t - C_s)(t_n - C_n) =$
$2 * 1.0000 * (0.2500 - 0.0000) * (0.2500 - 0.0000) = 0.1250$ in²

Available Reinforcement from reinforcing pad:

Reduction factor: $F_p = 1.0000$

Reinforcing pad outside limit: L_{po} = 36.0000 in
Reinforcing pad inside diameter: L_{pi} = 24.6250 in
Available Area: $A_{arp} = F_p(L_{po} - L_{pi})(t_p)$ =
1.0000 * (36.0000 - 24.6250) * 0.2500 = 2.8438 in²

Total available area of reinforcement: A_{at} = 9.2086 in²

Check nozzle attachment strength paths:

Required strength: $W_r = (A_r - A_{as})S_a$ =
(0.3852 - 5.7398) * 15000.0000 = -80319.4869 lbs

Nozzle neck:
Allowable stress: S_n = 15000.0000 psi

Outside fillet weld:
Weld size: W_o = 0.2500 in
Allowable stress: S_o = 15000.0000 psi

Shell Groove weld:
Weld size: W_g = 0.2500 in
Allowable stress: S_g = 15000.0000 psi

Reinforcing pad fillet weld:
Weld size: W_p = 0.2500 in
Allowable stress: S_p = 15000.0000 psi

Check attachment strength: Outside fillet weld, Groove weld

$W_a = \{0.60 * S_o * \pi * d * 0.707(W_o) +$
$0.850 * 0.70 * S_g * \pi * d * (W_g - C_s)\}/2 =$
$\{0.60 * 15000.0000 * \pi * 24.5000 * 0.707(0.2500) +$
$0.850 * 0.70 * 15000.0000 * \pi * 24.5000 * (0.2500 - 0.0000)\}/2 =$
147087.7972 lbs

Check attachment strength: Repad fillet weld, Groove weld

$W_a = \{0.60 * S_p * \pi * D_p * 0.707(W_p) +$
$0.850 * 0.70 * S_g * \pi * d * (W_g - C_s)\}/2 =$
$\{0.60 * 15000.0000 * \pi * 36.0000 * 0.707(0.2500) +$
$0.850 * 0.70 * 15000.0000 * \pi * 24.5000 * (0.2500 - 0.0000)\}/2 =$
175823.3562 lbs

Check attachment strength: Nozzle neck, Repad fillet weld

$W_a = \{0.80 * 0.875 * S_n * \pi * (t_n - C_n) * (d - t_n - C_n) +$
$0.60 * S_p * \pi * D_p * 0.707(W_p)\}/2 =$
$\{0.80 * 0.875 * 15000.0000 * \pi * (0.2500 - 0.0000) * (24.5000 - 0.2500 - 0.0000) +$
$0.60 * 15000.0000 * \pi * 36.0000 * 0.707(0.2500)\}/2 =$
189945.7969 lbs

4" Discharge Nozzle - G

Description: 4" 150# SO Flanged Nozzle
Elevation: 6.0000 in
Orientation: 180.0000°
Corrosion Allowance: Cn = 0.0000 in

Nozzle Neck: SCH80 Pipe
Material Grade: A53-B
Outside Diameter: d = 4.5000 in
Wall Thickness: t_n = 0.3370 in
Outside Projection: Po = 6.0000 in
Inside Projection: Pi = 0.0000 in

Reinforcing Pad:
Material Grade: A36
Thickness: tp = 0.2500 in
Outside Diameter: Dp = 8.0000 in

Flange Material Grade: A105

Calculate Required Shell Thickness at Nozzle

For Design: tr = 2.6000 * (9.5833 + 0.0000) * 10.1667 * 1.0000/[0.8500 * 15000.0000]
= 0.0199 in

Hoop Stress at Nozzle

Y = 9.5833 ft

D/H < 1.333 and Y ≥ 0.75D

Per Eq. 13-45, $N_i = 1.39AiGD^2 = (1.39)(0.1912)(1.00)(10.1667)^2 = 27.4734$ lbf/in

Per Eq. 13-46, $N_c = \frac{0.98AcGD^2\cosh[3.68(H - Y)/D]}{\cosh[3.68H/D]} =$

$$\frac{(0.98)(0.1216)(1.0000)(10.1667)^2\cosh[3.68(10.0833 - 9.5833)/10.1667]}{\cosh[(3.68)(10.0833/10.1667)]}$$

= 0.6506 lbf/in

$N_h = 2.60DYG = (2.60)(10.1667)(9.5833)(1.00) = 253.3194$ lbf/in

Shell thickness: t = 0.2500 in

Per Eq. 13-42, $\sigma_T = [N_h + \sqrt{\{N_i^2 + N_c^2 + (A_vN_h)^2\}}]/t =$
$[253.3194 + \sqrt{\{(27.4734)^2 + (0.6506)^2 + (0.0625 * 253.3194)^2\}}]/0.2500$
= 1140.1228 psi

Allowable stress: Sa = 16995.7500 psi

Minimum required thickness = (σ_T * t)/Sa =
(1140.1228 * 0.2500)/16995.7500 = 0.0168 in

Required shell thickness for Nozzle Calculations: t_r = 0.0199 in

Reinforcement of Nozzle for Design:
Diameter of Hole in Shell: D_1 = 4.5000 in
Required Area: $A_r = t_r D_s$ = 0.0199 * 4.5000 = 0.0894 in²

Available Reinforcement from shell:
Diameter of Shell available: D_s = 4.5000 in
Shell corrosion allowance: C_s = 0.0000 in
Available Area: $A_{as} = 2(D_s - D_1/2)(t - C_s - t_r)$ =
2 * (4.5000 - 4.5000/2)* (0.2500 - 0.0000 - 0.0199) = 1.0356 in²

Available Reinforcement from nozzle neck per Sec. 3.13:

Reduction factor: F_n 1.0000

Available Reinforcement from outside projection:
Projection: L_o = lesser of P_o or $4t_n$ = 1.3480 in
Available Area: $A_{ano} = 2F_nL_o(t_n - C_n)$ =
2 * 1.0000 * 1.3480 * (0.3370 - 0.0000) = 0.9086 in²

Available Reinforcement from portion in shell:
Available Area: $A_{an} = 2F_n(t - C_s)(t_n - C_n)$ =
2 * 1.0000 * (0.2500 - 0.0000) * (0.3370 - 0.0000) = 0.1685 in²

Available Reinforcement from reinforcing pad:

Reduction factor: F_p = 1.0000

Reinforcing pad outside limit: L_{po} = 8.0000 in
Reinforcing pad inside diameter: L_{pi} = 4.6250 in
Available Area: $A_{arp} = F_p(L_{po} - L_{pi})(t_p)$ =
1.0000 * (8.0000 - 4.6250) * 0.2500 = 0.8438 in²

Total available area of reinforcement: A_{at} = 2.9564 in²

Check nozzle attachment strength paths:
Required strength: $W_r = (A_r - A_{as})S_a$ =
(0.0894 - 1.0356) * 15000.0000 = -14192.7941 lbs

Nozzle neck:
Allowable stress: S_n = 15000.0000 psi

Outside fillet weld:
Weld size: W_o = 0.2500 in
Allowable stress: S_o = 15000.0000 psi

Shell Groove weld:
Weld size: W_g = 0.2500 in
Allowable stress: S_g = 15000.0000 psi

Reinforcing pad fillet weld:
Weld size: W_p = 0.2500 in
Allowable stress: S_p = 15000.0000 psi

Check attachment strength: Outside fillet weld, Groove weld

$$W_a = \{0.60 * S_o * \pi * d * 0.707(W_o) + 0.850 * 0.70 * S_g * \pi * d * (W_g - C_s)\}/2 =$$
$$\{0.60 * 15000.0000 * \pi * 4.5000 * 0.707(0.2500) + 0.850 * 0.70 * 15000.0000 * \pi * 4.5000 * (0.2500 - 0.0000)\}/2 =$$
27016.1260 lbs

Check attachment strength: Repad fillet weld, Groove weld

$$W_a = \{0.60 * S_p * \pi * D_p * 0.707(W_p) + 0.850 * 0.70 * S_g * \pi * d * (W_g - C_s)\}/2 =$$
$$\{0.60 * 15000.0000 * \pi * 8.0000 * 0.707(0.2500) + 0.850 * 0.70 * 15000.0000 * \pi * 4.5000 * (0.2500 - 0.0000)\}/2 =$$
35761.7309 lbs

Check attachment strength: Nozzle neck, Repad fillet weld

$$W_a = \{0.80 * 0.875 * S_n * \pi * (t_n - C_n) * (d - t_n - C_n) + 0.60 * S_p * \pi * D_p * 0.707(W_p)\}/2 =$$
$$\{0.80 * 0.875 * 15000.0000 * \pi * (0.3370 - 0.0000) * (4.5000 - 0.3370 - 0.0000) + 0.60 * 15000.0000 * \pi * 8.0000 * 0.707(0.2500)\}/2 =$$
43129.0021 lbs

4" Spare Nozzle - L

Description: 4" 150# SO Flanged Nozzle
Elevation: 10.0000 in
Orientation: 45.0000°
Corrosion Allowance: Cn = 0.0000 in

Nozzle Neck: SCH80 Pipe
Material Grade: A53-B
Outside Diameter: d = 4.5000 in
Wall Thickness: t_n = 0.3370 in
Outside Projection: Po = 6.0000 in
Inside Projection: Pi = 0.0000 in

Reinforcing Pad:
Material Grade: A36
Thickness: tp = 0.2500 in
Outside Diameter: Dp = 10.0000 in

Flange Material Grade: A105

Calculate Required Shell Thickness at Nozzle

For Design: tr = 2.6000 * (9.2500 + 0.0000) * 10.1667 * 1.0000/[0.8500 * 15000.0000]
= 0.0192 in

Hoop Stress at Nozzle

Y = 9.2500 ft

D/H < 1.333 and Y ≥ 0.75D

Per Eq. 13-45, $N_i = 1.39AiGD^2 = (1.39)(0.1912)(1.00)(10.1667)^2 = 27.4734$ lbf/in

Per Eq. 13-46, $N_c = \frac{0.98AcGD^2\cosh[3.68(H - Y)/D]}{\cosh[3.68H/D]} =$

$$\frac{(0.98)(0.1216)(1.0000)(10.1667)^2\cosh[3.68(10.0833 - 9.2500)/10.1667]}{\cosh[(3.68)(10.0833/10.1667)]}$$

= 0.6695 lbf/in

$N_h = 2.60DYG = (2.60)(10.1667)(9.2500)(1.00) = 244.5083$ lbf/in

Shell thickness: t = 0.2500 in

Per Eq. 13-42, $\sigma_T = [N_h + \sqrt{\{N_i^2 + N_c^2 + (A_vN_h)^2\}}]/t =$
$[244.5083 + \sqrt{\{(27.4734)^2 + (0.6695)^2 + (0.0625 * 244.5083)^2\}}]/0.2500$
= 1103.7958 psi

Allowable stress: Sa = 16995.7500 psi

Minimum required thickness = (σ_T * t)/Sa =
(1103.7958 * 0.2500)/16995.7500 = 0.0162 in

Required shell thickness for Nozzle Calculations: t_r = 0.0192 in

Reinforcement of Nozzle for Design:
Diameter of Hole in Shell: D_1 = 4.5000 in
Required Area: $A_r = t_r D_s$ = 0.0192 * 4.5000 = 0.0863 in²

Available Reinforcement from shell:
Diameter of Shell available: D_s = 4.5000 in
Shell corrosion allowance: C_s = 0.0000 in
Available Area: $A_{as} = 2(D_s - D_1/2)(t - C_s - t_r)$ =
2 * (4.5000 - 4.5000/2)* (0.2500 - 0.0000 - 0.0192) = 1.0387 in²

Available Reinforcement from nozzle neck per Sec. 3.13:

Reduction factor: F_n 1.0000

Available Reinforcement from outside projection:
Projection: L_o = lesser of P_o or $4t_n$ = 1.3480 in
Available Area: $A_{ano} = 2F_nL_o(t_n - C_n)$ =
2 * 1.0000 * 1.3480 * (0.3370 - 0.0000) = 0.9086 in²

Available Reinforcement from portion in shell:
Available Area: $A_{an} = 2F_n(t - C_s)(t_n - C_n)$ =
2 * 1.0000 * (0.2500 - 0.0000) * (0.3370 - 0.0000) = 0.1685 in²

Available Reinforcement from reinforcing pad:

Reduction factor: F_p = 1.0000

Reinforcing pad outside limit: L_{po} = 9.0000 in
Reinforcing pad inside diameter: L_{pi} = 4.6250 in
Available Area: $A_{arp} = F_p(L_{po} - L_{pi})(t_p)$ =
1.0000 * (9.0000 - 4.6250) * 0.2500 = 1.0938 in²

Total available area of reinforcement: A_{at} = 3.2095 in²

Check nozzle attachment strength paths:
Required strength: $W_r = (A_r - A_{as})S_a$ =
(0.0863 - 1.0387) * 15000.0000 = -14286.0882 lbs

Nozzle neck:
Allowable stress: S_n = 15000.0000 psi

Outside fillet weld:
Weld size: W_o = 0.2500 in
Allowable stress: S_o = 15000.0000 psi

Shell Groove weld:
Weld size: W_g = 0.2500 in
Allowable stress: S_g = 15000.0000 psi

Reinforcing pad fillet weld:
Weld size: W_p = 0.2500 in
Allowable stress: S_p = 15000.0000 psi

Check attachment strength: Outside fillet weld, Groove weld

$$W_a = \{0.60 * S_o * \pi * d * 0.707(W_o) + 0.850 * 0.70 * S_g * \pi * d * (W_g - C_s)\}/2 =$$
$$\{0.60 * 15000.0000 * \pi * 4.5000 * 0.707(0.2500) + 0.850 * 0.70 * 15000.0000 * \pi * 4.5000 * (0.2500 - 0.0000)\}/2 =$$
27016.1260 lbs

Check attachment strength: Repad fillet weld, Groove weld

$$W_a = \{0.60 * S_p * \pi * D_p * 0.707(W_p) + 0.850 * 0.70 * S_g * \pi * d * (W_g - C_s)\}/2 =$$
$$\{0.60 * 15000.0000 * \pi * 10.0000 * 0.707(0.2500) + 0.850 * 0.70 * 15000.0000 * \pi * 4.5000 * (0.2500 - 0.0000)\}/2 =$$
40759.2194 lbs

Check attachment strength: Nozzle neck, Repad fillet weld

$$W_a = \{0.80 * 0.875 * S_n * \pi * (t_n - C_n) * (d - t_n - C_n) + 0.60 * S_p * \pi * D_p * 0.707(W_p)\}/2 =$$
$$\{0.80 * 0.875 * 15000.0000 * \pi * (0.3370 - 0.0000) * (4.5000 - 0.3370 - 0.0000) + 0.60 * 15000.0000 * \pi * 10.0000 * 0.707(0.2500)\}/2 =$$
48126.4906 lbs

4"Discharge Nozzle - F

Description: 4" 150# SO Flanged Nozzle
Elevation: 6.0000 in
Orientation: 135.0000°
Corrosion Allowance: Cn = 0.0000 in

Nozzle Neck: SCH80 Pipe
Material Grade: A53-B
Outside Diameter: d = 4.5000 in
Wall Thickness: t_n = 0.3370 in
Outside Projection: Po = 6.0000 in
Inside Projection: Pi = 0.0000 in

Reinforcing Pad:
Material Grade: A36
Thickness: tp = 0.2500 in
Outside Diameter: Dp = 8.0000 in

Flange Material Grade: A105

Calculate Required Shell Thickness at Nozzle

For Design: tr = 2.6000 * (9.5833 + 0.0000) * 10.1667 * 1.0000/[0.8500 * 15000.0000]
= 0.0199 in

Hoop Stress at Nozzle

Y = 9.5833 ft

D/H < 1.333 and Y ≥ 0.75D

Per Eq. 13-45, $N_i = 1.39AiGD^2 = (1.39)(0.1912)(1.00)(10.1667)^2 = 27.4734$ lbf/in

Per Eq. 13-46, $N_c = \frac{0.98AcGD^2\cosh[3.68(H - Y)/D]}{\cosh[3.68H/D]} =$

$$\frac{(0.98)(0.1216)(1.0000)(10.1667)^2\cosh[3.68(10.0833 - 9.5833)/10.1667]}{\cosh[(3.68)(10.0833/10.1667)]}$$

= 0.6506 lbf/in

$N_h = 2.60DYG = (2.60)(10.1667)(9.5833)(1.00) = 253.3194$ lbf/in

Shell thickness: t = 0.2500 in

Per Eq. 13-42, $\sigma_T = [N_h + \sqrt{\{N_i^2 + N_c^2 + (A_vN_h)^2\}}]/t =$
$[253.3194 + \sqrt{\{(27.4734)^2 + (0.6506)^2 + (0.0625 * 253.3194)^2\}}]/0.2500$
= 1140.1228 psi

Allowable stress: Sa = 16995.7500 psi

Minimum required thickness = (σ_T * t)/Sa =
(1140.1228 * 0.2500)/16995.7500 = 0.0168 in

Required shell thickness for Nozzle Calculations: t_r = 0.0199 in

Reinforcement of Nozzle for Design:
Diameter of Hole in Shell: D_1 = 4.5000 in
Required Area: $A_r = t_r D_s$ = 0.0199 * 4.5000 = 0.0894 in²

Available Reinforcement from shell:
Diameter of Shell available: D_s = 4.5000 in
Shell corrosion allowance: C_s = 0.0000 in
Available Area: $A_{as} = 2(D_s - D_1/2)(t - C_s - t_r)$ =
2 * (4.5000 - 4.5000/2)* (0.2500 - 0.0000 - 0.0199) = 1.0356 in²

Available Reinforcement from nozzle neck per Sec. 3.13:

Reduction factor: F_n 1.0000

Available Reinforcement from outside projection:
Projection: L_o = lesser of P_o or $4t_n$ = 1.3480 in
Available Area: $A_{ano} = 2F_nL_o(t_n - C_n)$ =
2 * 1.0000 * 1.3480 * (0.3370 - 0.0000) = 0.9086 in²

Available Reinforcement from portion in shell:
Available Area: $A_{an} = 2F_n(t - C_s)(t_n - C_n)$ =
2 * 1.0000 * (0.2500 - 0.0000) * (0.3370 - 0.0000) = 0.1685 in²

Available Reinforcement from reinforcing pad:

Reduction factor: F_p = 1.0000

Reinforcing pad outside limit: L_{po} = 8.0000 in
Reinforcing pad inside diameter: L_{pi} = 4.6250 in
Available Area: $A_{arp} = F_p(L_{po} - L_{pi})(t_p)$ =
1.0000 * (8.0000 - 4.6250) * 0.2500 = 0.8438 in²

Total available area of reinforcement: A_{at} = 2.9564 in²

Check nozzle attachment strength paths:
Required strength: $W_r = (A_r - A_{as})S_a$ =
(0.0894 - 1.0356) * 15000.0000 = -14192.7941 lbs

Nozzle neck:
Allowable stress: S_n = 15000.0000 psi

Outside fillet weld:
Weld size: W_o = 0.1875 in
Allowable stress: S_o = 15000.0000 psi

Shell Groove weld:
Weld size: W_g = 0.2500 in
Allowable stress: S_g = 15000.0000 psi

Reinforcing pad fillet weld:
Weld size: W_p = 0.2500 in
Allowable stress: S_p = 15000.0000 psi

Check attachment strength: Outside fillet weld, Groove weld

$$W_a = \{0.60 * S_o * \pi * d * 0.707(W_o) + 0.850 * 0.70 * S_g * \pi * d * (W_g - C_s)\}/2 =$$
$$\{0.60 * 15000.0000 * \pi * 4.5000 * 0.707(0.1875) + 0.850 * 0.70 * 15000.0000 * \pi * 4.5000 * (0.2500 - 0.0000)\}/2 =$$
24205.0387 lbs

Check attachment strength: Repad fillet weld, Groove weld

$$W_a = \{0.60 * S_p * \pi * D_p * 0.707(W_p) + 0.850 * 0.70 * S_g * \pi * d * (W_g - C_s)\}/2 =$$
$$\{0.60 * 15000.0000 * \pi * 8.0000 * 0.707(0.2500) + 0.850 * 0.70 * 15000.0000 * \pi * 4.5000 * (0.2500 - 0.0000)\}/2 =$$
35761.7309 lbs

Check attachment strength: Nozzle neck, Repad fillet weld

$$W_a = \{0.80 * 0.875 * S_n * \pi * (t_n - C_n) * (d - t_n - C_n) + 0.60 * S_p * \pi * D_p * 0.707(W_p)\}/2 =$$
$$\{0.80 * 0.875 * 15000.0000 * \pi * (0.3370 - 0.0000) * (4.5000 - 0.3370 - 0.0000) + 0.60 * 15000.0000 * \pi * 8.0000 * 0.707(0.2500)\}/2 =$$
43129.0021 lbs

10.17´Dia. x 11´ Hgt - FBSSCRT
6000 Gal. Water Tanks

Customer:
Fliteway Technologies, Inc.
Job Number:
30883
Date: 02-18-2015 Rev.: 0

Foundation Loads

Dead Load = 121 lbf/ft
Dead Load + Live Load = 172 lbf/ft
Dead Load + Snow Load = 185 lbf/ft
Wind Load + Dead Load = 268 lbf/ft

(Wind Foundation Moment = 11,946 ft-lbs)
(Wind Horizontal Force = 2,091 lbs)

Seismic Load + Dead Load (ringwall foundation) = 580 lbf/ft
Seismic Load + Dead Load (slab foundation) = 723 lbf/ft

(Note: For Seismic the dead load has a portion of the vertical acceleration added to it and includes a portion of the snow load)
(Seismic Overturning Moment (ringwall) (M_{rw}) = 37,046 ft-lbs)
(Seismic Overturning Moment (slab) (M_s) = 48,633 ft-lbs)

(Seismic Horizontal Force = 8,649 lbs)

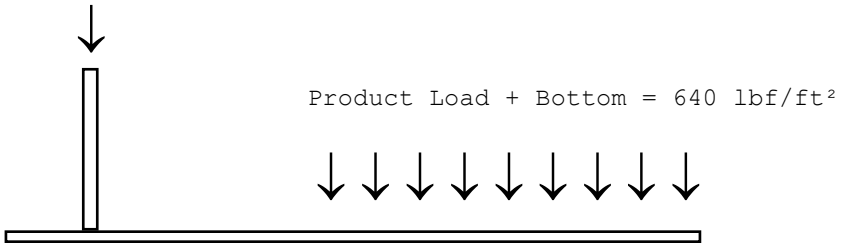

Total Weight of Tank: 4,748 lbs
Total Operating Weight: 55,826 lbs
Total Testing Weight: 55,826 lbs

BROWN-MINNEAPOLIS TANK
ENGINEERS - FABRICATORS - CONSTRUCTORS

BROWN-MINNEAPOLIS TANK
ENGINEERS - FABRICATORS - CONSTRUCTORS

BMT 30883

TANK PAINT SCHEDULE

FOR

6,000 Gal. Water Tanks
T-102 & T-108
For
EDB Interim Measure Project
Kirtland AFB
Albuquerque, New Mexico

☑ FOR APPROVAL ONLY
BROWN-MINNEAPOLIS TANK
ENGINEERING DIVISION

8301 Broadway Blvd. SE, Albuquerque, NM 87105 • (505) 563-4800 • Fax (505) 563-4799

BROWN-MINNEAPOLIS TANK
ENGINEERS - FABRICATORS - CONSTRUCTORS

COATING SCHEDULE

EDB Interim Measure Project
6,000 Gal. Water Tanks T-102 and T-108
Kirtland AFB, Albuquerque, NM

INTERIOR TANK PAINT SYSTEM:

TYPE OF PAINT	NO. OF COATS	D.F.T.
1st Coat – Sherwin-Williams MACROPOXY Fast Curing Epoxy (Mill White) (Shop Applied)	One	3 to 5 Mils
2nd Coat – Sherwin-Williams MACROPOXY Fast Curing Epoxy (Light Blue) (Shop Applied)	One	3 to 5 Mils

TOTAL (Min) . . . . 6 to 10 MILS

METHOD OF APPLICATION: AIRLESS SPRAY, APPLICATION.
SURFACE PREPARATION: SSPC-SP10, "NEAR WHITE METAL BLAST CLEANING" (SEE DETAILS ON PAGE-2)

---------- * ----------

EXTERIOR TANK PAINT SYSTEM:

TYPE OF PAINT	NO. OF COATS	D.F.T.
1st Coat Sherwin-Williams Recoatable Epoxy Primer (Light Gray) (Shop Applied)	One	4 to 6 Mils
2nd Coat – Sherwin-Williams ACROLON 218 HS Acrylic Polyurethane (Color: TBD) (Shop Applied)	One	3 to 6 Mils

TOTAL (Min) . . . . .7 to12 MILS

METHOD OF APPLICATION: AIRLESS SPRAY, APPLICATION.
SURFACE PREPARATION: SSPC-SP6, "COMMERCIAL BLAST CLEANING" (SEE DETAILS ON PAGE-2)

Color Selection: _____ Date of Approval: _____

BROWN-MINNEAPOLIS TANK
ENGINEERS - FABRICATORS - CONSTRUCTORS

SURFACE PREPARATION

INTERIOR:

The interior surfaces of the tank will be cleaned by sandblasting in the shop to remove mil scale in accordance with SSPC-SP10, Near White Blast Cleaning. Prepared surfaces will be coated with 3 to 5 mils of **Sherwin-Williams, MACROPOXY 646 Epoxy** (Mill White), followed by a finish coat of **Sherwin-Williams MACROPOXY 646 Epoxy** (Light Blue) of 3 to 5 mils for a total dry film thickness of 6 to 10 mils (DFT).

EXTERIOR:

The exterior surfaces of the tank will be cleaned by sandblasting to remove mil scale in accordance with SSPC-SP6, Commercial Blast Cleaning. Shop prepared surfaces will be coated with 4 to 6 mils of **Sherwin-Williams, Recoatable Epoxy Primer** (Light Gray), followed by a finish coat of **Sherwin-Williams, ACROLON 218 HS Acrylic Polyurethane** of 3 to 6 mils (color to be selected by the owner per Sherwin-Williams color chart) for a total dry film thickness of 7 to 12 mils (DFT).

NOTES:

- Application of two (2) or three (3) coat build-up system for tank structure surfaces will follow coat manufacturer's recommendation for drying time between coats of paint.

- Measurement of dry film thickness to be in accordance with SSPC-PA_2, excluding Section 5.2.2, Maximum Thickness.

REV-0; 2/18/2015

Protective & Marine Coatings

Classified Drinking Water System Component ANSI/NSF 61 3JGH Water Quality

MACROPOXY® 646 PW
POTABLE WATER EPOXY

PART A	B58WX610	MILL WHITE
PART A	B58LX600	LIGHT BLUE
PART B	B58VX600	HARDENER
PART B	B58VX605	OAP HARDENER

Revised 5/11

PRODUCT INFORMATION

4.56

PRODUCT DESCRIPTION

MACROPOXY 646 PW EPOXY is a high solids, high build, fast drying, polyamide epoxy classified by UL to ANSI/NSF 61 as a tank lining for potable water storage tanks. The high solids content ensures adequate protection of sharp edges, corners, and welds. B58VX605 Hardener contains Opti-Check OAP pigment technology for rapid holiday detection with safe blue light inspection lamps.

- Low VOC
- Low odor
- Outstanding application properties

PRODUCT CHARACTERISTICS

Finish:	Semi-Gloss
Color:	Mill White and Light Blue
Volume Solids:	72% ± 2%, mixed
Weight Solids:	85% ± 2%, mixed
VOC (EPA Method 24): mixed	Unreduced: <250 g/L; 2.08 lb/gal Reduced 10%: <300 g/L; 2.50 lb/gal
Mix Ratio:	1:1 by volume

Recommended Spreading Rate per coat:

	Standard Min.	Standard Max.	AWWA Min.	AWWA Max.
Wet mils (microns)	**7.0** 175	**13.5** 340	**4.2** 105	**8.3** 208
Dry mils (microns)	**5.0** 125	**10*** 250*	**3.0** 75	**6.0*** 150*
~Coverage sq ft/gal (m^2/L)	**116** 2.8	**232** 5.6	**192** 4.7	**384** 9.4
Theoretical coverage **sq ft/gal** (m^2/L) @ 1 mil/25 micron dft	**1152** (28.2)			

NOTE: Brush or roll application may require multiple coats to achieve maximum film thickness and uniformity of appearance.

* See Recommended Systems on reverse side

Drying Schedule @ 7.0 mils wet (175 microns):

	@ 40°F/4.5°C	@ 77°F/25°C *50% RH*	@ 100°F/38°C
To touch:	4-5 hours	2 hours	1.5 hours
To handle:	48 hours	8 hours	4.5 hours
To recoat:			
minimum:	48 hours	8 hours	4.5 hours
maximum:	1 year	1 year	1 year
Cure for immersion:	14 days	7 days	4 days
Pot Life:	10 hours	4 hours	2 hours
Sweat-in-Time:	30 minutes	30 minutes	15 minutes

If maximum recoat time is exceeded, abrade surface before recoating.

Drying time is temperature, humidity, and film thickness dependent.

For **Potable Water Service**, allow a minimum cure time of 7 days at 77°F (25°C) prior to placing in service. Sterilize and rinse per AWWA C652.

Shelf Life:	36 months, unopened Store indoors at 40°F (4.5°C) to 100°F (38°C).
Flash Point:	91°F (33°C), TCC, mixed
Reducer/Clean Up:	Reducer R7K15

RECOMMENDED USES

Potable Water Tank Restrictions
Water Contact Temp: 23°C
Standard Cure; Tanks >= 1,500 gal: 2 cts
Standard Cure; Pipe >= 49.2"
Forced Cure; Tanks >= 100 gal: 2 cts
Forced Cure, Pipe >= 15"; 2 cts
Forced Cure; Maximum DFT: 6 mils/ct, 2 cts

- Conforms to AWWA D102 ICS #1, #2, and #5, and OCS #5***
- Meets or exceeds the performance requirements of SSPC Paint Spec 22

***Refer to respective systems

PERFORMANCE CHARACTERISTICS

Substrate*: Steel

Surface Preparation*: SSPC-SP10/NACE 2

System Tested*:

1 ct. Macropoxy 646 PW Fast Cure @ 6.0 mils (150 microns) dft

*unless otherwise noted below

Test Name	Test Method	Results
Abrasion Resistance	ASTM D4060, CS17 wheel, 1000 cycles, 1 kg load	84 mg loss
Adhesion	ASTM D4541	1,037 psi
Corrosion Weathering[1]	ASTM D5894, 36 cycles, 12,000 hours	Rating 10 per ASTM D714 for blistering; Rating 9 per ASTM D610 per rusting
Direct Impact Resistance	ASTM D2794	30 in. lb.
Dry Heat Resistance	ASTM D2485	250°F (121°C)
Flexibility	ASTM D522, 180° bend, 3/4" mandrel	Passes
Humidity Resistance	ASTM D4585, 6000 hours	No blistering, cracking, or rusting
Immersion[2]	5 year potable water	Rating 10 per ASTM D610 for Rusting; Rating 10 per ASTM D714 for Blistering
Immersion	18 months fresh and salt water	Passes, no rusting, blistering, or loss of adhesion
Pencil Hardness	ASTM D3363	3H
Water Vapor Permeance	ASTM D1653, Method B	1.16 grains/day

Epoxy coatings may darken or discolor following application and curing.

Footnotes:

[1] Zinc Clad II Plus Primer

[2] Galvapac/2 cts Macropoxy 646 PW

continued on back

Protective & Marine Coatings

Classified Drinking Water System Component ANSI/NSF 61 3JGH Water Quality

MACROPOXY® 646 PW
POTABLE WATER EPOXY

PART A	B58WX610	MILL WHITE
PART A	B58LX600	LIGHT BLUE
PART B	B58VX600	HARDENER
PART B	B58VX605	OAP HARDENER

PRODUCT INFORMATION

4.56

RECOMMENDED SYSTEMS

	Dry Film Thickness / ct. Mils	(Microns)
Immersion, Steel:		
***AWWA D102: Inside Coating System No. 1**		
minimum AWWA	8.0	(200)
1 ct. Macropoxy 646 PW	3.0	(75)
1 ct. Macropoxy 646 PW	5.0	(125)
***AWWA D102: Inside Coating System No. 2**		
minimum AWWA	12.0	(300)
1 ct. Macropoxy 646 PW	3.0	(75)
1 ct. Macropoxy 646 PW	4.0	(100)
1 ct. Macropoxy 646 PW	5.0	(125)
***AWWA D102: Inside Coating System No. 3**		
minimum AWWA	10.0	(250)
1 ct. Zinc Clad II LV or Plus	2.0	(50)
1 ct. Macropoxy 646 PW	3.0	(75)
1 ct. Macropoxy 646 PW	5.0	(125)
***AWWA D102: Inside Coating System No. 5**		
minimum AWWA	10.0	(250)
1 ct. Corothane I Galvapac	2.0	(50)
2 cts. Macropoxy 646 PW	4.0	(100)
Steel, forced cure (100 gallon minimum tank size or 15" or greater pipe diameter):		
2 cts. Macropoxy 646 PW	5.0-6.0	(125-150)
•12 mils maximum film thickness •Curing requirements		
•Flash 2 hours @ 75°F (24°C)		
•24 hours @ 150°F (66°C)		
•24 hours @ 75°F (24°C)		
Atmospheric, Steel:		
***AWWA D102: Outside Coating System No. 5**		
minimum	6.0	(150)
1 ct. Macropoxy 646 PW	2.0	(50)
1 ct. Macropoxy 646 PW	2.0	(50)
1 ct. Acrolon 218HS	2.0	(50)
***AWWA D102: Outside Coating System No. 6**		
minimum	6.0	(150)
1 ct. Corothane I GalvaPac PW	2.0	(50)
1 ct. Macropoxy 646 PW	2.0	(50)
1 ct. Acrolon 218HS	2.0	(50)
Concrete/Masonry, smooth:		
2 cts.Macropoxy 646 PW	3.0-6.0	(75-150)

Refer to UL.com for maximum dft restrictions

The systems listed above are representative of the product's use, other systems may be appropriate.

DISCLAIMER

The information and recommendations set forth in this Product Data Sheet are based upon tests conducted by or on behalf of The Sherwin-Williams Company. Such information and recommendations set forth herein are subject to change and pertain to the product offered at the time of publication. Consult your Sherwin-Williams representative to obtain the most recent Product Data Information and Application Bulletin.

SURFACE PREPARATION

Surface must be clean, dry, and in sound condition. Remove all oil, dust, grease, dirt, loose rust, and other foreign material to ensure adequate adhesion.

Refer to product Application Bulletin for detailed surface preparation information.

Minimum recommended surface preparation:

Iron & Steel
- Atmospheric: SSPC-SP2/3
- Immersion: SSPC-SP10/NACE 2, 2-3 mil (50-75 micron) profile

Concrete & Masonry
- Immersion: SSPC-SP13/NACE 6-4.3.1 or 4.3.2, or ICRI No. 310.2, CSP 1-3

Surface Preparation Standards

	Condition of Surface	ISO 8501-1 BS7079:A1	Swedish Std. SIS055900	SSPC	NACE
White Metal		Sa 3	Sa 3	SP 5	1
Near White Metal		Sa 2.5	Sa 2.5	SP 10	2
Commercial Blast		Sa 2	Sa 2	SP 6	3
Brush-Off Blast		Sa 1	Sa 1	SP 7	4
Hand Tool Cleaning	Rusted	C St 2	C St 2	SP 2	-
	Pitted & Rusted	D St 2	D St 2	SP 2	-
Power Tool Cleaning	Rusted	C St 3	C St 3	SP 3	-
	Pitted & Rusted	D St 3	D St 3	SP 3	-

TINTING

Do not Tint.

APPLICATION CONDITIONS

Temperature:	40°F (4.5°C) minimum, 110°F (43°C) maximum (air, surface, and material) At least 5°F (2.8°C) above dew point
Relative humidity:	85% maximum

Refer to product Application Bulletin for detailed application information.

ORDERING INFORMATION

Packaging:
- Part A: 1 gallon (3.78L) and 5 gallon (18.9L) containers
- Part B: 1 gallon (3.78L) and 5 gallon (18.9L) containers

Weight: 12.7 ± 0.2 lb/gal ; 1.5 Kg/L mixed, may vary by color

SAFETY PRECAUTIONS

Refer to the MSDS sheet before use.

Published technical data and instructions are subject to change without notice. Contact your Sherwin-Williams representative for additional technical data and instructions.

WARRANTY

The Sherwin-Williams Company warrants our products to be free of manufacturing defects in accord with applicable Sherwin-Williams quality control procedures. Liability for products proven defective, if any, is limited to replacement of the defective product or the refund of the purchase price paid for the defective product as determined by Sherwin-Williams. NO OTHER WARRANTY OR GUARANTEE OF ANY KIND IS MADE BY SHERWIN-WILLIAMS, EXPRESSED OR IMPLIED, STATUTORY, BY OPERATION OF LAW OR OTHERWISE, INCLUDING MERCHANTABILITY AND FITNESS FOR A PARTICULAR PURPOSE.

Protective & Marine Coatings

Classified
Drinking Water System Component
ANSI/NSF 61
3JGH
Water Quality

MACROPOXY® 646 PW
POTABLE WATER EPOXY

PART A	B58WX610	MILL WHITE
PART A	B58LX600	LIGHT BLUE
PART B	B58VX600	HARDENER
PART B	B58VX605	OAP HARDENER

Revised 5/11

APPLICATION BULLETIN

4.56

SURFACE PREPARATIONS

Surface must be clean, dry, and in sound condition. Remove all oil, dust, grease, dirt, loose rust, and other foreign material to ensure adequate adhesion.

Carbon Steel, Immersion Service:
Clean and degrease the surface prior to abrasive blasting per SSPC-SP 1 Solvent Cleaning. Methods described in SSPC-SP 1 include solvents, alkali, detergent/water, emulsions, and steam. The surface shall be abrasive blasted to SSPC-SP10/NACE No. 2 Near-White Blast Cleaning with a 2-3 mil (50-75 micron) profile. The anchor pattern shall be sharp with no evidence of a polished surface. The finished surface shall be free of all visible oil, grease, dust, dirt, mill scale, rust, coating, oxides, corrosion products, and other foreign matter with no more than 5% staining. After blasting, all dust and loose residue should be removed from the surface by acceptable means. Coat steel the same day as it is prepared and prior to the formation of rust.

Iron & Steel, Atmospheric Service:
Minimum surface preparation is Hand Tool Clean per SSPC-SP2. Remove all oil and grease from surface by Solvent Cleaning per SSPC-SP1. For better performance, use Commercial Blast Cleaning per SSPC-SP6/NACE 3, blast clean all surfaces using a sharp, angular abrasive for optimum surface profile (2 mils / 50 microns). Prime any bare steel within 8 hours or before flash rusting occurs.

Ductile Iron, Immersion Service:
Refer to National Association of Pipe Fabricators Surface Preparations Standard NAPF 500-03 as follows:

a. NAPF 500-03-01 "Solvent Cleaning"
b. NAPF 500-03-02 "Hand Tool Cleaning"
c. NAPF 500-03-03 "Power Tool Cleaning"
d. NAPF 500-03-04 "Abrasive Blast Cleaning of Ductile Iron Pipe".

Concrete and Masonry
For surface preparation, refer to SSPC-SP13/NACE 6, or ICRI No. 310.2, CSP 1-3. Surfaces should be thoroughly clean and dry. Concrete and mortar must be cured at least 28 days @ 75°F (24°C). Remove all loose mortar and foreign material. Surface must be free of laitance, concrete dust, dirt, form release agents, moisture curing membranes, loose cement and hardeners. Fill bug holes, air pockets and other voids with Steel-Seam FT910.

Follow the standard methods listed below when applicable:
ASTM D4258 Standard Practice for Cleaning Concrete.
ASTM D4259 Standard Practice for Abrading Concrete.
ASTM D4260 Standard Practice for Etching Concrete.
ASTM F1869 Standard Test Method for Measuring Moisture Vapor Emission Rate of Concrete.
SSPC-SP 13/Nace 6 Surface Preparation of Concrete.
ICRI No. 310.2 Concrete Surface Preparation.

Concrete, Immersion Service:
For surface preparation, refer to SSPC-SP13/NACE 6, Section 4.3.1 or 1.3.2 or ICRI No. 310.2, CSP 1-3.

Previously Painted Surfaces:
If in sound condition, clean the surface of all foreign material. Scarify the surface to create the desired surface profile. Apply coatings on a test area, allowing paint to dry one week before testing adhesion. If adhesion is poor, or if this product attacks the previous finish, removal of the previous coating may be necessary.

Surface Preparation Standards

	Condition of Surface	ISO 8501-1 BS7079:A1	Swedish Std. SIS055900	SSPC	NACE
White Metal		Sa 3	Sa 3	SP 5	1
Near White Metal		Sa 2.5	Sa 2.5	SP 10	2
Commercial Blast		Sa 2	Sa 2	SP 6	3
Brush-Off Blast		Sa 1	Sa 1	SP 7	4
Hand Tool Cleaning	Rusted	C St 2	C St 2	SP 2	-
	Pitted & Rusted	D St 2	D St 2	SP 2	-
Power Tool Cleaning	Rusted	C St 3	C St 3	SP 3	-
	Pitted & Rusted	D St 3	D St 3	SP 3	-

APPLICATION CONDITIONS

Temperature:	40°F (4.5°C) minimum, 110°F (43°C) maximum (air, surface, and material) At least 5°F (2.8°C) above dew point
Relative humidity:	85% maximum

APPLICATION EQUIPMENT

The following is a guide. Changes in pressures and tip sizes may be needed for proper spray characteristics. Always purge spray equipment before use with listed reducer. Any reduction must be compliant with existing VOC regulations and compatible with the existing environmental and application conditions.

Reducer/Clean Up ..... Reducer R7K15

Airless Spray
Pump.....30:1
Pressure.....2800 - 3000 psi
Hose.....1/4" ID
Tip .....017" - .023"
Filter .....60 mesh
Reduction.....As needed up to 10% by volume

Brush
Brush.....Nylon/Polyester or Natural Bristle
Reduction.....As needed up to 10% by volume

Roller
Cover .....3/8" woven with solvent resistant core
Reduction.....As needed up to 10% by volume

Recommended Spreading Rate per coat:

	Standard	AWWA
Wet mils (microns):	7.0 (175) - 13.5 (340)	4.2 (105) - 8.3 (208)
Dry mils (microns):	5.0 (125) - 10.0* (250)	3.0 (75) - 6.0* (150)
Coverage:	116 (2.8) - 232 (5.6) sq ft/gal (m^2/L)	192 (4.7) - 384 (9.4)

*See recommended systems on Product Information page

If specific application equipment is not listed above, equivalent equipment may be substituted.

continued on back

Protective & Marine Coatings

Classified
Drinking Water System Component
ANSI/NSF 61
3JGH
Water Quality

MACROPOXY® 646 PW
POTABLE WATER EPOXY

PART A	B58WX610	MILL WHITE
PART A	B58LX600	LIGHT BLUE
PART B	B58VX600	HARDENER
PART B	B58VX605	OAP HARDENER

APPLICATION BULLETIN

4.56

APPLICATION PROCEDURES

Surface preparation must be completed as indicated.

Mix contents of each component thoroughly with low speed power agitation. Make certain no pigment remains on the bottom of the can. Then combine one part by volume of Part A with one part by volume of Part B. Thoroughly agitate the mixture with power agitation. Allow the material to sweat-in as indicated prior to application. Re-stir before using.

If reducer solvent is used, add only after both components have been thoroughly mixed, after sweat-in.

Apply paint at the recommended film thickness and spreading rate as indicated below:

Recommended Spreading Rate per coat:

	Standard		AWWA	
	Min.	Max.	Min.	Max.
Wet mils (microns)	**7.0** 175	**13.5** 340	**4.2** 105	**8.3** 208
Dry mils (microns)	**5.0** 125	**10*** 250*	**3.0** 75	**6.0*** 150*
~Coverage sq ft/gal (m^2/L)	**116** 2.8	**232** 5.6	**192** 4.7	**384** 9.4
Theoretical coverage **sq ft/gal** (m^2/L) @ 1 mil/25 micron dft	**1152** (28.2)			

NOTE: Brush or roll application may require multiple coats to achieve maximum film thickness and uniformity of appearance.

* See Recommended Systems on reverse side

Drying Schedule @ 7.0 mils wet (175 microns):

	@ 40°F/4.5°C	@ 77°F/25°C *50% RH*	@ 100°F/38°C
To touch:	4-5 hours	2 hours	1.5 hours
To handle:	48 hours	8 hours	4.5 hours
To recoat:			
minimum:	48 hours	8 hours	4.5 hours
maximum:	1 year	1 year	1 year
Cure for immersion:	14 days	7 days	4 days
Pot Life:	10 hours	4 hours	2 hours
Sweat-in-Time:	30 minutes	30 minutes	15 minutes

If maximum recoat time is exceeded, abrade surface before recoating.

Drying time is temperature, humidity, and film thickness dependent.

For **Potable Water Service**, allow a minimum cure time of 7 days at 77°F (25°C) prior to placing in service. Sterilize and rinse per AWWA C652.

Application of coating above maximum or below minimum recommended spreading rate may adversely affect coating performance.

CLEAN UP INSTRUCTIONS

Clean spills and spatters immediately with Reducer R7K15. Clean tools immediately after use with Reducer R7K15.

DISCLAIMER

The information and recommendations set forth in this Product Data Sheet are based upon tests conducted by or on behalf of The Sherwin-Williams Company. Such information and recommendations set forth herein are subject to change and pertain to the product offered at the time of publication. Consult your Sherwin-Williams representative to obtain the most recent Product Data Information and Application Bulletin.

PERFORMANCE TIPS

Stripe coat all crevices, welds, and sharp angles to prevent early failure in these areas.

When using spray application, use a 50% overlap with each pass of the gun to avoid holidays, bare areas, and pinholes. If necessary, cross spray at a right angle

Spreading rates are calculated on volume solids and do not include an application loss factor due to surface profile, roughness or porosity of the surface, skill and technique of the applicator, method of application, various surface irregularities, material lost during mixing, spillage, over thinning, climatic conditions, and excessive film build.

Excessive reduction of material can affect film build, appearance, adhesion and UL ANSI/ NSF 61 approval.

Do not mix previously catalyzed material with new.

Do not apply the material beyond recommended pot life.

In order to avoid blockage of spray equipment, clean equipment before use or before periods of extended downtime with Reducer R7K15.

Tinting is not recommended for immersion service.

Quik-Kick Epoxy Accelerator is acceptable for atmospheric use.

Do not use Quik-Kick Epoxy Accelerator for immersion ser-vice when UL certification is required.

Insufficient ventilation, incomplete mixing, miscatalyzation, and external heaters may cause premature yellowing.

Excessive film build, poor ventilation, and cool temperatures may cause solvent entrapment and premature coating failure.

For Immersion Service: (if required) Holiday test in accordance with ASTM D5162 for steel, or ASTM D4787 for concrete.

Guidance on techniques and required equipment to inspect a coating system incorporating Opti-Check OAP Technology can be found in SSPC-TU 11.

Refer to Product Information sheet for additional performance characteristics and properties.

SAFETY PRECAUTIONS

Refer to the MSDS sheet before use.

Published technical data and instructions are subject to change without notice. Contact your Sherwin-Williams representative for additional technical data and instructions.

WARRANTY

The Sherwin-Williams Company warrants our products to be free of manufacturing defects in accord with applicable Sherwin-Williams quality control procedures. Liability for products proven defective, if any, is limited to replacement of the defective product or the refund of the purchase price paid for the defective product as determined by Sherwin-Williams. NO OTHER WARRANTY OR GUARANTEE OF ANY KIND IS MADE BY SHERWIN-WILLIAMS, EXPRESSED OR IMPLIED, STATUTORY, BY OPERATION OF LAW OR OTHERWISE, INCLUDING MERCHANTABILITY AND FITNESS FOR A PARTICULAR PURPOSE.

MATERIAL SAFETY DATA SHEET

B58WX610
06 00

DATE OF PREPARATION
May 8, 2011

SECTION 1 — PRODUCT AND COMPANY IDENTIFICATION

PRODUCT NUMBER
B58WX610
PRODUCT NAME
MACROPOXY® 646 PW Potable Water Epoxy (Part A), Mill White
MANUFACTURER'S NAME
THE SHERWIN-WILLIAMS COMPANY
101 Prospect Avenue N.W.
Cleveland, OH 44115

Telephone Numbers and Websites

Product Information	www.sherwin-williams.com
Regulatory Information	(216) 566-2902 www.paintdocs.com
Medical Emergency	(216) 566-2917
Transportation Emergency*	(800) 424-9300
**for Chemical Emergency ONLY (spill, leak, fire, exposure, or accident)*	

SECTION 2 — COMPOSITION/INFORMATION ON INGREDIENTS

% by Weight	CAS Number	Ingredient	Units	Vapor Pressure
3	**100-41-4**	**Ethylbenzene**		
		ACGIH TLV	100 PPM	7.1 mm
		ACGIH TLV	125 PPM STEL	
		OSHA PEL	100 PPM	
		OSHA PEL	125 PPM STEL	
14	**1330-20-7**	**Xylene**		
		ACGIH TLV	100 PPM	5.9 mm
		ACGIH TLV	150 PPM STEL	
		OSHA PEL	100 PPM	
		OSHA PEL	150 PPM STEL	
10	**68410-23-1**	**Polyamide**		
		ACGIH TLV	Not Available	
		OSHA PEL	Not Available	
8	**14807-96-6**	**Talc**		
		ACGIH TLV	2 mg/m3 as Resp. Dust	
		OSHA PEL	2 mg/m3 as Resp. Dust	
35	**13463-67-7**	**Titanium Dioxide**		
		ACGIH TLV	10 mg/m3 as Dust	
		OSHA PEL	10 mg/m3 Total Dust	
		OSHA PEL	5 mg/m3 Respirable Fraction	

SECTION 3 — HAZARDS IDENTIFICATION

ROUTES OF EXPOSURE
INHALATION of vapor or spray mist.
EYE or SKIN contact with the product, vapor or spray mist.

HMIS Codes

Health	3*
Flammability	3
Reactivity	0

EFFECTS OF OVEREXPOSURE
EYES: Irritation.
SKIN: Prolonged or repeated exposure may cause irritation.
INHALATION: Irritation of the upper respiratory system.

May cause nervous system depression. Extreme overexposure may result in unconsciousness and possibly death.
Prolonged overexposure to hazardous ingredients in Section 2 may cause adverse chronic effects to the following organs or systems:
- the liver
- the urinary system
- the reproductive system

SIGNS AND SYMPTOMS OF OVEREXPOSURE

Headache, dizziness, nausea, and loss of coordination are indications of excessive exposure to vapors or spray mists.
Redness and itching or burning sensation may indicate eye or excessive skin exposure.

MEDICAL CONDITIONS AGGRAVATED BY EXPOSURE

May cause allergic skin reaction in susceptible persons or skin sensitization.

CANCER INFORMATION

For complete discussion of toxicology data refer to Section 11.

SECTION 4 — FIRST AID MEASURES

EYES: Flush eyes with large amounts of water for 15 minutes. Get medical attention.
SKIN: Wash affected area thoroughly with soap and water.
Remove contaminated clothing and launder before re-use.
INHALATION: If affected, remove from exposure. Restore breathing. Keep warm and quiet.
INGESTION: Do not induce vomiting. Get medical attention immediately.

SECTION 5 — FIRE FIGHTING MEASURES

FLASH POINT	LEL	UEL	FLAMMABILITY CLASSIFICATION
85 °F PMCC	1.0	7.0	RED LABEL -- Flammable, Flash below 100 °F (38 °C)

EXTINGUISHING MEDIA

Carbon Dioxide, Dry Chemical, Foam

UNUSUAL FIRE AND EXPLOSION HAZARDS

Closed containers may explode when exposed to extreme heat.
Application to hot surfaces requires special precautions.
During emergency conditions overexposure to decomposition products may cause a health hazard. Symptoms may not be immediately apparent. Obtain medical attention.

SPECIAL FIRE FIGHTING PROCEDURES

Full protective equipment including self-contained breathing apparatus should be used.
Water spray may be ineffective. If water is used, fog nozzles are preferable. Water may be used to cool closed containers to prevent pressure build-up and possible autoignition or explosion when exposed to extreme heat.

SECTION 6 — ACCIDENTAL RELEASE MEASURES

STEPS TO BE TAKEN IN CASE MATERIAL IS RELEASED OR SPILLED

Remove all sources of ignition. Ventilate the area.
Remove with inert absorbent.

SECTION 7 — HANDLING AND STORAGE

STORAGE CATEGORY

DOL Storage Class IC

PRECAUTIONS TO BE TAKEN IN HANDLING AND STORAGE

Contents are FLAMMABLE. Keep away from heat, sparks, and open flame.
During use and until all vapors are gone: Keep area ventilated - Do not smoke - Extinguish all flames, pilot lights, and heaters - Turn off stoves, electric tools and appliances, and any other sources of ignition.
Consult NFPA Code. Use approved Bonding and Grounding procedures.
Keep container closed when not in use. Transfer only to approved containers with complete and appropriate labeling. Do not take internally. Keep out of the reach of children.

SECTION 8 — EXPOSURE CONTROLS/PERSONAL PROTECTION

PRECAUTIONS TO BE TAKEN IN USE

Use only with adequate ventilation.
Avoid contact with skin and eyes. Avoid breathing vapor and spray mist.
Wash hands after using.
This coating may contain materials classified as nuisance particulates (listed "as Dust" in Section 2) which may be present at hazardous levels only during sanding or abrading of the dried film. If no specific dusts are listed in Section 2, the applicable limits for nuisance dusts are ACGIH TLV 10 mg/m3 (total dust), 3 mg/m3 (respirable fraction), OSHA PEL 15 mg/m3 (total dust), 5 mg/m3 (respirable fraction).

VENTILATION

Local exhaust preferable. General exhaust acceptable if the exposure to materials in Section 2 is maintained below applicable exposure limits. Refer to OSHA Standards 1910.94, 1910.107, 1910.108.

RESPIRATORY PROTECTION

If personal exposure cannot be controlled below applicable limits by ventilation, wear a properly fitted organic vapor/particulate respirator approved by NIOSH/MSHA for protection against materials in Section 2.
When sanding or abrading the dried film, wear a dust/mist respirator approved by NIOSH/MSHA for dust which may be generated from this product, underlying paint, or the abrasive.

PROTECTIVE GLOVES

Wear gloves which are recommended by glove supplier for protection against materials in Section 2.

EYE PROTECTION

Wear safety spectacles with unperforated sideshields.

OTHER PRECAUTIONS

This product must be mixed with other components before use. Before opening the packages, READ AND FOLLOW WARNING LABELS ON ALL COMPONENTS.

Intentional misuse by deliberately concentrating and inhaling the contents can be harmful or fatal.

SECTION 9 — PHYSICAL AND CHEMICAL PROPERTIES

PRODUCT WEIGHT	12.41 lb/gal	1487 g/l
SPECIFIC GRAVITY	1.49	
BOILING POINT	277 - 292 °F	136 - 144 °C
MELTING POINT	Not Available	
VOLATILE VOLUME	29%	
EVAPORATION RATE	Slower than ether	
VAPOR DENSITY	Heavier than air	
SOLUBILITY IN WATER	N.A.	

VOLATILE ORGANIC COMPOUNDS (VOC Theoretical - As Packaged)

2.09 lb/gal	251 g/l	Less Water and Federally Exempt Solvents
2.09 lb/gal	251 g/l	Emitted VOC

SECTION 10 — STABILITY AND REACTIVITY

STABILITY — Stable

CONDITIONS TO AVOID

None known.

INCOMPATIBILITY

None known.

HAZARDOUS DECOMPOSITION PRODUCTS

By fire: Carbon Dioxide, Carbon Monoxide

HAZARDOUS POLYMERIZATION

Will not occur

SECTION 11 — TOXICOLOGICAL INFORMATION

CHRONIC HEALTH HAZARDS

Reports have associated repeated and prolonged overexposure to solvents with permanent brain and nervous system damage.

Ethylbenzene is classified by IARC as possibly carcinogenic to humans (2B) based on inadequate evidence in humans and sufficient evidence in laboratory animals. Lifetime inhalation exposure of rats and mice to high ethylbenzene concentrations resulted in increases in certain types of cancer, including kidney tumors in rats and lung and liver tumors in mice. These effects were not observed in animals exposed to lower concentrations. There is no evidence that ethylbenzene causes cancer in humans.

IARC's Monograph No. 93 reports there is sufficient evidence of carcinogenicity in experimental rats exposed to titanium dioxide but inadequate evidence for carcinogenicity in humans and has assigned a Group 2B rating. In addition, the IARC summary concludes, "No significant exposure to titanium dioxide is thought to occur during the use of products in which titanium is bound to other materials, such as paint."

TOXICOLOGY DATA

CAS No.	Ingredient Name			
100-41-4	**Ethylbenzene**			
		LC50 RAT	4HR	Not Available
		LD50 RAT		3500 mg/kg
1330-20-7	**Xylene**			
		LC50 RAT	4HR	5000 ppm
		LD50 RAT		4300 mg/kg
68410-23-1	**Polyamide**			
		LC50 RAT	4HR	Not Available
		LD50 RAT		8000. mg/kg
14807-96-6	**Talc**			
		LC50 RAT	4HR	Not Available
		LD50 RAT		Not Available
13463-67-7	**Titanium Dioxide**			
		LC50 RAT	4HR	Not Available
		LD50 RAT		Not Available

SECTION 12 — ECOLOGICAL INFORMATION

ECOTOXICOLOGICAL INFORMATION

No data available.

SECTION 13 — DISPOSAL CONSIDERATIONS

WASTE DISPOSAL METHOD

Waste from this product may be hazardous as defined under the Resource Conservation and Recovery Act (RCRA) 40 CFR 261.
Waste must be tested for ignitability to determine the applicable EPA hazardous waste numbers.
Incinerate in approved facility. Do not incinerate closed container. Dispose of in accordance with Federal, State/Provincial, and Local regulations regarding pollution.

SECTION 14 — TRANSPORT INFORMATION

Multi-modal shipping descriptions are provided for informational purposes and do not consider container sizes. The presence of a shipping description for a particular mode of transport (ocean, air, etc.), does not indicate that the product is packaged suitably for that mode of transport. All packaging must be reviewed for suitability prior to shipment, and compliance with the applicable regulations is the sole responsibility of the person offering the product for transport.

US Ground (DOT)

5 Liters (1.3 Gallons) and Less may be Classed as CONSUMER COMMODITY, ORM-D
Larger Containers are Regulated as:
UN1263, PAINT, 3, PG III, (ERG#128)

DOT (Dept of Transportation) Hazardous Substances & Reportable Quantities

Ethyl benzene 1000 lb RQ
Xylenes (isomers and mixture) 100 lb RQ

Bulk Containers may be Shipped as (check reportable quantities):

RQ, UN1263, PAINT, 3, PG III, (XYLENES (ISOMERS AND MIXTURE)), (ERG#128)

Canada (TDG)

UN1263, PAINT, CLASS 3, PG III, LIMITED QUANTITY, (ERG#128)

IMO

5 Liters (1.3 Gallons) and Less may be Shipped as Limited Quantity.
UN1263, PAINT, CLASS 3, PG III, (29 C c.c.), EmS F-E, S-E, ADR (D/E)

IATA/ICAO

UN1263, PAINT, 3, PG III

SECTION 15 — REGULATORY INFORMATION

SARA 313 *(40 CFR 372.65C)* SUPPLIER NOTIFICATION

CAS No.	CHEMICAL/COMPOUND	% by WT	% Element
100-41-4	Ethylbenzene	3	
1330-20-7	Xylene	14	

CALIFORNIA PROPOSITION 65

WARNING: This product contains chemicals known to the State of California to cause cancer and birth defects or other reproductive harm.

TSCA CERTIFICATION

All chemicals in this product are listed, or are exempt from listing, on the TSCA Inventory.

SECTION 16 — OTHER INFORMATION

This product has been classified in accordance with the hazard criteria of the Canadian Controlled Products Regulations (CPR) and the MSDS contains all of the information required by the CPR.

The above information pertains to this product as currently formulated, and is based on the information available at this time. Addition of reducers or other additives to this product may substantially alter the composition and hazards of the product. Since conditions of use are outside our control, we make no warranties, express or implied, and assume no liability in connection with any use of this information.

Protective & Marine Coatings

RECOATABLE EPOXY PRIMER

PART G	B67A5	LIGHT GRAY
PART G	B67H5	TAN
PART G	B67R5	RED OXIDE
PART H	B67V5	HARDENER

Revised 5/11

PRODUCT INFORMATION

4.45

PRODUCT DESCRIPTION

RECOATABLE EPOXY PRIMER is a rust inhibitive high build catalyzed polyamide/bisphenol A epoxy primer designed for fast dry and quick or extended recoatability.

- Meets Class A requirements for Slip Coefficient, .50 (Red Oxide only)
- Long pot life
- High build coating for economical application
- One year recoatability
- Low temperature application - down to 35°F (1.5°C)
- Corrosion resistant (contains zinc phosphate)
- Outstanding application properties

PRODUCT CHARACTERISTICS

Finish:	Flat
Color:	Red Oxide, Tan, Light Gray
Volume Solids:	65% ± 2%, mixed
Weight Solids:	81% ± 2%, mixed
VOC (EPA Method 24): mixed	Unreduced: <320 g/L; 2.67 lb/gal Reduced 5%: <340 g/L; 2.88 lb/gal
Mix Ratio:	1:1 by volume

Recommended Spreading Rate per coat:

	Minimum	Maximum
Wet mils (microns)	**6.0** (150)	**9.0** (225)
Dry mils (microns)	**4.0*** (100)	**6.0*** (150)
~Coverage sq ft/gal (m^2/L)	**175** (4.3)	**260** (6.4)
Theoretical coverage **sq ft/gal** (m^2/L) @ 1 mil / 25 microns dft	**1040** (25.5)	

*See Performance Tips section

NOTE: Brush or roll application may require multiple coats to achieve maximum film thickness and uniformity of appearance.

Drying Schedule @ 6.0 mils wet (150 microns):

	@ 35°F/1.5°C	@ 77°F/25°C *50% RH*	@ 120°F/49°C
To touch:	1 hour	15 minutes	10 minutes
Tack free:	2 hours	30 minutes	15 minutes
To recoat:			
minimum:	6 hours	2 hours	30 minutes
maximum:	1 year	1 year	1 year
To cure:	14 days	14 days	2 days
Pot Life:	8+ hours	8 hours	3 hours
Sweat-in-time:	1 hour	30 minutes	10 minutes

If maximum recoat time is exceeded, abrade surface before recoating.

Drying time is temperature, humidity, and film thickness dependent.

Shelf Life:	36 months, unopened Store indoors at 40°F (4.5°C) to 100°F (38°C).
Flash Point:	80°F (27°C), PMCC, mixed
Reducer/Clean Up:	
Below 80°F (27°C):	Reducer #54, R7K54
Above 80°F (27°C):	Reducer #100, R7K100 or R7K104
In California:	Reducer R7K111

RECOMMENDED USES

For use as a shop or field applied epoxy primer where a variable recoat window is required due to construction schedules, distribution logistics and environmental considerations. Affords flexibility in projects when completion schedules cannot be specified.

- Primer for structural steel
- Paper mills
- Power plants
- Suitable for use in USDA inspected facilities
- Marine applications
- Storage tanks

PERFORMANCE CHARACTERISTICS

Substrate*: Steel

Surface Preparation*: SSPC-SP6/NACE 3

System Tested*:

1 ct. Recoatable Epoxy Primer @ 5.0 mils (125 microns) dft

*unless otherwise noted below

Test Name	Test Method	Results
Abrasion Resistance	ASTM D4060, CS17 wheel, 1000 cycles, 1 kg load	200 mg loss
Accelerated Weathering - QUV[1]	ASTM D4587, QUV-A, 5,000 hours	Passes
Adhesion	ASTM D4541	1050 psi
Corrosion Weathering	ASTM D5894, 13 cycles, 4,368 hours	Rating 10 per ASTM D714 for Blistering; Rating 7 per ASTM D610 for Rusting
Direct Impact Resistance	ASTM D2794	160 in. lbs.
Dry Heat Resistance	ASTM D2485	250°F (121°C) (discolors)
Flexibility	ASTM D522, 180° bend, 1" mandrel	Passes
Moisture Condensation Resistance	ASTM D4585, 100°F (38°C), 2000 hours	Passes, no cracking or delamination
Pencil Hardness	ASTM D3363	3H
Salt Fog Resistance[1]	ASTM B117, 5,600 hours	Passes, no cracking or delamination
Slip Coefficient, Red Oxide	AISC Specification for Structural Joints Using ASTM A325 or ASTM A490 Bolts	Class A, 0.50

Epoxy coatings may darken or yellow following application and curing.

Provides performance comparable to products formulated to federal specifications: Mil-P-23377, Mil-P-53022

Footnotes:

[1] Acrolon 218 HS topcoat

continued on back

Protective & Marine Coatings RECOATABLE EPOXY PRIMER

PART G	B67A5	LIGHT GRAY
PART G	B67H5	TAN
PART G	B67R5	RED OXIDE
PART H	B67V5	HARDENER

PRODUCT INFORMATION

4.45

RECOMMENDED SYSTEMS

		Dry Film Thickness / ct. Mils	(Microns)
Steel, catalyzed epoxy topcoat:			
1 ct.	Recoatable Epoxy Primer	4.0-6.0	(100-150)
2 cts.	Tile-Clad HS Epoxy	2.5-4.0	(63-100)
Steel, polyurethane topcoat:			
1 ct.	Recoatable Epoxy Primer	4.0-6.0	(100-150)
1-2 cts.	Hi-Solids Polyurethane	3.0-4.0	(75-100)
Steel, acrylic epoxy topcoat:			
1 ct.	Recoatable Epoxy Primer	4.0-6.0	(100-150)
2 cts.	Water Based Catalyzed Epoxy	2.5-3.0	(63-75)
Steel, acrylic topcoat:			
1 ct.	Recoatable Epoxy Primer	4.0-6.0	(100-150)
2 cts.	DTM Acrylic Coating	2.5-4.0	(63-100)
Galvanized:			
1 ct.	Recoatable Epoxy Primer	4.0-6.0	(100-150)
2 cts.	Tile-Clad HS Epoxy	2.5-4.0	(63-100)

The systems listed above are representative of the product's use, other systems may be appropriate.

DISCLAIMER

The information and recommendations set forth in this Product Data Sheet are based upon tests conducted by or on behalf of The Sherwin-Williams Company. Such information and recommendations set forth herein are subject to change and pertain to the product offered at the time of publication. Consult your Sherwin-Williams representative to obtain the most recent Product Data Information and Application Bulletin.

SURFACE PREPARATION

Surface must be clean, dry, and in sound condition. Remove all oil, dust, grease, dirt, loose rust, and other foreign material to ensure adequate adhesion.

Refer to product Application Bulletin for detailed surface preparation information.

Minimum recommended surface preparation:

Iron & Steel: SSPC-SP6/NACE 3, 2 mil (50 micron) profile

Galvanizing: SSPC-SP1

Surface Preparation Standards

	Condition of Surface	ISO 8501-1 BS7079:A1	Swedish Std. SIS055900	SSPC	NACE
White Metal		Sa 3	Sa 3	SP 5	1
Near White Metal		Sa 2.5	Sa 2.5	SP 10	2
Commercial Blast		Sa 2	Sa 2	SP 6	3
Brush-Off Blast		Sa 1	Sa 1	SP 7	4
Hand Tool Cleaning	Rusted	C St 2	C St 2	SP 2	-
	Pitted & Rusted	D St 2	D St 2	SP 2	-
Power Tool Cleaning	Rusted	C St 3	C St 3	SP 3	-
	Pitted & Rusted	D St 3	D St 3	SP 3	-

TINTING

Do not tint.

APPLICATION CONDITIONS

Temperature:

air and surface: 35°F (1.6°C) minimum, 140°F (60°C) maximum

material: 50°F (10°C) minimum
At least 5°F (2.8°C) above dew point

Relative humidity: 85% maximum

Refer to product Application Bulletin for detailed application information.

ORDERING INFORMATION

Packaging:

Part G: 1 gallon (3.78L) and 5 gallon (18.9L) containers

Part H: 1 gallon (3.78L) and 5 gallon (18.9L) containers

Weight: 13.26 ± 0.2 lb/gal ; 1.6 Kg/L, mixed

SAFETY PRECAUTIONS

Refer to the MSDS sheet before use.

Published technical data and instructions are subject to change without notice. Contact your Sherwin-Williams representative for additional technical data and instructions.

WARRANTY

The Sherwin-Williams Company warrants our products to be free of manufacturing defects in accord with applicable Sherwin-Williams quality control procedures. Liability for products proven defective, if any, is limited to replacement of the defective product or the refund of the purchase price paid for the defective product as determined by Sherwin-Williams. NO OTHER WARRANTY OR GUARANTEE OF ANY KIND IS MADE BY SHERWIN-WILLIAMS, EXPRESSED OR IMPLIED, STATUTORY, BY OPERATION OF LAW OR OTHERWISE, INCLUDING MERCHANTABILITY AND FITNESS FOR A PARTICULAR PURPOSE.

Protective & Marine Coatings

RECOATABLE EPOXY PRIMER

PART G	B67A5	LIGHT GRAY
PART G	B67H5	TAN
PART G	B67R5	RED OXIDE
PART H	B67V5	HARDENER

Revised 5/11

APPLICATION BULLETIN

4.45

SURFACE PREPARATIONS

Surface must be clean, dry, and in sound condition. Remove all oil, dust, grease, dirt, loose rust, and other foreign material to ensure adequate adhesion.

Iron & Steel (atmospheric service)
Remove all oil and grease from surface by Solvent Cleaning per SSPC-SP1. Minimum surface preparation is Commercial Blast Cleaning per SSPC-SP6/NACE 3. For better performance, use Near White Metal Blast Cleaning per SSPC-SP10/NACE 2. Blast clean all surfaces using a sharp, angular abrasive for optimum surface profile (2 mils / 50 microns). Prime any bare steel the same day as it is cleaned.

Galvanized Steel
Allow to weather a minimum of six months prior to coating. Solvent Clean per SSPC-SP1. When weathering is not possible, or the surface has been treated with chromates or silicates, first Solvent Clean per SSPC-SP1 and apply a test patch. Allow paint to dry at least one week before testing adhesion. If adhesion is poor, brush blasting per SSPC-SP7 is necessary to remove these treatments. Rusty galvanizing requires a minimum of Hand Tool Cleaning per SSPC-SP2, prime the area the same day as cleaned.

Previously Painted Surfaces
If in sound condition, clean the surface of all foreign material. Smooth, hard or glossy coatings and surfaces should be dulled by abrading the surface. Apply a test area, allowing paint to dry one week before testing adhesion. If adhesion is poor, or if this product attacks the previous finish, removal of the previous coating may be necessary. If paint is peeling or badly weathered, clean surface to sound substrate and treat as a new surface as above.

Surface Preparation Standards

	Condition of Surface	ISO 8501-1 BS7079:A1	Swedish Std. SIS055900	SSPC	NACE
White Metal		Sa 3	Sa 3	SP 5	1
Near White Metal		Sa 2.5	Sa 2.5	SP 10	2
Commercial Blast		Sa 2	Sa 2	SP 6	3
Brush-Off Blast		Sa 1	Sa 1	SP 7	4
Hand Tool Cleaning	Rusted	C St 2	C St 2	SP 2	-
	Pitted & Rusted	D St 2	D St 2	SP 2	-
Power Tool Cleaning	Rusted	C St 3	C St 3	SP 3	-
	Pitted & Rusted	D St 3	D St 3	SP 3	-

APPLICATION CONDITIONS

Temperature:	
air and surface:	35°F (1.6°C) minimum, 140°F (60°C) maximum
material:	50°F (10°C) minimum At least 5°F (2.8°C) above dew point
Relative humidity:	85% maximum

APPLICATION EQUIPMENT

The following is a guide. Changes in pressures and tip sizes may be needed for proper spray characteristics. Always purge spray equipment before use with listed reducer. Any reduction must be compliant with existing VOC regulations and compatible with the existing environmental and application conditions.

Reducer/Clean Up
Below 80°F (27°C) .....Reducer #54, R7K54
Above 80°F (27°C).....Reducer #100, R7K100 or R7K104
In California.....Reducer R7K111

Airless Spray
Pressure.....2400 psi
Hose.....1/4" ID
Tip .....017"
Filter.....60 mesh
Reduction.....As needed up to 5% by volume

Brush
Brush.....Natural Bristle
Reduction.....Not recommended

Roller
Cover .....3/8" - 1/2" woven with solvent resistant core
Reduction.....Not recommended

Plural Component Spray ...Acceptable
Refer to April 2010 Technical Bulletin - "Application Guidelines for Macropoxy 646 & Recoatable Epoxy Primer Utilizing Plural Component Equipment"

If specific application equipment is not listed above, equivalent equipment may be substituted.

continued on back

Protective & Marine Coatings RECOATABLE EPOXY PRIMER

PART G	B67A5	LIGHT GRAY
PART G	B67H5	TAN
PART G	B67R5	RED OXIDE
PART H	B67V5	HARDENER

APPLICATION BULLETIN

4.45

APPLICATION PROCEDURES

Surface preparation must be completed as indicated.

Mix contents of each component thoroughly with low speed power agitation. Make certain no pigment remains on the bottom of the cans. Then combine one part by volume of Part G with one part by volume of Part H. Thoroughly agitate the mixture with power agitation. Allow the material to sweat-in as indicated. Re-stir before using.

If reducer solvent is used, add only after both components have been thoroughly mixed, after sweat-in.

Apply paint at the recommended film thickness and spreading rate as indicated below:

Recommended Spreading Rate per coat:

	Minimum	Maximum
Wet mils (microns)	**6.0** (150)	**9.0** (225)
Dry mils (microns)	**4.0*** (100)	**6.0*** (150)
~Coverage sq ft/gal (m^2/L)	**175** (4.3)	**260** (6.4)
Theoretical coverage **sq ft/gal** (m^2/L) @ 1 mil / 25 microns dft	**1040** (25.5)	

*See Performance Tips section

NOTE: Brush or roll application may require multiple coats to achieve maximum film thickness and uniformity of appearance.

Drying Schedule @ 6.0 mils wet (150 microns):

	@ 35°F/1.5°C	@ 77°F/25°C *50% RH*	@ 120°F/49°C
To touch:	1 hour	15 minutes	10 minutes
Tack free:	2 hours	30 minutes	15 minutes
To recoat:			
minimum:	6 hours	2 hours	30 minutes
maximum:	1 year	1 year	1 year
To cure:	14 days	14 days	2 days

If maximum recoat time is exceeded, abrade surface before recoating.

Drying time is temperature, humidity, and film thickness dependent.

Pot Life:	8+ hours	8 hours	3 hours
Sweat-in-time:	1 hour	30 minutes	10 minutes

Application of coating above maximum or below minimum recommended spreading rate may adversely affect coating performance.

CLEAN UP INSTRUCTIONS

Clean spills and spatters immediately with Reducer #54, R7K54. Clean tools immediately after use with Reducer #54, R7K54. Follow manufacturer's safety recommendations when using any solvent.

DISCLAIMER

The information and recommendations set forth in this Product Data Sheet are based upon tests conducted by or on behalf of The Sherwin-Williams Company. Such information and recommendations set forth herein are subject to change and pertain to the product offered at the time of publication. Consult your Sherwin-Williams representative to obtain the most recent Product Data Information and Application Bulletin.

PERFORMANCE TIPS

Stripe coat all crevices, welds, and sharp angles to prevent early failure in these areas.

When using spray application, use a 50% overlap with each pass of the gun to avoid holidays, bare areas, and pinholes. If necessary, cross spray at a right angle.

Spreading rates are calculated on volume solids and do not include an application loss factor due to surface profile, roughness or porosity of the surface, skill and technique of the applicator, method of application, various surface irregularities, material lost during mixing, spillage, overthinning, climatic conditions, and excessive film build.

Excessive reduction of material can affect film build, appearance, and adhesion.

Do not apply the material beyond recommended pot life.

Do not mix previously catalyzed material with new.

In order to avoid blockage of spray equipment, clean equipment before use or before periods of extended downtime with Reducer #54, R7K54.

Material must be at least 50°F (10°C) prior to catalyzing.

Quik-Kick Epoxy Accelerator is acceptable for use. See data page 4.99 for details.

When coating over aluminum and galvanizing, recommended dft is 2-4 mils (50-100 microns).

Refer to Product Information sheet for additional performance characteristics and properties.

SAFETY PRECAUTIONS

Refer to the MSDS sheet before use.

Published technical data and instructions are subject to change without notice. Contact your Sherwin-Williams representative for additional technical data and instructions.

WARRANTY

The Sherwin-Williams Company warrants our products to be free of manufacturing defects in accord with applicable Sherwin-Williams quality control procedures. Liability for products proven defective, if any, is limited to replacement of the defective product or the refund of the purchase price paid for the defective product as determined by Sherwin-Williams. NO OTHER WARRANTY OR GUARANTEE OF ANY KIND IS MADE BY SHERWIN-WILLIAMS, EXPRESSED OR IMPLIED, STATUTORY, BY OPERATION OF LAW OR OTHERWISE, INCLUDING MERCHANTABILITY AND FITNESS FOR A PARTICULAR PURPOSE.

MATERIAL SAFETY DATA SHEET

B67A5
17 00

DATE OF PREPARATION
May 8, 2011

SECTION 1 — PRODUCT AND COMPANY IDENTIFICATION

PRODUCT NUMBER
B67A5

PRODUCT NAME
Recoatable Epoxy Primer (Part G), Light Gray

MANUFACTURER'S NAME
THE SHERWIN-WILLIAMS COMPANY
101 Prospect Avenue N.W.
Cleveland, OH 44115

Telephone Numbers and Websites

Product Information	www.sherwin-williams.com
Regulatory Information	(216) 566-2902 www.paintdocs.com
Medical Emergency	(216) 566-2917
Transportation Emergency*	(800) 424-9300
**for Chemical Emergency ONLY (spill, leak, fire, exposure, or accident)*	

SECTION 2 — COMPOSITION/INFORMATION ON INGREDIENTS

% by Weight	CAS Number	Ingredient	Units	Vapor Pressure
2	100-41-4	**Ethylbenzene**		
		ACGIH TLV	100 PPM	7.1 mm
		ACGIH TLV	125 PPM STEL	
		OSHA PEL	100 PPM	
		OSHA PEL	125 PPM STEL	
12	1330-20-7	**Xylene**		
		ACGIH TLV	100 PPM	5.9 mm
		ACGIH TLV	150 PPM STEL	
		OSHA PEL	100 PPM	
		OSHA PEL	150 PPM STEL	
3	2807-30-9	**2-Propoxyethanol**		
		ACGIH TLV	Not Available	1.3 mm
		OSHA PEL	Not Available	
7	68410-23-1	**Polyamide**		
		ACGIH TLV	Not Available	
		OSHA PEL	Not Available	
47	14808-60-7	**Quartz**		
		ACGIH TLV	0.025 mg/m3 as Resp. Dust	
		OSHA PEL	0.1 mg/m3 as Resp. Dust	
14	13463-67-7	**Titanium Dioxide**		
		ACGIH TLV	10 mg/m3 as Dust	
		OSHA PEL	10 mg/m3 Total Dust	
		OSHA PEL	5 mg/m3 Respirable Fraction	
2	1314-13-2	**Zinc Oxide**		
		ACGIH TLV	10 mg/m3 as Dust	
		OSHA PEL	10 mg/m3 Total Dust	
		OSHA PEL	5 mg/m3 Respirable Fraction	

SECTION 3 — HAZARDS IDENTIFICATION

ROUTES OF EXPOSURE
INHALATION of vapor or spray mist.
EYE or SKIN contact with the product, vapor or spray mist.

EFFECTS OF OVEREXPOSURE
EYES: Irritation.
SKIN: Prolonged or repeated exposure may cause irritation.
INHALATION: Irritation of the upper respiratory system.

HMIS Codes

Health	3*
Flammability	3
Reactivity	0

May cause nervous system depression. Extreme overexposure may result in unconsciousness and possibly death.
Prolonged overexposure to hazardous ingredients in Section 2 may cause adverse chronic effects to the following organs or systems:

- the liver
- the urinary system
- the reproductive system

SIGNS AND SYMPTOMS OF OVEREXPOSURE

Headache, dizziness, nausea, and loss of coordination are indications of excessive exposure to vapors or spray mists.
Redness and itching or burning sensation may indicate eye or excessive skin exposure.

MEDICAL CONDITIONS AGGRAVATED BY EXPOSURE

May cause allergic skin reaction in susceptible persons or skin sensitization.

CANCER INFORMATION

For complete discussion of toxicology data refer to Section 11.

SECTION 4 — FIRST AID MEASURES

EYES: Flush eyes with large amounts of water for 15 minutes. Get medical attention.
SKIN: Wash affected area thoroughly with soap and water.
If irritation persists or occurs later, get medical attention.
Remove contaminated clothing and launder before re-use.
INHALATION: If affected, remove from exposure. Restore breathing. Keep warm and quiet.
INGESTION: Do not induce vomiting. Get medical attention immediately.

SECTION 5 — FIRE FIGHTING MEASURES

FLASH POINT	LEL	UEL	FLAMMABILITY CLASSIFICATION
80 °F PMCC	1.0	15.8	RED LABEL -- Flammable, Flash below 100 °F (38 °C)

EXTINGUISHING MEDIA

Carbon Dioxide, Dry Chemical, Foam

UNUSUAL FIRE AND EXPLOSION HAZARDS

Closed containers may explode when exposed to extreme heat.
Application to hot surfaces requires special precautions.
During emergency conditions overexposure to decomposition products may cause a health hazard. Symptoms may not be immediately apparent. Obtain medical attention.

SPECIAL FIRE FIGHTING PROCEDURES

Full protective equipment including self-contained breathing apparatus should be used.
Water spray may be ineffective. If water is used, fog nozzles are preferable. Water may be used to cool closed containers to prevent pressure build-up and possible autoignition or explosion when exposed to extreme heat.

SECTION 6 — ACCIDENTAL RELEASE MEASURES

STEPS TO BE TAKEN IN CASE MATERIAL IS RELEASED OR SPILLED

Remove all sources of ignition. Ventilate the area.
Remove with inert absorbent.

SECTION 7 — HANDLING AND STORAGE

STORAGE CATEGORY

DOL Storage Class IC

PRECAUTIONS TO BE TAKEN IN HANDLING AND STORAGE

Contents are FLAMMABLE. Keep away from heat, sparks, and open flame.
During use and until all vapors are gone: Keep area ventilated - Do not smoke - Extinguish all flames, pilot lights, and heaters - Turn off stoves, electric tools and appliances, and any other sources of ignition.
Consult NFPA Code. Use approved Bonding and Grounding procedures.
Keep container closed when not in use. Transfer only to approved containers with complete and appropriate labeling. Do not take internally. Keep out of the reach of children.

SECTION 8 — EXPOSURE CONTROLS/PERSONAL PROTECTION

PRECAUTIONS TO BE TAKEN IN USE

Use only with adequate ventilation.
Avoid contact with skin and eyes. Avoid breathing vapor and spray mist.
Wash hands after using.
This coating may contain materials classified as nuisance particulates (listed "as Dust" in Section 2) which may be present at hazardous levels only during sanding or abrading of the dried film. If no specific dusts are listed in Section 2, the applicable limits for nuisance dusts are ACGIH TLV 10 mg/m3 (total dust), 3 mg/m3 (respirable fraction), OSHA PEL 15 mg/m3 (total dust), 5 mg/m3 (respirable fraction).

VENTILATION

Local exhaust preferable. General exhaust acceptable if the exposure to materials in Section 2 is maintained below applicable exposure limits. Refer to OSHA Standards 1910.94, 1910.107, 1910.108.

RESPIRATORY PROTECTION

If personal exposure cannot be controlled below applicable limits by ventilation, wear a properly fitted organic vapor/particulate respirator approved by NIOSH/MSHA for protection against materials in Section 2.

When sanding or abrading the dried film, wear a dust/mist respirator approved by NIOSH/MSHA for dust which may be generated from this product, underlying paint, or the abrasive.

PROTECTIVE GLOVES

Wear gloves which are recommended by glove supplier for protection against materials in Section 2.

EYE PROTECTION

Wear safety spectacles with unperforated sideshields.

OTHER PROTECTIVE EQUIPMENT

Use of barrier cream on exposed skin is recommended.

OTHER PRECAUTIONS

This product must be mixed with other components before use. Before opening the packages, READ AND FOLLOW WARNING LABELS ON ALL COMPONENTS.

Intentional misuse by deliberately concentrating and inhaling the contents can be harmful or fatal.

SECTION 9 — PHYSICAL AND CHEMICAL PROPERTIES

PRODUCT WEIGHT	14.59 lb/gal	1748 g/l
SPECIFIC GRAVITY	1.76	
BOILING POINT	277 - 308 °F	136 - 153 °C
MELTING POINT	Not Available	
VOLATILE VOLUME	35%	
EVAPORATION RATE	Slower than ether	
VAPOR DENSITY	Heavier than air	
SOLUBILITY IN WATER	N.A.	

VOLATILE ORGANIC COMPOUNDS (VOC Theoretical - As Packaged)

2.56 lb/gal	307 g/l	Less Water and Federally Exempt Solvents
2.56 lb/gal	307 g/l	Emitted VOC

SECTION 10 — STABILITY AND REACTIVITY

STABILITY — Stable

CONDITIONS TO AVOID

None known.

INCOMPATIBILITY

None known.

HAZARDOUS DECOMPOSITION PRODUCTS

By fire: Carbon Dioxide, Carbon Monoxide

HAZARDOUS POLYMERIZATION

Will not occur

SECTION 11 — TOXICOLOGICAL INFORMATION

CHRONIC HEALTH HAZARDS

Reports have associated repeated and prolonged overexposure to solvents with permanent brain and nervous system damage.

Ethylbenzene is classified by IARC as possibly carcinogenic to humans (2B) based on inadequate evidence in humans and sufficient evidence in laboratory animals. Lifetime inhalation exposure of rats and mice to high ethylbenzene concentrations resulted in increases in certain types of cancer, including kidney tumors in rats and lung and liver tumors in mice. These effects were not observed in animals exposed to lower concentrations. There is no evidence that ethylbenzene causes cancer in humans.

Crystalline Silica (Quartz, Cristobalite) is listed by IARC and NTP. Long term exposure to high levels of silica dust, which can occur only when sanding or abrading the dry film, may cause lung damage (silicosis) and possibly cancer.

IARC's Monograph No. 93 reports there is sufficient evidence of carcinogenicity in experimental rats exposed to titanium dioxide but inadequate evidence for carcinogenicity in humans and has assigned a Group 2B rating. In addition, the IARC summary concludes, "No significant exposure to titanium dioxide is thought to occur during the use of products in which titanium is bound to other materials, such as paint."

TOXICOLOGY DATA

CAS No.	Ingredient Name			
100-41-4	**Ethylbenzene**			
		LC50 RAT	4HR	Not Available
		LD50 RAT		3500 mg/kg
1330-20-7	**Xylene**			
		LC50 RAT	4HR	5000 ppm
		LD50 RAT		4300 mg/kg
2807-30-9	**2-Propoxyethanol**			
		LC50 RAT	4HR	Not Available
		LD50 RAT		3090 mg/kg
68410-23-1	**Polyamide**			
		LC50 RAT	4HR	Not Available
		LD50 RAT		Not Available
14808-60-7	**Quartz**			
		LC50 RAT	4HR	Not Available
		LD50 RAT		Not Available
13463-67-7	**Titanium Dioxide**			
		LC50 RAT	4HR	Not Available
		LD50 RAT		Not Available
1314-13-2	**Zinc Oxide**			
		LC50 RAT	4HR	Not Available
		LD50 RAT		Not Available

SECTION 12 — ECOLOGICAL INFORMATION

ECOTOXICOLOGICAL INFORMATION

No data available.

SECTION 13 — DISPOSAL CONSIDERATIONS

WASTE DISPOSAL METHOD

Waste from this product may be hazardous as defined under the Resource Conservation and Recovery Act (RCRA) 40 CFR 261.
Waste must be tested for ignitability to determine the applicable EPA hazardous waste numbers.
Incinerate in approved facility. Do not incinerate closed container. Dispose of in accordance with Federal, State/Provincial, and Local regulations regarding pollution.

SECTION 14 — TRANSPORT INFORMATION

Multi-modal shipping descriptions are provided for informational purposes and do not consider container sizes. The presence of a shipping description for a particular mode of transport (ocean, air, etc.), does not indicate that the product is packaged suitably for that mode of transport. All packaging must be reviewed for suitability prior to shipment, and compliance with the applicable regulations is the sole responsibility of the person offering the product for transport.

US Ground (DOT)

5 Liters (1.3 Gallons) and Less may be Classed as CONSUMER COMMODITY, ORM-D
Larger Containers are Regulated as:
UN1263, PAINT, 3, PG III, (ERG#128)

DOT (Dept of Transportation) Hazardous Substances & Reportable Quantities

Ethyl benzene 1000 lb RQ
Xylenes (isomers and mixture) 100 lb RQ

Bulk Containers may be Shipped as (check reportable quantities):

RQ, UN1263, PAINT, 3, PG III, (XYLENES (ISOMERS AND MIXTURE)),
(ERG#128)

Canada (TDG)

UN1263, PAINT, CLASS 3, PG III, LIMITED QUANTITY, (ERG#128)

IMO

5 Liters (1.3 Gallons) and Less may be Shipped as Limited Quantity.
UN1263, PAINT, CLASS 3, PG III, (27 C c.c.), EmS F-E, S-E, ADR (D/E)

IATA/ICAO

UN1263, PAINT, 3, PG III

SECTION 15 — REGULATORY INFORMATION

SARA 313 *(40 CFR 372.65C)* SUPPLIER NOTIFICATION

CAS No.	CHEMICAL/COMPOUND	% by WT	% Element
100-41-4	Ethylbenzene	2	
1330-20-7	Xylene	12	
	Zinc Compound	6	3.3
	Glycol Ethers	3	

CALIFORNIA PROPOSITION 65

WARNING: This product contains chemicals known to the State of California to cause cancer and birth defects or other reproductive harm.

TSCA CERTIFICATION

All chemicals in this product are listed, or are exempt from listing, on the TSCA Inventory.

SECTION 16 — OTHER INFORMATION

This product has been classified in accordance with the hazard criteria of the Canadian Controlled Products Regulations (CPR) and the MSDS contains all of the information required by the CPR.

The above information pertains to this product as currently formulated, and is based on the information available at this time. Addition of reducers or other additives to this product may substantially alter the composition and hazards of the product. Since conditions of use are outside our control, we make no warranties, express or implied, and assume no liability in connection with any use of this information.

Protective & Marine Coatings

ACROLON™ 218 HS
ACRYLIC POLYURETHANE

PART A	B65-600	GLOSS SERIES
PART A	B65-650	SEMI-GLOSS SERIES
PART B	B65V600	HARDENER

Revised 5/11

PRODUCT INFORMATION

5.22

PRODUCT DESCRIPTION

ACROLON 218 HS is a low VOC, polyester modified, aliphatic, acrylic polyurethane formulated specifically for in-shop applications. Also suitable for industrial applications. A fast drying, urethane that provides color and gloss retention for exterior exposure.

- Can be used directly over organic zinc rich primers (epoxy zinc primer and moisture cure urethane zinc primer)
- Color and gloss retention for exterior exposure
- Fast dry
- Outstanding application properties

PRODUCT CHARACTERISTICS

Finish:	Gloss or Semi-Gloss
Color:	Wide range of colors available
Volume Solids:	65% ± 2%, mixed, may vary by color
Weight Solids:	78% ± 2%, mixed, may vary by color
VOC (EPA Method 24):	Unreduced: <300 g/L; 2.5 lb/gal
mixed	Reduced 10% with R7K15: <340 g/L; 2.8 lb/gal
mixed	Reduced 9% with MEK, R6K10: <340 g/L; 2.8 lb/gal
Mix Ratio:	6:1 by volume, 1 gallon or 5 gallon mixes premeasured components

Recommended Spreading Rate per coat:

	Minimum	Maximum
Wet mils (microns)	**4.5** (112.5)	**9.0** (225)
Dry mils (microns)	**3.0** (75)	**6.0** (150)
~Coverage sq ft/gal (m^2/L)	**175** (4.3)	**346** (8.5)
Theoretical coverage **sq ft/gal** (m^2/L) @ 1 mil / 25 microns dft	**1040** (25.5)	

NOTE: Brush or roll application may require multiple coats to achieve maximum film thickness and uniformity of appearance.

Drying Schedule @ 6.0 mils wet (150 microns):

	@ 35°F/1.7°C	@ 77°F/25°C *50% RH*	@ 120°F/49°C
To touch:	4 hours	30 minutes	20 minutes
To handle:	18 hours	6 hours	4 hours
To recoat:			
minimum:	18 hours	8 hours	6 hours
maximum:	3 months	3 months	3 months
To cure:	14 days	7 days	5 days
Pot Life: (reduced 5% with Reducer R7K15)	4 hours	2 hours	45 minutes
Sweat-in-Time:		None	

If maximum recoat time is exceeded, abrade surface before recoating. Drying time is temperature, humidity, and film thickness dependent.
Paint temperature must be at least 40°F (4.5°C) minimum.

Shelf Life:	Part A - 36 months, unopened Part B - 24 months, unopened Store indoors at 40°F (4.5°C) to 100°F (38°C).
Flash Point:	55°F (13°C), Seta, mixed
Reducer/Clean Up:	
Spray:	Reducer R7K15, MEK R6K10, or R7K111
Brush / Roll:	Reducer #132, R7K132 or R7K111

RECOMMENDED USES

Specifically formulated for in-shop applications.
For use over prepared metal and masonry surfaces in industrial environments such as:

- Structural steel
- Rail cars and locomotives
- Conveyors
- Bridges
- Tank exteriors
- Pipelines
- Ships
- Wind Towers - onshore and offshore
- Offshore platforms - exploration and production
- Suitable for use in USDA inspected facilities
- Conforms to AWWA D102 Outside Coating Systems #4 (OCS-4), #5 (OCS-5) & #6 (OCS-6)
- Acceptable for use in high performance architectural applications

PERFORMANCE CHARACTERISTICS

Substrate*: Steel
Surface Preparation*: SSPC-SP10/NACE 2
System Tested*:
1 ct. Macropoxy 646 @ 6.0 mils (150 microns) dft
1 ct. Acrolon 218 HS Gloss @ 4.0 mils (100 microns) dft
*unless otherwise noted below

Test Name	Test Method	Results
Abrasion Resistance[1]	ASTM D4060, CS17 wheel, 1000 cycles, 1 kg load	43 mg loss
Adhesion	ASTM D4541	975 psi
Corrosion Weathering[2]	ASTM D5894, 9 cycles, 3024 hours	Rating 10 per ASTM D610, for rusting; Rating 10 per ASTM D714, for blistering
Direct Impact Resistance[1]	ASTM D2794	50 in. lb.
Dry Heat Resistance[1]	ASTM D2485, Method A	200°F (93°C)
Flexibility[1]	ASTM D522, 180° bend, 1/8" mandrel	Passes
Humidity Resistance[2]	ASTM D4585, 100°F (38°C), 1500 hours	Rating 10 per ASTM D610, for rusting; Rating 10 per ASTM D714, for blistering
Pencil Hardness	ASTM D3363	3H
Salt Fog Resistance[2]	ASTM B117, 7000 hours	Rating 10 per ASTM D610, for rusting; Rating 9 per ASTM D714, for blistering

Meets the requirements of SSPC Paint No. 36, Level 3.

Complies with ISO 12944-5 C5I and C5M requirements.

Footnotes:
[1] Finish coat only tested
[2] Primer — Zinc-Clad II Plus
Intermediate — Macropoxy 646
Finish — Acrolon 218 HS

continued on back

Protective & Marine Coatings

ACROLON™ 218 HS
ACRYLIC POLYURETHANE

PART A	B65-600	GLOSS SERIES
PART A	B65-650	SEMI-GLOSS SERIES
PART B	B65V600	HARDENER

PRODUCT INFORMATION

5.22

RECOMMENDED SYSTEMS

		Dry Film Thickness / ct. Mils	(Microns)
Steel:			
1 ct.	Macropoxy 646	5.0-10.0	(125-250)
1-2 cts.	Acrolon 218 HS Polyurethane	3.0-6.0	(75-150)
Steel:			
1 ct.	Zinc Clad II Plus	3.0-5.0	(75-125)
1 ct.	Macropoxy 646	5.0-10.0	(125-250)
1-2 cts.	Acrolon 218 HS Polyurethane	3.0-6.0	(75-150)
Steel:			
1 ct.	Zinc Clad IV	3.0-5.0	(75-125)
1-2 cts.	Acrolon 218 HS Polyurethane	3.0-6.0	(75-150)
Steel:			
1 ct.	Corothane I-GalvaPac Zinc Primer	3.0-4.0	(75-100)
1-2 cts.	Acrolon 218 HS Polyurethane	3.0-6.0	(75-150)
Steel:			
1 ct.	Epoxy Mastic Aluminum II	6.0	(150)
1-2 cts.	Acrolon 218 HS Polyurethane	3.0-6.0	(75-150)
Steel:			
1 ct.	Recoatable Epoxy Primer	4.0-6.0	(100-150)
1-2 cts.	Acrolon 218 HS Polyurethane	3.0-6.0	(75-150)
Concrete/Masonry:			
1 ct.	Kem Cati-Coat HS Epoxy Filler/Sealer	10.0-20.0	(250-500)
1-2 cts.	Acrolon 218 HS Polyurethane	3.0-6.0	(75-150)
Aluminum/Galvanizing:			
1 ct.	DTM Wash Primer	0.7-1.3	(18-32)
1-2 cts.	Acrolon 218 HS Polyurethane	3.0-6.0	(75-150)
ISO 12944 C5M System:			
1 ct.	Zinc Clad III HS	3.0-5.0	(75-125)
1 ct.	Tower Guard Epoxy	5.0-11.5	(125-287.5)
1 ct.	Acrolon 218 HS	3.0-6.0	(75-150)

The systems listed above are representative of the product's use, other systems may be appropriate.

DISCLAIMER

The information and recommendations set forth in this Product Data Sheet are based upon tests conducted by or on behalf of The Sherwin-Williams Company. Such information and recommendations set forth herein are subject to change and pertain to the product offered at the time of publication. Consult your Sherwin-Williams representative to obtain the most recent Product Data Information and Application Bulletin.

SURFACE PREPARATION

Surface must be clean, dry, and in sound condition. Remove all oil, dust, grease, dirt, loose rust, and other foreign material to ensure adequate adhesion.

Refer to product Application Bulletin for detailed surface preparation information.

Minimum recommended surface preparation:

* Iron & Steel: SSPC-SP6/NACE 3, 1-2 mil (25-50 micron) profile
* Galvanizing: SSPC-SP1
* Concrete & Masonry: SSPC-SP13/NACE 6, or ICRI No. 310.2, CSP 1-3

* Primer required

Surface Preparation Standards

	Condition of Surface	ISO 8501-1 BS7079:A1	Swedish Std. SIS055900	SSPC	NACE
White Metal		Sa 3	Sa 3	SP 5	1
Near White Metal		Sa 2.5	Sa 2.5	SP 10	2
Commercial Blast		Sa 2	Sa 2	SP 6	3
Brush-Off Blast		Sa 1	Sa 1	SP 7	4
Hand Tool Cleaning	Rusted	C St 2	C St 2	SP 2	-
	Pitted & Rusted	D St 2	D St 2	SP 2	-
Power Tool Cleaning	Rusted	C St 3	C St 3	SP 3	-
	Pitted & Rusted	D St 3	D St 3	SP 3	-

TINTING

Tint Part A with Maxitoner Colorants.

- Extra white tints at 100% tint strength
- Ultradeep base tints at 150% tint strength

Five minutes minimum mixing on a mechanical shaker is required for complete mixing of color.

APPLICATION CONDITIONS

Temperature:	35°F (1.7°C) minimum, 120°F (49°C) maximum (air and surface) 40°F (4.5°C) minimum, 120°F (49°C) maximum (material) At least 5°F (2.8°C) above dew point
Relative humidity:	85% maximum

Refer to product Application Bulletin for detailed application information.

ORDERING INFORMATION

Packaging:	1 gallon (3.78L) mix:	5 gallon (18.9L) mix:
Part A:	.86 gal (3.25L)	4.29 gal (16.2L)
Part B:	.14 gal (0.53L)	0.71 gal (2.7L)
(premeasured components)		

Weight: 11.2 ± 0.2 lb/gal ; 1.3 Kg/L mixed, may vary with color

SAFETY PRECAUTIONS

Refer to the MSDS sheet before use.

Published technical data and instructions are subject to change without notice. Contact your Sherwin-Williams representative for additional technical data and instructions.

WARRANTY

The Sherwin-Williams Company warrants our products to be free of manufacturing defects in accord with applicable Sherwin-Williams quality control procedures. Liability for products proven defective, if any, is limited to replacement of the defective product or the refund of the purchase price paid for the defective product as determined by Sherwin-Williams. NO OTHER WARRANTY OR GUARANTEE OF ANY KIND IS MADE BY SHERWIN-WILLIAMS, EXPRESSED OR IMPLIED, STATUTORY, BY OPERATION OF LAW OR OTHERWISE, INCLUDING MERCHANTABILITY AND FITNESS FOR A PARTICULAR PURPOSE.

Protective & Marine Coatings

ACROLON™ 218 HS
ACRYLIC POLYURETHANE

PART A	B65-600	GLOSS SERIES
PART A	B65-650	SEMI-GLOSS SERIES
PART B	B65V600	HARDENER

Revised 5/11

APPLICATION BULLETIN

5.22

SURFACE PREPARATIONS

Surface must be clean, dry, and in sound condition. Remove all oil, dust, grease, dirt, loose rust, and other foreign material to ensure adequate adhesion.

Iron & Steel
Remove all oil and grease from surface by Solvent Cleaning per SSPC-SP1. Minimum surface preparation is Commercial Blast Cleaning per SSPC-SP6/NACE 3. For better performance, use Near White Metal Blast Cleaning per SSPC-SP10/NACE 2. Blast clean all surfaces using a sharp, angular abrasive for optimum surface profile (1-2 mils / 25-50 microns). Prime any bare steel the same day as it is cleaned or before flash rusting occurs.

Aluminum
Remove all oil, grease, dirt, oxide and other foreign material by Solvent Cleaning per SSPC-SP1. Primer required.

Galvanized Steel
Allow to weather a minimum of six months prior to coating. Solvent Clean per SSPC-SP1. When weathering is not possible, or the surface has been treated with chromates or silicates, first Solvent Clean per SSPC-SP1 and apply a test patch. Allow paint to dry at least one week before testing adhesion. If adhesion is poor, brush blasting per SSPC-SP7 is necessary to remove these treatments. Rusty galvanizing requires a minimum of Hand Tool Cleaning per SSPC-SP2, prime the area the same day as cleaned or before flash rusting occurs. Primer required.

Concrete and Masonry
For surface preparation, refer to SSPC-SP13/NACE 6, or ICRI No. 310.2, CSP 1-3. Surfaces should be thoroughly clean and dry. Concrete and mortar must be cured at least 28 days @ 75°F (24°C). Remove all loose mortar and foreign material. Surface must be free of laitance, concrete dust, dirt, form release agents, moisture curing membranes, loose cement and hardeners. Fill bug holes, air pockets and other voids with Steel-Seam FT910. Primer required.

Follow the standard methods listed below when applicable:
ASTM D4258 Standard Practice for Cleaning Concrete.
ASTM D4259 Standard Practice for Abrading Concrete.
ASTM D4260 Standard Practice for Etching Concrete.
ASTM F1869 Standard Test Method for Measuring Moisture Vapor Emission Rate of Concrete.
SSPC-SP 13/Nace 6 Surface Preparation of Concrete.
ICRI No. 310.2 Concrete Surface Preparation.

Surface Preparation Standards

	Condition of Surface	ISO 8501-1 BS7079:A1	Swedish Std. SIS055900	SSPC	NACE
White Metal		Sa 3	Sa 3	SP 5	1
Near White Metal		Sa 2.5	Sa 2.5	SP 10	2
Commercial Blast		Sa 2	Sa 2	SP 6	3
Brush-Off Blast		Sa 1	Sa 1	SP 7	4
Hand Tool Cleaning	Rusted	C St 2	C St 2	SP 2	-
	Pitted & Rusted	D St 2	D St 2	SP 2	-
Power Tool Cleaning	Rusted	C St 3	C St 3	SP 3	-
	Pitted & Rusted	D St 3	D St 3	SP 3	-

APPLICATION CONDITIONS

Temperature:	35°F (1.7°C) minimum, 120°F (49°C) maximum (air and surface) 40°F (4.5°C) minimum, 120°F (49°C) maximum (material) At least 5°F (2.8°C) above dew point
Relative humidity:	85% maximum

APPLICATION EQUIPMENT

The following is a guide. Changes in pressures and tip sizes may be needed for proper spray characteristics. Always purge spray equipment before use with listed reducer. Any reduction must be compliant with existing VOC regulations and compatible with the existing environmental and application conditions.

Reducer/Clean Up:
Spray.....Reducer R7K15, MEK R6K10, or R7K111
Brush/Roll .....Reducer #132, R7K132, or R7K111
If reducer is used, reduce at time of catalyzation.

Airless Spray
Pressure.....2500 - 2800 psi
Hose.....3/8" ID
Tip .....013" - .017"
Filter.....60 mesh
Reduction.....As needed up to 10% by volume with R7K15 or R7K111, or up to 9% with MEK, R6K10*

Conventional Spray
Gun .....Binks 95
Cap 63P
Atomization Pressure.....50 - 70 psi
Fluid Pressure.....20 - 25 psi
Reduction.....As needed up to 10% by volume with R7K15 or R7K111, or up to 9% with MEK, R6K10*

Brush
Brush.....Natural Bristle
Reduction.....As needed up to 10% by volume*

Roller
Cover .....3/8" woven with solvent resistant core
Reduction.....As needed up to 10% by volume*

If specific application equipment is not listed above, equivalent equipment may be substituted.

* Note: Reducing more than maximum recommended level will result in exceed VOC exceeding 340g/L

continued on back

Protective & Marine Coatings

ACROLON™ 218 HS
ACRYLIC POLYURETHANE

PART A	B65-600	GLOSS SERIES
PART A	B65-650	SEMI-GLOSS SERIES
PART B	B65V600	HARDENER

APPLICATION BULLETIN

5.22

APPLICATION PROCEDURES

Surface preparation must be completed as indicated.

Mix contents of each component thoroughly with low speed power agitation. Make certain no pigment remains on the bottom of the can. Then combine six parts by volume of Part A with one part by volume of Part B (premeasured components). Thoroughly agitate the mixture with power agitation. Re-stir before using.

If reducer is used, add only after both components have been thoroughly mixed.

Apply paint at the recommended film thickness and spreading rate as indicated below:

Recommended Spreading Rate per coat:

	Minimum	Maximum
Wet mils (microns)	**4.5** (112.5)	**9.0** (225)
Dry mils (microns)	**3.0** (75)	**6.0** (150)
~Coverage sq ft/gal (m^2/L)	**175** (4.3)	**346** (8.5)
Theoretical coverage **sq ft/gal** (m^2/L) @ 1 mil / 25 microns dft	**1040** (25.5)	

NOTE: Brush or roll application may require multiple coats to achieve maximum film thickness and uniformity of appearance.

Drying Schedule @ 6.0 mils wet (150 microns):

	@ 35°F/1.7°C	@ 77°F/25°C *50% RH*	@ 120°F/49°C
To touch:	4 hours	30 minutes	20 minutes
To handle:	18 hours	6 hours	4 hours
To recoat:			
minimum:	18 hours	8 hours	6 hours
maximum:	3 months	3 months	3 months
To cure:	14 days	7 days	5 days
Pot Life: (reduced 5% with Reducer R7K15)	4 hours	2 hours	45 minutes
Sweat-in-Time:		None	

If maximum recoat time is exceeded, abrade surface before recoating.
Drying time is temperature, humidity, and film thickness dependent.
Paint temperature must be at least 40°F (4.5°C) minimum.

Application of coating above maximum or below minimum recommended spreading rate may adversely affect coating performance.

CLEAN UP INSTRUCTIONS

Clean spills and spatters immediately with Reducer #132, R7K132. Clean tools immediately after use with Reducer #132, R7K132. Follow manufacturer's safety recommendations when using any solvent.

DISCLAIMER

The information and recommendations set forth in this Product Data Sheet are based upon tests conducted by or on behalf of The Sherwin-Williams Company. Such information and recommendations set forth herein are subject to change and pertain to the product offered at the time of publication. Consult your Sherwin-Williams representative to obtain the most recent Product Data Information and Application Bulletin.

PERFORMANCE TIPS

Stripe coat all crevices, welds, and sharp angles to prevent early failure in these areas.

When using spray application, use a 50% overlap with each pass of the gun to avoid holidays, bare areas, and pinholes. If necessary, cross spray at a right angle.

Spreading rates are calculated on volume solids and do not include an application loss factor due to surface profile, roughness or porosity of the surface, skill and technique of the applicator, method of application, various surface irregularities, material lost during mixing, spillage, overthinning, climatic conditions, and excessive film build.

Excessive reduction of material can affect film build, appearance, and adhesion.

Do not apply the material beyond recommended pot life.

Do not mix previously catalyzed material with new.

In order to avoid blockage of spray equipment, clean equipment before use or before periods of extended downtime with Reducer #15, R7K15 or MEK, R6K10.

Mixed coating is sensitive to water. Use water traps in all air lines. Moisture contact can reduce pot life and affect gloss and color.

Quick-Thane Urethane Accelerator is acceptable for use. See data page 5.97 for details.

E-Z Roll Urethane Defoamer is acceptable for use. See data page 5.99 for details.

Refer to Product Information sheet for additional performance characteristics and properties.

SAFETY PRECAUTIONS

Refer to the MSDS sheet before use.

Published technical data and instructions are subject to change without notice. Contact your Sherwin-Williams representative for additional technical data and instructions.

WARRANTY

The Sherwin-Williams Company warrants our products to be free of manufacturing defects in accord with applicable Sherwin-Williams quality control procedures. Liability for products proven defective, if any, is limited to replacement of the defective product or the refund of the purchase price paid for the defective product as determined by Sherwin-Williams. NO OTHER WARRANTY OR GUARANTEE OF ANY KIND IS MADE BY SHERWIN-WILLIAMS, EXPRESSED OR IMPLIED, STATUTORY, BY OPERATION OF LAW OR OTHERWISE, INCLUDING MERCHANTABILITY AND FITNESS FOR A PARTICULAR PURPOSE.

MATERIAL SAFETY DATA SHEET

B65T654
12 00

DATE OF PREPARATION
May 8, 2011

SECTION 1 — PRODUCT AND COMPANY IDENTIFICATION

PRODUCT NUMBER
B65T654

PRODUCT NAME
ACROLON™ 218 HS Polyurethane - Semi-Gloss (Part A), Ultradeep/Clear Tint Base

MANUFACTURER'S NAME
THE SHERWIN-WILLIAMS COMPANY
101 Prospect Avenue N.W.
Cleveland, OH 44115

Telephone Numbers and Websites

Product Information	www.sherwin-williams.com
Regulatory Information	(216) 566-2902 www.paintdocs.com
Medical Emergency	(216) 566-2917
Transportation Emergency*	(800) 424-9300
**for Chemical Emergency ONLY (spill, leak, fire, exposure, or accident)*	

SECTION 2 — COMPOSITION/INFORMATION ON INGREDIENTS

% by Weight	CAS Number	Ingredient	Units	Vapor Pressure
0.2	**100-41-4**	**Ethylbenzene**		
		ACGIH TLV	100 PPM	7.1 mm
		ACGIH TLV	125 PPM STEL	
		OSHA PEL	100 PPM	
		OSHA PEL	125 PPM STEL	
1	**1330-20-7**	**Xylene**		
		ACGIH TLV	100 PPM	5.9 mm
		ACGIH TLV	150 PPM STEL	
		OSHA PEL	100 PPM	
		OSHA PEL	150 PPM STEL	
1	**64742-94-5**	**Medium Aromatic Hydrocarbons**		
		ACGIH TLV	Not Available	0.12 mm
		OSHA PEL	Not Available	
0.2	**91-20-3**	**Naphthalene**		
		ACGIH TLV	10 PPM	1 mm
		ACGIH TLV	15 PPM STEL	
		OSHA PEL	10 PPM	
		OSHA PEL	15 PPM STEL	
7	**78-93-3**	**Methyl Ethyl Ketone**		
		ACGIH TLV	200 PPM	70 mm
		ACGIH TLV	300 PPM STEL	
		OSHA PEL	200 PPM	
		OSHA PEL	300 PPM STEL	
10	**123-86-4**	**n-Butyl Acetate**		
		ACGIH TLV	150 PPM	10 mm
		ACGIH TLV	200 PPM STEL	
		OSHA PEL	150 PPM	
		OSHA PEL	200 PPM STEL	
7	**108-65-6**	**1-Methoxy-2-Propanol Acetate**		
		ACGIH TLV	Not Available	1.8 mm
		OSHA PEL	Not Available	
21	**14808-60-7**	**Quartz**		
		ACGIH TLV	0.025 mg/m3 as Resp. Dust	
		OSHA PEL	0.1 mg/m3 as Resp. Dust	
5	**112926-00-8**	**Amorphous Precipitated Silica**		
		ACGIH TLV	10 mg/m3 as Dust	
		OSHA PEL	6 mg/m3 as Dust	

SECTION 3 — HAZARDS IDENTIFICATION

HMIS Codes

Health	2*
Flammability	3
Reactivity	0

ROUTES OF EXPOSURE

INHALATION of vapor or spray mist.
EYE or SKIN contact with the product, vapor or spray mist.

EFFECTS OF OVEREXPOSURE

EYES: Irritation.
SKIN: Prolonged or repeated exposure may cause irritation.
INHALATION: Irritation of the upper respiratory system.

May cause nervous system depression. Extreme overexposure may result in unconsciousness and possibly death.
Prolonged overexposure to hazardous ingredients in Section 2 may cause adverse chronic effects to the following organs or systems:

- the liver
- the urinary system
- the hematopoietic (blood-forming) system
- the reproductive system

SIGNS AND SYMPTOMS OF OVEREXPOSURE

Headache, dizziness, nausea, and loss of coordination are indications of excessive exposure to vapors or spray mists.
Redness and itching or burning sensation may indicate eye or excessive skin exposure.

MEDICAL CONDITIONS AGGRAVATED BY EXPOSURE

May cause allergic respiratory and/or skin reaction in susceptible persons or sensitization. This effect may be delayed several hours after exposure.
Persons sensitive to isocyanates will experience increased allergic reaction on repeated exposure.

CANCER INFORMATION

For complete discussion of toxicology data refer to Section 11.

SECTION 4 — FIRST AID MEASURES

EYES: Flush eyes with large amounts of water for 15 minutes. Get medical attention.
SKIN: Wash affected area thoroughly with soap and water.
Remove contaminated clothing and launder before re-use.
INHALATION: If any breathing problems occur during use, **LEAVE THE AREA** and get fresh air. If problems remain or occur later, **IMMEDIATELY** get medical attention.
INGESTION: Do not induce vomiting. Get medical attention immediately.

SECTION 5 — FIRE FIGHTING MEASURES

FLASH POINT	LEL	UEL	FLAMMABILITY CLASSIFICATION
55 °F PMCC	0.8	13.1	RED LABEL -- Flammable, Flash below 100 °F (38 °C)

EXTINGUISHING MEDIA

Carbon Dioxide, Dry Chemical, Foam

UNUSUAL FIRE AND EXPLOSION HAZARDS

Closed containers may explode when exposed to extreme heat.
Application to hot surfaces requires special precautions.
During emergency conditions overexposure to decomposition products may cause a health hazard. Symptoms may not be immediately apparent. Obtain medical attention.

SPECIAL FIRE FIGHTING PROCEDURES

Full protective equipment including self-contained breathing apparatus should be used.
Water spray may be ineffective. If water is used, fog nozzles are preferable. Water may be used to cool closed containers to prevent pressure build-up and possible autoignition or explosion when exposed to extreme heat.

SECTION 6 — ACCIDENTAL RELEASE MEASURES

STEPS TO BE TAKEN IN CASE MATERIAL IS RELEASED OR SPILLED

Remove all sources of ignition. Ventilate the area.
Remove with inert absorbent.

SECTION 7 — HANDLING AND STORAGE

STORAGE CATEGORY

DOL Storage Class IB

PRECAUTIONS TO BE TAKEN IN HANDLING AND STORAGE

Contents are FLAMMABLE. Keep away from heat, sparks, and open flame.
During use and until all vapors are gone: Keep area ventilated - Do not smoke - Extinguish all flames, pilot lights, and heaters - Turn off stoves, electric tools and appliances, and any other sources of ignition.
Consult NFPA Code. Use approved Bonding and Grounding procedures.

Keep container closed when not in use. Transfer only to approved containers with complete and appropriate labeling. Do not take internally. Keep out of the reach of children.

SECTION 8 — EXPOSURE CONTROLS/PERSONAL PROTECTION

PRECAUTIONS TO BE TAKEN IN USE

NO PERSON SHOULD USE THIS PRODUCT, OR BE IN THE AREA WHERE IT IS BEING USED, IF THEY HAVE CHRONIC (LONG-TERM) LUNG OR BREATHING PROBLEMS OR IF THEY EVER HAD A REACTION TO ISOCYANATES.

Use only with adequate ventilation.

Avoid contact with skin and eyes. Avoid breathing vapor and spray mist.

Wash hands after using.

This coating may contain materials classified as nuisance particulates (listed "as Dust" in Section 2) which may be present at hazardous levels only during sanding or abrading of the dried film. If no specific dusts are listed in Section 2, the applicable limits for nuisance dusts are ACGIH TLV 10 mg/m3 (total dust), 3 mg/m3 (respirable fraction), OSHA PEL 15 mg/m3 (total dust), 5 mg/m3 (respirable fraction).

VENTILATION

Local exhaust preferable. General exhaust acceptable if the exposure to materials in Section 2 is maintained below applicable exposure limits. Refer to OSHA Standards 1910.94, 1910.107, 1910.108.

RESPIRATORY PROTECTION

Where overspray is present, a positive pressure air supplied respirator (TC19C NIOSH/MSHA approved) should be worn. If unavailable, a properly fitted organic vapor/particulate respirator approved by NIOSH/MSHA for protection against materials in Section 2 may be effective. Follow respirator manufacturers directions for use. Wear the respirator for the whole time of spraying and until all vapors and mists are gone. **NO PERSONS SHOULD BE ALLOWED IN THE AREA WHERE THIS PRODUCT IS BEING USED UNLESS EQUIPPED WITH THE SAME RESPIRATOR PROTECTION RECOMMENDED FOR THE PAINTERS.**

When sanding or abrading the dried film, wear a dust/mist respirator approved by NIOSH/MSHA for dust which may be generated from this product, underlying paint, or the abrasive.

PROTECTIVE GLOVES

To prevent skin contact, wear gloves which are recommended by glove supplier for protection against materials in Section 2.

EYE PROTECTION

Wear safety spectacles with unperforated sideshields.

OTHER PROTECTIVE EQUIPMENT

Use barrier cream on exposed skin.

OTHER PRECAUTIONS

This product must be mixed with other components before use. Before opening the packages, READ AND FOLLOW WARNING LABELS ON ALL COMPONENTS.

Intentional misuse by deliberately concentrating and inhaling the contents can be harmful or fatal.

SECTION 9 — PHYSICAL AND CHEMICAL PROPERTIES

PRODUCT WEIGHT	10.14 lb/gal	1215 g/l
SPECIFIC GRAVITY	1.22	
BOILING POINT	174 - 415 °F	78 - 212 °C
MELTING POINT	Not Available	
VOLATILE VOLUME	38%	
EVAPORATION RATE	Slower than ether	
VAPOR DENSITY	Heavier than air	
SOLUBILITY IN WATER	N.A.	

VOLATILE ORGANIC COMPOUNDS (VOC Theoretical - As Packaged)

2.77 lb/gal	332 g/l	Less Water and Federally Exempt Solvents
2.77 lb/gal	332 g/l	Emitted VOC

SECTION 10 — STABILITY AND REACTIVITY

STABILITY — Stable

CONDITIONS TO AVOID

None known.

INCOMPATIBILITY

None known.

HAZARDOUS DECOMPOSITION PRODUCTS

By fire: Carbon Dioxide, Carbon Monoxide

HAZARDOUS POLYMERIZATION

Will not occur

SECTION 11 — TOXICOLOGICAL INFORMATION

CHRONIC HEALTH HAZARDS

Methyl Ethyl Ketone may increase the nervous system effects of other solvents.

Reports have associated repeated and prolonged overexposure to solvents with permanent brain and nervous system damage.

Ethylbenzene is classified by IARC as possibly carcinogenic to humans (2B) based on inadequate evidence in humans and sufficient evidence in laboratory animals. Lifetime inhalation exposure of rats and mice to high ethylbenzene concentrations resulted in increases in

certain types of cancer, including kidney tumors in rats and lung and liver tumors in mice. These effects were not observed in animals exposed to lower concentrations. There is no evidence that ethylbenzene causes cancer in humans.

Crystalline Silica (Quartz, Cristobalite) is listed by IARC and NTP. Long term exposure to high levels of silica dust, which can occur only when sanding or abrading the dry film, may cause lung damage (silicosis) and possibly cancer.

TOXICOLOGY DATA

CAS No.	Ingredient Name			
100-41-4	**Ethylbenzene**			
		LC50 RAT	4HR	Not Available
		LD50 RAT		3500 mg/kg
1330-20-7	**Xylene**			
		LC50 RAT	4HR	5000 ppm
		LD50 RAT		4300 mg/kg
64742-94-5	**Medium Aromatic Hydrocarbons**			
		LC50 RAT	4HR	Not Available
		LD50 RAT		Not Available
91-20-3	**Naphthalene**			
		LC50 RAT	4HR	Not Available
		LD50 RAT		Not Available
78-93-3	**Methyl Ethyl Ketone**			
		LC50 RAT	4HR	Not Available
		LD50 RAT		2740 mg/kg
123-86-4	**n-Butyl Acetate**			
		LC50 RAT	4HR	2000 ppm
		LD50 RAT		13100 mg/kg
108-65-6	**1-Methoxy-2-Propanol Acetate**			
		LC50 RAT	4HR	Not Available
		LD50 RAT		8500 mg/kg
14808-60-7	**Quartz**			
		LC50 RAT	4HR	Not Available
		LD50 RAT		Not Available
112926-00-8	**Amorphous Precipitated Silica**			
		LC50 RAT	4HR	Not Available
		LD50 RAT		4999. mg/kg

SECTION 12 — ECOLOGICAL INFORMATION

ECOTOXICOLOGICAL INFORMATION

No data available.

SECTION 13 — DISPOSAL CONSIDERATIONS

WASTE DISPOSAL METHOD

Waste from this product may be hazardous as defined under the Resource Conservation and Recovery Act (RCRA) 40 CFR 261.
Waste must be tested for ignitability to determine the applicable EPA hazardous waste numbers.
Incinerate in approved facility. Do not incinerate closed container. Dispose of in accordance with Federal, State/Provincial, and Local regulations regarding pollution.

SECTION 14 — TRANSPORT INFORMATION

Multi-modal shipping descriptions are provided for informational purposes and do not consider container sizes. The presence of a shipping description for a particular mode of transport (ocean, air, etc.), does not indicate that the product is packaged suitably for that mode of transport. All packaging must be reviewed for suitability prior to shipment, and compliance with the applicable regulations is the sole responsibility of the person offering the product for transport.

US Ground (DOT)

5 Liters (1.3 Gallons) and Less may be Classed as CONSUMER COMMODITY, ORM-D
Larger Containers are Regulated as:
UN1263, PAINT, 3, PG II, (ERG#128)

DOT (Dept of Transportation) Hazardous Substances & Reportable Quantities

Xylenes (isomers and mixture) 100 lb RQ

Bulk Containers may be Shipped as (check reportable quantities):

UN1263, PAINT, 3, PG II, (ERG#128)

Canada (TDG)

UN1263, PAINT, CLASS 3, PG II, (ERG#128)

IMO

5 Liters (1.3 Gallons) and Less may be Shipped as Limited Quantity.
UN1263, PAINT, CLASS 3, PG II, (13 C c.c.), EmS F-E, S-E, ADR (D/E)

IATA/ICAO

UN1263, PAINT, 3, PG II

SECTION 15 — REGULATORY INFORMATION

SARA 313 *(40 CFR 372.65C)* SUPPLIER NOTIFICATION

CAS No.	CHEMICAL/COMPOUND	% by WT	% Element
100-41-4	Ethylbenzene	0.1	
1330-20-7	Xylene	1	
91-20-3	Naphthalene	0.1	

CALIFORNIA PROPOSITION 65

WARNING: This product contains chemicals known to the State of California to cause cancer and birth defects or other reproductive harm.

TSCA CERTIFICATION

All chemicals in this product are listed, or are exempt from listing, on the TSCA Inventory.

SECTION 16 — OTHER INFORMATION

This product has been classified in accordance with the hazard criteria of the Canadian Controlled Products Regulations (CPR) and the MSDS contains all of the information required by the CPR.

The above information pertains to this product as currently formulated, and is based on the information available at this time. Addition of reducers or other additives to this product may substantially alter the composition and hazards of the product. Since conditions of use are outside our control, we make no warranties, express or implied, and assume no liability in connection with any use of this information.

SHER-KEM™ ENAMEL COLOR SELECTOR

for fabricators and job shops

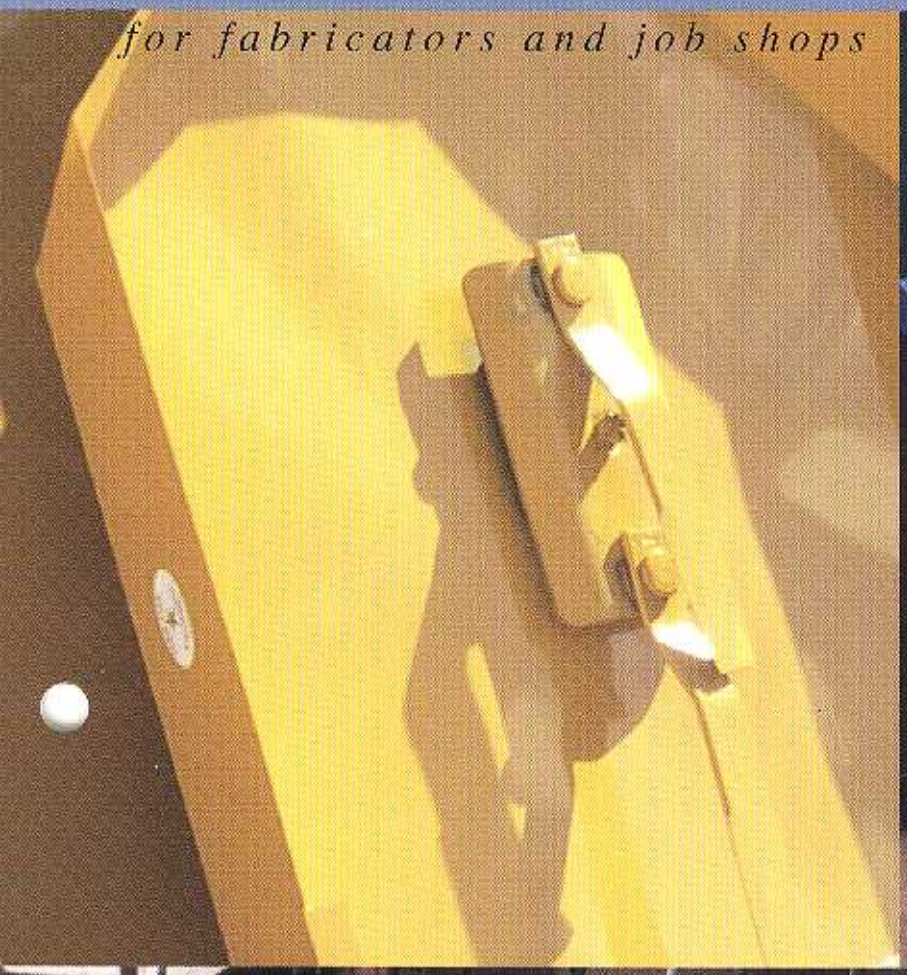

SHERWIN WILLIAMS

Heavy Equipment Colors

Extra White* SW 7401

Stardust White SW 7409

Implement Yellow* SW 7402

•Equipment Agricultural Yellow SW 7410

•Green Tractor SW 7415

•Equipment Green SW 7420

Equipment Yellow* SW 7403

Equipment Tan SW 7411

Motor Blue SW 7416

Blue Ribbon SW 7421

Implement Orange* SW 7404

•Heavy Equipment Orange SW 7412

•Allen Red SW 7417

•Machinery Red SW 7422

International Red* SW 7405

•Power Orange SW 7413

Frame Grey SW 7418

Industrial Charcoal SW 7423

Enviro Green* SW 7406

Architectural Bronze SW 7414

Dark Grey SW 7419

Dull Black SW 7424

Equipment Blue* SW 7407

Raven Black* SW 7408

*Package Colors

These colors approximate as closely as possible the actual paint colors.

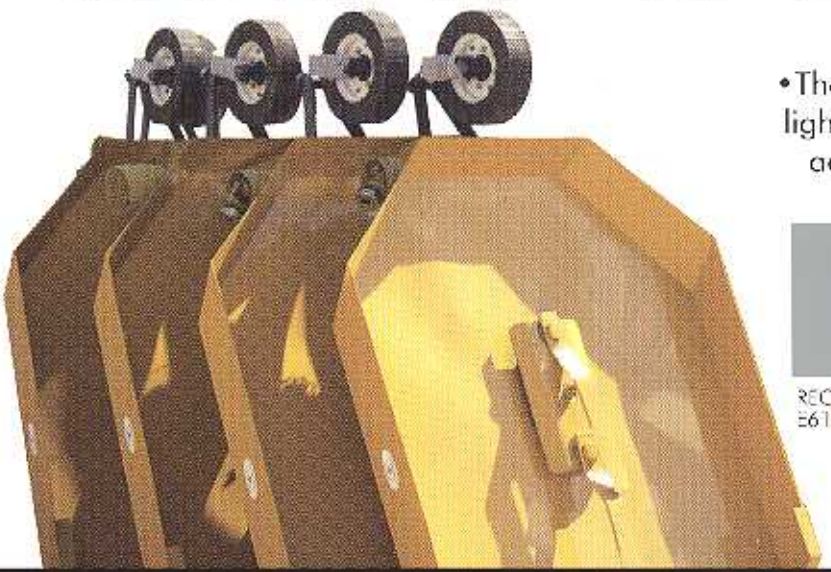

•These colors require a light colored primer to achieve final color.

RECOMMENDED PRIMER E61A400

General Metal Colors

Snobs White SW 7425	Bone White SW 7433	White Metal SW 7441	Machinery White SW 7447
HD Beige SW 7426	Beach Sand SW 7434	Surrey Beige SW 7442	Container Tan SW 7448
•Ultra Orange SW 7427	•General Orange SW 7435	Red Metal SW 7443	Driftwood SW 7449
Outdoor Green SW 7428	Rock Green SW 7436	Fence Green SW 7444	Pastel Blue SW 7450
•Bright Blue SW 7429	Legal Blue SW 7437	Electric Blue SW 7445	Navy Blue SW 7451
ANSI 70 Grey SW 7430	Overnight Grey SW 7438	New Rim Grey SW 7446	Wheel Grey SW 7452
ANSI 61 Grey SW 7431	All Grey SW 7439		
ANSI 49 Grey SW 7432	Wheel Black SW 7440		

At Sherwin-Williams, our combination of products and services makes it easy and fast to get the best metal
We supply spray equipment and parts, metal prep cleaners, primers and topcoat finishes that protect
enhance your products....adding lasting value to what you finish.

METAL CONTAINER COLORS

Packer Beige SW 7453

Clay SW 7459

•Federal Yellow SW 7454

•Container Orange SW 7460

Container Red SW 7455

Burgundy SW 7461

Container Brown SW 7456

Packer Brown SW 7462

WM Green SW 7457

Meridian Green SW 7463

Forest Green SW 7458

Container Green SW 7464

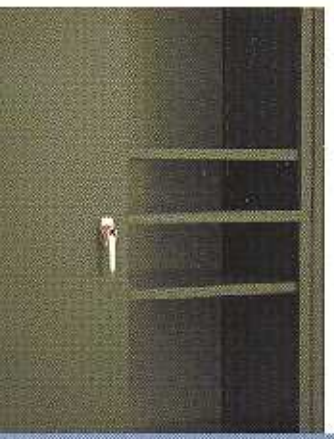

BFI Blue SW 7465

Warm White Gloss SW 7466

The colors featured in this selector provide a full range of clean, brilliant colors for HEAVY EQUIPMENT, GENERAL METALS, and METAL CONTAINER market applications. They represent the latest OEM (original equipment manufacturer) colors allowing you to select the color that's right for a specific job and customer. Custom colors can also be blended and matched at your local Sherwin-Williams store using the latest Sher Color™ computerized color matching technology. Sher-Color gives you the fastest most accurate color matching. Ask for **SHER-KEM™** HIGH GLOSS METAL FINISHING ENAMEL in one of our new factory applied colors.

Container Grey SW 7467

Gloss Black SW 7468

finishing solutions.
endure and

SHER-KEM™ Enamel Color Selector.
Offering colors that brand your products as the very best.

SHER-KEM HIGH GLOSS METAL FINISHING ENAMEL is designed as a premium topcoat that provides a long lasting bright finish. It's a super smooth finish with superior color brilliance and distinctness of image, creating a mirror like quality. It stands up to harsh environments with superior resistance to ultraviolet light exposure, petroleum based fuels, and surface abrasion. This factory applied finish is now available at your local Sherwin-Williams store, in the COLORS YOU WANT.

SHER-KEM™ *HIGH GLOSS METAL FINISHING ENAMEL*

Sherwin-Williams' comprehensive line of proven production finishes are backed by the largest distribution system in the industry, expert advice, fast delivery, and computerized color matching.

There's a location near you. For more information about our products and services, contact your local Sherwin-Williams store or representative.

Call 1 800 521 5979 to have a rep contact you.

www.sherwin-williams.com

SHERWIN WILLIAMS.

SHER-KEM™ ENAMEL COLOR SELECTOR

for fabricators and job shops

www.sherwin-williams.com

2005807
©2006 The Sherwin-Williams Company

BROWN-MINNEAPOLIS TANK
ENGINEERS - FABRICATORS - CONSTRUCTORS

DAILY COATING INSPECTION FORM

DATE: 4/30/15 M T W R F S SU | PG ___ OF ___

PROJECT / JOB #: 30883 Tank #1

LOCATION / CUSTOMER: Shop 1

DESCRIPTION OF WORK AREA

Blast interior Sp-10

HOLD POINT INSPECTIONS PREFORMED

- [✓] WEATHER AND SITE CONDITIONS
- [✓] PRE SURFACE PREP / CONDITION & CLEANLINESS
- [✓] SURFACE PREPARATION MONITORING
- [✓] POST SURFACE PREP CLEANLINESS & PROFILE
- [✓] APPLICATION MONITORING / WFT
- [ ] POST APPLICAITON
- [ ] POST CURE DFT & INTERIOR HOLIDAY TEST
- [✓] CORRECTIVE ACTION AND FINAL INSPECTION

SURFACE CONDITIONS

- [✓] NEW STEEL [ ] OLD STEEL [ ] GALV. STEEL [ ] MAINT.
- [✓] SALT CONTAMINATION: CL FE
- DEGREE OF CORROSION: Mill Scale
- [ ] PITS [ ] SHARP EDGES [ ] RUNS/SAGS [ ]MOISTURE [ ] OIL
- PAINTED SURFACE CONDITIONS:
- [ ] DRY TOUCH [ ] HANDLE [ ] RECOAT
- [ ]DRY OVERSPRAY [ ] PINHOLES [ ] HOLIDAYS
- [ ] OTHER:

AMBIENT CONDITIONS

TIME	10:15						
DRY BULB, F	61 o	o	o	o	o	o	
WET BULB, F	58 o	o	o	o	o	o	
% HUMIDITY	21 %	%	%	%	%	%	
SURFACE MIN/MAX							
WIND DIR/SPEED	3mph						

WEATHER CONDITIONS: Clear - Cool

SURFACE PREPARATION

START TIME: FINISH TIME: EST. SF

- [ ] SOLVENT CLEAN [ ] HAND TOOL [ ] POWER TOOL
- [ ] HP WASH PSI [ ] OTHER:
- [✓] ABRASIVE BLAST [✓] ABRASIVE TYPE Copper [ ] SAMPLE
- [✓] BLAST HOSE SIZE 2" [✓] NOZZLE SIZE / PSI #8
- [✓] AIR SUPPLY CFM 600 [✓] AIR SUPPLY CLEANLINESS
- [✓] WATER/OIL TRAP CHECK [✓] EQUIPMENT CONDITION CHECK

SURFACE CLEANLINESS & PROFILE MEASURMENT

- SPECIFIED SURFACE PREPARATION: SSPC SP-
- ACTUAL SURFACE PREPARATION: SSPC SP- ____
- PROFILE CHECK: ____ [ ] DISC [ ] TAPE [ ] GAUGE
- [ ] SPECIFIED ____ mils [ ] ACTUAL ____ mils
- [ ] Banana Gage BMR ____ mils

DRY FILM THICKNESS MEASURMENT

- Gage Type / Model: ____ Serial # ____
- [ ] Calibration Verified # DFT Readings ____ Est. SF ____
- Min. ____ mils Max ____ mils Ave. ____ mils

Additional Notes:

APPLICATION

START TIME: FINISH TIME: EST. SF

[ ] PRIMER [ ] INTERMEDIATE [ ] TOPCOAT [ ] TOUCHUP

Generic Type:		Qty Mixed:
Manuf:		Mix Ratio:
Prod. Name:		Mix Method:
Prod. #:		Strain/Screen [ ]
Color:		Material Temp. oF
Kit Size / Condition:		Sweat Time ____ min.
Shelf Life:		Pot Life ____ min.
Batch Numbers		Thinner #:
(A)		Qty. Added:
(B)		% Volume:
(C)		Spec. WFT: mils
Thinner		Actual WFT: mils

[ ] Airless [ ] Conventional [ ] Brush [ ] Roller [ ] Other

Pump / Pot	Hose Dia.	[ ] Air Check
Ratio / Size	Hose Lng.	[ ] SEP / Trap
GPM / CFM	Spray Gun	[ ] Filter
PSI:	Tip Sz.	[ ] Agitator

Inspector Signature

Testex Tapes

33

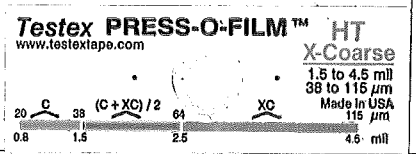

BROWN-MINNEAPOLIS TANK
ENGINEERS - FABRICATORS - CONSTRUCTORS

DAILY COATING INSPECTION FORM

DATE: 5/1/15 M T W R F S SU | PG ___ OF ___

PROJECT / JOB #: 30883 Tank #2

LOCATION / CUSTOMER: Shop 1

DESCRIPTION OF WORK AREA

Blast interior SP-10

HOLD POINT INSPECTIONS PREFORMED

- [✓] WEATHER AND SITE CONDITIONS
- [✓] PRE SURFACE PREP / CONDITION & CLEANLINESS
- [✓] SURFACE PREPARATION MONITORING
- [✓] POST SURFACE PREP CLEANLINESS & PROFILE
- [✓] APPLICATION MONITORING / WFT
- [ ] POST APPLICAITON
- [ ] POST CURE DFT & INTERIOR HOLIDAY TEST
- [✓] CORRECTIVE ACTION AND FINAL INSPECTION

SURFACE CONDITIONS

- [✓] NEW STEEL [ ] OLD STEEL [ ] GALV. STEEL [ ] MAINT.
- [✓] SALT CONTAMINATION: CL FE
- DEGREE OF CORROSION: Mill Scale
- [ ] PITS [ ] SHARP EDGES [ ] RUNS/SAGS [ ] MOISTURE [ ] OIL
- PAINTED SURFACE CONDITIONS:
- [ ] DRY TOUCH [ ] HANDLE [ ] RECOAT
- [ ] DRY OVERSPRAY [ ] PINHOLES [ ] HOLIDAYS
- [ ] OTHER:

AMBIENT CONDITIONS

TIME	1:07						
DRY BULB, F	81 o	o	o	o	o	o	
WET BULB, F	79 o	o	o	o	o	o	
% HUMIDITY	13 %	%	%	%	%	%	
SURFACE MIN/MAX							
WIND DIR/SPEED	5 NW						

WEATHER CONDITIONS: Clear - Good

SURFACE PREPARATION

START TIME: FINISH TIME: EST. SF

- [✓] SOLVENT CLEAN [ ] HAND TOOL [ ] POWER TOOL
- [ ] HP WASH ___ PSI [ ] OTHER:
- [✓] ABRASIVE BLAST [✓] ABRASIVE TYPE Copper [ ] SAMPLE
- [✓] BLAST HOSE SIZE 3/4" [✓] NOZZLE SIZE / PSI #8
- [✓] AIR SUPPLY CFM 600 [✓] AIR SUPPLY CLEANLINESS
- [✓] WATER/OIL TRAP CHECK [✓] EQUIPMENT CONDITION CHECK

SURFACE CLEANLINESS & PROFILE MEASURMENT

SPECIFIED SURFACE PREPARATION: SSPC SP-

ACTUAL SURFACE PREPARATION: SSPC SP- ___

PROFILE CHECK: ___ [ ] DISC [ ] TAPE [ ] GAUGE

[ ] SPECIFIED ___ mils [ ] ACTUAL ___ mils

[ ] Banana Gage BMR ___ mils

DRY FILM THICKNESS MEASURMENT

Gage Type / Model: ___ Serial # ___

[ ] Calibration Verified # DFT Readings ___ Est. SF

Min. ___ mils Max ___ mils Ave. ___ mils

Additional Notes:

APPLICATION

START TIME: FINISH TIME: EST. SF

[ ] PRIMER [ ] INTERMEDIATE [ ] TOPCOAT [ ] TOUCHUP

Generic Type:	Qty Mixed:
Manuf:	Mix Ratio:
Prod. Name:	Mix Method:
Prod. #:	Strain/Screen [ ]
Color:	Material Temp. ___ oF
Kit Size / Condition:	Sweat Time ___ min.
Shelf Life:	Pot Life ___ min.
Batch Numbers	Thinner #:
(A)	Qty. Added:
(B)	% Volume:
(C)	Spec. WFT: mils
Thinner	Actual WFT: mils

[ ] Airless [ ] Conventional [ ] Brush [ ] Roller [ ] Other

Pump / Pot	Hose Dia.	[ ] Air Check
Ratio / Size	Hose Lng.	[ ] SEP / Trap
GPM / CFM	Spray Gun	[ ] Filter
PSI:	Tip Sz.	[ ] Agitator

Inspector Signature

Testex Tapes

3.5

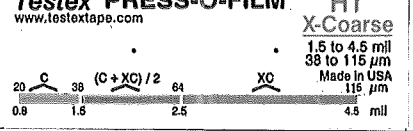

BROWN-MINNEAPOLIS TANK
ENGINEERS - FABRICATORS - CONSTRUCTORS

DAILY COATING INSPECTION FORM

DATE: 5/16/15 M T (W) R F S SU | PG ___ OF ___

PROJECT / JOB #: 30883 - 1 - 2

LOCATION / CUSTOMER: Shop / Ft. Henry

DESCRIPTION OF WORK AREA

Blast exterior SP-6
interior
Touch up exterior too.

HOLD POINT INSPECTIONS PREFORMED

- [✓] WEATHER AND SITE CONDITIONS
- [✓] PRE SURFACE PREP / CONDITION & CLEANLINESS
- [✓] SURFACE PREPARATION MONITORING
- [✓] POST SURFACE PREP CLEANLINESS & PROFILE
- [✓] APPLICATION MONITORING / WFT
- [ ] POST APPLICAITON
- [ ] POST CURE DFT & INTERIOR HOLIDAY TEST
- [✓] CORRECTIVE ACTION AND FINAL INSPECTION

SURFACE CONDITIONS

- [✓] NEW STEEL [ ] OLD STEEL [ ] GALV. STEEL [ ] MAINT.
- [✓] SALT CONTAMINATION: CL FE
- DEGREE OF CORROSION: Millscale
- [ ] PITS [ ] SHARP EDGES [ ] RUNS/SAGS [ ] MOISTURE [ ] OIL
- PAINTED SURFACE CONDITIONS:
- [ ] DRY TOUCH [ ] HANDLE [ ] RECOAT
- [ ] DRY OVERSPRAY [ ] PINHOLES [ ] HOLIDAYS
- [ ] OTHER:

AMBIENT CONDITIONS

TIME	10:00						
DRY BULB, F	63 o	o	o	o	o	o	
WET BULB, F	59 o	o	o	o	o	o	
% HUMIDITY	49 %	%	%	%	%	%	
SURFACE MIN/MAX							
WIND DIR/SPEED	12mph						

WEATHER CONDITIONS: Clear - Good

SURFACE PREPARATION

START TIME: FINISH TIME: EST. SF

- [ ] SOLVENT CLEAN [ ] HAND TOOL [ ] POWER TOOL
- [ ] HP WASH PSI [ ] OTHER:
- [✓] ABRASIVE BLAST [✓] ABRASIVE TYPE Copper [ ] SAMPLE
- [✓] BLAST HOSE SIZE 2" [✓] NOZZLE SIZE / PSI #8
- [✓] AIR SUPPLY CFM Cfm [✓] AIR SUPPLY CLEANLINESS
- [✓] WATER/OIL TRAP CHECK [✓] EQUIPMENT CONDITION CHECK

SURFACE CLEANLINESS & PROFILE MEASURMENT

- SPECIFIED SURFACE PREPARATION: SSPC SP-
- ACTUAL SURFACE PREPARATION: SSPC SP- ____
- PROFILE CHECK: ____ [ ] DISC [ ] TAPE [ ] GAUGE
- [ ] SPECIFIED ____ mils [ ] ACTUAL ____ mils
- [ ] Banana Gage BMR ____ mils

DRY FILM THICKNESS MEASURMENT

- Gage Type / Model: ____ Serial # ____
- [ ] Calibration Verified # DFT Readings ____ Est. SF
- Min. ____ mils Max ____ mils Ave. ____ mils
- Additional Notes:

APPLICATION

START TIME: FINISH TIME: EST. SF

[ ] PRIMER [ ] INTERMEDIATE [ ] TOPCOAT [ ] TOUCHUP

Generic Type:	Qty Mixed:
Manuf:	Mix Ratio:
Prod. Name:	Mix Method:
Prod. #:	Strain/Screen [ ]
Color:	Material Temp. oF
Kit Size / Condition:	Sweat Time ____ min.
Shelf Life:	Pot Life ____ min.
Batch Numbers	Thinner #:
(A)	Qty. Added:
(B)	% Volume:
(C)	Spec. WFT: mils
Thinner	Actual WFT: mils

[ ] Airless [ ] Conventional [ ] Brush [ ] Roller [ ] Other

Pump / Pot	Hose Dia.	[ ] Air Check
Ratio / Size	Hose Lng.	[ ] SEP / Trap
GPM / CFM	Spray Gun	[ ] Filter
PSI:	Tip Sz.	[ ] Agitator

Inspector Signature

Testex Tapes

3.4

Testex PRESS-O-FILM™ www.testextape.com HT X-Coarse 1.5 to 4.5 mil 38 to 115 µm Made in USA

20 C 39 (C+XC)/2 64 XC 115 µm

0.8 1.5 2.5 4.5 mil

BROWN-MINNEAPOLIS TANK
ENGINEERS - FABRICATORS - CONSTRUCTORS

DAILY COATING INSPECTION FORM

DATE: 5/11/15 (M) T W R F S SU | PG ___ OF ___

PROJECT / JOB #: 30883 Tank #2

LOCATION / CUSTOMER: Shop / Elkhorn

DESCRIPTION OF WORK AREA

Paint
Spray interior Sherwin Williams
Macropoxy 646 PW

Spray Exterior Sherwin Williams
Macropoxy 646

HOLD POINT INSPECTIONS PREFORMED

[✓] WEATHER AND SITE CONDITIONS
[✓] PRE SURFACE PREP / CONDITION & CLEANLINESS
[✓] SURFACE PREPARATION MONITORING
[✓] POST SURFACE PREP CLEANLINESS & PROFILE
[✓] APPLICATION MONITORING / WFT
[ ] POST APPLICAITON
[ ] POST CURE DFT & INTERIOR HOLIDAY TEST
[✓] CORRECTIVE ACTION AND FINAL INSPECTION

SURFACE CONDITIONS

[ ] NEW STEEL [ ] OLD STEEL [ ] GALV. STEEL [ ] MAINT.
[ ] SALT CONTAMINATION: CL ___ FE ___
DEGREE OF CORROSION:
[ ] PITS [ ] SHARP EDGES [ ] RUNS/SAGS [ ]MOISTURE [ ] OIL
PAINTED SURFACE CONDITIONS:
[ ] DRY TOUCH [ ] HANDLE [ ] RECOAT
[ ]DRY OVERSPRAY [ ] PINHOLES [ ] HOLIDAYS
[ ] OTHER:

AMBIENT CONDITIONS

TIME	0807						
DRY BULB, F	60	o	o	o	o	o	
WET BULB, F	57	o	o	o	o	o	
% HUMIDITY	21	%	%	%	%	%	
SURFACE MIN/MAX	70'						
WIND DIR/SPEED	5mph						

WEATHER CONDITIONS: Clear - Good

SURFACE PREPARATION

START TIME: ___ FINISH TIME: ___ EST. SF ___
[ ] SOLVENT CLEAN [ ] HAND TOOL [ ] POWER TOOL
[ ] HP WASH ___ PSI [ ] OTHER:
[ ] ABRASIVE BLAST [ ] ABRASIVE TYPE ___ [ ] SAMPLE
[ ] BLAST HOSE SIZE ___ [ ] NOZZLE SIZE / PSI ___
[ ] AIR SUPPLY CFM ___ [ ] AIR SUPPLY CLEANLINESS
[ ] WATER/OIL TRAP CHECK [ ] EQUIPMENT CONDITION CHECK

SURFACE CLEANLINESS & PROFILE MEASURMENT

SPECIFIED SURFACE PREPARATION: SSPC SP-
ACTUAL SURFACE PREPARATION: SSPC SP- ___
PROFILE CHECK: ___ [ ] DISC [ ] TAPE [ ] GAUGE
[ ] SPECIFIED ___ mils [ ] ACTUAL ___ mils
[ ] Banana Gage BMR ___ mils

DRY FILM THICKNESS MEASURMENT

Gage Type / Model: ___ Serial # ___
[ ] Calibration Verified # DFT Readings ___ Est. SF ___
Min. ___ mils Max ___ mils Ave. ___ mils
Additional Notes: Sherwin Williams Macropoxy
A) XM0125K5
B) XM2624BK
Reduce # 15

APPLICATION

START TIME: ___ FINISH TIME: ___ EST. SF ___
[ ] PRIMER [ ] INTERMEDIATE [ ] TOPCOAT [ ] TOUCHUP

Generic Type:		Qty Mixed:
Manuf: Sherwin Williams		Mix Ratio: 1-1
Prod. Name: Macropoxy		Mix Method: Paint Shaker
Prod. #: 646 PW		Strain/Screen [✓]
Color: White		Material Temp. ___ oF
Kit Size / Condition: 10 gallon		Sweat Time ___ min.
Shelf Life:		Pot Life ___ min.
Batch Numbers		Thinner #: 15
(A) XM0794UE		Qty. Added:
(B) XM0225LG		% Volume:
(C)		Spec. WFT: ___ mils
Thinner # 15		Actual WFT: ___ mils

[✓] Airless [ ] Conventional [ ] Brush [ ] Roller [ ] Other

Pump / Pot	Hose Dia. 1/4	[ ] Air Check
Ratio / Size	Hose Lng. 100	[✓] SEP / Trap
GPM / CFM	Spray Gun	[✓] Filter
PSI: 3000	Tip Sz. 517	[ ] Agitator

Inspector Signature

Testex Tapes

BROWN-MINNEAPOLIS TANK
ENGINEERS - FABRICATORS - CONSTRUCTORS

DAILY COATING INSPECTION FORM

DATE: 5/12/15 M T W R F S SU | PG ___ OF ___

PROJECT / JOB #: 30883 Tanks #1, #2

LOCATION / CUSTOMER: Shop / Fiteway

DESCRIPTION OF WORK AREA

Paint
Spray interior Sherwin Williams
Macropoxy 646 PW Light Blue

Spray exterior Sherwin Williams
Acrolon 218 HS White

HOLD POINT INSPECTIONS PREFORMED

- [X] WEATHER AND SITE CONDITIONS
- [X] PRE SURFACE PREP / CONDITION & CLEANLINESS
- [X] SURFACE PREPARATION MONITORING
- [X] POST SURFACE PREP CLEANLINESS & PROFILE
- [X] APPLICATION MONITORING / WFT
- [ ] POST APPLICAITON
- [ ] POST CURE DFT & INTERIOR HOLIDAY TEST
- [X] CORRECTIVE ACTION AND FINAL INSPECTION

SURFACE CONDITIONS

- [ ] NEW STEEL [ ] OLD STEEL [ ] GALV. STEEL [ ] MAINT.
- [ ] SALT CONTAMINATION: CL ___ FE ___
- DEGREE OF CORROSION:
- [ ] PITS [ ] SHARP EDGES [ ] RUNS/SAGS [ ] MOISTURE [ ] OIL
- PAINTED SURFACE CONDITIONS:
- [ ] DRY TOUCH [ ] HANDLE [ ] RECOAT
- [ ] DRY OVERSPRAY [ ] PINHOLES [ ] HOLIDAYS
- [ ] OTHER:

AMBIENT CONDITIONS

TIME	9:12						
DRY BULB, F	60 o	o	o	o	o	o	o
WET BULB, F	56 o	o	o	o	o	o	o
% HUMIDITY	40%	%	%	%	%	%	%
SURFACE MIN/MAX	73'						
WIND DIR/SPEED	2mph						

WEATHER CONDITIONS: windy - OK

SURFACE PREPARATION

START TIME: ___ FINISH TIME: ___ EST. SF ___

- [ ] SOLVENT CLEAN [ ] HAND TOOL [ ] POWER TOOL
- [ ] HP WASH ___ PSI [ ] OTHER:
- [ ] ABRASIVE BLAST [ ] ABRASIVE TYPE ___ [ ] SAMPLE
- [ ] BLAST HOSE SIZE ___ [ ] NOZZLE SIZE / PSI
- [ ] AIR SUPPLY CFM ___ [ ] AIR SUPPLY CLEANLINESS
- [ ] WATER/OIL TRAP CHECK [ ] EQUIPMENT CONDITION CHECK

SURFACE CLEANLINESS & PROFILE MEASURMENT

- SPECIFIED SURFACE PREPARATION: SSPC SP-
- ACTUAL SURFACE PREPARATION: SSPC SP- ___
- PROFILE CHECK: ___ [ ] DISC [ ] TAPE [ ] GAUGE
- [ ] SPECIFIED ___ mils [ ] ACTUAL ___ mils
- [ ] Banana Gage BMR ___ mils

DRY FILM THICKNESS MEASURMENT

Gage Type / Model: ___ Serial # ___

[ ] Calibration Verified # DFT Readings ___ Est. SF ___

Min. ___ mils Max ___ mils Ave. ___ mils

Additional Notes: Sherwin Williams Acrolon 218
A3 XM0905AN
B3 M0575XU
Reducer #15

APPLICATION

START TIME: ___ FINISH TIME: ___ EST. SF ___

[ ] PRIMER [ ] INTERMEDIATE [ ] TOPCOAT [ ] TOUCHUP

Generic Type:		Qty Mixed:
Manuf: Sherwin Williams		Mix Ratio: 1-1
Prod. Name: MacroPoxy		Mix Method: Power
Prod. #: 646 PW		Strain/Screen [X]
Color: Light Blue		Material Temp. 68 oF
Kit Size / Condition: 10 gallon		Sweat Time ___ min.
Shelf Life:		Pot Life ___ min.
Batch Numbers		Thinner #: 15
(A)		Qty. Added:
(B) XM0263-413K		% Volume:
(C)		Spec. WFT: mils
Thinner #15		Actual WFT: mils

[X] Airless [ ] Conventional [ ] Brush [ ] Roller [ ] Other

Pump / Pot	Hose Dia. 1/4	[X] Air Check
Ratio / Size	Hose Lng. 100	[X] SEP / Trap
GPM / CFM	Spray Gun	[X] Filter
PSI: 3000	Tip Sz. 5/19	[ ] Agitator

Inspector Signature

Testex Tapes

BROWN-MINNEAPOLIS TANK
ENGINEERS - FABRICATORS - CONSTRUCTORS

TANK PRESSURE TEST LOG

PROJECT:

JOB NO.: BMT # 30883 ~ 110

INSPECTOR: TERRY SHUGHART

SUMMARY OF TEST PROCEDURE:

- All tank openings will be plugged or covered.
- Tank will be air tested to 1½ times the maximum design pressure for the tank.
- Soap suds will be applied to all shell, bottom, roof and attachment welds to detect leaks.
- Any weld defects will be repaired and the tank re-tested.
- Air pressure will be released before removal of plugs and covers.

TANK NUMBER	TEST DATE	INITIAL PRESSURE AT START TIME		PRESSURE AT INTERVAL		PASS	FAIL	REPAIRS REQUIRED
		TIME	PSI	TIME	PSI			
TK 1	5-5-15	10 AM	3PSI	11 AM	3PSI	✓		NO Repairs
TANK RE-TEST (IF REQUIRED)								
	TEST DATE	INITIAL PRESSURE AT START TIME		PRESSURE AT INTERVAL		PASS	FAIL	

COMMENTS: TESTED RE PADS @ 15 PSI SOAP TEST

8301 Broadway Blvd. SE, Albuquerque, NM 87105 • (505) 563-4800 • Fax (505) 563-4799

BROWN-MINNEAPOLIS TANK
ENGINEERS - FABRICATORS - CONSTRUCTORS

TANK PRESSURE TEST LOG

PROJECT:

JOB NO.: BMT # 30883 – 116

INSPECTOR: TERRY SHUGHART

SUMMARY OF TEST PROCEDURE:

- All tank openings will be plugged or covered.
- Tank will be air tested to 1½ times the maximum design pressure for the tank.
- Soap suds will be applied to all shell, bottom, roof and attachment welds to detect leaks.
- Any weld defects will be repaired and the tank re-tested.
- Air pressure will be released before removal of plugs and covers.

TANK NUMBER	TEST DATE	INITIAL PRESSURE AT START TIME		PRESSURE AT INTERVAL		PASS	FAIL	REPAIRS REQUIRED
		TIME	PSI	TIME	PSI			
TK 2	5-7-15	8 AM	3 PSI	9:15 AM	3 PSI	✓		NO Repairs
TANK RE-TEST (IF REQUIRED)								
	TEST DATE	INITIAL PRESSURE AT START TIME		PRESSURE AT INTERVAL		PASS	FAIL	

COMMENTS: TESTED REPADS @ 15 PSI
SOAP TEST

8301 Broadway Blvd. SE, Albuquerque, NM 87105 • (505) 563-4800 • Fax (505) 563-4799

Fliteway Technologies, Inc.

Feed Pump Skid

2129 East Birchwood Ave. Cudahy, WI 53110

(414) 483-5600 1-800-236-3580 FAX (414) 483-1957

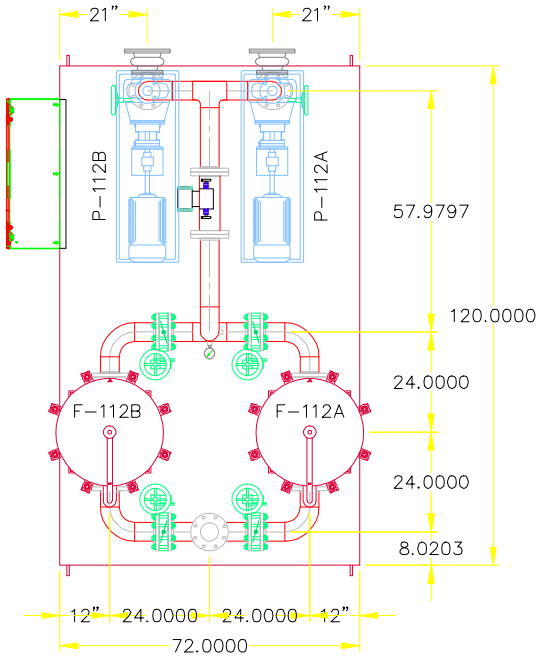

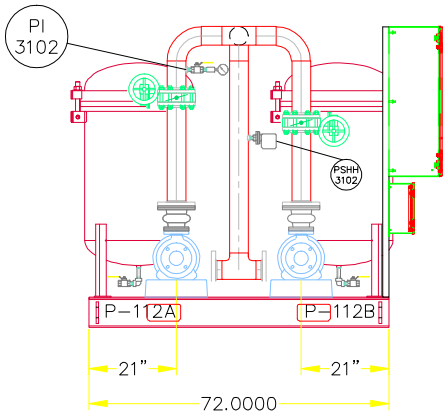

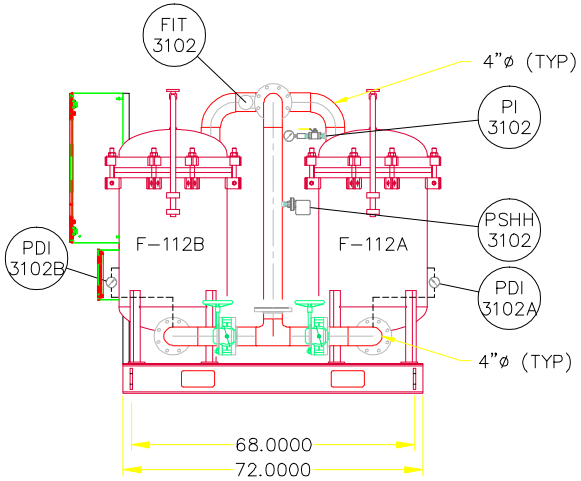

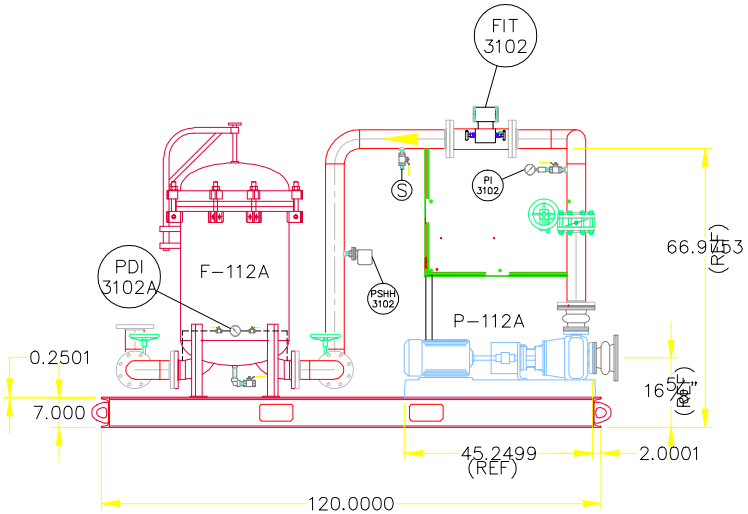

THIS DRAWING IS THE PROPERTY OF
Fliteway Technologies, Inc
2129 EAST BIRCHWOOD AVE
CUDAHY WI, 53110
414.483.5600 414.483.1957
AND IS NOT TO BE REPRODUCED
WITHOUT WRITTEN PERMISSION

6'X10' FEED PUMP SKID

CB&I WATER TREATMENT

3/19/15	SIZE	FSCM NO.	DWG NO. Q14508
	SCALE NONE		SHEET 1 OF 1

CRANE ENGINEERING SALES

February 9, 2015

Proposal No: TS14-12-11 01
Item No: Feed Pumps

MODEL:3196 STi SIZE:2x3-6 QTY: 1

i-FRAME™

Operating Conditions

SERVICE

LIQUID	Groundwater Temp. 70.0 deg F, SP.GR 1.000, Viscosity 1.000 cp, rated / max. suction pressure 0.0 / 0.0 psi g
CAPACITY Rated	200.0 gpm
HEAD	100.0 (ft)

Performance at 3500 RPM per HI 14.6 1B basis power

PUBLISHED EFFY	66.5% (CDS)
RATED EFFY	63.5% with contract seal
RATED POWER	8.4 hp (incl. Mech. seal drag 0.37). (Run out 10.7 hp)
NPSHR	10.0 ft
DISCH PRESSURE (R)	45.9 psi g (50.0 psi g @ Shut off) based on 0.0 psi g rated suction pressure
PERF. CURVE	2228-6 (Rotation CW viewed from coupling end)
SHUT OFF HEAD	115.6 ft
MIN. FLOW	Continuous Stable: 35.5 gpm Hydraulic: 35.5 gpm Thermal: N/A

Materials

CONSTRUCTION	Ductile iron
CASING	Ductile iron (max.casing pressure @ rated temperature 250.0 psi g)
ST.BOX COVER	Ductile iron
IMPELLER	Ductile iron - Open (5.3750 in rated, max=6.0620 in, min=4.0000 in)
CASING GASKETS	Aramid Fiber with EPDM and Silicate Filler
IMPELLER O-RING	Teflon
SHAFT MATERIAL	SAE 4140
SHAFT SLEEVE	316SS
LUBRICATION	Flood oil
SEAL CHAMBER	Taper bore plus with axial ribs
GLAND	316SS Flush quench and drain
BEARINGS	6207 (Inboard) 5306 (Outboard)
COUPLING	Rexnord - Omega Rex Elastomer- ES-4 (standard orange element)-S.F. 1.00
COUPLING GUARD	Carbon steel
BASEPLATE	Cast iron camber top E00025A

Sealing Method

MECHANICAL SEAL	John Crane 5611Q X(1)F(50)1XO(58)1 (Carbon vs Silicon Carbide with Viton) - (Cartridge - Single)

Flanges

150# flat face

Frame Connections

Bearing frame drain

Frame cooler access

Oil fill connection

Frame features

Ductile iron frame adapter

Inpro VBXX-D Hybrid Bearing Isolators

Premium Severe Duty Thrust Bearings

i- ALERT™ Condition Monitor

Assembly and Testing

Casing & Cover - Standard hydro test

Impeller balanced to ISO G6.3

Painting

Goulds Blue standard painting

Warranty

5 Year Extended Warranty (All the components, manufactured by ITT Goulds pumps, in the liquid end and power end are covered).

Driver : Electric motor Manufacturer : Pump mfg's Choice

FURNISHED BY	Pump mfg	MOUNTED BY	Pump mfg
RATING	15.0 hp (11.2 KW)	ENCLOSURE	TEFC - Premium Efficiency
PHASE/FREQ/VOLTS	3/60 Hz/460	SPEED	3600 RPM
INSULATION/SF	F/1.15	FRAME	254T

Freight Terms

Freight invoices received from ITT partner carriers are proprietary information and cannot be divulged for any reason. ITT will provide an ITT generated freight invoice upon request.

Weights and Measurements

TOTAL NET UNIT WEIGHT / VOLUME	**490.5 lb / 7.2 ft³**
TOTAL GROSS UNIT WEIGHT / GROSS VOLUME	**604.5 lb / 22.8 ft³**

Program Version 1.51.0.1

Drawing Revision Limit

Drawings returned with status approved as noted or revise and re-submit will be corrected and resubmitted only once. Thereafter, additional comments or revisions to these drawings will incur a charge of $250 per drawing.

Our offer does not include specific review and incorporation of any Statutory or Regulatory Requirements and the offer is limited to the requirements of the design specifications. Should any Statutory or Regulatory requirements need to be reviewed and incorporated then the Customer is responsible to identify those and provide copies for review and revision of our offer.

Our quotation is offered in accordance with our comments and exceptions identified in our proposal.

Click here to download the pump Bulletin

Click here to learn more about the new i-FRAME™

GOULDS PUMPS

OUTLINE DRAWING

Model 3196 STi
Size 2x3-6

ITT

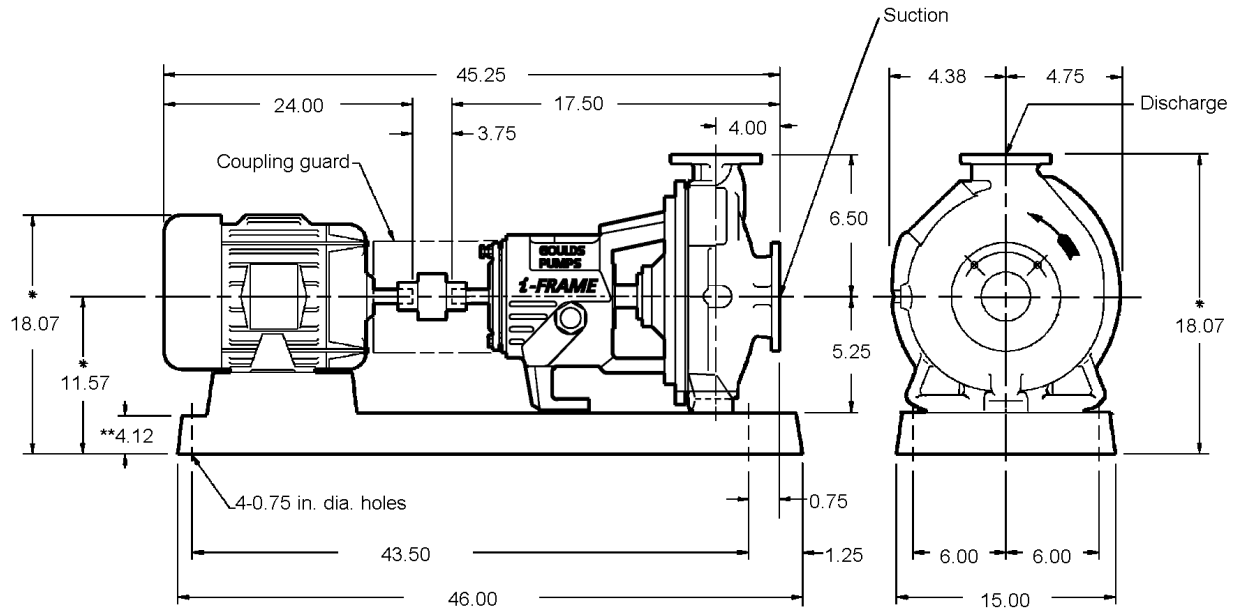

Pump Specification

SUCT.FLANGE SIZE	*3"*	DRILLING	*ANSI 150#*	FACING	*FF*	FINISH	*SERRATED*
DISCH.FLANGE SIZE	*2"*	DRILLING	*ANSI 150#*	FACING	*FF*	FINISH	*SERRATED*
PUMP ROTATION (LOOKING AT PUMP FROM MOTOR)			*CW*				
TYPE OF LUBRICATION	*FLOOD OIL*					COOLED	*NO*
TYPE OF STUFFING BOX	*TAPER BORE PLUS WITH AXIAL RIBS*					COOLED	*NO*
TYPE OF SEALING	*MECHANICAL SEAL*						

Weights and Measurements

PUMP	*95.0 lb*
MOTOR/CPLG	*270.0/5.5 lb*
BASEPLATE	*120.0 lb*
TOTAL	*490.5 lb*
GR.VOLUME w/BOX	*22.8 ft³*
GR.WEIGHT w/BOX	*604.5 lb*

Motor Specification

MOTOR BY	*PUMP MFG*	MOUNT BY	*PUMP MFG*	MFG.	*PUMP MFG'S CHOICE*
FRAME	*254T*	POWER	*15.0 hp*	RPM	*3600*
PHASE	*3*	FREQUENCY	*60 HZ*	VOLTS	*460*
INSULATION	*F*	S.F.	*1.15*		
ENCLOSURE	*TEFC - PREMIUM EFFICIENCY*				

Notes and References

- MTR DIMENSIONS ARE APPROXIMATE
- INSTALL FOUNDATION BOLTS IN PIPE SLEEVES
- ALLOW FROM 0.75 to 1.50in. FOR GROUTING. SEE INSTRUCTION BOOK FOR DETAILS.

*Tolerance is -0.50 +0

** Foundation bolt grip thickness

Auxiliary Specification

COUPLING BY	*PUMP MFG*	CPLG TYPE	*REXNORD OMEGA REX ELASTOMER- ES-4 (STANDARD ORANGE*
CPL GUARD BY	*PUMP MFG*	CPLG GUARD MATL	*CARBON STEEL*
BASEPLATE	*CAST IRON CAMBER TOP E00025A*		
MECH.SEAL	*JOHN CRANE 5611Q X(1)F(50)1XO(58)1 (CARBON VS SILICON CARBIDE WITH VITON)*		

FOR PUMP TAPPED OPENINGS REFER TO DWG.:
TTS14-12-11 01 / Feed Pumps

DRAWING IS FOR REFERENCE ONLY.
NOT CERTIFIED FOR CONSTRUCTION UNLESS SIGNED.

Customer: CRANE ENGINEERING SALES
Serial No:
Customer P.O. No:
Item No: Feed Pumps
End User: .
Service:

Copyright 2015
ITT Corp

All dimensions are in inches.
Drawing is not to scale
Weights (lbs) are approximate

DRAWING NO TS14-12-11 01/Feed Pumps

Model: 3196	Size: 2x3-6	Group: STi	60Hz	RPM: 3500	Stages: 1

Job/Inq.No. :
Purchaser : CRANE ENGINEERING SALES
End User: .
Item/Equip.No. : Feed Pumps
Service :
Order No. :

Issued by : Tom Schroeder
Quotation No. : TS14-12-11 01
Certified By :

Date : 02/09/2015
Rev. : 0

Operating Conditions

Liquid:	Groundwater	Published Efficiency:	66.5 %
Temp.:	70.0 deg F	Rated Pump Efficiency:	63.5 %
S.G./Visc.:	1.000/1.000 cp	Rated Total Power:	8.4 hp
Flow:	200.0 gpm	Non-Overloading Power:	10.7 hp
TDH:	100.0 ft	Imp. Dia. First 1 Stg(s):	5.3750 in
NPSHa:	0.0 ft	NPSHr:	10.0 ft
Solid size:		Shut off Head:	115.6 ft
% Susp. Solids (by wtg):		Vapor Press:	

Pump Performance

Suction Specific Speed:	8,473 gpm(US) ft
Min. Hydraulic Flow:	35.5 gpm
Min. Thermal Flow:	N/A
Max. Solids Size:	0.3750 in

Notes: 1. Power and efficiency losses are not reflected on the curve below.
2. Elevated temperature effects on performance are not included.

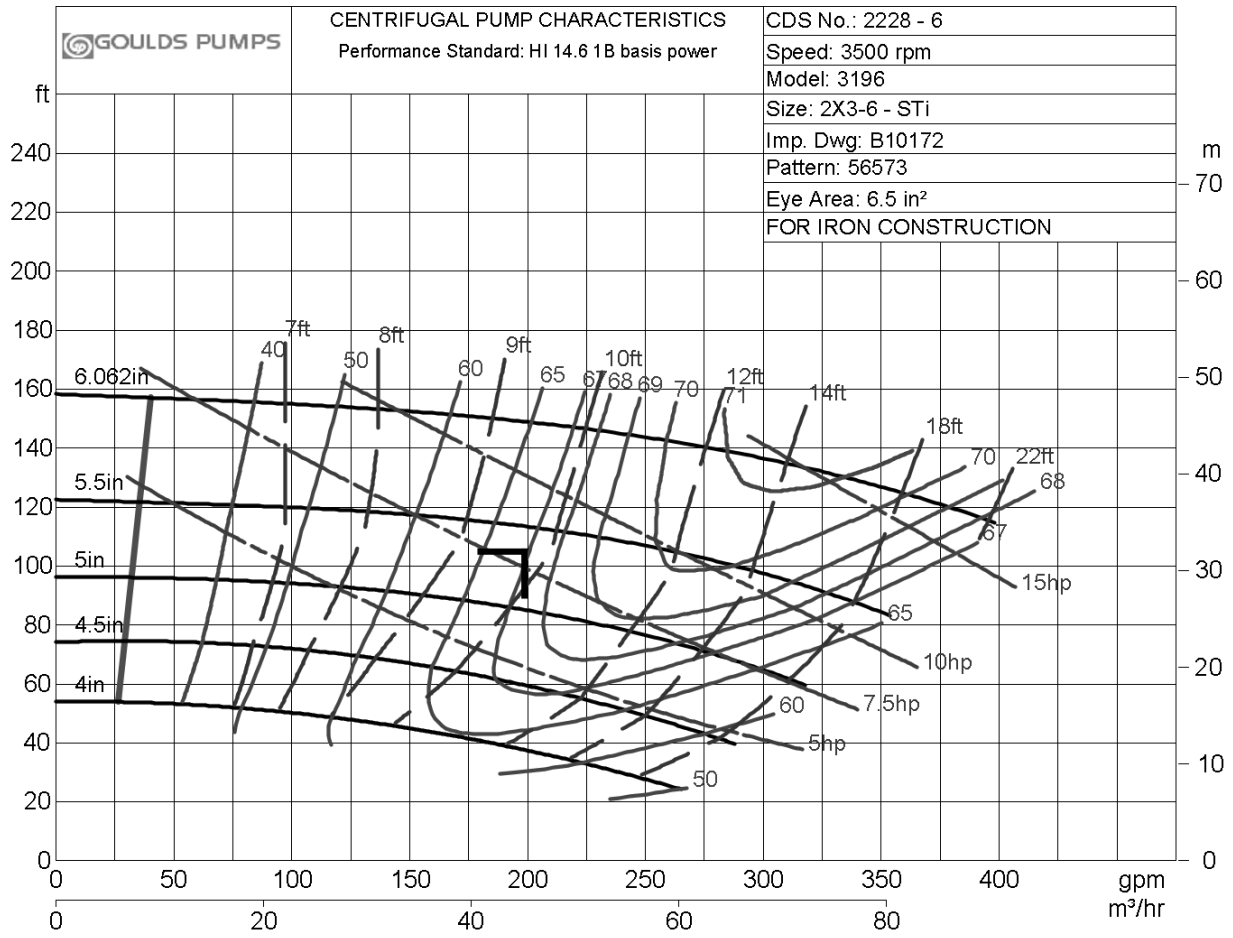

ITT

GOULDS PUMPS

Installation, Operation, and Maintenance Manual

Model 3196 i-FRAME

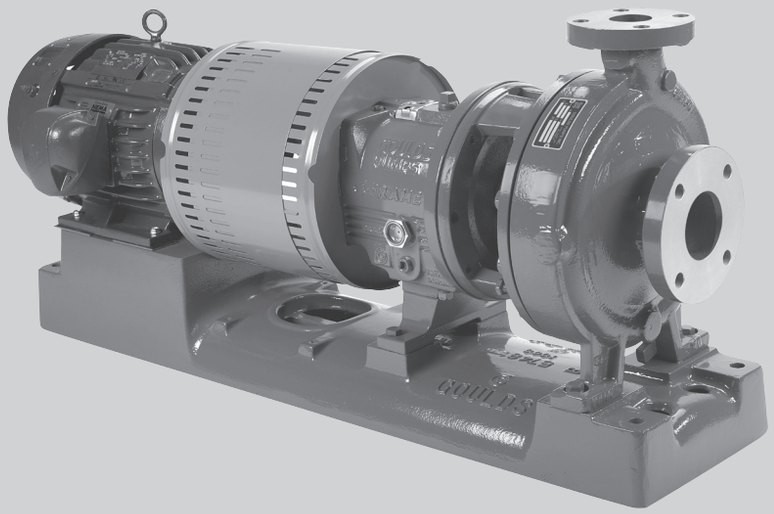

ITT

ENGINEERED FOR LIFE

Table of Contents

Introduction and Safety 4
Introduction 4
Safety 4
Safety terminology and symbols 5
Environmental safety 5
User safety 6
Ex-approved products 8
Product approval standards 8
Product warranty 9

Transportation and Storage 11
Inspect the delivery 11
Inspect the package 11
Inspect the unit 11
Transportation guidelines 11
Pump handling 11
Lifting methods 11
Storage guidelines 14
Pump storage requirements 14
Frostproofing 15

Product Description 16
General description 3196 16
Part description 3196 17
General description i-ALERT™ Condition Monitor 18
Nameplate information 19

Installation 22
Preinstallation 22
Pump location guidelines 22
Foundation requirements 22
Baseplate-mounting procedures 23
Prepare the baseplate for mounting 23
Install the baseplate using shims or wedges 23
Install the baseplate using jackscrews 24
Install the baseplate using spring mounting 27
Install the baseplate using stilt mounting 28
Baseplate-leveling worksheet 30
Install the pump, driver, and coupling 31
Pump-to-driver alignment 31
Alignment checks 31
Permitted indicator values for alignment checks 32
Alignment measurement guidelines 32
Attach the dial indicators for alignment 32
Pump-to-driver alignment instructions 33
C-face adapter 36
Grout the baseplate 36
Piping checklists 37
General piping checklist 37
Suction-piping checklist 39
Discharge piping checklist 41

Commissioning, Startup, Operation, and Shutdown 43
Preparation for startup 43
Remove the coupling guard 44
Check the rotation - Frame Mounted 46
Impeller-clearance check 46
Impeller clearances (3196 and HT 3196) 47
Impeller-clearance setting 47
Set the impeller clearance - dial indicator method (all except CV 3196) 47
Set the impeller clearance - feeler gauge method (all except CV 3196) 48
Couple the pump and driver 49
Install the coupling guard 50
Bearing lubrication 54
Shaft-sealing options 56
Mechanical seal options 56
Connection of sealing liquid for mechanical seals 56
Packed stuffing box option 57
Connection of sealing liquid for a packed stuffing box 57
Dynamic-seal option 57
Set an elastomeric face seal 58
Pump priming 58
Prime the pump with the suction supply above the pump 58
Prime the pump with the suction supply below the pump 59
Other methods of priming the pump 60
Start the pump 60
Activate the i-ALERT Condition Monitor 61
i-ALERT™ Condition Monitor routine operation 62
Pump operation precautions 62
Shut down the pump 63
Deactivate the i-ALERT™ Condition Monitor 63
Reset the i-ALERT™ Condition Monitor 64
Make the final alignment of the pump and driver 64

Maintenance 65
Maintenance schedule 65
Bearing maintenance 66
Lubricating-oil requirements 66
Regrease the grease-lubricated bearings 67
Lubricate the bearings after a shutdown period 68
Shaft seal maintenance 68
Mechanical-seal maintenance 68
Packed stuffing-box maintenance 69
Dynamic-seal maintenance 69
Disassembly 70
Disassembly precautions 70
Tools required 70
Drain the pump 71
Remove the coupling 71
Remove the back pull-out assembly 71
Remove the coupling hub 73
Impeller removal 74
Seal-chamber cover removal 76
Remove the seal-chamber cover (3196, CV 3196, HT 3196, LF 3196, 3796) 76
Remove the stuffing-box cover (3196, CV 3196, HT 3196, LF 3196, 3796) 77
Remove the dynamic seal 78
Remove the frame adapter (MTi, LTi, XLT-i, i17) 79
Remove the inboard labyrinth oil seal 79
Power-end disassembly 79

Disassemble the bearing frame 88
Guidelines for i-ALERT™ Condition Monitor disposal 89
Disassemble the C-face adapter 89
Pre-assembly inspections 90
Replacement guidelines 90
Shaft and sleeve replacement guidelines 92
Bearing-frame inspection 92
C-face adapter inspection 93
Seal chamber and stuffing box cover inspection 94
Bearings inspection 95
Bearing-housing inspection 95
Bearing fits and tolerances 97
Reassembly 98
Assemble the rotating element and the bearing frame (STi and MTi) 98
Assemble the rotating element and the bearing frame (STi and MTi with duplex bearings) 100
Assemble the rotating element and the bearing frame (LTi) 103
Assemble the rotating element and the bearing frame (XLT-i and i17) 106
Assemble the rotating element and the bearing frame (XLT-i and i17 with duplex bearings) 109
Assemble the frame 113
INPRO labyrinth oil seal description 116
Assemble the INPRO labyrinth oil seal 117
Assemble the C-face adapter 117
Shaft sealing 118
Install the impeller 124
Attach the i-ALERT™ Condition Monitor to the pump 126
Post-assembly checks 127
Install the back pull-out assembly (except HT 3196) 127
Assembly references 129
Spare parts 130
Interchangeability drawings 130
3196 interchangeability 130
Lubrication conversion 131
Frame lubrication conversion 131
Convert from greased-for-life or regreaseable to oil-lubricated bearings 132
Conversion from flood-oil to pure-oil mist 133
Convert from flood oil to regreaseable 133

Troubleshooting 134
Operation troubleshooting 134
Alignment troubleshooting 135
Assembly troubleshooting 135
i-ALERT™ Condition Monitor troubleshooting 135

Parts Listings and Cross-Sectionals 136
Parts list 136

Certification: CE or CE ATEX 145
Certificates of conformance 145

Other Relevant Documentation or Manuals 151

Local ITT Contacts 152
Regional offices 152

Introduction and Safety

Introduction

Purpose of this manual

The purpose of this manual is to provide necessary information for:

- Installation
- Operation
- Maintenance

CAUTION:
Read this manual carefully before installing and using the product. Improper use of the product can cause personal injury and damage to property, and may void the warranty.

NOTICE:
Save this manual for future reference, and keep it readily available at the location of the unit.

Requesting other information

Special versions can be supplied with supplementary instruction leaflets. See the sales contract for any modifications or special version characteristics. For instructions, situations, or events that are not considered in this manual or in the sales documents, please contact the nearest ITT representative.

Always specify the exact product type and identification code when requesting technical information or spare parts.

Safety

WARNING:

- The operator must be aware of safety precautions to prevent physical injury.
- Any pressure-containing device can explode, rupture, or discharge its contents if it is over-pressurized. Take all necessary measures to avoid over-pressurization.
- Operating, installing, or maintaining the unit in any way that is not covered in this manual could cause death, serious personal injury, or damage to the equipment. This includes any modification to the equipment or use of parts not provided by ITT. If there is a question regarding the intended use of the equipment, please contact an ITT representative before proceeding.
- This manual clearly identifies accepted methods for disassembling units. These methods must be adhered to. Trapped liquid can rapidly expand and result in a violent explosion and injury. Never apply heat to impellers, propellers, or their retaining devices to aid in their removal unless explicitly stated in this manual.
- If the pump/motor is damaged or leaking, do not operate as it may cause an electric shock, fire, explosion, liberation of toxic fumes, physical harm, or environmental damage. Correct/repair the problem prior to putting back in service.
- Do not change the service application without the approval of an authorized ITT representative.

CAUTION:
You must observe the instructions contained in this manual. Failure to do so could result in physical injury, damage, or delays.

Safety terminology and symbols

About safety messages

It is extremely important that you read, understand, and follow the safety messages and regulations carefully before handling the product. They are published to help prevent these hazards:

- Personal accidents and health problems
- Damage to the product
- Product malfunction

Hazard levels

Hazard level	Indication
DANGER:	A hazardous situation which, if not avoided, will result in death or serious injury
WARNING:	A hazardous situation which, if not avoided, could result in death or serious injury
CAUTION:	A hazardous situation which, if not avoided, could result in minor or moderate injury
NOTICE:	• A potential situation which, if not avoided, could result in undesirable conditions • A practice not related to personal injury

Hazard categories

Hazard categories can either fall under hazard levels or let specific symbols replace the ordinary hazard level symbols.

Electrical hazards are indicated by the following specific symbol:

Electrical Hazard:

These are examples of other categories that can occur. They fall under the ordinary hazard levels and may use complementing symbols:

- Crush hazard
- Cutting hazard
- Arc flash hazard

The Ex symbol

The Ex symbol indicates safety regulations for Ex-approved products when used in atmospheres that are potentially explosive or flammable.

Environmental safety

The work area

Always keep the station clean to avoid and/or discover emissions.

Waste and emissions regulations

Observe these safety regulations regarding waste and emissions:

- Appropriately dispose of all waste.
- Handle and dispose of the processed liquid in compliance with applicable environmental regulations.
- Clean up all spills in accordance with safety and environmental procedures.
- Report all environmental emissions to the appropriate authorities.

WARNING:
Do NOT send the product to the ITT manufacturer if it has been contaminated by any nuclear radiation. Inform ITT so that accurate actions can take place.

Electrical installation

For electrical installation recycling requirements, consult your local electric utility.

Recycling guidelines

Always follow local laws and regulations regarding recycling.

User safety

General safety rules

These safety rules apply:

- Always keep the work area clean.
- Pay attention to the risks presented by gas and vapors in the work area.
- Avoid all electrical dangers. Pay attention to the risks of electric shock or arc flash hazards.
- Always bear in mind the risk of drowning, electrical accidents, and burn injuries.

Safety equipment

Use safety equipment according to the company regulations. Use this safety equipment within the work area:

- Helmet
- Safety goggles, preferably with side shields
- Protective shoes
- Protective gloves
- Gas mask
- Hearing protection
- First-aid kit
- Safety devices

NOTICE:
Never operate a unit unless safety devices are installed. Also see specific information about safety devices in other chapters of this manual.

Electrical connections

Electrical connections must be made by certified electricians in compliance with all international, national, state, and local regulations. For more information about requirements, see sections dealing specifically with electrical connections.

Precautions before work

Observe these safety precautions before you work with the product or are in connection with the product:

- Provide a suitable barrier around the work area, for example, a guard rail.
- Make sure that all safety guards are in place and secure.
- Make sure that you have a clear path of retreat.
- Make sure that the product cannot roll or fall over and injure people or damage property.
- Make sure that the lifting equipment is in good condition.
- Use a lifting harness, a safety line, and a breathing device as required.
- Allow all system and pump components to cool before you handle them.
- Make sure that the product has been thoroughly cleaned.
- Disconnect and lock out power before you service the pump.
- Check the explosion risk before you weld or use electric hand tools.

Precautions during work

Observe these safety precautions when you work with the product or are in connection with the product:

CAUTION:
Read this manual carefully before installing and using the product. Improper use of the product can cause personal injury and damage to property, and may void the warranty.

- Never work alone.
- Always wear protective clothing and hand protection.
- Stay clear of suspended loads.
- Always lift the product by its lifting device.
- Beware of the risk of a sudden start if the product is used with an automatic level control.
- Beware of the starting jerk, which can be powerful.
- Rinse the components in water after you disassemble the pump.
- Do not exceed the maximum working pressure of the pump.
- Do not open any vent or drain valve or remove any plugs while the system is pressurized. Make sure that the pump is isolated from the system and that pressure is relieved before you disassemble the pump, remove plugs, or disconnect piping.
- Never operate a pump without a properly installed coupling guard.

Hazardous liquids

The product is designed for use in liquids that can be hazardous to your health. Observe these rules when you work with the product:

- Make sure that all personnel who work with biologically hazardous liquids are vaccinated against diseases to which they may be exposed.
- Observe strict personal cleanliness.
- A small amount of liquid will be present in certain areas like the seal chamber.

Wash the skin and eyes

1. Follow these procedures for chemicals or hazardous fluids that have come into contact with your eyes or your skin:

Condition	Action
Chemicals or hazardous fluids in eyes	1. Hold your eyelids apart forcibly with your fingers. 2. Rinse the eyes with eyewash or running water for at least 15 minutes. 3. Seek medical attention.
Chemicals or hazardous fluids on skin	1. Remove contaminated clothing. 2. Wash the skin with soap and water for at least 1 minute. 3. Seek medical attention, if necessary.

Ex-approved products

Follow these special handling instructions if you have an Ex-approved unit.

Personnel requirements

These are the personnel requirements for Ex-approved products in potentially explosive atmospheres:

- All work on the product must be carried out by certified electricians and ITT-authorized mechanics. Special rules apply to installations in explosive atmospheres.
- All users must know about the risks of electric current and the chemical and physical characteristics of the gas, the vapor, or both present in hazardous areas.
- Any maintenance for Ex-approved products must conform to international and national standards (for example, IEC/EN 60079-17).

ITT disclaims all responsibility for work done by untrained and unauthorized personnel.

Product and product handling requirements

These are the product and product handling requirements for Ex-approved products in potentially explosive atmospheres:

- Only use the product in accordance with the approved motor data.
- The Ex-approved product must never run dry during normal operation. Dry running during service and inspection is only permitted outside the classified area.
- Before you start work on the product, make sure that the product and the control panel are isolated from the power supply and the control circuit, so they cannot be energized.
- Do not open the product while it is energized or in an explosive gas atmosphere.
- Make sure that thermal contacts are connected to a protection circuit according to the approval classification of the product, and that they are in use.
- Intrinsically safe circuits are normally required for the automatic level-control system by the level regulator if mounted in zone 0.
- The yield stress of fasteners must be in accordance with the approval drawing and the product specification.
- Do not modify the equipment without approval from an authorized ITT representative.
- Only use parts that are provided by an authorized ITT representative.

Product approval standards

Regular standards

All standard products are approved according to CSA standards in Canada and UL standards in USA. The drive unit degree of protection follows IP68. See the nameplate for maximum submersion, according to standard IEC 60529.

All electrical ratings and performance of the motors comply with IEC 600341.

Explosion-proofing standards

All explosion-proof products for use in explosive atmospheres are designed in compliance with one or more of the following approvals:

- EN, ATEX Directive 94/9/EC
- FM According to NEC
  - Class 1 Div 1 Groups “C”, and “D”
  - Class 2 Div 1 Groups “E”, “F”, and “G”
  - Class 3 Div 1 Hazardous Locations

ATEX/IECEx:

- Group: IIC

- Category: Ex ia
- Temperature Class: T4 (for ambients up to 100ºC)
- ATEX Marking: Ex II 1 G

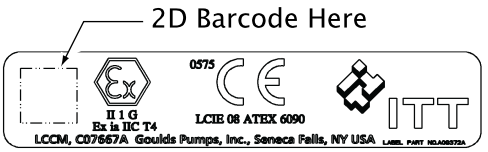

CSA certification

Intrinsically safe for:

- Class I, Div. 1, Groups A, B, C, D
- Class II, Div. 1, Groups E, F, G
- Class III
- Certified to Canadian and US requirements

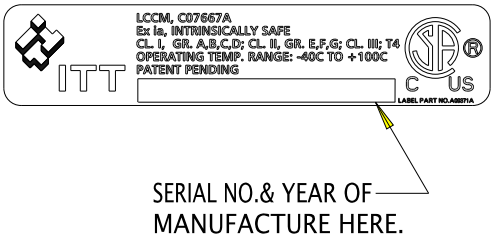

Product warranty

Coverage

ITT undertakes to remedy faults in products from ITT under these conditions:

- The faults are due to defects in design, materials, or workmanship.
- The faults are reported to an ITT representative within the warranty period.
- The product is used only under the conditions described in this manual.
- The monitoring equipment incorporated in the product is correctly connected and in use.
- All service and repair work is done by ITT-authorized personnel.
- Genuine ITT parts are used.
- Only Ex-approved spare parts and accessories authorized by ITT are used in Ex-approved products.

Limitations

The warranty does not cover faults caused by these situations:

- Deficient maintenance
- Improper installation
- Modifications or changes to the product and installation made without consulting ITT
- Incorrectly executed repair work
- Normal wear and tear

ITT assumes no liability for these situations:

- Bodily injuries
- Material damages
- Economic losses

Warranty claim

ITT products are high-quality products with expected reliable operation and long life. However, should the need arise for a warranty claim, then contact your ITT representative.

Transportation and Storage

Inspect the delivery

Inspect the package

1. Inspect the package for damaged or missing items upon delivery.
2. Note any damaged or missing items on the receipt and freight bill.
3. File a claim with the shipping company if anything is out of order.
   If the product has been picked up at a distributor, make a claim directly to the distributor.

Inspect the unit

1. Remove packing materials from the product.
   Dispose of all packing materials in accordance with local regulations.
2. Inspect the product to determine if any parts have been damaged or are missing.
3. If applicable, unfasten the product by removing any screws, bolts, or straps.
   For your personal safety, be careful when you handle nails and straps.
4. Contact your sales representative if anything is out of order.

Transportation guidelines

Pump handling

WARNING:

- Make sure that the unit cannot roll or fall over and injure people or damage property.
- These pumps might use carbon or ceramic silicon carbide components. Do not drop the pump or subject it to shock loads as this can damage the internal ceramic components.

NOTICE:

Use a forklift truck or an overhead crane with sufficient capacity to move the pallet with the pump unit on top. Failure to do so can result in equipment damage.

Lifting methods

WARNING:

- All lifting must be done in compliance with all applicable regulations/standards.
- Assembled units and their components are heavy. Failure to properly lift and support this equipment can result in serious physical injury and/or equipment damage. Lift equipment only at the specifically identified lifting points. Lifting devices such as hoist rings, shackles, slings, and spreaders must be rated, selected, and used for the entire load being lifted.
- Assembled units and their components are heavy. Failure to properly lift and support this equipment can result in serious physical injury and/or equipment damage. Lift equipment only at the specifically identified lifting points. Lifting devices such as eyebolts, slings, and spreaders must be rated, selected, and used for the entire load being lifted.
- Crush hazard. The unit and the components can be heavy. Use proper lifting methods and wear steel-toed shoes at all times.
- Do not attach sling ropes to shaft ends.

Table 1: Methods

Pump type	Lifting method
A bare pump without lifting handles	Use a suitable sling attached properly to solid points like the casing, the flanges, or the frames.
A bare pump with lifting handles	Lift the pump by the handles.
A base-mounted pump	Use slings under the pump casing and the drive unit, or under the base rails.

Pump type	Lifting method
Mounted on top of a Polyshield ANSI Combo	See separate information regarding the Polyshield ANSI Combo.

Examples

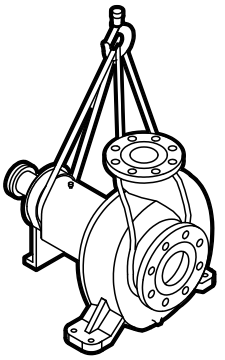

Figure 1: Example of a proper lifting method

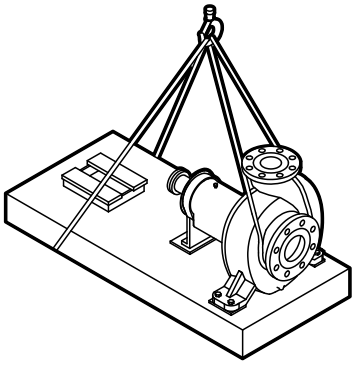

NOTICE:
Do not use this lifting method to lift a Polyshield ANSI Combo with the pump and motor mounted. Doing so may result in equipment damage.

Figure 2: Example of a proper lifting method

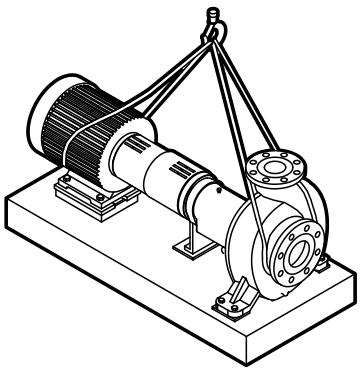

NOTICE:
Do not use this lifting method to lift a Polyshield ANSI Combo with the pump and motor mounted. Doing so may result in equipment damage.

Figure 3: Example of a proper lifting method

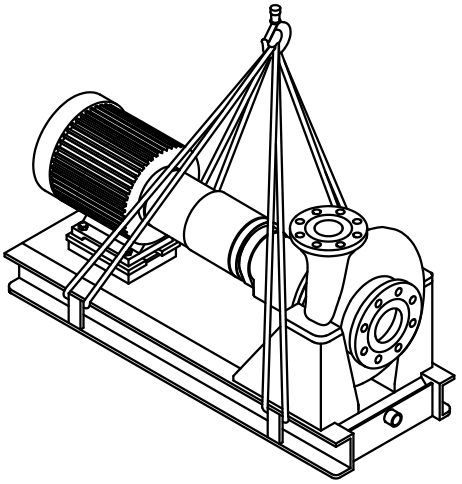

Figure 4: Example of a proper lifting method

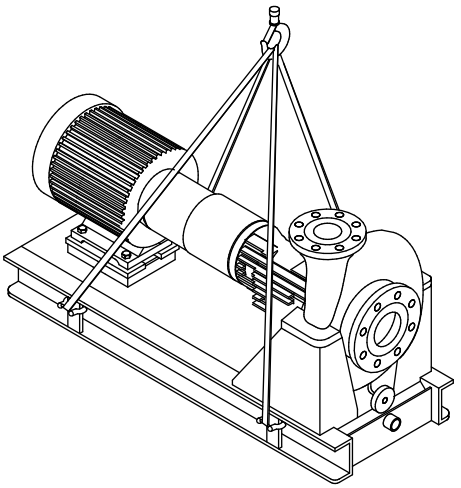

Figure 5: Example of a proper lifting method

NOTICE:
When lifting a unit that does not have a way to secure the strap on the suction flange, you must secure the strap around the frame adapter. Failure to do so may result in equipment damage.

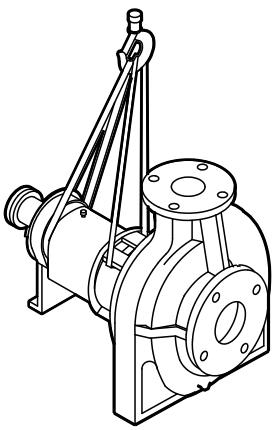

Figure 6: Example of a proper lifting method with a strap secured around the frame adapter

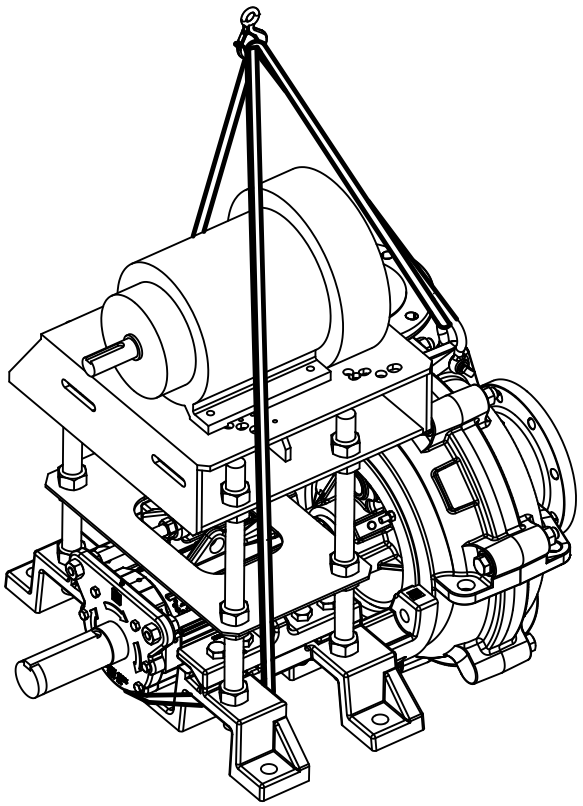

Figure 7: Example of offset overhead motor mount pump proper lifting method

Storage guidelines

Pump storage requirements

Storage requirements depend on the amount of time that you store the unit. The normal packaging is designed only to protect the unit during shipping.

Length of time in storage	Storage requirements
Upon receipt/short-term (less than six months)	• Store in a covered and dry location. • Store the unit free from dirt and vibrations.
Long-term (more than six months)	• Store in a covered and dry location. • Store the unit free from heat, dirt, and vibrations. • Rotate the shaft by hand several times at least every three months.

NOTICE:
Risk of damage to the mechanical seal or shaft sleeve on units supplied with cartridge mechanical seals. Make sure to install and tighten the centering clips and loosen the set screws in the seal locking ring.

Treat bearing and machined surfaces so that they are well preserved. Refer to drive unit and coupling manufacturers for their long-term storage procedures.

You can purchase long-term storage treatment with the initial unit order or you can purchase it and apply it after the units are already in the field. Contact your local ITT sales representative.

Frostproofing

Table 2: Situations when the pump is or is not frostproof

Situation	Condition
Operating	The pump is frostproof.
Immersed in a liquid	The pump is frostproof.
Lifted out of a liquid into a temperature below freezing	The impeller might freeze.

Product Description

General description 3196

The 3196 is a horizontal overhung, open impeller, centrifugal pump. This pump is ANSI B73.1 compliant.
The model is based on 5 power ends and 29 hydraulic sizes.

Figure 8: 3196 pump

This table shows the number of hydraulic sizes available for each drive-unit size group.

Drive-unit size group	Number of hydraulic sizes
STi	5
MTi	15
LTi	15
XLT-i	5
i-17	4

Part description 3196

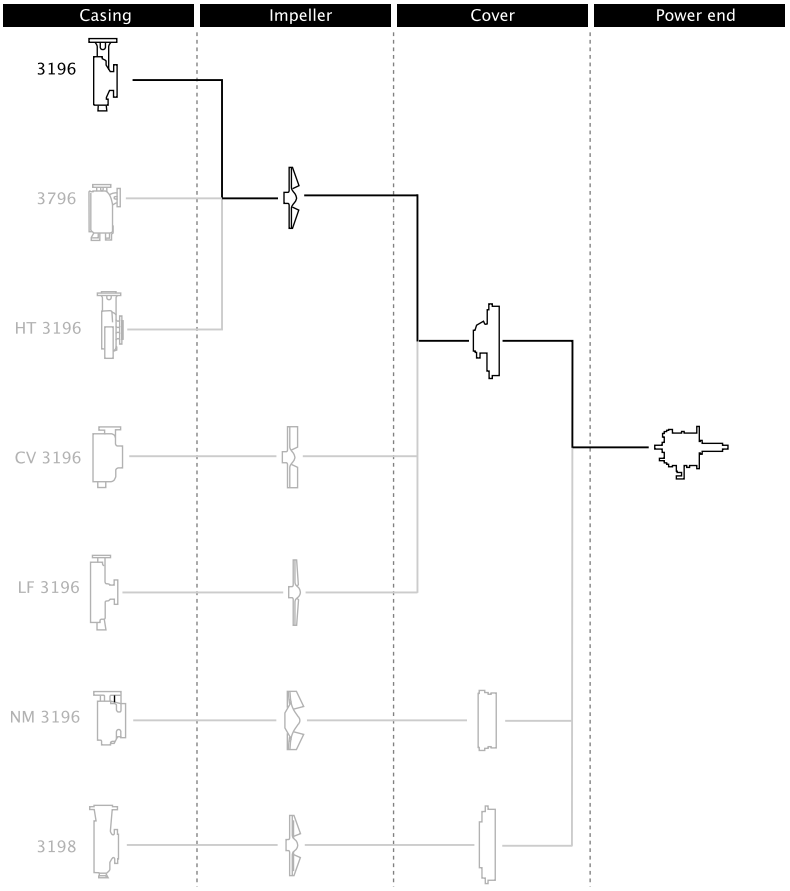

Figure 9: 3196 part description

Table 3: Casing

This table describes the pump casing parts.

Part	Description
Discharge	Top-centerline
Casing ventilation	Self venting
Gasket	Fully confined
Mounting method	Integral foot support for maximum resistance to misalignment due to piping loads.
Standard flange	ANSI flat-faced serrated flange
Optional flanges	One of the following flanges can be used: • ANSI class 150 raised-face serrated flange • ANSI class 300 flat-face serrated flange • ANSI class 300 raised-face serrated flange

Impeller

The impeller is

- fully open
- screwed onto the shaft

The threads are sealed from the pumped liquid by a Teflon O-ring for the 3196.

Cover

Standard seal

- The 3196 is available with a stuffing-box cover designed for a packing and a BigBore or a TaperBore PLUS seal chamber.

Optional seal

- a dynamic seal is available which uses a repeller to pump liquid out of the stuffing box while the pump operates. A static seal prevents leakage when the pump is shut down.

Table 4: Power end

This table describes the main parts of the power end.

Part	Description
Frame adapter	The ductile iron frame adapter has • a machined rabbet fitted to the seal chamber/ stuffing box cover • a precision dowel pin fitted to the bearing frame.

Power end	• Flood-oil lubrication is standard.
	• No machining is required to convert from oil to grease or oil-mist lubrication. Regreasable bearings and oil-mist lubrication are optional.
	• The oil level is checked through a sight glass.
	• The power end is sealed with labyrinth seals.
	• The power end is made in the following sizes:
	  • STi
	  • MTi
	  • LTi
	  • XLT-i
	  • i-17

Shaft	The shaft is available with or without a sleeve.
Bearings	The inboard bearing • carries only radial loads. • is free to float axially in the frame. • is a single-row deep-groove ball bearing The outboard bearing • is shouldered and locked to the shaft and housing to enable it to carry radial and thrust loads. • is a double-row angular-contact bearing, except for the LTi which uses a pair of single-row angular-contact ball bearings mounted back-to-back.

General description i-ALERT™ Condition Monitor

Description

The i-ALERT Condition Monitor is a compact, battery-operated monitoring device that continuously measures the vibration and temperature of the pump power end. The condition monitor uses blinking red LEDs to alert the pump operator when the pump exceeds pre-set vibration and temperature limits. This allows the pump operator to make changes to the process or the pump before a catastrophic failure occurs. The condition monitor is also equipped with a single green LED to indicate when it is operational and has sufficient battery life.

Software License Agreement

BY USING THE i-Alert™ CONDITION MONITOR, YOU AGREE TO BE BOUND BY THE TERMS AND CONDITIONS OF THE FOLLOWING LICENSE AGREEMENT. PLEASE READ THIS AGREEMENT CAREFULLY.

ITT Corporation and its subsidiaries, affiliates, either directly, or through its authorized sublicensees ("ITT") grants you a limited, non-exclusive license to use the software embedded in this device ("Software") in binary executable form in the normal operation of the i-Alert™ condition monitor for monitoring the condition of an Goulds Pump Inc. model. Title, ownership rights, and intellectual property rights in and to the Software remain in ITT or its third-party providers. You agree that this license agreement does not need to be signed for it to take effect.

You acknowledge that this Software is the property of ITT and is protected under United States of America copyright laws and international copyright treaties. You further acknowledge that the structure, organization, and code of the Software are valuable trade secrets of ITT and/or its third-party providers and that the Software in source code form remains a valuable trade

secret of ITT. You agree not to decompile, disassemble, modify, reverse assemble, reverse engineer, or reduce to human readable form the Software or any part thereof or create any derivative works based on the Software. You agree not to export or re-export the Software to any country in violation of the export control laws of the United States of America.

Alarm mode

The condition monitor enters alarm mode when either vibration or temperature limits are exceeded over two consecutive readings within a ten minute period. Alarm mode is indicated with two red flashing LEDs within two second intervals.

Temperature and vibration limits

Variable	Limit
Temperature	195°F (91°C)
Vibration	100% increase over the baseline level

Battery life

The i-ALERT Condition Monitor battery is not replaceable. You must replace the entire unit once the battery runs out of power.

The battery life is not covered as part of the standard five-year pump warranty.

This table shows the average condition monitor battery life under normal and alarm-mode operating conditions.

Condition monitor operational state	Battery life
Normal operating and environmental conditions	Three to five years
Alarm mode	One year

Nameplate information

Important information for ordering

Every pump has nameplates that provide information about the pump. The nameplates are located on the casing and the bearing frame.

When you order spare parts, identify this pump information:

- Model
- Size
- Serial number
- Item numbers of the required parts

Refer to the nameplate on the pump casing for most of the information. See Parts List for item numbers.

Nameplate types

Nameplate	Description
Pump casing	Provides information about the hydraulic characteristics of the pump. The formula for the pump size is: Discharge x Suction - Nominal Maximum Impeller Diameter in inches. (Example: 2x3-8)
Bearing frame	Provides information about the lubrication system used.
ATEX	If applicable, your pump unit might have an ATEX nameplate affixed to the pump, the baseplate, or the discharge head. The nameplate provides information about the ATEX specifications of this pump.
IECEx	If applicable, your pump unit might have the following IECEx nameplate affixed to the pump and/or baseplate. The nameplate provides information about the IECEx specifications of this pump.

Nameplate on the pump casing using English units

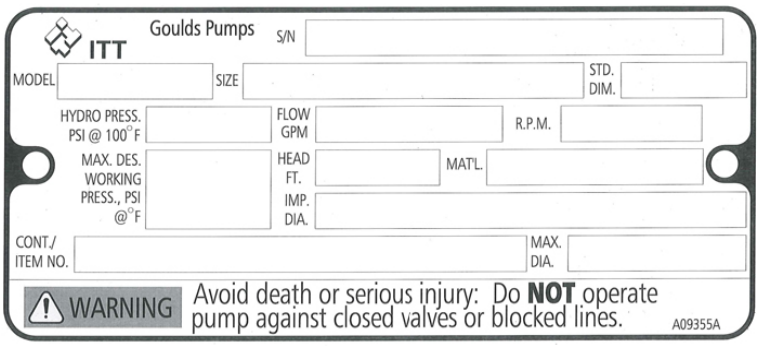

Table 5: Explanation of nameplate on the pump casing

Nameplate field	Explanation
IMPLR. DIA.	Impeller diameter, in inches
MAX. DIA.	Maximum impeller diameter, in inches
GPM	Rated pump flow, in gallons per minute
FT HD	Rated pump head, in feet
RPM	Rated pump speed, revolutions per minute
MOD.	Pump model
SIZE	Size of the pump
STD. NO.	ANSI standard designation
MAT L. CONST.	Material of which the pump is constructed
SER. NO.	Serial number of the pump
MAX DSGN PSI @ 100ºF	Maximum pressure at 100ºF according to the pump design

Nameplate on the pump casing using metric units

Table 6: Explanation of the nameplate on the pump casing

Nameplate field	Explanation
IMPLR. DIA.	Impeller diameter
MAX. DIA.	Maximum impeller diameter
M^3/HR	Rated pump flow, in cubic meters per hour
M HD	Rated pump head, in meters
RPM	Rated pump speed, in revolutions per minute
MOD.	Pump model
SIZE	Size of the pump
STD. NO.	ANSI standard designation
MAT L. CONST	Material of which the pump is constructed
SER. NO.	Serial number of the pump
MAX. DSGN KG/CM^3 @ 20°C	Kilograms per cubic centimeter at 20°C

Nameplate on the bearing frame

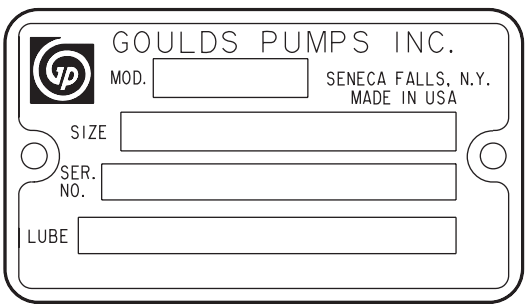

Table 7: Explanation of the nameplate on the bearing frame

Nameplate field	Explanation
BRG. O. B.	Outboard bearing designation
BRG. I. B.	Inboard bearing designation
S/N	Serial number of the pump
LUBE	Lubricant, oil or grease

ATEX nameplate

Nameplate field	Explanation
II	Group 2
2	Category 2
G/D	Pump can be used when gas and dust are present
T4	Temperature class

NOTICE:
Make sure that the code classifications on the pump are compatible with the specific environment in which you plan to install the equipment. If they are not compatible, do not operate the equipment and contact your ITT representative before you proceed.

Installation

Preinstallation

Precautions

WARNING:

- When installing in a potentially explosive environment, make sure that the motor is properly certified.
- You must earth (ground) all electrical equipment. This applies to the pump equipment, the driver, and any monitoring equipment. Test the earth (ground) lead to verify that it is connected correctly.
- Electrical Connections must be made by certified electricians in compliance with all international, national, state, and local rules.

NOTICE:

Supervision by an authorized ITT representative is recommended to ensure proper installation. Failure to do so may result in equipment damage or decreased performance.

Pump location guidelines

WARNING:

Assembled units and their components are heavy. Failure to properly lift and support this equipment can result in serious physical injury and/or equipment damage. Lift equipment only at the specifically identified lifting points. Lifting devices such as eyebolts, slings, and spreaders must be rated, selected, and used for the entire load being lifted.

Guideline	Explanation/comment
Keep the pump as close to the liquid source as practically possible.	This minimizes the friction loss and keeps the suction piping as short as possible.
Make sure that the space around the pump is sufficient.	This facilitates ventilation, inspection, maintenance, and service.
If you require lifting equipment such as a hoist or tackle, make sure that there is enough space above the pump.	This makes it easier to properly use the lifting equipment and safely remove and relocate the components to a safe location.
Protect the unit from weather and water damage due to rain, flooding, and freezing temperatures.	This is applicable if nothing else is specified.
Do not install and operate the equipment in closed systems unless the system is constructed with properly-sized safety devices and control devices.	Acceptable devices: • Pressure relief valves • Compression tanks • Pressure controls • Temperature controls • Flow controls If the system does not include these devices, consult the engineer or architect in charge before you operate the pump.
Take into consideration the occurrence of unwanted noise and vibration.	The best pump location for noise and vibration absorption is on a concrete floor with subsoil underneath.
If the pump location is overhead, undertake special precautions to reduce possible noise transmission.	Consider a consultation with a noise specialist.

Foundation requirements

Requirements

- The foundation must be able to absorb any type of vibration and form a permanent, rigid support for the unit.
- The location and size of the foundation bolt holes must match those shown on the assembly drawing provided with the pump data package.
- The foundation must weigh between two and three times the weight of the pump.

- Provide a flat, substantial concrete foundation in order to prevent strain and distortion when you tighten the foundation bolts.
- Sleeve-type and J-type foundation bolts are most commonly used. Both designs allow movement for the final bolt adjustment.

Sleeve-type bolts

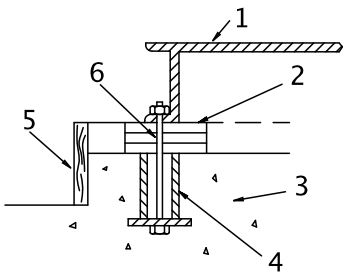

1. Baseplate
2. Shims or wedges
3. Foundation
4. Sleeve
5. Dam
6. Bolt

J-type bolts

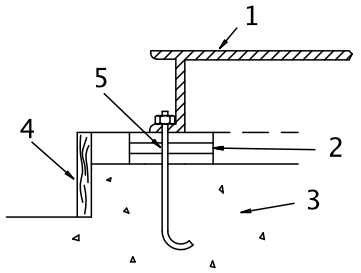

1. Baseplate
2. Shims or wedges
3. Foundation
4. Dam
5. Bolt

Baseplate-mounting procedures

Prepare the baseplate for mounting

1. Remove all the attached equipment from the baseplate.
2. Clean the underside of the baseplate completely.
3. If applicable, coat the underside of the baseplate with an epoxy primer.
   Use an epoxy primer only if you used an epoxy-based grout.
4. Remove the rust-proofing coat from the machined mounting pads using an appropriate solvent.
5. Remove water and debris from the foundation-bolt holes.

Install the baseplate using shims or wedges

Required tools:

- Two sets of shims or wedges for each foundation bolt
- Two machinist's levels

- Baseplate-leveling worksheet

This procedure is applicable to cast iron and fabricated steel baseplates.

1. If you use sleeve-type bolts, fill the bolt sleeves with packing material or rags to prevent grout from entering the bolt holes.
2. Put the sets of wedges or shims on each side of each foundation bolt.
   The sets of wedges should have a height of between 0.75 in. (19 mm) and 1.50 in. (38 mm).

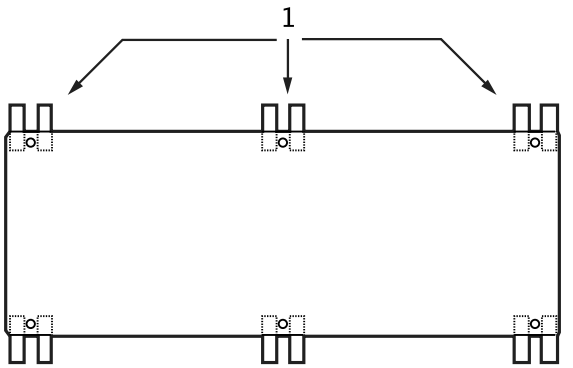

1. Shims or wedges

Figure 10: Top view

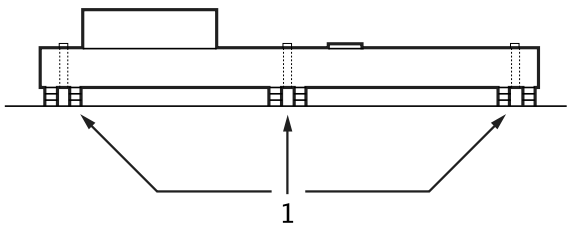

1. Shims or wedges

Figure 11: Side view

3. Lower the baseplate carefully onto the foundation bolts.
4. Put the machinist's levels across the mounting pads of the driver and the mounting pads of the pump.

NOTICE:
Remove all dirt from the mounting pads in order to make sure that you achieve the correct leveling. Failure to do so can result in equipment damage or decreased performance.

5. Level the baseplate both lengthwise and across by adding or removing shims or moving the wedges.
   These are the leveling tolerances:
   - A maximum difference of 0.125 in. (3.2 mm) lengthwise
   - A maximum difference of 0.059 in. (1.5 mm) across

   You can use the baseplate-leveling worksheet when you take the readings.
6. Hand-tighten the nuts for the foundation.

Install the baseplate using jackscrews

Tools required:

- Anti-seize compound
- Jackscrews
- Bar stock
- Two machinist's levels

- Baseplate-leveling worksheet

This procedure is applicable to the feature-fabricated steel baseplate and the advantage base baseplate.

1. Apply an anti-seize compound on the jackscrews.
   The compound makes it easier to remove the screws after you grout.
2. Lower the baseplate carefully onto the foundation bolts and perform these steps:
   a) Cut the plates from the bar stock and chamfer the edges of the plates in order to reduce stress concentrations.
   b) Put the plates between the jackscrews and the foundation surface.
   c) Use the four jackscrews in the corners in order to raise the baseplate above the foundation.
      Make sure that the distance between the baseplate and the foundation surface is between 0.75 in. (19 mm) and 1.50 in. (38 mm).
   d) Make sure that the center jackscrews do not touch the foundation surface yet.

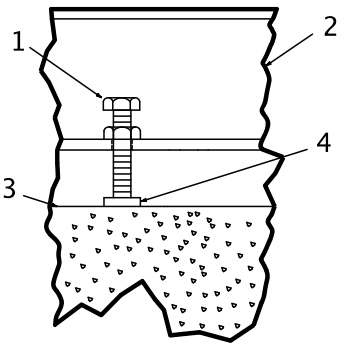

1. Jackscrew
2. Baseplate
3. Foundation
4. Plate

3. Level the driver mounting pads:

NOTICE:
Remove all dirt from the mounting pads in order to make sure that you achieve the correct leveling. Failure to do so can result in equipment damage or decreased performance.

   a) Put one machinist's level lengthwise on one of the two pads.
   b) Put the other machinist's level across the ends of the two pads.

c) Level the pads by adjusting the four jackscrews in the corners.
Make sure that the machinist's level readings are as close to zero as possible, both lengthwise and across.
Use the baseplate-leveling worksheet when you take the readings.

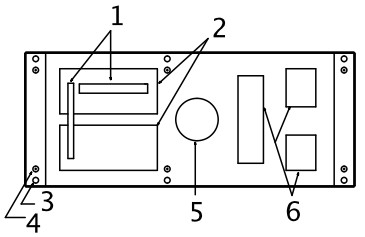

1. Machinist's levels
2. Driver's mounting pads
3. Foundation bolts
4. Jackscrews
5. Grout hole
6. Pump's mounting pads

4. Turn the center jackscrews down so that they rest on their plates on the foundation surface.
5. Level the pump mounting pads:

NOTICE:
Remove all dirt from the mounting pads in order to make sure that you achieve the correct leveling. Failure to do so can result in equipment damage or decreased performance.

a) Put one machinist's level lengthwise on one of the two pads.
b) Put the other level across the center of the two pads.
c) Level the pads by adjusting the four jackscrews in the corners.
Make sure that the machinist's level readings are as close to zero as possible, both lengthwise and across.

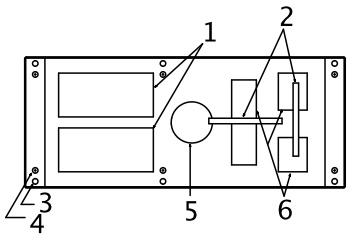

1. Driver's mounting pads
2. Machinist's levels
3. Foundation bolts
4. Jackscrews
5. Grout hole
6. Pump's mounting pads

6. Hand-tighten the nuts for the foundation bolts.
7. Check that the driver's mounting pads are level and adjust the jackscrews and the foundation bolts if necessary.
The correct level measurement is a maximum of 0.002 in./ft (0.0167 mm/m).

Install the baseplate using spring mounting

NOTICE:
The spring-mounted baseplate is designed only to support piping loads from thermal expansion. You must support the suction and discharge piping individually. Failure to do so may result in equipment damage.

The foundation pads are not provided with the baseplate. Make sure that the foundation pads are 316 stainless-steel plates, which have a 16-20 micro-inch surface finish.

Before you start this procedure, make sure that the foundation pads are correctly installed on the foundation/floor (see the manufacturer's instructions).

1. Put the baseplate on a support above the foundation/floor.
   Make sure that there is enough space between the baseplate and the foundation/floor in order to install the spring assemblies.
2. Install the lower part of the spring assembly:
   a) Screw the lower jam nut onto the spring stud.
   b) Screw the lower adjusting nut onto the spring-stud, on top of the jam nut.
   c) Set the lower adjusting nut to the correct height.
      The correct height depends on the required distance between the foundation/floor and the baseplate.
   d) Put a washer, a follower, a spring, and one more follower onto the lower adjusting nut.
3. Install the spring assembly on the baseplate:
   a) Insert the spring assembly into the baseplate's anchorage hole from below.
   b) Put a follower, a spring, another follower, and a washer onto the spring stud.
   c) Fasten the spring assembly with the upper adjusting nut by hand.
4. Thread the upper jam nut onto the spring stud by hand.
5. Repeat steps 2 through 4 for all the spring assemblies.
6. Lower the baseplate so that the spring assemblies fit into the foundation pads.
7. Level the baseplate and make the final height adjustments:
   a) Loosen the upper jam nuts and adjusting nuts.
   b) Adjust the height and level the baseplate by moving the lower adjusting nuts.
   c) When the baseplate is level, tighten the top adjusting nuts so that the top springs are not loose in their followers.
8. Fasten the lower and upper jam nuts on each spring assembly.

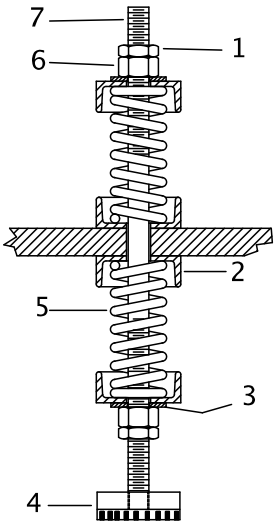

1. Upper jam nut
2. Follower
3. Washer
4. Foundation pads
5. Spring
6. Upper adjusting nut
7. Spring stud

Figure 12: Example of an installed spring assembly

Install the baseplate using stilt mounting

NOTICE:
The stilt-mounted baseplate is not designed to support static piping loads. Make sure to individually support the suction and discharge piping. Failure to do so may result in equipment damage.

1. Put the baseplate on a support above the foundation/floor.
   Make sure that there is enough space between the baseplate and the foundation/floor to install the stilts.
2. Install the lower part of the stilt assembly:
   a) Screw the lower jam nut and adjusting nut onto the stilt.
   b) Set the lower adjusting nut to the correct height.
      The correct height depends on the required distance between the foundation/floor and the baseplate.
   c) Put a washer onto the lower adjusting- nut.
3. Install the stilt assembly on the baseplate:
   a) Insert the stilt assembly into the baseplate's anchorage hole from below.
   b) Put a washer onto the stilt.
   c) Fasten the stilt assembly with the upper adjusting nut by hand.
4. Screw the upper jam nut onto the stilt by hand.
5. Repeat steps 2 through 4 for all the stilt assemblies.
6. Lower the baseplate so that the stilts fit into the foundation cups.
7. Level the baseplate and make the final height adjustments:
   a) Loosen the upper jam nuts and adjusting nuts.
   b) Adjust the height and level the baseplate by moving the lower adjusting nuts.
   c) When the baseplate is level, tighten the top adjusting nuts.
8. Fasten the lower and upper jam nuts on each stilt.

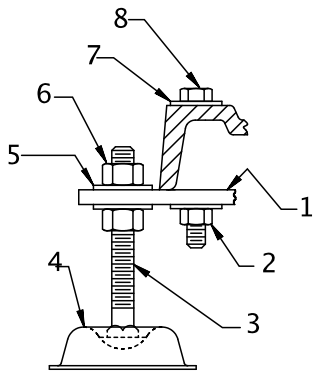

1. Mounting plate
2. Mounting nut
3. Stilt bolt
4. Foundation cups
5. Washer
6. Upper adjustment nut
7. Mounting washer
8. Mounting bolt

Figure 13: Example of an installed stilt assembly

Baseplate-leveling worksheet

Level measurements

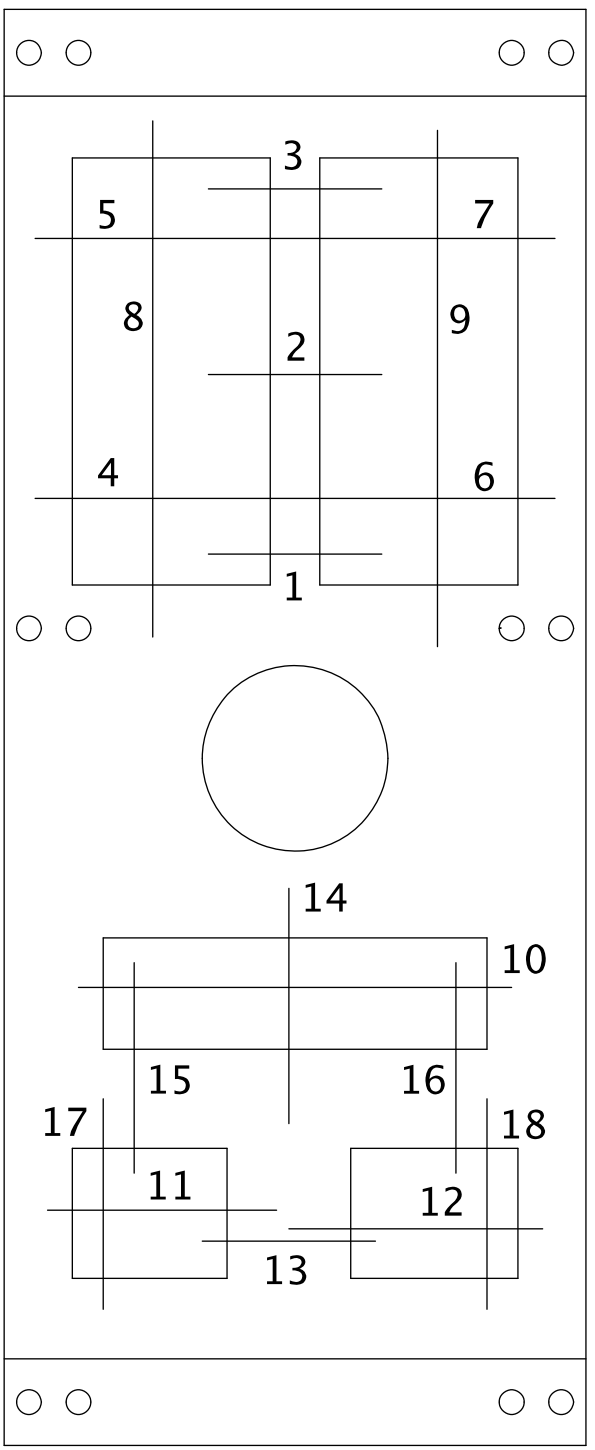

1)_____

2)_____

3)_____

4)_____

5)_____

6)_____

7)_____

8)_____

9)_____

10)_____

11)_____

12)_____

13)_____

14)_____

15)_____

16)_____

17)_____

18)_____

Install the pump, driver, and coupling

1. Mount and fasten the pump on the baseplate. Use applicable bolts.
2. Mount the driver on the baseplate. Use applicable bolts and hand tighten.
3. Install the coupling.
   See the installation instructions from the coupling manufacturer.

Pump-to-driver alignment

Precautions

WARNING:

- Follow shaft alignment procedures in order to prevent catastrophic failure of drive components or unintended contact of rotating parts. Follow the coupling installation and operation procedures from the coupling manufacturer.
- Always disconnect and lock out power to the driver before you perform any installation or maintenance tasks. Failure to disconnect and lock out driver power will result in serious physical injury.
  - Electrical connections must be made by certified electricians in compliance with all international, national, state, and local rules.
  - Refer to driver/coupling/gear manufacturers installation and operation manuals (IOM) for specific instructions and recommendations.

NOTICE:

Proper alignment is the responsibility of the installer and the user of the unit. Check the alignment of frame-mounted units before you operate the unit. Failure to do so can result in equipment damage or decreased performance.

Alignment checks

When to perform alignment checks

You must perform alignment checks under these circumstances:

- The process temperature changes.
- The piping changes.
- The pump has been serviced.

Types of alignment checks

Type of check	When it is used
Initial alignment (cold alignment) check	Prior to operation when the pump and the driver are at ambient temperature.
Final alignment (hot alignment) check	After operation when the pump and the driver are at operating temperature.

Initial alignment (cold alignment) checks

When	Why
Before you grout the baseplate	This ensures that alignment can be accomplished.
After you grout the baseplate	This ensures that no changes have occurred during the grouting process.
After you connect the piping	This ensures that pipe strains have not altered the alignment. If changes have occurred, you must alter the piping to remove pipe strains on the pump flanges.

Final alignment (hot alignment) checks

When	Why
After the first run	This ensures correct alignment when both the pump and the driver are at operating temperature.

When	Why
Periodically	This follows the plant operating procedures.

Permitted indicator values for alignment checks

NOTICE:
The specified permitted reading values are valid only at operating temperature. For cold settings, other values are permitted. You must use the correct tolerances. Failure to do so can result in misalignment and reduced pump reliability.

When dial indicators are used to check the final alignment, the pump and drive unit are correctly aligned when these conditions are true:

- The total indicator runout is a maximum of 0.002 in. (0.05 mm) at operating temperature.
- The tolerance of the indicator is 0.0005 in./in. (0.0127 mm/mm) of indicator separation at operating temperature.

Cold settings for parallel vertical alignment

Introduction

This section shows the recommended preliminary (cold) settings for electric motor-driven pumps based on different temperatures of pumped fluid. Consult driver manufacturers for recommended cold settings for other types of drivers such as steam turbines and engines.

Recommended settings for models 3196, CV 3196, and LF 3196

Pumpage temperature	Recommended setting
50°F (10°C)	0.002 in. (0.05 mm), low
150°F (65°C)	0.001 in. (0.03 mm), high
250°F (120°C)	0.005 in. (0.12 mm), high
350°F (175°C)	0.009 in. (0.23 mm), high
450°F (218°C)	0.013 in. (0.33 mm), high
550°F (228°C)	0.017 in. (0.43 mm), high
650°F (343°C)	0.021 in. (0.53 mm), high
700°F (371°C)	0.023 in. (0.58 mm), high

Alignment measurement guidelines

Guideline	Explanation
Rotate the pump coupling half and the driver coupling half together so that the indicator rods have contact with the same points on the driver coupling half.	This prevents incorrect measurement.
Move or shim only the driver in order to make adjustments.	This prevents strain on the piping installations.
Make sure that the hold-down bolts for the driver feet are tight when you take indicator measurements.	This keeps the driver stationary since movement causes incorrect measurement.
Make sure that the hold-down bolts for the driver feet are loose before you make alignment corrections.	This makes it possible to move the driver when you make alignment corrections.
Check the alignment again after any mechanical adjustments.	This corrects any misalignments that an adjustment may have caused.

Attach the dial indicators for alignment

You must have two dial indicators in order to complete this procedure.

1. Attach two dial indicators on the pump coupling half (X):
   a) Attach one indicator (P) so that the indicator rod comes into contact with the perimeter of the driver coupling half (Y).
   This indicator is used to measure parallel misalignment.

b) Attach the other indicator (A) so that the indicator rod comes into contact with the inner end of the driver coupling half.
This indicator is used to measure angular misalignment.

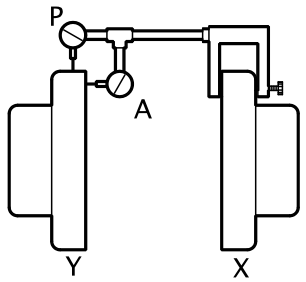

2. Rotate the pump coupling half (X) in order to check that the indicators are in contact with the driver coupling half (Y) but do not bottom out.
3. Adjust the indicators if necessary.

Pump-to-driver alignment instructions

Perform angular alignment for a vertical correction

1. Set the angular alignment indicator to zero at the top-center position (12 o'clock) of the driver coupling half (Y).
2. Rotate the indicator to the bottom-center position (6 o'clock).
3. Record the indicator reading.

When the reading value is...	Then...
Negative	The coupling halves are farther apart at the bottom than at the top. Perform one of these steps: • Add shims in order to raise the feet of the driver at the shaft end. • Remove shims in order to lower the feet of the driver at the other end.
Positive	The coupling halves are closer at the bottom than at the top. Perform one of these steps: • Remove shims in order to lower the feet of the driver at the shaft end. • Add shims in order to raise the feet of the driver at the other end.

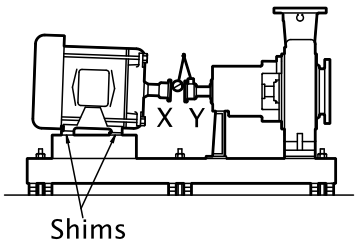

Figure 14: Side view of an incorrect vertical alignment

4. Repeat the previous steps until the permitted reading value is achieved.

Perform angular alignment for a horizontal correction

1. Set the angular alignment indicator (A) to zero on left side of the driver coupling half (Y), 90° from the top-center position (9 o'clock).
2. Rotate the indicator through the top-center position to the right side, 180° from the start position (3 o'clock).
3. Record the indicator reading.

When the reading value is...	Then...
Negative	The coupling halves are farther apart on the right side than the left. Perform one of these steps: • Slide the shaft end of the driver to the left. • Slide the opposite end to the right.
Positive	The coupling halves are closer together on the right side than the left. Perform one of these steps: • Slide the shaft end of the driver to the right. • Slide the opposite end to the left.

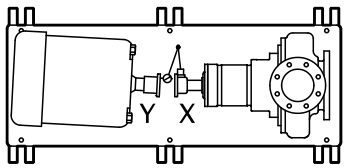

Figure 15: Top view of an incorrect horizontal alignment

4. Repeat the previous steps until the permitted reading value is achieved.

Perform parallel alignment for a vertical correction

Refer to the alignment table in "Permitted indicator values for alignment checks" (see Table of Contents for location of table) for the proper cold alignment value based on the motor temperature rise and the pump operating temperature.

Before you start this procedure, make sure that the dial indicators are correctly set up.

A unit is in parallel alignment when the parallel indicator (P) does not vary by more than 0.002 in. (0.05 mm) as measured at four points 90° apart at the operating temperature.

1. Set the parallel alignment indicator (P) to zero at the top-center position (12 o'clock) of the driver coupling half (Y).
2. Rotate the indicator to the bottom-center position (6 o'clock).
3. Record the indicator reading.

When the reading value is...	Then...
Negative	The pump coupling half (X) is lower than the driver coupling half (Y). Remove shims of a thickness equal to half of the indicator reading value under each driver foot.
Positive	The pump coupling half (X) is higher than the driver coupling half (Y). Add shims of a thickness equal to half of the indicator reading value to each driver foot.

NOTICE:

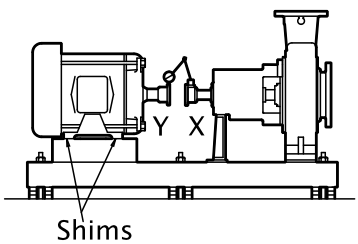

Figure 16: Side view of an incorrect vertical alignment

4. Repeat the previous steps until the permitted reading value is achieved.

NOTICE:
The specified permitted reading values are valid only at operating temperature. For cold settings, other values are permitted. You must use the correct tolerances. Failure to do so can result in misalignment and reduced pump reliability.

Perform parallel alignment for a horizontal correction

A unit is in parallel alignment when the parallel indicator (P) does not vary by more than 0.002 in. (0.05 mm) as measured at four points 90° apart at the operating temperature.

1. Set the parallel alignment indicator (P) to zero on the left side of the driver coupling half (Y), 90° from the top-center position (9 o'clock).
2. Rotate the indicator through the top-center position to the right side, 180° from the start position (3 o'clock).
3. Record the indicator reading.

When the reading value is...	Then...
Negative	The driver coupling half (Y) is to the left of the pump coupling half (X).
Positive	The driver coupling half (Y) is to the right of the pump coupling half (X).

4. Slide the driver carefully in the appropriate direction.

NOTICE: Make sure to slide the driver evenly. Failure to do so can negatively affect horizontal angular correction.

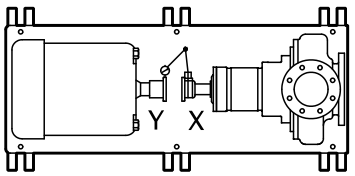

Figure 17: Top view of an incorrect horizontal alignment

5. Repeat the previous steps until the permitted reading value is achieved.

NOTICE:
The specified permitted reading values are valid only at operating temperature. For cold settings, other values are permitted. You must use the correct tolerances. Failure to do so can result in misalignment and reduced pump reliability.

Perform complete alignment for a vertical correction

A unit is in complete alignment when both the angular indicator (A) and the parallel indicator (P) do not vary by more than 0.002 in. (0.05 mm) as measured at four points 90° apart.

1. Set the angular and parallel dial indicators to zero at the top-center position (12 o'clock) of the driver coupling half (Y).
2. Rotate the indicators to the bottom-center position (6 o'clock).
3. Record the indicator readings.
4. Make corrections according to the separate instructions for angular and parallel alignment until you obtain the permitted reading values.

Perform complete alignment for a horizontal correction

A unit is in complete alignment when both the angular indicator (A) and the parallel indicator (P) do not vary by more than 0.002 in. (0.05 mm) as measured at four points 90° apart.

1. Set the angular and parallel dial indicators to zero at the left side of the driver coupling half (Y), 90° from the top-center position (9 o'clock).

2. Rotate the indicators through the top-center position to the right side, 180° from the start position (3 o'clock).
3. Record the indicator readings.
4. Make corrections according to the separate instructions for angular and parallel alignment until you obtain the permitted reading values.

C-face adapter

Intended use

The C-face adapter is a device that attaches the pump to the drive unit to minimize the axial and radial play between the two coupling halves.

Illustration

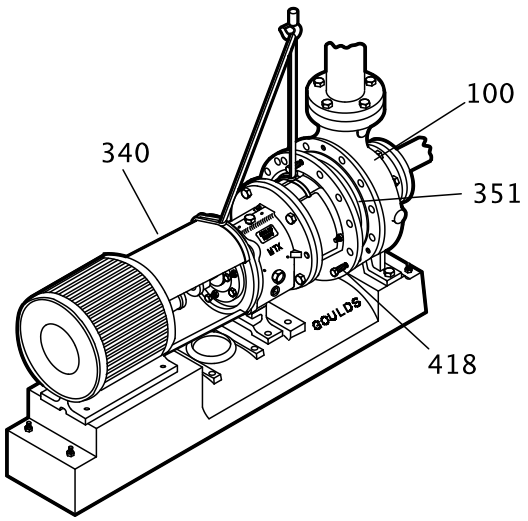

Figure 18: Example of the C-face adapter (340)

Alignment requirements

When you use a C-face adapter, you do not have to align the shaft. The rabbeted fittings of the drive unit to the adapter and the adapter to the bearing frame automatically align the shaft to within the specified limits.

Specified limits

A C-face adapter can attain a nominal alignment of 0.007 in. Total Indicated Runout (T.I.R.). However, because of the stack-up of the machining tolerances of the various parts, the alignment can be as high as 0.015 inches TIR.

If high reliability (with shaft alignments of less than 0.002 in. (0.05mm)) is required for the pump, use a foot-mounted drive unit on a precision-machined baseplate and perform a conventional alignment.

Grout the baseplate

Required equipment:

- Cleaners: Do not use an oil-based cleaner because the grout will not bond to it. See the instructions provided by the grout manufacturer.
- Grout: Non-shrink grout is recommended.

1. Clean all the areas of the baseplate that will come into contact with the grout.
2. Build a dam around the foundation.
3. Thoroughly wet the foundation that will come into contact with the grout.
4. Pour grout through the grout hole into the baseplate up to the level of the dam.

When you pour the grout, remove air bubbles from it by using one of these methods:

- Puddle with a vibrator.
- Pump the grout into place.

5. Allow the grout to set.

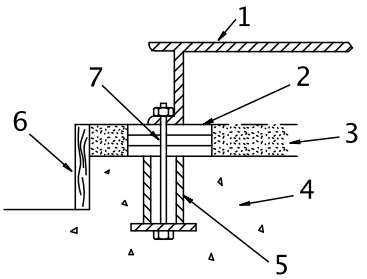

1. Baseplate
2. Shims or wedges
3. Grout
4. Foundation
5. Sleeve
6. Dam
7. Bolt

6. Fill the remainder of the baseplate with grout, and allow the grout to set for at least 48 hours.

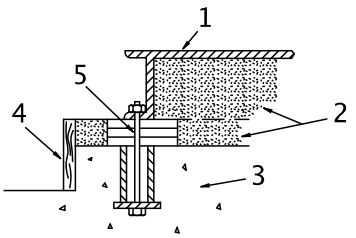

1. Baseplate
2. Grout
3. Foundation
4. Dam
5. Bolt

7. Tighten the foundation bolts.

Piping checklists

General piping checklist

Precautions

CAUTION:

- Never draw piping into place by using force at the flanged connections of the pump. This can impose dangerous strains on the unit and cause misalignment between the pump and driver. Pipe strain adversely affects the operation of the pump, which results in physical injury and damage to the equipment.
- Vary the capacity with the regulating valve in the discharge line. Never throttle the flow from the suction side. This action can result in decreased performance, unexpected heat generation, and equipment damage.

CAUTION:

Piping guidelines

Guidelines for piping are given in the Hydraulic Institute Standards available from the Hydraulic Institute at 9 Sylvan Way, Parsippany, NJ 07054-3802. You must review this document before you install the pump.

Checklist

Check	Explanation/comment	Checked
Check that all piping is supported independently of, and lined up naturally with, the pump flange.	This helps to prevent: • Strain on the pump • Misalignment between the pump and the drive unit • Wear on the pump bearings and the coupling • Wear on the pump bearings, seal, and shafting	
Keep the piping as short as possible.	This helps to minimize friction losses.	
Check that only necessary fittings are used.	This helps to minimize friction losses.	
Do not connect the piping to the pump until: • The grout for the baseplate or sub-base becomes hard. • The hold-down bolts for the pump and the driver are tightened.	—	
Make sure that all the piping joints and fittings are airtight.	This prevents air from entering the piping system or leaks that occur during operation.	
If the pump handles corrosive fluids, make sure that the piping allows you to flush out the liquid before you remove the pump.		
If the pump handles liquids at elevated temperatures, make sure that the expansion loops and joints are properly installed.	This helps to prevent misalignment due to linear expansion of the piping.	

Example: Installation for expansion

Correct	Incorrect
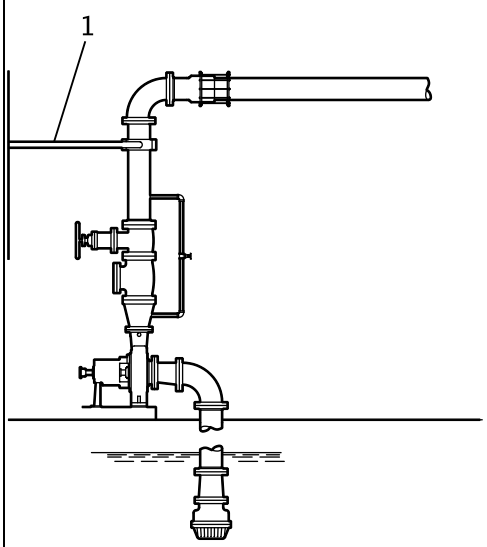 1. Expansion loop/joint	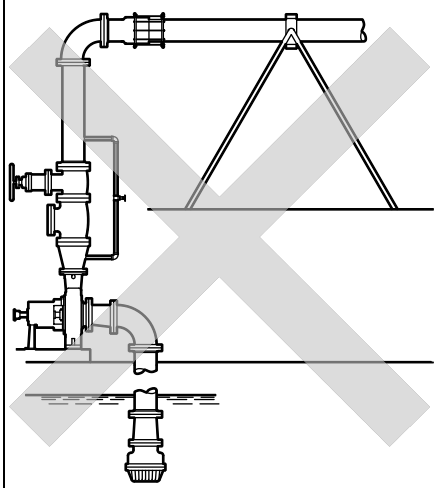

Fastening

WARNING:
- Only use fasteners of the proper size and material.
- Replace all corroded fasteners.
- Make sure that all fasteners are properly tightened and that there are no missing fasteners.

Suction-piping checklist

Performance curve reference

Net positive suction head available ($NPSH_A$) must always exceed NPSH required ($NPSH_R$) as shown on the published performance curve of the pump.

Suction-piping checks

Check	Explanation/comment	Checked
Check that the distance between the inlet flange of the pump and the closest elbow is at least five pipe diameters.	This minimizes the risk of cavitation in the suction inlet of the pump due to turbulence. See the Example sections for illustrations.	
Check that elbows in general do not have sharp bends.	See the Example sections for illustrations.	
Check that the suction piping is one or two sizes larger than the suction inlet of the pump. Install an eccentric reducer between the pump inlet and the suction piping.	The suction piping must never have a smaller diameter than the suction inlet of the pump. See the Example sections for illustrations.	
Check that the eccentric reducer at the suction flange of the pump has the following properties: • Sloping side down • Horizontal side at the top	See the example illustrations.	
When suction strainers or suction bells are used, check that they are at least three times the area of the suction piping.	Suction strainers help to prevent clogging. Mesh holes with a minimum diameter of 1/16 in. (1.6 mm) are recommended.	
If more than one pump operates from the same liquid source, check that separate suction-piping lines are used for each pump.	This recommendation helps you to achieve a higher pump performance.	
If necessary, make sure that the suction piping includes a drain valve and that it is correctly installed.	—	

Liquid source below the pump

Check	Explanation/comment	Checked
Make sure that the suction piping is free from air pockets.	This helps to prevent the occurrence of air and cavitation in the pump inlet.	
Check that the suction piping slopes upwards from the liquid source to the pump inlet.	—	
If the pump is not self-priming, check that a device for priming the pump is installed.	Use a foot valve with a diameter that is at least equivalent to the diameter of the suction piping.	

Liquid source above the pump

Check	Explanation/comment	Checked
Check that an isolation valve is installed in the suction piping at a distance of at least two times the pipe diameter from the suction inlet.	This permits you to close the line during pump inspection and maintenance. Do not use the isolation valve to throttle the pump. Throttling can cause these problems: • Loss of priming • Excessive temperatures • Damage to the pump • Voiding the warranty	
Make sure that the suction piping is free from air pockets.	This helps to prevent the occurrence of air and cavitation in the pump inlet.	
Check that the piping is level or slopes downward from the liquid source.	—	
Make sure that no part of the suction piping extends below the suction flange of the pump.	—	
Make sure that the suction piping is adequately submerged below the surface of the liquid source.	This prevents air from entering the pump through a suction vortex.	

Example: Elbow close to the pump suction inlet

Correct	Incorrect
The correct distance between the inlet flange of the pump and the closest elbow must be at least five pipe diameters. 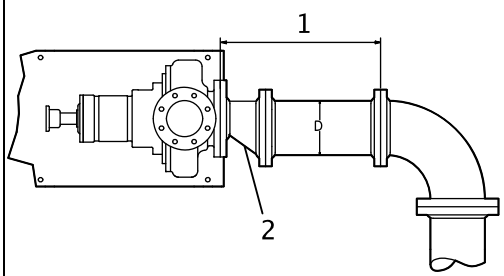 1. Enough distance to prevent cavitation 2. Eccentric reducer with a level top	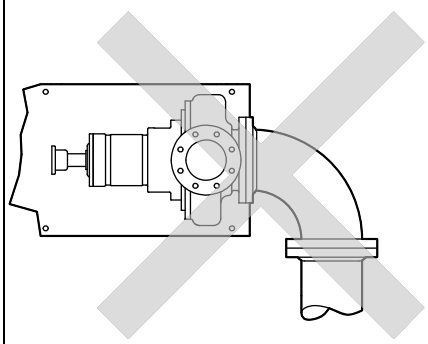

Example: Suction piping equipment

Correct	Incorrect
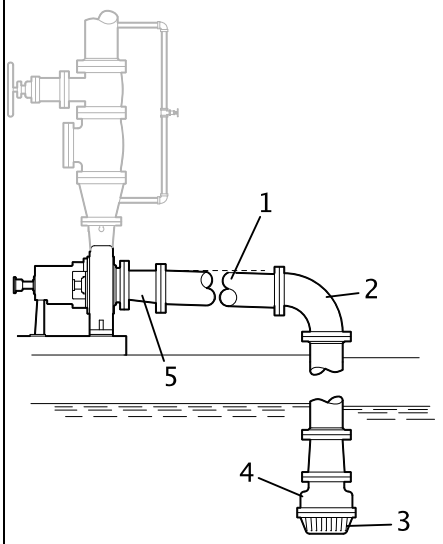	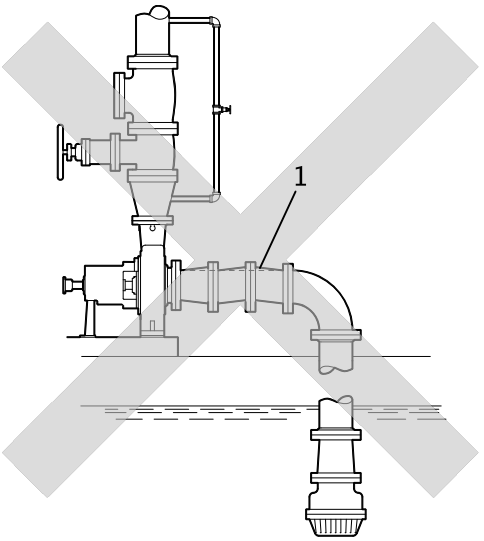
1. Suction pipe sloping upwards from liquid source 2. Long-radius elbow 3. Strainer 4. Foot valve 5. Eccentric reducer with a level top	1. Air pocket, because the eccentric reducer is not used and because the suction piping does not slope gradually upward from the liquid source

Discharge piping checklist

Checklist

Check	Explanation/comment	Checked
Check that an isolation valve is installed in the discharge line.	The isolation valve is required for: • Priming • Regulation of flow • Inspection and maintenance of the pump See Example: Discharge piping equipment for illustrations.	
Check that a check valve is installed in the discharge line, between the isolation valve and the pump discharge outlet.	The location between the isolation valve and the pump allows inspection of the check valve. The check valve prevents damage to the pump and seal due to the back flow through the pump, when the drive unit is shut off. It is also used to restrain the liquid flow. See Example: Discharge piping equipment for illustrations.	
If increasers are used, check that they are installed between the pump and the check valve.	See Example: Discharge piping equipment for illustrations.	
If quick-closing valves are installed in the system, check that cushioning devices are used.	This protects the pump from surges and water hammer.	

Example: Discharge piping equipment

Correct	Incorrect
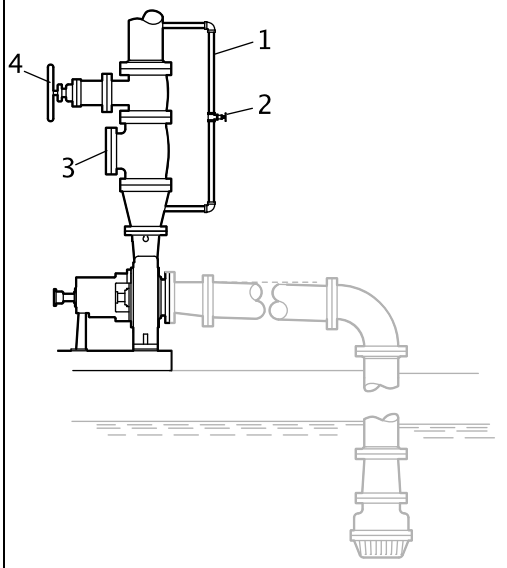	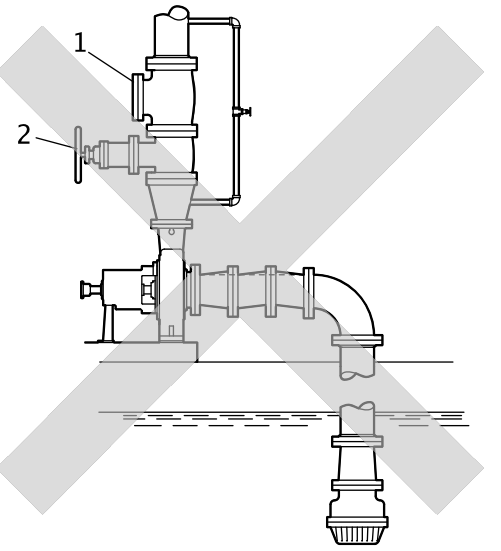
1. Bypass line 2. Shut-off valve 3. Check valve 4. Discharge isolation valve	1. Check valve (incorrect position) 2. The isolation valve should not be positioned between the check valve and the pump.

Commissioning, Startup, Operation, and Shutdown

Preparation for startup

DANGER:
Avoid death or serious injury. Explosion and/or seizure of pump can cause fire and/or burns. Never operate pump past the pressure and temperature limits shown on the nameplate on the pump.

WARNING:

- Failure to follow these precautions before you start the unit will lead to serious personal injury and equipment failure.
- Do not operate the pump below the minimum rated flows or with the suction or discharge valves closed. These conditions can create an explosive hazard due to vaporization of pumped fluid and can quickly lead to pump failure and physical injury.
- Avoid death or serious injury. Leaking fluid can cause fire and/or burns. Operating the pump above maximum rated flow shown on the pump curve leading to an increase in horsepower and vibration along with an increase in NPSHr resulting in mechanical seal and/or shaft failure and/or loss of prime.
- Avoid death or serious injury. Leaking fluid can cause fire and/or burns. Speed of pump must reach 2000 rpm for 2 pole motors and 1000 rpm for 4 pole motors within 10 seconds or an increase in vibration and rotor deflection and decrease in rotor stability leading to mechanical seal and/or shaft failure and/or pump seizure can occur.
- Never operate the pump without the coupling guard correctly installed.
- Always disconnect and lock out power to the driver before you perform any installation or maintenance tasks. Failure to disconnect and lock out driver power will result in serious physical injury.
  - Electrical connections must be made by certified electricians in compliance with all international, national, state, and local rules.
  - Refer to driver/coupling/gear manufacturers installation and operation manuals (IOM) for specific instructions and recommendations.
- Operating the pump in reverse rotation can result in the contact of metal parts, heat generation, and breach of containment.
- Avoid death or serious injury. Explosion and/or seizure of pump can cause fire and/or burns. Assure balance line is installed and either piped to the pump suction or back to the suction vessel to avoid vaporization of pumped fluid.

DANGER:
Avoid death or serious injury. Leaking fluid can cause fire and/or burns. Assure all openings are sealed off prior to filling pump.

Precautions

NOTICE:

- Verify the driver settings before you start any pump.
- Make sure that the warm-up rate does not exceed 2.5°F (1.4°C) per minute.
- Risk of damage to the mechanical seal or shaft sleeve on units supplied with cartridge mechanical seals. Prior to startup, make sure to tighten the set screws in the seal locking ring and remove the centering clips.

You must follow these precautions before you start the pump:

- Flush and clean the system thoroughly to remove dirt or debris in the pipe system in order to prevent premature failure at initial startup.

- Bring variable-speed drivers to the rated speed as quickly as possible.
- Run a new or rebuilt pump at a speed that provides enough flow to flush and cool the close-running surfaces of the stuffing-box bushing.
- If temperatures of the pumped fluid will exceed 200°F (93°C), then warm up the pump prior to operation. Circulate a small amount of fluid through the pump until the casing temperature is within 100°F (38°C) of the fluid temperature. Accomplish this by flowing fluid from pump inlet to discharge drain (optionally, the casing vent can be included in warm-up circuit but not required). Soak for (2) hours at process fluid temperature.

At initial startup, do not adjust the variable-speed drivers or check for speed governor or over-speed trip settings while the variable-speed driver is coupled to the pump. If the settings have not been verified, then uncouple the unit and refer to instructions supplied by the driver manufacturer.

Remove the coupling guard

1. Remove the nut, bolt, and washers from the slotted hole in the center of the coupling guard.
2. Slide the driver half of the coupling guard toward the pump.

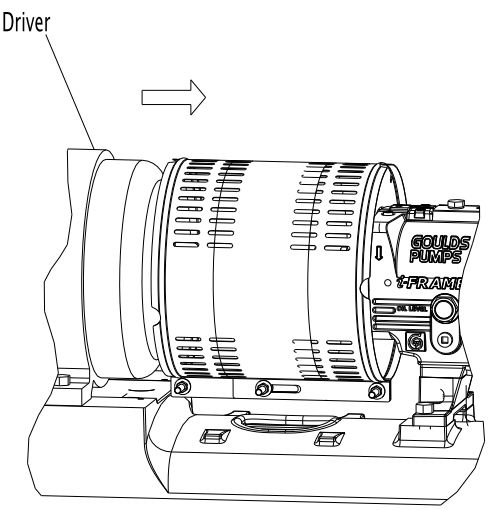

3. Remove the nut, bolt, and washers from the driver half of the coupling guard.

4. Remove the driver-side end plate.

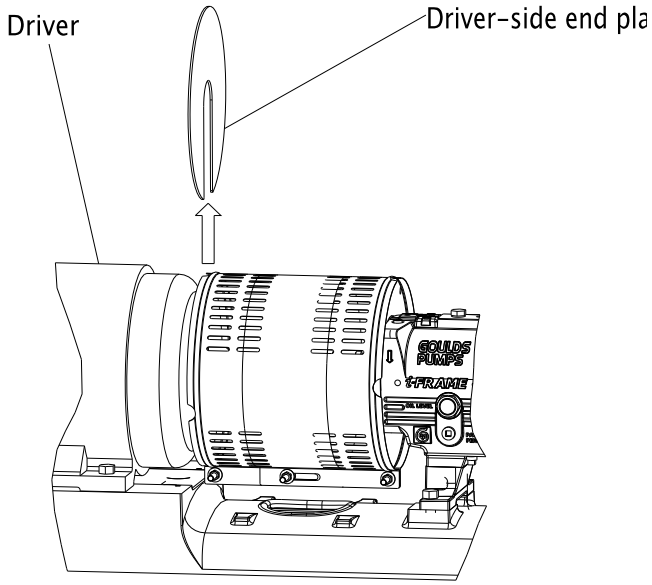

5. Remove the driver half of the coupling guard:
   a) Slightly spread the bottom apart.
   b) Lift upwards.

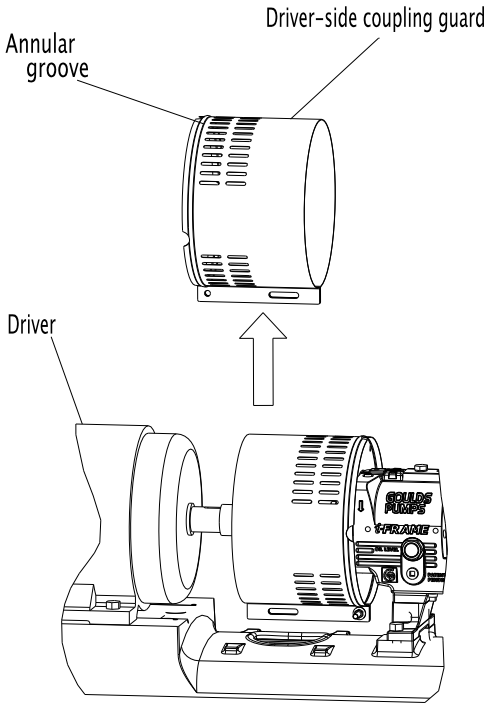

6. Remove the remaining nut, bolt, and washers from the pump half of the coupling guard. It is not necessary to remove the end plate from the pump side of the bearing housing. You can access the bearing-housing tap bolts without removing this end plate if maintenance of internal pump parts is necessary.
7. Remove the pump half of the coupling guard:
   a) Slightly spread the bottom apart.

b) Lift upwards.

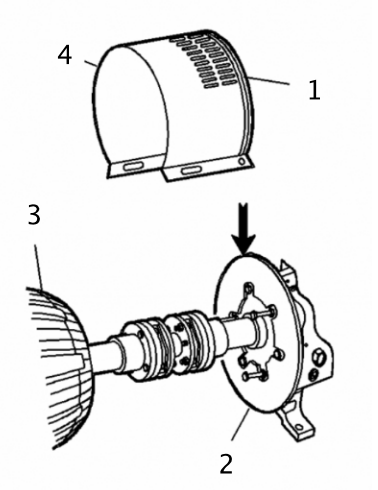

1. Annular groove
2. Pump-side end plate
3. Driver
4. Pump half of the coupling guard

Check the rotation - Frame Mounted

WARNING:

- Operating the pump in reverse rotation can result in the contact of metal parts, heat generation, and breach of containment.
- Always disconnect and lock out power to the driver before you perform any installation or maintenance tasks. Failure to disconnect and lock out driver power will result in serious physical injury.
  - Electrical connections must be made by certified electricians in compliance with all international, national, state, and local rules.
  - Refer to driver/coupling/gear manufacturers installation and operation manuals (IOM) for specific instructions and recommendations.

1. Lock out power to the driver.
2. Make sure that the coupling hubs are fastened securely to the shafts.
3. Make sure that the coupling spacer is removed.
   The pump ships with the coupling spacer removed.
4. Unlock power to the driver.
5. Make sure that everyone is clear, and then jog the driver long enough to determine that the direction of rotation corresponds to the arrow on the bearing housing or close-coupled frame.
6. Lock out power to the driver.

Impeller-clearance check

The impeller-clearance check ensures the following:

- The pump turns freely.
- The pump operates at optimal efficiency for long equipment life and low energy consumption.

Impeller clearances (3196 and HT 3196)

WARNING:
For pumpage temperatures greater than 200°F (93°C), you must increase the cold (ambient) setting according to this table. Doing so prevents the impeller from contacting the casing due to differential expansion from the higher operating temperatures. Failure to do so may result in sparks, unexpected heat generation, and equipment damage.

NOTICE:
Do not set the maximum impeller setting to more than 0.005 in. (0.13 mm) greater than the values in this table. Doing so may result in a significant decrease in performance.

Table 8: Impeller clearances
This pump requires the impeller clearances in the following table.

Service temperature	STi	MTi/LTi	XLT-i/i17
in. (mm)	in. (mm)	in. (mm)	
-20 to 200°F (-29 to 93°C)	0.005 (0.13)	0.008 (0.20)	0.015 (0.38)
Up to 250°F (121°C)	0.006 (0.15)	0.009 (0.22)	0.016 (0.41)
Up to 300°F (149°C)	0.007 (0.18)	0.010 (0.25)	0.017 (0.43)
Up to 350°F (177°C)	0.009 (0.22)	0.012 (0.30)	0.019 (0.48)
Up to 400°F (204°C)	0.010 (0.25)	0.013 (0.33)	0.020 (0.50)
Up to 450°F (232°C)	0.011 (0.28)	0.014 (0.35)	0.021 (0.53)
Up to 500°F (260°C)	0.012 (0.30)	0.015 (0.38)	0.022 (0.56)
Up to 550°F (288°C)	0.013 (0.33)	0.016 (0.41)	0.023 (0.58)
Up to 600°F (316°C)	0.014 (0.36)	0.017 (0.43)	0.024 (0.61)
Up to 650°F (343°C)	0.016 (0.40)	0.019 (0.48)	0.026 (0.66)
Up to 700°F (371°C)	0.017 (0.43)	0.020 (0.50)	0.027 (0.69)

Impeller-clearance setting

Importance of a proper impeller clearance

A proper impeller clearance ensures that the pump runs at high performance.

WARNING:
- The impeller clearance setting procedure must be followed. Improperly setting the clearance or not following any of the proper procedures can result in sparks, unexpected heat generation, and equipment damage.
- If you use a cartridge mechanical seal, you must install the centering clips and loosen the set screws before you set the impeller clearance. Failure to do so could result in sparks, heat generation, and mechanical seal damage.

Impeller clearance methods

You can set the impeller clearance with either of these methods:

- Dial indicator method
- Feeler gauge method

Set the impeller clearance - dial indicator method (all except CV 3196)

WARNING:
Always disconnect and lock out power to the driver before you perform any installation or maintenance tasks. Failure to disconnect and lock out driver power will result in serious physical injury.
- Electrical connections must be made by certified electricians in compliance with all international, national, state, and local rules.
- Refer to driver/coupling/gear manufacturers installation and operation manuals (IOM) for specific instructions and recommendations.

1. Remove the coupling guard.
2. Set the indicator so that the button contacts either the shaft end or the face of the coupling.

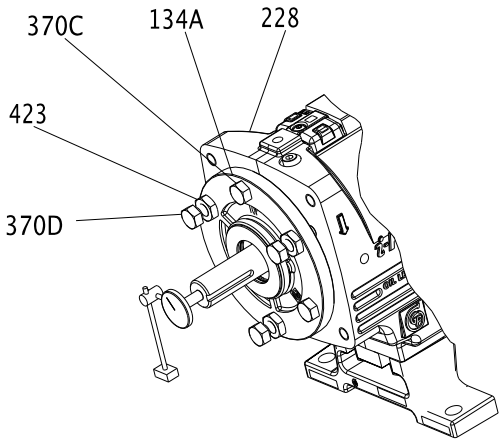

3. Loosen the jam nuts (423) on the jack bolts (370D) , and then back the bolts out about two turns.
4. Tighten the locking bolts evenly (370C), bringing the bearing housing (134A) towards the frame (228) until the impeller contacts the casing.
5. Turn the shaft to ensure that there is contact between the impeller and the casing.
6. Set the indicator to zero and loosen the locking bolt (370C) about one turn.
7. Thread in the jack bolts (370D) until the jack bolts evenly contact the bearing frame.
8. Tighten the jack bolts evenly about one flat at a time, moving the bearing housing (134A) away from the bearing frame until the indicator shows the correct clearance.
   Refer to the impeller clearance table to determine the correct clearance.
9. Tighten the bolts evenly in this order:
   a) Tighten the locking bolts (370C).
   b) Tighten the jack bolts (370D).
   Make sure to keep the indicator reading at the proper setting.
10. Make sure the shaft turns freely.

Set the impeller clearance - feeler gauge method (all except CV 3196)

WARNING:
Always disconnect and lock out power to the driver before you perform any installation or maintenance tasks. Failure to disconnect and lock out driver power will result in serious physical injury.

- Electrical connections must be made by certified electricians in compliance with all international, national, state, and local rules.
- Refer to driver/coupling/gear manufacturers installation and operation manuals (IOM) for specific instructions and recommendations.

1. Lock out the driver power and remove the coupling guard.

2. Loosen the jam nuts (423B) on the jack bolts (371A), and then back the bolts out about two turns.

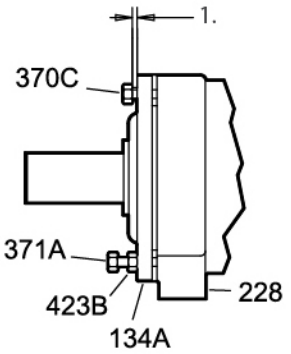

1. See impeller clearance table for distance

3. Evenly tighten the locking bolts (370C), bringing the bearing housing (134A) towards the frame (228) until the impeller contacts the casing.
4. Turn the shaft to ensure that there is contact between the impeller and the casing.
5. Use a feeler gauge to set the gap between the three locking bolts (370C) and the bearing housing (134A) to the correct impeller clearance.
   Refer to the impeller clearance table to determine the correct clearance.
6. Use the three jack bolts (370D) to evenly loosen the bearing housing (134A) until it contacts the locking bolts (370C).
7. Evenly tighten the jam nuts (423B).
8. Make sure the shaft turns freely.

Couple the pump and driver

WARNING:
Always disconnect and lock out power to the driver before you perform any installation or maintenance tasks. Failure to disconnect and lock out driver power will result in serious physical injury.

- Electrical connections must be made by certified electricians in compliance with all international, national, state, and local rules.
- Refer to driver/coupling/gear manufacturers installation and operation manuals (IOM) for specific instructions and recommendations.

Couplings must have proper certification to be used in an ATEX classified environment. Use the instructions from the coupling manufacturer in order to lubricate and install the coupling. Refer to driver/coupling/gear manufacturers IOM for specific instructions and recommendations.

Install the coupling guard

WARNING:

- Never operate a pump without a properly installed coupling guard. Personal injury will occur if you run the pump without a coupling guard.
- Electrical Connections must be made by certified electricians in compliance with all international, national, state, and local rules.
- Refer to driver/coupling/gear manufacturers IOM for specific instructions and recommendations.
- Always disconnect and lock out power to the driver before you perform any installation or maintenance tasks. Failure to disconnect and lock out driver power will result in serious physical injury.
  - Electrical connections must be made by certified electricians in compliance with all international, national, state, and local rules.
  - Refer to driver/coupling/gear manufacturers installation and operation manuals (IOM) for specific instructions and recommendations.
- The coupling used in an Ex-classified environment must be properly certified and must be constructed from a non-sparking material.

Required parts:

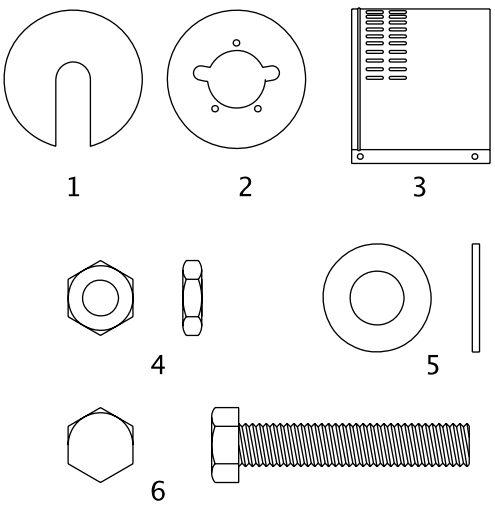

1. End plate, drive end
2. End plate, pump end
3. Guard half, 2 required
4. 3/8-16 nut, 3 required
5. 3/8 in. washer
6. 3/8-16 x 2 in. hex head bolt, 3 required

1. De-energize the motor, place the motor in a locked-out position, and place a caution tag at the starter that indicates the disconnect.
2. Put the pump-side end plate in place.
   If the pump-side end plate is already in place, make any necessary coupling adjustments and then proceed to the next step.

If the pump size is...	Then...
STi, MTi, LTi	Align the pump-side end plate to the bearing frame. You do not need to adjust the impeller.
XLT-i	1. Align the end plate on the pump side to the bearing housing so that you meet these conditions: 1. The large slots on the end plate do not touch the bearing housing tap bolts. 2. The small slots align with the impeller adjusting bolts. 2. Fasten the end plate to the bearing housing using the jam nuts on the impeller adjusting bolts. 3. Check the impeller clearance. Refer to the impeller clearance table for the correct impeller clearance.

If the pump size is...	Then...

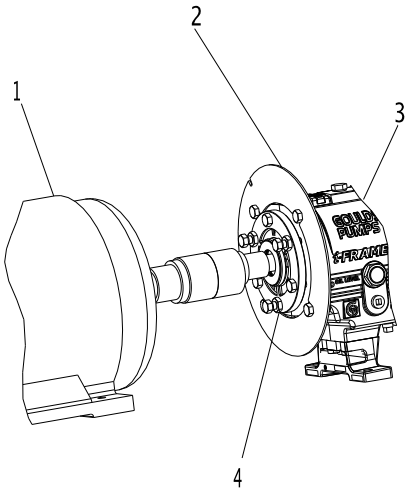

1. Driver
2. Pump end plate
3. Bearing housing
4. Jam nut

3. Put the pump-half of the coupling guard in place:
   a) Slightly spread the bottom apart.
   b) Place the coupling guard half over the pump-side end plate.

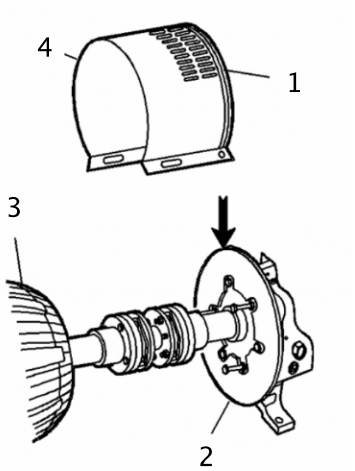

1. Annular groove
2. Pump-side end plate
3. Driver
4. Pump half of the coupling guard

The annular groove in the coupling guard half must fit around the end plate.

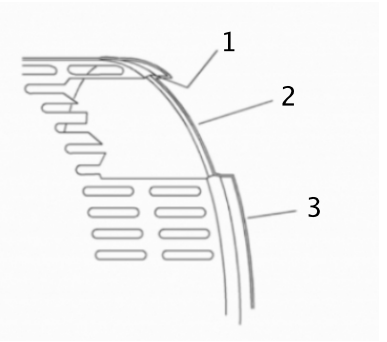

1. Annular groove
2. End plate (pump end)
3. Guard half

4. Use a bolt, a nut, and two washers to secure the coupling guard half to the end plate. Tighten securely.

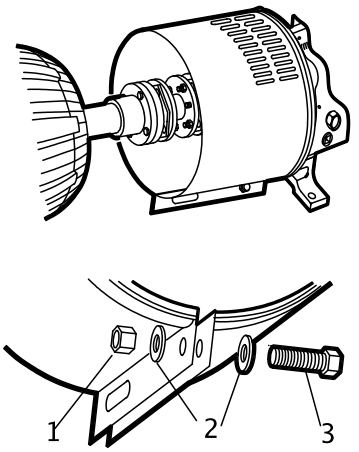

1. Nut
2. Washer
3. Bolt

5. Put the driver half of the coupling guard in place:
   a) Slightly spread the bottom apart.

b) Place the driver half of the coupling guard over the pump half of the coupling guard. The annular groove in the coupling guard half must face the motor.

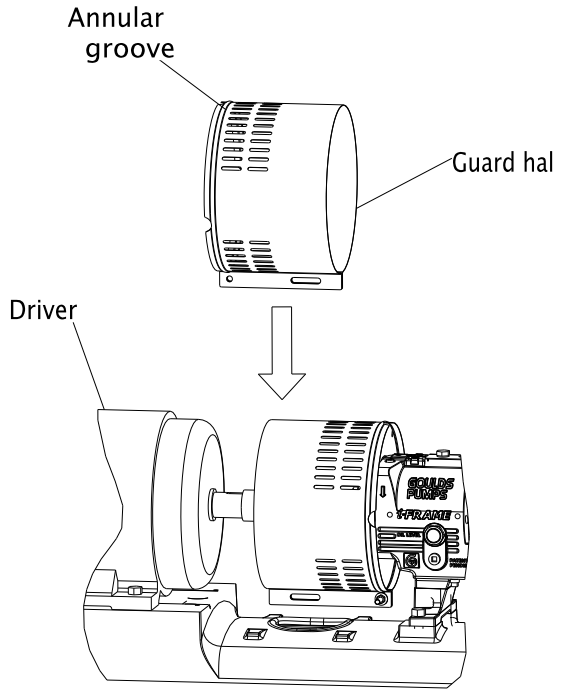

6. Place the driver-side end plate over the motor shaft.

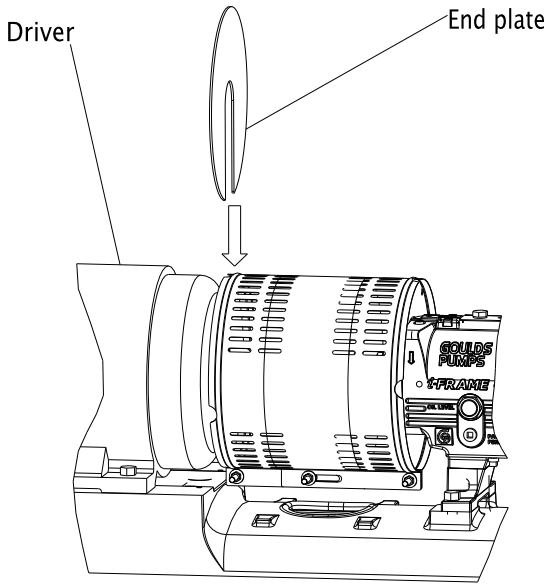

7. Place the driver-side end plate in the annular groove of the driver-half of the coupling guard.
8. Use a bolt, a nut, and two washers to secure the coupling guard half to the end plate. Hand-tighten only.
   The hole is located on the driver-side of the coupling guard half.

9. Slide the driver-half of the coupling guard towards the motor so that the coupling guard completely covers the shafts and coupling.

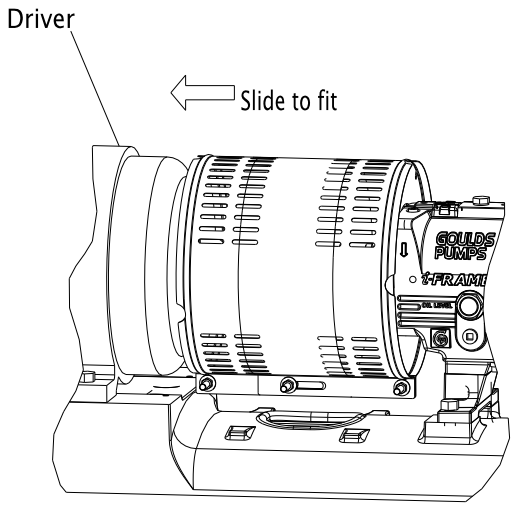

10. Use a nut, a bolt, and two washers to secure the coupling guard halves together.
11. Tighten all nuts on the guard assembly.

WARNING:
Never operate the pump without the coupling guard correctly installed.

Bearing lubrication

WARNING:
Make sure to properly lubricate the bearings. Failure to do so can result in excess heat generation, sparks, and premature failure.

NOTICE: Be certain to check the greasing on a pump that has been out of service for a long period of time and re-grease if necessary.

Pumps are shipped without oil. You must lubricate oil-lubricated bearings at the job site.

Grease-lubricated bearings are lubricated at the factory.

The bearing manufacturer fills greased-for-life bearings with grease and seals them at the factory. You do not need to lubricate or seal these bearings.

Oil volumes

Oil volume requirements

This table shows the required amount of oil for oil-lubricated bearings.

Frame	Qts.	Oz.	ml
STi	0.5	16	400
MTi	1.5	47	1400
LTi	1.5	48	1400
XLT-i and i17	3	96	3000

Lubricating-oil requirements

Oil requirements based on temperature

For the majority of operating conditions, bearing temperatures run between 120°F (49°C) and 180°F (82°C), and you can use an oil of ISO viscosity grade 68 at 100°F (38°C). If temperatures exceed 180°F (82°C), refer to the table for temperature requirements.

Temperature	Oil requirement
Bearing temperatures exceed 180°F (82°C)	Use ISO viscosity grade 100 with bearing-frame cooling or finned-tube oil cooler. The finned-tube oil cooler is standard with the HT 3196 model and optional for all other models.
Pumped-fluid temperatures exceed 350°F (177°C)	Use synthetic lubrication.

Acceptable oil for lubricating bearings

Acceptable lubricants

Examples of acceptable high quality turbine oils with rust and oxidation inhibitors.

Brand	Lubricant type
Chevron	GTS Oil 68
Exxon	Teresstic EP 68
Mobil	DTE 26 300 SSU @ 100°F (38°C)
Philips	Mangus Oil 315
Shell	Tellus Oil 68
Sunoco	Sunvis 968
Royal Purple	SYNFILM ISO VG 68 Synthetic Lube

Examples of acceptable synthetic lubricants.

Brand	Lubricant type
Castrol	Hyspin R&O 220
Chevron	GST 220
Exxon	Teresstic 220
Mobil	DTE Oil BB SHC 630
Shell	Marlina 220 Tellus 220
Sunoco	Sunvis 9220
Texaco	Regal R&O 220 Rando HD 220
Royal Purple	Synfilm GT 220 Synergy 220

Lubricate the bearings with oil

Use a high-quality turbine oil with rust and oxidation inhibitors.

1. Remove the fill plug.
2. Fill the bearing frame with oil through the filler connection, which is located on top of the bearing frame.

Fill the bearing frame with oil until the oil level reaches the middle of the sight glass (319).

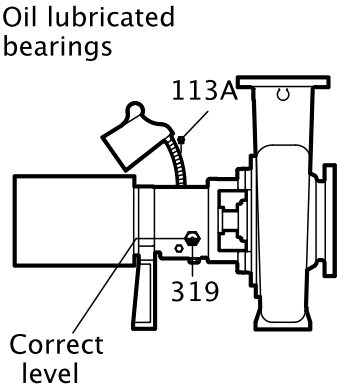

3. Replace the fill plug.

Lubricate the bearings with pure oil mist

Oil mist is an optional feature for this pump.
To lubricate bearings with pure oil mist, follow the instructions provided by the manufacturer of the oil-mist generator.
The inlet connections are on the top of the bearing frame.

Greased-for-life bearing lubrication

The bearing manufacturer fills greased-for-life bearings with grease and seals them at the factory. You do not need to lubricate or seal these bearings. Refer to the Maintenance chapter for re-greasing and maintenance procedures for these bearings.

Shaft-sealing options

In most cases, the manufacturer seals the shaft before shipping the pump. If your pump does not have a sealed shaft, see the Shaft-seal maintenance section in the Maintenance chapter.
This model uses these types of shaft seals:

- Cartridge mechanical seal
- Conventional inside-component mechanical seal
- Conventional outside-component mechanical seal
- Dynamic seal
- Packed-stuffing-box option

Mechanical seal options

Pumps are usually shipped with mechanical seals installed. If they are not, then refer to the mechanical seal manufacturer's installation instructions.
These are the mechanical seal options for this pump:

- Cartridge mechanical seal
- Conventional inside component mechanical seal
- Conventional outside component mechanical seal

Connection of sealing liquid for mechanical seals

Seal lubrication is required

Seal faces must have liquid film between them for proper lubrication. Locate the taps using the illustrations shipped with the seal.

Seal flushing methods

You can use these methods in order to flush or cool the seal:

Method	Description
Product flush	Run the piping so that the pump pushes the pumped fluid from the casing and injects it into the seal gland. If necessary, an external heat exchanger cools the pumped fluid before it enters the seal gland.
External flush	Run the piping so that the pump injects a clean, cool, compatible liquid directly into the seal gland. The pressure of the flushing liquid must be 5 to 15 psi (0.35 to 1.01 kg/cm^2) greater than the seal chamber pressure. The injection rate must be 0.5 to 2 gpm (2 to 8 lpm).
Other	You can use other methods that employ multiple gland or seal chamber connections. Refer to the mechanical seal reference drawing and piping diagrams.

Packed stuffing box option

WARNING:
Packed stuffing boxes are not allowed in an ATEX-classified environment.

The factory does not install the packing, lantern ring, or split gland.

These parts are included with the pump in the box of fittings. Before you start the pump, you must install the packing, lantern ring, and split gland according to the Packed stuffing box maintenance section in the Maintenance chapter.

Connection of sealing liquid for a packed stuffing box

WARNING:
Packed stuffing boxes are not allowed in an ATEX-classified environment.

NOTICE:
Make sure to lubricate the packing. Failure to do so may result in shortening the life of the packing and the pump.

You must use an external sealing liquid under these conditions:

- The pumped fluid includes abrasive particles.
- The stuffing-box pressure is below atmospheric pressure when the pump is running with a suction lift or when the suction source is in a vacuum. Under these conditions, packing is not cooled and lubricated and air is drawn into pump.

Conditions for application of an external liquid

Condition	Action
The stuffing box pressure is above atmospheric pressure and the pumped fluid is clean.	Normal gland leaks of 40 to 60 drops per minute is usually sufficient to lubricate and cool the packing. You do not need sealing liquid.
The stuffing box pressure is below atmospheric pressure or the pumped fluid is not clean.	An outside source of clean compatible liquid is required.
An outside source of clean compatible liquid is required.	You must connect the piping to the lantern ring connection with a 40 to 60 drops-per-minute leak rate. The pressure must be 15 psi (1.01 kg/cm^2) above the stuffing box pressure.

Dynamic-seal option

WARNING:
Dynamic seals are not allowed in an ATEX-classified environment.

The dynamic seal consists of two parts:

- Repeller seal
- Secondary seal (one of the following):
  - Graphite packing
  - Elastomenic face seal

Table 9: Dynamic seal part function

Part	Function
Repeller seal	A repeller seal prevents liquid from entering the stuffing box during operation. The repeller normally does not require a flush. However, for services that allow a build-up of solids on the repeller, you must install a flush connection. If a danger of freezing exists, then you must install a drain connection to drain the repeller chamber.

Secondary seal (graphite packing)	This secondary seal prevents leaks during pump shutdown and is comprised of the following:
	• Graphite packing – Graphite packing provides adequate life running dry but can provide longer performance if lubricated with clean water or grease.
	  • If you lubricate with clean water, then the repeller reduces both the quantity and pressure of seal water that is necessary. If the suction head is less than the repeller capability, then the stuffing box pressure is the same as the atmospheric pressure. Water pressure for the seal must be high enough to overcome static head when the pump is not operating to keep pumped fluid out of the packing. There must be enough flow to cool the packing.
	  • If you lubricate with grease, then you must use spring-loaded grease lubricators to maintain a constant supply.
	• Elastomeric face seal – The elastomeric face seal consists of an elastomer rotary fitted to the shaft and a ceramic stationary seat fitted in the gland. To set an elastomeric face seal, refer to Set an elastomeric face seal. This seal is designed to run dry, so no flush is necessary.

Set an elastomeric face seal

This procedure ensures that the elastomeric seal attains proper contact. No other adjustments are necessary.

1. Remove the gland nuts.
2. Slide the gland back on the sleeve.
3. Pull the rotary back on the sleeve until the rotary is about 1 in. (25 mm) beyond the stuffing box face.
4. Push the gland back onto the studs, pushing the rotary back along the sleeve.
5. Tighten the gland nuts.

Pump priming

Prime the pump with the suction supply above the pump

1. Slowly open the suction isolation valve.
2. Open the air vents on the suction and discharge piping until the pumped fluid flows out.
3. Close the air vents.

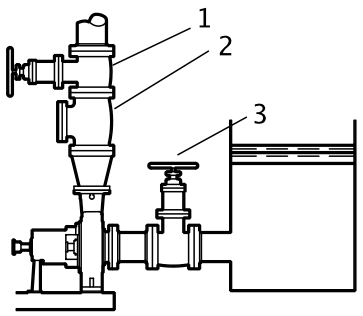

1. Discharge isolation valve
2. Check valve
3. Suction isolation valve

Prime the pump with the suction supply below the pump

Use a foot valve and an outside source of liquid in order to prime the pump. The liquid can come from one of these sources:

- A priming pump
- A pressurized discharge line
- Another outside supply

1. Close the discharge isolation valve.
2. Open the air vent valves in the casing.
3. Open the valve in the outside supply line until only liquid escapes from the vent valves.
4. Close the vent valves.
5. Close the outside supply line.

This illustration is an example of priming the pump with a foot valve and an outside supply:

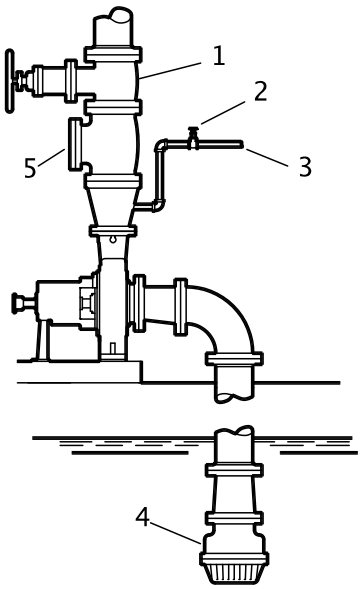

1. Discharge isolation valve
2. Shutoff valve
3. From outside supply
4. Foot valve
5. Check valve

This illustration is an example of priming the pump with a foot valve using a bypass around the check valve:

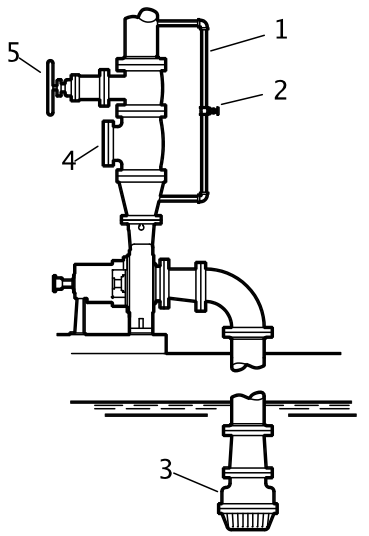

1. By-pass line
2. Shutoff valve
3. Foot valve
4. Check valve
5. Discharge isolation valve

Other methods of priming the pump

You can also use these methods in order to prime the pump:

- Prime by ejector
- Prime by automatic priming pump

Start the pump

WARNING: Immediately observe the pressure gauges. If discharge pressure is not quickly attained, stop the driver immediately, reprime, and attempt to restart the pump.

CAUTION:

- Immediately observe the pressure gauges. If discharge pressure is not quickly attained, stop the driver, reprime, and attempt to restart the pump.
- Observe the pump for vibration levels, bearing temperature, and excessive noise. If normal levels are exceeded, shut down the pump and resolve the issue.
- On pure or purge-oil mist-lubricated units, remove the viewing port plugs to verify that oil mist flowing properly. Replace the plugs.
- On frame mounted units, ensure that the oil level is correct prior to starting pump. Close coupled pumps do not have oil lubricated bearings.
- Ensure all flush and cooling systems are operating correctly prior to starting pump.

Before you start the pump, you must perform these tasks:

- Open the suction valve.
- Open any recirculation or cooling lines.

1. Fully close or partially open the discharge valve, depending on system conditions.
2. Start the driver.
3. Slowly open the discharge valve until the pump reaches the desired flow.
4. Immediately check the pressure gauge to ensure that the pump quickly reaches the correct discharge pressure.
5. If the pump fails to reach the correct pressure, perform these steps:
   a) Stop the driver.
   b) Prime the pump again.
   c) Restart the driver.
6. Monitor the pump while it is operating:
   a) Check the pump for bearing temperature, excessive vibration, and noise.
   b) If the pump exceeds normal levels, then shut down the pump immediately and correct the problem.
   A pump can exceed normal levels for several reasons. See Troubleshooting for information about possible solutions to this problem.
7. Repeat steps 5 and 6 until the pump runs properly.

Activate the i-ALERT Condition Monitor

WARNING:
Never heat the condition monitor to temperatures in excess of 300°F (149°C). Heating to these temperatures could result in death or serious injury.

CAUTION:
Always wear protective gloves. The pump and condition monitor can be hot.

By using the i-Alert™ Condition monitor, you agree to be bound by the Terms and Conditions of the *Software License Agreement* (page 18)

The condition monitor is ready for activation when the pump is running and has reached a steady flow, pressure, and temperature. This process only takes a few minutes.

1. Place a small magnet on the condition monitor over the ITT logo and then remove it, as this example shows.

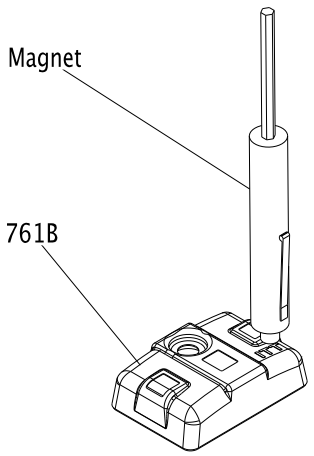

When the condition monitor is activated it:

1. Displays a series of red LEDs followed by a solid green LED.
2. Collects eight samples that are spaced one second apart.
3. Averages these readings to establish the baseline vibration level.
4. Flashes a green LED after approximately twelve seconds.

For the first ten minutes, the green LED flashes every second for five consecutive flashes and then pauses to take a vibration reading. More frequent measurements (every six seconds) are taken in this startup period so that an alarm can be immediately detected.

i-ALERT™ Condition Monitor routine operation

Measurement interval

This table shows the measurement intervals for the condition monitor during normal operation and when the monitor is in alarm mode.

Mode	Measurement interval
Normal operating mode	Five minutes
Alarm mode	Two minutes

When the condition monitor measures a reading beyond the specified temperature and vibration limits, the appropriate red LED flashes. After the process or pump condition that causes the alarm is corrected, the condition monitor returns to normal mode after one normal-level measurement.

Alarm mode

When the condition monitor is in alarm mode, you should investigate the cause of the condition and make necessary corrections in a timely manner.

Magnetic device considerations

Be careful when you use magnetic devices in close proximity of the condition monitor, such as magnetic vibration-monitoring probes or dial indicators. These magnetic devices can accidentally activate or deactivate the condition monitor resulting in improper alarm levels or loss of monitoring.

Pump operation precautions

General considerations

CAUTION:

- Vary the capacity with the regulating valve in the discharge line. Never throttle the flow from the suction side since this can result in decreased performance, unexpected heat generation, and equipment damage.
  Do not overload the driver. Driver overload can result in unexpected heat generation and equipment damage. The driver can overload in these circumstances:
  - The specific gravity of the pumped fluid is greater than expected.
  - The pumped fluid exceeds the rated flow rate.
- Do not operate pump past the maximum flow. For maximum flow refer to the pump performance curve.
- Do not overload the driver. Driver overload can result in unexpected heat generation and equipment damage. The driver can overload in these circumstances:
  - The specific gravity of the pumped fluid is greater than expected.
  - The pumped fluid exceeds the rated flow rate.
- Do not operate pump below hydraulic or thermal minimum flow. For hydraulic minimum flows refer to technical manual and pump performance curve. To calculate thermal minimum flow, refer to HI Centrifugal Pumps for Design and Application ANSI/HI 1.3-2000.
- Make sure to operate the pump at or near the rated conditions. Failure to do so can result in pump damage from cavitation or recirculation.

Operation at reduced capacity

WARNING:
Never operate any pumping system with a blocked suction and discharge. Operation, even for a brief period under these conditions, can cause confined pumped fluid to overheat, which results in a violent explosion. You must take all necessary measures to avoid this condition. If pump becomes plugged shut down and unplug prior to restarting pump.

CAUTION:

- The pump and system must be free of foreign objects. If pump becomes plugged, shut down and unplug prior to restarting pump.
- Avoid excessive vibration levels. Excessive vibration levels can damage the bearings, stuffing box or seal chamber, and the mechanical seal, which can result in decreased performance.
- Avoid increased radial load. Failure to do so can cause stress on the shaft and bearings.
- Avoid heat build-up. Failure to do so can cause rotating parts to score or seize.
- Avoid cavitation. Failure to do so can cause damage to the internal surfaces of the pump.

Operation under freezing conditions

NOTICE:
Do not expose an idle pump to freezing conditions. Drain all liquid that is inside the pump and the cooling coils. Failure to do so can cause liquid to freeze and damage the pump.

Shut down the pump

WARNING:
The pump can handle hazardous and toxic fluids. Identify the contents of the pump and observe proper decontamination procedures in order to eliminate the possible exposure to any hazardous or toxic fluids. Wear the proper personal protective equipment. Potential hazards include, but are not limited to, high temperature, flammable, acidic, caustic, explosive, and other risks. You must handle and dispose of pumped fluid in compliance with the applicable environmental regulations.

1. Slowly close the discharge valve.
2. Shut down and lock the driver to prevent accidental rotation.

Deactivate the i-ALERT™ Condition Monitor

NOTICE:
Always deactivate the condition monitor when the pump is going to be shut down for an extended period of time. Failure to do so will result in reduced battery life.

1. Touch and hold a small magnet to the condition monitor over the ITT logo until the red LEDs blink three times.
   This should take 10-15 seconds if the condition monitor is in normal operating mode and approximately five seconds if the condition monitor is in alarm mode.
2. Remove the magnet.

If the deactivation is successful, solid red LEDs will be displayed.

Reset the i-ALERT™ Condition Monitor

NOTICE:
Always reset the condition monitor when the pump is started after maintenance, system change, or down-time. Failure to do so may result in false baseline levels that could cause the condition monitor to alert in error.

1. Touch a magnet to the condition monitor over the ITT logo to turn the power on.The condition monitor begins to establish a new baseline vibration level.

Make the final alignment of the pump and driver

WARNING:
- Always disconnect and lock out power to the driver before you perform any installation or maintenance tasks. Failure to disconnect and lock out driver power will result in serious physical injury.
  - Electrical connections must be made by certified electricians in compliance with all international, national, state, and local rules.
  - Refer to driver/coupling/gear manufacturers installation and operation manuals (IOM) for specific instructions and recommendations.
- Follow shaft alignment procedures in order to prevent catastrophic failure of drive components or unintended contact of rotating parts. Follow the coupling installation and operation procedures from the coupling manufacturer.

You must check the final alignment after the pump and driver are at operating temperature. For initial alignment instructions, see the Installation chapter.

1. Run the unit under actual operating conditions for enough time to bring the pump, driver, and associated system to operating temperature.
2. Shut down the pump and the driver.
3. Remove the coupling guard.
   See Remove the coupling guard in the Maintenance chapter.
4. Check the alignment while the unit is still hot.
   See Pump-to-driver alignment in the Installation chapter.
5. Reinstall the coupling guard.
6. Restart the pump and driver.

Maintenance

Maintenance schedule

Maintenance inspections

A maintenance schedule includes these types of inspections:

- Routine maintenance
- Routine inspections
- Three-month inspections
- Annual inspections

Shorten the inspection intervals appropriately if the pumped fluid is abrasive or corrosive or if the environment is classified as potentially explosive.

Routine maintenance

Perform these tasks whenever you perform routine maintenance:

- Lubricate the bearings.
- Inspect the seal.

Routine inspections

Perform these tasks whenever you check the pump during routine inspections:

- Check the level and condition of the oil through the sight glass on the bearing frame.
- Check for unusual noise, vibration, and bearing temperatures.
- Check the pump and piping for leaks.
- Analyze the vibration.
- Inspect the discharge pressure.
- Inspect the temperature.
- Check the seal chamber and stuffing box for leaks.
  - Ensure that there are no leaks from the mechanical seal.
  - Adjust or replace the packing in the stuffing box if you notice excessive leaking.

Three-month inspections

Perform these tasks every three months:

- Check that the foundation and the hold-down bolts are tight.
- Check the packing if the pump has been left idle, and replace as required.
- Change the oil every three months (2000 operating hours) at minimum.
  - Change the oil more often if there are adverse atmospheric or other conditions that might contaminate or break down the oil.
- Check the shaft alignment, and realign as required.

Annual inspections

Perform these inspections one time each year:

- Check the pump capacity.
- Check the pump pressure.
- Check the pump power.

If the pump performance does not satisfy your process requirements, and the process requirements have not changed, then perform these steps:

1. Disassemble the pump.
2. Inspect it.

3. Replace worn parts.

Bearing maintenance

These bearing lubrication sections list different temperatures of the pumped fluid. If the pump is ATEX-certified and the temperature of the pumped fluid exceeds the permitted temperature values, then consult your ITT representative.

Bearing lubrication schedule

Type of bearing	First lubrication	Lubrication intervals
Oil-lubricated bearings	Add oil before you install and start the pump. Change the oil after 200 hours for new bearings.	After the first 200 hours, change the oil every 2000 operating hours or every three months.
Grease-lubricated bearings	Grease-lubricated bearings are initially lubricated at the factory.	Regrease bearings every 2000 operating hours or every three months.

Lubricating-oil requirements

Oil requirements based on temperature

For the majority of operating conditions, bearing temperatures run between 120°F (49°C) and 180°F (82°C), and you can use an oil of ISO viscosity grade 68 at 100°F (38°C). If temperatures exceed 180°F (82°C), refer to the table for temperature requirements.

Temperature	Oil requirement
Bearing temperatures exceed 180°F (82°C)	Use ISO viscosity grade 100 with bearing-frame cooling or finned-tube oil cooler. The finned-tube oil cooler is standard with the HT 3196 model and optional for all other models.
Pumped-fluid temperatures exceed 350°F (177°C)	Use synthetic lubrication.

Oil volumes

Oil volume requirements

This table shows the required amount of oil for oil-lubricated bearings.

Frame	Qts.	Oz.	ml
STi	0.5	16	400
MTi	1.5	47	1400
LTi	1.5	48	1400
XLT-i and i17	3	96	3000

Acceptable oil for lubricating bearings

Acceptable lubricants

Examples of acceptable high quality turbine oils with rust and oxidation inhibitors.

Brand	Lubricant type
Chevron	GTS Oil 68
Exxon	Teresstic EP 68
Mobil	DTE 26 300 SSU @ 100°F (38°C)
Philips	Mangus Oil 315
Shell	Tellus Oil 68
Sunoco	Sunvis 968
Royal Purple	SYNFILM ISO VG 68 Synthetic Lube

Examples of acceptable synthetic lubricants.

Brand	Lubricant type
Castrol	Hyspin R&O 220
Chevron	GST 220
Exxon	Teresstic 220

Brand	Lubricant type
Mobil	DTE Oil BB SHC 630
Shell	Marlina 220 Tellus 220
Sunoco	Sunvis 9220
Texaco	Regal R&O 220 Rando HD 220
Royal Purple	Synfilm GT 220 Synergy 220

Regrease the grease-lubricated bearings

NOTICE:
Make sure that the grease container, the greasing device, and the fittings are clean. Failure to do this can result in impurities entering the bearing housing when you regrease the bearings.

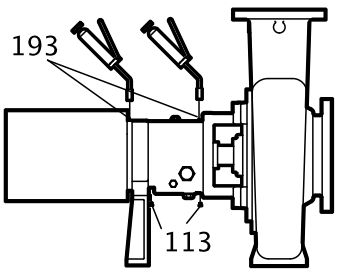

1. Wipe dirt from the grease fittings.
2. Remove the two grease-relief plugs from the bottom of the frame.
3. Fill both of the grease cavities through the fittings with a recommended grease until the fresh grease comes out of the relief holes.
4. Make sure that the frame seals are seated in the bearing housing.
   If they are not, press them in place with the drains located at the bottom.
5. Reinstall the grease-relief plugs.
6. Wipe off any excess grease.
7. Recheck the alignment.

The bearing temperature usually rises after you regrease due to an excess supply of grease. Temperatures return to normal in about two to four operating hours as the pump runs and purges the excess grease from the bearings.

Lubricating-grease requirements

Precautions

NOTICE:

- Never mix greases of different consistencies (NLGI 1 or 3 with NLGI 2) or with different thickeners. For example, never mix a lithium-based grease with a polyurea-based grease. Doing so may result in decreased performance.
- Remove the bearings and old grease if you need to change the grease type or consistency. Failure to do so may result in equipment damage or decreased performance.

Bearing temperature

Bearing temperatures are generally about 20Â°F (18Â°C) greater than bearing-housing outer surface temperatures.
This table shows the type of grease required for the operating temperature of the pump.

Bearing temperature	Type of grease
5°F to 230°F (-15°C to 110°C)	Use a lithium-based mineral-oil grease with a consistency of NLGI 2.
Exceed 350°F (177°C)	Use a high-temperature grease. Mineral-oil greases should have oxidation stabilizers and a consistency of NGLI 3.

Grease recommendations based on temperature

Most pumps use Sunoco 2EP grease. High temperature units that can pump fluids with a temperature greater than 350°F (177°C) use Mobil SCH32.
This table shows which brand of grease to use when lubricating the pump.

Brand	When temperature of pumped fluid is less than 350°F (177°C) âM M NLGI consistency 2	When temperature of pumped fluid is greater than350°F (177°C) âM M NLGI consistency 3
Mobil	Mobilux EP2	SCH32
Exxon	Unirex N2	Unirex N3
Sunoco	Mutipurpose 2EP	N/A
SKF	LGMT 2	LGMT 3

Lubricate the bearings after a shutdown period

1. Flush out the bearings and bearing frame with a light oil to remove contaminants. During flushing, make sure to rotate the shaft slowly by hand.
2. Flush the bearing housing with the proper lubricating oil to ensure oil quality after cleaning.
3. Refer to "Reassembly" section for proper bearing greasing procedure.

Shaft seal maintenance

Mechanical-seal maintenance

WARNING:
The mechanical seal used in an Ex-classified environment must be properly certified. Prior to startup, make sure that all areas that could leak pumped fluid to the work environment are closed.

CAUTION:
Never operate the pump without liquid supplied to mechanical seal. If you run a mechanical seal dry, even for a few seconds, this can cause seal damage. Physical injury can occur if a mechanical seal fails.

Cartridge-type mechanical seals

Cartridge-type mechanical seals are commonly used. Cartridge seals are preset by the seal manufacturer and require no field settings. Cartridge seals installed by the user require disengagement of the holding clips prior to operation, allowing the seal to slide into place. If the seal has been installed in the pump by ITT, these clips have already been disengaged.

Other mechanical seal types

For other types of mechanical seals, refer to the instructions provided by the seal manufacturer for installation and setting.

Reference drawing

The manufacturer supplies a reference drawing with the data package. Keep this drawing for future use when you perform maintenance and seal adjustments. The seal drawing specifies the required flush fluid and attachment points.

Before you start the pump

Check the seal and all flush piping.

Mechanical seal life

The life of a mechanical seal depends on the cleanliness of the pumped fluid. Due to the diversity of operating conditions, it is not possible to give definite indications as to the life of a mechanical seal.

Packed stuffing-box maintenance

WARNING:

- Packed stuffing boxes are not allowed in an ATEX-classified environment.
- Never attempt to replace the packing until the driver is properly locked out and the coupling spacer is removed.

Accepted leakage rate

It is not necessary to shut down or disassemble the pump to inspect the packing operation. During normal operation, the packing should leak approximately one drop per second.

Adjustment of gland

Adjust the gland if the leakage rate is greater than or less than the specified rate.

Evenly adjust each of the two gland bolts with a one-quarter (1/4) turn until the desired leakage rate is obtained. Tighten the bolts to decrease the rate. Loosen the bolts to increase the rate.

Tightening of packing

NOTICE: Never over-tighten packing to the point where less than one drop per second is observed. Over-tightening can cause excessive wear and power consumption during operation.

If you cannot tighten the packing to obtain less than the specified leakage rate, then replace the packing.

Dynamic-seal maintenance

WARNING:
Dynamic seals are not allowed in an ATEX-classified environment.

About the dynamic seal

Dynamic seal parts do not wear substantially to affect operation and do not require maintenance unless the service is particularly abrasive or corrosive.

Repeller

The dynamic repeller prevents pumpage leaks through the stuffing box when the pump operates under published acceptable conditions.

Static seal

A static seal prevents leakage when the pump is shut down. A static seal is either of the following:

- a lip seal
- an elastomeric-face seal
- graphite packing

The only maintenance that the lip seal and the elastomeric-face seal require is replacement when leakage becomes excessive.

The graphite packing should be installed as stuffing-box packing and is designed to run dry.

Disassembly

Disassembly precautions

WARNING:

- This manual clearly identifies accepted methods for disassembling units. These methods must be adhered to. Trapped liquid can rapidly expand and result in a violent explosion and injury. Never apply heat to impellers, propellers, or their retaining devices to aid in their removal unless explicitly stated in this manual.
- Always disconnect and lock out power to the driver before you perform any installation or maintenance tasks. Failure to disconnect and lock out driver power will result in serious physical injury.
  - Electrical connections must be made by certified electricians in compliance with all international, national, state, and local rules.
  - Refer to driver/coupling/gear manufacturers installation and operation manuals (IOM) for specific instructions and recommendations.
- Crush hazard. The unit and the components can be heavy. Use proper lifting methods and wear steel-toed shoes at all times.
- The pump can handle hazardous and toxic fluids. Identify the contents of the pump and observe proper decontamination procedures in order to eliminate the possible exposure to any hazardous or toxic fluids. Wear the proper personal protective equipment. Potential hazards include, but are not limited to, high temperature, flammable, acidic, caustic, explosive, and other risks. You must handle and dispose of pumped fluid in compliance with the applicable environmental regulations.
- A small amount of liquid will be present in certain areas like the seal chamber.

NOTICE:

- Avoid injury. Worn pump components can have sharp edges. Wear appropriate gloves while handling these parts.
- Make sure that all replacement parts are available before you disassemble the pump for overhaul.

Tools required

In order to disassemble the pump, you need these tools:

- Bearing puller
- Brass drift punch
- Cleaning agents and solvents
- Dial indicators
- Feeler gauges
- Hex wrenches
- Hydraulic press
- Induction heater
- Leveling blocks and shims
- Lifting sling
- Micrometer
- Rubber mallet
- Screwdriver
- Snap-ring pliers
- Torque wrench with sockets
- Wrenches

Drain the pump

CAUTION:

- Allow all system and pump components to cool before you handle them to prevent physical injury.
- If your pump is a Model NM3171, NM3196, 3198, 3298, V3298, SP3298, 4150, 4550, or 3107 there is a possible risk of static electric discharge from plastic parts that are not properly grounded. If the pumped fluid is non-conductive, drain and flush the pump with a conductive fluid under conditions that will not allow for a spark to be released to the atmosphere.

1. Close the isolation valves on the suction and discharge sides of the pump.
   You must drain the system if no valves are installed.
2. Open the drain valve.
   Do not proceed until liquid stops coming out of the drain valve. If liquid continues to flow from the drain valve, the isolation valves are not sealing properly and you must repair them before you proceed.
3. Leave the drain valve open and remove the drain plug located on the bottom of the pump housing.
   Do not reinstall the plug or close the drain valve until the reassembly is complete.
4. Drain the liquid from the piping and flush the pump if it is necessary.
5. Disconnect all auxiliary piping and tubing.
6. Remove the coupling guard.

Remove the coupling

1. Disconnect the coupling.
2. Remove the C-face adapter.
3. Remove the coupling-guard pump end-plate.

Remove the back pull-out assembly

CAUTION:
Never remove the back pull-out assembly without assistance.

1. Is your bearing frame oil lubricated?
   - If No: Proceed to step 2.
   - If Yes:
     1. Remove the bearing-frame drain plug (408A) in order to drain oil from the bearing frame.
     2. Replace the plug after the oil is drained.

3. Remove the oil reservoir, if equipped.

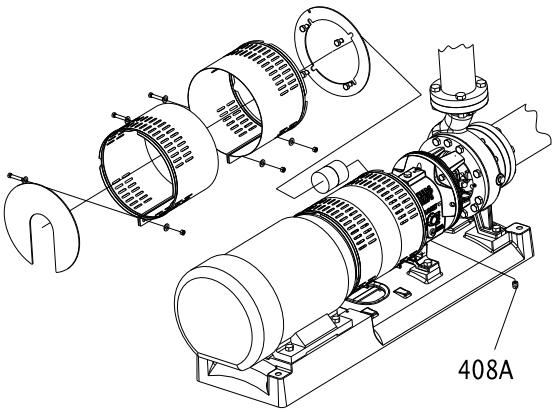

NOTICE:
Oil analysis should be part of a preventive maintenance program that determines the cause of a failure. Save the oil in a clean container for inspection.

2. Does your pump use a C-face adapter?
   - If Yes: Place one sling from the hoist through the frame adapter (108) or frame (228A) for the STi and a second sling from the hoist through the C-face adapter.
   - If No: Place a sling from the hoist through the frame adapter (108) or the frame (228A) for the STi.

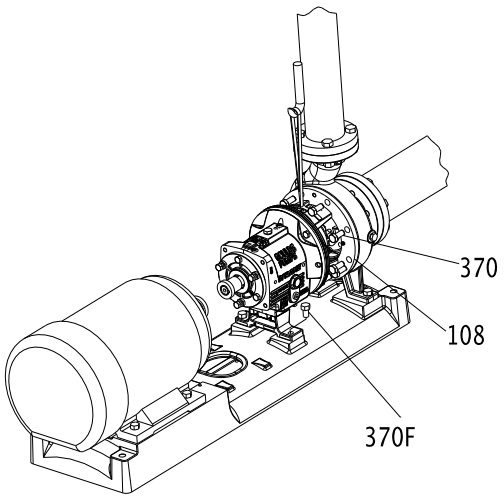

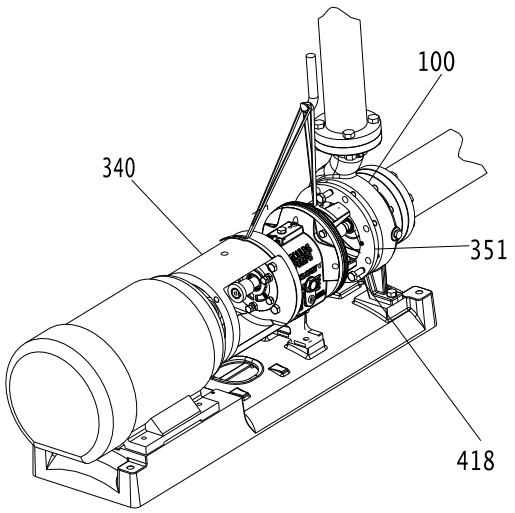

3. Remove the hold-down bolts of the bearing frame foot.
4. Remove the casing bolts.

WARNING:
- Never use heat to disassemble the pump due to the risk of an explosion from trapped liquid.

5. Tighten the jackscrews evenly, using an alternating pattern, in order to remove the back pull-out assembly.
   You can use penetrating oil if the adapter to the casing joint is corroded.
6. Remove the back pull-out assembly from the casing (100).
7. Mark and remove the shims from under the frame foot and save them for reassembly.
8. Remove and discard the casing gasket.
   You will insert a new casing gasket during reassembly.
9. Remove the jackscrews.
10. Clean all gasket surfaces.
    Clean surfaces prevent the casing gasket from partially adhering to the casing due to binders and adhesives in the gasket material.

Remove the coupling hub

1. Clamp the frame adapter securely to the workbench.
2. Remove the coupling hub.
   Mark the shaft for relocation of the coupling hub during reassembly.

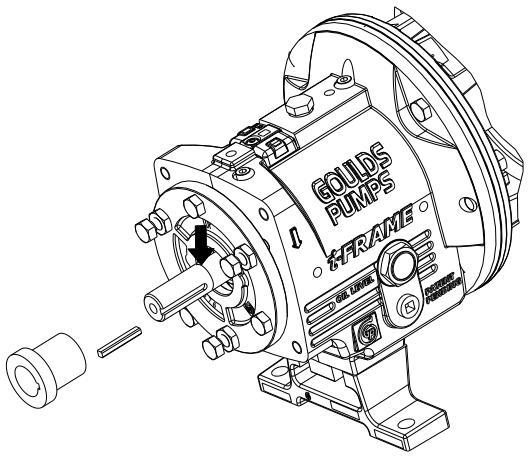

Impeller removal

Remove the impeller (STi, MTi, and LTi)

WARNING:
Never apply heat to remove an impeller. The use of heat may cause an explosion due to trapped liquid, resulting in severe physical injury and property damage.

CAUTION:
Wear heavy work gloves when you handle impellers. The sharp edges can cause physical injury.

1. Slide the shaft wrench (A05107A or A01676A) over the shaft (122) and key.
2. Rotate the impeller (101) clockwise (viewed from the impeller end of the shaft) and raise the wrench off of the work surface.
3. To loosen the impeller, quickly turn it counter-clockwise (viewed from the impeller end of the shaft) while impacting the wrench handle on the workbench or a solid block.

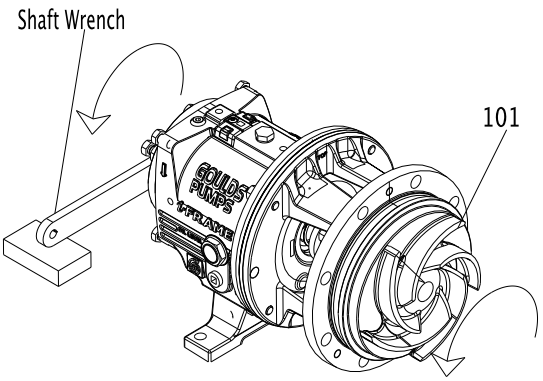

4. Repeat step 3 until the impeller becomes loose.
5. Remove and discard the impeller O-ring (412A). You will insert a new O-ring during reassembly.

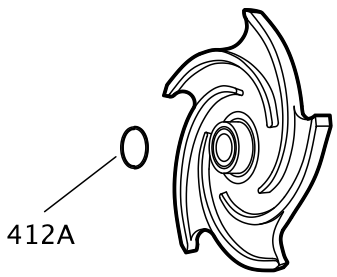

Figure 19: O-ring for models 3196, HT 3196, NM 3196, 3198, and 3796

If the impeller cannot be removed by the previous methods, cut the shaft between the gland and the frame, remove the impeller, stuffing-box cover, gland, sleeve, and shaft end as a unit. Do not apply heat.

Remove the impeller (XLT-i, and i17)

WARNING:
Never apply heat to remove an impeller. The use of heat may cause an explosion due to trapped liquid, resulting in severe physical injury and property damage.

CAUTION:
Wear heavy work gloves when you handle impellers. The sharp edges can cause physical injury.

Clamp the frame foot (241) to the workbench when you use this method to remove the impeller.

1. Remove the impeller plug (458Y) from the front of the impeller (101) and discard the Teflon gasket (428D).

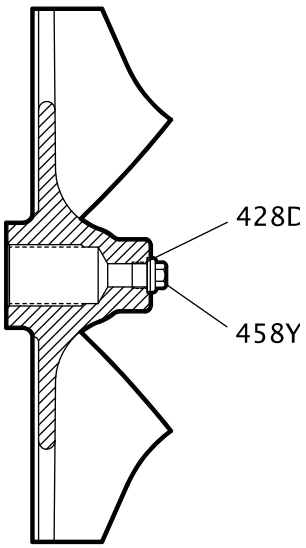

2. Spray penetrating oil through the plug hole into the cavity at the end of the shaft and let it penetrate for 15 minutes.
3. While waiting, rotate the shaft several times to distribute the oil.
4. Slide the shaft wrench (A05107A) over the shaft (122) and key.
5. Rotate the impeller clockwise (viewed from the impeller end of the shaft) and raise the wrench off of the work surface.
6. To loosen the impeller, quickly turn the impeller counter-clockwise (viewed from the impeller end of the shaft) while impacting the wrench handle on the workbench or a solid block.
7. Repeat step 6 until the impeller becomes loose.
8. If step 6 and 7 do not work then do this:
   a) Place a socket wrench over the cast nut on the impeller hub.
   b) Turn the impeller counter-clockwise (viewed from the impeller end of the shaft).

   Be sure that the impeller wrench rests on the workbench or a solid block and that the power end is secure on the work surface.
9. Remove and discard the impeller O-ring (412A).

You will insert a new O-ring during reassembly.

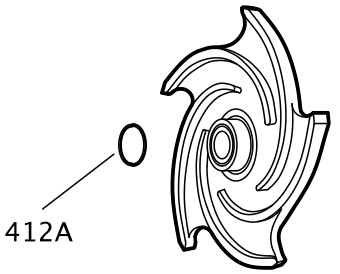

Figure 20: O-ring for models 3196 and HT 3196

If the impeller cannot be removed by the previous methods, cut the shaft between the gland and the frame, remove the impeller, stuffing-box cover, gland, sleeve, and shaft end as a unit. Do not apply heat.

Seal-chamber cover removal

Seal-chamber removal procedures

Choose from one of these procedures to remove the seal-chamber cover.

Table 10: Procedures for seal-chamber cover removal by model

Model	Procedure
3196, CV 3196, HT 3196, LF 3196, 3796	Remove the seal-chamber cover.
NM 3196, 3198	Remove the seal-chamber cover and/or backplate.

Remove the seal-chamber cover (3196, CV 3196, HT 3196, LF 3196, 3796)

1. Remove the gland stud nuts (355).
2. Remove the seal-chamber stud nuts (370H).
3. Remove the seal chamber (184).

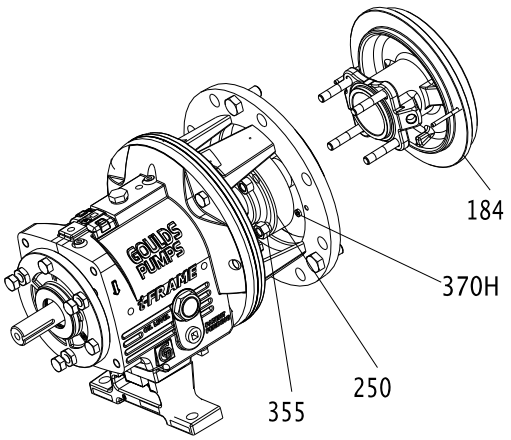

4. Remove the shaft sleeve (126) if it is used.
   The mechanical seal is attached to the sleeve.

NOTICE:
Be careful with the stationary portion of the mechanical seal that is either clamped between the backplate and the gland or seated in the seal-chamber bore. Failure to do so may result in equipment damage.

5. Remove the rotary portion of the seal from the sleeve by loosening the setscrews and sliding it off the sleeve.
   Refer to the mechanical-seal instructions for more information.
6. Remove the gland (250), the stationary portion of the seal, and the O-ring (360Q).

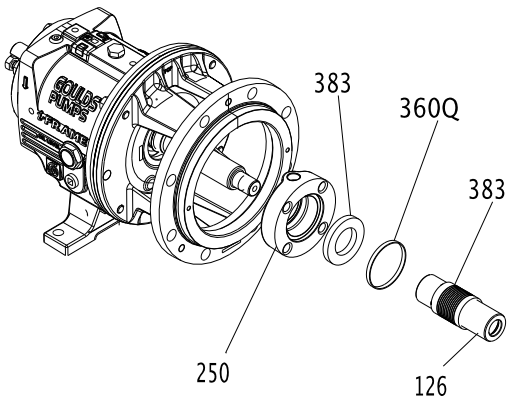

Remove the stuffing-box cover (3196, CV 3196, HT 3196, LF 3196, 3796)

1. Remove the gland nuts (355) and the gland (107).
2. Remove the stuffing-box-cover nuts (370H).
3. Remove the stuffing-box cover (184).

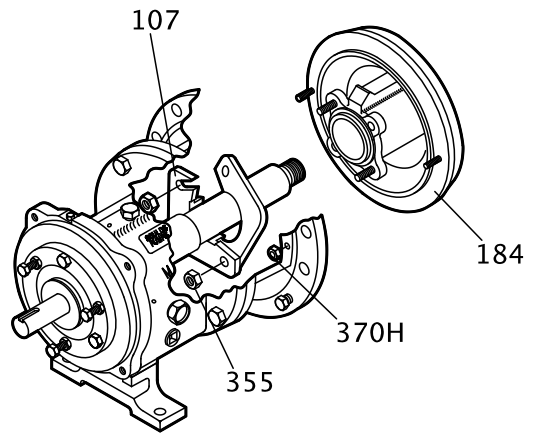

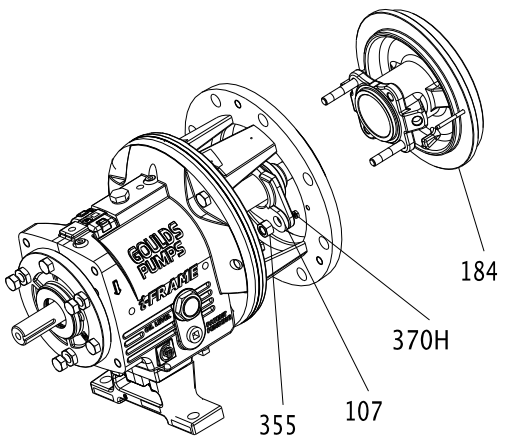

4. Remove the shaft sleeve (126).

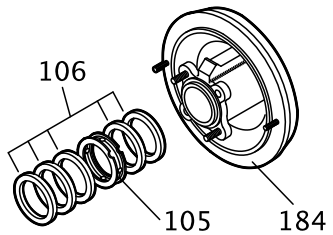

5. Remove the packing (106) and lantern ring (105) from the stuffing-box cover (184). A lantern ring does not come with self-lubricating graphite packing.

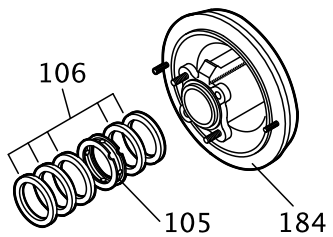

Remove the dynamic seal

1. Remove the stud nuts (370H).
2. Remove the dynamic-seal assembly.

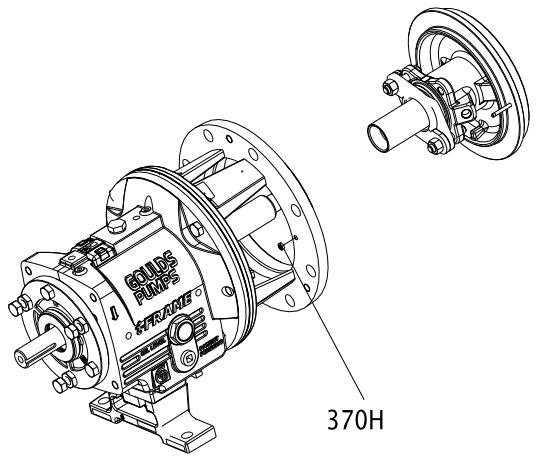

3. Remove the socket head cap screws (265).
4. Remove the packed stuffing box cover (184) and gasket (264).
5. Remove the repeller (262) from the backplate (444).

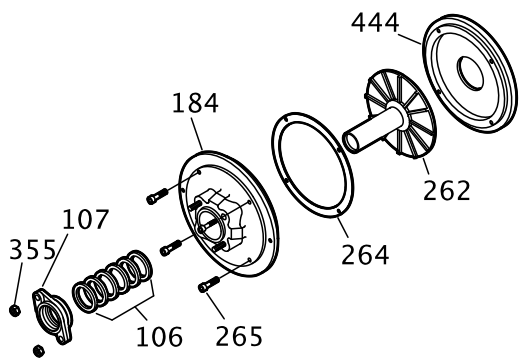

Remove the frame adapter (MTi, LTi, XLT-i, i17)

The 3198 frame adapter is not interchangeable with the adapter of any other model.

1. Remove the dowel pins (469B) and the bolts (370B).
2. Remove the frame adapter (108).
3. Remove and discard the gasket (360D).
   You will install a new gasket during reassembly.

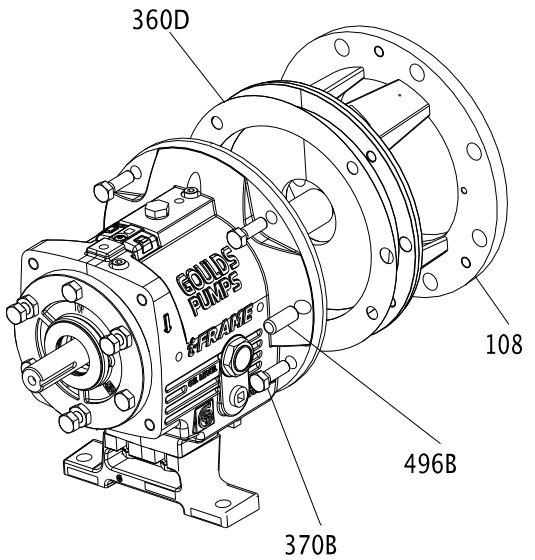

Remove the inboard labyrinth oil seal

Labyrinth oil-seal O-rings are part of the 3196 maintenance kits, and they are sold separately.

1. Determine the fit of your labyrinth oil seal.

Table 11: Labyrinth oil-seal fit

Model	Type of fit
STi	O-ring fit into the bearing-frame adapter (228A)
MTi, LTi, XLT-i and i17	O-ring fit into the frame adapter

2. Remove the O-rings (497H and 497J) and the seal (333A).

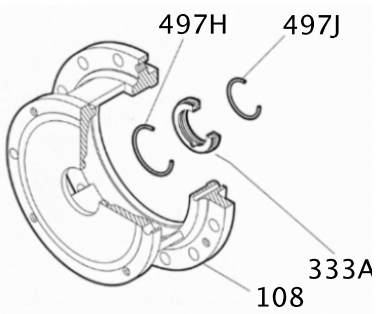

Power-end disassembly

Disassemble the power end (STi, MTi)

1. Remove the clamp screws (370C) and back off the jam nuts (423).
2. Tighten the jack screws (370D) evenly to move the bearing housing (134) out of the bearing frame (228A).

3. Remove the shaft assembly from the bearing frame (228A).

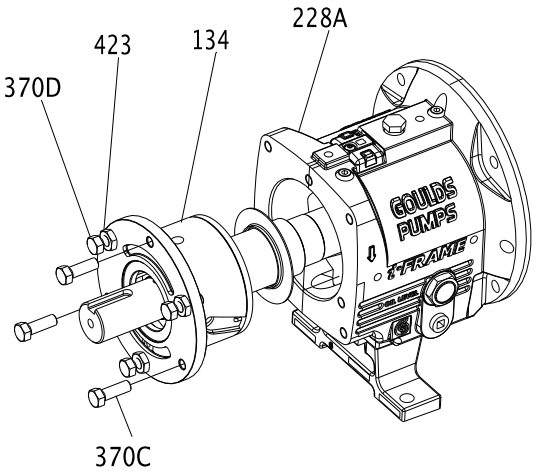

4. Remove the jack screws (370D) with nuts (423).
5. Remove the bearing housing O-ring (496) and the bearings.
6. Remove the outboard bearing retaining snap ring (361A).

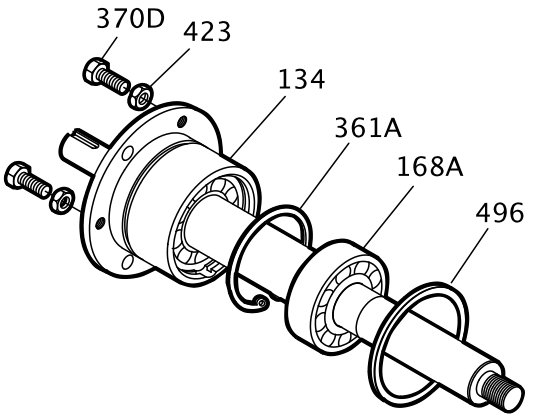

7. Remove the bearing housing (134) and bearings (112A and 168A) from the shaft (122).

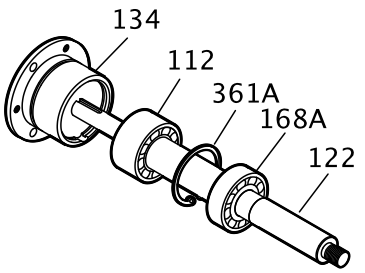

8. Remove the bearing locknut (136) and bearing lock washer (382).
9. Remove the inboard bearing (168A).
10. Remove the outboard bearing (112A).

NOTICE:
Use force only on the inner race when you press bearings off the shaft. Do not use force in situations in which you might break a part. Doing so may result in equipment damage.

NOTICE:
Save the bearings for inspection. Do not reuse the bearings. Doing so may result in decreased performance.

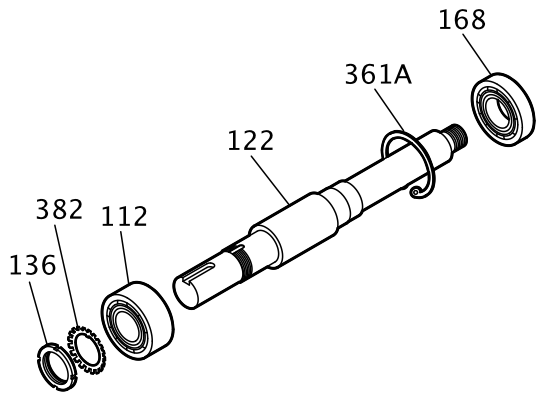

Disassemble the power end (STi and MTi with duplex bearings)

1. Remove the clamp screws (370C) and back off the jam nuts (423).
2. Tighten the jack screws (370D) evenly to move the bearing housing (134) out of the bearing frame (228A).
3. Remove the shaft assembly from the bearing frame (228A).

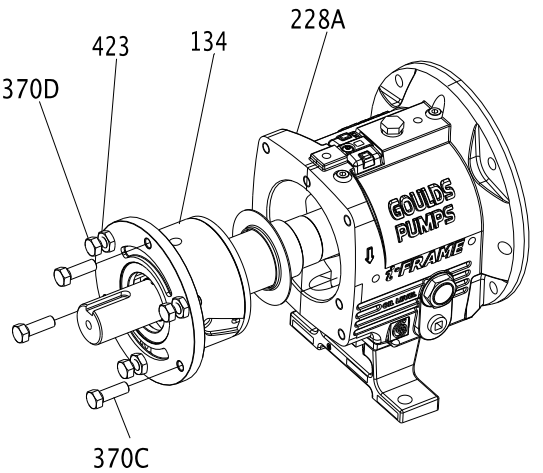

4. Remove the jack screws (370D) with the nuts (423).

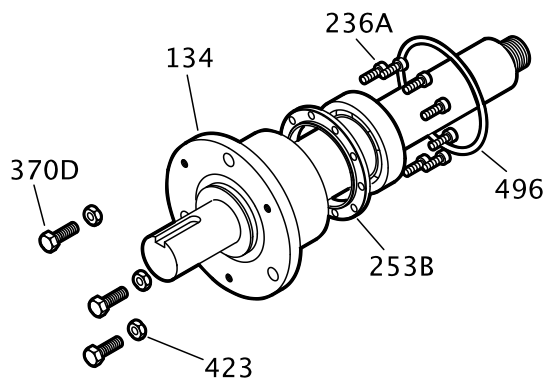

5. Remove the bearing housing O-ring (496).
6. Remove the clamp ring screws (236A) and separate the clamp ring (253B) from the bearing housing (134).
   You must remove the bearings before you can remove the clamp ring from the shaft.
7. Remove the bearing housing (134) and the bearings (112A and 168A) from the shaft (122).

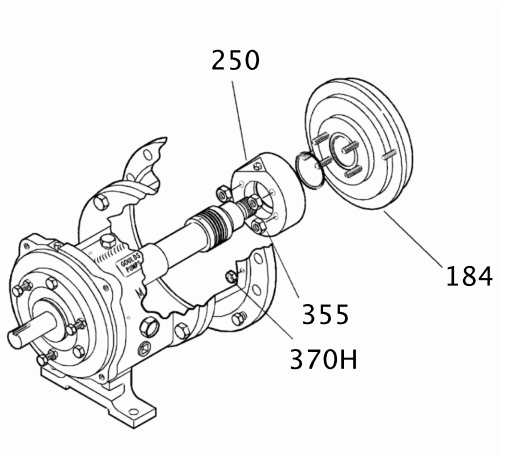

8. Remove the inboard bearing (168A).

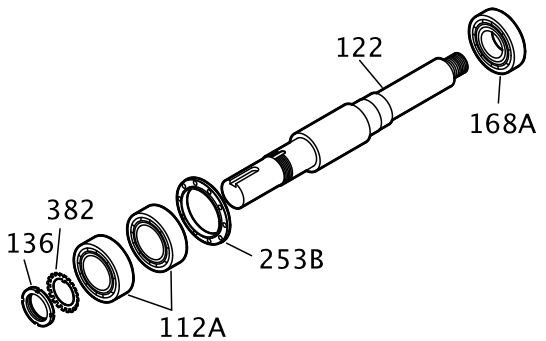

9. Remove the bearing locknut (136) and bearing lockwasher (382).
10. Remove the outboard bearings (112A).

NOTICE:
Use force only on the inner race when you press bearings off the shaft. Do not use force in situations in which you might break a part. Doing so may result in equipment damage.

NOTICE:
Save the bearings for inspection. Do not reuse the bearings. Doing so may result in decreased performance.

11. Remove the outboard labyrinth oil seal (332A) from the bearing housing (134).

Remove the O-rings (497F and 497G) if it is necessary. Labyrinth oil seal O-rings are part of the 3196 maintenance kits and they are sold separately.

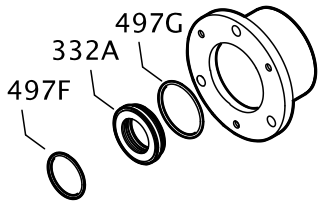

Disassemble the power end (LTi)

1. Remove the clamp screws (370C) and back off the jam nuts (423).
2. Evenly tighten the jack screws (370D) to move the bearing housing (134) out of the bearing frame (228A).
3. Remove the shaft assembly from the bearing frame (228A).

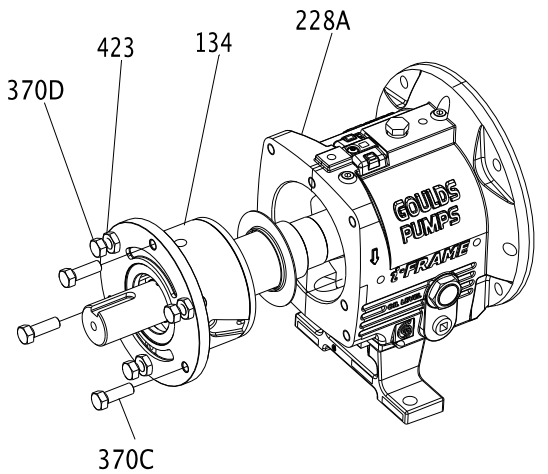

4. Remove the jack screws (370D) with the nuts (423).
5. Remove the clamp-ring screws (236A) and separate the clamp ring (253B) from the bearing housing (134).
   You must remove the bearings before you can remove the clamp ring from the shaft.

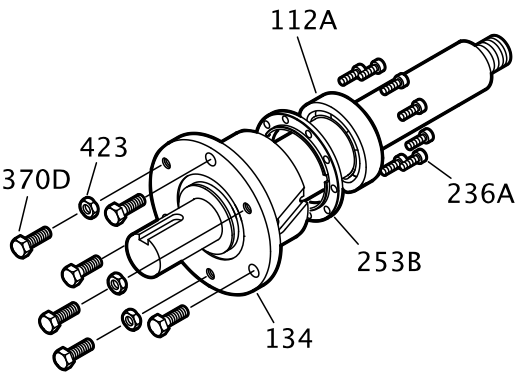

6. Remove the bearing housing (134) and the bearings (112A and 168A) from the shaft (122).

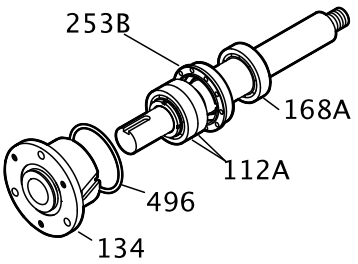

7. Remove the bearing housing O-ring (496) and the inboard bearing (168A).

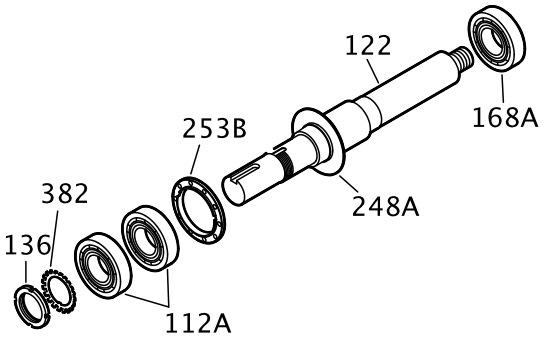

8. Remove the bearing locknut (136) and the bearing lockwasher (382).
9. Remove the outboard bearings (112A) and the clamp ring (253B).

NOTICE:
Do not remove the oil flinger unless it is damaged. Doing so may result in unnecessary shutdown time or equipment damage.

NOTICE:
Use force only on the inner race when you press bearings off the shaft. Do not use force in situations in which you might break a part. Doing so may result in equipment damage.

NOTICE:
Save the bearings for inspection. Do not reuse the bearings. Doing so may result in decreased performance.

10. Remove the outboard labyrinth oil seal (332A) from the bearing housing (134).
11. Remove the O-rings (497F and 497G) if it is necessary.

Labyrinth oil-seal O-rings are part of the 3196 maintenance kits, and they are sold separately.

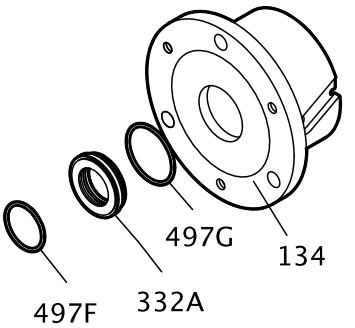

Disassemble the power end (XLT-i and i17)

1. Remove the bearing frame from the frame foot (241) using the frame-foot bolts (370F).

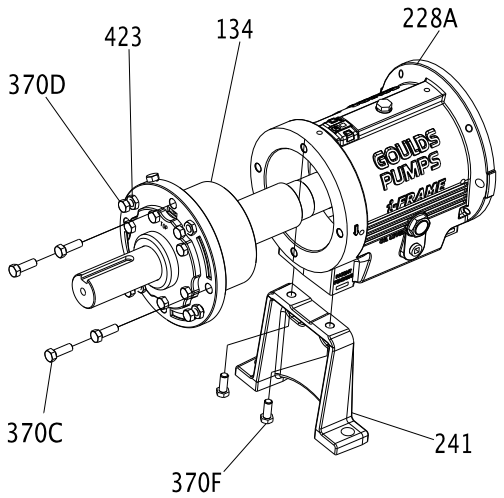

2. Remove the clamp screws (370C) and back off the jam nuts (423).
3. Tighten the jack screws (370D) evenly to move the bearing housing (134) out of the bearing frame (228A).
4. Remove the shaft assembly from the bearing frame (228A).
5. Remove the jack screws (370D), the nuts (423), and the bearing housing O-ring.
6. Remove the inboard bearing (168A).

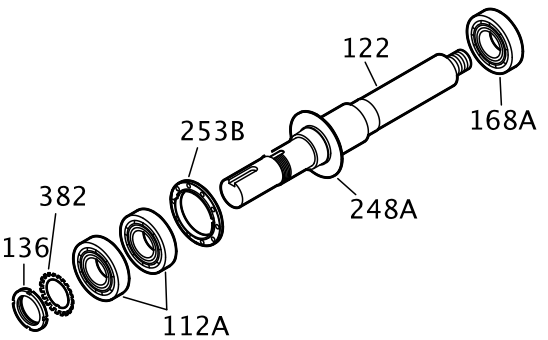

7. Remove the bolts (371C), the bearing end cover (109A), and the gasket (360C).
8. Remove the outboard labyrinth oil seal (332A) from the end cover (109A).

9. Remove the O-rings (497F and 497G) if it is necessary.
   Labyrinth oil-seal O-rings are part of the 3196 maintenance kits, and they are sold separately.

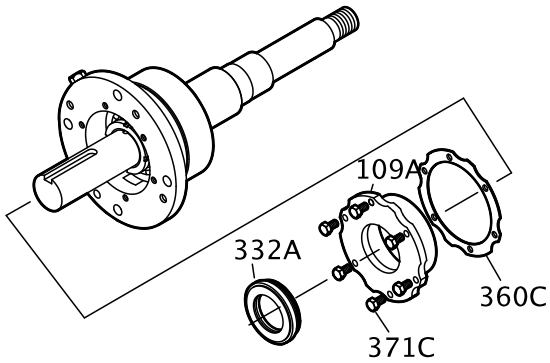

10. Remove the bearing housing (134) and the bearing (112A) from the shaft (122).

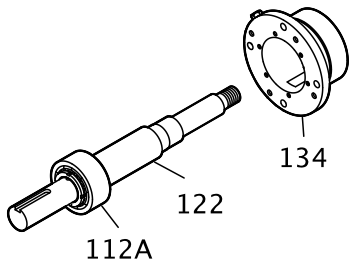

11. Remove the bearing locknut (136), the bearing lockwasher (382), and the outboard bearing (112A).

NOTICE:
Use force only on the inner race when you press bearings off the shaft. Do not use force in situations in which you might break a part. Doing so may result in equipment damage.

NOTICE:
Save the bearings for inspection. Do not reuse the bearings. Doing so may result in decreased performance.

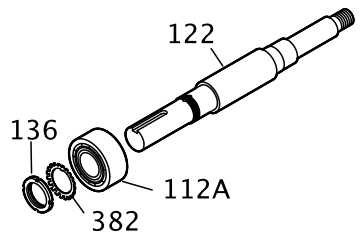

Disassemble the power end (XLT-i and i17 with duplex bearings)

1. Remove the bearing frame to frame foot (241) using the frame-foot bolts (370F).

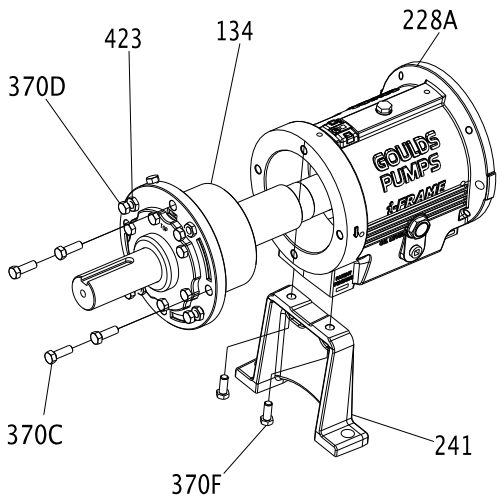

2. Remove the clamp screws (370C) and back off the jam nuts (423).
3. Tighten the jack screws (370D) evenly to move the bearing housing (134) out of the bearing frame (228A).
4. Remove the shaft assembly from the bearing frame (228A).
5. Remove the jack screws (370D) and the nuts (423).
6. Remove the bearing housing O-ring (496) and the inboard bearing (168A).

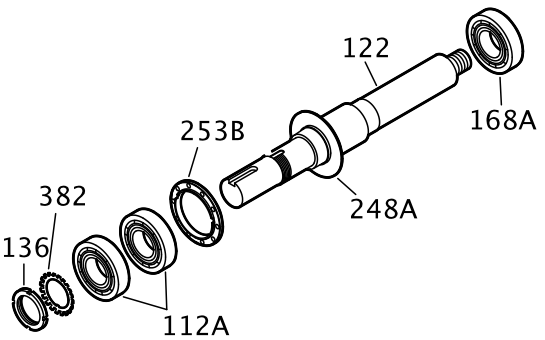

7. Remove the bolts (371C), the end cover (109A), and the gasket (360C).
8. If necessary, remove the outboard labyrinth oil seal (332A) from the end cover (109A) and remove the O-rings (497F and 497G).

Labyrinth oil-seal O-rings are part of the 3196 maintenance kits, or they are sold separately.

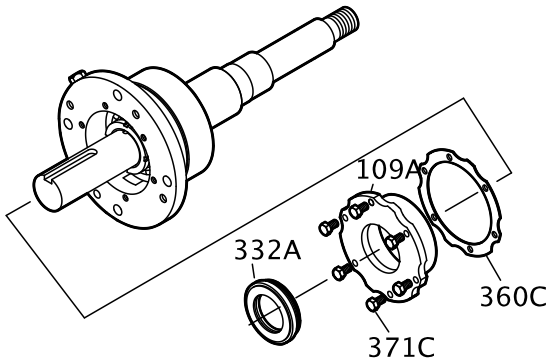

9. Remove the bearing housing (134) and bearings (112A) from the shaft (122) .

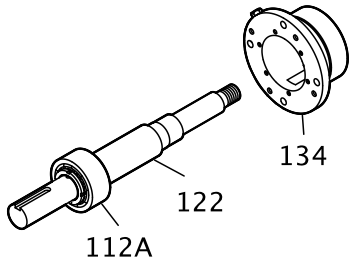

10. Remove the bearing locknut (136), the bearing lockwasher (382), and the outboard bearing (112A).

NOTICE:
Use force only on the inner race when you press bearings off the shaft. Do not use force in situations in which you might break a part. Doing so may result in equipment damage.

NOTICE:
Save the bearings for inspection. Do not reuse the bearings. Doing so may result in decreased performance.

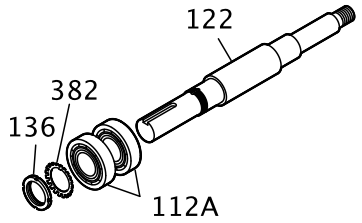

Disassemble the bearing frame

1. Remove these plugs from the bearing frame (228A).
   - oil-fill plug (113A)
   - oil-drain plug (408A)
   - sight-oiler plug (408J)
   - four oil mist/grease connection plugs (408H)
   - oil-cooler inlet and outlet plugs (408L and 408M) or oil cooler

2. For the MTi and LTi models, remove the bearing frame foot-to-frame bolts (370F) and the frame foot (241).

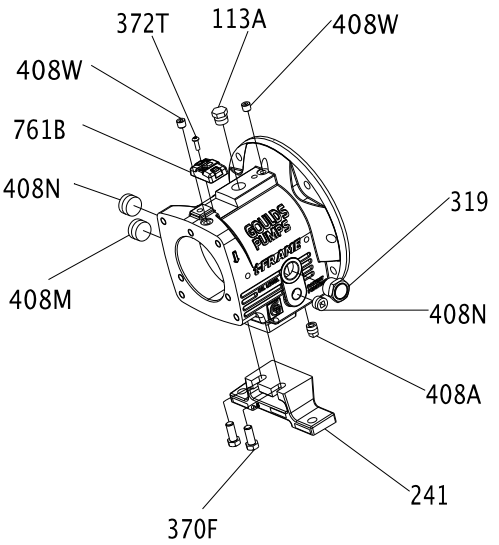

Guidelines for i-ALERT™ Condition Monitor disposal

Precautions

WARNING:
- Never heat the condition monitor to temperatures in excess of 300°F (149°C). Heating to these temperatures could result in death or serious injury.
- Never dispose of the condition monitor in a fire. This could result in death or serious injury.

Guidelines

The battery contained in the condition monitor does not contain enough lithium to qualify as reactive hazardous waste. Use these guidelines when disposing of the condition monitor.

- The condition monitor is safe for disposal in the normal municipal waste stream.
- Adhere to local laws when you dispose of the condition monitor.

Disassemble the C-face adapter

NOTICE:
You must properly support the motor with a clean, uncorroded eye bolt or a strap under both end bells. Failure to do so may result in equipment damage.

1. Loosen the motor-mounting bolts and remove the motor.

Table 12: Required number of motor-mounting bolts
This table shows the number of motor-mounting bolts.

Pump frame	Motor frame	Number of bolts
STi	All	4
MTi and LTi	143-286	4
	324-365	8

2. Loosen the bolts attached to the bearing-frame flange and remove the C-face adapter from the bearing frame.

Pre-assembly inspections

Guidelines

Before you assemble the pump parts, make sure you follow these guidelines:

- Inspect the pump parts according to the information in these pre-assembly topics before you reassemble your pump. Replace any part that does not meet the required criteria.
- Make sure that the parts are clean. Clean the pump parts in solvent in order to remove oil, grease, and dirt.

NOTICE:
Protect machined surfaces while you clean the parts. Failure to do so may result in equipment damage.

Replacement guidelines

Casing check and replacement

WARNING:
Avoid death or serious injury. Leaking fluid can cause fire and/or burns. Inspect and assure gasket sealing surfaces are not damaged and repair or replace as necessary.

Inspect the casing for cracks and excessive wear or pitting. Thoroughly clean gasket surfaces and alignment fits in order to remove rust and debris.

Repair or replace the casing if you notice any of these conditions:

- Localized wear or grooving that is greater than 1/8 in. (3.2 mm) deep
- Pitting that is greater than 1/8 in. (3.2 mm) deep
- Irregularities in the casing-gasket seat surface

Casing areas to inspect

The arrows point to the areas to inspect for wear on the casing:

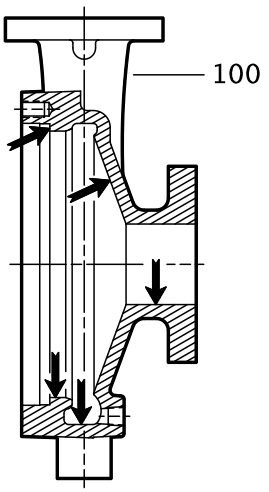

Figure 21: 3196, HT 3196, LF 3196, NM 3196, and 3198 casing

Impeller replacement

This table shows the criteria for replacing the impeller:

Impeller parts	When to replace
Impeller vanes	• When grooved deeper than 1/16 in. (1.6 mm), or • When worn evenly more than 1/32 in. (0.8 mm)
Pumpout vanes	When worn or bent more than 1/32 in. (0.8 mm)
Vane edges	When you see cracks, pitting, or corrosion damage

Impeller areas to inspect

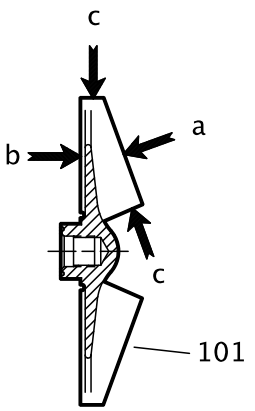

Figure 22: Areas to inspect for wear on the 3196 impeller.

Frame adapter check and replacement

- Replace the frame adapter if it has cracks or excessive corrosion damage.
- Make sure the gasket surface is clean.

Dynamic-seal repeller replacement

This table shows the criteria for replacing dynamic-seal repeller parts for the 3196, CV 3196, and LF 3196 pump models.

Dynamic seal part	When to replace
Dynamic-seal repeller vane	The grooves are deeper than 1/16 in. (1.6 mm) or are worn evenly more than 1/32 in. (0.8 mm).
Sleeve surface	The surface has grooves, pitting, or other damage.

Labyrinth seal replacement

Replace the labyrinth-seal O-ring if it has cuts and cracks.

Gaskets, O-rings, and seats replacement

WARNING:
Avoid death or serious injury. Leaking fluid can cause fire and/or burns. Replace any damaged or worn gaskets/o-rings.

- Replace all gaskets and O-rings at each overhaul and disassembly.
- Inspect the seats. They must be smooth and free of physical defects.
  In order to repair worn seats, skin cut them in a lathe while you maintain dimensional relationships with other surfaces.
- Replace parts if the seats are defective.

Shaft and sleeve replacement guidelines

Two types of sleeves

The 3198 is offered with either a metallic sleeve that uses the standard 3196 shaft or a Teflon sleeve. The Teflon sleeve requires a special shaft and a different inboard labyrinth oil seal.

Shaft measurements check

Replace the shaft (122) if any measurements exceed acceptable values. See Bearing fits and tolerances.

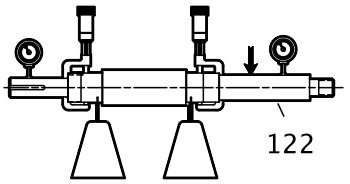

Straightness check

Replace the shaft (122) if runout exceeds the values in this table:

Table 13: Shaft runout tolerances for sleeve fit and coupling fit

	Sleeve fit in inches (millimeters)	Coupling fit in inches (millimeters)
With sleeve	0.001 (0.025)	0.001 (0.025)
Without sleeve	0.002 (0.051)	0.001 (0.025)

Shaft and sleeve check

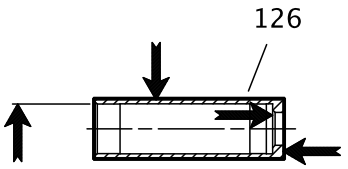

- Check the shaft and sleeve (126) surface for grooves and pitting.
- Replace the shaft and sleeve if any grooves or pits are found.

Bearing-frame inspection

Checklist

Check the bearing frame for these conditions:

- Visually inspect the bearing frame and frame foot for cracks.
- Check the inside surfaces of the frame for rust, scale, or debris. Remove all loose and foreign material.
- Make sure that all lubrication passages are clear.
- If the frame has been exposed to pumped fluid, inspect the frame for corrosion or pitting.
- Inspect the inboard-bearing bores.
  If any bores are outside the measurements in the Bearing fits and tolerances table, replace the bearing frame.

Surface inspection locations

This figure shows the areas to inspect for wear on the bearing frame outside surface.

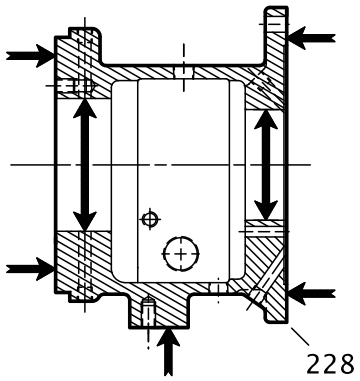

Figure 23: Outside surface inspection locations

This figure shows the areas to inspect for wear on the bearing frame inside surface.

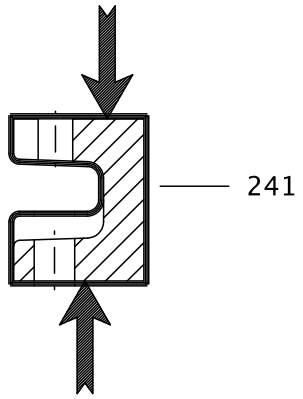

Figure 24: Inside surface inspection locations

C-face adapter inspection

Checklist

- Visually inspect the C-face adapter (340) for cracks.
- Check all surfaces for rust, scale, or debris and remove all loose and foreign material.
- Check for corrosion or pitting.

This figure shows the areas to inspect for cracks on the C-face adapter.

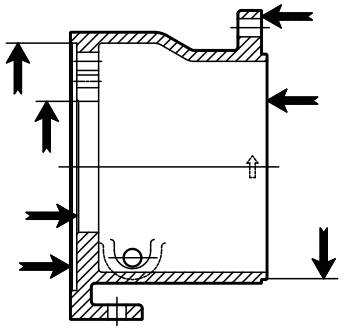

Figure 25: C-face adapter inspection locations

Seal chamber and stuffing box cover inspection

Checklist

Perform these checks when you inspect the seal chamber and stuffing box cover:

- Make sure that these surfaces are clean:
  - Seal chamber and stuffing box cover
  - Dynamic-seal backplate gasket
  - Mounting
- Make sure there is no pitting or wear greater than 1/8 in. (3.2 mm) deep. Replace the seal chamber and stuffing box cover if pitting or wear exceeds this measurement.
- Inspect the machined surfaces and mating faces noted in the figures.

These images point to the areas to inspect:

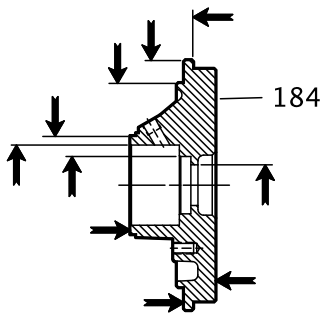

Figure 26: BigBore™ chamber

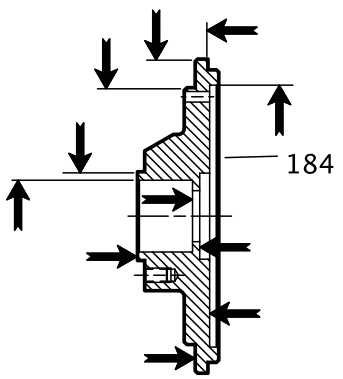

Figure 27: Stuffing box cover

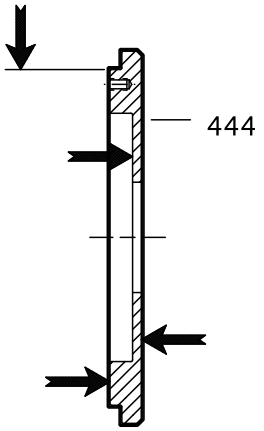

Figure 28: Dynamic-seal backplate

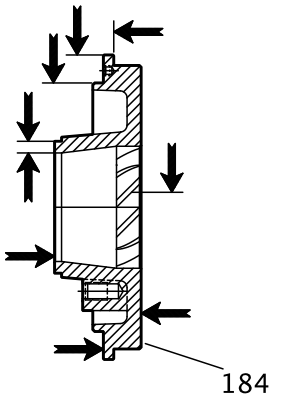

Figure 29: TaperBore™ Plus

Bearings inspection

Condition of bearings

Do not reuse bearings. The condition of the bearings provides useful information on operating conditions in the bearing frame.

Checklist

Perform these checks when you inspect the bearings:

- Inspect the bearings for contamination and damage.
- Note any lubricant condition and residue.
- Inspect the ball bearings to see if they are loose, rough, or noisy when you rotate them.
- Investigate any bearing damage to determine the cause. If the cause is not normal wear, correct the issue before you return the pump to service.

Bearing-housing inspection

Checklist

- Inspect the bearing-housing (134) bore according to the bearing fits and tolerances table.

- Replace the bearing housing if the dimensions exceed acceptable values. Reference: see Bearings fits and tolerances.
- Visually inspect the bearing housing for cracks and pits.

Checklist for specific models

This table shows bearing-housing checks that are required for specific models of pump.

Frame	Bearing-housing check
STi and MTi	Ensure that the snap-ring groove is not cracked.
LTi	Clear all grooves and holes.
XLT-i and i17	Clean the gasket surface.

Inspection locations

The following images point to the areas to inspect on the bearing housing.

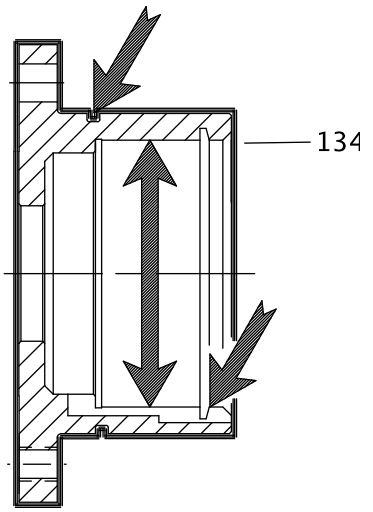

Figure 30: STi and MTi bearing housing

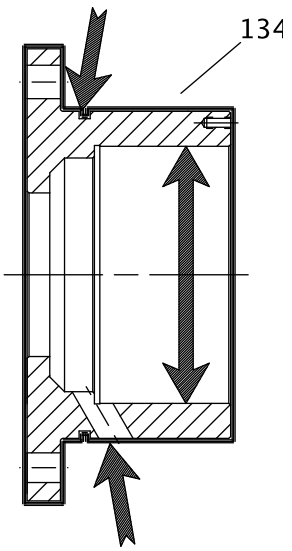

Figure 31: LTi bearing housing

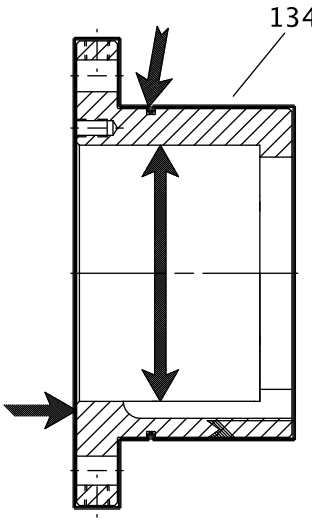

Figure 32: XLT-i and i17 bearing housing

Bearing fits and tolerances

Table 14: Bearing fits and tolerances table

This table references the bearing fits and tolerances according to the ABEC I standard.

	STi inches (millimeters)	MTi inches (millimeters)	LTi inches (millimeters)	XLT-i, i-17 inches (millimeters)
Shaft OD Inboard	1.3785 (35.014) 1.3781 (35.004)	1.7722 (45.014) 1.7718 (45.004)	2.1660 (55.016) 2.1655 (55.004)	2.5597 (65.016) 2.5592 (65.004)
Clearance	0.0010 (0.025) tight 0.0001 (0.003) tight	0.0010 (0.025) tight 0.0001 (0.003) tight	0.0012 (0.030) tight 0.0001 (0.003) tight	0.0012 (0.030) tight 0.0001 (0.003) tight
Bearing ID Inboard	1.3780 (35.001) 1.3775 (34.989)	1.7717 (45.001) 1.7712 (44.988)	2.1654 (55.001) 2.1648 (54.986)	2.5591 (65.001) 2.5585 (64.986)
Frame ID Inboard	2.8346 (72.000) 2.8353 (72.017)	3.9370 (100.000) 3.9379 (100.023)	4.7244 (120.000) 4.7253 (120.023)	5.5118 (140.000) 5.5128 (140.025)
Clearance	0.0012 (0.031) loose 0.0000 (0.000) loose	0.0015 (0.038) loose 0.0000 (0.000) loose	0.0015 (0.038) loose 0.0000 (0.000) loose	0.0017 (0.043) loose 0.0000 (0.000) loose
Bearing OD Inboard	2.8346 (72.000) 2.8341 (71.986)	3.9370 (100.000) 3.9364 (99.985)	4.7244 (120.000) 4.7238 (119.985)	5.5118 (140.000) 5.5111 (139.982)
Shaft OD Outboard	1.1815 (30.010) 1.1812 (30.002)	1.7722 (45.014) 1.7718 (45.004)	1.9690 (50.013) 1.9686 (50.003)	2.5597 (65.016) 2.5592 (65.004)
Clearance	0.0008 (0.020) tight 0.0001 (0.003) tight	0.0010 (0.025) tight 0.0001 (0.003) tight	0.0010 (0.025) tight 0.0001 (0.003) tight	0.0012 (0.030) tight 0.0001 (0.003) tight
Bearing OD Outboard	1.1811 (30.000) 1.1807 (29.990)	1.7717 (45.001) 1.7712 (44.988)	1.9685 (50.000) 1.9680 (49.987)	2.5591 (65.001) 2.5585 (64.986)
Housing OD Outboard	2.8346 (72.000) 2.8353 (72.017)	3.9370 (100.000) 3.9379 (100.022)	4.3307 (110.000) 4.3316 (110.023)	5.5118 (140.000) 5.5128 (140.025)
Clearance	0.0012 (0.031) loose 0.0000 (0.000) loose	0.0015 (0.038) loose 0.0000 (0.000) loose	0.0015 (0.038) loose 0.0000 (0.000) loose	0.0017 (0.043) loose 0.0000 (0.000) loose
Bearing OD Outboard	2.8346 (72.000) 2.8341 (71.986)	3.9370 (100.000) 3.9364 (99.985)	4.3307 (110.000) 4.3301 (109.985)	5.5118 (140.000) 5.5111 (139.982)

Reassembly

Assemble the rotating element and the bearing frame (STi and MTi)

CAUTION:
Wear insulated gloves when you use a bearing heater. Bearings get hot and can cause physical injury.

NOTICE:
Make sure that the pipe threads are clean, and that you apply thread sealant to the plugs and fittings. Failure to do so may result in equipment damage or decreased performance.

NOTICE:
Use an induction heater that heats as well as demagnetizes the bearings when you install bearings. Failure to do so may result in decreased performance.

1. Prepare the bearing frame (228) as follows (see the illustration):
   a) Install the oil-fill plug (113A).
   b) Install the oil-drain plug (408A).
   c) Install the sight glass (319).
   d) Install the sight oiler plug (408J).
   e) Install the plug for the oil-cooler inlet (408L).
   f) Install the plug for the oil-cooler outlet (408M).
   g) Install four oil-mist connection plugs (408H).
      Or: Install two grease fittings (193) and two grease-relief plugs (113).
   h) Attach the bearing-frame foot (241) and fasten the bolts (370F) by hand.

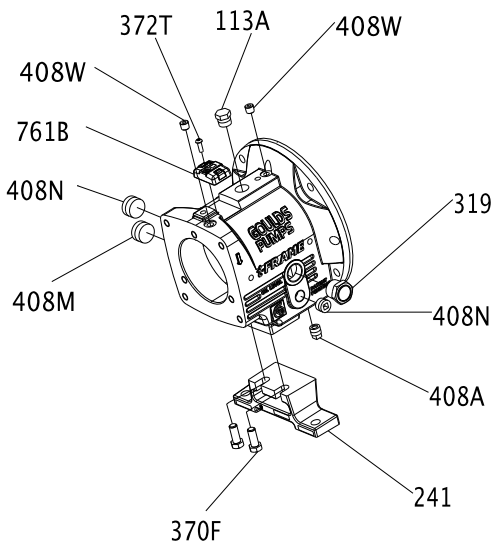

2. Install the outboard bearing (112A) on the shaft (122).
   The regreaseable bearing has a single shield. The outboard bearing is installed with the shield toward the impeller.
   a) Inspect the shaft (122) to ensure that it is clean, dimensionally correct, and is free of nicks and burrs.
   b) Lightly coat the bearing seating with a thin film of oil.
   c) Remove the bearing (112) from its packaging.
   d) Wipe the preservative from the bearing (112) bore and outer diameter.

e) Use an induction heater with a demagnetizing cycle to heat the bearing (112) to an inner ring temperature of 230 °F (110 °C).
f) Position the bearing (112) on the shaft (122) against the shoulder and snug the locknut (136) against the bearing until it is cool.
The locknut prevents the bearing from moving away from the shaft shoulder as it cools.
g) Remove the bearing locknut (136) after the bearing (112) cools.

3. Put the lockwasher (382) onto the shaft (122).
4. Thread the locknut (136) onto the shaft (122) and tighten it until it is snug.
5. Bend the tangs of the lockwasher into the slots of the locknut.
6. Put the bearing-retaining ring (361A) onto the shaft (122).
Make sure that the flat side of the ring is towards the bearing.
7. Coat the inner surfaces of the bearings with lubricant.
8. Put the inboard bearing (168) onto the shaft (122).
The regreasable bearing has a single shield. Make sure that the bearing is installed with the shield away from the impeller.

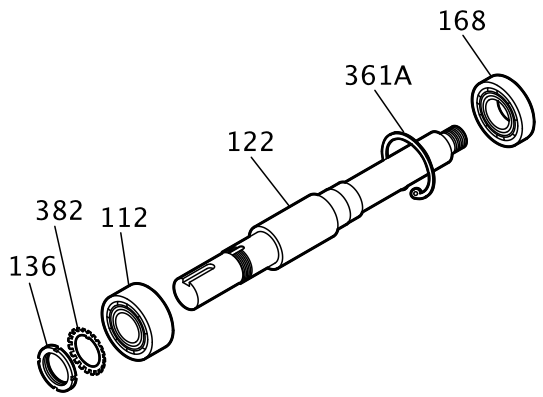

9. Prepare the shaft for assembly as follows (see the illustration):
a) Install a new O-ring (496).
b) Coat the outside of the outboard bearing (112A) with oil.
c) Coat the bore of the bearing housing (134) with oil.
d) Put the bearing housing (134) onto the shaft.
Do not use force.
e) Insert the bearing-retaining ring (361A) into the bore groove of the bearing housing (134).

NOTICE:
Ensure that the space between the ends of the retaining ring are located in the oil-return groove. Failure to do so may result in oil-flow obstruction.

Make sure that the shaft rotates freely.

f) Install the outboard labyrinth oil-seal (332A) into the bearing housing (134).
Place the drain slots of the oil seal at the bottom position (6 o'clock).
Make sure that the edges of the keyway are free from burrs. To protect the O-ring, cover the keyway lengthwise with a piece of electrical tape before you install the oil seal.

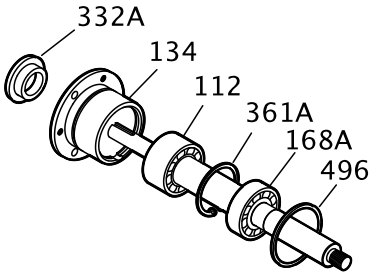

10. Install the shaft assembly into the bearing frame as follows (see the illustration):
    a) Coat the outside of the bearing housing (134) with oil.
    b) Coat all the internal surfaces of the bearing frame (228) with oil.
    c) Install the shaft assembly into the bearing frame (228).
    Make sure that the shaft rotates freely.
    d) Install the clamp bolts (370C) in the bearing housing (134) and tighten by hand.
    e) Install the jack bolts (370D) with the locknuts (423) in the bearing housing (134) and tighten by hand.

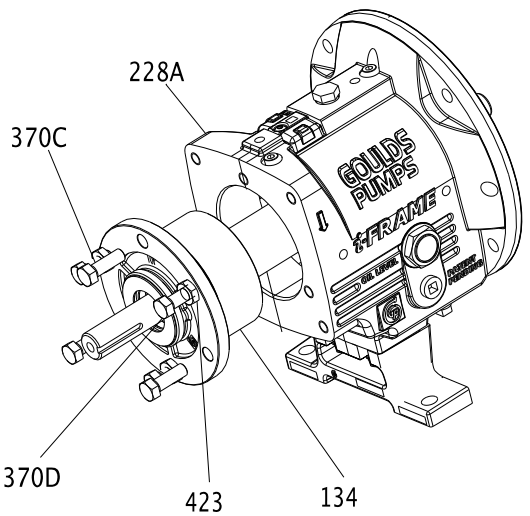

Assemble the rotating element and the bearing frame (STi and MTi with duplex bearings)

CAUTION:
- Wear insulated gloves when you use a bearing heater. Bearings get hot and can cause physical injury.
- Use care when you handle the shaft because it can be heavy. Failure to do so could result in personal injury.

NOTICE:
Make sure that the pipe threads are clean, and that you apply thread sealant to the plugs and fittings. Failure to do so may result in equipment damage or decreased performance.

NOTICE:
Use an induction heater that heats as well as demagnetizes the bearings when you install bearings. Failure to do so may result in decreased performance.

1. Prepare the bearing frame (228) as follows (see the illustration):
   a) Install the oil-fill plug (113A).
   b) Install the oil-drain plug (408A).
   c) Install the sight glass (319).
   d) Install the sight oiler plug (408J).
   e) Install the plug for the oil-cooler inlet (408L).
   f) Install the plug for the oil-cooler outlet (408M).
   g) Install four oil-mist connection plugs (408H).
      Or: Install two grease fittings (193) and two grease-relief plugs (113).
   h) Attach the bearing-frame foot (241) and fasten the bolts (370F) by hand.

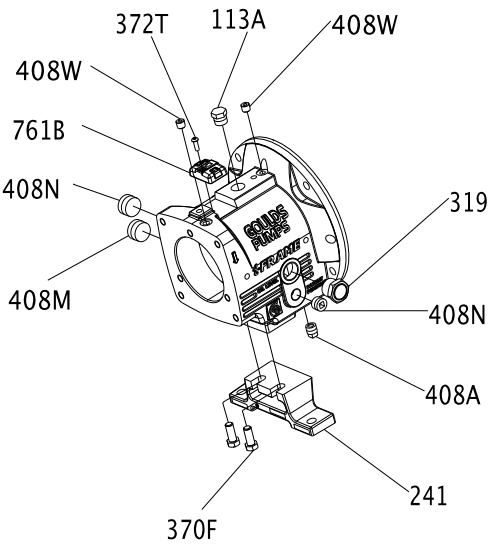

2. Install the outboard bearings (112A) on the shaft (122).
   The regreasable bearing has a single shield. Make sure that the bearing is installed with the shield away from the impeller.
   The duplex bearings are mounted back-to-back. Make sure that the orientation of the bearings are correct.
   a) Inspect the shaft (122) to ensure that it is clean, dimensionally correct, and is free of nicks and burrs.

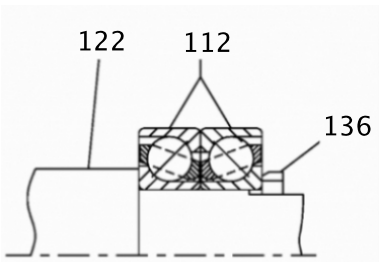

b) Lightly coat the bearing seating with a thin film of oil.
c) Remove the bearings (112) from their packaging.
d) Wipe the preservative from the bearing (112) bore and outer diameter.
e) Use an induction heater with a demagnetizing cycle to heat both bearings (112) to an inner ring temperature of 230 °F (110 °C).
f) Place both bearings (112) on the shaft (122) with the large outer races together (back-to-back).
g) Position the bearings (112) on the shaft (122) against the shoulder and snug the locknut (136) against the bearings until they are cool.
The locknut prevents the bearings from moving away from the shaft shoulder as they cool. Rotate the outer bearing rings relative to each other as they are placed on the shaft to assure good alignment.
h) Remove the bearing locknut (136) after the bearings (112) are cool.

3. Put the lockwasher (382) onto the shaft (122).
4. Thread the locknut (136) onto the shaft (122) and tighten it until it is snug.
5. Bend the tangs of the lockwasher into the slots of the locknut.
6. Place the bearing-clamp ring (253B) onto the shaft (122).
Make sure that the orientation of the bearing-clamp ring is correct.
7. Coat the inner surfaces of the bearings with lubricant.
8. Put the inboard bearing (168) onto the shaft (122).

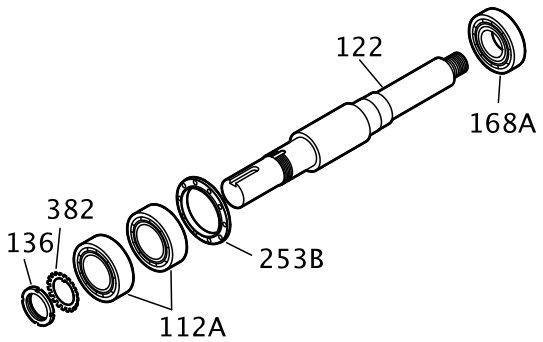

9. Install the bearing housing as follows (see the illustration):
a) Coat the outside of the outboard bearing (112A) with oil.
b) Coat the bore of the bearing housing (134) with oil.
c) Put the bearing housing (134) onto the shaft.
Do not use force.

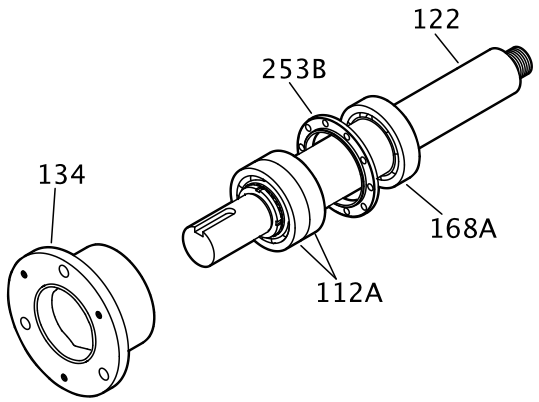

10. Prepare the shaft for assembly as follows (see the illustration):
a) Place the bearing-clamp ring (253B) onto the shaft (122).

b) Fasten the clamp-ring bolts (236A) crosswise.
See the specified torque values.
Make sure that the shaft rotates freely.
c) Install a new O-ring (496).
d) Install the outboard labyrinth oil-seal (332A) into the bearing housing (134).
Place the drain slots of the oil seal at the bottom position (6 o'clock).
Make sure that the edges of the keyway are free from burrs. To protect the O-ring, cover the keyway lengthwise with a piece of electrical tape before you install the oil seal.

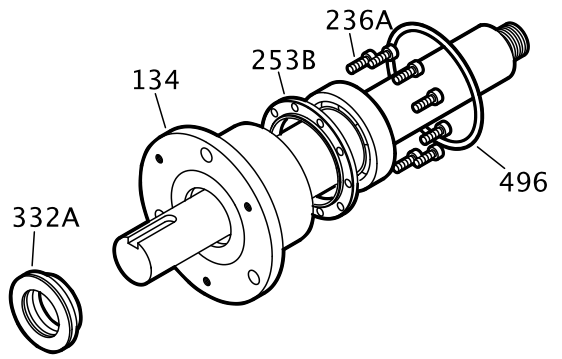

11. Install the shaft assembly into the bearing frame as follows (see the illustration):
a) Coat the outside of the bearing housing (134) with oil.
b) Coat all the internal surfaces of the bearing frame (228) with oil.
c) Install the shaft assembly into the bearing frame (228).
Make sure that the shaft rotates freely.
d) Install the clamp bolts (370C) in the bearing housing (134) and tighten by hand.
e) Install the jack bolts (370D) with the locknuts (423) in the bearing housing (134) and tighten by hand.

Assemble the rotating element and the bearing frame (LTi)

CAUTION:
Wear insulated gloves when you use a bearing heater. Bearings get hot and can cause physical injury.

NOTICE:
Make sure that the pipe threads are clean, and that you apply thread sealant to the plugs and fittings. Failure to do so may result in equipment damage or decreased performance.

NOTICE:
Use an induction heater that heats as well as demagnetizes the bearings when you install bearings. Failure to do so may result in decreased performance.

1. Prepare the bearing frame (228) as follows (see the illustration):
a) Install the oil-fill plug (113A).
b) Install the oil-drain plug (408A).
c) Install the sight glass (319).
d) Install the sight oiler plug (408J).
e) Install the plug for the oil-cooler inlet (408L).
f) Install the plug for the oil-cooler outlet (408M).

g) Install four oil-mist connection plugs (408H).
Or: Install two grease fittings (193) and two grease-relief plugs (113).

h) Attach the bearing-frame foot (241) and fasten the bolts (370F) by hand.

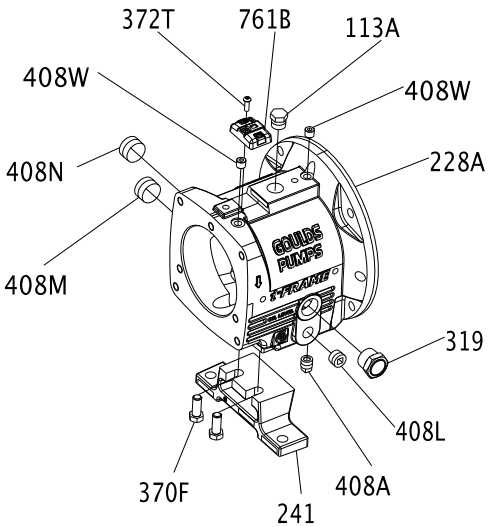

2. Install the oil flinger (248A) onto the shaft (122).

NOTICE:
The oil flinger is press fitted onto the shaft. Use a properly sized driver. Failure to do so may result in damage to the oil flinger.

3. Place the bearing-clamp ring (253B) onto the shaft (122).
Make sure that the orientation of the bearing-clamp ring is correct.
4. Install outboard bearings (112A) on shaft (122).
The regreasable bearing has a single shield. Make sure that the bearing is installed with the shield away from the impeller.
The duplex bearings are mounted back-to-back. Make sure that the orientation of the bearings are correct.
   a) Inspect the shaft (122) to ensure that it is clean, dimensionally correct, and is free of nicks and burrs.

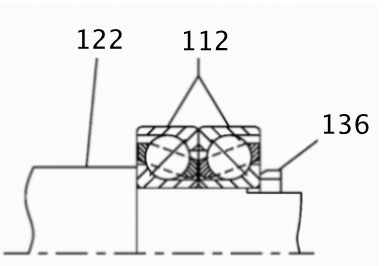

   b) Lightly coat the bearing seating with a thin film of oil.
   c) Remove the bearings (112) from their packaging.
   d) Wipe the preservative from the bearing (112) bore and outer diameter.
   e) Use an induction heater with a demagnetizing cycle to heat both bearings (112) to an inner ring temperature of 230 °F (110 °C).
   f) Place both bearings (112) on the shaft (122) with the large outer races together (back-to-back).

g) Position the bearings (112) on the shaft (122) against the shoulder and snug the locknut (136) against the bearings until they are cool.
The locknut prevents the bearings from moving away from the shaft shoulder as they cool. Rotate the outer bearing rings relative to each other as they are placed on the shaft to assure good alignment.

h) Remove the bearing locknut (136) after the bearings (112) are cool.

5. Put the lockwasher (382) onto the shaft (122).
6. Thread the locknut (136) onto the shaft (122) and tighten it until it is snug.
7. Bend the tangs of the lockwasher into the slots of the locknut.
8. Coat the inner surfaces of the bearings with lubricant.
9. Put the inboard bearing (168) onto the shaft (122).

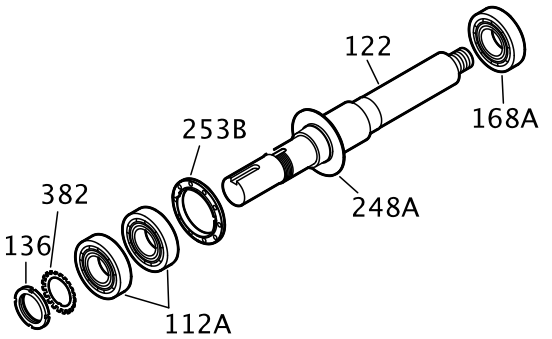

10. Install the bearing housing as follows (see the illustration):
    a) Coat the outside of the outboard bearing (112A) with oil.
    b) Coat the bore of the bearing housing (134) with oil.
    c) Put the bearing housing (134) onto the shaft.
    Do not use force.

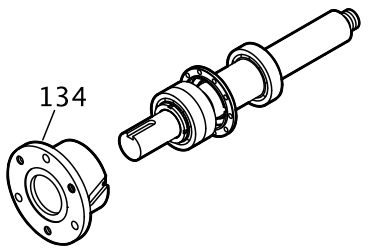

11. Prepare the shaft for assembly as follows (see the illustration):
    a) Fasten the clamp-ring bolts (236A) crosswise.
    See the specified torque values.
    Make sure that the shaft rotates freely.
    b) Install a new O-ring (496).

c) Install the outboard labyrinth oil-seal (332A) into the bearing housing (134).
Place the drain slots of the oil seal at the bottom position (6 o'clock).
Make sure that the edges of the keyway are free from burrs. To protect the O-ring, cover the keyway lengthwise with a piece of electrical tape before you install the oil seal.

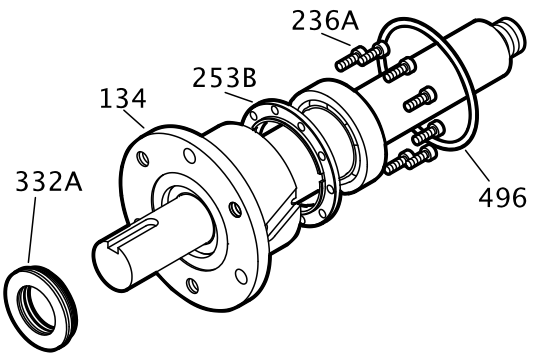

12. Install the shaft assembly into the bearing frame as follows (see the illustration):
    a) Coat the outside of the bearing housing (134) with oil.
    b) Coat all the internal surfaces of the bearing frame (228) with oil.
    c) Install the shaft assembly into the bearing frame (228).
    Make sure that the shaft rotates freely.
    d) Install the clamp bolts (370C) in the bearing housing (134) and tighten by hand.
    e) Install the jack bolts (370D) with the locknuts (423) in the bearing housing (134) and tighten by hand.

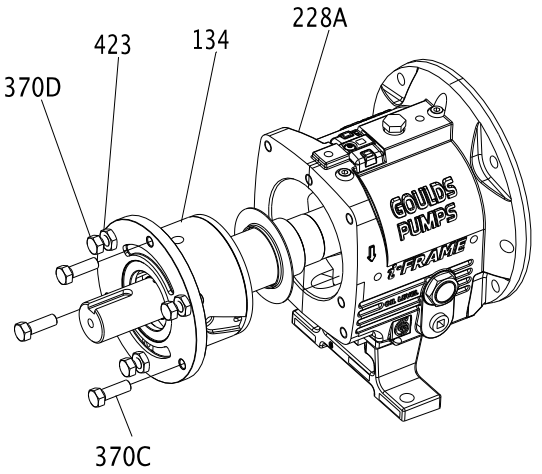

Assemble the rotating element and the bearing frame (XLT-i and i17)

CAUTION:
- Wear insulated gloves when you use a bearing heater. Bearings get hot and can cause physical injury.
- Use care when you handle the shaft because it can be heavy. Failure to do so could result in personal injury.

NOTICE:
Make sure that the pipe threads are clean, and that you apply thread sealant to the plugs and fittings. Failure to do so may result in equipment damage or decreased performance.

NOTICE:
Use an induction heater that heats as well as demagnetizes the bearings when you install bearings. Failure to do so may result in decreased performance.

1. Prepare the bearing frame (228) as follows (see the illustration):
   a) Install the oil-fill plug (113A).
   b) Install the oil-drain plug (408A).
   c) Install the sight glass (319).
   d) Install the sight oiler plug (408J).
   e) Install the plug for the oil-cooler inlet (408L).
   f) Install the plug for the oil-cooler outlet (408M).
   g) Install four oil-mist connection plugs (408H).
      Or: Install two grease fittings (193) and two grease-relief plugs (113).

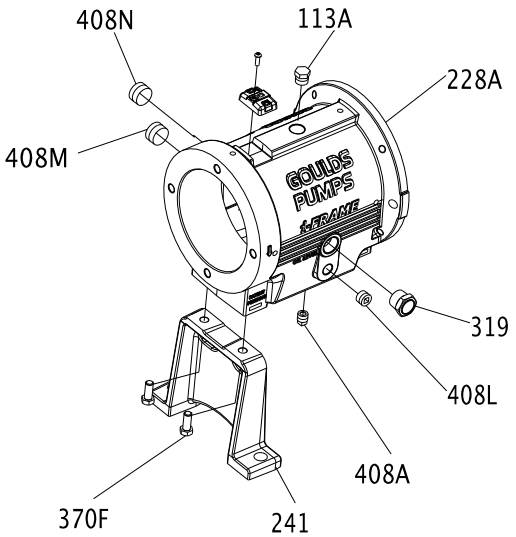

2. Install the outboard bearings (112A) on the shaft (122).
   The regreaseable bearing has a single shield. The outboard bearing is installed with the shield toward the impeller.
   a) Inspect the shaft (122) to ensure that it is clean, dimensionally correct, and is free of nicks and burrs.
   b) Lightly coat the bearing seating with a thin film of oil.
   c) Remove the bearing (112) from its packaging.
   d) Wipe the preservative from the bearing (112) bore and outer diameter.
   e) Use an induction heater with a demagnetizing cycle to heat the bearing (112) to an inner ring temperature of 230 °F (110 °C).
   f) Position the bearing (112) on the shaft (122) against the shoulder and snug the locknut (136) against the bearing until it is cool.
      The locknut prevents the bearing from moving away from the shaft shoulder as it cools.
   g) Remove the bearing locknut (136) after the bearing (112) cools.
3. Put the lockwasher (382) onto the shaft (122).
4. Thread the locknut (136) onto the shaft (122) and tighten it until it is snug.

5. Bend the tangs of the lockwasher into the slots of the locknut.

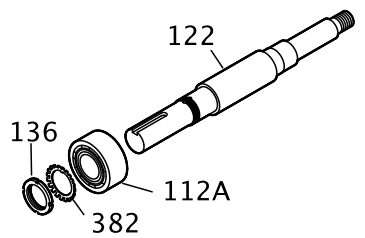

6. Install the bearing housing as follows (see the illustration):
   a) Coat the outside of the outboard bearing (112A) with oil.
   b) Coat the bore of the bearing housing (134) with oil.
   c) Put the bearing housing (134) onto the shaft.
   Do not use force.

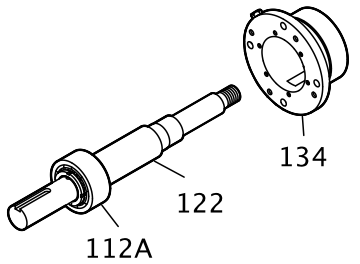

7. Fasten the gasket (360C) and the end cover (109A) with the bolts (371C).
   See the specified torque values.
   Make sure that the shaft rotates freely.

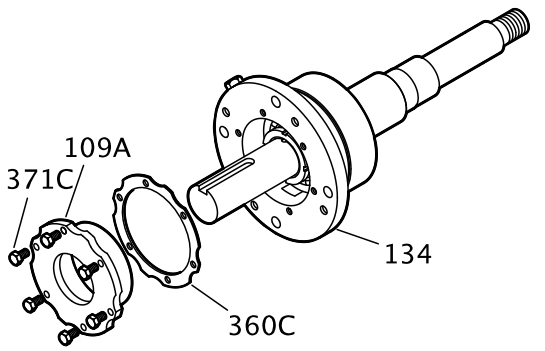

8. Install the inboard bearing as follows (see the illustration):
   a) Coat the inner surfaces of the bearings with lubricant.
   b) Put the inboard bearing (168) onto the shaft (122).
   The regreasable bearing has a single shield. Make sure that the bearing is installed with the shield away from the impeller.

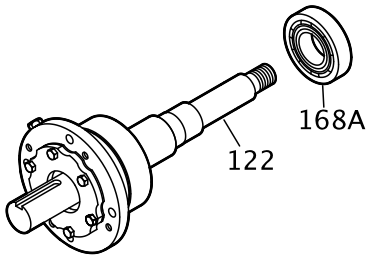

9. Install the remaining parts onto the bearing shaft as follows (see the illustration):
   a) Install a new O-ring (496).
   b) Install the outboard labyrinth oil-seal (332A) into the end cover (109A).
      Place the drain slots of the oil seal at the bottom position (6 o'clock).
      Make sure that the edges of the keyway are free from burrs. To protect the O-ring, cover the keyway lengthwise with a piece of electrical tape before you install the oil seal.

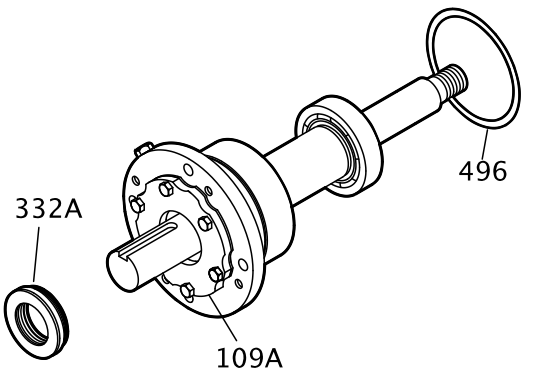

10. Install the shaft assembly into the bearing frame as follows (see the illustration):
    a) Coat the outside of the bearing housing (134) with oil.
    b) Coat all the internal surfaces of the bearing frame (228) with oil.
    c) Install the shaft assembly into the bearing frame (228).
       Make sure that the shaft rotates freely.
    d) Install the clamp bolts (370C) in the bearing housing (134) and tighten by hand.
    e) Install the jack bolts (370D) with the locknuts (423) in the bearing housing (134) and tighten by hand.
    f) Attach the bearing-frame foot (241) and fasten the bolts (370F) by hand.

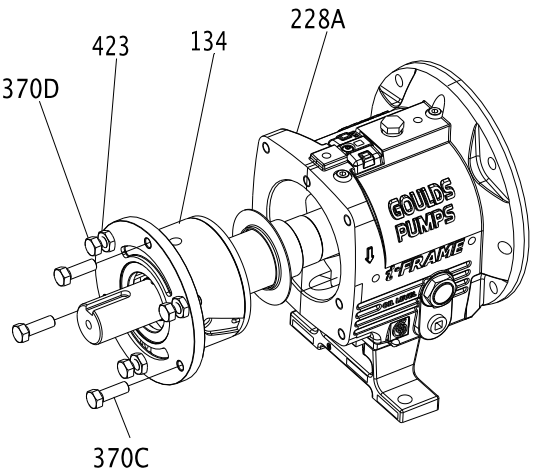

Assemble the rotating element and the bearing frame (XLT-i and i17 with duplex bearings)

CAUTION:
- Wear insulated gloves when you use a bearing heater. Bearings get hot and can cause physical injury.
- Use care when you handle the shaft because it can be heavy. Failure to do so could result in personal injury.

NOTICE:
Make sure that the pipe threads are clean, and that you apply thread sealant to the plugs and fittings. Failure to do so may result in equipment damage or decreased performance.

NOTICE:
Use an induction heater that heats as well as demagnetizes the bearings when you install bearings. Failure to do so may result in decreased performance.

1. Prepare the bearing frame (228) as follows (see the illustration):
   a) Install the oil-fill plug (113A).
   b) Install the oil-drain plug (408A).
   c) Install the sight glass (319).
   d) Install the sight oiler plug (408J).
   e) Install the plug for the oil-cooler inlet (408L).
   f) Install the plug for the oil-cooler outlet (408M).
   g) Install four oil-mist connection plugs (408H).
      Or: Install two grease fittings (193) and two grease-relief plugs (113).

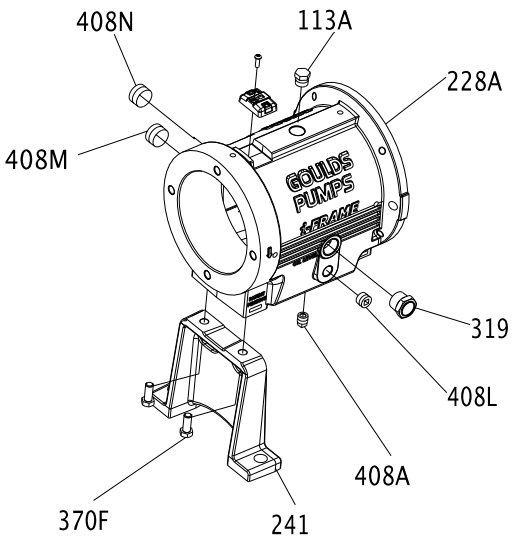

2. Install the outboard bearings (112A) on the shaft (122).
   The regreasable bearing has a single shield. Make sure that the bearing is installed with the shield away from the impeller.
   The duplex bearings are mounted back-to-back. Make sure that the orientation of the bearings are correct.
   a) Inspect the shaft (122) to ensure that it is clean, dimensionally correct, and is free of nicks and burrs.

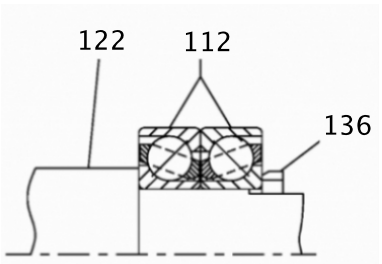

   b) Lightly coat the bearing seating with a thin film of oil.

c) Remove the bearings (112) from their packaging.
d) Wipe the preservative from the bearing (112) bore and outer diameter.
e) Use an induction heater with a demagnetizing cycle to heat both bearings (112) to an inner ring temperature of 230 °F (110 °C).
f) Place both bearings (112) on the shaft (122) with the large outer races together (back-to-back).
g) Position the bearings (112) on the shaft (122) against the shoulder and snug the locknut (136) against the bearings until they are cool.
The locknut prevents the bearings from moving away from the shaft shoulder as they cool. Rotate the outer bearing rings relative to each other as they are placed on the shaft to assure good alignment.
h) Remove the bearing locknut (136) after the bearings (112) are cool.

3. Put the lockwasher (382) onto the shaft (122).
4. Thread the locknut (136) onto the shaft (122) and tighten it until it is snug.
5. Bend the tangs of the lockwasher into the slots of the locknut.

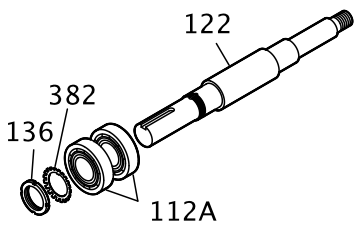

6. Install the bearing housing as follows (see the illustration):
a) Coat the outside of the outboard bearing (112A) with oil.
b) Coat the bore of the bearing housing (134) with oil.
c) Put the bearing housing (134) onto the shaft.
Do not use force.

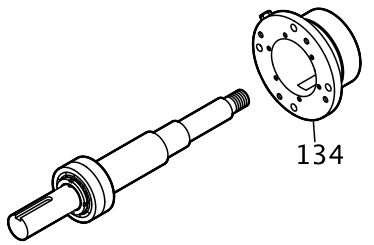

7. Fasten the gasket (360C) and the end cover (109A) with the bolts (371C).
See the specified torque values.
Make sure that the shaft rotates freely.

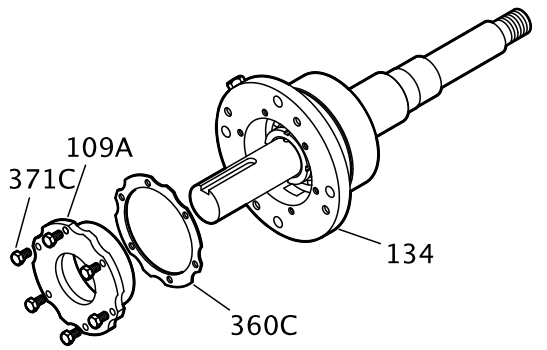

8. Install the inboard bearing as follows (see the illustration):

a) Coat the inner surfaces of the bearings with lubricant.
b) Put the inboard bearing (168) onto the shaft (122).
The regreasable bearing has a single shield. Make sure that the bearing is installed with the shield away from the impeller.

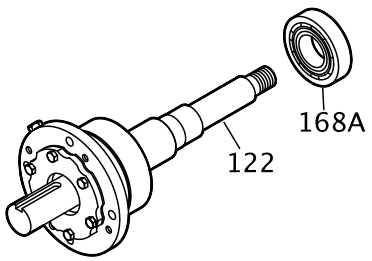

9. Install the remaining parts onto the bearing shaft as follows (see the illustration):
a) Install a new O-ring (496).
b) Install the outboard labyrinth oil-seal (332A) into the end cover (109A).
Place the drain slots of the oil seal at the bottom position (6 o'clock).
Make sure that the edges of the keyway are free from burrs. To protect the O-ring, cover the keyway lengthwise with a piece of electrical tape before you install the oil seal.

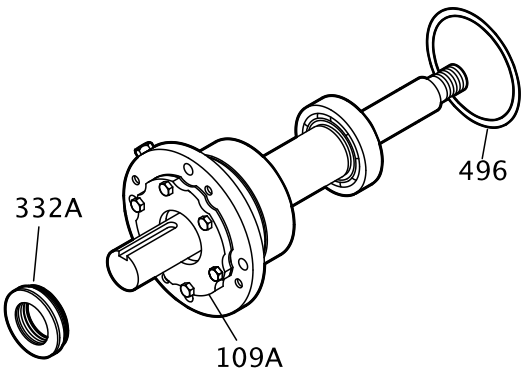

10. Install the shaft assembly into the bearing frame as follows (see the illustration):
a) Coat the outside of the bearing housing (134) with oil.
b) Coat all the internal surfaces of the bearing frame (228) with oil.
c) Install the shaft assembly into the bearing frame (228).
Make sure that the shaft rotates freely.
d) Install the clamp bolts (370C) in the bearing housing (134) and tighten by hand.
e) Install the jack bolts (370D) with the locknuts (423) in the bearing housing (134) and tighten by hand.

f) Attach the bearing-frame foot (241) and fasten the bolts (370F) by hand.

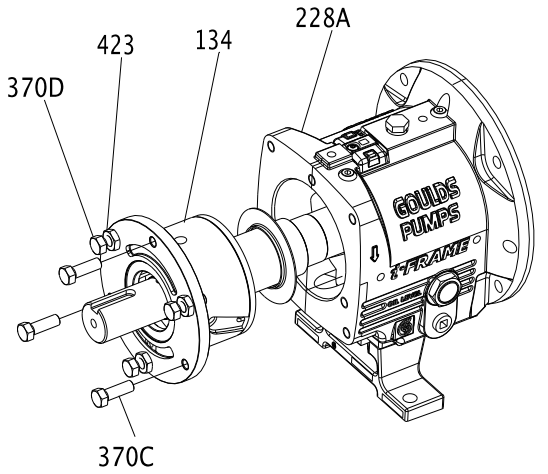

Assemble the frame

1. Support the frame assembly in a horizontal position.
2. Check the shaft-end play by moving the shaft forward and backward by hand, and note any indicator movement.
   If the total indicator reading is greater than the values in this table, then disassemble the shaft and determine the cause.

Table 15: Shaft-end play

Use this table as a reference for shaft-end play values.

Frame	Double row bearing	Duplex bearing
STi inches (millimeters)	0.0011 (0.028) 0.0019 (0.048)	0.0007 (0.018) 0.0010 (0.025)
MTi inches (millimeters)	0.0013 (0.033) 0.0021 (0.053)	0.0009 (0.023) 0.0012 (0.030)
LTi inches (millimeters)	Not applicable	0.0010 (0.025) 0.0015 (0.038)
XLT-i inches (millimeters)	0.0014 (0.036) 0.0023 (0.058)	0.0010 (0.025) 0.0015 (0.038)

Frame	Double row bearing	Duplex bearing

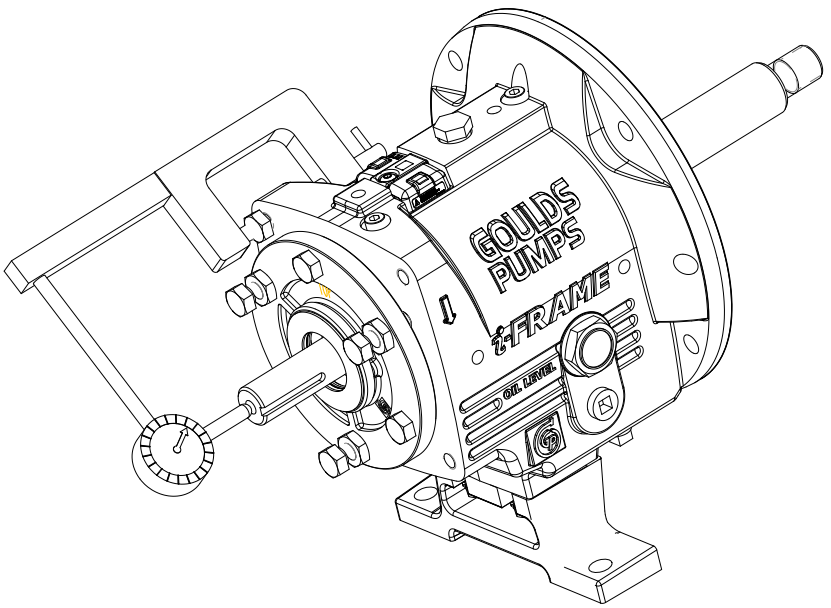

3. Check the shaft-sleeve (126) runout.
   a) Install the shaft sleeve.
   b) Thread the impeller on the shaft until hand tight.
   c) Rotate the shaft 360º.
   d) If the total indicator reading is greater than 0.002 in. (0.051 mm), then disassemble the shaft sleeve and determine the cause.
   e) Remove the impeller and shaft sleeve.

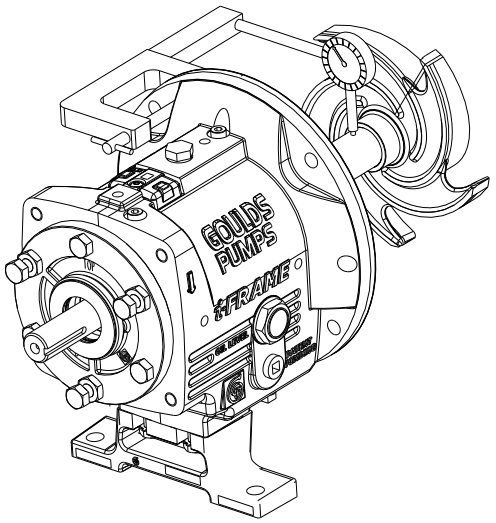

4. Check the frame-face runout by rotating the shaft so that the indicator measures the fit for 360º.
   If the total indicator reading is greater than 0.001 in. (0.025 mm), then disassemble and determine the cause.

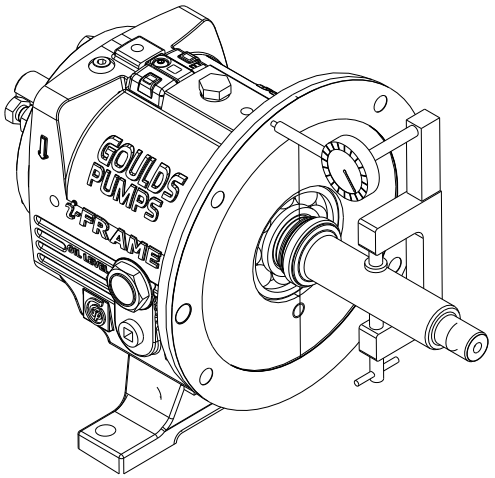

5. Place the manila gasket (360D) on the frame (228), and hold the gasket in place by inserting the dowel pins (469B) in their holes.
   The gasket is designed to fit only one way.
6. Install the frame adapter.
   a) Place the frame adapter (108) onto the frame assembly.
   b) Align the bolt holes and dowel locations on the frame adapter with the bolt holes and dowel locations on the frame.

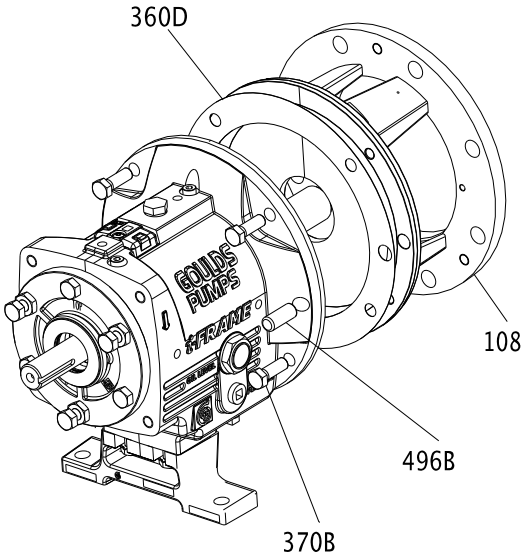

   c) Install the dowel pins (469B) and bolts (370B). Tighten the bolts in a criss-cross pattern according to the specifications in the bolt torque values table.

d) Rotate the shaft 360º to check the adapter fit.
If the total indicator reading is greater than 0.005 in. (0.13 mm), then determine the cause and correct it before you proceed.

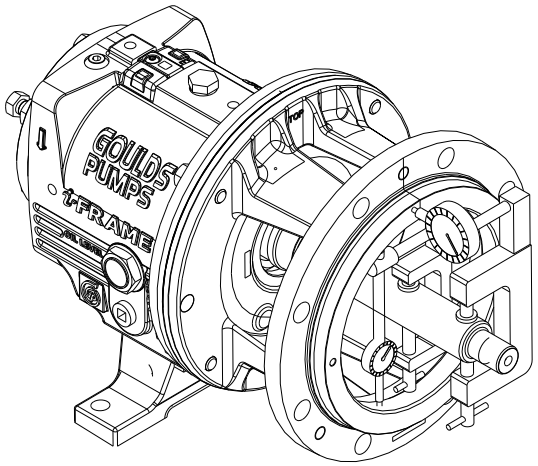

7. Install the labyrinth oil-seal (333A) into the adapter (108) and the bearing frame (228). The labyrinth oil seal is an O-ring fit.
8. Position the labyrinth oil-seal drain slots at the bottom (6 o'clock) position.
Refer to Assemble the INPRO labyrinth oil-seal for more information on the labyrinth oil-seal installation.

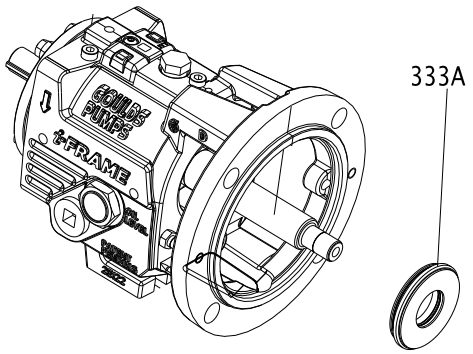

INPRO labyrinth oil seal description

Description

The INPRO VBXX-D Labyrinth Oil Seal consists of the rotor (1), the stator (2), and the VBX Ring (3). The rotor (1) fits over the shaft and is held in place by an elastomeric drive ring (4). The drive ring causes the rotor to turn with the shaft and provides a positive, static seal against the shaft. Since there is no metal-to-metal contact, there are no friction or wear concerns.

NOTICE:
The INPRO VBX is a one-piece design. Do not attempt to separate the rotor from the stator before or during installation. Doing so may result in equipment damage.

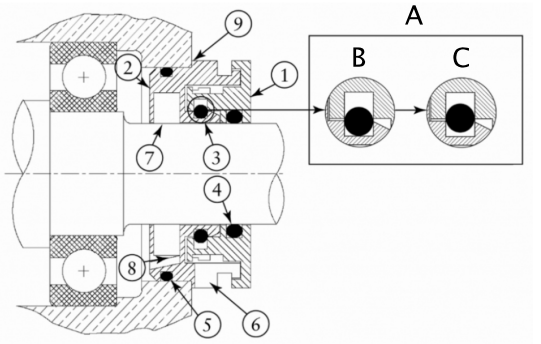

A	"VBX" O-ring action
B	Static
C	Dynamic
1	Rotor
2	Stator
3	"VBX" ring
4	Rotor drive ring
5	Stator gasket
6	Expulsion port
7	D groove
8	Lube return
9	Location shoulder

Assemble the INPRO labyrinth oil seal

1. Wrap electrical tape around the coupling end of the shaft to cover the keyway.

   NOTICE:
   The edges of the keyway can be sharp. Make sure to cover the keyway with tape. Failure to do so may result in cutting the O-ring and damaging the seal.

2. Lightly lube the shaft and the drive ring (4) with lubricant.
   Lubricant helps in the installation process. Be sure that the lubricant is compatible with the O-ring material and the pump-system standards.
3. Use an arbor press to install the outboard INPRO VBXX-D into the bearing cover with the expulsion port (6) at the 6 o'clock position.
   Press the outboard INPRO VBXX-D down to where the stator location ramp (9) starts to avoid angular misalignment. There is a nominal 0.002 in. (0.051 mm) interference fit.
4. Discard any residual material from the stator gasket (5).
5. Complete the applicable step in this table depending on the model of your pump.

Pump model	Action
STi	Press the inboard seal along the shaft into the bearing frame.
All other models	After you install the frame adapter on the bearing frame, press the inboard seal over the shaft and into the adapter.

Assemble the C-face adapter

1. Mount the pump and the motor-coupling hubs if they are not already mounted.
2. Slide the C-face adapter over the pump shaft and mount it against the bearing-frame flange using four bolts.
3. Mount the motor to the C-face adapter using either four or eight motor bolts.

Table 16: Motor-bolt torque values for C-face adapter to frame

This table contains the motor-bolt torque values for assembling the C-face adapter to a frame.

Frame	Lubricated threads	Dry threads
STi	20 ft-lb (27 Nm)	30 ft-lb (41 Nm)
MTi	20 ft-lb (27 Nm)	30 ft-lb (41 Nm)
LTi	20 ft-lb (27 Nm)	30 ft-lb (41 Nm)

Table 17: Motor-bolt torque values for C-face adapter to motor

This table contains the motor-bolt torque values for assembling the C-face adapter to a motor.

Frame	Lubricated threads	Dry threads
143TC-145TC	8 ft-lb (11 Nm)	12 ft-lb (16 Nm)
182TC-286TC	20 ft-lb (27 Nm)	30 ft-lb (41 Nm)
324TC-365TC	39 ft-lb (53 Nm)	59 ft-lb (80 Nm)

Shaft sealing

WARNING:
The mechanical seal used in an Ex-classified environment must be properly certified. Prior to startup, make sure that all areas that could leak pumped fluid to the work environment are closed.

NOTICE:
The mechanical seal must have an appropriate seal-flush system. Otherwise, excess heat generation and seal failure can occur.

Methods for sealing the shaft

These sections discuss the methods that you can use to seal the shaft.

- Seal the shaft with a dynamic seal.
- Seal the shaft with a cartridge-mechanical seal.
- Seal the shaft with a conventional inside-component mechanical seal.
- Seal the shaft with a conventional outside-component mechanical seal.
- Seal the shaft with a packed stuffing box.

Seal the shaft with a dynamic seal

1. Place the backplate (444) with the flat side down on the bench.

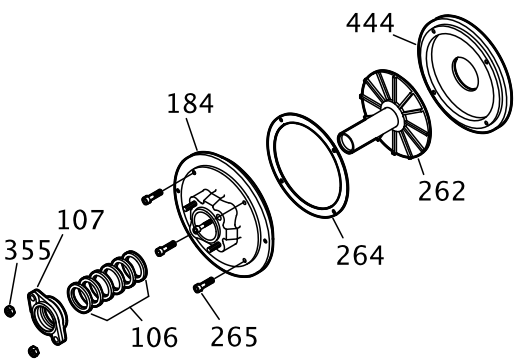

2. Place the repeller (262) in the backplate (444) with the sleeve side up.
3. Place a Teflon gasket (264) on the backplate (444) and align the holes in the gasket with the holes in the backplate.
4. Place a stuffing-box cover (184) on the backplate (444) and align the holes in the gasket with the holes in the backplate.
5. Install four socket-head capscrews (265) and tighten them securely.
6. Install a new sealing element into the gland.

7. Install a gasket (360Q) and gland (107) on the stuffing-box cover (184).
8. Install the nuts (355).
9. Install a dynamic-seal assembly and nuts (370H).

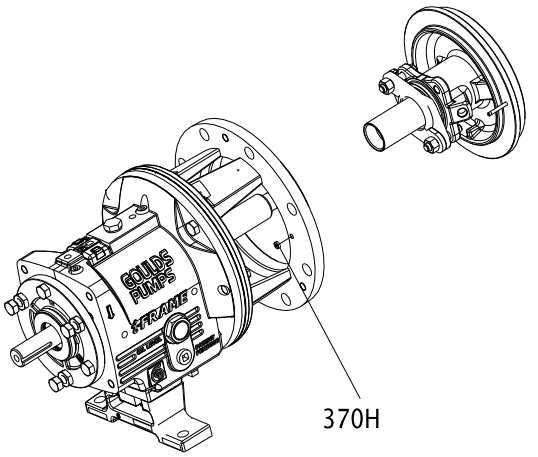

10. Check the stuffing-box-cover runout and rotate the indicator through 360 degrees. An indicator reading that is greater than 0.005 in. (0.013 mm) indicates a problem.

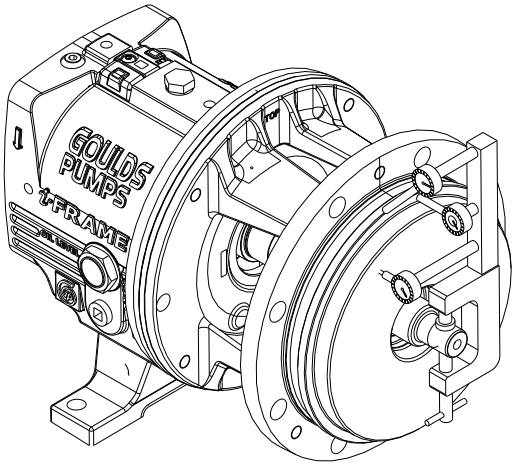

Seal the shaft with a packed stuffing box

WARNING:
Packed stuffing boxes are not allowed in an ATEX-classified environment.

Pumps are shipped without the packing, lantern ring, or split gland installed. These parts are included with the box of fittings shipped with each pump and must be installed before startup.

1. Carefully clean the stuffing-box bore.

2. Twist the packing enough to get it around the shaft.

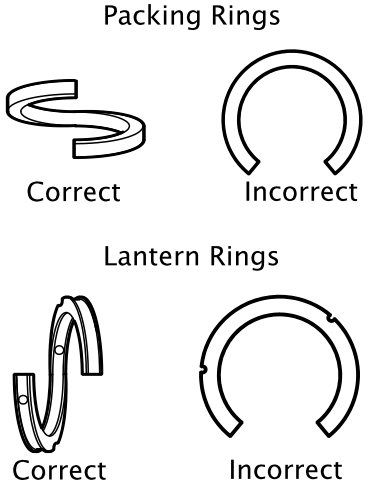

3. Insert the packing and stagger the joints in each ring by 90°.
   Install the stuffing-box parts in this order:
   a) Two packing rings
   b) One lantern ring (two-piece)
   c) Three packing rings

NOTICE:
Make sure that the lantern ring is located at the flushing connection to ensure that flush is obtained. Failure to do so may result in decreased performance.

4. Install the gland halves and evenly hand-tighten the nuts.

Seal the shaft with a cartridge mechanical seal

WARNING:
The mechanical seal used in an Ex-classified environment must be properly certified. Prior to startup, make sure that all areas that could leak pumped fluid to the work environment are closed.

NOTICE:
The mechanical seal must have an appropriate seal-flush system. Otherwise, excess heat generation and seal failure can occur.

1. Slide the cartridge seal onto the shaft or sleeve until it contacts the inboard labyrinth oil seal.
2. Assemble the seal chamber.
3. Slide the cartridge seal into the seal chamber and secure using the four studs and nuts.
4. Continue with the pump reassembly.
5. Set the impeller clearance.
   Refer to the Impeller clearance setting topic for more information.
6. Tighten the setscrews in the seal locking ring in order to secure the seal to the shaft.
7. Remove the centering clips from the seal.

Seal the shaft with a conventional inside-component mechanical seal

WARNING:
The mechanical seal used in an Ex-classified environment must be properly certified. Prior to startup, make sure that all areas that could leak pumped fluid to the work environment are closed.

NOTICE:
The mechanical seal must have an appropriate seal-flush system. Otherwise, excess heat generation and seal failure can occur.

1. Assemble the seal chamber:
   a) Install a seal-chamber cover or a backplate (184) and fasten with nuts (370H) with .

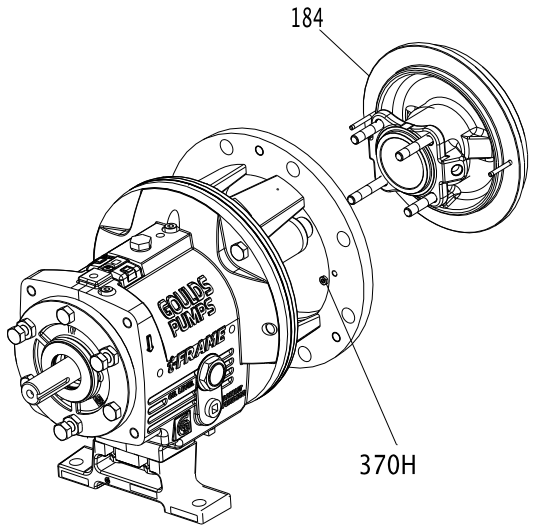

   b) Check the seal-chamber cover runout.

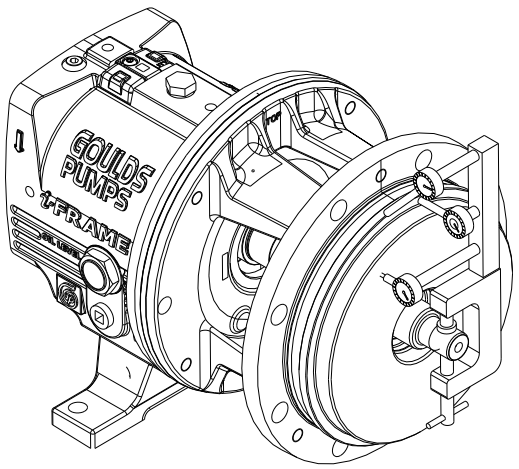

Rotate the indicator through 360º. If the total indicator reading is greater than 0.005 inches (0.13 mm), determine the cause and correct the issue before you proceed.

c) Install the shaft sleeve (126).

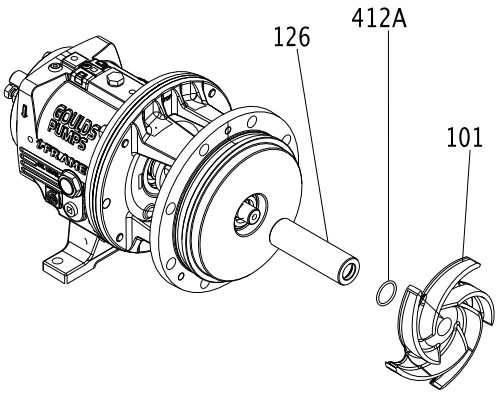

2. Mark the shaft and sleeve at the face of the seal chamber.
3. Continue the complete reassembly of the pump, except for the mechanical seal.
4. Set the impeller clearance.
   Refer to the Impeller Clearance Setting section for more information.
5. Scribe a line on the marked shaft and sleeve at the face of the seal chamber.
6. Remove the casing, the impeller, and the seal chamber.
7. If applicable, slide the gland, with the stationary seat and gland gasket installed, onto the shaft until it contacts the inboard labyrinth oil seal.
8. Install the mechanical-seal rotary unit according to the manufacturer's instructions.
   Use the scribed line and the seal-reference dimension.
9. Reinstall the seal chamber.
10. Slide the gland on the seal-chamber studs and secure them with the gland nuts.
    Tighten the nuts evenly so that the gland is seated on the seal-chamber pilot and is perpendicular to the shaft.
11. Complete the reassembly of the pump.

Seal the shaft with a conventional outside-component mechanical seal

WARNING:
The mechanical seal used in an Ex-classified environment must be properly certified. Prior to startup, make sure that all areas that could leak pumped fluid to the work environment are closed.

NOTICE:
The mechanical seal must have an appropriate seal-flush system. Otherwise, excess heat generation and seal failure can occur.

1. Assemble the seal chamber.

a) Install the seal-chamber cover or backplate (184) and fasten with nuts (370H).

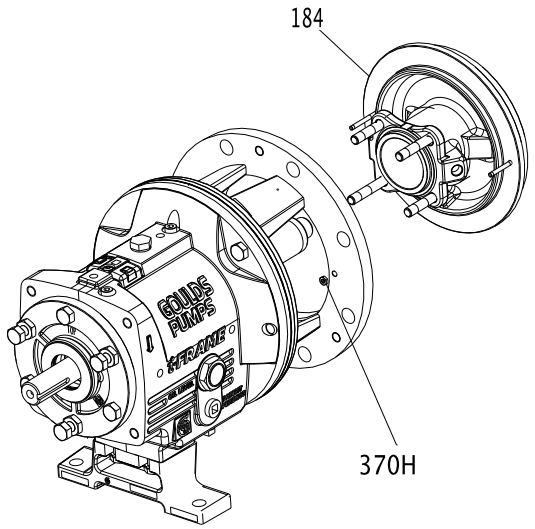

b) Check the seal-chamber cover runout.

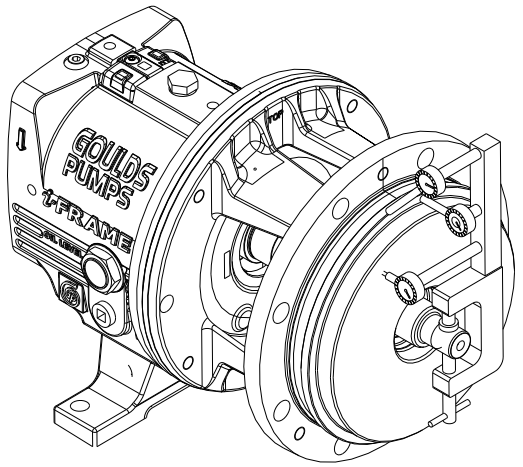

Rotate the indicator through 360 degrees. If the total indicator reading is greater than 0.005 in. (0.13 mm), determine the cause and correct the issue before you proceed.

c) Install the shaft sleeve (126).

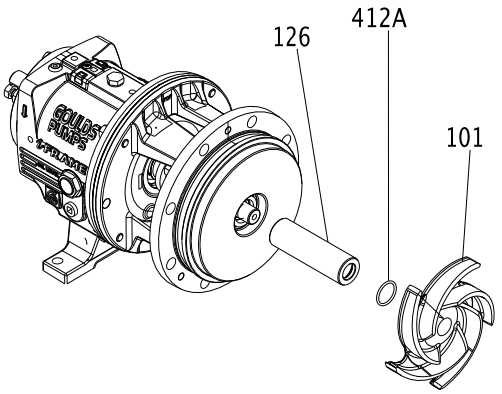

2. Mark the shaft and sleeve at the face of the seal chamber.
3. Continue the complete reassembly of the pump, except for the mechanical seal.
4. Set the impeller clearance.
   Refer to the Impeller clearance setting section for more information.
5. Scribe a line on the marked shaft and sleeve at the face of the seal chamber.
6. Remove the casing, the impeller, and the seal chamber.
7. Install the mechanical-seal rotary unit per the manufacturer's instructions.
   Use the scribed line as the seal-reference dimension. Be sure to secure the rotary unit in place using the set screws in the locking ring.
8. Install the gland, with the stationary seat and gland gaskets installed, on the seal chamber.
9. Reinstall the seal chamber.
10. Complete the reassembly of the pump.

Install the impeller

CAUTION:
Wear heavy work gloves when you handle impellers. The sharp edges can cause physical injury.

1. Install the impeller.

Pump size	Action
STi, MTi, and LTi	Install the impeller (101). Use a new impeller O-ring (412A).
XLT-i and i17	Install the impeller (101) and a Teflon washer (428D) on the plug (458Y). Use a new impeller O-ring (412A).

2. Attach a shaft wrench and a coupling key on the shaft.
   a) When the impeller (101) makes firm contact with the sleeve (126), raise the shaft wrench (counterclockwise, viewed from the impeller end of the shaft) off of the bench and slam it down (clockwise, viewed from the impeller end of shaft).

b) Apply a few sharp raps to tighten the impeller (101).

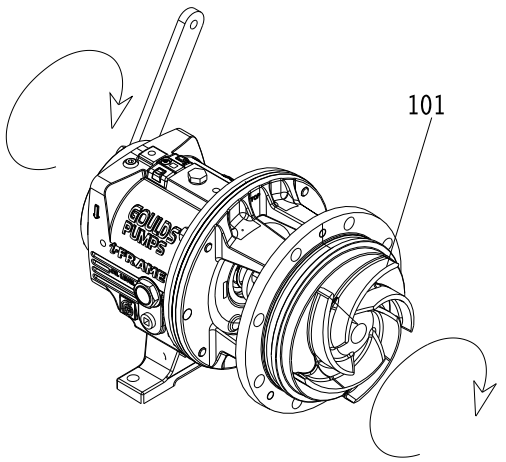

3. Loosen the clamp bolts (370C) and the jack bolts (370D).
4. Measure the gap between the impeller (101) and the seal chamber and stuffing-box cover (184) with a feeler gauge.

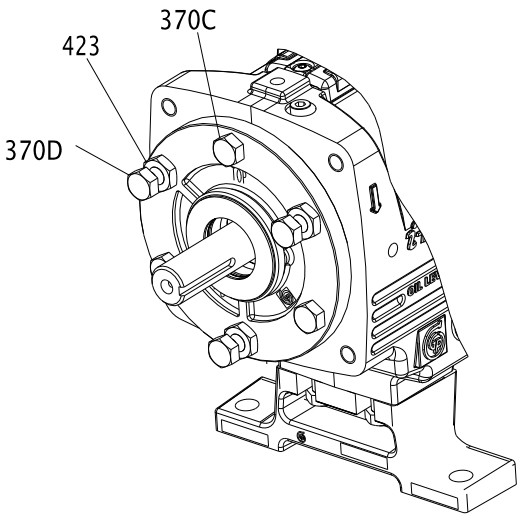

5. When you reach a 0.030 in. (0.76 mm) clearance, tighten the clamp bolts (370C), jack bolts (370D), and lock nuts (423).
   This approximates the impeller position when it is set to 0.015 in. (0.38 mm) from the casing. Perform a final impeller adjustment after you install the impeller into the casing.
6. Check the impeller (101) runout.

Check vane tip to vane tip. If the total indicator reading is greater than 0.005 in. (0.13 mm), determine the cause and correct the issue before you proceed.

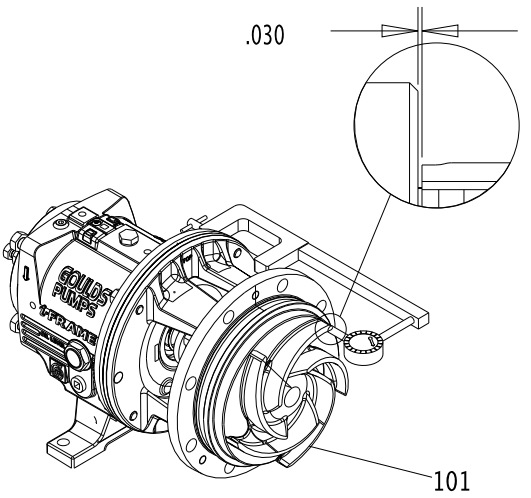

For more information on how to set the impeller clearances, refer to the Impeller-clearance checks and Impeller-clearance setting sections in Commissioning, Startup, Operation, and Shutdown.

Attach the i-ALERT™ Condition Monitor to the pump

CAUTION:
Always wear protective gloves. The pump and condition monitor can be hot.

Tools required:

- 5/32 inch hex wrench

1. Attach the condition monitor (761B) to the bearing frame (228A) using the hex-head screw (372T) provided.

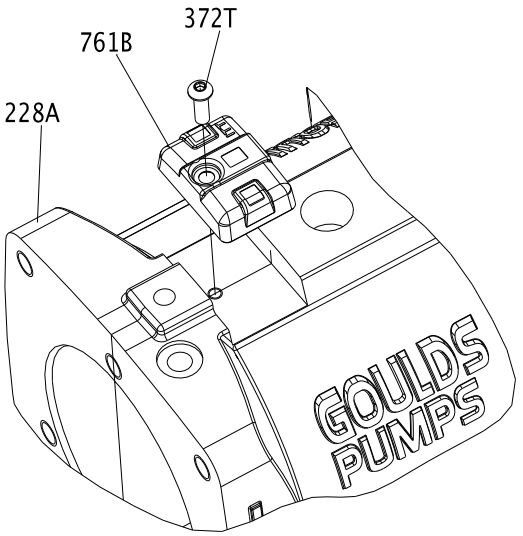

2. Tighten the hex-head screw with a 5/32 inch hex wrench to 6 ft-lbs (8 Nm).

Post-assembly checks

Perform these checks after you assemble the pump, then continue with pump startup:

- Rotate the shaft by hand in order to make sure that it rotates easily and smoothly and that there is no rubbing.
- Open the isolation valves and check the pump for leaks.

Install the back pull-out assembly (except HT 3196)

CAUTION:
Never remove the back pull-out assembly without assistance.

1. Clean the casing fit and install the casing gasket (351) on the seal chamber and stuffing-box cover.
2. Loosen the clamping bolts (370C) and jack bolts (370D) on the bearing housing.

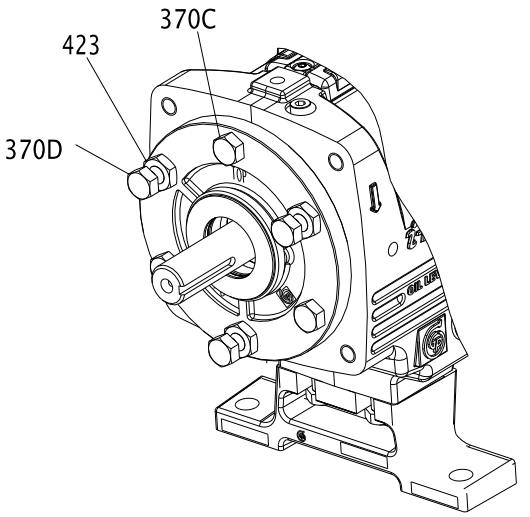

3. Install the back pull-out assembly in the casing.

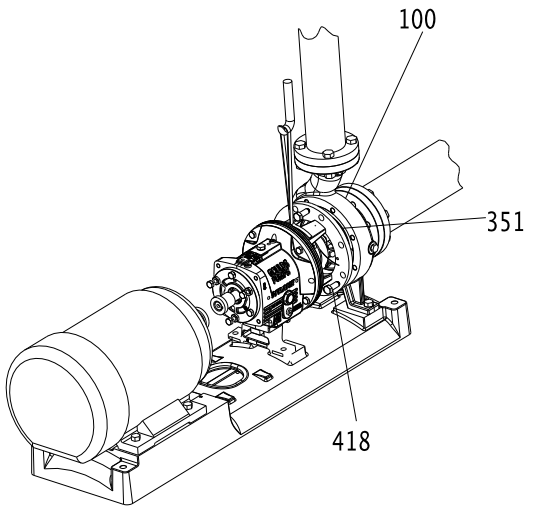

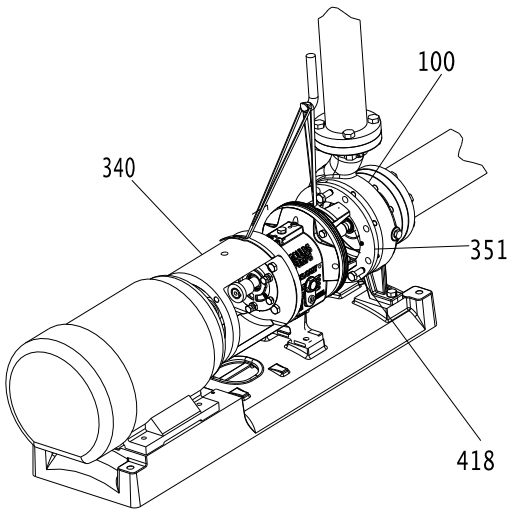

4. Install and then hand-tighten the casing bolts (370).
   Refer to the bolt torque values for information on how to tighten the casing bolts.
5. Install and tighten the casing jackscrews (418).

NOTICE:
Do not overtighten the casing jackscrews. Doing so may result in equipment damage.

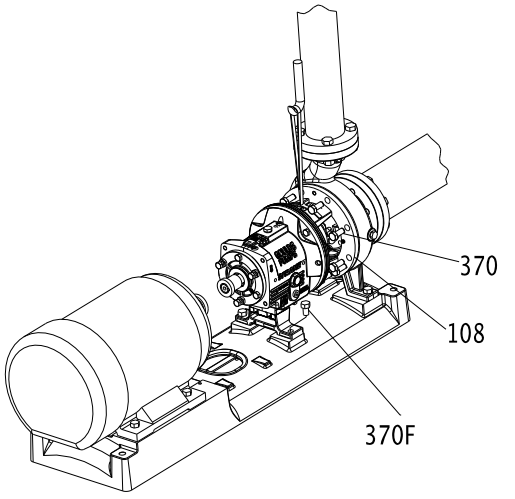

6. Reinstall the shims under the frame foot and tighten the frame foot to the baseplate.
   Make sure that you use the proper shim. Mount a dial indicator in order to measure the distance between the top of the frame and the baseplate. Make sure that the distance does not change as you tighten the frame-foot bolts.
7. Check the total clearance of the impeller in the casing.
   With new parts, an acceptable range is 0.030 in. (0.76 mm) to 0.065 in. (1.65 mm). If the impeller clearance is outside of this range, you either have the incorrect parts, an improper installation, or too much pipe strain. Determine the cause and correct the problem before you proceed.
8. Adjust the impeller clearance.
   Refer to the Impeller clearance setting section for more information.
9. Replace the auxiliary piping.
10. Fill the pump with the proper lubricant. See Lubricating-oil requirements.
11. Reinstall the coupling guard.

See Install the coupling guard for more information.

NOTICE:
Risk of damage to the mechanical seal or shaft sleeve on units supplied with cartridge mechanical seals. Prior to startup, make sure to tighten the set screws in the seal locking ring and remove the centering clips.

Assembly references

Bolt torque values

Table 18: Bolt torque, lb-ft (Nm)

This table provides the bolt torque values.

Location	Frame	3196, CV 3196, LF 3196, 3796		NM 3196		3198	
		Lube	Dry	Lube	Dry	Lube	Dry
Casing bolts (370) or casing nuts (425)	6-in. STi	Refer to the maximum torque values in lb-ft (Nm) for casing bolts table.		27 (36)	40 (53)	N/A	N/A
	8-in. STi			20 (27)	30 (40)	35 (47)	53 (71)
	MTi, LTi			27 (36)	40 (53)	35 (47)	53 (71)
	XLT-i, i17			N/A	N/A	N/A	N/A
Frame-to-adapter bolts	All	20 (27)	30 (40)	20 (27)	30 (40)	20 (27)	30 (40)
Bearing-clamp ring bolts (236A) - duplex bearing only	STi, MTi	10* (1.1)	17* (1.9)	10* (1.1)	17* (1.9)	10* (1.1)	17* (1.9)
	LTi	55* (6.2)	83* (9.4)	55* (6.2)	83* (9.4)	55* (6.2)	83* (9.4)
Bearing end cover bolts (371C)	XLT-i, i17	9 (12)	12 (16)	N/A	N/A	N/A	N/A
Dynamic seal cap-screws (265)	STi, MTi, LTi	55* (6.2)	83* (9.4)	N/A	N/A	N/A	N/A
	XLT-i, i17	9 (12)	12 (16)	N/A	N/A	N/A	N/A
* Values are in lb-in. (Nm)							

Table 19: Maximum torque values in lb-ft (Nm) for casing bolts

This table provides the maximum torque values for casing bolts.

		Models 3196, CV 3196 LF 3196, 3796 with 150 lb (68 kg) casing flanges				Model HT 3196 and all models with 300 lb (136 kg) casing flanges	
		Material specification					
		Ductile iron casing with A307 Grade B casing bolts		Alloy casing with (304SS) F593 Grade 1 or (316SS F593) Grade 2 casing bolts		Ductile iron and alloy casings with A193 grade B7 casing bolts	
Frame	Casing bolt diameter (in.)	Lube	Dry	Lube	Dry	Lube	Dry
8 in. STi	0.50	20 (27)	30 (41)	35 (47)	54 (73)	58 (79)	87 (118)
6 in. STi	0.625	39 (53)	59 (80)	71 (96)	107 (145)	115 (156)	173 (235)
MTi	0.625	39 (53)	59 (80)	71 (96)	107 (145)	115 (156)	173 (235)
LTi	0.625	39 (53)	59 (80)	71 (96)	107 (145)	115 (156)	173 (235)
XLT-i	0.625	39 (53)	59 (80)	71 (96)	107 (145)	115 (156)	173 (235)
i17	7/8	113 (153)	170 (230)	141 (191)	212 (287)	330 (447)	495 (671)

Shaft-end play

Table 20: Shaft-end play

Use this table as a reference for shaft-end play values.

Frame	Double row bearing	Duplex bearing
STi inches (millimeters)	0.0011 (0.028) 0.0019 (0.048)	0.0007 (0.018) 0.0010 (0.025)
MTi inches (millimeters)	0.0013 (0.033) 0.0021 (0.053)	0.0009 (0.023) 0.0012 (0.030)

Frame	Double row bearing	Duplex bearing
LTi inches (millimeters)	Not applicable	0.0010 (0.025) 0.0015 (0.038)
XLT-i inches (millimeters)	0.0014 (0.036) 0.0023 (0.058)	0.0010 (0.025) 0.0015 (0.038)

Bearing types

Table 21: Bearing types

Frame Double row	Inboard bearing Duplex	Outboard bearing	
STi	6207	3306	7306
MTi	6309	3309	7309
LTi	6311	Not applicable	7310
XLT-i, i17	6313	3313	7313

Spare parts

Always state the serial number and indicate the part name and item number from the relevant sectional drawing when you order spare parts. It is imperative for service reliability to have a sufficient stock of readily available spare parts.

- Impeller (101)
- Shaft (122A)
- Shaft sleeve (126)
- Outboard bearing (112A)
- Inboard bearing (168A)
- Casing gasket (351)
- Frame-to-adapter gasket (360D)
- Bearing-housing retaining ring (361A)
- Bearing lockwasher (382)
- Bearing locknut (136)
- Impeller O-ring (412A)
- Bearing-housing O-ring (496)
- Outboard labyrinth-seal rotary O-ring (497F)
- Outboard labyrinth-seal stationary O-ring (497G)
- Inboard labyrinth-seal rotary O-ring (497H)
- Inboard labyrinth-seal stationary O-ring (497J)
- Lantern ring half (105) (packed stuffing box)
- Stuffing box packing (106) (packed stuffing box)
- Packing gland (107) (packed stuffing box)
- Impeller gasket (428D) (XLT-i and i17 only)

Interchangeability drawings

3196 interchangeability

Table 22: 3196 interchangeability drawing

Description	Shaft and Bearing Frame Assembly	Adapter	Seal Chamber	Impeller	Casing	Size
Model 3196 STi 1–3/8 in. Shaft Dia. Max BHP-40 HP	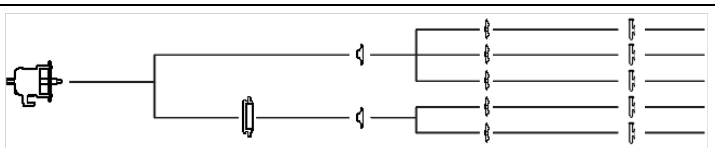					1x1.5-6 A 1.5x3-6 A 2x3-6 AC 1X1.5-8 A 1.5X3-8 A

Description	Shaft and Bearing Frame Assembly	Adapter	Seal Chamber	Impeller	Casing	Size
Model 3196 MTi 1–3/4 in. Shaft Dia. Max BHP-122 HP	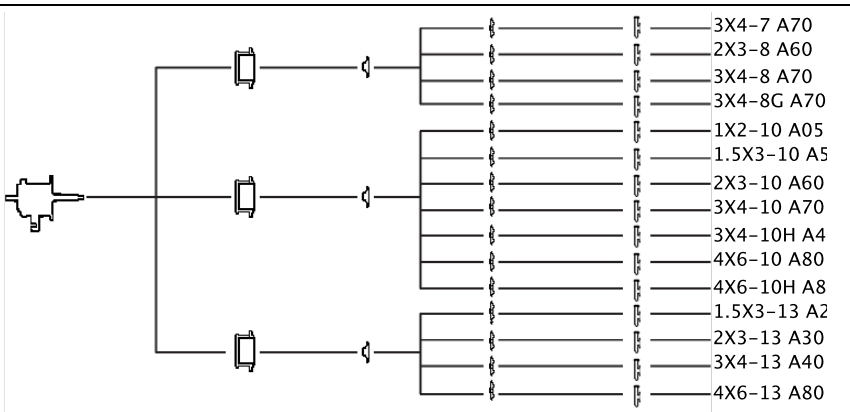					3X4-7 A70 2X3-8 A60 3X4-8 A70 3X4-8G A70 1X2-10 A05 1.5X3-10 A5 2X3-10 A60 3X4-10 A70 3X4-10H A4 4X6-10 A80 4X6-10H A8 1.5X3-13 A2 2X3-13 A30 3X4-13 A40 4X6-13 A80
Model 3196 LTi 2–1/8 in. Shaft Dia. Max BHP-200 HP	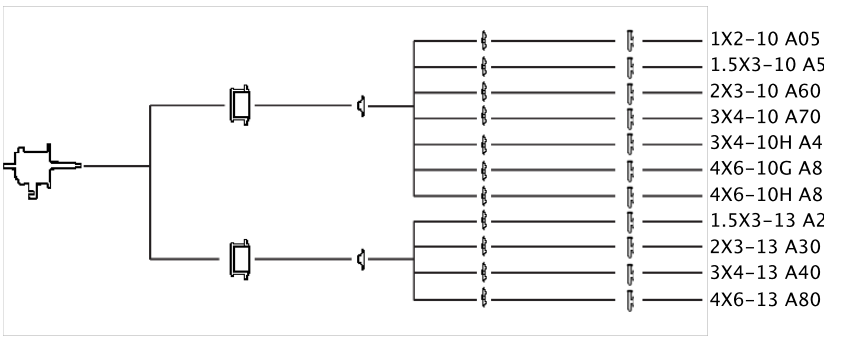					1X2-10 A05 1.5X3-10 A5 2X3-10 A60 3X4-10 A70 3X4-10H A4 4X6-10G A8 4X6-10H A8 1.5X3-13 A2 2X3-13 A30 3X4-13 A40 4X6-13 A80
Model 3196 XLT-i 2–1/2 in. Shaft Dia. Max BHP-250 HP 17 in. XLT-i has 2–3/4 in. Shaft Dia. Max BHP-350 HP	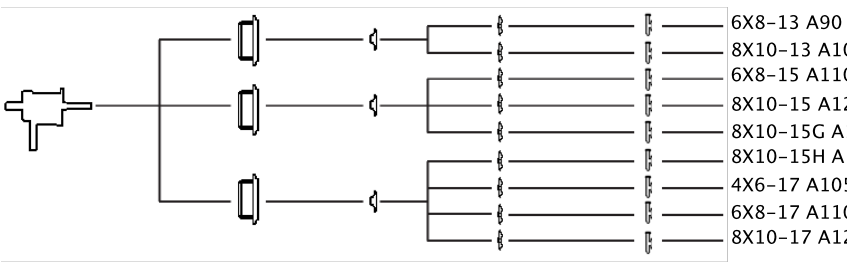					6X8-13 A90 8X10-13 A100 6X8-15 A110 8X10-15 A120 8X10-15G A12 8X10-15H A12 4X6-17 A105 6X8-17 A110 8X10-17 A120

Lubrication conversion

Frame lubrication conversion

NOTICE:

- Never mix greases of different consistencies (NLGI 1 or 3 with NLGI 2) or with different thickeners. For example, never mix a lithium-based grease with a polyurea-based grease. Doing so may result in decreased performance.
- Remove the bearings and old grease if you need to change the grease type or consistency. Failure to do so may result in equipment damage or decreased performance.

Use a grease that is suitable for high temperatures when you have frame pumpage temperatures greater than 350°F (177°C). Ensure that mineral-oil greases have oxidation stabilizers and a consistency of NLGI 3.

Table 23: Lubricating-grease requirements

Most pumps use Sunoco 2EP grease. High temperature units with a pumpage temperature greater than 350° F (177°C) use Mobil SCH32.

This table shows which brand of grease to use when lubricating the pump.

	Pumpage temperature less than 350°F (177°C)	Pumpage temperature greater than 350°F (177°C)
NGLI consistency	2	3
Mobil	Mobilux EP2	SCH32
Exxon	Unirex N2	Unirex N3
Sunoco	Mutipurpose 2EP	N/A
SKF	LGMT 2	LGMT 3

Convert from greased-for-life or regreaseable to oil-lubricated bearings

1. Remove the plug from the oil-return slot in the frame located under the radial bearing. Use this table as a guide.

Pump model	Action
STi	Remove the epoxy from the return slot.
MTi, LTi, XLT-i, and i-17	Remove the set screw installed in the oil-return hole.

2. Remove the plug from the oil-return hole in the bearing housing (134).
3. Replace both bearings with unshielded, oil-lubricated bearings.

Table 24: Bearing types

Frame Double row	Inboard bearing Duplex	Outboard bearing	
STi	6207	3306	7306
MTi	6309	3309	7309
LTi	6311	Not applicable	7310
XLT-i, i17	6313	3313	7313

4. Remove the grease fittings (193) to prevent accidental greasing. Two plugs (408H) are required to replace the two grease fittings.

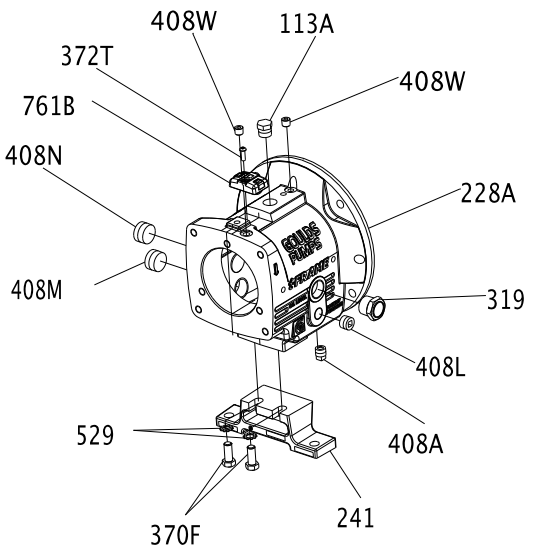

Item Number	Size	Description	Quantity
113	1/4"-18 NPT	External hex/square head pipe plug	2
113A	1/2"-14 NPT	External hex/square head pipe plug	1
193	1/4"-18 NPT	Grease fitting	2
228	- - - -	Bearing frame	1
241	- - - -	Frame foot	1
370F	1/2"	Hex cap screw	2
408A	3/8"-18 NPT	External square head pipe plug (magnetic)	1

Item Number	Size	Description	Quantity
408J	1/4"-18 NPT	External hex/square head pipe plug	1
408L	1/2"-14 NPT	Square countersunk headless pipe plug	1
408M	1" 11-1/2" NPT	Square countersunk headless pipe plug	1
529	1/2"	Light helical spring lock washer	2

Conversion from flood-oil to pure-oil mist

Consult your local ITT representative for further information on this topic.

Convert from flood oil to regreaseable

Consult your local ITT representative for further information on this topic.

Troubleshooting

Operation troubleshooting

Symptom	Cause	Remedy
The pump is not delivering liquid.	The pump is not primed.	Re-prime the pump and check that the pump and suction line are full of liquid.
	The suction line is clogged.	Remove the obstructions.
	The impeller is clogged.	Back-flush the pump in order to clean the impeller.
	The shaft is rotating in the wrong direction.	Change the rotation. The rotation must match the arrow on the bearing housing or pump casing.
	The foot valve or suction pipe opening is not submerged enough.	Consult an ITT representative for the proper submersion depth. Use a baffle in order to eliminate vortices.
	The suction lift is too high.	Shorten the suction pipe.
The pump is not producing the rated flow or head.	The gasket or O-ring has an air leak.	Replace the gasket or O-ring.
	The stuffing box has an air leak.	Replace or readjust the mechanical seal.
	The impeller is partly clogged.	Back-flush the pump in order to clean the impeller.
	The clearance between the impeller and the pump casing is excessive.	Adjust the impeller clearance.
	The suction head is not sufficient.	Make sure that the suction-line shutoff valve is fully open and that the line is unobstructed.
	The impeller is worn or broken.	Inspect and replace the impeller if necessary.
The pump starts and then stops pumping.	The pump is not primed.	Re-prime the pump and check that the pump and suction line are full of liquid.
	The suction line has air or vapor pockets.	Rearrange the piping in order to eliminate air pockets.
	The suction line has an air leak.	Repair the leak.
The bearings are running hot.	The pump and driver are not aligned properly.	Realign the pump and driver.
	There is not sufficient lubrication.	Check the lubricant for suitability and level.
	The lubrication was not cooled properly.	Check the cooling system.
The pump is noisy or vibrates.	The pump and driver are not aligned properly.	Realign the pump and driver.
	The impeller is partly clogged.	Back-flush the pump in order to clean the impeller.
	The impeller or shaft is broken or bent.	Replace the impeller or shaft as necessary.
	The foundation is not rigid.	Tighten the hold-down bolts of the pump and motor. Make sure the baseplate is properly grouted without voids or air pockets.
	The bearings are worn.	Replace the bearings.
	The suction or discharge piping is not anchored or properly supported.	Anchor the suction or discharge piping as necessary according to recommendations in the Hydraulic Institute Standards Manual.
	The pump is cavitating.	Locate and correct the system problem.
The mechanical seal is leaking excessively.	The packing gland is not adjusted properly.	Tighten the gland nuts.
	The stuffing box is not packed properly.	Check the packing and repack the box.
	The mechanical seal parts are worn.	Replace the worn parts.
	The mechanical seal is overheating.	Check the lubrication and cooling lines.
	The shaft sleeve is scored.	Machine or replace the shaft sleeve as necessary.
The motor requires excessive power.	The discharge head has dropped below the rated point and is pumping too much liquid.	Install a throttle valve. If this does not help, then trim the impeller diameter. If this does not help, then contact your ITT representative.
	The liquid is heavier than expected.	Check the specific gravity and viscosity.
	The stuffing-box packing is too tight.	Readjust the packing. If the packing is worn, then replace the packing.
	Rotating parts are rubbing against each other.	Check the parts that are wearing for proper clearances.
	The impeller clearance is too tight.	Adjust the impeller clearance.

Alignment troubleshooting

Symptom	Cause	Remedy
Horizontal (side-to-side) alignment cannot be obtained (angular or parallel).	The driver feet are bolt-bound.	Loosen the pump's hold-down bolts, and slide the pump and driver until you achieve horizontal alignment.
	The baseplate is not leveled properly and is probably twisted.	1. Determine which corners of the baseplate are high or low. 2. Remove or add shims at the appropriate corners. 3. Realign the pump and driver.

Assembly troubleshooting

Symptom	Cause	Remedy
There is excessive shaft end play.	The internal clearance of the bearings exceeds the recommended amount.	Replace the bearings with a bearing of the correct type.
	The snap ring is loose in the bearing-housing groove.	Re-seat the snap ring.
There is excessive shaft and sleeve runout.	The sleeve is worn.	Replace the sleeve.
	The shaft is bent.	Replace the shaft.
There is excessive bearing-frame flange runout.	The shaft is bent.	Replace the shaft.
	The flange of the bearing frame is distorted.	Replace the bearing-frame flange.
There is excessive frame-adapter runout.	There is corrosion on the frame adapter.	Replace the frame adapter.
	The adapter-to-frame gasket is not seated properly.	Re-seat the frame adapter and make sure that the adapter-to-frame gasket is seated properly.
There is excessive seal chamber or stuffing-box cover runout.	The seal chamber or the stuffing-box cover is not properly seated in the frame adapter.	Re-seat the seal chamber or stuffing-box cover.
	There is corrosion or wear on the seal chamber or stuffing-box cover.	Replace the seal chamber or stuffing-box cover.
There is excessive vane-tip runout of the impeller.	The vane is bent.	Replace the impeller.

i-ALERT™ Condition Monitor troubleshooting

Symptom	Cause	Remedy
There are no green or red flashing LEDs.	The battery is dead.	Replace the condition monitor.
	The unit is deactivated.	Activate the condition monitor.
	The unit is malfunctioning.	Consult your ITT representative for a warranty replacement.
The red LEDs are flashing, but the temperature and vibration are at acceptable levels.	The baseline is bad.	Check the temperature and vibration levels and reset the condition monitor.
	The unit is malfunctioning.	Consult your ITT representative for a warranty replacement.

Parts Listings and Cross-Sectionals

Parts list

Table 25: Construction material and quantity

Item	Quantity	Part name	Pump Material				
			All D.I.	D.I. With 316 SS impeller	All 316SS	All CD4MCu	All Alloy 20
100	1	Casing	1012	1012	1203	1216	1204
101	1	Impeller	1013	1203	1203	1216	1204
105	1	Lantern Ring	Teflon				
106	1 set	Stuffing Box Packing	Non-asbestos braid				
107	1	Gland—Packed Box	1203			1204	
108	1	Frame Adapter	1013				
109C	1***	Outboard Bearing End Cover	1001				
112A	1	Outboard Bearing	Double row angular contact (duplex pair for LTi)				
113	2	Plug—Grease Relief	2210				
113B	1	Plug—Oil Fill	2210				
122	1	Shaft—Without Sleeve	2229			2230	
122	1	Shaft—With Sleeve	2238				
126	1	Shaft Sleeve	2229				2230
134	1	Bearing Housing	1001				
136	1	Bearing Locknut	Steel				
168A	1	Radial Bearing	Single row ball				
184	1	Seal Chamber/Stuffing Box Cover	1012	1012	1203	1216	1204
193	2	Grease Fitting	Steel				
228	1	Bearing Frame	STi 1013, All others - 1001				
236A	10	Cap Screw—Bearing Clamp Ring	2210				
239	1	Support, Casing	–	–	2201*	2201*	2201*
241	1	Frame Foot	1001				
248	1	Oil Thrower	2210				
250	1	Gland—Mechanical Seal	Material varies				
253B	1	Bearing Clamp Ring	2210				
319	1	Sight Glass	Glass/steel				
332A	1	Outboard Labyrinth Seal w/O-rings	Brass ASTM B505-96				
333A	1	Inboard Labyrinth Seal w/O-rings	Brass ASTM B505-96				
351	1	Casing Gasket	Aramid fiber w/EPDM				
353	4	Gland Stud	2228				
355	4	Gland Stud Nut	2228				
358	1	Plug—Casing Drain	2210		2229	2230	
358Y	1 ***	Plug, Impeller	2229			2230	
360C	1 ***	Gasket—Thrust End Cover	Buna				
360D	1	Gasket—Frame-to-Adapter	Buna				
360Q	1	Gasket—Gland-to-Stuffing Box Cover	Material varies				
361A	1	Retaining Ring	Steel				
370	****	Bolt—Adapter to Case	2210		2228		
370B	4	Bolt—Frame-to-Adapter	2210				
370C	**	Clamp Bolt —Bearing Housing	2210				
370D	**	Jack Bolt—Bearing Housing	2210				
370F	2	Bolt—Frame Foot to Frame	2210				
370H	2	Stud—Stuffing Box Cover-to-Adapter	2228				
370Y	2	Bolt—Cap Casing to Support	–	–	2210*		
371C	6 ***	Cap Screw-End Cover to Bearing Housing	2210				
382	1	Bearing Lockwasher	Steel				
383	1	Mechanical Seal	Material varies				
400	1	Coupling Key	2210				

Item	Quantity	Part name	Pump Material				
			All D.I.	D.I. With 316 SS impeller	All 316SS	All CD4MCu	All Alloy 20
408A	1	Plug—Oil Drane	2210				
408H	4	Plug—Oil Mist Connection	2210				
408J	1	Plug—Oiler	2210				
408L	1	Plug—Oil Cooler Inlet	2210				
408M	1	Plug—Oil Cooler Outlet	2210				
408N	1	Plug—Sight Glass	2210				
412A	1	O-Ring, Graphoil Impeller	–	–	*		
418	3	Jack Bolt—Adapter-to-Case	2228				
423	3	Jam Nut—Bearing Housing Jack Bolt	2210				
423B	2	Hex Nut—Stuffing Box Cover to Adapter	2228				
428	1	Gasket, Plug	Teflon				
437	1	Lockwasher, Casing to Support	–	–	2210*		
458Y	1 ***	Plug, Impeller	2229			2230	
469B	2	Dowel Pin—Frame-to-Adapter	Steel				
494	1	Tube Element, Finned Cooled	304SS / Copper				
496	1	O-Ring Bearing Housing	Buna N				
412A	1	O-Ring—Impeller	Viton				
497F	1	O-Ring—Outboard Labyrinth Rotor	Viton				
497G	1	O-Ring—Outboard Labyrinth Stator	Viton				
497H	1	O-Ring—Inboard Labyrinth Rotor	Viton				
497J	1	O-Ring—Inboard Laybrinth Stator	Viton				
497L	1	O-Ring Internal (inboard)	Viton				
497N	1	O-Ring Internal (outboard)	Viton				
503	1	Adapter Ring	1013				
529	1	Lockwasher—Frame Foot-to-Bearing Frame	Steel				
555	1	Tube, Finned Cooling Assembly	304AA / Copper				
555A	1	Tube, Ftg Male (Frame Cooling)	Brass				
555B	2	Connector, Thermocouple (Frame Cooling)	Brass				
555C	2	Elbow, Female (Frame Cooling)	Brass				
555D	1	Conn TC Sealed PWR	Cast iron				
761B	1	i-ALERT™ Condition Monitor	Stainless steel/epoxy				

Table 26: Construction material and quantity (continued)

Item	Quantity	Part name	Pump Material				
			All 317SS	All Monel	All Nickel	All Hastelloy C	All Hastelloy B
100	1	Casing	1209	1119	1601	1215	1217
101	1	Impeller	1209	1119	1601	1215	1217
105	1	Lantern Ring	Teflon				
106	1 set	Stuffing Box Packing	Non-asbestos braid				
107	1	Gland—Packed Box	1209	1119	1601	1215	1217
108	1	Frame Adapter	1013				
109C	1***	Outboard Bearing End Cover	1001				
112A	1	Outboard Bearing	Double row angular contact (duplex pair for LTi)				
113	2	Plug—Grease Relief	2210				
113B	1	Plug—Oil Fill	2210				
122	1	Shaft—Less Sleeve	2232	2150	2155	2248	2247
122	1	Shaft—With Sleeve	2229				
126	1	Shaft Sleeve	2232	2150	2155	2248	2247
134	1	Bearing Housing	1001				
136	1	Bearing Locknut	Steel				
168A	1	Radial Bearing	Single row ball				
184	1	Seal Chamber/Stuffing Box Cover	1209	1119	1601	1215	1217
193	2	Grease Fitting	Steel				

Item	Quantity	Part name	Pump Material				
			All 317SS	All Monel	All Nickel	All Hastelloy C	All Hastelloy B
228	1	Bearing Frame	STi-1013, All others - 1001				
236A	10	Cap Screw—Bearing Clamp Ring	2210				
239	1	Support, Casing	–	–	–	2201*	–
241	1	Frame Foot	1001				
248	1	Oil Thrower	2210				
250	1	Gland—Mechanical Seal	Material varies				
253B	1	Bearing Clamp Ring	2210				
319	1	Sight Glass	Glass/steel				
332A	1	Outboard Labyrinth Seal w/O-rings	Brass ASTM B505-96				
333A	1	Inboard Labyrinth Seal w/O-rings	Brass ASTM B505-96				
351	1	Casing Gasket	Aramid fiber w/EPDM				
353	4	Gland Stud	2232	2150	2155	2248	2247
355	4	Gland Stud Nut	2232	2150	2155	2248	2247
358	1	Plug—Casing Drain	2232	2150	2156	2248	2247
358Y	1 ***	Plug, Impeller	2232	2150	2156	2248	2156
360C	1 ***	Gasket—Thrust End Cover	Buna				
360D	1	Gasket—Frame-to-Adapter	Buna				
360Q	1	Gasket—Gland-to-Stuffing Box Cover	Material varies				
361A	1	Retaining Ring	Steel				
370	****	Bolt—Adapter to Case	2228				
370B	4	Bolt—Frame-to-Adapter	2210				
370C	**	Clamp Bolt —Bearing Housing	2210				
370D	**	Jack Bolt—Bearing Housing	2210				
370F	2	Bolt—Frame Foot to Frame	2210				
370H	2	Stud—Stuffing Box Cover-to-Adapter	2228				
370H	2	Bolt—Cap Casing to Support	–	–	–	2210*	–
371C	6 ***	Cap Screw-End Cover to Bearing Housing	2210				
382	1	Bearing Lockwasher	Steel				
383	1	Mechanical Seal	Material varies				
400	1	Coupling Key	2210				
408A	1	Plug—Oil Drane	2210				
408H	4	Plug—Oil Mist Connection	2210				
408J	1	Plug—Oiler	2210				
408L	1	Plug—Oil Cooler Inlet	2210				
408M	1	Plug—Oil Cooler Outlet	2210				
408N	1	Plug—Sight Glass	2210				
412A	1	O-Ring, Graphoil Impeller	–	–	–	*	–
418	3	Jack Bolt—Adapter-to-Case	2228				
423	3	Jam Nut—Bearing Housing Jack Bolt	2210				
423B	2	Hex Nut—Stuffing Box Cover to Adapter	2228				
428	1	Gasket, Plug	Teflon				
437	1	Lockwasher, Casing to Support	–	–	–	2210*	–
458Y	1***	Plug, Impeller	2232	2150	2155	2248	2247
469B	2	Dowel Pin—Frame-to-Adapter	Steel				
494	1	Tube Element, Finned Cooled	304SS / Copper				
496	1	O-Ring Bearing Housing	Buna N				
412A	1	O-Ring—Impeller	Viton				
497F	1	O-Ring—Outboard Labyrinth Rotor	Viton				
497G	1	O-Ring—Outboard Labyrinth Stator	Viton				
497H	1	O-Ring—Inboard Labyrinth Rotor	Viton				
497J	1	O-Ring—Inboard Laybrinth Stator	Viton				
497L	1	O-Ring Internal (inboard)	Viton				
497N	1	O-Ring Internal (outboard)	Viton				
503	1	Adapter Ring	1013				

Item	Quantity	Part name	Pump Material				
			All 317SS	All Monel	All Nickel	All Hastelloy C	All Hastelloy B
529	1	Lockwasher—Frame Foot-to-Bearing Frame	Steel				
555	1	Tube, Finned Cooling Assembly	304AA / Copper				
555A	1	Tube, Ftg Male (Frame Cooling)	Brass				
555B	2	Connector, Thermocouple (Frame Cooling)	Brass				
555C	2	Elbow, Female (Frame Cooling)	Brass				
555D	1	Conn TC Sealed PWR	Cast iron				
761B	1	i-ALERT™ Condition Monitor	Stainless steel/epoxy				

Table 27: Construction material and quantity (continued)

Item	Quantity	Part name	Pump Material (3196, HT 3196, CV 3196, 3796)	Pump Material (NM 3196)	Pump Material (3198)
			All Titanium	Vinylester	D.I./Teflon
100	1	Casing	1220	6929	9639
101	1	Impeller	1220	6929	6944
105	1	Lantern Ring	Teflon	–	–
106	1 set	Stuffing Box Packing	Non-asbestos braid	–	–
107	1	Gland—Packed Box	1220	–	–
108	1	Frame Adapter	1013		
109C	1***	Outboard Bearing End Cover	1001		
112A	1	Outboard Bearing	Double row angluar contact (duplex pair for LTi)		
113	2	Plug—Grease Relief	2210		
113B	1	Plug—Oil Fill	2210		
122	1	Shaft—Less Sleeve	2156	2229	–
122	1	Shaft—With Sleeve	2229		6947
126	1	Shaft Sleeve	2156	2229	–
134	1	Bearing Housing	1001		
136	1	Bearing Locknut	Steel		
168A	1	Radial Bearing	Single row ball		
184	1	Seal Chamber/Stuffing Box Cover	1220	6929	9639
193	2	Grease Fitting	Steel		
228	1	Bearing Frame	STi - 1013, All others - 1001		
236A	10	Cap Screw—Bearing Clamp Ring	2210		
239	1	Support, Casing	–	–	–
241	1	Frame Foot	1001		
248	1	Oil Thrower	2210		
250	1	Gland—Mechanical Seal	Material varies		
253B	1	Bearing Clamp Ring	2210		
319	1	Sight Glass	Glass/steel		
332A	1	Outboard Labyrinth Seal w/O-rings	Brass ASTM B505-96		
333A	1	Inboard Labyrinth Seal w/O-rings	Brass ASTM B505-96		
351	1	Casing Gasket	Aramid fiber w/EPDM		
353	4	Gland Stud	2156	2229	2229
355	4	Gland Stud Nut	2156	2229	2229
358	1	Plug—Casing Drain	2156	–	–
358Y	1 ***	Plug, Impeller	2156	–	–
360C	1 ***	Gasket—Thrust End Cover	Buna		
360D	1	Gasket—Frame-to-Adapter	Buna		
360Q	1	Gasket—Gland-to-Stuffing Box Cover	Material varies		
361A	1	Retaining Ring	Steel		
370	****	Bolt—Adapter to Case	2228		
370B	4	Bolt—Frame-to-Adapter	2210		
370C	**	Clamp Bolt —Bearing Housing	2210		
370D	**l	Jack Bolt—Bearing Housing	2210		
370F	2	Bolt—Frame Foot to Frame	2210		

Item	Quantity	Part name	Pump Material (3196, HT 3196, CV 3196, 3796)	Pump Material (NM 3196)	Pump Material (3198)
			All Titanium	Vinylester	D.I./Teflon
370H	2	Stud—Stuffing Box Cover-to-Adapter	2228		
370Y	2	Bolt—Cap Casing to Support	–	–	–
371C	6 ***	Cap Screw-End Cover to Bearing Housing	2210		
382	1	Bearing Lockwasher	Steel		
383	1	Mechanical Seal	Material varies		
400	1	Coupling Key	2210		
408A	1	Plug—Oil Drane	2210		
408H	4	Plug—Oil Mist Connection	2210		
408J	1	Plug—Oiler	2210		
408L	1	Plug—Oil Cooler Inlet	2210		
408M	1	Plug—Oil Cooler Outlet	2210		
408N	1	Plug—Sight Glass	2210		
412A	1	O-Ring, Graphoil Impeller	–	–	–
418	3	Jack Bolt—Adapter-to-Case	2228		
423	3	Jam Nut—Bearing Housing Jack Bolt	2210		
423B	2	Hex Nut—Stuffing Box Cover to Adapter	2228		
428	1	Gasket, Plug	Teflon		
437	1	Lockwasher, Casing to Support	–	–	–
458Y	1 ***	Plug, Impeller	2156	–	–
469B	2	Dowel Pin—Frame-to-Adapter	Steel		
494	1	Tube Element, Finned Cooled	304SS / Copper		
496	1	O-Ring Bearing Housing	Buna N		
412A	1	O-Ring—Impeller	Viton		
497F	1	O-Ring—Outboard Labyrinth Rotor	Viton		
497G	1	O-Ring—Outboard Labyrinth Stator	Viton		
497H	1	O-Ring—Inboard Labyrinth Rotor	Viton		
497J	1	O-Ring—Inboard Laybrinth Stator	Viton		
497L	1	O-Ring Internal (inboard)	Viton		
497N	1	O-Ring Internal (outboard)	Viton		
503	1	Adapter Ring	1013		
529	1	Lockwasher—Frame Foot-to-Bearing Frame	Steel		
555	1	Tube, Finned Cooling Assembly	304AA / Copper		
555A	1	Tube, Ftg Male (Frame Cooling)	Brass		
555B	2	Connector, Thermocouple (Frame Cooling)	Brass		
555C	2	Elbow, Female (Frame Cooling)	Brass		
555D	1	Conn TC Sealed PWR	Cast iron		
761B	1	i-ALERT™ Condition Monitor	Stainless steel/epoxy		

Table 28: Key to table symbols

–	Not applicable
*	Only applicable for HT 3196
**	3 for STi, MTi, LTi 4 for XLT-i, i17
***	XLT-I and i17 only
****	4 for 6 in. STi 8 for 8 in. STi and MTi 16 for 13 in. MTi, LTi , XLT-I 24 for 15 in. XLT-I 12 for 10 in. MTi, LTi , i17

Table 29: Material-code reference

Material	Goulds material code	ASTM	Din	ISO	JIS
Cast Iron	1001	A48 CLASS 20			
Ductile Iron	1012	A395 Gr60-40-18			
Ductile Iron	1013	A536 Gr60-42-10			
CD4MCu	1041	A744 CD4MCU			
Monel	1119	A494 GrM-35-1			
316SS	1203	A744 CF-8M	1.4408		G5121 (SC514)
Alloy 20	1204	A744CN-7M	1.4500		
317SS	1209	A744CG-8M	1.4448		
Hastelloy C	1215	A494 CW-6M			
CD4MCu	1216	A744CD4MCU	9.4460		
Hastelloy B	1217	A494 N-7M			
Titanium	1220	B367 GrC-3			
Nickel	1601	A494 GrCZ100			
Monel	2150	B164 UNS N04400			
Nickel	2155	B160 UNS N02200			
Titanium	2156	B348 Gr2			
Carbon Steel	2201	A576 Gr. 1018 and 1020			
Carbon Steel	2210	A108Gr1211			
304SS	2228	A276 Type 304			
316SS	2229	A276 Type 316			
Alloy 20	2230	B473 (N08020)			
317SS	2232	A276			
4150 Steel	2237	A322Gr4150			
4140 Steel	2238	A434Gr4140			
4140 Steel	2239	A193 Gr. B7			
Alloy B-2	2247	B335 (N10665)			
Alloy C-276	2248	B574 (N10276)			
GMP-2000	6929	N/A			
PFA Lined Steel	6944	N/A			
PFA Lined 316SS	6947	N/A			
PFA Lined Ductile Iron	9639	N/A			

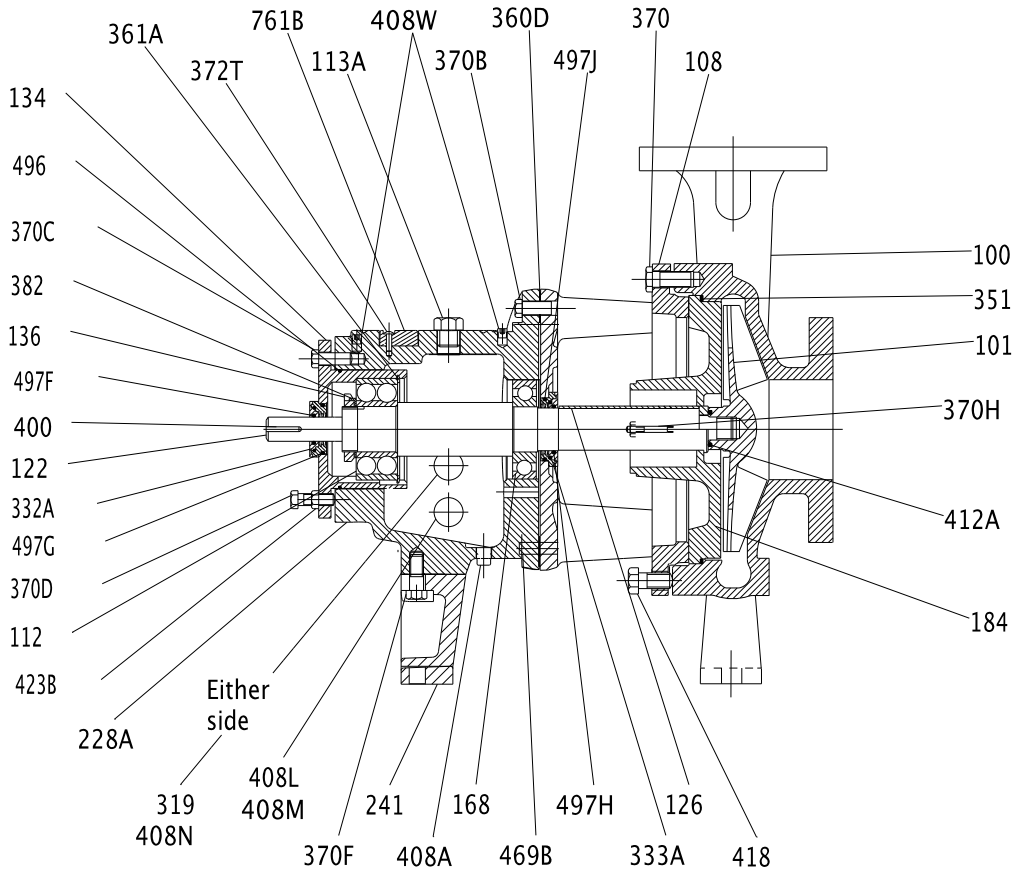

Figure 33: 3196 cross-sectional drawing

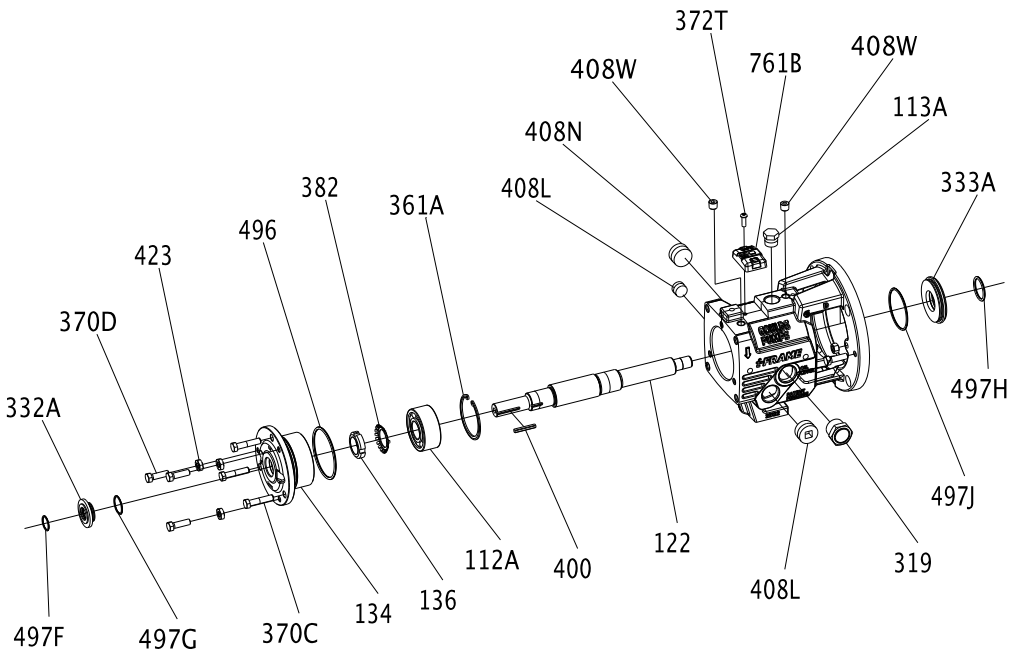

Figure 34: STi bearing-frame exploded view

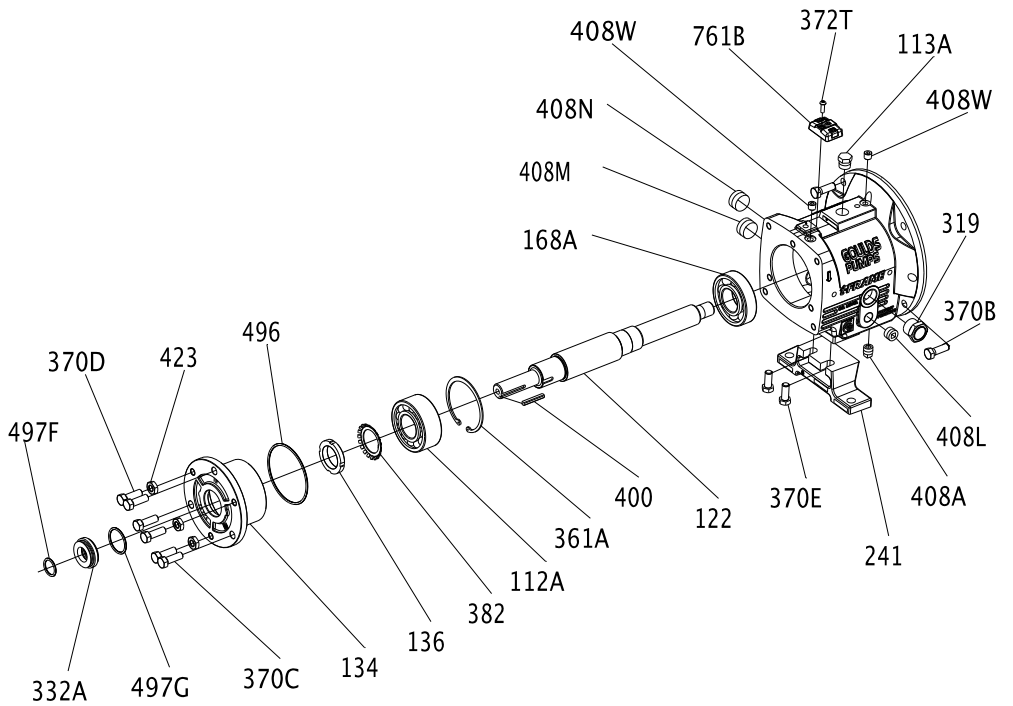

Figure 35: MTi bearing-frame exploded view

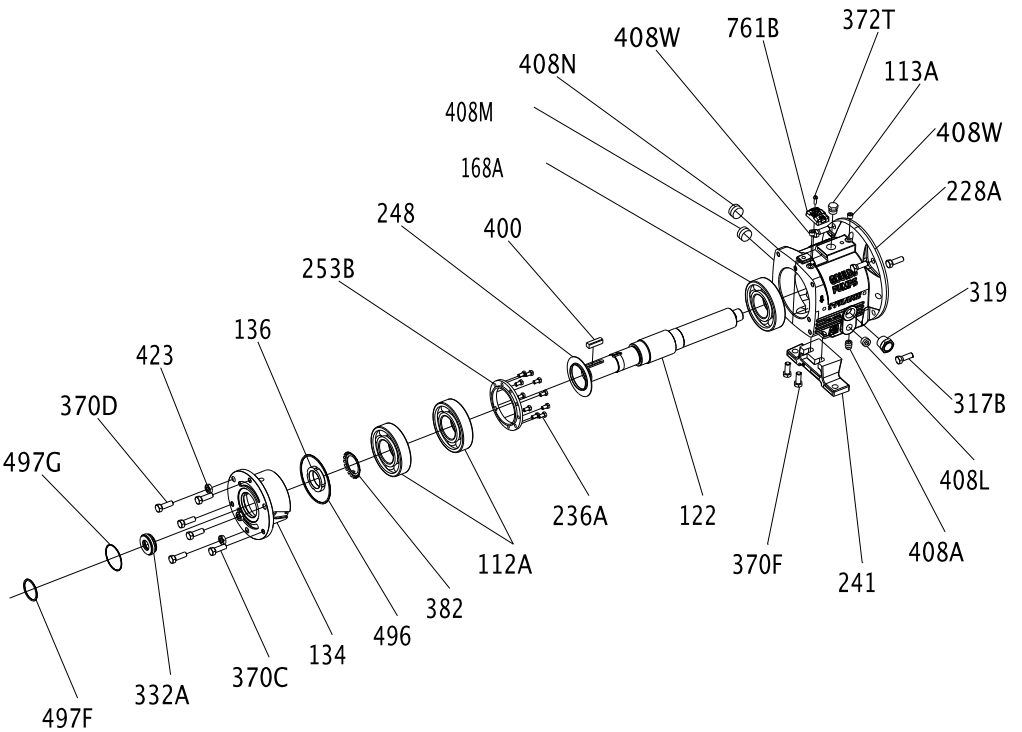

Figure 36: LTi bearing-frame exploded view

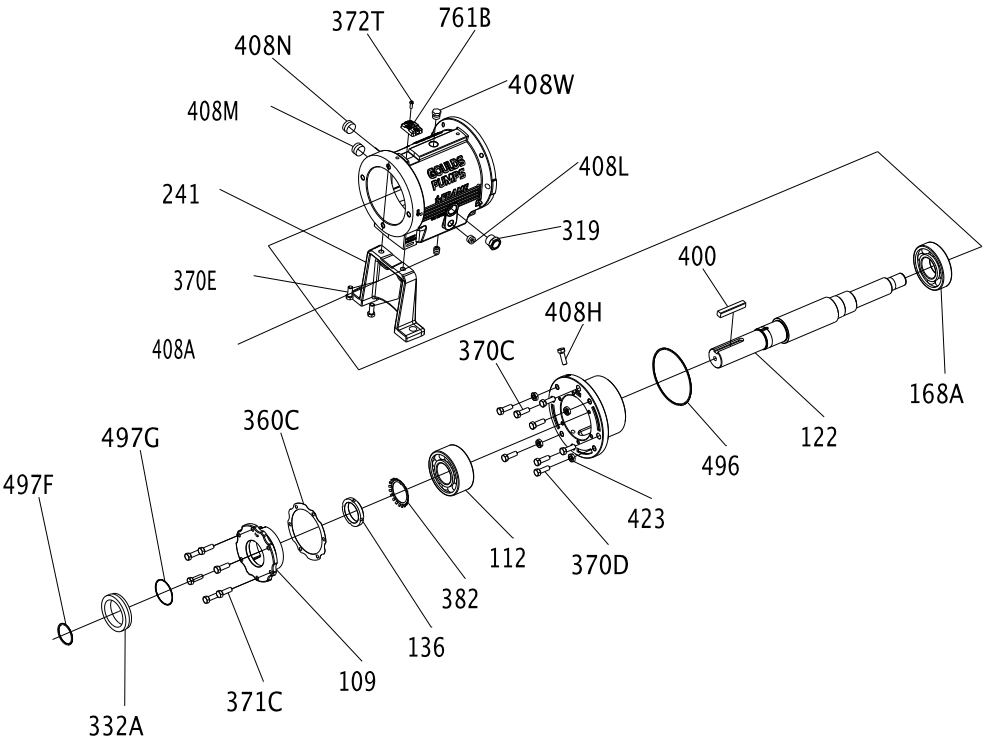

Figure 37: XLT-i bearing-frame exploded view

The finned-tube oil cooler is standard on HT 3196 and optional on all other models.

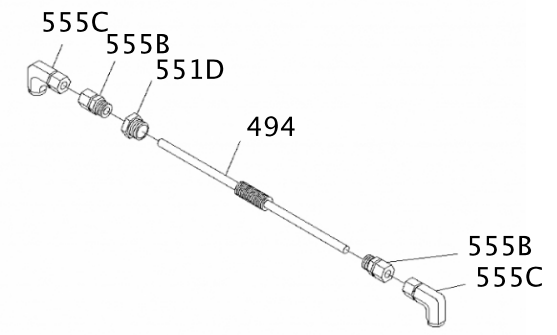

Figure 38: Finned-tube oil cooler exploded view

Certification: CE or CE ATEX

Certificates of conformance

CSA Certificate

CSA INTERNATIONAL

Certificate of Compliance

Certificate: 1992883 **Master Contract:** 236924

Project: 2254252 **Date Issued:** 2009/12/16

Issued to: **ITT Corporation**

240 Fall St
Seneca Falls, NY 13148
USA
Attention: Anthony Stavale

The products listed below are eligible to bear the CSA Mark shown with adjacent indicators 'C' and 'US' for Canada and US or with adjacent indicator 'US' for US only or without either indicator for Canada only.

C US

D. Simpson, Certifier

Issued by: D. Simpson, Certifier

PRODUCTS

CLASS 2258 03 - PROCESS CONTROL EQUIPMENT - Intrinsically Safe and Non - Incendive Systems - For Hazardous Locations

CLASS 2258 83 - PROCESS CONTROL EQUIPMENT-Intrinsically Safe and Non-Incendive - Systems-For Hazardous Locations-Certified to U.S. Standards

Class I, Division 1, Group A, B, C and D; Class II, Group E, F and G; Class III:

- Condition Monitor, Model LCCM, p/n C07667A, battery operated (non-replaceable, non-rechargeable), intrinsically safe, temperature code T4 (at max ambient of 100C).

APPLICABLE REQUIREMENTS

CAN/CSA-C22.2 No. 0-M91 - General Requirements – Canadian Electrical Code, Part II

CAN/CSA-C22.2 No.157-92 - Intrinsically Safe and Non-Incendive Equipment for Use in Hazardous Locations

UL Std No.913, Ed. 7 - Intrinsically Safe Apparatus and Associated Apparatus for Use in Class I, II and III, Division 1, Hazardous Locations

DQD 507 Rev. 2009-09-01

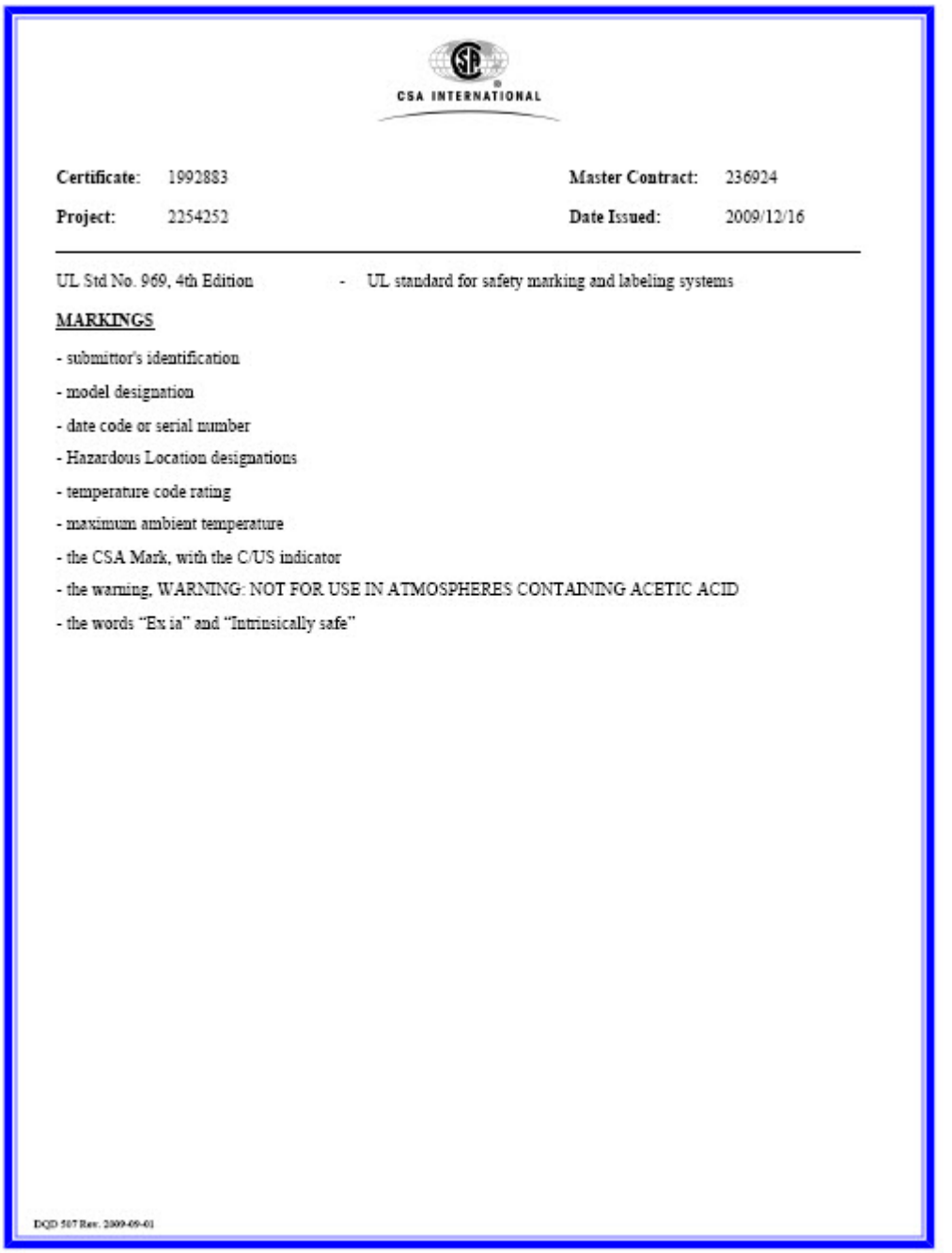

CSA INTERNATIONAL

Certificate: 1992883 **Master Contract:** 236924

Project: 2254252 **Date Issued:** 2009/12/16

UL Std No. 969, 4th Edition - UL standard for safety marking and labeling systems

MARKINGS

- submittor's identification
- model designation
- date code or serial number
- Hazardous Location designations
- temperature code rating
- maximum ambient temperature
- the CSA Mark, with the C/US indicator
- the warning, WARNING: NOT FOR USE IN ATMOSPHERES CONTAINING ACETIC ACID
- the words "Ex ia" and "Intrinsically safe"

DQD 507 Rev. 2009-09-01

ATEX notification

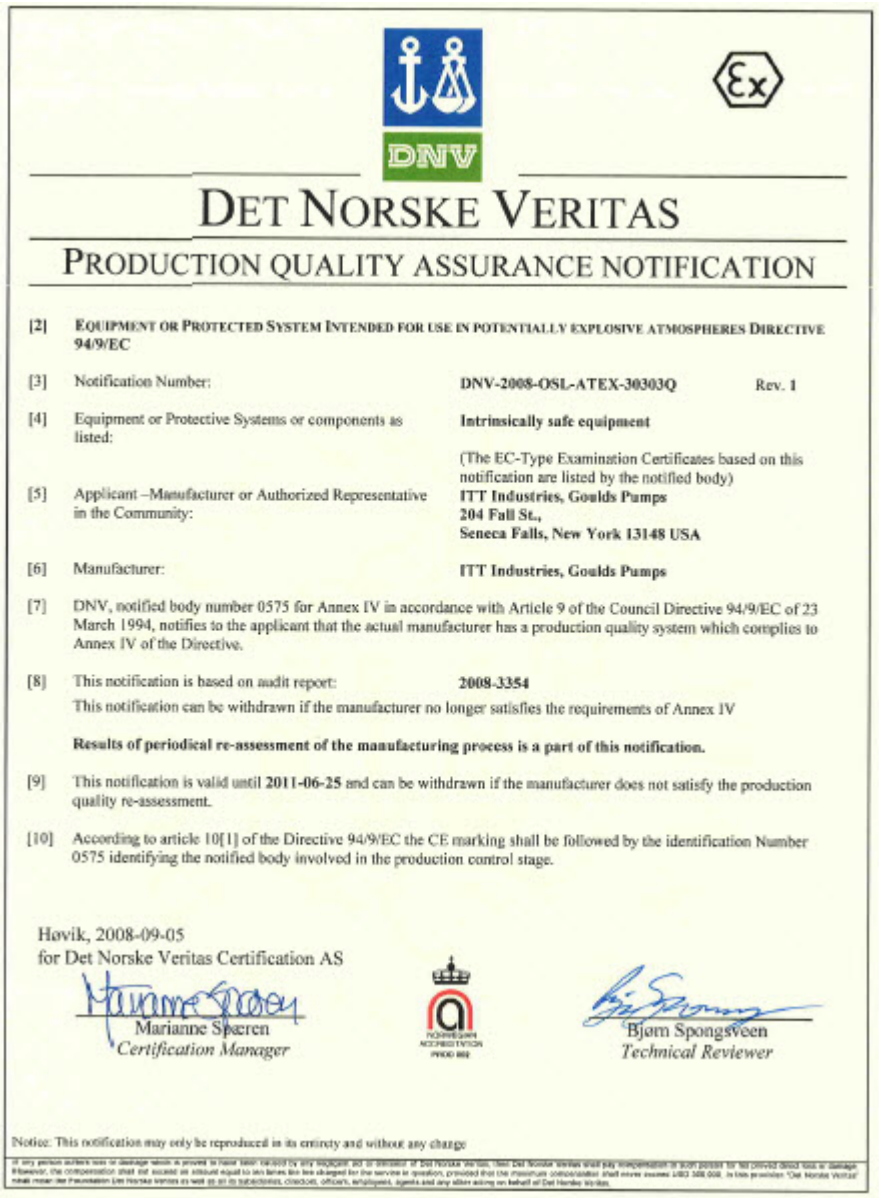

DET NORSKE VERITAS

PRODUCTION QUALITY ASSURANCE NOTIFICATION

[2] EQUIPMENT OR PROTECTED SYSTEM INTENDED FOR USE IN POTENTIALLY EXPLOSIVE ATMOSPHERES DIRECTIVE 94/9/EC

[3] Notification Number: **DNV-2008-OSL-ATEX-30303Q** Rev. 1

[4] Equipment or Protective Systems or components as listed: **Intrinsically safe equipment**

(The EC-Type Examination Certificates based on this notification are listed by the notified body)

[5] Applicant –Manufacturer or Authorized Representative in the Community: **ITT Industries, Goulds Pumps**
204 Fall St.,
Seneca Falls, New York 13148 USA

[6] Manufacturer: **ITT Industries, Goulds Pumps**

[7] DNV, notified body number 0575 for Annex IV in accordance with Article 9 of the Council Directive 94/9/EC of 23 March 1994, notifies to the applicant that the actual manufacturer has a production quality system which complies to Annex IV of the Directive.

[8] This notification is based on audit report: **2008-3354**
This notification can be withdrawn if the manufacturer no longer satisfies the requirements of Annex IV

Results of periodical re-assessment of the manufacturing process is a part of this notification.

[9] This notification is valid until **2011-06-25** and can be withdrawn if the manufacturer does not satisfy the production quality re-assessment.

[10] According to article 10[1] of the Directive 94/9/EC the CE marking shall be followed by the identification Number 0575 identifying the notified body involved in the production control stage.

Høvik, 2008-09-05
for Det Norske Veritas Certification AS

Marianne Sperren
Certification Manager

Bjørn Spongsveen
Technical Reviewer

Notice: This notification may only be reproduced in its entirety and without any change

IECEx Certificate of Conformity

IECEx Certificate of Conformity

INTERNATIONAL ELECTROTECHNICAL COMMISSION
IEC Certification Scheme for Explosive Atmospheres
for rules and details of the IECEx Scheme visit www.iecex.com

Certificate No.: IECEx LCI 08.0038 Issue No.:0 Certificate history:

Status: Current

Date of Issue: 2008-09-16 Page 1 of 3

Applicant:
ITT Corp.
Goulds pumps
240 Fall Street
Seneca Falls, NY 13148
United States of America

Electrical Apparatus: **Condition Monitor**
Optional accessory:

Type of Protection: **ia**

Marking:
ITT Corp.
Goulds pumps
240 Fall Street
Seneca Falls, NY 13148
U.S.A.
Condition Monitor
Type : LCCM, p/n C07667A
Ex ia IIC T4
Tamb : -40°C à 100°C

Approved for issue on behalf of the IECEx Certification Body: Marc Gillaux

Position: Ex Certification Manager

Signature: (for printed version)

Date: le 16 Septembre 2008

1. This certificate and schedule may only be reproduced in full.
2. This certificate is not transferable and remains the property of the issuing body.
3. The Status and authenticity of this certificate may be verified by visiting the Official IECEx Website.

Certificate issued by:

Laboratoire Central des Industries Electriques (LCIE)
33 Avenue du General Leclerc
FR-92260 Fontenay-aux-Roses
France

IECEx Certificate of Conformity

Certificate No.: IECEx LCI 08.0038

Date of Issue: 2008-09-16 Issue No.: 0

Page 2 of 3

Manufacturer: ITT Corp.
Goulds pumps
240 Fall Street
Seneca Falls, NY 13148
United States of America

Manufacturing location(s):

This certificate is issued as verification that a sample(s), representative of production, was assessed and tested and found to comply with the IEC Standard list below and that the manufacturer's quality system, relating to the Ex products covered by this certificate, was assessed and found to comply with the IECEx Quality system requirements. This certificate is granted subject to the conditions as set out in IECEx Scheme Rules, IECEx 02 and Operational Documents as amended.

STANDARDS:
The electrical apparatus and any acceptable variations to it specified in the schedule of this certificate and the identified documents, was found to comply with the following standards:

IEC 60079-0 : 2004 Edition: 4.0	Electrical apparatus for explosive gas atmospheres - Part 0: General requirements
IEC 60079-11 : 2006 Edition: 5	Explosive atmospheres - Part 11: Equipment protection by intrinsic safety "i"

*This Certificate **does not** indicate compliance with electrical safety and performance requirements other than those expressly included in the Standards listed above.*

TEST & ASSESSMENT REPORTS:
A sample(s) of the equipment listed has successfully met the examination and test requirements as recorded in

Test Report:

FR/LCI/ExTR08.0043/00

Quality Assessment Report:
NO/DNV/QAR08.0006/00

Chinese Certificate of Conformity

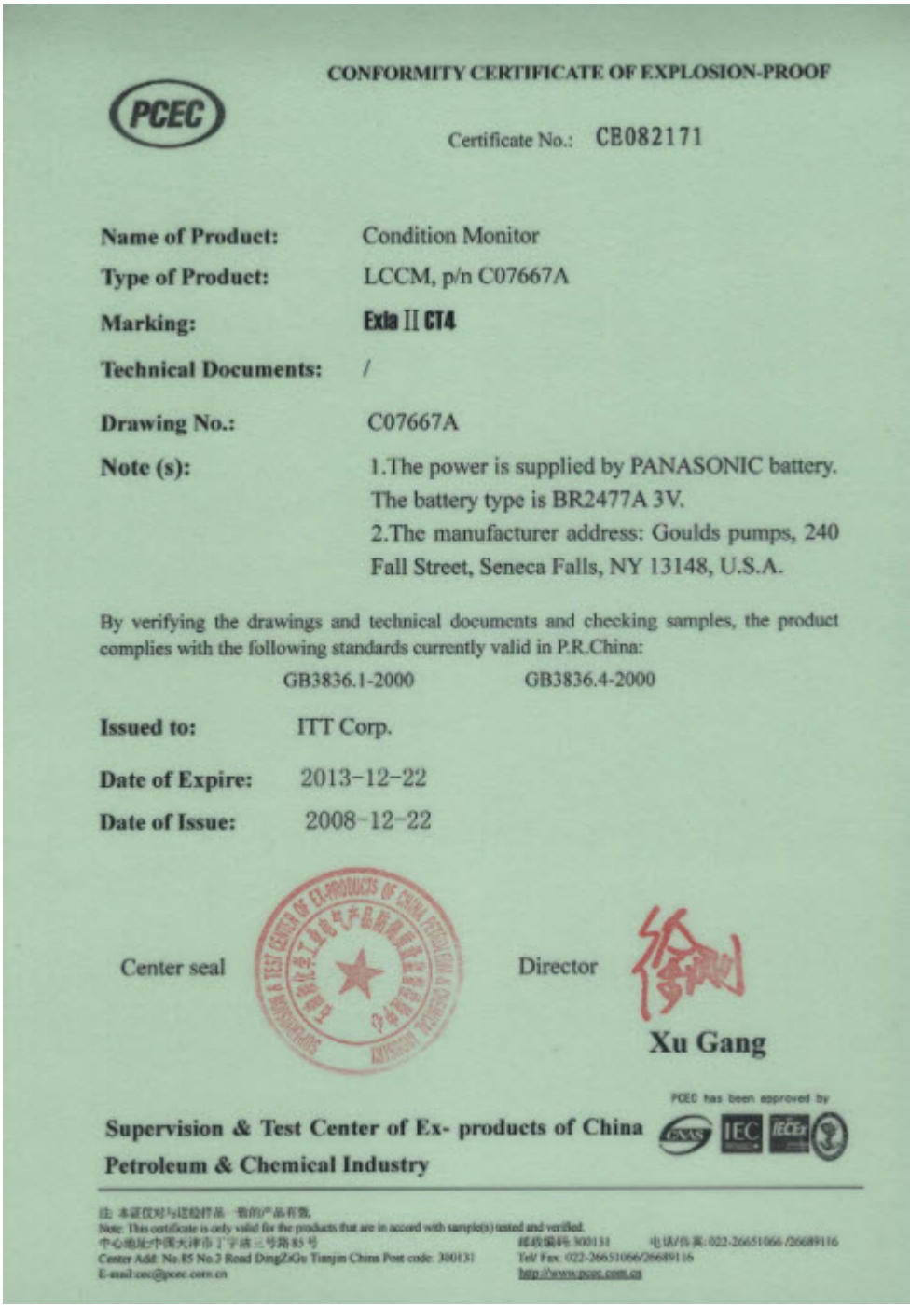

CONFORMITY CERTIFICATE OF EXPLOSION-PROOF

PCEC

Certificate No.: CB082171

Name of Product: Condition Monitor

Type of Product: LCCM, p/n C07667A

Marking: Exia II CT4

Technical Documents: /

Drawing No.: C07667A

Note (s): 1.The power is supplied by PANASONIC battery. The battery type is BR2477A 3V.
2.The manufacturer address: Goulds pumps, 240 Fall Street, Seneca Falls, NY 13148, U.S.A.

By verifying the drawings and technical documents and checking samples, the product complies with the following standards currently valid in P.R.China:

GB3836.1-2000 GB3836.4-2000

Issued to: ITT Corp.

Date of Expire: 2013-12-22

Date of Issue: 2008-12-22

Center seal

Director

Xu Gang

PCEC has been approved by

Supervision & Test Center of Ex- products of China Petroleum & Chemical Industry

Note: This certificate is only valid for the products that are in accord with sample(s) tested and verified.
Center Add: No.85 No.3 Road DingZiGu Tianjin China Post code: 300131
Tel/ Fax: 022-26651066/26689116
E-mail:cec@pcec.com.cn
http://www.pcec.com.cn

Other Relevant Documentation or Manuals

For additional documentation

For any other relevant documentation or manuals, contact your ITT representative.

Local ITT Contacts

Regional offices

Region	Address	Telephone	Fax
North America (Headquarters)	ITT - Goulds Pumps 240 Fall Street Seneca Falls, NY 13148 USA	+1 315-568-2811	+1 315-568-2418
Asia Pacific	ITT Industrial Process 10 Jalan Kilang #06-01 Singapore 159410	+65 627-63693	+65 627-63685
Europe	ITT - Goulds Pumps Millwey Rise Industrial Estate Axminster, Devon, England EX13 5HU	+44 1297-630250	+44 1297-630256
Latin America	ITT - Goulds Pumps Camino La Colina # 1448 Condominio Industrial El Rosal Huechuraba Santiago 8580000 Chile	+562 544-7000	+562 544-7001
Middle East and Africa	ITT - Goulds Pumps Achileos Kyrou 4 Neo Psychiko 115 25 Athens Greece	+30 210-677-0770	+30 210-677-5642

Visit our website for the latest version of this document and more information:
http://www.gouldspumps.com

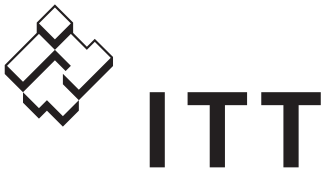

ENGINEERED FOR LIFE

240 Fall Street
Seneca Falls, NY 13148
USA
Tel. 1-800-446-8537
Fax (315) 568-2418

© 2014 ITT Corporation
The original instruction is in English. All non-English instructions are translations of the original instruction.

Form en-US.2014-07.IOM.3196.i-FRAME

ASHCROFT®
Trust the shield.™

Type 1259 Process Pressure Gauge

- *Solid front safety case*
- *Accuracy complies with ASME B40.1 Grade 2A (±0.5% of span)*
- *As-welded Bourdon tube for safety and longer life*
- *Micrometer adjustable pointer.*
- *Adjustable movement*
- *Ranges: vac to 20,000 psi*
- *Date coded socket to ensure pedigree*
- *Wetted part material printed on dial*
- *Liquid filled case option (Code L)*

The Type 1259 process gauge is offered with an as-welded Bourdon tube to ensure safety and a long life. Meeting ASME B40.1, the Type 1259 process gauge has been engineered to meet marketplace requirements.

TEMPERATURE LIMITS

	Ambient	Process	Storage
Dry	–20/200°F (–29/93°C)	–20/250°F (–29/121°C)	–40/250°F (–40/121°C)
LF (glycerin)	20/150°F (7/66°C)	20/200°F (7/93°C)	0/150°F (–18/66°C)

Note: Other than discoloration of the dial and hardening of the gasketing that may occur as ambient or process temperatures exceeds 150°F, non-liquid-filled gauges with standard glass windows, can withstand continuous operating temperatures up to 250°F (121°C). Liquid-filled gauges can withstand 200°F (93°C) but glycerin fill and acrylic window will tend to yellow. Accuracy at temperatures above or below the reference ambient temperature of 68°F (20°C) will be affected by approximately .4% per 25°F. Gauges with welded joints will withstand 750°F (450°F (232°C) with silver brazed joints) for short times without rupture, although other parts of the gauge will be destroyed and calibration will be lost. For continuous use and for process or ambient temperatures above 250°F (121°C), a diaphragm seal or capillary or siphon is recommended.

PRODUCT SPECIFICATIONS

Model Number:	1259
Accuracy:	½% full scale (Grade 2A, ASME B40.100)
Ranges:	Vacuum – 20,000 psi
Ring Type:	Cam lock, fiberglass reinforced thermoplastic
Dial Size:	4½" diameter
Case:	Solid front safety
Case Material:	Fiberglass reinforced thermoplastic
Weather Protection:	Dry Case: IP54 Liquid filled or hermetically sealed case: IP 65
Window:	Glass
Dial:	Aluminum, white background, black pressure scale.
Pointer:	Micrometer adjustable
Movement:	Adjustable 300 series ss
Bourdon Tube & Socket:	316L SS/316L SS (S)[1] K Monel/Monel (P)[1]
Conn. Size:	¼, ½ NPT
Conn. Location:	Lower
Weight (Lbs.)	2.5 (Dry) 3.5 (Liquid Filled)

PRODUCT OPTIONS

Fill:	Glycerin
Hermetic Seal:	XLJ
Flush Mounting Ring:	X56, X57
Shatter Proof Glass Window:	XSG
Window Acrylic:	XPD

[1] Joints welded

Dimensions

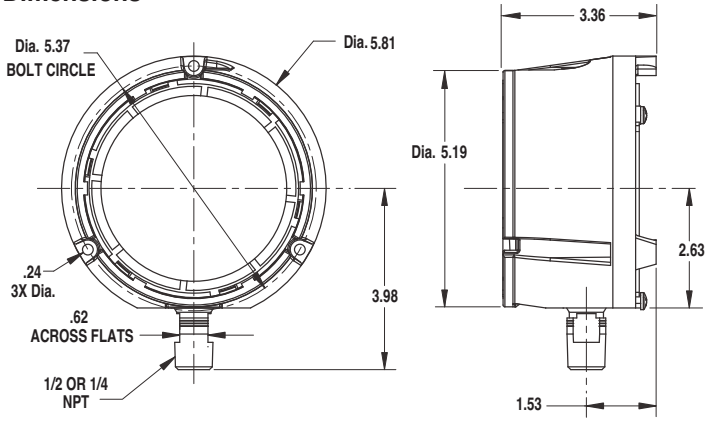

ISO 9001
REGISTERED FIRM

BULLETIN PR-1259

All specifications are subject to change without notice.
All sales subject to standard terms and conditions.
© 2014 Ashcroft Inc. 11/14

Ashcroft Inc., 250 East Main Street, Stratford, CT 06614 USA
Tel: 203-378-8281 • Fax: 203-385-0408
email: info@ashcroft.com • www.ashcroft.com

ASHCROFT®
Trust the shield.™

Type 1259 Process Pressure Gauge

PSI RANGES
Pressure – psi
Range
0/15
0/30
0/60
0/100
0/160
0/200
0/300
0/400
0/600
0/800
0/1000
0/1500
0/2000
0/3000
0/4000
0/6000
0/10,000
0/20,000
Vacuum
30/0 in.Hg
34/0 ftH_20
Compound
30˝Hg/15 psi
30˝Hg/30 psi
30˝Hg/60 psi
30˝Hg/100 psi
30˝Hg/150 psi
30˝Hg/300 psi

METRIC RANGES	
Pressure – kg/cm² and bar	
Range	**(Outer Scale) psi**
0/1	0/14
0/1.6	0/22
0/2.5	0/35
0/4	0/55
0/6	0/85
0/10	0/140
0/16	0/220
0/25	0/350
0/40	0/550
0/60	0/850
0/100	1400
0/160	2200
0/250	3500
0/400	5500
0/600	8500
0/1000	14,000
0/1600	22,000
Vacuum	**Outer Scale**
–1/0	30˝Hg
Compound	
–1/0/1.5	30˝Hg/20
–1/0/3	30˝Hg/40
–1/0/5	30˝Hg/70
–1/0/9	30˝Hg/125
–1/0/15	30˝Hg/215
–1/0/24	30˝Hg/340

METRIC RANGES	
Pressure – kPa	
Range	**(Outer Scale) psi**
0/100	0/14
0/160	0/22
0/250	0/35
0/400	0/55
0/600	0/85
0/1000	0/140
0/1600	0/220
0/2500	0/350
0/4000	0/550
0/6000	0/850
0/10,000	1400
0/16,000	2200
0/25,000	3500
0/40,000	5500
0/60,000	8500
0/100,000	14,000
0/160,00	22,000
Vacuum	**Outer Scale**
–100/0	30˝Hg
Compound	
–100/0/150	30˝Hg/20
–100/0/300	30˝Hg/40
–100/0/500	30˝Hg/70
–100/0/900	30˝Hg/125
–100/0/1500	30˝Hg/215
–100/0/2400	30˝Hg/340

Pressure – mPa	
Range	**(Outer Scale) psi**
0/0.1	0/14
0/0.16	0/22
0/0.25	0/35
0/0.4	0/55
0/0.6	0/85
0/1	0/140
0/1.6	0/220
0/2.5	0/350
0/4	0/550
0/6	0/850
Vacuum	**Outer Scale**
–0.1/0	30˝Hg
Compound	
–0.1/0/0.15	30˝Hg/20
–0.1/0/0.3	30˝Hg/40
–0.1/0/0.5	30˝Hg/70
–0.1/0/0.9	30˝Hg/125
–0.1/0/1.5	30˝Hg/215
–0.1/0/2.4	30˝Hg/340

Order Coding Example

45	1259	S	S	04	L	OPTIONAL X VARIATIONS	100	#

SIZE	TYPE	SYSTEM (TUBE & SOCKET)	CASE DESIGN SOLID FRONT	PROCESS CONNECTION SIZE	CONNECTION LOCATION	OPTIONS (X VARIATIONS)[1]	RANGE	ENGINEERING UNITS
(45) 4½	**1259**	**(S)** 316L[2] **(P)** K-Monel 500 tube, Monel 400 socket[2] [2] Max pressure 30,000psi	**(S)** Dry (IP54) **(SL)** Liquid filled (glycerin standard) (IP65)	**(02)** 1/4 NPT male **(04)** 1/2 NPT male	**(L)** Lower	**(LJ)** Hermetically Sealed, IP65 **(NH)** St. St. Wired Tag **(PD)** Acrylic window **(SG)** Safety glass **(56)** Flush mounting ring [1] Others on request	See above	**(#)** PSI **(BR)**) Bar **(KG)** Kilograms/CM2 **(KP)** Kilopascal **(IMV)** Inches of Mercury Vacuum

ISO 9001
REGISTERED FIRM

BULLETIN PR-1259

All specifications are subject to change without notice.
All sales subject to standard terms and conditions.
© 2014 Ashcroft Inc. 11/14

Ashcroft Inc., 250 East Main Street, Stratford, CT 06614 USA
Tel: 203-378-8281 • Fax: 203-385-0408
email: info@ashcroft.com • www.ashcroft.com

REVISIONS					
REV	DESCRIPTION	ECN	DATE	BY	APPROVED
F	Updated Top plate closure, pre cuts	-	6/25/13	S	-
-	-	-	-	-	-

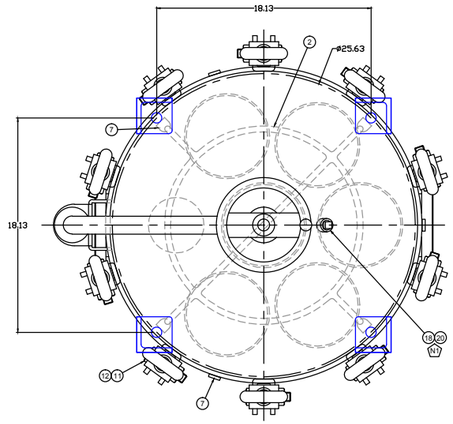

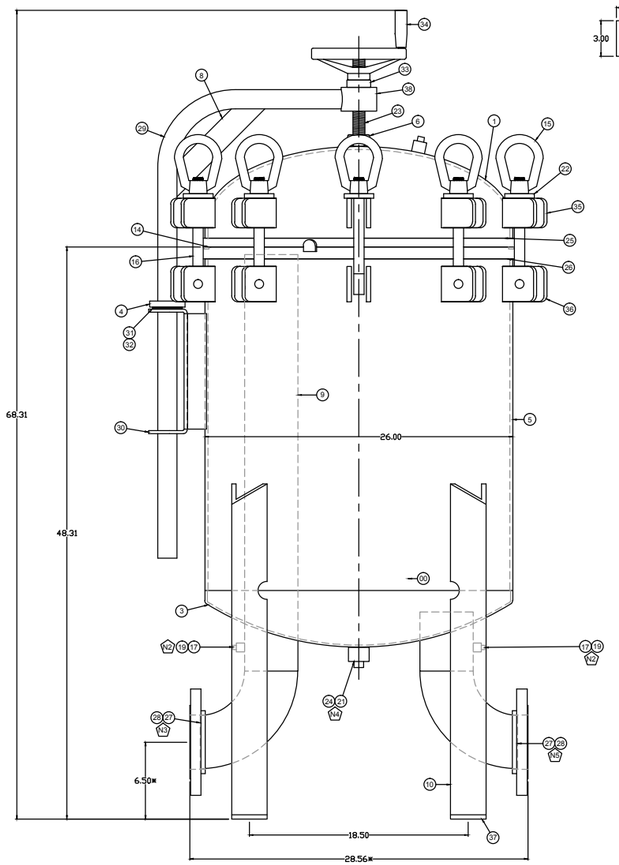

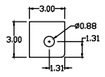

Balloon	Part #	Description	Quantity
38	3RDC	3" ROUND ROD CARBON A36 20FT	2
37	PL-C-144	Plate,Feet,3x3x.375,SA-36	4
36	PL-C-134-NC	Ear,Shell,MR,C/S,SA-36	10
35	PL-C-135-NC	Ear,LID,MR,C/S,SA-36	10
34	KW-30748	Handle Wheel,Aluminum,8"OD,	1
33	1"TB-HD	1" THRUST BEARING, HEAVY DUT	1
32	DTBR	WASHER THRUST TRD 2840	2
31	DTB	DAVIT THRUST BEARINGS TORRIN	1
30	DLBRC	BRACKET DAVIT LIFT 1/4" HR	1
29	DLAC	DAVIT LIFT ARM CARBON	1
28	4FC	4" RFSO FLANGE CARBON 150#	2
27	4-90-C	4" 90 DEGREE CARBON ELBOW LR	2
26	26TPC6D4	TOP PLATE.26.75"OD,1"T,6 Bag	1
25	HR-26.75-C-PART	Head Ring,26.75"OD,SA-36	1
24	1PPC	1" PIPE PLUG CARBON	1
23	FTS-1X8-C-ZP	Full Thread Stud,1"-8x8"L	1
22	.375SQW	.375" X 2" X 2.5" SQUARE WAS	10
21	1HCC	1" HALF COUPLING CARBON 3000	1
20	.50HCC	Coupler,Half,.50",3000 class	1
19	.25HCC	Coupler,Half,.25",3000 class	2
18	.50PPC	1/2 PIPE PLUG CARBON	1
17	.25PPC	1/4 PIPE PLUG CARBON STEEL	2
16	REM	ROD END 7/8"-9 X 9",4140 All	10
15	ENM	EYE NUT 7/8-9,C1045	10
14	CB26LB	O Ring,Buna,LR6/C26	1
13	BT-LR-2-SR-S	Basket,LR Style,#2,9/64"Perf	6 Not Shown
12	.75NLN	.75-10 NYLON LOCK NUT ZINC P	10
11	.75HB	.75-10 X 3.5" GR5 HEX HEAD S	10
10	3ANG.375C	3"X3" ANGLE 3/8" A36 CARBN 2	111.75
9	4P-SCH40-C	Pipe,4",Sch.40,SA53-B,Type E	40.19
8	.375X2HRC	3/8" X 2" SA36 HR CARBON 20'	10.5
7	PL-C-142	Plate Tab,.25" x 1",SA-36	7
6	HN-1-2H-PF	Hex Nut,1"-8,2H,Plain Finish	1
5	2628RTC.1875	Plate Roll & Tack,SA-36	1
4	PL-C-116	Plate,Donut,3"OD,1.75"ID	1
3	26H1F5-.1875	Head,F&D,26"OD,.1875"t	1
2	HD-26-C-102	Hold Down,MR,SA-36 or Equiv.	1
1	26HFC-.25-NB	HEAD,2:1 Elip,26"OD,.25"WT	1

MARK	QTY	SERVICE	SIZE	TYPE	WALL THICKNESS	WELD DETAIL	NUMBER	PURPOSE
N5	1	Outlet	4"	RFSO	150□	H, U		
N4	1	Drain	1"	NPT	3000□	B		
N3	1	Inlet	4"	RFSO	150□	H, U		
N2	2	Gauge	.25"	NPT	3000□	B		
N1	1	Vent	.5"	NPT	3000□	B	-	-
NOZZLE SCHEDULE							□IGS USED	

APPROVALS		DATE
Approved By	-	-
Checked By	-	-
Drawn By	□S	6/21/13

FINISH INFO	
Prep Sandblast Interior□	SP 7 (Closure)
Prep Sandblast Exterior□	SP 7 (Closure)
Finish Sandblast Interior□	SP 7 (Rough)
Finish Sandblast Exterior□	SP 7 (Rough)
Paint Interior□	Black Epoxy
Paint Exterior□	Black Epoxy

DESIGN INFO	
M.A.W.P.□	150 psig @ 300° F
M.A.E.P.□	0
M.D.M.T.□	-20° F @ 150 psig
Hydro Test Pressure□	195 psig
Radiography□	None
Corrosion Allowance□	None
Weight□	-
Element□	(6) □2 Filter Bag

GENERAL TOLERANCES (unless otherwise noted)	
*	□/- .125" (Critical)
XX.XXXX	□/- .0625"
XX.XXX	□/- .125"
XX.XX	□/- .25"
XX.X	□/- .5"
ANGULAR TOLERANCE : 3°	
GENERAL NOTES	
1) All dimensions are in inches unless otherwise noted 2) No heat treatment or impact testing.	

PENTAIR
9449 South 550 West
Winamac, IN. 46996
Phone□574-278-7161 / Fax□574-278-7131

Part Number□ LR6304FAC15

Dwg No.	Revision
2273	F

THIS DOCUMENT IS SOLELY THE PROPERTY OF PENTAIR. REPRODUCTION, USE DISCLOSURE, OR TRANSMISSION OF THIS DOCUMENT OR DETAILS CONTAINED HEREIN, IN PART OR IN WHOLE, IS PROHIBITED WITHOUT WRITTEN CONSENT OF PENTAIR ENGINEERING. THIS DOCUMENT AND ANY COPIES SHALL BE RETURNED TO PENTAIR UPON WRITTEN REQUEST.

Scale□Not to Scale | AutoCAD Format | Sheet 1 of 1

****WARNING-SAFETY INFORMATION****

1. The housings in this catalog, if improperly used, can cause serious injury or death
2. Always wear proper protective clothing for the liquid being filtered. Check your M.S.D.S. for any instructions or suggestions.
3. Do not run housing in excess of the rated pressure or temperature found on the housing tank label.
4. Check chemical compatibility of selected o-ring and housing material before housing installation.
5. Do not open housing when the system is under pressure; always relieve all pressure through housing before opening of housing lid.
6. *Stop all flow of liquid before opening of lid*.
7. Bolt housing to floor, as tipping may occur when lid is opened.

Do not operate over 150 PSI working pressure

MODEL **LR2**: maximum flow rate of **400** gallons per minute
MODEL **LR3**: maximum flow rate of **600** gallons per minute
MODEL **LR4**: maximum flow rate of **800** gallons per minute
MODEL **LR6**: maximum flow rate of **1200** gallons per minute
MODEL **LR8**: maximum flow rate of **1600** gallons per minute
MODEL **LR12**: maximum flow rate of **2000** gallons per minute
MODEL **LR17**: maximum flow rate of **3500** gallons per minute

RECEIVING INSTRUCTIONS:

1. Uncrate the housing(s) and discard any shipping materials
2. Place housing in the desired location on a flat surface, securing the four support legs to the base.

INSTALLATION INSTRUCTIONS:

*** flow to the housing should be turned off***

1. Place housing on pipe connections
   a. N.P.T./Coupling style – We do not recommend using any type of liquid sealant due to contamination of the pipe that may occur.
   b. Flange style – put a small amount of clean, heavy oil on one side of the gaskets, place oiled side down onto existing flanges to hold gaskets.
2. Please note the labeling of the inlet and outlet connections for proper installation. Tighten housing with proper tension to seal housing onto existing pipe or flange. Note: housing has been factory pressure tested to assure a leak proof vessel. If leaking occurs, check for improper connections.
3. Remove lid from housing by turning eye nuts until loosened and swing them down. Using the Lid Lift Handle, swing the lid until full view of the inner housing area is gained.
4. Check inner housing and pipe connections for foreign material and discard any items that have entered during shipping or unpacking.
5. Make sure that the strainer baskets are pushed fully into housing grooves. If using a filter bag, seat bag fully into strainer basket to assure a leak-proof seal between bag and basket. For best results, bag should be fully extended into the basket.
6. Close lid and alternately tighten the eye nuts until lid is fully seated onto the O-ring gasket.
7. Housing is now ready for start-up.

START-UP OF HOUSING

1. Loosen vent plug to allow air to escape from housing.
2. Slowly open the inlet to gradually fill the housing body.
3. When housing body is full (liquid escapes from top vent), close the vent.
4. Open the outlet connection and fully open the inlet connection. Housing is now operating properly.

REMOVAL OF SPENT ELEMENT:

1. When the housing reaches your pre-determined differential pressure, stop flow to the housing and relieve housing pressure through housing drain. Remove enough liquid to show top of basket flange.
2. Loosen eye nuts on housing and, using the Lid Lift Handle, swing the lid to gain full access to the inside of housing.
3. If using a liquid bag, pull the element out of the basket and discard the element in accordance with any required local and federal laws.
4. Remove filter baskets and clean thoroughly.
5. Housing debris and sludge should be removed to prolong filter efficiencies.
6. Replace filter baskets and bags into housings as noted in Installation Instructions above.

RECOMMENDED MAINTENANCE:

Periodic checks should be made on all housing lid and basket o-rings to ensure no cuts or damage has incurred that would cause the housing not to seal. If housing parts become damaged or worn, replace immediately.

OPTIONAL REPLACEMENT PARTS LIST

CB*LB	Buna Lid O-ring
LLHM	Lid Lift Handle
ENM	Eye Nut
REM	Rod End
CBAM	Clevis Bolt Assembly
PER APPLICATION **	Filter Bags
PER APPLICATION **	Filter Basket

* Insert outside diameter of housing model #
** Full line of replacement bags and baskets are available

Fliteway Technologies, Inc.

Feed Pump VFD - Control Panel

2129 East Birchwood Ave. Cudahy, WI 53110

(414) 483-5600 1-800-236-3580 FAX (414) 483-1957

FEED PUMP SKID

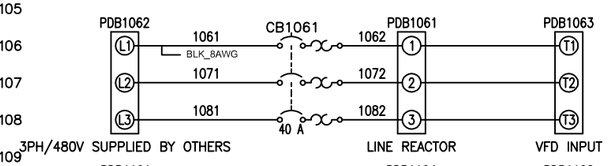

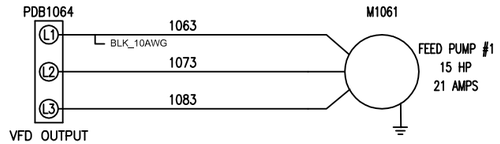

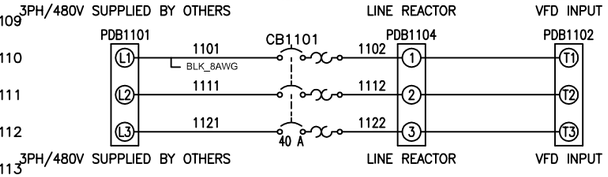

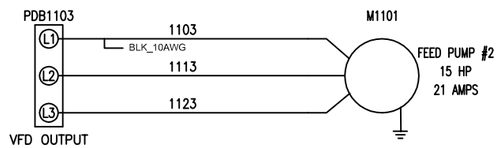

HIGH VOLTAGE PANEL

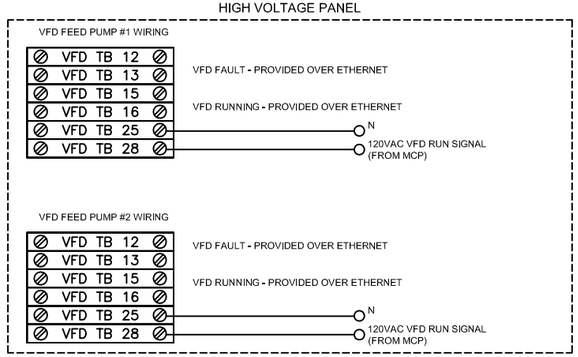

LOW VOLTAGE JUNCTION BOX

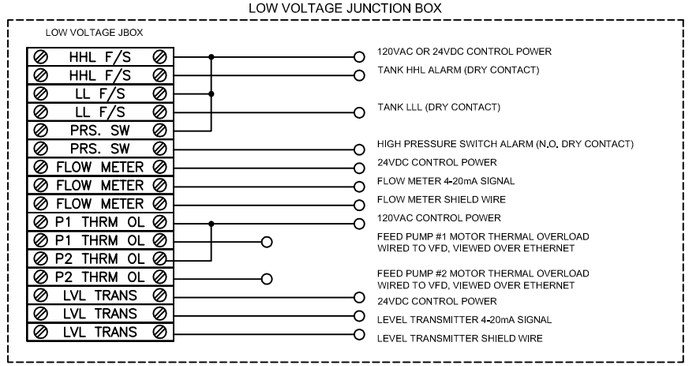

TREAT WATER PUMP SKID

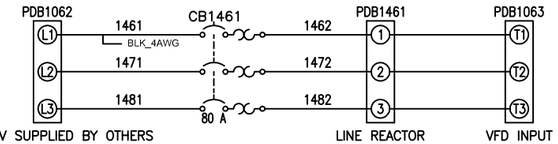

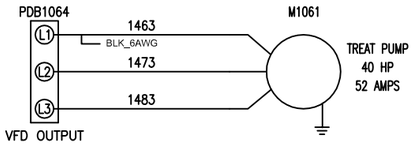

HIGH VOLTAGE PANEL

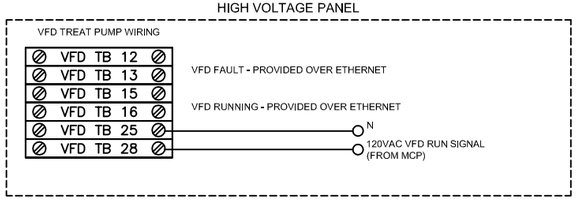

LOW VOLTAGE JUNCTION BOX

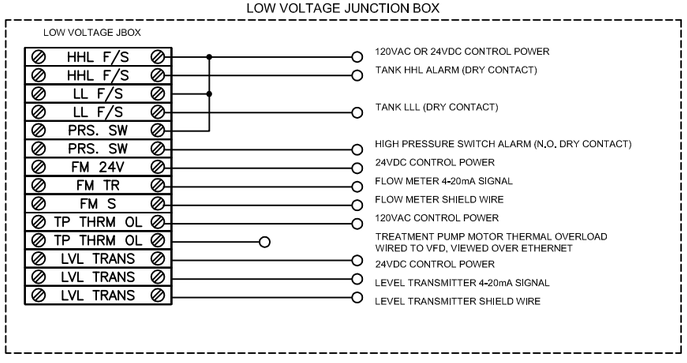

THIS PRINT AND ITS CONTENTS ARE THE PROPERTY OF FLITEWAY AND MUST NOT BE USED FOR ANY PURPOSE NOT AUTHORIZED BY FLITEWAY. DO NOT DISCLOSE, REPRODUCE OR OTHERWISE USE THIS PRINT OR ITS CONTENTS IN ANY MANNER DETRIMENTAL TO THE INTEREST OF FLITEWAY WITHOUT FLITEWAY'S PRIOR WRITTEN CONSENT. FLITEWAY RESERVES ALL RIGHTS OF DESIGN AND INVENTION TO THE EXTENT PERMITTED BY LAW.

CAD SYSTEM	UNITS
ACADE	IN
SCALE	FORMAT
1:1	D

Fliteway Technologies, Inc.
2129 East Birchwood Ave.
Cudahy, WI 53110

DRAWN BY	Q #	DESCRIPTION
Josh	Q14508	AS BUILT

DESIGNED FOR: CB&I Federal Services

Drawing Number

PLOTTED : 09-16-2015

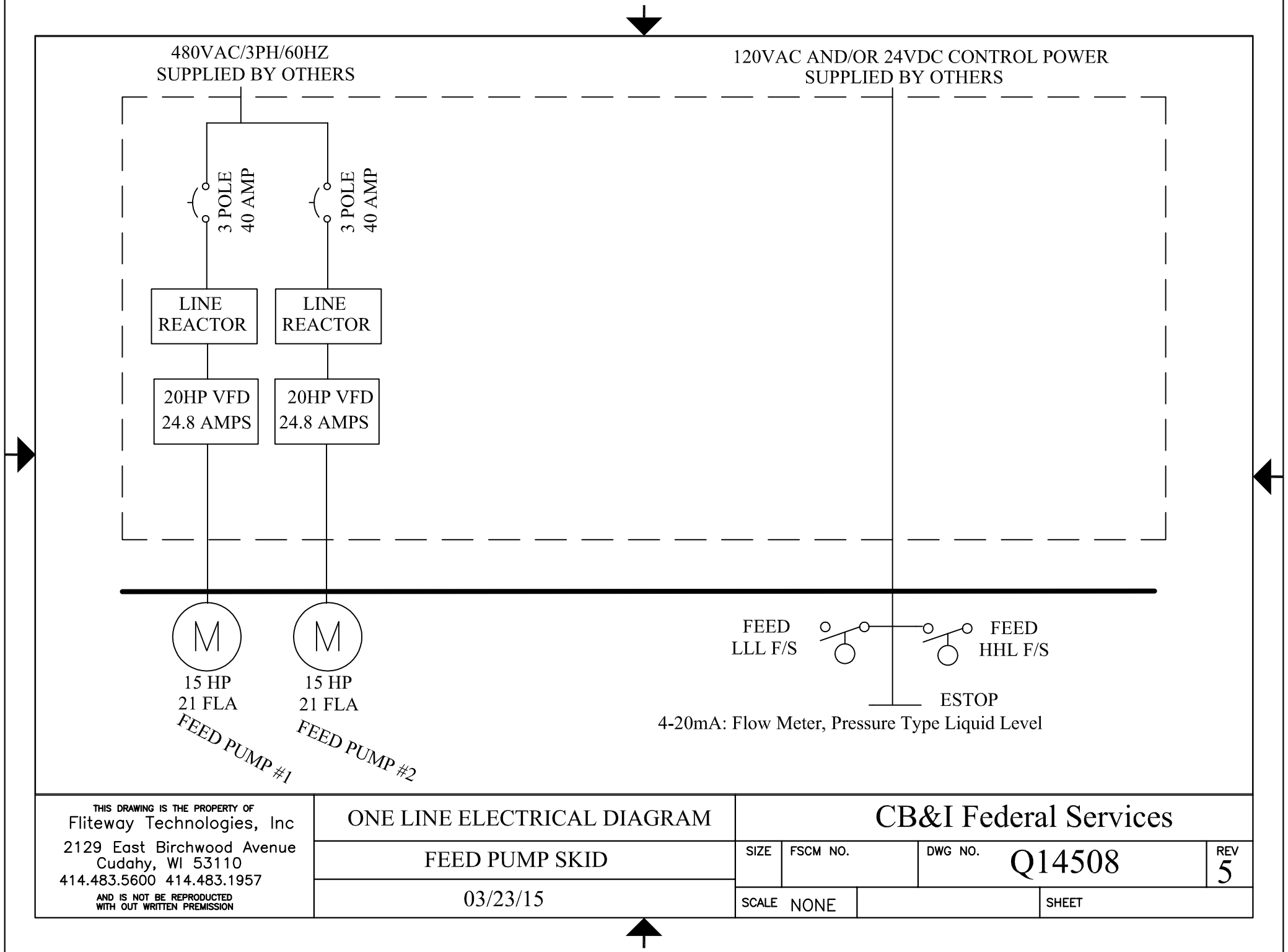

THIS DRAWING IS THE PROPERTY OF
Fliteway Technologies, Inc
2129 East Birchwood Avenue
Cudahy, WI 53110
414.483.5600 414.483.1957
AND IS NOT BE REPRODUCTED
WITH OUT WRITTEN PREMISSION

ONE LINE ELECTRICAL DIAGRAM

FEED PUMP SKID

03/23/15

CB&I Federal Services

SIZE	FSCM NO.	DWG NO.	REV
		Q14508	5

SCALE NONE

SHEET

Allen-Bradley

PowerFlex 700 Adjustable Frequency AC Drive

Topic	Page
Product Overview	2
Certifications and Specifications	7
Design Considerations	12
Drive, Fuse and Circuit Breaker Ratings	24
Cable Recommendations	33
Power Wiring	34
I/O Wiring	44
Mounting	49
Dimensions and Weights	53
PowerFlex 700 Packaged Drives	77
Drive Options	78

LISTEN. THINK. SOLVE.®

Allen-Bradley • Rockwell Software

Rockwell Automation

Additional Resources

These documents contain additional information concerning related products from Rockwell Automation.

Resource	Description
PowerFlex 700 Adjustable Frequency AC Drive Installation Instructions – Frames 0…6, publication 20B-IN0019	Provides detailed information about installation and start-up.
PowerFlex 700 Adjustable Frequency AC Drive Installation Instructions – Frames 7…10, publication 20B-IN0014	
PowerFlex 700 Standard Control User Manual, publication 20B-UM001	Provides detailed information on: • Parameters and programming • Faults, alarms, and troubleshooting
PowerFlex 700 Vector Control User Manual (v4.001 & up), publication 20B-UM002	
PowerFlex 70 and PowerFlex 700 Reference Manual, publication PFLEX-RM001	Provides detailed application specific information for programming and configuring the PowerFlex 700 drive.
PowerFlex 70 Enhanced Control and PowerFlex 700 Vector Control Reference Manual, publication PFLEX-RM004	
Wiring and Grounding Guidelines for Pulse Width Modulated (PWM) AC Drives, publication DRIVES-IN001	Provides basic information needed to properly wire and ground PWM AC drives.
Safety Guidelines for the Application, Installation and Maintenance of Solid State Control, publication SGI-1.1	Provides general guidelines for the application, installation, and maintenance of solid-state control.
Preventive Maintenance of Industrial Control and Drive System Equipment, publication DRIVES-TD001	Provides a guide to performing preventive maintenance.
Guarding Against Electrostatic Damage, publication 8000-4.5.2	Provides practices for guarding against electrostatic damage (ESD).
Product Certifications website, http://ab.com	Provides declarations of conformity, certificates, and other certification details.

You can view or download publications at http://www.rockwellautomation.com/literature/. To order paper copies of technical documentation, contact your local Allen-Bradley distributor or Rockwell Automation sales representative.

Product Overview

The PowerFlex 700 AC drive offers outstanding performance in an easy-to-use drive that you have come to expect from Rockwell Automation. This world-class performance comes in a small and competitively priced package. The PowerFlex 700 AC drive is designed to control three-phase induction motors in applications with requirements ranging from the simplest speed control to the most demanding torque control. The drive has volts per hertz, sensorless vector and vector control. Vector control includes Allen-Bradley's patented Force™ Technology which provides world class motor control.

Flexible Packaging and Mounting

- **IP20, NEMA / UL Type 1** – For conventional mounting inside or outside a control cabinet. Conduit plate is removable for easy installation and replacement without disturbing conduit.
- **IP54, NEMA / UL Type 12** – Stand-alone, wall mount drives are available for dust tight applications with power ratings from 75 to 200 Hp (Frames 5 & 6).
- **IP54, NEMA / UL Type 12** – Flange mount drives with an IP00, NEMA / UL Type Open front. These can be installed in a user supplied cabinet to meet IP54, NEMA / UL Type 12. This allows the majority of heat to be exhausted out the back of the cabinet while keeping the cabinet protected. Power ratings range from 75 to 700 Hp (Frames 5...10).
- **Zero Stacking**™ – Frame 0...6 drives can be mounted next to each other with no reduction of surrounding air temperature rating (50°C). This unique bookshelf design also allows access to one drive without disturbing another.

Space Saving Hardware Features

- **Integral EMC Filtering** plus built-in DC bus choke common mode cores and common mode capacitors provides a compact, all-in-one package solution for meeting EMC requirements, including CE in Europe. Frames 0...6 only (Frames 7...10 meet CE when installed per recommendations).
- **Internal Communications** allow the user to integrate the drive into the manufacturing process. Status indicators for all internal communication options are visible on the cover for easy setup and monitoring of drive communications. Users can easily manage information from shop floor to top floor and seamlessly integrate their complete system as they control, configure and collect data.
- **Integral Dynamic Brake Transistor** delivers a cost effective means of switching regenerative energy without costly external chopper circuits. These internal transistors are available in power ratings from 0.5 to 200 Hp.
- **Internal Dynamic Brake Resistor** (up to 25 Hp) requires no extra panel space, and supplies a large amount of braking torque for short periods.

Easy to Use Human Interface Tools

The PowerFlex 7-Class AC drives provide common Human Interface tools that are familiar and easy to use. These include the LCD Human Interface modules and PC-based configuration tools.

- LCD Human Interface modules provide:
  - Large and easy to read 7 line x 21 character backlit display
  - Variety of languages (English, French, German, Italian, Spanish, Portuguese, Dutch)
  - Alternate function keys for shortcuts to common tasks
  - “Calculator-like” number pad for fast and easy data entry (Full Numeric version only)
  - Control keys for local start, stop, speed, and direction
  - Remote versions for panel mount application

Outstanding Control and Performance

Multiple motor control algorithms allow performance matched to the application need:

- **Volts/Hertz** for simple Fan and Pump applications.
- **Sensorless Vector** for high torque production over a wide speed range.
- **Vector** for outstanding torque regulation and excellent low speed/zero speed performance (w/Vector Control cassette).

The PowerFlex 700 drive's Vector Control uses Allen-Bradley's patented Force™ Technology which provides excellent low-speed performance - whether it is operated with or without feedback. While this industry-leading control provides the highest level of drive performance, it is as easy to use as any general purpose drive available.

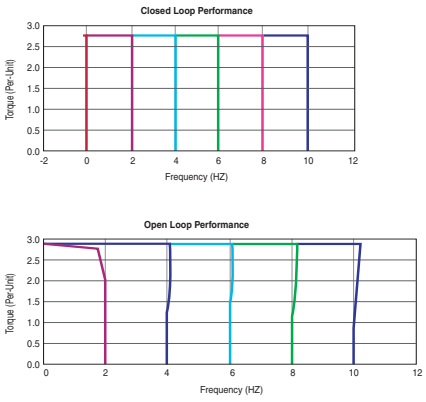

Drives Features

- Fast-acting **Current Limit** and **Bus Voltage Regulation** result in maximum accel/decel without tripping.
- **High speed analog inputs** improve drive response to torque or speed commands.
- **Programming flexibility** allows parameters to be linked within the drive.
- **Flying Start** delivers smooth and instantaneous connection into rotating loads, regardless of commanded direction, without the need for any speed feedback.
- **Integral Process PI Control** can eliminate the need for a separate process loop controller.
- **Inertia Ride-Through** offers tripless operation during a prolonged power outage by using the rotating energy stored in high inertia, low-friction loads.
- **Position Indexer/Speed Profiler** uses a 16 step indexer to provide point-to-point positioning or velocity profiling based on encoder counts, digital inputs, parameter levels or time.
- **TorqProve**™ assures control of the load when transferring control between the drive and a mechanical brake.
- **Speed Regulation** - Open Loop or Closed Loop
  - **Slip Compensation** delivers a minimum 0.5% speed regulation without feedback hardware.
  - **Droop** allows drives to load share without fighting each other.
  - **Encoder Feedback** provides up to 0.001% speed regulation for the tightest application requirements.
- **Torque Regulation** - Open Loop or Closed Loop
  - **Open Loop** torque regulation provides ±5% regulation.
  - **Encoder Feedback** provides ±2% regulation and the ability to hold full load at zero speed.

Unsurpassed Capability in Network Communications

PowerFlex drives are fully compatible with the wide variety of Allen-Bradley DPI™ communication adapters, offering the following benefits:

BACnet®	ControlNet™	DeviceNet™	EtherNet/IP™	LonWorks™	Modbus RTU	PROFIBUS™	Remote I/O(1)	RS485 DF1	USB	Description
	✔	✔	✔							**(Unconnected Messaging)** permits other network devices (e.g. PanelView™) to communicate directly to a drive without routing the communication through the network scanner.
✔	✔	✔	✔					✔	✔	**Adapter Routing** - Plug PC into one drive and talk to all other Allen-Bradley drives on same network, without being routed through network scanner.
✔	✔	✔	✔	✔	✔	✔	✔	✔	✔	Access to 100% of all parameters over the network.
✔		✔	✔			✔				**AutoBaud** capability makes initial connections less problematic.
		✔								**Change of State** significantly reduces network traffic by configuring control messages to be sent only upon customer defined states. Very flexible configuration for each node (Example: "reference must change by more than 5%").
		✔	✔							**Peer Control** provides master-slave type control between drives, where one or more slave drives (consumers) can run based on the status of a master drive (producer), which can also significantly reduce network traffic.
		✔								**ADR (Automatic Device Replacement)** saves significant time and effort when replacing a drive, by allowing the scanner to be configured to automatically detect a new drive and download the required parameter settings.
✔	✔	✔	✔	✔	✔	✔	✔	✔	✔	**Flexible Fault Configuration** - Adapters can be programmed to take fault based actions as ramp to stop, coast-to-stop and hold last state, as well as send user configurable logic control and speed reference values. In addition, different actions can be taken based on whether the network experienced a serious problem (broken cable etc.) versus network idle condition (PLC set to "Program").

(1) This item has Silver Series status. For information, refer to http://www.ab.com/silver.

Catalog Number Explanation

20B	D	2P1	A	3	A	Y	N	A	E	C	0	NN	AD
a	*b*	*c1…c5*	*d*	*e*	*f*	*g*	*h*	*i*	*j*	*k*	*l*	*m*	*n*

a

Drive	
Code	Type
20B	PowerFlex 700

b

Voltage Rating				
Code	Voltage	Ph.	Prechg.	Frames
B	240V AC	3	-	0…6
C	400V AC	3	-	0…10
D	480V AC	3	-	0…10
E	600V AC	3	-	0…6
F	690V AC	3	-	5…6
H	540V DC	-	N	5…6, 10
J	650V DC	-	N	5…6, 10
N	325V DC	-	Y	5…6
P	540V DC	-	Y	5…9
R	650V DC	-	Y	5…9
T	810V DC	-	Y	5…6
W	932V DC	-	Y	5…6

c1

ND Rating				
208/240V, 60 Hz Input				
Code	208V Amps	240V Amps	Hp	Frame
2P2	2.5	2.2	0.5	0
4P2	4.8	4.2	1.0	0
6P8	7.8	6.8	2.0	1
9P6	11	9.6	3.0	1
015	17.5	15.3	5.0	1
022	25.3	22	7.5	1
028	32.2	28	10	2
042	48.3	42	15	3
052	56	52	20	3
070	78.2	70	25	4
080	92	80	30	4
104	120	104	40	5
130	130	130	50	5
154	177	154	60	6
192	221	192	75	6
260	260	260	100	6

c2

ND Rating			
400V, 50 Hz Input			
Code	Amps	kW	Frame
1P3	1.3	0.37	0
2P1	2.1	0.75	0
3P5	3.5	1.5	0
5P0	5.0	2.2	0
8P7	8.7	4.0	0
011	11.5	5.5	0
015	15.4	7.5	1
022	22	11	1
030	30	15	2
037	37	18.5	2
043	43	22	3
056	56	30	3
072	72	37	3
085	85	45	4
105	105	55	5
125	125	55	5
140	140	75	5
170	170	90	6
205	205	110	6
260	260	132	6
292	292	160	7
325	325	180	7
365	365	200	8
415	415	240	8
481	481	280	8
535	535	300	8
600	600	350	8
730	730	400	9
875	875	500	10

c3

ND Rating			
480V, 60 Hz Input			
Code	Amps	Hp	Frame
1P1	1.1	0.5	0
2P1	2.1	1.0	0
3P4	3.4	2.0	0
5P0	5.0	3.0	0
8P0	8.0	5.0	0
011	11	7.5	0
014	14	10	1
022	22	15	1
027	27	20	2
034	34	25	2
040	40	30	3
052	52	40	3
065	65	50	3
077	77	60	4
096	96	75	5
125	125	100	5
156	156	125	6
180	180	150	6
248	248	200	6
292	292	250	7
325	325	250	7
365	365	300	8
415	415	350	8
481	481	400	8
535	535	450	8
600	600	500	8
730	730	600	9
875	875	700	10

c4

ND Rating			
600V, 60 Hz Input			
Code	Amps	Hp	Frame
1P7	1.7	1.0	0
2P7	2.7	2.0	0
3P9	3.9	3.0	0
6P1	6.1	5.0	0
9P0	9.0	7.5	0
011	11	10	1
017	17	15	1
022	22	20	2
027	27	25	2
032	32	30	3
041	41	40	3
052	52	50	3
062	62	60	4
077	77	75	5
099	99	100	5
125	125	125	6
144	144	150	6

20B	D	2P1	A	3	A	Y	N	A	E	C	0	NN	AD
a	*b*	*c1…c5*	*d*	*e*	*f*	*g*	*h*	*i*	*j*	*k*	*l*	*m*	*n*

c5

ND Rating			
690V, 50 Hz Input			
Code	Amps	kW	Frame
052	52	45	5
060	60	55	5
082	82	75	5
098	98	90	6
119	119	110	6
142	142	132	6

d

Enclosure	
Code	Enclosure
A	IP20, NEMA/UL Type 1
F ♠	Open/Flange Mount Front: IP00, NEMA/UL Type Open Back/Heatsink: IP54, NEMA Type 12
N ♣	Open/Flange Mount Front: IP00, NEMA/UL Type Open Back/Heatsink: IP54, NEMA 12
G ♠	Stand-Alone/Wall Mount IP54, NEMA/UL Type 12
U	Roll-In Front: IP00, NEMA/UL Type Open Back/Heatsink: IP54, NEMA 12 Frames 8 & 9 Only

♠ Only available for Frame 5 & Frame 6 drives, 400…690V.

♣ Only available for Frames 7…10.

e

HIM	
Code	Operator Interface
0	Blank Cover
3	LCD Display, Full Numeric Keypad
J ♦	Remote (Panel Mount), IP66, NEMA/UL Type 12 Full Numeric LCD HIM
K ♦	Remote (Panel Mount), IP66, NEMA/UL Type 12 Prog. Only LCD HIM

♦ Available with Frames 5…6 Stand-Alone IP54 drives (Enclosure Code "G").

f

Documentation	
Code	Type
A	Manual
N	No Manual
Q	No Shipping Package (Internal Use Only)

g

Brake	
Code	w/Brake IGBT ‡
Y	Yes
N	No

‡ Brake IGBT is standard on Frames 0-3, optional on Frames 4-6 and not available on Frames 7…10.

h

Internal Braking Resistor	
Code	w/Resistor
Y	Yes ★
N	No

★ Not available for Frame 3 drives or larger.

i

Emission		
Code	CE Filter §	CM Choke
A	Yes	Yes
B #	Yes	No
N	No	No

§ Note: 600V class drives below 77 Amps (Frames 0-4) are declared to meet the Low Voltage Directive. It is the responsibility of the user to determine compliance to the EMC directive. Frames 7…10, 400/480V AC drives (Voltage Rating codes "C" and "D") meet CE certification requirements when installed per recommendations.

Only available for 208…240V Frame 0-3 drives.

j

Comm Slot	
Code	Network Type
C	ControlNet (Coax)
D	DeviceNet
E	EtherNet/IP
N	None

k

Control & I/O		
Code	Control	I/O Volts
A	Standard ♦	24V DC/AC
B	Standard ♦	115V AC
C	Vector Δ	24V DC
D	Vector Δ	115V AC
N	Standard	None

Δ Vector Control Option utilizes DPI Only.

♦ Frame 0…6 drives only.

l

Feedback	
Code	Type
0	None
1	Encoder, 12V/5V

m

Future Use

n

Special Firmware (Frames 0…6 Only)	
Code	Type
AD ♦	60 Hz Maximum
AE ♦	Cascading Fan/Pump Control
AX ♦	82 Hz Maximum
BA ♦	Pump Off (for pump jack)

♦ Must be used with Vector Control option C or D (Position k). Positions m-n are only required when custom firmware is supplied.

Certifications and Specifications

Certifications

Certification [1]	Description	Frames			
		0…4		5…6	7…10
		230…480V	600V		
ABS	American Bureau of Shipping MA Certificate 08-HS303172B-3-PDA for auxiliary services on AB Classed vessels and offshore platforms	✔		✔	
CE	Certified by Rockwell Automation to be in conformity with the essential requirements of the applicable European Directives and the standards referenced below have been applied:				
	2006/95/EC (Low Voltage Directive) EN 50178 Electronic Equipment for use in Power Installations	✔	✔	✔	✔
	2004/108/EC (EMC Directive) EN 61800-3 Adjustable Speed electrical power drive systems - Part 3: EMC requirements and specific test methods.	✔		✔	✔[2]
RCM	Certified by Rockwell Automation to be in conformity with the requirements of the applicable Australian legislation and the standards referenced: IEC 61800-3.	✔		✔	✔
c-UL-us	Listed to UL508C and C22.2 No. 14. Packaged drives may be listed to UL508A.	✔	✔	✔	✔
EAC	Low Voltage TR CU 004/2011 EMC TR CU 020/2011	✔	✔	✔	✔
EPRI /SEMIF47	EPRI Quality Star Certificates SEMIF47.115 and SEMIF47.127 for SEMI F47 compliance, only 480V units tested	✔		✔	
Functional Safety	EC-Type-Examination Certificate TUV 05 ATEX 7153 for directive 94/9/EC: Safe turn off of certified ATEX motors used in Group II Category (2) GD potentially explosive atmospheres.	✔	✔	✔	✔
Korean KC Registration	KCC-REM-RAA-20B Refer to the certificate of registration for specific drive catalog numbers that have this certification.	✔	✔	✔	✔
Lloyd's Register	Lloyd's Register Type Approval Certificate 08-HS303172B-3-PDA (marine certification)	✔		✔	
Trentec	Tested by Trentec to be compliant with AC156 Acceptance Criteria for Seismic Qualification Testing of Nonstructural Components and 2003 International Building Code for worst-case seismic level for USA excluding site class F	✔	✔	✔	
Designed to Meet Applicable Requirements	CMAA Specification #70 (Crane Manufacturers of America Assoc.)	✔	✔	✔	✔
	NFPA 70 – US National Electrical Code	✔	✔	✔	✔
	NEMA ICS 7.1 – Safety Standards for Construction and Guide for Selection, Installation, and Operation of Adjustable Speed Drive Systems	✔	✔	✔	✔
	IEC 61800-2 – Adjustable Speed Electrical Power Drive Systems - Part 2: General Requirements - Rating specifications for low voltage adjustable frequency AC power drive systems.	✔	✔	✔	✔

(1) See the product certifications website, http://www.rockwellautomation.com/products/certification for declarations of conformity, certificates, and other certification details.

(2) Frames 7…10 provided as IP00 or NEMA / UL Open style must be installed in a supplementary enclosure which provides adequate attenuation of radiated emissions in order to be compliant with EN 61800-3.

Environmental

Category	Specification				
Environment	Altitude:	1000 m (3300 ft) max. without derating			
	Maximum Surrounding Air Temperature without Derating - IP20, NEMA / UL Type Open: Frames 0…6 Frames 7…10	 0…50 °C (32…122 °F), typical. See Installation Instructions for details. 0…40 °C (32…104 °F) for chassis (heatsink) 0…65 °C (32…149 °F) for control (front of backplane)			
	Storage Temperature (all const.):	-40…70 °C (-40…158 °F)			
	Atmosphere:	**Important:** Drive **must not** be installed in an area where the ambient atmosphere contains volatile or corrosive gas, vapors or dust. If the drive is not going to be installed for a period of time, it must be stored in an area where it will not be exposed to a corrosive atmosphere.			
	Relative Humidity:	5 to 95% non-condensing			
	Shock:	15G peak for 11ms duration (±1.0 ms)			
	Vibration:	0.152 mm (0.006 in.) displacement, 1G peak			
	Surrounding Environment Pollution Degree Pollution Degree 1 & 2: Pollution Degree 3 & 4: (See page 11 for descriptions of each pollution degree rating.)	 All enclosures acceptable. Enclosure that meets or exceeds IP54, NEMA / UL Type 12 required.			
	Sound:	Frame	Fan Velocity	Sound Level	Note: Sound pressure level is measured at 2 meters.
		0	30 CFM	58 dB	
		1	30 CFM	59 dB	
		2	50 CFM	57 dB	
		3	120 CFM	61 dB	
		4	190 CFM	59 dB	
		5	200 CFM	71 dB	
		6	300 CFM	72 dB	
		7	756 CFM	74 dB	
		8	1200 CFM	78 dB	
		9	2800 CFM	82 dB	
		10 Inv.	1850 CFM	78 dB	
		10 Cnv.	1200 CFM	78 dB	

Technical Specifications

Category	Specification						
Protection	**Drive**	200…208V	240V	380/400V	480V	600V Frames 0…4	600/690V Frames 5…6
	AC Input Overvoltage Trip:	285V AC	285V AC	570V AC	570V AC	716V AC	818V AC
	AC Input Undervoltage Trip:	120V AC	138V AC	233V AC	280V AC	345V AC	345V AC
	Bus Overvoltage Trip:	405V DC	405V DC	810V DC	810V DC	1013V DC	1162V DC
	Bus Undervoltage Shutoff/Fault:	153V DC	153V DC	305V DC	305V DC	381V DC	437V DC
	Nominal Bus Voltage:	281V DC	324V DC	540V DC	648V DC	810V DC	932V DC
	All Drives						
	Heat Sink Thermistor:	Monitored by microprocessor overtemp trip					
	Drive Overcurrent Trip Software Overcurrent Trip: Hardware Overcurrent Trip:	 200% of rated current (typical) 220…300% of rated current (dependent on drive rating)					
	Line transients:	up to 6000 volts peak per IEEE C62.41-1991					
	Control Logic Noise Immunity:	Showering arc transients up to 1500V peak					
	Power Ride-Thru:	15 milliseconds at full load					
	Logic Control Ride-Thru:	0.5 seconds minimum, 2 seconds typical					
	Ground Fault Trip:	Phase-to-ground on drive output					
	Short Circuit Trip:	Phase-to-phase on drive output					
Electrical	Voltage Tolerance:	See page 12 for full power and operating range					
	Input Frequency Tolerance:	47…63 Hz					
	Input Phases:	Three-phase input provides full rating for all drives. Single-phase operation possible on certain drives and provides 50% of rated current (see Installation Instructions for details). Frames 0…7: Drive can be supplied as 6 pulse or 18 pulse in an engineered package.					
	Displacement Power Factor:	0.98 across entire speed range					
	Efficiency:	97.5% at rated amps, nominal line volts					
	Maximum Short Circuit Rating:	200,000 Amps symmetrical					
	Actual Short Circuit Rating:	Determined by AIC rating of installed fuse/circuit breaker					
	Drive to Motor Power Ratio Minimum Maximum	 Recommended not less than 1:2 ratio Recommended not greater than 2:1 ratio					

Category	Specification	
Control	Method:	Sine coded PWM with programmable carrier frequency. Ratings apply to all drives (refer to the *Derating Guidelines* in the PowerFlex Reference Manual). The drive can be supplied as 6 pulse or 18 pulse in a configured package.
	Carrier Frequency:	2, 4, 8, and 10 kHz. Drive rating based on 4 kHz. See the Input Protection Device tables in the Installation Instructions for exceptions.
	Output Voltage Range:	0 to rated motor voltage
	Output Frequency Range:	Standard Control – 0 to 400 Hz., Vector Control – 0 to 420 Hz
	Frequency Accuracy Digital Input: Analog Input:	 Within ±0.01% of set output frequency Within ±0.4% of maximum output frequency
	Frequency Control:	Speed Regulation - w/Slip Compensation (Volts per Hertz Mode) 0.5% of base speed across 40:1 speed range, 40:1 operating range 10 rad/sec bandwidth
		Speed Regulation - w/Slip Compensation (Sensorless Vector Mode) 0.5% of base speed across 80:1 speed range, 80:1 operating range 20 rad/sec bandwidth
		Speed Regulation - w/Feedback (Sensorless Vector Mode) 0.1% of base speed across 80:1 speed range, 80:1 operating range 20 rad/sec bandwidth
	Speed Control:	Speed Regulation - w/o Feedback (Vector Control Mode) 0.1% of base speed across 120:1 speed range, 120:1 operating range 50 rad/sec bandwidth
		Speed Regulation - w/Feedback (Vector Control Mode) 0.001% of base speed across 120:1 speed range, 1000:1 operating range, 250 rad/sec bandwidth
	Torque Regulation:	Torque Regulation - w/o Feedback ±5%, 600 rad/sec bandwidth
		Torque Regulation - w/Feedback ±2%, 2500 rad/sec bandwidth
	Selectable Motor Control:	Sensorless Vector with full tuning. Standard V/Hz with full custom capability. PF700 adds Vector Control.
	Stop Modes:	Multiple programmable stop modes including - Ramp, Coast, DC-Brake, Ramp-to-Hold and S-curve.
	Accel/Decel:	Two independently programmable accel and decel times. Each time may be programmed from 0…3600 seconds in 0.1 second increments.
	Intermittent Overload:	110% Overload capability for up to 1 minute, 150% Overload capability for up to 3 seconds.
	Current Limit Capability:	Proactive Current Limit programmable from 20…160% of rated output current. Independently programmable proportional & integral gain.
	Motor Overload Protection Frames 0…6 Standard Control: Frames 0…6 Vector Control: Frames 7…10 Vector Control:	 PowerFlex 700 drives with standard control, identified by an N, A, or B in position 15 of the catalog number, only provide Class 10 motor overload protection according to NEC article 430. They do not provide speed sensitive overload protection, thermal memory retention and motor over-temperature sensing according to NEC article 430.126 (A) (2). If such protection is needed in the end-use product, it must be provided by additional means. PowerFlex 700 drives with vector control, identified by a C or D in position 15 of the catalog number, provide class 10 motor overload protection according to NEC article 430 and motor over-temperature protection according to NEC article 430.126 (A) (2). UL 508C File E59272. Class 10 motor overload protection according to NEC article 430 and motor over-temperature protection according to NEC article 430.126 (A)(2). UL 508C File E59272.

Category	Specification					
Control (continued)	Digital/Analog Input Latency	Signal		Motor Control	Latency	
					Min.	Max	Typical
		Digital Input	Start	FVC	8.4 ms	10.4 ms	8.4 ms
				SVC	9.2 ms	16.0 ms	9.2 ms
			Stop	FVC	10.0 ms	12.4 ms	10.4 ms
				SVC	10.0 ms	12.0 ms	10.4 ms
		Analog Input	Torque 4 kHz PWM	FVC	772 µs	1.06 ms	840 µs
			Torque 2 kHz PWM	FVC	1.008 ms	1.46 ms	1.256 ms
			Speed	FVC	4.6 ms	8.6 ms	4.8 ms
			Speed	SVC	4.8 ms	12.4 ms	6.4 ms
Encoder	Type:	Incremental, dual channel					
	Supply:	12V, 250 mA. 12V, 10 mA minimum inputs isolated with differential transmitter, 250 kHz maximum.					
	Quadrature:	90°, ±27 degrees at 25 degrees C.					
	Duty Cycle:	50%, +10%					
	Requirements:	Encoders must be line driver type, quadrature (dual channel) or pulse (single channel), 8…15V DC output (4…6V DC when jumpers are in 5V position), single-ended or differential and capable of supplying a minimum of 10 mA per channel. Maximum input frequency is 250 kHz. The Encoder Interface Board accepts 12V DC square-wave with a minimum high state voltage of 7.0V DC. With the jumpers in the 5V position, the encoder will accept a 5V DC square-wave with a minimum high state voltage of 3.0V DC. In either jumper position, the maximum low state voltage is 0.4V DC.					

Pollution Degree Ratings According to EN 61800-5-1

Pollution Degree	Description
1	No pollution or only dry, non-conductive pollution occurs. The pollution has no influence.
2	Normally, only non-conductive pollution occurs. Occasionally, however, a temporary conductivity caused by condensation is to be expected, when the drive is out of operation.
3	Conductive pollution or dry non-conductive pollution occurs, which becomes conductive due to condensation, which is to be expected.
4	The pollution generates persistent conductivity caused, for example, by conductive dust, rain or snow.

Design Considerations

Input Voltage Tolerance

Drive Rating	Nominal Line Voltage	Nominal Motor Voltage	Drive Full Power Range	Drive Operating Range
200…240	200	200*	200…264	180…264
	208	208	208…264	
	240	230	230…264	
380…480	380	380*	380…528	342…528
	400	400	400…528	
	480	460	460…528	
500…600 (Frames 0…4 Only)	600	575*	575…660	432…660
500…690 (Frames 5 & 6 Only)	600	575*	575…660	475…759
	690	690	690…759	475…759

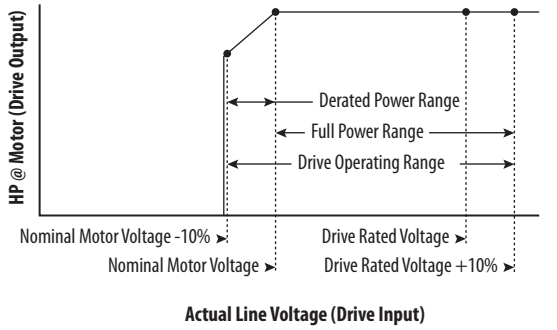

Drive Full Power Range = Nominal Motor Voltage to Drive Rated Voltage +10%.
Rated current is available across the entire Drive Full Power Range

Drive Operating Range = Lowest* Nominal Motor Voltage –10% to Drive Rated Voltage +10%.
Drive Output is linearly derated when Actual Line Voltage is less than the Nominal Motor Voltage

EXAMPLE Calculate the maximum power of a 5 Hp, 460V motor connected to a 480V rated drive supplied with 342V Actual Line Voltage input.

- Actual Line Voltage / Nominal Motor Voltage = 74.3%
- 74.3% × 5 Hp = 3.7 Hp
- 74.3% × 60 Hz = 44.6 Hz

At 342V Actual Line Voltage, the maximum power the 5 Hp, 460V motor can produce is 3.7 Hp at 44.6 Hz.

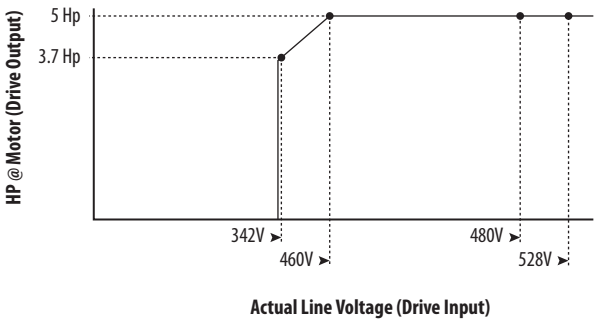

Approximate Watts Loss

The following tables list the watts loss data for drives running at full load, full speed and default carrier frequency.

Internal watts are those dissipated by the control structure of the drive and will be dissipated into the cabinet regardless of mounting style. External watts are those dissipated directly through the heatsink and will be outside the cabinet for flange mount and inside the cabinet for other mounting types.

Watts Loss – Frames 0...6

Voltage	ND Hp/kW	External Watts	Internal Watts	Total Watts Loss[1]
IP20, NEMA / UL Type 1				
240V	0.5	9	37	46
	1	22	39	61
	2	38	39	77
	3	57	41	98
	5	97	82	179
	7.5	134	74	208
	10	192	77	269
	15	276	92	368
	20	354	82	436
	25	602	96	698
	30	780	96	876
	40	860	107	967
	50	1132	138	1270
	60	1296	200	1496
	75	1716	277	1993
	100	1837	418	2255
400V	0.37	11	42	53
	0.75	19	44	63
	1.5	31	45	76
	2.2	46	46	93
	4	78	87	164
	5.5	115	79	194
	7.5	134	84	218
	11	226	99	326
	15	303	91	394
	18.5	339	102	441
	22	357	103	459
	30	492	117	610
	37	568	148	717
	45	722	207	930
	55	821	286	1107
	55	1130	397	1527
	90	1402	443	1845
	110	1711	493	2204
	132	1930	583	2513

Voltage	ND Hp/kW	External Watts	Internal Watts	Total Watts Loss[1]
480V	0.5	11	42	53
	1	19	44	63
	2	31	45	76
	3	46	46	93
	5	78	87	164
	7.5	115	79	194
	10	134	84	218
	15	226	99	326
	20	303	91	394
	25	339	102	441
	30	357	103	459
	40	492	117	610
	50	568	148	717
	60	722	207	930
	75	821	286	1107
	100	1130	397	1527
	125	1402	443	1845
	150	1711	493	2204
	200	1930	583	2513
600V	0.5	9	37	46
	1	14	40	54
	2	25	40	65
	3	41	42	83
	5	59	83	142
	7.5	83	75	157
	10	109	77	186
	15	177	93	270
	20	260	83	343
	25	291	95	385
	30	324	95	419
	40	459	109	569
	50	569	141	710
	60	630	195	825
	75	1053	308	1361
	100	1467	407	1874
	125	1400	500	1900
	150	1668	612	2280
690V	45	894	141	1034
	55	1056	195	1251
	75	1105	308	1412
	90	1389	407	1796
	110	1283	500	1783
	132	1592	612	2204

Voltage	ND Hp/kW	External Watts	Internal Watts	Total Watts Loss(1)
IP54, NEMA / UL Type 12				
480V	75	873	234	1107
	100	1237	290	1527
	125	1563	282	1845
	150	1874	330	2204
	200	2100	413	2513
600V	75	1091	270	1361
	100	1537	337	1874
	125	1584	316	1900
	150	1895	385	2280

(1) Worst case condition including Vector Control board, HIM, and Communication Module.

Watts Loss – Frames 7…10

Voltage	Frame	Hp Rating		Dissipation (Watts)(1)					
				AC Input			DC Input		
		ND	HD	External	Internal	Total	External	Internal	Total
IP20, NEMA / UL Type 1									
400/480V	7	250	200	3422	514	3936	3098	497	3595
		250	250	4224	618	4842	3848	599	4447
	8	300	250	3125	569	3694	2698	547	3245
		350	300	3588	681	4269	3091	655	3746
		400	350	4284	850	5133	3692	816	4510
		450	400	4850	1000	5850	4178	965	5143
		500	450	5278	2010	7288	4506	1969	6475
	9	600	500	8740	2270	11010	7752	2218	9970
	10	700	600	8595	2339	10934	7470	2280	9750

(1) Worst case condition including Vector Control board, HIM, and Communication Module.

Derating Guidelines

Altitude and Efficiency

Frame	Type	Derate
All	Altitude	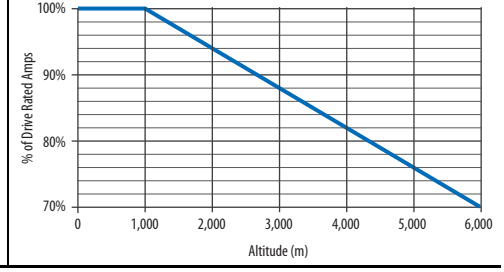

Frame	Type	Derate
All	Efficiency (typical)	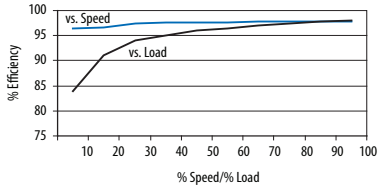

Ambient Temperature/Load – 240V AC

240 Volt Power Rating			Derating — — — 2 kHz ····· 4 kHz ———
ND Hp	**HD Hp**	**Cont. Amps**	
0.5…5.0	0.33…3.0	2.2…15.3	None
10…15	7.5…10	28…42	None
25	20	70	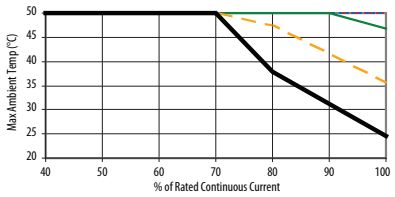
40	30	104 (80)	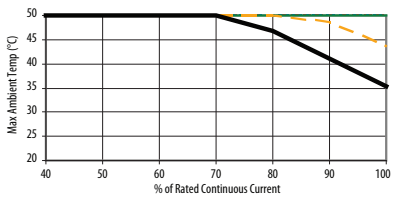
60	50	154 (130)	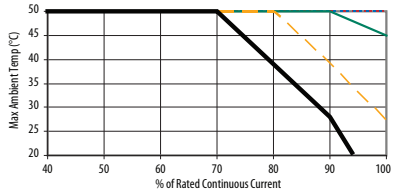
100	75	260 (205)	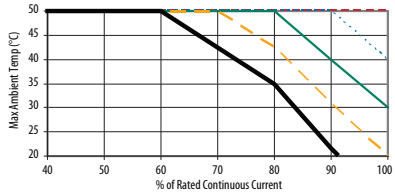

240 Volt Power Rating			Derating — — — 2 kHz ····· 4 kHz ———
ND Hp	**HD Hp**	**Cont. Amps**	
7.5	5.0	22	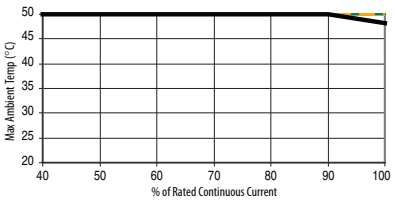
20	15	52	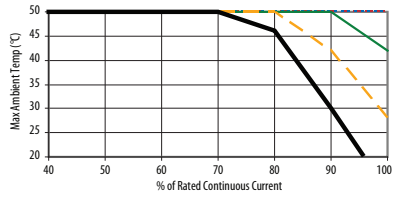
30	25	80	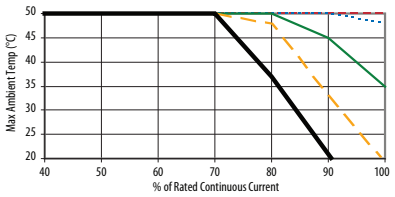
50	40	130 (104)	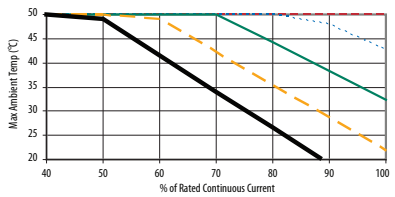
75	60	192 (154)	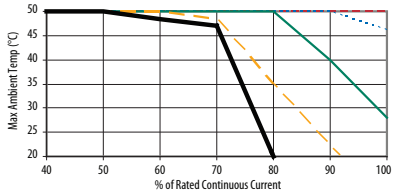

Ambient Temperature/Load – 400V AC

400 Volt Power Rating			Derating
ND kW	HD kW	Cont. Amps	2 kHz, 4 kHz, 6 kHz, 8 kHz, 10 kHz
0.37…7.5	0.25…5.5	1.3…15.4	None
15	11	30	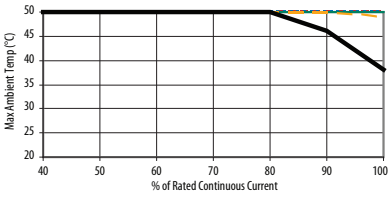
22	18.5	43	None
37	30	72	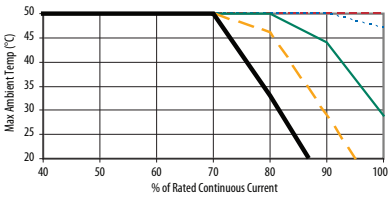
55	45	105 (85)	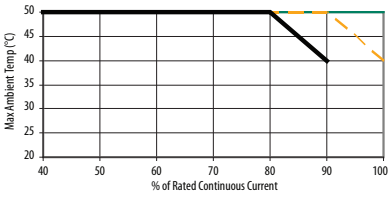
90	75	170 (140)	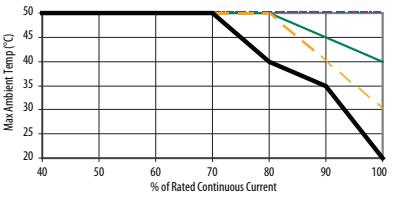
132	110	260 (205)	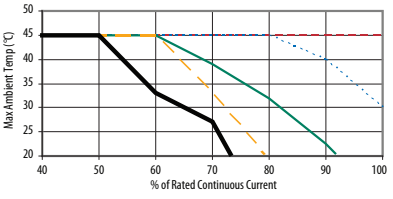

400 Volt Power Rating			Derating
ND kW	HD kW	Cont. Amps	2 kHz, 4 kHz, 6 kHz, 8 kHz, 10 kHz
11	7.5	22	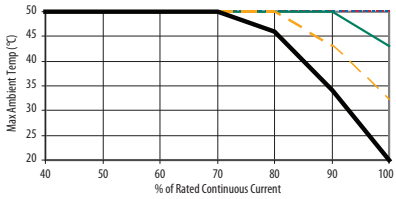
18.5	15	37	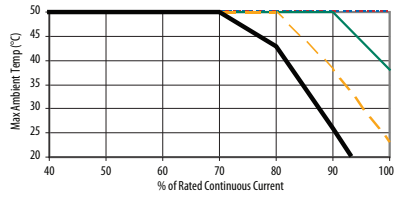
30	22	56	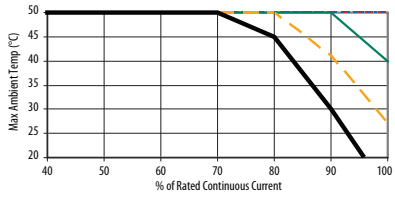
45	37	85 (72)	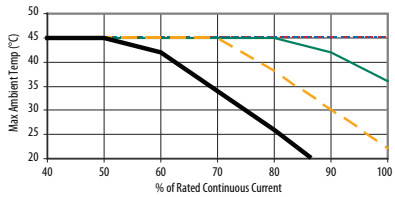
75	55	140 (105)	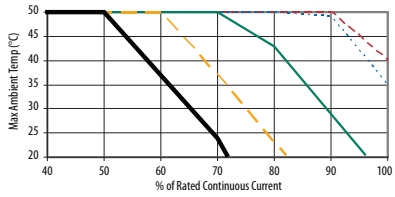
110	90	205 (170)	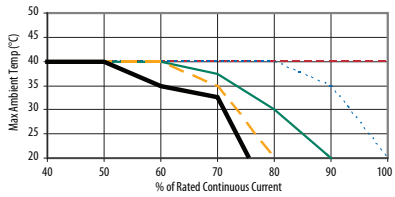
160	150	292 (263)	see 480 Volt, 292 (263) Amp on page 18
180	180	325 (325)	see 480 Volt, 325 (325) Amp on page 19
200	180	365 (325)	see 480 Volt, 365 (325) Amp on page 19
240	200	415 (365)	see 480 Volt, 415 (365) Amp on page 19
280	240	481 (415)	see 480 Volt, 481 (415) Amp on page 19
300	280	535 (481)	see 480 Volt, 535 (481) Amp on page 19
350	300	600 (535)	see 480 Volt, 600 (535) Amp on page 19
400	350	730 (600)	see 480 Volt, 730 (600) Amp on page 19
500	400	875 (700)	see 480 Volt, 875 (700) Amp on page 19

Ambient Temperature/Load – 480V AC

480 Volt Power Rating			Derating
ND Hp	HD Hp	Cont. Amps	2 kHz 4 kHz 6 kHz 8 kHz 10 kHz
0.5…10	0.33…7.5	1.1…14	None
20	15	27	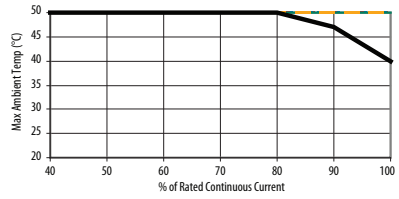
30	25	40	None
50	40	65	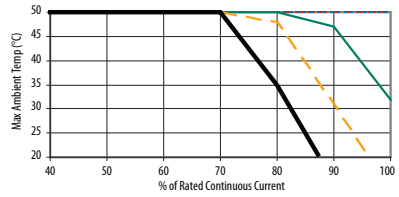
75	60	96 (77)	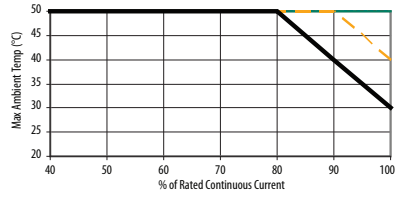
125	100	156 (125)	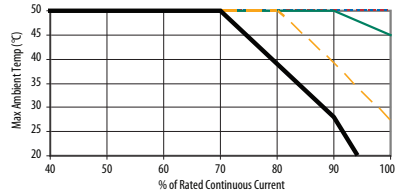
200	150	248 (180)	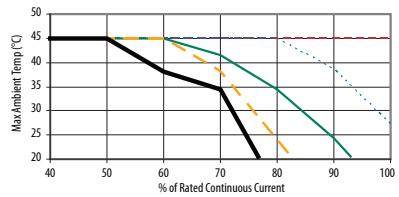

480 Volt Power Rating			Derating
ND Hp	HD Hp	Cont. Amps	2 kHz 4 kHz 6 kHz 8 kHz 10 kHz
15	10	22	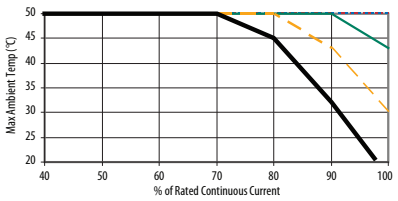
25	20	34	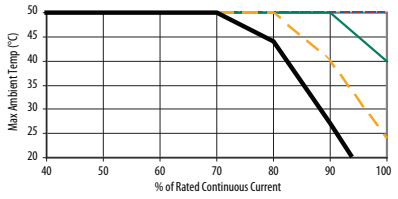
40	30	52	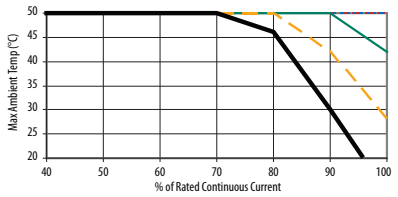
60	50	77 (65)	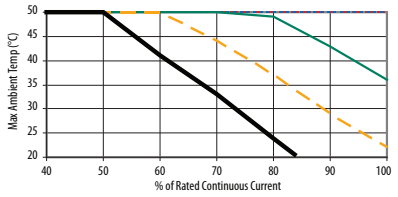
100	75	125 (96)	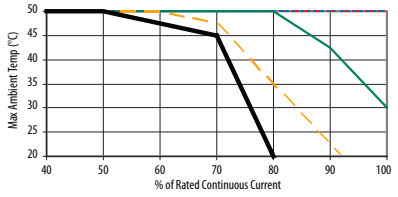
150	125	180 (156)	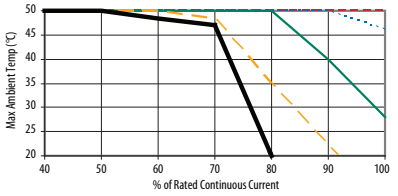
250	200	292 (263)	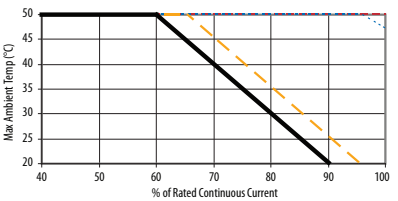

480 Volt Power Rating			Derating
ND Hp	HD Hp	Cont. Amps	2 kHz, 4 kHz, 6 kHz, 8 kHz, 10 kHz
250	250	325 (325)	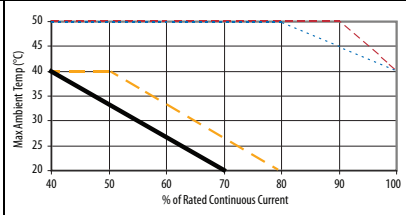
350	300	415 (365)	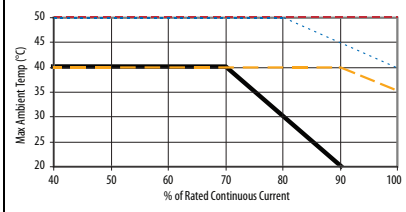
450	400	535 (481)	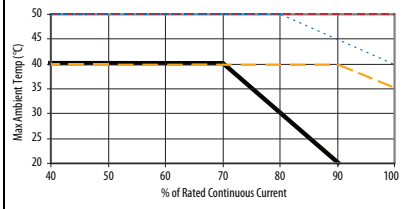
600	500	730 (600)	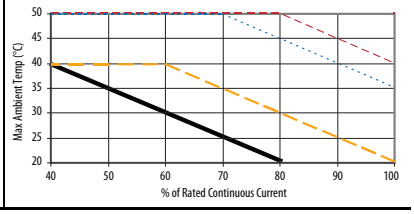

480 Volt Power Rating			Derating
ND Hp	HD Hp	Cont. Amps	2 kHz, 4 kHz, 6 kHz, 8 kHz, 10 kHz
300	250	365 (325)	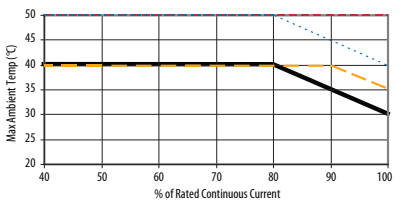
400	350	481 (415)	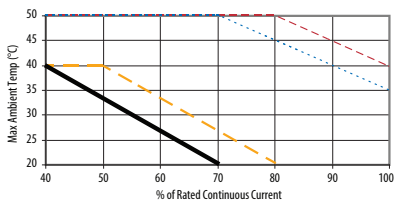
500	450	600 (535)	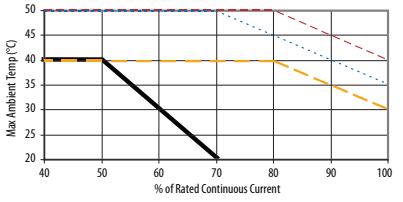
700	600	875 (700)	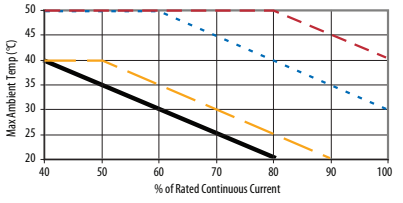

Ambient Temperature/Load – 600V AC

600 Volt Power Rating			Derating — — — 2 kHz ····· 4 kHz ———
ND Hp	**HD Hp**	**Cont. Amps**	
1.0…2.0	0.5…1.0	1.7…2.7	None
5.0	3.0	6.1	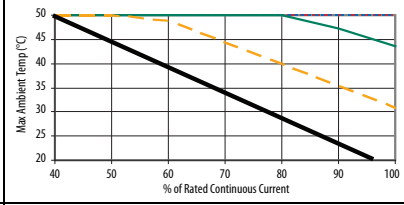
10	7.5	11	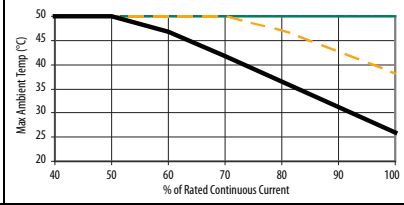
20	15	22	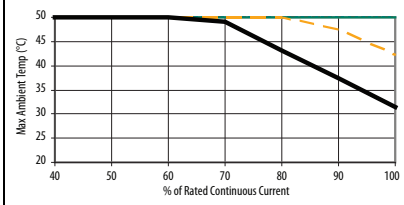
30	25	32	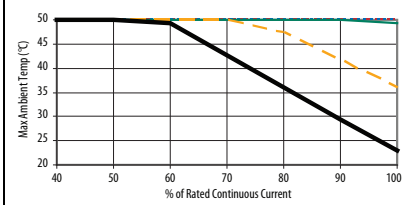
50	40	52	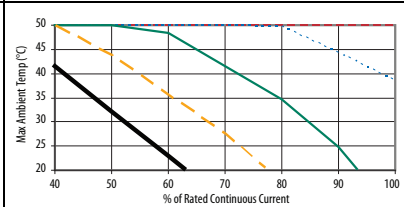
75	60	77 (63)	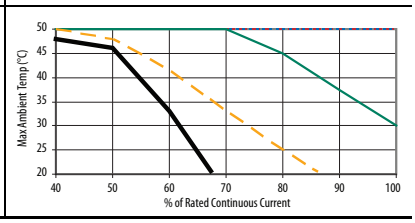

600 Volt Power Rating			Derating — — — 2 kHz ····· 4 kHz ———
ND Hp	**HD Hp**	**Cont. Amps**	
3.0	2.0	3.9	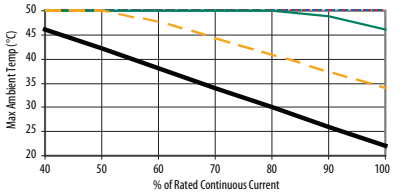
7.5	5.0	9	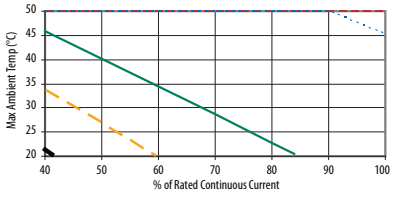
15	10	17	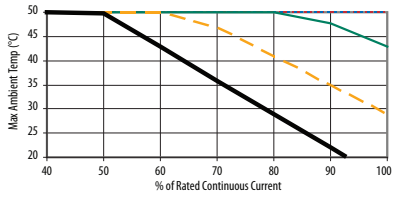
25	20	27	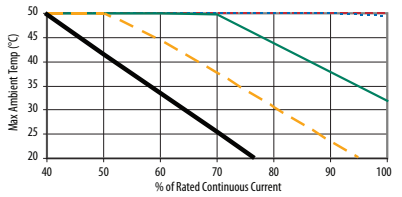
40	30	41	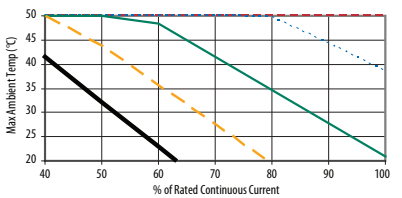
60	50	62	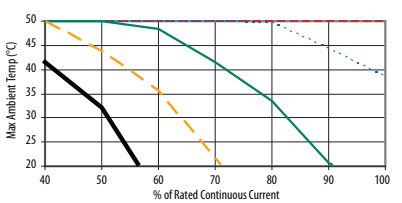
100	75	99 (77)	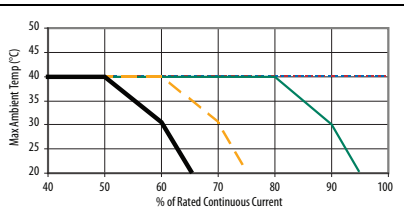

600 Volt Power Rating			Derating
ND Hp	HD Hp	Cont. Amps	2 kHz 4 kHz
125	100	125 (99)	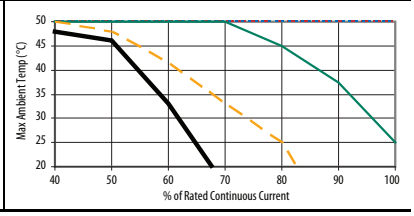

600 Volt Power Rating			Derating
ND Hp	HD Hp	Cont. Amps	2 kHz 4 kHz
150	125	144 (125)	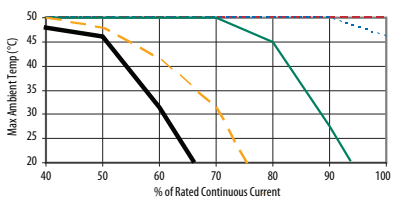

Ambient Temperature/Load – 690V AC

690 Volt Power Rating			Derating
ND kW	HD kW	Cont. Amps	2 kHz 4 kHz 6 kHz 8 kHz 10 kHz
45…55	37.5…45	52…60 (46…52)	None
90	75	98 (82)	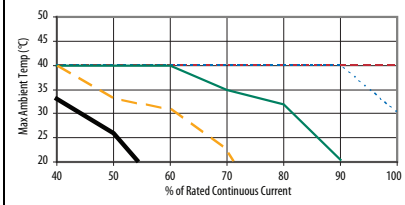
132	110	142 (119)	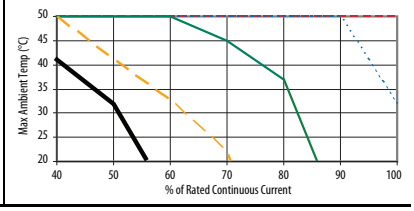

690 Volt Power Rating			Derating
ND kW	HD kW	Cont. Amps	2 kHz 4 kHz 6 kHz 8 kHz 10 kHz
75	55	82 (60)	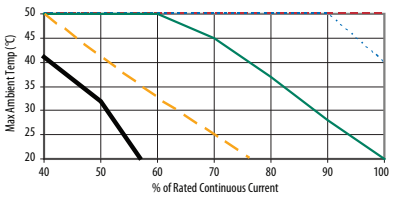
110	90	119 (98)	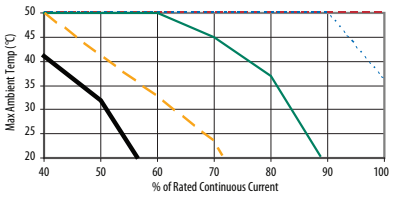

Single-Phase Input Power

The PowerFlex 700 drive is typically used with a three-phase input supply. Single-phase operation is possible with output current derated by 50% (at maximum ambient temperature of 25 °C) of the three-phase ratings.

208/240 Volt Single-Phase AC Input Ratings

240V Single-Phase AC Input						208V Single-Phase AC Input						
Drive Catalog Number	Frame	Hp Rating	Input Amps	Three-Phase Output		Drive Catalog Number	Frame	Hp Rating	Input Amps	Three-Phase Output		Temp.
				V AC	Amps					V AC	Amps	°C
20BB2P2	0	0.25	1.5	0-230	1.1	20BB2P2	0	0.25	1.7	0-200	1.3	25
20BB4P2	0	0.5	2.8	0-230	2.1	20BB4P2	0	0.5	3.2	0-200	2.4	25
20BB6P8	1	1	5.1	0-230	3.4	20BB6P8	1	1	5.9	0-200	3.9	25
20BB9P6	1	1.5	7.2	0-230	4.8	20BB9P6	1	1.5	8.3	0-200	5.5	25
20BB015	1	2.5	11.9	0-230	7.7	20BB015	1	2.5	13.6	0-200	8.8	25
20BB022	1	3.75	17.3	0-230	11	20BB022	1	3.75	19.9	0-200	12.7	25
20BB028	2	5	22.2	0-230	14	20BB028	2	5	25.7	0-200	16.1	25
20BB042	3	7.5	33.4	0-230	21	20BB042	3	7.5	38.5	0-200	24.2	25
20BB052	3	10	41.3	0-230	26	20BB052	3	10	44.6	0-200	28	25
20BB070	4	12.5	55.6	0-230	35	20BB070	4	12.5	62.3	0-200	39.1	25
20BB080	4	15	63.6	0-230	40	20BB080	4	15	73.3	0-200	46	25
20BB104	5	20	84.6	0-230	52	20BB104	5	20	97.9	0-200	60	25
20BB130	5	25	105.7	0-230	65	20BB130	5	25	106.1	0-200	65	25
20BB154	6	30	125.2	0-230	77	20BB154	6	30	144.4	0-200	88.5	25
20BB192	6	37.5	156.1	0-230	96	20BB192	6	37.5	180.3	0-200	110.5	25
20BB260	6	50	211.4	0-230	130	20BB260	6	50	212.1	0-200	130	25

380…480 Volt Single-Phase AC Input Ratings

480V Single-Phase AC Input						380…400V Single-Phase AC Input						
Drive Catalog Number	Frame	Hp Rating	Input Amps	Three-Phase Output		Drive Catalog Number	Frame	kW Rating	Input Amps	Three-Phase Output		Temp.
				V AC	Amps					V AC	Amps	°C
20BD1P1	0	0.25	0.7	0-460	0.6	20BC1P3	0	0.2	1	0-400	0.7	25
20BD2P1	0	0.5	1.4	0-460	1.1	20BC2P1	0	0.4	1.6	0-400	1.1	25
20BD3P4	0	1	2.3	0-460	1.7	20BC3P5	0	0.75	2.7	0-400	1.8	25
20BD5P0	0	1.5	3.4	0-460	2.5	20BC5P0	0	1.1	3.9	0-400	2.5	25
20BD8P0	0	2.5	6	0-460	4	20BC8P7	0	2	6.9	0-400	4.4	25
20BD011	0	3.75	8.2	0-460	5.5	20BC011	0	2.75	9.3	0-400	5.8	25
20BD014	1	5	10.9	0-460	7	20BC015	1	3.75	12.5	0-400	7.7	25
20BD022	1	7.5	17.3	0-460	11	20BC022	1	5.5	17.8	0-400	11	25
20BD027	2	10	21.4	0-460	13.5	20BC030	2	7.5	24.6	0-400	15	25
20BD034	2	12.5	27	0-460	17	20BC037	2	9.25	30.3	0-400	18.5	25
20BD040	3	15	31.8	0-460	20	20BC043	3	11	35.2	0-400	21.5	25
20BD052	3	20	41.3	0-460	26	20BC056	3	15	45.9	0-400	28	25
20BD065	3	25	51.6	0-460	32.5	20BC072	3	18.5	59.7	0-400	36	25
20BD077	4	30	62.6	0-460	38.5	20BC085	4	22.5	70.5	0-400	42.5	25
20BD096	5	37.5	78.1	0-460	48	20BC105	5	27.5	87	0-400	52.5	25
20BD125	5	50	101.6	0-460	62.5	20BC125	5	27.5	103.6	0-400	62.5	25
–	–	–	–	–	–	20BC140	5	37.5	117.4	0-400	70	25
20BD156	6	62.5	126.8	0-460	78	20BC170	6	45	142.6	0-400	85	25
20BD180	6	75	146.4	0-460	90	20BC205	6	55	171.9	0-400	102.5	25
20BD248	6	100	201.6	0-460	124	20BC260	6	66	220.6	0-400	130	25

600…690 Volt Single-Phase AC Input Rating

600V Single-Phase AC Input						690V Single-Phase AC Input						Temp.
Drive Catalog Number	Frame	Hp Rating	Input Amps	Three-Phase Output		Drive Catalog Number	Frame	kW Rating	Input Amps	Three-Phase Output		
				V AC	Amps					V AC	Amps	°C
20BE1P7	0	0.5	1.1	0-575	0.9	–	–	–	–	–	–	25
20BE2P7	0	1	1.8	0-575	1.4	–	–	–	–	–	–	25
20BE3P9	0	1.5	2.6	0-575	2	–	–	–	–	–	–	25
20BE6P1	0	2.5	4.6	0-575	3.1	–	–	–	–	–	–	25
20BE9P0	0	3.75	6.7	0-575	4.5	–	–	–	–	–	–	25
20BE011	1	5	8.5	0-575	5.5	–	–	–	–	–	–	25
20BE017	1	7.5	13.3	0-575	8.5	–	–	–	–	–	–	25
20BE022	2	10	17.5	0-575	11	–	–	–	–	–	–	25
20BE027	2	12.5	21.4	0-575	13.5	–	–	–	–	–	–	25
20BE032	3	15	25.4	0-575	16	–	–	–	–	–	–	25
20BE041	3	20	32.6	0-575	20.5	–	–	–	–	–	–	25
20BE052	3	25	41.3	0-575	26	20BF052	5	22.5	43.1	0-690	26	25
20BE062	4	30	50.4	0-575	31	20BF060	5	27.5	49.9	0-690	30	25
20BE077	5	37.5	62.6	0-575	38.5	20BF082	5	37.5	68.4	0-690	41	25
20BE099	5	50	80.5	0-575	49.5	20BF098	5	45	82	0-690	49	25
20BE125	6	62.5	101.6	0-575	62.5	20BF119	6	55	100	0-690	59.5	25
20BE144	6	75	117.1	0-575	72	20BF142	6	66	120.2	0-690	71	25

Drive, Fuse and Circuit Breaker Ratings

The PowerFlex 700 can be installed with input fuses or an input circuit breaker. National and local industrial safety regulations and/or electrical codes can determine additional requirements for these installations.

The tables on the following pages provide recommended AC line input fuse and circuit breaker information. See Fusing and Circuit Breakers below for UL and IEC requirements. Sizes listed are the recommended sizes based on 40 °C (104 °F) and the U.S. NEC. Other country, state, or local codes can require different ratings. Tables with DC link fuse recommendations for DC input drives are also provided.

Fusing

The recommended fuse types are listed below. If available current ratings do not match those listed in the tables provided, choose the next higher fuse rating.

- IEC – BS88 (British Standard) Parts 1 & 2, EN60269-1, Parts 1 & 2[(1)], type gG or equivalent must be used.
- UL – UL Class CC, T, RK1 or J must be used for Frames 0...6.
  UL Class T, RK1, J, or L must be used for Frames 7...10.

Circuit Breakers

The "non-fuse" listings in the following tables include inverse time circuit breakers, instantaneous trip circuit breakers (motor circuit protectors) and 140M self-protected combination motor controllers (Frames 0...6 only). If one of these is chosen as the desired protection method, the following requirements apply:

- IEC – Both types of circuit breakers and 140M self-protected combination motor controllers (Frames 0...6 only) are acceptable for IEC installations.
- UL – Only inverse time circuit breakers and the specified 140M self-protected combination motor controllers (Frames 0...6 only) are acceptable for UL installations.

(1) Typical designations include, but may not be limited to the following; Parts 1 & 2: AC, AD, BC, BD, CD, DD, ED, EFS, EF, FF, FG, GF, GG, GH.

208 Volt AC Input Protection Devices – Frames 0…6

Drive Catalog Number	Frame	Hp Rating		PWM Freq.	Temp. (11)	Input Ratings		Output Amps			Dual Element Time Delay Fuse		Non-Time Delay Fuse		Circuit Breaker (3)	Motor Circuit Protector (4)	140M Motor Protector with Adjustable Current Range (5)(6)			
		ND	HD	kHz	°C	Amps	kVA	Cont.	1 Min.	3 Sec.	Min. (1)	Max. (2)	Min. (1)	Max. (2)	Max. (8)	Max. (8)	Available Catalog Numbers - 140… (7)			Min. Enclosure Vol. (in.3) (14)
20BB2P2	0	0.5	0.33	4	50	1.9	0.7	2.5	2.8	3.8	3	6	3	10	15	3	M-C2E-B25	M-D8E-B25	–	7269
20BB4P2	0	1	0.75	4	50	3.7	1.3	4.8	5.6	7	6	10	6	17.5	15	7	M-C2E-B63	M-D8E-B63	–	7269
20BB6P8	1	2	1.5	4	50	6.8	2.4	7.8	10.4	13.8	10	15	10	30	30	15	M-C2E-C10	M-D8E-C10	M-F8E-C10	7269
20BB9P6	1	3	2	4	50	9.5	3.4	11	12.1	17	12	20	12	40	40	15	M-C2E-C16	M-D8E-C16	M-F8E-C16	7269
20BB015	1	5	3	4	50	15.7	5.7	17.5	19.3	26.3	20	35	20	70	70	30	M-C2E-C20	M-D8E-C20	M-F8E-C20	7269
20BB022	1	7.5	5	4	50	23	8.3	25.3	27.8	38	30	50	30	100	100	30	–	M-D8E-C25	M-F8E-C25	7269
20BB028	2	10	7.5	4	50	29.6	10.7	32.2	38	50.6	40	70	40	125	125	50	–	–	M-F8E-C32	7269
20BB042	3	15	10	4	50	44.5	16	48.3	53.1	72.5	60	100	60	175	175	70	–	–	M-F8E-C45	13630
20BB052	3	20	15	4	50	51.5	17.1	56	64	86	80	125	80	200	200	100	–	–	–	–
20BB070	4	25	20	4	50	72	25.9	78.2	93	124	90	175	90	300	300	100	–	–	–	–
20BB080	4	30	25	4	50	84.7	30.5	92	117	156	110	200	110	350	350	150	–	–	–	–
20BB104 (12)	5	40	–	4	50	113	40.7	120	132	175	150	250	150	475	350	150	–	–	–	–
		–	30	4	50	84.7	30.5	92	138	175	125	200	125	350	300	150	–	–	–	–
20BB130 (12)	5	50	–	4	50	141	44.1	130	143	175	175	275	175	500	375	250	–	–	–	–
		–	40	4	50	113	35.3	104	156	175	125	225	125	400	300	150	–	–	–	–
20BB154 (12)	6	60	–	4	50	167	60.1	177	195	266	225	350	225	500	500	250	–	–	–	–
		–	50	4	50	141	50.9	150	225	300	200	300	200	500	450	250	–	–	–	–
20BB192 (12)	6	75	–	4	50	208	75	221	243	308	300	450	300	600	600	400	–	–	–	–
		–	60	4	50	167	60.1	177	266	308	225	350	225	500	500	250	–	–	–	–
20BB260 (12)	6	100	–	2	45	255	91.9	260	286	390	300	575	300	750	750	400	–	–	–	–
		–	75	2	50	199	71.7	205	305	410	225	450	225	600	600	400	–	–	–	–

See page 29 for notes.

240 Volt AC Input Protection Devices – Frames 0…6

Drive Catalog Number	Frame	Hp Rating		PWM Freq.	Temp. (11)	Input Ratings		Output Amps			Dual Element Time Delay Fuse		Non-Time Delay Fuse		Circuit Breaker (3)	Motor Circuit Protector (4)	140M Motor Protector with Adjustable Current Range (5)(6)			
		ND	HD	kHz	°C	Amps	kVA	Cont.	1 Min.	3 Sec.	Min. (1)	Max. (2)	Min. (1)	Max. (2)	Max. (8)	Max. (8)	Available Catalog Numbers - 140… (7)			Min. Enclosure Vol. (in.3) (14)
20BB2P2	0	0.5	0.33	4	50	1.7	0.7	2.2	2.4	3.3	3	6	3	10	15	3	M-C2E-B25	M-D8E-B25	–	7269
20BB4P2	0	1	0.75	4	50	3.3	1.4	4.2	4.8	6.4	5	8	5	15	15	7	M-C2E-B63	M-D8E-B63	–	7269
20BB6P8	1	2	1.5	4	50	5.9	2.4	6.8	9	12	10	15	10	25	25	15	M-C2E-C10	M-D8E-C10	M-F8E-C10	7269
20BB9P6	1	3	2	4	50	8.3	3.4	9.6	10.6	14.4	12	20	12	35	35	15	M-C2E-C10	M-D8E-C10	M-F8E-C10	7269
20BB015	1	5	3	4	50	13.7	5.7	15.3	16.8	23	20	30	20	60	60	30	M-C2E-C16	M-D8E-C16	M-F8E-C16	7269
20BB022	1	7.5	5	4	50	19.9	8.3	22	24.2	33	25	50	25	80	80	30	–	M-D8E-C25	M-F8E-C25	7269
20BB028	2	10	7.5	4	50	25.7	10.7	28	33	44	35	60	35	100	100	50	–	–	M-F8E-C32	7269
20BB042	3	15	10	4	50	38.5	16	42	46.2	63	50	90	50	150	150	50	–	–	M-F8E-C45	13630
20BB052	3	20	15	4	50	47.7	19.8	52	63	80	60	100	60	200	200	100	–	–	–	–
20BB070	4	25	20	4	50	64.2	26.7	70	78	105	90	150	90	275	275	100	–	–	–	–
20BB080	4	30	25	4	50	73.2	30.5	80	105	140	100	180	100	300	300	100	–	–	–	–
20BB104 (12)	5	40	–	4	50	98	40.6	104	115	175	125	225	125	400	300	150	–	–	–	–
		–	30	4	50	73	30.5	80	120	160	100	175	100	300	300	100	–	–	–	–
20BB130 (12)	5	50	–	4	50	122	50.7	130	143	175	175	275	175	500	375	250	–	–	–	–
		–	40	4	50	98	40.6	104	156	175	125	225	125	400	300	150	–	–	–	–
20BB154 (12)	6	60	–	4	50	145	60.1	154	169	231	200	300	200	600	450	250	–	–	–	–
		–	50	4	50	122	50.7	130	195	260	175	275	175	500	375	250	–	–	–	–
20BB192 (12)	6	75	–	4	50	180	74.9	192	211	288	225	400	225	600	575	250	–	–	–	–
		–	60	4	50	145	60.1	154	231	308	200	300	200	600	450	250	–	–	–	–
20BB260 (12)	6	100	–	2	45	233	96.7	260	286	390	300	575	300	750	750	300	–	–	–	–
		–	75	2	50	169	70.1	205	305	410	225	450	225	600	600	250	–	–	–	–

See page 29 for notes.

400 Volt AC Input Protection Devices – Frames 0…6

Drive Catalog Number	Frame	kW Rating		PWM Freq.	Temp.	Input Ratings		Output Amps			Dual Element Time Delay Fuse		Non-Time Delay Fuse		Circuit Breaker (3)	Motor Circuit Protector (4)	140M Motor Protector with Adjustable Current Range(5)(6)			
		ND	HD	kHz	°C	Amps	kVA	Cont.	1 Min.	3 Sec.	Min. (1)	Max. (2)	Min. (1)	Max. (2)	Max. (8)	Max. (8)	Available Catalog Numbers - 140… (7)			Min. Enclosure Vol. (in.^{3}) (14)
20BC1P3	0	0.37	0.25	4	50 (11)	1.1	0.77	1.3	1.4	1.9	3	3	3	6	15	3	M-C2E-B16	–	–	7269
20BC2P1	0	0.75	0.55	4	50 (11)	1.8	1.3	2.1	2.4	3.2	3	6	3	8	15	3	M-C2E-B25	M-D8E-B25	–	7269
20BC3P5	0	1.5	0.75	4	50 (11)	3.2	2.2	3.5	4.5	6	6	7	6	12	15	7	M-C2E-B40	M-D8E-B40	–	7269
20BC5P0	0	2.2	1.5	4	50 (11)	4.6	3.2	5	5.5	7.5	6	10	6	20	20	7	M-C2E-B63	M-D8E-B63	–	7269
20BC8P7	0	4	2.2	4	50 (11)	7.9	5.5	8.7	9.9	13.2	15	17.5	15	30	30	15	M-C2E-C10	M-D8E-C10	M-F8E-C10	7269
20BC011	0	5.5	4	4	50 (11)	10.8	7.5	11.5	13	17.4	15	25	15	45	45	15	M-C2E-C16	M-D8E-C16	M-F8E-C16	7269
20BC015	1	7.5	5.5	4	50 (11)	14.4	10	15.4	17.2	23.1	20	30	20	60	60	20	M-C2E-C20	M-D8E-C20	M-F8E-C20	7269
20BC022	1	11	7.5	4	50 (11)	20.6	14.3	22	24.2	33	30	45	30	80	80	30	–	M-D8E-C25	M-F8E-C25	7269
20BC030	2	15	11	4	50 (11)	28.4	19.7	30	33	45	35	60	35	120	120	50	–	–	M-F8E-C32	7269
20BC037	2	18.5	15	4	50 (11)	35	24.3	37	45	60	45	80	45	125	125	50	–	–	M-F8E-C45	7269
20BC043	3	22	18.5	4	50 (11)	40.7	28.2	43	56	74	60	90	60	150	150	60	–	–	–	–
20BC056	3	30	22	4	50 (11)	53	36.7	56	64	86	70	125	70	200	200	100	–	–	–	–
20BC072	3	37	30	4	50 (10)(11)	68.9	47.8	72	84	112	90	150	90	250	250	100	–	–	–	–
20BC085 (12)	4	45	–	4	45 (11)	81.4	56.4	85	94	128	110	200	110	300	300	150	–	–	–	–
		–	37	4	45 (11)	68.9	47.8	72	108	144	90	175	90	275	300	100	–	–	–	–
20BC105 (12)	5	55	–	4	50 (9)	100.5	69.6	105	116	158	125	225	125	400	300	150	–	–	–	–
		–	45	4	50 (9)	81.4	56.4	85	128	170	110	175	110	300	300	150	–	–	–	–
20BC125 (12)	5	55	–	4	50 (9)	121.1	83.9	125	138	163	150	275	150	500	375	250	–	–	–	–
		–	45	4	50 (9)	91.9	63.7	96	144	168	125	200	125	375	375	150	–	–	–	–
20BC140 (12)	5	75	–	4	40 (9)	136	93.9	140	154	190	200	300	200	400	400	250	–	–	–	–
		–	55	4	40 (9)	101	69.6	105	157	190	150	225	150	300	300	150	–	–	–	–
20BC170 (12)	6	90	–	4	50 (9)	164	126	170	187	255	250	375	250	600	500	250	–	–	–	–
		–	75	4	50 (9)	136	103	140	210	280	200	300	200	550	400	250	–	–	–	–
20BC205 (12)	6	110	–	4	40 (9)	199	148	205	220	289	250	450	250	600	600	400	–	–	–	–
		–	90	4	40 (9)	164	126	170	255	313	250	375	250	600	500	250	–	–	–	–
20BC260 (12)	6	132	–	2	45 (9)	255	177	260	286	390	350	550	350	750	750	400	–	–	–	–
		–	110	2	50 (9)	199	138	205	308	410	250	450	250	600	600	400	–	–	–	–

See page 29 for notes.

400 Volt AC Input Protection Devices – Frames 7…10

Drive Catalog Number (12)	Frame	kW Rating		PWM Freq.	Temp. (16)	Input Ratings		Output Amps			Dual Element Time Delay Fuse		Non-Time Delay Fuse		Circuit Breaker (3)	Motor Circuit Protector (4)
		ND	HD	kHz	°C	Amps	kVA	Cont.	1 Min.	3 Sec.	Min. (1)	Max. (2)	Min. (1)	Max. (2)	Max. (8)	Max. (8)
20BC292	7	160		4	40	293	203	292	322	438	375	650	375	850	850	400
			150	4	40	264	183	263	395	526	350	550	350	550	750	400
20BC325	7	180		4	40	326	226	325	358	488	425	700	425	950	950	600
			180	4	40	326	226	325	488	650	425	700	425	950	950	600
20BC365	8	200		2	40	366	253	365	402	548	475	800	475	1000	1000	600
			180	2	40	326	226	325	488	650	425	700	425	950	950	600
20BC415	8	240		2	40	416	288	415	457	623	525	900	525	1200	1200	600
			200	2	40	366	253	365	548	730	475	800	475	1000	1000	600
20BC481	8	280		2	40	483	334	481	530	722	600	1000	600	1400	1400	700
			240	2	40	416	288	415	623	830	525	900	525	1200	1200	600
20BC535	8	300		2	40	537	372	535	589	803	700	1200	700	1600	1600	700
			280	2	40	483	334	481	722	962	600	1000	600	1400	1400	700
20BC600	8	350		2	40	602	417	600	660	900	750	1300	750	1800	1800	800
			300	2	40	537	371	535	803	1070	700	1200	700	1600	1600	700
20BC730	9	400		2	40	702	486	730	803	1095	900	1500	900	2100	2100	900
			350	2	40	602	417	600	900	1200	750	1300	750	1800	1800	800
20BC875	10	500		2	40	877	608	875	963	1313	1100	1900	1100	2600	2600	1200
			400	2	40	877	486	700	1050	1400	900	1500	900	2100	2100	900

See page 29 for notes.

480 Volt AC Input Protection Devices – Frames 0…6

Drive Catalog Number	Frame	Hp Rating		PWM Freq.	Temp.	Input Ratings		Output Amps			Dual Element Time Delay Fuse		Non-Time Delay Fuse		Circuit Breaker (3)	Motor Circuit Protector (4)	140M Motor Protector with Adjustable Current Range (5)(6)			
		ND	HD	kHz	°C	Amps	kVA	Cont.	1 Min.	3 Sec.	Min. (1)	Max. (2)	Min. (1)	Max. (2)	Max. (8)	Max. (8)	Available Catalog Numbers - 140… (7)			Min. Enclosure Vol. (in.3) (14)
20BD1P1	0	0.5	0.33	4	50 (11)	0.9	0.7	1.1	1.2	1.6	3	3	3	6	15	3	M-C2E-B16	–	–	7269
20BD2P1	0	1	0.75	4	50 (11)	1.6	1.4	2.1	2.4	3.2	3	6	3	8	15	3	M-C2E-B25	–	–	7269
20BD3P4	0	2	1.5	4	50 (11)	2.6	2.2	3.4	4.5	6	4	8	4	12	15	7	M-C2E-B40	M-D8E-B40	–	7269
20BD5P0	0	3	2	4	50 (11)	3.9	3.2	5	5.5	7.5	6	10	6	20	20	7	M-C2E-B63	M-D8E-B63	–	7269
20BD8P0	0	5	3	4	50 (11)	6.9	5.7	8	8.8	12	10	15	10	30	30	15	M-C2E-C10	M-D8E-C10	M-F8E-C10	7269
20BD011	0	7.5	5	4	50 (11)	9.5	7.9	11	12.1	16.5	15	20	15	40	40	15	M-C2E-C16	M-D8E-C16	M-F8E-C16	7269
20BD014	1	10	7.5	4	50 (11)	12.5	10.4	14	16.5	22	17.5	30	17.5	50	50	20	M-C2E-C16	M-D8E-C16	M-F8E-C16	7269
20BD022	1	15	10	4	50 (11)	19.9	16.6	22	24.2	33	25	50	25	80	80	30	–	M-D8E-C25	M-F8E-C25	7269
20BD027	2	20	15	4	50 (11)	24.8	20.6	27	33	44	35	60	35	100	100	50	–	–	M-F8E-C32	7269
20BD034	2	25	20	4	50 (11)	31.2	25.9	34	40.5	54	40	70	40	125	125	50	–	–	M-F8E-C45	7269
20BD040	3	30	25	4	50 (11)	36.7	30.5	40	51	68	50	90	50	150	150	50	–	–	M-F8E-C45	13630
20BD052	3	40	30	4	50 (11)	47.7	39.7	52	60	80	60	110	60	200	200	70	–	–	–	–
20BD065	3	50	40	4	50 (11)	59.6	49.6	65	78	104	80	125	80	250	250	100	–	–	–	–
20BD077 (12)	4	60	–	4	50 (11)	72.3	60.1	77	85	116	100	170	100	300	300	100	–	–	–	–
		–	50	4	50 (11)	59.6	49.6	65	98	130	80	125	80	250	250	100	–	–	–	–
20BD096 (12)	5	75	–	4	50 (9)	90.1	74.9	96	106	144	125	200	125	350	350	125	–	–	–	–
		–	60	4	50 (9)	72.3	60.1	77	116	154	100	170	100	300	300	100	–	–	–	–
20BD125 (12)	5	100	–	4	50 (9)	117	97.6	125	138	163	150	250	150	500	375	150	–	–	–	–
		–	75	4	50 (9)	90.1	74.9	96	144	168	125	200	125	350	350	125	–	–	–	–
20BD156 (12)	6	125	–	4	50 (9)	147	122	156	172	234	200	350	200	600	450	250	–	–	–	–
		–	100	4	50 (9)	131	109	125	188	250	175	250	175	500	375	250	–	–	–	–
20BD180 (12)	6	150	–	4	50 (9)	169	141	180	198	270	225	400	225	600	500	250	–	–	–	–
		–	125	4	50 (9)	147	122	156	234	312	200	350	200	600	450	250	–	–	–	–
20BD248 (12)	6	200	–	2	45 (9)	233	194	248	273	372	300	550	300	700	700	400	–	–	–	–
		–	150	2	50 (9)	169 (17)	141	180	270	360	225	400	225	600	500	250	–	–	–	–

See page 29 for notes.

480 Volt AC Input Protection Devices – Frames 7…10

Drive Catalog Number (12)	Frame	Hp Rating		PWM Freq.	Temp. (16)	Input Ratings		Output Amps			Dual Element Time Delay Fuse		Non-Time Delay Fuse		Circuit Breaker (3)	Motor Circuit Protector (4)
		ND	HD	kHz	°C	Amps	kVA	Cont.	1 Min.	3 Sec.	Min. (1)	Max. (2)	Min. (1)	Max. (2)	Max. (8)	Max. (8)
20BD292	7	250		4	40	281	233	292	322	438	375	650	375	850	850	400
			200	4	40	253	210	263	395	526	350	550	350	550	750	400
20BD325	7	250		4	40	313	260	325	358	488	425	700	425	950	950	600
			250	4	40	313	260	325	488	650	425	700	425	950	950	600
20BD365	8	300		2	40	351	292	365	402	548	475	800	475	1000	1000	600
			250	2	40	313	260	325	488	650	425	700	425	950	950	600
20BD415	8	350		2	40	399	331	415	457	623	525	900	525	1200	1200	600
			300	2	40	351	291	365	548	730	475	800	475	1000	1000	600
20BD481	8	400		2	40	462	384	481	530	722	600	1000	600	1400	1400	700
			350	2	40	399	331	415	623	830	525	900	525	1200	1200	600
20BD535	8	450		2	40	514	427	535	589	803	700	1200	700	1600	1600	700
			400	2	40	462	384	481	722	962	600	1000	600	1400	1400	700
20BD600	8	500		2	40	577	479	600	660	900	750	1300	750	1800	1800	800
			450	2	40	514	427	535	803	1070	700	1200	700	1600	1600	700
20BD730	9	600		2	40	673	559	730	803	1095	900	1500	900	2100	2100	900
			500	2	40	577	479	600	900	1200	750	1300	750	1800	1800	800
20BD875	10	700		2	40	841	699	875	963	1313	1100	1900	1100	2600	2600	1200
			600	2	40	673	559	700	1050	1400	900	1500	900	2100	2100	900

See page 29 for notes.

600 Volt AC Input Protection Devices – Frames 0…6 [13]

Drive Catalog Number	Frame	Hp Rating		PWM Freq.	Temp. [11]	Input Ratings		Output Amps			Dual Element Time Delay Fuse		Non-Time Delay Fuse		Circuit Breaker [3]	Motor Circuit Protector [4]	140M Motor Protector with Adjustable Current Range [5][6]			
		ND	HD	kHz	°C	Amps	kVA	Cont.	1 Min.	3 Sec.	Min. [1]	Max. [2]	Min. [1]	Max. [2]	Max. [8]	Max. [8]	Available Catalog Numbers - 140… [7]			Min. Enclosure Vol. (in.^{3}) [14]
20BE1P7	0	1	0.5	4	50	1.3	1.4	1.7	2	2.6	2	4	2	6	15	3	M-C2E-B16	–	–	7269
20BE2P7	0	2	1	4	50	2.1	2.1	2.7	3.6	4.8	3	6	3	10	15	3	M-C2E-B25	–	–	7269
20BE3P9	0	3	2	4	50	3	3.1	3.9	4.3	5.9	6	9	6	15	15	7	M-C2E-B40	M-D8E-B40	–	7269
20BE6P1	0	5	3	4	50	5.3	5.5	6.1	6.7	9.2	9	12	9	20	20	15	–	M-D8E-B63	–	7269
20BE9P0	0	7.5	5	4	50	7.8	8.1	9	9.9	13.5	10	20	10	35	30	15	–	M-D8E-C10	M-F8E-C10	7269
20BE011	1	10	7.5	4	50	9.9	10.2	11	13.5	18	15	25	15	40	40	15	–	M-D8E-C10	M-F8E-C10	7269
20BE017	1	15	10	4	50	15.4	16	17	18.7	25.5	20	40	20	60	50	20	–	M-D8E-C16	M-F8E-C16	7269
20BE022	2	20	15	4	50	20.2	21	22	25.5	34	30	50	30	80	80	30	–	–	M-F8E-C25	7269
20BE027	2	25	20	4	50	24.8	25.7	27	33	44	35	60	35	100	100	50	–	–	M-F8E-C25	7269
20BE032	3	30	25	4	50	29.4	30.5	32	40.5	54	40	70	40	125	125	50	–	–	M-F8E-C32	13630
20BE041	3	40	30	4	50	37.6	39.1	41	48	64	50	90	50	150	150	100	–	–	–	–
20BE052	3	50	40	4	50	47.7	49.6	52	61.5	82	60	110	60	200	200	100	–	–	–	–
20BE062	4	60	50	2	50	58.2	60.5	62	78	104	80	125	80	225	225	100	–	–	–	–
20BE077 [12]	5	75	–	2	50 [9]	72.3	75.1	77	85	116	90	150	90	300	300	100	–	–	–	–
		–	60	2	50 [9]	58.2	60.5	63	94	126	90	125	90	250	250	100	–	–	–	–
20BE099 [12]	5	100	–	2	40 [9]	92.9	96.6	99	109	126	125	200	125	375	375	150	–	–	–	–
		–	75	2	40 [9]	72.3	75.1	77	116	138	100	175	100	300	300	100	–	–	–	–
20BE125 [12]	6	125	–	2	50 [9]	117	122	125	138	188	150	250	150	375	375	250	–	–	–	–
		–	100	2	50 [9]	93	96.6	99	149	198	125	200	125	375	375	150	–	–	–	–
20BE144 [12]	6	150	–	2	50 [9]	135	141	144	158	216	175	300	175	400	400	250	–	–	–	–
		–	125	2	50 [9]	117	122	125	188	250	150	275	150	375	375	250	–	–	–	–

See page 29 for notes.

690 Volt AC Input Protection Devices – Frames 0…6 [13]

Drive Catalog Number [12]	Frame	kW Rating		PWM Freq.	Temp. [11]	Input Ratings		Output Amps			Dual Element Time Delay Fuse		Non-Time Delay Fuse		Circuit Breaker [3]	Motor Circuit Protector [4]
		ND	HD	kHz	°C	Amps	kVA	Cont.	1 Min.	3 Sec.	Min. [1]	Max. [2]	Min. [1]	Max. [2]	Max. [8]	Max. [8]
20BF052	5	45	–	4	50 [9]	46.9	56.1	52	57	78	60	110	60	175	175	–
		–	37.5	4	50 [9]	40.1	48	46	69	92	50	90	50	150	150	–
20BF060	5	55	–	4	50 [9]	57.7	68.9	60	66	90	80	125	80	225	225	–
		–	45	4	50 [9]	46.9	56.1	52	78	104	60	110	60	175	175	–
20BF082	5	75	–	2	50 [9]	79	94.4	82	90	123	100	200	100	375	375	–
		–	55	2	50 [9]	57.7	68.9	60	90	120	80	125	80	225	225	–
20BF098	5	90	–	2	40 [9]	94.7	113	98	108	127	125	200	125	375	375	–
		–	75	2	40 [9]	79	94.4	82	123	140	100	200	100	375	375	–
20BF119	6	110	–	2	50 [9]	115	137	119	131	179	150	250	150	400	–	–
		–	90	2	50 [9]	94.7	113	98	147	196	125	200	125	375	–	–
20BF142	6	132	–	2	50 [9]	138	165	142	156	213	175	300	175	450	–	–
		–	110	2	50 [9]	115	137	119	179	238	150	250	150	400	–	–

See page 29 for notes.

Notes

(1) Minimum protection device size is the lowest rated device that supplies maximum protection without nuisance tripping.

(2) Maximum protection device size is the highest rated device that supplies drive protection. For US NEC, minimum size is 125% of motor FLA. Ratings shown are maximum.

(3) Circuit Breaker - inverse time breaker. For US NEC, minimum size is 125% of motor FLA. Ratings shown are maximum.

(4) Motor Circuit Protector - instantaneous trip circuit breaker. For US NEC minimum size is 125% of motor FLA. Ratings shown are maximum.

(5) Bulletin 140M with adjustable current range must have the current trip set to the minimum range that the device will not trip.

(6) Manual Self-Protected (Type E) Combination Motor Controller, UL listed for 208 Wye or Delta, 240 Wye or Delta, 480Y/277 or 600Y/ 347. Not UL listed for use on 480V or 600V Delta/Delta, corner ground, or high-resistance ground systems.

(7) The AIC ratings of the Bulletin 140M Motor Protector Circuit Breakers can vary. See Bulletin 140M Motor Protection Circuit Breakers Application Ratings.

(8) Maximum allowable rating by US NEC. Exact size must be chosen for each installation.

(9) UL Type 12/IP54 (flange mount) heat sink ambient temperature rating is 40° C/ambient of unprotected drive portion (inside enclosure) is 55° C. The ambient temperature for the UL Type 12/IP54 stand-alone drives is 40° C.

(10) Must remove top label and vent plate, drive enclosure rating is IP00, NEMA / UL Type Open.

(11) Frames 0…4 temperature rating is for NEMA / UL Type Open. The adhesive top label must be removed to operate drive at this temperature. Frames 5 & 6 do not have a top label.

(12) Drives have dual current ratings; one for normal duty applications, and one for heavy duty applications. The drive can be operated at either rating.

(13) Note: 600V class drives below 77 Amps (Frames 0…4) are declared to meet the Low Voltage Directive. It is the responsibility of the user to determine compliance to the EMC directive.

(14) When using a Manual Self-Protected (Type E) Combination Motor Controller, the drive must be installed in a ventilated or non-ventilated enclosure with the minimum volume specified in this column. Application specific thermal considerations can require a larger enclosure.

(15) Frame 7…10 drives are CE Certified for use with 400V AC and 480V AC center grounded neutral power supply systems only. It is the responsibility of the user to determine compliance to the EMC directive.

(16) Temperature rating is for IP20, NEMA / UL Type 1. For IP00, NEMA Type Open the temperature rating is 65 °C for the control board and 40 °C for the heat sink entry air.

(17) Input current on the drive can be lower than the output current due to the power factor correction in the drive.

325 Volt DC Input Protection Devices – Frames 0…6

Drive Catalog Number	Frame	Hp Rating		PWM Freq.	Temp. (1)	DC Input Ratings	Output Amps			Fuse	Non-Time Delay Fuse (2)(11)
		ND	HD	kHz	°C	Amps	Cont.	1 Min.	3 Sec.		
20BB2P2	0	0.5	0.33	4	50	2	2.2	2.4	3.3	5	JKS-5
20BB4P2	0	1	0.75	4	50	3.8	4.2	4.8	6.4	10	JKS-10
20BB6P8	1	2	1.5	4	50	6.9	6.8	9	12	15	HSJ15
20BB9P6	1	3	2	4	50	9.7	9.6	10.6	14.4	20	HSJ20
20BB015	1	5	3	4	50	16	15.3	16.8	23	30	HSJ30
20BB022	1	7.5	5	4	50	23.3	22	24.2	33	45	HSJ45
20BB028	2	10	7.5	4	50	30	28	33	44	60	HSJ60
20BB042	3	15	10	4	50	45	42	46.2	63	90	HSJ90
20BB052	3	20	15	4	50	55	52	63	80	100	HSJ100
20BB070	4	25	20	4	50	75.3	70	78	105	150	HSJ150
20BB080	4	30	25	4	50	86.8	80	105	140	175	HSJ175
20BN104 (3)	5	40	–	4	50	114.1	104	115	175	200	HSJ200
		–	30	4	50	85.8	80	120	160	200	HSJ200
20BN130 (3)	5	50	–	4	50	142.6	130	143	175	200	HSJ200
		–	40	4	50	114.1	104	156	175	200	HSJ200
20BN154 (3)	6	60	–	4	50	169	154	169	231	300	HSJ300
		–	50	4	50	142.6	130	195	260	300	HSJ300
20BN192 (3)	6	75	–	4	50	210.6	192	211	288	350	HSJ350
		–	60	4	50	169	154	231	308	350	HSJ350
20BN260 (3)	6	100	–	2	45	285.3	260	286	390	400	HSJ400
		–	75	2	50	210.6	205	305	410	400	HSJ400

See page 32 for notes.

540 Volt DC Input Protection Devices – Frames 0…6

Drive Catalog Number	Frame	kW Rating		PWM Freq.	Temp.[1]	DC Input Ratings	Output Amps			Fuse	Non-Time Delay Fuse[2][11]
		ND	HD	kHz	°C	Amps	Cont.	1 Min.	3 Sec.		
20BC1P3	0	0.37	0.25	4	50	1.3	1.3	1.4	1.9	3	JKS-3
20BC2P1	0	0.75	0.55	4	50	2.1	2.1	2.4	3.2	6	JKS-6
20BC3P5	0	1.5	0.75	4	50	3.7	3.5	4.5	6	8	JKS-8
20BC5P0	0	2.2	1.5	4	50	5.3	5	5.5	7.5	10	JKS-10
20BC8P7	0	4	3	4	50	9.3	8.7	9.9	13.2	15	HSJ15
20BC011	0	5.5	4	4	50	12.6	11.5	13	17.4	20	HSJ20
20BC015	1	7.5	5.5	4	50	16.8	15.4	17.2	23.1	25	HSJ25
20BC022	1	11	7.5	4	50	24	22	24.2	33	40	HSJ40
20BC030	2	15	11	4	50	33.2	30	33	45	50	HSJ50
20BC037	2	18.5	15	4	50	40.9	37	45	60	70	HSJ70
20BC043	3	22	18.5	4	50	47.5	43	56	74	90	HSJ90
20BC056	3	30	22	4	50	61.9	56	64	86	100	HSJ100
20BC072	3	37	30	4	50[7]	80.5	72	84	112	125	HSJ125
20BC085[3][5]	4	45	–	4	45	95.1	85	94	128	150	HSJ150
		–	37	4	45	80.5	72	108	144	175	HSJ175
20BH105[3][5]	5	55	–	4	50[4]	120.2	105	116	158	175	HSJ175
		–	45	4	50[4]	95.1	85	128	170	200	HSJ200
20BH140[3][5]	5	75	–	4	40[4]	159	140	154	190	225	HSJ225
		–	55	4	40[4]	120.2	105	158	190	225	HSJ225
20BH170[3][5]	6	90	–	4	50[4]	192.3	170	187	255	300	HSJ300
		–	75	4	50[4]	159	140	210	280	300	HSJ300
20BH205[3][5]	6	110	–	4	40[4]	226	205	220	289	350	HSJ350
		–	90	4	40[4]	192.3	170	255	313	350	HSJ350
20BH260[3][5]	6	132	–	2	45[4]	298	260	286	390	500	HSJ500
		–	110	2	50[4]	226	205	305	410	500	HSJ500

See page 32 for notes.

540 Volt DC Input with Precharge – Frames 7…10

Drive Catalog Number	Frame	kW Rating		PWM Freq.	Temp.	DC Input Ratings		Output Amps			Fuse	Non-Time Delay Fuse[2][11]
		ND	HD	kHz	°C	Amps	kW	Cont.	1 Min.	3 Sec.		
20BP292	7	160		4	40	342	185	292	322	438	500	170M6608[10]
			150	4	40	309	166	263	395	526	630	170M6610[10]
20BP325	7	180		4	40	381	206	325	358	488	630	170M6610[10]
			180	4	40	381	206	325	488	650	800	170M6612[10]
20BP365	8	200		2	40	428	231	365	402	548	630	170M6610[10]
			180	2	40	381	206	325	488	650	800	170M6612[10]
20BP415	8	240		2	40	487	262	415	457	623	800	170M6612[10]
			200	2	40	428	231	365	548	730	900	170M6613[10]
20BP481	8	280		2	40	564	304	481	530	722	900	170M6613[10]
			240	2	40	487	262	415	623	830	1000	170M6614[10]
20BP535	8	300		2	40	627	338	535	589	803	1000	170M6614[10]
			280	2	40	564	304	481	722	962	1100	170M6615[10]
20BP600	8	350		2	40	703	379	600	660	900	1100[8]	170M6615[10]
			300	2	40	627	338	535	803	1070	1200[8]	170M6616[10]
20BP730	9	400		2	40	855	461	730	803	1095	1200[9]	170M6616[10]
			350	2	40	703	379	600	900	1200	1400[9]	170M6617[10]
20BH875 No Precharge	10	500		2	40	1025	553	875	963	1313	2 x 800	170M6612[10]
			400	2	40	820	443	700	1050	1400	2 x 800	170M6612[10]

See page 32 for notes.

650 Volt DC Input Protection Devices – Frames 0…6

Drive Catalog Number	Frame	Hp Rating		PWM Freq.	Temp.[1]	DC Input Ratings	Output Amps			Fuse	Non-Time Delay Fuse[2][11]
		ND	HD	kHz	°C	Amps	Cont.	1 Min.	3 Sec.		
20BD1P1	0	0.5	0.33	4	50	1.0	1.1	1.2	1.6	3	JKS-3
20BD2P1	0	1	0.75	4	50	1.9	2.1	2.4	3.2	6	JKS-6
20BD3P4	0	2	1.5	4	50	3.0	3.4	4.5	6.0	6	JKS-6
20BD5P0	0	3	2	4	50	4.5	5.0	5.5	7.5	10	JKS-10
20BD8P0	0	5	3	4	50	8.1	8.0	8.8	12	15	HSJ15
20BD011	0	7.5	5	4	50	11.1	11	12.1	16.5	20	HSJ20
20BD014	1	10	7.5	4	50	14.7	14	16.5	22	30	HSJ30
20BD022	1	15	10	4	50	23.3	22	24.2	33	40	HSJ40
20BD027	2	20	15	4	50	28.9	27	33	44	50	HSJ50
20BD034	2	25	20	4	50	36.4	34	40.5	54	60	HSJ60
20BD040	3	30	25	4	50	42.9	40	51	68	80	HSJ80
20BD052	3	40	30	4	50	55.7	52	60	80	90	HSJ90
20BD065	3	50	40	4	50	69.7	65	78	104	100	HSJ100
20BD077[3]	4	60	–	4	50	84.5	77	85	116	150	HSJ150
		–	50	4	50	69.7	65	98	130	150	HSJ150
20BR096[3][6]	5	75	–	4	50[4]	105.3	96	106	144	175	HSJ175
		–	60	4	50[4]	84.5	77	116	154	175	HSJ175
20BR125[3][6]	5	100	–	4	50[4]	137.1	125	138	163	200	HSJ200
		–	75	4	50[4]	105.3	96	144	168	200	HSJ200
20BR156[3][6]	6	125	–	4	50[4]	171.2	156	172	234	300	HSJ300
		–	100	4	50[4]	137.1	125	188	250	300	HSJ300
20BR180[3][6]	6	150	–	4	50[4]	204	180	198	270	400	HSJ400
		–	125	4	50[4]	171.2	156	234	312	400	HSJ400
20BR248[3][6]	6	200	–	2	45[4]	272	248	273	372	400	HSJ400
		–	150	2	50[4]	204	180	270	360	400	HSJ400

See page 32 for notes.

650 Volt DC Input with Precharge – Frames 7…10

Drive Catalog Number	Frame	Hp Rating		PWM Freq.	Temp.	DC Input Ratings		Output Amps			Fuse	Non-Time Delay Fuse[2][11]
		ND	HD	kHz	°C	Amps	kW	Cont.	1 Min.	3 Sec.		
20BR292	7	250		4	40	328	212	292	322	438	500	170M6608[10]
			200	4	40	296	191	263	395	526	630	170M6610[10]
20BR325	7	250		4	40	365	236	325	358	488	550	170M6609[10]
			250	4	40	365	236	325	488	650	800	170M6612[10]
20BR365	8	300		2	40	410	265	365	402	548	630	170M6610[10]
			250	2	40	365	236	325	488	650	800	170M6612[10]
20BR415	8	350		2	40	466	302	415	457	623	700	170M6611[10]
			300	2	40	410	265	365	548	730	800	170M6612[10]
20BR481	8	400		2	40	540	350	481	530	722	800	170M6619[10]
			350	2	40	466	302	415	623	830	900	170M6613[10]
20BR535	8	450		2	40	601	389	535	589	803	900	170M6613[10]
			400	2	40	540	350	481	722	962	1000	170M6614[10]
20BR600	8	500		2	40	674	436	600	660	900	1000[8]	170M6614[10]
			450	2	40	601	389	535	803	1070	1200[8]	170M6616[10]
20BR730	9	600		2	40	820	533	730	803	1095	1200[9]	170M6616[10]
			500	2	40	674	436	600	900	1200	1400[9]	170M6617[10]
20BJ875 No Precharge	10	700		2	40	983	636	875	963	1313	1400	2 x 170M6611[10]
			600	2	40	786	509	700	1050	1400	1600	2 x 170M6612[10]

See page 32 for notes.

810 Volt DC Input Protection Devices – Frames 0…6

Drive Catalog Number	Frame	Hp Rating		PWM Freq.	Temp.[1]	DC Input Ratings	Output Amps			Fuse	Non-Time Delay Fuse[2][11]
		ND	HD	kHz	°C	Amps	Cont.	1 Min.	3 Sec.		
20BE1P7	0	1	0.75	4	50	1.5	1.7	2	2.6	3	JKS-3
20BE2P7	0	2	1.5	4	50	2.4	2.7	3.6	4.8	6	JKS-6
20BE3P9	0	3	2	4	50	3.5	3.9	4.3	5.9	6	JKS-6
20BE6P1	0	5	3	4	50	6.2	6.1	6.7	9.2	10	JKS-10
20BE9P0	0	7.5	5	4	50	9.1	9	9.9	13.5	15	HSJ15
20BE011	0	10	7.5	4	50	11.5	11	13.5	18	20	HSJ20
20BE017	1	15	10	4	50	18	17	18.7	25.5	30	HSJ30
20BE022	2	20	15	4	50	23.6	22	25.5	34	40	HSJ40
20BE027	2	25	20	4	50	29	27	33	44	50	HSJ50
20BE032	3	30	25	4	50	34.3	32	40.5	54	60	HSJ60
20BE041	3	40	30	4	50	43.9	41	48	64	70	HSJ70
20BE052	3	50	40	4	50	55.7	52	61.5	82	90	HSJ90
20BE062	4	60	50	2	50	68	62	78	104	125	HSJ125
20BT099[3]	5	100	–	2	40	108.6	99	109	126	150	HSJ150
		–	75	2	40	84.5	77	116	138	150	HSJ150
20BT144[3]	6	150	–	2	50	158	144	158	216	250	HSJ250
		–	125	2	50	137.1	125	188	250	250	HSJ250

932 Volt DC Input Protection Devices – Frames 0…6

Drive Catalog Number	Frame	kW Rating		PWM Freq.	Temp.[1]	DC Input Ratings	Output Amps			Fuse	Non-Time Delay Fuse[2][11]
		ND	HD	kHz	°C	Amps	Cont.	1 Min.	3 Sec.		
20BW052[3]	5	45	–	2	50[4]	58.2	52	57	78	100	170M3691
		–	37.5	2	50[4]	46.9	46	69	92	100	170M3691
20BW098[3]	5	90	–	2	50[4]	110.7	98	108	127	160	170M3693
		–	75	2	50[4]	92.3	82	123	140	160	170M3693
20BW142[3]	6	132	–	2	50[4]	162.2	142	156	213	250	170M3695
		–	110	2	40[4]	134.9	119	179	238	315	170M3696

Notes

(1) Frames 0…4 temperature rating is for NEMA / UL Type Open. The adhesive top label must be removed to operate drive at this temperature. Frames 5 & 6 do not have a top label.

(2) The power source to common bus inverters must be derived from AC voltages 600V or less, as defined in NFPA70; Art 430-18 (NEC). Battery supplies or MG sets are not included. The following devices were validated to break current of the derived power DC Bus.
Disconnects: Allen-Bradley Bulletin 1494, 30-400A; 194, 30-400A; or ABB OESA, 600 & 800A; OESL, all sizes.
Fuses: Bussmann Type JKS, all sizes; Type 170M, Case Sizes 1, 2 and 3, or Ferraz Shawmut Type HSJ, all sizes. For any other devices, please contact the factory.

(3) Drives have dual current ratings; one for normal duty applications, and one for heavy duty applications. The drive can be operated at either rating.

(4) UL Type 12/IP54 (flange mount) heatsink ambient temperature rating is 40 °C/ambient of unprotected drive portion (inside enclosure) is 55 °C. The ambient temperature for the UL Type 12/IP54 stand-alone drives is 40 °C.

(5) Also applies to "P" voltage class.

(6) Also applies to "J" voltage class.

(7) Must remove top label and vent plate, drive enclosure rating is IP00, NEMA / UL Type Open.

(8) Two 630A Bussmann 170M6608 can also be used.

(9) Two 700A Bussmann 170M6611 can also be used.

(10) Bussmann or equivalent.

(11) See Fuse Certification and Test Data in PowerFlex AC Drives in Common Bus Configurations Application Guidelines, publication DRIVES-AT002, for fuse self-certification and test data for Bussmann 170M and JKS fuses recommended for the DC bus fusing.

Cable Recommendations

Power Cable Types Acceptable for 200…600 Volt Installations

A variety of cable types are acceptable for drive installations. For many installations, unshielded cable is adequate, provided it can be separated from sensitive circuits. As an approximate guide, allow a spacing of 0.3 meters (1 foot) for every 10 meters (32.8 feet) of length. In all cases, long parallel runs must be avoided. Do not use cable with an insulation thickness less than or equal to 15 mils (0.4mm/0.015 in.). Use Copper wire only. Wire gauge requirements and recommendations are based on 75° C. Do not reduce wire gauge when using higher temperature wire. See table below.

Location	Rating/Type	Description
Standard (Option 1)	600V, 90° C (194° F) XHHW2/RHW-2 Anixter B209500-B209507, Belden 29501-29507, or equivalent	• Four tinned copper conductors with XLP insulation. • Copper braid/aluminum foil combination shield and tinned copper drain wire. • PVC jacket.
Standard (Option 2)	Tray rated 600V, 90° C (194° F) RHH/RHW-2 Anixter OLF-7xxxxx or equivalent	• Three tinned copper conductors with XLPE insulation. • 5 mil single helical copper tape (25% overlap min.) with three bare copper grounds in contact with shield. • PVC jacket.
Class I & II; Division I & II	Tray rated 600V, 90° C (194° F) RHH/RHW-2 Anixter 7V-7xxxx-3G or equivalent	• Three bare copper conductors with XLPE insulation and impervious corrugated continuously welded aluminum armor. • Black sunlight resistant PVC jacket overall. • Three copper grounds on #10 AWG and smaller.

Unshielded

THHN, THWN or similar wire is acceptable for drive installation in dry environments provided adequate free air space and/or conduit fill rates limits are provided. **Do not use THHN or similarly coated wire in wet areas**. Any wire chosen must have a minimum insulation thickness of 15 Mils and should not have large variations in insulation concentricity.

Shielded/Armored Cable

Shielded cable contains all of the general benefits of multi-conductor cable with the added benefit of a copper braided shield that can contain much of the noise generated by a typical AC drive. Strong consideration for shielded cable should be given in installations with sensitive equipment such as weigh scales, capacitive proximity switches and other devices that may be affected by electrical noise in the distribution system. Applications with large numbers of drives in a similar location, imposed EMC regulations or a high degree of communications/ networking are also good candidates for shielded cable.

Shielded cable may also help reduce shaft voltage and induced bearing currents for some applications. In addition, the increased impedance of shielded cable may help extend the distance that the motor can be located from the drive without the addition of motor protective devices such as terminator networks.

Consideration should be given to all of the general specifications dictated by the environment of the installation, including temperature, flexibility, moisture characteristics and chemical resistance. In addition, a braided shield should be included and be specified by the cable manufacturer as having coverage of at least 75%. An additional foil shield can greatly improve noise containment.

A good example of recommended cable is Belden® 295xx (xx determines gauge). This cable has four (4) XLPE insulated conductors with a 100% coverage foil and an 85% coverage copper braided shield (with drain wire) surrounded by a PVC jacket.

Other types of shielded cable are available, but the selection of these types may limit the allowable cable length. Particularly, some of the newer cables twist 4 conductors of THHN wire and wrap them tightly with a foil shield. This construction can greatly increase the cable charging current required and reduce the overall drive performance. Unless specified in the individual distance tables as tested with the drive, these cables are not recommended and their performance against the lead length limits supplied is not known.

Maximum Motor Cable Lengths

For information on maximum motor cable lengths, refer to the Wiring and Grounding Guidelines for Pulse Width Modulated (PWM) AC Drives, publication DRIVES-IN001.

Power Wiring

The PowerFlex 700 has the following built in protective features to help simplify installation:

- Ground fault protection during start up and running ensures reliable operation
- Electronic motor overload protection increases motor life
- Removable MOV to ground and common mode capacitors to ground ensure compatibility with ungrounded systems. These devices must be disconnected if the drive is installed on a resistive grounded distribution system, an ungrounded distribution system, a B phase grounded distribution system or impedance grounded system. These devices must also be disconnected if the drive power source is a regenerative unit (such as a bus supply and brake) or is DC fed from an active converter.
- 6 kV transient protection provides increased robustness for 380...480V system voltages

There are many other factors that must be considered for optimal performance in any given application. The block diagram below highlights the primary installation considerations. Consult the Wiring and Grounding Guidelines for Pulse Width Modulated (PWM) AC Drives, publication DRIVES-IN001 for detailed recommendations on input power conditioning, dynamic braking, reflected wave protection and motor cable types.

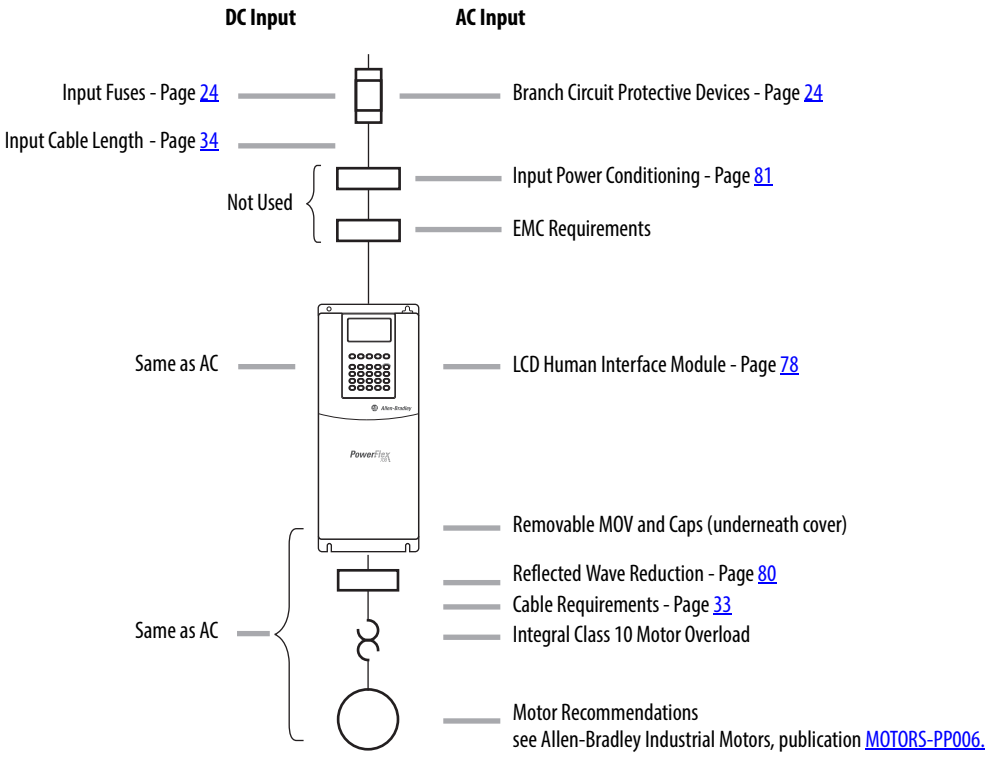

Terminal Blocks

Terminal Block Specifications

Refer to pages 36...38 for typical locations.

No.	Name	Frame	Description	Wire Size Range - See Note (3)		Torque	
				Maximum	Minimum	Maximum	Recommended
❶	Power Terminal Block	0 & 1	Input power and motor connections	4.0 mm^2 (12 AWG)	0.5 mm^2 (22 AWG)	1.7 N•m (15 lb.•in.)	0.8 N•m (7 lb.•in.)
		2	Input power and motor connections	10.0 mm^2 (8 AWG)	0.8 mm^2 (18 AWG)	1.7 N•m (15 lb.•in.)	1.4 N•m (12 lb.•in.)
		3	Input power and motor connections	25.0 mm^2 (3 AWG)	2.5 mm^2 (14 AWG)	3.6 N•m (32 lb.•in.)	1.8 N•m (16 lb.•in.)
			BR1, 2 terminals	10.0 mm^2 (8 AWG)	0.8 mm^2 (18 AWG)	1.7 N•m (15 lb.•in.)	1.4 N•m (12 lb.•in.)
		4	Input power and motor connections	35.0 mm^2 (3 AWG)	10.0 mm^2 (14 AWG)	4.0 N•m (35 lb.•in.)	4.0 N•m (35 lb.•in.)
		5 75 Hp, 480V 100 Hp, 600V	Input power, DC+, DC–, BR1, 2, PE, motor connections	50.0 mm^2 (1 AWG)	4.0 mm^2 (8 AWG)	See Note (5)	
		5 100 Hp	Input power, DC+, DC– and motor	70.0 mm^2 (2/0 AWG)	10.0 mm^2 (8 AWG)		
			BR1, 2, PE terminals	50.0 mm^2 (1/0 AWG)	4.0 mm^2 (12 AWG)		
		6	Input power, DC+, DC–, BR1, 2, PE, motor connections	150.0 mm^2 (300 MCM) *see Note* (4)	2.5 mm^2 (14 AWG)	6.0 N•m (52 lb.•in.)	6.0 N•m (52 lb.•in.)
		7	Input power, DC+, DC–, PE, motor connections	150.0 mm^2 (300 MCM) *see Note* (4)	2.5 mm^2 (14 AWG)	2.7 N•m (24 lb.•in.)	2.7 N•m (24 lb.•in.)
		8 & 9	Input power, DC+, DC–, PE, motor connections	300.0 mm^2 (600 MCM) *see Note* (4)	2.5 mm^2 (14 AWG)	10.0 N•m (87 lb.•in.)	10.0 N•m (87 lb.•in.)
		10	Input power, DC+, DC–, PE, motor connections	300.0 mm^2 (600 MCM) *see Note* (4)	2.5 mm^2 (14 AWG)	10.0 N•m (87 lb.•in.)	10.0 N•m (87 lb.•in.)
❷	SHLD Terminal	0…6	Terminating point for wiring shields	—	—	1.6 N•m (14 lb.•in.)	1.6 N•m (14 lb.•in.)
❸	AUX Terminal Block	0…4	Auxiliary control voltage PS+, PS– (1)(2)	1.5 mm^2 (16 AWG)	0.2 mm^2 (24 AWG)	—	—
		5…6		4.0 mm^2 (12 AWG)	0.5 mm^2 (22 AWG)	0.6 N•m (5.3 lb.•in.)	0.6 N•m (5.3 lb.•in.)
		7…10		4.0 mm^2 (12 AWG)	0.049 mm^2 (30 AWG)	0.6 N•m (5.3 lb.•in.)	0.6 N•m (5.3 lb.•in.)
❹	I/O Terminal Block	0…6	Signal & control connections	2.5 mm^2 (14 AWG)	0.30 mm^2 (22 AWG)	0.6 N•m (5.3 lb.•in.)	0.6 N•m (5.3 lb.•in.)
		7…10		4.0 mm^2 (12 AWG)	0.049 mm^2 (30 AWG)	0.6 N•m (5.3 lb.•in.)	0.6 N•m (5.3 lb.•in.)
❺	Encoder Terminal Block	0…10	Encoder power & signal connections	0.75 mm^2 (18 AWG)	0.196 mm^2 (24 AWG)	0.6 N•m (5.3 lb.•in.)	0.6 N•m (5.3 lb.•in.)
❻	Fan Terminal Block	5…6	User supplied fan voltage	4.0 mm^2 (12 AWG)	0.5 mm^2 (22 AWG)	0.6 N•m (5.3 lb.•in.)	0.6 N•m (5.3 lb.•in.)
		7		4.0 mm^2 (12 AWG)	0.5 mm^2 (22 AWG)	0.9 N•m (8.0 lb.•in.)	0.6 N•m (5.3 lb.•in.)
		8…10		4.0 mm^2 (12 AWG)	0.5 mm^2 (22 AWG)	0.6 N•m (5.3 lb.•in.)	0.6 N•m (5.3 lb.•in.)

(1) External control power: UL Installation-300V DC, ±10%, Non UL Installation-270…600V DC, ±10% (0…3 Frame-40W, 165 mA, 5 Frame-80W, 90 mA).

(2) An Auxiliary Control Power Supply such as the 20-24V-AUX can be used with 400/480 and 600/690 Volt drives with Vector Control. However, consult the factory before using an auxiliary power supply in these instances. **Important:** The Auxiliary Control Power Supply Must Not be used with any Standard Control drive or any 200/240V PowerFlex 700 drive, Standard or Vector Control.

(3) **Maximum/minimum sizes that the terminal block will accept -** these are not recommendations**.**

(4) If may be necessary to connect multiple wires in parallel to these terminals using multiple lugs.

(5) Refer to the terminal block label inside the drive.

Typical Terminal Block Location

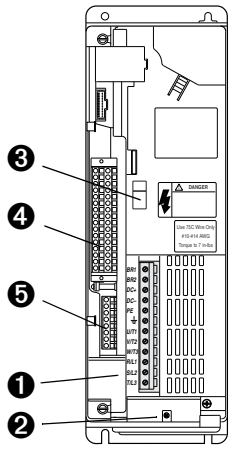

Frames 0…1

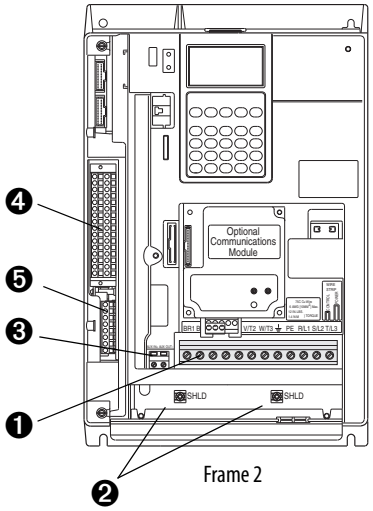

Frame 2

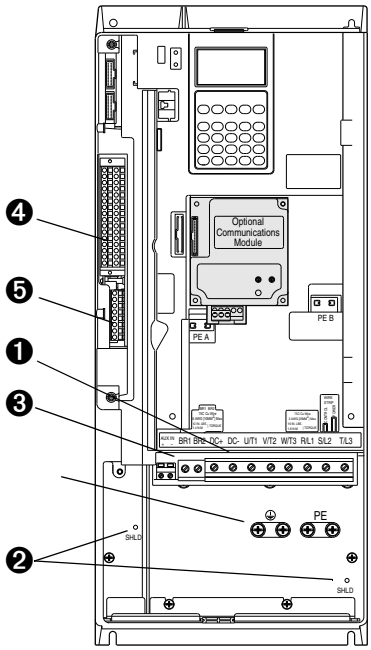

Frames 3…4

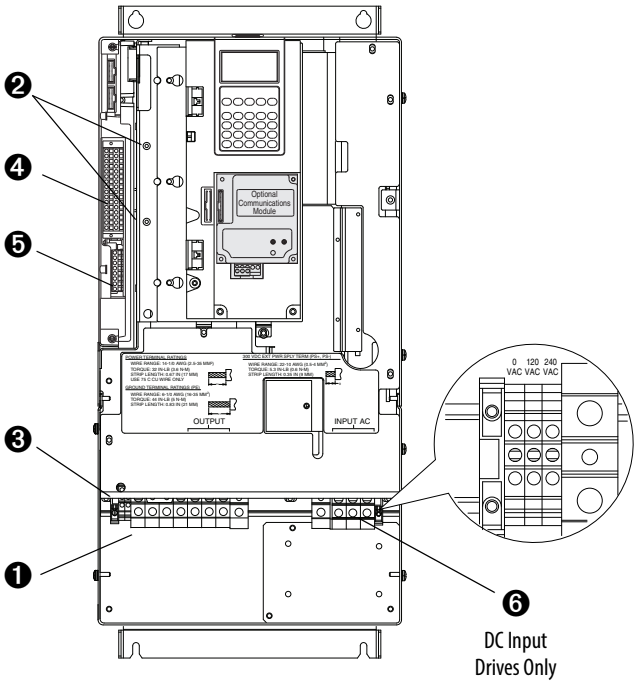

Frame 5

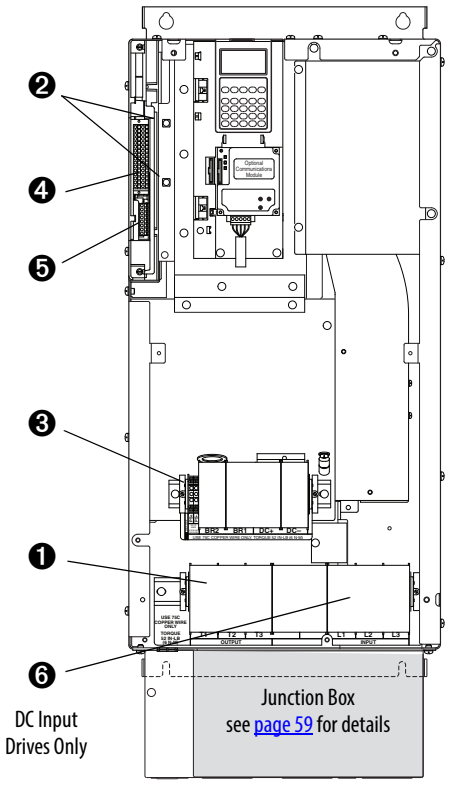

Frame 6

⏚ / PE

Typical Terminal Block Locations (continued)

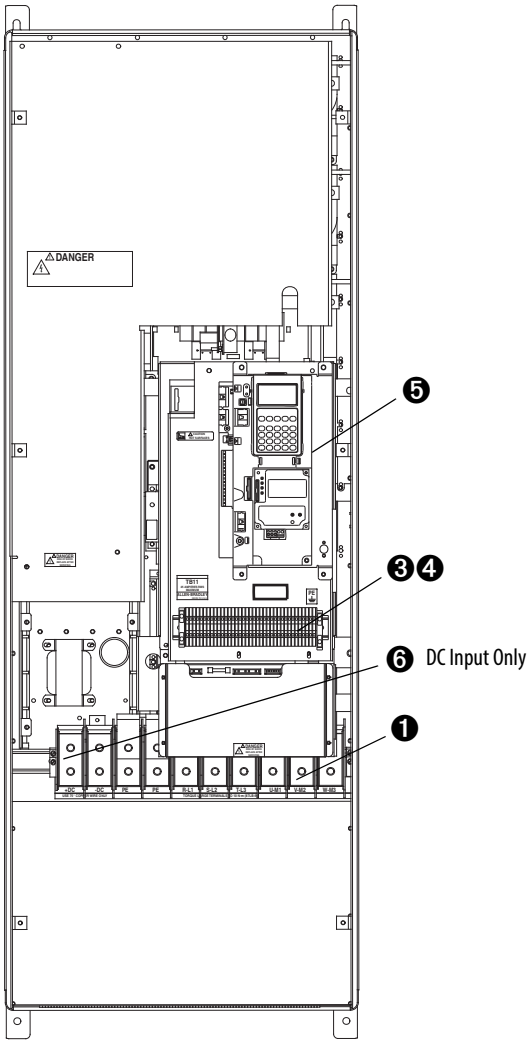

Frame 7

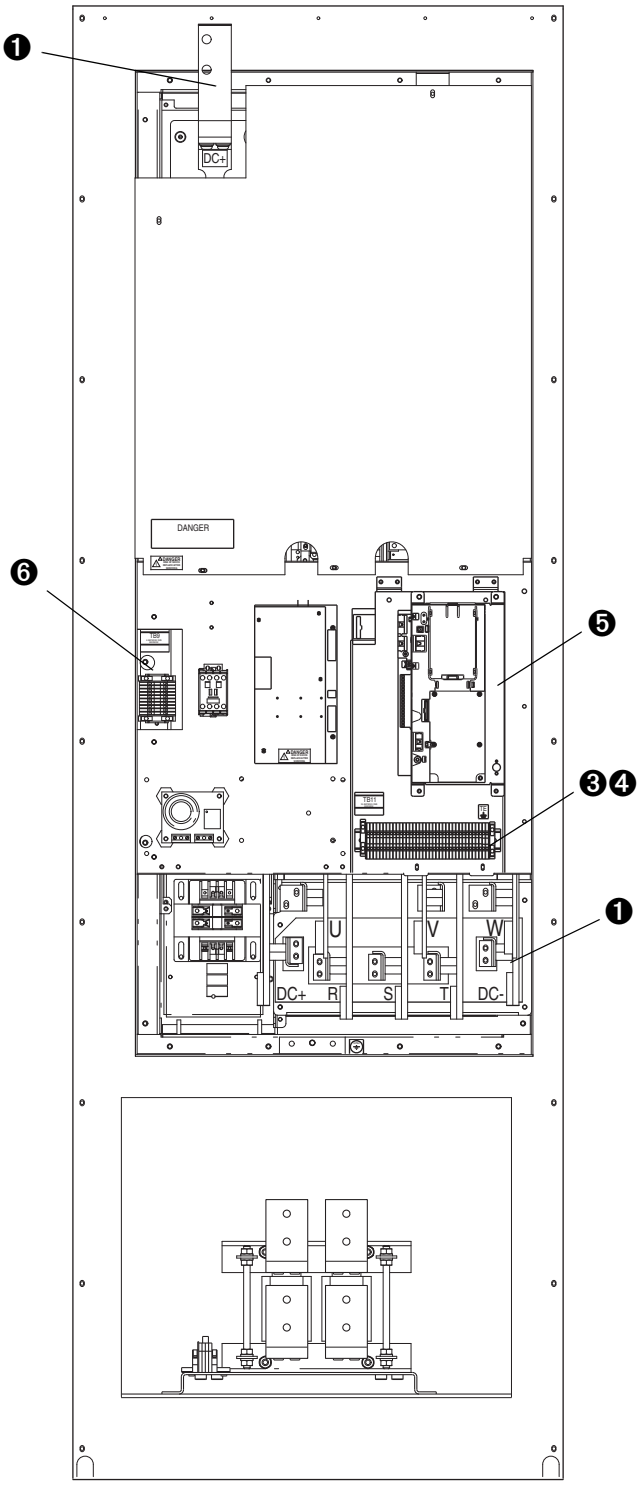

Frames 8…9

Typical Terminal Block Locations (continued)

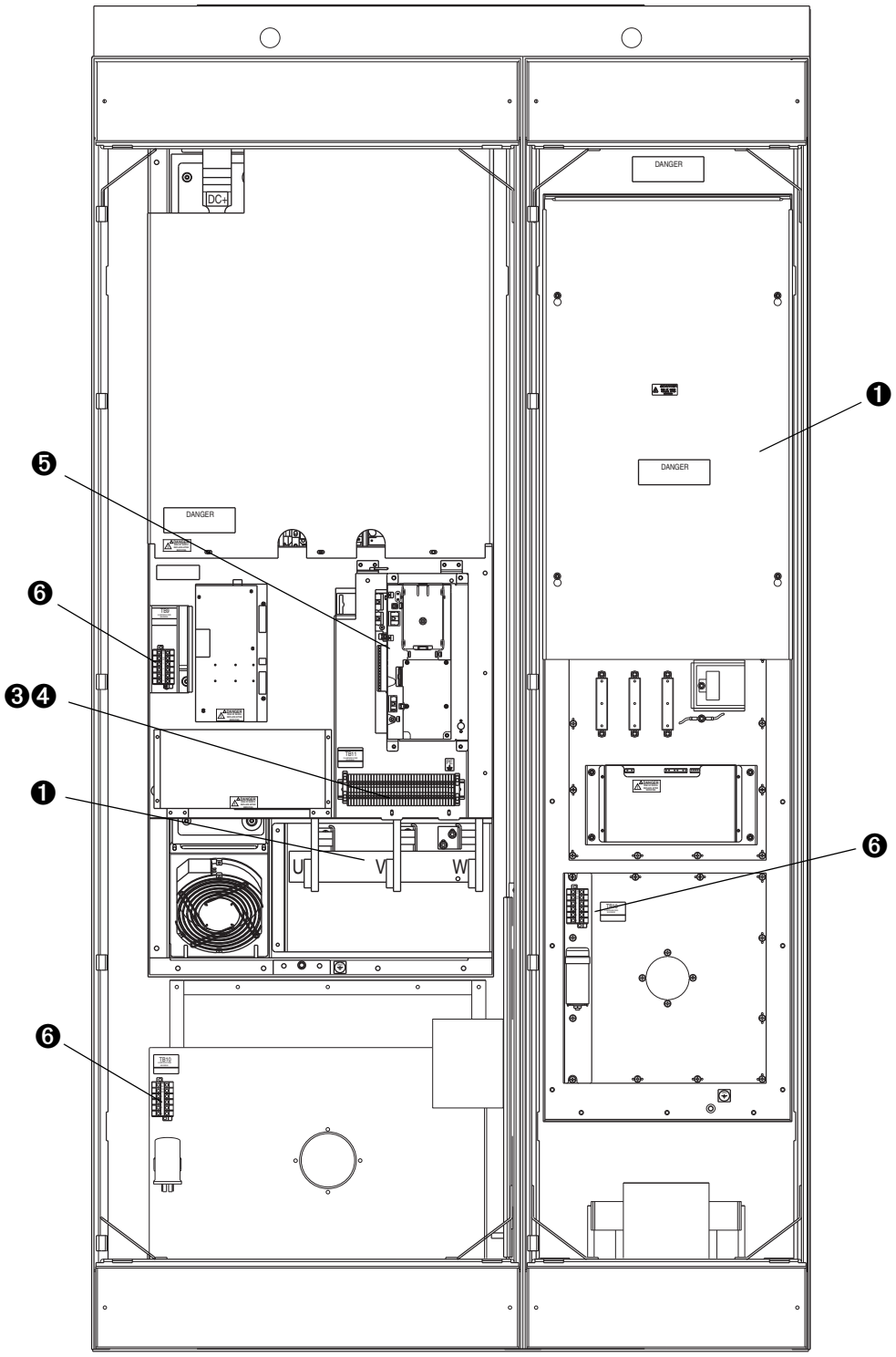

Frame 10
AC Input shown, DC Input Drives utilize the Inverter (Left) Bay only

Power Terminals

<table>
<tr><th>Frame</th><th>Terminal Block</th><th></th></tr>
<tr><td>0…1</td><td> 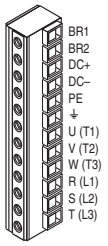
</td><td rowspan="3">* Note:
Shaded BR1 & BR2 Terminals will only be present on drives ordered with the Brake Option.</td></tr>
<tr><td>2</td><td> 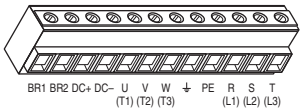
</td></tr>
<tr><td>3…4</td><td> 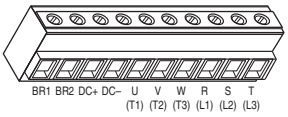
</td></tr>
<tr><td></td><td>AC Input</td><td>DC Input</td></tr>
<tr><td>5</td><td>75 Hp, Normal Duty
 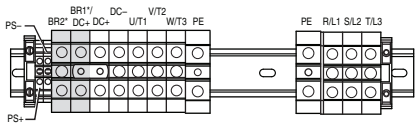
</td><td>75 Hp, Normal Duty
 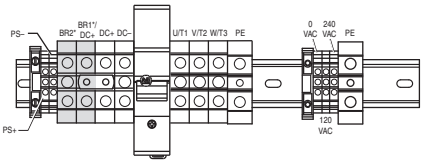
</td></tr>
<tr><td></td><td>100 Hp, Normal Duty
 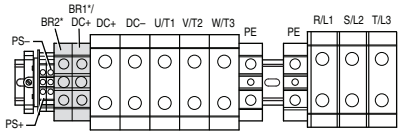
</td><td>100 Hp, Normal Duty
 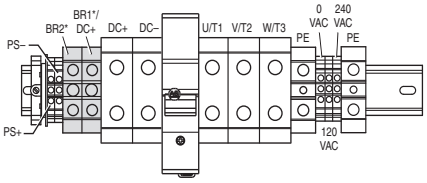
</td></tr>
<tr><td>6</td><td>125…200 Hp, Normal Duty
 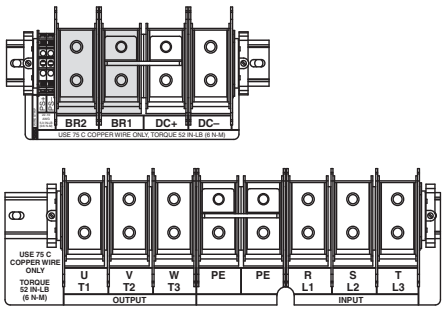
</td><td>125…200 Hp, Normal Duty
 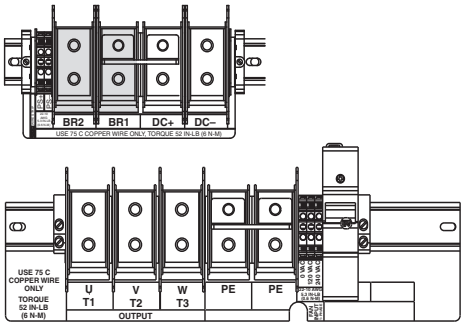
</td></tr>
</table>

Frame	Terminal Block	
	AC Input	**DC Input**
7	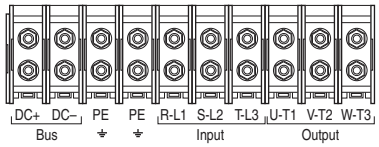	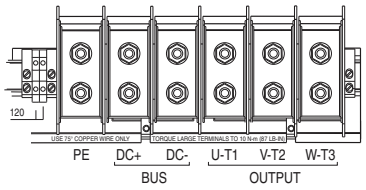
8…9	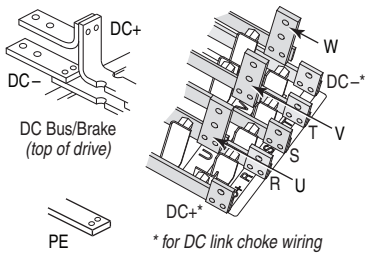	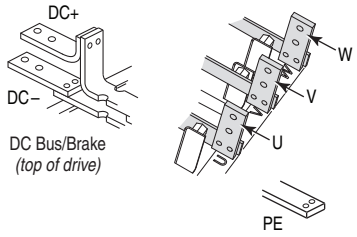
10	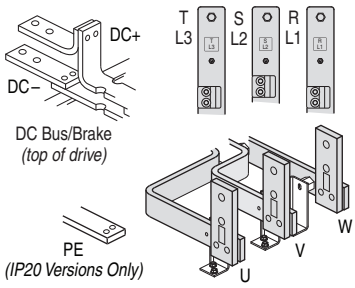	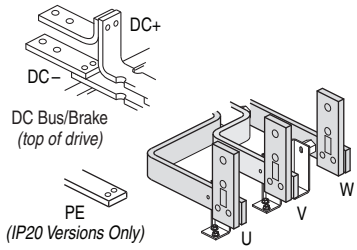

Fan Circuit Power Supply

Some drives utilize a fan transformer to power the internal fan(s). This transformer is sized specifically for the internal fan(s) and must not be used to power other circuitry. If your line voltage is different than the voltage class specified on the drive nameplate, changing the transformer taps will be required.

Frames 5…6 Fan Connections

Drive Type	Enclosure	**Rating** (120V AC)	No. of Fans	Connect at …
DC Input	IP00, NEMA / UL Type Open	100 VA (Frame 5) 138 VA (Frame 6)	1	Power Terminal Block Requires user supplied 120 or 240V AC. See page 36 for TB locations and terminal designations.
	IP20, NEMA / UL Type 1 IP54, NEMA / UL Type 12	100 VA (Frame 5) 138 VA (Frame 6)	1	
AC Input	IP00, NEMA / UL Type Open	100 VA (Frame 5) 138 VA (Frame 6)	1	N/A (Connected internally) A transformer matches the input line voltage to the internal fan voltage. If line voltage is different than the voltage class specified on the drive nameplate, the transformer taps may require changing. The transformer is behind the Power Terminal Block. Access is gained by releasing the terminal block from the rail and removing the transformer cover plate. 1. Locate the small metal tab at the bottom of the end terminal block. 2. Press the tab-in and pull the top of the block out. Repeat for the next block if desired. 3. Remove the transformer cover plate. 4. Select the appropriate transformer tap. 5. Replace cover and terminal block.
	IP20, NEMA / UL Type 1 IP54, NEMA / UL Type 12	100 VA (Frame 5) 138 VA (Frame 6)	1	
	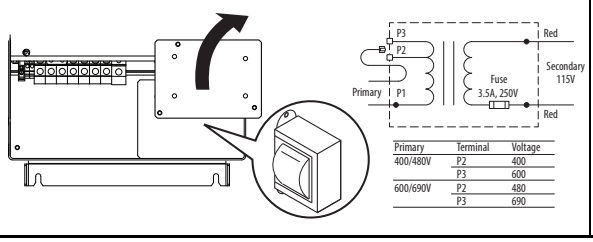			

Frame 7

Drive Type	Enclosure	Rating *(120VAC)*	No. of Fans	Connect at . . .
DC Input	IP00, NEMA / UL Type Open	250 VA	1	Power Terminal Block Requires user supplied 120V AC. See page 40 for location.
	IP20, NEMA / UL Type 1	250 VA	1	
AC Input	IP00, NEMA / UL Type Open	250 VA	1	N/A (Connected internally)
	IP20, NEMA / UL Type 1	250 VA	1	

Frame 8

Drive Type	Enclosure	Rating (120VAC)	No. of Fans	Connect at . . .
DC Input	IP00, NEMA / UL Type Open	500 VA	1	TB9 Requires user supplied 120V AC. See page 37 for TB location and page 42 for terminal designations.
	IP20, NEMA / UL Type 1	500 VA	1	
AC Input	IP00, NEMA / UL Type Open	500 VA	1	TB9 A transformer matches the input line voltage to the internal fan voltage. If line voltage is different than the voltage class specified on the drive nameplate, the transformer taps may require changing. 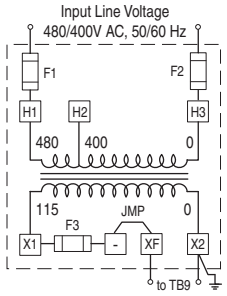
	IP20, NEMA / UL Type 1	500 VA	1	

Frame 9

Drive Type	Enclosure	Rating (120VAC)	No. of Fans	Connect at . . .
DC Input	IP00, NEMA / UL Type Open	500 VA	2	**TB9** Requires user supplied 120V AC for cap. bank fan and phase monitor. **Blower Terminal Block** Three-phase power must be supplied to the Blower TB. See page 37 for TB locations and page 42 for terminal designations.
	IP20, NEMA / UL Type 1	500 VA	2	
AC Input	IP00, NEMA / UL Type Open	500 VA	2	**TB9** A transformer matches the input line voltage to the internal voltage used for the capacitor fan and phase detector module. If the line voltage is different than the voltage class specified on the drive nameplate, the transformer taps may require changing. 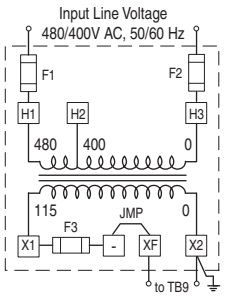
	IP20, NEMA / UL Type 1	500 VA	2	

Frame 9 Blower Operation

Frame 9 drives use a single-phase capacitor bank fan and a three-phase blower for cooling. Proper phasing must be supplied to terminals R, S, and T of the Power Terminal Block (AC drives) or the Blower Terminal Block (DC drives) to assure correct blower rotation. To verify this, a Phase Monitor is used.

Frame 10

Drive Type	Enclosure	Rating *(120VAC)*	No. of Fans	Connect at . . .
DC Input	IP00, NEMA / UL Type Open	1000 VA	2	TB9 & 10 Requires user supplied 120V AC. See page 38 for TB locations and page 42 for terminal designations.
	IP20, NEMA / UL Type 1	1000 VA	2	
AC Input	IP00, NEMA / UL Type Open	1000 VA	3	TB9, 10 & 12 Requires user supplied 120V AC. See page 38 for TB locations and page 42 for terminal designations.
	IP20, NEMA / UL Type 1	1000 VA	3	TB9, 10 & 12 A transformer matches the input line voltage to the internal fan voltage. If line voltage is different than the voltage class specified on the drive nameplate, the transformer taps may require changing. 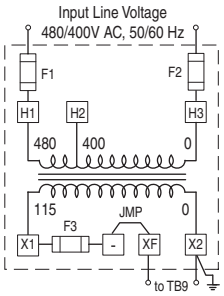

Fan/Blower Terminal Blocks - Frames 8…10

TB9, TB10

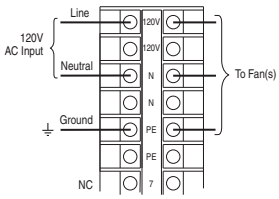

Frames 8…10

Blower TB

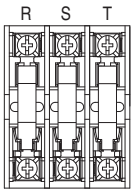

Frame 9 Only

TB12

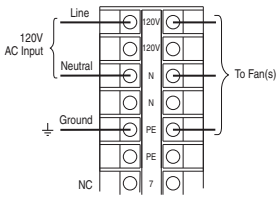

Frame 10, AC Input, IP20 Only

Fan Transformer Specifications/Fusing

Frame	Rating	Recommended Fuses	
		Primary (Quantity 2)	Secondary (Quantity 1)
8…9	500 VA	2.8A, 600V AC, KLDR/ATQR Type	6.25A, 250V AC, Time Delay
10	1000 VA	6A, 600V AC, KLDR/ATQR Type	9A, 250V AC, Time Delay

Three-Phase Blower Fusing

Frame	Recommended Fuses (Quantity 3)
9	5A, 600V AC, Time Delay

Additional Frame 10 Wiring Requirement for IP00 AC Input Drives

The Inverter and Converter sections of Frame 10 AC Input IP00, NEMA / UL Type Open drives are shipped separately. Once installed, the following connections are required.

1. DC Link Choke Wiring
   DC link chokes are supplied loose for customer mounting and wiring in IP00 drives. Refer to DC Link Chokes – Frames 8...10 below.
2. Thermistor Wiring
   Thermistor wiring is coiled loose in the Converter section for shipping. Locate the wire (labeled "To INV") and route through the enclosure wall. Connect it to the mating connector above the HIM cradle.
3. Ground the drive chassis.

DC Link Chokes – Frames 8…10

DC Link Chokes are supplied with Frame 8...10 AC input drives.

Frame	Type	DC Link Choke is supplied …
8…9	IP00, NEMA / UL Type Open	Mounted and wired
	IP20, NEMA / UL Type 1	Mounted and wired
	IP00, NEMA / UL Type Open Roll-In	Loose without cables
10	IP00, NEMA / UL Type Open	Loose without cables
	IP20, NEMA / UL Type 1	Mounted and wired

I/O Wiring

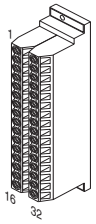

Standard Control Option – Frames 0…6 (1)

No.	Signal	Factory Default	Description
1	Anlg Volts In 1 (–)	(3)	Isolated (4), bipolar, differential, ±10V, 11 bit & sign, 88k ohm input impedance.
2	Anlg Volts In 1 (+)		
3	Anlg Volts In 2 (–)	(3)	Isolated (5), bipolar, differential, ±10V, 11 bit & sign, 88k ohm input impedance.
4	Anlg Volts In 2 (+)		
5	Pot Common	–	For (+) and (–) 10V pot references.
6	Anlg Volts Out 1 (–)	(3)	Bipolar, ±10V, 11 bit & sign, 2k ohm minimum load.
7	Anlg Volts Out 1 (+)		
8	Anlg Current Out 1 (–)	(3)	4-20mA, 11 bit & sign, 400 ohm maximum load.
9	Anlg Current Out 1 (+)		
10	Reserved for Future Use		
11	Digital Out 1 – N.C. (2)	Fault	Max. Resistive Load: 240V AC/30V DC – 1200VA, 150W Max. Current: 5A, Min. Load: 10mA Max. Inductive Load: 240V AC/30V DC – 840VA, 105W Max. Current: 3.5A, Min. Load: 10mA
12	Digital Out 1 Common		
13	Digital Out 1 – N.O. (2)	NOT Fault	
14	Digital Out 2 – N.C. (2)	NOT Run	
15	Digital Out 2 Common		
16	Digital Out 2 – N.O. (2)	Run	
17	Anlg Current In 1 (–)	(3)	Isolated (4), 4-20 mA, 11 bit & sign, 124 ohm input impedance.
18	Anlg Current In 1 (+)		
19	Anlg Current In 2 (–)	(3)	Isolated (5), 4-20 mA, 11 bit & sign, 124 ohm input impedance.
20	Anlg Current In 2 (+)		
21	–10V DC Pot Ref.	–	2k ohm minimum.
22	+10V DC Pot Ref.	–	
23	Reserved for Future Use		
24	+24V DC (6)	–	Drive supplied logic input power. (6)
25	Digital In Common	–	
26	24V Common (6)	–	Common for internal power supply.
27	Digital In 1	Stop - CF	115V AC, 50/60 Hz - Control & I/O Cat. No. option B Opto isolated Low State: less than 30V AC High State: greater than 100V AC, 5.0 mA 24V AC/DC, 50/60 Hz - Control & I/O Cat. No. option A Opto isolated Low State: less than 5V AC/DC High State: greater than 20V AC/DC, 11.2 mA DC Digital Input Impedance: 35k ohm
28	Digital In 2	Start	
29	Digital In 3	Auto/Man.	
30	Digital In 4	Speed Sel 1	
31	Digital In 5	Speed Sel 2	
32	Digital In 6	Speed Sel 3	

Vector Control Option – Frames 0…6 (1)

Signal	Factory Default	Description
Analog In 1 (–) (7)	(3)	Isolated (9), bipolar, differential, ±10V/0-20 mA, 11 bit & sign. For 0-20 mA, a jumper must be installed at terminals 17 & 18 (or 19 & 20). 88k ohm input impedance when configured for volt. & 95.3 ohm for current
Analog In 1 (+) (7)		
Analog In 2 (–) (7)		
Analog In 2 (+) (7)		
Pot Common	–	For (+) and (–) 10V pot references.
Analog Out 1 (–)	(3)	Single-ended bipolar (current output is not bipolar), ±10V/0-20 mA, 11 bit & sign, Voltage mode - limit current to 5 mA. Current mode - max. load is 400 ohms.
Analog Out 1 (+)		
Analog Out 2 (–)		
Analog Out 2 (+)		
HW PTC Input 1	–	1.8k ohm PTC, Internal 3.32k ohm pull-up resistor
Digital Out 1 – N.C. (2)	Fault	Max. Resistive Load: 240V AC/30V DC – 1200VA, 150W Max. Current: 5A, Min. Load: 10 mA Max. Inductive Load: 240V AC/30V DC – 840VA, 105W Max. Current: 3.5A, Min. Load: 10 mA
Digital Out 1 Common		
Digital Out 1 – N.O. (2)	NOT Fault	
Digital Out 2 – N.C. (2)	NOT Run	
Digital Out 2/3 Com.		
Digital Out 3 – N.O. (2)	Run	
Current In Jumper (7) – Analog In 1		Placing a jumper across terminals 17 & 18 (or 19 & 20) configures that analog input for current.
Current In Jumper (7) – Analog In 2		
–10V DC Pot Ref.	–	2k ohm minimum load.
+10V DC Pot Ref.	–	
HW PTC Input 2	–	See above
+24V DC (6)	–	Drive supplied logic input power. (6)
Digital In Common	–	
24V Common (6)	–	Common for internal power supply.
Digital In 1 (8)	Stop - CF	115V AC, 50/60 Hz - Control & I/O Cat. No. option D Opto isolated Low State: less than 30V AC High State: greater than 100V AC, 5.7 mA 24V DC - Control & I/O Cat. No. option C Opto isolated Low State: less than 5V DC High State: greater than 20V DC, 10 mA DC Digital Input Impedance: 21k ohm
Digital In 2 (8)	Start	
Digital In 3 (8)	Auto/Man.	
Digital In 4 (8)	Speed Sel 1	
Digital In 5 (8)	Speed Sel 2	
Digital In 6/Hardware Enable (8), see pg. 46	Speed Sel 3	

(1) Refer to the catalog number position "k" to determine your control option (A or B = standard control option, C or D = vector control option).

(2) Contacts in unpowered state. Any relay programmed as Fault or Alarm energizes (picks up) when power is applied to drive and deenergize (drop out) when a fault or alarm exists. Relays selected for other functions energize only when that condition exists and deenergizes when condition is removed.

(3) These inputs/outputs are dependant on a number of parameters.

(4) Differential Isolation - External source must be maintained at less than 160V with respect to PE. Input provides high common mode immunity.

(5) Differential Isolation - External source must be less than 10V with respect to PE.

(6) 150 mA maximum load designed to power digital inputs only. Not present on 115V versions.

(7) **Important:** 0…20 mA operation requires a jumper at terminals 17 & 18 (or 19 & 20). Drive damage can occur if jumper is not installed.

(8) A 10k ohm, 2 watt burden resistor must be installed on each digital input when using a triac type device. The resistor is installed between each digital input and neutral /common.

(9) Differential Isolation - External source must be maintained at less than 160V with respect to PE. Input provides high common mode immunity.

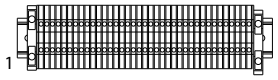

Vector Control Option – Frames 7…10

No.	Signal	Factory Default	Description
1	Analog In 1 (–) (1)	(3)	Isolated (4), bipolar, differential, ±10V/4-20mA, 11 bit & sign, 88k ohm input impedance. For 4-20mA, a jumper must be installed at terminals 17 & 18 (or 19 & 20).
2	Analog In 1 (+) (1)		
3	Analog In 2 (–) (1)		
4	Analog In 2 (+) (1)		
5	Pot Common	–	For (+) and (–) 10V pot references.
6	Analog Out 1 (–)	(3)	Bipolar (current output is not bipolar), ±10V/4-20mA, 11 bit & sign, voltage mode - limit current to 5 mA. Current mode - max. load resistance is 400 ohms.
7	Analog Out 1 (+)		
8	Analog Out 2 (–)		
9	Analog Out 2 (+)		
10	HW PTC Input 1	–	1.8k ohm PTC, Internal 3.32k ohm pull-up resistor
11	Digital Out 1 – N.C. (2)	Fault	Max. Resistive Load: 240V AC/30V DC – 1200VA, 150W Max. Current: 5A, Min. Load: 10mA Max. Inductive Load: 240V AC/30V DC – 840VA, 105W Max. Current: 3.5A, Min. Load: 10mA
12	Digital Out 1 Common		
13	Digital Out 1 – N.O. (2)	NOT Fault	
14	Digital Out 2 – N.C. (2)	NOT Run	
15	Digital Out 2/3 Com.		
16	Digital Out 3 – N.O. (2)	Run	
17	Current In Jumper (1) – Analog In 1		Placing a jumper across terminals 17 & 18 (or 19 & 20) configures that analog input for current.
18			
19	Current In Jumper (1) – Analog In 2		
20			
21	–10V Pot Reference	–	2k ohm minimum load.
22	+10V Pot Reference	–	
23	HW PTC Input 2	–	See above
24	+24V DC (5)	–	Drive supplied logic input power. (5)
25	Digital In Common	–	
26	24V Common (5)	–	Common for internal power supply.
27	Digital In 1	Stop - CF	115V AC, 50/60 Hz - Control & I/O Cat. No. option D Opto isolated Low State: less than 30V AC High State: greater than 100V AC 24V DC - Control & I/O Cat. No. option C Opto isolated Low State: less than 5V DC High State: greater than 20V DC 11.2 mA DC
28	Digital In 2	Start	
29	Digital In 3	Auto/Man.	
30	Digital In 4	Speed Sel 1	
31	Digital In 5	Speed Sel 2	
32	Digital In 6/Hardware Enable, see pg. 46	Speed Sel 3	
33	Digital Out 4 – N.C.	Fault	Dedicated fault output - Not user configurable. Relay energizes (picks up) when power is applied to the drive and deenergizes (drops out) when a fault exists. See Terminals 11-16 for specs.
34	Digital Out 4 Common		
35	Digital Out 4 – N.O.	NOT Fault	
PS+	Aux. Control Power (+)		
PS-	Aux. Control Power (–)		
PE	PE Ground		PE Ground
PE	PE Ground		PE Ground

(1) **Important:** 0…20mA operation requires a jumper at terminals 17 & 18 (or 19 & 20). Drive damage can occur if jumper is not installed.

(2) Contacts in unpowered state. Any relay programmed as Fault or Alarm energizes (picks up) when power is applied to the drive and deenergizes (drops out) when a fault or alarm exists. Relays selected for other functions energize only when that condition exists and deenergize when condition is removed.

(3) These inputs/outputs are dependant on a number of parameters.

(4) Differential Isolation - External source must be maintained at less than 160V with respect to PE. Input provides high common mode immunity.

(5) 150mA maximum Load. Not present on 115V versions.

Hardware Enable Circuitry (Vector Control Only)

By default, the user can program a digital input as an Enable input. The status of this input is interpreted by drive software. If the application requires the drive to be disabled without software interpretation, a "dedicated" hardware enable configuration can be utilized. This is done by removing a jumper and wiring the enable input to "Digital In 6."

Encoder Interface Option (Vector Control Only)

Encoder Terminal Designations

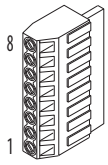

No.	Description (refer to specifications on page 11)	
8	+12V (1) DC Power	Internal power source 250 mA.
7	+12V (1) DC Return (Common)	
6	Encoder Z (NOT)	Pulse, marker or registration input. (2)
5	Encoder Z	
4	Encoder B (NOT)	Quadrature B input.
3	Encoder B	
2	Encoder A (NOT)	Single channel or quadrature A input.
1	Encoder A	

(1) Jumper selectable +5/12V is available on 20B-ENC-1 Encoder Boards.

(2) Z channel can be used as a pulse input while A & B are used for encoder.

Sample Encoder Wiring

I/O	Connection Example
Encoder Power –Internal Drive Power Internal (drive) 12V DC, 250mA (1)	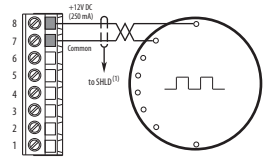
Encoder Signal –Single-Ended, Dual Channel (2)	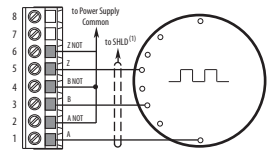

I/O	Connection Example
Encoder Power –External Power Source	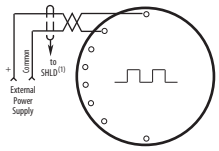
Encoder Signal –Differential, Dual Channel	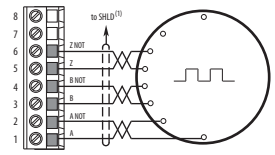

(1) SHLD connection is on drive chassis (see page 36).

(2) Example applies to 20B-ENC-1 only.

I/O Wiring Examples – Standard & Vector Control Options

Input/Output	Connection Example	Required Parameter Changes
Potentiometer Unipolar Speed Reference (1) 10k Ohm Pot. Recommended (2k Ohm Minimum)	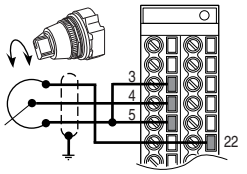	• Adjust Scaling: Parameters 91/92 and 325/326 • View Results: Parameter 002
Joystick Bipolar Speed Reference (1) ±10V Input	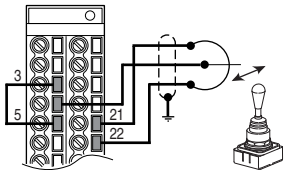	• Set Direction Mode: Parameter 190 = "1, Bipolar" • Adjust Scaling: Parameters 91/92 and 325/326 • View Results: Parameter 002
Analog Input Bipolar Speed Reference ±10V Input	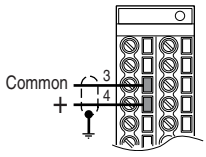	• Set Direction Mode: Parameter 190 = "1, Bipolar" • Adjust Scaling: Parameters 91/92 and 325/326 • View Results: Parameter 002
Analog Voltage Input Unipolar Speed Reference 0 to +10V Input	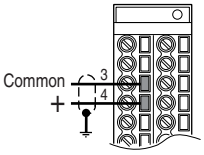	• Configure Input with parameter 320 • Adjust Scaling: Parameters 91/92 and 325/326 • View results: Parameter 002
Analog Current Input Unipolar Speed Reference **Standard** 4-20 mA Input	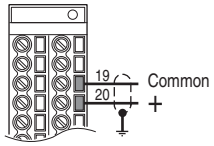	• Configure Input for Current: Parameter 320, Bit 1 = "1, Current" • Adjust Scaling: Parameters 91/92 and 325/326 • View Results: Parameter 002
Analog Current Input Unipolar Speed Reference **Vector** 0-20 mA Input	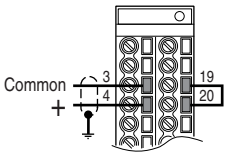	• Configure Input for Current: Parameter 320 and add jumper at appropriate terminals • Adjust Scaling: Parameters 91/92 and 325/326 • View results: Parameter 002
Analog Input, PTC **Vector** PTC OT set > 5V PTC OT cleared < 4V PTC Short < 0.2V	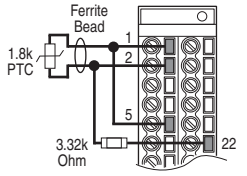	• Set Fault Config 1: Parameter 238, bit 7 = "Enabled" • Set Alarm Config 1: Parameter 259, bit 11 = "Enabled" • View Drive Alarm 1: Parameter 211, bit 11 = "True"
HW PTC Input Series B Only PTC OT set > 5V PTC OT cleared < 4V PTC Short < 0.2V	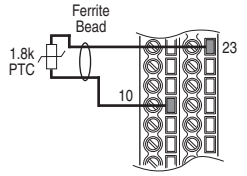	• Set Fault Config 1: Parameter 238, bit 13 = "Enabled" • Set Alarm Config 1: Parameter 259, bit 18 = "Enabled" • View Status: Drive Alarm 1: Parameter 211, bit 18 = "True"

(1) Refer to the PowerFlex 700 User Manual for important bipolar wiring information.

Input/Output	Connection Example	Required Parameter Changes
Analog Output ±10V, 0-20 mA Bipolar +10V Unipolar *(shown)* Standard Control 4-20 mA Unipolar *(use term. 8 & 9)*	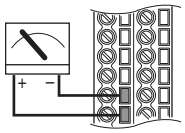	• Configure with Parameter 340 • Select Source Value: Parameter 384, [Digital Out1 Sel] • Adjust Scaling: Parameters 343/344
2-Wire Control Non-Reversing(1) 24V DC internal supply	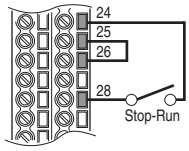	• Disable Digital Input:#1: Parameter 361 = "0, Unused" • Set Digital Input #2: Parameter 362 = "7, Run" • Set Direction Mode: Parameter 190 = "0, Unipolar"
2-Wire Control Reversing(1) External supply (I/O Board dependent)	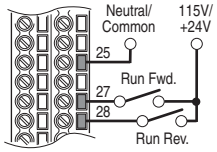	• Set Digital Input:#1: Parameter 361 = "8, Run Forward" • Set Digital Input #2: Parameter 362 = "9, Run Reverse"
3-Wire Control Internal supply	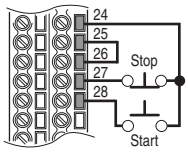	• No Changes Required
3-Wire Control External supply (I/O Board dependent). Requires 3-wire functions only ([Digital In1 Sel]). Using 2-wire selections will cause a type 2 alarm.	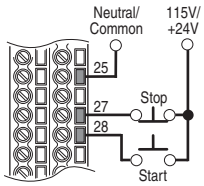	• No Changes Required •
Digital Input PLC Output Card (Board dependent).	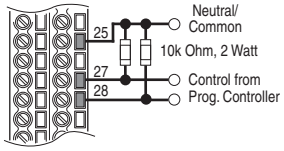	• No Changes Required •
Digital Output Relays shown in powered state with drive faulted. See page 44. Standard Control 1 relay at terminals 14-16. Vector Control 2 relays at terminals 14-16.	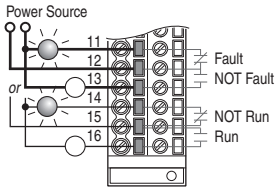	• Select Source to Activate: Parameters 380/384
Enable Input	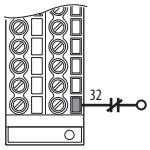	• Standard Control Configure with parameter 366 • Vector Control Configure with parameter 366 For dedicated hardware Enable: Remove Jumper J10 (see page 46)

(1) **Important:** Programming inputs for 2 wire control deactivates all HIM Start buttons.

Mounting

Frame/Rating Cross Reference

AC Input

	208/240		400V		480V		600V		690V	
Frame	**ND Hp**	**HD Hp**	**ND kW**	**HD kW**	**ND Hp**	**HD Hp**	**ND Hp**	**HD Hp**	**ND kW**	**HD kW**
0	0.5	0.33	0.37	0.25	0.5	0.33	1	0.5	–	–
	1	0.75	0.75	0.55	1	0.75	2	1	–	–
	–	–	1.5	0.75	2	1.5	3	2	–	–
	–	–	2.2	1.5	3	2	5	3	–	–
	–	–	4	2.2	5	3	7.5	5	–	–
	–	–	5.5	4	7.5	5	–	–	–	–
1	2	1.5	7.5	5.5	10	7.5	10	7.5	–	–
	3	2	11	7.5	15	10	15	10	–	–
	5	3	–	–	–	–	–	–	–	–
	7.5	5	–	–	–	–	–	–	–	–
2	10	7.5	15	11	20	15	20	15	–	–
	–	–	18.5	15	25	20	25	20	–	–
3	15	10	22	18.5	30	25	30	25	–	–
	20	15	30	22	40	30	40	30	–	–
	–	–	37	30	50	40	50	40	–	–
4	25	20	45	37	60	50	60	50	–	–
	30	25	–	–	–	–	–	–	–	–
5	40	30	55	45	75	60	75	60	45	37.5
	50	40	75	55	100	75	100	75	55	45
	–	–	–	–	–	–	–	–	75	55
	–	–	–	–	–	–	–	–	90	75
6	60	50	90	75	125	100	125	100	110	90
	75	60	110	90	150	125	150	125	132	110
	100	75	132	110	200	150	–	–	–	–
7	–	–	160	150	250	200	–	–	–	–
	–	–	180	180	250	250	–	–	–	–
8	–	–	200	180	300	250	–	–	–	–
	–	–	240	200	350	300	–	–	–	–
	–	–	280	240	400	350	–	–	–	–
	–	–	300	280	450	400	–	–	–	–
	–	–	350	300	500	450	–	–	–	–
9	–	–	400	350	600	500	–	–	–	–
10	–	–	500	400	700	600	–	–	–	–

DC Input

	325V		540V		650V		810V		932V	
Frame	**ND Hp**	**HD Hp**	**ND kW**	**HD kW**	**ND Hp**	**HD Hp**	**ND Hp**	**HD Hp**	**ND kW**	**HD kW**
0	0.5	0.33	–	–	0.5	0.33	1	0.75	–	–
	1	0.75	–	–	1	0.75	2	1.5	–	–
	–	–	–	–	2	1.5	3	2	–	–
	–	–	–	–	3	2	5	3	–	–
	–	–	–	–	5	3	7.5	5	–	–
	–	–	–	–	7.5	5	10	7.5	–	–
1	2	1.5	0.37	0.25	10	7.5	15	10	–	–
	3	2	0.75	0.55	15	10	–	–	–	–
	5	3	1.5	0.75	–	–	–	–	–	–
	7.5	5	2.2	1.5	–	–	–	–	–	–
	–	–	4	2.2	–	–	–	–	–	–
	–	–	5.5	4	–	–	–	–	–	–
	–	–	7.5	5.5	–	–	–	–	–	–
	–	–	11	7.5	–	–	–	–	–	–
2	10	7.5	15	11	20	15	20	15	–	–
	–	–	18.5	15	25	20	25	20	–	–
3	15	10	22	18.5	30	25	30	25	–	–
	20	15	30	22	40	30	40	30	–	–
	–	–	37	30	50	40	50	40	–	–
4	25	20	45	37	60	50	60	50	–	–
	30	25	–	–	–	–	–	–	–	–
5	40	30	55	45	75	60	100	75	45	37.5
	50	40	–	–	100	75	–	–	90	75
6	60	50	75	55	125	100	150	125	132	110
	75	60	90	75	150	125	–	–	–	–
	100	75	110	90	–	–	–	–	–	–
	–	–	132	110	200	150	–	–	–	–
7	–	–	160	150	250	200	–	–	–	–
	–	–	180	180	250	250	–	–	–	–
8	–	–	200	180	300	250	–	–	–	–
	–	–	240	200	350	300	–	–	–	–
	–	–	280	240	400	350	–	–	–	–
	–	–	300	280	450	400	–	–	–	–
	–	–	350	300	500	450	–	–	–	–
9	–	–	400	350	600	500	–	–	–	–
10	–	–	500	400	700	600	–	–	–	–

Operating Temperatures

PowerFlex 700 drives are designed to operate at 0°to 40° C ambient. To operate the drive in installations between 41° and 50° C, see the information below and refer to pages 25...32 for exceptions.

Acceptable Surrounding Air Temperature & Required Actions

Enclosure Rating	Temperature Range	Drive
IP20, NEMA / UL Type 1 (with Top Label) (1)	0…40 °C (0…104 °F)	Frames 0…4, All Ratings
	0…50 °C (0…122 °F)	Frames 5…6, Most Ratings (2)
IP20, NEMA / UL Type Open (Top Label Removed) (1)	0…50 °C (0…122 °F)	Frames 0…6, Most Ratings (2)
	0…45 °C (0…113 °F)	20BC072 Only
IP00, NEMA / UL Type Open (Top Label & Vent Plate Removed)	0…50 °C (0…122 °F)	20BC072 Only (3)
Flange Mount Front: IP00, NEMA / UL Type Open Back/Heat Sink: IP54, NEMA / UL Type 12	0…55 °C (0…131 °F) Front (Inside Encl.) 0…40 °C (0…104 °F) Back (External)	Frames 5…6
Stand-alone/Wall Mount IP54, NEMA / UL Type 12	0…40 °C (0…104 °F)	Frames 5…6
IP20, NEMA / UL Type 1	0…40 °C (0…104 °F)	Frames 7…10
IP00, NEMA / UL Type Open/Flange Mount Front: IP00, NEMA / UL Type Open Back/Heat Sink: IP54, NEMA12	0…65 °C (0…149 °F) Control Board 0…40 °C (0…104 °F) Heat Sink Entry Air	Frames 7…10
Roll In Front: IP00, NEMA / UL Type Open Back/Heat Sink: IP54, NEMA12	0…65 °C (0…149 °F) Control Board 0…40 °C (0…104 °F) Heat Sink Entry Air	Frames 8…9

(1) Removing the adhesive top label from the drive changes the NEMA / UL enclosure rating from Type 1 to Open. Frames 5 and 6 do not have a top label.

(2) Refer to pages 25…32 for exceptions.

(3) To remove vent plate (see page 53 for location), lift top edge of plate from the chassis. Rotate the plate out from the back plate.

Minimum Mounting Clearances

Frames 0…6

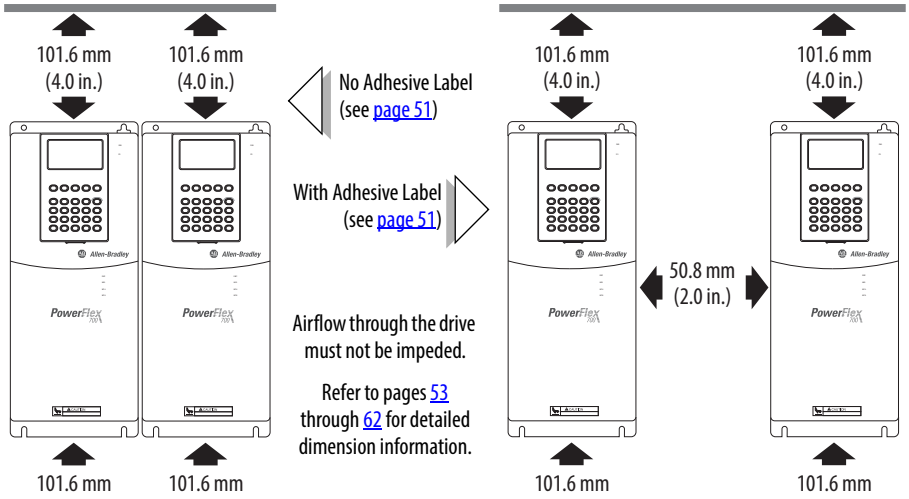

Specified vertical clearance requirements (indicated above) are intended to be from the drive to the closest object that can restrict airflow through the drive heat sink and chassis. The drive must be mounted in a vertical orientation as shown and must make full contact with the mounting surface. Do not use standoffs or spacers. In addition, inlet air temperature must not exceed the product specification.

Frames 7…10

The drive must be mounted with sufficient space at the top, sides, and front of the cabinet to allow for proper heat dissipation.

Frame	Recommendations
7	Minimum of 152 mm (6.0 in.) at the top and bottom of the enclosure and 102 mm (4.0 in.) on the sides. Flange Mount - Minimum of 152 mm (6.0 in.) at the back of the enclosure (flange mount surface to wall).
8…10	Minimum of 152 mm (6.0 in.) at the top of the enclosure. Additionally, allow a minimum of 102 mm (4.0 in.) on each side OR 152 mm (6.0 in.) in the back. Flange Mount - Minimum of 102 mm (4.0 in.) on each side.

Dimensions and Weights

Frames 0…3 – IP20, NEMA / UL Type 1

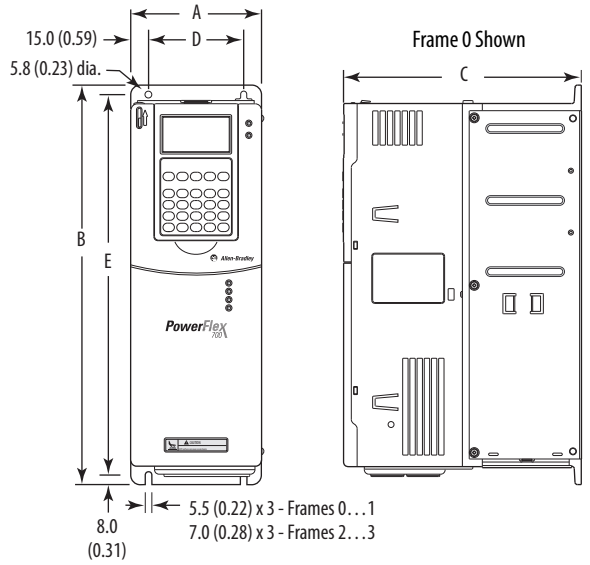

Frame	A	B	C	D	E	Weight (1) kg (lbs.)	
						Drive	Drive & Packaging
0	110.0 (4.33)	336.0 (13.23)	200.0 (7.87)	80.0 (3.15)	320.0 (12.60)	5.22 (11.5)	8.16 (18)
1	135.0 (5.31)	336.0 (13.23)	200.0 (7.87)	105.0 (4.13)	320.0 (12.60)	7.03 (15.5)	9.98 (22)
2	222.0 (8.74)	342.5 (13.48)	200.0 (7.87)	192.0 (7.56)	320.0 (12.60)	12.52 (27.6)	15.20 (33.5)
3	222.0 (8.74)	517.5 (20.37)	200.0 (7.87)	192.0 (7.56)	495.0 (19.49)	18.55 (40.9)	22.68 (50)

(1) Weights include HIM and Standard I/O.

Dimensions are in millimeters and (inches)

.

Frame 0

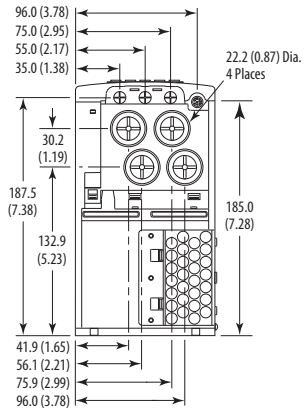

Frame 1

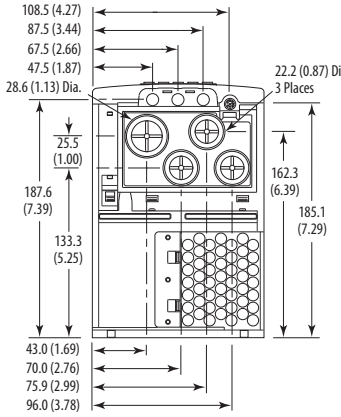

Frame 2

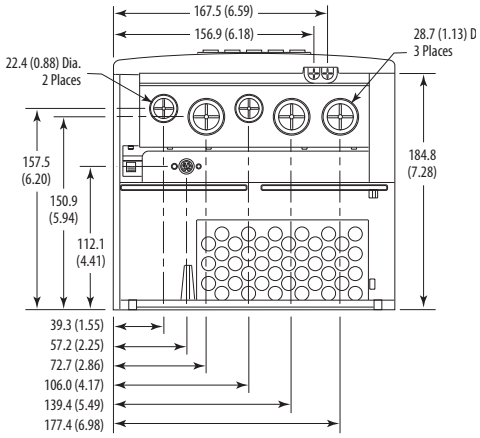

Frame 3
All *except* 50 Hp, 480V (37 kW, 400V)

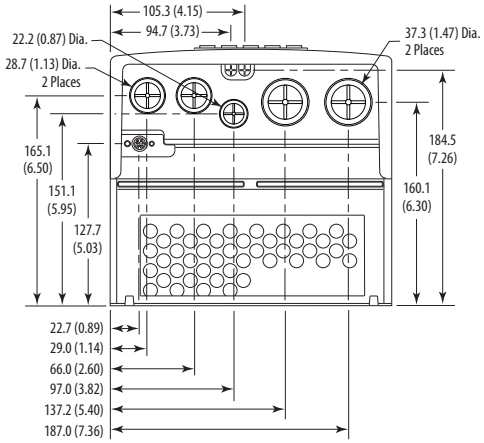

Frame 3
50 Hp, 480V (37 kW, 400V) Normal Duty Drive

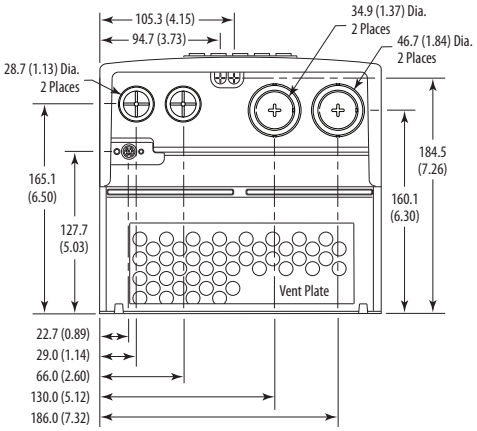

Frame 4 – IP20, NEMA / UL Type 1

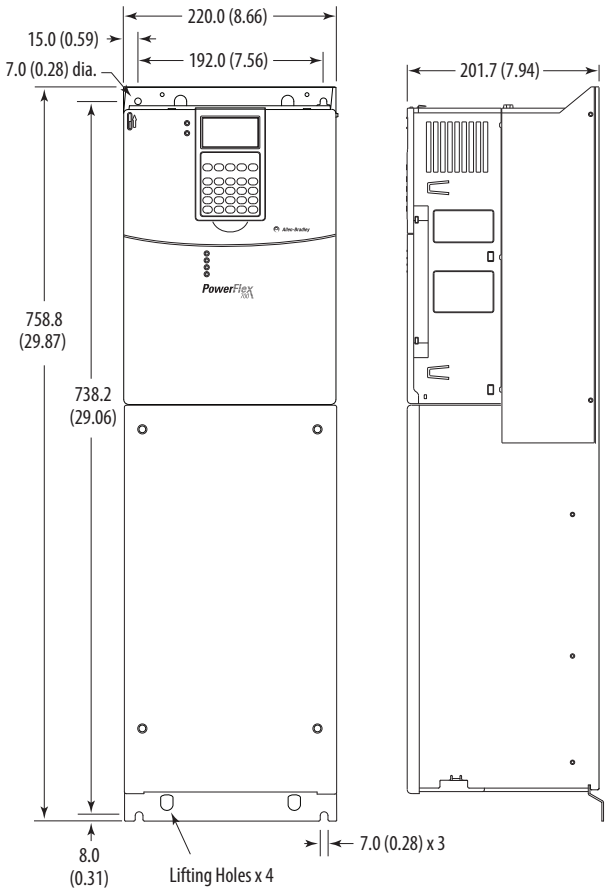

Dimensions are in millimeters and (inches)

Frame	Approx. Weight (1) kg (lbs.)	
	Drive	Drive & Packaging
4	24.49 (54.0)	29.03 (64.0)

(1) Weights include HIM and Standard I/O.

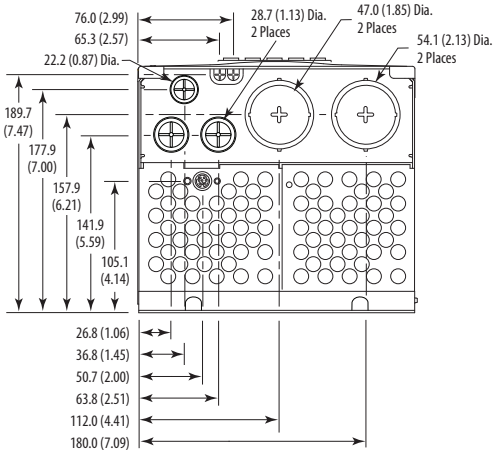

Frame 5 – IP20, NEMA / UL Type 1

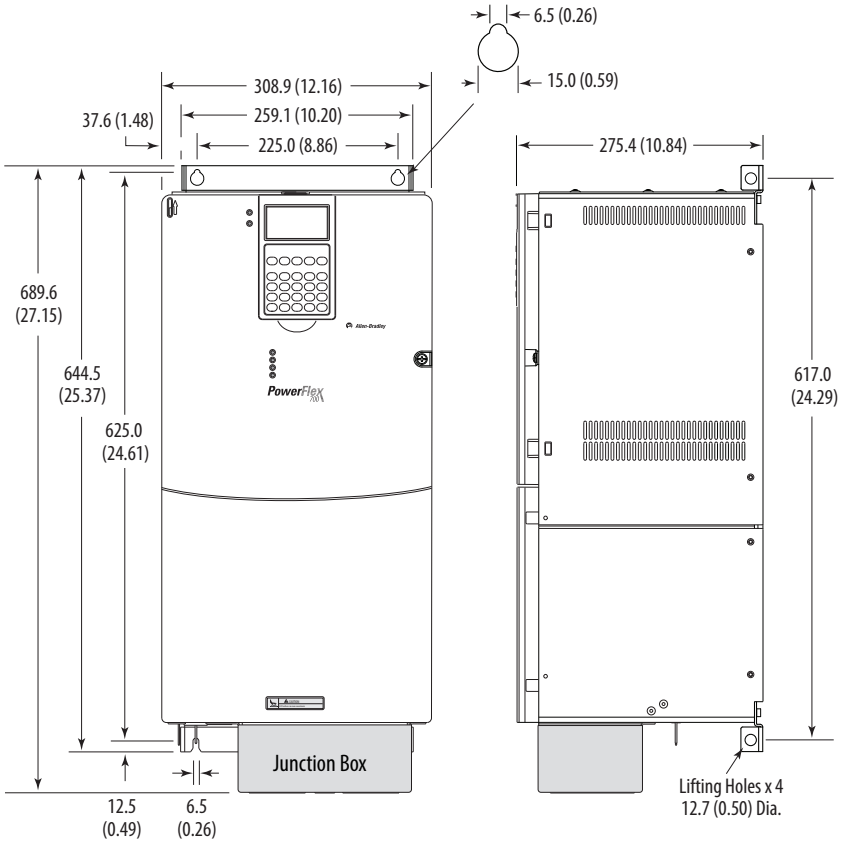

Dimensions are in millimeters and (inches)

Frame	Approx. Weight (1) kg (lbs.)	
	Drive	Drive & Packaging
5	37.19 (82.0)	49.50 (109.0)

(1) Weights include HIM and Standard I/O. Add 2.70 kg (6.0 lbs.) for the 20BC140 drive.

30 kW, 208V (40 Hp, 240V)
55 kW, 400V (75 Hp, 480V)
45/55/75 kW, 690V (75 Hp, 600V)

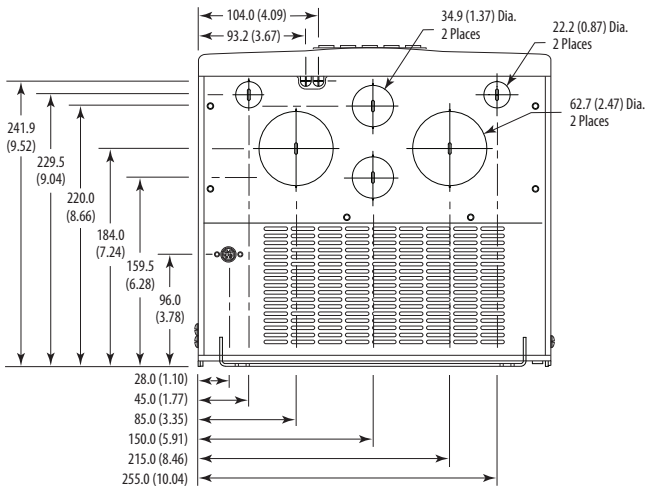

37 kW, 208V (50 Hp, 240V)
75 kW, 400V (100 Hp, 480V)
90kW, 690V (100 Hp, 600V)

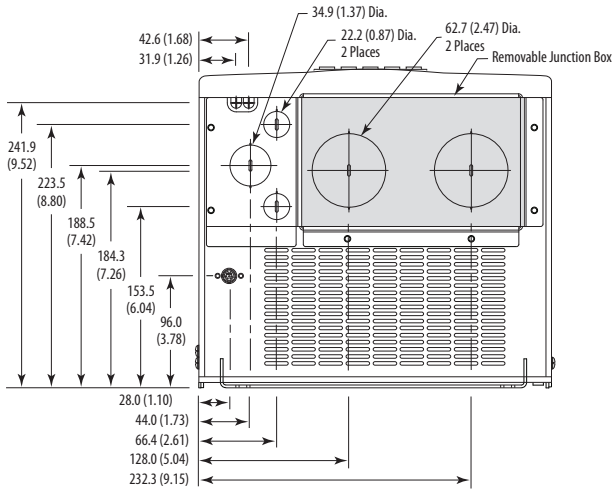

Frame 5 – IP54, NEMA Type 12 Standalone (400…690V drives only)

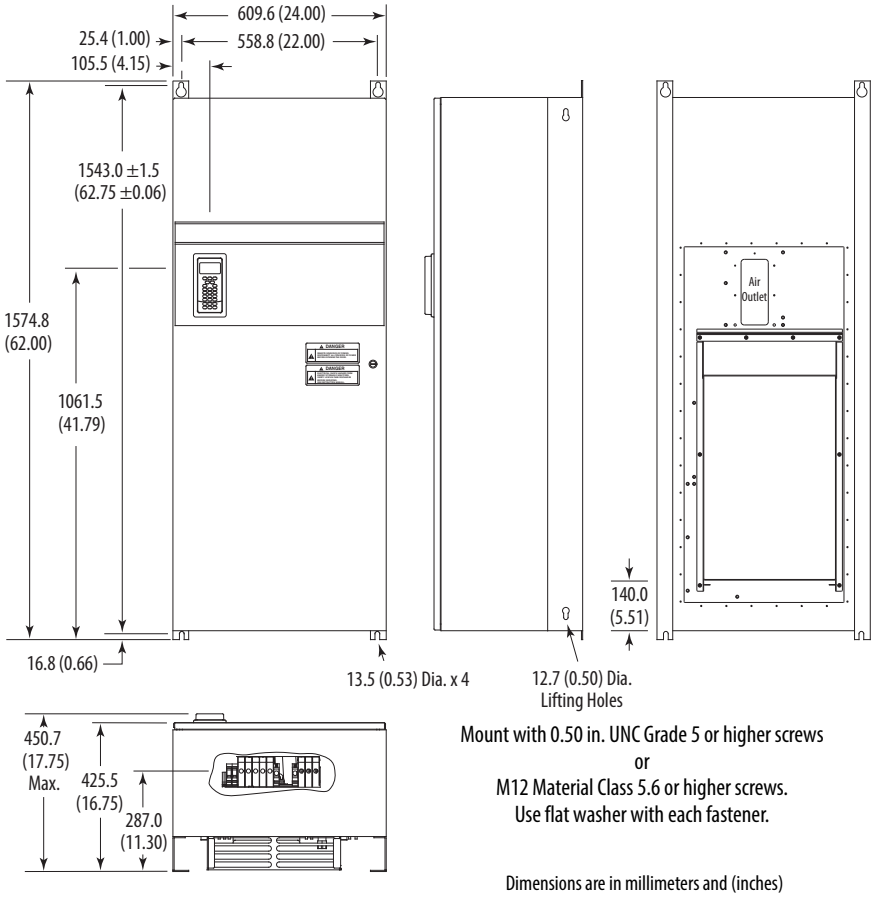

Frame	Description	Approx. Weight (1) kg (lbs.)	
		Drive	Drive & Packaging
5	Standalone	102.51 (226.0)	154.68 (341.0)

(1) Weights include HIM and Standard I/O.

Frame 5 – IP54, NEMA Type 12 Flange Mount (400…690V drives only)

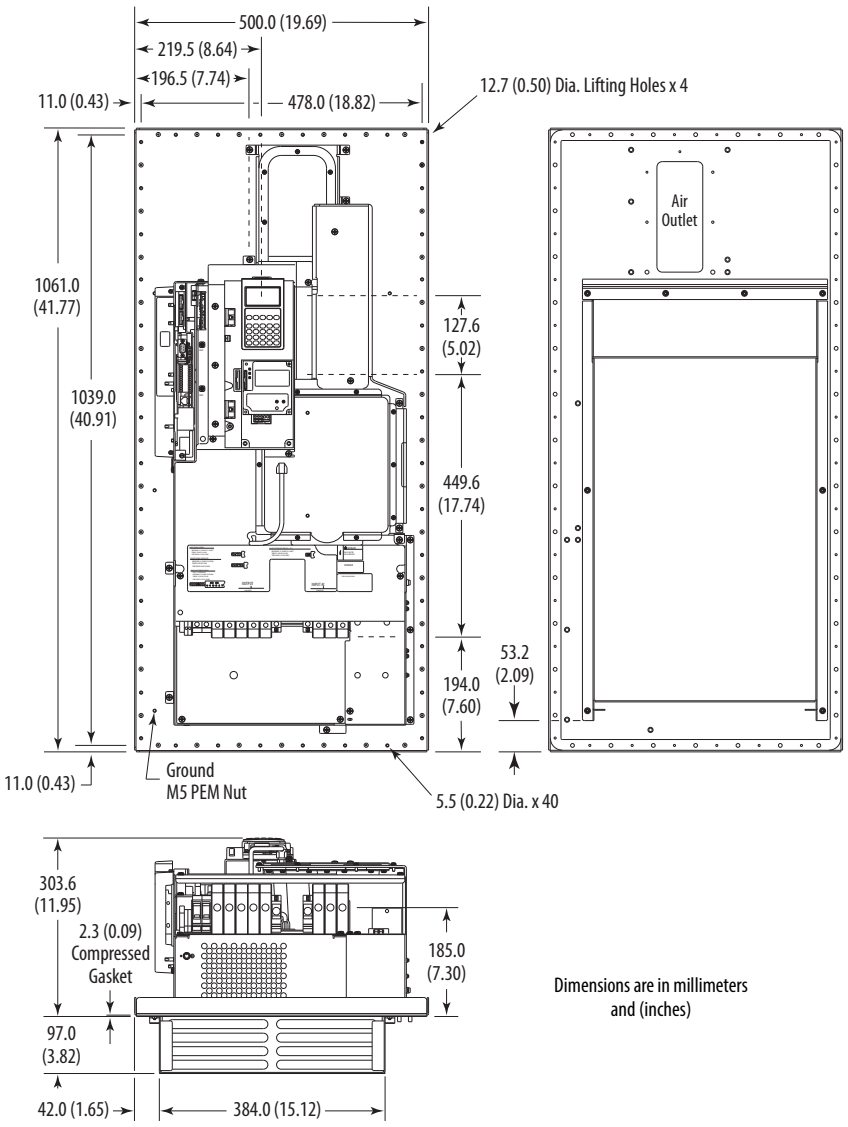

Frame	Description	Approx. Weight (1) kg (lbs.)	
		Drive	Drive & Packaging
5	Flange Mount	61.69 (136.0)	81.65 (180.0)

(1) Weights include HIM and Standard I/O.

Frame 5 – Flange Mount Cutout

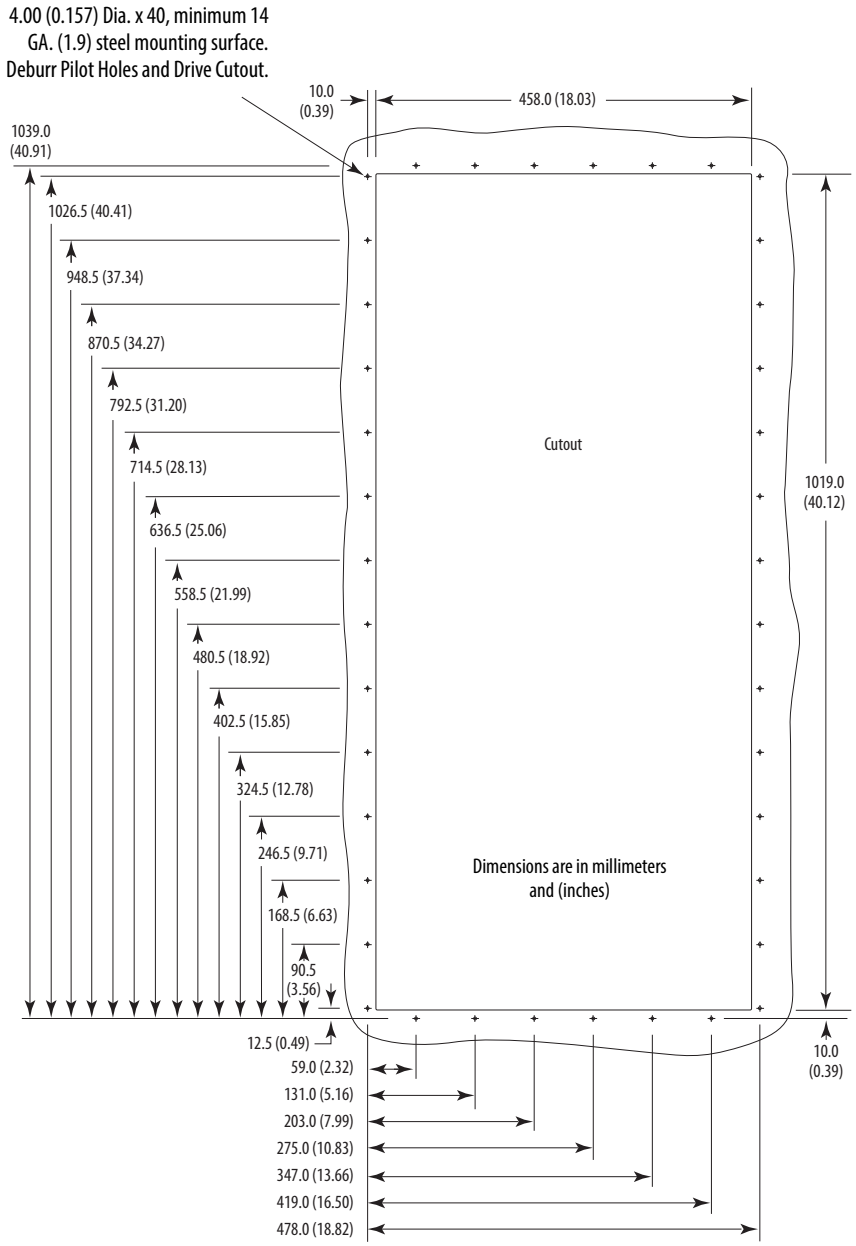

Frame 6 – IP20, NEMA / UL Type 1

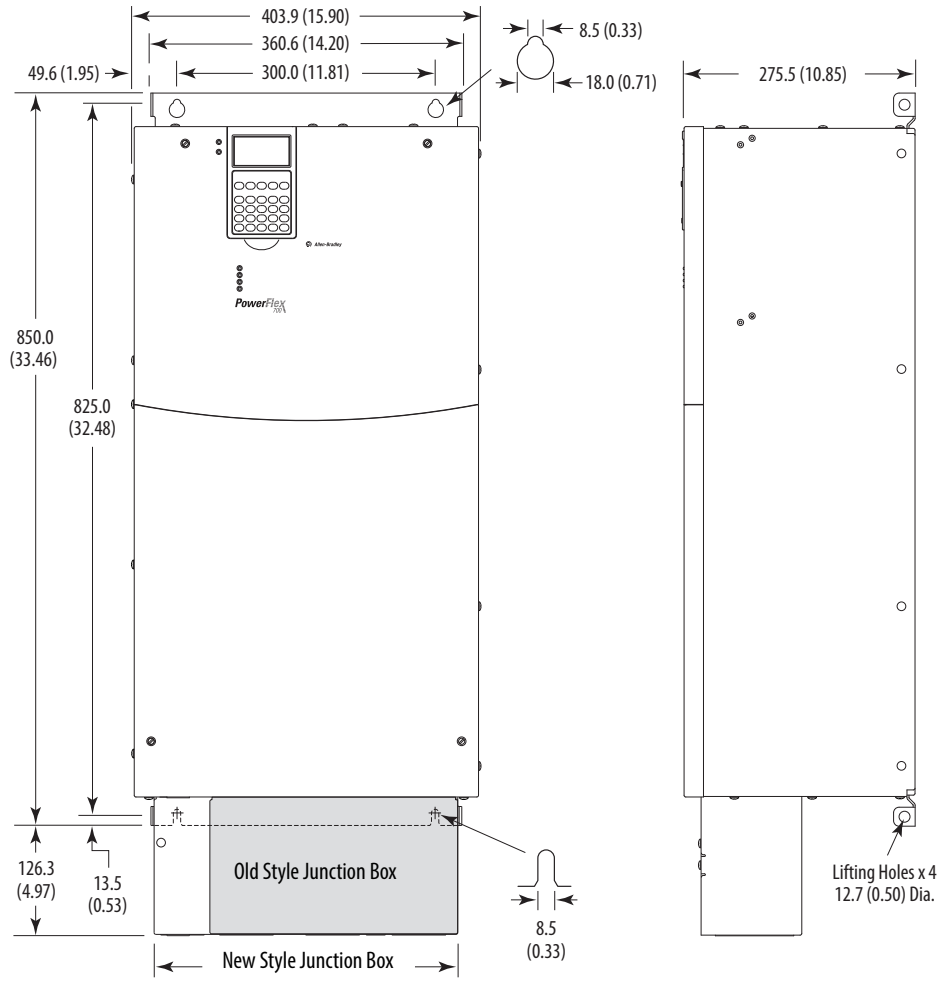

Junction Box can be removed if drive is mounted in a cabinet

Dimensions are in millimeters and (inches)

Frame	Approx. Weight (1) kg (lbs.)	
	Drive	Drive & Packaging
6	71.44 (157.5)	100.9 (222.0)

(1) Weights include HIM and Standard I/O. Add 13.60 kg (30.0 lbs.) for; 20BB260, 20BC260 and 20BD248.

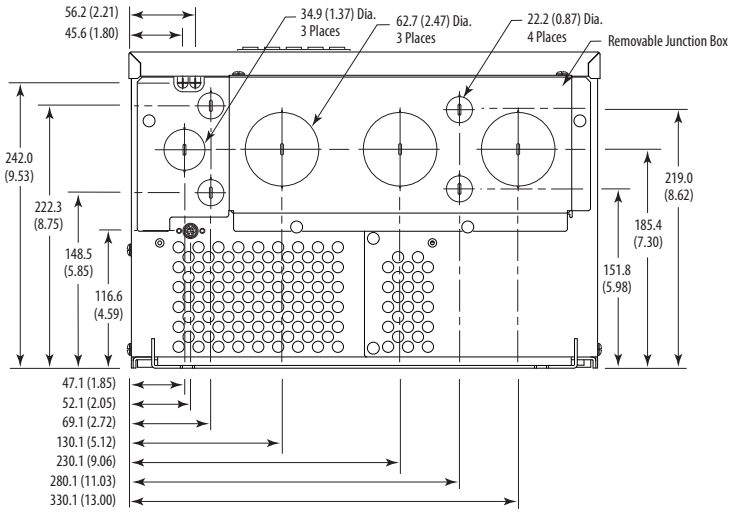

Frame 6 – IP54, NEMA Type 12 Standalone (400…690V drives only)

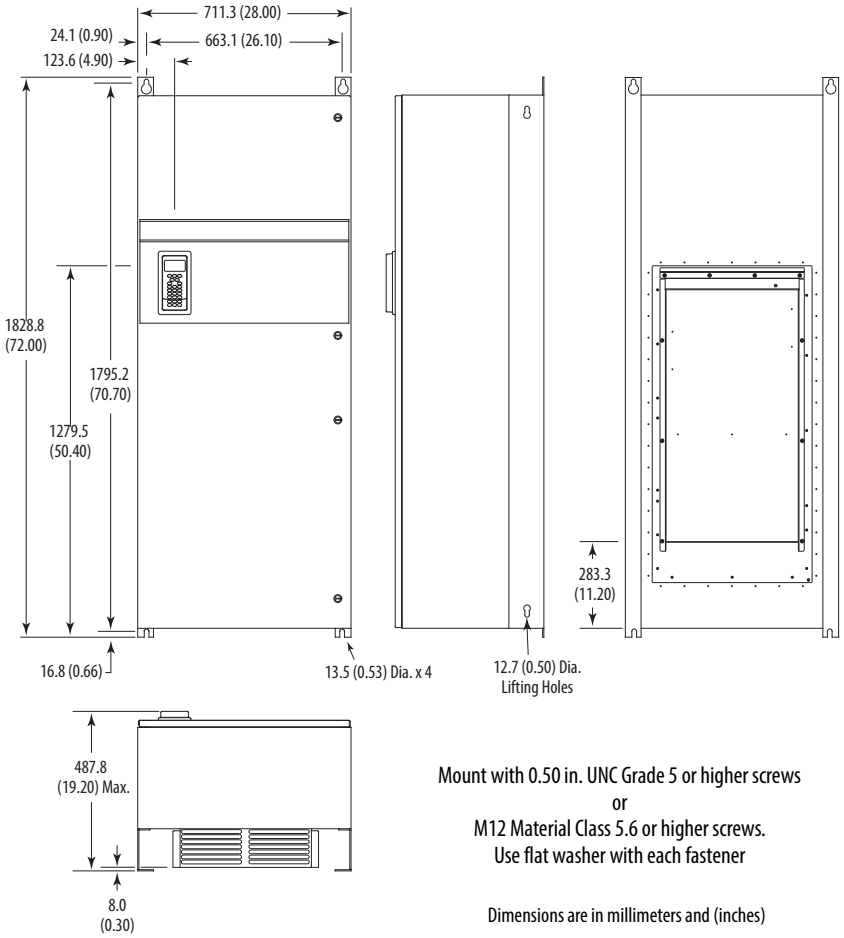

Frame	Description	Approx. Weight [1] kg (lbs.)	
		Drive	Drive & Packaging
6	Standalone	176.90 (390.0)	229.07 (505.0)

(1) Weights include HIM and Standard I/O.

Frame 6 – IP54, NEMA Type 12 Flange Mount (400…690V drives only)

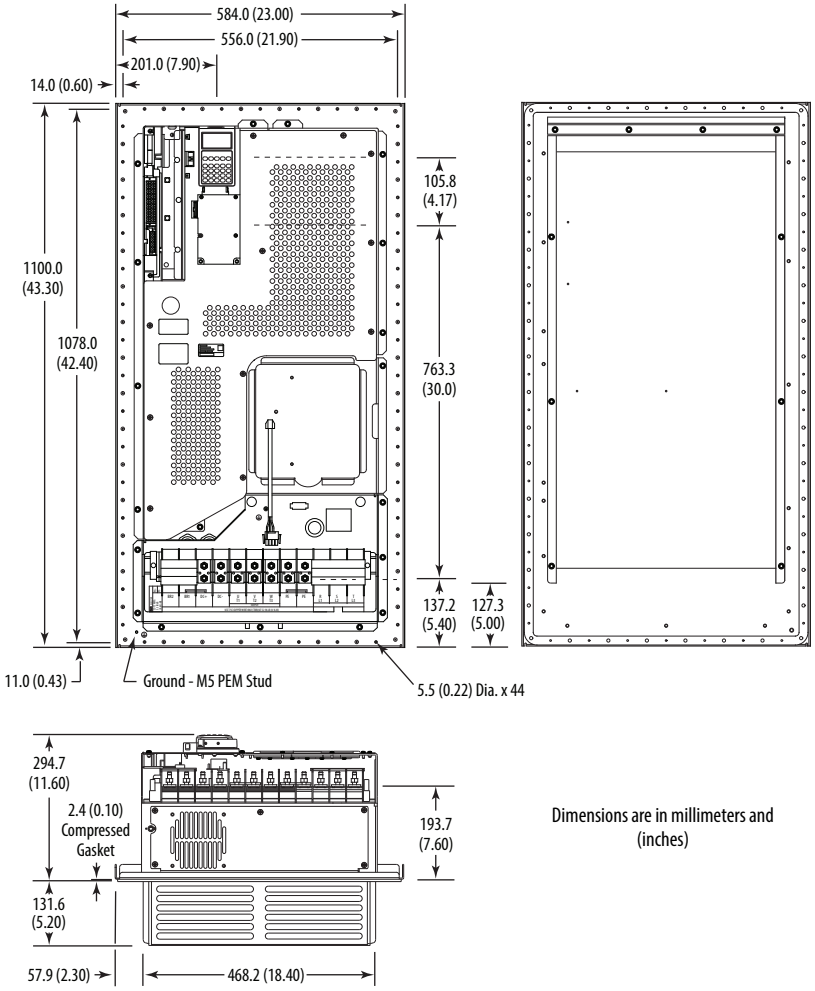

Dimensions are in millimeters and (inches)

Frame	Description	Approx. Weight (1) kg (lbs.)	
		Drive	Drive & Packaging
6	Flange Mount	99.79 (220.0)	119.75 (264.0)

(1) Weights include HIM and Standard I/O.

Frame 6 – Flange Mount Cutout

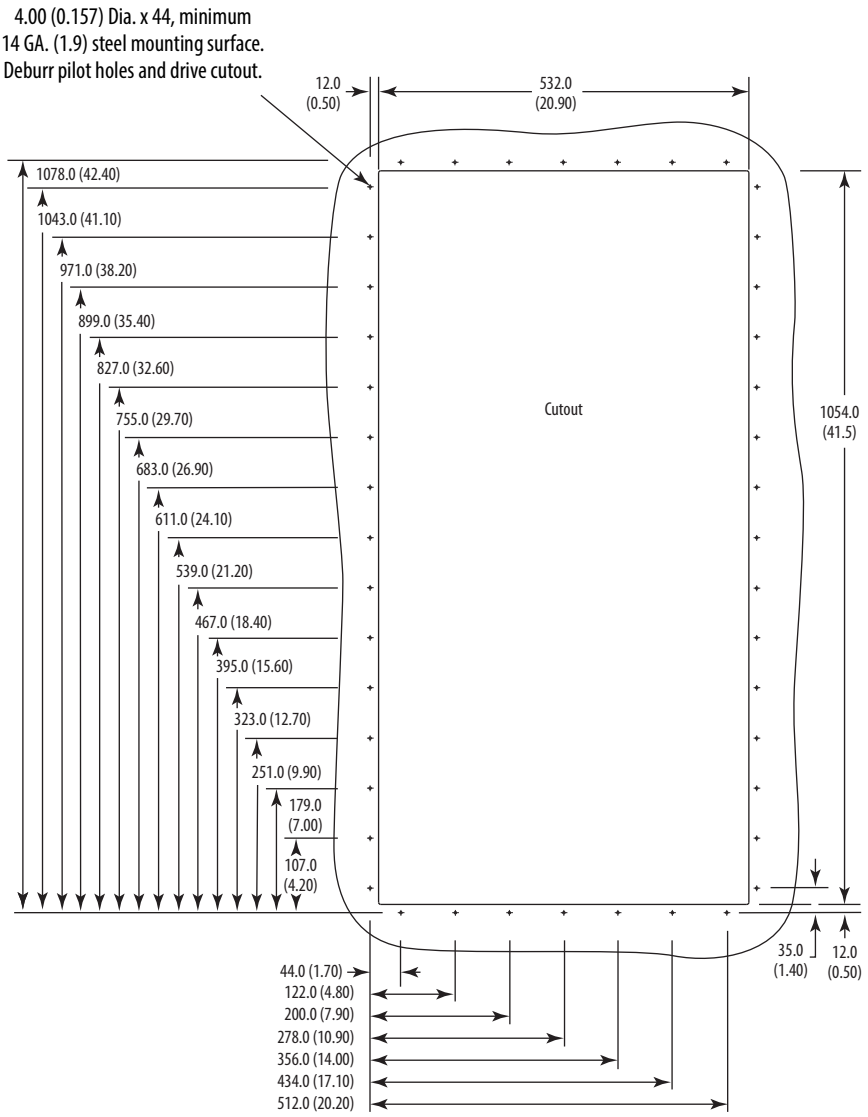

Dimensions are in millimeters and (inches)

Frame 7 – IP20, NEMA / UL Type 1

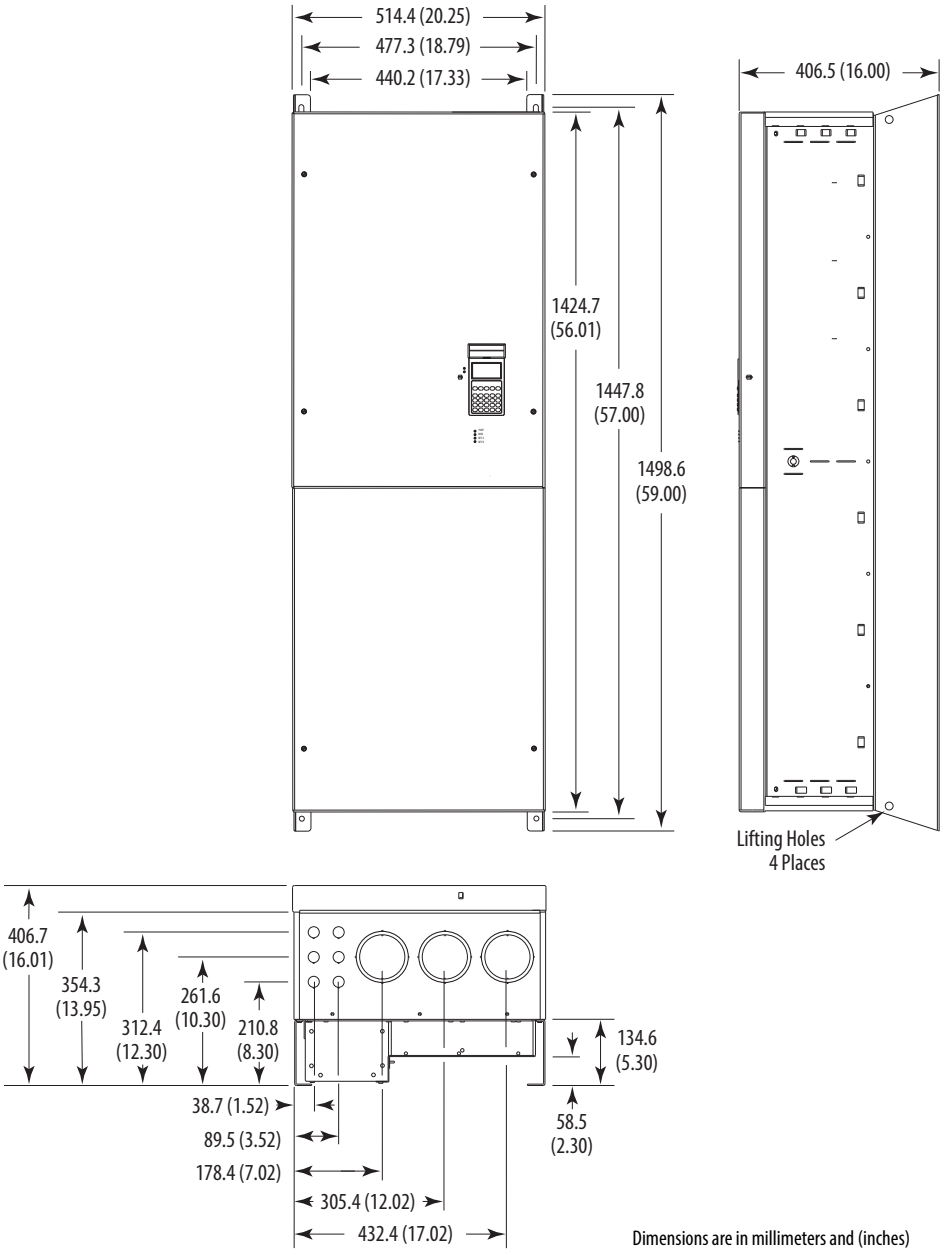

Dimensions are in millimeters and (inches)

Approx. Weight kg (lbs.)	
Drive	**Drive & Packaging**
170 (375)	196 (433)

Frame 7 – IP00, NEMA / UL Type Open

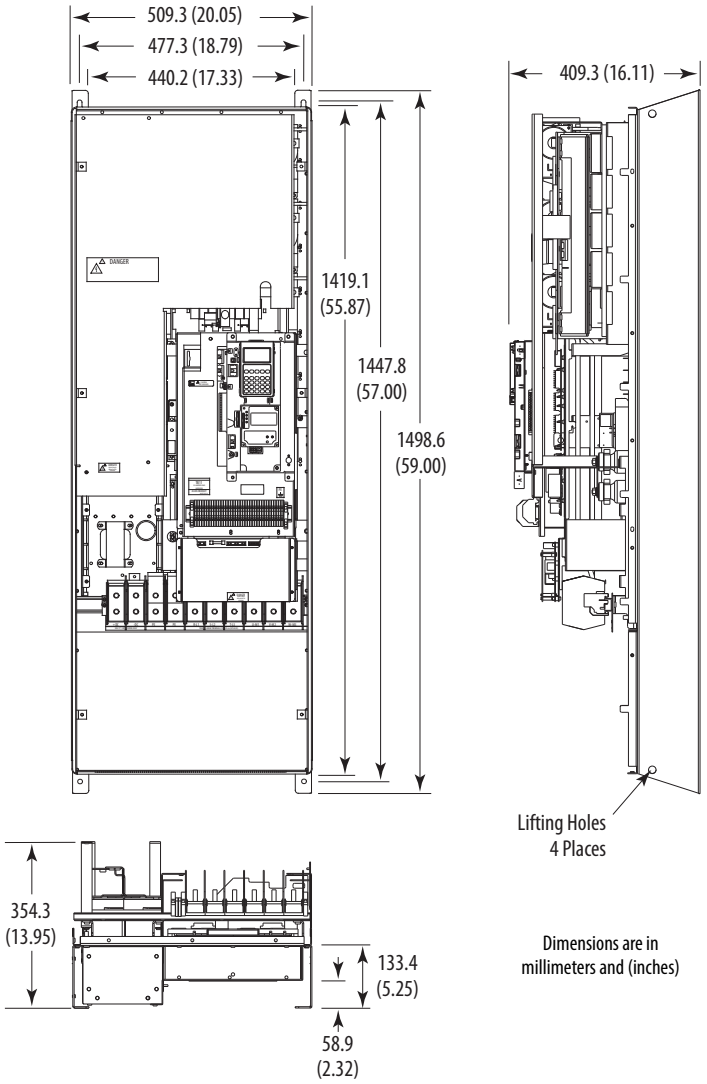

Approx. Weight kg (lbs.)	
Drive	**Drive & Packaging**
147 (324)	173 (382)

Frame 7 – Flange Mount Cutout

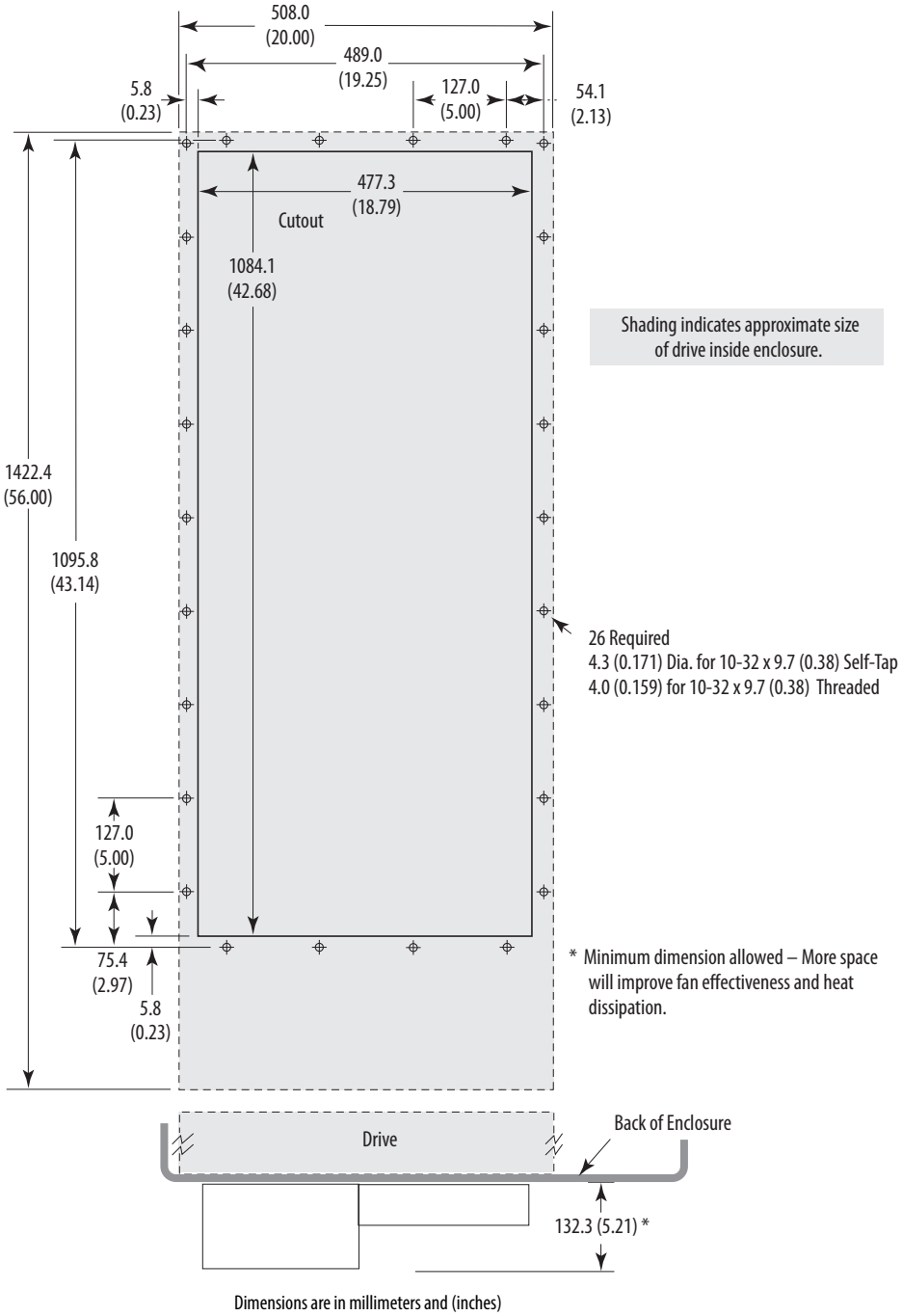

IMPORTANT Use gasket kit catalog number SK-G1-GASKET1-F7 with user supplied IP54, NEMA / UL Type 12 enclosure.

Frames 8…9 – IP20, NEMA / UL Type 1

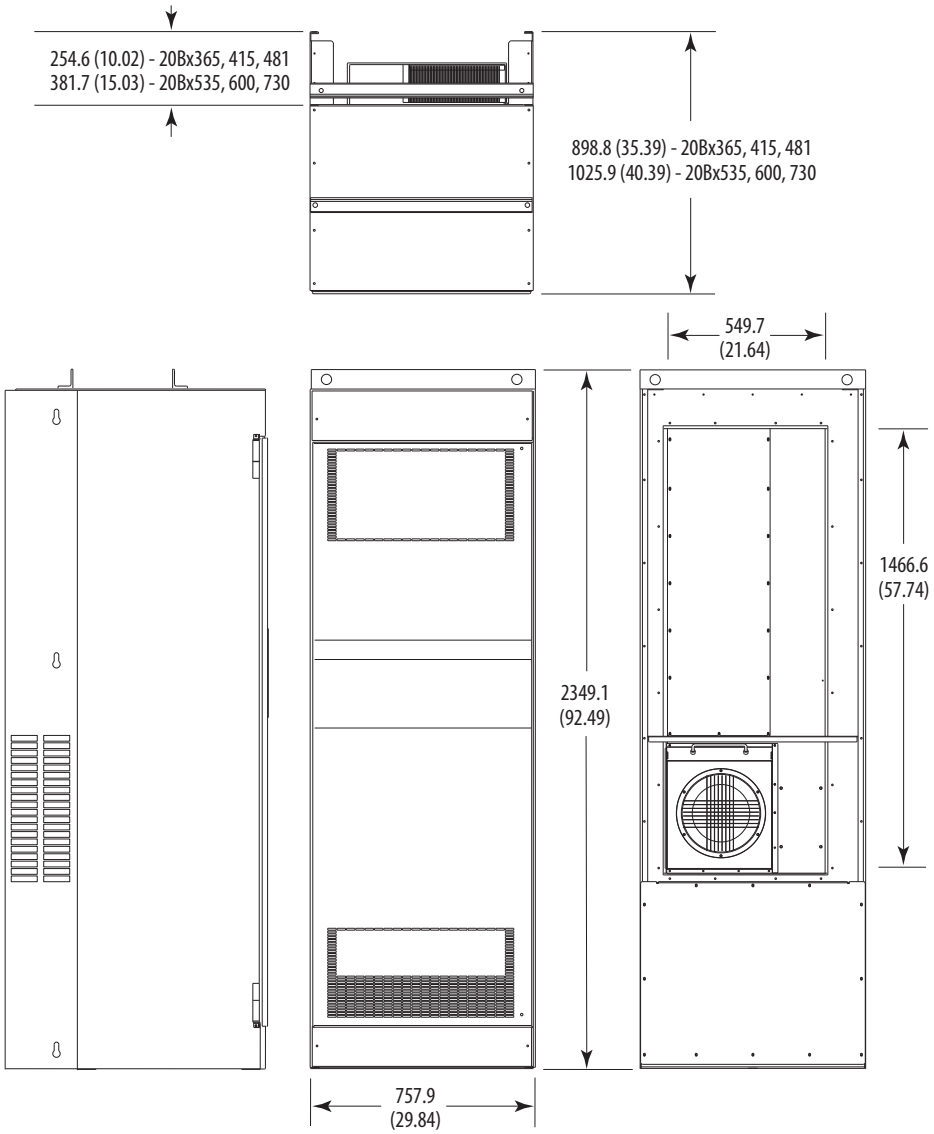

Dimensions are in millimeters and (inches)

Approx. Weight kg (lbs.)		
Frame	**Drive**	**Drive & Packaging**
8	509 (1122)	556 (1225)
9	526 (1159)	603 (1262)

Frames 8…9 – IP00, NEMA / UL Type Open

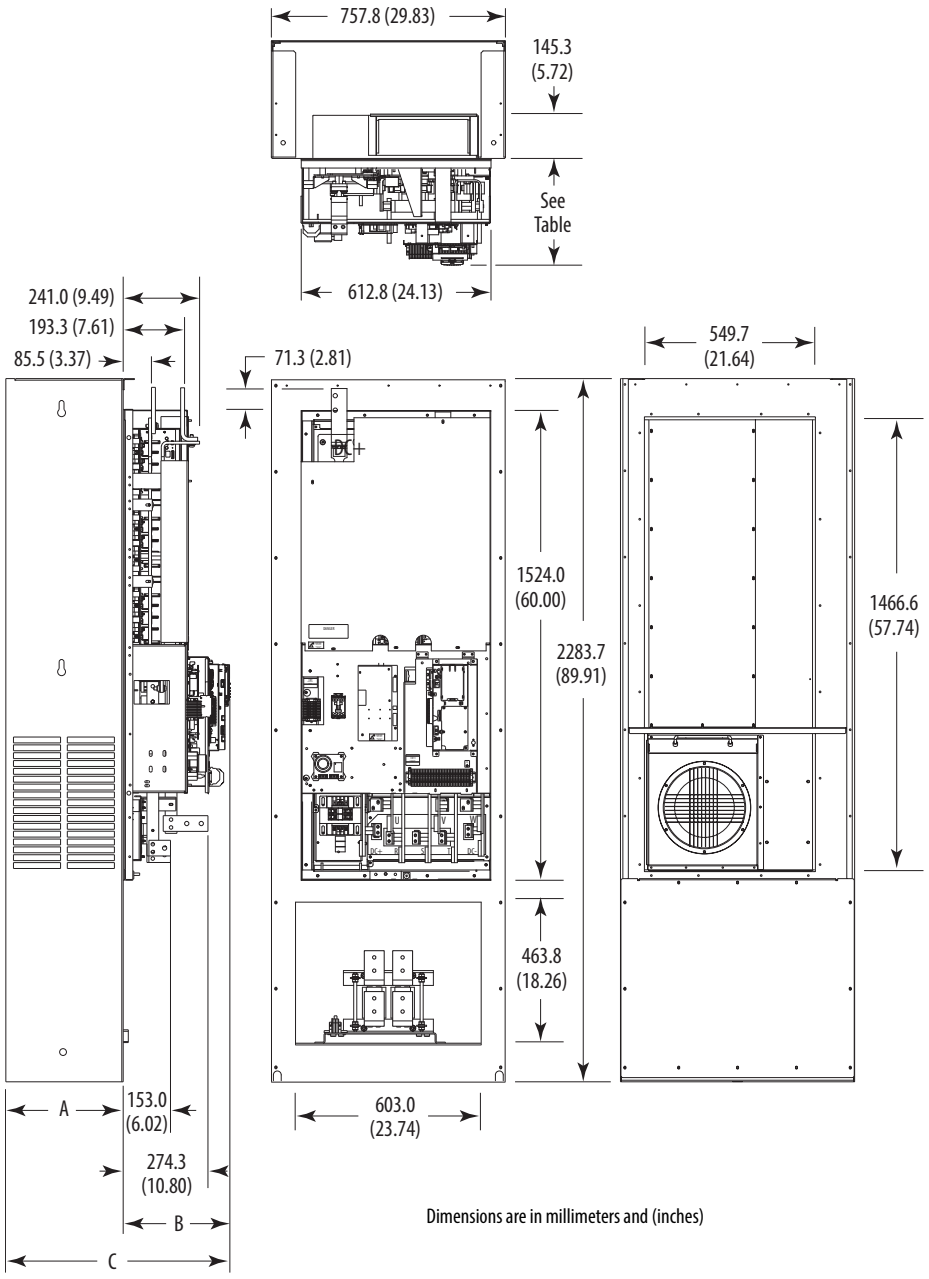

Dimensions are in millimeters and (inches)

Frame	Cat. No.	A	B	C	Approx. Weight kg (lbs.)	
					Drive	Drive & Packaging
8	20Bx365, 415, 481	254.6 (10.02)	345.3 (13.59)	599.4 (23.60)	384 (847)	431 (950)
	20Bx535, 600	381.7 (15.03)	345.5 (13.60)	726.6 (28.61)	384 (847)	431 (950)
9	20Bx730	381.1 (15.00)	345.3 (13.60)	771.9 (30.39)	401 (884)	448 (987)

Frames 8…9 – Converting an IP00 Drive for Flange Mounting

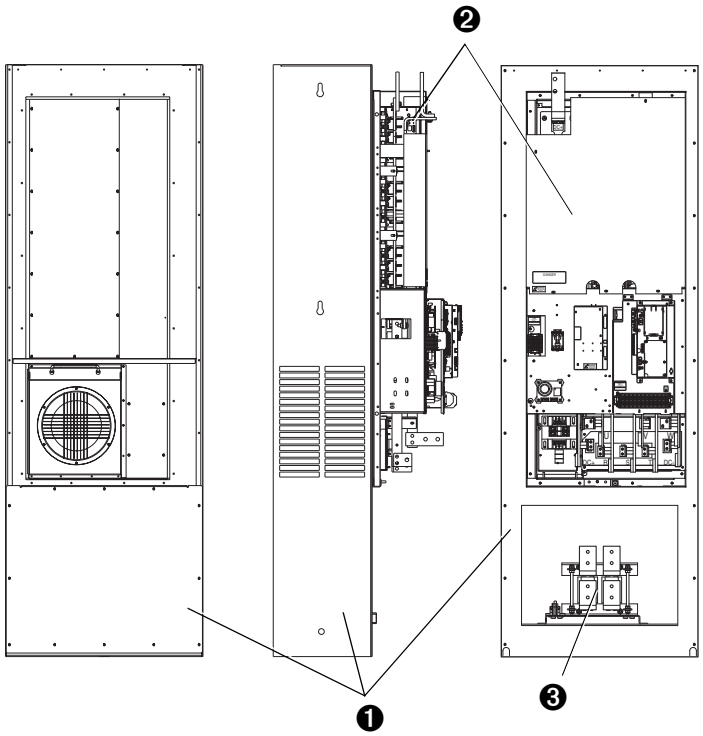

No.	Component
❶	Remove these IP00 enclosure components.
❷	Drive assembly to be flange mounted.
❸	DC link choke - mounts separately in enclosure (see page 72 for dimensions) and is wired directly to drive.

Frames 8…9 Roll-In – IP00, NEMA / UL Type Open

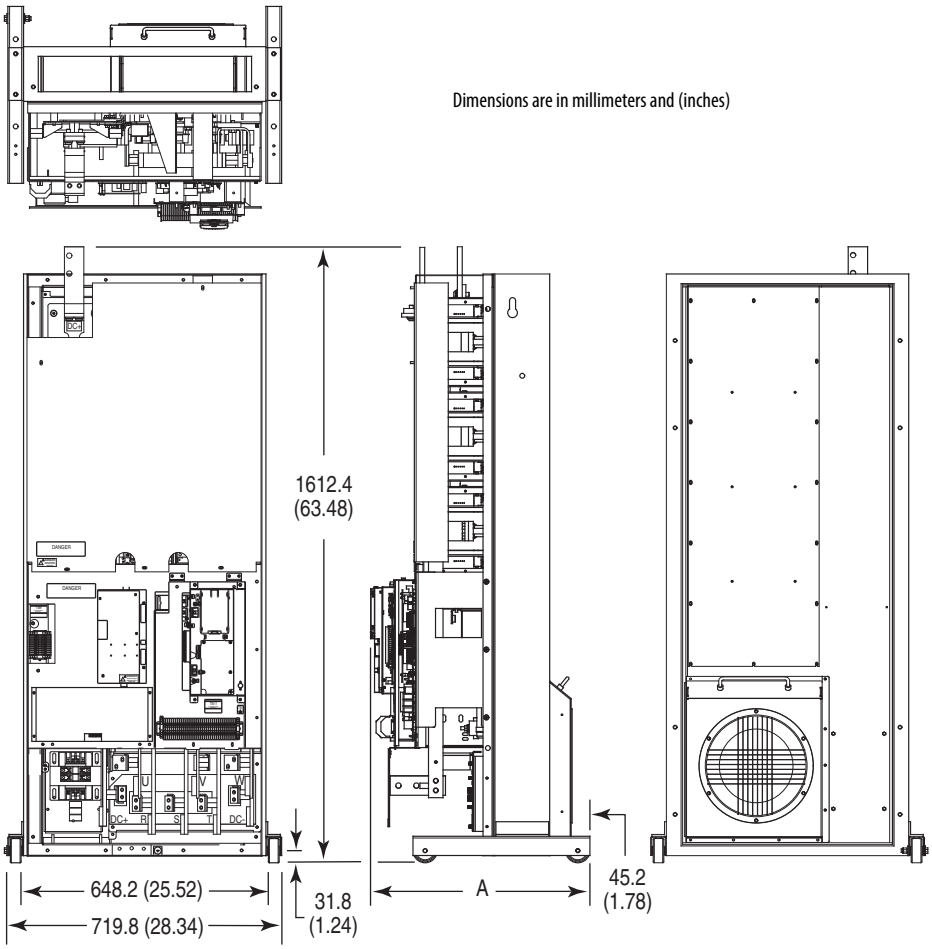

Frame	Cat. No.	A	Approx. Weight kg (lbs.)	
			Drive	Drive & Packaging
8	20Bx365, 415, 481	574.8 (22.63)	250 (552)	297 (655)
8	20Bx535, 600	574.8 (22.63)	250 (552)	297 (655)
9	20Bx730	594.3 (23.40)	267 (589)	314 (692)

Frames 8…9 Roll-In Mounting Considerations

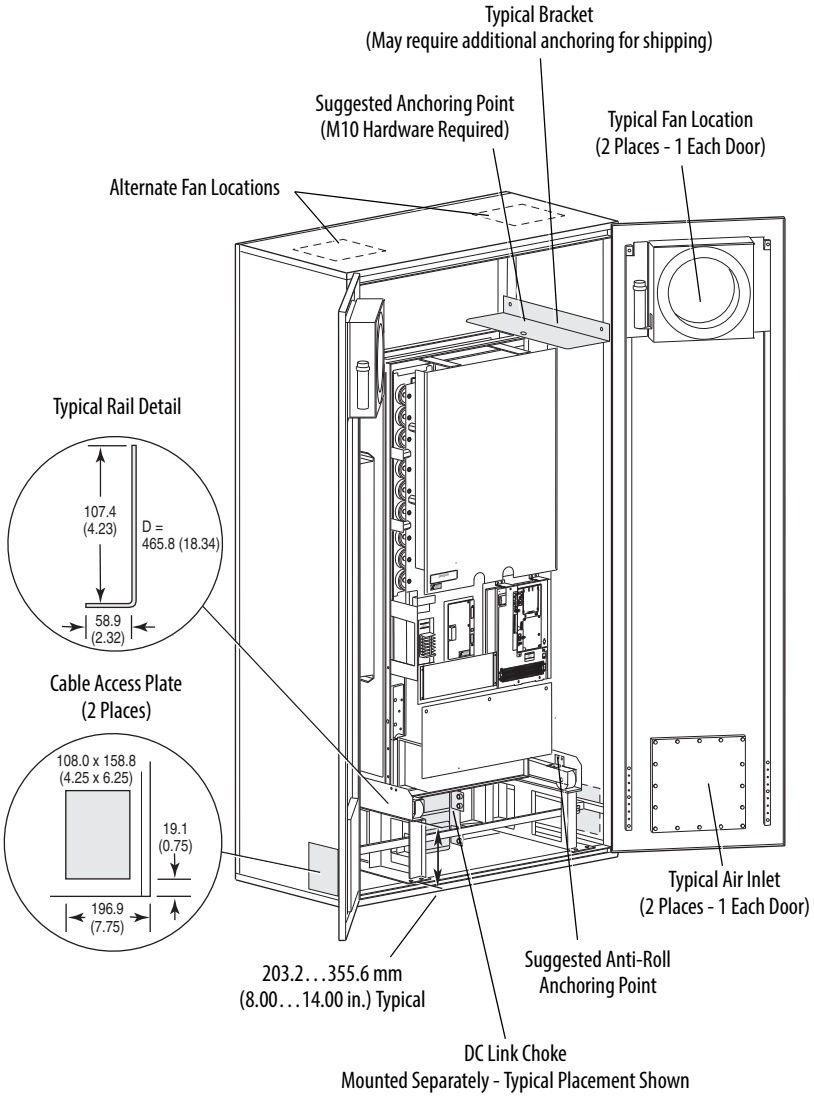

IMPORTANT This information illustrates how an open roll-in style drive could be mounted in a user supplied enclosure. Illustrations are intended only to identify structural mounting points and hardware shapes. You must design and fabricate steel components based on the actual mounting configuration, calculated loads and enclosure specifications. Minimum thickness of all parts = 4.6 mm (0.18 in.).

Frames 8…9 Flange Mount Cutout

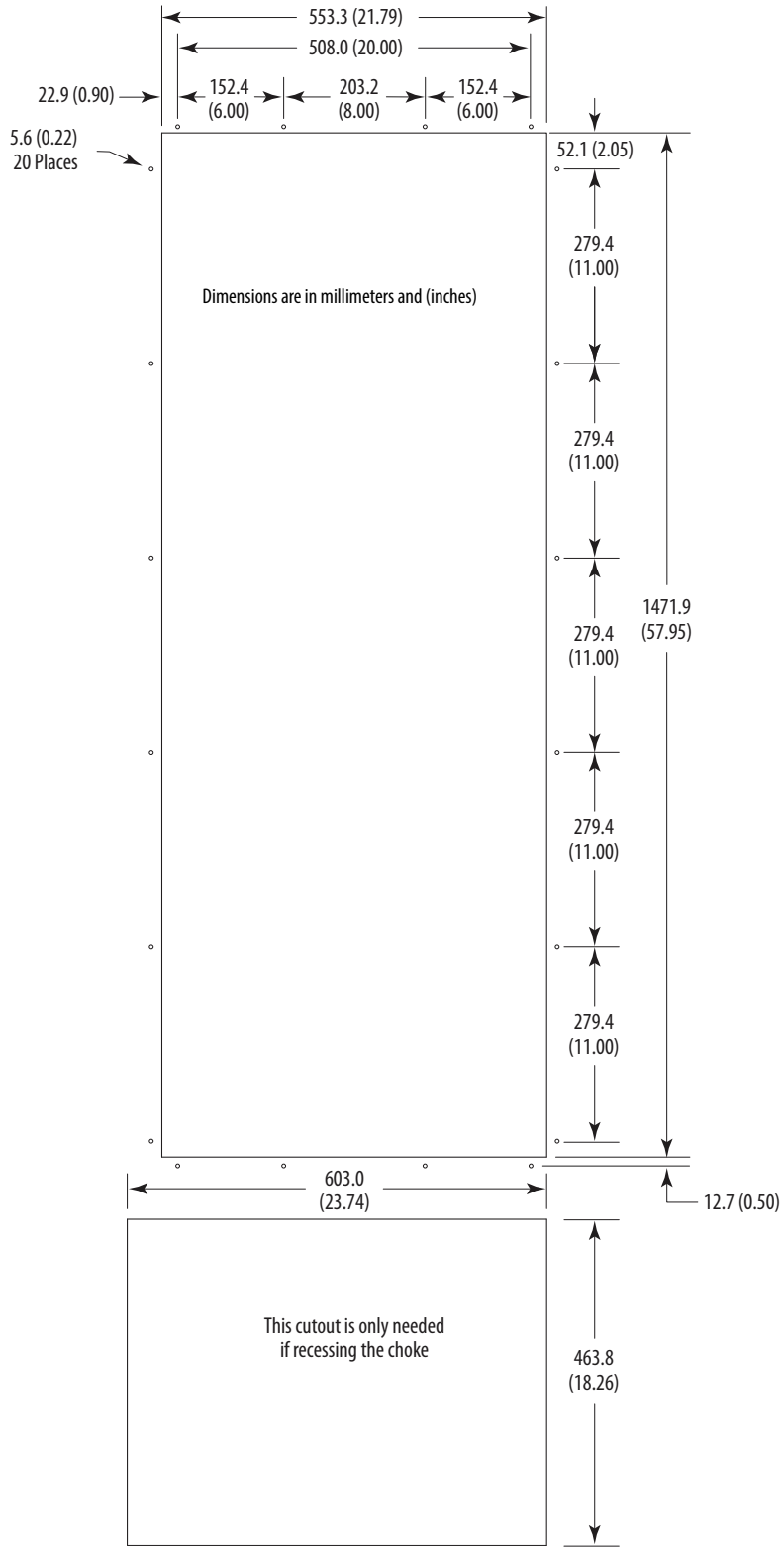

IMPORTANT Use gasket kit catalog number SK-G1-GASKET1-F89 with user supplied IP54, NEMA / UL Type 12 enclosure.

DC Link Chokes

Frame 8

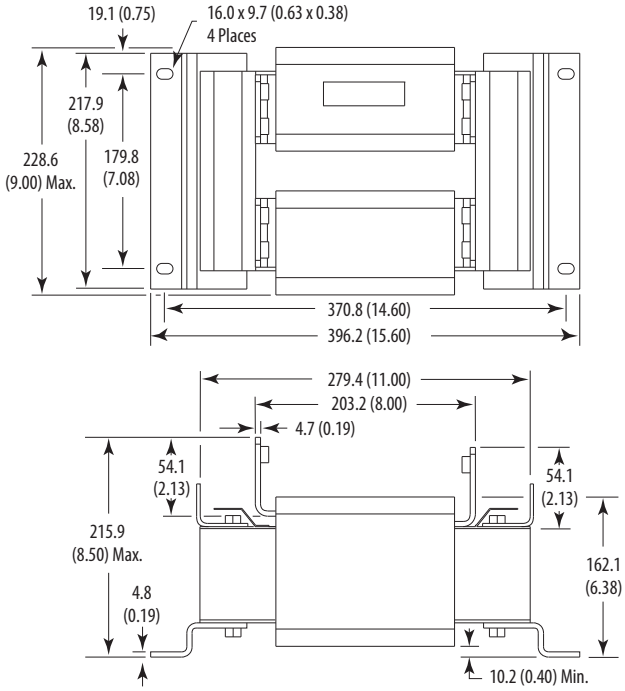

Frame 9

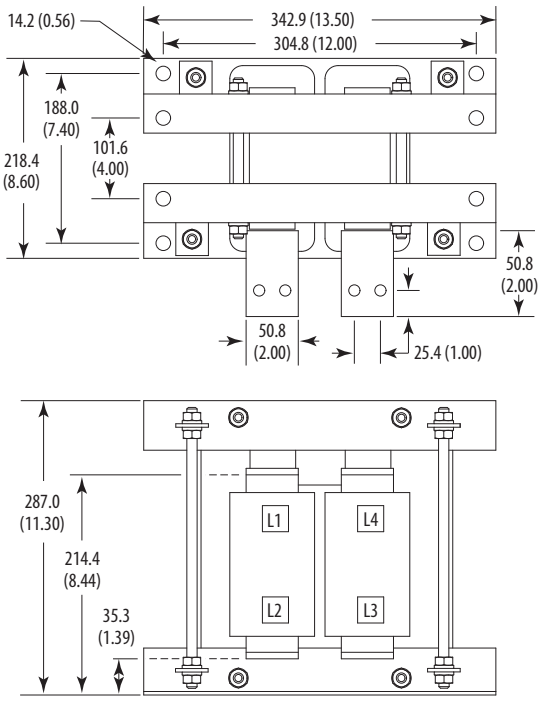

Frame 10

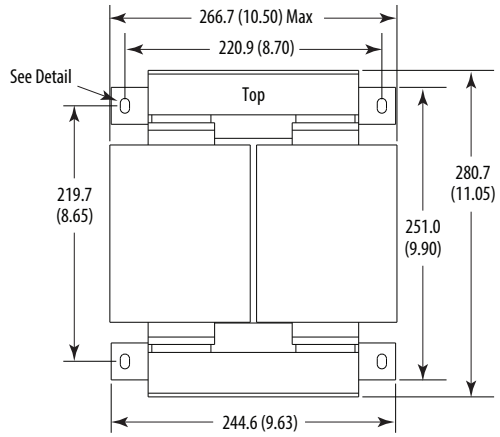

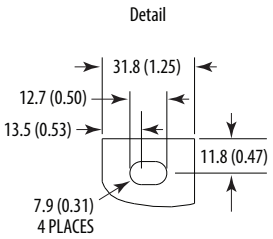

Dimensions are in millimeters and (inches)

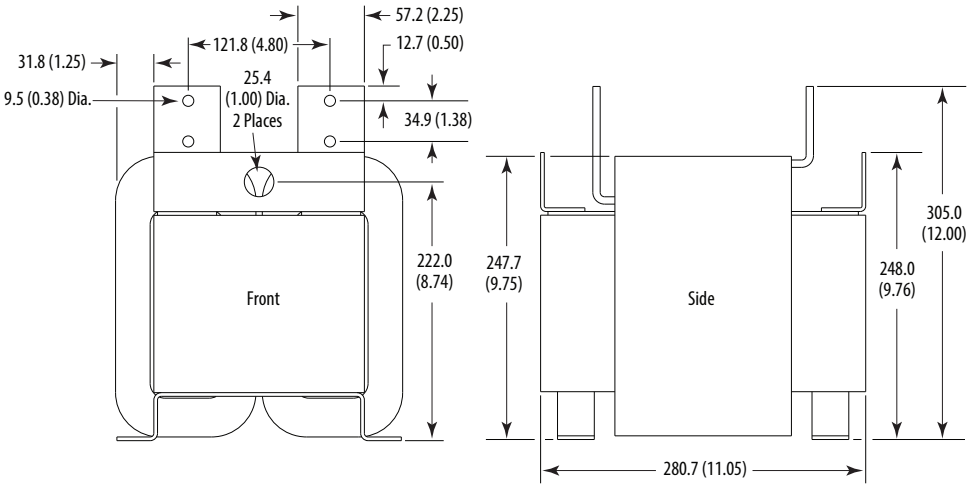

Frame 10 – IP20, NEMA / UL Type 1
AC Input Shown, for DC Input Dimensions use the Inverter (Left) Bay

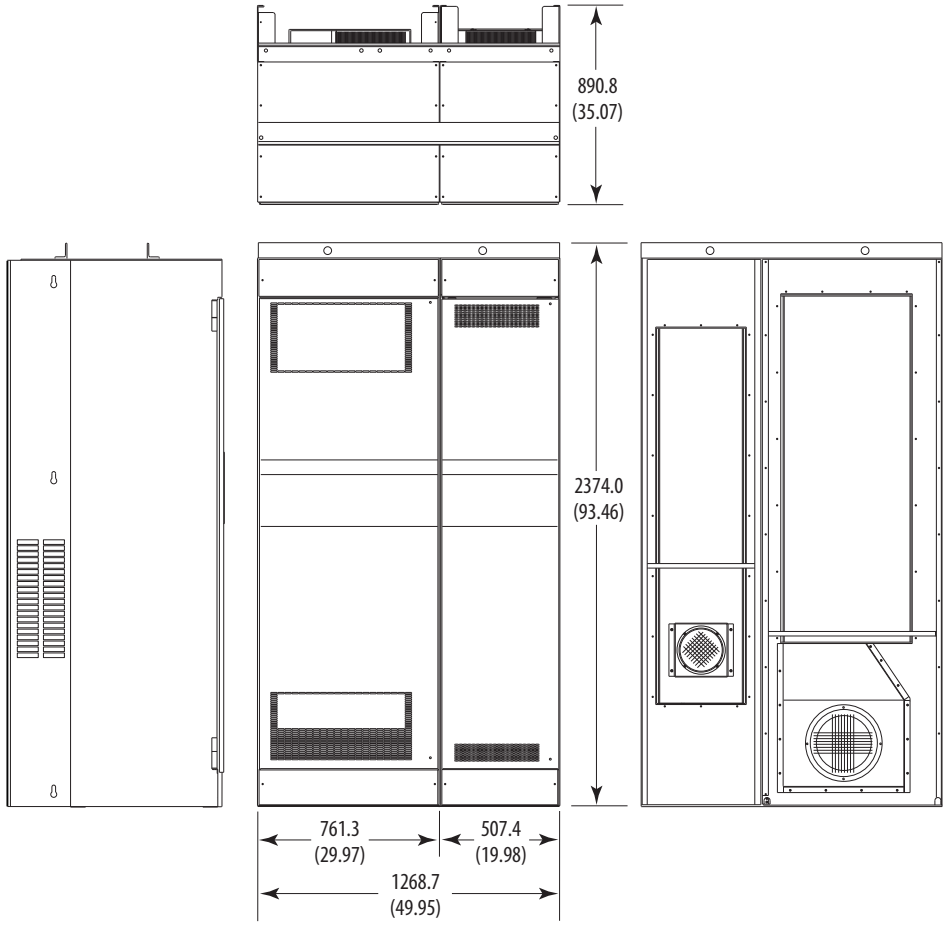

Dimensions are in millimeters and (inches)

Approx. Weight kg (lbs.)		
Type	**Drive**	**Drive & Packaging**
DC Input	468 (1032)	515 (1135)
AC Input	867 (1912)	958 (2112)

Frame 10 – IP00, NEMA / UL Type Open

AC Input Shown, for DC Input Dimensions use the Inverter (Left) Bay

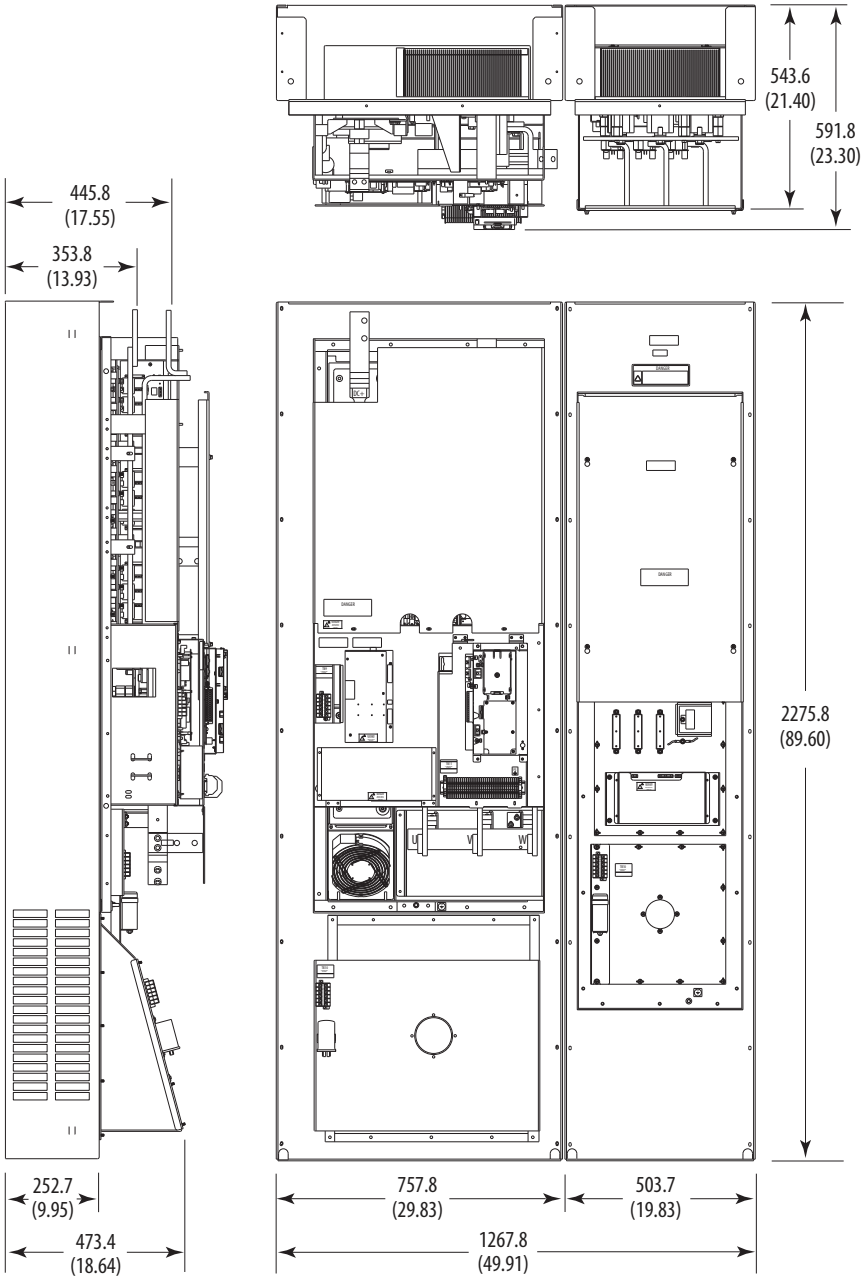

Dimensions are in millimeters and (inches)

Approx. Weight kg (lbs.)		
Type	**Drive**	**Drive & Packaging**
DC Input	305 (672)	352 (775)
AC Input	532 (1172)	623 (1372)

Frame 10 – Flange Mount Cutout

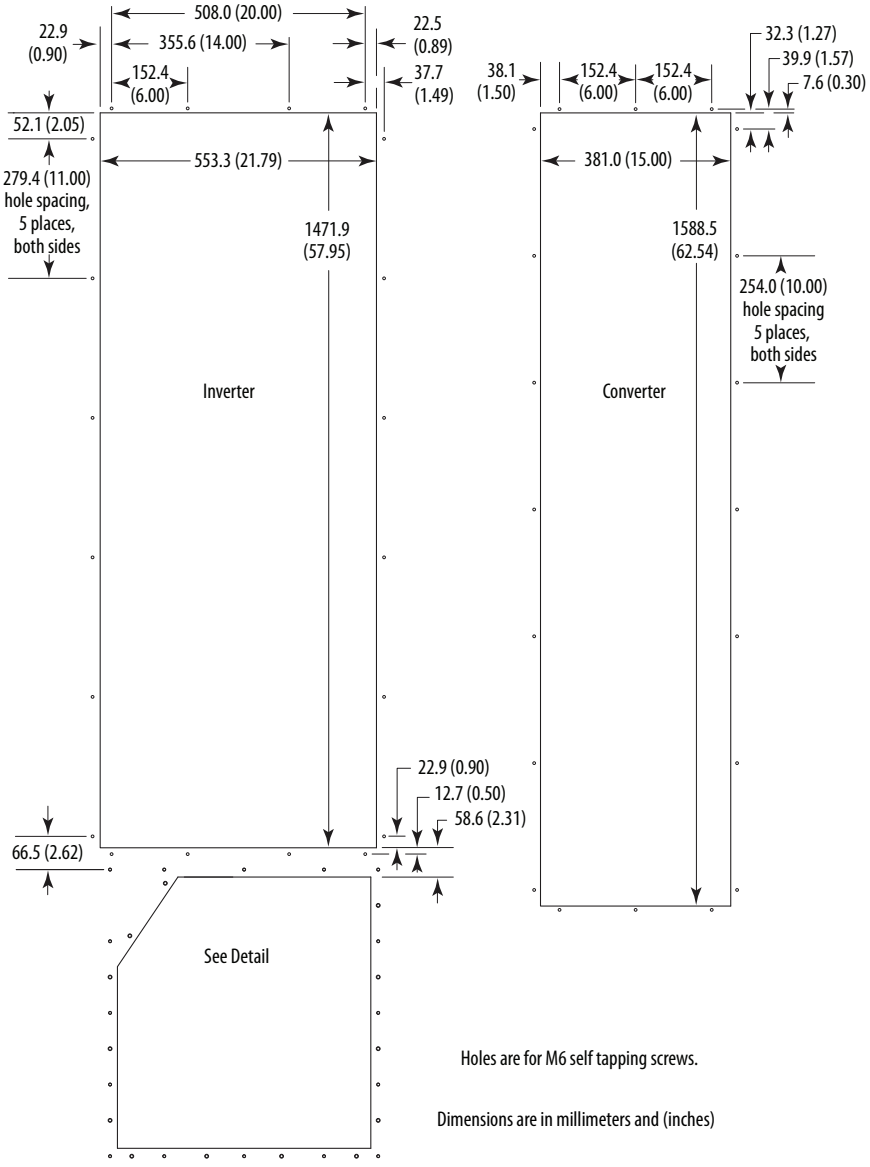

IMPORTANT Backplate and extension are a single piece. Drive chassis can be removed from backplate to mount in user supplied IP54, NEMA / UL Type 12 enclosure.

Frame 10 – Flange Mount Cutout Detail

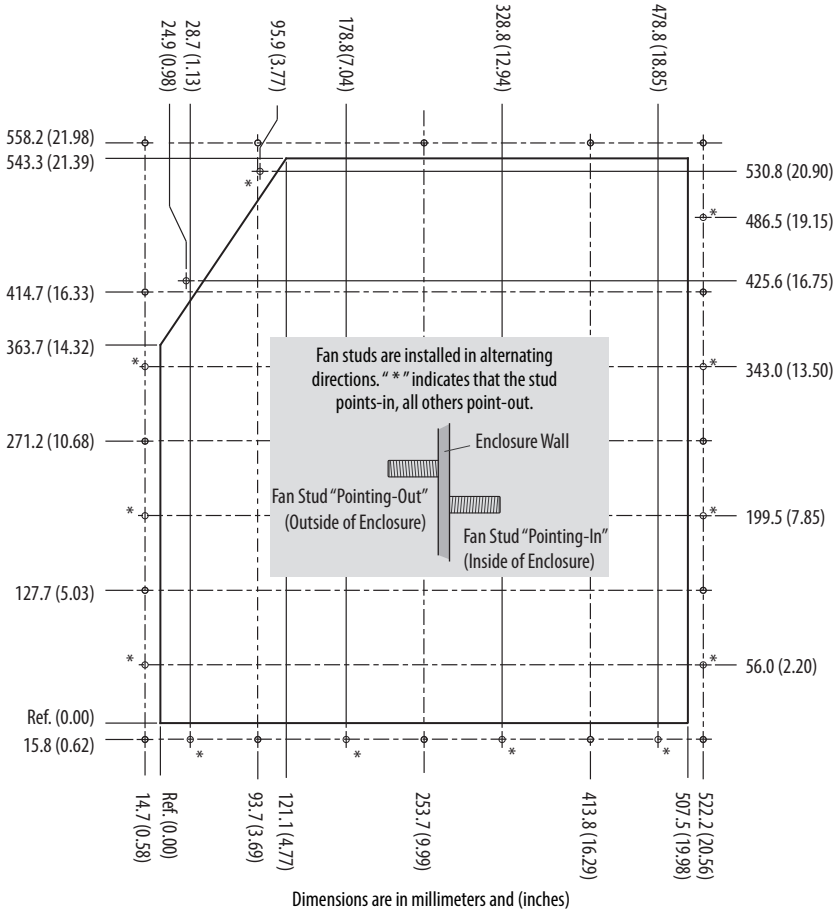

IMPORTANT Backplate and extension are a single piece. Drive chassis can be removed from backplate to mount in user supplied IP54, NEMA / UL Type 12 enclosure.

PowerFlex 700 Packaged Drives

Product Description

PowerFlex 700 Packaged Drives are ideal for global Original Equipment Manufacturers (OEM) and end users with special installation needs. This program simplifies installation and start-up by allowing users to order drive packages that combine operator interface, control, communications and power options in pre-configured assemblies. Designed to meet customer demands for space savings, application flexibility and reliability, Packaged PowerFlex 700 AC drives offer a number of commonly requested pre-engineered options, as well as more complex custom-engineered packages.

Benefits

- Simplified installation and start-up by use of common options assembled at the factory.
- Drive functionality exceeds options offered with a standard drive.
- Multiple packaging options specific to customer needs.
- Pre-engineered options for easy order entry, consistent manufacturing, high quality and reduced deliveries.
- Selectable configurations to meet application requirements.

Features

- Standard PowerFlex 700 AC drives and drive-related options.
- Six pulse and multi-pulse.
- Tuned harmonic filters.
- Enclosure options: Type 1, Type 12 (fan and filter or convection/AC), and Type 4 (indoor).
- Pre-engineered options.
- Custom/engineered solutions.
- UL panel recognition from the factory for pre-engineered options.

Options

- Drive Input Protection
- Input/Output Contactors
- Input/Output Line Reactors
- Bypass
- Control Power
- Control Interface and Feedback
- Communication
- Human Interface Module (HIM)
- Motor Interface
- Door Mounted Operator Devices

Please contact your local distributor or sales office for product availability.

Drive Options

Human Interface Modules

Description	Cat. No.
No HIM (Blank Plate), Handheld/Local (Drive Mount)	20-HIM-A0
LCD Display, Full Numeric Keypad, Handheld/Local (Drive Mount)	20-HIM-A3
Enhanced, LCD, Full Numeric Keypad, Handheld/Local (Drive Mount)	20-HIM-A6
Remote (Panel Mount) LCD Display, Full Numeric Keypad (1) (2)	20-HIM-C3S
Enhanced, LCD, Full Numeric Keypad ?‡	20-HIM-C6S

(1) IP66, NEMA Type 4X/12 - For indoor use only.

(2) Includes a 1202-C30 interface cable (3 meters) for connection to drive.

Human Interface Module Accessories

Description	Cat. No.
Bezel Kit for LCD HIMs, NEMA Type 1 (1)	20-HIM-B1
PowerFlex HIM Interface Cable, 1 m (39 in) (2)	20-HIM-H10
Comm Option Cable Kit (Male-Male) 0.33 Meters (1.1 Feet) 1 Meter (3.3 Feet) 3 Meter (9.8 Feet) 9 Meter (29.5 Feet)	 1202-C03 1202-C10 1202-C30 1202-C90
Cable Kit (Male-Female) (3) 0.33 Meters (1.1 Feet) 1 Meter (3.3 Feet) 3 Meter (9.8 Feet) 9 Meter (29.5 Feet)	 1202-H03 1202-H10 1202-H30 1202-H90
DPI Cable Kit with Connectors, Tools and 100 m (328 ft.) Cable	1202-CBL-KIT-100M
DPI Cable Connector Kit	1202-TB-KIT-SET
DPI/SCANport™ One toTwo Port Splitter Cable	1203-S03

(1) Includes a 1202-C30 interface cable (3 meters) for connection to drive.

(2) Required only when HIM is used as handheld or remote.

(3) Required in addition to 20-HIM-H10 for distances up to a total maximum of 10 Meters (32.8 Feet).

Communication Option Kits and Accessories

Description	Cat. No.
BACnet® MS/TP RS485 Communication Adapter	20-COMM-B
ControlNet Communication Adapter (Coax)	20-COMM-C
DeviceNet Communication Adapter	20-COMM-D
EtherNet/IP™ Communication Adapter	20-COMM-E
Dual-port EtherNet/IP™ Communication Adapter	20-COMM-ER (2)
HVAC Communication Adapter (Only Modbus RTU can be used)	20-COMM-H
CANopen® Communication Adapter	20-COMM-K
LonWorks® Communication Adapter	20-COMM-L
Modbus/TCP Communication Adapter	20-COMM-M
PROFIBUS™ DP Communication Adapter	20-COMM-P
ControlNet Communication Adapter (Fiber)	20-COMM-Q
Remote I/O Communication Adapter	20-COMM-R (3)
RS485 DF1 Communication Adapter	20-COMM-S
External Communications Kit Power Supply	20-XCOMM-AC-PS1
DPI External Communications Kit	20-XCOMM-DC-BASE
External DPI I/O Option Board (1)	20-XCOMM-IO-OPT1
Compact I/O™ Module (3 Channel)	1769-SM1
Serial Null Modem Adapter	1203-SNM
Smart Self-powered Serial Converter (RS232) includes 1203-SFC and 1202-C10 Cables	1203-SSS
Universal Serial Bus™ (USB) Converter includes 2 m USB, 20-HIM-H10 & 22-HIM-H10 Cables	1203-USB

(1) For use only with DPI External Communications Kits 20-XCOMM-DC-BASE.

(2) Contact your local Rockwell Automation sales office or Allen-Bradley distributor for availability.

(3) This item has Silver Series status. For information, refer to http://www.ab.com/silver.

Feedback Options

Description	Cat. No.
12V/5V Encoder (1)	20B-ENC-1

(1) Vector Control only.

Other Options

Description	Cat. No.
Removable I/O Terminal Block	SK-G9-TB1-S1
Removable Encoder Terminal Block	SK-G9-TB1-ENC1

PowerFlex 700 Control Option Kits

Control with I/O	Factory Installed Cat. Code # (2)	Cat. No.
Vector Control - 24V DC with: (1)		
60 Hz Maximum	NNAD	20B-VECT-C0AD
82 Hz Maximum	NNAX	20B-VECTB-C0AX
Cascading Fan/Pump Control	NNAE	20B-VECT-C0AE
Pump Off (for Pump Jack)	NNBA	20B-VECTB-C0BA
Vector Control - 115V AC(1)	D (3)	20B-VECTB-D0
Vector Control - 115V AC with:(1)		
60 Hz Maximum	NNAD	20B-VECT-D0AD
82 Hz Maximum	NNAX	20B-VECTB-D0AX
Cascading Fan/Pump Control	NNAE	20B-VECT-D0AE
Pump Off (for Pump Jack)	NNBA	20B-VECT-D0BA

(1) Vector Control option utilizes DPI Only.

(2) This code is entered at the end of the drive catalog number (positions 17…20).

(3) This code is entered at position 15 of the drive catalog number.

Internal Dynamic Brake Resistor Kits

These resistors have a limited duty cycle. Refer to the PowerFlex Dynamic Braking Selection Guide to determine if an internal resistor will be sufficient for your application. An external resistor may be required.

Drive Input Voltage	Brake Resistance Ohms	Frame	Cat. No.
208…240V AC	62	0	20BB-DB1-0
	62	1 (except 7.5 Hp)	20BB-DB1-1
	22	1 (7.5 Hp)	20BB-DB2-1
	22	2	20BB-DB1-2
380…600V AC	115	0	20BD-DB1-0
	115	1	20BD-DB1-1
	68	2	20BD-DB1-2

Terminators

Description (1)	Cat. No.
for use with 3.7 kW (5 Hp) & below drives	1204-TFA1
for use with 1.5 kW (2 Hp) & up drives	1204-TFB2

(1) Refer to Appendix A of the Wiring and Grounding Guidelines for Pulse Width Modulated (PWM) AC Drives, publication Drives-IN001 for selection information.

Reflected Wave Reduction Modules w/Common Mode Choke

Description (1)	Cat. No.
17A with Common Mode Choke	1204-RWC-17-A

(1) Refer to Appendix A of the Wiring and Grounding Guidelines for Pulse Width Modulated (PWM) AC Drives, publication Drives-IN001 for selection information.

Isolation Transformers

For installations that have specific types of AC supply configurations or require drive protection due to AC line disturbances, isolation transformers are available.

IP32 (NEMA/UL Type 3R)

Motor Rating kW (Hp)	240V, 60 Hz, Three-Phase, 240V Primary & 240V Secondary	460V, 60 Hz, Three-Phase, 460V Primary & 460V Secondary	575V, 60 Hz, Three-Phase, 575V Primary & 575V Secondary
	Cat. No.	Cat. No.	Cat. No.
0.25 (0.33)	1321-3TW005-AA	1321-3TW005-BB	–
0.37 (0.5)	1321-3TW005-AA	1321-3TW005-BB	–
0.55 (0.75)	1321-3TW005-AA	1321-3TW005-BB	–
0.75 (1.0)	1321-3TW005-AA	1321-3TW005-BB	1321-3TW005-CC
1.1 (1.5)	1321-3TW005-AA	1321-3TW005-BB	–
1.5 (2.0)	1321-3TW005-AA	1321-3TW005-BB	1321-3TW005-CC
2.2 (3.0)	1321-3TW005-AA	1321-3TW005-BB	1321-3TW005-CC
4.0 (5.0)	1321-3TW007-AA	1321-3TW007-BB	1321-3TW007-CC
5.5 (7.5)	1321-3TW011-AA	1321-3TW011-BB	1321-3TW011-CC
7.5 (10)	1321-3TW014-AA	1321-3TW014-BB	1321-3TW014-CC
11 (15)	1321-3TW020-AA	1321-3TW020-BB	1321-3TW020-CC
15 (20)	1321-3TW027-AA	1321-3TW027-BB	1321-3TW027-CC
18.5 (25)	1321-3TW034-AA	1321-3TW034-BB	1321-3TW034-CC
22 (30)	1321-3TW040-AA	1321-3TW040-BB	1321-3TW040-CC
30 (40)	1321-3TW051-AA	1321-3TW051-BB	1321-3TW051-CC
37 (50)	1321-3TH063-AA	1321-3TH063-BB	1321-3TH063-CC
45 (60)	1321-3TH075-AA	1321-3TH075-BB	1321-3TH075-CC
55 (75)	1321-3TH093-AA	1321-3TH093-BB	1321-3TH093-CC
75 (100)	–	1321-3TH118-BB	1321-3TH118-CC
90 (125)	–	1321-3TH145-BB	1321-3TH145-CC
110 (150)	–	1321-3TH175-BB	1321-3TH175-CC
149 (200)	–	1321-3TH220-BB	1321-3TH220-CC
187 (250)	–	1321-3TH275-BB	1321-3TH275-CC
224 (300)	–	1321-3TH330-BB	1321-3TH330-CC
261 (350)	–	1321-3TH440-BB	1321-3TH440-CC
298 (400)	–	1321-3TH440-BB	1321-3TH440-CC
336 (450)	–	1321-3TH550-BB	1321-3TH550-CC
373 (500)	–	1321-3TH550-BB	1321-3TH550-CC
448 (600)	–	1321-3TH660-BB	1321-3TH660-CC
485 (650)	–	–	1321-3TH770-CC
522 (700)	–	1321-3TH770-BB	1321-3TH770-CC

Input/Output Line Reactors

For impedance matching, protection from AC line disturbances or motor protection, reactors are available for both the input and output sides of the drive.

240V, 60 Hz, Three-Phase, 3% Impedance

			Input Line Reactor[1]		Output Line Reactor[1]	
			IP00 (Open Style)	IP11 (NEMA/UL Type 1)	IP00 (Open Style)	IP11 (NEMA/UL Type 1)
Drive Cat. No.	Duty	Hp	Cat. No.	Cat. No.	Cat. No.	Cat. No.
20BB2P2	Heavy Duty	0.33	1321-3R2-D	1321-3RA2-D	1321-3R2-D	1321-3RA2-D
20BB2P2	Normal Duty	0.5	1321-3R2-D	1321-3RA2-D	1321-3R2-D	1321-3RA2-D
20BB4P2	Heavy Duty	0.75	1321-3R4-A	1321-3RA4-A	1321-3R4-A	1321-3RA4-A
20BB4P2	Normal Duty	1	1321-3R4-A	1321-3RA4-A	1321-3R4-A	1321-3RA4-A
20BB6P8	Heavy Duty	1.5	1321-3R8-B	1321-3RA8-B	1321-3R8-A	1321-3RA8-A
20BB6P8	Normal Duty	2	1321-3R8-A	1321-3RA8-A	1321-3R8-A	1321-3RA8-A
20BB9P6	Heavy Duty	2	1321-3R8-A	1321-3RA8-A	1321-3R12-A	1321-3RA12-A
20BB9P6	Normal Duty	3	1321-3R12-A	1321-3RA12-A	1321-3R12-A	1321-3RA12-A
20BB015	Heavy Duty	3	1321-3R12-A	1321-3RA12-A	1321-3R18-A	1321-3RA18-A
20BB015	Normal Duty	5	1321-3R18-A	1321-3RA18-A	1321-3R18-A	1321-3RA18-A
20BB022	Heavy Duty	5	1321-3R18-A	1321-3RA18-A	1321-3R25-A	1321-3RA25-A
20BB022	Normal Duty	7.5	1321-3R25-A	1321-3RA25-A	1321-3R25-A	1321-3RA25-A
20BB028	Heavy Duty	7.5	1321-3R25-A	1321-3RA25-A	1321-3R35-A	1321-3RA35-A
20BB028	Normal Duty	10	1321-3R35-A	1321-3RA35-A	1321-3R35-A	1321-3RA35-A
20BB042	Heavy Duty	10	1321-3R35-A	1321-3RA35-A	1321-3R45-A	1321-3RA45-A
20BB042	Normal Duty	15	1321-3R45-A	1321-3RA45-A	1321-3R45-A	1321-3RA45-A
20BB052	Heavy Duty	15	1321-3R45-A	1321-3RA45-A	1321-3R55-A	1321-3RA55-A
20BB052	Normal Duty	20	1321-3R55-A	1321-3RA55-A	1321-3R55-A	1321-3RA55-A
20BB070	Heavy Duty	20	1321-3R55-A	1321-3RA55-A	1321-3R80-A	1321-3RA80-A
20BB070	Normal Duty	25	1321-3R80-A	1321-3RA80-A	1321-3R80-A	1321-3RA80-A
20BB080	Heavy Duty	25	1321-3R80-A	1321-3RA80-A	1321-3R80-A	1321-3RA80-A
20BB080	Normal Duty	30	1321-3R80-A	1321-3RA80-A	1321-3R80-A	1321-3RA80-A
20BB104	Heavy Duty	30	1321-3R80-A	1321-3RA80-A	1321-3R80-A	1321-3RA80-A
20BB104	Normal Duty	40	1321-3R100-A	1321-3RA100-A	1321-3R100-A	1321-3RA100-A
20BB130	Heavy Duty	40	1321-3R100-A	1321-3RA100-A	1321-3R100-A	1321-3RA100-A
20BB130	Normal Duty	50	1321-3R130-A	1321-3RA130-A	1321-3R130-A	1321-3RA130-A
20BB154	Heavy Duty	50	1321-3R130-A	1321-3RA130-A	1321-3R130-A	1321-3RA130-A
20BB154	Normal Duty	60	1321-3R160-A	1321-3RA160-A	1321-3R160-A	1321-3RA160-A
20BB192	Heavy Duty	60	1321-3R160-A	1321-3RA160-A	1321-3R160-A	1321-3RA160-A
20BB192	Normal Duty	75	1321-3R200-A	1321-3RA200-A	1321-3R200-A	1321-3RA200-A
20BB260	Heavy Duty	75	1321-3R200-A	1321-3RA200-A	1321-3R200-A	1321-3RA200-A
20BB260	Normal Duty	100	1321-3RB250-A	1321-3RAB250-A	1321-3RB250-A	1321-3RAB250-A

(1) Input line reactors were sized based on the NEC fundamental motor amps. Output line reactors were sized based on the VFD rated output currents.

240V, 60 Hz, Three-Phase, 5% Impedance

			Input Line Reactor[1]		Output Line Reactor[1]	
			IP00 (Open Style)	IP11 (NEMA/UL Type 1)	IP00 (Open Style)	IP11 (NEMA/UL Type 1)
Drive Cat. No.	Duty	Hp	Cat. No.	Cat. No.	Cat. No.	Cat. No.
20BB2P2	Heavy Duty	0.33	1321-3R2-A	1321-3RA2-A	1321-3R2-A	1321-3RA2-A
20BB2P2	Normal Duty	0.5	1321-3R2-A	1321-3RA2-A	1321-3R2-A	1321-3RA2-A
20BB4P2	Heavy Duty	0.75	1321-3R4-B	1321-3RA4-B	1321-3R4-B	1321-3RA4-B
20BB4P2	Normal Duty	1	1321-3R4-B	1321-3RA4-B	1321-3R4-B	1321-3RA4-B
20BB6P8	Heavy Duty	1.5	1321-3R8-B	1321-3RA8-B	1321-3R8-B	1321-3RA8-B
20BB6P8	Normal Duty	2	1321-3R8-B	1321-3RA8-B	1321-3R8-B	1321-3RA8-B
20BB9P6	Heavy Duty	2	1321-3R8-B	1321-3RA8-B	1321-3R12-B	1321-3RA12-B
20BB9P6	Normal Duty	3	1321-3R12-B	1321-3RA12-B	1321-3R12-B	1321-3RA12-B
20BB015	Heavy Duty	3	1321-3R12-B	1321-3RA12-B	1321-3R18-B	1321-3RA18-B
20BB015	Normal Duty	5	1321-3R18-B	1321-3RA18-B	1321-3R18-B	1321-3RA18-B
20BB022	Heavy Duty	5	1321-3R18-B	1321-3RA18-B	1321-3R25-B	1321-3RA25-B
20BB022	Normal Duty	7.5	1321-3R25-B	1321-3RA25-B	1321-3R25-B	1321-3RA25-B
20BB028	Heavy Duty	7.5	1321-3R25-B	1321-3RA25-B	1321-3R35-B	1321-3RA35-B
20BB028	Normal Duty	10	1321-3R35-B	1321-3RA35-B	1321-3R35-B	1321-3RA35-B
20BB042	Heavy Duty	10	1321-3R35-B	1321-3RA35-B	1321-3R45-B	1321-3RA45-B
20BB042	Normal Duty	15	1321-3R45-B	1321-3RA45-B	1321-3R45-B	1321-3RA45-B
20BB052	Heavy Duty	15	1321-3R45-B	1321-3RA45-B	1321-3R55-B	1321-3RA55-B
20BB052	Normal Duty	20	1321-3R55-B	1321-3RA55-B	1321-3R55-B	1321-3RA55-B
20BB070	Heavy Duty	20	1321-3R55-B	1321-3RA55-B	1321-3R80-B	1321-3RA80-B
20BB070	Normal Duty	25	1321-3R80-B	1321-3RA80-B	1321-3R80-B	1321-3RA80-B
20BB080	Heavy Duty	25	1321-3R80-B	1321-3RA80-B	1321-3R80-B	1321-3RA80-B
20BB080	Normal Duty	30	1321-3R80-B	1321-3RA80-B	1321-3R80-B	1321-3RA80-B
20BB104	Heavy Duty	30	1321-3R80-B	1321-3RA80-B	1321-3R80-B	1321-3RA80-B
20BB104	Normal Duty	40	1321-3R100-B	1321-3RA100-B	1321-3R100-B	1321-3RA100-B
20BB130	Heavy Duty	40	1321-3R100-B	1321-3RA100-B	1321-3R100-B	1321-3RA100-B
20BB130	Normal Duty	50	1321-3R130-B	1321-3RA130-B	1321-3R130-B	1321-3RA130-B
20BB154	Heavy Duty	50	1321-3R130-B	1321-3RA130-B	1321-3R130-B	1321-3RA130-B
20BB154	Normal Duty	60	1321-3R160-B	1321-3RA160-B	1321-3R160-B	1321-3RA160-B
20BB192	Heavy Duty	60	1321-3R160-B	1321-3RA160-B	1321-3R160-B	1321-3RA160-B
20BB192	Normal Duty	75	1321-3R200-B	1321-3RA200-B	1321-3R200-B	1321-3RA200-B
20BB260	Heavy Duty	75	1321-3R200-B	1321-3RA200-B	1321-3R200-B	1321-3RA200-B
20BB260	Normal Duty	100	1321-3RB250-B	1321-3RAB250-B	1321-3RB250-B	1321-3RAB250-B

(1) Input line reactors were sized based on the NEC fundamental motor amps. Output line reactors were sized based on the VFD rated output currents.

480V, 60 Hz, Three-Phase, 3% Impedance

			Input Line Reactor[1]		Output Line Reactor[1]	
			IP00 (Open Style)	IP11 (NEMA/UL Type 1)	IP00 (Open Style)	IP11 (NEMA/UL Type 1)
Drive Cat. No.	Duty	Hp	Cat. No.	Cat. No.	Cat. No.	Cat. No.
20BD1P1	Heavy Duty	0.33	1321-3R1-C	1321-3RA1-C	1321-3R2-B	1321-3RA2-B
20BD1P1	Normal Duty	0.5	1321-3R1-C	1321-3RA1-C	1321-3R2-B	1321-3RA2-B
20BD2P1	Heavy Duty	0.75	1321-3R2-A	1321-3RA2-A	1321-3R2-A	1321-3RA2-A
20BD2P1	Normal Duty	1	1321-3R2-A	1321-3RA2-A	1321-3R2-A	1321-3RA2-A
20BD3P4	Heavy Duty	1.5	1321-3R4-C	1321-3RA4-C	1321-3R4-B	1321-3RA4-B
20BD3P4	Normal Duty	2	1321-3R4-B	1321-3RA4-B	1321-3R4-B	1321-3RA4-B
20BD5P0	Heavy Duty	2	1321-3R4-B	1321-3RA4-B	1321-3R8-C	1321-3RA8-C
20BD5P0	Normal Duty	3	1321-3R8-C	1321-3RA8-C	1321-3R8-C	1321-3RA8-C
20BD8P0	Heavy Duty	3	1321-3R8-C	1321-3RA8-C	1321-3R8-B	1321-3RA8-B
20BD8P0	Normal Duty	5	1321-3R8-B	1321-3RA8-B	1321-3R8-B	1321-3RA8-B
20BD011	Heavy Duty	5	1321-3R8-B	1321-3RA8-B	1321-3R12-B	1321-3RA12-B
20BD011	Normal Duty	7.5	1321-3R12-B	1321-3RA12-B	1321-3R12-B	1321-3RA12-B
20BD014	Heavy Duty	7.5	1321-3R12-B	1321-3RA12-B	1321-3R18-B	1321-3RA18-B
20BD014	Normal Duty	10	1321-3R18-B	1321-3RA18-B	1321-3R18-B	1321-3RA18-B
20BD022	Heavy Duty	10	1321-3R18-B	1321-3RA18-B	1321-3R25-B	1321-3RA25-B
20BD022	Normal Duty	15	1321-3R25-B	1321-3RA25-B	1321-3R25-B	1321-3RA25-B
20BD027	Heavy Duty	15	1321-3R25-B	1321-3RA25-B	1321-3R25-B	1321-3RA25-B
20BD027	Normal Duty	20	1321-3R35-B	1321-3RA35-B	1321-3R25-B	1321-3RA25-B
20BD034	Heavy Duty	20	1321-3R35-B	1321-3RA35-B	1321-3R35-B	1321-3RA35-B
20BD034	Normal Duty	25	1321-3R35-B	1321-3RA35-B	1321-3R35-B	1321-3RA35-B
20BD040	Heavy Duty	25	1321-3R35-B	1321-3RA35-B	1321-3R45-B	1321-3RA45-B
20BD040	Normal Duty	30	1321-3R45-B	1321-3RA45-B	1321-3R45-B	1321-3RA45-B
20BD052	Heavy Duty	30	1321-3R45-B	1321-3RA45-B	1321-3R55-B	1321-3RA55-B
20BD052	Normal Duty	40	1321-3R55-B	1321-3RA55-B	1321-3R55-B	1321-3RA55-B
20BD065	Heavy Duty	40	1321-3R55-B	1321-3RA55-B	1321-3R80-B	1321-3RA80-B
20BD065	Normal Duty	50	1321-3R80-B	1321-3RA80-B	1321-3R80-B	1321-3RA80-B
20BD077	Heavy Duty	50	1321-3R80-B	1321-3RA80-B	1321-3R80-B	1321-3RA80-B
20BD077	Normal Duty	60	1321-3R80-B	1321-3RA80-B	1321-3R80-B	1321-3RA80-B
20BD096	Heavy Duty	60	1321-3R80-B	1321-3RA80-B	1321-3R80-B	1321-3RA80-B
20BD096	Normal Duty	75	1321-3R100-B	1321-3RA100-B	1321-3R100-B	1321-3RA100-B
20BD125	Heavy Duty	75	1321-3R100-B	1321-3RA100-B	1321-3R100-B	1321-3RA100-B
20BD125	Normal Duty	100	1321-3R130-B	1321-3RA130-B	1321-3R130-B	1321-3RA130-B
20BD156	Heavy Duty	100	1321-3R130-B	1321-3RA130-B	1321-3R130-B	1321-3RA130-B
20BD156	Normal Duty	125	1321-3R160-B	1321-3RA160-B	1321-3R160-B	1321-3RA160-B
20BD180	Heavy Duty	125	1321-3R160-B	1321-3RA160-B	1321-3R160-B	1321-3RA160-B
20BD180	Normal Duty	150	1321-3R200-B	1321-3RA200-B	1321-3R200-C	1321-3RA200-C

continued

			Input Line Reactor[1]		Output Line Reactor[1]	
			IP00 (Open Style)	IP11 (NEMA/UL Type 1)	IP00 (Open Style)	IP11 (NEMA/UL Type 1)
Drive Cat. No.	Duty	Hp	Cat. No.	Cat. No.	Cat. No.	Cat. No.
20BD248	Heavy Duty	150	1321-3R200-B	1321-3RA200-B	1321-3R200-C	1321-3RA200-C
20BD248	Normal Duty	200	1321-3RB250-B	1321-3RAB250-B	1321-3RB250-B	1321-3RAB250-B
20BD292	Heavy Duty	200	1321-3RB250-B	1321-3RAB250-B	1321-3RB250-B	1321-3RAB250-B
20BD292	Normal Duty	250	1321-3RB320-B	1321-3RAB320-B	1321-3RB320-B	1321-3RAB320-B
20BD325	Heavy Duty	250	1321-3RB320-B	1321-3RAB320-B	1321-3RB320-B	1321-3RAB320-B
20BD325	Normal Duty	250	1321-3RB320-B	1321-3RAB320-B	1321-3RB320-B	1321-3RAB320-B
20BD365	Heavy Duty	250	1321-3RB320-B	1321-3RAB320-B	1321-3RB320-B	1321-3RAB320-B
20BD365	Normal Duty	300	1321-3RB400-B	1321-3RAB400-B	1321-3RB400-B	1321-3RAB400-B
20BD415	Heavy Duty	300	1321-3RB400-B	1321-3RAB400-B	1321-3RB400-B	1321-3RAB400-B
20BD415	Normal Duty	350	1321-3RB400-B	1321-3RAB400-B	1321-3RB400-B	1321-3RAB400-B
20BD481	Heavy Duty	350	1321-3RB400-B	1321-3RAB400-B	1321-3RB400-B	1321-3RAB400-B
20BD481	Normal Duty	400	1321-3R500-B	1321-3RA500-B	1321-3R500-B	1321-3RA500-B
20BD535	Heavy Duty	400	1321-3R500-B	1321-3RA500-B	1321-3R500-B	1321-3RA500-B
20BD535	Normal Duty	450	1321-3R500-B	1321-3RA500-B	1321-3R500-B	1321-3RA500-B
20BD600	Heavy Duty	450	1321-3R500-B	1321-3RA500-B	1321-3R500-B	1321-3RA500-B
20BD600	Normal Duty	500	1321-3R600-B	1321-3RA600-B	1321-3R600-B	1321-3RA600-B
20BD730	Heavy Duty	500	1321-3R600-B	1321-3RA600-B	1321-3R600-B	1321-3RA600-B
20BD730	Normal Duty	600	1321-3R750-B	1321-3RA750-B	1321-3R750-B	1321-3RA750-B
20BD875	Heavy Duty	600	1321-3R750-B	1321-3RA750-B	1321-3R600-B	1321-3RA600-B
20BD875	Normal Duty	700	1321-3R850-B	1321-3RA850-B	1321-3R850-B	1321-3RA850-B

(1) Input line reactors were sized based on the NEC fundamental motor amps. Output line reactors were sized based on the VFD rated output currents.

480V, 60 Hz, Three-Phase, 5% Impedance

			Input Line Reactor[1]		Output Line Reactor[1]	
			IP00 (Open Style)	IP11 (NEMA/UL Type 1)	IP00 (Open Style)	IP11 (NEMA/UL Type 1)
Drive Cat. No.	Duty	Hp	Cat. No.	Cat. No.	Cat. No.	Cat. No.
20BD1P1	Heavy Duty	0.33	1321-3R1-B	1321-3RA1-B	1321-3R2-C	1321-3RA2-C
20BD1P1	Normal Duty	0.5	1321-3R1-B	1321-3RA1-B	1321-3R2-C	1321-3RA2-C
20BD2P1	Heavy Duty	0.75	1321-3R2-C	1321-3RA2-C	1321-3R2-B	1321-3RA2-B
20BD2P1	Normal Duty	1	1321-3R2-B	1321-3RA2-B	1321-3R2-B	1321-3RA2-B
20BD3P4	Heavy Duty	1.5	1321-3R4-D	1321-3RA4-D	1321-3R4-D	1321-3RA4-D
20BD3P4	Normal Duty	2	1321-3R4-D	1321-3RA4-D	1321-3R4-D	1321-3RA4-D
20BD5P0	Heavy Duty	2	1321-3R4-D	1321-3RA4-D	1321-3R8-D	1321-3RA8-D
20BD5P0	Normal Duty	3	1321-3R8-D	1321-3RA8-D	1321-3R8-D	1321-3RA8-D
20BD8P0	Heavy Duty	3	1321-3R8-D	1321-3RA8-D	1321-3R8-C	1321-3RA8-C
20BD8P0	Normal Duty	5	1321-3R8-C	1321-3RA8-C	1321-3R8-C	1321-3RA8-C
20BD011	Heavy Duty	5	1321-3R8-C	1321-3RA8-C	1321-3R12-C	1321-3RA12-C
20BD011	Normal Duty	7.5	1321-3R12-C	1321-3RA12-C	1321-3R12-C	1321-3RA12-C
20BD014	Heavy Duty	7.5	1321-3R12-C	1321-3RA12-C	1321-3R18-C	1321-3RA18-C
20BD014	Normal Duty	10	1321-3R18-C	1321-3RA18-C	1321-3R18-C	1321-3RA18-C
20BD022	Heavy Duty	10	1321-3R18-C	1321-3RA18-C	1321-3R25-C	1321-3RA25-C
20BD022	Normal Duty	15	1321-3R25-C	1321-3RA25-C	1321-3R25-C	1321-3RA25-C
20BD027	Heavy Duty	15	1321-3R25-C	1321-3RA25-C	1321-3R25-C	1321-3RA25-C
20BD027	Normal Duty	20	1321-3R35-C[2]	1321-3RA35-C[2]	1321-3R25-C	1321-3RA25-C
20BD034	Heavy Duty	20	1321-3R35-C[2]	1321-3RA35-C[2]	1321-3R35-C	1321-3RA35-C
20BD034	Normal Duty	25	1321-3R35-C	1321-3RA35-C	1321-3R35-C	1321-3RA35-C
20BD040	Heavy Duty	25	1321-3R35-C	1321-3RA35-C	1321-3R45-C	1321-3RA45-C
20BD040	Normal Duty	30	1321-3R45-C	1321-3RA45-C	1321-3R45-C	1321-3RA45-C
20BD052	Heavy Duty	30	1321-3R45-C	1321-3RA45-C	1321-3R55-C	1321-3RA55-C
20BD052	Normal Duty	40	1321-3R55-C	1321-3RA55-C	1321-3R55-C	1321-3RA55-C
20BD065	Heavy Duty	40	1321-3R55-C	1321-3RA55-C	1321-3R80-C	1321-3RA80-C
20BD065	Normal Duty	50	1321-3R80-C	1321-3RA80-C	1321-3R80-C	1321-3RA80-C
20BD077	Heavy Duty	50	1321-3R80-C	1321-3RA80-C	1321-3R80-C	1321-3RA80-C
20BD077	Normal Duty	60	1321-3R80-C	1321-3RA80-C	1321-3R80-C	1321-3RA80-C
20BD096	Heavy Duty	60	1321-3R80-C	1321-3RA80-C	1321-3R80-C	1321-3RA80-C
20BD096	Normal Duty	75	1321-3R100-C	1321-3RA100-C	1321-3R100-C	1321-3RA100-C
20BD125	Heavy Duty	75	1321-3R100-C	1321-3RA100-C	1321-3R100-C	1321-3RA100-C
20BD125	Normal Duty	100	1321-3R130-C	1321-3RA130-C	1321-3R130-C	1321-3RA130-C
20BD156	Heavy Duty	100	1321-3R130-C	1321-3RA130-C	1321-3R130-C	1321-3RA130-C
20BD156	Normal Duty	125	1321-3R160-C	1321-3RA160-C	1321-3R160-C	1321-3RA160-C
20BD180	Heavy Duty	125	1321-3R160-C	1321-3RA160-C	1321-3R160-C	1321-3RA160-C
20BD180	Normal Duty	150	1321-3R200-C	1321-3RA200-C	1321-3R200-C[2]	1321-3RA200-C[2]

continued

Drive Cat. No.	Duty	Hp	Input Line Reactor[1]		Output Line Reactor[1]	
			IP00 (Open Style)	IP11 (NEMA/UL Type 1)	IP00 (Open Style)	IP11 (NEMA/UL Type 1)
			Cat. No.	Cat. No.	Cat. No.	Cat. No.
20BD248	Heavy Duty	150	1321-3R200-C	1321-3RA200-C	1321-3R200-C[2]	1321-3RA200-C[2]
20BD248	Normal Duty	200	1321-3RB250-C	1321-3RAB250-C	1321-3RB250-C	1321-3RAB250-C
20BD292	Heavy Duty	200	1321-3RB250-C	1321-3RAB250-C	1321-3RB250-C	1321-3RAB250-C
20BD292	Normal Duty	250	1321-3RB320-C	1321-3RAB320-C	1321-3RB320-C	1321-3RAB320-C
20BD325	Heavy Duty	250	1321-3RB320-C	1321-3RAB320-C	1321-3RB320-C	1321-3RAB320-C
20BD325	Normal Duty	250	1321-3RB320-C	1321-3RAB320-C	1321-3RB320-C	1321-3RAB320-C
20BD365	Heavy Duty	250	1321-3RB320-C	1321-3RAB320-C	1321-3RB320-C	1321-3RAB320-C
20BD365	Normal Duty	300	1321-3RB400-C	1321-3RAB400-C	1321-3RB400-C	1321-3RAB400-C
20BD415	Heavy Duty	300	1321-3RB400-C	1321-3RAB400-C	1321-3RB400-C	1321-3RAB400-C
20BD415	Normal Duty	350	1321-3R500-C	1321-3RA500-C	1321-3RB400-C	1321-3RAB400-C
20BD481	Heavy Duty	350	1321-3R500-C	1321-3RA500-C	1321-3RB400-C	1321-3RAB400-C
20BD481	Normal Duty	400	1321-3R500-C	1321-3RA500-C	1321-3R500-C	1321-3RA500-C
20BD535	Heavy Duty	400	1321-3R500-C	1321-3RA500-C	1321-3R500-C	1321-3RA500-C
20BD535	Normal Duty	450	1321-3R600-C	1321-3RA600-C	1321-3R500-C	1321-3RA500-C
20BD600	Heavy Duty	450	1321-3R600-C	1321-3RA600-C	1321-3R500-C	1321-3RA500-C
20BD600	Normal Duty	500	1321-3R600-C	1321-3RA600-C	1321-3R600-C	1321-3RA600-C
20BD730	Heavy Duty	500	1321-3R600-C	1321-3RA600-C	1321-3R600-C	1321-3RA600-C
20BD730	Normal Duty	600	1321-3R750-E	1321-3RA750-E	1321-3R750-E	1321-3RA750-E
20BD875	Heavy Duty	600	1321-3R750-E	1321-3RA750-E	1321-3R750-E	1321-3RA750-E
20BD875	Normal Duty	700	1321-3R850-C	1321-3RA850-C	1321-3R850-C	1321-3RA850-C

(1) Input line reactors were sized based on the NEC fundamental motor amps. Output line reactors were sized based on the VFD rated output currents.

(2) 4% impedance.

600V, 60 Hz, Three-Phase, 3% Impedance

			Input Line Reactor[1]		Output Line Reactor[1]	
			IP00 (Open Style)	IP11 (NEMA/UL Type 1)	IP00 (Open Style)	IP11 (NEMA/UL Type 1)
Drive Cat. No.	Duty	Hp	Cat. No.	Cat. No.	Cat. No.	Cat. No.
20BE1P7	Heavy Duty	0.5	1321-3R1-C	1321-3RA1-C	1321-3R2-B	1321-3RA2-B
20BE1P7	Normal Duty	1	1321-3R2-B	1321-3RA2-B	1321-3R2-B	1321-3RA2-B
20BE2P7	Heavy Duty	1	1321-3R2-B	1321-3RA2-B	1321-3R4-D	1321-3RA4-D
20BE2P7	Normal Duty	2	1321-3R4-D	1321-3RA4-D	1321-3R4-D	1321-3RA4-D
20BE3P9	Heavy Duty	2	1321-3R4-D	1321-3RA4-D	1321-3R4-C	1321-3RA4-C
20BE3P9	Normal Duty	3	1321-3R4-C	1321-3RA4-C	1321-3R4-C	1321-3RA4-C
20BE6P1	Heavy Duty	3	1321-3R4-C	1321-3RA4-C	1321-3R8-C	1321-3RA8-C
20BE6P1	Normal Duty	5	1321-3R8-C	1321-3RA8-C	1321-3R8-C	1321-3RA8-C
20BE9P0	Heavy Duty	5	1321-3R8-C	1321-3RA8-C	1321-3R12-C	1321-3RA12-C
20BE9P0	Normal Duty	7.5	1321-3R12-C	1321-3RA12-C	1321-3R12-C	1321-3RA12-C
20BE011	Heavy Duty	7.5	1321-3R12-C	1321-3RA12-C	1321-3R12-B	1321-3RA12-B
20BE011	Normal Duty	10	1321-3R12-B	1321-3RA12-B	1321-3R12-B	1321-3RA12-B
20BE017	Heavy Duty	10	1321-3R12-B	1321-3RA12-B	1321-3R18-B	1321-3RA18-B
20BE017	Normal Duty	15	1321-3R18-B	1321-3RA18-B	1321-3R18-B	1321-3RA18-B
20BE022	Heavy Duty	15	1321-3R18-B	1321-3RA18-B	1321-3R25-B	1321-3RA25-B
20BE022	Normal Duty	20	1321-3R25-B	1321-3RA25-B	1321-3R25-B	1321-3RA25-B
20BE027	Heavy Duty	20	1321-3R25-B	1321-3RA25-B	1321-3R35-C	1321-3RA35-C
20BE027	Normal Duty	25	1321-3R35-C	1321-3RA35-C	1321-3R35-C	1321-3RA35-C
20BE032	Heavy Duty	25	1321-3R35-C	1321-3RA35-C	1321-3R35-B	1321-3RA35-B
20BE032	Normal Duty	30	1321-3R35-B	1321-3RA35-B	1321-3R35-B	1321-3RA35-B
20BE041	Heavy Duty	30	1321-3R35-B	1321-3RA35-B	1321-3R45-B	1321-3RA45-B
20BE041	Normal Duty	40	1321-3R45-B	1321-3RA45-B	1321-3R45-B	1321-3RA45-B
20BE052	Heavy Duty	40	1321-3R45-B	1321-3RA45-B	1321-3R55-B	1321-3RA55-B
20BE052	Normal Duty	50	1321-3R55-B	1321-3RA55-B	1321-3R55-B	1321-3RA55-B
20BE062	Heavy Duty	50	1321-3R55-B	1321-3RA55-B	1321-3R80-B	1321-3RA80-B
20BE062	Normal Duty	60	1321-3R80-B	1321-3RA80-B	1321-3R80-B	1321-3RA80-B
20BE077	Heavy Duty	60	1321-3R80-B	1321-3RA80-B	1321-3R80-B	1321-3RA80-B
20BE077	Normal Duty	75	1321-3R80-B	1321-3RA80-B	1321-3R80-B	1321-3RA80-B
20BE099	Heavy Duty	75	1321-3R80-B	1321-3RA80-B	1321-3R80-B	1321-3RA80-B
20BE099	Normal Duty	100	1321-3R100-B	1321-3RA100-B	1321-3R100-B	1321-3RA100-B
20BE125	Heavy Duty	100	1321-3R100-B	1321-3RA100-B	1321-3R100-B	1321-3RA100-B
20BE125	Normal Duty	125	1321-3R130-B	1321-3RA130-B	1321-3R130-B	1321-3RA130-B
20BE144	Heavy Duty	125	1321-3R130-B	1321-3RA130-B	1321-3R130-B	1321-3RA130-B
20BE144	Normal Duty	150	1321-3R160-B	1321-3RA160-B	1321-3R160-B	1321-3RA160-B

(1) Input line reactors were sized based on the NEC fundamental motor amps. Output line reactors were sized based on the VFD rated output currents.

600V, 60 Hz, Three-Phase, 5% Impedance

			Input Line Reactor[1]		Output Line Reactor[1]	
			IP00 (Open Style)	IP11 (NEMA/UL Type 1)	IP00 (Open Style)	IP11 (NEMA/UL Type 1)
Drive Cat. No.	Duty	Hp	Cat. No.	Cat. No.	Cat. No.	Cat. No.
20BE1P7	Heavy Duty	0.5	1321-3R1-B	1321-3RA1-B	1321-3R2-C	1321-3RA2-C
20BE1P7	Normal Duty	1	1321-3R2-C	1321-3RA2-C	1321-3R2-C	1321-3RA2-C
20BE2P7	Heavy Duty	1	1321-3R2-C	1321-3RA2-C	1321-3R4-D[2]	1321-3RA4-D[2]
20BE2P7	Normal Duty	2	1321-3R4-D[2]	1321-3RA4-D[2]	1321-3R4-D[2]	1321-3RA4-D[2]
20BE3P9	Heavy Duty	2	1321-3R4-D[2]	1321-3RA4-D[2]	1321-3R4-D	1321-3RA4-D
20BE3P9	Normal Duty	3	1321-3R4-D	1321-3RA4-D	1321-3R4-D	1321-3RA4-D
20BE6P1	Heavy Duty	3	1321-3R4-D	1321-3RA4-D	1321-3R8-D	1321-3RA8-D
20BE6P1	Normal Duty	5	1321-3R8-D	1321-3RA8-D	1321-3R8-D	1321-3RA8-D
20BE9P0	Heavy Duty	5	1321-3R8-D	1321-3RA8-D	1321-3R12-C[2]	1321-3RA12-C[2]
20BE9P0	Normal Duty	7.5	1321-3R12-C[2]	1321-3RA12-C[2]	1321-3R12-C[2]	1321-3RA12-C[2]
20BE011	Heavy Duty	7.5	1321-3R12-C[2]	1321-3RA12-C[2]	1321-3R12-C	1321-3RA12-C
20BE011	Normal Duty	10	1321-3R12-C	1321-3RA12-C	1321-3R12-C	1321-3RA12-C
20BE017	Heavy Duty	10	1321-3R12-C	1321-3RA12-C	1321-3R18-C	1321-3RA18-C
20BE017	Normal Duty	15	1321-3R18-C	1321-3RA18-C	1321-3R18-C	1321-3RA18-C
20BE022	Heavy Duty	15	1321-3R18-C	1321-3RA18-C	1321-3R25-C[2]	1321-3RA25-C[2]
20BE022	Normal Duty	20	1321-3R25-C[2]	1321-3RA25-C[2]	1321-3R25-C[2]	1321-3RA25-C[2]
20BE027	Heavy Duty	20	1321-3R25-C[2]	1321-3RA25-C[2]	1321-3R35-C[2]	1321-3RA35-C[2]
20BE027	Normal Duty	25	1321-3R35-C[2]	1321-3RA35-C[2]	1321-3R35-C[2]	1321-3RA35-C[2]
20BE032	Heavy Duty	25	1321-3R35-C[2]	1321-3RA35-C[2]	1321-3R35-C[2]	1321-3RA35-C[2]
20BE032	Normal Duty	30	1321-3R35-C[2]	1321-3RA35-C[2]	1321-3R35-C[2]	1321-3RA35-C[2]
20BE041	Heavy Duty	30	1321-3R35-C[2]	1321-3RA35-C[2]	1321-3R45-C	1321-3RA45-C
20BE041	Normal Duty	40	1321-3R45-C	1321-3RA45-C	1321-3R45-C	1321-3RA45-C
20BE052	Heavy Duty	40	1321-3R45-C	1321-3RA45-C	1321-3R55-C	1321-3RA55-C
20BE052	Normal Duty	50	1321-3R55-C	1321-3RA55-C	1321-3R55-C	1321-3RA55-C
20BE062	Heavy Duty	50	1321-3R55-C	1321-3RA55-C	1321-3R80-C	1321-3RA80-C
20BE062	Normal Duty	60	1321-3R80-C	1321-3RA80-C	1321-3R80-C	1321-3RA80-C
20BE077	Heavy Duty	60	1321-3R80-C	1321-3RA80-C	1321-3R80-C	1321-3RA80-C
20BE077	Normal Duty	75	1321-3R80-C	1321-3RA80-C	1321-3R80-C	1321-3RA80-C
20BE099	Heavy Duty	75	1321-3R80-C	1321-3RA80-C	1321-3R80-C	1321-3RA80-C
20BE099	Normal Duty	100	1321-3R100-C	1321-3RA100-C	1321-3R100-C	1321-3RA100-C
20BE125	Heavy Duty	100	1321-3R100-C	1321-3RA100-C	1321-3R100-C	1321-3RA100-C
20BE125	Normal Duty	125	1321-3R130-C[2]	1321-3RA130-C[2]	1321-3R130-C[2]	1321-3RA130-C[2]
20BE144	Heavy Duty	125	1321-3R130-C[2]	1321-3RA130-C[2]	1321-3R130-C[2]	1321-3RA130-C[2]
20BE144	Normal Duty	150	1321-3R160-C[2]	1321-3RA160-C[2]	1321-3R160-C[2]	1321-3RA160-C[2]

(1) Input line reactors were sized based on the NEC fundamental motor amps. Output line reactors were sized based on the VFD rated output currents.

(2) 4% impedance.

Important User Information

Read this document and the documents listed in the additional resources section about installation, configuration, and operation of this equipment before you install, configure, operate, or maintain this product. Users are required to familiarize themselves with installation and wiring instructions in addition to requirements of all applicable codes, laws, and standards.

Activities including installation, adjustments, putting into service, use, assembly, disassembly, and maintenance are required to be carried out by suitably trained personnel in accordance with applicable code of practice.

If this equipment is used in a manner not specified by the manufacturer, the protection provided by the equipment may be impaired.

In no event will Rockwell Automation, Inc. be responsible or liable for indirect or consequential damages resulting from the use or application of this equipment.

The examples and diagrams in this manual are included solely for illustrative purposes. Because of the many variables and requirements associated with any particular installation, Rockwell Automation, Inc. cannot assume responsibility or liability for actual use based on the examples and diagrams.

No patent liability is assumed by Rockwell Automation, Inc. with respect to use of information, circuits, equipment, or software described in this manual.

Reproduction of the contents of this manual, in whole or in part, without written permission of Rockwell Automation, Inc., is prohibited.

Documentation Feedback

Your comments will help us serve your documentation needs better. If you have any suggestions on how to improve this document, complete this form, publication RA-DU002, available at http://www.rockwellautomation.com/literature/.

Allen-Bradley, Rockwell Software, Rockwell Automation, and LISTEN. THINK. SOLVE are trademarks of Rockwell Automation, Inc.
Trademarks not belonging to Rockwell Automation are property of their respective companies.

Rockwell Otomasyon Ticaret A.Ş., Kar Plaza İş Merkezi E Blok Kat:6 34752 İçerenköy, İstanbul, Tel: +90 (216) 5698400

www.rockwellautomation.com

Power, Control and Information Solutions Headquarters

Americas: Rockwell Automation, 1201 South Second Street, Milwaukee, WI 53204-2496 USA, Tel: (1) 414.382.2000, Fax: (1) 414.382.4444
Europe/Middle East/Africa: Rockwell Automation NV, Pegasus Park, De Kleetlaan 12a, 1831 Diegem, Belgium, Tel: (32) 2 663 0600, Fax: (32) 2 663 0640
Asia Pacific: Rockwell Automation, Level 14, Core F, Cyberport 3, 100 Cyberport Road, Hong Kong, Tel: (852) 2887 4788, Fax: (852) 2508 1846

Publication 20B-TD001H-EN-P - July 2014
Supersedes Publication 20B-TD001G-EN-P - July 2013

Copyright © 2014 Rockwell Automation, Inc. All rights reserved. Printed in the U.S.A.

Allen-Bradley

1321 Power Conditioning Products

Don't Ignore the Cost of Power Line Disturbance

Topic	Page
Product Overview	2
1321-3R and 3RA Series Line Reactors	3
1321 Reflective Wave Reduction (RWR) Devices	12
1321-3TH/3TW Series Three-Phase Isolation Transformers	16
1321-M Common Mode Chokes	21
1321-DC DC Link Chokes	24

Additional Resources

These documents contain additional information concerning related products from Rockwell Automation.

Resource	Description
Wiring and Grounding Guidelines for Pulse Width Modulated (PWM) AC Drives, publication DRIVES-IN001	Provides basic information needed to properly wire and ground PWM AC drives.
Safety Guidelines for the Application, Installation and Maintenance of Solid State Control, publication SGI-1.1	Provides general guidelines for the application, installation, and maintenance of solid-state control.

You can view or download publications at http://www.rockwellautomation.com/literature/. To order paper copies of technical documentation, contact your local Allen-Bradley distributor or Rockwell Automation sales representative.

For Allen-Bradley Drives Technical Support:

Title	Online at…
Allen-Bradley Drives Technical Support	www.ab.com/support/abdrives or call (1) 262.512.8176

Product Overview

Allen-Bradley reactors help keep equipment running longer by absorbing many of the power line disturbances which can shut down your drive. Allen-Bradley isolation transformers can provide both voltage change and isolation for your variable speed drive. These designs are harmonic compensated and IGBT protected to assure optimum performance in the presence of harmonics.

1321-3R and 3RA Series Line Reactors

Applying Allen-Bradley Line Reactors

At the Input of the Drive

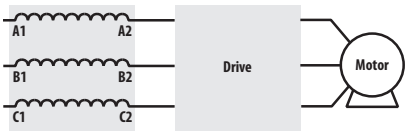

At the input of a drive, line reactors help protect against surges or spikes on the incoming power lines and help reduce harmonic distortion.

- Eliminate Nuisance Tripping
- Extend Semiconductor Life
- Reduce Harmonic Distortion
- Improve True Power Factor
- Reduce Voltage Notching
- Meet IEEE-519 or EN-61800

At the Output of the Drive

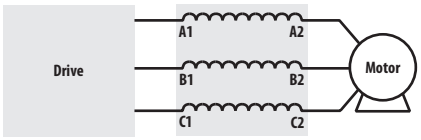

In long motor lead applications, Allen-Bradley load reactors located between the drive and motor help reduce dv/dt and motor terminal peak voltages. The use of a load reactor also helps protect the drive from surge currents caused by rapid changes in the load.

- Protect Motors from Long Lead Effects
- Reduce Output Voltage dv/dt
- Extend Semiconductor Life
- Reduce Surge Currents
- Reduce Motor Temperature
- Reduce Audible Motor Noise

With Multiple Drives

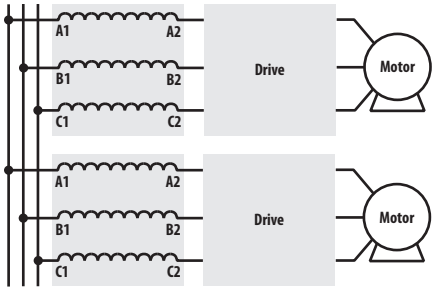

Multiple drives on a common power line should each have their own line reactor. Individual line reactors provide filtering between each drive to help reduce any crosstalk while providing optimum surge protection for each drive.

With Multiple Motors

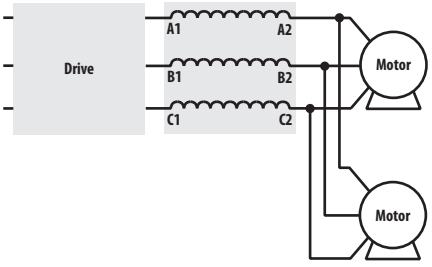

When more than one motor is controlled by a single drive, a single line reactor can typically be used between the drive and all the motors. Size the line reactor based on the total motor/load horsepower.

With Single-Phase Input

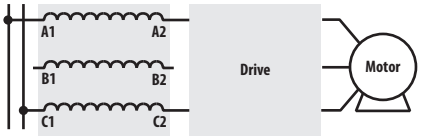

A three-phase reactor can be used for single-phase applications by routing each of the two input power conductors to the outside two coils, and leaving the center coil disconnected. The sum of the inductance of the two coils is the total inductance applied to the circuit. Contact Rockwell Automation Technical Support for assistance in specifying the proper reactor.

Selecting the Correct Impedance Rating

Why is the Right Impedance Rating Important?

Selecting the correct impedance rating is critical for your job. An impedance value too low may not limit peak current. Too high of an impedance may reduce input voltage. Allen-Bradley line reactors offer two impedance ratings.

3% Impedance Rated Reactors to Reduce Nuisance Trips

Allen-Bradley line reactors rated at 3% are typically sufficient to absorb line spikes and motor current surges and will help prevent nuisance tripping of drive and circuit breakers in most applications.

5% Impedance Rated Reactors to Reduce Harmonic Content

Allen-Bradley reactors rated at 5% are best for reducing harmonic current and frequencies. These line reactors help comply with IEEE-519 (not normally used as load reactors).

Voltage Spike Protection

Voltage spikes on AC power lines can cause elevation of the DC bus voltage which may cause the drive to trip on an overvoltage condition.

3% impedance reactors are very effective at protecting drives against voltage spikes and nuisance tripping. Allen-Bradley line reactors absorb these line spikes protecting the drive from nuisance tripping and damage.

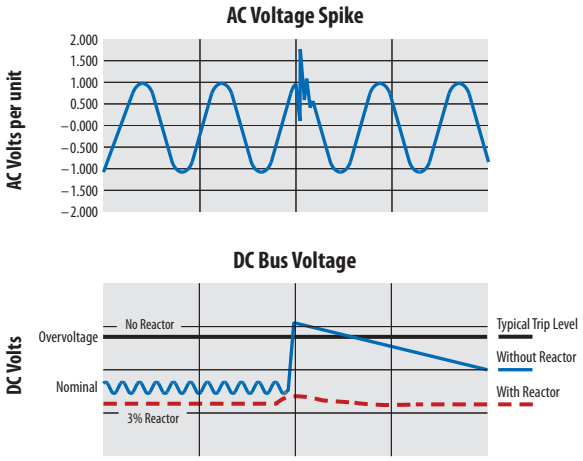

Motor Protection

Allen-Bradley load reactors can help protect motors from high peak voltages.

For IGBT drive applications with long drive-to-motor lead lengths, Allen-Bradley load reactors can help protect against fast dv/dt rise times.

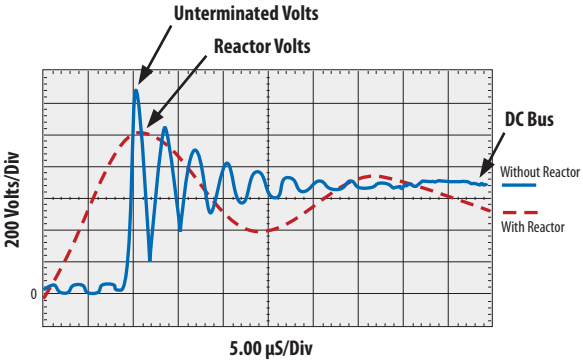

Catalog Number Explanation

Position Number

1-4		*6*	7	8		10
1321	–	3	R	4	–	B
a		*b*	*c*	*d*		*e*

a

Product	
Code	**Type**
1321	1321 Power Component

b

Phases	
Code	**Description**
3	Three-Phase

c

Device	
Code	**Description**
R	Reactor, Open
RA, RB	Reactor, NEMA 1
RAB	Reactor, NEMA 1, Cabinet Style 2 Only

d

Fundamental Amps	
Code	**Amps**
1	1
2	2
4	4
8	8
12	12
18	18
25	25
35	35
45	45
55	55
80	80
100	100
130	130
160	160
200	200
250	250
320	320
400	400
500	500
600	600
750	750
850	850
1000	1000

e

Inductance Rating	
Code	**Description**
A	Each reactor current rating has four inductance ratings also available. See the IP00 dimension table.
B	
C	
D	

Common Specifications

Specification		Rating
Material	Enclosures	IP11 (NEMA/UL Type 1) — Sheet steel in accordance with UL, NEMA requirements
		IP00 (Open) or IP20 (Open - with finger safe terminals)
	Terminations	1-45 Amp (fundamental) Ratings – Finger guard IP20 terminal block
		80-160 Amp (fundamental) Ratings – Solid copper box lugs
		200-400 Amp (fundamental) Ratings – Copper tab terminals
		401 Amps and Above – Copper tab terminals
Harmonic Compensation	All line reactors are compensated for the additional currents and high frequencies caused by the presence of harmonics	
General Protection	Impedance	3% or 5% based on the fundamental current ratings
	Overload Rating	200% of fundamental current for 30 minutes 300% of fundamental current for 1 minute
	dv/dt Protection	Meets NEMA MG-1, part 31
Electrical	Max. Rated Voltage	600V AC (units with terminal blocks) 690V AC (units with box lugs or tab terminals)
	Max. Switching Freq.	20 kHz
	Fundamental Frequency	Line/Load - 50/60 Hz
	Temperature Rise	135 degrees C average
	Dielectric Strength	3,000 Volts rms (4,243 volts peak)
	Inductance Curve (Typical)	100% at 100% current 100% at 150% current 50% at 350% current (minimum)
	Inductance Tolerance	±10%
	Insulation System	Class N (200 degrees C)
	Impregnation	High bond strength solventless epoxy, 200 degrees C, UL94HB recognized
Environmental	Ambient Temperature	45 degrees C (maximum)
	Altitude	1000 meters (3280 feet)
Agency Approvals	UL-508	File E180243 Component Listed (1-2400 amps) File E180243 UL Listed NEMA Type 1 units (1-2400 amps) Note: Short Circuit rating not required under Exception No.1 of UL508A SB4.2.1 effective 4/25/06
	CSA C22.2, Class N, 200 °C	File LR29753-13 CSA Certified (1 amp - 2400 amps) File E66214, Type 200-18, UL Recognized Insulation System
	CE	TUV certified to EN61558-2-20:2000

Termination

Allen-Bradley reactors rated 45 Amps (fundamental) and below are supplied with an integral mounted terminal block. Reactors rated from 55 to 160 Amps (fundamental) are supplied with box lugs. Reactors rated 200 to 400 Amps (fundamental) will be supplied with front facing copper tabs. Above 400 Amps (fundamental), side facing copper tabs are used. The "3R" and "3RA" designations for the 1321 line reactors indicate the following: 3R = Open Enclosure Line Reactor and 3RA = NEMA 1 Enclosure Line Reactor.

Typical Termination Types and Specifications

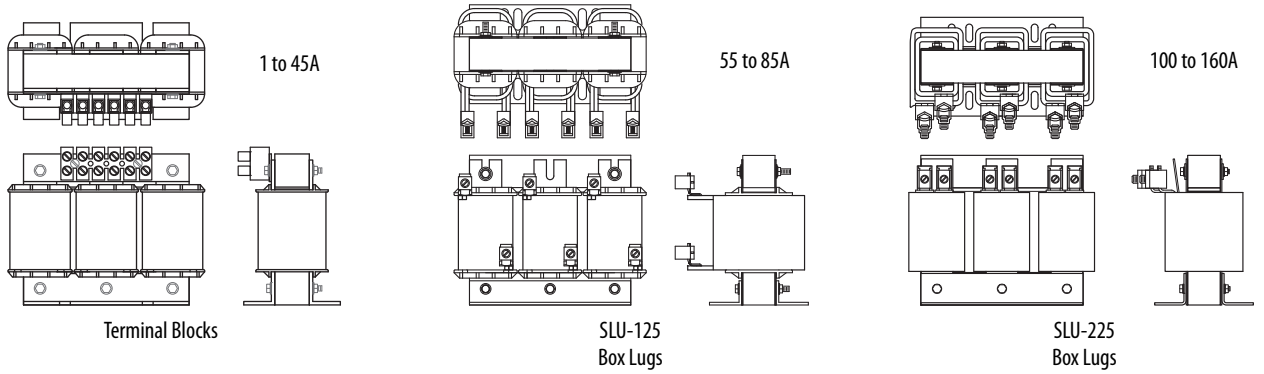

Reactor Catalog Number		Termination	Max./Min. Wire Size	Max. Torque
IP00 (Open) or IP20	IP11 (NEMA/UL Type 1)	Type	mm^2 (AWG)	Nm (lb.-in.)
1321-3R1-A to 1321-3R8-D	1321-3RA1-A to 1321-3RA8-D	20A Terminal Block	2.1/0.3 (14/22)	0.51 (4.5)
1321-3R12-A to 1321-3R35-B	1321-3RA12-A to 1321-3RA35-B	65A Terminal Block	16.0/0.3 (5/22)	1.81 (16)
1321-3R35-C to 1321-3R45-C	1321-3RA35-C to 1321-3RA45-C	85A Terminal Block	21.2/0.8 (4/18)	2.26 (20)
1321-3R55-A to 1321-3R80-C	1321-3RA55-A to 1321-3RA80-C	SLU-125 Box Lug	50.0/10.0 (0/6)	5.09 (45)
1321-3R100-A to 1321-3R160-C	1321-3RA100-A to 1321-3RA160-C	SLU-225 Box Lug	120.0-27.0 (0000/2)	16.95 (150)

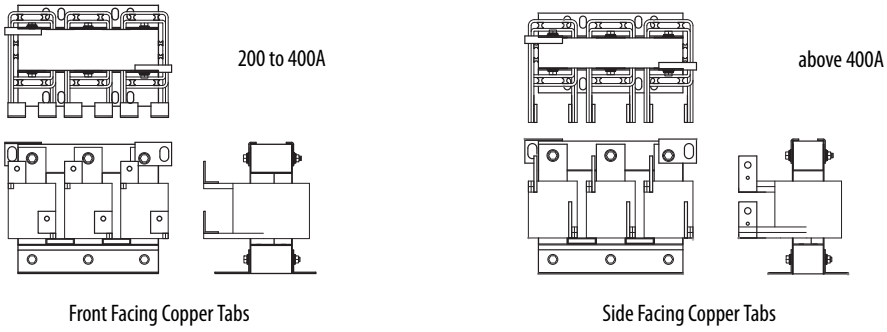

Reactor Catalog Number		Termination	Contact Surface (H x W)	Hole Diameter	Thickness
IP00 (Open) or IP20	IP11 (NEMA/UL Type 1)	Type	mm (in.)	mm (in.)	mm (in.)
1321-3R200-A to 1321-3R200-C	1321-3RA200-A to 1321-3RA200-C	Front Facing Copper Tab	41.3 x 25.4 (1.63 x 1.0)	10.36 (0.408)	3.18 (0.125)
1321-3R250-B to 1321-3RB250-C	1321-3RAB250-A to 1321-3RAB250-C	Front Facing Copper Tab	57.2 x 19.1 (2.25 x 0.75)	10.31 (0.406)	4.75 (0.187)
1321-3RB320-A to 1321-3R400-A	1321-3RAB320-A to 1321-3RA400-A	Front Facing Copper Tab	44.5 x 38.1 (1.75 x 1.5)	10.31 (0.406)	3.18 (0.125)
1321-3R500-A	1321-3RA500-A	Side Facing Copper Tab	44.5 x 38.1 (1.75 x 1.5)	10.31 (0.406)	3.18 (0.125)
1321-3R500-B to 1321-3R500-C	–	Front Facing Copper Tab	76.2 x 38.1 (3.00 x 1.5)	13.49 & 6.35 (0.531 & 0.25)	6.35 (0.25)
–	1321-3RA500-B	Side Facing Copper Tab	44.5 x 38.1 (1.75 x 1.5)	10.31 (0.406)	3.18 (0.125)

Mounting Dimensions and Weights

IMPORTANT The dimensions and weights provided on the following pages are for estimating purposes only. Conduit entry locations for floor mounted enclosures are the responsibility of the installer. Contact your Allen-Bradley Sales Office if certified drawings are required for planning and installation.

IP11 (NEMA/UL Type 1)

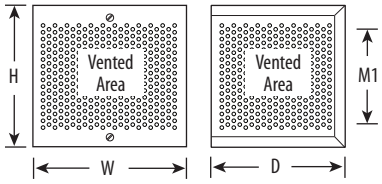

Cabinet 1 – Wall Mounted

Catalog Number 1321- …	Unit	Dimensions in mm (in.) and Weights in kg (lbs.)				
		H	W	D	M1	Weight (Cabinet Only)
3RA1-A to 3RA18-B	Cabinet 1	203 (8.0)	203 (8.0)	152 (6.0)	140 (5.5)	3.2 (7)

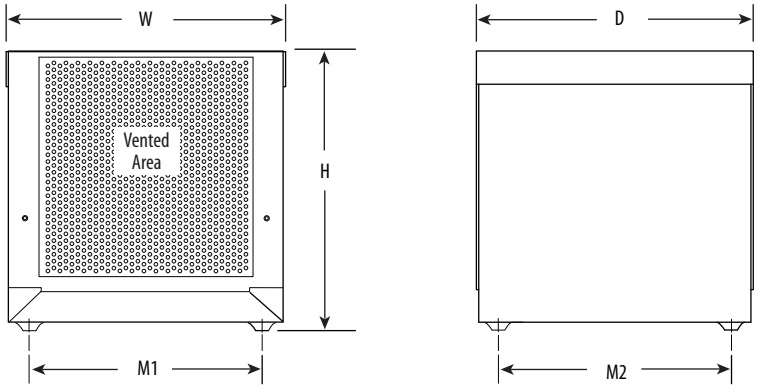

Cabinet 2 – Floor Mounted

Catalog Number 1321- …	Unit	Dimensions in mm (in.) and Weights in kg (lbs.)					
		H	W	D	Feet M1	Feet M2	Weight (Cabinet Only)
3RA18-C to 3RAB250-A	Cabinet 2	330 (13.0)	336 (13.2)	332 (13.1)	279 (11.0)	279 (11.0)	8.2 (18)

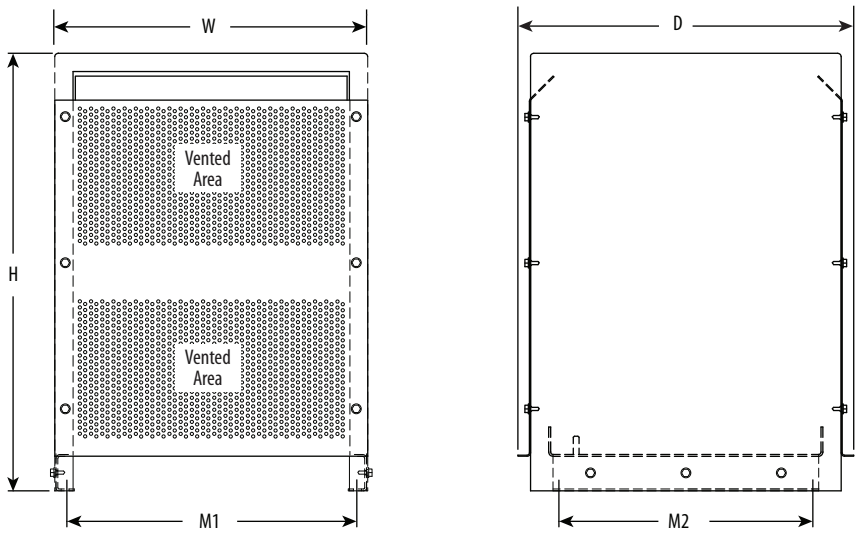

Cabinet 3 – Floor Mounted

Catalog Number 1321- …	Unit	Dimensions in mm (in.) and Weights in kg (lbs.)					
		H	W	D	Feet M1	Feet M2	Weight (Cabinet Only)
3RA250-B to 3RA500-A	Cabinet 3	610 (24.0)	429 (16.9)	467 (18.4)	406 (16.0)	343 (13.5)	12.2 (27)

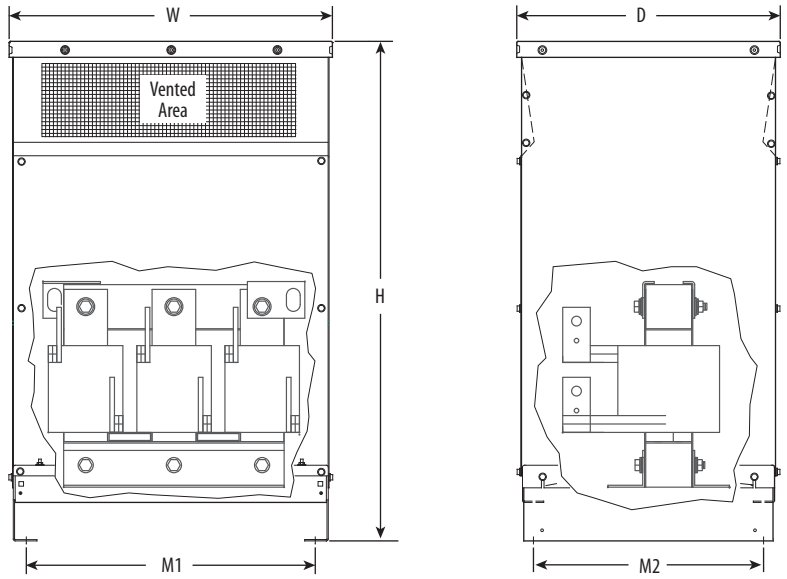

Cabinets 4 & 5 – Floor Mounted

Catalog Number 1321- …	Unit	Dimensions in mm (in.) and Weights in kg (lbs.)					
		H	W	D	Feet M1	Feet M2	Weight (1) (Cabinet Only)
3RA500-B to 3RA600-C	Cabinet 4	1194 (47.0)	674 (26.6)	633 (24.9)	592 (23.3)	552 (21.8)	72.1 (159)
3RA750-A to 3RA850-B 3RA850-C to 3RA1000-C	Cabinet 5	1194 (47.0)	776 (30.6)	633 (24.9)	694 (27.3)	552 (21.8)	72.1 (159)

(1) For total weight - add enclosure weight to specific reactor weight.

IP00/Open

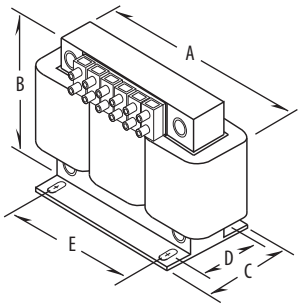

IP00 /Open, 45 Amps (fundamental) and Below

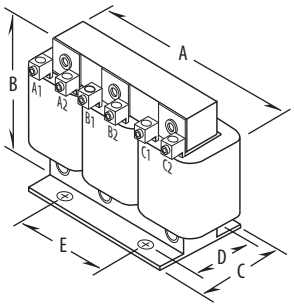

IP00/Open, 80 Amps (fundamental) and Above

Sizing Guidelines

Fundamental amps are used for sizing the reactor to be equal to or slightly higher than the total motor FLA. Sizing reactors to drive ampere ratings alone may result in mis-sizing the reactor.

Catalog Number	Fundamental Amps	Inductance - mH (Based on Fundamental Amps)	Watts Loss	Dimensions in mm (in.) and Weight in kg (lbs.)					
				A	B	C	D[1]	E	Weight
1321-3R1-A	1	100.0	14	112 (4.40)	104 (4.10)	79 (3.10)	60 (2.35)	37 (1.44)	1.8 (4)
1321-3R1-B		50.0	14.8	112 (4.40)	104 (4.10)	71 (2.80)	50 (1.98)	37 (1.44)	1.8 (4)
1321-3R1-C		36.0	12	112 (4.40)	104 (4.10)	71 (2.80)	50 (1.98)	37 (1.44)	1.4 (3)
1321-3R1-D		18.0	5	112 (4.40)	104 (4.10)	71 (2.80)	50 (1.98)	37 (1.44)	1.4 (3)
1321-3R2-A	2	12.0	7.5	112 (4.40)	104 (4.10)	71 (2.80)	50 (1.98)	37 (1.44)	1.8 (4)
1321-3R2-B		20.0	11.3	112 (4.40)	104 (4.10)	71 (2.80)	50 (1.98)	37 (1.44)	1.8 (4)
1321-3R2-C		32.0	16	112 (4.40)	104 (4.10)	71 (2.80)	50 (1.98)	37 (1.44)	1.8 (4)
1321-3R2-D		6.0	10.7	112 (4.40)	104 (4.10)	64 (2.50)	44 (1.73)	37 (1.44)	1.4 (3)
1321-3R4-A	4	3.0	14.5	112 (4.40)	104 (4.10)	71 (2.80)	50 (1.98)	37 (1.44)	1.8 (4)
1321-3R4-B		6.5	20	112 (4.40)	104 (4.10)	71 (2.80)	50 (1.98)	37 (1.44)	1.8 (4)
1321-3R4-C		9.0	20	112 (4.40)	104 (4.10)	86 (3.40)	60 (2.35)	37 (1.44)	2.3 (5)
1321-3R4-D		12.0	21	112 (4.40)	104 (4.10)	86 (3.40)	66 (2.60)	37 (1.44)	2.7 (6)
1321-3R8-A	8	1.5	19.5	152 (6.00)	121 (4.75)	76 (3.00)	53 (2.10)	51 (2.00)	3.2 (7)
1321-3R8-B		3.0	29	152 (6.00)	121 (4.75)	76 (3.00)	53 (2.10)	51 (2.00)	3.6 (8)
1321-3R8-C		5.0	25.3	152 (6.00)	121 (4.75)	86 (3.40)	67 (2.62)	51 (2.00)	5.0 (11)
1321-3R8-D		7.5	28	152 (6.00)	121 (4.75)	86 (3.40)	63 (2.48)	51 (2.00)	5.9 (13)
1321-3R12-A	12	1.25	26	152 (6.00)	127 (5.00)	84 (3.30)	53 (2.10)	51 (2.00)	4.1 (9)
1321-3R12-B		2.5	31	152 (6.00)	127 (5.00)	84 (3.30)	53 (2.10)	51 (2.00)	4.5 (10)
1321-3R12-C		4.2	41	152 (6.00)	127 (5.00)	99 (3.90)	70 (2.75)	51 (2.00)	8.2 (18)
1321-3R18-A	18	0.8	36	152 (6.00)	135 (5.30)	81 (3.20)	53 (2.10)	51 (2.00)	4.1 (9)
1321-3R18-B		1.5	43	152 (6.00)	135 (5.30)	89 (3.50)	63 (2.48)	51 (2.00)	5.5 (12)
1321-3R18-C		2.5	43	206 (8.10)	155 (6.10)	102 (4.00)	66 (2.60)	76 (3.00)	7.3 (16)
1321-3R25-A	25	0.5	48	183 (7.20)	147 (5.80)	89 (3.50)	60 (2.35)	76 (3.00)	5.0 (11)
1321-3R25-B		1.2	52	183 (7.20)	147 (5.80)	89 (3.50)	60 (2.35)	76 (3.00)	6.4 (14)
1321-3R25-C		2.0	61	183 (7.20)	147 (5.80)	109 (4.30)	79 (3.10)	76 (3.00)	9.1 (20)
1321-3R35-A	35	0.4	49	183 (7.20)	147 (5.80)	102 (4.00)	66 (2.60)	76 (3.00)	6.4 (14)
1321-3R35-B		0.8	54	183 (7.20)	147 (5.80)	102 (4.00)	70 (2.75)	76 (3.00)	7.3 (16)
1321-3R35-C		1.2	54	229 (9.00)	188 (7.40)	119 (4.70)	80 (3.16)	76 (3.00)	14.0 (30)

continued

Catalog Number	Fundamental Amps	Inductance - mH (Based on Fundamental Amps)	Watts Loss	Dimensions in mm (in.) and Weight in kg (lbs.)					
				A	B	C	D[1]	E	Weight
1321-3R45-A	45	0.3	54	229 (9.00)	188 (7.40)	119 (4.70)	80 (3.16)	76 (3.00)	10.0 (22)
1321-3R45-B		0.7	62	229 (9.00)	188 (7.40)	119 (4.70)	80 (3.16)	76 (3.00)	13.0 (28)
1321-3R45-C		1.2	65	229 (9.00)	185 (7.30)	135 (5.30)	93 (3.66)	76 (3.00)	18.0 (39)
1321-3R55-A	55	0.25	64	229 (9.00)	185 (7.30)	135 (5.30)	80 (3.16)	76 (3.00)	11.0 (24)
1321-3R55-B		0.5	67	229 (9.00)	178 (7.00)	135 (5.30)	80 (3.16)	76 (3.00)	12.0 (26)
1321-3R55-C		0.85	71	229 (9.00)	178 (7.00)	152 (6.00)	99 (3.91)	76 (3.00)	16.0 (35)
1321-3R80-A	80	0.2	82	229 (9.00)	183 (7.20)	160 (6.30)	88 (3.47)	92 (3.63)	11.3 (25)
1321-3R80-B		0.4	86	229 (9.00)	183 (7.20)	165 (6.50)	88 (3.47)	92 (3.63)	14.9 (33)
1321-3R80-C		0.7	96	274 (10.80)	216 (8.50)	173 (6.80)	106 (4.16)	92 (3.63)	28.0 (61)
1321-3R100-A	100	0.15	94	229 (9.00)	185 (7.30)	165 (6.50)	84 (3.30)	92 (3.63)	13.1 (29)
1321-3R100-B		0.3	84	229 (9.00)	185 (7.30)	173 (6.80)	93 (3.66)	92 (3.63)	16.8 (37)
1321-3R100-C		0.45	108	274 (10.80)	210 (8.30)	156 (6.20)	106 (4.16)	92 (3.63)	34.0 (74)
1321-3R130-A	130	0.1	108	229 (9.00)	178 (7.00)	118 (4.70)	80 (3.16)	76 (3.00)	13.1 (29)
1321-3R130-B		0.2	180	229 (9.00)	183 (7.20)	173 (6.80)	93 (3.66)	92 (3.63)	19.5 (43)
1321-3R130-C		0.3	128	279 (11.00)	216 (8.50)	156 (6.20)	106 (4.16)	92 (3.63)	29.0 (64)
1321-3R160-A	160	0.075	116	229 (9.00)	183 (7.20)	173 (6.80)	80 (3.16)	92 (3.63)	18.6 (41)
1321-3R160-B		0.15	149	274 (10.80)	211 (8.30)	152 (6.00)	88 (3.47)	92 (3.63)	23.0 (50)
1321-3R160-C		0.23	138	292 (11.50)	216 (8.50)	229 (9.00)	119 (4.69)	92 (3.63)	30.0 (67)
1321-3R200-A	200	0.055	124	229 (9.00)	191 (7.50)	185 (7.30)	106 (4.16)	76 (3.00)	17.2 (38)
1321-3R200-B[1]		0.110	168	229 (9.00)	191 (7.50)	211 (8.30)	112 (4.41)	76 (3.00)	24.5 (54)
1321-3R200-C[1]		0.185	146	274 (10.80)	211 (8.30)	254 (10.00)	150 (5.91)	92 (3.63)	45.4 (100)
1321-3RB250-A[1]	250	0.045	154	229 (9.00)	191 (7.50)	229 (9.00)	106 (4.19)	76 (3.00)	21.3 (47)
1321-3RB250-B[1]		0.090	231	274 (10.80)	216 (8.50)	229 (9.00)	131 (5.16)	117 (4.60)	36.3 (80)
1321-3RB250-C[1]		0.150	219	366 (14.40)	284 (11.20)	262 (10.30)	148 (5.82)	117 (4.60)	57.0 (125)
1321-3RB320-A[1]	320	0.040	224	274 (10.80)	229 (9.00)	211 (8.30)	131 (5.16)	117 (4.60)	36.3 (80)
1321-3RB320-B[1]		0.075	264	274 (10.80)	229 (9.00)	254 (10.00)	149 (5.88)	117 (4.60)	46.3 (102)
1321-3RB320-C[1]		0.125	351	366 (14.40)	286 (11.30)	267 (10.50)	181 (7.13)	117 (4.60)	72.6 (160)
1321-3RB400-A[1]	400	0.030	231	274 (10.80)	254 (10.00)	254 (10.00)	131 (5.16)	117 (4.60)	38.1 (84)
1321-3RB400-B[1]		0.060	333	381 (15.00)	286 (11.30)	292 (11.50)	172 (6.76)	117 (4.60)	53.5 (118)
1321-3RB400-C[1]		0.105	293	366 (14.40)	286 (11.30)	318 (12.50)	184 (7.26)	117 (4.60)	67.6 (149)
1321-3R500-A[1]	500	0.025	266	274 (10.80)	229 (9.00)	267 (10.50)	140 (5.50)	117 (4.60)	42.2 (93)
1321-3R500-B[1]		0.050	340	366 (14.40)	292 (11.50)	292 (11.50)	172 (6.76)	117 (4.60)	53.5 (118)
1321-3R500-C[1]		0.085	422	366 (14.40)	292 (11.50)	338 (13.30)	248 (9.76)	117 (4.60)	95.3 (210)
1321-3R600-A[1]	600	0.020	307	366 (14.40)	292 (11.50)	254 (10.00)	134 (5.26)	117 (4.60)	54.4 (120)
1321-3R600-B[1]		0.040	414	366 (14.40)	286 (11.30)	305 (12.00)	203 (8.00)	117 (4.60)	79.4 (175)
1321-3R600-C[1]		0.065	406	366 (14.40)	286 (11.30)	381 (15.00)	235 (9.26)	117 (4.60)	122.5 (270)
1321-3R750-A[1]	750	0.015	427	366 (14.40)	292 (11.50)	279 (11.00)	168 (6.63)	183 (7.20)	63.5 (140)
1321-3R750-B[1]		0.029	630	366 (14.40)	292 (11.50)	318 (12.50)	204 (8.01)	183 (7.20)	86.2 (190)
1321-3R750-C[1]		0.048	552	366 (14.40)	368 (14.50)	356 (14.00)	235 (9.26)	183 (7.20)	120.2 (265)
1321-3R750-E[1]		0.060	810	366 (14.40)	368 (14.50)	381 (15.00)	276 (10.88)	183 (7.20)	147.4 (325)
1321-3R850-A[1]	850	0.015	799	451 (17.80)	394 (15.50)	368 (14.50)	191 (7.50)	183 (7.20)	88.0 (195)
1321-3R850-B[1]		0.027	756	451 (17.80)	394 (15.50)	394 (15.50)	208 (8.20)	183 (7.20)	98.0 (215)
1321-3R850-C[1]		0.042	758	451 (17.80)	400 (15.80)	445 (17.50)	208 (8.20)	183 (7.20)	143.0 (315)
1321-3R1000-B[1]	1000	0.022	964	514 (20.25)	425 (16.80)	330 (13.00)	216 (8.50)	183 (7.20)	185.0 (408)
1321-3R1000-C[1]		0.038	960	514 (20.25)	425 (16.80)	381 (15.00)	273 (10.76)	183 (7.20)	267.2 (589)

(1) Removable lifting rings are supplied with the unit.

1321 Reflective Wave Reduction (RWR) Devices

Description of Reflected Wave Phenomenon

The inverter section of a drive does not produce sinusoidal voltage, but rather a series of voltage pulses created from the DC bus. These pulses travel down the motor cables to the motor and then reflected back to the drive. The reflection is dependant on the rise time of the drive output voltage, cable characteristics, cable length and motor impedance. If the voltage reflection is combined with another subsequent pulse, peak voltages can be at a destructive level. A single IGBT drive output may have reflected wave transient voltage stresses of up to twice (2 pu or per unit) the DC bus voltage between its own output wires. Multiple drive output wires in a single conduit or wire tray further increase output wire voltage stress between multi-drive output wires that are touching. Drive #1 may have a (+) 2 pu stress while drive #2 may simultaneously have a (–) 2 pu stress.

Refer to the Wiring & Grounding Guidelines for PWM Drives (publication DRIVES-IN001) for details.

Applying RWR Devices

At the Output of the Drive

In long motor lead applications, an Allen-Bradley 1321 RWR located between the drive and motor helps to reduce dv/dt and motor terminal peak voltages. The use of an RWR device also helps protect the drive from surge currents caused by rapid changes in the load.

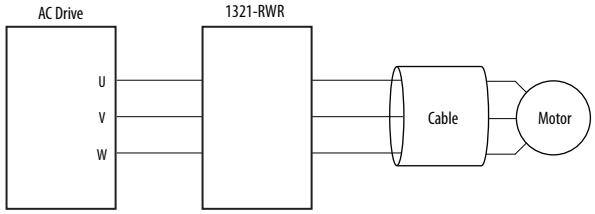

- Protect Motors from Long Lead Effects
- Reduce Output Voltage dv/dt
- Extend Semiconductor Life
- Reduce Surge Currents
- Reduce Motor Temperature
- Reduce Audible Motor Noise

Motor Protection

Allen-Bradley Reflective Wave Reduction devices can help protect motors from high peak voltages.

For IGBT drive applications with long drive-to-motor lead lengths, Allen-Bradley RWR devices can help protect against fast dv/dt rise times.

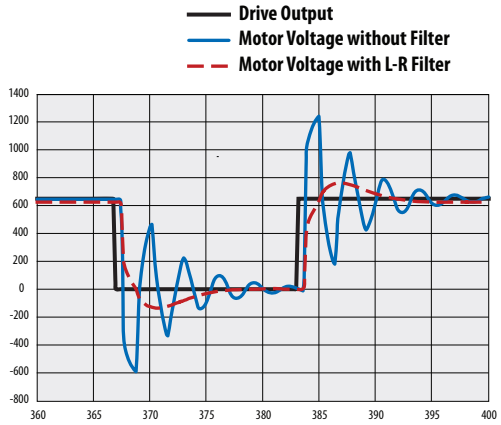

Catalog Number Explanation

IMPORTANT 1321-RWR products replace existing 1204-RWR products. However, 1204-RWRC modules (RWR and Common Mode Choke assembly) are still available.

Position	1-8	9	11	12
	1321 – RWR	8	– D	P
	a	b	c	d

a

Product	
Code	Type
1321-RWR	Reflective Wave Reduction Device

b1

Rating	
400-480V ac	
Code	Fundamental Amps
8	8
12	12
18	18
25	25
35	35
45	45
55	55
80	80
100	100
130	130
160	160
200	200
250	250
320	320

b2

Rating	
600V ac	
Code	Fundamental Amps
8	8
12	12
18	18
25	25
35	35
45	45
55	55
80	80
100	100
130	130
160	160
200	200
250	250

c

Voltage Rating	
Code	Voltage
D	400/480V ac
E	600V ac

d

Enclosure	
Code	Description
P	Panel Mount
A	NEMA/UL Type 1 ∗
W	NEMA/UL Type 3R ∗

∗ Not available

Specifications

Specification		Rating
Material	Enclosures	IP00 (Open)
	Terminations	1-45 Amp (fundamental) Ratings – Finger guard IP20 terminal block
		80-160 Amp (fundamental) Ratings – Solid copper box lugs
		200-400 Amp (fundamental) Ratings – Copper tab terminals
		401 Amps and Above – Copper tab terminals
Harmonic Compensation	All line reactors are compensated for the additional currents and high frequencies caused by the presence of harmonics	
General Protection	Impedance	3%
	Overload Rating	300% of fundamental current for (1) minute
IGBT Protection	First turn triple insulated offering protection up to 16kV	16,000 Volts per Microsecond dv/dt Protection 20 kHz Maximum Switching Frequency
Electrical	Max. Rated Voltage	600V AC, 50/60 Hz frequency
	Max. Switching Freq.	4 kHz
	Temperature Rise	115 degrees C.
	Dielectric Strength	4,000 Volts rms (5,600 volts peak)
	Inductance Curve	100% at 100% current, 100% at 150% current, 50% at 350% current
	Insulation System	Class H (180 degrees C or better)
	Impregnation	High bond strength epoxy impregnation, 4,000V high dielectric strength
Environmental	Ambient Temperature	45 degrees C.
	U.L. Listed	UL-508 - IP00, IP20, and IP11
	International	Conforms to VDE 0550
	CE	Not certified

Termination

Allen-Bradley 1321 RWR devices rated 45 Amps (fundamental) and below are supplied with an integral mounted terminal block. Devices rated from 55 to 160 Amps (fundamental) are supplied with box lugs. Devices rated 200 to 400 Amps (fundamental) can be supplied with box lugs or copper tabs. Above 400 Amps (fundamental), solid copper tabs are used.

Approximate Dimensions, Weights, Wire Size and Terminal Blocks

The dimensions and weights provided on the following page is for estimating purposes only. Contact your Allen-Bradley Sales Office if certified drawings are required for planning and installation.

RWR Catalog No. x = D (400V), E (600V)	Fund. Amps	Cont. Amps	Wire Size	Watts Loss		Figure (see page 15)	Dimensions *mm (in.)*					Weight
			mm^2 (AWG)	400V	600V		A	B	C	D	E	kg (lbs.)
1321-RWR8-xP	8	12	2.5-4.0 (14-12)	389	536	1	282.6 (11.13)	298.5 (11.75)	171.5 (6.75)	7.4 (0.29)	7.4 x 11.6 (0.29 x 0.46)	4.8 (10.5)
1321-RWR12-xP	12	18	2.5-4.0 (14-12)	391	406	1	282.6 (11.13)	298.5 (11.75)	174.6 (6.88)	7.4 (0.29)	7.4 x 11.6 (0.29 x 0.46)	5.7 (12.5)
1321-RWR18-xP	18	27	2.5-4.0 (14-12)	403	551	1	282.6 (11.13)	298.5 (11.75)	174.6 (6.88)	7.4 (0.29)	7.4 x 11.6 (0.29 x 0.46)	7.3 (16)
1321-RWR25-xP	25	37.5	6.0 (10)	412	562	1	282.6 (11.13)	298.5 (11.75)	193.7 (7.63)	7.4 (0.29)	7.4 x 11.6 (0.29 x 0.46)	7.7 (17)
1321-RWR35-xP	35	52.5	10.0-16.0 (8-6)	414	429	1	282.6 (11.13)	298.5 (11.75)	193.7 (7.63)	7.4 (0.29)	7.4 x 11.6 (0.29 x 0.46)	8.8 (19.5)
1321-RWR45-xP	45	67.5	16.0 (6)	422	572	2	319.1 (12.56)	392.1 (15.44)	158.8 (6.25)	10.5 (0.41)	10.3 x 17.9 (0.41 x 0.70)	17.5 (38.5)
1321-RWR55-xP	55	82.5	25.0 (4)	427	577	2	320.7 (12.63)	392.1 (15.44)	158.8 (6.25)	10.5 (0.41)	10.3 x 17.9 (0.41 x 0.70)	18.4 (40.5)
1321-RWR80-xP	80	120	35.0-50.0 (2-1/0)	446	341	2	322.3 (12.69)	395.3 (15.56)	177.8 (7.00)	10.5 (0.41)	10.3 x 17.9 (0.41 x 0.70)	20.4 (45)
1321-RWR100-xP	100	150	50.0-70.0 (1/0-2/0)	444	339	2	320.7 (12.63)	393.7 (15.50)	187.3 (7.38)	10.5 (0.41)	10.3 x 17.9 (0.41 x 0.70)	22.5 (49.5)
1321-RWR130-xP	130	195	70.0-120.0 (2/0-4/0)	630	495	2	317.5 (12.50)	390.5 (15.38)	187.3 (7.38)	10.5 (0.41)	10.3 x 17.9 (0.41 x 0.70)	24.5 (54)
1321-RWR160-xP	160	240	120.0 (4/0)	599	464	3	355.6 (14.00)	438.2 (17.25)	250.8 (9.88)	10.5 (0.41)	10.3 x 25.8 (0.41 x 1.02)	30.8 (68)
1321-RWR200-xP	200	300	120.0-185.0 (4/0-350 MCM)	618	612	2	317.5 (12.50)	393.7 (15.50)	214.3 (8.44)	10.5 (0.41)	10.3 x 17.9 (0.41 x 0.70)	29.9 (66)
1321-RWR250-xP	250	375	185.0 (350 MCM)	681	546	3	358.8 (14.13)	439.8 (17.31)	225.4 (8.88)	10.5 (0.41)	10.3 x 25.8 (0.41 x 1.02)	41.7 (92)
1321-RWR320-DP	320	480	240.0 (500 MCM)	489	NA	3	358.8 (14.13)	438.2 (17.25)	250.8 (9.88)	10.5 (0.41)	10.3 x 25.8 (0.41 x 1.02)	52.2 (115)

1321-RWR Assembly Components

400/480V

Reactor	Resistor Ohms	Resistor Watts	Wire Size (AWG)
1321-3R8-B	50	250	14-12
1321-3R12-B	50	250	14-12
1321-3R18-B	50	250	14-12
1321-3R25-B	50	250	10
1321-3R35-B	50	250	8-6
1321-3R45-B	50	250	6
1321-3R55-B	50	250	4
1321-3R80-B	50	250	2-1/0
1321-3R100-B	50	250	1/0-2/0
1321-3R130-B	50	300	2/0-4/0
1321-3R160-B	50	300	4/0
1321-3R200-B	50	300	4/0-350 MCM
1321-3RB250-B	50	300	350 MCM
1321-3R320-B	50	300	500 MCM

600V

Reactor	Resistor Ohms	Resistor Watts	Wire Size (AWG)
1321-3R8-B	50	375	14-12
1321-3R12-B	50	375	14-12
1321-3R18-B	50	375	14-12
1321-3R25-B	50	375	10
1321-3R35-B	50	375	8-6
1321-3R45-B	50	375	6
1321-3R55-B	50	375	4
1321-3R80-B	50	375	2-1/0
1321-3R100-B	50	375	1/0-2/0
1321-3R130-B	50	420	2/0-4/0
1321-3R160-B	50	420	4/0
1321-3R200-B	50	420	4/0-350 MCM
1321-3RB250-B	50	420	350 MCM

Dimension Reference

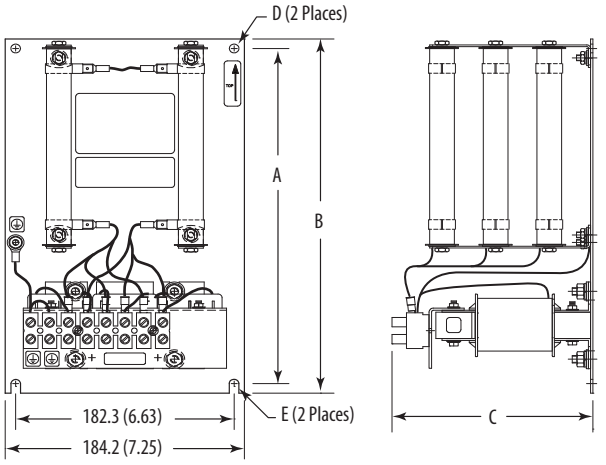

Figure 1

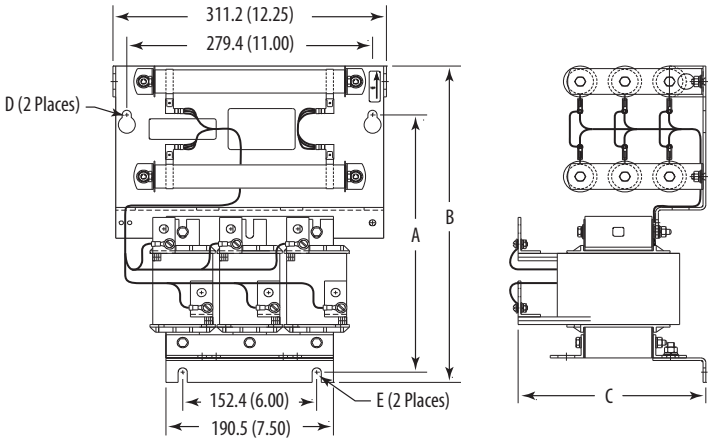

Figure 2

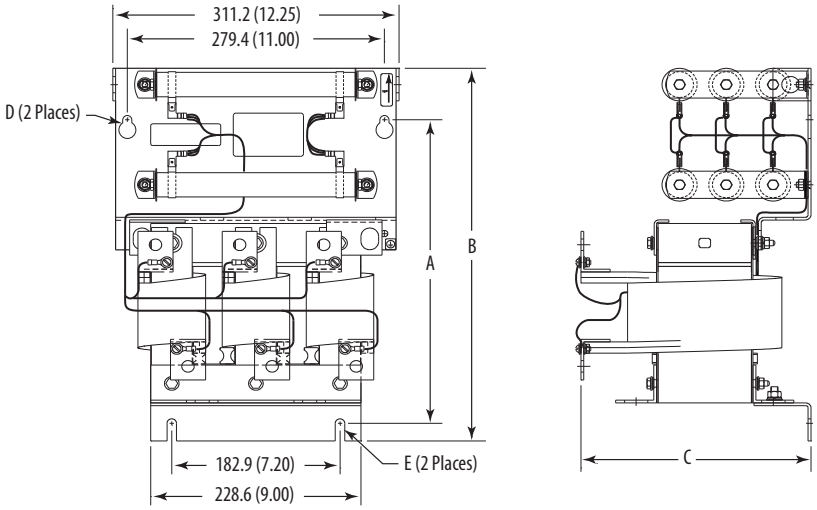

Figure 3

Terminal Block Details

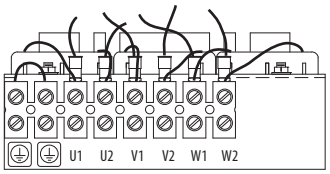

Figure 1

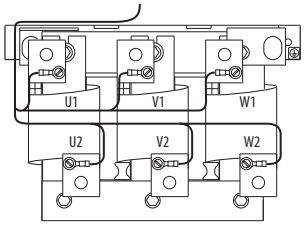

Figures 2 & 3

1321-3TH/3TW Series Three-Phase Isolation Transformers

Allen-Bradley 1321 Isolation Transformers are designed to meet the standard horsepower, voltage ratings and harmonics of the Allen-Bradley variable speed drives.

Catalog Number Explanation

Position	1-4	6	7	8	9	11	12
	1321	– 3	T	W	005	– A	A
	a	b	c	d	e	f	g

a

Product	
Code	Type
1321	Power Component

b

Phases	
Code	Description
3	Three-Phase

c

Device	
Code	Description
T	Transformer

d

Mounting	
Code	Description
W	Wall
H	Floor

e

Rating	
Code	kVA
005	5
007	7.5
011	11
014	14
020	20
027	27
034	34
040	40
051	51
063	63
075	75
093	93
118	118
145	145
175	175
220	220
275	275
330	330
440	440
550	550
660	660
770	770
880	880

f

Primary Voltage	
Code	Voltage
A	230V ac
B	460V ac
C	575V ac
X	208V ac

g

Secondary Voltage	
Code	Voltage
A	230V ac
B	460V ac
C	575V ac
X	208V ac

Specifications

Specification		Rating
Electrical	General	Delta primary, wye secondary, 60 Hz, Aluminum wound, Neutral terminal available for customer use
	Standard Voltage Taps	5.0-175 kVA 1-5.0% FCAN & FCBN
		220-880 kVA 1-2.5% FCAN & FCBN
	Insulation System	Class 220
		150 degrees C Rise Over 40 degrees C Ambient
		Peak 40 degrees C Ambient with 30 degrees C 24 Hour Avg.
	Efficiency	98% (2% losses)
Environmental	Elevation	Up to 1,000 Meters. Above 1,000 Meters, consult factory for derating
	U.L. Listed	File E112313
Construction	Enclosure	NEMA/UL Type 3R (IP32)
		Heavy duty ventilated enclosure with metal screens protecting all vents and finished in ANSI 61 grey
	Termination	Transformers up to 75kVA have integral high and low voltage lugs installed, suitable for copper or aluminum cable installation
	Conduit Entry	Standard knockouts on all enclosures
	Mounting	5-51 kVA units suitable for either floor or wall mounting. 63-75 kVA units suitable for floor, wall or ceiling mounting with mounting kit 1321-3TWM2 (Style NH3). Larger units are floor mount only
General	Impedance	4-6% impedance (nominal)
	Short Circuit Capability	Meets UL short circuit withstand capability
	Overload Rating	Windings designed to withstand overcurrent of 150% of rated load for 60 Seconds or 200% of rated load for 30 Seconds
	Duty Cycle	(1) start every (2) hours
	Thermostats	Thermostats with 1 N.C contact in each coil, wired in series and integral on all units
	K Factor	4
	Custom Options (consult factory for operating information)	50 Hz units
		Electrostatic shield (60dB attenuation typical)
		NEMA/UL Type 2 or IP20 (NEMA/UL Type 1)
		Core and coil construction (open)
		Additional HP or kVA sizes, voltages, extra primary taps, copper wound units, etc.

Approximate Mounting Dimensions

IP32, NEMA/UL Type 3R - Styles NH3 through NH4

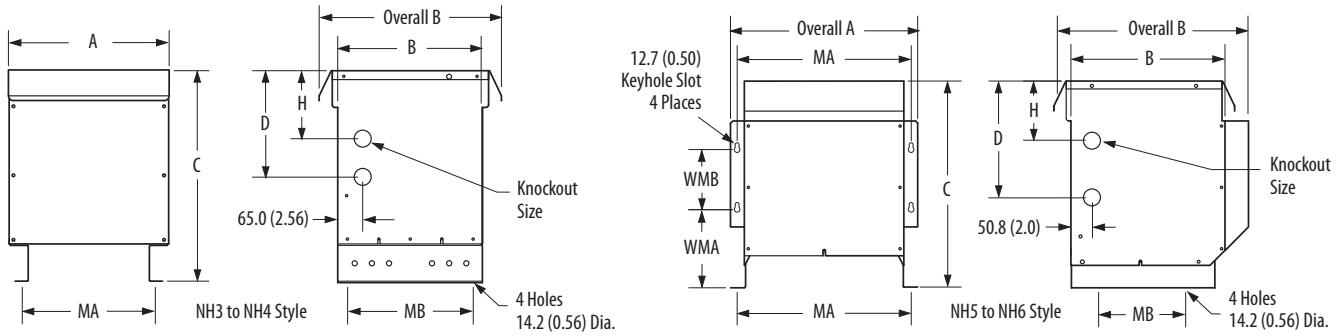

Dimensions in mm (in.)

Style	A	Overall A	B	Overall B	C	D	H	K	MA	MB	WMB	WMA
NH3	660.4 (26.00)	–	533.4 (21.00)	635.0 (25.00)	66.0 (38.00)	609.6 (24.00)	355.6 (14.00)	50.8 x 76.2 (2.00 x 3.00)	546.1 (21.50)	482.6 (19.00)	–	–
NH4	812.8 (32.00)	–	647.7 (25.50)	749.3 (29.50)	68.0 (41.00)	609.6 (24.00)	304.8 (12.00)	50.8 x 76.2 (2.00 x 3.00)	596.9 (23.50)	596.9 (23.50)	–	–
NH5 (1)	425.5 (16.75)	492.8 (19.40)	381.0 (15.00)	513.1 (20.20)	546.1 (21.50)	304.8 (12.00)	152.4 (6.00)	35.1 x 44.4 (1.38 x 1.75)	457.2 (18.00)	228.6 (9.00)	177.8 (7.00)	184.4 (7.26)
NH6 (1)	546.1 (21.50)	607.1 (23.90)	495.3 (19.50)	730.3 (28.75)	730.3 (28.75)	431.8 (17.00)	215.9 (8.50)	35.1 x 44.4 (1.38 x 1.75)	577.9 (22.75)	228.6 (9.00)	203.2 (8.00)	247.1 (9.73)

(1) Enclosure Styles NH1 and NH2 are replaced by NH5 and NH6 through 1321-3TH005 - 1321-3TH051 ratings.

IP32, NEMA/UL Type 3R -Styles NJ1 through NJ6

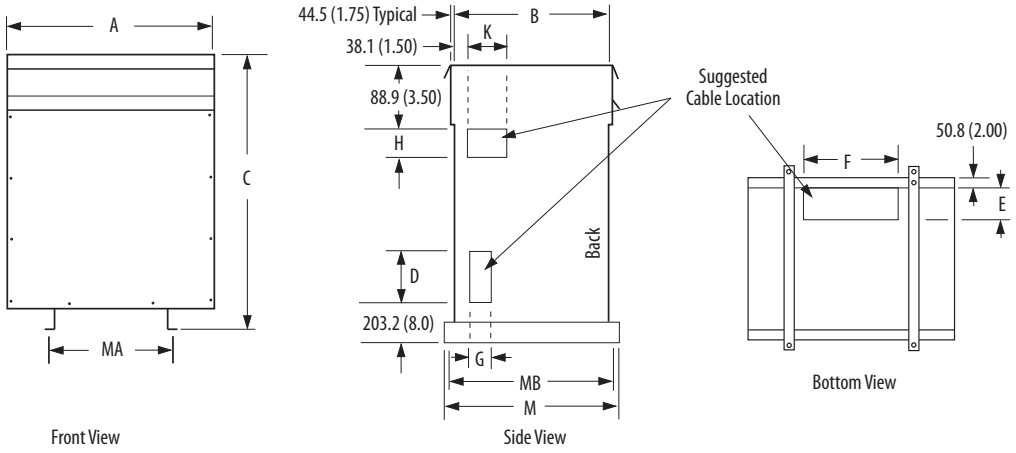

Dimensions in mm (in.)

Style	A	B	C	D	E	F	G	H	K	M	MA	MB
NJ1	1003.3 (39.50)	762.0 (30.00)	1308.1 (51.50)	254.0 (10.00)	190.5 (7.50)	546.1 (21.50)	203.2 (8.00)	165.1 (6.50)	342.9 (13.50)	863.6 (34.00)	609.6 (24.00)	812.8 (32.00)
NJ2	1239.1 (48.50)	836.6 (34.00)	1498.6 (59.00)	330.2 (13.00)	215.9 (8.50)	635.0 (25.00)	228.6 (9.00)	215.9 (8.50)	393.7 (15.50)	965.2 (38.00)	698.5 (27.50)	914.4 (36.00)
NJ3	1308.1 (51.50)	990.6 (39.00)	1676.4 (66.00)	406.4 (16.00)	241.3 (9.50)	800.1 (31.50)	254.0 (10.00)	292.1 (11.50)	457.2 (18.00)	1092.2 (43.00)	863.6 (34.00)	1041.4 (41.00)
NJ6	1625.6 (64.00)	1016.0 (40.00)	1727.2 (68.00)	406.4 (16.00)	266.7 (10.50)	952.5 (37.50)	279.4 (11.00)	292.1 (11.50)	457.2 (18.00)	1117.6 (44.00)	1016.0 (40.00)	1066.8 (42.00)

Wiring Diagrams, Ratings and Weights

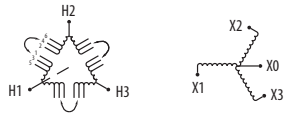

Wiring Diagram 1

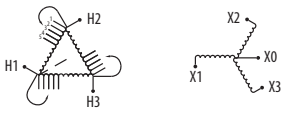

Wiring Diagram 2

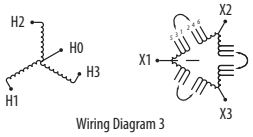

Wiring Diagram 3

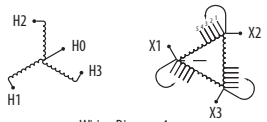

Wiring Diagram 4

kVA	Catalog Number	Style	Primary Voltage	Secondary Voltage	Wiring Diagram	Weight kg (lbs.)
5	1321-3TW005-AA	NH5	230	230	1	63.5 (140)
	1321-3TW005-AB	NH5	230	460	3	63.5 (140)
	1321-3TW005-AC	NH5	230	575	3	63.5 (140)
	1321-3TW005-BA	NH5	460	230	1	63.5 (140)
	1321-3TW005-BB	NH5	460	460	1	63.5 (140)
	1321-3TW005-BC	NH5	460	575	3	63.5 (140)
	1321-3TW005-CA	NH5	575	230	1	63.5 (140)
	1321-3TW005-CB	NH5	575	460	1	63.5 (140)
	1321-3TW005-CC	NH5	575	575	1	63.5 (140)
	1321-3TW005-XX	NH5	208	208	1	63.5 (140)
40	1321-3TW040-AA	NH6	230	230	2	145.2 (320)
	1321-3TW040-AB	NH6	230	460	4	145.2 (320)
	1321-3TW040-AC	NH6	230	575	4	145.2 (320)
	1321-3TW040-BA	NH6	460	230	2	145.2 (320)
	1321-3TW040-BB	NH6	460	460	2	145.2 (320)
	1321-3TW040-BC	NH6	460	575	4	145.2 (320)
	1321-3TW040-CA	NH6	575	230	2	145.2 (320)
	1321-3TW040-CB	NH6	575	460	2	145.2 (320)
	1321-3TW040-CC	NH6	575	575	2	145.2 (320)
51	1321-3TW051-AA	NH6	230	230	2	190.5 (420)
	1321-3TW051-AB	NH6	230	460	4	190.5 (420)
	1321-3TW051-AC	NH6	230	575	4	190.5 (420)
	1321-3TW051-BA	NH6	460	230	2	190.5 (420)
	1321-3TW051-BB	NH6	460	460	2	190.5 (420)
	1321-3TW051-BC	NH6	460	575	4	190.5 (420)
	1321-3TW051-CA	NH6	575	230	2	190.5 (420)
	1321-3TW051-CB	NH6	575	460	2	190.5 (420)
	1321-3TW051-CC	NH6	575	575	2	190.5 (420)
63	1321-3TH063-AA	NH3	230	230	2	244.9 (540)
	1321-3TH063-AB	NH3	230	460	4	244.9 (540)
	1321-3TH063-AC	NH3	230	575	4	244.9 (540)
	1321-3TH063-BA	NH3	460	230	2	244.9 (540)
	1321-3TH063-BB	NH3	460	460	2	244.9 (540)
	1321-3TH063-BC	NH3	460	575	4	244.9 (540)
	1321-3TH063-CA	NH3	575	230	2	244.9 (540)
	1321-3TH063-CB	NH3	575	460	2	244.9 (540)
	1321-3TH063-CC	NH3	575	575	2	244.9 (540)
75	1321-3TH075-AA	NH3	230	230	2	263.1 (580)
	1321-3TH075-AB	NH3	230	460	4	263.1 (580)
	1321-3TH075-AC	NH3	230	575	4	263.1 (580)
	1321-3TH075-BA	NH3	460	230	2	263.1 (580)
	1321-3TH075-BB	NH3	460	460	2	263.1 (580)
	1321-3TH075-BC	NH3	460	575	4	263.1 (580)
	1321-3TH075-CA	NH3	575	230	2	263.1 (580)
	1321-3TH075-CB	NH3	575	460	2	263.1 (580)
	1321-3TH075-CC	NH3	575	575	2	263.1 (580)
93	1321-3TH093-AA	NH3	230	230	2	285.8 (630)
	1321-3TH093-AB	NH3	230	460	4	285.8 (630)
	1321-3TH093-AC	NH3	230	575	4	285.8 (630)
	1321-3TH093-BA	NH3	460	230	2	285.8 (630)
	1321-3TH093-BB	NH3	460	460	2	285.8 (630)
	1321-3TH093-BC	NH3	460	575	4	285.8 (630)
	1321-3TH093-CA	NH3	575	230	2	285.8 (630)
	1321-3TH093-CB	NH3	575	460	2	285.8 (630)
	1321-3TH093-CC	NH3	575	575	2	285.8 (630)
118	1321-3TH118-AA	NH3	230	230	2	328.9 (725)
	1321-3TH118-AB	NH3	230	460	4	328.9 (725)
	1321-3TH118-AC	NH3	230	575	4	328.9 (725)
	1321-3TH118-BA	NH3	460	230	2	328.9 (725)
	1321-3TH118-BB	NH3	460	460	2	328.9 (725)
	1321-3TH118-BC	NH3	460	575	4	328.9 (725)
	1321-3TH118-CA	NH3	575	230	2	328.9 (725)
	1321-3TH118-CB	NH3	575	460	2	328.9 (725)
	1321-3TH118-CC	NH3	575	575	2	328.9 (725)
145	1321-3TH145-AA	NH4	230	230	2	408.2 (900)
	1321-3TH145-AB	NH4	230	460	4	408.2 (900)
	1321-3TH145-AC	NH4	230	575	4	408.2 (900)
	1321-3TH145-BA	NH4	460	230	2	408.2 (900)
	1321-3TH145-BB	NH4	460	460	2	408.2 (900)
	1321-3TH145-BC	NH4	460	575	4	408.2 (900)
	1321-3TH145-CA	NH4	575	230	2	408.2 (900)
	1321-3TH145-CB	NH4	575	460	2	408.2 (900)
	1321-3TH145-CC	NH4	575	575	2	408.2 (900)

continued

kVA	Catalog Number	Style	Primary Voltage	Secondary Voltage	Wiring Diagram	Weight kg (lbs.)
175	1321-3TH175-AA	NH4	230	230	2	453.6 (1000)
	1321-3TH175-AB	NH4	230	460	4	453.6 (1000)
	1321-3TH175-AC	NH4	230	575	4	453.6 (1000)
	1321-3TH175-BA	NH4	460	230	2	453.6 (1000)
	1321-3TH175-BB	NH4	460	460	2	453.6 (1000)
	1321-3TH175-BC	NH4	460	575	4	453.6 (1000)
	1321-3TH175-CA	NH4	575	230	2	453.6 (1000)
	1321-3TH175-CB	NH4	575	460	2	453.6 (1000)
	1321-3TH175-CC	NH4	575	575	2	453.6 (1000)
220	1321-3TH220-AA	NJ1	230	230	2	589.7 (1300)
	1321-3TH220-AB	NJ1	230	460	4	589.7 (1300)
	1321-3TH220-AC	NJ1	230	575	4	589.7 (1300)
	1321-3TH220-BA	NJ1	460	230	2	589.7 (1300)
	1321-3TH220-BB	NJ1	460	460	2	589.7 (1300)
	1321-3TH220-BC	NJ1	460	575	4	589.7 (1300)
	1321-3TH220-CA	NJ1	575	230	2	589.7 (1300)
	1321-3TH220-CB	NJ1	575	460	2	589.7 (1300)
	1321-3TH220-CC	NJ1	575	575	2	589.7 (1300)
275	1321-3TH275-AA	NJ1	230	230	2	680.4 (1500)
	1321-3TH275-AB	NJ1	230	460	4	680.4 (1500)
	1321-3TH275-AC	NJ1	230	575	4	680.4 (1500)
	1321-3TH275-BA	NJ1	460	230	2	680.4 (1500)
	1321-3TH275-BB	NJ1	460	460	2	680.4 (1500)
	1321-3TH275-BC	NJ1	460	575	4	680.4 (1500)
	1321-3TH275-CA	NJ1	575	230	2	680.4 (1500)
	1321-3TH275-CB	NJ1	575	460	2	680.4 (1500)
	1321-3TH275-CC	NJ1	575	575	2	680.4 (1500)
330	1321-3TH330-AA	NJ1	230	230	2	771.1 (1700)
	1321-3TH330-AB	NJ1	230	460	4	771.1 (1700)
	1321-3TH330-AC	NJ1	230	575	4	771.1 (1700)
	1321-3TH330-BA	NJ1	460	230	2	771.1 (1700)
	1321-3TH330-BB	NJ1	460	460	2	771.1 (1700)
	1321-3TH330-BC	NJ1	460	575	4	771.1 (1700)
	1321-3TH330-CA	NJ1	575	230	2	771.1 (1700)
	1321-3TH330-CB	NJ1	575	460	2	771.1 (1700)
	1321-3TH330-CC	NJ1	575	575	2	771.1 (1700)
440	1321-3TH440-AA	NJ2	230	230	1	907.2 (2000)
	1321-3TH440-AB	NJ2	230	460	3	907.2 (2000)
	1321-3TH440-AC	NJ2	230	575	3	907.2 (2000)
	1321-3TH440-BA	NJ2	460	230	1	907.2 (2000)
	1321-3TH440-BB	NJ2	460	460	1	907.2 (2000)
	1321-3TH440-BC	NJ2	460	575	3	907.2 (2000)
	1321-3TH440-CA	NJ2	575	230	1	907.2 (2000)
	1321-3TH440-CB	NJ2	575	460	1	907.2 (2000)
	1321-3TH440-CC	NJ2	575	575	1	907.2 (2000)
550	1321-3TH550-AA	NJ2	230	230	1	1134.0 (2500)
	1321-3TH550-AB	NJ2	230	460	3	1134.0 (2500)
	1321-3TH550-AC	NJ2	230	575	3	1134.0 (2500)
	1321-3TH550-BA	NJ2	460	230	1	1134.0 (2500)
	1321-3TH550-BB	NJ2	460	460	1	1134.0 (2500)
	1321-3TH550-BC	NJ2	460	575	3	1134.0 (2500)
	1321-3TH550-CA	NJ2	575	230	1	1134.0 (2500)
	1321-3TH550-CB	NJ2	575	460	1	1134.0 (2500)
	1321-3TH550-CC	NJ2	575	575	1	1134.0 (2500)
660	1321-3TH660-AA	NJ3	230	230	1	1360.8 (3000)
	1321-3TH660-AB	NJ3	230	460	3	1360.8 (3000)
	1321-3TH660-AC	NJ3	230	575	3	1360.8 (3000)
	1321-3TH660-BA	NJ3	460	230	1	1360.8 (3000)
	1321-3TH660-BB	NJ3	460	460	1	1360.8 (3000)
	1321-3TH660-BC	NJ3	460	575	3	1360.8 (3000)
	1321-3TH660-CA	NJ3	575	230	1	1360.8 (3000)
	1321-3TH660-CB	NJ3	575	460	1	1360.8 (3000)
	1321-3TH660-CC	NJ3	575	575	1	1360.8 (3000)
770	1321-3TH770-AA	NJ3	230	230	1	1587.6 (3500)
	1321-3TH770-AB	NJ3	230	460	3	1587.6 (3500)
	1321-3TH770-AC	NJ3	230	575	3	1587.6 (3500)
	1321-3TH770-BA	NJ3	460	230	1	1587.6 (3500)
	1321-3TH770-BB	NJ3	460	460	1	1587.6 (3500)
	1321-3TH770-BC	NJ3	460	575	3	1587.6 (3500)
	1321-3TH770-CA	NJ3	575	230	1	1587.6 (3500)
	1321-3TH770-CB	NJ3	575	460	1	1587.6 (3500)
	1321-3TH770-CC	NJ3	575	575	1	1587.6 (3500)
880	1321-3TH880-AA	NJ6	230	230	1	1678.3 (3700)
	1321-3TH880-AB	NJ6	230	460	3	1678.3 (3700)
	1321-3TH880-AC	NJ6	230	575	3	1678.3 (3700)
	1321-3TH880-BA	NJ6	460	230	1	1678.3 (3700)
	1321-3TH880-BB	NJ6	460	460	1	1678.3 (3700)
	1321-3TH880-BC	NJ6	460	575	3	1678.3 (3700)
	1321-3TH880-CA	NJ6	575	230	1	1678.3 (3700)
	1321-3TH880-CB	NJ6	575	460	1	1678.3 (3700)
	1321-3TH880-CC	NJ6	575	575	1	1678.3 (3700)

1321-M Common Mode Chokes

1321-M Common Mode Chokes can be installed with 1305, 1336 PLUS II, 1336 IMPACT™ and PowerFlex® 70/700 AC drives. When installed at the drive output the common mode choke helps to guard against interference with other electrical equipment (Programmable Controllers, sensors, analog circuits, etc.). In addition, reducing the PWM carrier frequency reduces the effects and lowers the risk of common mode noise interference.

Catalog Number Explanation

Position	1-4		6		7
	1321	–	M		009
	a		b		c

a

Product	
Code	Type
1321	Power Component

b

Device	
Code	Description
M	Common Mode Choke

c

Current Rating	
Code	Amps
001 ∗	1
009	9
048	48
180	180
670	670

∗ Same core as 1321-M009. Can be used in place of the M009, M048 or M180 if the terminal block and windings typical of those ratings are not desired.

Ratings

Choke Type	Used With	Ratings	Catalog Number
Open Style, 9A (with terminal strip)	All Drives	Communication Cables, Analog Signal Cables, etc.	1321-M001
	PowerFlex 70/700	0.37-1.5 kW (0.5-2 HP) 230V 0.37-4 kW (0.5-5 HP) 480V	1321-M009
	1305 and 1336 PLUS II	0.37-2.2 kW (0.5-2 HP) 230V 0.37-3.7 kW (0.5-5 HP) 480V	
	1336 IMPACT	0.37-3.7 kW (0.5-5 HP) 480V	
Open Style, 48A	PowerFlex 70/700	2.2-11 kW (3-15 HP) 230V 5.5-22 kW (7.5-30 HP) 480V 5.5-30 kW (7.5-40 HP) 600V	1321-M048
	1336 PLUS II	2.2-11 kW (3-15 HP) 230V 5.5-22 kW (7.5-30 HP) 480V 0.75-30 kW (1-40 HP) 600V	
	1336 IMPACT	5.5-22 kW (7.5-30 HP) 480V 5.5-30 kW (7.5-40 HP) 600V	
Open Style, 180A	PowerFlex 70/700	15-45 kW (20-60 HP) 230V 30-110 kW (40-150 HP) 480V 37-110 kW (50-150 HP) 600V	1321-M180
	1336 PLUS II	15-45 kW (20-60 HP) 230V 30-112 kW (40-150 HP) 480V 37-112 kW (50-150 HP) 600V	
	1336 IMPACT	30-112 kW (40-150 HP) 480V 37-93 kW (50-125 HP) 600V	
Open Style, 670A	PowerFlex 70/700	55-66 kW (75-100 HP) 230V 110-350 kW (150-500 HP) 480V 132-223 kW (200-300 HP) 600V	1321-M670
	1336 PLUS II	56-93 kW (75-125 HP) 230V 112-448 kW (150-600 HP) 480V 149-448 kW (200-600 HP) 600V	
	1336 IMPACT	112-448 kW (150-600 HP) 480V 149-448 kW (200-600 HP) 600V	

Approximate Mounting Dimensions

1321-M001

Dimensions are in mm (in.)

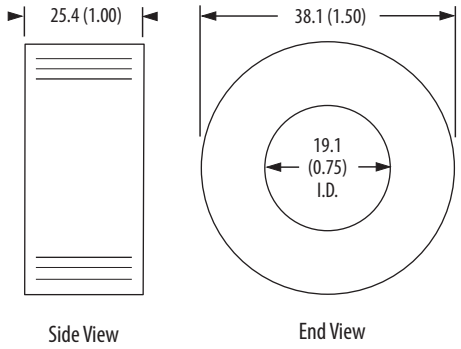

1321-M009

Dimensions are in mm (in.)

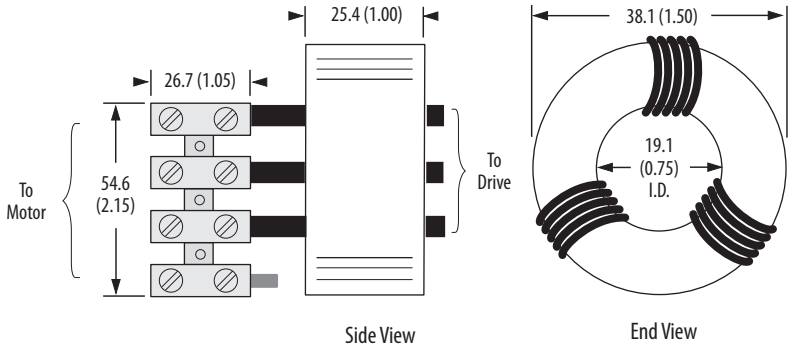

1321-M048

Dimensions are in mm (in.)

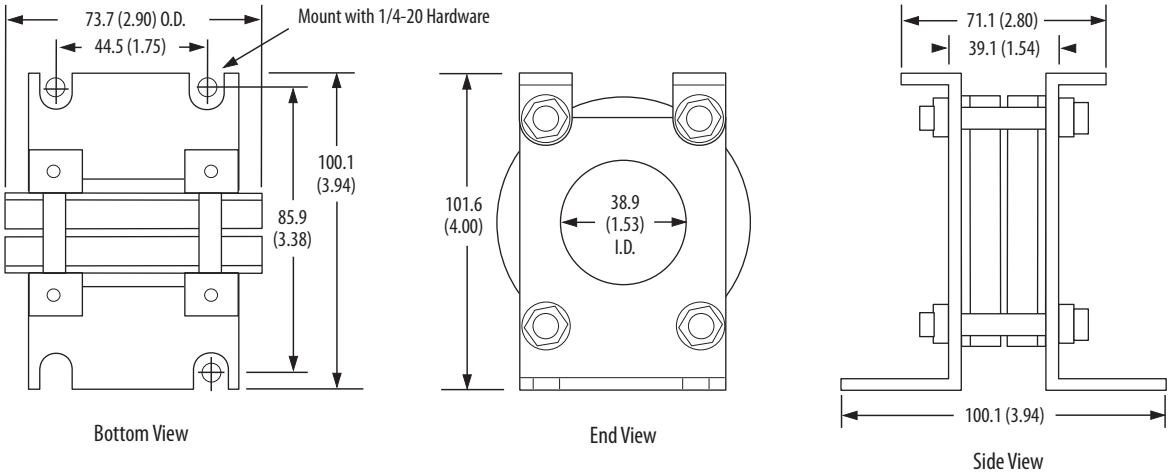

1321-M180

Dimensions are in mm (in.)

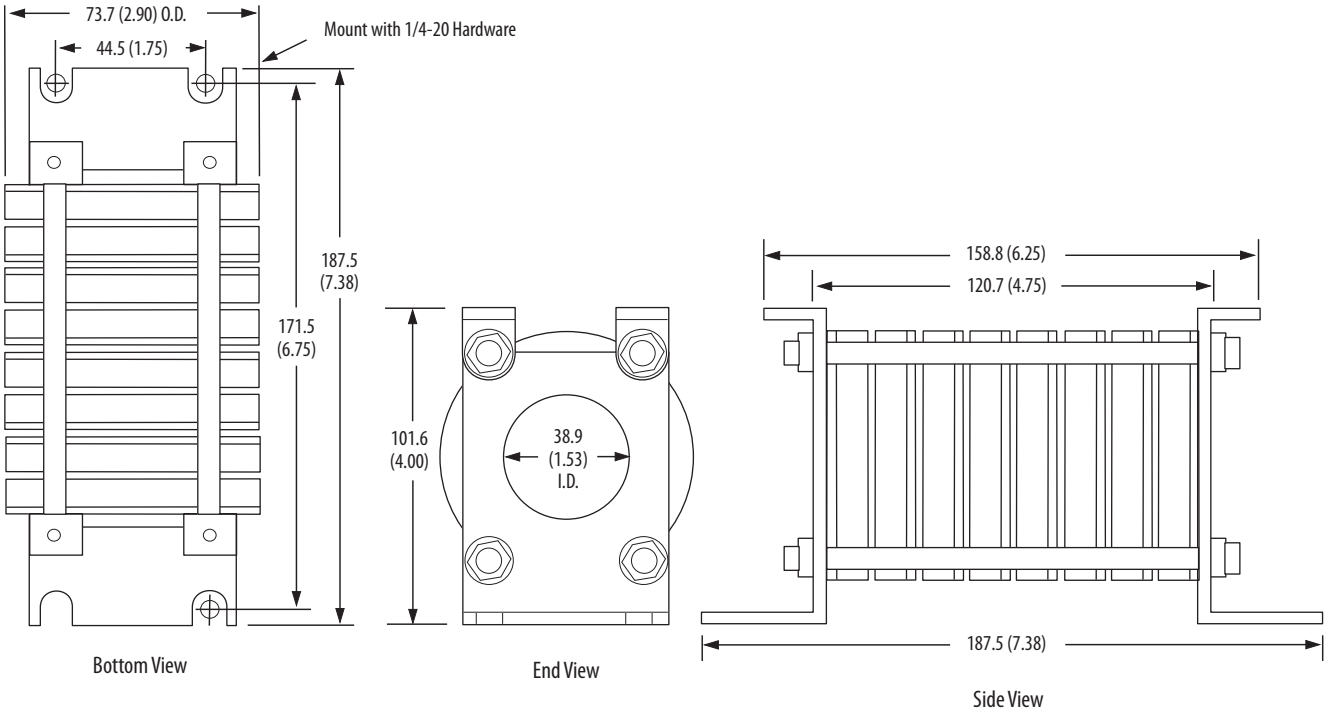

1321-M670

Dimensions are in mm (in.)

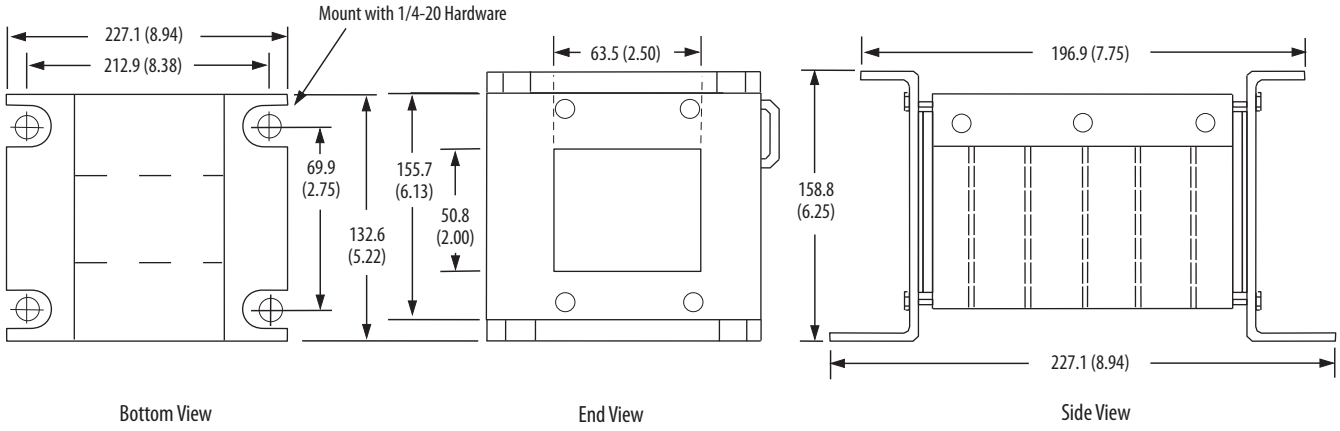

1321-DC DC Link Chokes

1321-DC DC Link Chokes can be installed with Frame C PowerFlex® 40 and all PowerFlex 400 drives. Add DC Link Chokes in series with the internal DC Bus to:

- Reduce AC Input Line Harmonics
- Help meet IEEE-519 limits
- Absorb Voltage/Current Spikes
- Reduce AC Ripple on DC Bus
- Reduce dV/dT and dI/dT rates
- Solve nuisance overvoltage tripping
- Reduce DC Bus Transient Overvoltage

Catalog Number Explanation

Position	1-4	6	7	8	9
	1321	– DC	12	–	1
	a	b	c		d

a

Product	
Code	Type
1321	Power Component

b

Device	
Code	Description
DC	DC Link Choke

c

Current Rating	
Code	Amps
9	9
12	12
18	18
25	25
32	32
40	40

d

Inductance Rating	
Code	Description
1	Each DC Link Choke current rating may have more than one inductance rating. Refer to *Ratings* on page 25 for specific values.
2	
3	
4	

Specifications

Specification	Rating
General	UL-508 component recognized (File E180243)
	1000 Volts DC maximum
	For ripple frequency of 300 Hz or 360 Hz
	50 degrees C temperature rise
	Suitable for 40 degrees C ambient temperature
	Class B insulation system (130 degrees C)
	Suitable for ripple current of 10% peak-to-peak
	Touchsafe terminals in many ratings

Special Features

- Solid copper box lug type terminals on most sizes
- Specially constructed and epoxy impregnated for low noise
- Customized ratings also available - contact the factory for custom mounting, inductance, current or ripple requirements

Ratings

Catalog Number	Type	DC Amps	mH	Watts	Lug Size	Torque
1321-DC9-2	Open Style	9	3.22	7	22-14	4.5
1321-DC12-1	Open Style	12	1	5	22-14	4.5
1321-DC12-2	Open Style	12	2.1	7	18-4	20
1321-DC18-1	Open Style	18	0.65	5	18-4	20
1321-DC18-4	Open Style	18	3.75	17	18-4	20
1321-DC25-4	Open Style	25	1.75	13	18-4	20
1321-DC32-1	Open Style	32	0.85	11	18-4	20
1321-DC32-2	Open Style	32	1.62	14	18-4	20
1321-DC32-3	Open Style	32	2.68	21	18-4	20
1321-DC40-2	Open Style	40	0.75	15	18-4	20
1321-DC40-4	Open Style	40	2	29	18-4	20

Approximate Mounting Dimensions

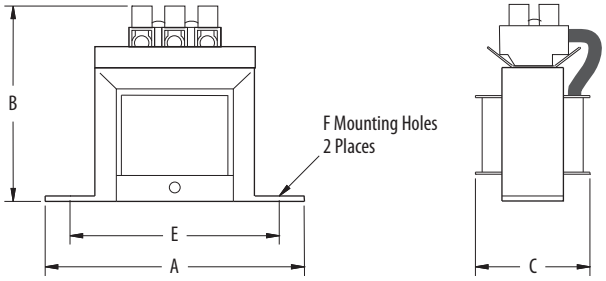

Figure 1

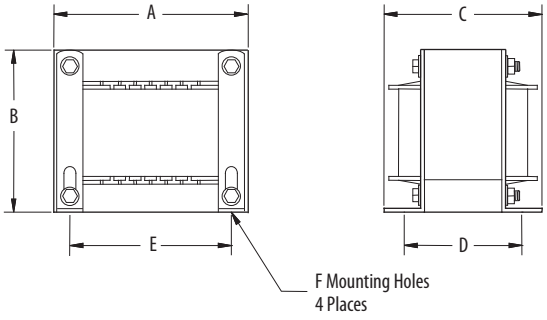

Figure 2

Catalog Number	Figure	Dimensions in mm (in.)					
		A	B	C	D	E	F
1321-DC9-2	1	95.3 (3.75)	82.6 (3.25)	50.8 (2)	(NA)	79.5 (3.13)	47.5 DIA. (0.187 DIA.)
1321-DC12-1	1	95.3 (3.75)	82.6 (3.25)	44.5 (1.75)	(NA)	79.5 (3.13)	47.5 DIA. (0.187 DIA.)
1321-DC12-2	2	96.8 (3.81)	114.3 (4.5)	71.6 (2.82)	50.8 (2)	79.5 (3.13)	5.2 x 8.3 (0.203 x 0.328)
1321-DC18-1	1	95.3 (3.75)	82.6 (3.25)	50.8 (2)	(NA)	79.5 (3.13)	47.5 DIA. (0.187 DIA.)
1321-DC18-4	2	117.6 (4.63)	133.4 (5.25)	101.6 (4)	63.5 (2.5)	95.3 (3.75)	5.2 x 8.3 (0.203 x 0.328)
1321-DC25-4	2	96.8 (3.81)	114.3 (4.5)	76.2 (3)	63.5 (2.5)	79.5 (3.13)	5.2 x 8.3 (0.203 x 0.328)
1321-DC32-1	2	96.8 (3.81)	114.3 (4.5)	84.3 (3.32)	63.5 (2.5)	79.5 (3.13)	5.2 x 8.3 (0.203 x 0.328)
1321-DC32-2	2	117.6 (4.63)	133.4 (5.25)	108.0 (4.25)	76.2 (3)	95.3 (3.75)	5.2 x 8.3 (0.203 x 0.328)
1321-DC32-3	2	117.6 (4.63)	133.4 (5.25)	133.4 (5.25)	101.6 (4)	95.3 (3.75)	5.2 x 8.3 (0.203 x 0.328)
1321-DC40-2	2	96.8 (3.81)	114.3 (4.5)	95.3 (3.75)	76.2 (3)	79.5 (3.13)	5.2 x 8.3 (0.203 x 0.328)
1321-DC40-4	2	165.1 (6.5)	166.4 (6.55)	152.4 (6)	85.9 (3.38)	134.9 (5.31)	7.1 x 13.2 (0.28 x 0.52)

Important User Information

Solid-state equipment has operational characteristics differing from those of electromechanical equipment. Safety Guidelines for the Application, Installation and Maintenance of Solid State Controls (publication SGI-1.1 available from your local Rockwell Automation sales office or online at http://www.rockwellautomation.com/literature/) describes some important differences between solid-state equipment and hard-wired electromechanical devices. Because of this difference, and also because of the wide variety of uses for solid-state equipment, all persons responsible for applying this equipment must satisfy themselves that each intended application of this equipment is acceptable.

In no event will Rockwell Automation, Inc. be responsible or liable for indirect or consequential damages resulting from the use or application of this equipment.

The examples and diagrams in this publication are included solely for illustrative purposes. Because of the many variables and requirements associated with any particular installation, Rockwell Automation, Inc. cannot assume responsibility or liability for actual use based on the examples and diagrams.

No patent liability is assumed by Rockwell Automation, Inc. with respect to use of information, circuits, equipment, or software described in this manual.

Reproduction of the contents of this manual, in whole or in part, without written permission of Rockwell Automation, Inc., is prohibited.

Documentation Feedback

Your comments will help us serve your documentation needs better. If you have any suggestions on how to improve this document, complete this form, publication RA-DU002, available at http://www.rockwellautomation.com/literature/.

Allen-Bradley, Rockwell Software, Rockwell Automation, and LISTEN. THINK. SOLVE are trademarks of Rockwell Automation, Inc.
Trademarks not belonging to Rockwell Automation are property of their respective companies.

Rockwell Otomasyon Ticaret A.Ş., Kar Plaza İş Merkezi E Blok Kat:6 34752 İçerenköy, İstanbul, Tel: +90 (216) 5698400

www.rockwellautomation.com

Power, Control and Information Solutions Headquarters
Americas: Rockwell Automation, 1201 South Second Street, Milwaukee, WI 53204-2496 USA, Tel: (1) 414.382.2000, Fax: (1) 414.382.4444
Europe/Middle East/Africa: Rockwell Automation NV, Pegasus Park, De Kleetlaan 12a, 1831 Diegem, Belgium, Tel: (32) 2 663 0600, Fax: (32) 2 663 0640
Asia Pacific: Rockwell Automation, Level 14, Core F, Cyberport 3, 100 Cyberport Road, Hong Kong, Tel: (852) 2887 4788, Fax: (852) 2508 1846

Publication 1321-TD001O-EN-P - September 2012
Supersedes Publication 1321-TD001N-EN-P - October 2008

Copyright © 2012 Rockwell Automation, Inc. All rights reserved. Printed in the U.S.A.

User Manual

Allen-Bradley

Dual-Port EtherNet/IP Communication Adapter

Catalog Number 20-COMM-ER

Important User Information

Solid state equipment has operational characteristics differing from those of electromechanical equipment. *Safety Guidelines for the Application, Installation and Maintenance of Solid State Controls* (Publication SGI-1.1 available from your local Rockwell Automation sales office or online at http://www.rockwellautomation.com/literature) describes some important differences between solid state equipment and hard-wired electromechanical devices. Because of this difference, and also because of the wide variety of uses for solid state equipment, all persons responsible for applying this equipment must satisfy themselves that each intended application of this equipment is acceptable.

In no event will Rockwell Automation, Inc. be responsible or liable for indirect or consequential damages resulting from the use or application of this equipment.

The examples and diagrams in this manual are included solely for illustrative purposes. Because of the many variables and requirements associated with any particular installation, Rockwell Automation, Inc. cannot assume responsibility or liability for actual use based on the examples and diagrams.

No patent liability is assumed by Rockwell Automation, Inc. with respect to use of information, circuits, equipment, or software described in this manual.

Reproduction of the contents of this manual, in whole or in part, without written permission of Rockwell Automation, Inc. is prohibited.

Throughout this manual, when necessary we use notes to make you aware of safety considerations.

WARNING: Identifies information about practices or circumstances that can cause an explosion in a hazardous environment, which may lead to personal injury or death, property damage, or economic loss.

Important: Identifies information that is critical for successful application and understanding of the product.

ATTENTION: Identifies information about practices or circumstances that can lead to personal injury or death, property damage, or economic loss. Attentions help you identify a hazard, avoid a hazard, and recognize the consequences.

Shock Hazard labels may be located on or inside the equipment (e.g., drive or motor) to alert people that dangerous voltage may be present.

Burn Hazard labels may be located on or inside the equipment (e.g., drive or motor) to alert people that surfaces may be at dangerous temperatures.

Allen-Bradley, Rockwell Software, and TechConnect are trademarks of Rockwell Automation, Inc.

Trademarks not belonging to Rockwell Automation are property of their respective companies.

Preface

About This Manual 7
Conventions Used in This Manual 7
Rockwell Automation Support 8
Additional Resources 8

Chapter 1

Getting Started

Components 11
Features 12
Compatible Products 13
Required Equipment 13
Equipment Shipped with the Adapter 13
User-Supplied Equipment 13
Safety Precautions 15
Quick Start 16

Chapter 2

Installing the Adapter

EMC Conformance 17
Preparing for an Installation 18
Setting the Web Pages Switch 19
Connecting the Adapter to the Drive or SMC 20
Connecting the Adapter to the Network 23
Applying Power 24
Start-Up Status Indications 24
Configuring and Verifying Key Drive Parameters 26
Commissioning the Adapter 26

Chapter 3

Configuring the Adapter

Configuration Tools 27
Using the PowerFlex 7-Class HIM 28
Using an LED HIM 28
Using an LCD HIM 28
Using BOOTP 29
Configure the Adapter Using a BOOTP Server 29
Setting the IP Address, Subnet Mask, and Gateway Address 32
Disable the BOOTP Feature 32
Set an IP Address Using Parameters 32
Set a Subnet Mask Using Parameters 33
Set a Gateway Address Using Parameters 33
Setting the Data Rate 34
Setting the I/O Configuration 35
Selecting Master-Slave or Peer-to-Peer 36
Setting a Master-Slave Hierarchy 36
Setting the Adapter to Transmit Peer-to-Peer Data 37
Setting the Adapter to Receive Peer-to-Peer Data 38
Setting the Reference Adjustment 41
Setting a Fault Action 41

Changing the Fault Action 42
Setting the Fault Configuration Parameters 42
Setting Web Access Control 42
Resetting the Adapter 43
Viewing the Adapter Status Using Parameters 44
Updating the Adapter Firmware 44

Chapter 4

Configuring the I/O

Using RSLinx Classic Software 47
ControlLogix Controller Example 48
Adding the Bridge to the I/O Configuration 49
Using RSLogix 5000 Device Add-on Profiles, Version 16.00 or Later 51
Using the RSLogix 5000 Classic Profile, Versions 13.00...15.00 . . . 60
Using the RSLogix 5000 Generic Profile, All Versions 62
Limitations Using a MicroLogix 1100/1400 Controller 68
MicroLogix 1100/1400 Controller Example 68
Configuring Parameters for Network I/O 69
Creating RSLogix 500 Project, Version 7.00 or Later 70

Chapter 5

Using the I/O

About I/O Messaging 79
Understanding the I/O Image 80
ControlLogix Controller Image 80
MicroLogix 1100/1400 Controller Image 82
Using Logic Command/Status 84
Using Reference/Feedback 84
PowerFlex 7-Class Drives 85
Using Datalinks 86
Rules for Using Datalinks 86
Using 16-Bit Datalinks to Read/Write 32-Bit Parameters 86
Example Ladder Logic Program Information 87
Functions of the Example Programs 87
Logic Command/Status Words 88
ControlLogix Controller Example 88
Creating Ladder Logic Using the RSLogix 5000 Device Add-on Profiles, Version 16.00 or Later 88
Creating Ladder Logic Using the RSLogix 5000 Classic Profile, Versions 1300...15.00 89
Creating Ladder Logic Using the RSLogix 5000 Generic Profile, All Versions 90
MicroLogix 1100/1400 Controller Example 96
Drive and Adapter Parameter Settings 96
Understanding Controller Data Table Addresses 97

Chapter 6

Using Explicit Messaging

About Explicit Messaging 106
Performing Explicit Messages 106
ControlLogix Controller Examples 108
Explicit Messaging Using RSLogix 5000 Software, Version 15.00 or Later 108
Explicit Messaging Using RSLogix 5000 Software, All Versions.. 121
MicroLogix 1100/1400 Controller Examples..... 124
MicroLogix 1100/1400 Controller Explicit Messaging Using the Read/Write Parameter Service..... 125
MicroLogix 1100/1400 Controller Explicit Messaging Using the Generic Get/Set Attribute Service 130

Chapter 7

Troubleshooting

Understanding the Status Indicators..... 143
Port Status Indicator 144
Network Status Indicator..... 145
Link (LS1, LS2) Status Indicator 145
NET A Status Indicator 145
Hardware Reset via Node Switches 146
Viewing Adapter Diagnostic Items..... 146
Viewing and Clearing Events..... 149

Chapter 8

Viewing the Adapter Web Pages

Accessing the Adapter Web Home Page..... 153
Viewing the Web Pages 153
Title Bar on Adapter Web Pages 154
Navigation Pane on Adapter Web Pages..... 155
Process Display Home Page 156
Browse DPI Device Folder 156
Diagnostics Web Page 157
Diagnostic Overview link 157
Network Setting Link..... 158
EtherNet/IP Statistics Link 159
Ring Statistics link..... 159
Crash Display Link 160
Heap Statistics Display link 160
Administrative Web Pages 160
Device Identity Link 161
Network Configuration Link 161
Email Configuration Link..... 162
Password Configuration 165

Chapter 9

Using the Adapter in a DPI External Comms Kit (20-XCOMM-DC-BASE)

Installing the Adapter 167

Appendix A

Specifications

Communications. 169
Electrical 169
Mechanical 170
Environmental. 170
Regulatory Compliance. 170

Appendix B

Adapter Parameters

About Parameter Numbers. 171
Parameter List 171

Appendix C

EtherNet/IP Objects

Supported Data Types 182
Identity Object. 182
Assembly Object 183
Register Object. 184
Parameter Object 185
Parameter Group Object. 188
Device Level Ring Object 189
Quality of Service Object 190
PCCC Object 190
DPI Device Object 196
DPI Parameter Object 198
DPI Fault Object. 204
DPI Alarm Object. 206
DPI Diagnostic Object 207
DPI Time Object 209
TCP/IP Interface Object 211
Ethernet Link Object. 213

Appendix D

Logic Command/Status Words

PowerFlex 70/70EC, PowerFlex 700/700VC, and PowerFlex 700H Drives 215
Logic Command Word 215
Logic Status Word. 216
PowerFlex 700S Drives 217
Logic Command Word (Phase II Control) 217
Logic Status Word (Phase II Control) 218
SMC Flex Controllers /SMC-50 Controllers 219
Logic Status Word. 219
Logic Command Word (Control) 220

Glossary. 221

Index 231

Preface

About This Manual

Topic	Page
Conventions Used in This Manual	7
Rockwell Automation Support	7
Additional Resources	8

This manual provides information about the adapter and using it with PowerFlex 7-Class (Architecture-Class) drives or Bulletin 150 SMC Soft Starters. The adapter can be used with other products that support a DPI™ adapter, such as the DPI External Comms Kit (20-XCOMM-DC-BASE). See the documentation for your product for specific information about how it works with the adapter.

Conventions Used in This Manual

The following conventions are used throughout this manual:

- Parameter names are shown in the format **Parameter xx - [*]**. The xx represents the parameter number. The * represents the parameter name—for example **Parameter 01 - [DPI Port]**.
- Menu commands are shown in bold type face and follow the format **Menu > Command**. For example, if you read 'Select **File > Open**', you should click the **File** menu and then click the **Open** command.
- The firmware revision number (FRN) is displayed as FRN *X.xxx*, where '*X*' is the major revision number and '*xxx*' is the minor revision number.
- The screen images in this manual resulted from using the following software:
  - RSLinx® Classic software, version 2.51
  - RSLogix 5000 software, version 16

  Different versions of the software may have screens that vary in appearance, and differences in procedures.

Rockwell Automation Support

Rockwell Automation offers support services worldwide, with over 75 sales and support offices, over 500 authorized distributors, and over 250 authorized systems integrators located through the United States alone. In addition, Rockwell Automation representatives are in every major country in the world.

Local Product Support

Contact your local Rockwell Automation representative for the following:

- Sales and order support
- Product technical training

- Warranty support
- Support service agreements

Technical Product Assistance

For technical assistance, please review the information in Chapter 7, Troubleshooting, first. If you still have problems, then access the Allen-Bradley Technical Support website at www.ab.com/support/abdrives or contact Rockwell Automation.

Additional Resources

These documents contain additional information concerning related products from Rockwell Automation.

Resource	Description
Industrial Automation wiring and grounding guidelines, publication 1770-4.1	Provides general guidelines for installing a Rockwell Automation industrial system.
Product certifications website, http://www.ab.com	Provides declarations of conformity, certificates, and other certification details.
Industrial Security Best Practices, publication SECUR-AT001	Provides further information and guidelines on product and system security.
PowerFlex 7-Class DPI (Drive Peripheral Interface) Network Communication Adapter Installation Instructions, publication 20COMM-IN004	Information on the installation of PowerFlex® 20-COMM-x Network Communication Adapters.
EtherNet/IP Media Planning and Installation Manual, ODVA publication 148 (1)	Information on the planning, installation, and techniques used to implement an EtherNet/IP network.
EtherNet/IP Network Infrastructure Guidelines, ODVA publication 35 (1)	
Ethernet Design Considerations Reference Manual, publication ENET-RM002	
Connected Components Workbench website http://www.ab.com/support/abdrives/webupdate/software.html, and online help	Information on the Connected Components Workbench™ software tool—and includes a link for **free** software download.
PowerFlex 20-HIM-A3/-A5/-C3S/-C5S HIM Quick Reference, publication 20HIM-QR001	Information on the use of the PowerFlex 20-HIM-A3, 20-HIM-A5, 20-HIM-C3S, and 20-HIM-C5S HIMs.
PowerFlex 20-HIM-A6/-C6S HIM (Human Interface Module) User Manual, publication 20HIM-UM001	Information on the installation and use of the PowerFlex 20-HIM-A6 and 20-HIM-C6S HIMs.
PowerFlex 70 User Manual, publication 20A-UM001 PowerFlex 70/700 Reference Manual, publication PFLEX-RM001 PowerFlex 70EC/700VC Reference Manual, publication PFLEX-RM004	Information on installing, programming, and technical data of PowerFlex 70 and PowerFlex 70EC drives.
PowerFlex 700 Series A User Manual, publication 20B-UM001 PowerFlex 700 Series B User Manual, publication 20B-UM002 PowerFlex 70/700 Reference Manual, publication PFLEX-RM001 PowerFlex 70EC/700VC Reference Manual, publication PFLEX-RM004	Information on installing, programming, and technical data of PowerFlex 700/700VC Series A and PowerFlex 700VC Series B drives.
PowerFlex 700H Installation Instructions, publication PFLEX-IN006 PowerFlex 700H Programming Manual, publication 20C-PM001	Information on installing, programming, and technical data of PowerFlex 700H drives.

Resource	Description
PowerFlex 700S w/Phase I Control Installation Manual (Frames 1…6), publication 20D-IN024 PowerFlex 700S w/Phase I Control Installation Manual (Frames 9 and 10), publication PFLEX-IN006 PowerFlex 700S w/Phase I Control User Manual (All Frame Sizes), publication 20D-UM001 PowerFlex 700S w/Phase I Control Reference Manual, publication PFLEX-RM002 PowerFlex 700S w/Phase II Control Installation Manual (Frames 1…6), publication 20D-IN024 PowerFlex 700S w/Phase II Control Installation Manual (Frames 9…14), publication PFLEX-IN006 PowerFlex 700S w/Phase II Control Programming Manual (All Frame Sizes), publication 20D-PM001 PowerFlex 700S w/Phase II Control Reference Manual, publication PFLEX-RM003	Information on installing, programming, and technical data of PowerFlex 700S drives.
PowerFlex 700L User Manual, publication 20L-UM001	Information on installing, programming, and technical data of PowerFlex 700L Liquid-Cooled AC drives.
SMC Flex Smart Motor Controller User Manual, publication 150-UM008	Information on installing, programming, and technical data of SMC Flex State Smart Motor Controller.
SMC-50 Solid-State Smart Motor Controller User Manual, publication 150-UM011	Information on installing, programming, and technical data of SMC-50 Solid-State Smart Motor Controller.
PowerFlex Digital DC Drive User Manual, publication 20P-UM001	Information on installing, programming, and technical data of PowerFlex Digital DC drives.
Getting Results with RSLinx Guide, publication LINX-GR001and online help (1)	Information on using RSLinx Classic software.
RSLogix Emulate 5/500 Getting Results Guide, publication EMULAT-GR002 and online help	Information on how to install and navigate the RSLogix Emulate software for ladder logic programming with Allen-Bradley® PLC-5® and SLC™ 500 processors.
RSLogix 500 Getting Results Guide, publication LG500-GR002 and online help (1)	Information on using RSLogix 500 software tool.
RSLogix 5000 PIDE Autotuner Getting Results Guide, publication PIDE-GR001 and online help (1)	Information on using RSLogix 5000 software tool.
EtherNet/IP Modules in Logix5000 Control Systems User Manual, publication ENET-UM001	Information on using the ControlLogix® 1756-ENBT or 1756-EN2T EtherNet/IP communication modules with your Logix5000 controller and communicating with various devices on the EtherNet/IP network.
Enhanced and Ethernet PLC-5 Programmable Controllers User Manual, publication 1785-UM012	Information to help design, operate and maintain an Enhanced and Ethernet PLC-5 programmable controller system.
MicroLogix 1100 Programmable Controllers User Manual, publication 1763-UM001 MicroLogix 1400 Programmable Controllers User Manual, publication 1766-UM001	Information to install, wire, and troubleshoot the MicroLogix™ 1100 and MicroLogix 1400 controllers respectively.
Web Updates http://www.ab.com/support/abdrives/webupdate/	Flash Update Files, Product Help Files, Control Bar Files, GSD Files, EDS File links, DriveTools SP / Drive AOP Database Files, and other downloads to keep your Allen-Bradley brand drive products up to date

(1) Use this link to the ODVA EtherNet/IP library: http://odva.org/Home/ODVATECHNOLOGIES/EtherNetIP/EtherNetIPLibrary/tabid/76/Default.aspx

Documentation can be obtained online at http://literature.rockwellautomation.com. To order paper copies of technical documentation, contact your local Rockwell Automation distributor or sales representative.

To find your local Rockwell Automation distributor or sales representative, visit http://www.rockwellautomation.com/locations.

For information such as firmware updates or answers to drive-related questions, go to the Drives Service & Support web site at http://www.ab.com/support/abdrives and click on the Downloads or Knowledgebase link.

Notes:

Getting Started

The adapter is intended for installation in a PowerFlex 7-Class drive or Bulletin 150 SMC soft starter and is used for network communication.

Topic	Page
Components	11
Features	12
Compatible Products	13
Required Equipment	13
Safety Precautions	15
Quick Start	16

Components

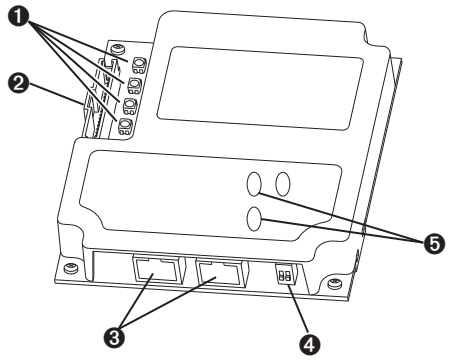

Item	Part	Description
1	Status Indicators	Four status indicators that indicate the status of the DPI, the adapter, and network connection. See Chapter 7, Troubleshooting.
2	DPI Connector	A 20-pin, single-row shrouded male header. An Internal Interface cable is connected to this connector and a connector on the drive.
3	Ethernet Connector	RJ-45 connector for the Ethernet network cable. The connector is CAT-5 compliant to ensure reliable data transfer on 100Base-TX Ethernet connections.
4	Web Pages Switch (SW4)	Enables or disables the adapter web pages. See Setting the Web Pages Switch on page 19.
5	Address/mode switches	Set IP address or DHCP/BootP mode.

Features

The features of the adapter include the following:

- Typical mounting in a PowerFlex 7-Class drive or SMC soft starter.
- Captive screws to secure and ground the adapter to the drive.
- Compatibility with various configuration tools to configure the adapter and connected host drive, including the following tools:
  - PowerFlex HIM (Human Interface Module) on the drive or SMC, if available
  - Connected Components Workbench software, version 1.02 or later
  - DriveExplorer software, version 2.01 or later
  - DriveExecutive software, version 3.01 or later
  - RSLogix5000 version16 and later with Drives Add-on Profile version 4.05 and later

  Additionally, you can use a BOOTP/DHCP server to configure the network address for the adapter.
- Status indicators that report the status of the drive communications, the adapter, and network. They are visible when the drive cover is open or closed.
- Parameter-configured I/O (Logic Command/Reference and up to four pairs of Datalinks) to accommodate application requirements.
- Explicit Messaging support.
- Master-Slave or Peer-to-Peer hierarchy that can be configured to transmit data to and from either a controller or another PowerFlex drive or SMC on the network.
- User-defined fault actions to determine how the adapter and connected PowerFlex drive respond to the following:
  - I/O messaging communication disruptions (Comm Flt Action)
  - Controllers in idle mode (Idle Flt Action)
- Web pages, viewed by using a web browser, that show information about the adapter, its connected host drive, and DPI devices connected to the drive.
- Configurable e-mail messaging to desired addresses when selected drive faults occur and/or are cleared, and/or when the adapter takes a communication or idle fault action.
- Access to any PowerFlex drive or SMC and its connected peripherals on the network to which the adapter is connected.
- Device Level Ring (DLR) or Star Topology support with Quality of Service (QoS) support.

Compatible Products

At the time of publication, the adapter is compatible with the following products:

- PowerFlex 70/70EC drives
- PowerFlex 700/700VC drives
- PowerFlex 700H drives
- PowerFlex 700S drives
- PowerFlex 7000/7000-2 drives
- PowerFlex 700L drives
- PowerFlex Digital DC drives
- DPI External Comms Kit
- SMC™-50
- SMC™ Flex

Note: The adapter is not compatible with PowerFlex 750 series drives.

Required Equipment

Some of the equipment that is required for use with the adapter is shipped with the adapter, but some you must supply yourself.

Equipment Shipped with the Adapter

When you unpack the adapter, verify that the package includes the following:

- ❑ One 20-COMM-ER EtherNet/IP adapter
- ❑ One 2.54 cm (1 in.) long and one 15.24 cm (6 in.) long Internal Interface cable (only one cable is needed to connect the adapter to the drive; for which cable to use, see Figure 3 - on page 2-21)
- ❑ One PowerFlex 7-Class DPI (Drive Peripheral Interface) Network Communication Adapter Installation Instructions, publication 20COMM-IN004
- ❑ One LED Identification Label for use with Bulletin 150 SMC Flex and Bulletin 700 PowerFlex drives

User-Supplied Equipment

To install and configure the adapter, you must supply the following:

- ❑ A small flathead screwdriver
- ❑ Ethernet cable (for details, see the EtherNet/IP Media Planning and Installation Manual, ODVA publication 148 available on the ODVA website at http://odva.org/Home/ODVATECHNOLOGIES/EtherNetIP/EtherNetIPLibrary/tabid/76/Default.aspx)
- ❑ Ethernet switch (for details, see the Ethernet Design Considerations Reference Manual, publication ENET-RM002)
- ❑ Configuration tool, such as the following:
  - PowerFlex 20-HIM-xx HIM

– Connected Components Workbench software, version 1.02 or later

Connected Components Workbench is the recommended stand-alone software tool for use with PowerFlex drives. You can obtain a **free copy** by:

- Internet download at http://www.ab.com/support/abdrives/webupdate/software.html
- Requesting a DVD at http://www.ab.com/onecontact/controllers/micro800/

Your local distributor may also have copies of the DVD available.

Connected Components Workbench software cannot be used to configure SCANport-based drives or Bulletin 160 drives.

– DriveExplorer software, version 2.01 or later

This software tool has been discontinued and is now available as **freeware** at http://www.ab.com/support/abdrives/webupdate/software.html. There are no plans to provide future updates to this tool and the download is being provided 'as-is' for users that lost their DriveExplorer CD, or need to configure legacy products not supported by Connected Components Workbench software.

– DriveExecutive software, version 3.01 or later

A Lite version of DriveExecutive software ships with RSLogix 5000, RSNetWorx MD, FactoryTalk AssetCentre, and ItelliCENTER software. All other versions are purchasable items:

- 9303-4DTE01ENE Drive Executive software
- 9303-4DTS01ENE DriveTools SP Suite (includes DriveExecutive and DriveObserver software)
- 9303-4DTE2S01ENE DriveExecutive software upgrade to DriveTools SP Suite (adds DriveObserver software)

DriveExecutive software updates (patches, and so forth) can be obtained at http://www.ab.com/support/abdrives/webupdate/software.html. It is highly recommended that you periodically check for and install the latest update.

– BOOTP server, version 2.1 or higher, for network setup only

❑ Controller configuration software, such as RSLogix 5/500/5000

❑ A computer connection to the EtherNet/IP network

Safety Precautions

Please read the following safety precautions carefully.

ATTENTION: Risk of injury or death exists. The PowerFlex drive may contain high voltages that can cause injury or death. Remove all power from the PowerFlex drive or SMC, and then verify power has been discharged before installing or removing an adapter.

ATTENTION: Risk of injury or equipment damage exists. Only personnel familiar with drive and power products and the associated machinery should plan or implement the installation, start up, configuration, and subsequent maintenance of the product using an adapter. Failure to comply may result in injury and/or equipment damage.

ATTENTION: Risk of equipment damage exists. The adapter contains electrostatic discharge (ESD) sensitive parts that can be damaged if you do not follow ESD control procedures. Static control precautions are required when handling the adapter. If you are unfamiliar with static control procedures, see Guarding Against Electrostatic Damage, publication 8000-4.5.2.

ATTENTION: Risk of injury or equipment damage exists. If the adapter is transmitting control I/O to the drive, the drive may fault when you reset the adapter. Determine how your drive will respond before resetting an adapter.

ATTENTION: Risk of injury or equipment damage exists. **Parameters 21 - [Comm Flt Action]**, **24 - [Idle Flt Action]**, and **43 - [Peer Flt Action]** let you determine the action of the adapter and connected drive if communication is disrupted or the controller is idle. By default, these parameters fault the drive. You may configure these parameters so that the drive continues to run, however, precautions should be taken to ensure that the settings of these parameters do not create a risk of injury or equipment damage. When commissioning the drive, verify that your system responds correctly to various situations (for example, a disconnected cable or a controller in idle state).

ATTENTION: Risk of injury or equipment damage exists. When a system is configured for the first time, there may be unintended or incorrect machine motion. Disconnect the motor from the machine or process during initial system testing.

ATTENTION: Risk of injury or equipment damage exists. The examples in this publication are intended solely for purposes of example. There are many variables and requirements with any application. Rockwell Automation, Inc. does not assume responsibility or liability (to include intellectual property liability) for actual use of the examples shown in this publication.

Quick Start

This section is provided to help experienced users quickly start using the adapter. If you are unsure how to complete a step, refer to the referenced chapter.

Step	Action	See
1	Review the safety precautions for the drive or SMC	Drive or SMC User Manual
2	Review the safety precautions for the adapter	Throughout this manual
3	Verify that the power control device is properly installed.	Drive or SMC User Manual
4	Install the adapter. a. Verify that the power control device is not powered. b. Connect the adapter to the device with the Internal Interface cable. c. Use the captive screws to secure and ground the adapter to the device. d. Connect the adapter to the network with an Ethernet cable. **NOTE:** When installing the adapter in the DPI External Comms Kit—see the 20-XCOMM-DC-BASE Installation Instructions, publication 20COMM-IN001, supplied with the kit.	PowerFlex 7-Class DPI Network Communication Adapter Installation Instructions, publication 20COMM-IN004, and Chapter 2, Installing the Adapter
5	Apply power to the adapter. a. Verify that the adapter is installed correctly. b. The adapter receives power from the drive or SMC. Apply power to the device. The status indicators should be green. If they flash red, there is a problem. See Chapter 7, Troubleshooting. c. Configure and verify key drive or SMC parameters.	Chapter 2, Installing the Adapter
6	Configure the adapter for your application. Set adapter parameters for the following functions as required by your application: • IP address, subnet mask, and gateway address • Data rate • I/O configuration • Master-Slave or Peer-to-Peer hierarchy • Fault actions	Chapter 3, Configuring the Adapter
7	Configure the controller to communicate with the adapter. Use a controller configuration tool, such as RSLogix software, to configure the master on the network to recognize the adapter and drive or SMC.	Chapter 4, Configuring the I/O
8	Create a ladder logic program. Use a controller configuration tool, such as RSLogix software, to create a ladder logic program that enables you to do the following: • Control the connected device, via the adapter, by using I/O. • Monitor or configure the device or SMC by using explicit messages.	Chapter 5, Using the I/O Chapter 6, Using Explicit Messaging

Installing the Adapter

This chapter provides instructions for installing the adapter in a PowerFlex 7-Class drive.

Topic	Page
Preparing for an Installation	18
Setting the Web Pages Switch	19
Connecting the Adapter to the Drive or SMC	20
Connecting the Adapter to the Network	23
Applying Power	24
Commissioning the Adapter	26

EMC Conformance

For all PowerFlex 70 and 700 drive installations that require CE conformance per EN61800-3, a ferrite core must be installed on each EtherNet/IP cable connected to the drive.

These ferrites are not required for installation on SMC products.

A ferrite core such as FAIR-RITE part number 2643803802 needs to be installed according to the following diagram.

Note: the cable is wrapped 4 times around each core.

Figure 1 - Ferrite Core Installation

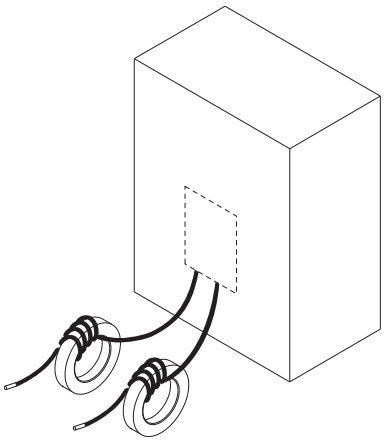

Preparing for an Installation

Before installing the adapter, do the following:

- Make sure the Ethernet switch is the correct type. A 'managed' switch that supports IGMP snooping is usually recommended. An 'unmanaged' switch can be used instead if RSLogix 5000 software, version 18.00 or later, is used and all devices on the network are configured for 'unicast' I/O. For more details, see the following documents:
  - EtherNet/IP Media Planning and Installation Manual, ODVA publication 148
  - EtherNet/IP Network Infrastructure Guidelines, ODVA publication 35
  - Ethernet Design Considerations Reference Manual, publication ENET-RM002

- Understand IGMP Snooping/Ethernet Switches

  The 20-COMM-ER adapter is a multicast device. In most situations, an IGMP snooping (managed) switch is required. If more than one or two 20-COMM-ER adapters are connected to the switch, a managed switch is required—otherwise the drive may fault on a DPI Port x network loss. The 20-COMM-ER, RSLogix 5000 software, version 18.00 or later, and a ControlLogix or CompactLogix controller will support unicast. Unicast setup is required when adding the drive to the I/O. When all adapters are set up as unicast devices, then an IGMP snooping (managed) switch is not needed.

  Much of EtherNet/IP implicit (I/O) messaging uses IP multicast to distribute I/O control data, which is consistent with the CIP producer/consumer model. Historically, most switches have treated multicast packets the same as broadcast packets. That is, all multicast packets are re-transmitted to all ports.

  IGMP snooping constrains the flooding of multicast traffic by dynamically configuring switch ports so that multicast traffic is forwarded only to ports associated with a particular IP multicast group.

  Switches that support IGMP snooping (managed switches) 'learn' which ports have devices that are part of a particular multicast group and only forward the multicast packets to the ports that are part of the multicast group.

  Be careful as to what level of support a switch has of IGMP snooping. Some layer 2 switches that support IGMP snooping require a router (which could be a layer 3 switch) to send out IGMP polls to learn what devices are part of the multicast group. Some layer 2 switches can use IGMP snooping without a router sending polls. If your control system is a standalone network or is required to continue performing if the router is out of service, make sure the switch you are using supports IGMP snooping without a router being present.

- See Appendix A for the number of CIP connections supported by the 20-COMM-ER adapter.
- Verify that you have all required equipment. See Required Equipment on page 13.

Setting the Web Pages Switch

To use the adapter web pages, the Web Pages Switch must be set to its 'Enable Web' position. For information to enable or disable web pages for an adapter, see Setting Web Access Control on page 42.

ATTENTION: Risk of equipment damage exists. The adapter contains electrostatic discharge (ESD) sensitive parts that can be damaged if you do not follow ESD control procedures. Static control precautions are required when handling the adapter. If you are unfamiliar with static control procedures, see Guarding Against Electrostatic Damage, publication 8000-4.5.2.

Important: A new switch setting is recognized only when power is applied to the adapter, or the adapter is reset. If you change a switch setting, cycle power or reset the adapter to apply the change.

Set the Web Pages Switch (SW4 in Figure 2) to enable or disable the adapter web pages. By default, the adapter web pages are disabled. For complete details on adapter web pages, see Viewing the Adapter Web Pages on page 153.

Figure 2 - Setting Web Pages Switch (only Series B Adapter)

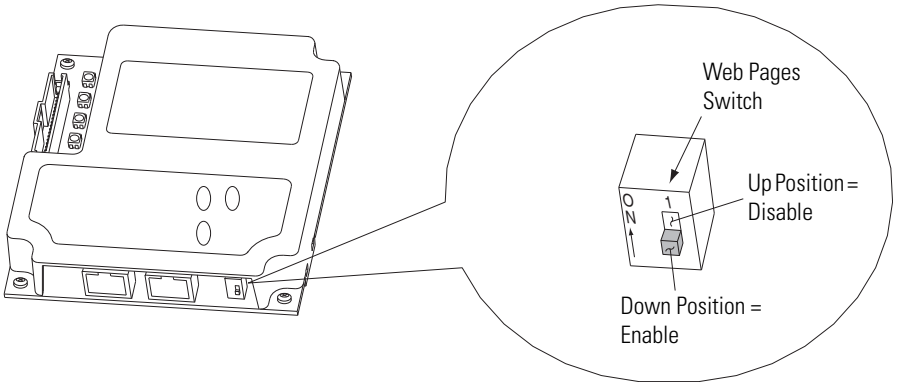

Setting	Description
Down (OFF) position	Web server enabled
Up (ON) position	Web server disabled (as shipped)

Connecting the Adapter to the Drive or SMC

ATTENTION: Risk of injury or death exists. The PowerFlex drive or SMC may contain high voltages that can cause injury or death. Remove **ALL** power from the drive or SMC, and then verify power has been discharged before installing or removing the adapter.

1. Remove **ALL** power from the drive or SMC.
2. Use static control precautions.
3. Remove the drive or SMC cover or open the drive door.
4. Connect the Internal Interface cable to the DPI port on the drive and then to the DPI connector on the adapter (see Figure 3).
5. Secure and ground the adapter to the drive or SMC (see Figure 4) by doing the following:
   - On a PowerFlex 70 drive, fold the Internal Interface cable behind the adapter and mount the adapter on the drive using the four captive screws.
   - On an SMC Flex, put the wire lug between the mounting screw and 20-COMM-ER board

Important: Tighten all screws to properly ground the adapter. Recommended torque is 0.9 N•m (8.0 lb•in).

Figure 3 - DPI Ports and Internal Interface Cables

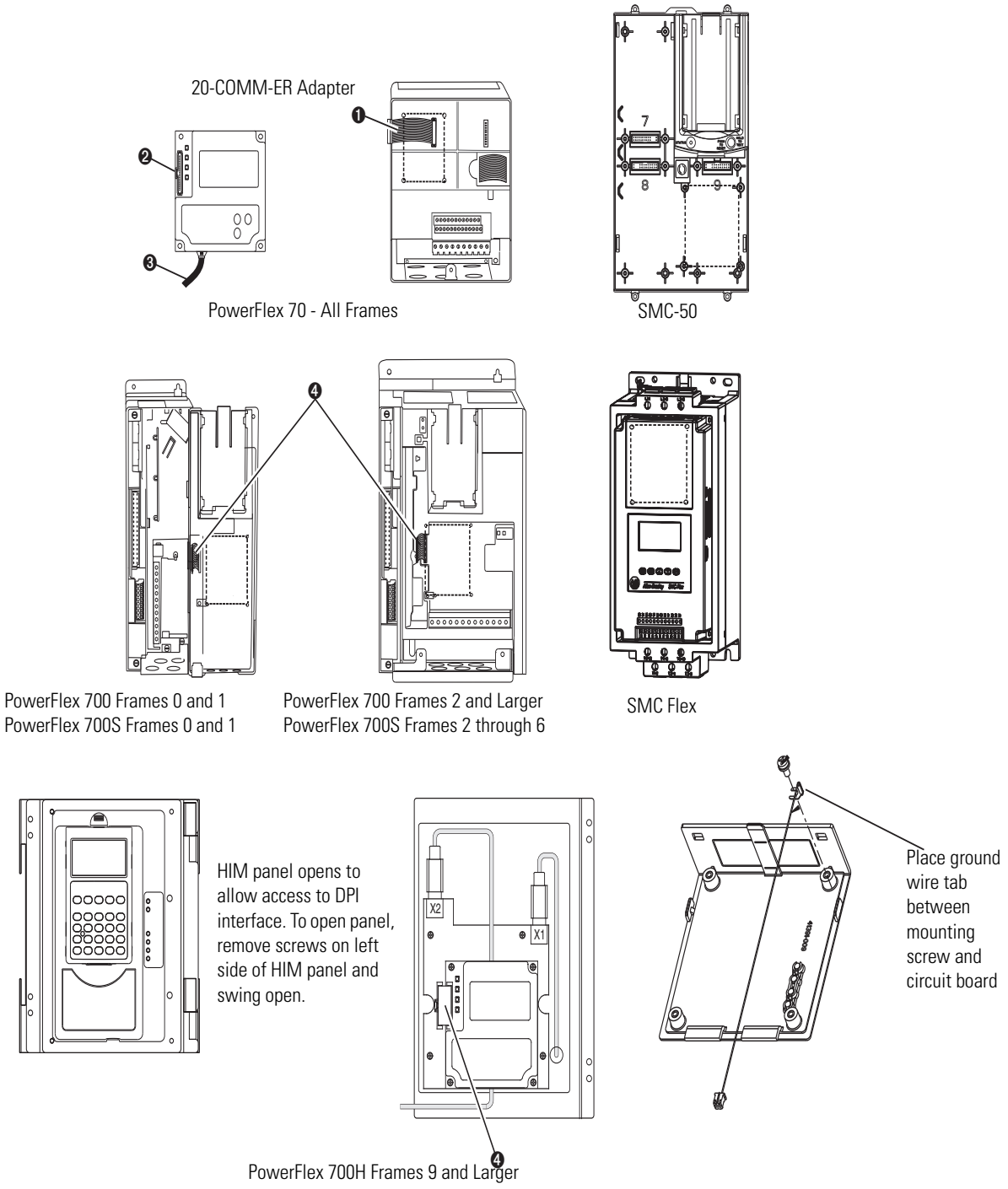

Item	Description
❶	15.24 cm (6 in.) Internal Interface cable
❷	DPI Connector
❸	Ethernet cable
❹	2.54 cm (1 in.) Internal Interface cable

Figure 4 - Mounting and Grounding the Adapter

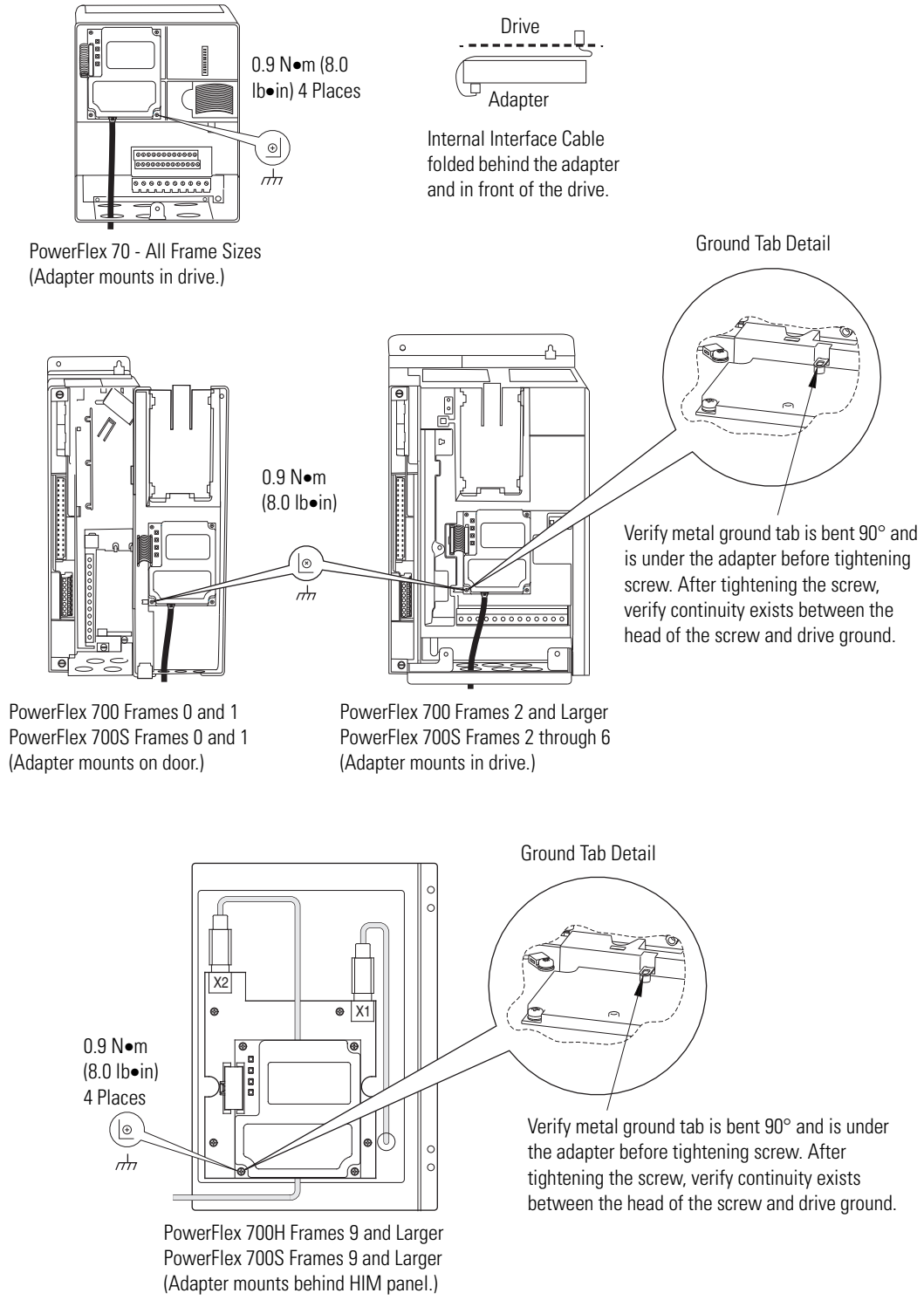

Connecting the Adapter to the Network

ATTENTION: Risk of injury or death exists. The PowerFlex drive may contain high voltages that can cause injury or death. Remove power from the drive, and then verify power has been discharged before installing or removing the adapter.

1. Remove power from the drive.
2. Use static control precautions.
3. Connect one end of an Ethernet cable to the network. See Figure 5 for an example of wiring to an EtherNet/IP network.

Figure 5 - Connecting the Ethernet Cable in a Linear Topology Network

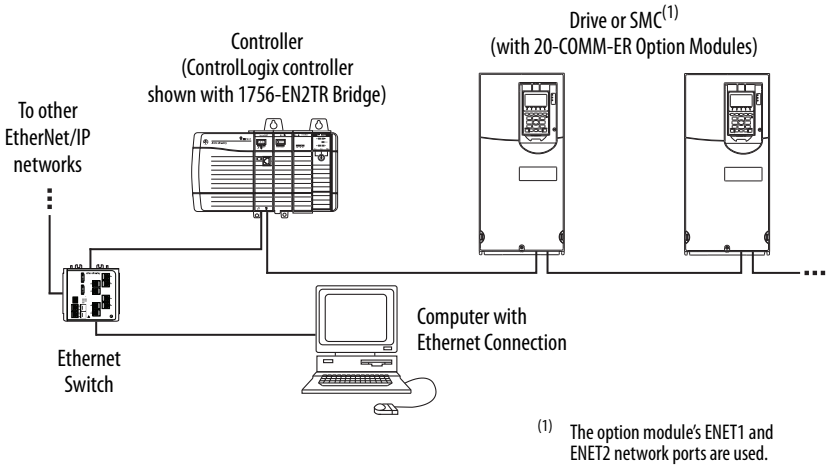

Figure 6 - Connecting the Ethernet Cable in a DLR Topology Network

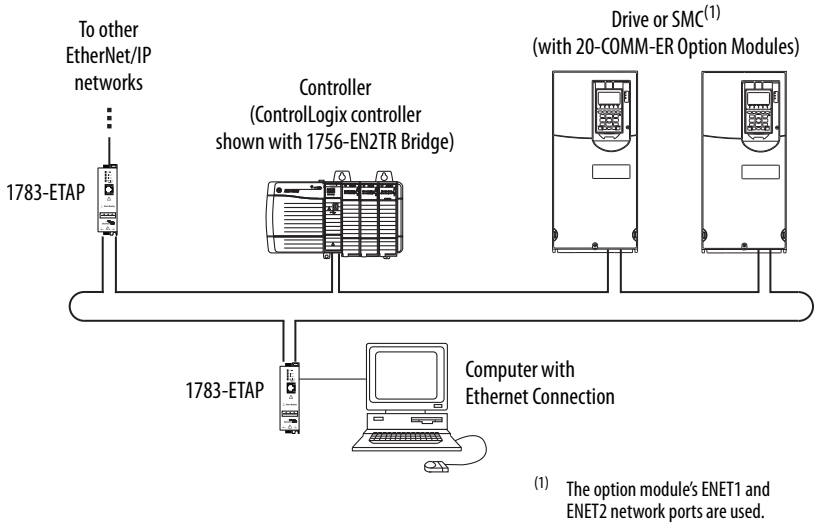

4. For Linear or DLR Network Topology, route the other end of the Ethernet cable from the network through the bottom of the first drive, and insert its cable plug into the option module ENET1 network port.

To connect to the second drive, attach another Ethernet cable between the first drive's option module ENET2 network port and the second drive's option module ENET1 network port.

To connect additional drives, repeat these daisy-chain connections in the same way.

5. Route the other end of the Ethernet cable through the bottom of the PowerFlex drive (Figure 4) and insert its Ethernet cable plug into the mating adapter receptacle.

Applying Power

ATTENTION: Risk of equipment damage, injury, or death exists. Unpredictable operation may occur if you fail to verify that parameter settings are compatible with your application. Verify that settings are compatible with your application before applying power to the drive.

Install the device cover or close the drive door, and apply power to the device. The adapter receives its power from the connected device. When you apply power to the adapter for the first time, its topmost PORT status indicator should be steady green or flashing green after an initialization. If it is red, there is a problem. See Chapter 7, Troubleshooting.

Start-Up Status Indications

After power has been applied, the status indicators for the device and communications adapter can be viewed on the front of the device (Figure 7). Possible start-up status indications are shown in Table 1.

Figure 7 - Drive and Adapter Status Indicators (location will vary by device)

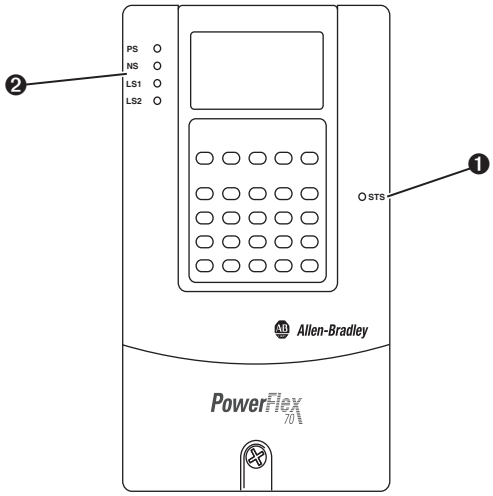

Table 1 - Drive and Adapter Start-Up Status Indications

Item	Name	Color	State	Description
			Drive STS Indicator	
❶	STS (Status) refer to drive or SMC manual for status indication information)	Green	Flashing	Device ready but not running, and no faults are present.
			Steady	Device running, no faults are present.
		Yellow	Flashing, device stopped	An inhibit condition exists – the drive cannot be started. Check device Parameter 214 - [Start Inhibits].
			Flashing, device running	An intermittent type 1 alarm condition is occurring. Check device Parameter 211 - [Drive Alarm 1].
			Steady, device running	A continuous type 1 alarm condition exists. Check device Parameter 211 - [Drive Alarm 1].
		Red	Flashing	A fault has occurred.
			Steady	A non-resettable fault has occurred.
			Adapter Status Indicators	
❷	PS	Off	Steady	No power
		Orange	Flashing	Requesting DPI I/O Connections
			Steady	Peripheral is Connected to an incompatible product or no DPI ping events are detected.
		Green	Flashing	Normal Operation (DPI connected) - No I/O, or PLC in Program
			Steady	Normal Operation (DPI connected) - I/O Operational
		Red	Flashing	DPI Problem, Bad CRC of Adapter Parameters or Flash Program
			Steady	DPI Failure or Failed power-on diagnostic test (hardware failure)
		Green/ Red	Flashing	Flash update in progress
	NS	Off	Steady	No power OR no IP Address
		Green	Flashing	An IP address is configured, but no CIP connections are established, and an Exclusive Owner connection has not timed out
			Steady	At least one CIP connection (any transport class) is established, and an Exclusive Owner connection has not timed out
		Red	Flashing	Connection has timed out see the “The EtherNet Adaptation of CIP” Specification sections 9-4.4 for detailed behavior description
			Steady	Duplicate IP Address detected
		Orange	Steady	Adapter Failure (used in conjunction with PS orange)
		Green/ Red	Flashing	Self-test on power up
	LS1	Off	Steady	No Network Activity
		Green	Flashing	Network activity at 100 Mbps
		Yellow	Flashing	Network activity at 10 Mbps
	LS2	Off	Steady	No Network Activity
		Green	Flashing	Network activity at 100 Mbps
		Yellow	Flashing	Network activity at 10 Mbps

After verifying correct operation, close or install the drive cover. For more details on status indicator operation, see page 144 and page 145.

Configuring and Verifying Key Drive Parameters

The PowerFlex 7-Class drive can be separately configured for the control and Reference functions in various combinations. For example, you could set the drive to have its control come from a peripheral or terminal block with the Reference coming from the network. Or you could set the drive to have both its control and Reference come from the network.

The following steps in this section assume that the drive will receive the Logic Command and Reference from the network.

1. Use drive Parameter 090 - [Speed Ref A Sel] to set the drive speed Reference to '22' (DPI Port 5).
2. If hard-wired discrete digital inputs are not used to control the drive, verify that unused digital input drive Parameters 361 - [Dig In1 Sel] and 362 - [Dig In2 Sel] are set to '0' (Not Used).
3. Verify that drive Parameter 213 - [Speed Ref Source] is reporting that the source of the Reference to the drive is '22' (DPI Port 5).

   This ensures that any Reference commanded from the network can be monitored by using drive Parameter 002 - [Commanded Speed]. If a problem occurs, this verification step provides the diagnostic capability to determine whether the drive/adapter or the network is the cause.

Commissioning the Adapter

To commission the adapter, you must set a unique IP address on the network. After installing the adapter and applying power, you can set the IP address by using a BOOTP/DHCP server or adapter parameters. See Setting the IP Address, Subnet Mask, and Gateway Address on page 32 for details.

By default, the adapter is configured so that you must set the IP address using a BOOTP/DHCP server or by setting the adapter to a valid address, 1-254, via the rotary switches on the adapter. An invalid address 0 or >254 will cause the module to defer to the addressing mode selected by parameter 3 [BOOTP/DHCP]. If disabled, the adapter will use the address information stored in the adapters database. If that address is invalid, the adapter will try to contact a DHCP server on the network. To use adapter parameters, you must disable the BOOTP feature. For details, see Disable the BOOTP Feature on page 32.

Important: New settings for some adapter parameters (for example, **Parameters 04 - [IP Addr Cfg 1]** through **07 - [IP Addr Cfg 4]**) are recognized only when power is applied to the adapter or it is reset. After you change parameter settings, cycle power or reset the adapter.

Configuring the Adapter

This chapter provides instructions and information for setting the parameters in the adapter.

Topic	Page
Configuration Tools	27
Using the PowerFlex 7-Class HIM	28
Using BOOTP	29
Setting the IP Address, Subnet Mask, and Gateway Address	32
Setting the Data Rate	34
Setting the I/O Configuration	35
Selecting Master-Slave or Peer-to-Peer	36
Setting the Reference Adjustment	41
Setting a Fault Action	41
Setting Web Access Control	42
Resetting the Adapter	43
Viewing the Adapter Status Using Parameters	44
Updating the Adapter Firmware	44

For a list of parameters, see Appendix B, Adapter Parameters. For definitions of terms in this chapter, see the .

Configuration Tools

The adapter stores parameters and other information in its own nonvolatile storage (NVS) memory. You must, therefore, access the adapter to view and edit its parameters. The following tools can be used to access the adapter parameters.

Tool	See
PowerFlex 7-Class HIM	page 28
BOOTP/DHCP server	page 29
Connected Components Workbench software, version 1.02 or later	http://www.ab.com/support/abdrives/webupdate/software.html, or online help (installed with the software)

Using the PowerFlex 7-Class HIM

If your drive has either an LED or LCD HIM (Human Interface Module), it can be used to access parameters in the adapter as shown below. It is recommended that you read through the steps for your HIM before performing the sequence. For additional information, see the drive documentation or the PowerFlex 7-Class HIM Quick Reference, publication 20HIM-QR001.

Using an LED HIM

Step	Example Screens
1. Press the ALT key and then the Device Sel (Sel) key to display the Device Screen. 2. Press the ▲ or ▼ key to scroll to the adapter. Letters represent files in the drive, and numbers represent ports. The adapter is usually connected to port 5. The adapter is usually connected to port 5. 3. Press the ↵ (Enter) key to enter your selection. A parameter database is constructed, and then the first parameter is displayed. 4. Edit the parameters using the same techniques that you use to edit drive parameters.	

Using an LCD HIM

Step	Example Screens
1. In the main menu, press the ▲ or ▼ key to scroll to **Device Select**. 2. Press the ↵ (Enter) key to enter your selection. 3. Press the ▲ or ▼ key to scroll to the adapter (20-COMM-ER). 4. Press the ↵ (Enter) key to select the adapter. A parameter database is constructed, and then the main menu for the adapter is displayed. 5. Edit the parameters using the same techniques that you use to edit drive parameters.	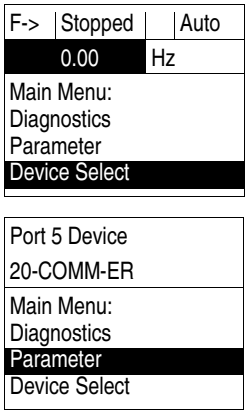

NOTE: All configuration procedures throughout this chapter use the PowerFlex 7-Class LCD HIM to access parameters in the adapter and show example LCD HIM screens.

TIP When using a PowerFlex 20-HIM-A6 or 20-HIM-C6S HIM, see its User Manual, publication 20-HIM-UM001.

SMC Flex controllers require an external HIM (A3 or A6) to program the adapter. The internal Human Interface of the SMC Flex does not allow programming of the Adapter.

Using BOOTP

The IP address, subnet mask and gateway address can be configured multiple ways depending on the setting of the three rotary switches on the adapter. The switches are read on power up or reset.

1. If the switches are set to an address from 1...254, that value will be used as the LSB of the IP address 192.168.1.xxx
2. If the switches are set to an invalid number (000 or a value greater than 254), the unit will check if DHCP is enabled. If DHCP is enabled, the unit requests an address from a DHCP server.
   If DHCP is not enabled and switches are set to an illegal value, the adapter will use the IP address (along with other TCP configurable parameters) stored in nonvolatile memory. If the unit finds that the stored IP configuration is not usable (set to 0), then the unit will revert to the out-of-box behavior of DHCP being enabled.
3. Any other switch setting will cause the adapter to use the IP address data set in the adapter's database parameters.

By default, the adapter is configured so that you can set its IP address, subnet mask, and gateway address by using a BOOTP or a DHCP server. There is a variety of BOOTP servers available. The following instructions use Rockwell Automation's BOOTP Server, version 2.3 or later, a **free** standalone program that incorporates the functionality of standard BOOTP utilities with a graphical interface. It is available from http://www.software.rockwell.com/support/download/detail.cfm?ID=3390. See the Readme file and online Help for directions and more information.

TIP If desired, you can disable BOOTP and configure the IP address, subnet mask, and gateway address with adapter parameters. For details, see Setting the IP Address, Subnet Mask, and Gateway Address on page 32.

Configure the Adapter Using a BOOTP Server

1. On the adapter label, note the adapter's hardware Ethernet Address (MAC), which will be used in step 6.
2. On a computer connected to the EtherNet/IP network, start the BOOTP software.

The BOOTP Server window appears.

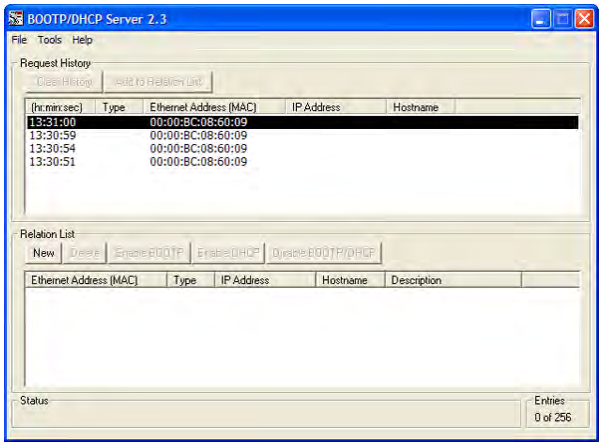

3. Select **Tools > Network Settings** to display the Network Settings window.

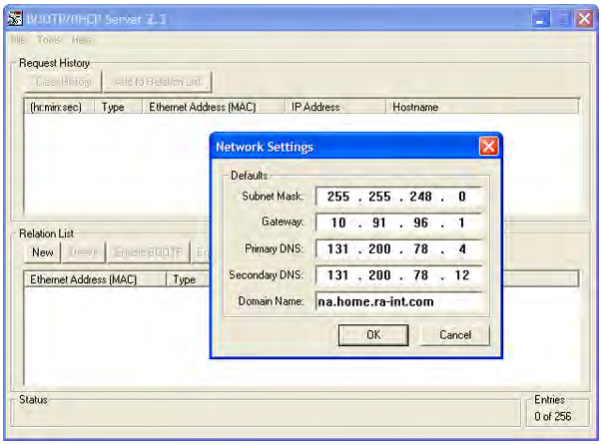

To properly configure devices on your EtherNet/IP network, you must configure settings in the BOOTP software to match the network.

4. Edit the following:

Box	Type
Subnet Mask (1)	The subnet mask for the adapter's network.
Gateway (1)	The IP address of the gateway device on the adapter's network.
Primary DNS	The address of the primary DNS server to be used on the local end of the link for negotiating with remote devices.
Secondary DNS	Optional — the address of the secondary DNS server to be used on the local end of the link for negotiating with remote devices when the primary DNS server is unavailable.
Domain Name	The text name corresponding to the numeric IP address that was assigned to the server that controls the network.

(1) For definitions of these terms, refer to the .

5. Click **OK** to apply the settings.

Devices on the network issuing BOOTP requests appear in the BOOTP Request History list.

6. In the BOOTP Request History list, either double-click the adapter's Ethernet Address (MAC) noted in Step 1, or click **New** in the Relation List.

   The New Entry dialog box appears.

   In the first case, the Ethernet Address (MAC) is automatically entered. In the latter case, you must manually enter it.

7. Edit the following:

Box	Type
IP Address	A unique IP address for the adapter
Host Name	Optional
Description	Optional

8. Click **OK** to apply the settings.

   The adapter appears in the Relation List with the new settings.

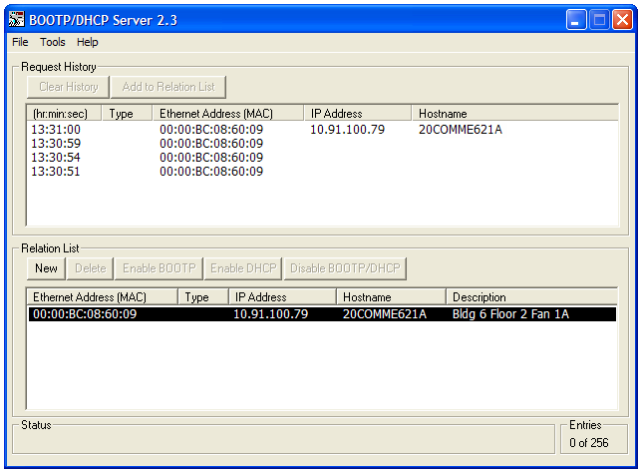

9. To assign this configuration to the adapter permanently, select the device in the Relation List and click **Disable BOOTP/DHCP**.

   When power is cycled on the adapter, it will use the configuration you assigned it and not issue new BOOTP requests.

TIP To enable BOOTP for an adapter that has had BOOTP disabled, first select the adapter in the Relation List, then click **Enable BOOTP**, and lastly reset the adapter or power cycle the drive.

10. Select **File > Save** to save the Relation List.

Setting the IP Address, Subnet Mask, and Gateway Address

By default, the adapter is configured so that you set its IP address, subnet mask, and gateway address using a BOOTP/DHCP server. To use adapter parameters instead, you must disable BOOTP/DHCP and then set the associated adapter parameters.

The IP address can be set using the rotary switches on the adapter to an address from 1...254 that will be used as the lower byte of the IP address 192.168.1.xxx. The Subnet mask will be set to 255.255.255.0.

If the rotary switches are set to any invalid address (0 or >254), the address programmed in the adapter's internal data base will be used.

Disable the BOOTP Feature

1. Set the value of **Parameter 03 - [BOOTP/DHCP]** to '0' (Disabled).

Port 5 Device
20-COMM-ER
Parameter #: 03 BOOTP 0 Disabled

Value	Setting
0	Disabled
1	Enabled (Default)

Note: The internal port used by the adapter is different for different products. The examples here show port 5, used by the SMC Flex and drive products. The SMC-50 uses port 4.

2. Reset the adapter; see Resetting the Adapter on page 43.

After disabling the BOOTP/DHCP feature, you can then configure the IP address, subnet mask, and gateway address using adapter parameters.

Set an IP Address Using Parameters

1. Verify that **Parameter 03 - [BOOTP/DHCP]** is set to '0' (Disabled).

2. Set the value of **Parameters 04 - [IP Addr Cfg 1]** through **07 - [IP Addr Cfg 4]** to a unique IP address.

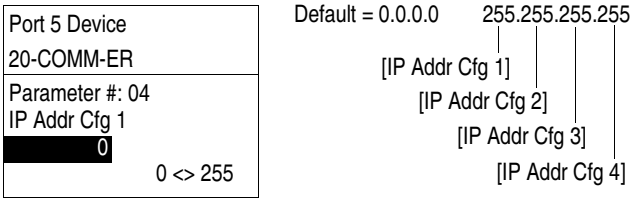

3. Reset the adapter; see Resetting the Adapter on page 43.

The Network status indicator will be steady green or flashing green if the IP address is correctly configured, and is connected to an operating ethernet network.

Set a Subnet Mask Using Parameters

1. Verify that **Parameter 03 - [BOOTP/DHCP]** is set to '0' (Disabled).
2. Set the value of **Parameters 08 - [Subnet Cfg 1]** through **11 - [Subnet Cfg 4]** to the desired value for the subnet mask.

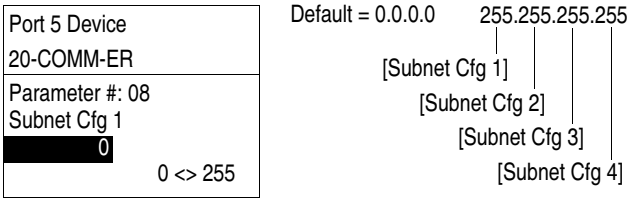

3. Reset the adapter; see Resetting the Adapter on page 43.

Set a Gateway Address Using Parameters

1. Verify that **Parameter 03 - [BOOTP]** is set to '0' (Disabled).
2. Set the value of **Parameters 12 - [Gateway Cfg 1]** through **15 - [Gateway Cfg 4]** to the IP address of the gateway device.

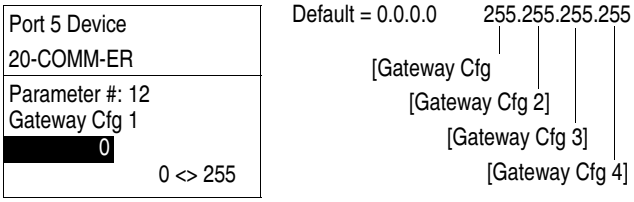

3. Reset the adapter; see Resetting the Adapter on page 43.

Setting the Data Rate

By default, the adapter is set to autodetect, so it automatically detects the data rate and duplex setting used on the network. If you need to set a specific data rate and duplex setting, the value of **Parameter 16 - [EN P1 Rate Config]** determines the Ethernet data rate and duplex setting that the adapter will use to communicate. For definitions of data rate and duplex, see Glossary on page 221.

1. Set the value of **Parameter 16 - [EN P1 Rate Config]** to the data rate at which your network is operating.

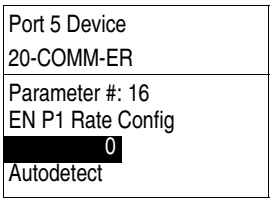

Value	Data Rate
0	Autodetect (default)
1	10 Mbps Full
2	10 Mbps Half
3	100 Mbps Full
4	100 Mbps Half

TIP Auto detection of baud rate and duplex works properly only if the device (usually a switch) on the other end of the cable is also set to automatically detect the baud rate/duplex. If one device has the baud rate/duplex hard-coded, the other device must be hard-coded to the same settings.

2. Reset the adapter; see Resetting the Adapter on page 43.

By default, the adapter is set to autodetect, so it automatically detects the data rate and duplex setting used on the network. If you need to set a specific data rate and duplex setting, the value of **Parameter 18 - [EN P2 Rate Config]** determines the Ethernet data rate and duplex setting that the adapter will use to communicate. For definitions of data rate and duplex, see Glossary on page 221.

1. Set the value of **Parameter 18 - [ENEN P2 Rate Config]** to the data rate at which your network is operating.

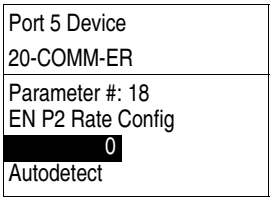

Value	Data Rate
0	Autodetect (default)
1	10 Mbps Full
2	10 Mbps Half
3	100 Mbps Full
4	100 Mbps Half

TIP Auto detection of baud rate and duplex works properly only if the device (usually a switch) on the other end of the cable is also set to automatically detect the baud rate/duplex. If one device has the baud rate/duplex hard-coded, the other device must be hard-coded to the same settings.

2. Reset the adapter; see Resetting the Adapter on page 43.

Setting the I/O Configuration

The I/O configuration determines the data that is sent to and from the drive. Logic Command/Status, Reference/Feedback, and Datalinks may be enabled or disabled. (Datalinks allow you to read/write directly to parameters in the drive using implicit I/O.) A '1' enables the I/O and a '0' disables the I/O.

1. Set the bits in **Parameter 25 - [DPI I/O Cfg]**.

Port 5 Device
20-COMM-ER
Parameter #: 25 DPI I/O Cfg x x x x x x x x x x x 0 0 0 0 **1** Cmd/Ref b00

Bit	Description
0	Logic Command/Reference (Default)
1	Datalink A
2	Datalink B
3	Datalink C
4	Datalink D
5...15	Not Used

   Bit 0 is the right-most bit. It is highlighted above and equals '1'.

2. If a controller is used to control the drive, set adapter **Parameters 37 - [M-S Input]** and **38 - [M-S Output]** for Master-Slave Hierarchy.

   For details, see Setting a Master-Slave Hierarchy (Scanner-to-Drive Communication) on page 36.

3. If Logic Command/Reference is enabled, configure the parameters in the drive to accept the Logic Command and Reference from the adapter.

   For example, set Parameter 90 - [Speed Ref A Sel] in a PowerFlex 70 or 700 drive to '22' (DPI Port 5) so that the drive uses the Reference from the adapter. Also, verify that the mask parameters (for example, Parameter 276 - [Logic Mask]) in the drive are configured to receive the desired logic from the adapter. See the documentation for your drive for details.

   The the SMC devices do not currently use the reference data sent in the IO frame. No reference configuration is required. Refer to the applicable SMC user manual for the latest reference configuration information.

4. If you enabled one or more Datalinks, configure parameters in the drive to determine the source and destination of data in the Datalink(s).

   When using Datalinks, up to 8 [Data In xx] parameters and/or up to 8 [Data Out xx] parameters must be assigned to point to the appropriate parameters for your application. See Chapter 4 for an example.

5. Reset the adapter; see Resetting the Adapter on page 43.

The adapter is ready to receive I/O. You must now configure the adapter to receive I/O from a master or peer device. See Selecting Master-Slave or Peer-to-Peer. If you select a Master-Slave hierarchy, you must also configure the master to communicate with the adapter. See Chapter 4, Configuring the I/O.

Selecting Master-Slave or Peer-to-Peer

A hierarchy determines the type of device with which the adapter exchanges data. In a Master-Slave hierarchy, the adapter exchanges data with a master, such as a scanner or bridge (1756-ENBT, 1756-EN2T, 1747-L5-xxx, and so forth). In a Peer-to-Peer hierarchy, the adapter exchanges data with one or more EtherNet/IP adapters in other devices. (The devices must have compatible Logic Command/Status words.)

For both Master-Slave and Peer-to-Peer hierarchies, the devices exchanging data must be on the same IP subnet. See 'IP Addresses' in the for information about IP subnets.

Setting a Master-Slave Hierarchy (Scanner-to-Drive Communication)

1. Enable the desired I/O in **Parameter 25 - [DPI I/O Cfg]**.

   See Setting the I/O Configuration on page 35.

2. Set the bits in **Parameter 37 - [M-S Input]**.

   This parameter determines the data received from the master by the device. A '1' enables the I/O and a '0' disables the I/O.

Port 5 Device 20-COMM-ER
Parameter #: 37 M-S Input x x x x x x x x x x x 0 0 0 0 **1** Cmd/Ref b00

Bit	Description
0	Logic Command/Reference (Default)
1	Datalink A Input
2	Datalink B Input
3	Datalink C Input
4	Datalink D Input
5...15	Not Used

   Bit 0 is the right-most bit. It is highlighted above and equals '1'.

3. Set the bits in **Parameter 38 - [M-S Output]**.

   This parameter determines the data transmitted from the device to the scanner. A '1' enables the I/O and a '0' disables the I/O.

Port 5 Device 20-COMM-ER
Parameter #: 38 M-S Output x x x x x x x x x x x 0 0 0 0 **1** Status/Fdbk b00

Bit	Description
0	Status/Feedback (Default)
1	Datalink A Output
2	Datalink B Output
3	Datalink C Output
4	Datalink D Output
5...15	Not Used

   Bit 0 is the right-most bit. It is highlighted above and equals '1'.

4. Reset the adapter; see Resetting the Adapter on page 43.

The adapter is ready to receive I/O from the master (that is, scanner). You must now configure the scanner to recognize and transmit I/O to the adapter. See Chapter 4, Configuring the I/O.

Setting the Adapter to Transmit Peer-to-Peer Data (Drive-to-Drive Communication)

1. Verify that **Parameter 53 - [Peer Out Enable]** is set to '0' (Off).

   This parameter must be Off while you configure peer output parameters.

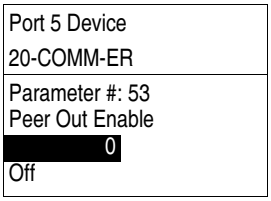

Value	Setting
0	Off (Default)
1	On

2. Set **Parameter 51 - [Peer A Output]** to select the source of the data to output to the network.

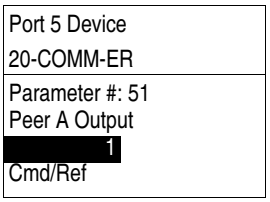

Value	Description
0	Off (Default)
1	Logic Command/Reference
2…5	Datalink A, B, C, or D Input
6…9	Datalink A, B, C, or D Output

3. If desired, set **Parameter 52 - [Peer B Output]** to select an additional source of the data to output to the network.

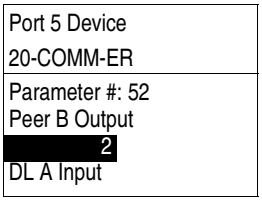

Value	Description
0	Off (Default)
1	Logic Command/Reference
2…5	Datalink A, B, C, or D Input
6…9	Datalink A, B, C, or D Output

4. Set **Parameters 54 - [Peer Out Time]** and **55 - [Peer Out Skip]** to establish the minimum and maximum intervals between peer messages.

Because the adapter transmits peer messages when a change-of-state condition occurs, minimum and maximum intervals are required.

– The minimum interval ensures that the adapter does not transmit messages on the network too often, thus minimizing network traffic. Set it with **Parameter 54 - [Peer Out Time]**.

– The maximum interval ensures that the adapter transmits messages often enough so that the receiving adapter(s) can receive recent data and verify that communications are working or, if communications are not working, can timeout. The maximum interval is the value of **Parameter 54 - [Peer Out Time]** multiplied by the value of **Parameter 55 - [Peer Out Skip]**.

In the example below, the minimum interval is set to 2.00 seconds (**Parameter 54 - [Peer Out Time]**), and the maximum interval is set to 4.00 seconds (2.00 x ‘2’ setting of **Parameter 55 - [Peer Out Skip]**).

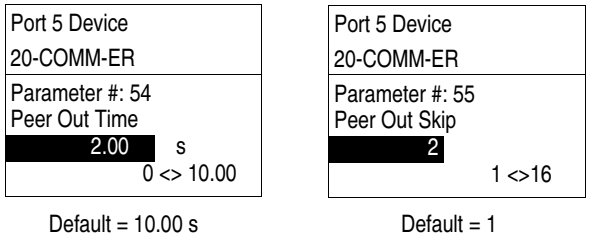

5. Set **Parameter 53 - [Peer Out Enable]** to ‘1’ (On).

The adapter will transmit the data selected in **Parameters 51 - [Peer A Output]** and **52 - [Peer B Output]** to the network. Another adapter must be configured to receive the peer I/O data.

Setting the Adapter to Receive Peer-to-Peer Data

1. Verify that **Parameter 49 - [Peer Inp Enable]** is set to ‘0’ (Off).

This parameter must be Off while you configure the peer input parameters.

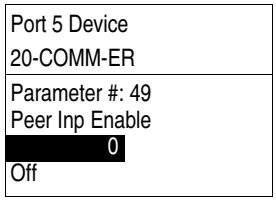

Value	Setting
0	Off (Default)
1	On

2. Set **Parameters 44 - [Peer Inp Addr 1]** through **47 - [Peer Inp Addr 4]** to the IP address of the node from which you want to receive data.

Valid nodes must have 20-COMM-ER adapters connected to drives with compatible Logic Command/Status words.

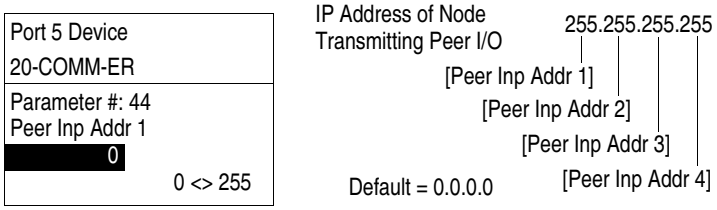

3. Set **Parameter 40 - [Peer A Input]** to select the destination of the data that is input to the drive as Peer A.

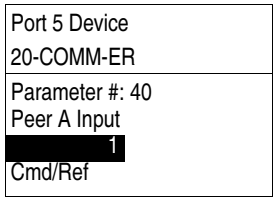

Value	Description
0	Off (Default)
1	Logic Command/Reference
2…5	Datalink A, B, C, or D Input

Data is used from the least significant word in the event of a mismatch in Reference or Datalink sizes.

4. If desired, set **Parameter 41 - [Peer B Input]** to select the destination of the data to input to the device as Peer B.

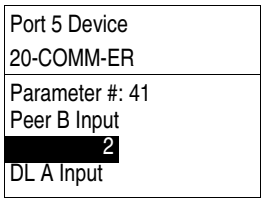

Value	Description
0	Off (Default)
1	Logic Command/Reference
2…5	Datalink A, B, C, or D Input

5. If the adapter receives a Logic Command, set the bits in **Parameter 42 - [Peer Cmd Mask]** that the device should use.

The bit definitions for the Logic Command word will depend on the drive to which the adapter is connected. See Appendix D or the device documentation.

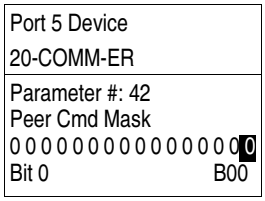

Value	Description
0	Ignore this command bit. (Default)
1	Use this command bit.

If the adapter receives a Logic Command from both a master device and a peer device, each command bit must have only one source. The source of command bits set to ‘0’ will be the master device. The source of command bits set to ‘1’ will be the peer device.

6. Reset the adapter (see Resetting the Adapter on page 43) so that changes to **Parameter 42 - [Peer Cmd Mask]** take effect.
7. Set **Parameter 48 - [Peer Inp Timeout]** to the maximum amount of time the adapter will wait for a message before timing out.

Important: This value must be greater than the product of **Parameter 54 - [Peer Out Time]** multiplied by **Parameter 55 - [Peer Out Skip]** in the adapter from which you are receiving I/O.

For example, if the value of **Parameter 54 - [Peer Out Time]** is 2.00 seconds and the value of **Parameter 55 - [Peer Out Skip]** is 2 (see example screen in step 4 on page 37), then **Parameter 48 - [Peer Inp Timeout]** needs to have a value greater than 4.00, such as 5.00 in the example screen below.

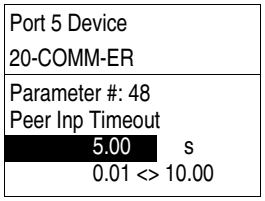

Default = 10.00 s

8. Set **Parameter 43 - [Peer Flt Action]** to the action that the adapter will take if it times out.

ATTENTION: Risk of injury or equipment damage exists. **Parameter 43 - [Peer Flt Action]** lets you determine the action of the adapter and connected device if peer communication is disrupted. By default, this parameter faults the device. You can set this parameter so that the device continues to run, however, precautions should be taken to ensure that the setting of this parameter does not create a hazard of injury or equipment damage. When commissioning the device, verify that your system responds correctly to various situations (for example, a disconnected cable).

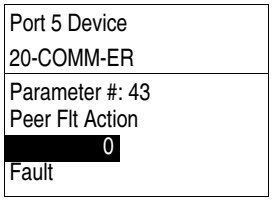

Value	Description
0	Fault (Default)
1	Stop
2	Zero Data
3	Hold Last
4	Send Flt Cfg

For more details, see Setting a Fault Action on page 41.

9. Set **Parameter 49 - [Peer Inp Enable]** to '1' (On).

The adapter is now configured to receive peer I/O from the specified node. Ensure that the specified node is configured to transmit peer I/O.

Setting the Reference Adjustment

A Reference Adjustment is a percent scaling factor for the Reference from the network. It can be set from 0.00...200.00% to allow the drive's Reference to either match the network Reference (= 100.00%), scale below the network Reference (< 100.00%), or scale above the network Reference (> 100.00%).

The SMC controllers do not currently use the reference data sent in the IO frame. No Reference configuration is required. Refer to the applicable SMC user manual for the latest reference configuration information.

ATTENTION: To guard against equipment damage and/or personal injury, note that changes to adapter **Parameter 39 - [Ref Adjust]** take effect immediately. A drive receiving its Reference from the adapter will receive the newly scaled Reference, resulting in a change of speed.

If the adapter is receiving a Reference, set **Parameter 39 - [Ref Adjust]** to the desired scaling factor.

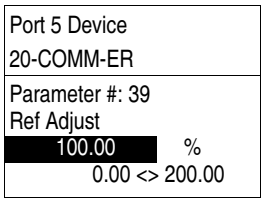

Default = 100.00%

The adjustment takes effect as soon as it is entered.

Setting a Fault Action

By default, when I/O communication is disrupted (for example, a cable is disconnected) or the controller is idle (in program mode or faulted), the drive responds by faulting if it is using I/O from the network. You can configure a different response to these events:

- Disrupted I/O communication by using **Parameter 23 - [Comm Flt Action]**
- An idle controller by using **Parameter 24 - [Idle Flt Action]**

ATTENTION: Risk of injury or equipment damage exists. **Parameters 23 - [Comm Flt Action]** and **24 - [Idle Flt Action]** let you determine the action of the adapter and connected device if I/O communication is disrupted or the controller is idle. By default, these parameters fault the device. You can set these parameters so that the device continues to run, however, precautions should be taken to ensure that the settings of these parameters do not create a risk of injury or equipment damage. When commissioning the device, verify that your system responds correctly to various situations (for example, a disconnected cable or faulted controller).

Changing the Fault Action

Set the values of **Parameters 23 - [Comm Flt Action]** and **24 - [Idle Flt Action]** to any of these desired responses.

Value	Action	Description
0	Fault	The device is faulted and stopped. (Default)
1	Stop	The device is stopped, but not faulted.
2	Zero Data	The device is sent 0 for output data. This does not command a stop.
3	Hold Last	The device continues in its present state.
4	Send Flt Cfg	The device is sent the data that you set in the fault configuration parameters (**Parameters 27 - [Flt Cfg Logic]** through **36 - [Flt Cfg D2 In]**).

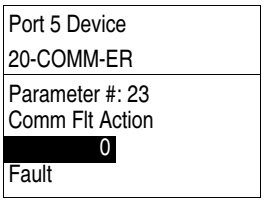

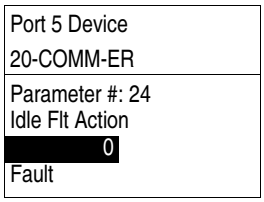

Changes to these parameters take effect immediately. A reset is not required.

If communication is disrupted and then is re-established, the drive will automatically take commands from the network again.

Setting the Fault Configuration Parameters

If you set **Parameter 23 - [Comm Flt Action]** or **24 - [Idle Flt Action]** to 'Send Flt Cfg', the values in the following parameters are sent to the drive after an I/O communications fault and/or idle fault occurs. You must set these parameters to values required by your application.

Parameter	Description
27 - [Flt Cfg Logic]	A 16-bit value sent to the device for Logic Command.
28 - [Flt Cfg Ref]	A 32-bit value (0…4294967295) sent to the device as a Reference or Datalink. **Important:** If the device uses a 16-bit Reference or 16-bit Datalinks, the most significant word of the value must be set to zero (0) or a fault will occur.
29 - [Flt Cfg x1 In] through **36 - [Flt Cfg x2 In]**	

Changes to these parameters take effect immediately. A reset is not required.

Setting Web Access Control

By using a web browser to access the IP address set for the adapter, you can view the adapter's web pages for information about the adapter, its connected device, and other DPI devices connected to the device, such as HIMs or converters. Additionally, the adapter can be configured to automatically send e-mail messages

to desired addresses when selected device faults occur and/or are cleared, and/or when the adapter takes a communication or idle fault action. For more details on the adapter's web pages, refer to Chapter 8, Viewing the Adapter Web Pages.

By default, the adapter web pages are disabled. See Figure 2 and set the Web Pages Switch (SW4) to the 'Enable Web' (up) position. **Parameter 56 [Web Enabled]** reflects the position of the web enable DIP switch on the adapter.

Important: For a change to the switch setting to take effect, the adapter must be reset (see Resetting the Adapter on page 43).

Bit 0 of **Parameter 57 - [Web Features]** is used to protect the configured settings for e-mail messaging. By default, settings are not protected and the user can make changes. To protect the configured settings, set the value of E-mail Cfg Bit 0 to '0' (Disabled). You can unprotect the configuration by changing Bit 0 back to '1' (Enabled). E-mail messaging will always remain active regardless of whether or not its settings are protected—unless e-mail messaging was **never** configured. For more information about configuring adapter e-mail messaging or to stop e-mail messages, see Email Configuration Link on page 162.

Port 5 Device 20-COMM-ER
Parameter #: 57 Web Features x x x x x x x x x x x x x x x **1** E-mail Cfg b00

Bit	Description
0	E-mail Cfg (Default = 0 = Disabled)
1…7	Not Used

Bit 0 is the right-most bit. It is highlighted above and equals '1'.

Changes to this parameter take effect immediately. A reset is not required.

Resetting the Adapter

Changes to switch settings and some adapter parameters require that you reset the adapter before the new settings take effect. You can reset the adapter by power cycling the drive or by using **Parameter 22- [Reset Module]**.

ATTENTION: Risk of injury or equipment damage exists. If the adapter is transmitting control I/O to the drive, the drive may fault when you reset the adapter. Determine how your drive will respond before resetting a connected adapter.

Set **Parameter 22 - [Reset Module]** to '1' (Reset Module).

Port 5 Device 20-COMM-ER
Parameter #: 22 Reset Module **1** Reset Module

Value	Description
0	Ready (Default)
1	Reset Module
2	Set Defaults

When you enter '1' (Reset Module), the adapter will be immediately reset. When you enter '2' (Set Defaults), the adapter will set all adapter parameters to their factory-default values. After performing a Set Defaults, enter '1' (Reset Module) so that the new values take effect. The value of this parameter will be restored to '0' (Ready) after the adapter is reset.

Viewing the Adapter Status Using Parameters

The following parameters provide information about the status of the adapter. You can view these parameters at any time.

Parameter	Description
17 - [EN P1 Rate Act]	The data rate used on port 1 of the adapter
19 - [EN P2 Rate Act]	The data rate used on port 2 of the adapter
20 - [Ref/Fdbk Size]	The size of the Reference/Feedback. It will either be 16 bits or 32 bits. It is set in the device and the adapter automatically uses the correct size.
21 - [Datalink Size]	The size of the Datalinks. It will either be 16 bits or 32 bits. It is set in the device and the adapter automatically uses the correct size.
26 - [DPI I/O Act]	The Reference/Feedback and Datalinks used by the adapter. This value is the same as **Parameter 25 - [DPI I/O Cfg]** unless the parameter was changed and the adapter was not reset. Bit Definition: Not Used | Not Used | Not Used | Datalink D | Datalink C | Datalink B | Datalink A | Cmd/Ref Default: x | x | x | 0 | 0 | 0 | 0 | 1 Bit: 7 | 6 | 5 | 4 | 3 | 2 | 1 | 0 0 = I/O disabled 1 = I/O enabled
50 - [Peer Inp Status]	The status of the consumed peer input connection. Values 0 = Off 1 = Waiting 2 = Running 3 = Faulted

Updating the Adapter Firmware

The adapter firmware can be updated over the network or serially through a direct connection from a computer to the drive using a 1203-USB or 1203-SSS serial converter.

When updating firmware over the network, you can use the Allen-Bradley ControlFLASH software tool, the built-in update capability of DriveExplorer Full software, or the built-in update capability of DriveExecutive software.

When updating firmware through a direct serial connection from a computer to a drive, you can use the same Allen-Bradley software tools described above, or you can use terminal emulation software set to the X-modem protocol.

If using a direct serial connection, you can use DriveExplorer Lite software.

To obtain a firmware update for this adapter, go to http://www.ab.com/support/abdrives/webupdate. This website contains all firmware update files and associated Release Notes that describe the following items:

- Firmware update enhancements and anomalies
- How to determine the existing firmware revision
- How to update firmware using DriveExplorer, DriveExecutive, ControlFLASH, or HyperTerminal software

Configuring the I/O

This chapter provides instructions on how to configure a Rockwell Automation ControlLogix or MicroLogix 1100/1400 controller to communicate with the adapter and connected PowerFlex drive.

Topic	Page
Using RSLinx Classic Software	47
ControlLogix Controller Example	48
MicroLogix 1100/1400 Controller Example	68

Using RSLinx Classic Software

RSLinx Classic software, in all its variations (Lite, Gateway, OEM, and so forth), is used to provide a communication link between the computer, network, and controller. RSLinx Classic software requires its network-specific driver to be configured before communication is established with network devices. To configure the RSLinx driver, follow this procedure.

1. Start RSLinx Classic software and select **Communications > Configure Drivers** to display the Configure Drivers screen.
2. From the Available Driver Types pull-down menu, choose EtherNet/IP Driver.
3. Click **Add New...** to display the Add New RSLinx Driver screen.
4. Use the default name or type a new name and click **OK**. The 'Configure driver:' screen appears.
5. Depending on your application, select either the browse local or remote subnet option.
6. Click **OK**.

The Configure Drivers screen reappears with the new driver in the Configured Drivers list.

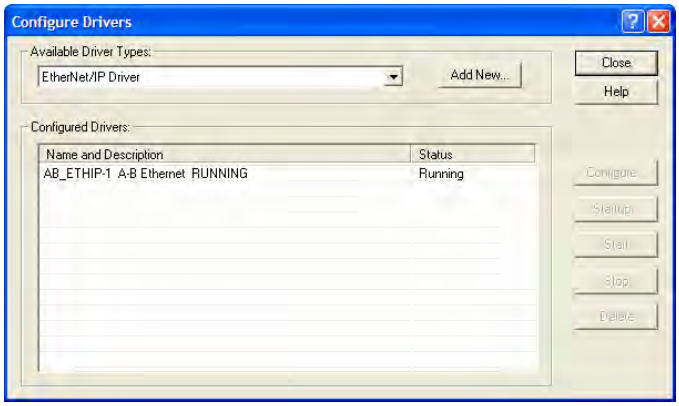

7. Click **Close** to close the Configure Drivers screen.
8. Keep RSLinx running and verify that the computer recognizes the drive.
   a. Select **Communications > RSWho**.
   b. In the menu tree, click '+' next to the Ethernet driver.

   If the 'EtherNet/IP driver' cannot see your drive, as an alternative, use either the 'Ethernet devices' or 'Remote Devices via Linx Gateway' RSLinx driver.

ControlLogix Controller Example

After the adapter is configured, the connected drive and adapter will be a single node on the network. This section provides the steps needed to configure a simple EtherNet/IP network (see Figure 8). In our example, we will configure a ControlLogix controller with 1756-ENBT (Series A) bridge to communicate with a drive using Logic Command/Status, Reference/Feedback, and 16 Datalinks (8 to read and 8 to write) over the network.

Figure 8 - Example ControlLogix EtherNet/IP Network

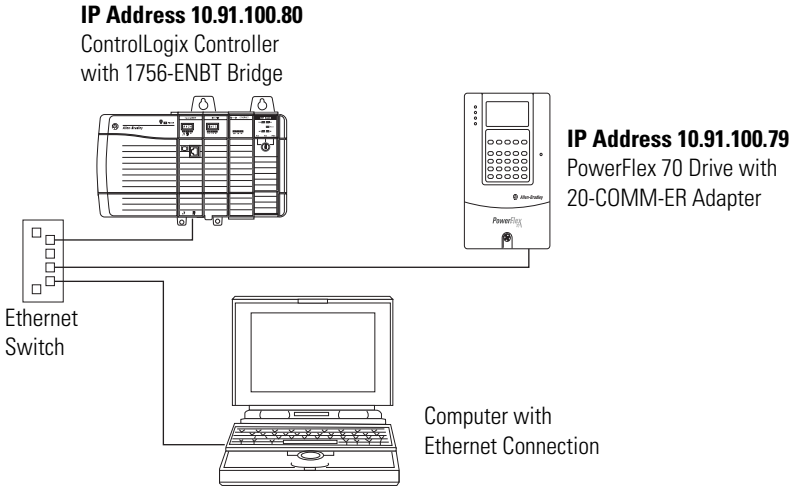

Adding the Bridge to the I/O Configuration

To establish communications between the controller and adapter over the network, you must first add the ControlLogix controller and its bridge to the I/O configuration. This procedure is similar for all RSLogix 5000 versions.

1. Start RSLogix 5000 software.
2. Select **File > New** to display the New Controller screen.

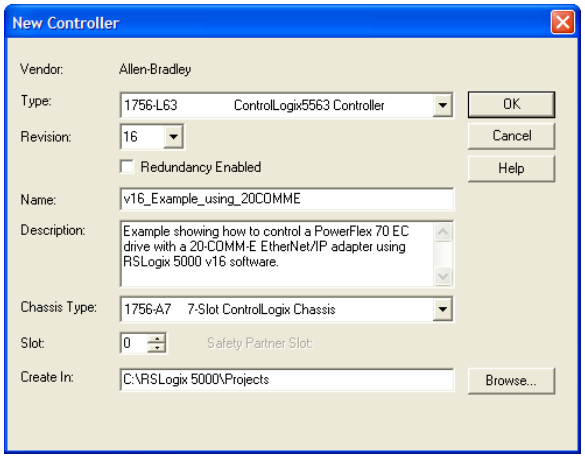

   a. Choose the appropriate choices for the fields in the screen to match your application.
   b. Click **OK**.

      The RSLogix 5000 window reappears with the treeview in the left pane.

3. In the treeview, right-click the I/O Configuration folder and choose **New Module...**

The Select Module screen appears.

4. Expand the Communications group to display all of the available communication modules.

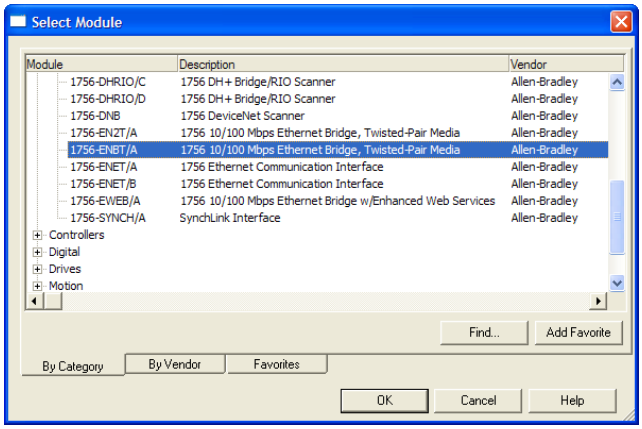

5. In the list, select the EtherNet/IP bridge used by your controller.

In this example, we use a 1756-ENBT EtherNet/IP Bridge (Series A), so the 1756-ENBT/A option is selected.

6. Click **OK**.
7. In the Select Major Revision pop-up dialog box, select the major revision of its firmware.
8. Click **OK**.

The bridge's New Module screen appears.

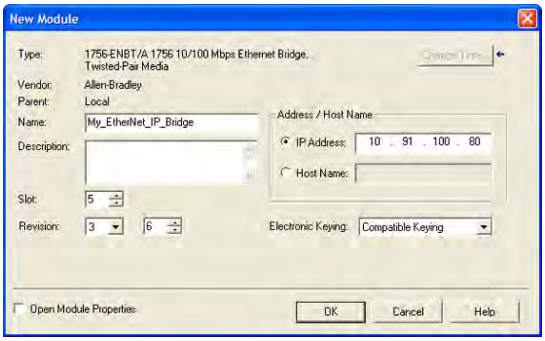

9. Edit the following:

Box	Setting
Name	A name to identify the EtherNet/IP bridge.
Description	Optional – description of the EtherNet/IP bridge.
IP Address	The IP address of the EtherNet/IP bridge.
Host Name	Not used.
Slot	The slot of the EtherNet/IP bridge in the rack.
Revision	The minor revision of the firmware in the bridge. (You already set the major revision by selecting the bridge series in step 5.)
Electronic Keying	**Compatible Keying**. The 'Compatible Keying' setting for Electronic Keying ensures the physical module is consistent with the software configuration before the controller and bridge make a connection. Therefore, be sure that you have set the correct revision in this screen. See the online Help for additional information on this and other Electronic Keying settings. If keying is not required, select 'Disable Keying'. Disable keying is recommended.
Open Module Properties	When this box is checked, clicking **OK** opens additional module properties screens to further configure the bridge. When unchecked, clicking **OK** closes the bridge's New Module screen. For this example, uncheck this box.

10. Click **OK**.

The bridge is now configured for the EtherNet/IP network, added to the RSLogix 5000 project, and appears in the I/O Configuration folder. In our example, a 1756-ENBT bridge appears under the I/O Configuration folder with its assigned name.

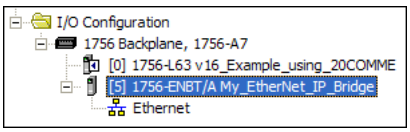

For convenience, keep the project open. Later in this chapter the project will need to be downloaded to the controller.

There are three ways to add the adapter into the I/O configuration:

- Device Add-on Profiles (RSLogix 5000 software, version 16.00 or later)
- Classic Profile (RSLogix 5000 software, versions 13.00...15.00)
- Generic Profile (RSLogix 5000 software, all versions)

These are described in separate sections below. If your version of RSLogix 5000 software supports device Add-on Profiles, we recommend that you use this method.

Using RSLogix 5000 Device Add-on Profiles, Version 16.00 or Later

When compared to using the RSLogix 5000 Classic Profile (versions 13.00...15.00) or Generic Profile (all versions), the RSLogix 5000 device Add-on Profiles provide the following advantages:

- Profiles for specific drives that provide descriptive controller tags for basic control I/O words (Logic Command/Status and Reference/Feedback) **and** Datalinks. Additionally, Datalinks automatically take the name of the drive parameter to which they are assigned. These profiles virtually eliminate I/O mismatch errors and substantially reduce drive configuration time.

- New Drive tab eliminates the need for a separate drive software configuration tool.

- Drive configuration settings are saved as part of the RSLogix 5000 software, version 16.00 or later, project file (.ACD) and also downloaded to the controller.

- Unicast connection (RSLogix 5000 software, version 18.00 or later)

- Device Add-on Profiles can be updated anytime. When a new drive is used or to benefit from new updates for Add-on Profiles, you will need the newest Add-on Profile update. Go to www.ab.com/support/abdrives/webupdate to download the latest RSLogix 5000 device Add-on Profile. To determine your device Add-on Profile version, see Allen-Bradley Knowledgebase document #65882.

Add the Drive/Adapter to the I/O Configuration

To transmit data between the bridge and the drive, you must add the drive as a child device to the parent bridge. In this example, RSLogix 5000 software, version 16.00 is used with device Add-on Profile version 4.05 or later.

1. In the treeview, right-click on the bridge and choose **New Module...** to display the Select Module screen.

   In our example, we right-click on the 1756-ENBT/A bridge. Expand the Drives group to display all of the available drives with their communication adapters.

TIP If the PowerFlex drive is not shown, go to www.ab.com/support/abdrives/webupdate and download the latest RSLogix 5000 device Add-on Profile.

2. From the list, select the drive and its connected adapter.

   For this example, we selected 'PowerFlex 70 EC-E'.

3. Click **OK**.

   The drive's New Module screen appears.

4. On the General tab, edit the following data about the drive/adapter.

Box	Setting
Name	A name to identify the drive.
Description	Optional – description of the drive/adapter.
IP Address	The IP address of the adapter.

5. On the New Module screen in the Module Definition section, click **Change...** to launch the Module Definition screen and begin the drive/adapter configuration process.

   In this example, Datalinks are used to do the following.

Read...	Write to...
Output Current (Parameter 3)	Accel Time 1 (Parameter 140)
DC Bus Voltage (Parameter 12)	Decel Time 1 (Parameter 142)
Fault 1 Code (Parameter 243)	High Resolution Reference (Parameter 308)

TIP To get the latest RSLogix 5000 device Add-on Profile, go to www.ab.com/support/abdrives/webupdate.

6. In the Module Definition screen, edit the following information.

Box	Setting
Revision	The major and minor revision of the firmware (database) in the drive. If the drive's major and minor revision is not available, the drive database is not installed on your computer. To get the correct database revision, use one of the following buttons at the bottom left of the Module Definition screen: • **Create Database:** Creates a database from an online network drive. Clicking this button displays an RSLinx software RSWho window. Browse to the online drive (for this example, PowerFlex 70 EC), select it, and click **OK**. The database will be uploaded and stored on the computer. Thereafter, close the Module Definition screen and then re-open it to display the new revision. • **Web Update:** When a drive is not available online, opens the Allen-Bradley Drives Web Updates website to download a specific database file. After downloading the file, close the Module Definition screen and then re-open it to display the new revision. • **Match Drive:** Use this button when the drive being added to the network matches the drive profile (revision, rating, configuration settings, and so forth) of an existing online network drive. Click this button to conveniently create a duplicate drive profile from the online drive, and automatically load this identical information into the Module Definition screen. This eliminates the need to manually enter the information each time a new drive with a matching profile is added to the network.
Electronic Keying	**Compatible Module**. The 'Compatible Module' setting for Electronic Keying ensures that the physical module is consistent with the software configuration before the controller and bridge make a connection. Therefore, be sure that you have set the correct revision in this screen. See the online Help for additional information on this and other Electronic Keying settings. If keying is not required, select 'Disable Keying'. Drives do not require keying, and so 'Disable Keying' is recommended.
Drive Rating	The voltage and current rating of the drive. If the drive rating is not listed, the drive database is not installed on your computer. To get the correct drive rating, use the **Create Database**, **Web Update**, or **Match Drive** button described above.
Connection	**Parameters via Datalinks.** When selecting 'Parameters via Datalinks' (default), the controller tags for the Datalinks use the drive parameter names to which they are assigned. When selecting 'Datalinks', the controller tags for the Datalinks have non-descriptive UserDefinedData[n] names like those used in RSLogix 5000 software, version 15.00.
Data Format	**Parameters.** When the Connection field is set to 'Parameters via Datalinks', 'Parameters' is automatically selected. When the Connection field is set to 'Datalinks', you must select the number of Datalinks required for your application in the 'Data Format' field.
Datalink A, B, C, D	In the Input Data column, assigns selected drive parameters to be READ by the controller. In the Output Data column, assigns selected drive parameters to be WRITTEN by the controller.
Sort Input/ Output selection…	When this box is checked, sorts the Input Data and Output Data assigned parameters by name and then by number, and enables parameter search by name. When unchecked, sorts the assigned parameters by parameter number and then by name, and enables parameter search by number.
Use Network Reference	Conveniently selects the speed reference for the drive to come from the network. This box is checked by default.

When a 32-bit parameter is selected for Input Data or Output Data for a drive with 16-bit Datalinks, two contiguous Datalinks (for example, x1 and x2, where x = A, B, C or D) are automatically assigned as a pair to

represent that parameter. See Datalink examples in the screen shown on the previous page. For more information on Datalinks, see Using Datalinks on page 86.

On the Module Definition screen, notice that the automatically-assigned controller tags DriveStatus, OutputFreq, DriveLogicRslt, and CommandedFreq are always used.

When a Datalink is enabled, the following 20-COMM-ER adapter I/O parameters are automatically set:

- **Parameter 25 - [DPI I/O Cfg]** turns on the enabled Datalink bit so the 20-COMM-ER adapter will communicate that Datalink's information with the drive.
- **Parameter 37 - [M-S Input]** turns on the enabled Datalink bit so the 20-COMM-ER adapter will input that Datalink's information from the controller.
- **Parameter 38 - [M-S Output]** turns on the enabled Datalink bit so the 20-COMM-ER adapter will output that Datalink's information to the controller.

7. Click **OK** on the Module Definition screen to save the drive and adapter configuration and close the screen.

The drive's New Module screen reappears.

8. On the New Module screen, click the Connection tab.

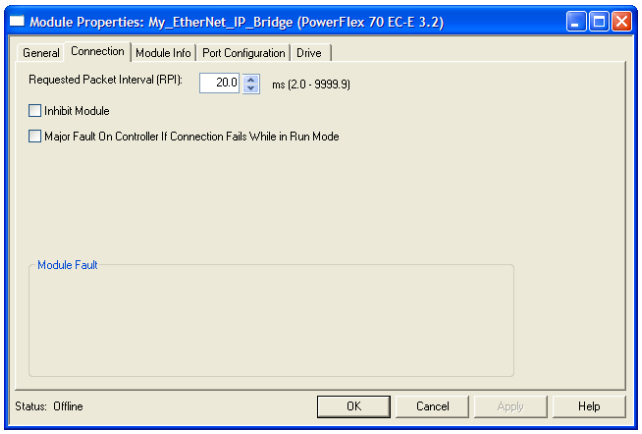

Screen for RSLogix 5000 software, version 16.00 or 17.00

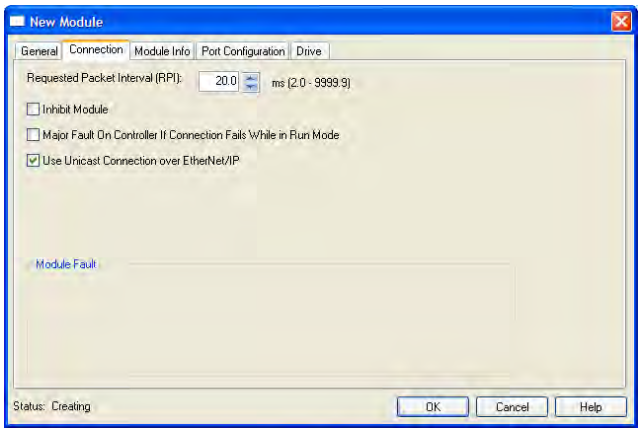

Screen for RSLogix 5000 software, version 18.00 or later

9. In the 'Requested Packet Interval (RPI)' box, set the value to 5.0 milliseconds or greater.

This value determines the maximum interval that a controller should use to move data to and from the adapter. To conserve bandwidth, use higher values for communicating with low priority devices.

The 'Inhibit Module' box, when checked, inhibits the module from communicating with the RSLogix 5000 project. When the 'Major Fault on ...' box is checked, a major controller fault will occur when the module's connection fails while the controller is in the Run Mode. For this example, leave the 'Inhibit Module' and 'Major Fault On ...' boxes unchecked.

Important: Unicast support has been added to RSLogix 5000 software, version 18.00 or later. However, to also support unicast, the controller firmware must be version 18.00 or later. Unicast is recommended whenever possible. For the benefits of unicast operation, see Preparing for an Installation on page 18.

10. On the New Module screen, click the Port Configuration tab.

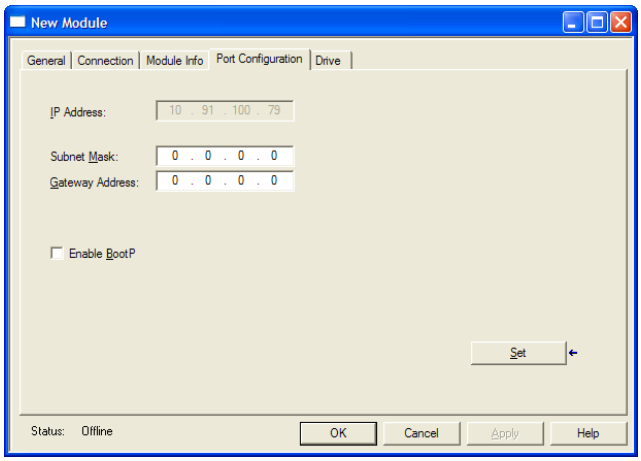

11. In the Port Configuration tab screen, edit the following information.

Box	Setting
IP Address	The IP address of the adapter that was already set in the General tab. This field is not configurable (grayed out).
Subnet Mask	The Subnet Mask configuration setting of the network. This setting must match the setting of other devices on the network (for example, 255.255.255.0).
Gateway Address	The Gateway Address configuration setting of the network. This setting must match the setting of other devices on the network (for example, 10.91.100.1).
Enable BootP	When this box is checked, BOOTP is enabled in the adapter and will ignore the IP address set in the General tab. When unchecked, the controller uses the set IP address. This is another method to enable/disable BOOTP in the adapter. For this example, leave this box unchecked.

12. Click **Set** to save the Port Configuration information which sets the corresponding offline Subnet Cfg x and Gateway Cfg x parameters in the adapter.

13. Click **OK** on the New Module screen.

The new node (‘My_PowerFlex_70_EC_Drive’ in this example) now appears under the bridge (‘My_EtherNet_IP_Bridge’ in this example) in the I/O Configuration folder. If you double-click the Controller Tags, you will see that module-defined data types and tags have been automatically created (Figure 9). Note that all tag names are defined and Datalinks include the assigned drive parameter name. After you save and download the configuration, these tags allow you to access the Input and Output data of the drive via the controller’s ladder logic.

Figure 9 - Controller Tags

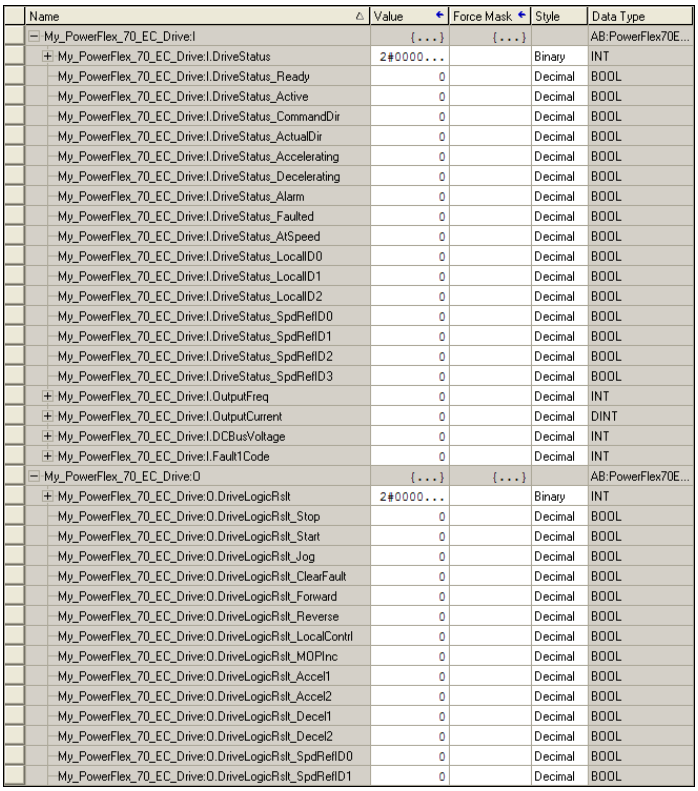

Name	Value	Force Mask	Style	Data Type
My_PowerFlex_70_EC_Drive:I	{...}	{...}		AB:PowerFlex70E...
My_PowerFlex_70_EC_Drive:I.DriveStatus	2#0000...		Binary	INT
My_PowerFlex_70_EC_Drive:I.DriveStatus_Ready	0		Decimal	BOOL
My_PowerFlex_70_EC_Drive:I.DriveStatus_Active	0		Decimal	BOOL
My_PowerFlex_70_EC_Drive:I.DriveStatus_CommandDir	0		Decimal	BOOL
My_PowerFlex_70_EC_Drive:I.DriveStatus_ActualDir	0		Decimal	BOOL
My_PowerFlex_70_EC_Drive:I.DriveStatus_Accelerating	0		Decimal	BOOL
My_PowerFlex_70_EC_Drive:I.DriveStatus_Decelerating	0		Decimal	BOOL
My_PowerFlex_70_EC_Drive:I.DriveStatus_Alarm	0		Decimal	BOOL
My_PowerFlex_70_EC_Drive:I.DriveStatus_Faulted	0		Decimal	BOOL
My_PowerFlex_70_EC_Drive:I.DriveStatus_AtSpeed	0		Decimal	BOOL
My_PowerFlex_70_EC_Drive:I.DriveStatus_LocalID0	0		Decimal	BOOL
My_PowerFlex_70_EC_Drive:I.DriveStatus_LocalID1	0		Decimal	BOOL
My_PowerFlex_70_EC_Drive:I.DriveStatus_LocalID2	0		Decimal	BOOL
My_PowerFlex_70_EC_Drive:I.DriveStatus_SpdRefID0	0		Decimal	BOOL
My_PowerFlex_70_EC_Drive:I.DriveStatus_SpdRefID1	0		Decimal	BOOL
My_PowerFlex_70_EC_Drive:I.DriveStatus_SpdRefID2	0		Decimal	BOOL
My_PowerFlex_70_EC_Drive:I.DriveStatus_SpdRefID3	0		Decimal	BOOL
My_PowerFlex_70_EC_Drive:I.OutputFreq	0		Decimal	INT
My_PowerFlex_70_EC_Drive:I.OutputCurrent	0		Decimal	DINT
My_PowerFlex_70_EC_Drive:I.DCBusVoltage	0		Decimal	INT
My_PowerFlex_70_EC_Drive:I.Fault1Code	0		Decimal	INT
My_PowerFlex_70_EC_Drive:O	{...}	{...}		AB:PowerFlex70E...
My_PowerFlex_70_EC_Drive:O.DriveLogicRslt	2#0000...		Binary	INT
My_PowerFlex_70_EC_Drive:O.DriveLogicRslt_Stop	0		Decimal	BOOL
My_PowerFlex_70_EC_Drive:O.DriveLogicRslt_Start	0		Decimal	BOOL
My_PowerFlex_70_EC_Drive:O.DriveLogicRslt_Jog	0		Decimal	BOOL
My_PowerFlex_70_EC_Drive:O.DriveLogicRslt_ClearFault	0		Decimal	BOOL
My_PowerFlex_70_EC_Drive:O.DriveLogicRslt_Forward	0		Decimal	BOOL
My_PowerFlex_70_EC_Drive:O.DriveLogicRslt_Reverse	0		Decimal	BOOL
My_PowerFlex_70_EC_Drive:O.DriveLogicRslt_LocalContrl	0		Decimal	BOOL
My_PowerFlex_70_EC_Drive:O.DriveLogicRslt_MOPInc	0		Decimal	BOOL
My_PowerFlex_70_EC_Drive:O.DriveLogicRslt_Accel1	0		Decimal	BOOL
My_PowerFlex_70_EC_Drive:O.DriveLogicRslt_Accel2	0		Decimal	BOOL
My_PowerFlex_70_EC_Drive:O.DriveLogicRslt_Decel1	0		Decimal	BOOL
My_PowerFlex_70_EC_Drive:O.DriveLogicRslt_Decel2	0		Decimal	BOOL
My_PowerFlex_70_EC_Drive:O.DriveLogicRslt_SpdRefID0	0		Decimal	BOOL
My_PowerFlex_70_EC_Drive:O.DriveLogicRslt_SpdRefID1	0		Decimal	BOOL

Save the I/O Configuration to the Controller

After adding the bridge and drive/adapter to the I/O configuration, you must download the configuration to the controller. You should also save the configuration to a file on your computer.

1. In the RSLogix 5000 window, select **Communications > Download**.

The Download dialog box appears.

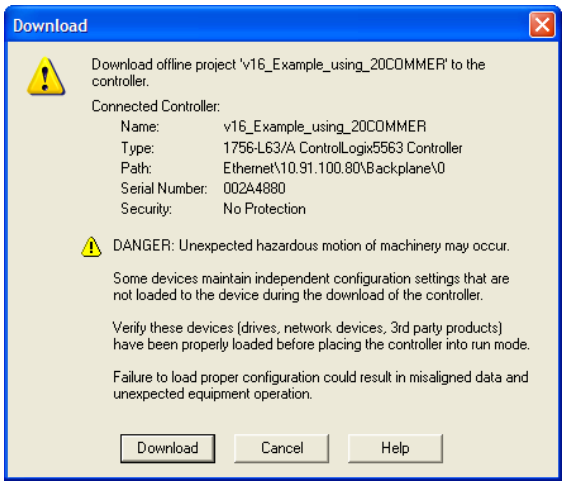

TIP If a message box reports that RSLogix 5000 software is unable to go online, select **Communications > Who Active** to find your controller in the Who Active screen. After finding and selecting the controller, click **Set Project Path** to establish the path. If your controller does not appear, you need to add or configure the EtherNet/IP driver with RSLinx software. See Using RSLinx Classic Software on page 47 and RSLinx online help for details.

2. Click **Download** to download the configuration to the controller.

   When the download is successfully completed, RSLogix 5000 software goes into the Online mode and the I/O Not Responding box in the upper-left of the window should be flashing green. Also, a yellow warning symbol ⚠ should be displayed on the I/O Configuration folder in the treeview and on the drive profile.

   If the controller was in Run Mode before clicking **Download**, RSLogix 5000 software prompts you to change the controller mode back to Remote Run. In this case, choose the appropriate mode for your application. If the controller was in Program Mode before clicking **Download**, this prompt will not appear.

3. Select **File > Save**.

   If this is the first time you saved the project, the Save As dialog box appears.

   a. Navigate to a folder.

   b. Type a file name.

   c. Click **Save** to save the configuration to a file on your computer.

   To be sure that the present project configuration values are saved, RSLogix 5000 software prompts you to upload them. Click **Yes** to upload and save the values.

Correlate the Drive with the Controller

You must now correlate the drive settings to the RSLogix 5000 project I/O settings so that they match. This requires loading the project I/O settings into the drive.

1. In the treeview under I/O Configuration, right-click on the drive profile (for this example, My_PowerFlex_70_EC_Drive) and choose **Properties**.

2. Click the Drive tab.

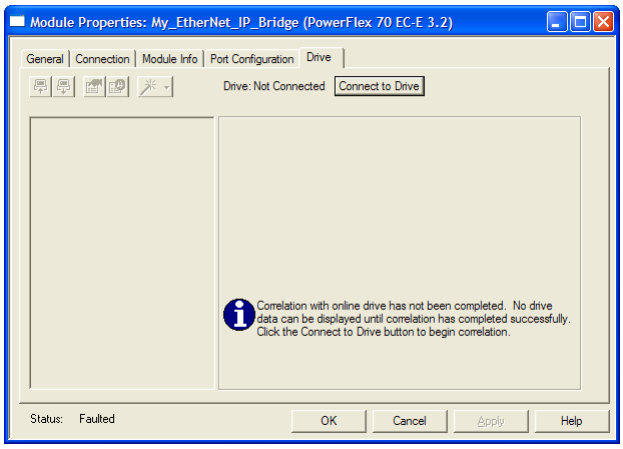

3. Click **Connect to Drive** to begin the correlation process.

   After the drive configuration data has been verified, a pop-up dialog box appears, which synchronizes ports from the online drive to the project to be sure that correct Datalinks are assigned.

4. Click OK.

   If the Differences Found screen appears—which is typical, click **Download**. This will download the project settings from the controller to the drive and its connected adapter. If **Upload** is clicked, the drive and adapter settings are uploaded to the controller.

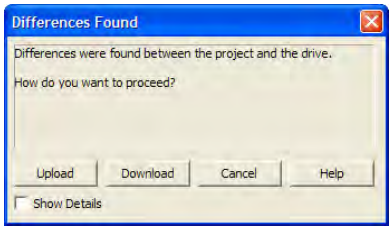

TIP On subsequent connections to the drive (after initial download), click **Upload**.

5. When the Reset Comm Module screen appears, click **Yes** to reset the communication adapter so that the new I/O settings take effect.

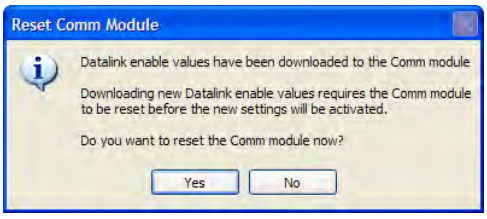

   After resetting the communication module, which may take up to a minute to complete, the I/O OK box in the upper-left of the RSLogix 5000 window should now be steady green and the yellow warning symbols ⚠ in

the treeview under the I/O Configuration folder and drive profile should be gone.

TIP If the yellow warning symbol ⚠ for your drive remains displayed, first try power cycling the drive. Otherwise, double-click the drive under the I/O tree and click the Connection tab to find the cause of the problem.

6. The Module Properties Drive Tab screen re-appears.

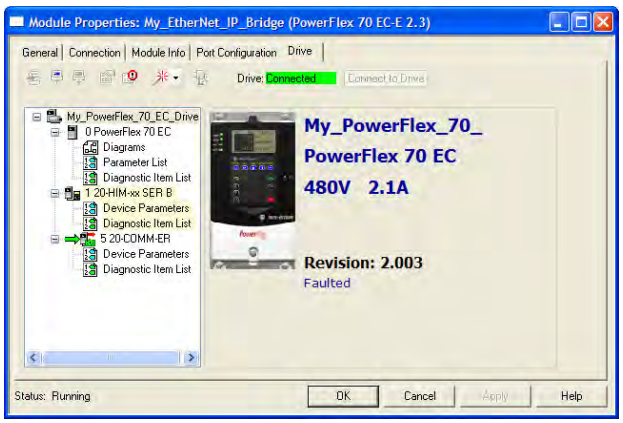

You can view the drive's Parameter List, Diagnostic Items List, and lists for any connected peripheral, including the 20-COMM-ER. While connected to the drive, you can dynamically change values of parameters. Diagnostic items and diagram views can be used for troubleshooting. Table 24 on page 147 provides diagnostic items for troubleshooting the adapter.

7. Click **OK** when finished to close the Module Properties screen for the drive.

Using the RSLogix 5000 Classic Profile, Versions 13.00…15.00

When compared to using the RSLogix 5000 Generic Profile (all versions), the RSLogix 5000 Classic Profile provides these advantages:

- Profiles for specific drives (Figure 10) that provide descriptive controller tags for basic control I/O words (Logic Command/Status and Reference/Feedback). The controller tags for Datalinks, however, have non-descriptive UserDefinedData[n] names.

- Improved I/O configuration—no I/O assembly configuration required. Basic control I/O is defined, but Datalinks still need to be configured/mapped.

- The Setup tab includes a DriveExecutive icon link to conveniently launch DriveExecutive software (when installed on computer) to match the adapter I/O configuration with the controller, and to assign the Datalink parameters in the drive. This reduces I/O mismatches.

TIP Since the RSLogix 5000 Classic Profile has been significantly improved upon by RSLogix 5000 Device Add-on Profiles, version 16.00 or later, we recommend using RSLogix 5000 Device Add-on Profiles to take advantage of its benefits (more intuitive, time saving, and less likely to make I/O configuration errors).

Figure 10 - Classic Profile Screens for Drives

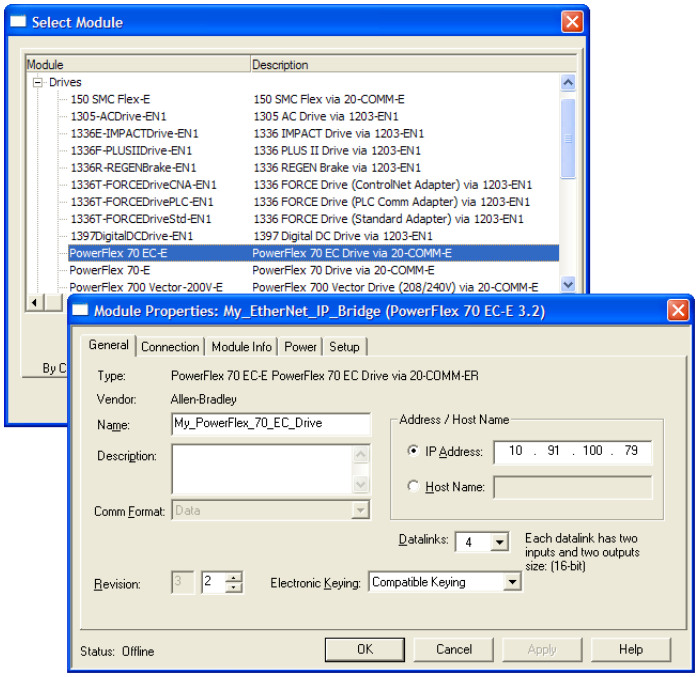

When Datalinks are used, you must enable the desired Datalinks and assign names to their non-descriptive controller tags. When a Datalink is enabled, you must set the following adapter I/O parameters:

- **Parameter 25 - [DPI I/O Cfg]** turns on the enabled Datalink bit so the 20-COMM-ER adapter will communicate that Datalink's information with the drive.

- **Parameter 37 - [M-S Input]** turns on the enabled Datalink bit so the 20-COMM-ER adapter will input that Datalink's information from the controller.

- **Parameter 38 - [M-S Output]** turns on the enabled Datalink bit so the 20-COMM-ER adapter will output that Datalink's information to the controller.

When using Datalinks, up to 8 [Data In xx] parameters and/or up to 8 [Data Out xx] parameters must be assigned to point to the appropriate drive parameters for your application.

Using the RSLogix 5000 Generic Profile, All Versions

We recommend that you use the basic RSLogix 5000 Generic Profile for only the following reasons:

- A specific drive profile in other versions of RSLogix 5000 software is unavailable.
- Users are already familiar with a drive Generic Profile and do not want to convert an existing project to a Classic Profile, versions 13.00...15.00, or to a device Add-on Profile (RSLogix 5000 software, version 16.00 or later).
- A project must maintain specific revision level control.
- The controller cannot be taken offline. RSlogix 5000 software, version 16.00 or later, enables the drive Generic Profile to be added while the controller is online and in the Run mode.

Add the Drive/Adapter to the I/O Configuration

To transmit data between the bridge and the drive, you must add the drive as a child device to the parent bridge.

1. In the treeview, right-click the bridge and select **New Module...** to display the Select Module screen.

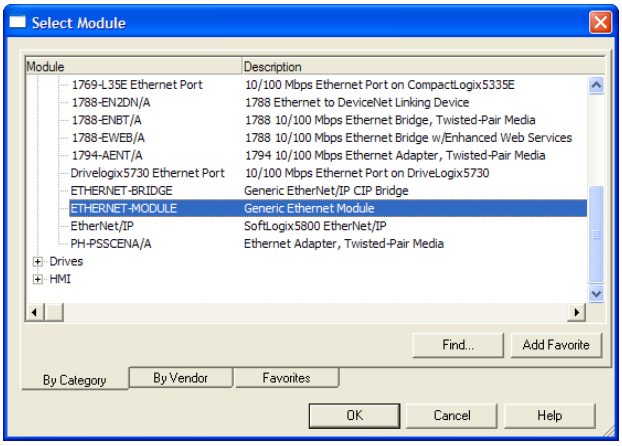

In our example, we right-click on the 1756-ENBT/A bridge.

2. Expand the Communications group to display all of the available communication modules.

3. Select "ETHERNET-MODULE" from the list to configure the drive and its connected 20-COMM-ER adapter.
4. Click **OK**.

The drive's New Module screen appears.

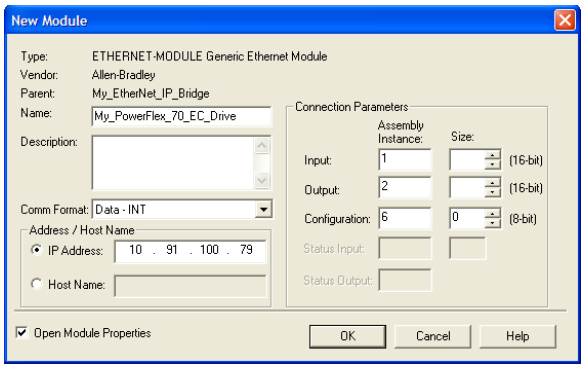

5. Edit the following information about the drive and adapter.

Box	Setting
Name	A name to identify the drive and adapter.
Description	Optional – description of the drive/adapter.
Comm Format	**Data - INT** (This setting formats the data in 16-bit words.)
IP Address	The IP address of the adapter.
Open Module Properties	When this box is checked, clicking **OK** opens additional module properties screens to further configure the drive/adapter. When unchecked, clicking **OK** closes the drive's New Module screen. For this example, check this box.

6. Under Connection Parameters, edit the following information.

Box	Assembly Instance	Size
Input	**1** (This value is required.)	The value will vary based on your application (setting of **Parameters 25 - [DPI I/O Cfg]** and **38 - [M-S Output]**) and the size (16-bit or 32-bit) of the Reference/Feedback and Datalinks in the drive. See Table 2, Table 3, or Table 4 on page 64.
Output	**2** (This value is required.)	The value will vary based on your application (setting of **Parameters 25 - [DPI I/O Cfg]** and **37 - [M-S Input]**) and the size (16-bit or 32-bit) of the Reference/Feedback and Datalinks in the drive. See Table 2, Table 3, or Table 4 on page 64.
Configuration	**6** (This value is required.)	**0** (This value is required.)

The following tables define the number of 16-bit words that you need to enter for the Input Size and Output Size boxes depending on your configuration.

Table 2 - Devices with 16-bit Reference/Feedback and 16-bit Datalinks

These products include the following:

- PowerFlex 70 drives with standard or enhanced control
- PowerFlex 700 drives with standard control
- PowerFlex 700H drives
- SMC Flex smart motor controllers
- SMC-50 smart motor controllers

Logic Command/ Status	Ref/Fdbk (16-bit)	Datalinks (16-bit)				User Configured Settings				
		A	B	C	D	Size in Words		Par. 23 - [DPI I/O Cfg]	Par. 35 - [M-S Input]	Par. 36 - [M-S Output]
						Input	Output			
✔	✔					4	2	...0 0001	...0 0001	...0 0001
✔	✔	✔				6	4	...0 0011	...0 0011	...0 0011
✔	✔	✔	✔			8	6	...0 0111	...0 0111	...0 0111
✔	✔	✔	✔	✔		10	8	...0 1111	...0 1111	...0 1111
✔	✔	✔	✔	✔	✔	12	10	...1 1111	...1 1111	...1 1111

Table 3 - Devices with 16-bit Reference/Feedback and 32-bit Datalinks

These products include the following:

- PowerFlex 700 drives with vector control
- PowerFlex 700L drives with 700 control
- PowerFlex Digital DC drives
- SMC Controllers

Logic Command/ Status	Ref/Fdbk (16-bit)	Datalinks (32-bit)				User Configured Settings				
		A	B	C	D	Size in Words		Par. 23 - [DPI I/O Cfg]	Par. 35 - [M-S Input]	Par. 36 - [M-S Output]
						Input	Output			
✔	✔					4	2	...0 0001	...0 0001	...0 0001
✔	✔	✔				8	6	...0 0011	...0 0011	...0 0011
✔	✔	✔	✔			12	10	...0 0111	...0 0111	...0 0111
✔	✔	✔	✔	✔		16	14	...0 1111	...0 1111	...0 1111
✔	✔	✔	✔	✔	✔	20	18	...1 1111	...1 1111	...1 1111

Table 4 - Drives with 32-bit Reference/Feedback and 32-bit Datalinks

These products include the following:

- PowerFlex 700S drives with Phase I or Phase II control
- PowerFlex 700L drives with 700S control
- PowerFlex 753 drives
- PowerFlex 755 drives

Logic Command/ Status	Ref/Fdbk (32-bit)	Datalinks (32-bit)				User Configured Settings				
		A	B	C	D	Size in Words		Par. 23 - [DPI I/O Cfg]	Par. 35 - [M-S Input]	Par. 36 - [M-S Output]
						Input	Output			
✔	✔					6	4	...0 0001	...0 0001	...0 0001
✔	✔	✔				10	8	...0 0011	...0 0011	...0 0011
✔	✔	✔	✔			14	12	...0 0111	...0 0111	...0 0111
✔	✔	✔	✔	✔		18	16	...0 1111	...0 1111	...0 1111
✔	✔	✔	✔	✔	✔	22	20	...1 1111	...1 1111	...1 1111

TIP For instructions on configuring the I/O for the adapter using **Parameter 25 - [DPI I/O Cfg]** and its Master-Slave Hierarchy using **Parameters 37 - [M-S Input]** and **38 - [M-S Output]**, see Setting the I/O Configuration on page 35.

When using Datalinks, up to 8 [Data In xx] parameters and/or up to 8 [Data Out xx] parameters must be assigned to point to the appropriate device parameters for your application.

7. After setting the information in the device's New Module screen, click **OK**.

The Module Properties screen appears.

8. Click the Connection tab.

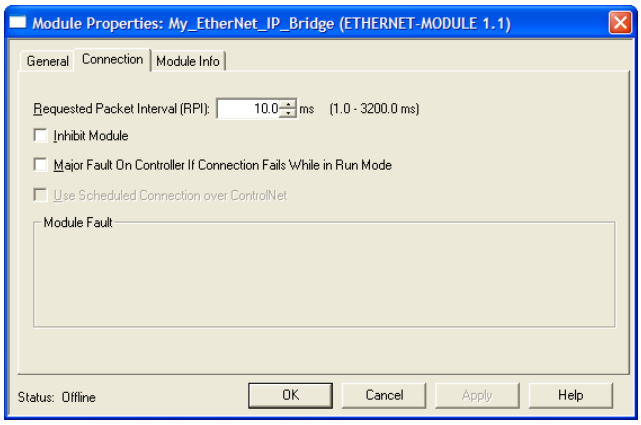

9. In the 'Requested Packet Interval (RPI)' box, set the value to 5.0 ms or greater.

This value determines the maximum interval that a controller should use to move data to and from the adapter. To conserve bandwidth, use higher values for communicating with low priority devices. For this example, leave the 'Inhibit Module' and 'Major Fault …' boxes unchecked.

10. Click **OK**.

The new node ('My_PowerFlex_70_EC_Drive' in this example) now appears under the bridge ('My_EtherNet_IP_Bridge' in this example) in the I/O Configuration folder. If you double-click the Controller Tags, you will see that module-defined data types and tags have been automatically created (Figure 11). After you save and download the configuration, these tags allow you to access the Input and Output data of the drive via the controller's ladder logic.

For this example, all Datalinks (A, B, C, and D) are enabled. The Input Size is set to 12 words and the Output Size is set to 10 words. Also, the following adapter I/O parameters are set to the following values.

Adapter Parameter No.	Setting
25 - [DPI I/O Cfg]	xxxx xxxx xxx1 1111
37 - [M-S Input]	xxxx xxxx xxx1 1111
38 - [M-S Output]	xxxx xxxx xxx1 1111

11. Reset the adapter (see Resetting the Adapter on page 43) or power cycle the device.

For the device speed reference and Datalink parameter values and the adapter setup parameter values, see Drive and Adapter Parameter Settings on page 90.

Figure 11 - Controller Tags

Name	Value	Force Mask	Style	Data Type
+ My_PowerFlex_70_EC_Drive:C	{...}	{...}		AB:ETHERNET_...
− My_PowerFlex_70_EC_Drive:I	{...}	{...}		AB:ETHERNET_...
− My_PowerFlex_70_EC_Drive:I.Data	{...}	{...}	Decimal	INT[12]
+ My_PowerFlex_70_EC_Drive:I.Data[0]	0		Decimal	INT
+ My_PowerFlex_70_EC_Drive:I.Data[1]	0		Decimal	INT
+ My_PowerFlex_70_EC_Drive:I.Data[2]	0		Decimal	INT
+ My_PowerFlex_70_EC_Drive:I.Data[3]	0		Decimal	INT
+ My_PowerFlex_70_EC_Drive:I.Data[4]	0		Decimal	INT
+ My_PowerFlex_70_EC_Drive:I.Data[5]	0		Decimal	INT
+ My_PowerFlex_70_EC_Drive:I.Data[6]	0		Decimal	INT
+ My_PowerFlex_70_EC_Drive:I.Data[7]	0		Decimal	INT
+ My_PowerFlex_70_EC_Drive:I.Data[8]	0		Decimal	INT
+ My_PowerFlex_70_EC_Drive:I.Data[9]	0		Decimal	INT
+ My_PowerFlex_70_EC_Drive:I.Data[10]	0		Decimal	INT
+ My_PowerFlex_70_EC_Drive:I.Data[11]	0		Decimal	INT
− My_PowerFlex_70_EC_Drive:O	{...}	{...}		AB:ETHERNET_...
− My_PowerFlex_70_EC_Drive:O.Data	{...}	{...}	Decimal	INT[10]
+ My_PowerFlex_70_EC_Drive:O.Data[0]	0		Decimal	INT
+ My_PowerFlex_70_EC_Drive:O.Data[1]	0		Decimal	INT
+ My_PowerFlex_70_EC_Drive:O.Data[2]	0		Decimal	INT
+ My_PowerFlex_70_EC_Drive:O.Data[3]	0		Decimal	INT
+ My_PowerFlex_70_EC_Drive:O.Data[4]	0		Decimal	INT
+ My_PowerFlex_70_EC_Drive:O.Data[5]	0		Decimal	INT
+ My_PowerFlex_70_EC_Drive:O.Data[6]	0		Decimal	INT
+ My_PowerFlex_70_EC_Drive:O.Data[7]	0		Decimal	INT
+ My_PowerFlex_70_EC_Drive:O.Data[8]	0		Decimal	INT
+ My_PowerFlex_70_EC_Drive:O.Data[9]	0		Decimal	INT

Save the I/O Configuration to the Controller

After adding the bridge and drive/adapter to the I/O configuration, you must download the configuration to the controller. You should also save the configuration to a file on your computer.

TIP When using RSLogix 5000 software, version 16.00 or later, you can add the I/O configuration of a Generic Profile while the controller is online and in the Run mode.

1. In the RSLogix 5000 window, select **Communications > Download**.

The Download dialog box appears.

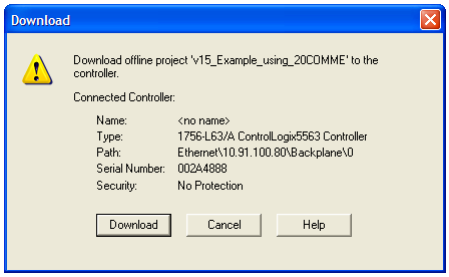

TIP If a message box reports that RSLogix 5000 software is unable to go online, select **Communications > Who Active** to find your controller in the Who Active screen. After finding and selecting the controller, click **Set Project Path** to establish the path. If your controller does not appear, you need to add or configure the EtherNet/IP driver with RSLinx software. See Using RSLinx Classic Software on page 47 and RSLinx online help for details.

2. Click **Download** to download the configuration to the controller.

   When the download is successfully completed, RSLogix 5000 software goes into the Online mode and the I/O OK box in the upper-left of the screen should be steady green.

3. Select **File > Save**.

   If this is the first time you saved the project, the Save As dialog box appears. Navigate to a folder, type a file name, and click **Save** to save the configuration to a file on your computer.

   To be sure that the present project configuration values are saved, RSLogix 5000 software prompts you to upload them. Click **Yes** to upload and save the values.

4. Configure any Datalinks in the drive (for example, Datalink parameters 300...317 in PowerFlex 70 drives) that were enabled in the controller and adapter during I/O configuration (Table 2, Table 3, or Table 4).

   Each Datalink being used must be assigned to a specific parameter in the drive or connected peripheral. If this is not done, the controller will receive or send placeholder data instead of actual drive or peripheral parameter values.

5. Place the controller in Remote Run or Run Mode.

Limitations Using a MicroLogix 1100/1400 Controller

Controlling I/O with explicit messages is relatively complex compared to normal implicit I/O control.

ControlLogix and CompactLogix controllers with EtherNet/IP provide the easiest and most integrated form of implicit I/O control for a device. RSLogix 5000 software, version 16.00 or later, for ControlLogix and CompactLogix controllers contains integrated profiles for PowerFlex drives that, with a few clicks of the mouse, automatically create all controller tags and an implicit connection at the specified Requested Packet Interval to control the drive. This connection is monitored at both ends to verify that the controller and drive are communicating. A watchdog will cause a drive fault if the drive does not respond within approximately 100 milliseconds. Therefore, using a ControlLogix or CompactLogix controller is by far the much preferred method of controlling drives on EtherNet/IP.

If you are not using either of these type of controllers, then devices on EtherNet/IP can be controlled with explicit messages using MicroLogix 1100/1400 controllers with the following limitations:

- An explicit message is a much slower form of control and is non-deterministic. This means that you cannot guarantee how long the device will take to start up or stop when the command is given. Therefore, all equipment used in this manner should be subject to a risk assessment, taking into account the mechanical and electrical implementation.
- A timeout value (in seconds) in the EtherNet/IP adapter will issue a device fault if a message is not received from the controller within the specified time. However, the controller has no way of detecting a loss of communication to the device until the next cycle of explicit messages. This is another factor in the risk assessment.
- Any additional devices to be controlled will require additional explicit messages for their control, and they need to be carefully sequenced. Most controllers have small communication queues (see the User Manual), which need to be carefully managed if messages are not to be lost.
- Each controller has a limited number of communication connections (see its User Manual for maximum connections), which will limit the number of drives that can be connected.

In summary, unlike a ControlLogix or CompactLogix controller, programming a MicroLogix 1100/1400 controller by using RSLogix 500 software with explicit messages is more difficult, and produces a more complex program.

MicroLogix 1100/1400 Controller Example

After the adapter is configured, the connected drive and adapter will be a single node on the network. This section provides the steps needed to configure a simple EtherNet/IP network (see Figure 12). In our example, we will configure a MicroLogix 1100 controller to communicate with a drive using Logic Command/Status, Reference/Feedback, and Datalinks over the network.

Figure 12 - Example MicroLogix 1100/1400 Controller EtherNet/IP Network

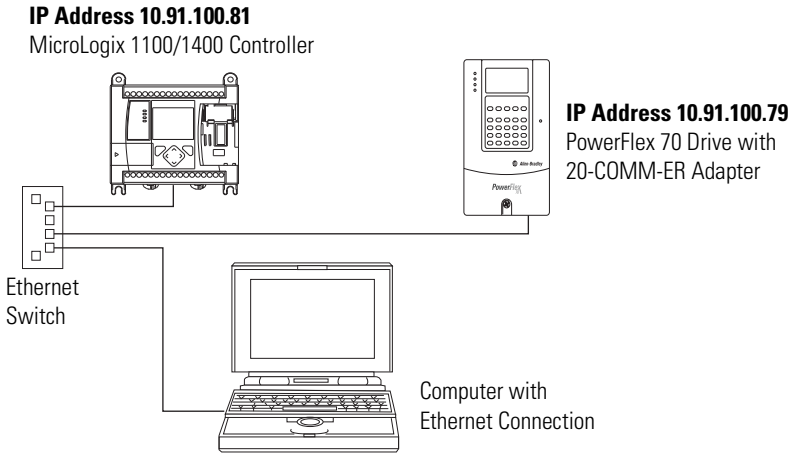

TIP Information for PowerFlex 750-Series drives has been added where applicable.

Configuring Parameters for Network I/O

Because the I/O for the drive is message-based, there is no need to configure any I/O inside the RSLogix 500 project, version 7.00 or later, until using the I/O as described in Chapter 5.

However, to get the adapter to operate with the I/O created in Chapter 5, we need to configure the adapter to accept the I/O and drive to point to the appropriate Datalinks.

1. For this example, the following adapter I/O parameters are set to the following values.

Adapter Parameter No.	Setting
25 - [DPI I/O Cfg]	xxxx xxxx xxx1 1111
37 - [M-S Input]	xxxx xxxx xxx1 1111
38 - [M-S Output]	xxxx xxxx xxx1 1111

2. Reset the adapter (see Resetting the Adapter on page 43) or power cycle the drive.

For the drive speed reference and Datalink parameter values and the adapter setup parameter values, refer to Drive and Adapter Parameter Settings on page 96.

Creating RSLogix 500 Project, Version 7.00 or Later

To transmit (read and write) data between the controller and drive, you must create message instructions that allocate data table addresses in the controller for Logic Command/Status, Reference/Feedback, and Datalinks.

Select the Controller

1. Start RSLogix 500 software.

   The RSLogix 500 window appears.

2. Select **File > New** to display the Select Processor Type screen.

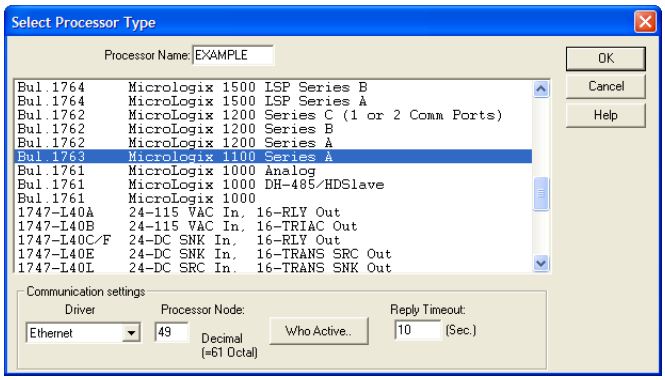

3. Assign a name for the processor.
4. In the list, select the MicroLogix 1100.
5. Choose the appropriate choices for the fields in the screen to match your application.
6. Click **OK**.

   The RSLogix 500 project window appears.

Create MicroLogix 1100/1400 Ladder Logic for the Control Timeout

1. In the RSLogix 500 project window treeview under Program Files double-click on LAD 2.
2. Insert a ladder rung.
3. Double-click on the rung to display the rung editor.
4. Enter **MSG MGxx:n**, where:

   xx is an unused data file number (for example, MG10:n), and
   n is an unused element of the data file chosen for xx (for example, MG10:0)
5. Press **Enter**.
6. Insert another separate rung.
7. Double-click on the rung to display the rung editor.
8. Enter **BST XIC MGxx:n/DN NXB XIC MGxx:n/ER BND OTU MGxx:n/EN**, where:

   xx and n must correspond to the assigned data file number and element (for example, MG10:0) for the message created in steps 2…5.

Important: The information must be entered with appropriate numbers for ‘xx’ and ‘n’ for your application, and with spaces and forward slashes exactly as shown.

9. Press **Enter**.
10. In the MSG instruction (Figure 13), double-click Setup Screen to launch the message configuration screen (Figure 14).

Figure 13 - MicroLogix 1100/1400 Ladder Logic for the Control Timeout

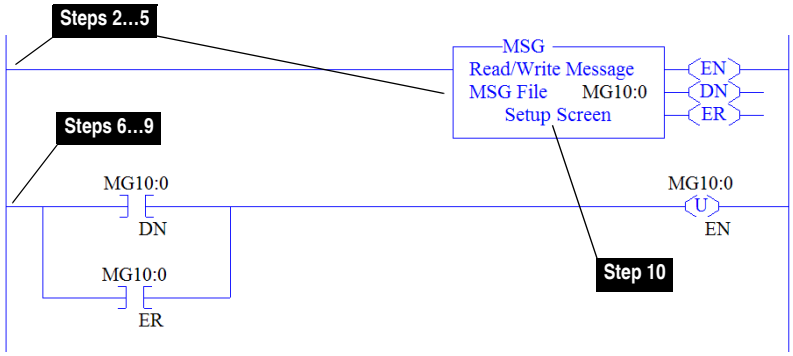

11. Configure the General tab fields by entering or verifying the information shown in the message configuration screen.

Figure 14 - MicroLogix 1100/1400 Message Configuration Screens for the Control Timeout

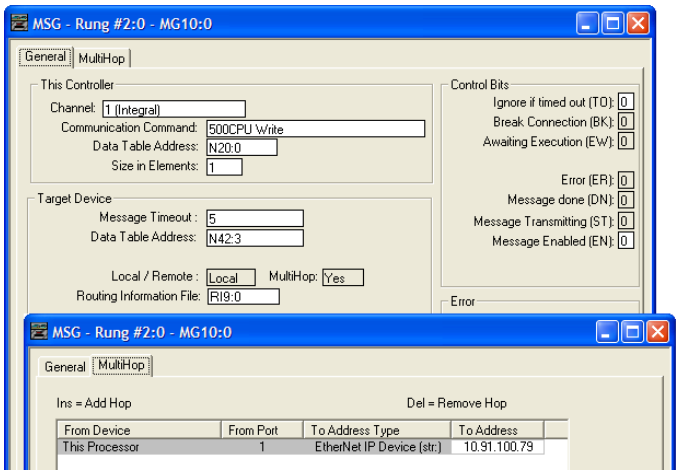

General Tab Box	Setting
This Controller (data for MicroLogix 1100)	
Channel	**1 (integral)**. Controller port to which the network is connected.
Communication Command	**500CPU Write**. The controller type and command type for the controller to read or write data. Because the MicroLogix 1100 is part of the SLC-500 controller family, the '500CPU' controller type was selected. The 'Write' command type was selected to write the control timeout value to the drive.
Data Table Address (1)	**N20:0**. An unused controller data table address containing the control timeout value to be written.
Size in Elements (2)	**1**. Number of elements (words) to be transferred. Each element size is a 16-bit integer.
Target Device (data for adapter/drive)	
Message Timeout	**5**. Message timeout duration in seconds.
Data Table Address (3)	**N42:3**. Specific starting address of the destination file in the drive.
Routing Information File	**RI9:0**. An unused routing information file for the controller.
MultiHop Tab Box	**Setting**
To Address	**10.91.100.79.** The IP address of the adapter connected to the drive.

(1) For details on data table addresses for this example project, see Table 11…Table 14 starting on page 98.

(2) For details to determine element size for a specific drive, see Understanding Controller Data Table Addresses on page 97.

(3) For details on setting the control timeout value and its function, see N-Files on page 192. The Control Timeout (N42:3) is stored in RAM. If the 20-COMM-ER adapter is power cycled, the Control Timeout Message must be re-sent. If the Control Timeout is not changed from a non-zero value, the control message (page 75) will error out.

TIP The Control Timeout (N42:3) must be changed to a non-zero value (5…20 seconds recommended). If the Control Timeout is not changed from a non-zero value, the control message (page 75) will error out. The Control Timeout is stored in RAM. If the adapter is power cycled, the Control Timeout Message must be re-sent.

Create MicroLogix 1100/1400 Ladder Logic for the Logic Status, Feedback, and Datalink Out

1. Insert another separate rung.
2. Double-click on the rung to display the rung editor.
3. Enter **MSG MGxx:n**, where:

   xx is an unused data file number (for example, MG11:n), and
   n is an unused element of the data file chosen for xx (for example, MG11:0)
4. Press **Enter**.
5. Insert another separate rung.
6. Double-click on the rung to display the rung editor.
7. Enter **BST XIC MGxx:n/DN NXB XIC MGxx:n/ER BND OTU MGxx:n/EN**, where:

   xx and n must correspond to the assigned data file number and element (for example, MG11:0) for the message created in steps 1…4.

Important: The information must be entered with appropriate numbers for ‘xx’ and ‘n’ for your application, and with spaces and forward slashes exactly as shown.

8. Press **Enter**.
9. In the MSG instruction (Figure 15), double-click Setup Screen to launch the message configuration screen (Figure 16).

Figure 15 - MicroLogix 1100/1400 Ladder Logic for the Logic Status, Feedback, and Datalink Out

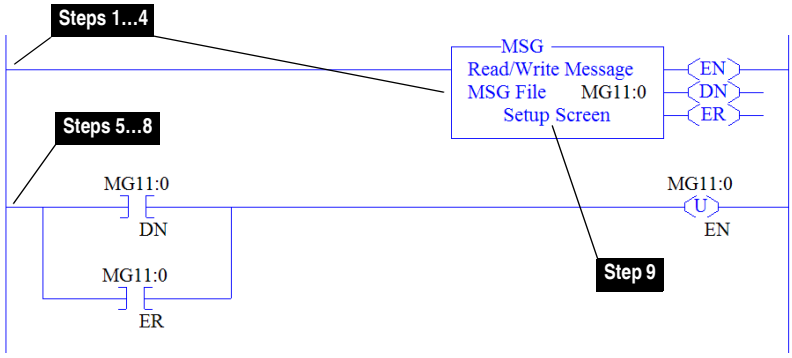

10. Configure the General tab fields by entering or verifying the information shown in the message configuration screen.

Figure 16 - MicroLogix 1100/1400 Message Configuration Screens for the Logic Status, Feedback, and Datalink Out

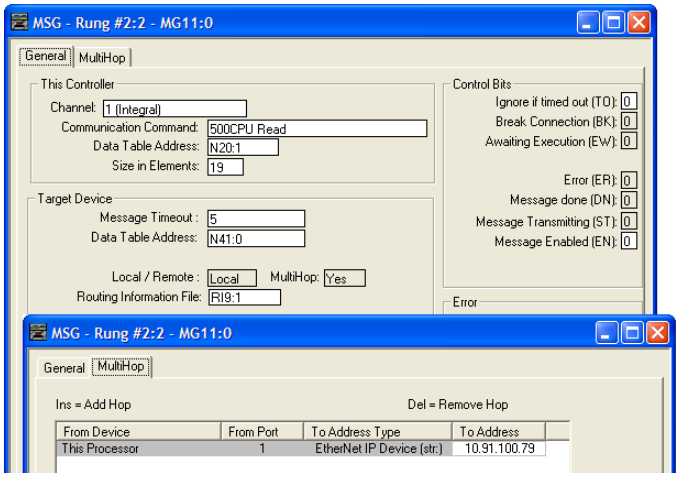

General Tab Box	Setting
This Controller (data for MicroLogix 1100)	
Channel	**1 (integral)**. Controller port to which the network is connected.
Communication Command	**500CPU Read**. The controller type and command type for the controller to read or write data. Because the MicroLogix 1100 is part of the SLC-500 controller family, the '500CPU' controller type was selected. The 'Read' command type was selected to read data from the drive.
Data Table Address (1)	**N20:1**. An unused controller data table address containing the data to be read from the drive.
Size in Elements (2)	**19**. Number of elements (words) to be transferred. Each element size is a 16-bit integer.
Target Device (data for adapter/drive)	
Message Timeout	**5**. Message timeout duration in seconds.
Data Table Address (3)	**N41:0**. Specific starting address of the source file in the drive.
Routing Information File	**RI9:1**. An unused routing information file for the controller.
MultiHop Tab Box	**Setting**
To Address	**10.91.100.79.** The IP address of the adapter connected to the drive.

(1) For details on data table addresses for this example project, see Table 11…Table 14 starting on page 98.

(2) For details to determine element size for a specific drive, see Understanding Controller Data Table Addresses on page 97.

(3) For N-File details, see N-Files on page 192.

Create MicroLogix 1100/1400 Ladder Logic for the Logic Command, Reference, and Datalink In

1. Insert another separate rung.
2. Double-click on the rung to display the rung editor.
3. Enter **MSG MGxx:n**, where:

   xx is an unused data file number (for example, MG12:n), and
   n is an unused element of the data file chosen for xx (for example, MG12:0)
4. Press **Enter**.
5. Insert another separate rung.
6. Double-click on the rung to display the rung editor.
7. Enter **BST XIC MGxx:n/DN NXB XIC MGxx:n/ER BND OTU MGxx:n/EN**, where:

   xx and n must correspond to the assigned data file number and element (for example, MG12:0) for the message created in steps 1…4.

Important: The information must be entered with appropriate numbers for ‘xx’ and ‘n’ for your application, and with spaces and forward slashes exactly as shown.

8. Press **Enter**.
9. In the MSG instruction (Figure 17), double-click Setup Screen to launch the message configuration screen (Figure 18).

Figure 17 - MicroLogix 1100/1400 Ladder Logic for the Logic Command, Reference, and Datalink In

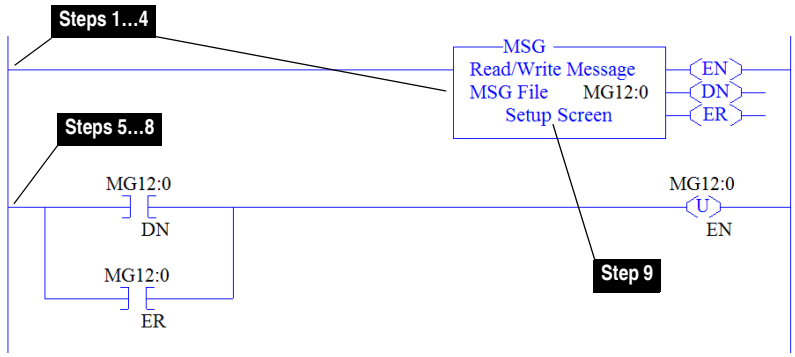

10. Configure the General tab fields by entering or verifying the information shown in the message configuration screen.

Figure 18 - MicroLogix 1100/1400 Message Configuration Screens for the Logic Command, Reference, and Datalink In

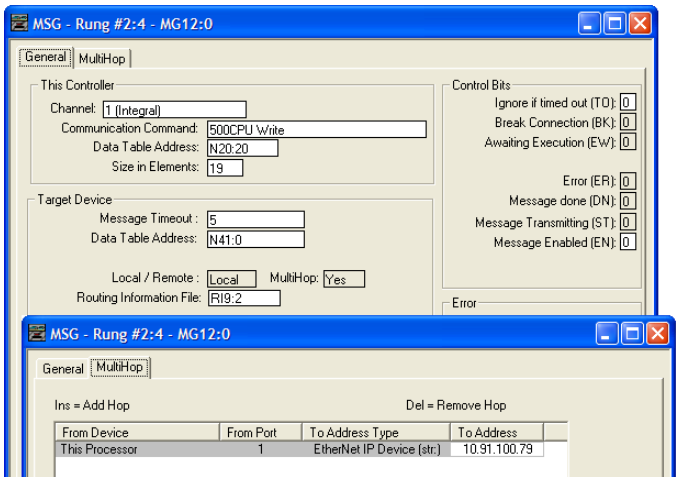

General Tab Box	Setting
This Controller (data for MicroLogix 1100)	
Channel	**1 (integral)**. Controller port to which the network is connected.
Communication Command	**500CPU Write**. The controller type and command type for the controller to read or write data. Because the MicroLogix 1100 is part of the SLC-500 controller family, the '500CPU' controller type was selected. The 'Write' command type was selected to write data to the drive.
Data Table Address (1)	**N20:20**. An unused controller data table address containing the data to be written to the drive.
Size in Elements (2)	**19**. Number of elements (words) to be transferred. Each element size is a 16-bit integer.
Target Device (data for adapter/drive)	
Message Timeout	**5**. Message timeout duration in seconds.
Data Table Address (3)	**N41:0**. Specific starting address of the destination file in the drive.
Routing Information File	**RI9:2**. An unused routing information file for the controller.
MultiHop Tab Box	**Setting**
To Address	**10.91.100.79.** The IP address of the adapter connected to the drive.

(1) For details on data table addresses for this example project, see Table 11…Table 14 starting on page 98.

(2) For details to determine element size for a specific drive, see Understanding Controller Data Table Addresses on page 97.

(3) For N-File details, see N-Files on page 192.

TIP This message will error out if the Control Timeout value is not changed from a non-zero value. Refer to page 71 for writing a value to the Control Timeout.

TIP If the controller is controlling more than one drive, it is recommended to intersperse the control I/O messaging for each drive to conserve network bandwidth and decrease response time. That is, sequence the message instructions for each drive so that its group of messages will occur at a different time than those for another drive.

Notes:

Using the I/O

This chapter provides information and examples that explain how to control, configure, and monitor a PowerFlex 7-Class drive or SMC using the configured I/O.

Topic	Page
About I/O Messaging	79
Understanding the I/O Image	80
Using Logic Command/Status	84
Using Reference/Feedback	84
Using Datalinks	86
Example Ladder Logic Program Information	87
ControlLogix Controller Example	88

ATTENTION: Risk of injury or equipment damage exists. The examples in this publication are intended solely for purposes of example. There are many variables and requirements with any application. Rockwell Automation, Inc. does not assume responsibility or liability (to include intellectual property liability) for actual use of the examples shown in this publication.

About I/O Messaging

On CIP-based networks, including EtherNet/IP, I/O connections are used to transfer the data which controls the PowerFlex drive or SMC and sets its Reference. I/O can also be used to transfer data to and from Datalinks.

The adapter provides many options for configuring and using I/O, including the following:

- Configuring the size of I/O by enabling or disabling the Logic Command/Reference and Datalinks.
- Setting a Master-Slave or Peer-to-Peer hierarchy.

Chapter 3, Configuring the Adapter, and Chapter 4, Configuring the I/O, discuss how to configure the adapter and controller on the network for these options. The defines the different options. This chapter discusses how to use I/O after you have configured the adapter and controller.

Understanding the I/O Image

The terms 'input' and 'output' are defined from the controller's point of view. Therefore, output I/O is data that is produced by the controller and consumed by the adapter. Input I/O is status data that is produced by the adapter and consumed as input by the controller. The I/O image will vary based on the following:

- Size (either 16-bit or 32-bit) of the Reference/Feedback words and Datalink words used by the device. To determine the size of the Reference/Feedback and Datalinks, view adapter **Parameters 20 - [Ref/Fdbk Size]** and **21- [Datalink Size]**. For information to access parameters, see Using the PowerFlex 7-Class HIM on page 28.

- Configuration of I/O (**Parameter 25 - [DPI I/O Cfg]**). If all I/O is not enabled, the image is truncated. The image always uses consecutive words starting at word 0.

- **ControlLogix/CompactLogix Controllers only**—The drive profile used in RSLogix 5000 software (device Add-on Profile in version 16.00 or later, Classic Profile in versions 13.00...15.00, or Generic Profile in all versions).

ControlLogix Controller Image

Since the device Add-on Profile in RSLogix 5000 software, version 16.00 or later, and the Classic Profile, versions 13.00...15.00, provide descriptive controller tags, the I/O image (tag size and location) is automatically configured based on the device being used. When using the Generic Profile (page 62) in RSLogix 5000 software, however, controller tags are not descriptive or defined.

The ControlLogix controller I/O image changes depending on the size of the device's Reference/Feedback and Datalinks. Table , Table , and Table show the I/O image when using various PowerFlex 7-Class drives, and all Datalinks enabled.

Table 5 - ControlLogix Controller I/O Image for Devices with 16-bit Reference/ Feedback and 16-bit Datalinks – Using Generic Profile

These products include the following:

- PowerFlex 70 drives with standard or enhanced control
- PowerFlex 700 drives with standard control
- PowerFlex 700H drives
- SMC Flex smart motor controllers
- SMC-50 smart motor controllers

Word	Output I/O
0	Logic Command
1	Reference
2	Datalink In A1
3	Datalink In A2
4	Datalink In B1
5	Datalink In B2
6	Datalink In C1
7	Datalink In C2
8	Datalink In D1
9	Datalink In D2

Word	Input I/O
0	Pad Word
1	Pad Word
2	Logic Status
3	Feedback
4	Datalink Out A1
5	Datalink Out A2
6	Datalink Out B1
7	Datalink Out B2
8	Datalink Out C1
9	Datalink Out C2
10	Datalink Out D1
11	Datalink Out D2

Table 6 - ControlLogix Controller I/O Image for Devices with 16-bit Reference/ Feedback and 32-bit Datalinks – Using Generic Profile

These products include the following:

- PowerFlex 700 drives with vector control
- PowerFlex 700L drives with 700 control
- PowerFlex Digital DC drives
- SMC-50 smart motor controllers

Word	Output I/O
0	Logic Command
1	Reference
2	Datalink In A1 (LSW)
3	Datalink In A1 (MSW)
4	Datalink In A2 (LSW)
5	Datalink In A2 (MSW)
6	Datalink In B1 (LSW)
7	Datalink In B1 (MSW)
8	Datalink In B2 (LSW)
9	Datalink In B2 (MSW)
10	Datalink In C1 (LSW)
11	Datalink In C1 (MSW)
12	Datalink In C2 (LSW)
13	Datalink In C2 (MSW)
14	Datalink In D1 (LSW)
15	Datalink In D1 (MSW)
16	Datalink In D2 (LSW)
17	Datalink In D2 (MSW)

Word	Input I/O
0	Pad Word
1	Pad Word
2	Logic Status
3	Feedback
4	Datalink Out A1 (LSW)
5	Datalink Out A1 (MSW)
6	Datalink Out A2 (LSW)
7	Datalink Out A2 (MSW)
8	Datalink Out B1 (LSW)
9	Datalink Out B1 (MSW)
10	Datalink Out B2 (LSW)
11	Datalink Out B2 (MSW)
12	Datalink Out C1 (LSW)
13	Datalink Out C1 (MSW)
14	Datalink Out C2 (LSW)
15	Datalink Out C2 (MSW)
16	Datalink Out D1 (LSW)
17	Datalink Out D1 (MSW)
18	Datalink Out D2 (LSW)
19	Datalink Out D2 (MSW)

Table 7 - ControlLogix Controller I/O Image for Drives with 32-bit Reference/ Feedback and 32-bit Datalinks – Using Generic Profile

These products include the following:

- PowerFlex 700S drives with Phase I or Phase II control
- PowerFlex 700L drives with 700S control
- PowerFlex 753 drives
- PowerFlex 755 drives

Word	Output I/O
0	Logic Command
1	Not Used
2	Reference (LSW)
3	Reference (MSW)
4	Datalink In A1 (LSW)
5	Datalink In A1 (MSW)
6	Datalink In A2 (LSW)
7	Datalink In A2 (MSW)
8	Datalink In B1 (LSW)
9	Datalink In B1 (MSW)
10	Datalink In B2 (LSW)
11	Datalink In B2 (MSW)
12	Datalink In C1 (LSW)
13	Datalink In C1 (MSW)
14	Datalink In C2 (LSW)
15	Datalink In C2 (MSW)
16	Datalink In D1 (LSW)
17	Datalink In D1 (MSW)
18	Datalink In D2 (LSW)
19	Datalink In D2 (MSW)

Word	Input I/O
0	Pad Word
1	Pad Word
2	Logic Status
3	Not Used
4	Feedback (LSW)
5	Feedback (MSW)
6	Datalink Out A1 (LSW)
7	Datalink Out A1 (MSW)
8	Datalink Out A2 (LSW)
9	Datalink Out A2 (MSW)
10	Datalink Out B1 (LSW)
11	Datalink Out B1 (MSW)
12	Datalink Out B2 (LSW)
13	Datalink Out B2 (MSW)
14	Datalink Out C1 (LSW)
15	Datalink Out C1 (MSW)
16	Datalink Out C2 (LSW)
17	Datalink Out C2 (MSW)
18	Datalink Out D1 (LSW)
19	Datalink Out D1 (MSW)
20	Datalink Out D2 (LSW)
21	Datalink Out D2 (MSW)

MicroLogix 1100/1400 Controller Image

The I/O image for these controllers always has 19 words of output and 19 words of input. However, depending on the size of the device's Reference/Feedback and Datalinks, specific words in the I/O image may not be used. Table 8, Table 9, and Table 10 show the I/O image when using various PowerFlex 7-Class drives, and all Datalinks enabled.

Table 8 - MicroLogix 1100/1400 I/O Image for PowerFlex 70/ 700/700H Drives and SMC Flex (16-bit Reference/Feedback and 16-bit Datalinks)

Word	Output I/O
0	Logic Command
1	Not used
2	Reference (MSW)
3	Not used
4	Datalink In A1 (MSW)
5	Not used
6	Datalink In A2 (MSW)
7	Not used
8	Datalink In B1 (MSW)
9	Not used
10	Datalink In B2 (MSW)
11	Not used
12	Datalink In C1 (MSW)
13	Not used
14	Datalink In C2 (MSW)
15	Not used
16	Datalink In D1 (MSW)
17	Not used
18	Datalink In D2 (MSW)

Word	Input I/O
0	Logic Status
1	Not used
2	Feedback (MSW)
3	Not used
4	Datalink Out A1 (MSW)
5	Not used
6	Datalink Out A2 (MSW)
7	Not used
8	Datalink Out B1 (MSW)
9	Not used
10	Datalink Out B2 (MSW)
11	Not used
12	Datalink Out C1 (MSW)
13	Not used
14	Datalink Out C2 (MSW)
15	Not used
16	Datalink Out D1 (MSW)
17	Not used
18	Datalink Out D2 (MSW)

Table 9 - MicroLogix 1100/1400 I/O Image for PowerFlex 700 VC Drives and SMC-50 Controllers (16-bit Reference/Feedback and 32-bit Datalinks)

Word	Output I/O
0	Logic Command
1	Not used
2	Reference (MSW)
3	Datalink In A1 (LSW)
4	Datalink In A1 (MSW)
5	Datalink In A2 (LSW)
6	Datalink In A2 (MSW)
7	Datalink In B1 (LSW)
8	Datalink In B1 (MSW)
9	Datalink In B2 (LSW)
10	Datalink In B2 (MSW)
11	Datalink In C1 (LSW)
12	Datalink In C1 (MSW)
13	Datalink In C2 (LSW)
14	Datalink In C2 (MSW)
15	Datalink In D1 (LSW)
16	Datalink In D1 (MSW)
17	Datalink In D2 (LSW)
18	Datalink In D2 (MSW)

Word	Input I/O
0	Logic Status
1	Not used
2	Feedback (MSW)
3	Datalink Out A1 (LSW)
4	Datalink Out A1 (MSW)
5	Datalink Out A2 (LSW)
6	Datalink Out A2 (MSW)
7	Datalink Out B1 (LSW)
8	Datalink Out B1 (MSW)
9	Datalink Out B2 (LSW)
10	Datalink Out B2 (MSW)
11	Datalink Out C1 (LSW)
12	Datalink Out C1 (MSW)
13	Datalink Out C2 (LSW)
14	Datalink Out C2 (MSW)
15	Datalink Out D1 (LSW)
16	Datalink Out D1 (MSW)
17	Datalink Out D2 (LSW)
18	Datalink Out D2 (MSW)

Table 10 - MicroLogix 1100/1400 I/O Image for PowerFlex 700S Series Drives (32-bit Reference/Feedback and 32-bit Datalinks)

Word	Output I/O
0	Logic Command
1	Reference (LSW)
2	Reference (MSW)
3	Datalink In A1 (LSW)
4	Datalink In A1 (MSW)
5	Datalink In A2 (LSW)
6	Datalink In A2 (MSW)
7	Datalink In B1 (LSW)
8	Datalink In B1 (MSW)
9	Datalink In B2 (LSW)
10	Datalink In B2 (MSW)
11	Datalink In C1 (LSW)
12	Datalink In C1 (MSW)
13	Datalink In C2 (LSW)
14	Datalink In C2 (MSW)
15	Datalink In D1 (LSW)
16	Datalink In D1 (MSW)
17	Datalink In D2 (LSW)
18	Datalink In D2 (MSW)

Word	Input I/O
0	Logic Status
1	Feedback (LSW)
2	Feedback (MSW)
3	Datalink Out A1 (LSW)
4	Datalink Out A1 (MSW)
5	Datalink Out A2 (LSW)
6	Datalink Out A2 (MSW)
7	Datalink Out B1 (LSW)
8	Datalink Out B1 (MSW)
9	Datalink Out B2 (LSW)
10	Datalink Out B2 (MSW)
11	Datalink Out C1 (LSW)
12	Datalink Out C1 (MSW)
13	Datalink Out C2 (LSW)
14	Datalink Out C2 (MSW)
15	Datalink Out D1 (LSW)
16	Datalink Out D1 (MSW)
17	Datalink Out D2 (LSW)
18	Datalink Out D2 (MSW)

Using Logic Command/ Status

The Logic Command is a 16-bit word of control data produced by the scanner and consumed by the adapter. The Logic Status is a 16-bit word of status data produced by the adapter and consumed by the scanner.

This manual contains the bit definitions for most compatible products available at the time of publication in Appendix D, Logic Command/Status Words. For other products, see their documentation.

Using Reference/Feedback

The Reference is produced by the controller and consumed by the adapter. The Feedback is produced by the adapter and consumed by the controller. The size of the Reference/Feedback is determined by the drive and displayed using adapter **Parameter 20 - [Ref/Fdbk Size]**.

Size	Valid Values
16-bit	-32768 to 32767
32-bit	-2147483648 to 2147483647

When the Reference and Feedback are enabled and a ControlLogix controller with a device Add-on Profile or Classic Profile is used, specific controller tags are automatically created, sized (16-bit or 32-bit), and placed in the I/O image.

PowerFlex 7-Class Drives

The Reference value is an unscaled value; it is NOT in Hertz or RPM. The Reference uses a '32767' scale. The '32767' endpoint of the scale is equal to the value of drive parameter 55 - [Maximum Freq], which has a default value of 130 Hz. For all PowerFlex 70/700 drives, default scaling is 0...15123 which is equal to 0...60.0 Hz. This is based on the formula shown below. Reference scaling is limited by drive parameter 82 - [Maximum Speed]. If the default value of 60 Hz. for parameter 82 - [Maximum Speed] is changed, the speed Reference scaling also changes. To determine Reference scaling, use the following formula:

(Parameter 82 ÷ Parameter 55) * 32767 = Scaling

Using drive parameter 82 and 55 default values, speed Reference scaling is:

(60 Hz ÷ 130 Hz) * 32767 = 15123

Therefore, 0...15123 = 0...60.0 Hz.

If parameter 82 - [Maximum Speed] is changed to 90 Hz, then:

(90 Hz ÷ 130 Hz) * 32767 = 22685

Therefore, 0...22685 = 0...90.0 Hz.

A graphic representation of this Reference scaling is shown below.

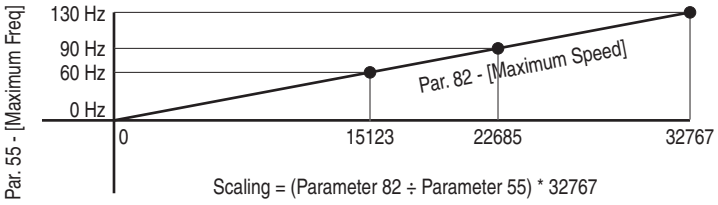

For PowerFlex 70 EC drives, firmware 2.xxx or later, or PowerFlex 700 VC drives, firmware 3.xxx or later, drive parameter 298 - [DPI Ref Select] was added to simplify scaling for the speed Reference. When drive parameter 298 - [DPI Ref Select] is set to its default '0' (Max Freq), the speed Reference scaling is as shown above. However, when parameter 298 - [DPI Ref Select] is set to '1' (Max Speed), the speed Reference scaling is equal to parameter 82 - [Max Speed]:

Parameter 82 = Scaling

Using the parameter 82 default value, speed Reference scaling is:

0...32767 = 0...60.0 Hz.

If parameter 82 - [Maximum Speed] is changed to 90 Hz, then:

90 Hz = 32767

Speed Feedback uses the same scaling as the speed Reference.

TIP For PowerFlex 700 VC drives, firmware 3.xxx or later, parameter 299 - [DPI Fdbk Select] enables you to select the feedback data coming from the drive over DPI. The default is 'Speed Fdbk' in Hz or RPM determined by parameter 079 - [Speed Units]. The data selection for parameter 299 is also displayed on the 1st line of the HIM and on DriveExplorer and DriveExecutive software screens in the drive status area of the screen.

The controller in the system sends a reference to the SMC, but it is not used for control purposes in the current release.

The SMC products use the feedback to send motor current information.

Using Datalinks

A Datalink is a mechanism used by PowerFlex drives and SMCs to transfer data to and from the controller. Datalinks allow a device parameter value to be read or written without using an Explicit Message. When enabled, each Datalink occupies two 16-bit or 32-bit words in both the input and output image. Use adapter **Parameter 21 - [Datalink Size]** to determine whether the drive uses 16-bit or 32-bit words for Datalinks.

Rules for Using Datalinks

- Each set of Datalink parameters in a device can be used by only one adapter. If more than one adapter is connected to a single device, multiple adapters cannot use the same Datalink.
- Parameter settings in the device determine the data passed through the Datalink mechanism. See the documentation for your device.
- When you use a Datalink to change a value, the value is NOT written to the Nonvolatile Storage (NVS). The value is stored in volatile memory and lost when the device loses power. Therefore, use Datalinks when you need to change a value of a parameter frequently.

Using 16-Bit Datalinks to Read/Write 32-Bit Parameters

This subsection only pertains to the SMC Flex and PowerFlex 70 (SC or EC), PowerFlex 700 (SC), and PowerFlex 700H drives which use 16-bit Datalinks. To read or write a 32-bit parameter using 16-bit Datalinks, typically both Datalinks of a pair (A, B, C, D) are set to the same 32-bit parameter. For example, to read parameter 10 - [Elapsed Run Time] in a PowerFlex 70 drive, both Datalink A1 Out (Parameter 310) and Datalink A2 Out (Parameter 311) are set to '10'. Datalink A1 Out will contain the least significant word (LSW) and Datalink A2 Out will contain the most significant word (MSW).

32-bit data is stored in binary as follows:

MSW	2^{31} through 2^{16}
LSW	2^{15} through 2^{0}

In this example, the parameter 10 - [Elapsed Run Time] value of 6553.9 Hrs is read as '6553.9' in Datalink A1 Out (Parameter 310) and Datalink A2 Out (Parameter 311).

Datalink	Word	Parameter	Data (Hex)
A1 Out	LSW	10	0003
A2 Out	MSW	10	0001

Conversion Example:

Parameter 010 - [Elapsed Run Time] = 6553.9 Hrs
MSW = $0001_{hex} = 0001_{binary} = 2^{16} = 65536$
LSW = 0003_{hex} =3
Engineering Value = 65536 + 3 = 65539
Parameter 10 Displayed Value = 6553.9 Hrs

Regardless of the Datalink combination, Datalink x1 Out will always contain the LSW and Datalink x2 Out will always contain the MSW. In the following example, the PowerFlex 70 drive parameter 242 - [Power Up Marker] contains a value of 88.4541 hours.

Datalink	Word	Parameter	Data (Hex)
A2 Out	MSW	242	000D
B1 Out	LSW	242	7F3D

Conversion Example:

Parameter 242 - [Power Up Marker] = 88.4541 hours
MSW = $000D_{hex} = 1101_{binary} = 2^{19} + 2^{18} + 2^{16} = 851968$
LSW = $7F3D_{hex} = 32573$
Engineering Value = 851968 + 32573 = 884541
Parameter 242 Displayed Value = 88.4541 Hrs

Example Ladder Logic Program Information

The example ladder logic programs in the sections of this chapter are intended for and operate PowerFlex 7-Class drives and SMC Flex controllers.

Functions of the Example Programs

The example programs enable you to do the following:

- Receive Logic Status information from the drive.
- Send a Logic Command to control the drive (for example, start, stop).
- Send a Reference to the drive and receive Feedback from the drive.
- Send/receive Datalink data to/from the drive.

Logic Command/Status Words

These examples use the Logic Command word and Logic Status word for PowerFlex 70/700 drives. See Appendix D to view details. The definition of the bits in these words may vary if you are using a different DPI device. See the documentation for your device.

ControlLogix Controller Example

Creating Ladder Logic Using the RSLogix 5000 Device Add-on Profiles, Version 16.00 or Later

Because the device Add-on Profile automatically created descriptive controller tags (Figure 9) for the entire I/O image in Chapter 4, you can use these tags to directly control and monitor the device without creating any ladder logic program. However, if you intend to use Human Machine Interface devices (PanelView, and so forth) to operate the device and view its status, you will need to create descriptive user-defined Program tags (Figure 19) and a ladder logic program that will pass the Controller tag data to the Program tags.

Figure 19 - ControlLogix Program Tags for Device Add-on Profile Ladder Logic Program Example

Name	Style	Data Type
Command_Clear_Faults	Decimal	BOOL
Command_Forward_Reverse	Decimal	BOOL
Command_Jog	Decimal	BOOL
Command_Start	Decimal	BOOL
Command_Stop	Decimal	BOOL
⊞ Speed_Feedback	Decimal	DINT
⊞ Speed_Reference	Decimal	DINT
Status_Active	Decimal	BOOL
Status_At_Speed	Decimal	BOOL
Status_Faulted	Decimal	BOOL
Status_Forward	Decimal	BOOL
Status_Ready	Decimal	BOOL
Status_Reverse	Decimal	BOOL

An example ladder logic program that uses the automatically created descriptive Controller tags and passes their data to the user-defined Program tags is shown in Figure 20 and Figure 21. Note that the prefix for the device Controller tags is determined by the name assigned when configuring the I/O (Chapter 4).

Figure 20 - ControlLogix Example Ladder Logic Program Using a Device Add-on Profile for Logic Status/Feedback

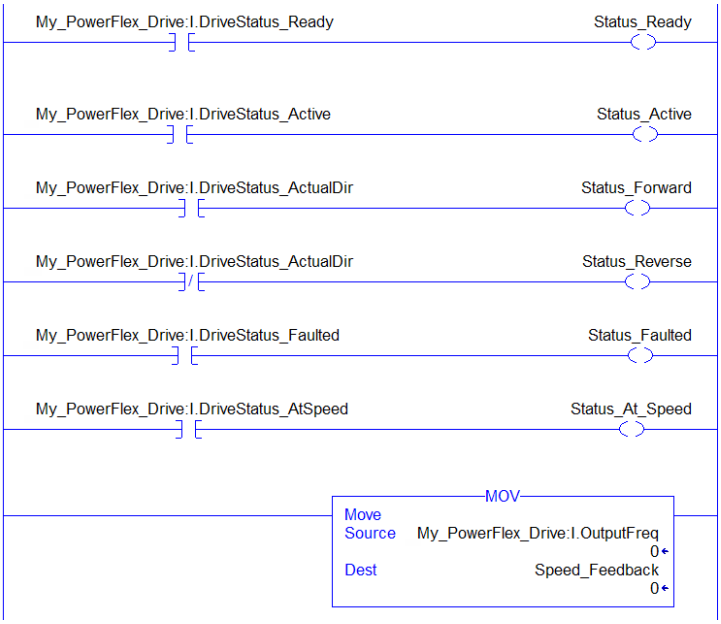

Figure 21 - ControlLogix Example Ladder Logic Program Using a Device Add-on Profile for Logic Command/Reference

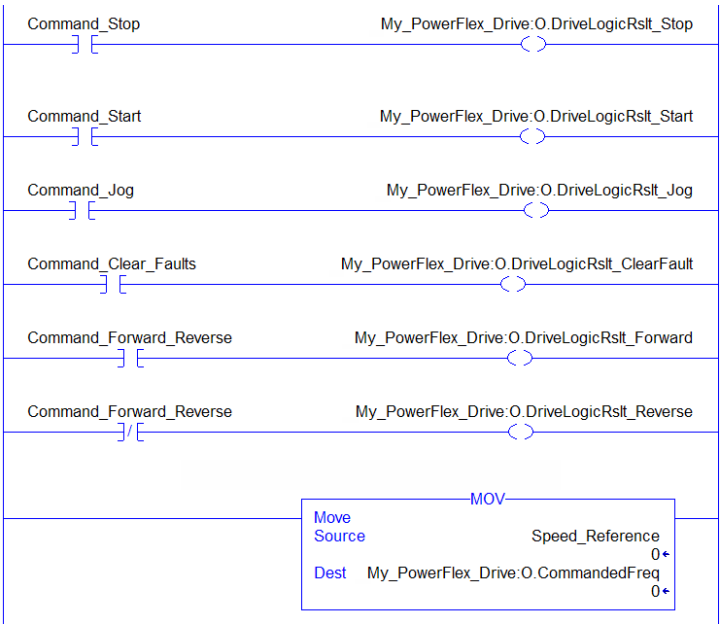

Creating Ladder Logic Using the RSLogix 5000 Classic Profile, Versions 1300…15.00

Since the RSLogix 5000 Classic Profile has been significantly improved upon by RSLogix 5000 device Add-on Profiles, version 16.00 or later, we highly

recommended using the RSLogix 5000 device Add-on Profiles to take advantage of their benefits (more intuitive, time saving, and less likely to make ladder logic program errors).

Creating Ladder Logic Using the RSLogix 5000 Generic Profile, All Versions

Drive and Adapter Parameter Settings

The following drive and adapter settings were used for the example ladder logic program in this section.

Device	Parameter	Value	Description
PowerFlex 70 EC Drive	90 - [Speed Ref A Sel]	22 (DPI Port 5)	Assigns 20-COMM-ER to be used for the Reference.
	300 - [Data In A1]	140	Points to Par. 140 - [Accel Time 1]
	301 - [Data In A2]	142	Points to Par. 142 - [Decel Time 1]
	302 - [Data In B1]	100	Points to Par. 100 - [Jog Speed]
	303 - [Data In B2]	155	Points to Par. 155 - [Stop Mode A]
	304 - [Data In C1]	101	Points to Par. 101 - [Preset Speed 1]
	305 - [Data In C2]	102	Points to Par. 102 - [Preset Speed 2]
	306 - [Data In D1]	103	Points to Par. 103 - [Preset Speed 3]
	307 - [Data In D2]	104	Points to Par. 104 - [Preset Speed 4]
	310 - [Data Out A1]	140	Points to Par. 140 - [Accel Time 1]
	311 - [Data Out A2]	142	Points to Par. 142 - [Decel Time 1]
	312 - [Data Out B1]	100	Points to Par. 100 - [Jog Speed]
	313 - [Data Out B2]	155	Points to Par. 155 - [Stop Mode A]
	314 - [Data Out C1]	101	Points to Par. 101 - [Preset Speed 1]
	315 - [Data Out C2]	102	Points to Par. 102 - [Preset Speed 2]
	316 - [Data Out D1]	103	Points to Par. 103 - [Preset Speed 3]
	317 - [Data Out D2]	104	Points to Par. 104 - [Preset Speed 4]
20-COMM-ER Adapter	04 - [IP Addr Cfg 1] ⋮ 07 - [IP Addr Cfg 4]	10.91.100.79	IP address for the adapter.
	08 - [Subnet Cfg 1] ⋮ 11 - [Subnet Cfg 4]	255.255.248.0	Subnet mask for the adapter.
	23 - [DPI I/O Cfg]	xxx1 1111	Enables Cmd/Ref and Datalinks A…D.
	35 - [M-S Input]	xxx1 1111	Configures the I/O Data to be transferred from the controller on the network to the drive.
	36 - [M-S Output]	xxx1 1111	Configures the I/O Data to be transferred from the drive to the controller on the network.

TIP Data In parameters are inputs into the device that come from controller outputs (for example, data to write to a device parameter). Data Out parameters are outputs from the device that go to controller inputs (for example, data to read a device parameter).

Controller Tags

When you add the adapter and drive to the I/O configuration (Chapter 4), RSLogix 5000 software automatically creates generic (non-descriptive) controller tags for them. In this example program, the following controller tags are used.

Figure 22 - ControlLogix Controller Tags for Drive Generic Profile Example Ladder Logic Program

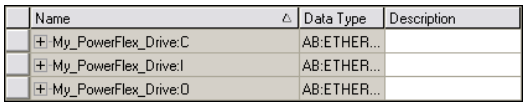

Name	Data Type	Description
⊞ My_PowerFlex_Drive:C	AB:ETHER...	
⊞ My_PowerFlex_Drive:I	AB:ETHER...	
⊞ My_PowerFlex_Drive:O	AB:ETHER...	

You can expand the Input and Output tags to reveal the input and output configuration.

Figure 23 - ControlLogix Input Image for Drive Generic Profile Example Ladder Logic Program

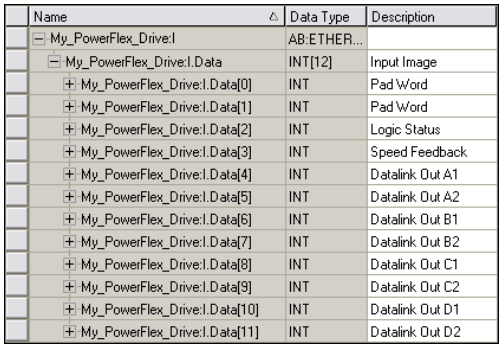

Name	Data Type	Description
⊟ My_PowerFlex_Drive:I	AB:ETHER...	
⊟ My_PowerFlex_Drive:I.Data	INT[12]	Input Image
⊞ My_PowerFlex_Drive:I.Data[0]	INT	Pad Word
⊞ My_PowerFlex_Drive:I.Data[1]	INT	Pad Word
⊞ My_PowerFlex_Drive:I.Data[2]	INT	Logic Status
⊞ My_PowerFlex_Drive:I.Data[3]	INT	Speed Feedback
⊞ My_PowerFlex_Drive:I.Data[4]	INT	Datalink Out A1
⊞ My_PowerFlex_Drive:I.Data[5]	INT	Datalink Out A2
⊞ My_PowerFlex_Drive:I.Data[6]	INT	Datalink Out B1
⊞ My_PowerFlex_Drive:I.Data[7]	INT	Datalink Out B2
⊞ My_PowerFlex_Drive:I.Data[8]	INT	Datalink Out C1
⊞ My_PowerFlex_Drive:I.Data[9]	INT	Datalink Out C2
⊞ My_PowerFlex_Drive:I.Data[10]	INT	Datalink Out D1
⊞ My_PowerFlex_Drive:I.Data[11]	INT	Datalink Out D2

PowerFlex 70 Drive
16-bit Speed Feedback and Datalinks

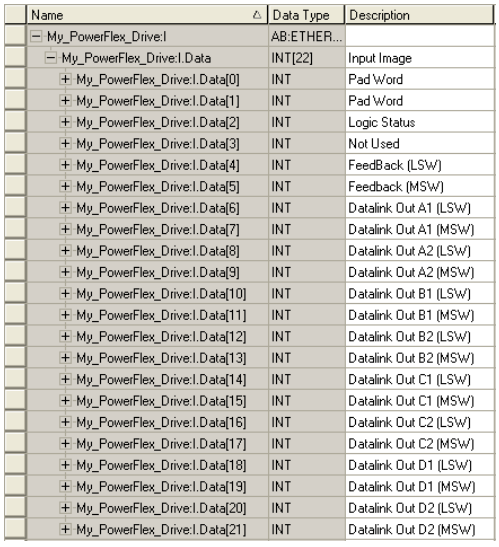

Name	Data Type	Description
⊟ My_PowerFlex_Drive:I	AB:ETHER...	
⊟ My_PowerFlex_Drive:I.Data	INT[22]	Input Image
⊞ My_PowerFlex_Drive:I.Data[0]	INT	Pad Word
⊞ My_PowerFlex_Drive:I.Data[1]	INT	Pad Word
⊞ My_PowerFlex_Drive:I.Data[2]	INT	Logic Status
⊞ My_PowerFlex_Drive:I.Data[3]	INT	Not Used
⊞ My_PowerFlex_Drive:I.Data[4]	INT	FeedBack (LSW)
⊞ My_PowerFlex_Drive:I.Data[5]	INT	Feedback (MSW)
⊞ My_PowerFlex_Drive:I.Data[6]	INT	Datalink Out A1 (LSW)
⊞ My_PowerFlex_Drive:I.Data[7]	INT	Datalink Out A1 (MSW)
⊞ My_PowerFlex_Drive:I.Data[8]	INT	Datalink Out A2 (LSW)
⊞ My_PowerFlex_Drive:I.Data[9]	INT	Datalink Out A2 (MSW)
⊞ My_PowerFlex_Drive:I.Data[10]	INT	Datalink Out B1 (LSW)
⊞ My_PowerFlex_Drive:I.Data[11]	INT	Datalink Out B1 (MSW)
⊞ My_PowerFlex_Drive:I.Data[12]	INT	Datalink Out B2 (LSW)
⊞ My_PowerFlex_Drive:I.Data[13]	INT	Datalink Out B2 (MSW)
⊞ My_PowerFlex_Drive:I.Data[14]	INT	Datalink Out C1 (LSW)
⊞ My_PowerFlex_Drive:I.Data[15]	INT	Datalink Out C1 (MSW)
⊞ My_PowerFlex_Drive:I.Data[16]	INT	Datalink Out C2 (LSW)
⊞ My_PowerFlex_Drive:I.Data[17]	INT	Datalink Out C2 (MSW)
⊞ My_PowerFlex_Drive:I.Data[18]	INT	Datalink Out D1 (LSW)
⊞ My_PowerFlex_Drive:I.Data[19]	INT	Datalink Out D1 (MSW)
⊞ My_PowerFlex_Drive:I.Data[20]	INT	Datalink Out D2 (LSW)
⊞ My_PowerFlex_Drive:I.Data[21]	INT	Datalink Out D2 (MSW)

PowerFlex 700S-Series Drive
32-bit Speed Feedback and Datalinks

Figure 24 - ControlLogix Output Image for Drive Generic Profile Example Ladder Logic Program

Name	Data Type	Description
My_PowerFlex_Drive:O	AB:ETHER...	
My_PowerFlex_Drive:O.Data	INT[10]	Output Image
My_PowerFlex_Drive:O.Data[0]	INT	Logic Command
My_PowerFlex_Drive:O.Data[1]	INT	Speed Reference
My_PowerFlex_Drive:O.Data[2]	INT	Datalink In A1
My_PowerFlex_Drive:O.Data[3]	INT	Datalink In A2
My_PowerFlex_Drive:O.Data[4]	INT	Datalink In B1
My_PowerFlex_Drive:O.Data[5]	INT	Datalink In B2
My_PowerFlex_Drive:O.Data[6]	INT	Datalink In C1
My_PowerFlex_Drive:O.Data[7]	INT	Datalink In C2
My_PowerFlex_Drive:O.Data[8]	INT	Datalink In D1
My_PowerFlex_Drive:O.Data[9]	INT	Datalink In D2

PowerFlex 70 Drive
16-bit Speed Reference and Datalinks

Name	Data Type	Description
My_PowerFlex_Drive:O	AB:ETHER...	
My_PowerFlex_Drive:O.Data	INT[20]	Output Image
My_PowerFlex_Drive:O.Data[0]	INT	Logic Command
My_PowerFlex_Drive:O.Data[1]	INT	Not Used
My_PowerFlex_Drive:O.Data[2]	INT	Reference (LSW)
My_PowerFlex_Drive:O.Data[3]	INT	Reference (MSW)
My_PowerFlex_Drive:O.Data[4]	INT	Datalink In A1 (LSW)
My_PowerFlex_Drive:O.Data[5]	INT	Datalink In A1 (MSW)
My_PowerFlex_Drive:O.Data[6]	INT	Datalink In A2 (LSW)
My_PowerFlex_Drive:O.Data[7]	INT	Datalink In A2 (MSW)
My_PowerFlex_Drive:O.Data[8]	INT	Datalink In B1 (LSW)
My_PowerFlex_Drive:O.Data[9]	INT	Datalink In B1 (MSW)
My_PowerFlex_Drive:O.Data[10]	INT	Datalink In B2 (LSW)
My_PowerFlex_Drive:O.Data[11]	INT	Datalink In B2 (MSW)
My_PowerFlex_Drive:O.Data[12]	INT	Datalink In C1 (LSW)
My_PowerFlex_Drive:O.Data[13]	INT	Datalink In C1 (MSW)
My_PowerFlex_Drive:O.Data[14]	INT	Datalink In C2 (LSW)
My_PowerFlex_Drive:O.Data[15]	INT	Datalink In C2 (MSW)
My_PowerFlex_Drive:O.Data[16]	INT	Datalink In D1 (LSW)
My_PowerFlex_Drive:O.Data[17]	INT	Datalink In D1 (MSW)
My_PowerFlex_Drive:O.Data[18]	INT	Datalink In D2 (LSW)
My_PowerFlex_Drive:O.Data[19]	INT	Datalink In D2 (MSW)

PowerFlex 700S-Series Drive
32-bit Speed Reference and Datalinks

Program Tags

To use the Controller tags that are automatically created, you need to create the following Program tags for this example program.

Figure 25 - ControlLogix Program Tags for Drive Generic Profile Example Ladder Logic Program

Name	Style	Data Type
Command_Clear_Faults	Decimal	BOOL
Command_Forward_Reverse	Decimal	BOOL
Command_Jog	Decimal	BOOL
Command_Start	Decimal	BOOL
Command_Stop	Decimal	BOOL
Speed_Feedback	Decimal	DINT
Speed_Reference	Decimal	DINT
Status_Active	Decimal	BOOL
Status_At_Speed	Decimal	BOOL
Status_Faulted	Decimal	BOOL
Status_Forward	Decimal	BOOL
Status_Ready	Decimal	BOOL
Status_Reverse	Decimal	BOOL

For information on speed Reference and Feedback scaling, see PowerFlex 7-Class Drives on page 85.

Figure 26 - ControlLogix Example Ladder Logic Program Using a Drive Generic Profile for Logic Status/Feedback

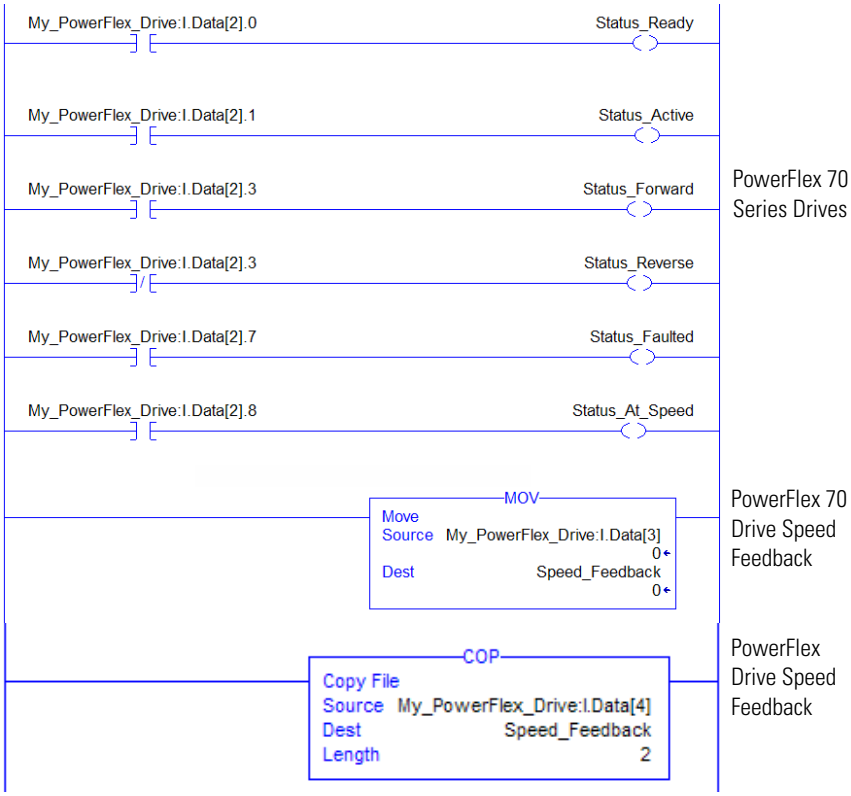

Figure 27 - ControlLogix Example Ladder Logic Program Using a Drive Generic Profile for Logic Command/Reference

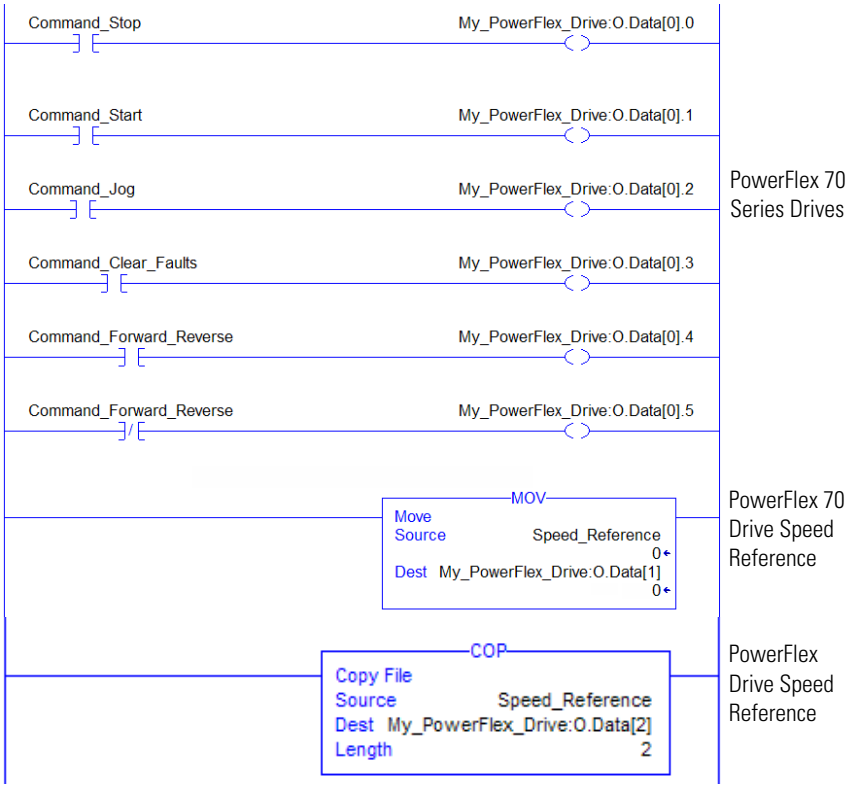

Example Datalink Data

The Datalink data used in the example program is shown in Figure 28. Note that to describe the parameters to which the Datalinks are assigned, you may want to add descriptions to the automatically-created generic controller tags or create a User Defined Data Types (UDDT).

Figure 28 - ControlLogix Example Datalinks for Ladder Logic Program Using a Drive Generic Profile

Name	Value	Data Type	Description
My_PowerFlex_Drive:I	{...}	AB:ETHER...	
My_PowerFlex_Drive:I.Data	{...}	INT[12]	Input Image
My_PowerFlex_Drive:I.Data[0]	0	INT	Pad Word
My_PowerFlex_Drive:I.Data[1]	0	INT	Pad Word
My_PowerFlex_Drive:I.Data[2]	0	INT	Logic Status
My_PowerFlex_Drive:I.Data[3]	0	INT	Speed Feedback
My_PowerFlex_Drive:I.Data[4]	50	INT	Datalink Out A1
My_PowerFlex_Drive:I.Data[5]	50	INT	Datalink Out A2
My_PowerFlex_Drive:I.Data[6]	100	INT	Datalink Out B1
My_PowerFlex_Drive:I.Data[7]	1	INT	Datalink Out B2
My_PowerFlex_Drive:I.Data[8]	200	INT	Datalink Out C1
My_PowerFlex_Drive:I.Data[9]	300	INT	Datalink Out C2
My_PowerFlex_Drive:I.Data[10]	400	INT	Datalink Out D1
My_PowerFlex_Drive:I.Data[11]	500	INT	Datalink Out D2
My_PowerFlex_Drive:O	{...}	AB:ETHER...	
My_PowerFlex_Drive:O.Data	{...}	INT[10]	Output Image
My_PowerFlex_Drive:O.Data[0]	0	INT	Logic Command
My_PowerFlex_Drive:O.Data[1]	0	INT	Speed Reference
My_PowerFlex_Drive:O.Data[2]	50	INT	Datalink In A1
My_PowerFlex_Drive:O.Data[3]	50	INT	Datalink In A2
My_PowerFlex_Drive:O.Data[4]	100	INT	Datalink In B1
My_PowerFlex_Drive:O.Data[5]	1	INT	Datalink In B2
My_PowerFlex_Drive:O.Data[6]	200	INT	Datalink In C1
My_PowerFlex_Drive:O.Data[7]	300	INT	Datalink In C2
My_PowerFlex_Drive:O.Data[8]	400	INT	Datalink In D1
My_PowerFlex_Drive:O.Data[9]	500	INT	Datalink In D2

PowerFlex 70 Drive

Name	Value	Data Type	Description
My_PowerFlex_Drive:I	{...}	AB:ETHER...	
My_PowerFlex_Drive:I.Data	{...}	INT[22]	Input Image
My_PowerFlex_Drive:I.Data[0]	0	INT	Pad Word
My_PowerFlex_Drive:I.Data[1]	0	INT	Pad Word
My_PowerFlex_Drive:I.Data[2]	1295	INT	Logic Status
My_PowerFlex_Drive:I.Data[3]	0	INT	Not Used
My_PowerFlex_Drive:I.Data[4]	25000	INT	Feedback (LSW)
My_PowerFlex_Drive:I.Data[5]	0	INT	Feedback (MSW)
My_PowerFlex_Drive:I.Data[6]	-26970	INT	Datalink Out A1 (LSW)
My_PowerFlex_Drive:I.Data[7]	17432	INT	Datalink Out A1 (MSW)
My_PowerFlex_Drive:I.Data[8]	15562	INT	Datalink Out A2 (LSW)
My_PowerFlex_Drive:I.Data[9]	5457	INT	Datalink Out A2 (MSW)
My_PowerFlex_Drive:I.Data[10]	0	INT	Datalink Out B1 (LSW)
My_PowerFlex_Drive:I.Data[11]	16840	INT	Datalink Out B1 (MSW)
My_PowerFlex_Drive:I.Data[12]	0	INT	Datalink Out B2 (LSW)
My_PowerFlex_Drive:I.Data[13]	0	INT	Datalink Out B2 (MSW)
My_PowerFlex_Drive:I.Data[14]	0	INT	Datalink Out C1 (LSW)
My_PowerFlex_Drive:I.Data[15]	0	INT	Datalink Out C1 (MSW)
My_PowerFlex_Drive:I.Data[16]	0	INT	Datalink Out C2 (LSW)
My_PowerFlex_Drive:I.Data[17]	0	INT	Datalink Out C2 (MSW)
My_PowerFlex_Drive:I.Data[18]	0	INT	Datalink Out D1 (LSW)
My_PowerFlex_Drive:I.Data[19]	0	INT	Datalink Out D1 (MSW)
My_PowerFlex_Drive:I.Data[20]	0	INT	Datalink Out D2 (LSW)
My_PowerFlex_Drive:I.Data[21]	0	INT	Datalink Out D2 (MSW)
My_PowerFlex_Drive:O	{...}	AB:ETHER...	
My_PowerFlex_Drive:O.Data	{...}	INT[20]	Output Image
My_PowerFlex_Drive:O.Data[0]	0	INT	Logic Command
My_PowerFlex_Drive:O.Data[1]	0	INT	Not Used
My_PowerFlex_Drive:O.Data[2]	25000	INT	Reference (LSW)
My_PowerFlex_Drive:O.Data[3]	0	INT	Reference (MSW)
My_PowerFlex_Drive:O.Data[4]	0	INT	Datalink In A1 (LSW)
My_PowerFlex_Drive:O.Data[5]	16680	INT	Datalink In A1 (MSW)
My_PowerFlex_Drive:O.Data[6]	4430	INT	Datalink In A2 (LSW)
My_PowerFlex_Drive:O.Data[7]	1909	INT	Datalink In A2 (MSW)
My_PowerFlex_Drive:O.Data[8]	-2621	INT	Datalink In B1 (LSW)
My_PowerFlex_Drive:O.Data[9]	16664	INT	Datalink In B1 (MSW)
My_PowerFlex_Drive:O.Data[10]	0	INT	Datalink In B2 (LSW)
My_PowerFlex_Drive:O.Data[11]	0	INT	Datalink In B2 (MSW)

PowerFlex 700S-Series Drive

For PowerFlex 7-Class drives, the scaling may need to be multiplied by 10 or 100, depending on the parameter. For more information, see Using Datalinks on page 86.

MicroLogix 1100/1400 Controller Example

Drive and Adapter Parameter Settings

The following drive and adapter settings were used for the example ladder logic program in this section.

Device	Parameter	Value	Description
PowerFlex 70 EC Drive	90 - [Speed Ref A Sel]	22 (DPI Port 5)	Assigns 20-COMM-ER to be used for the Reference.
	300 - [Data In A1]	140	Points to Par. 140 - [Accel Time 1]
	301 - [Data In A2]	142	Points to Par. 142 - [Decel Time 1]
	302 - [Data In B1]	100	Points to Par. 100 - [Jog Speed]
	303 - [Data In B2]	155	Points to Par. 155 - [Stop Mode A]
	304 - [Data In C1]	101	Points to Par. 101 - [Preset Speed 1]
	305 - [Data In C2]	102	Points to Par. 102 - [Preset Speed 2]
	306 - [Data In D1]	103	Points to Par. 103 - [Preset Speed 3]
	307 - [Data In D2]	104	Points to Par. 104 - [Preset Speed 4]
	310 - [Data Out A1]	140	Points to Par. 140 - [Accel Time 1]
	311 - [Data Out A2]	142	Points to Par. 142 - [Decel Time 1]
	312 - [Data Out B1]	100	Points to Par. 100 - [Jog Speed]
	313 - [Data Out B2]	155	Points to Par. 155 - [Stop Mode A]
	314 - [Data Out C1]	101	Points to Par. 101 - [Preset Speed 1]
	315 - [Data Out C2]	102	Points to Par. 102 - [Preset Speed 2]
	316 - [Data Out D1]	103	Points to Par. 103 - [Preset Speed 3]
	317 - [Data Out D2]	104	Points to Par. 104 - [Preset Speed 4]
20-COMM-ER Adapter	04 - [IP Addr Cfg 1] ⋮ 07 - [IP Addr Cfg 4]	10.91.100.79	IP address for the adapter.
	08 - [Subnet Cfg 1] ⋮ 11 - [Subnet Cfg 4]	255.255.248.0	Subnet mask for the adapter.
	23 - [DPI I/O Cfg]	xxx1 1111	Enables Cmd/Ref and Datalinks A…D.
	35 - [M-S Input]	xxx1 1111	Configures the I/O Data to be transferred from the controller on the network to the drive.
	36 - [M-S Output]	xxx1 1111	Configures the I/O Data to be transferred from the drive to the controller on the network.

TIP Data In parameters are inputs into the drive that come from controller outputs (for example, data to write to a drive parameter). Data Out parameters are outputs from the drive that go to controller inputs (for example, data to read a drive parameter).

TIP When using a drive that has 16-bit Datalinks (PowerFlex 70, PowerFlex 700, and PowerFlex 700H drives) to transfer a 32-bit parameter, two contiguous drive Datalink parameters (for example, Data Out A1/A2, B1/B2, etc.) are required. To determine if a parameter is a 32-bit parameter, see the Parameter section in the drive documentation and look for a symbol in the 'No.' column. (All parameters in PowerFlex 700 Series B drives are 32-bit parameters.) For example, parameter 3 - [Output Current] in a PowerFlex 70 EC drive is a 32-bit parameter. When using a drive that has 32-bit Datalinks (PowerFlex 700 VC and PowerFlex 700S), only one drive Datalink parameter is required to transfer any parameter.

Understanding Controller Data Table Addresses

Because MicroLogix 1100/1400 controllers are 16-bit platforms and are used with the 32-bit 20-COMM-ER adapter, the data will be transposed from the least-significant word (LSW) to the most-significant word (MSW) in the controller.

When the I/O was configured (Chapter 4), an available data table address (N20) was used. Figure 29 shows the entire data file address structure for this example.

Figure 29 - Data File Table for Example Ladder Logic Program

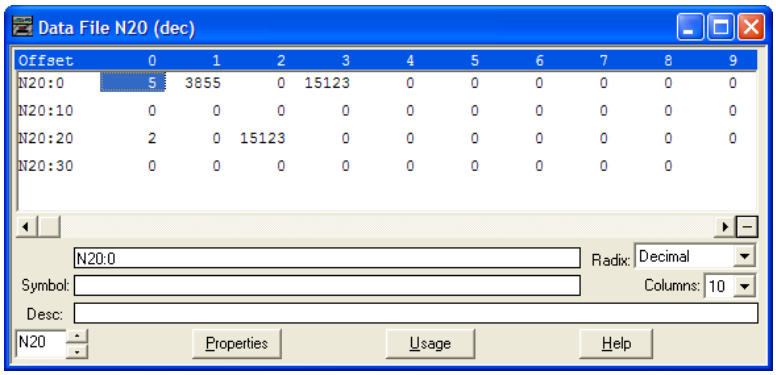

Important: The N20:0 data table address in this example is used to set a control timeout value (in seconds) which determines how long it will take the adapter to detect a communication loss. Enter a valid value (1…32767) for N20:0. A value of zero (0) is not valid, because it disables the timeout and all I/O connections (Logic Command/Status, Reference/Feedback, and Datalinks) intended for the drive will not execute. A timeout value of 5…20 seconds is recommended.

Depending on the drive you are using, Table 11, Table 12, Table 13, or Table 14 show the I/O definitions as they relate to the N20 data table (Figure 29) being used in this example.

When using PowerFlex 70 or 70 EC, PowerFlex 700, PowerFlex 700VC drives, or SMC Flex controllers—which all contain INT (16-bit format) data types, you will read from and write to the MSW data table address in the controller.

When using PowerFlex 700 VC drives or SMC-50 controllers, which contain DINT (32-bit format) data types, you will read from and write to the LSW data table address in the controller.

When using PowerFlex 700S drives, which contain both DINT (32-bit format) and REAL (floating point format) data types, you will always read from and write to the LSW data table address in the controller first. Then if the data value exceeds 16 bits, the remaining value will be in the MSW data table address.

Table 11 - Controller Data Table Addresses for PowerFlex 70/70 EC, PowerFlex 700 Drives, and SMC Flex Controllers

Data Table Address	Description
N20:1	Logic Status (see Appendix D)
N20:2	Reserved
N20:3	Speed Feedback
N20:4	Value of parameter assigned to Parameter 310 [Data Out A1] LSW
N20:5	Value of parameter assigned to Parameter 310 [Data Out A1] MSW
N20:6	Value of parameter assigned to Parameter 311 [Data Out A2] LSW
N20:7	Value of parameter assigned to Parameter 311 [Data Out A2] MSW
N20:8	Value of parameter assigned to Parameter 312 [Data Out B1] LSW
N20:9	Value of parameter assigned to Parameter 312 [Data Out B1] MSW
N20:10	Value of parameter assigned to Parameter 313 [Data Out B2] LSW
N20:11	Value of parameter assigned to Parameter 313 [Data Out B2] MSW
N20:12	Value of parameter assigned to Parameter 314 [Data Out C1] LSW
N20:13	Value of parameter assigned to Parameter 314 [Data Out C1] MSW
N20:14	Value of parameter assigned to Parameter 315 [Data Out C2] LSW
N20:15	Value of parameter assigned to Parameter 315 [Data Out C2] MSW
N20:16	Value of parameter assigned to Parameter 316 [Data Out D1] LSW
N20:17	Value of parameter assigned to Parameter 316 [Data Out D1] MSW
N20:18	Value of parameter assigned to Parameter 317 [Data Out D2] LSW
N20:19	Value of parameter assigned to Parameter 317 [Data Out D2] MSW
N20:20	Logic Command (see Appendix D)
N20:21	Reserved
N20:22	Speed Reference
N20:23	Value of parameter assigned to Parameter 300 [Data In A1] LSW
N20:24	Value of parameter assigned to Parameter 300 [Data In A1] MSW
N20:25	Value of parameter assigned to Parameter 301 [Data In A2] LSW
N20:26	Value of parameter assigned to Parameter 301 [Data In A2] MSW
N20:27	Value of parameter assigned to Parameter 302 [Data In B1] LSW
N20:28	Value of parameter assigned to Parameter 302 [Data In B1] MSW
N20:29	Value of parameter assigned to Parameter 303 [Data In B2] LSW
N20:30	Value of parameter assigned to Parameter 303 [Data In B2] MSW
N20:31	Value of parameter assigned to Parameter 304 [Data In C1] LSW
N20:32	Value of parameter assigned to Parameter 304 [Data In C1] MSW
N20:33	Value of parameter assigned to Parameter 305 [Data In C2] LSW
N20:34	Value of parameter assigned to Parameter 305 [Data In C2] MSW
N20:35	Value of parameter assigned to Parameter 306 [Data In D1] LSW
N20:36	Value of parameter assigned to Parameter 306 [Data In D1] MSW
N20:37	Value of parameter assigned to Parameter 307 [Data In D2] LSW
N20:38	Value of parameter assigned to Parameter 307 [Data In D2] MSW

Table 12 - Controller Data Table Addresses for PowerFlex 700 VC Drives and SMC-50 Controllers

Data Table Address	Description
N20:1	Logic Status (see Appendix D)
N20:2	Reserved
N20:3	Speed Feedback
N20:4	Value of parameter assigned to Parameter 310 [Data Out A1] LSW
N20:5	Value of parameter assigned to Parameter 310 [Data Out A1] MSW
N20:6	Value of parameter assigned to Parameter 311 [Data Out A2] LSW
N20:7	Value of parameter assigned to Parameter 311 [Data Out A2] MSW
N20:8	Value of parameter assigned to Parameter 312 [Data Out B1] LSW
N20:9	Value of parameter assigned to Parameter 312 [Data Out B1] MSW
N20:10	Value of parameter assigned to Parameter 313 [Data Out B2] LSW
N20:11	Value of parameter assigned to Parameter 313 [Data Out B2] MSW
N20:12	Value of parameter assigned to Parameter 314 [Data Out C1] LSW
N20:13	Value of parameter assigned to Parameter 314 [Data Out C1] MSW
N20:14	Value of parameter assigned to Parameter 315 [Data Out C2] LSW
N20:15	Value of parameter assigned to Parameter 315 [Data Out C2] MSW
N20:16	Value of parameter assigned to Parameter 316 [Data Out D1] LSW
N20:17	Value of parameter assigned to Parameter 316 [Data Out D1] MSW
N20:18	Value of parameter assigned to Parameter 317 [Data Out D2] LSW
N20:19	Value of parameter assigned to Parameter 317 [Data Out D2] MSW
N20:20	Logic Command (see Appendix D)
N20:21	Reserved
N20:22	Speed Reference
N20:23	Value of parameter assigned to Parameter 300 [Data In A1] LSW
N20:24	Value of parameter assigned to Parameter 300 [Data In A1] MSW
N20:25	Value of parameter assigned to Parameter 301 [Data In A2] LSW
N20:26	Value of parameter assigned to Parameter 301 [Data In A2] MSW
N20:27	Value of parameter assigned to Parameter 302 [Data In B1] LSW
N20:28	Value of parameter assigned to Parameter 302 [Data In B1] MSW
N20:29	Value of parameter assigned to Parameter 303 [Data In B2] LSW
N20:30	Value of parameter assigned to Parameter 303 [Data In B2] MSW
N20:31	Value of parameter assigned to Parameter 304 [Data In C1] LSW
N20:32	Value of parameter assigned to Parameter 304 [Data In C1] MSW
N20:33	Value of parameter assigned to Parameter 305 [Data In C2] LSW
N20:34	Value of parameter assigned to Parameter 305 [Data In C2] MSW
N20:35	Value of parameter assigned to Parameter 306 [Data In D1] LSW
N20:36	Value of parameter assigned to Parameter 306 [Data In D1] MSW
N20:37	Value of parameter assigned to Parameter 307 [Data In D2] LSW
N20:38	Value of parameter assigned to Parameter 307 [Data In D2] MSW

Table 13 - Controller Data Table Addresses for PowerFlex 700S Drives with Phase I Control

Data Table Address	Description
N20:1	Logic Status (see Appendix D)
N20:2	Speed Feedback LSW
N20:3	Speed Feedback MSW
N20:4	Value of parameter assigned to Parameter 724/725 [Data Out A1] LSW
N20:5	Value of parameter assigned to Parameter 724/725 [Data Out A1] MSW
N20:6	Value of parameter assigned to Parameter 726/727 [Data Out A2] LSW
N20:7	Value of parameter assigned to Parameter 726/727 [Data Out A2] MSW
N20:8	Value of parameter assigned to Parameter 728/729 [Data Out B1] LSW
N20:9	Value of parameter assigned to Parameter 728/729 [Data Out B1] MSW
N20:10	Value of parameter assigned to Parameter 730/731 [Data Out B2] LSW
N20:11	Value of parameter assigned to Parameter 730/731 [Data Out B2] MSW
N20:12	Value of parameter assigned to Parameter 732/733 [Data Out C1] LSW
N20:13	Value of parameter assigned to Parameter 732/733 [Data Out C1] MSW
N20:14	Value of parameter assigned to Parameter 734/735 [Data Out C2] LSW
N20:15	Value of parameter assigned to Parameter 734/735 [Data Out C2] MSW
N20:16	Value of parameter assigned to Parameter 736/737 [Data Out D1] LSW
N20:17	Value of parameter assigned to Parameter 736/737 [Data Out D1] MSW
N20:18	Value of parameter assigned to Parameter 738/739 [Data Out D2] LSW
N20:19	Value of parameter assigned to Parameter 738/739 [Data Out D2] MSW
N20:20	Logic Command (see Appendix D)
N20:21	Speed Reference LSW
N20:22	Speed Reference MSW
N20:23	Value of parameter assigned to Parameter 707/708 [Data In A1] LSW
N20:24	Value of parameter assigned to Parameter 707/708 [Data In A1] MSW
N20:25	Value of parameter assigned to Parameter 709/710 [Data In A2] LSW
N20:26	Value of parameter assigned to Parameter 709/710 [Data In A2] MSW
N20:27	Value of parameter assigned to Parameter 711/712 [Data In B1] LSW
N20:28	Value of parameter assigned to Parameter 711/712 [Data In B1] MSW
N20:29	Value of parameter assigned to Parameter 713/714 [Data In B2] LSW
N20:30	Value of parameter assigned to Parameter 713/714 [Data In B2] MSW
N20:31	Value of parameter assigned to Parameter 715/716 [Data In C1] LSW
N20:32	Value of parameter assigned to Parameter 715/716 [Data In C1] MSW
N20:33	Value of parameter assigned to Parameter 717/718 [Data In C2] LSW
N20:34	Value of parameter assigned to Parameter 717/718 [Data In C2] MSW
N20:35	Value of parameter assigned to Parameter 719/720 [Data In D1] LSW
N20:36	Value of parameter assigned to Parameter 719/720 [Data In D1] MSW
N20:37	Value of parameter assigned to Parameter 721/722 [Data In D2] LSW
N20:38	Value of parameter assigned to Parameter 721/722 [Data In D2] MSW

Table 14 - Controller Data Table Addresses for PowerFlex 700S Drives with Phase II Control

Data Table Address	Description
N20:1	Logic Status (see Appendix D)
N20:2	Speed Feedback LSW
N20:3	Speed Feedback MSW
N20:4	Value of parameter assigned to Parameter 660 [DPI Data Out A1] LSW
N20:5	Value of parameter assigned to Parameter 660 [DPI Data Out A1] MSW
N20:6	Value of parameter assigned to Parameter 661 [DPI Data Out A2] LSW
N20:7	Value of parameter assigned to Parameter 661 [DPI Data Out A2] MSW
N20:8	Value of parameter assigned to Parameter 662 [DPI Data Out B1] LSW
N20:9	Value of parameter assigned to Parameter 662 [DPI Data Out B1] MSW
N20:10	Value of parameter assigned to Parameter 663 [DPI Data Out B2] LSW
N20:11	Value of parameter assigned to Parameter 663 [DPI Data Out B2] MSW
N20:12	Value of parameter assigned to Parameter 664 [DPI Data Out C1] LSW
N20:13	Value of parameter assigned to Parameter 664 [DPI Data Out C1] MSW
N20:14	Value of parameter assigned to Parameter 665 [DPI Data Out C2] LSW
N20:15	Value of parameter assigned to Parameter 665 [DPI Data Out C2] MSW
N20:16	Value of parameter assigned to Parameter 666 [DPI Data Out D1] LSW
N20:17	Value of parameter assigned to Parameter 666 [DPI Data Out D1] MSW
N20:18	Value of parameter assigned to Parameter 667 [DPI Data Out D2] LSW
N20:19	Value of parameter assigned to Parameter 667 [DPI Data Out D2] MSW
N20:20	Logic Command (see Appendix D)
N20:21	Speed Reference LSW
N20:22	Speed Reference MSW
N20:23	Value of parameter assigned to Parameter 651 [DPI Data In A1] LSW
N20:24	Value of parameter assigned to Parameter 651 [DPI Data In A1] MSW
N20:25	Value of parameter assigned to Parameter 652 [DPI Data In A2] LSW
N20:26	Value of parameter assigned to Parameter 652 [DPI Data In A2] MSW
N20:27	Value of parameter assigned to Parameter 653 [DPI Data In B1] LSW
N20:28	Value of parameter assigned to Parameter 653 [DPI Data In B1] MSW
N20:29	Value of parameter assigned to Parameter 654 [DPI Data In B2] LSW
N20:30	Value of parameter assigned to Parameter 654 [DPI Data In B2] MSW
N20:31	Value of parameter assigned to Parameter 655 [DPI Data In C1] LSW
N20:32	Value of parameter assigned to Parameter 655 [DPI Data In C1] MSW
N20:33	Value of parameter assigned to Parameter 656 [DPI Data In C2] LSW
N20:34	Value of parameter assigned to Parameter 656 [DPI Data In C2] MSW
N20:35	Value of parameter assigned to Parameter 657 [DPI Data In D1] LSW
N20:36	Value of parameter assigned to Parameter 657 [DPI Data In D1] MSW
N20:37	Value of parameter assigned to Parameter 658 [DPI Data In D2] LSW
N20:38	Value of parameter assigned to Parameter 658 [DPI Data In D2] MSW

You can use the controller data table addresses to directly control and monitor the drive without creating any ladder logic program. However, if you intend to use Human Machine Interface devices (PanelView, and so forth) to operate the drive and view its status, you will need to create descriptive controller data table addresses (Table 15 and Table 16) and a ladder logic program that will pass that data to the data table addresses used for messaging.

Table 15 - Controller and Program Data Table Address Descriptions for Example Logic Status/Feedback Ladder Logic Program

Description	Controller Data Table Address
Drive Ready	N20:1/0
Drive Active	N20:1/1
Actual Direction (XIO)	N20:1/3
Actual Direction (XIC)	N20:1/3
Drive Faulted	N20:1/7
Drive At Speed	N20:1/8
Speed Feedback	N20:3

Description	Program Data Table Address
Status Ready	B3:1/0
Status Active	B3:1/1
Status Forward	B3:1/3
Status Reverse	B3:1/4
Status Faulted	B3:1/7
Status At Speed	B3:1/8
Speed Feedback	B30:3

Table 16 - Program and Controller Data Table Address Descriptions for Example Logic Command/Reference Ladder Logic Program

Description	Program Data Table Address
Command Stop	B3:20/0
Command Start	B3:20/1
Command Jog	B3:20/2
Command Clear Faults	B3:20/3
Command Forward Reverse (XIO)	B3:20/4
Command Forward Reverse (XIC)	B3:20/4
Speed Reference	N30:22

Description	Controller Data Table Address
Drive Stop	N20:20/0
Drive Start	N20:20/1
Drive Jog	N20:20/2
Drive Clear Faults	N20:20/3
Drive Forward	N20:20/4
Drive Reverse	N20:20/5
Speed Reference	N20:22

An example ladder logic program that uses these descriptive controller data table addresses and passes their data to the descriptive program data table addresses is shown in Figure 30, Figure 31, Figure 32, and Figure 33.

Figure 30 - MicroLogix 1100/1400 Example Ladder Logic Program for Logic Status

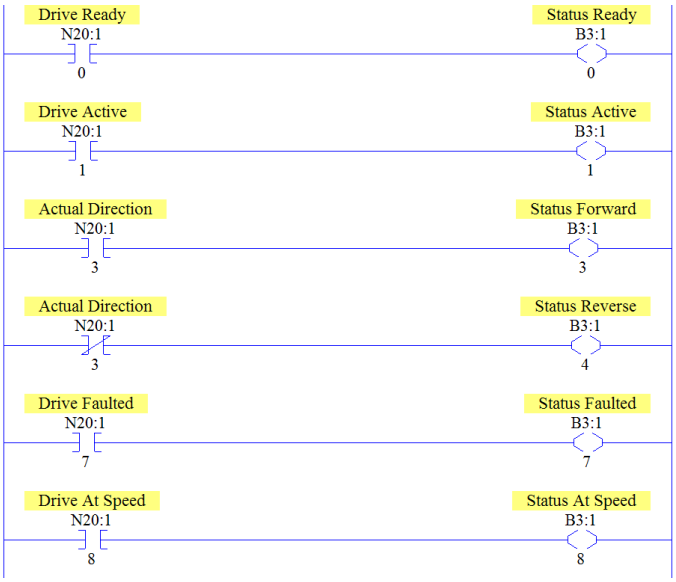

PowerFlex 70 Drives

Figure 31 - MicroLogix 1100/1400 Example Ladder Logic Program for Speed Feedback

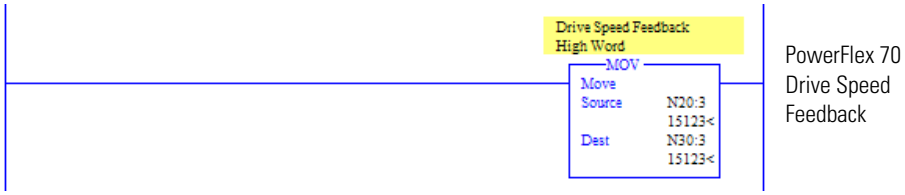

Figure 32 - MicroLogix 1100/1400 Example Ladder Logic Program for Logic Command

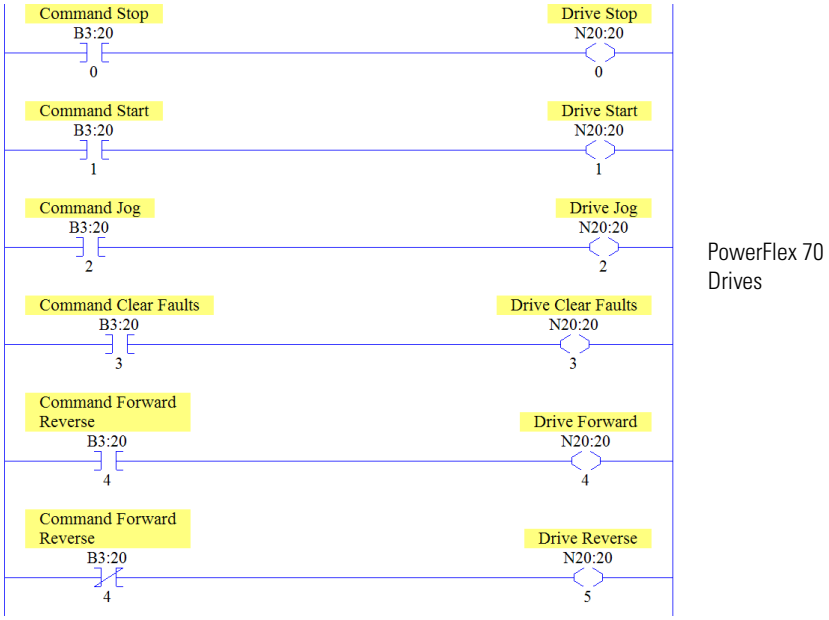

Figure 33 - MicroLogix 1100/1400 Example Ladder Logic Program for Speed Reference

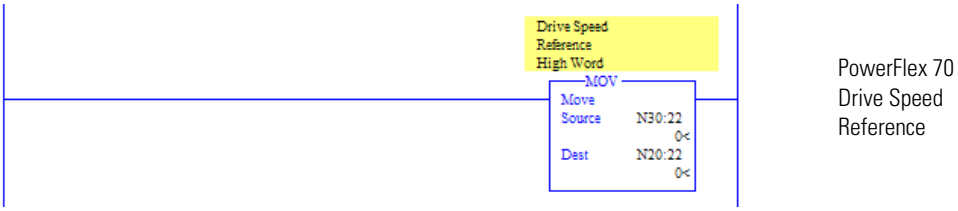

Using Explicit Messaging

This chapter provides information and examples that explain how to use Explicit Messaging to configure and monitor the adapter and connected PowerFlex 7-Class drive or SMC.

Topic	Page
About Explicit Messaging	106
Performing Explicit Messages	106
ControlLogix Controller Examples	108
MicroLogix 1100/1400 Controller Examples	124

ATTENTION: Risk of injury or equipment damage exists. The examples in this publication are intended solely for purposes of example. There are many variables and requirements with any application. Rockwell Automation, Inc. does not assume responsibility or liability (to include intellectual property liability) for actual use of the examples shown in this publication.

ATTENTION: Risk of equipment damage exists. If Explicit Messages are programmed to write parameter data to Nonvolatile Storage (NVS) frequently, the NVS will quickly exceed its life cycle and cause the drive to malfunction. Do not create a program that frequently uses Explicit Messages to write parameter data to NVS. Datalinks do not write to NVS and should be used for frequently changed parameters.

See Chapter 5 for information about the I/O Image, using Logic Command/Status, Reference/Feedback, and Datalinks.

About Explicit Messaging

Explicit Messaging is used to transfer data that does not require continuous updates. With Explicit Messaging, you can configure and monitor a slave device's parameters on the network.

Important: When an explicit message is performed, by default no connection is made since it is an 'unconnected' message. When timing of the message transaction is important, you can create a dedicated message connection between the controller and drive by checking the 'Connected' box on the Communications tab message configuration screen during message setup. These message connections are in addition to the I/O connection. However, the trade off for more message connections is decreased network performance. If your application cannot tolerate this, do not check the 'Connected' box, which is recommended.

Important: PowerFlex 7-Class drives have explicit messaging limitations. Table 17 shows the EtherNet/IP Object Class code compatibilities for these drives.

Table 17 - Explicit Messaging Class Code Compatibility with Drives

EtherNet/IP Object Class Code	PowerFlex 7-Class Drives	Explicit Messaging Function
Parameter Object 0x0F	Yes	Single parameter reads/writes
DPI Parameter Object 0x93	Yes	Single and scattered parameter reads/writes

Performing Explicit Messages

There are five basic events in the Explicit Messaging process. The details of each step will vary depending on the type of controller being used. See the documentation for your controller.

Important: There must be a request message and a response message for all Explicit Messages, whether you are reading or writing data.

Figure 34 - Explicit Message Process

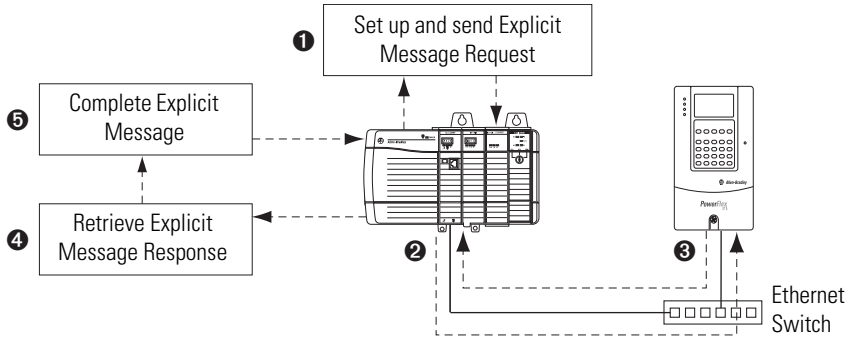

Event	Description
❶	You format the required data and set up the ladder logic program to send an Explicit Message request to the scanner or bridge module (download).
❷	The scanner or bridge module transmits the Explicit Message Request to the slave device over the network.
❸	The slave device transmits the Explicit Message Response back to the scanner. The data is stored in the scanner buffer.
❹	The controller retrieves the Explicit Message Response from the scanner's buffer (upload).
❺	The Explicit Message is complete.

For information on the maximum number of Explicit Messages that can be executed at a time, see the documentation for the scanner or bridge and/or controller that is being used.

ControlLogix Controller Examples

TIP To display the Message Configuration screen in RSLogix 5000 software, add a message instruction (MSG), create a new tag for the message (Properties: Base tag type, MESSAGE data type, controller scope), and click the ... button in the message instruction.

For supported classes, instances, and attributes, see Appendix C, EtherNet/IP Objects.

Explicit Messaging Using RSLogix 5000 Software, Version 15.00 or Later

ControlLogix Controller Example Ladder Logic Program to Read a Single Parameter

A Parameter Read message is used to read a single parameter. This read message example reads the value of parameter 003 - [Output Current] in a PowerFlex 7-Class drive.

Table 18 - Example Controller Tags to Read a Single Parameter

Operand	Controller Tags for Single Read Message	Data Type
XIC	Execute_Single_Read_Message	BOOL
MSG	Single_Read_Message	MESSAGE

Figure 35 - Example Ladder Logic to Read a Single Parameter

ControlLogix Controller – Formatting a Message to Read a Single Parameter, RSLogix 5000 Software, Version 15.00 or Later

Figure 36 - Parameter Read Single Message Configuration Screens

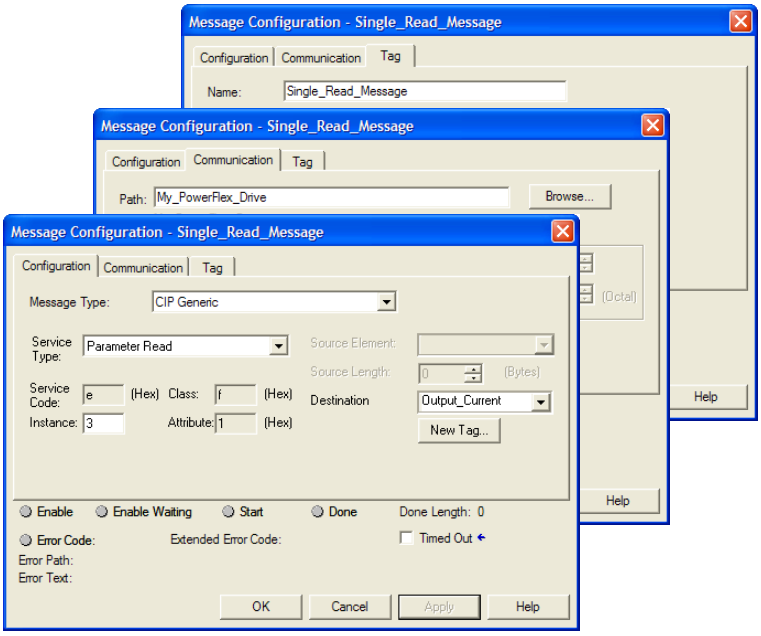

The following table identifies the data that is required in each box to configure a message to read a single parameter.

Configuration Tab	Example Value	Description
Message Type	CIP Generic	Used to access the Parameter Object in the adapter.
Service Type (1)	Parameter Read	This service is used to read a parameter value.
Service Code (1)	e (Hex.)	Code for the requested service.
Class	f (Hex.)	Class ID for the DPI Parameter Object.
Instance (2)	3 (Dec.)	Instance number is the same as parameter number.
Attribute	1 (Hex.)	Attribute number for the Parameter Value attribute.
Destination	Output_Current (4)	The tag where the data that is read is stored.
Communication Tab	**Example Value**	**Description**
Path (3)	My_PowerFlex_Drive	The path is the route that the message will follow.
Tag Tab	**Example Value**	**Description**
Name	Single_Read_Message	The name for the message.

(1) The default setting for Service Type is 'Custom', enabling entry of a Service Code not available from the Service Type pull-down menu. When choosing a Service Type other than 'Custom' from the pull-down menu, an appropriate Hex. value is automatically assigned to the Service Code box which is dimmed (unavailable).

(2) Only drive parameters (Port 0) can be read using Parameter Object Class code 0x0F. To read a parameter of a peripheral in another port, use DPI Parameter Object Class code 0x93 (see page 121).

(3) Click **Browse** to find the path, or type in the name of the device listed in the I/O Configuration folder.

(4) In this example, Output Current is a 32-bit parameter requiring the Data Type field to be set to 'DINT' when creating the controller tag. If the parameter being read is a 16-bit parameter, the tag Data Type field must be set to 'INT'. When using a PowerFlex 700S drive, Output Current is a floating point parameter requiring the Data Type field to be set to 'REAL' when creating the controller tag. See the drive documentation to determine the size of the parameter and its data type (16-bit or 32-bit integer or REAL).

ControlLogix Controller Example Ladder Logic Program to Write a Single Parameter, RSLogix 5000 Software, Version 15.00 or Later

A Parameter Write message is used to write to a single parameter. This write message example writes a value to parameter 140 - [Accel Time 1] in a PowerFlex 7-Class drive.

Table 19 - Example Controller Tags to Write a Single Parameter

Operand	Controller Tags for Single Write Message	Data Type
XIC	Execute_Single_Write_Message	BOOL
MSG	Single_Write_Message	MESSAGE

Figure 37 - Example Ladder Logic to Write a Single Parameter

Important: If the explicit message single write must be written continuously, use DPI Parameter Object Class code 0x93. This writes to RAM—not NVS (EEPROM) memory. This example single write message using Class code F writes to NVS. Over time, continuous writes will exceed the EEPROM life cycle and cause the drive to malfunction.

ControlLogix Controller – Formatting a Message to Write a Single Parameter, RSLogix 5000 Software, Version 15.00 or Later

Figure 38 - Parameter Write Single Message Configuration Screens

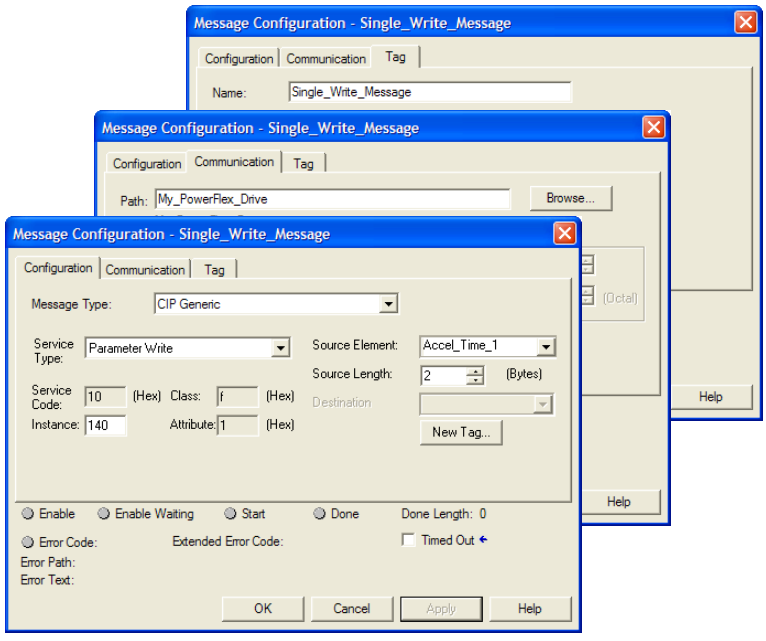

The following table identifies the data that is required in each box to configure a message to write a single parameter.

Configuration Tab	Example Value	Description
Message Type	CIP Generic	Used to access the Parameter Object in the adapter.
Service Type (1)	Parameter Write	This service is used to write a parameter value.
Service Code (1)	10 (Hex.)	Code for the requested service.
Class	f (Hex.)	Class ID for the DPI Parameter Object.
Instance (2)	140 (Dec.)	Instance number is the same as parameter number.
Attribute	1 (Hex.)	Attribute number for the Parameter Value attribute.
Source Element	Accel_Time_1 (4)	Name of the tag for any service data to be sent from the scanner or bridge to the adapter/drive.
Source Length	2 (4)	Number of bytes of service data to be sent in the message.
Communication Tab	**Example Value**	**Description**
Path (3)	My_PowerFlex_Drive	The path is the route that the message will follow.
Tag Tab	**Example Value**	**Description**
Name	Single_Write_Message	The name for the message.

(1) The default setting for Service Type is 'Custom', enabling entry of a Service Code not available from the Service Type pull-down menu. When choosing a Service Type other than 'Custom' from the pull-down menu, an appropriate Hex. value is automatically assigned to the Service Code box which is dimmed (unavailable).

(2) Only drive parameters (Port 0) can be written to using Parameter Object Class code 0x0F. To write to a parameter of a peripheral in another port, use DPI Parameter Object Class code 0x93 (see page 123).

(3) Click **Browse** to find the path, or type in the name of the device listed in the I/O Configuration folder.

(4) In this example, Accel Time 1 is a 16-bit parameter requiring the tag Data Type field to be set to 'INT' when creating the controller tag. If the parameter being written to is a 32-bit parameter, the tag Data Type field must be set to 'DINT'. Also, the Source Length field on the Message Configuration screen must correspond to the selected Data Type in bytes (for example, 4 bytes for a DINT or a REAL). When using a PowerFlex 700S drive, Accel Time 1 is a floating point number requiring the Data Type field to be set to 'REAL' when creating the controller tag. See the drive documentation to determine the size of the parameter and its data type (16-bit or 32-bit integer or REAL).

ControlLogix Controller Example Ladder Logic Program to Read Multiple Parameters, RSLogix 5000 Software, All Versions

A Scattered Read message is used to read the values of multiple parameters. Up to 22 parameters can be read. This read message example reads the values of these five parameters.

PowerFlex 7-Class Drive
• Parameter 001 - [Output Freq] • Parameter 003 - [Output Current] • Parameter 006 - [Output Voltage] • Parameter 012 - [DC Bus Voltage] • Parameter 017 - [Analog In1 Value]

See DPI Parameter Object on page 198 (Class code 0x93) for parameter numbering.

Important: See Table 17 on page 106 for limitations of PowerFlex 7-Class drives when using Class code 0x93.

Table 20 - Example Controller Tags to Read Multiple Parameters

Operand	Controller Tags for Read Multiple Message	Data Type
XIC	Execute_Scattered_Read_Message	BOOL
MSG	Scattered_Read_Message	MESSAGE

Figure 39 - Example Ladder Logic to Read Multiple Parameters

ControlLogix Controller – Formatting a Message to Read Multiple Parameters, RSLogix 5000 Software, All Versions

Figure 40 - Scattered Read Message Configuration Screens

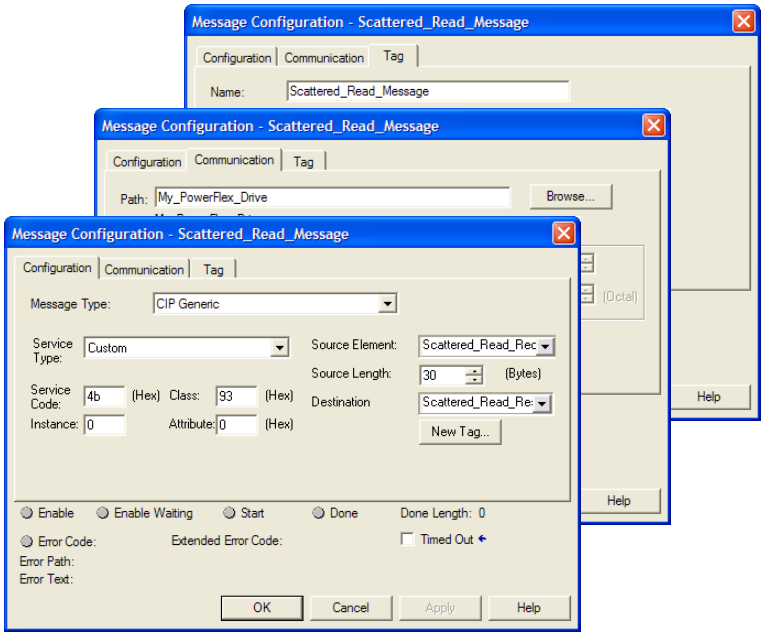

The following table identifies the data that is required in each box to configure a message to read multiple parameters.

Configuration Tab	Example Value	Description
Message Type	CIP Generic	Used to access Parameter Object in the adapter.
Service Type (1)	Custom	Required for scattered messages.
Service Code (1)	4b (Hex.)	Code for the requested service.
Class	93 or 9F (Hex.) (3)	Class ID for the DPI Parameter Object.
Instance	0 (Dec.)	Required for scattered messages.
Attribute	0 (Hex.)	Required for scattered messages.
Source Element	Scattered_Read_Request (4)	Name of the tag for any service data to be sent from scanner or bridge to the adapter/drive.
Source Length	30 (4)	Number of bytes of service data to be sent in the message.
Destination	Scattered_Read_Response	The tag where the data that is read is stored.
Communication Tab	**Example Value**	**Description**
Path (2)	My_PowerFlex_Drive	The path is the route that the message will follow.
Tag Tab	**Example Value**	**Description**
Name	Scattered_Read_Message	The name for the message.

(1) The default setting for Service Type is 'Custom', enabling entry of a Service Code not available from the Service Type pull-down menu. When choosing a Service Type other than 'Custom' from the pull-down menu, an appropriate Hex. value is automatically assigned to the Service Code box which is dimmed (unavailable).

(2) Click **Browse** to find the path, or type in the name of the device listed in the I/O Configuration folder.

(3) See Table 17 on page 106 for limitations of PowerFlex 7-Class drives when using DPI Parameter Object Class code 0x93 for explicit messaging.

(4) In this example, we are reading five parameters. Each parameter being read requires an array of three INT registers. Therefore, a controller tag was created with its Data Type field set to 'INT[15]'. Also, the Source Length field on the Message Configuration screen must correspond to the selected Data Type in bytes (for this example, 30 bytes for an INT[15] array). Scattered read messages always assume that every parameter being read is a 32-bit parameter, regardless of its actual size. Maximum length is 132 bytes or 66 words which equates to 22 parameters. For parameter numbering, see DPI Parameter Object on page 198 (Class code 0x93).

ControlLogix Controller Example Scattered Read Request Data

In this message example, we use the data structure in Figure 41 or Figure in the source tag named Scattered_Read_Request to read these five parameters.

PowerFlex 7-Class Drive
• Parameter 001 - [Output Freq] • Parameter 003 - [Output Current] • Parameter 006 - [Output Voltage] • Parameter 012 - [DC Bus Voltage] • Parameter 017 - [Analog In1 Value]

See DPI Parameter Object on page 198 (Class code 0x93) for parameter numbering.

Figure 41 - Example Scattered Read Request Data for PowerFlex 7-Class Drive

Name	Value	Data Type	Description
Scattered_Read_Request	{...}	INT[15]	
Scattered_Read_Request[0]	1	INT	Parameter Number (decimal)
Scattered_Read_Request[1]	0	INT	Pad Word
Scattered_Read_Request[2]	0	INT	Pad Word
Scattered_Read_Request[3]	3	INT	Parameter Number (decimal)
Scattered_Read_Request[4]	0	INT	Pad Word
Scattered_Read_Request[5]	0	INT	Pad Word
Scattered_Read_Request[6]	6	INT	Parameter Number (decimal)
Scattered_Read_Request[7]	0	INT	Pad Word
Scattered_Read_Request[8]	0	INT	Pad Word
Scattered_Read_Request[9]	12	INT	Parameter Number (decimal)
Scattered_Read_Request[10]	0	INT	Pad Word
Scattered_Read_Request[11]	0	INT	Pad Word
Scattered_Read_Request[12]	17	INT	Parameter Number (decimal)
Scattered_Read_Request[13]	0	INT	Pad Word
Scattered_Read_Request[14]	0	INT	Pad Word

ControlLogix Controller Example Scattered Read Response Data

The Scattered Read Request message reads the multiple parameters and returns their values to the destination tag (Scattered_Read_Response). Figure 42 or Figure shows the parameter values.

Figure 42 - Example Scattered Read Response Data for PowerFlex 7-Class Drive

Name	Value	Data Type	Description
Scattered_Read_Response	{...}	INT[15]	
Scattered_Read_Response[0]	1	INT	Parameter Number (decimal)
Scattered_Read_Response[1]	325	INT	Parameter Value LSW
Scattered_Read_Response[2]	0	INT	Parameter Value MSW
Scattered_Read_Response[3]	3	INT	Parameter Number (decimal)
Scattered_Read_Response[4]	1	INT	Parameter Value LSW
Scattered_Read_Response[5]	0	INT	Parameter Value MSW
Scattered_Read_Response[6]	6	INT	Parameter Number (decimal)
Scattered_Read_Response[7]	1187	INT	Parameter Value LSW
Scattered_Read_Response[8]	0	INT	Parameter Value MSW
Scattered_Read_Response[9]	12	INT	Parameter Number (decimal)
Scattered_Read_Response[10]	3292	INT	Parameter Value LSW
Scattered_Read_Response[11]	0	INT	Parameter Value MSW
Scattered_Read_Response[12]	17	INT	Parameter Number (decimal)
Scattered_Read_Response[13]	8318	INT	Parameter Value LSW
Scattered_Read_Response[14]	0	INT	Parameter Value MSW

In this message example, the parameters have the following values.

PowerFlex 7-Class Drive Parameter	Read Value
1 - [Output Freq]	32.5 Hz
3 - [Output Current]	0.01 Amp
6 - [Output Voltage]	118.7 VAC
12 - [DC Bus Voltage]	329.2 VDC
17 - [Analog In2 Value]	8.318 mA

ControlLogix Controller Example Ladder Logic Program to Write Multiple Parameters, RSLogix 5000 Software, All Versions

A Scattered Write message is used to write to multiple parameters. This write message example writes the following values to these five parameters.

PowerFlex 7-Class Drive Parameter	Write Value
141 - [Accel Time 2]	11.1 Sec.
143 - [Decel Time 2]	22.2 Sec.
105 - [Preset Speed 5]	33.3 Hz.
106 - [Preset Speed 6]	44.4 Hz.
107 - [Preset Speed 7]	55.5 Hz.

See DPI Parameter Object on page 198 (Class code 0x93) for parameter numbering.

Important: See Table 17 on page 106 for limitations of PowerFlex 7-Class drives when using Class code 0x93 for explicit messaging.

Table 21 - Example Controller Tags to Write Multiple Parameters

Operand	Controller Tags for Write Multiple Message	Data Type
XIC	Execute_Scattered_Write_Message	BOOL
MSG	Scattered_Write_Message	MESSAGE

Figure 43 - Example Ladder Logic to Write Multiple Parameters

Important: If the explicit message scattered write must be written continuously, then use a separate explicit message single write for each parameter using DPI Parameter Object Class code 0x93 and attribute A (10 decimal; see page 123). Attribute A writes to RAM—not NVS (EEPROM) memory. This example scattered write message using attribute 0 writes to NVS. Over time, continuous writes will exceed the EEPROM life cycle and cause the drive to malfunction.

ControlLogix Controller – Formatting a Message to Write Multiple Parameters, RSLogix 5000 Software, All Versions

Figure 44 - Scattered Write Multiple Message Configuration Screens

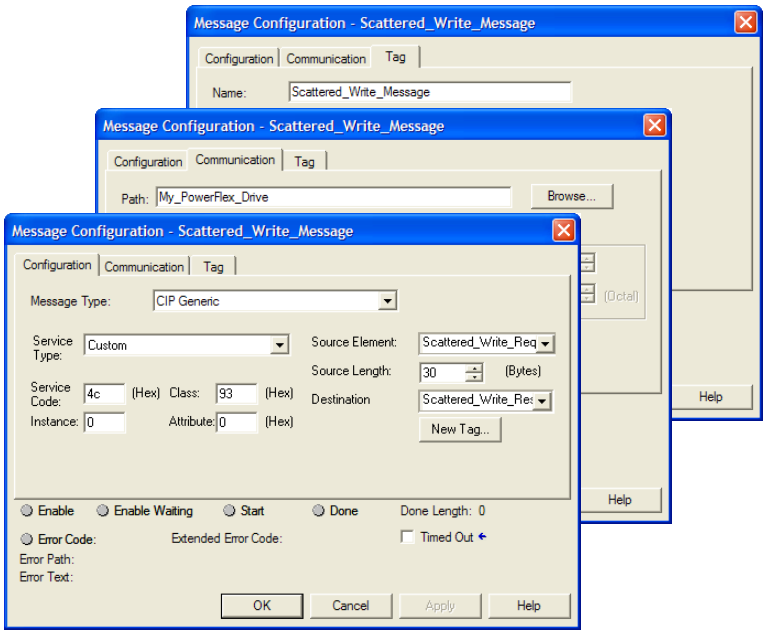

The following table identifies the data that is required in each box to configure a message to write multiple parameters.

Configuration Tab	Example Value	Description
Message Type	CIP Generic	Used to access Parameter Object in the adapter.
Service Type (1)	Custom	Required for scattered messages.
Service Code (1)	4c (Hex.)	Code for the requested service.
Class	93 or 9F (Hex.) (3)	Class ID for the DPI Parameter Object.
Instance	0 (Dec.)	Required for scattered messages.
Attribute	0 (Hex.)	Required for scattered messages.
Source Element	Scattered_Write_Request (4)	Name of the tag for any service data to be sent from scanner or bridge to the adapter/drive.
Source Length	30 (4)	Number of bytes of service data to be sent in the message.
Destination	Scattered_Write_Response	The tag where the data that is read is stored.
Communication Tab	**Example Value**	**Description**
Path (2)	My_PowerFlex_Drive	The path is the route that the message will follow.
Tag Tab	**Example Value**	**Description**
Name	Scattered_Write_Message	The name for the message.

(1) The default setting for Service Type is 'Custom', enabling entry of a Service Code not available from the Service Type pull-down menu. When choosing a Service Type other than 'Custom' from the pull-down menu, an appropriate Hex. value is automatically assigned to the Service Code box which is dimmed (unavailable).

(2) Click **Browse** to find the path, or type in the name of the device listed in the I/O Configuration folder.

(3) See Table 17 on page 106 for limitations of PowerFlex 7-Class drives when using DPI Parameter Object Class code 0x93 for explicit messaging.

(4) In this example, we are writing to five parameters. Each parameter being written to requires an array of three INT registers. Therefore, a controller tag was created with its Data Type field set to 'INT[15]'. Also, the Source Length field on the Message Configuration screen must correspond to the selected Data Type in bytes (for this example, 30 bytes for an INT[15] array). Scattered write messages always assume that every parameter being written to is a 32-bit parameter, regardless of its actual size. Maximum length is 132 bytes or 66 words which equates to 22 parameters. For parameter numbering, see DPI Parameter Object on page 198 (Class code 0x93).

ControlLogix Controller Example Scattered Write Request Data

In this message example, we use the data structure in Figure 45 or Figure in the source tag (Scattered_Write_Request) to write new values to these parameters.

PowerFlex 7-Class Drive Parameter	Write Value
141 - [Accel Time 2]	11.1 Sec.
143 - [Decel Time 2]	22.2 Sec.
105 - [Preset Speed 5]	33.3 Hz.
106 - [Preset Speed 6]	44.4 Hz.
107 - [Preset Speed 7]	55.5 Hz.

See DPI Parameter Object on page 198 (Class code 0x93) for parameter numbering.

Figure 45 shows the parameter values.

Figure 45 - Example Scattered Write Request Data for PowerFlex 7-Class Drive

Name	Value	Data Type	Description
Scattered_Write_Request	{...}	INT[15]	
Scattered_Write_Request[0]	141	INT	Parameter Number (decimal)
Scattered_Write_Request[1]	111	INT	Parameter Value LSW
Scattered_Write_Request[2]	0	INT	Parameter Value MSW
Scattered_Write_Request[3]	143	INT	Parameter Number (decimal)
Scattered_Write_Request[4]	222	INT	Parameter Value LSW
Scattered_Write_Request[5]	0	INT	Parameter Value MSW
Scattered_Write_Request[6]	105	INT	Parameter Number (decimal)
Scattered_Write_Request[7]	333	INT	Parameter Value LSW
Scattered_Write_Request[8]	0	INT	Parameter Value MSW
Scattered_Write_Request[9]	106	INT	Parameter Number (decimal)
Scattered_Write_Request[10]	444	INT	Parameter Value LSW
Scattered_Write_Request[11]	0	INT	Parameter Value MSW
Scattered_Write_Request[12]	107	INT	Parameter Number (decimal)
Scattered_Write_Request[13]	555	INT	Parameter Value LSW
Scattered_Write_Request[14]	0	INT	Parameter Value MSW

ControlLogix Controller Example Scattered Write Response Data

The results of the message appear in the destination tag named Scattered_Write_Response (Figure 46). Values of '0' indicate no errors occurred.

Figure 46 - Example Scattered Write Response Data for PowerFlex 7-Class Drive

Name	Value	Data Type	Description
Scattered_Write_Response	{...}	INT[15]	
Scattered_Write_Response[0]	141	INT	Parameter Number (decimal)
Scattered_Write_Response[1]	0	INT	Pad Word or Error Code
Scattered_Write_Response[2]	0	INT	Pad Word
Scattered_Write_Response[3]	143	INT	Parameter Number (decimal)
Scattered_Write_Response[4]	0	INT	Pad Word or Error Code
Scattered_Write_Response[5]	0	INT	Pad Word
Scattered_Write_Response[6]	105	INT	Parameter Number (decimal)
Scattered_Write_Response[7]	0	INT	Pad Word or Error Code
Scattered_Write_Response[8]	0	INT	Pad Word
Scattered_Write_Response[9]	106	INT	Parameter Number (decimal)
Scattered_Write_Response[10]	0	INT	Pad Word or Error Code
Scattered_Write_Response[11]	0	INT	Pad Word
Scattered_Write_Response[12]	107	INT	Parameter Number (decimal)
Scattered_Write_Response[13]	0	INT	Pad Word or Error Code
Scattered_Write_Response[14]	0	INT	Pad Word

ControlLogix Controller – Explanation of Request and Response Data for Read/Write Multiple Messaging, RSLogix 5000 Software, All Versions

The data structures in Figure 47 and Figure 48 use 16-bit words and can accommodate up to 22 parameters in a single message. In the Response Message, a parameter number with the high bit set indicates that the associated parameter value field contains an error code (parameter number in response data will be negative).

Important: See Table 17 on page 106 for limitations of PowerFlex 7-Class drives when using Class code 0x93 for explicit messaging.

Figure 47 - Data Structures for Scattered Read Messages

	Request (Source Data)		Response (Destination Data)
Word 0	Parameter Number	Word 0	Parameter Number
1	Pad Word	1	Parameter Value LSW
2	Pad Word	2	Parameter Value MSW
3	Parameter Number	3	Parameter Number
4	Pad Word	4	Parameter Value LSW
5	Pad Word	5	Parameter Value MSW
6	Parameter Number	6	Parameter Number
7	Pad Word	7	Parameter Value LSW
8	Pad Word	8	Parameter Value MSW
9	Parameter Number	9	Parameter Number
10	Pad Word	10	Parameter Value LSW
11	Pad Word	11	Parameter Value MSW
12	Parameter Number	12	Parameter Number
13	Pad Word	13	Parameter Value LSW
14	Pad Word	14	Parameter Value MSW
⋮		⋮	
63	Parameter Number	63	Parameter Number
64	Pad Word	64	Parameter Value LSW
65	Pad Word	65	Parameter Value MSW

Figure 48 - Data Structures for Scattered Write Messages

	Request (Source Data)		Response (Destination Data)
Word 0	Parameter Number	Word 0	Parameter Number
1	Parameter Value LSW	1	Pad Word
2	Parameter Value MSW	2	Pad Word
3	Parameter Number	3	Parameter Number
4	Parameter Value LSW	4	Pad Word
5	Parameter Value MSW	5	Pad Word
6	Parameter Number	6	Parameter Number
7	Parameter Value LSW	7	Pad Word
8	Parameter Value MSW	8	Pad Word
9	Parameter Number	9	Parameter Number
10	Parameter Value LSW	10	Pad Word
11	Parameter Value MSW	11	Pad Word
12	Parameter Number	12	Parameter Number
13	Parameter Value LSW	13	Pad Word
14	Parameter Value MSW	14	Pad Word
⋮		⋮	
63	Parameter Number	63	Parameter Number
64	Parameter Value LSW	64	Pad Word
65	Parameter Value MSW	65	Pad Word

Explicit Messaging Using RSLogix 5000 Software, All Versions

ControlLogix Controller Example Ladder Logic Program to Read a Single Parameter

A Get Attribute Single message is used to read a single parameter. This read message example reads the value of parameter 003 - [Output Current] in a PowerFlex 7-Class drive.

Important: See Table 17 on page 106 for limitations of PowerFlex 7-Class drives when using DPI Parameter Object Class code 0x93 for explicit messaging.

Table 22 - Example Controller Tags to Read a Single Parameter

Operand	Controller Tags for Single Read Message	Data Type
XIC	Execute_Single_Read_Message	BOOL
MSG	Single_Read_Message	MESSAGE

Figure 49 - Example Ladder Logic to Read a Single Parameter

ControlLogix Controller – Formatting a Message to Read a Single Parameter, RSLogix 5000 Software, All Versions

Figure 50 - Get Attribute Single Message Configuration Screens

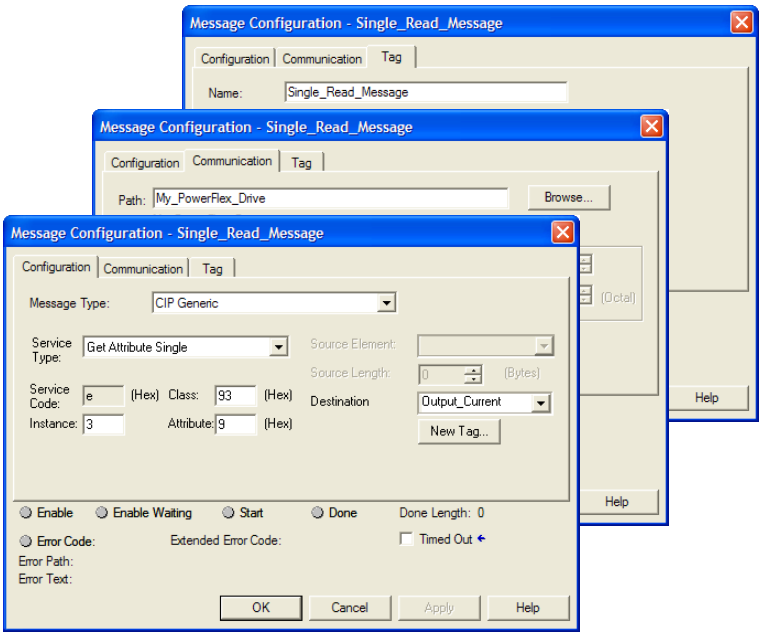

The following table identifies the data that is required in each box to configure a message to read a single parameter.

Configuration Tab	Example Value	Description
Message Type	CIP Generic	Used to access the Parameter Object in the adapter.
Service Type (1)	Get Attribute Single	This service is used to read a parameter value.
Service Code (1)	e (Hex.)	Code for the requested service.
Class	93 or 9F (Hex.) (4)	Class ID for the DPI Parameter Object.
Instance (2)	3 (Dec.)	Instance number is the same as parameter number.
Attribute	9 (Hex.)	Attribute number for the Parameter Value attribute.
Destination	Output_Current (5)	The tag where the data that is read is stored.
Communication Tab	**Example Value**	**Description**
Path (3)	My_PowerFlex_Drive	The path is the route that the message will follow.
Tag Tab	**Example Value**	**Description**
Name	Single_Read_Message	The name for the message.

(1) The default setting for Service Type is 'Custom', enabling entry of a Service Code not available from the Service Type pull-down menu. When choosing a Service Type other than 'Custom' from the pull-down menu, an appropriate Hex. value is automatically assigned to the Service Code box which is dimmed (unavailable).

(2) The instance is the parameter number in the drive (Port 0). For example, to read parameter 4 of a peripheral in Port 5 of an SMC-50 controller, the instance would be 21504 + 4 = 21508. See DPI Parameter Object on page 198 (Class code 0x93) to determine the instance number.

(3) Click **Browse** to find the path, or type in the name of the device listed in the I/O Configuration folder.

(4) See Table 17 on page 106 for limitations of PowerFlex 7-Class drives when using DPI Parameter Object Class code 0x93 for explicit messaging.

(5) In this example, Output Current is a 32-bit parameter requiring the Data Type field to be set to 'DINT' when creating the controller tag. If the parameter being read is a 16-bit parameter, the tag Data Type field must be set to 'INT'. When using a PowerFlex 700S drive, Output Current is a floating point number requiring the Data Type field to be set to 'REAL' when the creating controller tag. See the drive documentation to determine the size of the parameter and its data type (16-bit or 32-bit integer or REAL).

ControlLogix Controller Example Ladder Logic Program to Write a Single Parameter, RSLogix 5000 Software, All Versions

A Set Attribute Single message is used to write to a single parameter. This write message example writes a value to parameter 140 - [Accel Time 1] in a PowerFlex 7-Class drive.

Table 23 - Example Controller Tags to Write a Single Parameter

Operand	Controller Tags for Single Write Message	Data Type
XIC	Execute_Single_Write_Message	BOOL
MSG	Single_Write_Message	MESSAGE

Figure 51 - Example Ladder Logic to Write a Single Parameter

ControlLogix Controller – Formatting a Message to Write a Single Parameter, RSLogix 5000 Software, All Versions

Figure 52 - Set Attribute Single Message Configuration Screens

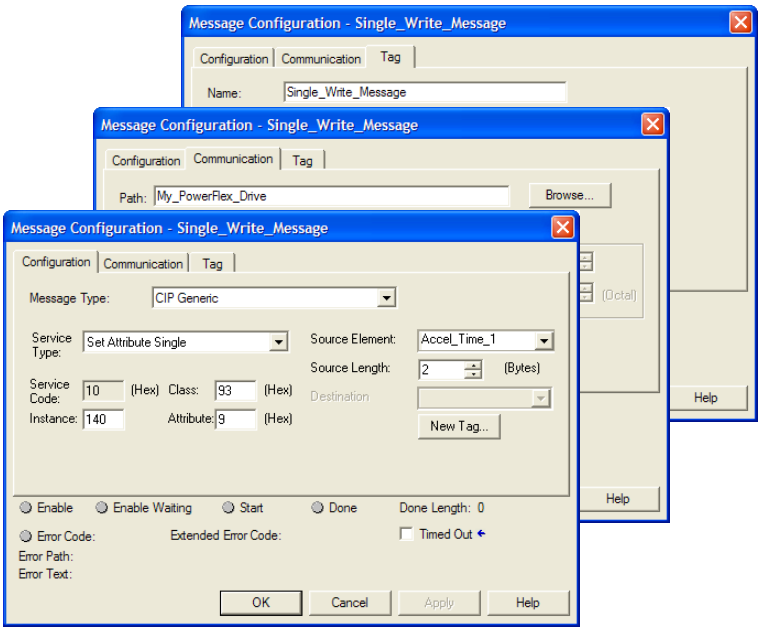

The following table identifies the data that is required in each box to configure a message to write a single parameter.

Configuration Tab	Example Value	Description
Message Type	CIP Generic	Used to access the Parameter Object in the adapter.
Service Type (1)	Set Attribute Single	This service is used to write a parameter value.
Service Code (1)	10 (Hex.)	Code for the requested service.
Class	93 or 9F (Hex.) (5)	Class ID for the DPI Parameter Object.
Instance (2)	140 (Dec.)	Instance number is the same as parameter number.
Attribute (3)	9 or A (Hex.)	Attribute number for the Parameter Value attribute.
Source Element	Accel_Time_1 (6)	Name of the tag for any service data to be sent from the scanner or bridge to the adapter/drive.
Source Length	2 (6)	Number of bytes of service data to be sent in the message.
Communication Tab	**Example Value**	**Description**
Path (4)	My_PowerFlex_Drive	The path is the route that the message will follow.
Tag Tab	**Example Value**	**Description**
Name	Single_Write_Message	The name for the message.

(1) The default setting for Service Type is 'Custom', enabling entry of a Service Code not available from the Service Type pull-down menu. When choosing a Service Type other than 'Custom' from the pull-down menu, an appropriate Hex. value is automatically assigned to the Service Code box which is dimmed (unavailable).

(2) The instance is the parameter number in the drive (Port 0). For example, to write to parameter 4 of a peripheral in Port 7 of an SMC-50 controller, the instance would be 21504 + 4 = 21508. See DPI Parameter Object on page 198 (Class code 0x93) to determine the instance number.

(3) Setting the Attribute value to '9' will write the parameter value to the drive's Nonvolatile Storage (EEPROM) memory, which retains the parameter value even after the drive is power cycled. **Important:** When set to '9', the EEPROM may quickly exceed its life cycle and cause the drive to malfunction. Setting the Attribute value to 'A' (10 decimal) will write the parameter value to temporary memory, which deletes the parameter value after the drive is power cycled. When frequent write messages are required, we recommend using the 'A' (10 decimal) setting.

(4) Click **Browse** to find the path, or type in the name of the device listed in the I/O Configuration folder.

(5) See Table 17 on page 106 for limitations of PowerFlex 7-Class drives when using DPI Parameter Object Class code 0x93 for explicit messaging.

(6) In this example, Accel Time 1 is a 16-bit parameter requiring the tag Data Type field to be set to 'INT' when creating the controller tag. If the parameter being written to is a 32-bit parameter, the tag Data Type field must be set to 'DINT'. Also, the Source Length field on the Message Configuration screen must correspond to the selected Data Type in bytes (for example, 4 bytes for a DINT or a REAL). When using a PowerFlex 700S drive, Accel Time 1 is a floating point number requiring the Data Type field to be set to 'REAL' when creating the controller tag. See the drive documentation to determine the size of the parameter and its data type (16-bit or 32-bit integer or REAL).

ControlLogix Controller Example Ladder Logic Program to Read or Write Multiple Parameters, RSLogix 5000 Software, All Versions

Because the example ladder logic rungs, configuration screens, and request/response data to read or write multiple parameters using RSLogix 5000 software, all versions, are identical to those for RSLogix 5000 software, version 15.00 or later, see the information contained on page 112 through page 119 for complete details.

MicroLogix 1100/1400 Controller Examples

When using RSLogix 500 software, version 7.10 and earlier, explicit messaging must be performed using the PCCC N-File method. For RSLogix 500 software, version 7.20 and later, the CIP messaging method has been added along with the PCCC N-File method. However, it is recommended to use the CIP method because it is easier to use and understand. For this reason, only instructions for the CIP method are provided.

The CIP messaging method provides two ways to perform explicit messaging:

- Read/Write Parameter Service simplifies setup by requiring less data to be entered in message configuration screens. However, the Read/Write Parameter Service can only be used to perform single parameter read or single parameter write explicit messages. (Multiple parameter reads or writes must be performed using the Generic Get/Set Attribute Service described below.)

Important: When performing a Write Parameter message, the data will always be written to the drive's Nonvolatile Storage (NVS). Continuous NVS writes may damage the drive's EEPROM. If continuous writes are necessary, use the Generic Set Attribute Single Service and attribute A (10 decimal; see page 133).

- Generic Get/Set Attribute Service requires more setup data to be entered in message configuration screens, but can be used to perform single parameter read or write and multiple parameter read or write explicit messages. Also, the Generic Set Attribute Service offers the choice of writing the data to the drive's Nonvolatile Storage (NVS) or the drive's Random Access Memory (RAM; for Generic Set Attribute Single service only, see page 133). Note that when selecting the data to be written to RAM, the data will be lost if the drive loses power.

For supported classes, instances, and attributes, see Appendix C, EtherNet/IP Objects.

MicroLogix 1100/1400 Controller Explicit Messaging Using the Read/Write Parameter Service

MicroLogix 1100/1400 Controller Example Ladder Logic Program to Read a Single Parameter

A Read Parameter message is used to read a single parameter. This read message example reads the value of parameter 003 - [Output Current] in a PowerFlex 7-Class drive.

Figure 53 - Example Ladder Logic to Read a Single Parameter

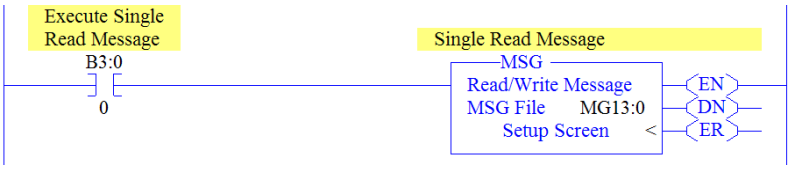

MicroLogix 1100/1400 Controller – Formatting a Message to Read a Single Parameter Using Read/Write Parameter Service

Figure 54 - Read Parameter Message Configuration Screens

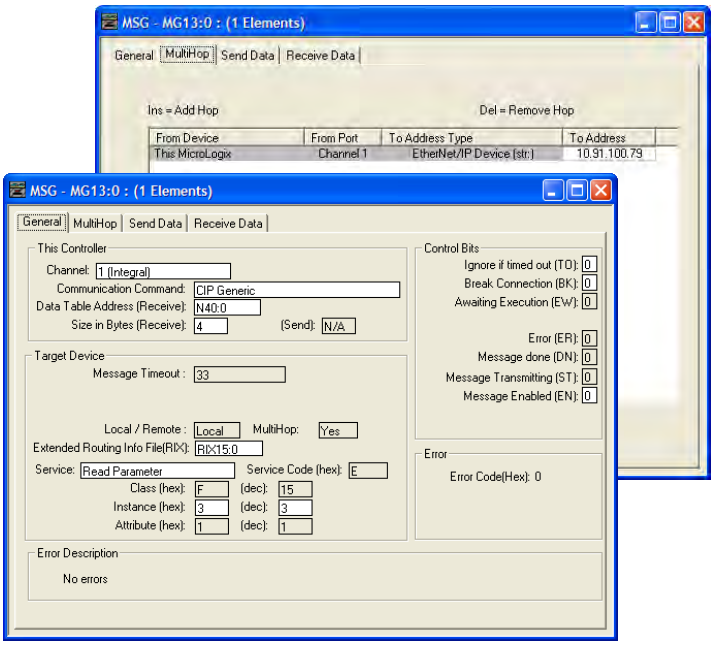

The following table identifies the data that is required in each box to configure a message to read a single parameter.

General Tab	Example Value	Description
Channel	1	Controller port to which the network is connected.
Comm… Command	CIP Generic	Used to access the Parameter Object in the adapter.
Data Table Address	N40:0	An unused controller data table address containing the message instruction. This address is the starting word of the destination file.
Size in Bytes	4 (3)	Number of bytes to be transferred. Each byte size is an 8-bit integer.
Extended Routing…	RIX15:0	An unused routing information file for the controller.
Service (1)	Read Parameter	Code for the requested service.
Instance (2)	3 (Dec.)	Instance number is the same as the parameter number.
MultiHop Tab	**Example Value**	**Description**
To Address	10.91.100.79	IP address of the adapter connected to the drive.

(1) The default setting for Service is 'Custom', enabling entry of a Service Code not available from the Service pull-down menu. When choosing a Service other than 'Custom' from the pull-down menu, an appropriate Hex. value is automatically assigned to the Service Code box which is dimmed (unavailable).

(2) Only drive parameters (Port 0) can be read using Parameter Object Class code 0x0F. To read a parameter of a peripheral in another port, use DPI Parameter Object Class code 0x93 (see page 130).

(3) In this example, Output Current is a 32-bit parameter. If the parameter being read is a 16-bit parameter, the Size in Bytes would be set to 2. When the parameter being read is a 32-bit REAL (floating point) data type, the size in bytes would be set to 4. See the drive documentation to determine the size of the parameter and its data type (16-bit or 32-bit integer or REAL).

MicroLogix 1100/1400 Controller Example Read Single Response Data

In this message example, we use the data table address in Figure 55 to store the response value (0.13 amps) that was read from drive parameter 003 - [Output Current]. To determine the data type for the parameter and its required scaling, see the specific drive documentation.

Figure 55 - Example Read Single Response Data File

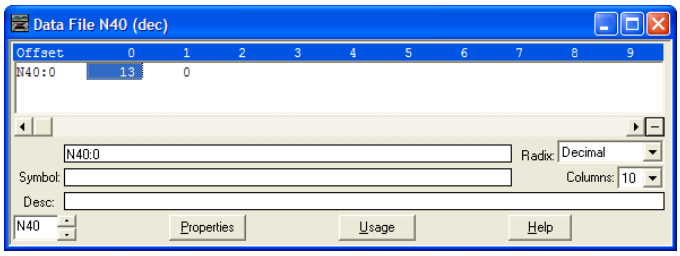

Figure 56 shows example ladder logic to correctly format the three possible data types for read messages in the MicroLogix 1100/1400 controller.

Figure 56 - Example Ladder Logic to Format Parameter Data Types for Reads

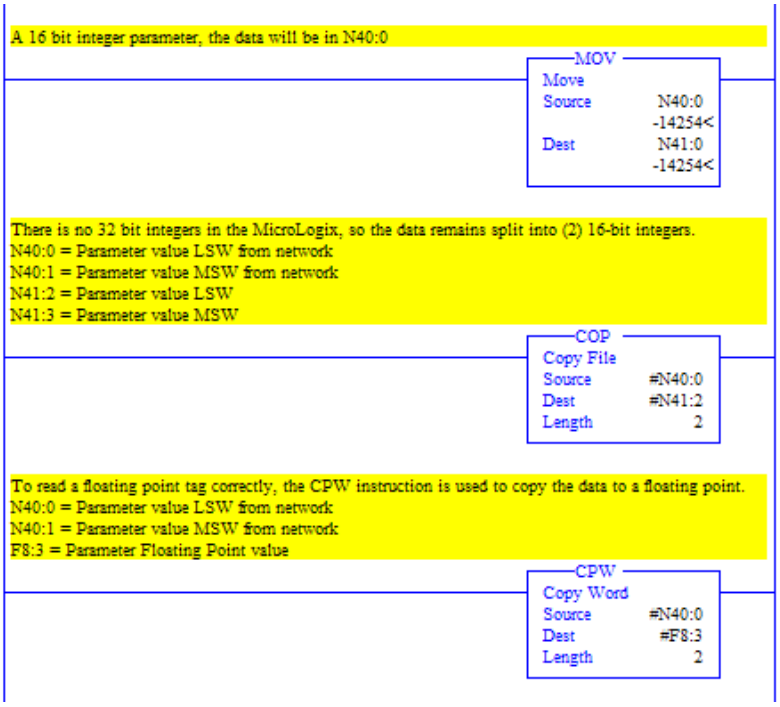

For 16-bit Integer Parameters – All PowerFlex 7-Class

For 32-bit Integer Parameters – All PowerFlex 7-Class

For 32-bit REAL (Floating Point) Parameters – PowerFlex 700S

MicroLogix 1100/1400 Controller Example Ladder Logic Program to Write a Single Parameter Using Read/Write Parameter Service

A Write Parameter message is used to write to a single parameter. This write message example writes a value to parameter 140 - [Accel Time 1] in a PowerFlex 7-Class drive.

Figure 57 - Example Ladder Logic to Write a Single Parameter

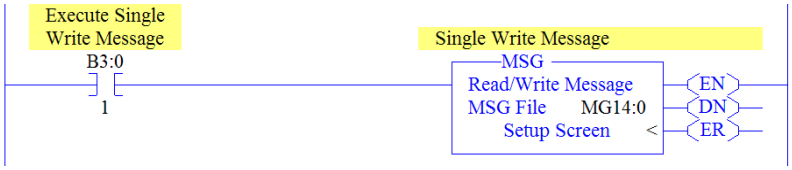

Important: If the explicit message single write must be written continuously, use DPI Parameter Object Class code 0x93 and attribute A (10 decimal; see page 133). This writes to RAM—not NVS (EEPROM) memory. This example single write message using Class code F writes to NVS. Over time, continuous writes will exceed the EEPROM life cycle and cause the drive to malfunction.

MicroLogix 1100/1400 Controller – Formatting a Message to Write a Single Parameter Using Read/Write Parameter Service

Figure 58 - Write Parameter Message Configuration Screens

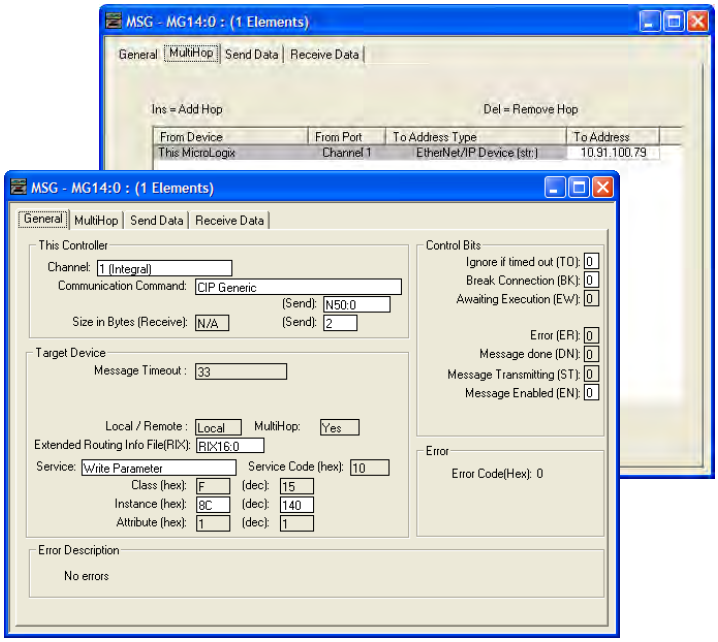

The following table identifies the data that is required in each box to configure a message to write a single parameter.

General Tab	Example Value	Description
Channel	1	Controller port to which the network is connected.
Comm... Command	CIP Generic	Used to access the Parameter Object in the adapter.
Data Table Address	N50:0	An unused controller data table address containing the message instruction. This address is the starting word of the destination file.
Size in Bytes	2 (3)	Number of bytes to be transferred. Each byte size is an 8-bit integer.
Extended Routing...	RIX16:0	An unused routing information file for the controller.
Service (1)	Write Parameter	Code for the requested service.
Instance (2)	140 (Dec.)	Instance number is the same as the parameter number.
MultiHop Tab	**Example Value**	**Description**
To Address	10.91.100.79	IP address of the adapter connected to the drive.

(1) The default setting for Service is 'Custom', enabling entry of a Service Code not available from the Service pull-down menu. When choosing a Service other than 'Custom' from the pull-down menu, an appropriate Hex. value is automatically assigned to the Service Code box which is dimmed (unavailable).

(2) Only drive parameters (Port 0) can be written to using Parameter Object Class code 0x0F. To write to a parameter of a peripheral in another port, use DPI Parameter Object Class code 0x93 (see page 133).

(3) In this example, Accel Time 1 is a 16-bit parameter. If the parameter being written to is a 32-bit parameter, the Size in Bytes would be set to 4. When the parameter being written to is a 32-bit REAL (floating point) data type, the size in bytes would be set to 4. See the drive documentation to determine the size of the parameter and its data type (16-bit or 32-bit integer or REAL).

MicroLogix 1100/1400 Controller Example Write Single Request Data

In this message example, we use the data table address in Figure 59 to store the request value (10.0 sec.) that was written to drive parameter 140 - [Accel Time 1]. To determine the data type for the parameter and its required scaling, see the specific drive documentation.

Figure 59 - Example Write Single Request Data File

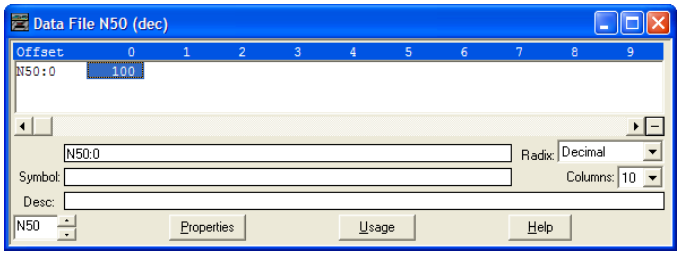

Figure 60 shows example ladder logic to correctly format the three possible data types for write messages in the MicroLogix 1100/1400 controller.

Figure 60 - Example Ladder Logic to Format Parameter Data Types for Writes

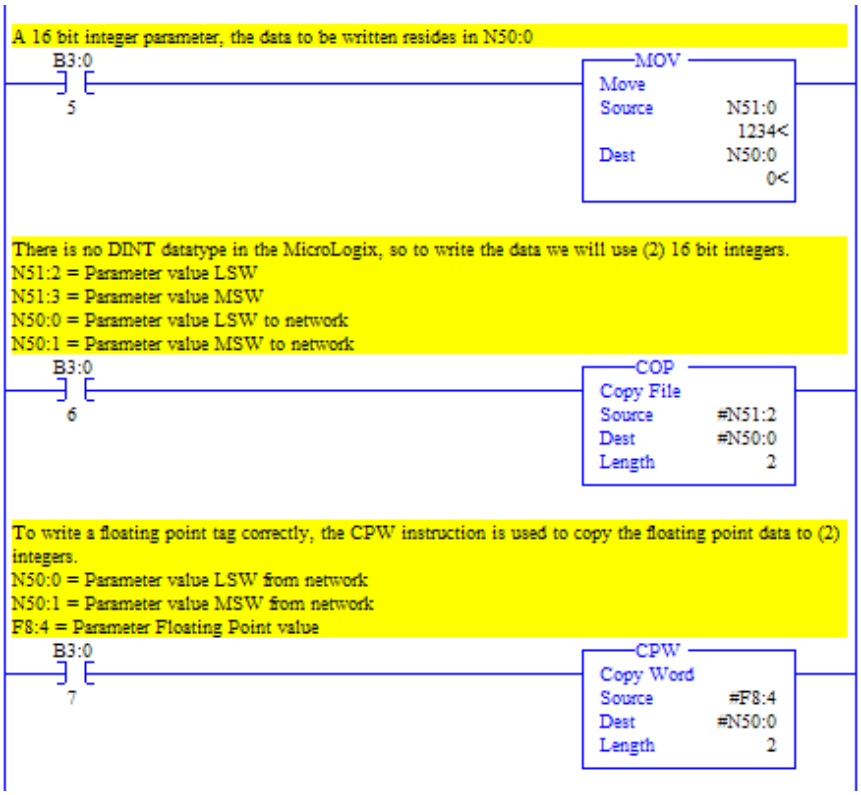

For 16-bit Integer Parameters – All PowerFlex 7-Class Drives

For 32-bit Integer Parameters – All PowerFlex 7-Class Drives

For 32-bit REAL (Floating Point) Parameters – PowerFlex 700S Drives

MicroLogix 1100/1400 Controller Explicit Messaging Using the Generic Get/Set Attribute Service

MicroLogix 1100/1400 Controller Example Ladder Logic Program to Read a Single Parameter

A Generic Get Attribute Single message is used to read a single parameter. This read message example reads the value of parameter 003 - [Output Current] in a PowerFlex 7-Class drive.

Important: See Table 17 on page 106 for limitations of PowerFlex 7-Class drives when using Class code 0x93 for explicit messaging.

Figure 61 - Example Ladder Logic to Read a Single Parameter

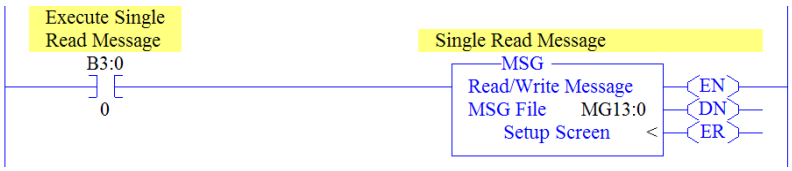

MicroLogix 1100/1400 Controller – Formatting a Message to Read a Single Parameter Using Generic Get/Set Attribute Service

Figure 62 - Generic Get Attribute Single Message Configuration Screens

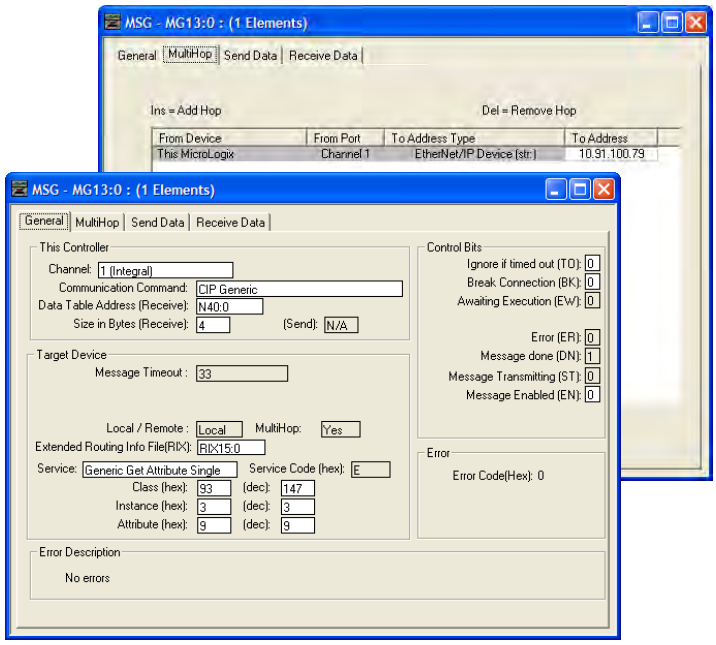

The following table identifies the data that is required in each box to configure a message to read a single parameter.

General Tab	Example Value	Description
Channel	1	Controller port to which the network is connected.
Comm… Command	CIP Generic	Used to access the Parameter Object in the adapter.
Data Table Address	N40:0	An unused controller data table address containing the message instruction. This address is the starting word of the destination file.
Size in Bytes	4 (3)	Number of bytes to be transferred. Each byte size is an 8-bit integer.
Extended Routing…	RIX15:0	An unused routing information file for the controller.
Service (1)	Generic Get Attribute Single	Code for the requested service.
Class	93 or 9F (Hex.) (4)	Class ID for the DPI Parameter Object.
Instance (2)	3 (Dec.)	Instance number is the same as the parameter number.
Attribute	9 (Dec.)	Attribute number for the Parameter Value attribute.
MultiHop Tab	**Example Value**	**Description**
To Address	10.91.100.79	IP address of the adapter connected to the drive.

(1) The default setting for Service is 'Custom', enabling entry of a Service Code not available from the Service pull-down menu. When choosing a Service other than 'Custom' from the pull-down menu, an appropriate Hex. value is automatically assigned to the Service Code box which is dimmed (unavailable).

(2) The instance is the parameter number in the drive (Port 0). For example, to read parameter 4 of a peripheral in Port 7 of an SMC-50 controller, the instance would be 21504 + 4 = 21508. See DPI Parameter Object on page 198 (Class code 0x93) to determine the instance number.

(3) In this example, Output Current is a 32-bit parameter. If the parameter being read is a 16-bit parameter, the Size in Bytes would be set to 2. When the parameter being read is a 32-bit REAL (floating point) data type, the size in bytes would be set to 4. See the drive documentation to determine the size of the parameter and its data type (16-bit or 32-bit integer or REAL).

(4) See Table 17 on page 106 for limitations of PowerFlex 7-Class drives when using DPI Parameter Object Class code 0x93 for explicit messaging.

MicroLogix 1100/1400 Controller Example Get Attribute Single Response Data

In this message example, we use the data table address in Figure 63 to store the response value (0.13 amps) that was read from drive parameter 003 - [Output Current]. To determine the data type for the parameter and its required scaling, see the specific drive documentation.

Figure 63 - Example Get Attribute Single Response Data File

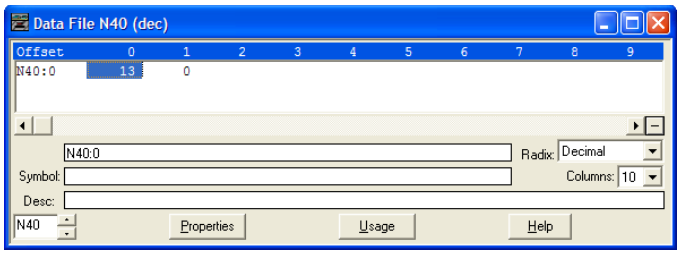

Figure 64 shows example ladder logic to correctly format the three possible data types for read messages in the MicroLogix 1100/1400 controller.

Figure 64 - Example Ladder Logic to Format Parameter Data Types for Gets

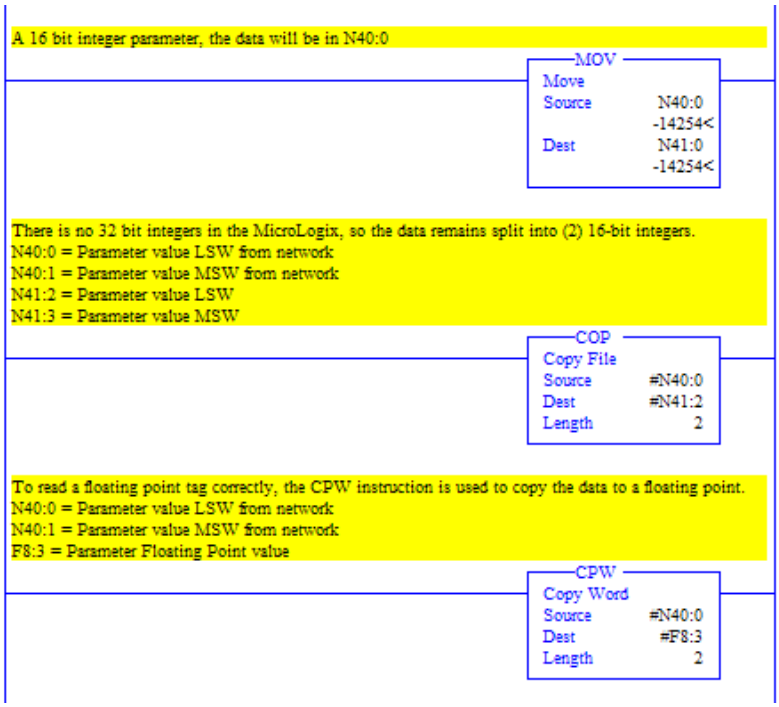

MicroLogix 1100/1400 Controller Example Ladder Logic Program to Write a Single Parameter Using Generic Get/Set Attribute Service

A Generic Set Attribute Single message is used to write to a single parameter. This write message example writes a value to parameter 140 - [Accel Time 1] in a PowerFlex 7-Class drive.

Important: See Table 17 on page 106 for limitations of PowerFlex 7-Class drives when using Class code 0x93 for explicit messaging.

Figure 65 - Example Ladder Logic to Write a Single Parameter

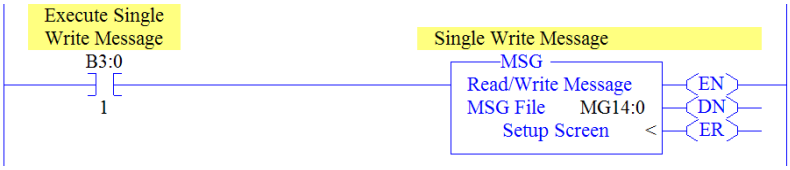

MicroLogix 1100/1400 Controller – Formatting a Message to Write a Single Parameter Using Generic Get/Set Attribute Service

Figure 66 - Generic Set Attribute Single Message Configuration Screens

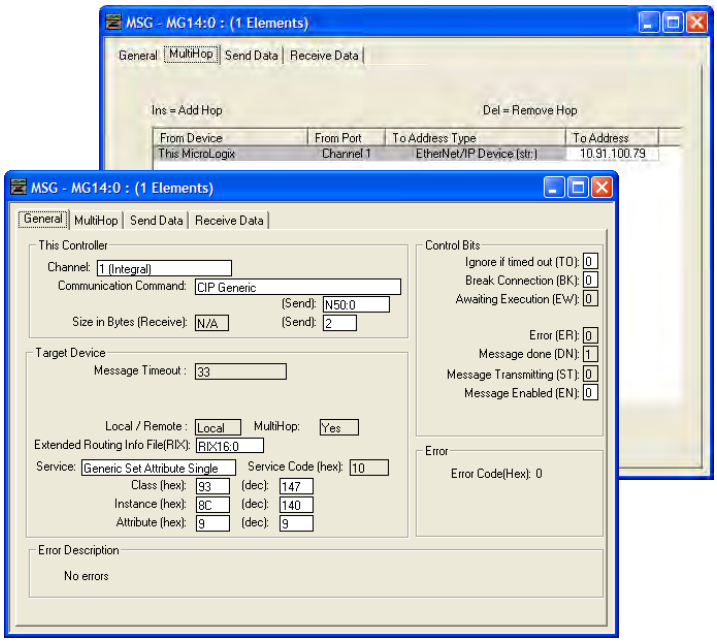

The following table identifies the data that is required in each box to configure a message to write a single parameter.

General Tab	Example Value	Description
Channel	1	Controller port to which the network is connected.
Comm… Command	CIP Generic	Used to access the Parameter Object in the adapter.
Data Table Address	N50:0	An unused controller data table address containing the message instruction. This address is the starting word of the destination file.
Size in Bytes	2 (4)	Number of bytes to be transferred. Each byte size is an 8-bit integer.
Extended Routing…	RIX16:0	An unused routing information file for the controller.
Service (1)	Generic Set Attribute Single	Code for the requested service.
Class	93 or 9F (Hex.) (5)	Class ID for the DPI Parameter Object.
Instance (2)	140 (Dec.)	Instance number is the same as the parameter number.
Attribute (3)	9 or 10 (Dec.)	Attribute number for the Parameter Value attribute.
MultiHop Tab	**Example Value**	**Description**
To Address	10.91.100.79	IP address of the adapter connected to the drive.

(1) The default setting for Service is 'Custom', enabling entry of a Service Code not available from the Service pull-down menu. When choosing a Service other than 'Custom' from the pull-down menu, an appropriate Hex. value is automatically assigned to the Service Code box which is dimmed (unavailable).

(2) The instance is the parameter number in the drive (Port 0). For example, to write to parameter 4 of a peripheral in Port 5 of an SMC-50 controller, the instance would be 21504 + 4 = 21508. See DPI Parameter Object on page 198 (Class code 0x93) to determine the instance number.

(3) Setting the Attribute value to '9' will write the parameter value to the drive's Nonvolatile Storage (EEPROM) memory, which retains the parameter value even after the drive is power cycled. **Important:** When set to '9', the EEPROM may quickly exceed its life cycle and cause the drive to malfunction. Setting the Attribute value to '10' will write the parameter value to temporary memory, which deletes the parameter value after the drive is power cycled. When frequent write messages are required, we recommend using the '10' setting.

(4) In this example, Accel Time 1 is a 16-bit parameter. If the parameter being written to is a 32-bit parameter, the Size in Bytes would be set to 4.

(5) See Table 17 on page 106 for limitations of PowerFlex 7-Class drives when using DPI Parameter Object Class code 0x93 for explicit messaging.

MicroLogix 1100/1400 Controller Example Set Attribute Single Request Data

In this message example, we use the data table address in Figure 67 to store the request value (10.0 sec.) that was written to drive parameter 140 - [Accel Time 1]. To determine the data type for the parameter and its required scaling, see the specific drive documentation.

Figure 67 - Example Set Attribute Single Request Data File

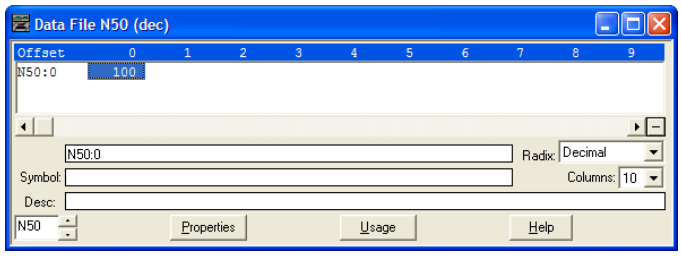

Figure 68 shows example ladder logic to correctly format the three possible data types for write messages in the MicroLogix 1100/1400 controller.

Figure 68 - Example Ladder Logic to Format Parameter Data Types for Sets

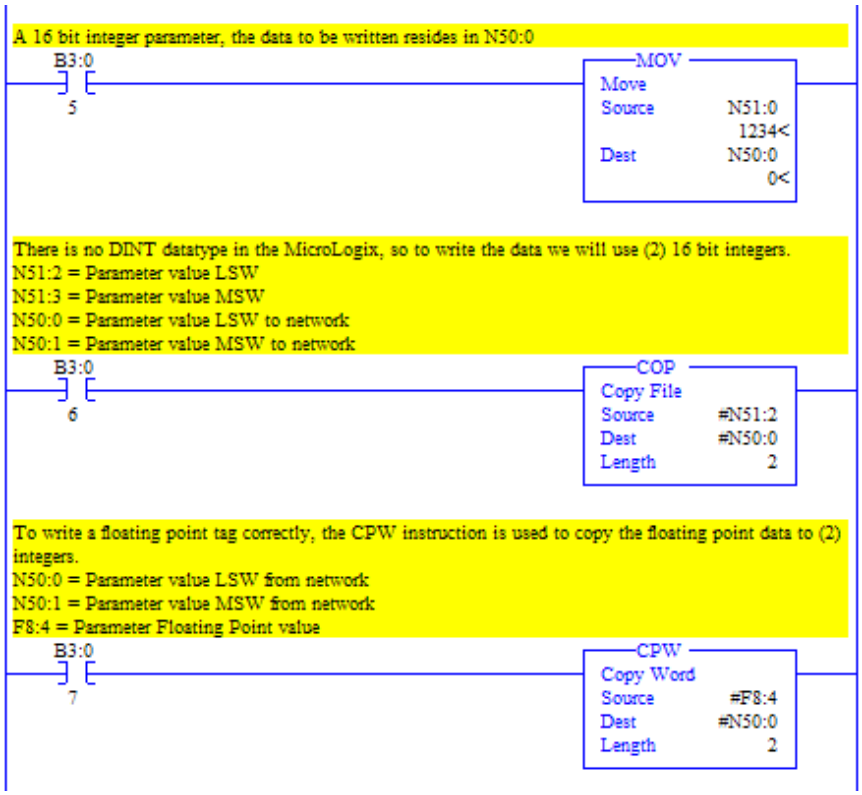

For 16-bit Integer Parameters – All PowerFlex 7-Class Drives

For 32-bit Integer Parameters – All PowerFlex 7-Class Drives

For 32-bit REAL (Floating Point) Parameters – PowerFlex 700S Drives

MicroLogix 1100/1400 Controller Example Ladder Logic Program to Read Multiple Parameters Using Generic Get/Set Attribute Service

A Custom scattered read message is used to read the values of multiple parameters. This read message example reads the values of these five parameters.

PowerFlex 7-Class Drive
• Parameter 001 - [Output Freq] • Parameter 003 - [Output Current] • Parameter 006 - [Output Voltage] • Parameter 012 - [DC Bus Voltage] • Parameter 017 - [Analog In1 Value]

See DPI Parameter Object on page 198 (Class code 0x93) for parameter numbering.

Important: See Table 17 on page 106 for limitations of PowerFlex 7-Class drives when using Class code 0x93 for explicit messaging.

Figure 69 - Example Ladder Logic to Read Multiple Parameters

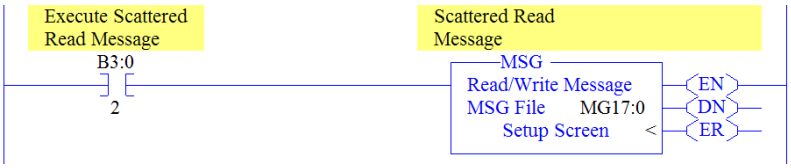

MicroLogix 1100/1400 Controller – Formatting a Message to Read Multiple Parameters Using Generic Get/Set Attribute Service

Figure 70 - Custom Scattered Read Message Configuration Screens

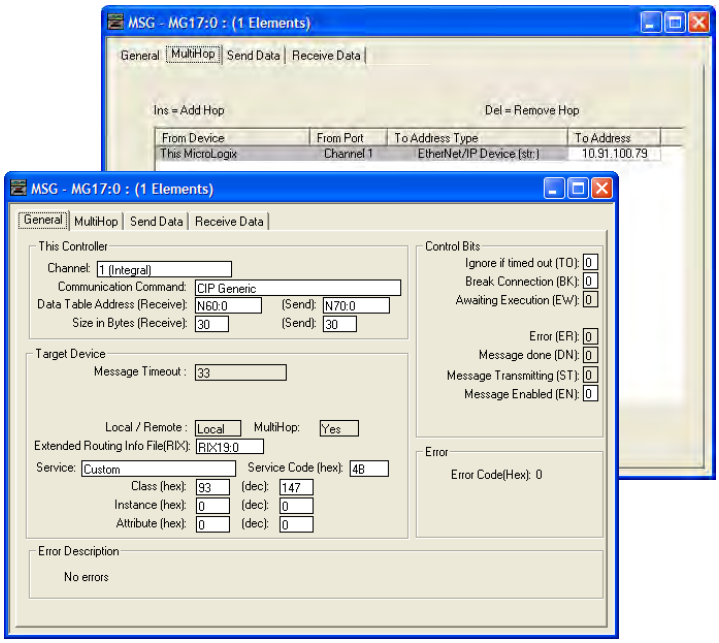

The following table identifies the data that is required in each box to configure a message to read multiple parameters.

General Tab	Example Value	Description
Channel	1	Controller port to which the network is connected.
Comm… Command	CIP Generic	Used to access the Parameter Object in the adapter.
Data Table Address	N60:0	An unused controller data table address containing the message instruction. This address is the starting word of the destination file.
Size in Bytes	30 (2)	Number of bytes to be transferred. Each byte size is an 8-bit integer.
Extended Routing…	RIX19:0	An unused routing information file for the controller.
Service (1)	Custom	Required for scattered messages.
Service Code	4B (Hex.)	Code for the requested service.
Class	93 or 9F (Hex.) (3)	Class ID for the DPI Parameter Object.
Instance	0 (Dec.)	Required for scattered messages.
Attribute	0 (Dec.)	Required for scattered messages.
MultiHop Tab	**Example Value**	**Description**
To Address	10.91.100.79	IP address of the adapter connected to the drive.

(1) The default setting for Service is 'Custom', enabling entry of a Service Code not available from the Service pull-down menu. When choosing a Service other than 'Custom' from the pull-down menu, an appropriate Hex. value is automatically assigned to the Service Code box which is dimmed (unavailable).

(2) In this example, we are reading five parameters. Each parameter being read requires three contiguous 16-bit words. Scattered read messages always assume that every parameter being read is a 32-bit parameter, regardless of its actual size. Therefore, the Size in Bytes must be set to 30. The data structure format is the same as shown on page 141. Maximum length is 66 words (132 bytes), which equates to 22 parameters. For parameter numbering, see DPI Parameter Object on page 198 (Class code 0x93).

(3) See Table 17 on page 106 for limitations of PowerFlex 7-Class drives when using DPI Parameter Object Class code 0x93 for explicit messaging.

MicroLogix 1100/1400 Controller Example Scattered Read Request Data

In this message example, we use the data table addresses in Figure 71 or Figure 71 to store the request values to be read from these drive parameters.

PowerFlex 7-Class Drive
• Parameter 001 - [Output Freq] • Parameter 003 - [Output Current] • Parameter 006 - [Output Voltage] • Parameter 012 - [DC Bus Voltage] • Parameter 017 - [Analog In1 Value]

See DPI Parameter Object on page 198 (Class code 0x93) for parameter numbering.

Figure 71 - Example Scattered Read Request Data File for PowerFlex 7-Class Drive

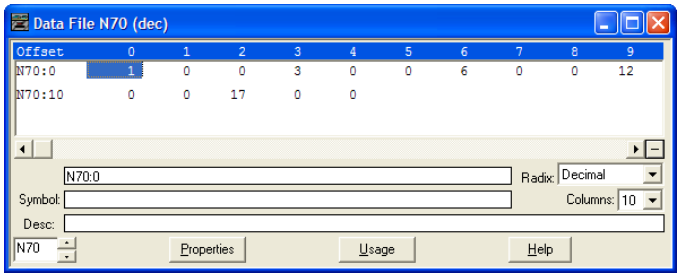

MicroLogix 1100/1400 Controller Example Scattered Read Response Data

In this message example, we use the data table addresses in Figure 72 to store the response values that were read from the requested drive parameters.

Figure 72 - Example Scattered Read Response Data File for PowerFlex 7-Class Drive

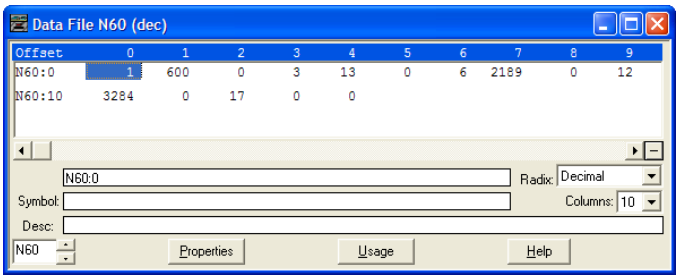

In this example, the parameters have the following values.

PowerFlex 7-Class Drive Parameter	Address	Read Value
1 - [Output Freq]	N60:1	32.5 Hz
3 - [Output Current]	N60:4	0.01 Amp
6 - [Output Voltage]	N60:7	118.7 VAC
12 - [DC Bus Voltage]	N60:10	329.2 VDC
17 - [Analog In2 Value]	N60:13	8.318 mA

MicroLogix 1100/1400 Controller Example Ladder Logic Program to Write Multiple Parameters Using Generic Get/Set Attribute Service

A Custom scattered write message is used to write to multiple parameters. This write message example writes the following values to these five parameters.

PowerFlex 7-Class Drive Parameter	Write Value
141 - [Accel Time 2]	11.1 Sec.
143 - [Decel Time 2]	22.2 Sec.
105 - [Preset Speed 5]	33.3 Hz.
106 - [Preset Speed 6]	44.4 Hz.
107 - [Preset Speed 7]	55.5 Hz.

See DPI Parameter Object on page 198 (Class code 0x93) for parameter numbering.

Important: See Table 17 on page 106 for limitations of PowerFlex 7-Class drives when using Class code 0x93 for explicit messaging.

Figure 73 - Example Ladder Logic to Write Multiple Parameters

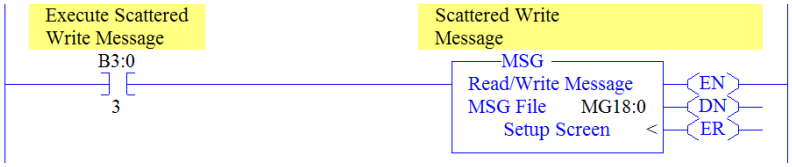

Important: If the explicit message scattered write must be written continuously, then use a separate Generic Set service explicit message single write for each parameter using DPI Parameter Object Class code 0x93 and attribute A (10 decimal; see page 133). Attribute A writes to RAM—not NVS (EEPROM) memory. This example scattered write message using attribute 0 writes to NVS. Over time, continuous writes will exceed the EEPROM life cycle and cause the drive to malfunction.

MicroLogix 1100/1400 Controller – Formatting a Message to Write Multiple Parameters Using Generic Get/Set Attribute Service

Figure 74 - Custom Scattered Write Multiple Message Configuration Screens

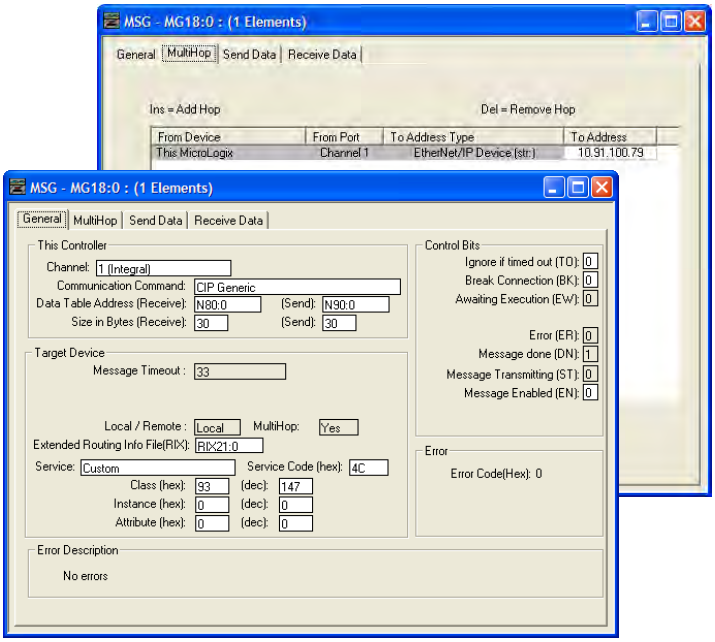

The following table identifies the data that is required in each box to configure a message to write multiple parameters.

General Tab	Example Value	Description
Channel	1	Controller port to which the network is connected.
Comm… Command	CIP Generic	Used to access the Parameter Object in the adapter.
Data Table Address	N80:0	An unused controller data table address containing the message instruction. This address is the starting word of the destination file.
Size in Bytes	30 (2)	Number of bytes to be transferred. Each byte size is an 8-bit integer.
Extended Routing…	RIX21:0	An unused routing information file for the controller.
Service (1)	Custom	Required for scattered messages.
Service Code	4C (Hex.)	Code for the requested service.
Class	93 or 9F (Hex.) (3)	Class ID for the DPI Parameter Object.
Instance	0 (Dec.)	Required for scattered messages.
Attribute	0 (Dec.)	Required for scattered messages.
MultiHop Tab	**Example Value**	**Description**
To Address	10.91.100.79	IP address of the adapter connected to the drive.

(1) The default setting for Service is 'Custom', enabling entry of a Service Code not available from the Service pull-down menu. When choosing a Service other than 'Custom' from the pull-down menu, an appropriate Hex. value is automatically assigned to the Service Code box which is dimmed (unavailable).

(2) In this example, we are writing to five parameters. Each parameter being written to requires three contiguous 16-bit words. Scattered write messages always assume that every parameter being written to is a 32-bit parameter, regardless of its actual size. Therefore, the Size in Bytes must be set to 30. The data structure format is the same as shown on page 120. Maximum length is 66 words (132 bytes), which equates to 22 parameters. For parameter numbering, see DPI Parameter Object on page 198 (Class code 0x93).

(3) See Table 17 on page 106 for limitations of PowerFlex 7-Class drives when using DPI Parameter Object Class code 0x93 for explicit messaging.

MicroLogix 1100/1400 Controller Example Scattered Write Request Data

In this message example, we use the data table addresses in Figure 75 to store the request values to be written to these drive parameters.

See DPI Parameter Object on page 198 (Class code 0x93) for parameter numbering.

Figure 75 or Figure 76 shows the parameter values.

Figure 75 - Example Scattered Write Request Data File for PowerFlex 7-Class Drive

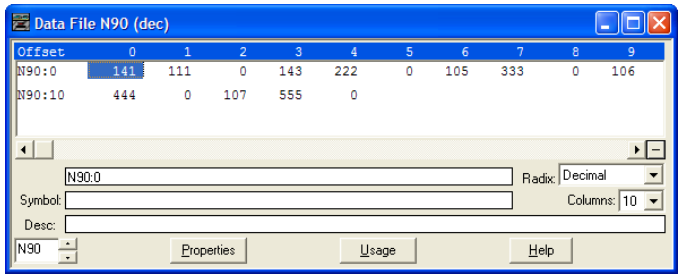

MicroLogix 1100/1400 Controller Example Scattered Write Response Data

In this message example, we use the data table addresses in Figure 76 to store the response values that were written to the requested drive parameters. Values of '0' indicate no errors occurred.

Figure 76 - Example Scattered Write Response Data File for PowerFlex 7-Class Drive

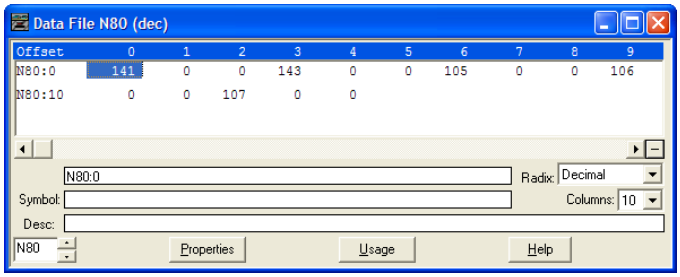

The results of the explicit message appear in the destination tag array N80 (Figure 76). Values of '0' indicate no errors occurred.

MicroLogix 1100/1400 Controller – Explanation of Request and Response Data for Read/Write Multiple Messaging

The data structures in Figure 77 and Figure 78 use 16-bit words and can accommodate up to 22 parameters in a single message. In the Response Message, a parameter number with the high bit set indicates that the associated parameter value field contains an error code (parameter number in response data will be negative).

Important: See Table 17 on page 106 for limitations of PowerFlex 7-Class drives when using Class code 0x93 for explicit messaging.

Figure 77 - Data Structures for Scattered Read Messages

	Request (Source Data)
Word 0	Parameter Number
1	Pad Word
2	Pad Word
3	Parameter Number
4	Pad Word
5	Pad Word
6	Parameter Number
7	Pad Word
8	Pad Word
9	Parameter Number
10	Pad Word
11	Pad Word
12	Parameter Number
13	Pad Word
14	Pad Word
⋮	

	Response (Destination Data)
Word 0	Parameter Number
1	Parameter Value LSW
2	Parameter Value MSW
3	Parameter Number
4	Parameter Value LSW
5	Parameter Value MSW
6	Parameter Number
7	Parameter Value LSW
8	Parameter Value MSW
9	Parameter Number
10	Parameter Value LSW
11	Parameter Value MSW
12	Parameter Number
13	Parameter Value LSW
14	Parameter Value MSW
⋮	

63	Parameter Number
64	Pad Word
65	Pad Word

63	Parameter Number
64	Parameter Value LSW
65	Parameter Value MSW

Figure 78 - Data Structures for Scattered Write Messages

	Request (Source Data)
Word 0	Parameter Number
1	Parameter Value LSW
2	Parameter Value MSW
3	Parameter Number
4	Parameter Value LSW
5	Parameter Value MSW
6	Parameter Number
7	Parameter Value LSW
8	Parameter Value MSW
9	Parameter Number
10	Parameter Value LSW
11	Parameter Value MSW
12	Parameter Number
13	Parameter Value LSW
14	Parameter Value MSW
⋮	
63	Parameter Number
64	Parameter Value LSW
65	Parameter Value MSW

	Response (Destination Data)
Word 0	Parameter Number
1	Pad Word
2	Pad Word
3	Parameter Number
4	Pad Word
5	Pad Word
6	Parameter Number
7	Pad Word
8	Pad Word
9	Parameter Number
10	Pad Word
11	Pad Word
12	Parameter Number
13	Pad Word
14	Pad Word
⋮	
63	Parameter Number
64	Pad Word
65	Pad Word

Troubleshooting

This chapter provides information for diagnosing and troubleshooting potential problems with the adapter and network.

Topic	Page
Understanding the Status Indicators	143
Port Status Indicator	144
Network Status Indicator	145
Link (LS1, LS2) Status Indicator	145
NET A Status Indicator	145
Hardware Reset via Node Switches	146
Viewing Adapter Diagnostic Items	146
Viewing and Clearing Events	149

Understanding the Status Indicators

The adapter has four status indicators. They can be viewed on the adapter or through the device cover.

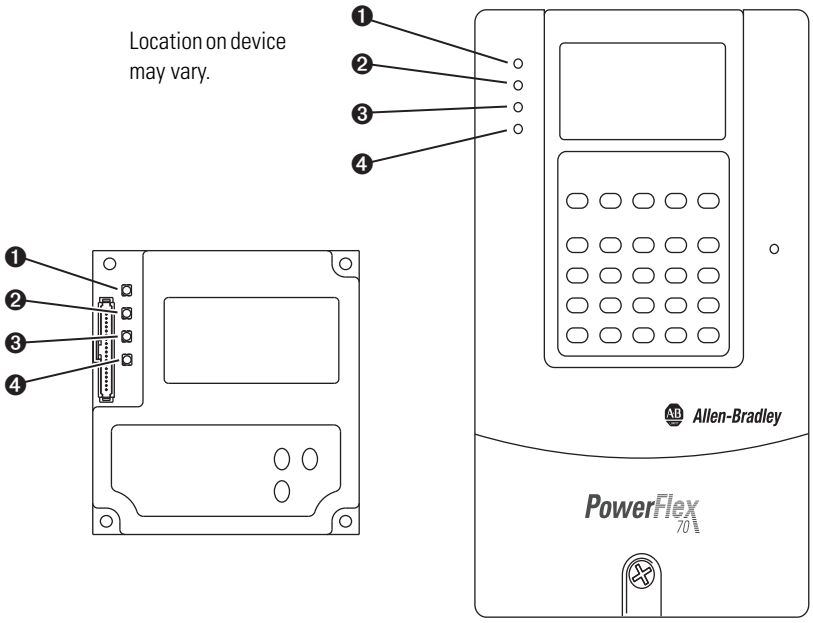

Item	Indicator Name	Description	See
❶	PS	DPI Connection Status	page 144
❷	NS	Network Status	page 145
❸	LS1	Link Status 1	page 145
❹	LS2	Link Status 2	page 145

Port Status Indicator

The LED indicates the status of the adapter's connection to the device as shown in the table below.

Status	Cause	Corrective Action
Off	No power	Securely connect the adapter to the drive using the internal interface (ribbon) cable.
Orange	Peripheral is Connected to an incompatible product, or no DPI ping events are detected.	Verify that cables are securely connected and not damaged. Replace cables if necessary. Cycle power to the device. Verify that Host is an Allen-Bradley compatible product.
Flashing Orange	Requesting DPI I/O Connections	No action required this is normal operation if No DPI IO is enabled
Flashing Green	Normal Operation (DPI connected) - No I/O, or PLC in Program	Place the scanner in RUN mode. Program the controller to recognize and transmit I/O to the adapter. Configure the adapter for the program in the controller. Normal behavior if no DPI I/O is enabled.
Green	Normal Operation (DPI connected) - I/O Operational	No action required.
Red	DPI Problem, Bad CRC of Adapter Parameters or Flash Program	Replace adapter
Flashing Red	DPI Failure or Failed power-on diagnostic test (hardware failure)	Clear faults in the adapter. Verify that all DPI cables on the drive are securely connected and not damaged. Replace cables if necessary. Verify that the DPI drive supports Datalinks. Configure the adapter to use a Datalink that is not already being used by another peripheral. Check mode switch settings. Cycle power to the device If cycling power does not correct the problem, the adapter parameter settings may have been corrupted. Reset defaults and reconfigure the adapter. If resetting defaults does not correct the problem, flash the adapter with the latest firmware release.
Flashing Green and Red	Flash update in progress	Normal during flash update process of application firmware

Network Status Indicator

The LED indicates the status of the adapter's connection to the device as shown in the table below.

Status	Cause	Corrective Action
Steady Off	No power OR No IP Address	Securely connect the adapter to the drive using the Internal Interface (ribbon) cable and to the network using an Ethernet cable. Correctly connect the Ethernet cable to the Ethernet connector. Set a unique IP address and disable BOOTP using a BOOTP server, or set a unique IP address by using adapter parameters. Apply power to the drive (or adapter if mounted in a DPI External Comms Kit).
Flashing Green	An IP address is configured, but no CIP connections are established, and an Exclusive Owner connection has not timed out	Place the controller in RUN mode, or apply power to the peer device that will send I/O. Program the controller or peer device to recognize and transmit I/O or make a messaging connection to the adapter. Configure the adapter for the program in the controller or the I/O from the peer device.
Steady Green	At least one CIP connection (any transport class) is established, and an Exclusive Owner connection has not timed out	No Action Required
Flashing Red	Connection has timed out see the "The EtherNet Adaptation of CIP" Specification sections 9-4.4 for detailed behavior description	Place the scanner in RUN mode, or apply power to the peer device that will send I/O. Check the IGMP Snooping/Ethernet Switches for correct operation. Check the amount of traffic on the network.
Steady Red	Duplicate IP Address detected	Configure the adapter to use a unique IP address and cycle power.
Orange	Adapter Failure (used in conjunction with PS orange)	Verify that cables are securely connected and not damaged. Replace cables if necessary. Cycle power to the drive. Verify that Host is a Scanport or Allen-Bradley compatible product. Replace Adapter
Flashing Green/Red	Self-test on power up	No action required

Link (LS1, LS2) Status Indicator

The LED indicates the status of the adapter's connection to the device as shown in the table below.

Status	Cause	Corrective Action
Blinking Yellow	Network at 10M Baud	Normal Operation
Blinking Green	Network at 100M Baudr	Normal Operation

NET A Status Indicator

This red/green bicolor LED indicates the status of the network connection as shown in the table below.

Status	Cause	Corrective Actions
Off	The adapter is not powered, the adapter is not properly connected to the network, the adapter needs an IP address, or BOOTP is enabled.	• Securely connect the adapter to the drive using the Internal Interface (ribbon) cable and to the network using an Ethernet cable. • Correctly connect the Ethernet cable to the Ethernet connector. • Set a unique IP address and disable BOOTP using a BOOTP server, or set a unique IP address by using adapter parameters. • Apply power to the drive (or adapter if mounted in a DPI External Comms Kit).
Steady Red	The adapter failed the duplicate IP address detection test.	• Configure the adapter to use a unique IP address and cycle power.
Flashing Red	An EtherNet/IP connection has timed out.	• Place the scanner in RUN mode, or apply power to the peer device that will send I/O. • Check the IGMP Snooping/Ethernet Switches for correct operation. • Check the amount of traffic on the network.

Status	Cause	Corrective Actions
Flashing Red/ Green	The adapter is performing a self-test.	No action required.
Flashing Green	The adapter is properly connected, has an IP address, and is connected to an EtherNet/IP network but does not have an I/O connection.	• Place the controller in RUN mode, or apply power to the peer device that will send I/O. • Program the controller or peer device to recognize and transmit I/O or make a messaging connection to the adapter. • Configure the adapter for the program in the controller or the I/O from the peer device.
Steady Green	The adapter is properly connected and communicating on the network to a controller.	No action required.

Hardware Reset via Node Switches

The special switch value of 888 allows the user to return the module to its factory default configuration. The setting of 888 shall reset all local configuration parameters on the adapter,

The setting of 888 is useful in situations where the user wishes to decommission an adapter (but may use it again later, e.g., as a spare module), or when the user wishes to commission a previously-used module that has unknown configuration parameters.

When the switches are set to 888, upon the next power up, a module shall behave as follows:

- Return to factory default settings local to the adapter.
- Cease communications on all communication ports.
- The Port Status LED shall transition to blinking red.
- The Network Status LED shall transition to off.

The purpose of the above behavior is to prevent the user from resetting the module and then never changing the switch setting from 888. Upon the next power up, the module would simply reset itself again.

Viewing Adapter Diagnostic Items

If you encounter unexpected communications problems, the adapter's diagnostic items may help you or Rockwell Automation personnel troubleshoot the problem. Adapter diagnostic items can be viewed with any of these drive configuration tools:

- LCD PowerFlex 7-Class HIM (Diagnostics/Device Items)
- Connected Components Workbench software, version 1.02 or later
- DriveExplorer software, version 2.01 or later
- DriveExecutive software, version 3.01 or later

Using the HIM to View Adapter Diagnostic Items

Step	Example Screen
1. Access parameters in the adapter. See Using the PowerFlex 7-Class HIM on page 28. 2. Press the ▲ or ▼ key to scroll to **Diagnostics**. 3. Press the ↵ (Enter) key to display the Diagnostics menu in the adapter. 4. Repeat steps 2 and 3 to enter the **Device Items** option. 5. Press the ▲ or ▼ key to scroll through the items.	Main Menu: Diagnostics Parameter Device Select Device Item # 3 Reference

Table 24 - Adapter Diagnostic Items

No.	Name	Description
1	Common Logic Cmd	The present value of the Common Logic Command being transmitted to the drive by this adapter.
2	Prod Logic Cmd	The present value of the Product Logic Command being transmitted to the drive by this adapter from the controller.
3	Reference	The present value of the Reference being transmitted to the drive by this adapter. Note that a 16-bit value will be sent as the Most Significant Word of the 32-bit field.
4	Common Logic Sts	The present value of the Common Logic Status being received from the drive by this adapter.
5	Prod Logic Sts	The present value of the Product Logic Status being received from the drive by this adapter to the controller.
6	Feedback	The present value of the Feedback being received from the drive by this adapter. Note that a 16-bit value will be sent as the Most Significant Word of the 32-bit field.
7	Datalink A1 In	The present value of respective Datalink In being transmitted to the drive by this adapter. (If not using a Datalink, this parameter should have a value of zero.)
8	Datalink A2 In	
9	Datalink B1 In	
10	Datalink B2 In	
11	Datalink C1 In	
12	Datalink C2 In	
13	Datalink D1 In	
14	Datalink D2 In	
15	Datalink A1 Out	The present value of respective Datalink Out being received from the drive by this adapter. (If the drive indicates a 16-bit datalink size, the value appears in the least significant 16 bits of this diagnostic item, and the most significant 16 bits of this diagnostic item are zero.)
16	Datalink A2 Out	
17	Datalink B1 Out	
18	Datalink B2 Out	
19	Datalink C1 Out	
20	Datalink C2 Out	
21	Datalink D1 Out	
22	Datalink D2 Out	
23	DPI Rx Errors	The present value of the DPI Receive error counter.
24	DPI Rx Error Max	The maximum value (since reset) of the DPI Receive error counter.
25	DPI Tx Errors	The present value of the DPI Transmit error counter.
26	DPI Tx Error Max	The maximum value (since reset) of the DPI Transmit error counter.
27	Boot Flash Count	Number of times the boot firmware in the adapter has been flash updated.
28	App Flash Count	Number of times the application firmware in the adapter has been flash updated.
29	M-S Input Size	Size of data transferred from the network to the drive.
30	M-S Output Size	Size of data transferred from the drive to the network.

No.	Name	Description
31 32 33 34 35 36	HW Addr 1 HW Addr 2 HW Addr 3 HW Addr 4 HW Addr 5 HW Addr 6	Decimal value of each byte in the adapter's Ethernet hardware address. 255:255:255:255:255:255 [HW Addr 1] [HW Addr 2] [HW Addr 3] [HW Addr 4] HW Addr 5] [HW Addr 6]
37 38 39 40	IP Addr Act 1 IP Addr Act 2 IP Addr Act 3 IP Addr Act 4	Value of each byte in the adapter's present IP address. A value of '0' appears if the adapter does not currently have an IP address. 255.255.255.255 [IP Addr Act 1] [IP Addr Act 2] [IP Addr Act 3] [IP Addr Act 4]
41 42 43 44	Subnet Act 1 Subnet Act 2 Subnet Act 3 Subnet Act 4	Value of each byte in the adapter's present subnet mask. A value of '0' appears if the adapter does not currently have a subnet mask. 255.255.255.255 [Subnet Act 1] [Subnet Act 2] [Subnet Act 3] [Subnet Act 4]
45 46 47 48	Gateway Act 1 Gateway Act 2 Gateway Act 3 Gateway Act 4	Value of each byte in the adapter's present gateway address. A value of '0' appears if the adapter does not currently have a gateway address. 255.255.255.255 [Gateway Act 1] [Gateway Act 2] [Gateway Act 3] [Gateway Act 4]
49	EN Rx Overruns	Number of receive buffer overruns reported by the Ethernet hardware.
50	EN Rx Packets	Number of Ethernet packets that the adapter has received.
51	EN Rx Errors	Number of receive errors reported by the Ethernet hardware.
52	EN Tx Packets	Number of Ethernet packets that the adapter has sent.
53	EN Tx Errors	Number of transmit errors reported by the Ethernet hardware.
54	Last TCP Reset	Last reason that the adapter reset or rejected a TCP/IP connection.
55	Missed IO Pkts	Number of incoming I/O connection packets that the adapter did not receive.
56	OPT Status	Operating status of optional I/O board in DPI External Comms Kit. For the meanings of the individual bits, see Viewing Adapter Diagnostic Items on page 146.
57	OPT RX Errors	Number of optional I/O board receive errors.
58	OPT FW Version	Firmware version of optional I/O board (in DPI External Comms Kit).

Viewing and Clearing Events

The adapter has an event queue to record significant events that occur in the operation of the adapter. When such an event occurs, an entry is put into the event queue. You can view the event queue with any of these drive configuration tools:

- LCD PowerFlex 7-Class HIM
- Connected Components Workbench software, version 1.02 or later
- DriveExplorer software, version 2.01 or later
- DriveExecutive software, version 1.01 or later
- Other clients using the DPI Fault object

The event queue can contain up to 32 entries. Eventually the event queue will become full, since its contents are retained through adapter resets. At that point, a new entry replaces the oldest entry. Only an event queue clear operation or adapter power cycle will clear the event queue contents.

Resetting the adapter to defaults has no effect on the event queue.

Using the HIM to View and Clear Events

Step	Example Screen
Viewing Events 1. Access parameters in the adapter. See Using the PowerFlex 7-Class HIM on page 28. 2. Press the ▲ or ▼ key to scroll to **Diagnostics**. 3. Press the ↵ (Enter) key to display the Diagnostics menu in the adapter. 4. Repeat steps 2 and 3 to enter the **Events** option and then **View Event Queue** option. 5. Press the ▲ or ▼ key to scroll through events. The most recent event is Event 1.	Main Menu: Diagnostics Parameter Device Select
Clearing Events 1. Access parameters in the adapter. See Using the PowerFlex 7-Class HIM on page 28. 2. Press the ▲ or ▼ key to scroll to **Diagnostics**. 3. Press the ↵ (Enter) key to display the Diagnostics menu in the adapter. 4. Repeat steps 2 and 3 to enter the **Events** option and then the **Clear Event** option or **Clr Event Queue** option. A message will pop up to confirm that you want to clear the message or queue. 5. Press the ↵ (Enter) key to confirm your request. If **Clr Event Queue** was selected, all event queue entries will then display 'No Event'.	Event Q: 1 E3 Ping Time Flt Dgn: Events View Event Queue Clear Event Clr Event Queue

Events

Many events in the event queue occur under normal operation. If you encounter unexpected communications problems, the events may help you or Allen-Bradley personnel troubleshoot the problem. The following events may appear in the event queue.

Table 25 - Adapter Events

Code	Event	Description
1	No Event	Empty event queue entry.
2	Device Power Up	Cold/hard boot.
3	Device Reset	Warm/soft boot.
4	Config CRC Error	Startup sequence detected corrupt NV storage.
5	App Updated	Startup sequence detected new application firmware in candidate area.
6	Boot Updated	Startup sequence detected new boot firmware in candidate area.
7	FATAL Error	A FATAL error was reported by the operating system.
8	DPI Bus Off	A bus-off condition is detected on DPI.
9	DPI Ping Timeout	No Ping message was received on DPI for longer than the maximum time allowed
10	DPI Port Invalid	The debounced DPI Pin ID is read as zero or seven after the peripheral has completed startup.
11	DPI Port Changed	The debounced DPI Pin ID has changed after the peripheral has completed startup.
12	DPI Host Reset	The drive issued a reset event.
13	DPI Baud 125K	The peripheral detects that the host is at 125 kbps.
14	DPI Baud 500K	The peripheral detects that the host is at 500 kbps.
15	DPI Host Invalid	Connected to a SCANport product and peripheral does not support a SCANport mode.
16	DPI Dup Port	Another peripheral with the same port number is already present.
17	DPI Type 0 Logon	The peripheral successfully logs in for Type 0 control.
18	DPI Type 0 Time	The peripheral has not received a Type 0 status message for longer than the maximum Type 0 time.
19	DPI DL Logon	The peripheral successfully logs into a data link.
20	DPI DL Error	The host rejects a login to a data link (e.g., data link not supported or already in use)
21	DPI DL Time	No Datalink status message is received on DPI for longer than the maximum time allowed
22	DPI Ctrl Disable	The peripheral has sent a “Soft Control Disable” command to the host.
23	DPI Ctrl Enable	The peripheral has sent a “Soft Control Enable” command to the host.
24	DPI Msg Timeout	A Client-Server message sent by the peripheral has not completed within one second.
25	DPI Manual Reset	Manual reset via DPI triggered.
31	Net Dup Address	IP address conflict.
32	Net Comm Fault	The peripheral detected a communications fault on the network.
33	Net Sent Reset	The peripheral received a reset from the network.
34	Net IO Close	An I/O connection from the network to the peripheral was closed.
35	Net Idle Fault	The peripheral is receiving "Idle" packets from the network.
36	Net IO Open	An I/O connection to the peripheral from the network has been opened.
37	Net IO Timeout	An I/O connection from the network to the Peripheral has timed out.
38	Net IO Size Err	EtherNet I/P I/O connection size mismatch error.
39	PCCC IO Close	The device sending PCCC Control messages to the Peripheral has set the PCCC Control Timeout to a value of zero.

Table 25 - Adapter Events (Continued)

Code	Event	Description
40	PCCC IO Open	The Peripheral has begun receiving PCCC Control messages (the PCCC Control Timeout was previously set to a non-zero value).
41	PCCC IO Timeout	The Peripheral has not received a PCCC control message for longer than the PCCC Control Timeout.
42	Msg Ctrl Open	The peripheral has sent a “Soft Control Enable“ command to the host.
43	Msg Ctrl Close	The peripheral has sent a “Soft Control Disable“ command to the host.
44	Msg Ctrl Timeout	A Client-Server message sent by the peripheral has not completed within one second.
45	Peer IO Open	The peripheral has received the first peer I/O message.
46	Peer IO Timeout	The Peripheral has not received a Peer I/O message for longer than the Peer I/O Timeout.
56	Email Failed	E-mail send failure.
58	Adapter Defaulted	Adapter parameters has been reset to default.
61	Net Link 1 Up	Link has been established on Eth Port 1
62	Net Link 1 Down	Link was lost on Eth Port 1.
63	Net Link 2 Up	Link has been established on Eth Port 2
64	Net Link 2 Down	Link was lost on Eth Port 2.
67	Net Ring Up	The Device Level Ring (DLR) status is Normal.
68	Net Ring Down	The Device Level Ring (DLR) status is Faulted.
69	Invalid Net Cfg	The adapter’s network address configuration parameters are invalid, or the network address provided by the BOOTP or DHCP server is invalid.
70	DHCP Response	The adapter received a response to its DHCP request.

Notes:

Viewing the Adapter Web Pages

This chapter provides instructions on how to monitor the adapter and connected PowerFlex drive by using the adapter's web interface.

Topic	Page
Accessing the Adapter Web Home Page	153
Viewing the Web Pages	153
Process Display Home Page	156
Browse DPI Device Folder	156
Diagnostics Web Page	157
Administrative Web Pages	160

Future enhancements may result in adapter web pages that look different than the examples shown in this chapter.

Accessing the Adapter Web Home Page

After configuring the adapter, you can view its web pages. These pages present information about the adapter, the device to which it is connected, and other DPI devices connected to or installed in the device such as a HIM or I/O card.

The adapter can be configured to automatically send email messages to desired addresses when selected device faults occur and/or are cleared when the adapter rakes a communication or idle fault action. Bit 0 of **Parameter 57-[Web Features]** can be used to protect the configured settings. For more details, see page 162.

Viewing the Web Pages

The adapter can be configured to automatically send e-mail messages to desired addresses when selected drive faults occur and/or are cleared, and/or when the adapter takes a communication or idle fault action.

Bit 0 of **Parameter 57 - [Web Features]** can be used to protect the configured settings. For more details, see page 162.

1. On a computer with access to the EtherNet/IP network on which the adapter/device is installed, launch a web browser such as Microsoft™ Internet Explorer, version 5.0 or later.

The computer can access the adapter web pages if it is connected to:

- The same network as the adapter.
- A network with access to the adapter's network via a gateway device (for example, a router).

2. In the Address box, type the IP address of the adapter.
3. Press ENTER.

The adapter web Home Page (Figure 79) appears.

Important: Using the browser's View >Refresh function will always re-display the adapter home page while viewing any of the adapter's web pages.

Figure 79 - Adapter Web Home Page Example

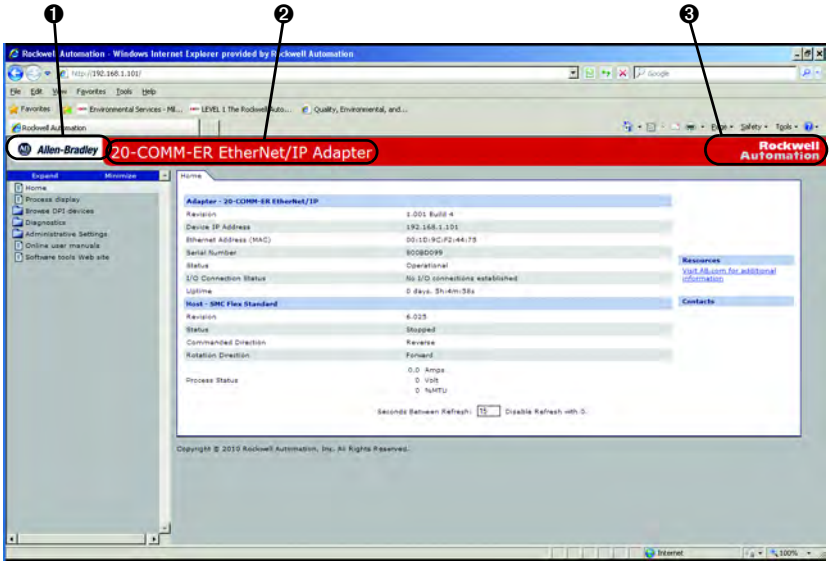

Title Bar on Adapter Web Pages

The title bar appears on the adapter Home Page and all of the adapter's other web pages. The title bar consists of three elements as shown in Figure 79.

Title Bar Element	Description
❶ Allen-Bradley logo	This logo is a hyperlink. Click it to view the ab.com web Home Page.
❷ Adapter Title	Shows the adapter type or user-configurable title.
❸ Rockwell Automation logo	This logo is a hyperlink. Click it to view the Rockwell Automation web Home Page.

Navigation Pane on Adapter Web Pages

The navigation pane appears on the left side of the adapter Home Page and all of the adapter's other web pages. The navigation pane consists of links and link folders which can be expanded or minimized. The following table shows all navigation pane links and link folders.

Navigation Pane Link/ Folder	Description
Home link	Click this link to view the adapter's Home Page (Figure 79).
Process display link	Click this link to view the host drive's Process Display pop-up window (Figure 81).
Browse DPI devices folder	Click this folder to expand and view the Port folders for all present DPI devices, including the drive, adapter, and other devices connected to the drive such as a HIM.
Diagnostics	Displays Ethernet/IP diagnostic information to aid in monitoring and troubleshooting the Ethernet/IP network.
Administrative Settings	Manage adapter settings such as password, IP address, and network configuration. Password Authorization is required to access subfolders.
Online user manuals link	Click this link to view Rockwell Automation's web page with documentation for drives, SMCs, and other devices.
Software tools Web site link	Click this link to view Allen-Bradley's web page with information about software tools such as DriveExplorer and DriveExecutive.

Figure 80 - Adapter Web Home Page Example

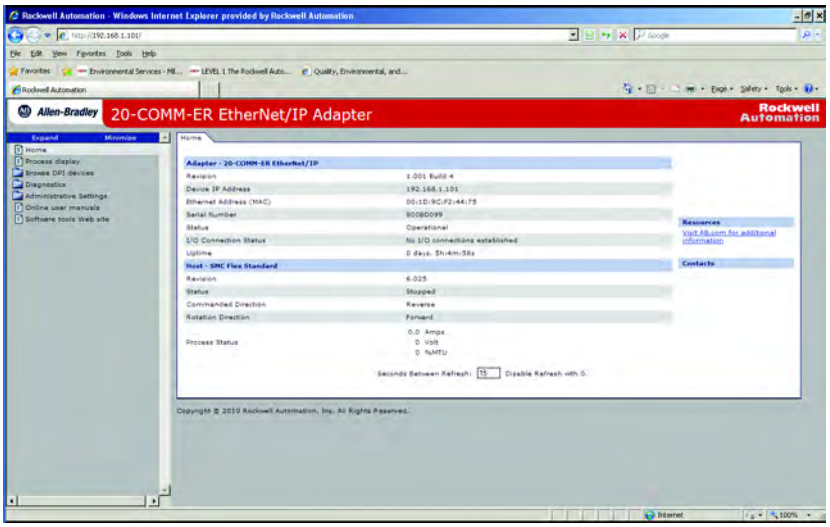

Process Display Home Page

The Process Display pop-up window dynamically shows the host drive's information. To view this window, click the 'Process display' link in the navigation pane.

Figure 81 - Example of Process Display Pop-up Window

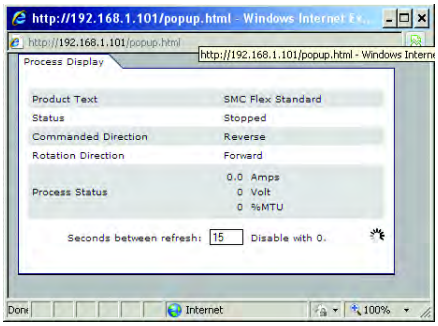

Browse DPI Device Folder

This folder gives access to the databases, fault and alarm queues and diagnostic data (if applicable) to all the devices connected to the DPI network.

Each Device on the DPI network has its own folder that has links to module information, parameters, diagnostic information, fault queues and alarm queue. The Parameters are further organized into the DPI groups defined for the specific device.

Figure 82 shows an example of an SMC-50 device acting as the DPI host on port 0 of the DPI network.

Figure 82 - Example of an SMC-50 Controller Acting as DPI Host

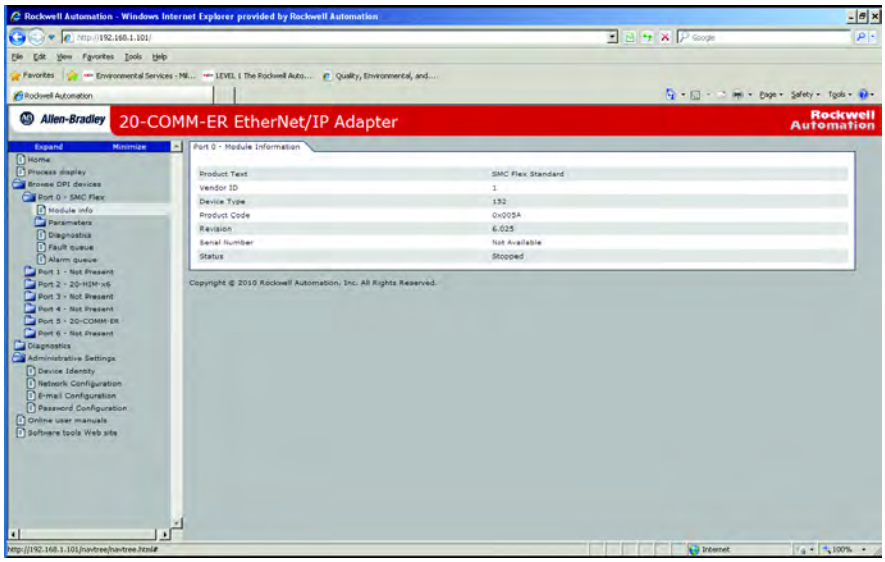

Parameters for the SMC-50 can be changed via the parameters web page by clicking on the Edit button near the bottom of the web page and entering the correct username and password when the authorization pop up window appears.

Note: PowerFlex drives on the network will not allow parameters to be changed via the Parameter Web page.

Figure 83 - Example of Parameter Web Page

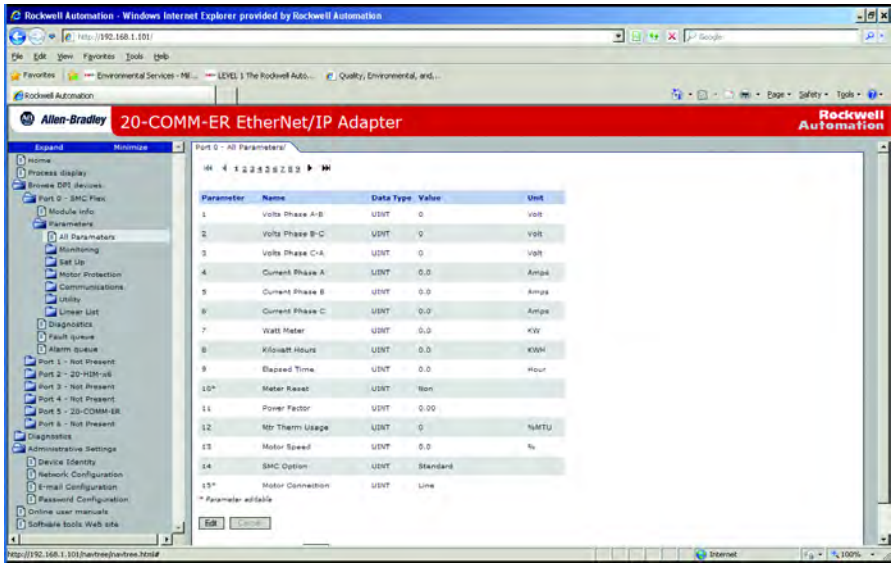

Diagnostics Web Page

The diagnostics web page provides the user with Adapter performance on the network detailing the configuration, status and traffic information about the EtherNet/IP network communications.

Diagnostic Overview link

This link provides a general overview of the Adapter's activity on the EtherNet/IP network.

Figure 84 - Diagnostic Overview Page

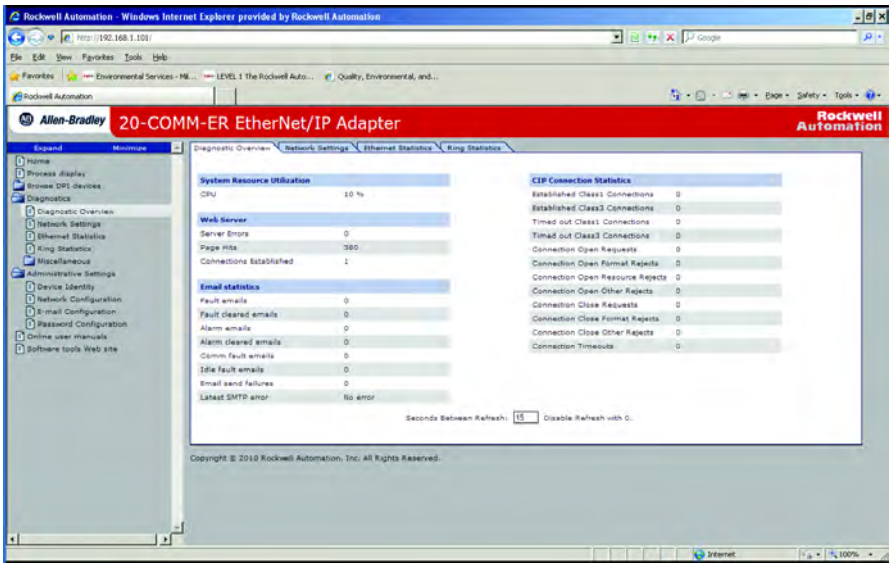

Network Setting Link

This link provides information about the adapter's Ethernet settings and network activities.

Figure 85 - Network Setting Page

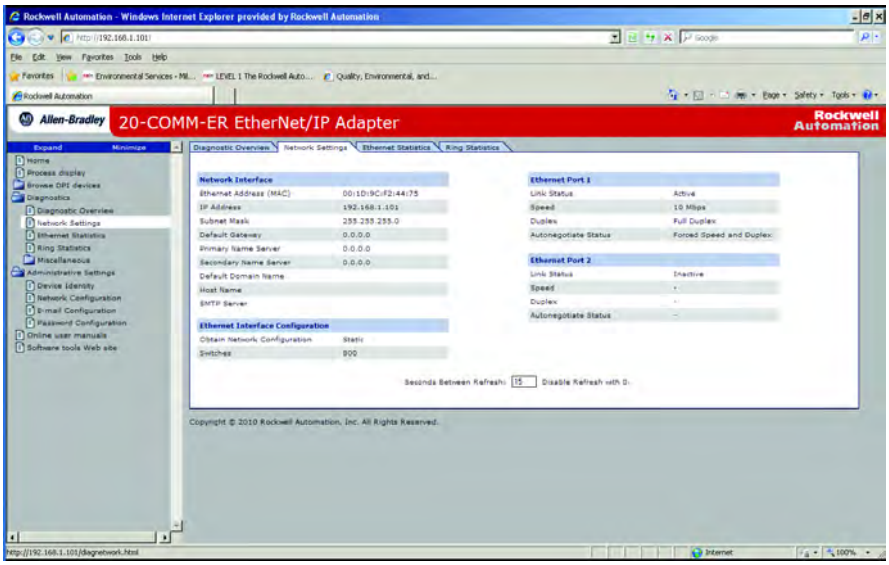

EtherNet/IP Statistics Link

This links displays information about the traffic activity on the EtherNet/IP network.

Figure 86 - EtherNet/IP Statistics Page

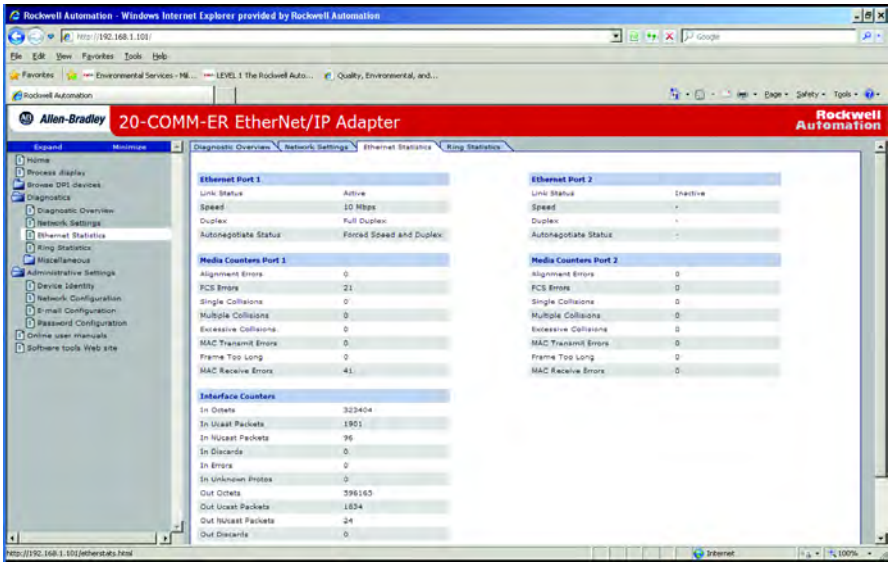

Ring Statistics link

This page displays configuration and status of the network and identifies the ring supervisor if the Ethernet network is configured as a ring.

Figure 87 - Ring Statistics Page

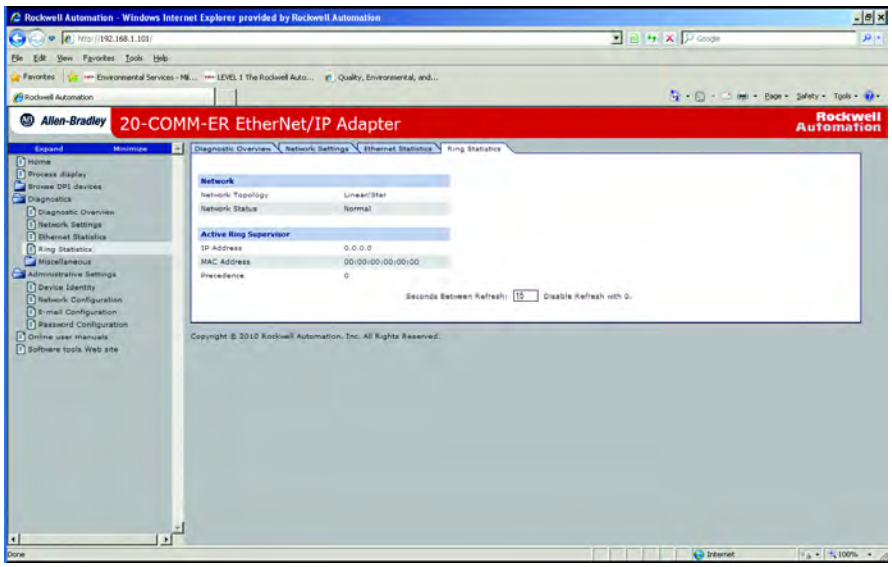

Crash Display Link

Figure 88 - Crash Display Page

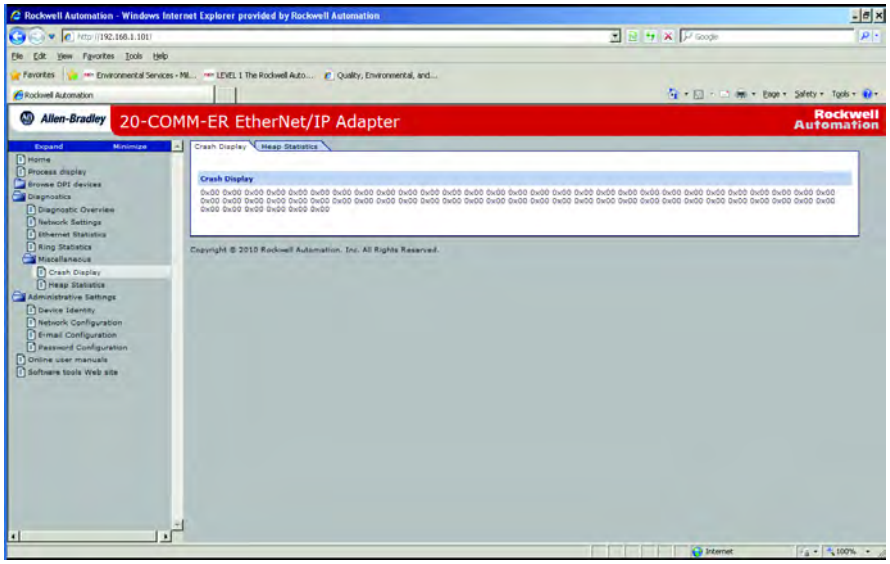

Heap Statistics Display link

Figure 89 - Heap Statistics Page

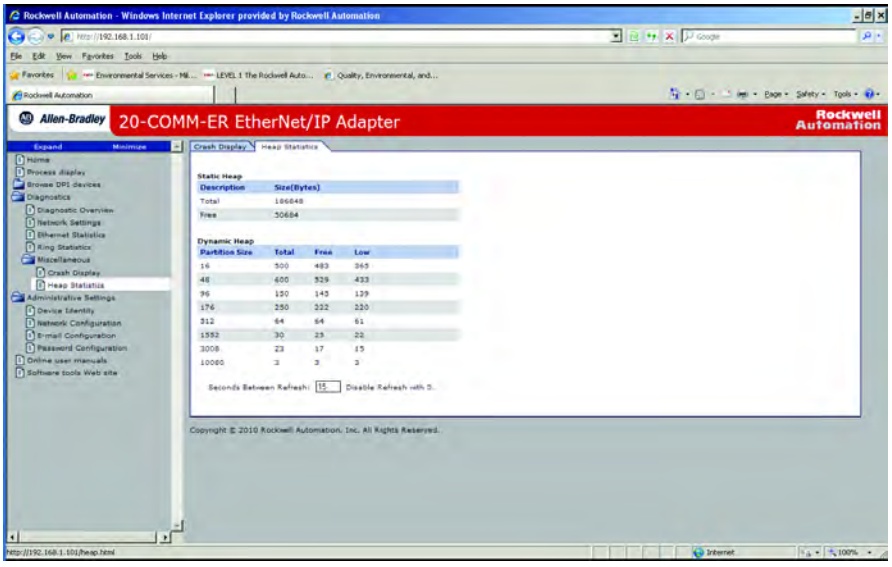

Administrative Web Pages

Administrative Web pages give the user access to the 20-COMM-ER module for the purpose of configuring the device for network operation and messaging.

Device Identity Link

The Device Identity link is used to give the Adapter an identity on the EtherNet/IP network that will be recognized by the user, software tools, and other devices on the network.

Figure 90 - Device Identity Page

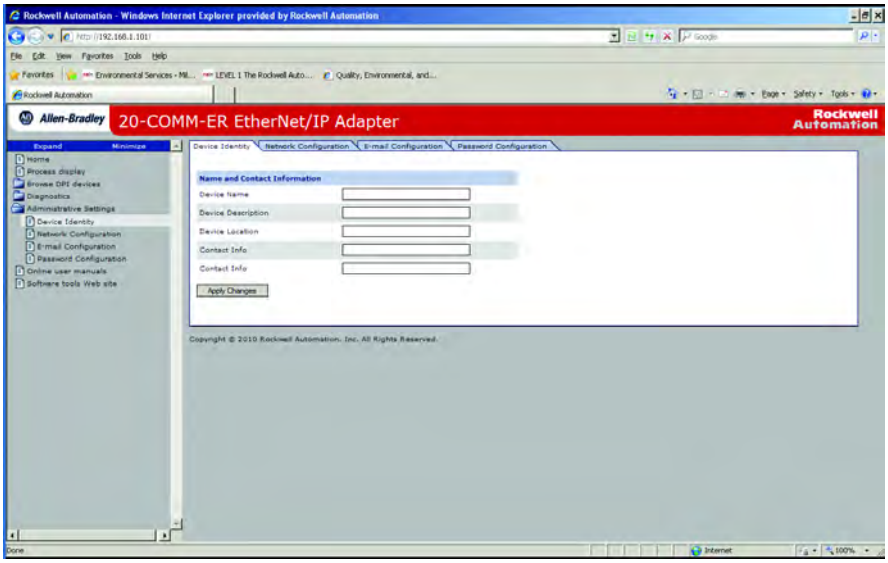

Network Configuration Link

The network configuration link allows setting of the TCP/IP layer of the Adapter, including IP address, Subnet mask, and gateway address.

Figure 91 - Network Configuration Page

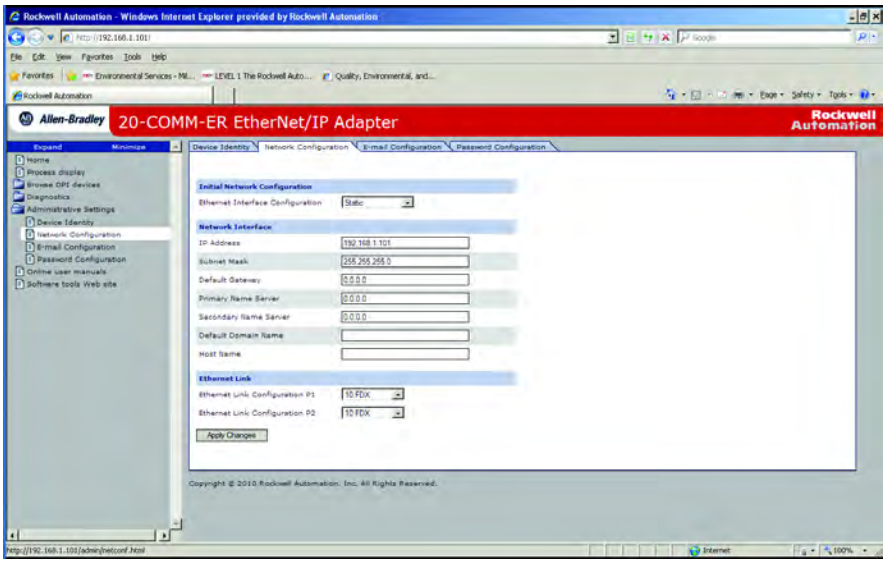

Email Configuration Link

The Configure E-mail Notification web page contains selections and data fields for configuring the adapter to automatically send email messages to desired addresses when selected types of events occur. To view this web page, click the 'Configure e-mail...' link (highlighted in Figure 92) in the navigation pane.

Figure 92 - E-mail Configuration Page

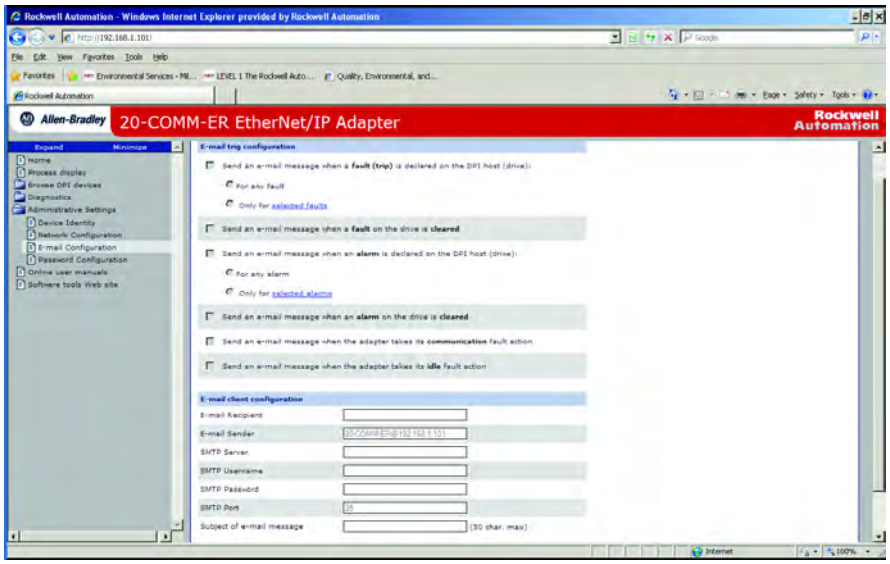

To configure email notification, perform the following steps.

1. Click the desired 'Send an e-mail message when...' check boxes you want to occur that will send email notification. If you only want email notification when selected faults/alarms occur:
   a. Click the respective fault and/or alarm radio buttons.
   b. Click the 'selected faults' link and/or 'selected alarms' link. Figure 93 shows an example faults configuration page.

Figure 93 - Example of Selected Faults Configuration Page

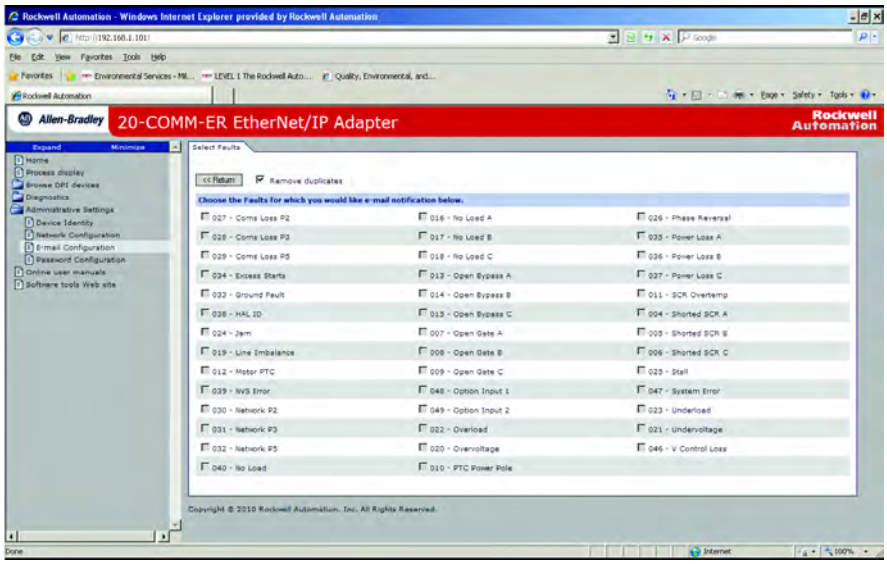

c. Click the desired fault/alarm check boxes.

d. Click **Apply Changes**.

e. Click the 'Back to E-mail Configuration Page' link.

2. Type the following information in their respective boxes.

Information	Description
'SMTP Server'	Type in the address of the mail server that will be used to deliver the email messages. (When the IP address is unknown, read the TIP shown below this table to determine the mail server address.)
'TO email recipient'	Type in addresses to where you want email messages to be sent. Multiple addresses can be used, but they must be separated by commas (comma delimited).
'Subject of e-mail message…'	Type in the desired subject text for the email message.

Figure 94 shows an example email message automatically sent by the adapter in response to selected events.

Figure 94 - Example of E-mail Message Sent by the Adapter

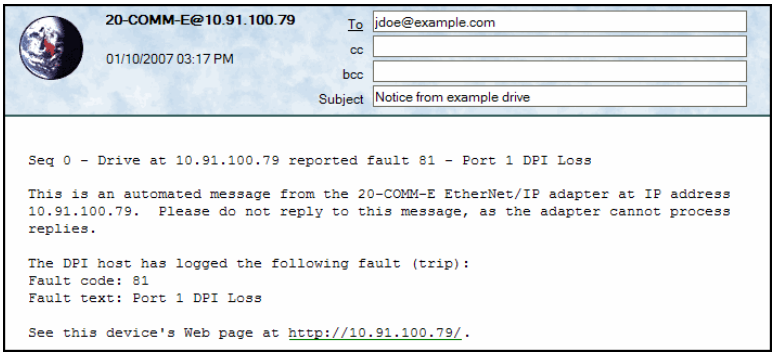

TIP To stop email messages, uncheck all of the 'Send an e-mail message when…' boxes.

Disabling the adapter web pages by setting the Web Pages Switch (SW2 in Figure 2) to the 'Disable Web' position will **not stop** the adapter from sending email messages.

Password Configuration

The Password Configuration Link allows the user to set or change a password. The factory default configuration is:

Username: Administrator

Password: <none> no password is set

Figure 95 - Password Configuration Page

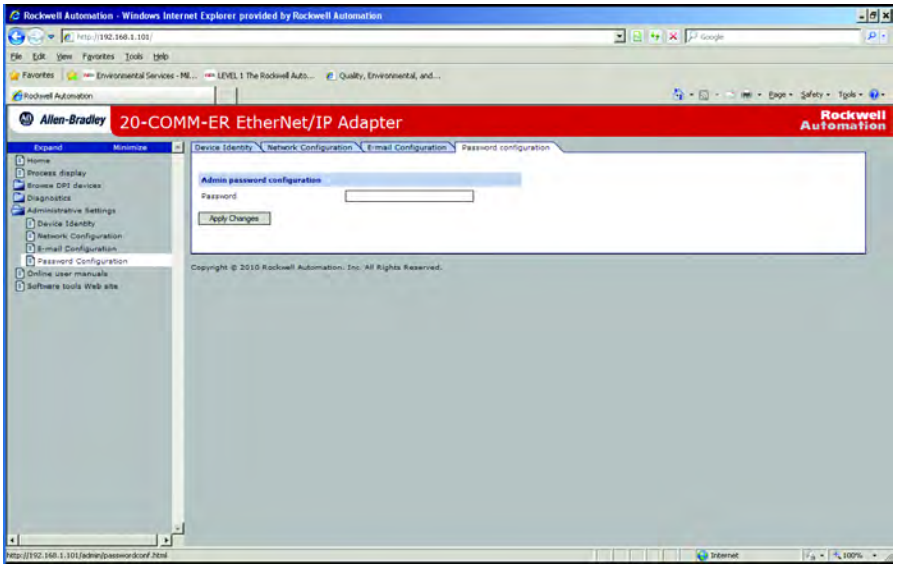

Notes:

Using the Adapter in a DPI External Comms Kit (20-XCOMM-DC-BASE)

This chapter provides information and examples that explain how to use the adapter in a DPI External Comms Kit (20-XCOMM-DC-BASE).

The adapter is typically installed in the internal communication slot on the PowerFlex 7-Class drive. However, an externally-mounted adapter may be desired when:

- The PowerFlex drive is already connected to an existing network, such as Remote I/O, and a second network is desired for a DriveExplorer or DriveExecutive software tool, data collection, and so forth.
- The PowerFlex drive is remotely located next to some I/O devices that also need to be networked. The DPI External Comms Kit has an option slot for general-purpose network I/O that a controller can use. Both the drive and I/O devices are handled as one node on the network to reduce the network node count.

Topic	Page
Installing the Adapter	167

Installing the Adapter

The adapter can be installed in a DPI External Comms Kit.

Figure 96 - Mounting and Connecting the Adapter

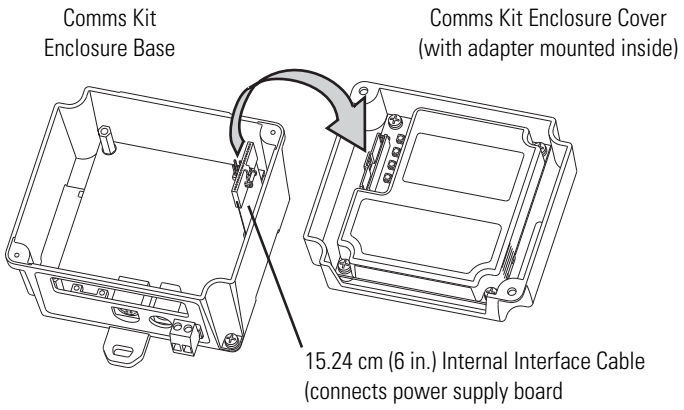

For more information, see the DPI External Communications Kit Installation Instructions, publication 20COMM-IN001.

Specifications

This appendix presents the specifications for the adapter.

Topic	Page
Communications	169
Electrical	169
Mechanical	170
Environmental	170
Regulatory Compliance	170

Communications

Network Protocol Data Rates	 EtherNet/IP 10 Mbps Full Duplex 10 Mbps Half Duplex 100 Mbps Full Duplex 100 Mbps Half Duplex
Connection Limits	30 TCP connections Two 'class 1' connections and 14 'class 3' connections are supported. The following activities use a CIP connection: • Explicit messaging where 'connected' is chosen (for example, in a checkbox in RSLogix 5000) The following activities **do not** use a CIP connection: • Explicit messaging-based control using PCCC or the Register or Assembly objects, including the PLC-5, SLC 500, and MicroLogix 1100 examples in Chapter 4 • Explicit messaging where 'connected' is **not** chosen, which is typically the default
Requested Packet Interval (RPI)	2 ms minimum
Drive Protocol Data Rates	 DPI 125 kbps or 500 kbps

Electrical

Consumption Drive Network	 482 mA at 5V DC supplied by the host (drive or DPI External Comms Kit) N/A

Mechanical

Dimensions	
Height	19 mm (0.75 inches)
Length	86 mm (3.39 inches)
Width	78.5 mm (3.09 inches)
Shipping Weight	150 g (5.2 oz.)

Environmental

Temperature	
Operating	-10…50 °C (14…122 °F)
Storage	-40…85 °C (-40…185 °F)
Relative Humidity	5…95% non-condensing
Atmosphere	**Important:** The adapter **must not** be installed in an area where the ambient atmosphere contains volatile or corrosive gas, vapors or dust. If the adapter is not going to be installed for a period of time, it must be stored in an area where it will not be exposed to a corrosive atmosphere.

Regulatory Compliance

Certification	Drive Specification	SMC Specification
UL	UL508C	UL508
cUL	CSA C22.2 No. 14-2010	CSA C22.2 No. 14-10
CE	EN61800-3	EN60947-4-2
CTick	EN61800-3	EN60947-4-2

NOTE: This is a product of category C2 according to IEC 61800-3. In a domestic environment this product may cause radio interference in which case supplementary mitigation measures may be required.

Adapter Parameters

This appendix provides information about the adapter parameters.

Topic	Page
About Parameter Numbers	171
Parameter List	171

About Parameter Numbers

The parameters in the adapter are numbered consecutively. However, depending on which configuration tool you use, they may have different numbers.

Configuration Tool	Numbering Scheme
• HIM • Connected Components Workbench software • DriveExplorer • DriveExecutive	The adapter parameters begin with parameter 01. For example, **Parameter 01 - [DPI Port]** is parameter 01 as indicated by this manual.
• Explicit Messaging	See Chapter 6, Using Explicit Messaging and Appendix C, EtherNet/IP Objects for details.

Parameter List

Parameter No.	Name and Description	Details
01	**[DPI Port]** Displays the port to which the adapter is connected. This will usually be port 5.	Default: 5 Minimum: 0 Maximum: 7 Type: Read Only
02	**[DPI Data Rate]** Displays the data rate used by the drive. This data rate is set in the drive and the adapter detects it.	Default: 0 = 125 kbps Values: 0 = 125 kbps 1 = 500 kbps Type: Read Only
03	**[BOOTP/DHCP]** Configures the adapter to use BOOTP so that you can set its IP address, subnet mask, and gateway address with a BOOTP server.	Default: 1 = Enabled Values: 0 = Disabled 1 = Enabled Type: Read/Write Reset Required: Yes

Parameter No.	Name and Description	Details
04 05 06 07	**[IP Addr Cfg 1]** **[IP Addr Cfg 2]** **[IP Addr Cfg 3]** **[IP Addr Cfg 4]** Sets the IP address bytes for the adapter's network address when **Parameter 03 - [BOOTP]** is set to '0' (Disabled). 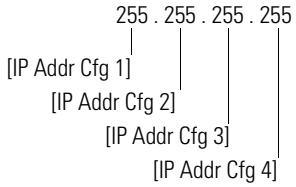	Default: 0 Default: 0 Default: 0 Default: 0 Minimum: 0 Maximum: 255 Type: Read/Write Reset Required: Yes
08 09 10 11	**[Subnet Cfg 1]** **[Subnet Cfg 2]** **[Subnet Cfg 3]** **[Subnet Cfg 4]** Sets the subnet mask bytes for the adapter's network address when **Parameter 03 - [BOOTP]** is set to '0' (Disabled). 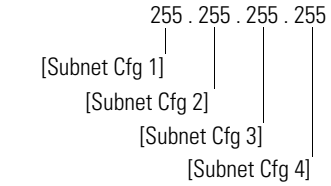	Default: 0 Default: 0 Default: 0 Default: 0 Minimum: 0 Maximum: 255 Type: Read/Write Reset Required: Yes
12 13 14 15	**[Gateway Cfg 1]** **[Gateway Cfg 2]** **[Gateway Cfg 3]** **[Gateway Cfg 4]** Sets the gateway address bytes for the adapter's network address when **Parameter 03 - [BOOTP]** is set to '0' (Disabled). 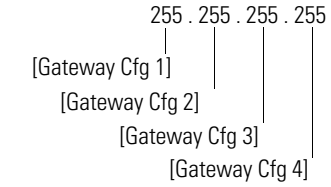	Default: 0 Default: 0 Default: 0 Default: 0 Minimum: 0 Maximum: 255 Type: Read/Write Reset Required: Yes
16	**[EN P1 Rate Cfg]** Sets the speed and duplex network data rate at which the adapter communicates. (Updates **Parameter 17 - [EN P1 Rate Act]** after a reset.)	Default: 0 = Autodetect Values: 0 = Autodetect 1 = 10 Mbps Full 2 = 10 Mbps Half 3 = 100 Mbps Full 4 = 100 Mbps Half Type: Read/Write Reset Required: Yes

Parameter No.	Name and Description	Details
17	**[EN P1 Rate Act]** Displays the actual speed and duplex network data rate used by the adapter.	Default: 0 = No Link Values: 0 = No Link 1 = 10 Mbps Full 2 = 10 Mbps Half 3 = 100 Mbps Full 4 = 100 Mbps Half Type: Read Only
18	**[EN P2 Rate Cfg]** Sets the speed and duplex network data rate at which the adapter communicates. (Updates **Parameter 19 - [EN PI Rate Act]** after a reset.)	Default: 0 = Autodetect Values: 0 = Autodetect 1 = 10 Mbps Full 2 = 10 Mbps Half 3 = 100 Mbps Full 4 = 100 Mbps Half Type: Read/Write Reset Required: Yes
19	**[EN P2 Rate Act]** Displays the actual speed and duplex network data rate used by the adapter.	Default: 0 = No Link Values: 0 = No Link 1 = 10 Mbps Full 2 = 10 Mbps Half 3 = 100 Mbps Full 4 = 100 Mbps Half Type: Read Only
20	**[Ref/Fdbk Size]** Displays the size of the Reference/Feedback. The drive determines the size of the Reference/ Feedback.	Default: 0 = 16-bit Values: 0 = 16-bit 1 = 32-bit Type: Read Only
21	**[Datalink Size]** Displays the size of each Datalink word. The drive determines the size of Datalinks.	Default: 0 = 16-bit Values: 0 = 16-bit 1 = 32-bit Type: Read Only
22	**[Reset Module]** No action if set to '0' (Ready). Resets the adapter if set to '1' (Reset Module). Restores the adapter to its factory default settings if set to '2' (Set Defaults). This parameter is a command. It will be reset to '0' (Ready) after the command has been performed.	Default: 0 = Ready Values: 0 = Ready 1 = Reset Module 2 = Set Defaults Type: Read/Write Reset Required: No

ATTENTION: Risk of injury or equipment damage exists. If the adapter is transmitting I/O that controls the drive, the drive may fault when you reset the adapter. Determine how your drive will respond before resetting a connected adapter.

Parameter No.	Name and Description	Details
23	**[Comm Flt Action]** Sets the action that the adapter and drive will take if the adapter detects that I/O communication has been disrupted. This setting is effective only if I/O that controls the drive is transmitted through the adapter. When communication is re-established, the drive will automatically receive commands over the network again.	Default: 0 = Fault Values: 0 = Fault 1 = Stop 2 = Zero Data 3 = Hold Last 4 = Send Flt Cfg Type: Read/Write Reset Required: No

ATTENTION: Risk of injury or equipment damage exists. **Parameter 23 - [Comm Flt Action]** lets you determine the action of the adapter and connected drive if I/O communication is disrupted. By default, this parameter faults the drive. You can set this parameter so that the drive continues to run, however, precautions should be taken to verify that the setting of this parameter does not create a risk of injury or equipment damage. When commissioning the drive, verify that your system responds correctly to various situations (for example, a disconnected cable).

Parameter No.	Name and Description	Details
24	**[Idle Flt Action]** Sets the action that the adapter and drive will take if the adapter detects that the controller is in program mode or faulted. This setting is effective only if I/O that controls the drive is transmitted through the adapter. When the controller is put back in Run mode, the drive will automatically receive commands over the network again.	Default: 0 = Fault Values: 0 = Fault 1 = Stop 2 = Zero Data 3 = Hold Last 4 = Send Flt Cfg Type: Read/Write Reset Required: No

ATTENTION: Risk of injury or equipment damage exists. **Parameter 24 - [Idle Flt Action]** lets you determine the action of the adapter and connected drive when the controller is idle. By default, this parameter faults the drive. You can set this parameter so that the drive continues to run, however, precautions should be taken to verify that the setting of this parameter does not create a risk of injury or equipment damage. When commissioning the drive, verify that your system responds correctly to various situations (for example, a faulted controller).

Parameter No.	Name and Description	Details
25	**[DPI I/O Cfg]** Sets the I/O that is transferred through the adapter.	Default: xxx0 0001 Bit Values: 0 = I/O Disabled 1 = I/O Enabled Type: Read/Write Reset Required: Yes

Bit Definition	Not Used	Not Used	Not Used	Datalink D	Datalink C	Datalink B	Datalink A	Cmd/Ref
Default	x	x	x	0	0	0	0	1
Bit	7	6	5	4	3	2	1	0

Parameter No.	Name and Description	Details
26	**[DPI I/O Act]** Displays the I/O that the adapter is actively transmitting. The value of this parameter will usually be equal to the value of **Parameter 25 - [DPI I/O Cfg]**.	Default: xxx0 0001 Bit Values: 0 = I/O Disabled 1 = I/O Enabled Type: Read Only Bit Definition: Not Used, Not Used, Not Used, Datalink D, Datalink C, Datalink B, Datalink A, Cmd/Ref Default: x, x, x, 0, 0, 0, 0, 1 Bit: 7, 6, 5, 4, 3, 2, 1, 0
27	**[Flt Cfg Logic]** Sets the Logic Command data that is sent to the drive if any of the following is true: • **Parameter 23 - [Comm Flt Action]** is set to '4' (Send Flt Cfg) and I/O communication is disrupted. • **Parameter 24 - [Idle Flt Action]** is set to '4' (Send Flt Cfg) and the controller is idle. • **Parameter 43 - [Peer Flt Action]** is set to '4' (Send Flt Cfg) and peer I/O communication is disrupted. The bit definitions will depend on the product to which the adapter is connected. See Appendix D or the documentation for the drive being used.	Default: 0000 0000 0000 0000 Minimum: 0000 0000 0000 0000 Maximum: 1111 1111 1111 1111 Type: Read/Write Reset Required: No
28	**[Flt Cfg Ref]** Sets the Reference data that is sent to the drive if any of the following is true: • **Parameter 23 - [Comm Flt Action]** is set to '4' (Send Flt Cfg) and I/O communication is disrupted. • **Parameter 24 - [Idle Flt Action]** is set to '4' (Send Flt Cfg) and the controller is idle. • **Parameter 43- [Peer Flt Action]** is set to '4' (Send Flt Cfg) and peer I/O communication is disrupted.	Default: 0 Minimum: 0 Maximum: 4294967295 Type: Read/Write Reset Required: No **Important:** If the drive uses a 16-bit Reference, the most significant word of this value must be set to zero (0) or a fault will occur.

Parameter No.	Name and Description	Details
29 30 31 32 33 34 35 36	**[Flt Cfg A1 In]** **[Flt Cfg A2 In]** **[Flt Cfg B1 In]** **[Flt Cfg B2 In]** **[Flt Cfg C1 In]** **[Flt Cfg C2 In]** **[Flt Cfg D1 In]** **[Flt Cfg D2 In]** Sets the data that is sent to the Datalink in the drive if any of the following is true: • **Parameter 23 - [Comm Flt Action]** is set to '4' (Send Flt Cfg) and I/O communication is disrupted. • **Parameter 24 - [Idle Flt Action]** is set to '4' (Send Flt Cfg) and the controller is idle. • **Parameter 43 - [Peer Flt Action]** is set to '4' (Send Flt Cfg) and peer I/O communication is disrupted.	Default: 0 Default: 0 Default: 0 Default: 0 Default: 0 Default: 0 Default: 0 Default: 0 Minimum: 0 Maximum: 4294967295 Type: Read/Write Reset Required: No **Important:** If the drive uses 16-bit Datalinks, the most significant word of this value must be set to zero (0) or a fault will occur.
37	**[M-S Input]** Sets the Master-Slave input data. This data is produced by the scanner and consumed by the adapter.	Default: xxx0 0001 Bit Values: 0 = I/O disabled 1 = I/O enabled Type: Read/Write Reset Required: Yes

Bit Definition	Not Used	Not Used	Not Used	Datalink D Input	Datalink C Input	Datalink B Input	Datalink A Input	Cmd/Ref
Default	x	x	x	0	0	0	0	1
Bit	7	6	5	4	3	2	1	0

38	**[M-S Output]** Sets the Master-Slave output data. This data is produced by the adapter and consumed by the Master device (for example, scanner).	Default: xxx0 0001 Bit Values: 0 = I/O disabled 1 = I/O enabled Type: Read/Write Reset Required: Yes

Bit Definition	Not Used	Not Used	Not Used	Datalink D Output	Datalink C Output	Datalink B Output	Datalink A Output	Cmd/Ref
Default	x	x	x	0	0	0	0	1
Bit	7	6	5	4	3	2	1	0

39	**[Ref Adjust]** Sets the percent scale factor for the Reference received from the network.	Default: 100.00% Minimum: 0.00% Maximum: 200.00% Type: Read/Write Reset Required: No

ATTENTION: To guard against equipment damage and/or personal injury, note that changes to **Parameter 39 - [Ref Adjust]** take effect immediately. A drive receiving its Reference from the adapter will receive the newly scaled Reference, resulting in a change of speed.

Parameter No.	Name and Description	Details
40 41	**[Peer A Input]** **[Peer B Input]** Sets the destination of the peer I/O input. The adapter receives this data from the network and sends it to the drive. **Important:** Changes to these parameters are ignored when **Parameter 49 - [Peer Inp Enable]** is set to '1' (On). **Important:** If the parameter is set to input a Logic Command, configure the mask in **Parameter 42 - [Peer Cmd Mask]** so that the desired bits from the peer device are used.	Default: 0 = Off Default: 0 = Off Values: 0 = Off 1 = Cmd/Ref 2 = Datalink A Input 3 = Datalink B Input 4 = Datalink C Input 5 = Datalink D Input Type: Read/Write Reset Required: No
42	**[Peer Cmd Mask]** Sets the mask for the Logic Command word when it is received through peer input. If the mask bit is '0' (Off), the command bit is ignored and not used. If the mask bit is '1' (On), the command bit is checked and used. **Important:** If the adapter receives a Logic Command from both a Master device and a peer device, each command bit must have only one source. The source of command bits set to '0' will be the Master device. The source of command bits set to '1' will be the peer device.	Default: 0000 0000 0000 0000 Minimum: 0000 0000 0000 0000 Maximum: 1111 1111 1111 1111 Values: 0 = Ignore bit 1 = Check bit Type: Read/Write Reset Required: Yes
43	**[Peer Flt Action]** Sets the action that the adapter and drive will take if the adapter detects that peer I/O communication has been disrupted. This setting is effective only if I/O is transmitted through the adapter.	Default: 0 = Fault Values: 0 = Fault 1 = Stop 2 = Zero Data 3 = Hold Last 4 = Send Flt Cfg Type: Read/Write Reset Required: No

ATTENTION: Risk of injury or equipment damage exists. **Parameter 43 - [Peer Flt Action]** lets you determine the action of the adapter and connected drive if the adapter is unable to communicate with the designated peer. By default, this parameter faults the drive. You can set this parameter so that the drive continues to run, however, precautions should be taken to verify that the setting of this parameter does not create a risk of injury or equipment damage. When commissioning the drive, verify that your system responds correctly to various situations (for example, a disconnected cable).

Parameter No.	Name and Description	Details
44 45 46 47	**[Peer Inp Addr 1]** **[Peer Inp Addr 2]** **[Peer Inp Addr 3]** **[Peer Inp Addr 4]** Sets the IP address bytes that specifies the device from which the adapter receives (consumes) peer I/O data. 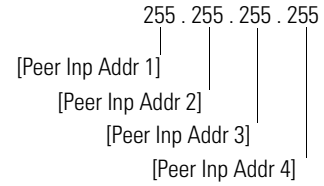 **Important:** The Peer Inp Addr must be on the same subnet as the 20-COMM-ER. See page 226 for more information. Changes to these parameters are ignored when **Parameter 49 - [Peer Inp Enable]** is set to '1' (On).	Default: 0 Default: 0 Default: 0 Default: 0 Minimum: 0 Maximum: 255 Type: Read/Write Reset Required: No
48	**[Peer Inp Timeout]** Sets the timeout for a peer I/O connection. If the time is reached without the adapter receiving (consuming) a message, the adapter will respond with the action specified in **Parameter 43 - [Peer Flt Action]**. In an adapter receiving (consuming) peer I/O, the value of this parameter must be greater than the product of the value of **Parameter 54 - [Peer Out Time]** in the adapter transmitting (producing) peer I/O multiplied by the value of **Parameter 55 - [Peer Out Skip]** in the adapter transmitting (producing) peer I/O.	Default: 10.00 Seconds Minimum: 0.01 Seconds Maximum: 10.00 Seconds Type: Read/Write Reset Required: No
49	**[Peer Inp Enable]** Determines if peer I/O input is on or off.	Default: 0 = Off Values: 0 = Off 1 = On Type: Read/Write Reset Required: No
50	**[Peer Inp Status]** Displays the status of the consumed peer I/O input connection.	Default: 0 = Off Values: 0 = Off 1 = Waiting 2 = Running 3 = Faulted Type: Read Only

Parameter No.	Name and Description	Details
51 52	**[Peer A Output]** **[Peer B Output]** Selects the source of the peer I/O output data. The adapter transmits this data to the network. **Important:** Changes to these parameters are ignored when **Parameter 53 - [Peer Out Enable]** is set to '1' (On).	Default: 0 = Off Default: 0 = Off Values: 0 = Off 1 = Cmd/Ref 2 = Datalink A Input 3 = Datalink B Input 4 = Datalink C Input 5 = Datalink D Input 6 = Datalink A Output 7 = Datalink B Output 8 = Datalink C Output 9 = Datalink D Output Type: Read/Write Reset Required: No
53	**[Peer Out Enable]** Determines if peer I/O output is on or off.	Default: 0 = Off Values: 0 = Off 1 = On Type: Read/Write Reset Required: No
54	**[Peer Out Time]** Sets the minimum time that an adapter will wait when transmitting data to a peer. **Important:** Changes to these parameters are ignored when **Parameter 53 - [Peer Out Enable]** is set to '1' (On).	Default: 10.00 Seconds Minimum: 0.01 Seconds Maximum: 10.00 Seconds Type: Read/Write Reset Required: No
55	**[Peer Out Skip]** Sets the maximum time that an adapter will wait when transmitting data to a peer. The value of **Parameter 54 - [Peer Out Time]** is multiplied by the value of this parameter to set the time. **Important:** Changes to these parameters are ignored when **Parameter 53 - [Peer Out Enable]** is set to '1' (On).	Default: 1 Minimum: 1 Maximum: 16 Type: Read/Write Reset Required: No
56	**[Web Enable]** Displays the setting of the adapter Web Pages Switch (SW2) when the adapter was last reset.	Default: 0 = Disabled Values: 0 = Disabled 1 = Enabled Type: Read Only
57	**[Web Features]** Sets the access to the Web interface and Web configurable email notification feature.	Default: xxxx xxx0 Bit Values: 0 = Disabled 1 = Enabled Type: Read/Write Reset Required: No

Bit Definition	Not Used	Not Used	Not Used	Not Used	Not Used	Not Used	Not Used	E-mail Cfg
Default	x	x	x	x	x	x	x	1
Bit	7	6	5	4	3	2	1	0

Notes:

EtherNet/IP Objects

This appendix presents information about the EtherNet/IP objects that can be accessed using Explicit Messages. For information on the format of Explicit Messages and example ladder logic programs, refer to Chapter 6, Using Explicit Messaging.

Object	Class Code		Page
	Hex.	Dec.	
Identity Object	0x01	1	182
Assembly Object	0x04	4	183
Register Object	0x07	7	184
Parameter Object	0x0F	15	185
Parameter Group Object	0x10	16	188
Device Level Ring Object	0x47	71	189
Quality of Service Object	0x48	72	190
PCCC Object	0x67	103	190

Object	Class Code		Page
	Hex.	Dec.	
DPI Device Object	0x92	146	196
DPI Parameter Object	0x93	147	198
DPI Fault Object	0x97	151	204
DPI Alarm Object	0x98	152	206
DPI Diagnostic Object	0x99	153	207
DPI Time Object	0x9B	155	209
TCP/IP Interface Object	0xF5	245	211
Ethernet Link Object	0xF6	246	213

TIP See the EtherNet/IP specification for more information about EtherNet/IP objects. Information about the EtherNet/IP specification is available on the ODVA web site (http://www.odva.org).

Supported Data Types

Data Type	Description
BOOL	8-bit value -- low bit is true or false
BOOL[n]	Array of n bits
BYTE	8-bit unsigned integer
CONTAINER	32-bit parameter value - sign extended if necessary
DINT	32-bit signed integer
DWORD	32-bit unsigned integer
INT	16-bit signed integer
LWORD	64-bit unsigned integer
REAL	32-bit floating point
SHORT_STRING	1-byte length indicator + that many characters
SINT	8-bit signed integer
STRING[n]	Array of n characters
STRUCT	Structure name only - no size in addition to elements
TCHAR	8 or 16-bit character
UDINT	32-bit unsigned integer
UINT	16-bit unsigned integer
USINT	8-bit unsigned integer
WORD	16-bit unsigned integer

Identity Object

Class Code

Hexadecimal	Decimal
0x01	1

Services

	Implemented for:		
Service Code	Class	Instance	Service Name
0x05	No	Yes	Reset
0x0E	Yes	Yes	Get_Attribute_Single
0x01	Yes	Yes	Get_Attributes_All

Instances

The number of instances depends on the number of components in the device connected to the adapter. This number of components can be read in Instance 0, Attribute 2.

Instance	Description
0	Class
1	Host
2…15	Peripherals on Ports 1…14

Class Attributes

Attribute ID	Access Rule	Name	Data Type	Description
2	Get	Max Instance	WORD	Total number of instances

Instance Attributes

Attribute ID	Access Rule	Name	Data Type	Description
1	Get	Vendor ID	WORD	1 = Allen-Bradley
2	Get	Device Type	WORD	123
3	Get	Product Code	WORD	Number identifying product name and rating
4	Get	Revision: Major Minor	STRUCT of: BYTE BYTE	 Value varies Value varies
5	Get	Status	WORD	Bit 0 = Owned Bit 8 = Minor recoverable fault Bit 10 = Major recoverable fault
6	Get	Serial Number	DWORD	Unique 32-bit number
7	Get	Product Name	SHORT_STRING	Product name and rating
8	Get	State	USINT	Always returns 3 (Operational)
9	Get	Configuration Consistency Value	UINT	For the Host (Instance #1) the CCV is determined from the Host's NVS Checksum along with 20-COMM-ER's NVS Checksum. For DPI Peripherals (Instances 2-15) the CCV is from the peripheral's NVS Checksum only.

Assembly Object

Class Code

Hexadecimal	Decimal
0x04	4

Services

	Implemented for:		
Service Code	Class	Instance	Service Name
0x0E	Yes	Yes	Get_Attribute_Single
0x10	Yes	Yes	Set_Attribute_Single

Instances

Instance	Description
1	All I/O data being read from the DPI device (read-only)
2	All I/O data written to the DPI device (read/write)
191	Input only
192	Listen only

Class Attributes

Attribute ID	Access Rule	Name	Data Type	Description
1	Get	Revision	WORD	2
2	Get	Max Instance	WORD	2
100	Set	Control Timeout	WORD	Control timeout in seconds

Instance Attributes

Attribute ID	Access Rule	Name	Data Type	Description
1	Get	Number of Members	WORD	1
2	Get	Member List	ARRAY of STRUCT: WORD WORD Packed EPATH	 Size of member data Size of member path Member path
3	Conditional [1]	Data	Array of Bits	Data to be transferred
4	Get	Size	WORD	Size of assembly data in bits

(1) For instance 1, access rule for the data attribute is Get. For instance 2, it is Get/Set.

Important: Setting an assembly object attribute can be done only when the Control Timeout (class attribute 100) has been set to a non-zero value.

Register Object

Class Code

Hexadecimal	Decimal
0x07	7

Services

Service Code	Implemented for:		Service Name
	Class	Instance	
0x0E	Yes	Yes	Get_Attribute_Single
0x10	Yes	Yes	Set_Attribute_Single

Instances

Instance	Description
1	All I/O data being read from the DPI device (read-only)
2	All I/O data written to the DPI device (read/write)
3	Logic Status and Feedback data (read-only)
4	Logic Command and Reference data (read/write)
5	Datalink A (input data from device to scanner) (read only)
6	Datalink A (output data from scanner to device) (read/write)
7	Datalink B (input data from device to scanner) (read only)
8	Datalink B (output data from scanner to device) (read/write)
9	Datalink C (input data from device to scanner) (read only)
10	Datalink C (output data from scanner to device) (read/write)
11	Datalink D (input data from device to scanner) (read only)
12	Datalink D (output data from scanner to device) (read/write)
13	Logic Status and Feedback Data (read-only)
14	Mask [1] (read/write)
15	Logic Status (read-only)
16	Logic Command (read/write)
17	Feedback (read-only)
18	Reference (read/write)

(1) The mask command word is set to the value of the first word of the data where there are ones in the second word of the data. Command = (word 1 and not word 2) or (word 1 and word 2). This only controls specified bits in the Logic Command data to the DPI product and does not change the Reference value.

Class Attributes

Attribute ID	Access Rule	Name	Data Type	Description
100	Set	Control Timeout	WORD	Control timeout in seconds

Instance Attributes

Attribute ID	Access Rule	Name	Data Type	Description
1	Get	Bad Flag	BOOL	If set to 1, then attribute 4 may contain invalid data. 0 = good 1 = bad
2	Get	Direction	BOOL	Direction of data transfer 0 = Producer Register (drive to network) 1 = Consumer Register (network to drive)
3	Get	Size	WORD	Size of register data in bits
4	Conditional (1)	Data	ARRAY of BITS	Data to be transferred

(1) For this attribute, the Access Rule is Get if Direction = 0. The Access Rule is Set if Direction = 1.

Important: Setting a Register object attribute can be done only when the Control Timeout (class attribute 100) has been set to a non-zero value.

Parameter Object

Class Code

Hexadecimal	Decimal
0x0F	15

Services

Service Code	Implemented for:		Service Name
	Class	Instance	
0x01	Yes	Yes	Get_Attributes_All
0x05	Yes	No	Reset
0x0E	Yes	Yes	Get_Attribute_Single
0x10	Yes	Yes	Set_Attribute_Single
0x4B	No	Yes	Get_Enum_String

Instances

The number of instances depends on the number of parameters in the DPI drive. The adapter parameters are appended to the list of drive parameters. The total number of parameters can be read in Instance 0, Attribute 2.

Instance	Description
0	Class Attributes
1	Drive Parameter 1 Attributes
⋮	⋮
n	Last Drive Parameter n Attributes (1)
n + 1	Adapter Parameter 1 Attributes
⋮	⋮
n + m	Last Adapter Parameter m Attributes (2)

(1) n represents the number of parameters in the drive.

(2) m represents the number of parameters in the adapter.

Class Attributes

Attribute ID	Access Rule	Name	Data Type	Description
1	Get	Revision	WORD	1
2	Get	Max Instance	WORD	Number of parameters
8	Get	Parameter Class Descriptor	WORD	0 = False, 1 = True Bit 0 = Supports parameter instances Bit 1 = Supports full attributes Bit 2 = Must do NVS save command Bit 3 = Parameters are stored in NVS
9	Get	Configuration Assembly Instance	WORD	0
10	Set	Native Language	BYTE	0 = English 1 = French 2 = Spanish 3 = Italian 4 = German 5 = Japanese 6 = Portuguese 7 = Mandarin Chinese 8 = Russian 9 = Dutch

Instance Attributes

Attribute ID	Access Rule	Name	Data Type	Description
1	(1)	Parameter Value	(2)	(3)
2	Get	Link Path Size	BYTE	0 = No link specified n = The size of Attribute 3 in bytes
3	Get	Link Path		(4)
4	Get	Descriptor	WORD	0 = False, 1 = True Bit 1 = Supports ENUMs Bit 2 = Supports scaling Bit 3 = Supports scaling links Bit 4 = Read only Bit 5 = Monitor Bit 6 = Extended precision scaling
5	Get	Data Type	BYTE	1 = WORD (16-bit) 2 = UINT (16-bit) 3 = INT (16-bit) 5 = SINT 6 = DINT 8 = USINT 9 = UDINT 11 = REAL 22 = SHORT_STRING 24 = BYTE 25 = DWORD
6	Get	Data Size	BYTE	(3)
7	Get	Parameter Name String	SHORT_STRING	(3)
8	Get	Units String	SHORT_STRING	(3)
9	Get	Help String	SHORT_STRING	Null string
10	Get	Minimum Value	(2)	(3)
11	Get	Maximum Value	(2)	(3)
12	Get	Default Value	(2)	(3)
13	Get	Scaling Multiplier	WORD	(3)
14	Get	Scaling Divisor	WORD	(3)
15	Get	Scaling Base	WORD	(3)
16	Get	Scaling Offset	WORD	(3)
17	Get	Multiplier Link	WORD	(3)
18	Get	Divisor Link	WORD	(3)
19	Get	Base Link	WORD	(3)
20	Get	Offset Link	WORD	(3)
21	Get	Decimal Precision	BYTE	(3)

(1) Access rule is defined in Bit 4 of instance attribute 4 (0 = Get/Set, 1 = Get).

(2) Specified in descriptor, data type, and data size.

(3) Value varies based on parameter instance.

(4) See the EtherNet/IP specification for a description of the link path.

Parameter Group Object

Class Code

Hexadecimal	Decimal
0x10	16

Services

Service Code	Implemented for:		Service Name
	Class	Instance	
0x0E	Yes	Yes	Get_Attribute_Single
0x10	Yes	No	Set_Attribute_Single

Instances

The number of instances depends on the number of groups in the device. A group of adapter parameters is appended to the list of groups in the device. The total number of groups can be read in Instance 0, Attribute 2.

Number	Description
0	Class Attributes
1	Drive Group 1 Attributes
⋮	⋮
n	Last Drive Group Attributes
n + 1	Adapter Group Attributes

Class Attributes

Attribute ID	Access Rule	Name	Data Type	Description
1	Get	Parameter group version	WORD	1
2	Get	Max Instance	WORD	Total number of groups
8	Set	Native Language	BYTE	0 = English 1 = French 2 = Spanish 3 = Italian 4 = German 5 = Japanese 6 = Portuguese 7 = Mandarin Chinese 8 = Russian 9 = Dutch

Instance Attributes

Attribute ID	Access Rule	Name	Data Type	Description
1	Get	Group Name String	SHORT_STRING	Group name
2	Get	Number of Members in Group	WORD	Number of parameters in group
3	Get	1st Parameter Number in Group	WORD	(1)
4	Get	2nd Parameter Number in Group	WORD	(1)
n	Get	⋮	WORD	(1)

(1) Value varies based on group instance.

Device Level Ring Object

Class Code

Hexadecimal	Decimal
0x0047	71

Services

The following common services will be implemented for the DLR Object.

Service Code	Implemented for:		Service Name
	Class	Instance	
0x01	No	Yes	Get_Attributes_All
0x0E	Yes	Yes	Get_Attribute_Single

Instances

Get_Attribute_ALL is implemented for instances and Get_Attribute_Single for both class and instance.

The adapter supports one instance of the TCP/IP Interface object.

Number	Description
0	Class Attributes
1	Object Attributes

Class Attributes

The following class attributes will be supported for the DLR Object:

Attribute ID	Access Rule	Name	Data Type	Description
1	Get	Revision	UNIT	2

Instance Attributes

A single instance (instance 1) will be supported.

Attribute ID	Access Rule	Name	Data Type	Description
1	Get	Network Topology	USINT	0 = Linear 1 = Ring
2	Get	Network Status	USINT	0 = Normal 1 = Ring Fault 2 = Unexpected Loop Detect 3 = Partial Network Fault 4 = Rapid Fault/Restore Cycle
10	Get	Active Supervisor Address	STRUCT of: UDINT Array of 6 USINT	Ring supervisor
12	Get	Capability Flags	DWORD	0x00000002

Quality of Service Object

Class Code

Hexadecimal	Decimal
0x0048	72

Services

Service Code	Implemented for:		Service Name
	Class	Instance	
0x0E	Yes	Yes	Get_Attribute_Single
0x10	No	Yes	Set_Attribute_Single

Instances

Get_Attribute_Single is implemented on both class and instance. Set_Attribute_Single is implemented on instances. Get_Attribute_All is not implemented

The adapter supports one instance of the TCP/IP Interface object.

Number	Description
0	Class Attributes
1	Object Attributes

Class Attributes

Attribute ID	Access Rule	Name	Data Type	Value
1	Get	Revision	UINT	1

Instance Attributes

Attribute ID	Access Rule	Name	Data Type	Description
1	Set	802.1Q Tag Enable	USINT	0 = Disable (default) 1 = Enable
4	Set	DSCP Urgent	USINT	Default = 55
5	Set	DSCP Scheduled	USINT	Default = 47
6	Set	DSCP High	USINT	Default = 43
7	Set	DSCP Low	USINT	Default = 31
8	Set	DSCP Explici	USINT	Default = 27

PCCC Object

Class Code

Hexadecimal	Decimal
0x67	103

Services

Service Code	Implemented for:		Service Name
	Class	Instance	
0x4B	No	Yes	Execute_PCCC
0x4C	No	Yes	Execute_DH+

Instances

Supports Instance 1.

Class Attributes

Not supported.

Instance Attributes

Not supported.

Message Structure for Execute_PCCC

Request		
Name	**Data Type**	**Description**
Length	USINT	Length of requestor ID
Vendor	UINT	Vendor number of requestor
Serial Number	UDINT	ASA serial number of requestor
Other	Product Specific	Identifier of user, task, etc. on the requestor
CMD	USINT	Command byte
STS	USINT	0
TNSW	UINT	Transport word
FNC	USINT	Function code; not used for all CMDs.
PCCC_ params	ARRAY of USINT	CMD/FNC specific parameters

Response		
Name	**Data Type**	**Description**
Length	USINT	Length of requestor ID
Vendor	UINT	Vendor number of requestor
Serial Number	UDINT	ASA serial number of requestor
Other	Product Specific	Identifier of user, task, etc. on the requestor
CMD	USINT	Command byte
STS	USINT	Status byte
TNSW	UINT	Transport word. Same value as the request.
EXT_STS	USINT	Extended status; not used for all CMDs.
PCCC_ results	ARRAY of USINT	CMD/FNC specific result data

Message Structure for Execute_DH+

Request		
Name	**Data Type**	**Description**
DLink	UINT	Destination Link ID
DSta	USINT	Destination Station number
DUser	USINT	Destination “User” number
SLink	UINT	Source Link ID
SSta	USINT	Source Station number
SUser	USINT	Source User number
CMD	USINT	Command byte
STS	USINT	0
TNSW	UINT	Transport word
FNC	USINT	Function code; not used for all CMDs
PCCC_ params	ARRAY of USINT	CMD/FNC specific parameters

Response		
Name	**Data Type**	**Description**
DLink	UINT	Destination Link ID
DSta	USINT	Destination Station number
DUser	USINT	Destination “User” number
SLink	UINT	Source Link ID
SSta	USINT	Source Station number
SUser	USINT	Source User number
CMD	USINT	Command byte
STS	USINT	Status byte
TNSW	UINT	Transport word. Same value as the request.
EXT_STS	USINT	Extended status; not used for all CMDs
PCCC_ results	ARRAY of USINT	CMD/FNC specific result data

The adapter supports the following PCCC command types:

CMD	FNC	Description
0x06	0x03	Identify host and some status
0x0F	0x67	PLC-5 typed write
0x0F	0x68	PLC-5 typed read
0x0F	0x95	Encapsulate other protocol
0x0F	0xA2	SLC 500 protected typed read with 3 address fields
0x0F	0xAA	SLC 500 protected typed write with 3 address fields
0x0F	0xA1	SLC 500 protected typed read with 2 address fields
0x0F	0xA9	SLC 500 protected typed write with 2 address fields
0x0F	0x00	Word range read
0x0F	0x01	Word range write

For more information regarding PCCC commands, see DF1 Protocol and Command Set Manual, publication 1770-6.5.16.

N-Files

<table>
<tr><th>N-File</th><th colspan="4">Description</th></tr>
<tr><td>N40</td><td colspan="4">This N-file lets you use Emulated Block Transfer messages to read and write many types of DPI messages. To use Emulated Block Transfer messages, you send a Write message to N40:0…N40:63, wait until the adapter responds with a reply message, and then read the response data in N40:0…N40:63 with a Read message.

For details about Block Transfer messages and the data required for each byte in the N-File, see the Remote I/O Adapter User Manual, publication 20COMM-UM004.

Bits 15…8 are the Most Significant Byte. Bits 7…0 are the Least Significant Byte.</td></tr>
<tr><td></td><td colspan="2">Write</td><td colspan="2">Read</td></tr>
<tr><td>Bits</td><td>15</td><td>0</td><td>15</td><td>0</td></tr>
<tr><td>N40:0</td><td>0x00</td><td>Length (in Bytes)</td><td>0x00</td><td>Length (in Bytes)</td></tr>
<tr><td>N40:1</td><td>DPI Port</td><td>0x81</td><td>Status Size</td><td>Status Type</td></tr>
<tr><td>N40:2</td><td>0x00</td><td>CIP Service</td><td colspan="2" rowspan="5">Data
(length varies based on message)</td></tr>
<tr><td>N40:3</td><td colspan="2">CIP Class</td></tr>
<tr><td>N40:4</td><td colspan="2">CIP Instance</td></tr>
<tr><td>N40:5</td><td colspan="2">CIP Attribute</td></tr>
<tr><td>N40:6
⋮
N40:63</td><td colspan="2">Data
(length varies based on message)</td></tr>
<tr><td>N41</td><td colspan="4">This N-file lets you read and write control I/O messages. You can write control I/O messages only when all of the following conditions are true:
The adapter is not receiving I/O from a scanner. For example, there is no scanner on the network, the scanner is in idle (program) mode, the scanner is faulted, or the adapter is not mapped to the scanner.
The adapter is not receiving peer I/O from another adapter.
The value of N42:3 is set to a non-zero value.</td></tr>
<tr><td></td><td colspan="2">Write</td><td colspan="2">Read</td></tr>
</table>

N-File	Description	
N41:0	Logic Command Word	Logic Status Word
N41:1	Reference (least significant word)	Feedback (least significant word)
N41:2	Reference (most significant word)	Feedback (most significant word)
N41:3	Datalink A1 (least significant word)	Datalink A1 (least significant word)
N41:4	Datalink A1 (most significant word)	Datalink A1 (most significant word)
N41:5	Datalink A2 (least significant word)	Datalink A2 (least significant word)
N41:6	Datalink A2 (most significant word)	Datalink A2 (most significant word)
N41:7	Datalink B1 (least significant word)	Datalink B1 (least significant word)
N41:8	Datalink B1 (most significant word)	Datalink B1 (most significant word)
N41:9	Datalink B2 (least significant word)	Datalink B2 (least significant word)
N41:10	Datalink B2 (most significant word)	Datalink B2 (most significant word)
N41:11	Datalink C1 (least significant word)	Datalink C1 (least significant word)
N41:12	Datalink C1 (most significant word)	Datalink C1 (most significant word)
N41:13	Datalink C2 (least significant word)	Datalink C2 (least significant word)
N41:14	Datalink C2 (most significant word)	Datalink C2 (most significant word)
N41:15	Datalink D1 (least significant word)	Datalink D1 (least significant word)
N41:16	Datalink D1 (most significant word)	Datalink D1 (most significant word)
N41:17	Datalink D2 (least significant word)	Datalink D2 (least significant word)
N41:18	Datalink D2 (most significant word)	Datalink D2 (most significant word)
N42	This N-file lets you read and write some values configuring the port.	
N42:3	Time-out (read/write): Time (in seconds) allowed between messages to the N41 file. If the adapter does not receive a message in the specified time, it performs the fault action configured in its [Comm Flt Action] parameter. A valid setting is between 1 and 32767 seconds (5. . . 20 seconds is recommended).	
N42:7	Adapter Port Number (read only): DPI port on the drive to which the adapter is connected.	
N42:8	Peer Adapters (read only): Bit field of devices having DPI Peer capabilities.	

N45	This N-file lets you read and write control I/O messages. You can write control I/O messages only when all of the following conditions are true: The adapter is not receiving I/O from a scanner. For example, there is no scanner on the network, the scanner is in idle (program) mode, the scanner is faulted, or the adapter is not mapped to the scanner. The adapter is not receiving peer I/O from another adapter. The value of N42:3 is set to a non-zero value.	
	Write	*Read*
N45:0	Logic Command (least significant)	Logic Status (least significant)
N45:1	Logic Command (most significant)	Logic Status (most significant)
N45:2	Reference (least significant)	Feedback (least significant)
N45:3	Reference (most significant)	Feedback (most significant)
N45:4	DL From Net 01 (least significant)	DL To Net 01 (least significant)
N45:5	DL From Net 01 (most significant)	DL To Net 01 (most significant)
N45:6	DL From Net 02 (least significant)	DL To Net 02 (least significant)
N45:7	DL From Net 02 (most significant)	DL To Net 02 (most significant)
N45:8	DL From Net 03 (least significant)	DL To Net 03 (least significant)
N45:9	DL From Net 03 (most significant)	DL To Net 03 (most significant)
N45:10	DL From Net 04 (least significant)	DL To Net 04 (least significant)
N45:11	DL From Net 04 (most significant)	DL To Net 04 (most significant)
N45:12	DL From Net 05 (least significant)	DL To Net 05 (least significant)
N45:13	DL From Net 05 (most significant)	DL To Net 05 (most significant)
N45:14	DL From Net 06 (least significant)	DL To Net 06 (least significant)
N45:15	DL From Net 06 (most significant)	DL To Net 06 (most significant)
N45:16	DL From Net 07 (least significant)	DL To Net 07 (least significant)
N45:17	DL From Net 07 (most significant)	DL To Net 07 (most significant)
N45:18	DL From Net 08 (least significant)	DL To Net 08 (least significant)
N45:19	DL From Net 08 (most significant)	DL To Net 08 (most significant)
N45:20	DL From Net 09 (least significant)	DL To Net 09 (least significant)
N45:21	DL From Net 09 (most significant)	DL To Net 09 (most significant)
N45:22	DL From Net 10 (least significant)	DL To Net 10 (least significant)
N45:23	DL From Net 10 (most significant)	DL To Net 10 (most significant)
N45:24	DL From Net 11 (least significant)	DL To Net 11 (least significant)
N45:25	DL From Net 11 (most significant)	DL To Net 11 (most significant)
N45:26	DL From Net 12 (least significant)	DL To Net 12 (least significant)
N45:27	DL From Net 12 (most significant)	DL To Net 12 (most significant)
N45:28	DL From Net 13 (least significant)	DL To Net 13 (least significant)
N45:29	DL From Net 13 (most significant)	DL To Net 13 (most significant)
N45:30	DL From Net 14 (least significant)	DL To Net 14 (least significant)
N45:31	DL From Net 14 (most significant)	DL To Net 14 (most significant)
N45:32	DL From Net 15 (least significant)	DL To Net 15 (least significant)
N45:33	DL From Net 15 (most significant)	DL To Net 15 (most significant)
N45:34	DL From Net 16 (least significant)	DL To Net 16 (least significant)
N45:35	DL From Net 16 (most significant)	DL To Net 16 (most significant)

Important: If your controller or HMI platform supports CIP messaging, use the CIP Parameter object to get and set parameters.

N-File	Description
N150…N199	These N-files let you read and write parameter values in DPI Port 0 (the host PowerFlex drive) as 32-bit double words. You can interpret the data in various ways (for example, 32-bit real, 32-bit integer) To read a parameter, you need to send a message with two elements. For example, to read parameter 1, read two elements beginning at N150:2. As another example, to read parameters 2…6, read ten elements beginning at N150:4.
N150:0…1	Number of parameters in the drive
N150:2…249	Drive parameters 1…124
N151:0…249	Drive parameters 125…249
N152:0…249	Drive parameters 250…374
N153:0…249	Drive parameters 375…499
⋮	⋮
N199:0…249	Drive parameters 6125…6249

N-File	Description
N201…N212	These N-files let you read and write values to DPI and Host parameters in Ports 1…14 (for example, a HIM or adapter) as 32-bit double words. You can interpret the data in various ways (for example, 32-bit real, 32-bit integer) To read a parameter, you need to send a message with two elements. For example, to read parameter 1 in the peripheral connected to DPI port 1, read two elements beginning at N201:2. As another example, to read parameters 2…6 in the peripheral connected to DPI port 5 (the adapter), read ten elements beginning at N209:4.
N201:0…1	Number of parameters in the DPI peripheral at DPI port 1
N201:2…249	Parameters 1…124 in the DPI peripheral at DPI port 1
N202:0…249	Parameters 125…249 in the DPI peripheral at DPI port 1
N203:0…1	Number of parameters in the DPI peripheral at DPI port 2
N203:2…249	Parameters 1…124 in the DPI peripheral at DPI port 2
N204:0…249	Parameters 125…249 in the DPI peripheral at DPI port 2
N205:0…1	Number of parameters in the DPI peripheral at DPI port 3
N205:2…249	Parameters 1…124 in the DPI peripheral at DPI port 3
N206:0…249	Parameters 125…249 in the DPI peripheral at DPI port 3
N207:0…1	Number of parameters in the DPI peripheral at DPI port 4
N207:2…249	Parameters 1…124 in the DPI peripheral at DPI port 4
N208:0…249	Parameters 125…249 in the DPI peripheral at DPI port 4
N209:0…1	Number of parameters in the DPI peripheral at DPI port 5
N209:2…249	Parameters 1…124 in the DPI peripheral at DPI port 5
N210:0…249	Parameters 125…249 in the DPI peripheral at DPI port 5
N211:0…1	Number of parameters in the DPI peripheral at DPI port 6
N211:2…249	Parameters 1…124 in the DPI peripheral at DPI port 6
N212:0…249	Parameters 125…249 in the DPI peripheral at DPI port 6
The following N-Files are supported only when the adapter is used with a PowerFlex 750-Series drive.	
N213:0…1	Number of parameters in the DPI peripheral at DPI port 7
N213:2…249	Parameters 1…124 in the DPI peripheral at DPI port 7
N214:0…249	Parameters 125…249 in the DPI peripheral at DPI port 7
N215:0…1	Number of parameters in the DPI peripheral at DPI port 8
N215:2…249	Parameters 1…124 in the DPI peripheral at DPI port 8
N216:0…249	Parameters 125…249 in the DPI peripheral at DPI port 8
N217:0…1	Number of parameters in the DPI peripheral at DPI port 9
N217:2…249	Parameters 1…124 in the DPI peripheral at DPI port 9
N218:0…249	Parameters 125…249 in the DPI peripheral at DPI port 9
N219:0…1	Number of parameters in the DPI peripheral at DPI port 10
N219:2…249	Parameters 1…124 in the DPI peripheral at DPI port 10
N220:0…249	Parameters 125…249 in the DPI peripheral at DPI port 10
N221:0…1	Number of parameters in the DPI peripheral at DPI port 11
N221:2…249	Parameters 1…124 in the DPI peripheral at DPI port 11
N222:0…249	Parameters 125…249 in the DPI peripheral at DPI port 11
N223:0…1	Number of parameters in the DPI peripheral at DPI port 12
N223:2…249	Parameters 1…124 in the DPI peripheral at DPI port 12
N224:0…249	Parameters 125…249 in the DPI peripheral at DPI port 12
N225:0…1	Number of parameters in the DPI peripheral at DPI port 13
N225:2…249	Parameters 1…124 in the DPI peripheral at DPI port 13
N226:0…249	Parameters 125…249 in the DPI peripheral at DPI port 13
N227:0…1	Number of parameters in the DPI peripheral at DPI port 14
N227:2…249	Parameters 1…124 in the DPI peripheral at DPI port 14
N228:0…249	Parameters 125…249 in the DPI peripheral at DPI port 14

DPI Device Object

Class Code

Hexadecimal	Decimal
0x92	146

Services

Service Code	Implemented for:		Service Name
	Class	Instance	
0x0E	Yes	Yes	Get_Attribute_Single
0x10	Yes	Yes	Set_Attribute_Single

Instances

The number of instances depends on the number of components in the device. The total number of components can be read in Instance 0, Class Attribute 4.

Instances (Hex.)	(Dec.)	Device
0x0000…0x3FFF	0…16383	Host
0x4000…0x43FF	16384…17407	Adapter
0x4400…0x47FF	17408…18431	DPI Port 1
0x4800…0x4BFF	18432…19455	DPI Port 2
0x4C00…0x4FFF	19456…20479	DPI Port 3
0x5000…0x53FF	20480…21503	DPI Port 4
0x5400…0x57FF	21504…22527	DPI Port 5
0x5800…0x5BFF	22528…23551	DPI Port 6
0x5C00…0x5FFF (1)	22552…24575	DPI Port 7
0x6000…0x63FF (1)	24576…25599	DPI Port 8
0x6400…0x67FF (1)	25600…26623	DPI Port 9
0x6800…0x6BFF (1)	26624…27647	DPI Port 10
0x6C00…0x6FFF (1)	27648…28671	DPI Port 11
0x7000…0x73FF (1)	28672…29695	DPI Port 12
0x7400…0x77FF (1)	29696…30719	DPI Port 13
0x7800…0x7BFF (1)	30720…31743	DPI Port 14

Example	Description
0	Class Attributes (Drive)
1	Drive Component 1
2	Drive Component 2
⋮	⋮
16384	Class Attributes (Adapter)
16385	Adapter Component 1
⋮	⋮

(1) These instances are supported only when the adapter is used with a PowerFlex 750-Series drive.

Class Attributes

Attribute ID	Access Rule	Name	Data Type	Description
0	Get	Family Code	BYTE	0x00 = DPI Peripheral 0x30 = PowerFlex 70 0x34 = PowerFlex 700H 0x38, 0x39, or 0x3A= PowerFlex 700 0x40 = PowerFlex 7000 0x48, 0x49, or 0x4A = PowerFlex 700S 0x5A = SMC Flex 0x68, 0x69, or 0x6A = PowerFlex 700VC 0x90 = PowerFlex 753/755 0xA0 = 20-750-xxx Option Module 0xFF = HIM
1	Get	Family Text	STRING[16]	Text identifying the device.

Attribute ID	Access Rule	Name	Data Type	Description
2	Set	Language Code	BYTE	0 = English 1 = French 2 = Spanish 3 = Italian 4 = German 5 = Japanese 6 = Portuguese 7 = Mandarin Chinese 8 = Russian 9 = Dutch
3	Get	Product Series	BYTE	1 = A 2 = B …
4	Get	Number of Components	BYTE	Number of components (for example, main control board, I/O boards, and so forth) in the device.
5	Set	User Definable Text	STRING[16]	Text identifying the device with a user-supplied name.
6	Get	Status Text	STRING[12]	Text describing the status of the device.
7	Get	Configuration Code	BYTE	Identification of variations.
8	Get	Configuration Text	STRING[16]	Text identifying a variation of a family device.
9	Get	Brand Code	WORD	0x0001 = Allen-Bradley
11	Get	NVS Checksum	WORD	Checksum of the Non-Volatile Storage in a device.
12	Get	Class Revision	WORD	2 = DPI
13	Get	Character Set Code	BYTE	0 = SCANport HIM 1 = ISO 8859-1 (Latin 1) 2 = ISO 8859-2 (Latin 2) 3 = ISO 8859-3 (Latin 3) 4 = ISO 8859-4 (Latin 4) 5 = ISO 8859-5 (Cyrillic) 6 = ISO 8859-6 (Arabic) 7 = ISO 8859-7 (Greek) 8 = ISO 8859-8 (Hebrew) 9 = ISO 8859-9 (Turkish) 10 = ISO 8859-10 (Nordic) 255 = ISO 10646 (Unicode)
14	Get	Product Option Support	BOOL[64]	
15	Get	Languages Supported	STRUCT of: BYTE BYTE[n]	 Number of Languages Language Codes (see Class Attribute 2)
16	Get	Date of Manufacture	STRUCT of: WORD BYTE BYTE	 Year Month Day
17	Get	Product Revision	STRUCT of: BYTE BYTE	 Major Firmware Release Minor Firmware Release
18	Get	Serial Number	DWORD	Value between 0x00000000 and 0xFFFFFFFF
19	Set	Language Selected	BYTE	0 = Default (HIM will prompt at start up) 1 = Language was selected (no prompt)
20	Set	Customer-Generated Firmware	STRING[36]	GUID (Globally Unique Identifier) identifying customer firmware flashed into the device.
30	Get	International Status Text	STRINGN	Text describing the status of device with support for Unicode.
31	Get/Set	International User Definable Text	STRINGN	Text identifying the device with a user-supplied name with support for Unicode.

Attribute ID	Access Rule	Name	Data Type	Description
34	Get	Key Information	STRUCT of: DWORD DWORD WORD WORD WORD BYTE BYTE BYTE BYTE BYTE BYTE[16]	 Rating Code Device Serial Number Customization Code Customization Revision Brand Code Family Code Config Code Language Code Major Revision Minor Revision Customer-Generated Firmware UUID
35	Get	NVS CRC	DWORD	A 32-bit CRC of the Non-Volatile Storage in a device.
39	Get	SI Driver Code	WORD	Code identifying the protocol between the device and host.
128	Get	Customization Code	WORD	Code identifying the customized device.
129	Get	Customization Revision Number	WORD	Revision of the customized device.
130	Get	Customization Device Text	STRING[32]	Text identifying the customized device.

Instance Attributes

Attribute ID	Access Rule	Name	Data Type	Description
3	Get	Component Name	STRING[32]	Name of the component
4	Get	Component Firmware Revision	STRUCT of: BYTE BYTE	 Major Revision Minor Revision
8	Get	Component Serial Number	DWORD	Value between 0x00000000 and 0xFFFFFFFF
9	Get	International Component Name	STRINGN	Name of the component with support for Unicode.

DPI Parameter Object

Class Code

Hexadecimal	Decimal
0x93	147

To access 'Host Config' parameters, use the HOST DPI Parameter Object (Class code 0x9F).

Instances

The number of instances depends on the number of parameters in the device. The total number of parameters can be read in Instance 0, Attribute 0.

Instances (Hex.)	(Dec.)	Device
0x0000…0x3FFF	0…16383	Host
0x4000…0x43FF	16384…17407	Adapter
0x4400…0x47FF	17408…18431	DPI Port 1
0x4800…0x4BFF	18432…19455	DPI Port 2
0x4C00…0x4FFF	19456…20479	DPI Port 3
0x5000…0x53FF	20480…21503	DPI Port 4
0x5400…0x57FF	21504…22527	DPI Port 5
0x5800…0x5BFF	22528…23551	DPI Port 6
0x5C00…0x5FFF (1)	23552…24575	DPI Port 7
0x6000…0x63FF (1)	24576…25599	DPI Port 8
0x6400…0x67FF (1)	25600…26623	DPI Port 9

Example	Description
0	Class Attributes (Drive)
1	Drive Parameter 1 Attributes
2	Drive Parameter 2 Attributes
⋮	⋮
16384	Class Attributes (Adapter)
16385	Adapter Parameter 1 Attributes
⋮	⋮

Instances (Hex.)	(Dec.)	Device
0x6800…0x6BFF (1)	26624…27647	DPI Port 10
0x6C00…0x6FFF (1)	27648…28671	DPI Port 11
0x7000…0x73FF (1)	28672…29695	DPI Port 12
0x7400…0x77FF (1)	29696…30719	DPI Port 13
0x7800…0x7BFF (1)	30720…31743	DPI Port 14

Example	Description

(1) These instances are supported only when the adapter is used with a PowerFlex 750-Series drive.

Class Attributes

Attribute ID	Access Rule	Name	Data Type	Description
0	Get	Number of Instances	WORD	Number of parameters in the device
1	Set	Write Protect Password	WORD	0 = Password disabled n = Password
2	Set	NVS Command Write	BYTE	0 = No Operation 1 = Store values in active memory to NVS 2 = Load values in NVS to active memory 3 = Load default values to active memory
3	Get	NVS Parameter Value Checksum	WORD	Checksum of all parameter values in a user set in NVS
4	Get	NVS Link Value Checksum	WORD	Checksum of parameter links in a user set in NVS
5	Get	First Accessible Parameter	WORD	First parameter available if parameters are protected by passwords. A '0' indicates all parameters are protected.
7	Get	Class Revision	WORD	2 = DPI
8	Get	First Parameter Processing Error	WORD	The first parameter that has been written with a value outside of its range. A '0' indicates no errors.
9	Set	Link Command	BYTE	0 = No Operation 1 = Clear All Parameter Links (This does not clear links to function blocks.)

Instance Attributes

Attribute ID	Access Rule	Name	Data Type	Description
6	Get	DPI Offline Read Full	STRUCT of: BOOL[32] CONTAINER CONTAINER CONTAINER STRING[16] STRING[4] WORD WORD WORD WORD WORD WORD BYTE BYTE WORD WORD CONTAINER WORD WORD WORD INT	 Descriptor Offline minimum value Offline maximum value Offline default value Parameter name Offline parameter units Online minimum parameter instance Online maximum parameter instance Online default parameter instance Multiple parameter instance Divisor parameter instance Base parameter instance Offset parameter instance Formula number Pad byte (always zero) Help instance Pad word (always a value of zero) Parameter value Multiplier Divisor Base Offset
7	Get	DPI Online Read Full	STRUCT of: BOOL[32] CONTAINER(1) CONTAINER CONTAINER CONTAINER WORD WORD STRING[4] WORD WORD WORD INT BYTE[3] BYTE STRING[16]	 Descriptor (see page 202) Parameter value Minimum value Maximum value Default value Next parameter Previous parameter Units (for example, Amp, Hz) Multiplier (2) Divisor (2) Base (2) Offset (2) Link (source of the value) (0 = no link) Always zero (0) Parameter name
8	Get	DPI Descriptor	BOOL[32]	Descriptor (see page 202)
9	Get/Set	DPI Parameter Value	Various	Parameter value in NVS. (3)
10	Get/Set	DPI RAM Parameter Value	Various	Parameter value in temporary memory. Valid only for DPI drives.
11	Get/Set	DPI Link	BYTE[3]	Link (parameter or function block that is the source of the value) (0 = no link)
12	Get	Help Object Instance	WORD	ID for help text for this parameter
13	Get	DPI Read Basic	STRUCT of: BOOL[32] CONTAINER CONTAINER CONTAINER CONTAINER STRING[16] STRING[4]	 Descriptor (see page 202) Parameter value Minimum value Maximum value Default value Parameter name Units (for example, Amp, Hz)
14	Get	DPI Parameter Name	STRING[16]	Parameter name
15	Get	DPI Parameter Alias	STRING[16]	Customer supplied parameter name.
16	Get	Parameter Processing Error	BYTE	0 = No error 1 = Value is less than the minimum 2 = Value is greater than the maximum

Attribute ID	Access Rule	Name	Data Type	Description
18	Get	International DPI Offline Parameter Text	STRUCT of: STRINGN STRINGN	 International parameter name International offline units
19	Get	International DPI Online Parameter Text	STRUCT of: STRINGN STRINGN	 International parameter name International offline units
20	Get	International DPI Online Read Full	STRUCT of: BOOL[32] CONTAINER CONTAINER CONTAINER CONTAINER WORD WORD WORD WORD WORD INT BYTE[3] BYTE BOOL[32] STRINGN STRINGN	 Descriptor Parameter value Online minimum value Online maximum value Online default value Next Previous Multiplier Divisor Base Offset Link Pad word (always zero) Extended descriptor International parameter name International online parameter units
21	Get	DPI Extended Descriptor	DWORD	Extended descriptor (see page 203)
22	Get	International DPI Offline Read Full	STRUCT of: BOOL CONTAINER CONTAINER CONTAINER WORD WORD WORD WORD WORD WORD WORD BYTE BYTE WORD WORD CONTAINER WORD WORD WORD INT BOOL[32] STRINGN STRINGN	 Descriptor Offline minimum value Offline maximum value Offline default value Online minimum parameter instance Online maximum parameter instance Online default parameter instance Multiple parameter instance Divisor parameter instance Base parameter instance Offset parameter instance Formula number Pad byte (always zero) Help instance Pad word (always a value of zero) Parameter value Multiplier Divisor Base Offset Extended DPI descriptor International DPI parameter name International DPI offline parameter units

(1) A CONTAINER is a 32-bit block of data that contains the data type used by a parameter value. If signed, the value is sign extended. Padding is used in the CONTAINER to ensure that it is always 32-bits.

(2) This value is used in the formulas used to convert the parameter value between display units and internal units. See Formulas for Converting on page 204.

(3) Do **not** continually write parameter data to NVS. See the attention on page 105.

Descriptor Attributes

Bit	Name	Description
0	Data Type (Bit 1)	Right bit is least significant bit (0). 000 = BYTE used as an array of Boolean 001 = WORD used as an array of Boolean 010 = BYTE (8-bit integer) 011 = WORD (16-bit integer) 100 = DWORD (32-bit integer) 101 = TCHAR (8-bit (not unicode) or 16-bits (unicode) 110 = REAL (32-bit floating point value) 111 = Use bits 16, 17, 18
1	Data Type (Bit 2)	
2	Data Type (Bit 3)	
3	Sign Type	0 = Unsigned 1 = Signed
4	Hidden	0 = Visible 1 = Hidden
5	Not a Link Sink	0 = Parameter can sink a link 1 = Parameter cannot sink a link
6	Not Recallable	0 = Recallable from NVS 1 = Not Recallable from NVS
7	ENUM	0 = No ENUM text 1 = ENUM text
8	Writable	0 = Read only 1 = Read/write
9	Not Writable When Enabled	0 = Writable when enabled (for example, drive running) 1 = Not writable when enabled
10	Instance	0 = Parameter value is not a Reference to another parameter 1 = Parameter value refers to another parameter
11	Uses Bit ENUM Mask	This parameter instance supports the Bit ENUM Mask attribute. For more information, see the definition of the attribute.
12	Decimal Place (Bit 0)	Number of digits to the right of the decimal point. 0000 = 0 1111 = 15
13	Decimal Place (Bit 1)	
14	Decimal Place (Bit 2)	
15	Decimal Place (Bit 3)	
16	Extended Data Type (Bit 4)	Right bit is least significant bit (16). 000 = Reserved 001 = DWORD used as an array of Boolean 010 = Reserved 011 = Reserved 100 = Reserved 101 = Reserved 110 = Reserved 111 = Reserved
17	Extended Data Type (Bit 5)	
18	Extended Data Type (Bit 6)	
19	Parameter Exists	Used to mark parameters that are not available to network tools.
20	Not Used	Reserved
21	Formula Links	Indicates the Formula Data is derived from other parameters.
22	Access Level (Bit 1)	A 3-bit field used to control access to parameter data.
23	Access Level (Bit 2)	
24	Access Level (Bit 3)	
25	Writable ENUM	ENUM text: 0 = Read Only, 1 = Read/Write
26	Not a Link Source	0 = May be the source end of a link 1 = May not be the source end of a link
27	Enhanced Bit ENUM	Parameter supports enhanced bit ENUMs.
28	Enhanced ENUM	Parameter supports enhanced ENUMs.
29	Uses DPI Limits Object	Parameter uses the DPI LImits Object.
30	Extended Descriptor	Parameter uses Extended Descriptor bits, which can be obtained by reading the DPI Extended Descriptor attribute for this parameter.
31	Always Upload/Download	Parameter shall always be included in uploads and downloads.

Extended Descriptor Attributes

Bit	Name	Description
0	Indirect Mode	0 = Analog (selects entire parameters) 1 = Digital (selects individual bits within parameters)
1	Indirect Type 0	Analog input list (Instance 0xFFFF)
2	Indirect Type 1	Digital input list (Instance 0xFFFE)
3	Indirect Type 2	Feedback list (Instance 0xFFFD)
4	Indirect Type 3	Analog output list (Instance 0xFFFC)
5	Indirect Type 4	Digital output list (Instance 0xFFFB)
6	Indirect Type 5	Undefined (Instance 0xFFFA)
7	Indirect Type 6	Undefined (Instance 0xFFF9)
8	Indirect Type 7	Undefined (Instance 0xFFF8)
9	Indirect Type 8	Undefined (Instance 0xFFF7)
10	Indirect Type 9	Undefined (Instance 0xFFF6)
11	Indirect Type 10	Undefined (Instance 0xFFF5)
12	Indirect Type 11	Undefined (Instance 0xFFF4)
13	Indirect Type 12	Undefined (Instance 0xFFF3)
14	Indirect Type 13	Undefined (Instance 0xFFF2)
15	Indirect Type 14	Parameter-specific list
16	FP Max Decimals Bit 0	These four bits are used on REAL parameters only. They indicate the maximum number of decimal places to be displayed for small values. A value of 0 indicates to not limit the number of decimal places used.
17	FP Max Decimals Bit 1	
18	FP Max Decimals Bit 2	
19	FP Max Decimals Bit 1	
20	Extended Parameter Reference	0 = Not an Extended Parameter Reference 1 = Extended Parameter Reference An Extended Parameter Reference contains a reference to another parameter. The value is formatted the same as an analog mode Indirect Selector parameter (SSpppp, where SS = slot number of device to which this Extended Parameter Reference is pointing, and pppp = number of the parameter or diagnostic item to which this Extended Parameter Reference is pointing). Note that an Extended Parameter Reference can only select parameters unlike an Indirect Selector. An Extended Parameter Reference could be used to configure a Datalink or show the source of a Reference (among other uses).
21	Uses Rating Table Object	This parameter has rating-dependent defaults and limits that can be obtained from the Rating Table Object. The Offline Read Full will include the default value for the smallest rating and limits that will accommodate the full range of values allowed in the family of devices using this particular combination of Family Code and Config Code. The Online Read Full will include the rating-dependent default and limit values for this particular combination of Family Code, Config Code, and Rating Code.
22	Writable Referenced Parameter	This bit must be zero unless the parameter is an Extended Parameter Reference. If the parameter is an Extended Parameter Reference, then: 0 = The referenced parameter may be read-only or writable. 1 = The referenced parameter must always be writable (including while running).
23	Disallow Zero	This bit must be zero unless the parameter is an Indirect Selector or Extended Parameter Reference. If the parameter is an Indirect Selector or Extended Parameter Reference, then: 0 = Allow zero 1 = Disallow zero If this bit is cleared (indicating that a value of zero is allowed), the device must support the 'Zero Text' parameter attribute so that a software tool or HIM can obtain text from the Zero Text parameter attribute. If this bit is set (indicating that a value of zero is disallowed), a software tool or HIM will not allow the user to enter a value of zero.
24	Datalink Out	This bit is used by offline tools and indicates that this is a Datalink Out parameter. Bit 20 must also be set.
25	Datalink In	This bit is used by offline tools and indicates that this is a Datalink In parameter. Bits 20 and 22 must also be set.
26	Not Writable While IO Active	This parameter cannot be written if the I/O data being exchanged between the Host and the peripheral is valid.
27	Command Parameter	This parameter commands the drive to take an action, such as 'Reset Defaults' or 'Autotune', and then returns to a value of zero. Offline software tools will not allow setting this parameter to anything other than a value of zero. If an offline file contains a Command Parameter with a non-zero value, the offline software tool will change the value to zero. Note that command parameters cannot have values that do not return to zero.

Bit	Name	Description
28	Current Value Is Default	This bit identifies a parameter that will not change if a 'Reset Defaults' is commanded. For example, if a drive contains a Language parameter that is set to German, setting defaults will leave the parameter set to German. Likewise, if the parameter is set to French, setting defaults will leave the parameter set to French.
29	Use Zero Text	If the 'Disallow Zero' bit is set, this bit must be cleared. If the 'Disallow Zero' bit is cleared, then: 0 = Use Disabled Text parameter class attribute. 1 = Use Zero Text parameter instance attribute.
30-31	Reserved	Reserved

Formulas for Converting

Display Value = ((Internal Value + Offset) x Multiplier x Base) / (Divisor x $10^{\text{Decimal Places}}$)

Internal Value = ((Display Value x Divisor x $10^{\text{Decimal Places}}$) / (Multiplier x Base)) - Offset

Common Services

Service Code	Implemented for:		Service Name
	Class	Instance	
0x0E	Yes	Yes	Get_Attribute_Single
0x10	Yes	Yes	Set_Attribute_Single

Object Specific Services

Service Code	Implemented for:		Service Name	Allocation Size (in bytes)	
	Class	Instance		Par. Number	Par. Value
0x4B	Yes	No	Get_Attributes_Scattered	2	2
0x4C	Yes	No	Set_Attributes_Scattered	2	2

The table below lists the parameters for the Get_Attributes_Scattered and Set_Attributes_Scattered object-specific service:

Name	Data Type	Description
Parameter Number	DWORD	Parameter to read or write
Parameter Value	DWORD	Parameter value to read or write (zero when reading)

DPI Fault Object

Class Code

Hexadecimal	Decimal
0x97	151

Products such as PowerFlex drives use this object for faults. Adapters use this object for events.

Services

Service Code	Implemented for:		Service Name
	Class	Instance	
0x0E	Yes	Yes	Get_Attribute_Single
0x10	Yes	Yes	Set_Attribute_Single

Instances

The number of instances depends on the maximum number of faults or events supported in the queue. The maximum number of faults/events can be read in Instance 0, Attribute 2.

Instances (Hex.)	(Dec.)	Device
0x0000…0x3FFF	0…16383	Host
0x4000…0x43FF	16384…17407	Adapter
0x4400…0x47FF	17408…18431	DPI Port 1
0x4800…0x4BFF	18432…19455	DPI Port 2
0x4C00…0x4FFF	19456…20479	DPI Port 3
0x5000…0x53FF	20480…21503	DPI Port 4
0x5400…0x57FF	21504…22527	DPI Port 5
0x5800…0x5BFF	22528…23551	DPI Port 6

Example	Description
0	Class Attributes (Drive)
1	Most Recent Drive Fault
2	Second Most Recent Drive Fault
⋮	⋮
16384	Class Attributes (Adapter)
16385	Most Recent Adapter Event
⋮	⋮

Class Attributes

Attribute ID	Access Rule	Name	Data Type	Description
1	Get	Class Revision	WORD	Revision of object
2	Get	Number of Instances	WORD	Maximum number of faults/events that the device can record in its queue
3	Set	Fault Command Write	BYTE	0 = No Operation 1 = Clear Fault/Event 2 = Clear Fault/Event Queue 3 = Reset Device
4	Get	Fault Trip Instance Read	WORD	Fault that tripped the device. For adapters, this value is always 1 when faulted.
5	Get	Fault Data List	STRUCT of: BYTE BYTE WORD[n]	Number of faults/events in the queue. A '0' indicates the fault queue is empty.
6	Get	Number of Recorded Faults	WORD	Number of faults/events in the queue. A '0' indicates the fault queue is empty.
7	Get	Fault Parameter Reference	WORD	Number of faults/events in the queue. A '0' indicates the fault queue is empty.

Instance Attributes

Attribute ID	Access Rule	Name	Data Type	Description
0	Get	Full/All Information	STRUCT of WORD STRUCT of: BYTE BYTE STRING[16] STRUCT of: LWORD BOOL[16] WORD CONTAINER[n]	Fault code Fault source DPI port DPI Device Object Fault text Fault time stamp Timer value (0 = timer not supported) BOOL[0]: (0 = invalid data, 1 = valid data) BOOL[1]: (0 = elapsed time, 1 = real time) BOOL[2…15]: Not used Reserved Reserved
1	Get	Basic Information	STRUCT of WORD STRUCT of: BYTE BYTE STRUCT of: LWORD BOOL[16]	Fault code Fault source DPI port DPI Device Object Fault time stamp Timer value (0 = timer not supported) BOOL[0]: (0 = invalid data, 1 = valid data) BOOL[1]: (0 = elapsed time, 1 = real time) BOOL[2…15]: Not used
2	Get	International Fault Text	STRINGN	Text describing the fault with support for Unicode.

DPI Alarm Object

Class Code

Hexadecimal	Decimal
0x98	152

Products such as PowerFlex drives use this object for alarms or warnings. Adapters do not support this object.

Services

Service Code	Implemented for:		Service Name
	Class	Instance	
0x0E	Yes	Yes	Get_Attribute_Single
0x10	Yes	Yes	Set_Attribute_Single

Instances

The number of instances depends on the maximum number of alarms supported by the queue. The maximum number of alarms can be read in Instance 0, Attribute 2.

Instances (Hex.)	(Dec.)	Device
0x0000…0x3FFF	0…16383	Host

Only host devices can have alarms.

Example	Description
0	Class Attributes (Drive)
1	Most Recent Alarm
2	Second Most Recent Alarm
⋮	⋮

Class Attributes

Attribute ID	Access Rule	Name	Data Type	Description
1	Get	Class Revision	WORD	Revision of object
2	Get	Number of Instances	WORD	Maximum number of alarms that the device can record in its queue
3	Set	Alarm Command Write	BYTE	0 = No Operation 1 = Clear Alarm 2 = Clear Alarm Queue 3 = Reset Device
4	Get	Fault Data List	STRUCT of: BYTE BYTE WORD[n]	Reserved
5	Get	Number of Recorded Alarms	WORD	Number of alarms in the queue. A '0' indicates the alarm queue is empty.

Instance Attributes

Attribute ID	Access Rule	Name	Data Type	Description
0	Get	Full/All Information	STRUCT of WORD STRUCT of: BYTE BYTE STRING[16] STRUCT of: LWORD BOOL[16] WORD CONTAINER[n]	Alarm code Alarm source DPI port DPI Device Object Alarm text Alarm time stamp Timer value (0 = timer not supported) BOOL[0]: (0 = invalid data, 1 = valid data) BOOL[1]: (0 = elapsed time, 1 = real time) BOOL[2…15] Reserved Reserved Reserved
1	Get	Basic Information	STRUCT of WORD STRUCT of: BYTE BYTE STRUCT of: LWORD BOOL[16]	Alarm code Alarm source DPI port DPI Device Object Alarm time stamp Timer value (0 = timer not supported) BOOL[0]: (0 = invalid data, 1 = valid data) BOOL[1]: (0 = elapsed time, 1 = real time) BOOL[2…15] Reserved
2	Get	International Alarm Text	STRINGN	Text describing the alarm with support for Unicode.

DPI Diagnostic Object

Class Code

Hexadecimal	Decimal
0x99	153

Services

Service Code	Implemented for:		Service Name
	Class	Instance	
0x0E	Yes	Yes	Get_Attribute_Single
0x10	Yes	Yes	Set_Attribute_Single

Instances

The number of instances depends on the maximum number of diagnostic items in the device. The total number of diagnostic items can be read in Instance 0, Attribute 2.

Instances (Hex.)	(Dec.)	Device
0x0000…0x3FFF	0…16383	Host
0x4000…0x43FF	16384…17407	Adapter
0x4400…0x47FF	17408…18431	DPI Port 1
0x4800…0x4BFF	18432…19455	DPI Port 2
0x4C00…0x4FFF	19456…20479	DPI Port 3
0x5000…0x53FF	20480…21503	DPI Port 4
0x5400…0x57FF	21504…22527	DPI Port 5
0x5800…0x5BFF	22528…23551	DPI Port 6

Example	Description
0	Class Attributes (Drive)
1	Drive Diagnostic Item 1
2	Drive Diagnostic Item 2
⋮	⋮
16384	Class Attributes (Adapter)
16385	Adapter Diagnostic Item1
⋮	⋮

Class Attributes

Attribute ID	Access Rule	Name	Data Type	Description
1	Get	Class Revision	WORD	1
2	Get	Number of Instances	WORD	Number of diagnostic items in the device.
3	Get	ENUM Offset	WORD	DPI ENUM object instance offset

Instance Attributes

Attribute ID	Access Rule	Name	Data Type	Description
0	Get	Full/All Information	STRUCT of:	
			BOOL[32]	Descriptor (see page 202)
			CONTAINER (1)	Value
			CONTAINER	Minimum value
			CONTAINER	Maximum value
			CONTAINER	Default value
			WORD	Pad Word
			WORD	Pad Word
			STRING[4]	Units (for example, Amp, Hz)
			WORD	Multiplier (2)
			WORD	Divisor (2)
			WORD	Base (2)
			INT	Offset (2)
			DWORD	Link (source of the value) (0 = no link)
			STRING[16]	Diagnostic name text

Attribute ID	Access Rule	Name	Data Type	Description
1	Get/Set	Value	Various	Diagnostic item value
2	Get	International Diagnostic Item Text	STRUCT of:	
			STRINGN	Diagnostic name text
			STRINGN	Diagnostic units text
3	Get	International Full Read All	STRUCT of:	
			BOOL[32]	Descriptor
			CONTAINER	Value
			CONTAINER	Minimum
			CONTAINER	Maximum
			CONTAINER	Default
			WORD	Pad Word
			WORD	Pad Word
			WORD	Multiplier
			WORD	Divisor
			WORD	Base
			INT	Offset
			DWORD	Pad
			BOOL[32]	Extended descriptor
			STRINGN	Diagnostic name text
			STRINGN	Diagnostic units text

(1) A CONTAINER is a 32-bit block of data that contains the data type used by a value. If signed, the value is sign extended. Padding is used in the CONTAINER to ensure that it is always 32-bits.

(2) This value is used in the formulas used to convert the value between display units and internal units. See Formulas for Converting on page 204.

DPI Time Object

Class Code

Hexadecimal	Decimal
0x9B	155

Services

Service Code	Implemented for:		Service Name
	Class	Instance	
0x0E	Yes	Yes	Get_Attribute_Single
0x10	Yes	Yes	Set_Attribute_Single

Instances

The number of instances depends on the number of timers in the device. Instance 1 is always reserved for a real-time clock although a device may not support it. The total number of timers can be read in Instance 0, Attribute 2.

Instances (Hex.)	(Dec.)	Device
0x0000…0x3FFF	0…16383	Host
0x4000…0x43FF	16384…17407	Adapter
0x4400…0x47FF	17408…18431	DPI Port 1
0x4800…0x4BFF	18432…19455	DPI Port 2
0x4C00…0x4FFF	19456…20479	DPI Port 3
0x5000…0x53FF	20480…21503	DPI Port 4
0x5400…0x57FF	21504…22527	DPI Port 5
0x5800…0x5BFF	22528…23551	DPI Port 6

Example	Description
0	Class Attributes (Drive)
1	Real Time Clock (Predefined) (not always supported)
2	Timer 1
3	Timer 2
⋮	⋮

Class Attributes

Attribute ID	Access Rule	Name	Data Type	Description
1	Get	Class Revision	WORD	Revision of object
2	Get	Number of Instances	WORD	Number of timers in the object, excluding the real-time clock that is predefined.
3	Get	First Device Specific Timer	WORD	Instance of the first timer that is not predefined.
4	Set	Time Command Write	BYTE	0 = No Operation 1 = Clear all timers (Does not clear the real-time clock or read only timers)
5	Get	Number of Supported Time Zones	WORD	Number of time zones described in the Time Zone List attribute.
6	Get	Time Zone List	STRUCT	Identifies a time zone.
7	Get/Set	Active Time Zone ID	WORD	The ID field of the Time Zone List structure for the desired time zone.
8	Get	Active Time Zone Data	STRUCT of: INT BYTE BYTE BYTE BYTE BYTE BYTE INT BYTE BYTE BYTE BYTE BYTE BYTE	 Standard bias Standard month Standard day of week Standard week Standard hour Standard minute Standard second Daylight offset Daylight month Daylight day of week Daylight week Daylight hour Daylight minute Daylight second
9	Get/Set	Custom Time Zone Data	STRUCT of: INT BYTE BYTE BYTE BYTE BYTE BYTE INT BYTE BYTE BYTE BYTE BYTE BYTE	 Standard bias Standard month Standard day of week Standard week Standard hour Standard minute Standard second Daylight offset Daylight month Daylight day of week Daylight week Daylight hour Daylight minute Daylight second

Instance Attributes

Attribute ID	Access Rule	Name	Data Type	Description
0	Get	Read Full	STRUCT of: STRING[16] LWORD or STRUCT BOOL[16]	 Name of the timer Elapsed time in milliseconds unless timer is a real-time clock (see attribute 2) See attribute 3
1	Get	Timer Text	STRING[16]	Name of the timer
2	Get/Set	Timer Value	LWORD -or- STRUCT of: WORD BYTE BYTE BYTE BYTE BYTE BYTE	Elapsed time in milliseconds unless the timer is a real-time clock. Real-Time Clock Data: Milliseconds (0…999) Seconds (0…59) Minutes (0…59) Hours (0…23) Days (1…31) Months (1 = January, 12 = December) Years (since 1972)
3	Get	Timer Descriptor	BOOL[16]	BOOL[0]: (0 = invalid data, 1 = valid data) BOOL[1]: (0 = elapsed time, 1 = real time) BOOL[2…15]: Not used
4	Get	International Read Full	STRUCT of: STRINGN STRUCT BOOL[16]	 International timer text Timer value Timer descriptor
5	Get	International Timer Text	STRINGN	Name of this timer
6	Get	Clock Status	BOOL[32]	Identifies clock status
8	Get/Set	Number of Leap Seconds	INT	Identifies the current number of Leap Seconds.
9	Get	Clock Options	BOOL[32]	Identifies the optional functionality available in the device's System Clock.
10	Get/Set	Clock Options Enable	BOOL[32]	Identifies which of the clock's options are enabled.

TCP/IP Interface Object

Class Code

Hexadecimal	Decimal
0xF5	245

Services

Service Code	Implemented for:		Service Name
	Class	Instance	
0x0E	Yes	Yes	Get_Attribute_Single
0x10	No	Yes	Set_Attribute_Single

Instances

Get_Attribute_All is supported for instances. The adapter supports one instance of the TCP/IP Interface object.

Number	Description
0	Class Attributes
1	Object Attributes

Class Attributes

Attribute ID	Access Rule	Name	Data Type	Description
1	Get	Revision	WORD	The revision of this object

Instance Attributes

Attribute ID	Access Rule	Name	Data Type	Description
1	Get	Status of TCP/IP Network Interface	DWORD	
2	Get	Configuration Capability	DWORD	0x000000F4
3	Get/Set	Configuration Control	DWORD	0 = Configuration from NVS 2 = Configuration from DHCP
4	Get	Physical Link Object	STRUCT of: UINT Padded EPATH	 2 words 20 F6 24 01 (Enet Link Object instance 1)
5	Get/Set	Interface Configuration	STRUCT of: UDINT UDINT UDINT UDINT UDINT STRING	 IP Address Network Mask Gateway Address Primary DNS Secondary DNS Default Domain Name for not fully qualified host names
6	Get/Set	Host Name	STRING	Host name when using DHCP
8	Get/Set	TTL Value	USINT	Time to Live value for EtherNet/IP multicast packets
9	Get/Set	Multicast Config	Struct of: USINT USINT UINT UDINT	 Allocation Control Reserved Number of multicast addresses to allocate (1-4) Multicast starting address.
10	Get/Set	SelectAcd	BOOL	Activates the use of ACD
11		LastConflictDetected	Struct of: USINT USINT[6] USINT[28]	 AcdActivity RemoteMAC ArpPdu

Ethernet Link Object

Class Code

Hexadecimal	Decimal
0xF6	246

Services

The following common services will be implemented for the Ethernet Link Object.

Service Code	Implemented for:		Service Name
	Class	Instance	
0x0E	Yes	Yes	Get_Attribute_Single
0x10	No	Yes	Set_Attribute_Single
0x4C	No	Yes	Get_and_Clear

Instances

The adapter supports one instance of the TCP/IP Interface object.

Number	Description
0	Class Attributes
1	Object Attributes Ethernet Port 1
2	Object Attributes Ethernet Port 2

Class Attributes

The following class attributes will be supported.

Attribute ID	Access Rule	Name	Data Type	Value
1	Get	Revision	UINT	3
2	Get	Max. Instance	UINT	2
3	Get	Number of Instances	UINT	2

Instance Attributes

Two instances of the Ethernet Link Object will be supported.

Attribute ID	Access Rule	Name	Data Type	Description
1	Get	Interface Speed	UDINT	10 or 100 megabits per second (Mbs)
2	Get	Interface Flags	DWORD	See EtherNet/IP specifications
3	Get	Physical Address	Array of 6 USINTs	MAC address
4	Get	Interface Counters	STRUCT of: UDINT UDINT UDINT UDINT UDINT UDINT UDINT UDINT UDINT UDINT UDINT	 In Octets In Ucast packets In NUcast packets In Discards In Errors In Unknown Protos Out Octets Out Ucast packets Out NUcast packets Out Discards Out Errors

Attribute ID	Access Rule	Name	Data Type	Description
5	Get	Media Counters	STRUCT of: DWORD DWORD DWORD DWORD DWORD DWORD DWORD DWORD DWORD DWORD DWORD DWORD	RX = Received, TX = Transmitted RX frames not having integral number of octets long RX frames not passing FCS check TX frames having one collision TX frames having multiple collisions Number of times of SQE test error message TX Frames delayed first attempt by busy medium Collisions detected later than 512 bit-times in trans. TX frames failing due to excessive collisions TX frames failing due to intern MAC sublayer TX error Times of carrier sense condition loss during trans. RX frames exceeding the maximum frame size RX frames failing due to intern MAC sublayer RX error
6	Get/Set	Interface Control	Struct of: WORD UINT	Struct of: Control Bits Forced Interface Speed
7	Get	Interface Type	USINT	2 = Twisted-pair (e.g., 10Base-T, 100Base-TX, 1000Base-T, etc.)
8	Get	Interface State	USINT	0 = Unknown interface state 1 = The interface is enabled and is ready to send and receive data 2 = The interface is disabled 3 = The interface is testing
9	Get/Set	Admin State	USINT	1 = Enable the interface (default) 2 = Disable the interface.
10	Get	Interface Label	SHORT_STRING	Instance 1: LS 1 Instance 2: LS 2

Logic Command/Status Words

This appendix presents the definitions of the Logic Command and Logic Status words that are used for some products that can be connected to the adapter. If the Logic Command/Logic Status for the product that you are using is not listed, refer to your product's documentation.

PowerFlex 70/70EC, PowerFlex 700/700VC, and PowerFlex 700H Drives

Logic Command Word

Logic Bits																	
15	14	13	12	11	10	9	8	7	6	5	4	3	2	1	0	Command	Description
															x	Stop (1)	0 = Not Stop 1 = Stop
														x		Start (1)(2)	0 = Not Start 1 = Start
													x			Jog	0 = Not Jog (Par. 100) 1 = Jog
												x				Clear Faults	0 = Not Clear Faults 1 = Clear Faults
										x	x					Direction	00 = No Command 01 = Forward Command 10 = Reverse Command 11 = Hold Direction Control
									x							Local Control	0 = No Local Control 1 = Local Control
								x								MOP Increment	0 = Not Increment 1 = Increment
						x	x									Accel Rate	00 = No Command 01 = Accel Rate 1 Command (Par. 140) 10 = Accel Rate 2 Command (Par. 141) 11 = Hold Accel Rate
				x	x											Decel Rate	00 = No Command 01 = Decel Rate 1 Command (Par. 142) 10 = Decel Rate 2 Command (Par. 143) 11 = Hold Decel Rate
	x	x	x													Reference Select (3)	000 = No Command 001 = Ref A Select (Par. 90) 010 = Ref B Select (Par. 93) 011 = Preset 3 (Par. 103) 100 = Preset 4 (Par. 104) 101 = Preset 5 (Par. 105) 110 = Preset 6 (Par. 106) 111 = Preset 7 (Par. 107)
x																MOP Decrement	0 = Not Decrement 1 = Decrement

(1) A '0 = Not Stop' condition (logic 0) must first be present before a '1 = Start' condition will start the drive. The Start command acts as a momentary Start command. A '1' will start the drive, but returning to '0' **will not** stop the drive.

(2) This Start will not function if a digital input (parameters 361…366) is programmed for 2-Wire Control (option 7, 8 or 9).

(3) This Reference Select will not function if a digital input (parameters 361…366) is programmed for 'Speed Sel 1, 2 or 3' (option 15, 16 or 17). Note that Reference Select is 'Exclusive Ownership' – see drive User Manual for more information.

Logic Status Word

Logic Bits																	
15	14	13	12	11	10	9	8	7	6	5	4	3	2	1	0	Status	Description
															x	Ready	0 = Not Ready (Par. 214) 1 = Ready
														x		Active	0 = Not Active (Running) 1 = Active
													x			Command Direction	0 = Reverse 1 = Forward
												x				Actual Direction	0 = Reverse 1 = Forward
											x					Accel	0 = Not Accelerating 1 = Accelerating
										x						Decel	0 = Not Decelerating 1 = Decelerating
									x							Alarm	0 = No Alarm (Par. 211 & 212) 1 = Alarm
								x								Fault	0 = No Fault (Par. 243) 1 = Fault
							x									At Speed	0 = Not At Reference 1 = At Reference
				x	x	x										Local Control (1)	000 = Port 0 (TB) 001 = Port 1 010 = Port 2 011 = Port 3 100 = Port 4 101 = Port 5 110 = Port 6 111 = No Local
x	x	x	x													Reference	0000 = Ref A Auto (Par. 90) 0001 = Ref B Auto (Par. 93) 0010 = Preset 2 Auto 0011 = Preset 3 Auto 0100 = Preset 4 Auto 0101 = Preset 5 Auto 0110 = Preset 6 Auto 0111 = Preset 7 Auto 1000 = Term Blk Manual 1001 = DPI 1 Manual 1010 = DPI 2 Manual 1011 = DPI 3 Manual 1100 = DPI 4 Manual 1101 = DPI 5 Manual 1110 = DPI 6 Manual 1111 = Jog Ref

(1) See 'Owners' in drive User Manual for further information.

PowerFlex 700S Drives

Logic Command Word (Phase II Control)

Logic Bits																Command	Description
15	14	13	12	11	10	9	8	7	6	5	4	3	2	1	0		
															x	Normal Stop	0 = Not Normal Stop 1 = Normal Stop
														x		Start (1)	0 = Not Start 1 = Start
													x			Jog 1	0 = Not Jog using [Jog Speed 1] (Par. 29) 1 = Jog using [Jog Speed 1] (Par. 29)
												x				Clear Fault (2)	0 = Not Clear Fault 1 = Clear Fault
										x	x					Unipolar Direction	00 = No Command 01 = Forward Command 10 = Reverse Command 11 = Hold Direction Control
									x							Reserved	
								x								Jog 2	0 = Not Jog using [Jog Speed 2] (Par. 39) 1 = Jog using [Jog Speed 2] (Par. 39)
							x									Current Limit Stop	0 = Not Current Limit Stop 1 = Current Limit Stop
						x										Coast Stop	0 = Not Coast to Stop 1 = Coast to Stop
					x											Reserved	
				x												Reserved	
			x													Spd Ref Sel0	
		x														Spd Ref Sel1	
	x															Spd Ref Sel2	
x																Reserved	

Bits			
14	13	12	
0	0	0	= Spd Ref A (Par. 27)
0	0	1	= Spd Ref B (Par. 28)
0	1	0	= Preset 2 (Par. 15)
0	1	1	= Preset 3 (Par. 16)
1	0	0	= Preset 4 (Par. 17)
1	0	1	= Preset 5 (Par. 18)
1	1	0	= Preset 6 (Par. 19)
1	1	1	= Preset 7 (Par. 20)

(1) A Not Stop condition (logic bit 0 = 0, logic bit 8 = 0, and logic bit 9 = 0) must first be present before a 1 = Start condition will start the drive.

(2) To perform this command, the value must switch from '0' to '1'.

Logic Status Word (Phase II Control)

Logic Bits																	
15	14	13	12	11	10	9	8	7	6	5	4	3	2	1	0	**Status**	**Description**
															x	Active	0 = Not Active 1 = Active
														x		Running	0 = Not Running 1 = Running
													x			Command Direction	0 = Reverse 1 = Forward
												x				Actual Direction	0 = Reverse 1 = Forward
											x					Accel	0 = Not Accelerating 1 = Accelerating
										x						Decel	0 = Not Decelerating 1 = Decelerating
									x							Jogging	0 = Not Jogging 1 = Jogging
								x								Fault	0 = No Fault (Par. 323, 324, 325) 1 = Fault
							x									Alarm	0 = No Alarm (Par. 326, 327, 328) 1 = Alarm
						x										Flash Mode	0 = Not in Flash Mode 1 = In Flash Mode
					x											Run Ready	0 = Not Ready to Run (Par. 156) 1 = Ready to Run
				x												At Limit (1)	0 = Not At Limit (Par. 304) 1 = At Limit
			x													Tach Loss Sw	0 = Not Tach Loss Sw 1 = Tach Loss Sw
		x														At Zero Spd	0 = Not At Zero Speed 1 = At Zero Speed
	x															At Setpt Spd	0 = Not At Setpoint Speed 1= At Setpoint Speed
x																Enable	0 = Not Enabled 1 = Enabled

(1) See Parameter 304 - [Limit Status] in the PowerFlex 700S drive User Manual for a description of the limit status conditions.

SMC Flex Controllers SMC-50 Controllers

Logic Status Word

Bit #																Status	Description
15	14	13	12	11	10	9	8	7	6	5	4	3	2	1	0		
															X	Enabled	1 — Control Power Applied 0 — No Control Power
														X		Running	1 — Power Applied to Motor 0 — Power **not** Applied to Motor
													X			Phasing	1 — ABC Phasing 0 — CBA Phasing
												X				Phasing Active	1 — 3-phase is valid 0 — No valid 3-phase detected
											X					Starting (Accel)	1 — Performing a Start Maneuver 0 — Not Performing a Start Maneuver
										X						Stopping (Decel)	1 — Performing a Stop Maneuver 0 — Not Performing a Stop Maneuver
									X							Alarm	1 — Alarm Present 0 — No Alarm Present
								X								Fault	1 — Fault Condition Exists 0 — No Fault Condition
							X									At Speed	1 — Full Voltage Applied 0 — Not Full Voltage Applied
						X										Start/ Isolation	1 — Start/Isolation Contactor Enabled 0 — Start/Isolation Contactor Disabled
					X											Bypass	1 — External Bypass Contactor Enabled 0 — External Bypass Contactor Disabled
				X												Ready	1 — Ready 0 — Not Ready
			X													Option 1 Input	1 — Input Active 0 — Input Inactive
		X														Option 2 Input	1 — Input Active 0 — Input Inactive
—																—	Bits 14 and 15 — Not Used

Logic Command Word (Control)

Bit #																Status	Description
15	14	13	12	11	10	9	8	7	6	5	4	3	2	1	0		
															X	Stop	1 — Stop/Inhibit 0 — No Action
														X		Start	1 — Start 0 — No Action
													X			Option #1 Input	1 — Stop Maneuver/Inhibit 0 — No Action
												X				Clear Faults	1 — Clear Faults 0 — No Action
											X					Option #2 Input	1 — Perform Option 2 function 0 — No Action
—																—	Bits 5…10 — Not Used
				X												Aux Enable	1 — Use Aux 1…Aux 4 0 — Ignore Aux 1…Aux 4
			X													Aux 1	1 — Aux 1 Active 0 — Aux 1 Inactive
		X														Aux 2	1 — Aux 2 Active 0 — Aux 2 Inactive
	X															Aux 3	1 — Aux 3 Active 0 — Aux 3 Inactive
X																Aux 4	1 — Aux 4 Active 0 — Aux 4 Inactive

A

Adapter

Devices such as drives, controllers, and computers usually require a network communication adapter to provide a communication interface between them and a network such as EtherNet/IP. An adapter reads data on the network and transmits it to the connected device. It also reads data in the device and transmits it to the network.

The 20-COMM-ER EtherNet/IP adapter connects PowerFlex 7-Class drives and SMC controllers to an EtherNet/IP network. Adapters are sometimes also called ‘cards’, ‘embedded communication options’, ‘gateways’, ‘modules’, or ‘peripherals’.

B

BOOTP (Bootstrap Protocol)

BOOTP lets the adapter configure itself dynamically at restart if the network has a BOOTP server. The BOOTP server assigns the adapter a preconfigured IP address, a subnet mask, and a gateway address; therefore, you do not have to configure these with the parameters in the adapter. BOOTP can make it easier to administer an Ethernet network. A **free version** of the Rockwell Software® BOOTP Server can be obtained at http://www.software.rockwell.com/support/download/detail.cfm?ID=3390.

Bridge

A network device that can route messages from one network to another. A bridge also refers to a communications module in a ControlLogix controller that connects the controller to a network. See also Scanner.

C

CIP (Common Industrial Protocol)

CIP is the transport and application layer protocol used for messaging over EtherNet/IP, ControlNet, and DeviceNet networks. The protocol is used for implicit messaging (real-time I/O) and explicit messaging (configuration, data collection, and diagnostics).

Connected Components Workbench Software

The recommended tool for monitoring and configuring Allen-Bradley products and network communication adapters. It can be used on computers running various Microsoft Windows operating systems. You can obtain a **free copy** of Connect Components Workbench software at http://www.ab.com/support/abdrives/webupdate/software.html.

ControlFLASH

A **free** software tool used to electronically update firmware of Allen-Bradley products and network communication adapters. ControlFLASH software is downloaded automatically when the firmware revision file for the product being

updated is downloaded from the Allen-Bradley updates website to your computer.

Controller

A controller, also called programmable logic controller, is a solid-state control system that has a user-programmable memory for storage of instructions to implement specific functions such as I/O control, logic, timing, counting, report generation, communication, arithmetic, and data file manipulation. A controller consists of a central processor, input/output interface, and memory. See also Scanner.

D

Data Rate

The speed at which data is transferred on the EtherNet/IP network. You can set the adapter to a data rate of 10 Mbps Full-Duplex, 10 Mbps Half-Duplex, 100 Mbps Full-Duplex, or 100 Mbps Half-Duplex. If another device on the network sets or auto-negotiates the data rate, you can set the adapter to automatically detect the data rate.

Datalinks

A Datalink is a type of pointer used by PowerFlex 7-Class drives and SMC controllers to transfer data to and from the controller. Datalinks allow specified parameters to be read or written to without using explicit messages. When enabled, each Datalink consumes either four bytes or eight bytes in both the input and output image table of the controller. The drive determines the size of Datalinks.

Device Level Ring (DLR)

A protocol that allows multiported EtherNet device to be connected in a ring topology, enabling broken ring connection detection and network reconfirmation to linear topology.

DLR Announce Frame

Data frame sent by the ring supervisor in a ring network to announce transition from linear to ring or ring to linear configuration.

DLR Beacon Frame

Data frame sent by the ring supervisor in a ring network used to lost connections that break the ring.

DLR Ring Supervisor

A node that sends beacon and announce frames on a ring network to monitor and maintain connectivity by re-configuring the ring while nodes are disconnected or reconnected.

DPI (Drive Peripheral Interface)

A second generation peripheral communication interface used by various Allen-Bradley drives and power products, such as PowerFlex 7-Class drives and SMC controllers. It is a functional enhancement to SCANport.

DPI Peripheral

A device that provides an interface between DPI and a network or user. Peripheral devices are also referred to as 'adapters' or 'modules'. The 20-COMM-ER adapter, 1203-USB or 1203-SSS converter, and PowerFlex 7-Class HIMs (20-HIM-xxx) are examples of DPI peripherals.

DPI Product

A device that uses the DPI communications interface to communicate with one or more peripheral devices. For example, a motor drive such as a PowerFlex 7-Class drive is a DPI product. In this manual, a DPI product is also referred to as 'drive' or 'host'.

DriveExplorer Software

A tool for monitoring and configuring Allen-Bradley products and network communication adapters. It can be used on computers running various Microsoft Windows operating systems. DriveExplorer software, version 3.xx or later, can be used to configure this adapter and PowerFlex drives. This software tool has been discontinued and is now available as **freeware** at http://www.ab.com/support/abdrives/webupdate/software.html. There are no plans to provide future updates to this tool and the download is being provided 'as-is' for users that lost their DriveExplorer CD, or need to configure legacy products not supported by Connected Components Workbench software.

DriveTools SP Software

A software suite designed for running on various Microsoft Windows operating systems. This software suite provides a family of tools, including DriveExecutive software (version 3.01 or later), that you can use to program, monitor, control, troubleshoot, and maintain Allen-Bradley products. DriveTools SP software can be used with PowerFlex 7-Class and PowerFlex 4-Class drives, and legacy drives that implement the SCANport communication interface. Information about DriveTools SP software can be accessed at http://www.ab.com/drives/drivetools.

Duplex

Duplex describes the mode of communication. 'Full-duplex' communication lets a device exchange data in both directions at the same time. 'Half-duplex' communication lets a device exchange data only in one direction at a time. The duplex used by the adapter depends on the type of duplex that other network devices, such as switches, support.

E

EDS (Electronic Data Sheet) Files

Simple text files that are used by network configuration tools to describe products so that you can easily commission them on a network. EDS files describe a product device type and revision. EDS files for many Allen-Bradley products can be found at http://www.ab.com/networks/eds.

EtherNet/IP Network

EtherNet/IP (Industrial Protocol) is an open producer-consumer communication network based on the Ethernet standard (IEEE 802.3), TCP/IP, UDP/IP, and CIP. Designed for industrial communication, both I/O and explicit messages can be transmitted over the network. Each device is assigned a unique IP address and transmits data on the network. The number of devices that an EtherNet/IP network can support depends on the class of IP address. For example, a network with a Class C IP address can have 254 nodes.

General information about EtherNet/IP and the EtherNet/IP specification are maintained by the Open DeviceNet Vendor's Association (ODVA). ODVA is online at http://www.odva.org.

Explicit Messaging

Explicit Messages are used to transfer data that does not require continuous updates. They are typically used to configure, monitor, and diagnose devices over the network.

F

Fault Action

A fault action determines how the adapter and connected drive act when a communication fault (for example, a disconnected cable) occurs or when the controller is switched out of run mode. The former uses a communication fault action, and the latter uses an idle fault action.

Fault Configuration

When communication is disrupted (for example, a cable is disconnected), the adapter and PowerFlex drive can respond with a user-defined fault configuration. The user sets the data that is sent to the drive using specific fault configuration parameters in the adapter. When a fault action parameter is set to use the fault

configuration data and a fault occurs, the data from these parameters is sent as the Logic Command, Reference, and/or Datalinks.

G

Gateway

A device on a network that connects an individual network to a system of networks. When a node needs to communicate with a node on another network, a gateway transfers the data between the two networks. You need to configure the address for the gateway device in the adapter if you want the adapter to communicate with devices that are not on its network.

H

Hardware Address

Each Ethernet device has a unique hardware address (sometimes called a MAC address) that is 48 bits. The address appears as six digits separated by colons (for example, xx:xx:xx:xx:xx:xx). Each digit has a value between 0 and 255 (0x00 and 0xFF). This address is assigned in the hardware and cannot be changed. It is required to identify the device if you are using a BOOTP server.

HIM (Human Interface Module)

A device that can be used to configure and control a drive. PowerFlex 7-Class HIMs (catalog number 20-HIM-xx) can be used to configure PowerFlex 7-Class drives and their connected peripherals.

Hold Last

When communication is disrupted (for example, a cable is disconnected), the adapter and PowerFlex drive can respond by holding last. Hold last results in the drive receiving the last data received via the network connection before the disruption. If the drive was running and using the Reference from the adapter, it will continue to run at the same Reference.

I

Idle Action

An idle action determines how the adapter and connected drive act when the controller is switched out of run mode.

I/O Data

I/O data, sometimes called ‘implicit messages’ or ‘input/output’, is time-critical data such as a Logic Command and Reference. The terms ‘input’ and ‘output’ are defined from the controller’s point of view. Output is produced by the controller and consumed by the adapter. Input is produced by the adapter and consumed by the controller.

IP Addresses

A unique IP address identifies each node on an EtherNet/IP network. An IP address consists of 32 bits that are divided into four segments of one byte each. It appears as four decimal integers separated by periods (xxx.xxx.xxx.xxx). Each 'xxx' can have a decimal value from 0 to 255. For example, an IP address could be 192.168.0.1.

An IP address has two parts: a network ID and a host ID. The class of network determines the format of the address.

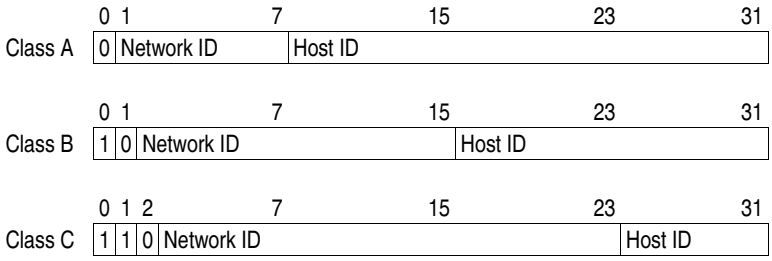

The number of devices on your EtherNet/IP network will vary depending on the number of bytes that are used for the network address. In many cases you are given a network with a Class C address, in which the first three bytes contain the network address (subnet mask = 255.255.255.0). This leaves 8 bits or 256 addresses on your network. Because two addresses are reserved for special uses (0 is an address for the network usually used by the router, and 255 is an address for broadcast messages to all network devices), you have 254 addresses to use on a Class C address block.

To ensure that each device on the Internet has a unique address, contact your network administrator or Internet Service Provider for unique fixed IP addresses. You can then set the unique IP address for the adapter by using a BOOTP server or by manually configuring parameters in the adapter. The adapter reads the values of these parameters only at powerup.

L

Logic Command/Logic Status

The Logic Command is used to control the PowerFlex 7-Class drive (for example, start, stop, and direction). It consists of one 16-bit word of output to the adapter from the network. The definitions of the bits in this word depend on the drive, and are shown in Appendix D.

The Logic Status is used to monitor the PowerFlex 7-Class drive (for example, operating state and motor direction). It consists of one 16-bit word of input from the adapter to the network. The definitions of the bits in this word depend on the drive, and are shown in Appendix D.

M

Master-Slave Hierarchy

An adapter configured for a master-slave hierarchy exchanges data with the master device. Usually, a network has one scanner which is the master device, and all other devices (for example, drives connected to EtherNet/IP adapters) are slave devices.

On a network with multiple scanners (called a multimaster hierarchy), each slave device must have a scanner specified as a master.

N

NVS (Nonvolatile Storage)

NVS is the permanent memory of a device. Devices such as the adapter and drive store parameters and other information in NVS so that they are not lost when the device loses power. NVS is sometimes called 'EEPROM'.

P

PCCC (Programmable Controller Communications Command)

PCCC is the protocol used by some controllers to communicate with devices on a network. Some software products (for example, DriveExplorer and DriveExecutive software) also use PCCC to communicate.

Peer-to-Peer Hierarchy

An adapter that is configured for a peer-to-peer hierarchy can exchange data with a device on the network that is not a scanner. This type of hierarchy can be set up so that a scanner configures or transmits data to one PowerFlex 7-Class drive which then sends the same configuration or data to other PowerFlex 7-Class drives on the network. To use a peer-to-peer hierarchy, you configure one adapter to transmit data (2 or 4 words) and one or more adapters to receive the data.

Ping

A message that is sent by a DPI product to its peripheral devices. They use the ping to gather data about the product, including whether it can receive messages and whether they can log in for control. On EtherNet/IP, a ping can be used to determine if a node exists.

PowerFlex 7-Class (Architecture Class) Drives

The Allen-Bradley PowerFlex 7-Class family of drives supports DPI and, at the time of publication, includes the PowerFlex 70, PowerFlex 700, PowerFlex 700H, PowerFlex 700S, PowerFlex 700L, and PowerFlex 7000 drives.

R

Reference/Feedback

The Reference is used to send a setpoint (for example, speed, frequency, and torque) to the drive. It consists of one word of output to the adapter from the

network. The size of the word (either a 16-bit word or 32-bit word) is determined by the drive.

Feedback is used to monitor the speed of the drive. It consists of one word of input from the adapter to the network. The size of the word (either a 16-bit word or 32-bit word) is determined by the drive.

RSLogix 5/500/5000 Software

RSLogix software is a tool for configuring and monitoring controllers to communicate with connected devices. It is a 32-bit application that runs on various Windows operating systems. Information about RSLogix software can be found at http://www.software.rockwell.com/rslogix.

S

Scanner

A scanner is a separate module (of a multi-module controller) or a built-in component (of a single-module controller) that provides communication with adapters connected to a network. See also Controller.

Status Indicators

LEDs that are used to report the status of the adapter, network, and drive. They are on the adapter and can be viewed on the front cover of the drive when the drive is powered.

Subnet Mask

An extension to the IP addressing scheme that lets you use a single network ID for multiple physical networks. A bit mask identifies the part of the address that specifies the network and the part of the address that specifies the unique node on the network. A ‘1’ in the subnet mask indicates the bit is used to specify the network. A ‘0’ in the subnet mask indicates that the bit is used to specify the node.

For example, a subnet mask on a network may appear as follows: 11111111 11111111 11111111 11000000 (255.255.255.192). This mask indicates that 26 bits are used to identify the network and 6 bits are used to identify devices on each network. Instead of a single physical Class C network with 254 devices, this subnet mask divides it into four networks with up to 62 devices each.

Switches

Network devices that provide virtual connections that help to control collisions and reduce traffic on the network. They are able to reduce network congestion by transmitting packets to an individual port only if they are destined for the connected device. In a control application, in which real time data access is critical, network switches may be required in place of hubs.

T

TCP (Transmission Control Protocol)

EtherNet/IP uses this protocol to transfer Explicit Messaging packets using IP. TCP guarantees delivery of data through the use of retries.

U

UDP (User Datagram Protocol)

EtherNet/IP uses this protocol to transfer I/O packets using IP. UDP provides a simple, but fast capability to send I/O messaging packets between devices. This protocol verifies that adapters transmit the most recent data because it does not use acknowledgements or retries.

UDDT (User-Defined Data Type)

A structure data type that you define during the development of an application (for example, to convert 32-bit REAL parameter data for written and read values to correctly display them in human readable format).

Update

The process of updating firmware in a device. The adapter and its connected PowerFlex 7-Class host drive and its peripherals can be updated using various Allen-Bradley software tools. See Updating the Adapter Firmware on page 44 for more information.

Z

Zero Data

When communication is disrupted (for example, a cable is disconnected), the adapter and drive can respond with zero data. Zero data results in the drive receiving zero as values for Logic Command, Reference, and Datalink data. If the drive was running and using the Reference from the adapter, it will stay running but at zero Reference.

A

adapter
- applying power **24**
- commissioning **26**
- compatible products **13**
- components **11**
- configuration tools **27**
- connecting to the drive **20**
- connecting to the network **23**
- definition **221**
- features **12**
- firmware updating **44**
- grounding **22**
- hardware address label **29**
- installation **17–26**
- IP address **29**, **32**
- mounting on the drive **22**
- parameters **171–179**
- resetting **43**
- specifications **169**
- using in a DPI External Comms Kit **167**
- viewing its status **44**
- web pages **153–??**

applying power to the adapter **24**
Assembly object **183**
attentions **15**

B

baud rate, *see data rate*
bit definitions of Logic Command/Status word for
- PowerFlex 70/700/700H drives **215**
- PowerFlex 700S drives **217**

BOOTP (Bootstrap Protocol)
- definition **221**
- disabling **32**
- free server application **221**
- using **29**

BOOTP parameter **171**
bridge **221**

C

cable, Ethernet **23**
cables
- DPI Internal Interface **20**, **21**

CIP (Common Industrial Protocol) **221**
classes of IP addresses **226**
Comm Flt Action parameter **174**
commissioning the adapter **26**
communications module, *see adapter*
compatible products **13**
components of the adapter **11**
configuration tools **27**
Connected Components Workbench software
- adapter configuration tool **14**, **27**
- definition/website **221**

connecting adapter to the
- drive **20**
- network **23**

ControlFLASH **221**
controller **222**
ControlLogix controller
- configuring the I/O **48**
- explicit messaging **108**
- using the I/O **88**

D

data rate
- definition **222**
- setting **34**

Datalink Size parameter **173**
Datalinks
- definition **222**
- in I/O image **80**
- using **86**

device-level ring (DLR)
- network example **23**

diagnostic items **146**
dimensions **170**
DPI
- connector on adapter **11**
- data rates **169**
- definition **223**
- Internal Interface cable **20**, **21**
- peripheral **223**
- products **13**, **223**

DPI Alarm object **206**
DPI Data Rate parameter **171**
DPI Device object **196**
DPI Diagnostic object **207**
DPI External Comms Kit - using adapter in **167**
DPI Fault object **204**

DPI I/O Act parameter **175**
DPI I/O Cfg parameter **174**
DPI Parameter object **198**
DPI Port parameter **171**
DPI Time object **209**
DriveExecutive software
  adapter configuration tool **14**, **27**
  definition/website **223**
DriveExplorer software
  adapter configuration tool **14**, **27**
  definition/website **223**
  free lite version **223**
drives, *see PowerFlex drives*
DriveTools SP software **223**
duplex communication mode
  definition **224**
  selecting **34**

E

EDS (Electronic Data Sheet) files **224**
EEPROM, *see Nonvolatile Storage (NVS)*
EMC Conformance **17**
EN Rate Act parameter **173**
EN Rate Cfg parameter **172**, **173**
environmental specifications **170**
equipment required **13**
Ethernet
  cable **23**
  connector on adapter **11**
Ethernet Link object **189**, **190**, **213**
EtherNet/IP
  data rates **169**
  example network for
    ControlLogix controller **48**
    MicroLogix 1100 controller **68**
  network definition **224**
  objects - list of **181**–??
  specification **224**
events
  clearing/viewing **149**
  list of **150**
explicit messaging
  about **106**
  configuring for
    ControlLogix controller **108**
    MicroLogix 1100/1400 controller **124**
  definition **224**
  performing **106**

F

fault action
  configuring the adapter for **41**
  definition **224**
fault configuration
  configuring the adapter for **42**
  definition **224**
faults, *see events*
features **12**
firmware revision **7**
firmware update
  definition **229**
  guidelines **44**
Flt Cfg A1-D2 In parameters **176**
Flt Cfg Logic parameter **175**
Flt Cfg Ref parameter **175**
full duplex, *see duplex*

G

gateway **225**
gateway address
  setting with BOOTP **29**
  setting with parameters **32**
Gateway Cfg 1-4 parameters **172**
grounding the adapter **22**

H

half duplex, *see duplex*
hardware address
  definition **225**
  in diagnostic item **148**
  on label **29**
HIM (Human Interface Module)
  accessing parameters with **28**
  definition **225**
  LCD model **28**
  LED model **28**

hold last
configuring the adapter for **41**
definition **225**
host IDs **226**

I

I/O
about **79**
configuring for
ControlLogix controller **48**
MicroLogix 1100/1400 controller **68**
configuring the adapter for **35**
definition **225**
understanding the I/O image **80**
using with
ControlLogix controller **88**
MicroLogix 1100/1400 controller **96**
PLC-5 controller **96**
SLC 500 controller **96**
Identity object **182**
idle action **225**
Idle Flt Action parameter **174**
installation
applying power to the adapter **24**
commissioning the adapter **26**
connecting to the drive **20**
connecting to the network **23**
preparing for **18**
Internal Interface cables
connecting to the adapter **21**
connecting to the drive **21**
illustration **21**
IP Addr Cfg 1-4 parameters **172**
IP address
definition/classes **226**
setting with BOOTP **29**
setting with parameters **32**

L

LCD HIM **28**
LED HIM **28**
LEDs, *see status indicators*
Link status indicator
troubleshooting with **145**
Logic Command/Status
bit definitions for
PowerFlex 70/700/700H drives **215**
PowerFlex 700S drives **217**
definition **226**
in I/O image for
ControlLogix controller **80**
PLC-5, SLC 500 or MicroLogix 1100 controllers **82**
using **84**

M

MAC address, *see hardware address*
manual
conventions **7**
related documentation **8**
website **8**
Master-Slave hierarchy
configuring adapter for **36**
definition **227**
mechanical dimensions **170**
messages, *see explicit messaging or I/O*
MicroLogix 1100/1400 controller
configuring the I/O **68**
explicit messaging **124**
limitations when using the I/O **68**
using the I/O **96**
mounting the adapter **22**
M-S Input parameter **176**
M-S Input parameter configurations **36**
M-S Output parameter **176**
M-S Output parameter configurations **36**

N

NET A status indicator
troubleshooting with **145**
NET B status indicator
locating **144**
network cable **23**
network IDs **226**
Network status indicator
troubleshooting with **145**
Non-Volatile Storage (NVS)
in adapter **27**
in drive **86**

Nonvolatile Storage (NVS)
definition **227**

O

objects - list of **181**–??
ODVA EtherNet/IP specification **224**

P

Parameter Group object **188**
Parameter object **185**
parameters
accessing **27**
convention **7**
list of **171**–**179**
numbering scheme **171**
restoring to factory-default settings **43**
PCCC (Programmable Controller Communications Command) **227**
PCCC object **190**
Peer A Input parameter **177**
Peer A Output parameter **179**
Peer B Input parameter **177**
Peer B Output parameter **179**
Peer Cmd Mask parameter **177**
Peer Flt Action parameter **177**
Peer Inp Addr 1-4 parameters **178**
Peer Inp Enable parameter **178**
Peer Inp Status parameter **178**
Peer Inp Timeout parameter **178**
Peer Out Enable parameter **179**
Peer Out Skip parameter **179**
Peer Out Time parameter **179**
Peer-to-Peer hierarchy
configuring adapter
to receive data **38**
to transmit data **37**
definition **227**
ping **227**
PLC-5 controller
limitations when using the I/O **68**
using the I/O **96**
PORT status indicator
locating **144**
troubleshooting with **144**
power consumption **169**
PowerFlex drives
compatible with adapter **13**
definition **227**
HIM **28**
installing adapter on **20**
preparing for an installation **18**
processor, *see controller*
programmable logic controller, *see controller*

Q

quick start **16**

R

Ref Adjust parameter **176**
Ref/Fdbk Size parameter **173**
Reference/Feedback
definition **227**
in I/O image for
ControlLogix controller **80**
PLC-5, SLC 500 or MicroLogix 1100 controllers **82**
setting an adjustment **41**
using **84**
Register object **184**
regulatory compliance **170**
related documentation **8**
requested packet interval **55**, **65**
Reset Module parameter **173**
ribbon cable, *see Internal Interface cable*
RSLinx Classic software
documentation **9**
using **47**
RSLogix 5/500/5000 software **228**

S

safety precautions **15**
scanner **228**
SLC 500 controller
limitations when using the I/O **68**
using the I/O **96**
specifications
adapter **169**
EtherNet/IP address **224**
EtherNet/IP subnet mask **228**

status indicators
definition **228**
Link **145**
NET A **145**
NET B **144**
Network **145**
normal operation **24**
PORT **144**
troubleshooting with **144**–??, **145**–??, **145**–??
understanding **143**
Subnet Cfg 1-4 parameters **172**
subnet mask
definition **228**
setting with BOOTP **29**
setting with parameters **32**
switches **228**

T

TCP (Transmission Control Protocol) **229**
TCP/IP Interface object **211**
technical support **8**
tools required **13**
troubleshooting **143**–**151**

U

UDDT (User-Defined Data Type) **229**
UDP (User Datagram Protocol) **229**

W

Web Enable parameter **179**
Web Features parameter **179**
web pages
enabling with parameter **42**
for the adapter **153**–??
website
BOOTP utility **221**
DriveExecutive software **223**
DriveExplorer software **223**
DriveTools SP software **223**
EDS files **224**
EtherNet/IP **224**
manuals **8**
ODVA (Open DeviceNet Vendor's Association) **224**
RSLogix 5/500/5000 software **228**
wiring, *see cable, Ethernet*

Z

zero data
configuring the adapter for **41**
definition **229**

U.S. Allen-Bradley Drives Technical Support - Tel: (1) 262.512.8176, Fax: (1) 262.512.2222, Email: support@drives.ra.rockwell.com, Online: www.ab.com/support/abdrives

www.rockwellautomation.com

Power, Control and Information Solutions Headquarters

Americas: Rockwell Automation, 1201 South Second Street, Milwaukee, WI 53204-2496 USA, Tel: (1) 414.382.2000, Fax: (1) 414.382.4444
Europe/Middle East/Africa: Rockwell Automation, Pegasus Park, De Kleetlaan 12a, 1831 Diegem, Belgium, Tel: (32) 2 663 0600, Fax: (32) 2 663 0640
Asia Pacific: Rockwell Automation, Level 14, Core F, Cyberport 3, 100 Cyberport Road, Hong Kong, Tel: (852) 2887 4788, Fax: (852) 2508 1846

Publication 20COMM-UM015B-EN-P - July 2013
Supercedes publication 20COMM-UM015A-EN-P — June 2013

Copyright © 2013 Rockwell Automation, Inc. All rights reserved. Printed in USA.

Series
A1F

Low Cost OEM Pressure Switch

Field Installable Weatherproof Enclosure

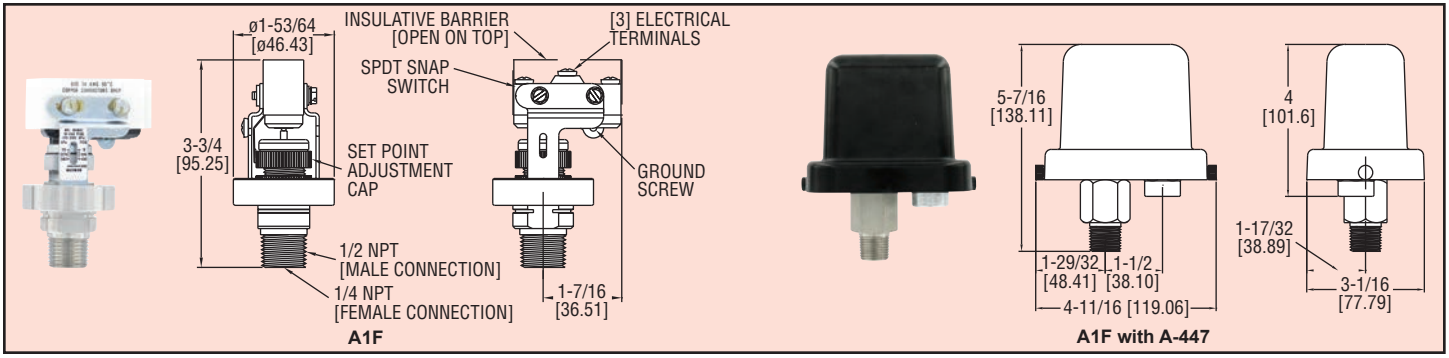

Low cost and precision made, the A1F Pressure Switch is ideal for OEM industrial applications. Wetted materials of 316 SS and fluorocarbon ensure great chemical compatibility with a wide range of process media. The open case style is perfect for panel mounting applications like pump skids. Field-installable weatherproof enclosure is available in polycarbonate offering a low cost weatherproof switch. Superior 15 A contact allows direct control of motors or pumps without the use of external relays, a true cost savings. Features include a convenient indicating scale for quick and easy field adjustment.

Model	Range	Deadband at Min Range	Deadband at Max Range
A1F-O-SS-1-1	2 to 15 (0.14 to 1.03)	2 (0.14)	3 (0.21)
A1F-O-SS-1-2	4 to 75 (0.28 to 5.17)	4 (0.27)	15 (1.0)
A1F-O-SS-1-3	8 to 225 (0.55 to 15.5)	8 (0.55)	25 (1.7)
A1F-O-SS-1-4	16 to 450 (1.1 to 31.0)	15 (1.0)	50 (3.5)

psig (bar)

ACCESSORY

A-447, Weatherproof enclosure; Easy field installation; Meets NEMA 4X, polycarbonate cover with 1/2″ NPT female conduit entry.

SPECIFICATIONS

Service: Compatible liquids and gases.
Wetted Materials: Pressure Chamber: 316 SS; Diaphragm: Fluorocarbon.
Temperature Limit: -40 to 175°F (-40 to 80°C).
Pressure Limits: 750 psig (51 bar).
Enclosure Rating: No rating for open construction. Installed properly within an optional A-447 enclosure meets NEMA 4X (IP66) standards.
Switch Type: SPDT snap switch.
Electrical Rating: 15 A @ 120/240/480 VAC; 1/8 HP @ 125 VAC; 1/4 HP @ 250 VAC.
Electrical Connection: Screw terminals.
Process Connection: 1/4″ female NPT and 1/2″ male NPT.
Mounting Orientation: Within 20° of vertical.
Set Point Adjustment: Knurled screw cap with indicating scale.
Deadband: Fixed. See deadband chart.
Weight: 10.5 oz (297 g).
Agency Approvals: CE, cUL, UL.

OPTION

Weatherproof enclosure. Optional A-447 enclosure factory installed. To order change "O" to "PC".
Example: A1F-PC-SS-1-1

Fliteway Technologies, Inc.

Treated Water Storage Tank

2129 East Birchwood Ave. Cudahy, WI 53110

(414) 483-5600 1-800-236-3580 FAX (414) 483-1957

See Groundwater Treatment Feed Tank Section

Fliteway Technologies, Inc.

Treated Water Pump Skid

2129 East Birchwood Ave. Cudahy, WI 53110

(414) 483-5600 1-800-236-3580 FAX (414) 483-1957

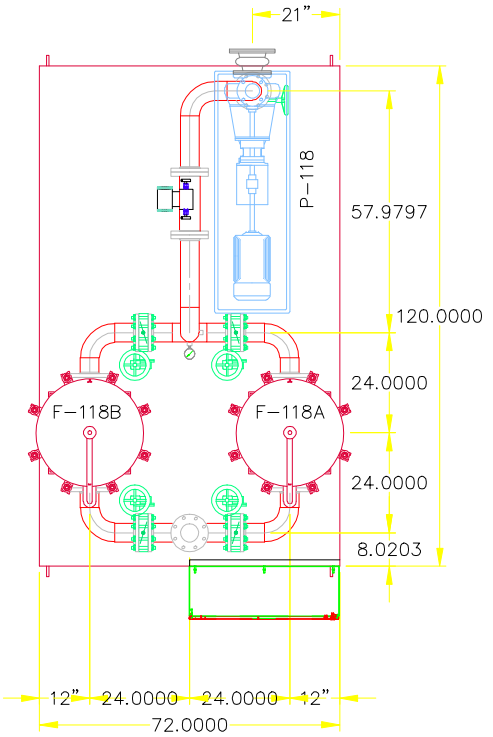

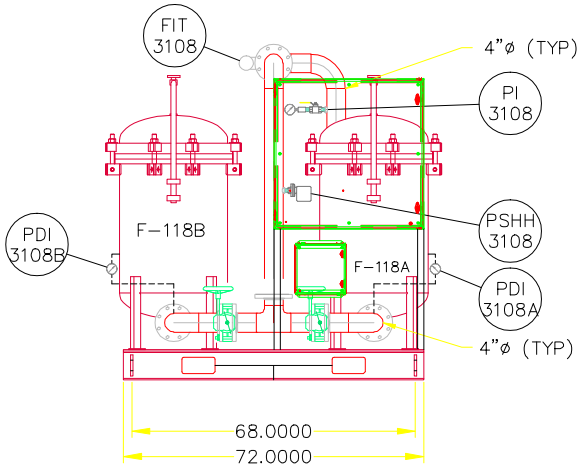

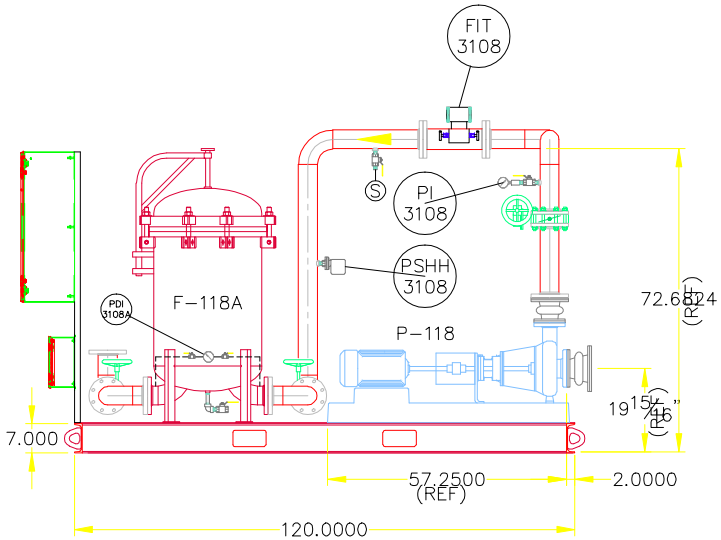

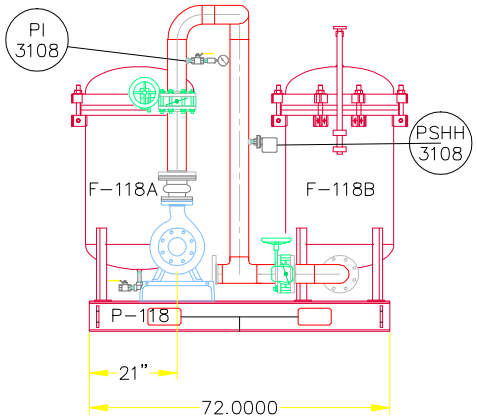

THIS DRAWING IS THE PROPERTY OF
Fliteway Technologies, Inc
2129 EAST BIRCHWOOD AVE
CUDAHY WI, 53110
414.483.5600 414.483.1957

AND IS NOT TO BE REPRODUCED
WITHOUT WRITTEN PERMISSION

3/19/15

6'X10' TREATED WATER PUMP SKID

CB&I WATER TREATMENT

SIZE	FSCM NO.	DWG NO.
		Q14508

SCALE NONE

SHEET 1 OF 1

CRANE ENGINEERING SALES

February 9, 2015

Proposal No: TS14-12-11 01
Item No: Discharge Pump

MODEL:3196 MTi SIZE:3x4-8G QTY: 1

i-FRAME™

Operating Conditions

SERVICE

LIQUID	Groundwater Temp. 70.0 deg F, SP.GR 1.000, Viscosity 1.000 cp, rated / max. suction pressure 0.0 / 0.0 psi g
CAPACITY Rated	400.0 gpm
HEAD	180.0 (ft)

Performance at 3550 RPM per HI 14.6 1B basis power

PUBLISHED EFFY	68.0% (CDS)
RATED EFFY	67.0% with contract seal
RATED POWER	27.2 hp (incl. Mech. seal drag 0.44). (Run out 33.1 hp)
NPSHR	12.6 ft
DISCH PRESSURE (R)	78.3 psi g (88.6 psi g @ Shut off) based on 0.0 psi g rated suction pressure
PERF. CURVE	1592-4 (Rotation CW viewed from coupling end)
SHUT OFF HEAD	204.8 ft
MIN. FLOW	Continuous Stable: 161.6 gpm Hydraulic: 161.6 gpm Thermal: N/A

Materials

CONSTRUCTION	Ductile iron
CASING	Ductile iron (max.casing pressure @ rated temperature 250.0 psi g)
ST.BOX COVER	Ductile iron
IMPELLER	Ductile iron - Open (7.1250 in rated, max=8.3750 in, min=5.5000 in)
CASING GASKETS	Aramid Fiber with EPDM and Silicate Filler
IMPELLER O-RING	Teflon
SHAFT MATERIAL	SAE 4140
SHAFT SLEEVE	316SS
LUBRICATION	Flood oil
SEAL CHAMBER	Taper bore plus with axial ribs
GLAND	316SS Flush quench and drain
BEARINGS	6309 (Inboard) 3309 (Outboard)
COUPLING	Rexnord - Omega Rex Elastomer- ES-10 (standard orange element)-S.F. 1.00
COUPLING GUARD	Carbon steel
BASEPLATE	Cast iron camber top B00051A

Sealing Method

MECHANICAL SEAL	John Crane 5611Q X(1)F(50)1XO(58)1 (Carbon vs Silicon Carbide with Viton) - (Cartridge - Single)

Flanges

150# flat face

Frame Connections

Bearing frame drain
Frame cooler access
Oil fill connection

Frame features

Ductile iron frame adapter
Inpro VBXX-D Hybrid Bearing Isolators
Premium Severe Duty Thrust Bearings
i- ALERT™ Condition Monitor

Assembly and Testing

Casing & Cover - Standard hydro test
Impeller balanced to ISO G6.3

Painting

Goulds Blue standard painting

Warranty

5 Year Extended Warranty (All the components, manufactured by ITT Goulds pumps, in the liquid end and power end are covered).

Driver : Electric motor Manufacturer : Pump mfg's Choice

FURNISHED BY	Pump mfg	MOUNTED BY	Pump mfg
RATING	40.0 hp (29.8 KW)	ENCLOSURE	TEFC - Premium Efficiency
PHASE/FREQ/VOLTS	3/60 Hz/460	SPEED	3600 RPM
INSULATION/SF	F/1.15	FRAME	324TS

Freight Terms

Freight invoices received from ITT partner carriers are proprietary information and cannot be divulged for any reason. ITT will provide an ITT generated freight invoice upon request.

Weights and Measurements

TOTAL NET UNIT WEIGHT / VOLUME	**1,016.0 lb / 14.8 ft³**
TOTAL GROSS UNIT WEIGHT / GROSS VOLUME	**1,204.2 lb / 38.2 ft³**

Program Version 1.51.0.1

Drawing Revision Limit

Drawings returned with status approved as noted or revise and re-submit will be corrected and resubmitted only once. Thereafter, additional comments or revisions to these drawings will incur a charge of $250 per drawing.

Our offer does not include specific review and incorporation of any Statutory or Regulatory Requirements and the offer is limited to the requirements of the design specifications. Should any Statutory or Regulatory requirements need to be reviewed and incorporated then the Customer is responsible to identify those and provide copies for review and revision of our offer.

Our quotation is offered in accordance with our comments and exceptions identified in our proposal.

Click here to download the pump Bulletin

Click here to learn more about the new i-FRAME™

GOULDS PUMPS

OUTLINE DRAWING

Model 3196 MTi
Size 3x4-8G

ITT

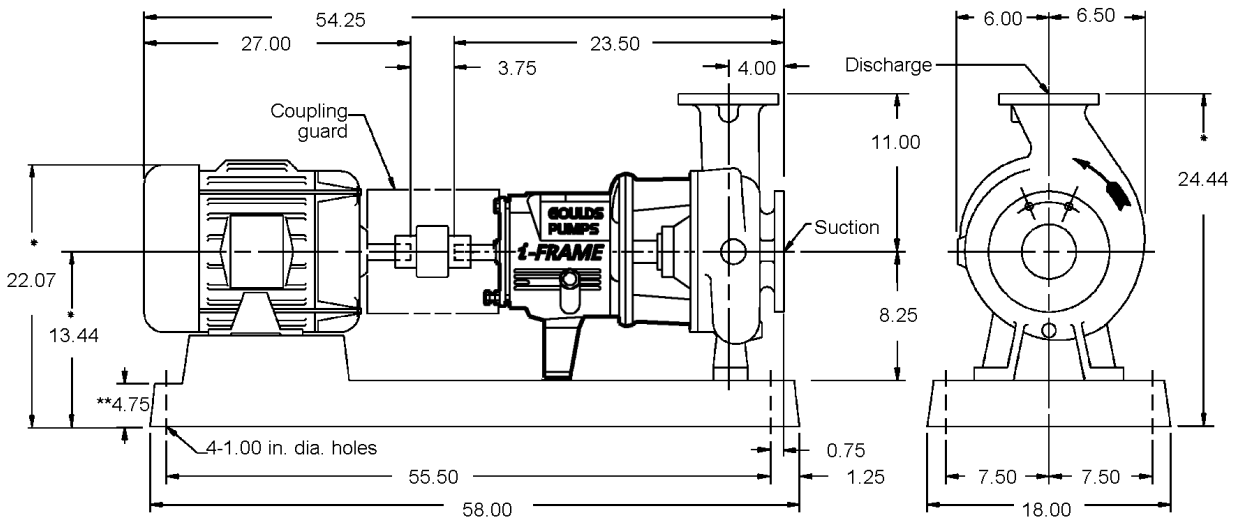

Pump Specification

SUCT.FLANGE SIZE	*4"*	DRILLING	*ANSI 150#*	FACING	*FF*	FINISH	*SERRATED*
DISCH.FLANGE SIZE	*3"*	DRILLING	*ANSI 150#*	FACING	*FF*	FINISH	*SERRATED*
PUMP ROTATION (LOOKING AT PUMP FROM MOTOR)			*CW*				
TYPE OF LUBRICATION	*FLOOD OIL*					COOLED	*NO*
TYPE OF STUFFING BOX	*TAPER BORE PLUS WITH AXIAL RIBS*					COOLED	*NO*
TYPE OF SEALING	*MECHANICAL SEAL*						

Weights and Measurements

PUMP	*240.0 lb*
MOTOR/CPLG	*560.0/11.0 lb*
BASEPLATE	*205.0 lb*
TOTAL	*1,016.0 lb*
GR.VOLUME w/BOX	*38.2 ft³*
GR.WEIGHT w/BOX	*1,204.2 lb*

Motor Specification

MOTOR BY	*PUMP MFG*	MOUNT BY	*PUMP MFG*	MFG.	*PUMP MFG'S CHOICE*
FRAME	*324TS*	POWER	*40.0 hp*	RPM	*3600*
PHASE	*3*	FREQUENCY	*60 HZ*	VOLTS	*460*
INSULATION	*F*	S.F.	*1.15*		
ENCLOSURE	*TEFC - PREMIUM EFFICIENCY*				

Notes and References

- MTR DIMENSIONS ARE APPROXIMATE
- INSTALL FOUNDATION BOLTS IN PIPE SLEEVES
- ALLOW FROM 0.75 to 1.50in. FOR GROUTING. SEE INSTRUCTION BOOK FOR DETAILS.

*Tolerance is +0 -0.5

** Foundation bolt grip thickness

Auxiliary Specification

COUPLING BY	*PUMP MFG*	CPLG TYPE	*REXNORD OMEGA REX ELASTOMER- ES-10 (STANDARD ORANGE*
CPL GUARD BY	*PUMP MFG*	CPLG GUARD MATL	*CARBON STEEL*
BASEPLATE	*CAST IRON CAMBER TOP B00051A*		
MECH.SEAL	*JOHN CRANE 5611Q X(1)F(50)1XO(58)1 (CARBON VS SILICON CARBIDE WITH VITON)*		

FOR PUMP TAPPED OPENINGS REFER TO DWG.:
TTS14-12-11 01 / Discharge Pump

DRAWING IS FOR REFERENCE ONLY.
NOT CERTIFIED FOR CONSTRUCTION UNLESS SIGNED.

Customer: CRANE ENGINEERING SALES
Serial No:
Customer P.O. No:
Item No: Discharge Pump
End User: .
Service:

Copyright 2015
ITT Corp

All dimensions are in inches.
Drawing is not to scale
Weights (lbs) are approximate

DRAWING NO TS14-12-11 01/Discharge Pump

Model: 3196	Size: 3x4-8G	Group: MTi	60Hz	RPM: 3550	Stages: 1

Job/Inq.No. :
Purchaser : CRANE ENGINEERING SALES
End User: .
Item/Equip.No. : Discharge Pump
Service :
Order No. :

Issued by : Tom Schroeder
Quotation No. : TS14-12-11 01
Certified By :

Date : 02/09/2015
Rev. : 0

Operating Conditions

Liquid:	Groundwater
Temp.:	70.0 deg F
S.G./Visc.:	1.000/1.000 cp
Flow:	400.0 gpm
TDH:	180.0 ft
NPSHa:	0.0 ft
Solid size:	
% Susp. Solids (by wtg):	

Pump Performance

Published Efficiency:	68.0 %
Rated Pump Efficiency:	67.0 %
Rated Total Power:	27.2 hp
Non-Overloading Power:	33.1 hp
Imp. Dia. First 1 Stg(s):	7.1250 in
NPSHr:	12.6 ft
Shut off Head:	204.8 ft
Vapor Press:	

Suction Specific Speed:	10,167 gpm(US) ft
Min. Hydraulic Flow:	161.6 gpm
Min. Thermal Flow:	N/A
Max. Solids Size:	0.6880 in

Notes: 1. Power and efficiency losses are not reflected on the curve below.
2. Elevated temperature effects on performance are not included.

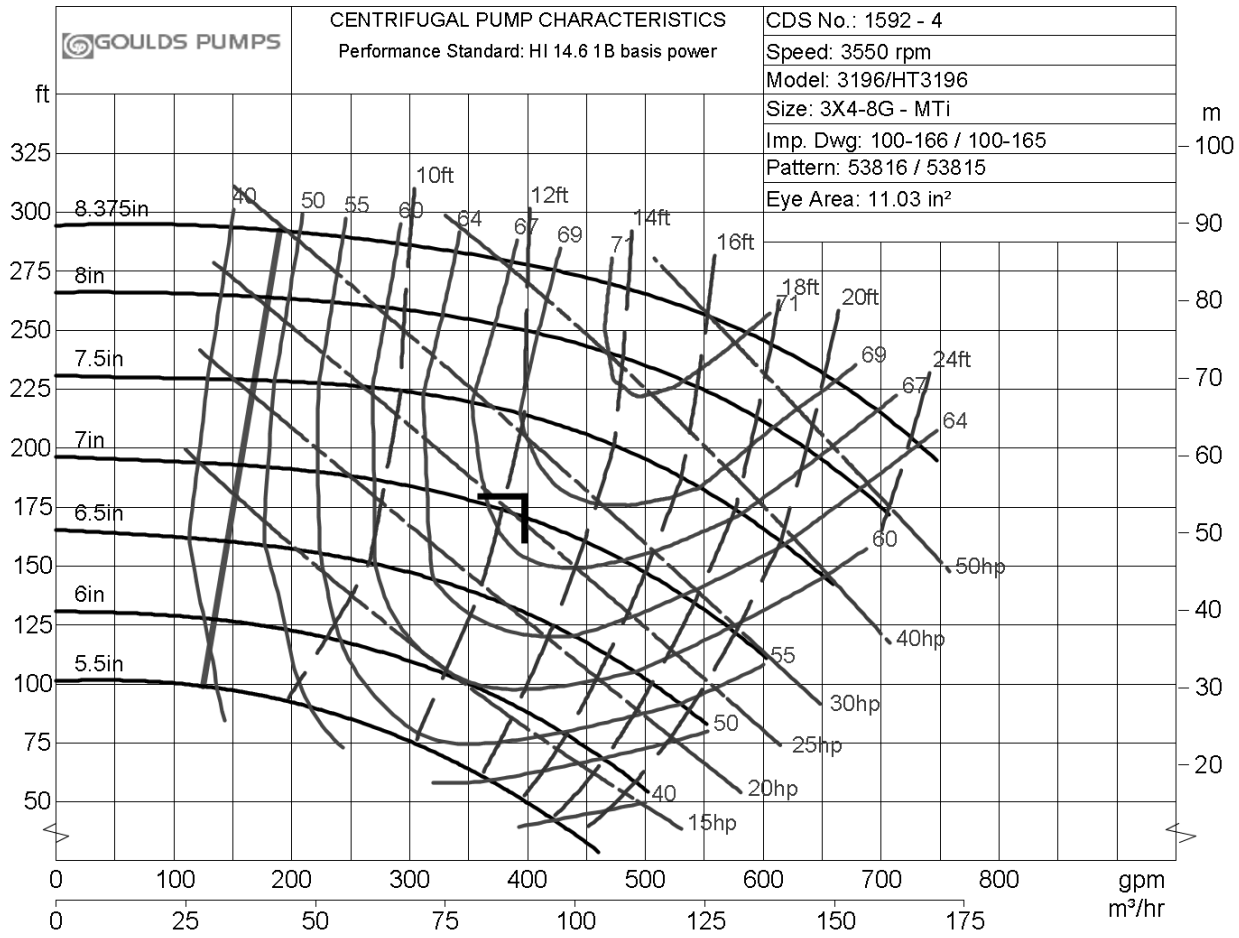

ITT

See Feed Pump Skid Section for Goulds Pump Manual

ASHCROFT®
Trust the shield.™

Type 1130 – 2″, 2½″, 3½″, 4″, 4½″, & 6″ Differential Gauge

- *Piston actuator*
- *Stainless steel case*
- *Ranges from 5 psid-150 psid*
- *Static pressures up to 6000 psi(4)*
- *Aluminum(3), brass or stainless steel bodies(1)*
- *Buna-N O-rings (others available)*
- *Superior magnets for smoother pointer motion*
- *Standard or explosion-proof reed switches available*
- *5-year warranty*

The Type 1130 uses a piston design where small migration of the process media is permissible.(1) It is recommended for high differential and high static pressures, up to 6000 psi. Body materials are available in Aluminum, Brass and Stainless Steel, with Buna, Viton or EPDM seals.(2)

NOTES:

(1) Not for use with incompatible media.

(2) Other wetted parts include stainless steel spring, Teflon piston and ceramic magnet.

(3) Aluminum bodies not to be used with water or corrosive applications.

(4) Static pressure over 3000 psi in SS only.

PRODUCT SPECIFICATIONS

Model Number:	1130
Accuracy (Ascending):	±2%
Migration:	Minor
Ranges:	0-5 psid to 150 psid
Maximum Static Pressure:	3000 psi (6000 psi for SS)
Actuator:	Piston
Case Material:	Stainless steel
Dial Size:	2″ (20), 2½″ (25), 3½″ (35), 4″ (40), 4½″ (45), 6″ (60)
Maximum Process Temp.:	175°F/80°C
Body Materials:	Aluminum (F), brass (A), stainless steel (S)
O-Rings/Diaphragm:	Buna-N
Connection Size (Female):	¼ NPT (25)
Connection Location:	In-Line (S), Lower (L), Back (B)
Window:	Glass

PRODUCT OPTIONS

Switches(1):		Available
⅛ NPT Female Adapter:	XGE	Available
Front Flange:	XFF	Available
Viton O-Rings:	XVD	Available
EPDM O-Rings:	XEM	Available
Fill(3):		
Glycerin	L	Standard
Silicone	XGV	Available
Window		
Plastic:	XPD	Available
Explosion Proof:	XEK	Available(2)
Pipe Mounting Bracket:	XTM	In-line (only)

(1) Applicable to switches:
XV1 – 1 SPST with DIN plug
XV2 – 1 SPST with terminal strip
XV3 – 2 SPST with DIN plug
XV4 – 2 SPST with terminal strip
XV5 – 1 SPDT with DIN plug
XV6 – 1 SPDT with terminal strip
XV7 – 2 SPDT with DIN plug
XV8 – 2 SPDT with terminal strip
Adjustable from 20-100% of range
Preset at 90% ascending
Terminal or DIN connected switches are not available with back connection

(2) Specify lower or back connection for gauge (not available in-line) and switch type V2, V4, V6, V8

(3) Liquid fill has an effect on accuracy that varies with range and temperature. Liquid filling may be required only in some very severe applications.

HOW TO ORDER:

25	1130	FD	25S	XXX	30#

Dial Size: 2″, 2½″, 3½″, 4″, 4½″, & 6″
Case Type Number: 1130
Body Material
Connection Size: ¼ NPTF (25)
Connection Location: In-line (S), Lower (L), Back (B)
Optional Features: see above
Standard Pressure Range

ISO 9001
REGISTERED FIRM
BULLETIN DP-1130

All specifications are subject to change without notice.
All sales subject to standard terms and conditions.
© Ashcroft Inc. 2010 09/14

Ashcroft Inc., 250 East Main Street, Stratford, CT 06614 USA
Tel: 203-378-8281 • Fax: 203-385-0408
email: info@ashcroft.com • www.ashcroft.com

Type 1130 – 2″, 2½″, 3½″, 4″, 4½″, & 6″ Differential Gauge

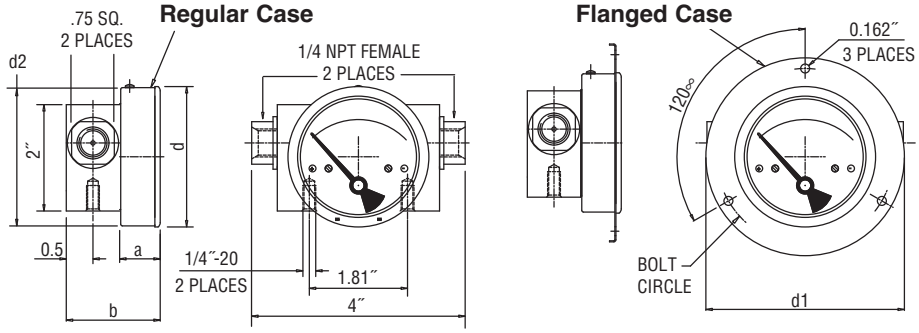

Type 1130 Dimension Drawing

Dial Size	a	b	d	d^1	d^2	Bolt Circle
2″	0.70″	1.70″	2.08″	3.11″	2.04″	2.72″
2.5″	0.75″	1.75″	2.59″	3.66″	2.55″	3.26″
3.5″	0.75″	1.75″	3.26″	4.29″	3.22″	3.89″
4″	0.75″	1.75″	4.10″	5.15″	4.01″	4.76″
4.5″	0.75″	1.75″	4.71″	5.74″	4.60″	5.35″
6″	0.75″	1.75″	6.07″	7.12″	6.00″	6.73″

Type 1130 – Standard Ranges

psi		0-5	0-8	0-10	0-15	0-20	0-25	0-30	
kPa	0-25		0-50	0-75	0-100		0-160	0-200	0-250
kg/cm²-bar	0-0.25		0-0.5	0-0.75	0-1		0-1.6	0-2	0-2.5

psi	0-40	0-50	0-60		0-80		0-100		0-150
kPa	0-300		0-400	0-500		0-600	0-700	0-900	0-1000
kg/cm²-bar	0-3		0-4	0-5		0-6	0-7	0-9	0-10

Ratings for Both Standard & Explosion Proof Switches:

SPST SWITCH
Specifications:
Contact Rating
10 VA ac (rms) or dc (max)
Switching Current
0.5 Amp ac (rms) or dc (max)
Switch Voltage
100 Vac/Vdc (max)

SPDT SWITCH
Specifications:
Contact Rating
3 VA ac (rms) or dc (max)
Switching Current
.3 Amp ac (rms) or dc (max)
Switch Voltage
30 Vac/Vdc (max)

Explosion Proof Switches Information:

Switches and electrical connections are mounted in an explosion-proof enclosure with UL, CSA, Cenelec and FM approval. The enclosure meets Class 1, Groups B, C, D, Class 2 Groups E, F, G, Class 3, NEMA 7 & 9 and IP 66. Two ¾″ electrical conduit connections.

All specifications are subject to change without notice.
All sales subject to standard terms and conditions.
© Ashcroft Inc. 2010 09/14

Ashcroft Inc., 250 East Main Street, Stratford, CT 06614 USA
Tel: 203-378-8281 • Fax: 203-385-0408
email: info@ashcroft.com • www.ashcroft.com

Fliteway Technologies, Inc.

Treated Water Pump VFD - Control Panel

2129 East Birchwood Ave. Cudahy, WI 53110

(414) 483-5600 1-800-236-3580 FAX (414) 483-1957

FEED PUMP SKID

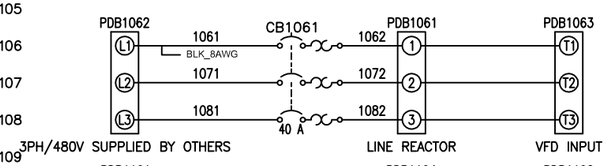

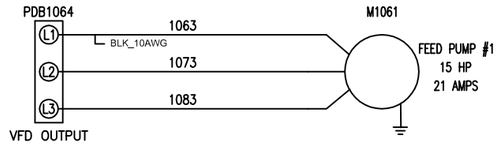

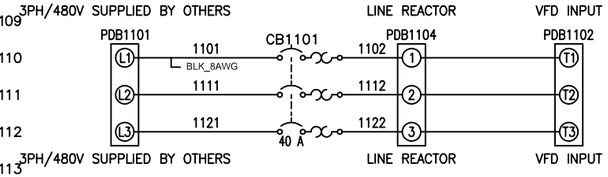

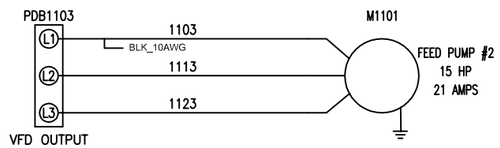

HIGH VOLTAGE PANEL

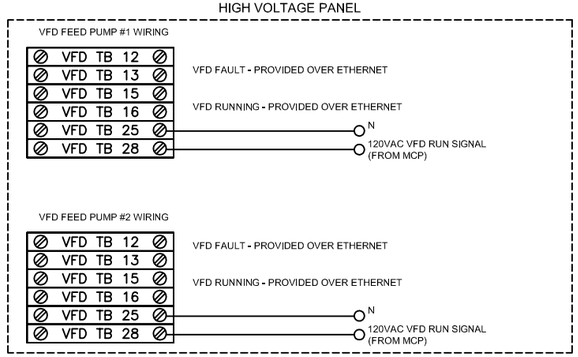

LOW VOLTAGE JUNCTION BOX

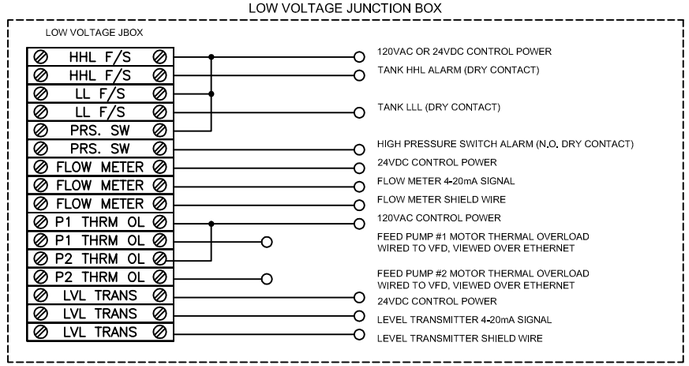

TREAT WATER PUMP SKID

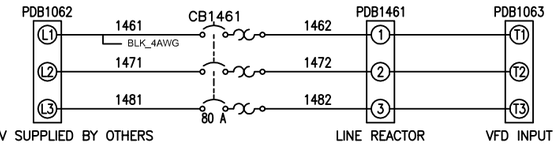

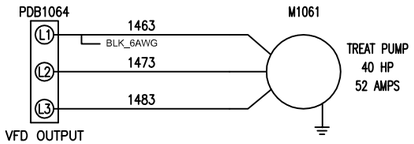

HIGH VOLTAGE PANEL

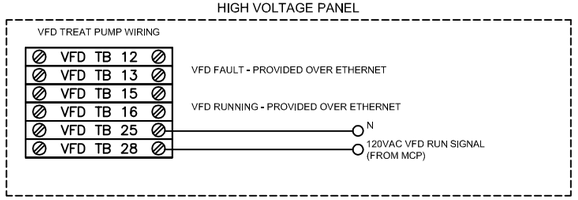

LOW VOLTAGE JUNCTION BOX

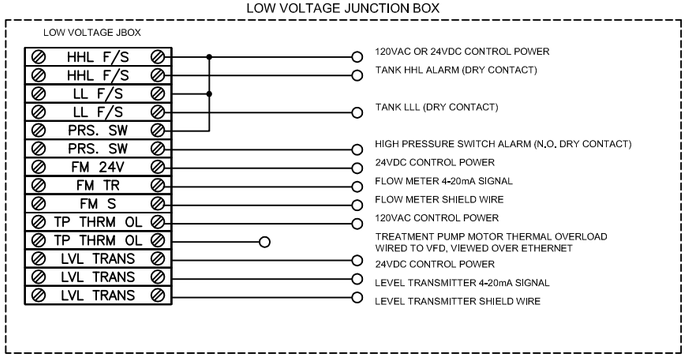

THIS PRINT AND ITS CONTENTS ARE THE PROPERTY OF FLITEWAY AND MUST NOT BE USED FOR ANY PURPOSE NOT AUTHORIZED BY FLITEWAY. DO NOT DISCLOSE, REPRODUCE OR OTHERWISE USE THIS PRINT OR ITS CONTENTS IN ANY MANNER DETRIMENTAL TO THE INTEREST OF FLITEWAY WITHOUT FLITEWAY'S PRIOR WRITTEN CONSENT. FLITEWAY RESERVES ALL RIGHTS OF DESIGN AND INVENTION TO THE EXTENT PERMITTED BY LAW.

CAD SYSTEM	UNITS
ACADE	IN
SCALE	FORMAT
1:1	D

Fliteway Technologies, Inc.
2129 East Birchwood Ave.
Cudahy, WI 53110

DRAWN BY	Q #	DESCRIPTION
Josh	Q14508	AS BUILT

DESIGNED FOR: CB&I Federal Services

Drawing Number

PLOTTED : 09-16-2015

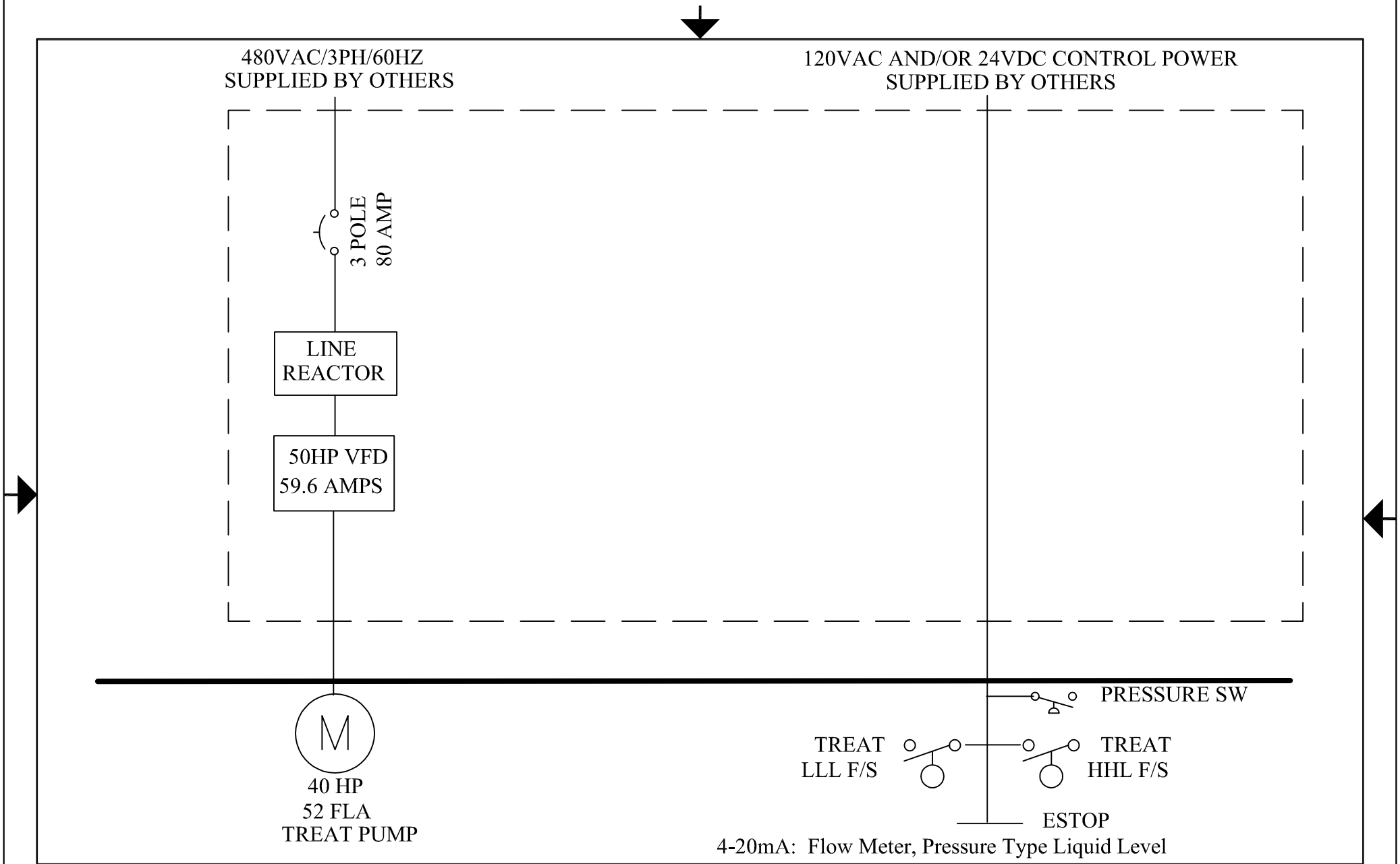

THIS DRAWING IS THE PROPERTY OF
Fliteway Technologies, Inc
2129 East Birchwood Avenue
Cudahy, WI 53110
414.483.5600 414.483.1957
AND IS NOT BE REPRODUCTED
WITH OUT WRITTEN PREMISSION

ONE LINE ELECTRICAL DIAGRAM

TREAT PUMP SKID

03/23/15

CB&I Federal Services

SIZE	FSCM NO.	DWG NO.	REV
		Q14508	5

SCALE NONE

SHEET

See Feed Pump VFD – Control Panel Section

Fliteway Technologies, Inc.

Air Compressor

2129 East Birchwood Ave. Cudahy, WI 53110

(414) 483-5600 1-800-236-3580 FAX (414) 483-1957

FEED PUMP SKID

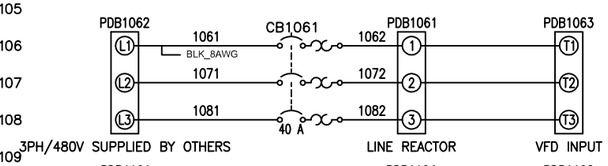

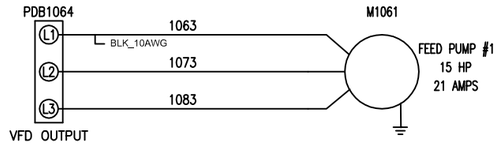

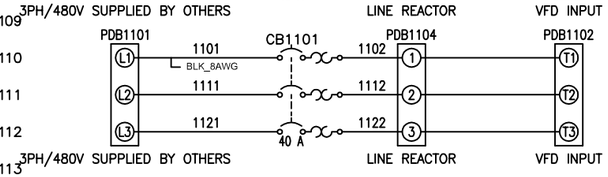

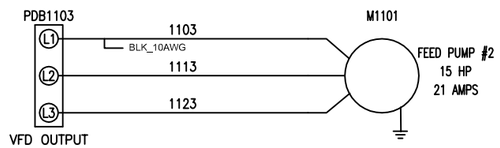

HIGH VOLTAGE PANEL

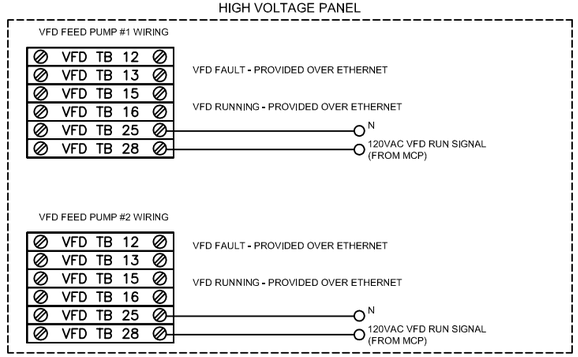

LOW VOLTAGE JUNCTION BOX

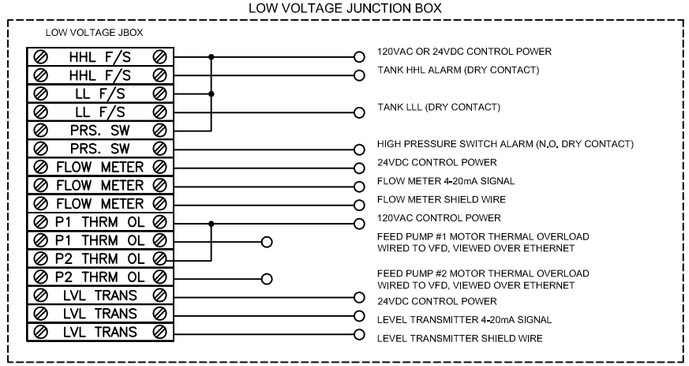

TREAT WATER PUMP SKID

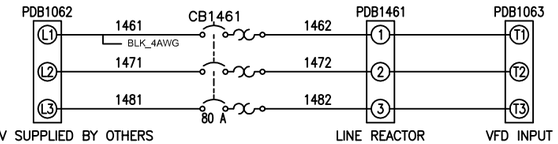

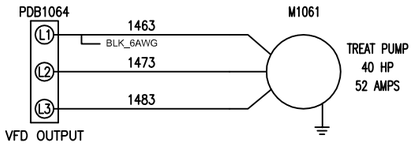

HIGH VOLTAGE PANEL

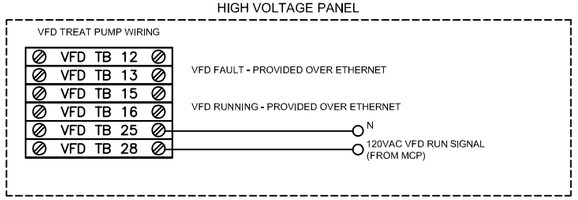

LOW VOLTAGE JUNCTION BOX

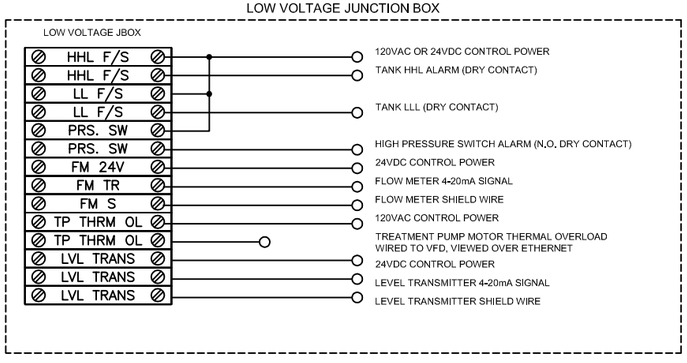

THIS PRINT AND ITS CONTENTS ARE THE PROPERTY OF FLITEWAY AND MUST NOT BE USED FOR ANY PURPOSE NOT AUTHORIZED BY FLITEWAY. DO NOT DISCLOSE, REPRODUCE OR OTHERWISE USE THIS PRINT OR ITS CONTENTS IN ANY MANNER DETRIMENTAL TO THE INTEREST OF FLITEWAY WITHOUT FLITEWAY'S PRIOR WRITTEN CONSENT. FLITEWAY RESERVES ALL RIGHTS OF DESIGN AND INVENTION TO THE EXTENT PERMITTED BY LAW.

CAD SYSTEM	UNITS
ACADE	IN
SCALE	FORMAT
1:1	D

Fliteway Technologies, Inc.
2129 East Birchwood Ave.
Cudahy, WI 53110

DRAWN BY	Q #	DESCRIPTION
Josh	Q14508	AS BUILT

DESIGNED FOR: CB&I Federal Services

Drawing Number

PLOTTED : 09-16-2015

480VAC/3PH/60HZ
SUPPLIED BY OTHERS

120VAC CONTROL POWER
SUPPLIED BY OTHERS

SELF-PROTECTED
(TYPE E) MANUAL
COMBINATION
STARTER

M

20 HP
AIR COMPRESSOR
27 FLA

AUTO-DRAIN

SOLENOID

THIS DRAWING IS THE PROPERTY OF
Fliteway Technologies, Inc
2129 East Birchwood Avenue
Cudahy, WI 53110
414.483.5600 414.483.1957
AND IS NOT BE REPRODUCTED
WITH OUT WRITTEN PREMISSION

ONE LINE ELECTRICAL DIAGRAM

COMPRESSORSKID

03/23/15

CB&I Federal Services

SIZE	FSCM NO.	DWG NO.	REV
		Q14508	5

SCALE NONE

SHEET

AC SERIES
AIR COMPRESSORS

15 through 350 SCFM

mattei®
BEST SOLUTIONS IN COMPRESSED AIR

AC SERIES HIGH-EFFICIENCY AIR COMPRESSORS

Engineered for Superior Performance & Energy Efficiency

UNBEATABLE PERFORMANCE

AC Series air compressors offer our customers the next level of sophistication. Featuring quiet {as low as 68 dB(A)} cabinet enclosures, electronic controllers, energy saving soft-start Wye-Delta motor starters, TEFC motors, air-cooled aftercoolers and optional integrated refrigerated air dryers, we invite you to experience the revolution. Mattei rotary vane air compressors are truly in a class of their own and known for their dependable operation and low maintenance. AC Series raises the bar with unbeatable performance and energy savings with package flow rates from 15 to 350 SCFM.

WE BUILD A BETTER COMPRESSOR

Founder Enea Mattei believed there was a better and more energy efficient way to generate compressed air. So, he focused his engineering on the inherent advantages of rotary vane technology and engineered in:

a) superior reliability
b) maximum mechanical & electrical efficiency
c) the most compressed air generated while consuming the least amount of electricity

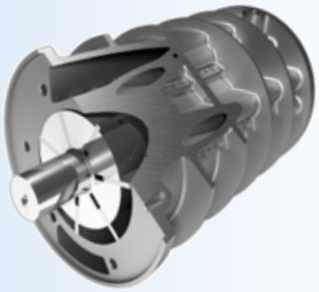

In effect, Mattei redefined the process of compressing air when he invented his first rotary vane air compressor over 50 years ago.

UNRIVALED PERFORMANCE AND DURABILITY

Today, Mattei continues to leverage advancements in technology, materials and within our exclusive airends (approximately 90% volumetric efficiency) to offer the best value in premium quality air compressors found anywhere on the planet.

Imagine “bearingless” Airends that carry a 10 Year Warranty as standard, and last up to 100,000 hours (*2-3 times the life of rotary screws*) without needing an overhaul, unrivaled super quiet operation, and the most energy stingy designs in the industry.

It’s a fact; Mattei is in a class of its own. Want to protect productivity, increase profitability, and lessen your carbon footprint?

Get your last air compressor first. Get a Mattei.

Get your last air compressor first. GET A MATTEI.

GET MORE FOR LESS

AC Series use our most advanced airend designs. Unlike typical rotary screw compressors, AC Series models use precision matched airends, direct-coupled to high efficiency motors that revolve at just 1,800 rpm, to deliver maximum energy efficiency and performance at design pressure. Thus, it is not uncommon to select a smaller HP AC Series model to meet the air demands of the customer.

For example, say you need about 130 SCFM. MATTEI can offer you our traditional 30 HP ERC Series model (129 scfm) or, we can offer you our 25 HP AC Series rated at 130 SCFM. Each produces about the same volume of air, but that 5 HP difference saves you money the moment you turn it on — that's why upgrading to an AC Series just makes sense. AC Series helps you get more air for less energy. Lower your electric bill month-after-month, year-after-year.

Get more for less. Get a MATTEI.

Figure 1:
Potential energy cost savings from lower AC Series nominal motor HP ratings for comparable SCFM production. Assumes 8,760 hours/year, 10 cents/kWh.

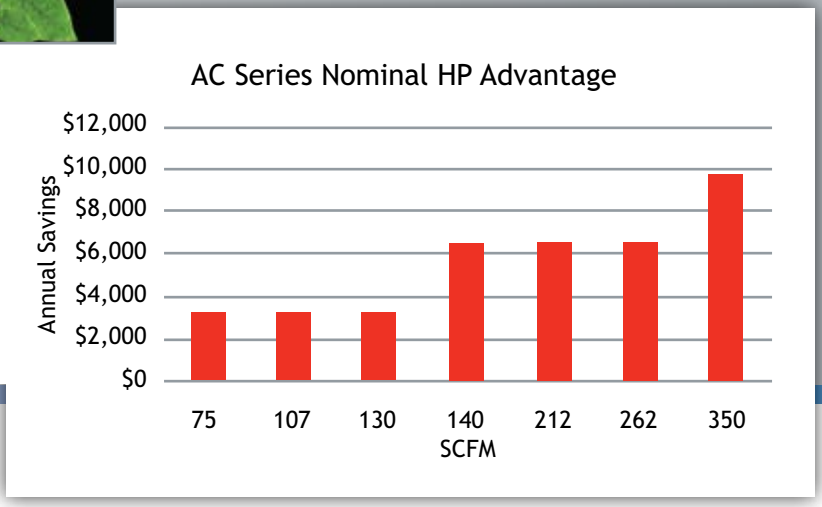

Mattei compressors are designed to give constant top performance 24 hours a day, every day of the year. Extremely rugged and reliable, AC Series is designed for outstanding performance and efficiency.

Rely on AC Series for:

- Superior SCFM/HP performance
- Unaltered performance through time
- System friendly demand adaptable controls
  - Automatic Load/No Load
  - Load matching Modulation
  - Automatic with Modulation
- No wear of the compressor's moving mechanical parts
- Compact design
- Low oil volume and consumption
- Direct coupled compressor and motor
- Slow 1,800 RPM rotational speed
- Low maintenance
- Quiet operation

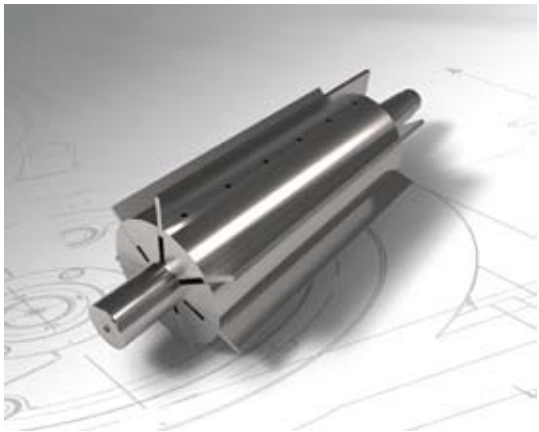

WHY MATTEI® IS YOUR BEST CHOICE

AC SERIES AIR
Sophisticated. S

SIMPLY SUPERIOR

All MATTEI air compressors retain the same heritage of innovation, durability and reliability. AC Series are highly-efficient cabinet style air compressors that raise the bar in delivering superior value, unrivaled high-capacity performance and energy efficient operation.

AC Series must be compared on an SCFM basis — not based on HP. Why? Because, AC Series uses our most advanced airends to produce more SCFM per HP than typical rotary air compressors, so to do a fair comparison, you usually need to select the next smaller size. In fact, it is not uncommon to get the same level of SCFM output from the next smaller AC Series model.

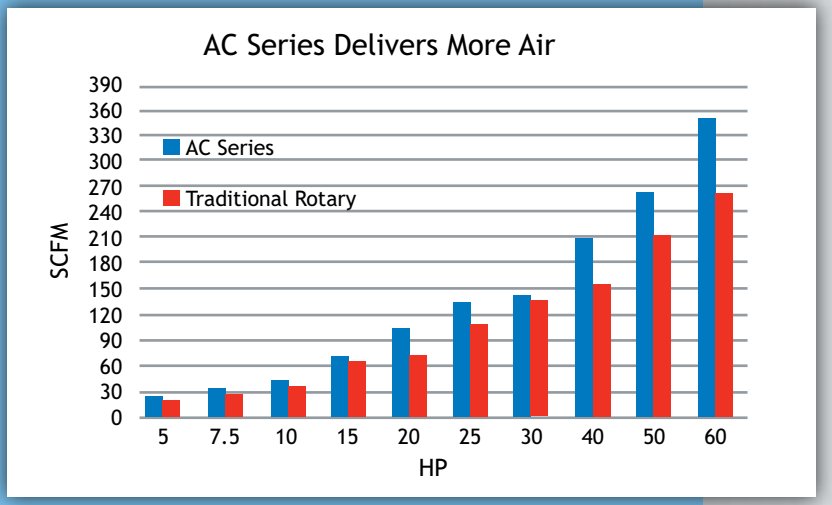

Figure 2:
AC Series uses less nominal HP to deliver more SCFM.

HOW IT WORKS

Ambient air is drawn through a filter into the compression chamber consisting of a stator in which an eccentrically arranged rotor revolves at 1,800 rpm. An air intake valve automatically adjusts incoming air volume to match your control scheme. The rotor has longitudinal slots in which the vanes slide. Zero-wear vanes ride on a thin film of oil and are held against the stator by centrifugal force. The air is compressed through the contraction in volume of each chamber formed by the vanes, the rotor and the stator wall. Sealing, cooling and lubrication are ensured by the oil injected into the chamber.

1. *Pleated oversized Air Filter*
2. *Automatic intake Valve*
3. *Oil chamber*
4. *Compression chamber*
5. *Oil filter*
6. *Rotor*
7. *Blades*
8. *Coalescing separator*
9. *Air/oil cooler (radiator)*
10. *Condensate Separator & Drain (optional)*

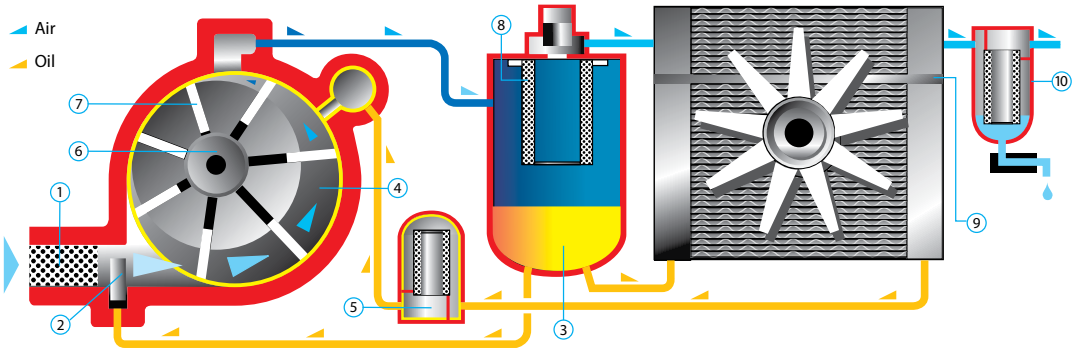

COMPRESSORS
Silent. Efficient.

Get your money's worth.
GET A MATTEI.

HIGH QUALITY COMPRESSED AIR

Mattei compressors have an exclusive and efficient oil separating system which occurs in three stages: in the initial stage most of the oil is separated in a labyrinth in the compression chamber; the flow then enters the separator chamber where a mechanical separation takes place through speed reduction and flow deviation; the last phase occurs through the separator element. Only 0.02% of the initial oil arrives to this final stage; this is the reason for which the average life of Mattei's separator element is 10,000 operating hours. Most importantly, this separating system guarantees a maximum oil residue of 3 ppm in Mattei's compressed air.

YOU GET WHAT YOU PAY FOR

It is not uncommon to get over 100,000 hours of service life out of our airends without a rebuild. MATTEI vane technology features zero-wear Meehanite™ cast iron blades that ride on a thin film of lubricant thus, preventing wear to the blade or stator wall. The heart of the unit is the rotor which is supported by two (2) white metal Babbitt bushings and spins at only 1,800 rpm.

AC Series is also friendly to your wallet and the environment. Each vane unit holds very little lubricant (typically less than half that of a screw type compressor) which saves you a small fortune on oil changes and disposal costs. The oil filter is cleanable — yes, cleanable. The highly efficient mechanical air/oil separation chamber delivers high quality air to the air/oil separator filter thus, it sees very little lubricant and provides up to 10,000 hours of service, and low 1-3 ppm oil carryover.

Get your money's worth. Get a MATTEI.

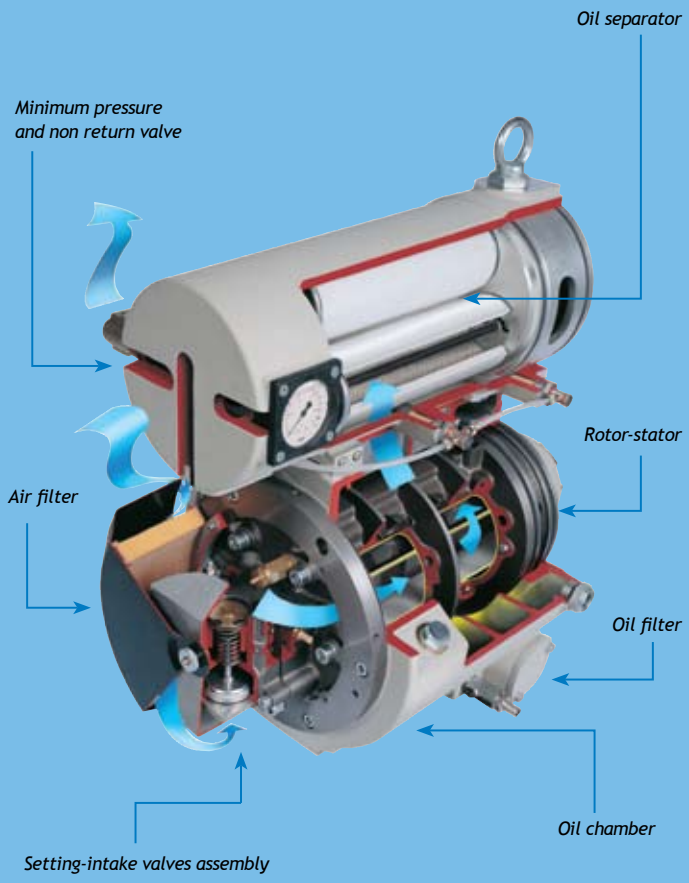

Figure 3:
Airend Construction

CAPACITY CONTROLS ADAPT TO YOUR DEMANDS

The layout and design of every air system is different. Some systems have very little air storage; some have an enormous volume of air storage. Some have small diameter air piping that is high in pressure drop; some have oversized piping to minimize pressure drop.

Thus, it is wise to select compressors with control schemes that can adapt to the demands and dynamics of your system. Mattei provides control flexibility to adapt to your system demands to help you save energy and prevent short-cycling and ambient oil misting problems created by inflexible control schemes and underutilized compressors.

Figure 4:
MATTEI Air Intake Control Valve Illustration

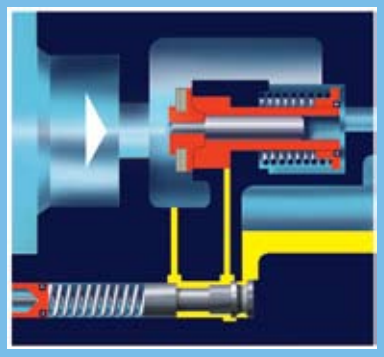

MODULATION OPERATING MODE AT CONSTANT PRESSURE

Thanks to a modulating proportional intake valve that supplies air at constant pressure, these compressors can even work without a receiver. With this regulation air delivery is automatically adapted to the system demand. Ideal for applications with little storage or continuous high air demands.

ENERGY SAVING AUTOMATIC LOAD / OFF LOAD

Load/Off Load mode maintains line pressure within a minimum/maximum pressure range, and the compressor may stop and restart according to air demand. “Load” initiates when the minimum pressure setting is reached and the compressor deliver 100% of its capacity. “Off Load” initiates when the maximum pressure setting is reached, and the intake valve closed and sump is decompressed to allow for a significant reduction of the absorbed power consumption. Should the pressure continue to remain high, the compressor will stop. Ideal for applications with adequate storage or large variations in air demand.

COMBINED ON/OFF LOAD AND MODULATION REGULATION

This regulation allows Mattei compressors to modulate within a set pressure range (for example, ± 4-5 psi). Should the air demand decrease, this regulation also allows the compressor to run off load and stop, with evident energy savings. Ideal for applications with little storage and large variations in demand

ADVANCED SYSTEM CONTROLLERS

MicroC: Standard on Models AC 4 & AC 5

Programmable microprocessor based control and protection system which controls compressor operation and adapts to the specific requirements of the air distribution system. MicroC offers a variety of programming levels and special options for controlling and analyzing system operation and faults. Advanced programming and analysis levels are protected by digital codes to avoid unintentional tampering. MicroC has an integrated memory module that stores the operational settings and data in case of power outage.

Figure 5:
MATTEI MicroC Controller

Figure 6:
MATTEI MAESTRO XS Controller

MAESTRO XS: Standard on Models AC 7 and larger

State-of-the-art computerized controller, Maestro XS automatically controls, monitors and programs the compressor's operation, and can be connected to a PC for remote control. In addition to providing all of the features found in the MicroC, Maestro XS can become master of a multi-compressor compressed air plant, thus saving on the installation of a dedicated Master controller, if connected to other compressed air packages equipped with Maestro XS controllers.

Figure 7: **AC SERIES CONTROLLER FEATURES**

			MicroC	MAESTRO XS
Electronic Controller Features	LED Display	Basic 3 character alphanumeric codes	X	–
		Full text 4 lines of 20 characters	–	X
	Operation Hour Counters	Power "On"	X	X
		Activation hours	X	X
		Run hours	X	X
		Loaded Hours	X	X
	Service Counters	Oil Change	X	X
		Separator Filter	X	X
		Automatic Restart after power failure	X	X
		Time/Day Compressor Start/Stop Settings	X	X
		Recordable Fault Events	5	20
		Alarm Coded Text with Icon based Signals	X	X
	Compressor Networking	Master & Slave Multi-Compressor Capable	–	X
		Cascade, Sequence, Equalization of Run Hours	–	X
	Optional	Expansion Module for Managing Integrated Refrigerated Air Dryer	X	X

AC SERIES PRODUCT FEATURES

		AC4-5	AC7-45
Electronic Controller	MicroC	X	–
	MAESTRO XS	–	X
	TEFC Motor	X	X
	Wye-Delta Motor Starter	X	X
System Adaptable Air Inlet Controls	Constant Pressure Modulation	X	X
	Automatic On Load/Off Load	X	X
	Combined On/Off Load and Modulation	X	X
	100,000 Hour Airend Design Life	X	X
	Direct-drive 1,800 rpm Airend	X	X
	10,000 Hour Air/Oil Separator Filter Design	X	X
	Cleanable Oil Filter	X	X
	Synthetic Rotor Oil 8000	X	X
Optional	High Efficiency Air Intake Filter Kit	X	X
	Condensate Drain & Moisture Separator Kit	X	X
	Soundproofing Intake Air Duct	X	X
	Integrated Refrigerated Air Dryer	X	X
	Integrated Oil/Water Separator	–	X
	Integrated Heat Recovery Kit	–	X

TECHNICAL FEATURES

Model[1]	Electric Motor Power		Free Air Delivery[2] LX HX HHX			Voltage	Sound Pressure Level[3]	Air Outlet	Dimensions (inches)	Wt. (net)
	HP	kW	115 PSIG	150 PSIG	175 PSIG	AC	db(A)	Rp	L x W x H	lbs.
AC 4	5	4	26	22	15	208V, 230V, 460V, 575V /3 Ph/60 Hz	67	1/2"	40 x 24 x 33	298
AC 5	7.5	5.5	36	29	24		67	1/2"	40 x 24 x 33	309
AC 7	10	7.5	49	43	42		67	3/4"	49 x 24 x 41	462
AC 11	15	11	75	66	58		67	3/4"	49 x 27 x 41	506
AC 15	20	15	107	94	85		69	1"	47 x 31 x 59	981
AC 18	25	18	130	112	91		69	1"	47 x 31 x 59	981
AC 22	30	22	140	127	110		69	1"	47 x 31 x 59	992
AC 30	40	30	212	202	173		68	2"	47 x 31 x 59	1,764
AC 37	50	37	262	244	207		68	2"	72 x 38 x 66	1,830
AC 45	60	45	350	307	254		68	2"	72 x 38 x 66	2,073

Working pressure: 109 psig for 115 psig unit; 143 psig for 150 psig unit; 167 psig for 175 unit.

[1] Models AC 7 and larger carry ULc approval [2] F.A.D. in accordance with ISO 1217:1996, annex "C" [3] According to PN8NTC2.3; value measured at 1 m distance ±3

Mattei Compressors, Inc. reserves the right to change or replace the data contained in this publication, without notice.

mattei®
BEST SOLUTIONS IN COMPRESSED AIR

COMPANY
WITH QUALITY MANAGEMENT
SYSTEM CERTIFIED BY DNV
= ISO 9001 : 2001 =

www.matteicomp.com

U.S.A.
MATTEI COMPRESSORS Inc
9635 Liberty Road, Suite E
Randallstown, MD 21133
Phone +1 410.521.7020
Fax +1 410.521.7024
e-mail: info@matteicomp.com

ITALY
ING. ENEA MATTEI SpA
Strada Padana Superiore, 307
20090 VIMODRONE (MI)
Tel + 39 02253051 - Fax +39 0225305243
e-mail: info@mattei.it

FRANCE
MATTEI COMPRESSEURS Sarl
Tel +33 1 60081212 - Fax +33 1 60085252
e-mail: info@mattei.fr

GERMANY
MATTEI KOMPRESSOREN DEUTSCHLAND GmbH
Tel +49 7151 5002560 - Fax +49 7151 5002565
e-mail: info@mattei-kompressoren.de

GREAT BRITIAN
MATTEI COMPRESSORS Ltd
Tel +44 (0)1789 450577 - Fax +44 (0)1789 450698
e-mail: info@mattei.co.uk

RUSSIAN FEDERATION
ING. ENEA MATTEI SpA
Tel +7-495-739 41 90 - Fax +7-495-739 41 90
e-mail: mattei@inbox.ru

SINGAPORE
ING. ENEA MATTEI SpA
Tel +65 6741 8187 - Fax +65 6741 6826
e-mail: mattei@singnet.com.sg

Member CAGI Compressed Air & Gas Institute

mattei® BEST SOLUTIONS IN COMPRESSED AIR	***QUOTATION*** ***ROTARY AIR COMPRESSOR*** *AC 15 LX*		Power (hp) **20**
Ing. Enea Mattei S.p.A.	Product code *GEABFSX50A*	Page *1 of 10*	Rev *01/2009/GB*

Mattei rotary vane compressors are the result of 90 years of investments in research and development to improve performance and lessen the impact on the environment. Designed for industrial continuous operation, they provide consistent performance, reliability, functionality and ease of maintenance.

The “AC 15 LX” single stage rotary vane compressor is a complete stand-alone, air cooled stationary air center powered by an electric motor. The compressor is perfectly designed down to the smallest component, assembled by skilled technicians using top quality components and has critical components machined using the most advanced technology. This attention to detail places Mattei compressors at the highest position in the market.
Blades are designed for over 100,000 hours of operation.

mattei® BEST SOLUTIONS IN COMPRESSED AIR	***QUOTATION*** ***ROTARY AIR COMPRESSOR*** *AC 15 LX*		Power (hp) **20**
Ing. Enea Mattei S.p.A.	Product code *GEABFSX50A*	Page *2 of 10*	Rev *01/2009/GB*

REFERENCE CONDITIONS according to ISO 1217 :1996 annex "E"

- Intake pressure	psia	14.5
- Air inlet temperature	°F	+ 68
- Relative humidity	%	0

PERFORMANCE

- Air end		single stage rotary vane compressor
- Nominal rotor speed	r.p.m.	1800
- Free air delivery at the working pressure (according to ISO 1217:1996 annex “C”)	cfm	107
- Maximum working pressure	psig	115
- Working pressure	psig	109
- Oil cooling		by air
- Compressed air cooling		by air
- Maximum oil carry-over	ppm	≤ 3
- Terminal power at working pressure including the fan power	kW	20.1
- Total off-load power	hp	6.3
- Compressed air outlet high temperature	K	≤ 10
- Min/max acceptable ambient temperatures	°F	34 / 104
- Sound pressure level at 1 metre (according to PNEUROP-PN8NTC 2.3)	dB(A)	69

ELECTRIC MOTOR

prime electric motor asynchronous – three phase - 4 poles – short circuit winding

- Insulation	class	F
- Efficiency complying with		EFF 2
- Protection	IP	55
- Rated power	hp	20
- Voltage as per IEC 38	Volt	460
- Frequency	Hz	60

MAIN SIZES

- Length	in.	59.5
- Width	in.	31.5
- Height	in.	47.5
- Weight	lbs	992
- Air outlet size	Rp	1”
- Condensate drain outlet size (optional)	∅ mm	10
- Water inlet-outlet size (optional)	Rp	½ “

OPERATING PRINCIPLE

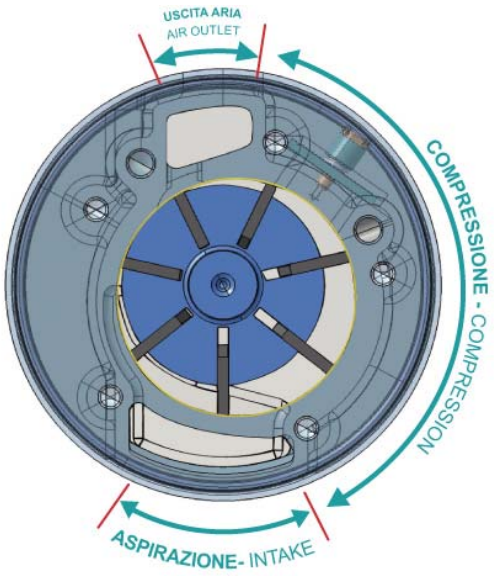

The vane compressor is a volumetric rotary compressor. It consists of a cylinder (stator) in which a rotor is mounted eccentrically between two end covers. The rotor has longitudinal slots in which the vanes slide. As the rotor turns the vanes are pushed against the stator by centrifugal force. Sealing of the moving parts, cooling and lubrication is accomplished by using a pressure differential lubrication system. There is no need for an oil pump as the oil is automatically circulated whenever the compressor is operating. An oil film on the inner surface of the stator wall prevents direct contact of the moving parts and avoids any wear. In the vane compressor there are no axial thrusts pushing the rotor against the end covers. Therefore there is no need for thrust bearings. The rotor is supported at each end by bush that has a practically unlimited lifetime. The decrease in volume of the pockets formed by the stator, rotor and vanes produces a continuous, pulse-free, compression.

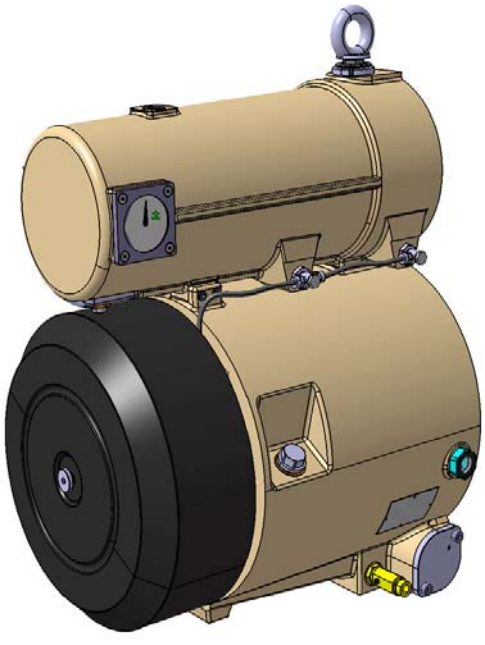

OIL SEPARATION

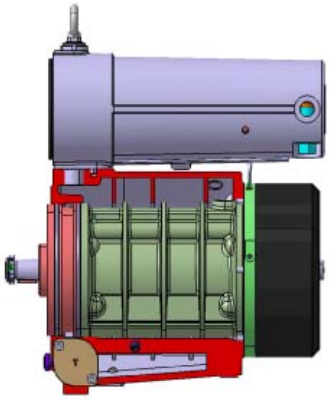

The air/oil separation occurs in different stages and ensures exceptionally low oil consumption. The main mechanical separation occurs in the oil chamber through a labyrinth path. Then it continues at the separator inlet, before the filter. This mechanical separation works via the continuous changes of direction of the air flow in the labyrinth path. The last separation occurs through the coalescing filter, removing the remaining oil vapor from the air. This particular oil separation system results in very reduced oil consumption. The large size of the filter and quality of materials ensure a long life of the filter itself.

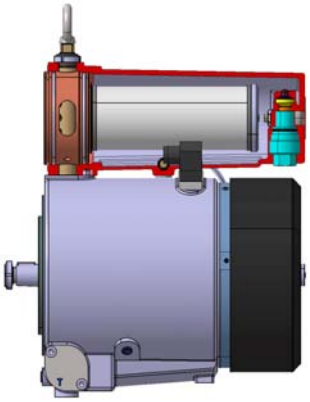

COOLING

The compressor is complete with two aluminum coolers, one for the oil and one for the compressed air. Cooling air is produced by a fan driven off the main electric motor.

A condensate separator and electronic drain with timer are available (see options). Enclosure openings and electrical connection points are supplied for powering the drain valve directly from the compressor control panel.

.

HEAT RECOVERY

As described in the previous paragraph, an air flow produced by the fan cools the oil and the compressed air. The heat removed creates a flow of hot air which can be used to heat work spaces during the winter season.

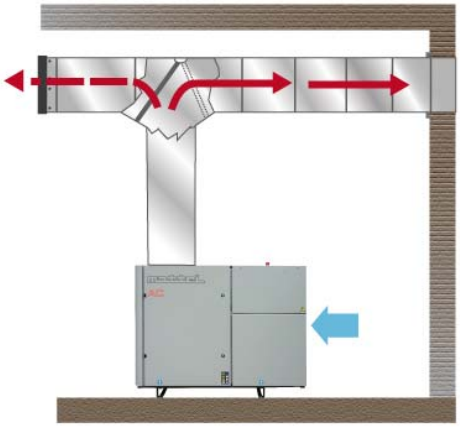

On average 1 kW installed power allows to heat about 30 cubic meters space by 1 K.

The compressor can be supplied with an “energy recovery” system upon request (see Optional equipment).

In the energy recovery system the oil passes through an oil-water heat exchanger controlled by a thermostatic valve located before the oil cooler. The heated water can then be used for industrial or sanitary purposes.

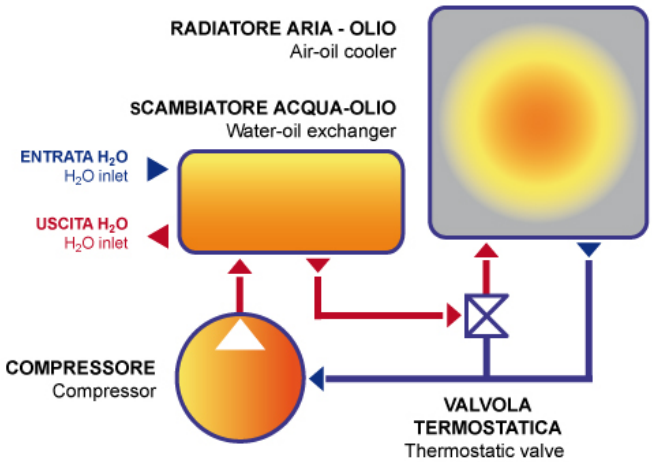

COUPLING

The compressor and the electric motor are connected by means of flexible coupling. This ensures a perfect alignment, no power absorption, silent operation and no need for maintenance.

CAPACITY REGULATION

To achieve maximum energy saving the compressor can be operated in three modes which can be selected through the control panel.

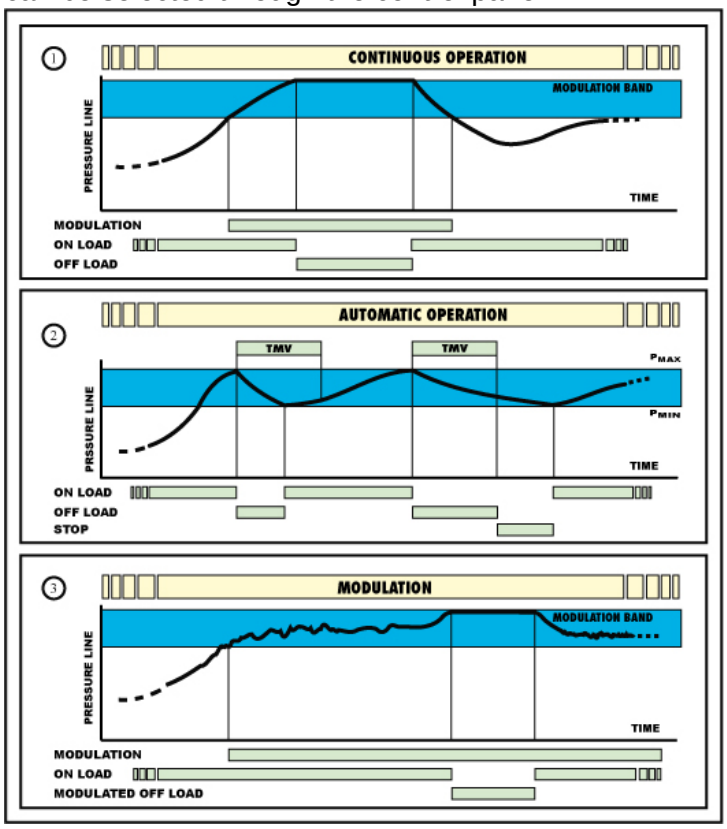

In “Continuous” operation the compressor delivers air within a preset maximum/minimum pressure range. When reaching the maximum pressure the intake valve closes. The compressor runs "off-load" and is decompressed to 21 psig to reduce the energy absorption. When the pressure decreases and reaches the minimum value, the compressor goes back to "load" and starts delivering air instantly.

In “Automatic” operation a further function is added to the previous one. This allows the compressor to stop automatically in case there is no air demand over a specific period of time.

In the ”Modulation” mode the air delivery is regulated and adjusted to the system demand by the hydraulically controlled intake system. This is a typical feature of Mattei compressors. The system includes an intake valve and a servovalve that work in conjunction to meet system demand. The compressor will have a maximum pressure that is set by the servovalve regulating system. When this is reached the intake valve closes and no more air is delivered. For pressures within 4 psi of the maximum pressure the compressor delivers a continuous and variable amount of air based on the system demand. At lower pressures the compressor delivers the maximum flow.

ELECTRIC STARTER

The metallic electric control box is IP-54 rated and includes:

- Star/delta starter
- Motor thermal overload protection relay
- 110 V transformer for auxiliary circuits
- 24 V transformer for MAESTRO^{XS} controller
- Primary and secondary circuit fuses
- Terminal board for remote start, stop and signal controls
- Emergency stop button
- Safety devices:

compressor high temperature - motor overload - low oil level - inadequate ventilation - high air and oil temperature - failure of pressure sensors - door safety switch

MICROPROCESSOR CONTROL AND PROTECTION SYSTEM " MAESTRO^{XS} "

Maestro^{XS} is a programmable system which controls the compressor operation and adapts this to the specific requirements of the air distribution system.
It has different programming levels and special options of controlling and analysing the operation and faults.
Advanced programming and analysis levels are protected by digital codes to avoid unintentional tampering.
Maestro^{XS} has an integrated memory module that stores the operational settings and data in case of an electricity cut out.

Hardware:

- Ergonomic control panel with keys for quick access to the main menu.
- Access keys to menu, start, stop and reset with “Led” indication.
- “LCD” semi-graphic display, lighted text – 8 lines for 22 letters.
- Supply 24 V AC 50/60Hz.
- Digital inputs 24 V DC.
- Digital outputs with volt free contacts up to 230V AC and up to 24V DC.
- Analog output 0-10 V DC.
- Pressure analog signals (4-20mA).
- Temperature analog signals (NTC).
- Interfaces:
  - RS485 to communicate with other “MAESTRO” devices
  - RS485 (optional) to communicate with PC supervisor and the network.

Software:

- Simple to use menu structure.
- Easily updated.
- Readouts include:
  - Analog data:
    - line pressure, separator pressure, oil chamber pressure, oil temperature, outlet air temperature.
  - General data:
    - alarms, operative messages, machine status, maximum and minimum pressure, last start and last stop.
  - Hour counter:
    - display of on/off times, operation, load, maintenance times.
  - Events storing:
    - alarm and fault recording with indication of which alarm was activated, hour of the alarm activation and machine status.

The device allows the following:

- Multilingual user interface.
- Start/stop weekly and hourly programming.
- Immediate reading on the display of compressor operational data:
  - Compressor on/off, operation and load hours
  - Line pressure and oil chamber pressure
  - Air outlet temperature and compressor oil temperature
- Programming of basic parameters (accessible by the user) for optimal compressor operation:
  - Compressor control mode: local, network (master/slave)
  - Operating mode (continuous, automatic, modulation)
  - Pressure checking (locally with pressure probe and externally by pressure switch)
  - Setting of maximum and minimum operating pressures
  - Setting of off load operating time
  - Setting of separator element change and oil change times.
- Password protected Advanced programming to insure only qualified technicians are able to change the parameters.
- Status check of controller/machine inputs and outputs to detect possible failures in the compressor electrical system and/ or in the safety and protection devices.
- Storing of up to 20 fault events.
- Storing of up to 20 last program modifications.
- Remote control for machine starting and stopping.
- Remote control, through volt free contacts, of the following machine states:
  - Compressor allowed to operate (Optional)
  - Operating compressor (Optional)
  - Compressor on load (Optional)
  - Tripped compressor. (Standard)

Note

MAESTRO^{XS} can be connected to a Mattei SuperVisor device (Optional) to allow:

- The remote monitoring through web interface.
- To signal alarms through e-mail, fax or mobile phone.

STANDARD EQUIPMENT

The compressor is supplied complete and includes:
intake air filter - air pressure gauge - minimum pressure/non return valve - safety relief valve - thermostatic valve - oil filter - oil level indicator - initial charge of Mattei Rotoroil 8000 F2 synthetic lubricant.

SOUNDPROOFING CANOPY

All components described are in a metal soundproofing enclosure. The enclosure is epoxy powder painted, lined internally with fire resistant sound abating material.

The enclosure has a pre-filter to prevent intake of large particles that could clog the radiators and the air filter.

Detachable hinged doors and panels allow easy access for the routine maintenance.

The base has openings to allow easy handling.

INSTALLATION

The compressor is supplied ready-to-use and needs no foundations.
Once placed in position, only the electrical connections and air connections have to be arranged. The electric supply should be: 3 phases + ground.
The disconnect switch and the protecting fuses are not included in the supply.
The compressor must be placed in a well ventilated area away from any heat source and the air should not contain flammable gases or solvents that could be drawn in by the compressor or the motor. In case of doubts, please contact our Technical department. If the compressor is installed in the open, a roof or other suitable covering must protect the equipment from atmospheric agents.

OPTIONAL EQUIPMENT

The compressor can be customized by purchasing specific accessories:

- **Condensate drain and separator kit** code IF54A34421 is installed externally to the soundproofing enclosure. It provides separation and draining of the condensate from the after cooler.
- **High efficiency intake filter kit** code IF54A43341 is installed in place of the standard filter. It can remove particles equal to or larger than 3 micron with a filtering efficiency 99%.
- **Heat recovery kit** code IF52A43339 to heat water for process and sanitary purposes. The kit is composed of a water/oil plate exchanger, a thermostatic valve and connecting pipes. It can be supplied already installed on compressor or as a separate component for remote operation.
- **Oil-water separator kit** code IF54A43340 installed inside the soundproofing enclosure to ensure separation of oil from the condensate water It requires the installation of the condensate drain and separator kit code IF54A34421.

PACKING
Standard packing includes: wooden shipping pallet, a polythene cover and a cardboard box.

DOCUMENTATION
The compressor is supplied complete with:
no. 1 Operating and maintenance instructions complying with Machines Directive 98/37 CE
no. 1 EC declaration of conformity
no. 1 Commissioning report
no. 1 Certificate of Conformity
no. 1 Maintenance schedule
no. 1 Wiring diagram (inside the Electric Panel)

CERTIFICATIONS
Ing. Enea Mattei S.p.A. has been certified by DNV with the Quality System Certificate, conforming to UNI EN ISO 9001 standard.

COMPANY
WITH QUALITY MANAGEMENT
SYSTEM CERTIFIED BY DNV
=ISO 9001 : 2000=

mattei® BEST SOLUTIONS IN COMPRESSED AIR	DESIGN DATA	rev	B
	1000 Series	data	Sep-09
		Compiled by	MRB/WK
		Approved by	

SERIES					AC 15 / AC 15 Plus		
VERSION					LX	HX	
Airend Nominal Pressure psi (g)					110	140	
PERFORMANCE							
				psi (g)			
Free air delivery (1)	CFM (F.A.D.)			100	106.5	95.7	
Terminal power (2)	[kW]				20.1	19.0	
	CFM (F.A.D.)			105	106.2	20.2	
	[kW]				20.6	19.5	
	CFM (F.A.D.)			110	106.0	95.2	
	[kW]				21.1	19.9	
	CFM (F.A.D.)			115	-	95.0	
	[kW]				-	20.4	
	CFM (F.A.D.)			120	-	94.8	
	[kW]				-	20.8	
	CFM (F.A.D.)			125	-	94.0	
	[kW]				-	21.2	
	CFM (F.A.D.)			130	-	94.4	
	[kW]				-	21.6	
	CFM (F.A.D.)			135	-	94.2	
	[kW]				-	22.0	
	CFM (F.A.D.)			140	-	94.0	
	[kW]				-	22.4	
	CFM (F.A.D.)			145	-	-	
	[kW]				-	-	
Off load power				[kW]	4.7	3.9	
Sound pressure level **(3) (6)**				[dB(A)]	69		
REFERENCE CONDITIONS							
Intake pressure				[psi(a)]	14.5		
Intake temperature				[°F]	68		
Relative humidity				%	0		
Nominal motor speed				rpm	1,800		
ELECTRICAL CHARACTERISTICS							
Motor rated power				[hp] / [kW]	20 / 15		
Voltage **(4)** *- Frequency*				[V/Hz]	230/60 or 460/60		
Enclosure-Insulation class					IP55-F		
Electric starting					Star delta		
Fan rated power **(6)**				[hp]	--		
Fan rated efficiency					n/a		
Auxiliary circuit voltage				[V]	110		
Supply min wire section				[AWG]	7 (x 33 ft)		
TYPE OF INTAKE CONTROL REGULATION							
Modulation					intake proportional valve		
On load, off load and stop					pressure control		
On load, off load					pressure control		
INTEGRATED DRYER (Only Plus)							
Absorbed power				[hp]	1.9		
Refrigerant					R 404 A		
Nominal dew point				[°F]	38		
TECHNICAL DATA							
Min-max allowed ambient temperature				[°F]	+34 / +104		
Outlet air temperature **(5)**					-		
AC version	AC Plus Version			[°F]	≤ 86 / 68		
Min-max oil temperature				[°F]	176÷230		
Cooling air flow rate **(6)**				[cfm]	163		
Fan residual head **(6)**				[Pa]	20		
Total recoverable heat				%	~ 95		
Oil system capacity				[gallon]	2.6		
Oil carry over				[ppm]	≤ 3		
Air outlet size					Rp 1"		
Condensate drain outlet size							
PLUS VERSION					2 X Rp ¼"		
With condensate sep. KIT **(7)**					ϕ 10		
Water inlet-outlet size					-		
With heat recovery KIT **(7)**					2 x Rp ¾"		
LxWxH		AC	AC Plus	[inch]	60 x 32 x 48		
Weight with oil		AC	AC Plus	[lb]	982	1,070	

(1)= According to ISO 1217: 1996 (annex "C")
(2)= Without dryer power (only Plus version)
(3)=According to PN8NTC2.3 measured at 1m distance
(4)= According to IEC 38
(5)= According to reference conditions indicated
(6)= Frequency 60 Hz
(7)= Optional

A TERMINI DI LEGGE LA "ING. ENEA MATTEI S.p.A." SI RISERVA LA PROPRIETA' DEL PRESENTE DISEGNO E NE VIETA L'UTILIZZAZIONE E LA RIPRODUZIONE O LA COMUNICAZIONE A TERZI SENZA IL PROPRIO BENESTARE.
THIS DRAWING CONTAINS PROPRIETARY DATA BELONGING TO "ING. ENEA MATTEI S.p.A." ANY RIPRODUCTION, UTILIZATION, EXIBIT OR LENDING IS NOT ALLOWED, WITHOUT PRIOR WRITTEN CONSENT.

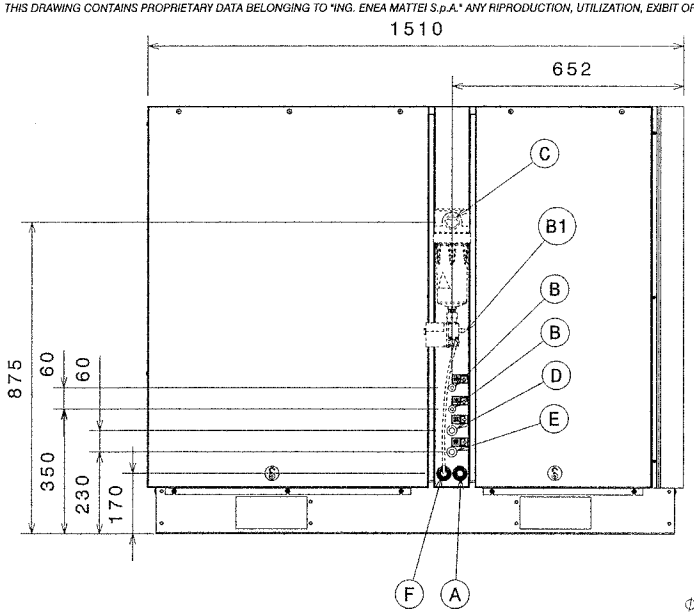

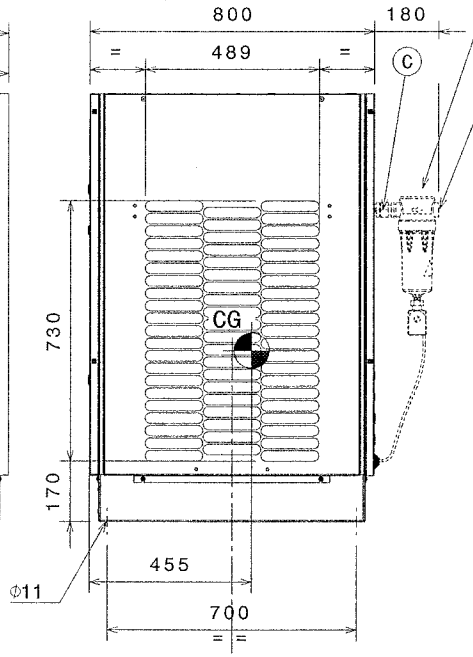

SEPARATORE DI CONDENSA (OPZ.)
CONDENSATE SEPARATOR (OPT.)

ARIA DI RAFFREDDAMENTO
COOLING AIR

OUT

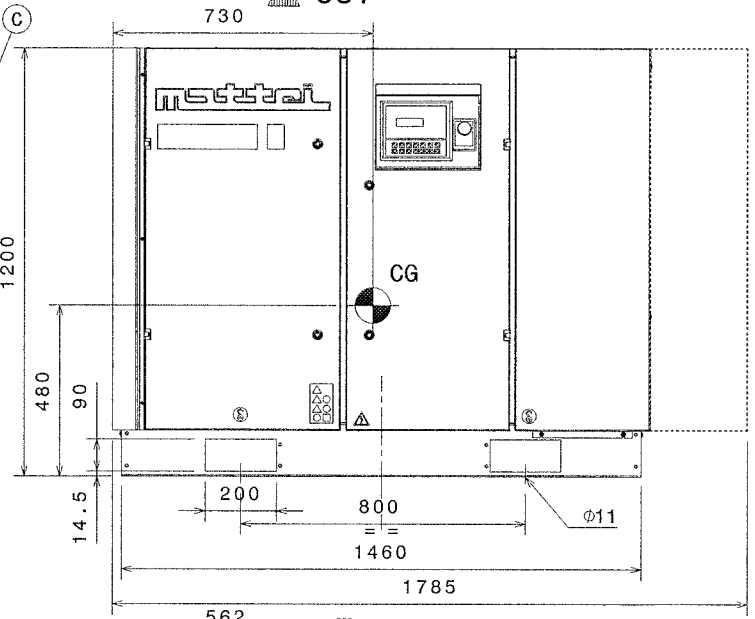

PREFILTRO
PREFILTER

IN

SERVIZIO
FOR SERVICE

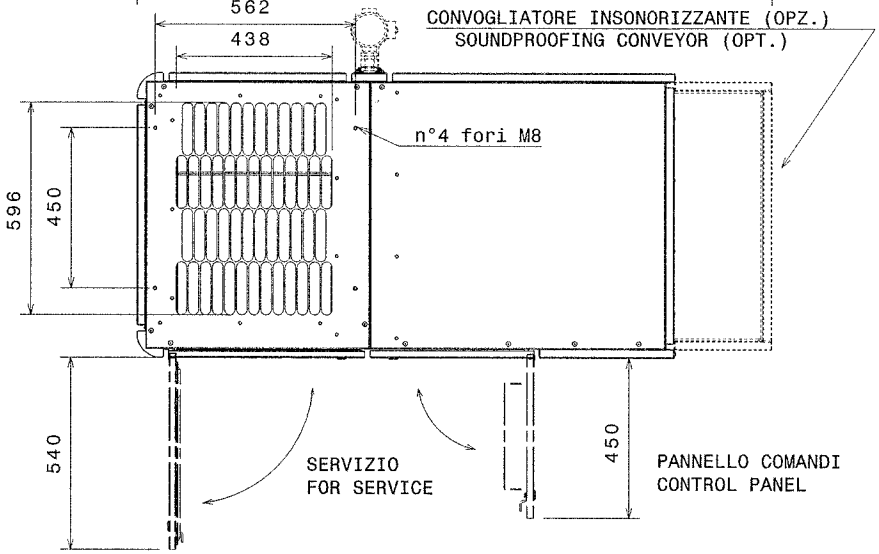

CONVOGLIATORE INSONORIZZANTE (OPZ.)
SOUNDPROOFING CONVEYOR (OPT.)

1) VERSIONE "PLUS" 2 x Rp 1/4
"PLUS" VERSION

2) CON SEPARATORE DI CONDENSA Φ10
WITH CONDENSATE SEPARATOR

3) CON KIT RECUPERO CALORE (OPZIONALE) 2 x Rp 1/2
WITH HEAT RECOVERY KIT (OPTIONAL)

ITEM	CONNECTION	SIZE
A	INGRESSO LINEA EL.SUPPLY	Φ31 MAX
B 1)	SCARICO CONDENSA CONDENSATE DRAIN	---
B1 2)	SCARICO CONDENSA CONDENSATE DRAIN	Φ10
C	USCITA ARIA AIR OUTLET	Rp 1
D 3)	ENTRATA ACQUA WATER INLET	---
E 3)	USCITA ACQUA WATER OUTLET	---
F	FORO SUPPLEMENTARE SUPPLEMENTARY HOLE	Φ31 MAX
CG	CENTRO DI GRAVITA' CENTER OF GRAVITY	

		Massa Kg Mass (con olio) (with oil)
AC 15 H-L-HH		445
= =	PLUS	485
AC 18 H-L-HH		445
= =	PLUS	485
AC 22 H-L-HH		450
= =	PLUS	490

SUPERFICIE DI CARICO LOADING AREA m2	~0,211
CARICO SULLE FONDAZIONI FLOOR LOAD max N/cm2	~2,1

DIMENSIONI PRINCIPALI-GENERAL ARRANGEMENT

DATA *date*	10.2005
DISEGN. *drawn*	TB
APPROV. *approved*	G.F.

mattei
BEST SOLUTION IN COMPRESSED AIR
ING. ENEA MATTEI S.p.A.

TITOLO *title*: AC 15-18-22 H-L-HH-plus

REV. B

SCALA *scale*: /

NO. DISEGNO *dwg.no.*: 34428

FOGLIO *sheet*: 1/1

MATTEI A3 1

AIR COMPRESSORS

Serie AC 1000

800

801a

INSTRUCTION, USE, AND MAINTENANCE MANUAL

TIEG4G-209

Translation of the original instructions in Italian

ING. ENEA MATTEI SpA
Strada Padana Superiore 307 - 20090 VIMODRONE (MI)
Tel +39 - 02253051 (16 linee) - Fax +39 - 0225305243
E-Mail: info@mattei.it - www.matteiaircompressors.com

801a

Versions

- **AC 15** (Plus)
- **AC 18** (Plus)
- **AC 22** (Plus)
- **AC 30s** (Plus)

Voltages/Frequencies

- V 230/50 - 400/50 Hz
- V 230/60 - 460/60 Hz

The present manual, written in English, is the official translation of the manual in **Italian**, chosen as reference language by Ing. ENEA MATTEI SpA.
The paper copy will be available for over 10 years after end of production of the machine to which it refers.

The content of this document cannot be used, reproduced or disclosed to third parties without the explicit written consent of **Ing. ENEA MATTEI S.p.A.**

Ing. ENEA MATTEI S.p.A. reserves the right to modify the characteristics of the machine subject of this document without prior notice.

Copyright 2008 by **Ing. ENEA MATTEI S.p.A.**

This Instruction Manual meets all the requirements of Directive 2006/42/EC.
It is to be considered valid for both the machines with the CE Marking and those without it.

Important Note
This manual should always be used together with the "MAESTRO ^{XS} User's Manual", code TECA2G-007

General Information
- Symbols in the manual Page 1.01
- Purpose of Document Page 1.02
- Required Qualifications for Operators Page 1.03
- Identification data of the Manufacturer and the Machine and the location of the nameplate “CE MARKING” Page 1.04
- General Delivery Notes - Final inspection - General Safety Warnings Page 1.05
- Settings at the Customer’s expense Page 1.09
- Instructions on how to request interventions - Instructions on how to order spare parts - The manufacturer’s address Page 1.10

General Information - SAFETY
- Dangers and residual risks and General Information Page 2.01
- Responsibilities Page 2.04
- Description of Pictograms Page 2.05

Description of Machine
- General Description of Machine Page 3.01
- Technical Data and Overall Dimensions Page 3.08

Transportation and handling Page 4.01

Installation
- Position of compressor Page 4.02
- Electrical connection Page 4.03
- Connection to the air network Page 4.04
- Dimensions of compressed air distribution piping Page 4.05
- Heat recovery Page 4.06

Safety Devices Page 5.01

Commands and control Page 5.02

Use of compressor
- Foreword Page 6.01
- Operation modes Page 6.02
- Basic Programming Menu Page 6.04
- Operational Failures Page 6.05
- Start - Stop Page 6.06

Maintenance Page 7.01
- Réguler Checksums Page 7.02
- Check of oil level - Cleaning and/or replacing the air suction filter - Cleaning the oil/air radiator Page 7.03
- Cleaning the pre-filters- Cleaning and/or replacing the oil return valves Page 7.04
- Replacing the oil filter Page 7.05
- Replacing the oil/air separator elements Page 7.06
- Oil change Page 7.08

Lubricants Page 8.01

Troubleshooting Page 9.01

The electrical motor Page 10.01

Storage - Decommissioning and dismantling Page 11.01

Condensate discharge in optional kit Page 12.01

Attachments:

Form to request Technical Service

Form to request spare parts

Parts to be replaced during maintenance

“Technical Data” Sheets

Symbols in the manual

In this manual some symbols are used that to attract the reader's attention and underline some particularly important aspects of the treatment.

The table below gives the list and describes the meaning of the different symbols used.

SYMBOL	MEANING and NOTES
098	**Danger** It indicates a danger with the risk for accident, even fatal, for the user. Pay careful attention to text block with this symbol.
!	**Warning** It warns against a possible deterioration of the machine or personal item of the user.
	Notice It shows either a notice or a note on the key functions or useful information.
	Further information This symbol introduces text blocks containing further information. This information has no direct relationship with the description of a function or with procedure development. They could be cross-references to other documents or other sections of this manual.
	Damage risk It indicates a high damage risk of a piece, for example, using a wrong tool or by mounting something with the incorrect procedure.
	Visual Check It recommends the reader to carry out a visual check. This symbol can also be found in the instructions for use. The user is required to read a measure value, to check some warning signs, etc.
	Acoustic Check It recommends the reader to carry out a sound acoustic check. This symbol can also be found in the instructions for use. The user is required to listen to an operational noise.

Purpose of Document

This manual contains the technical characteristics, the performance, the transportation and installation rules, the instructions for use, and the preventive and corrective maintenance operations of the machine manufactured by **Ing. ENEA MATTEI** S.p.A.

☞ **NOTE : This manual should be considered an integral part of the machine, and should stay with it during the entire life span of the equipment.**
Keep this manual and all of the attached documents in a place easily accessible to all staff in charge of the control or the maintenance of the machine.
Ing. ENEA MATTEI S.p.A. reserves the right to subject the supply of further copies to the repayment of charges and the acceptance of special provisions with respect to the legitimate defense of intellectual, patent, and executive identity and functional property of the product and/or its parts.
It is understood that forwarding all or part of this manual to third parties is not tolerated unless with the prior written consent of Ing. ENEA MATTEI S.p.A. for both the text, the illustrations and the diagrams attached.
Ing. ENEA MATTEI S.p.A. reserves the right to make changes without prior notice. Any change, supplement or suppression of elements, components, functions or cycles of the machine, not previously agreed upon with Ing. ENEA MATTEI S.p.A. releases the manufacturer from any responsibility whatsoever.

This manual is for the user and the service engineer of the machine, and it aims at supplying them with the basic technical data typical of the system, a technical description of the several operating groups that form it as well as the essential use procedures and the information necessary to perform preventive and corrective maintenance.

This manual is for staff with a sound knowledge of the processing technique, of mechanical and electrical diagrams, and is for both those in charge for the use of the machine and the service engineers.

This manual is an integral part of the machine and contains information that aims at granting all staff safe working conditions and guaranteeing perfect efficiency during the life span of the machine.

For a correct use of the machine, it is assumed that the working environment is adequate to current regulations concerning safety and hygiene.

Directives and Technical Standards Applied

The machine has been designed, made, and inspected in compliance with the “safety and health essential requirements” stated in attachment I to the **European Directive 2006/42/EC**.

The list below gives the reference Standards used by **Ing. ENEA MATTEI** S.p.A. to design, make, and to make the final inspection of the machine.

List of Directives and Technical Harmonized Standards

MACHINERY DIRECTIVE 2006/42/EC
ELECTROMAGNETIC COMPATIBILITY (EMC) DIRECTIVE 2004/108/EC
LOW VOLTAGE DIRECTIVE 2006/95/EC
EN 1012-1 Compressors and vacuum pumps – Safety Requirements - Compressors.

Required Qualifications for Operators

The operator in charge of the operation or the maintenance of the machine should have all the professional requirements specific to each foreseen operation.
The operator should be trained and aware of his responsibilities.
Below is the description of the professional profiles concerning the operators in charge of the machine

099

Entry Level Machine Operator (Qualification 1)
Qualified staff able to carry out simple tasks, i.e. to operate the machine with the use of controls on the push-button, and to carry out typical simple functions of adjustments, start or stop.

100

Second Level Machine Operator (Qualification 2)
Qualified staff able to carry out the task of qualification 1 and also to operate the machine with disconnected safety protections to perform specific adjustments, start or stop functions.

☞ *Important*
This qualification includes those responsibilities typically subdivided into two separate qualifications. For the operator in charge of our machines, a specialization course is held to train the operator to be able to perform all of the actions necessary to operate the machine even with some of the protections disconnected. However, this requires a certain competence by the operator and extreme care by the manager of the factory so that the said operator carries out only the established operations.

101

Mechanical Service Engineer
A qualified engineer able to operate the machine under normal conditions, to operate it with disconnected protections, to intervene on mechanical parts to carry out all adjustments, carry out maintenance and all of the necessary repairs.
This person is not empowered to carry out interventions on electrical systems with live voltage.

102

Electrical Service Engineer
A qualified engineer able to operate the machine under normal conditions, to operate it with disconnected protections. He/she is in charge of all electrical adjustments, maintenance and repair.
He/she is able to operate with live voltage inside cabins and shunt boxes.

103
A
104

The Manufacturer's Engineer
qualified engineer from the manufacturer to perform complex operations in special situations or according to that which has been agreed upon with the user.

Identification data of the Manufacturer and the Machine and the location of the nameplate "CE MARKING"

Ing. ENEA MATTEI S.p.A. is identified as the machine's manufacturer in conformity with the laws in force with the following acts:

- Declaration of conformity - CE Marking – Instruction Manual

305

A specific plate on the machine gives the following indelible information on the **CE MARKING**:

Model
Code
Serial number
Year of manufacture
Delivery
Pressure
Power
Number of runs
Dryer
Tank Capacity
Total Weight
Name and address of manufacturer

The "CE MARKING" plate has been applied at the base of the machine.

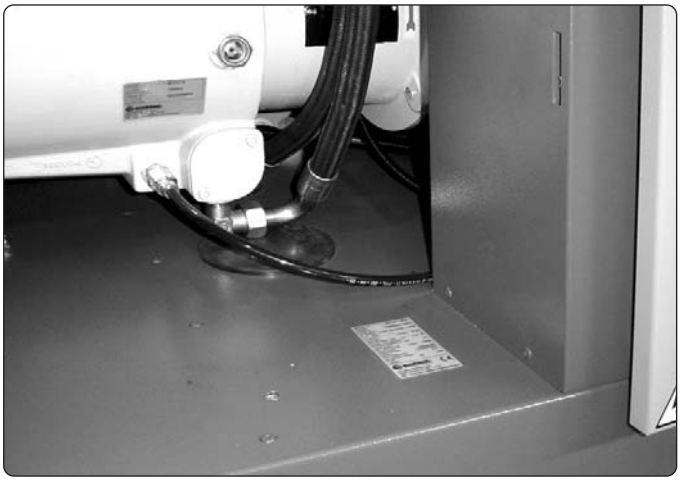

803

The relevant "**DECLARATION OF CONFORMITY**" has been attached.

It is forbidden to remove the "**CE MARKING**" plate and/or exchange it for other plates of machines of the same model supplied to the Customer or the operator.

Should the "**CE MARKING**" plate be accidentally damaged or removed from machine, the customer is required to inform the Company.

General notes on delivery

Upon receipt of the machine please check that:
The supply complies with the order speci cation.
There are no damages due to transportation or other reasons.
(In the event of damage or missing parts, please inform immediately and in detail the forwarding agent or **Ing. ENEA MATTEI S.p.A.**)

ALWAYS STATE THE MACHINE SERIAL NUMBER AS WELL AS THE PRINT NUMBER OF THIS CATALOGUE WHEN MAKING ANY REQUEST TO Ing. ENEA MATTEI S.p.A. OR ONE OF THEIR SERVICE CENTRES.

Final inspection

The manufacturer carries out the nal inspection of the machine directly, during the production phases, in compliance with the company quality system.
Ing. ENEA MATTEI S.p.A. is responsible for the machine under its original con guration.
Ing. ENEA MATTEI S.p.A. refuses any responsibility for improper use of the machine, for damages due to operations which are not described in this manual or unreasonable jobs.

Safety precautions

The nal user should comply with the instructions given by the seller, concerning:

- safety devices already installed on the machine
- instructions for correct machine installation
- correct use and periodic maintenance of all the machine components, including safety devices
- regulations of current laws

The following safety precautions de ne both the behaviour and obligations to be observed when carrying out the activities listed in the manual, the instructions for the machine use and the way how to operate under safety conditions, for the staff and the surrounding environment.

Machinary Directive
Machinary Directive means the DIRECTIVE OF THE EUROPEAN COMMUNITY COUNCIL 89/392/EC dated 14th June 1989 and its subsequent amendments that modify its content 91/368/EC dated 20th June 1991, 93/44/EC dated 14th June 1993 and 93/68/EC dated 22nd July 1993.
In June 1998 the Machinary Directive and its subsequent amendments were included into Directive 2006/42/EC without modi cations.

Machine
Machine means the functional assembly composed of: control unit, processing unit, working and resting equipment, systems (electrical, pneumatic, hydraulic, cooling, lubrication systems) and any group completing the system functionality.

Working area
Working area means the protected volume limited by guards to prevent injuries and aimed at operation during the machine processing.

Authorized staff
Authorized staff means personnel duly trained and appointed to perform the activities listed below and that make up the operating instructions for the machine.

Appointed staff
Appointed staff means the personnel who, although not participating materially in the work, supervise the work of others, for example the responsible engineer.

Transport
Transport means all those operations regarding the handling of the machinery or part of it

Installation
Installation means the mechanical, electrical and uid system integration of the machine into a production reality, in compliance with speci ed requirements.

Commissioning
Commissioning means the functional check of the machine installed.

Operation
Operation means the operating mode at which the machine produces compressed air according to all settings and controls inserted by the control device.

Decommissioning
Decommissioning means to disconnect mechanically and electrically the machine from a production line.

Dismantling
Dismantling means dismantling and eliminating the machine components.

Maintenance and repair
Maintenance and repair means the regular check and/or replacement of parts or components of the machine and any action to identify the cause of failure, ending with the machine resetting to the design operating conditions.

Improper use
Improper use means using the machine out of the limits speci ed in the technical documentation.

Applicability
The regulations should be applied when performing following activities:
- Transport, installation and setting up
- Manual operation
- Continuous operation
- Decommissioning and dismantling
- Maintenance and repair

that compose the use procedures foreseen for the machine.

Installation and commissioning

“The installation and commissioning are only permitted to authorised staff.
During installation, handle the machine components as indicated in this manual; if lifting is necessary, verify rst the correct xing of speci c devices for lifting and use adequate slings and equipment.
The machine installation should be as free as possible from any material preventing or limiting its view.
If there are any, remove xing brackets or eyebolt blocking devices, previously tted to allow the transport.
Check that all the machine safety devices are correctly xed and there are no moving or loose parts. Also check soundness of the control unit components.
Connect the machine pneumatic system to the air distribution system and carefully check that pressure is set to the correct value.
Check consistency between the voltage set on power transformers and the voltage value of the electrical supply.
Before connecting the machine electrical system, check that the mains isolator is blocked in the open position.
Verify that accident preventing guards are correctly installed and in perfect state.

The machine safety is not guaranteed in case of removal, by-pass or tampering of the safety devices on the machine.

To stop the machine during an emergency, press the emergency stop button.

Operating the machine

Only authorised and duly trained staff or at least with a suf cient technical experience should operate the machine. The staff in charge of operating the system should be aware that the knowledge and application of safety regulations is in an integral part of their job.
Unskilled personnel should not access the operating area and the machine control panel when the system is live.

Before starting the machine, carry out following operations:

- Carefully read the technical documentation;
- Get information about the operation and position of emergency stop devices on the machine;
- Know which protections and safety devices are tted on the machine, their position and operation.

It is forbidden to either disconnect or partially remove the protections and safety devices. The same applies for danger signals located in particular areas of the machine. It is strictly forbidden to access the working area and the control and power cabins during operation of the equipment (even partial) or immediately after it is switched off.
Protections and safety devices should be kept in perfect state so as to allow right operation; in case of failure they should be repaired or replaced.
The use of not authorised components and accessories for the protections and safety devices may lead to malfunctioning and dangerous situations for the operating staff.

Decommissioning and dismantling
Only authorised staff is allowed to decommission and remove the machine.
Before setting the machine out of operation it is necessary to disconnect the mains isolator and block it in the open position.
Discharge oils and uids, remove all moving parts.
Disconnect the mains isolator cable, by cutting out the power wires and then the earth wire.
Disconnect the power supply cable from the machine main switch and remove it.
Disconnect the machine pneumatic equipment from the air distribution system.
Remove the machine from the working area following the instructions given in this manual. Before lifting it, verify the correct use of lifting devices and use only suitable equipment.

Waste disposal should be performed in compliance with the laws in force in the country where the machine is installed.

- ❑ Installation, setting up and use of compressor should be carried out in compliance with the standards and the rules in force concerning safety at work.
- ❑ The owner of the machine is responsible for its good maintenance, an essential condition to ensure safe operation.
  Those machine parts that due to improper use or wear do not ensure safe operation should be quickly replaced.
- ❑ Only trained, authorised and skilled staff should perform the installation, use, maintenance and repairs.
- ❑ In case of difference between the instructions given in this manual and those foreseen by current laws concerning safety, it is recommended to apply the more restrictive ones.

Maintenance and repair
Only authorised personnel should carry out maintenance, troubleshooting and repairs.
Any maintenance and repair in progress should be signalled by a speci c sign, stating the maintenance condition and placed on the control panel until completion of the job, even if temporarily interrupted.

All operations for installation, maintenance or replacement of components on the machine or on the control unit should be performed with switched off system.
Therefore, the main switch should be on OFF (OPEN) position and blocked with the safety lock to prevent any movement to the ON position.

For compressors equipped with INVERTER, before performing any maintenance job, wait at least
5 minutes after you have disconnected the electricity supply.

Before acting, people in charge of maintenance should rst check following conditions:
• that any receiver under pressure has been exhausted.

Before intervening on pneumatic or lubricating systems and speci cally on pipes, receivers, hoses and other components under pressure, the staff in charge of maintenance should reduce the internal pressure of the plant down to the ambient pressure value.
Faulty components must be replaced with others having the same code.

If during troubleshooting it is necessary to carry out jobs with the control unit and the machine live, all precautions should be taken, as required by the safety standards to operate under dangerous voltages and with moving parts.
At the end of the maintenance and troubleshooting jobs, all disconnected safety devices should be reset.
Maintenance, repair and troubleshooting should be ended by the checking of the machine operation and of all its safety devices.

Settings to be made by customer

Unless different contractual agreements are taken, the following items are normally at customer's expense:

- ❑ room preparation (including building works, such as foundations or canalizations, etc, if required);
- ❑ anti-slip, levelled ooring;
- ❑ observing the dimensions given in the layout drawing when preparing the site and when installing the machine itself;
- ❑ preparation of auxiliary services, suitable for the system requirements (such as electricity supply, pneumatic system, etc)
- ❑ preparation of the electrical equipment conforming to 2006/95/EC Directive;
- ❑ adequate lighting complying with EN 60204-1 Standard;
- ❑ any safety devices upstream and downstream of the electrical supply lines (like differential switches, earthing systems, safety valves, etc) foreseen by the current laws in the country of installation;
- ❑ earthing equipment complying with CEI 64-8 Standard;

801a

For any kind of information on the use, maintenance, installation, etc. **Ing. ENEA MATTEI S.p.A.** is always available to meet the Purchaser's requests.

However, any enquiry should be made in clear terms, with references to this manual and always stating the data on the machine id plate.

For any communication with the service centre, always indicate the machine model, the serial number and year of manufacture, helping to identify every single machine and, when possible, specify the kind of problem or the defect found, for instance: electrical, mechanical fault or defects in the machining quality, and describe the same in the "**TECHNICAL SERVICE REQUEST FORM**" enclosed to this manual.

Please contact the nearest local service department, or refer to the headquarters in Italy.

Instructions on how to order spare parts

In the course of time a machine may need the replacement of those parts subject to wear.
The Purchaser may order the parts to be replaced.
It is compulsory to always buy original spare parts.

To order spare parts always indicate following data with the utmost accuracy:

1 Machine type and model
2 Serial number
3 Exact description of the item
4 Code and/or reference (if available)
5 Quantity

To simplify and speed up the delivery of spare parts, it is suggested to forward orders by compiling the "**SPARE PARTS REQUEST FORM**" enclosed with this manual and send it to **M.T.A. S.p.A.** or to the closest distributor.

The manufacturer's address

Any request for intervention of the technical service by the customer or explanations on technical aspects of this document should be made to:

Technical and Spare Parts Service

075 M.T.A. S.P.A. MECCANICA TECNICA ASSISTENZA

Corso Italia, 47 – 24049 VERDELLO - ZINGONIA (Bergamo) - Italy
TEL: +39 - 035/4186400 (Automatic search) FAX: +39 - 035/4186490
e-mail: info@mta.bg.it
C.P. N° 69 Zingonia

098 **To operate the machine under any operating condition, including maintenance, it is not necessary that more than one person be present.**
Using more than one person is superfluous and, in any case, not allowed for safety reasons.

! The employer should instruct the staff on the risks of accidents, on safety devices and on the general rules concerning prevention and protection, as established by the European Community Directives and by the current legislation in the country where the machine is installed.
The operator should be aware of the location and operation of all controls and of all the machine features.
The operator should also have read the entire manual.
Only skilled engineers should carry out maintenance jobs, after having duly prepared the machine.

098 **Any unauthorized tampering or replacement of one or more parts of the machine, or the adoption of accessories that modify the use of the machine and the use of different materials than those recommended in this manual, may be a potential risk of accidents.**
It is strictly forbidden for the machine to be operated by two persons contemporaneously, one inside the guards and one on the control panel.

Dangers and residual risks

During the design phase all hazardous areas have been considered and, therefore, all necessary precautions have been taken to avoid risks to people and damage to the machine components.
To guarantee both health and safety of those exposed, the machine is equipped with appropriate safety devices:

- EMERGENCY button to stop the machine immediately
- Fixed protections. located in areas with exclusive access for routine maintenance. They are xed by devices that need special tools for their removal, or they are locked with screws.
- Protection and segregation of the electrical/electronic driving equipment of the machine by metallic box, to avoid accidental contacts with live equipment in case the metallic box is open; the electric box is IP 54 protected; IP 20 is the protection degree of the internal devices against accidental contact.
- Suitable panels or protection to cover moving parts.
- Electrical devices to detect faults of the machine electrical supply and malfunction of motor electrical devices.

098 **WARNING !!!**
For compressors equipped with INVERTER, before performing any maintenance job, wait at least 5 minutes after you have disconnected the electricity supply.

098 **WARNING !!!**
Our machine IS NOT SUITABLE for use in areas with potentially explosive atmosphere.

After having carefully considered all possible risks concerning the use and maintenance of the machine, all measures have been adopted to eliminate risks and limit dangers to exposed people.
Although the machine is equipped with safety devices, the following residual risks remain, which can be eliminated or reduced by the relevant precaution:
• Risk of bruises, tearing, cuts during the handling of tools and/or elements.
• Risk of bruises during machine intervention.

Operation

- ❑ **The operator should use the personal protection devices.**
- ❑ Use the compressor only for the kind of application for which it is designed (air compression for industrial use).
- ❑ Before starting, ensure that compressor is lled with oil.
- ❑ Please refer to Section 8 of this manual for the oil type to be used.
- ❑ Never operate the compressor if there is a possibility of inhaling smoke or toxic or ammable vapours.
- ❑ Never operate the compressor at higher pressures than those indicated in the id plate.
  The air delivered by the compressor must not be used for breathing, although it is filtered and purified from oil.
- ❑ If hoses are used to distribute the air, ensure they are properly sized and suitable for the operating pressure, and not damaged or worn.
  Please remember that rubber hoses should be replaced at regular intervals.
- ❑ Never remove the oil ller plug when the machine is running or there is still pressure inside the compressor: there would be hot oil leak.
- ❑ Although it has an acceptable sound pressure level, the machine can produce a much higher noise if the room is narrow and reverberating. Please note that the continuous presence of an operator is unnecessary.
  For safey against noise, in compliance with local laws in force, and if necessary, place speci c warning signs near the machine and equip personnel with suitable protections.

Installation

Besides fulfilment of rules and regulations issued by the authorities, it is recommended to consider the following:

- ❑ The compressor will perform most ef ciently if installed in a suitable, well ventilated area and far from heat sources.
- ❑ Should any duct be installed for the suction and cooling of air, always use the data and recommendations given in Section 4 and preferably obtain expert advice during the design stage.
- ❑ In case of outdoor installation (not suggested for very cold climates) it is necessary to place the machine under a roof or covering, to protect it against weather.
- ❑ Be careful that no foreign materials clogg the radiator and cause rises of the operating temperature.
- ❑ The intake air must be clean and free from ammable vapours, which could cause res or explosions.
- ❑ As the machine is air cooled, except for machines supplied with the “Heat recovery” kit, adequate ventilation must be ensured to prevent it from overheating and thus avoiding the recirculation of the expelled hot air.
- ❑ Control and safety devices should never be tampered with.
- ❑ If one or more compressors are installed on a single pneumatic line, it is essential that each unit is equipped with a detect valve.
- ❑ Electrical connection should be conforming to current regulations. The machines should be earth connected and protected by a magneto-thermal switch against possible short circuits.
- ❑ It is essential to install a mains isolating switch upstream of the compressor.

Maintenance

The person responsible for operation of the compressor should check periodically that all instructions for operation and maintenance are followed by the operator.

098

WARNING !!!
Fill in the specific "Maintenance Sheet" supplied with the machine.

Only trained staff should carry out maintenance, with the compressor off and with no pressure inside the same. Also disconnect the compressor from the pneumatic equipment.
Cut out the electricity supply by acting on the mains isolator located upstream of the compressor electric board and indicate with a special sign that the machine MUST NOT BE RESTARTED.

098

WARNING !!!
An adequate cleaning of both the machine and the place where it is installed is highly recommended.
For cleaning DO NOT USE flammable fluids or products not complying with current regulations.
In case of doubts about the compressor operation or of any of its components, it is recommended to contact the after sales service of Ing. Enea Mattei S.p.A.

The following should be also considered:

- ❑ Before intervening on the machine, disconnect the electrical supply by means of the mains isolator.
  In fact, the machine is equipped with an automatic start system, starting the same at any time, if required by the compressed air system.
- ❑ The key for opening/closing the electric box doors should be given only to skilled personnel.
- ❑ Maintenance operations should be always carried out with compressor not operating.
- ❑ Before carrying out any job on the compressor unit, ensure through the gauge that there is no pressure inside.
- ❑ Only use suitable tools for the kind of job.
- ❑ Never use solvents and ammable products to clean the machine or individual parts.
- ❑ Never carry out weldings or other jobs requiring considerable heat near the machine, speci cally near the electrical system and the oil circuit.
- ❑ Do not make modi cations or weldings on vessels under pressure.
- ❑ Do not leave tools, rags or other loose items on the motor or on the compressor.
- ❑ The lubricating oil, especially if exhausted, may damage the skin: protect hands with gloves or speci c protecting products for the skin.
- ❑ Do not wear clothes contaminated by lubricating oil
- ❑ Absolutely avoid contaminating the ground with lubricating oil.
- ❑ To prevent pollution, store the exhausted lubricant into suitable containers and in a safe place. For oil disposal follow what suggested by internal rules and current regulations.
- ❑ In case of topping up, use the same oil as already contained in the machine.
  Mixtures are harmful for both the oil and the compressor life.
- ❑ After any maintenance, start the machine and check that all control, stop or alarm devices are working correctly; also verify that temperature and pressure values are the correct ones.
- ❑ Make checks and overhauls as foreseen in this Manual, and use only original spare parts.
  Failing to make checks or using non original spare parts may cause problems that jeopardize the machine operation and the manufacturer's warranty will be no longer valid.

Responsibilities

Ing. Enea MATTEI S.p.A. refuses any responsibility for injuries to people, animals or damages to objects, caused by:

- ❑ non-observance of the mentioned precautions;
- ❑ improper use of compressed air or of the machine in general;
- ❑ non-observance of normal safety regulations or domestic rules in the work eld;
- ❑ non-observance of the instructions during handling and transport of the machine;
- ❑ wrong machine installation;
- ❑ defects due to the electric power distribution;
- ❑ lacks in periodic maintenance;
- ❑ unauthorised jobs or modi cations;
- ❑ use of non original or unsuitable spare parts for the involved model;
- ❑ non-observance of the instructions, even if only partially;
- ❑ possible inef ciencies caused by malfunction or non-use of the compressor

098

WARNING !!!
It is recommended to use the compressed air delivered directly by compressors only for manufacturing processes. For any other use, please ALWAYS CONTACT the distributor, the technical service or the manufacturer BEFOREHAND.

801a

002

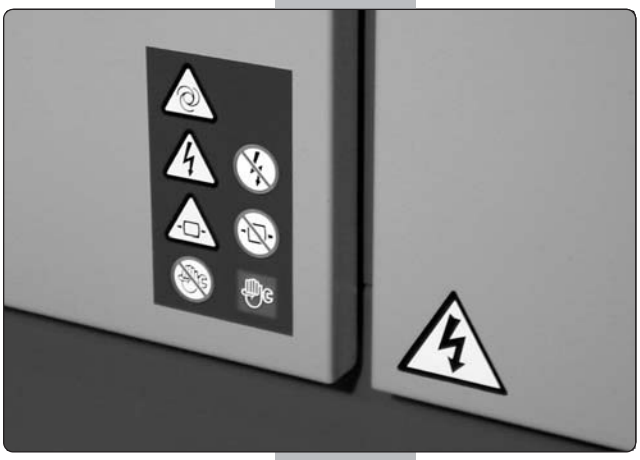

806

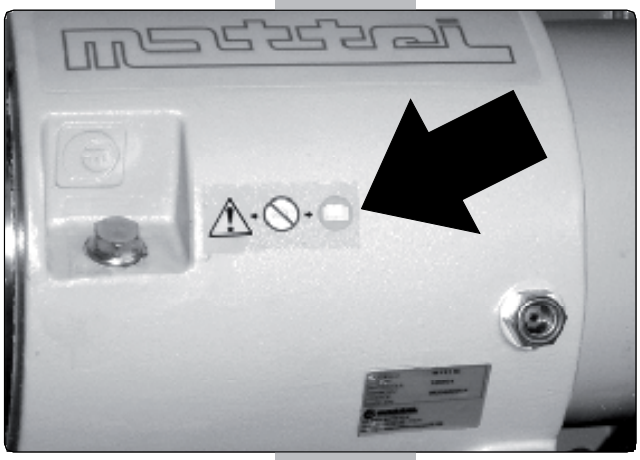

Description of Pictograms

Pictograms have been applied on the machine to explain following situations:

Danger
Obligation
Prohibition

Special indications (example: direction of rotation of the fan, etc)

Many accidents are often caused by the non-observance of the simplest safety rules or poor knowledge of the instructions given by the manufacturer.

To avoid possible danger situations, some of them are highlighted through special signs represented by suitable standardized symbols (pictograms).

Below is the list of the most common symbols applied to our machines:

Danger pictograms
These triangular signs are framed in black with a yellow background and the symbol is black.

105

Warning !
The machine is with remote control or with automatic system and may start without notice.

106

Warning !
Vessel under pressure.

107

Warning !
Risk of high temperature surface (> 70 °C)

108

Warning !
Air delivery.

109

Warning !
Risk of electrical shock.

Prohibition pictograms
These circular signs are framed in red, with white background and the symbol is black.

110

No working on the machine.

111

No pressure in the receiver.

112

No voltage.

003a

807

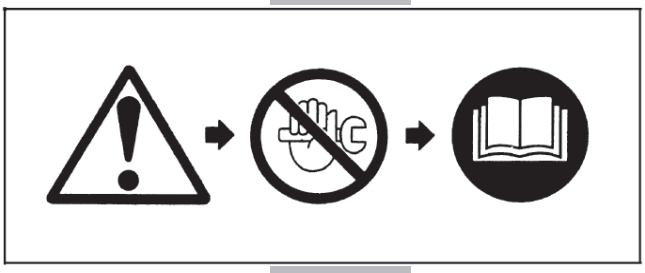
118

Description of Pictograms

Pictograms of Obligation
These are circular signs, on a blue background, and the symbol in white.

113

Read the instructions manual before carrying out any operation on the machine.

114

Use individual protective means against noise.

Pictograms of Indication
These signs may vary in shape and they give useful information.

115

Rotation direction.

116

Lifting point.

117

Possibility to carry out work.

Combination of pictograms
The above shown combination of pictograms means:
Warning ! Please refer to the Instruction Manual before starting any activity.

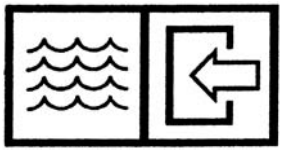
808

Water inlet

809

Water outlet

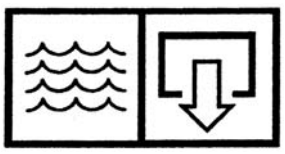
810

Condensate drain

Mattei rotary compressors of the AC Series are the result of years of investments in research and development, to improve performance continuously, and at the same be environment-friendly.
Designed for continuous industrial service, they guarantee constant performance over time, low energy consumptions, reliability, functionality and easy maintenance.
The compressor is supplied complete with all components described below and equipped with optional devices.
Unless differently required, the unit is lled with Mattei Rotoroil 8000 F2 synthetic lubricant.
For special requirements regarding lubricant, please refer to section 8 of this manual.

811a

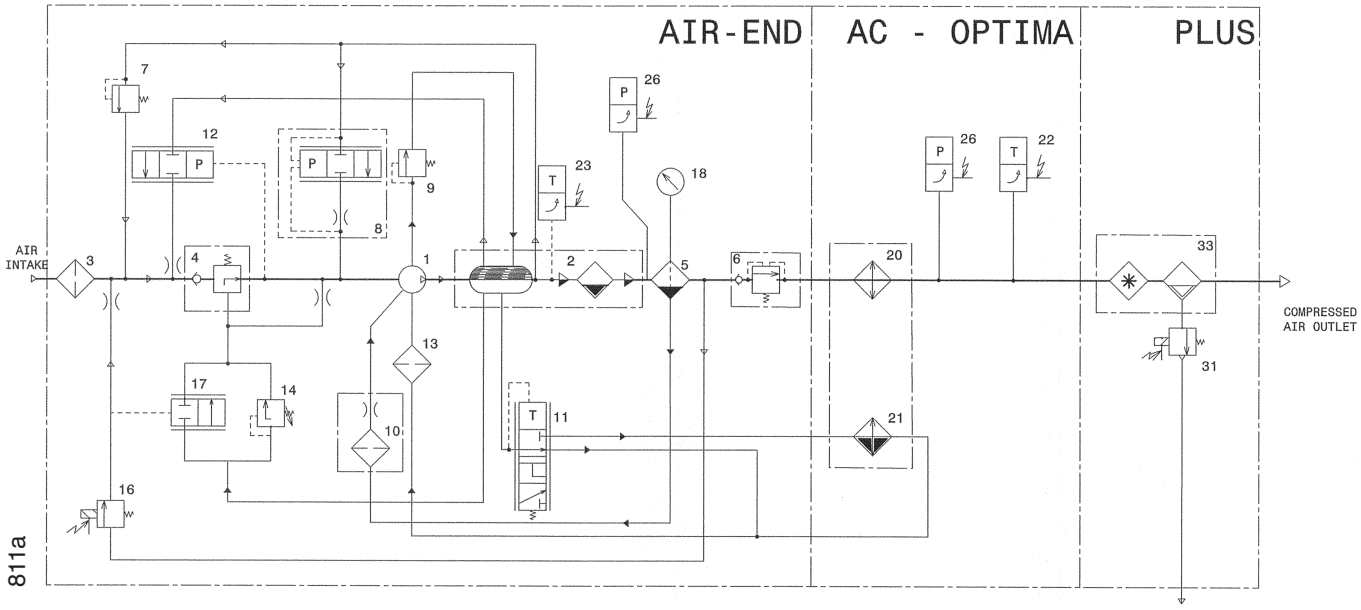

812a

1	COMPRESSORE ROTATIVO A PALETTE	1	ROTARY VANE COMPRESSOR
2	CAMERA OLIO - SEPARATORE PRIMARIO	2	OIL CHAMBER - PRIMARY SEPARATOR
3	FILTRO ASPIRAZIONE	3	INTAKE FILTER
4	VALVOLA ASPIRAZIONE	4	INTAKE VALVE
5	SEPARATORE ARIA - OLIO	5	AIR - OIL SEPARATOR
6	VALVOLA DI MINIMA PRESSIONE E NON RITORNO	6	MINIMUM PRESSURE - NON RETURN VALVE
7	VALVOLA DI SFIATO	7	RELIEF VALVE
8	VALVOLA DI SOCCORSO A VUOTO	8	VACUUM RELIEF VALVE
9	VALVOLA DI SCARICO OLIO	9	OIL RELIEF VALVE
10	VALVOLA DI RITORNO OLIO	10	OIL RETURN VALVE
11	VALVOLA TERMOSTATICA BY-PASS	11	BY-PASS THERMOSTATIC VALVE
12	VALVOLA DI SCARICO PRESSIONE	12	PRESSURE EXAUST VALVE
13	FILTRO OLIO	13	OIL FILTER
14	SERVOVALVOLA	14	SERVOVALVE
15	TERMOSTATO	15	THERMOSTAT
16	ELETTROVALVOLA DI MESSA A VUOTO	16	OFF LOAD SOLENOID VALVE
17	VALVOLA DI MESSA A VUOTO	17	OFF LOAD VALVE
18	INDICATORE DI PRESSIONE	18	PRESSURE GAUGE
19	LIVELLOSTATO OLIO	19	OIL LEVEL SWITCH
20	REFRIGERANTE ARIA	20	AIR COOLER
21	REFRIGERANTE OLIO	21	OIL COOLER
22	SONDA DI TEMPERATURA ARIA	22	AIR TEMPERATURE SENSOR
23	SONDA DI TEMPERATURA OLIO	23	OIL TEMPERATURE SENSOR
26	SONDA DI PRESSIONE	26	PRESSURE SENSOR
31	ELETTROVALVOLA DI SCARICO CONDENSA	31	CONDENSATE DRAIN SOLENOID VALVE
33	ESSICCATORE	33	AIR DRYER

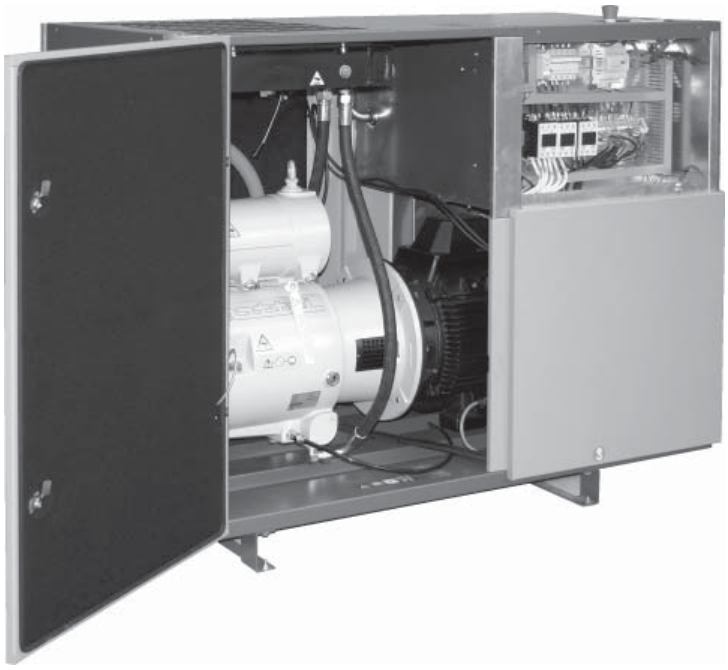

813a

All components are enclosed in a soundpro- o ng canopy in sheet stell , epoxy powder painted and lined with deadening re-resistant material.

The canopy has a pre- lter to prevent intake of gross particles that might prematurely clog the radiators and air lter.
Wide detachable panels and hinged doors allow easy access for all.

The base has openings to allow easy lifting and handling of the compressor (See Section 4).
Standard packing includes: xing on wooden pallets,protective polythene cover,and a cardboard box.

158

Compressor
The vane compressor is a volumetric rotary compressor.
It consists of a cylinder (stator) in which a rotor, mounted eccentrically and tangential with it rotates, and two end covers.
The rotor has longitudinal slots in which the vanes slide.
The vanes are pushed against the stator by centrifugal force.
Sealing of the moving parts, cooling and lubrication are provided by an ef cient injection of oil through proper ports, due to the pressure difference between the compression chamber and the oil receiver. No pump for uid circulation is needed.
An oil lm on the inner surface of the stator prevents direct contact of the moving parts and avoids any wear.
In the vane compressor there are no axial thrusts pushing the rotor against the end covers.
Therefore there is no need for thrust bearings.
The rotor is supported by white metal bearings having a practically unlimited lifetime.
The air drawn in rst passes through a lter and then through the modulating valve.
The decrease in volume of the pockets formed by the stator, rotor and vanes produces a continuous, pulse-free, compression.

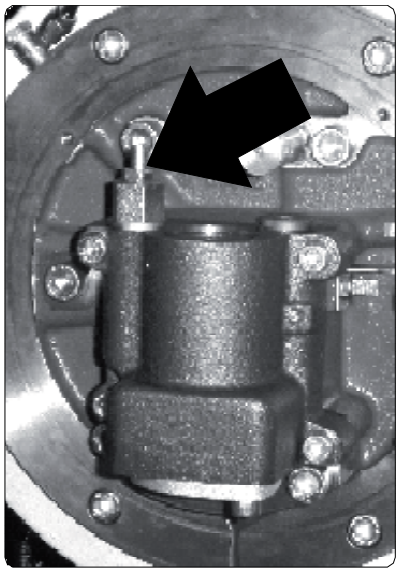

060

Intake valve
The intake valve, driven by a speci c servovalve through a hydraulic circuit using the same oil as used for lubrication, adjusts the intake air quantity to the air system requirements.

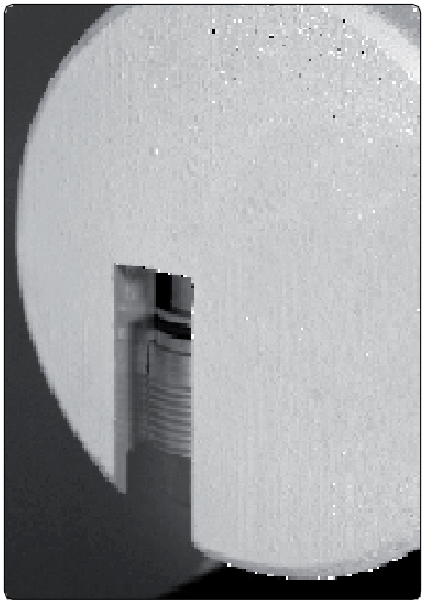

159

Minimum pressure and non return valve
Compressed air is delivered by the compressor through a valve ensuring a minimum pressure inside the oil chamber, so as to guarantee smooth operation when the compressor is delivering air. This valve also prevents the compressed air in the system from returning to the compressor.

Oil separation
The air/oil separation occurs in different stages and ensures exceptionally low oil consumptions.
The main mechanical separation occurs in the oil chamber through a labyrinth path.
This mechanical separation works via the continuous changes of direction of the air ow in the labyrinth path.
The last separation occurs through the coalescing lter, removing the remaining oil vapours from the air.
This particular oil separation system brings to a very reduced oil consumption. The large size of the lter and quality of materials ensure a long life of the lter itself.

Electric Motor
The compressor and the motor are connected by means of exible coupling. This ensures a perfect alignment, no power absorption, silent operation and no need for maintenance.
The electric motor is asynchronous, threephase, 4 poles, with short circuit winding.
- Class F isolation
- IP 55 protection degree
- Power supply according to IEC 38 standard.
- Voltage/Frequency V 230/50 - 400/50 Hz - V 230/60 - 460/60 Hz

Cooling Systems
The compressor comes with two aluminium radiators and suitable for cooling oil and compressed air, respectively.
An air ow, output from the fan inside the sound poof cabin, comes into contact with the radiators and removes the heat generated during compression.
The temperature of the output compressed air is slightly higher that the environmental temperature.
See technical characteristics attached.

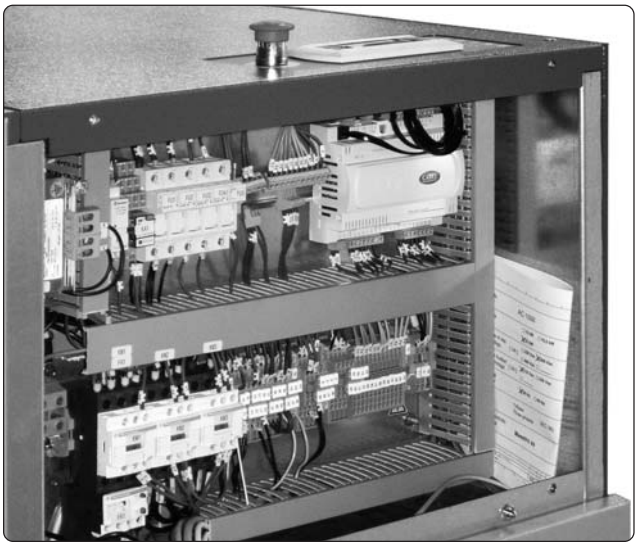

815a

The Diagram is contained in a specific document holder pocket.

Electrical Starter
The protection class is IP 54, and it includes
- Star-Delta starter
- Fan motor protection (by magneto-thermal switch)
- Main motor protection (by thermal PTC) (AC 30s version)
- 110 V transformer for auxiliary circuits
- 24 V transformer MAESTRO^{XS} control device
- Protection fuses for auxiliary and primary circuits of transformer
- Terminal board for the remote restarting of start/stop controls and signals
- Emergency push-button
- Micro-door
- Safety block:
  for high temperature in the compressor, motor overload, oil low level, insuf cient ventilation, air and oil high temperature, emergency stop, clogged separator lter, failure in the pressure sensors

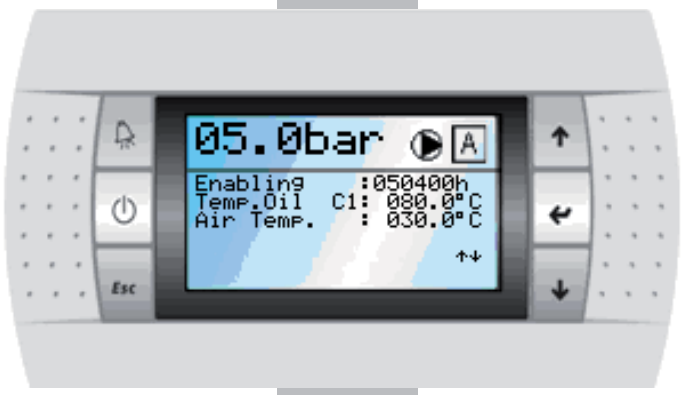

851

MAESTRO^{xs} is a programmable control unit which adapts compressor operation to the speci c requirements of the air line it is connected to. It features various programming levels and performs operating and fault controls and analysis.
Advanced programming and analysis levels are protected by digital codes to prevent unintentional access.
Maestro xs also contains a memory which saves settings and operating data even if the compressor is disconnected from the power supply or switches off due to a power cut.

Hardware Characteristics

- Microprocessor-based technology
- Ergonomic control panel with rapid access keys to main menus
- Access keys to menus, start/stop and reset keys with Led-controlled indications
- “LCD” display – text with blue leds - 8 lines - 22 types
- 24 V AC 50/60Hz Power Supply
- 24 V dc Digital Inputs
- Digital output with clean contacts up to 230Vac and until 24Vdc
- Analogue output 0-10 Vdc
- Pressure analog signals (4-20mA)
- Temperature analog signals (NPT)
- Interfaces:

❏ RS485 to communicate with other “MAESTRO xs” devices
❏ RS485 (optional) to communicate with supervising PC and lan

Software Characteristics:

- Easy use based on a menu structure
- Updating possibility
- Display of :

❏ Analogue data:

- Line pressure, pressure in the chamber, oil temperature, output air temperature

❏ General data:

- Alarms, operating messages, machine status, maximum and minimum pressure, last start and last stop

❏ Hour counter:

- Display of schedules of activation, start, loading, maintenance warns

❏ Events archive:

- Storage of alarms and blocks, with the indication of the when the alarm was activated, machine status.

The device allows for:

- User Interface in 8 languages (Italian, English, French, German, Spanish, Polish, Czech, Portuguese)
- Weekly and time schedule of starts and stops
- immediate reading on display of data relevant to the compressor operation:
  - ❏ Compressor hours of activation and line pressure of the equipment
  - ❏ Pressure oil chamber
  - ❏ Output air temperature and compressor oil temperature
  - ❏ Hours of running and hours of loading
- Programming of basic parameters for optimum operation of compressor accessible by user:
  - ❏ Control modes of compressor (Local/remote, master/slave)
  - ❏ Operation modes (Automatic, Continuous, Modulation)
  - ❏ The advanced programming of parameters, protected by “password” allows the qualified engineer to change those parameters to which the user cannot access directly
- Checking the input and output status of the gear case to detect any failure in the compressor electric equipment
- Storage of up to 20 failure events
- The check of the integrated dryer (plus models)
- The remote control by clean contacts of the machine status below:
  - ❏ Activated compressor (optional)
  - ❏ Running compressor (optional)
  - ❏ Compressor under load (optional)
  - ❏ Compressor blocked (standard)

Communication

MAESTRO^{xs}, connected to the Mattei supervision device (optional), allows for:

- Remote monitoring by web interface
- Alarm signaling by e-mail, fax or mobile phone.

WARNING !!!

The compressor has been designed to compress **AIR ONLY**.

The compression of other gases is FORBIDDEN.

098

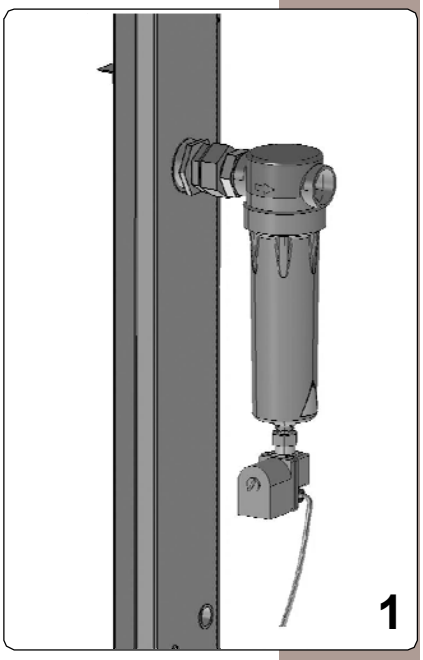

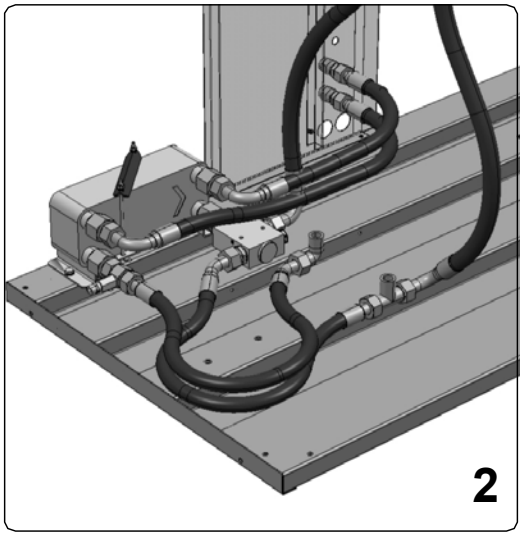

OPTIONALS ACCESSORIES

The machine can also be customized according to meet different requirements by purchasing specific accessories such as:

Separator and Condensate Drain Kit (Photo 1)

Heat Recovery Kit (Photo 2) to heat water for sanitary and processing purposes. The kit is made up of a water/oil plate exchanger, thermostatic valve and connection piping. The kit is a part of the compressor air-cooling system and in case of water shortage or reduction in its flow, the thermostatic valve duly deviates oil to the standard circuit.

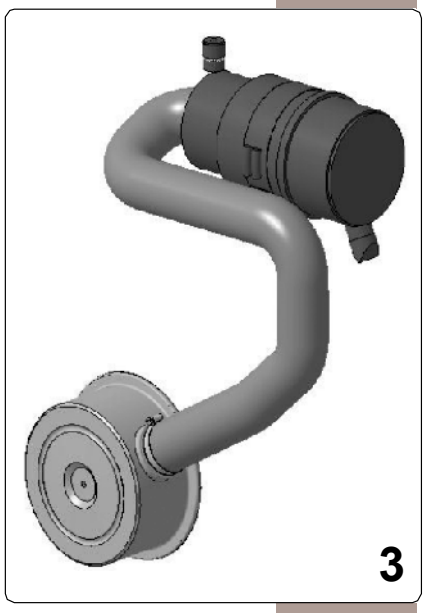

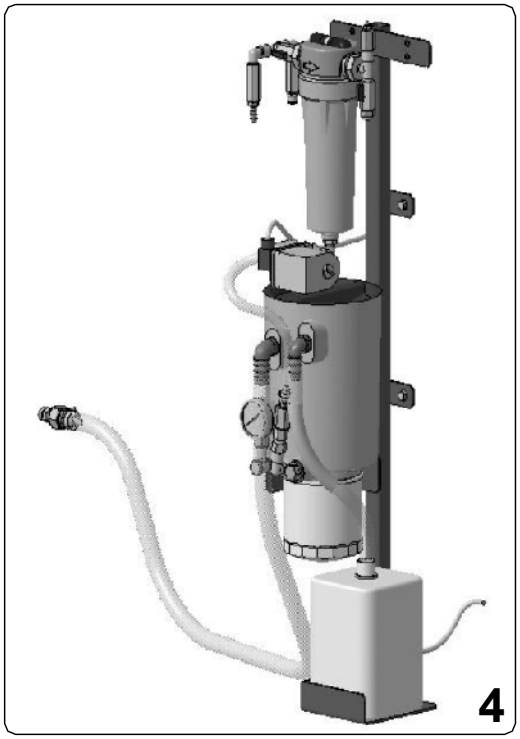

Highly Efficient Suction Filter (Photo 3) able to hold solid particles of more or equal to 3micron with a filtering efficiency of 99%.

Water/oil Separator Kit (Photo 4)

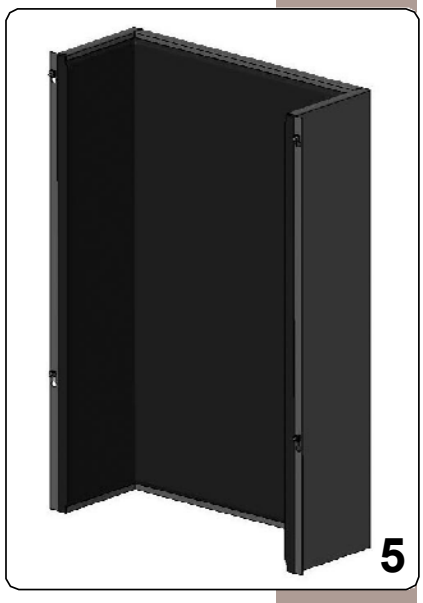

Soundproofing duct kit (Fig. 5) it reduces the sound pressure level on the intake side of the cooling air.

Built-in Dryer (versions plus)

Each AC unit (OPTIMA / MAXIMA) is supplied with a compressed air cooling radiator. Cooling produces condensation that is unloaded from specific separators and drainpipes that can be applied on the front of the machine (see this section Optional Accessories).
Many industrial applications require that the compressed air be almost completely emptied from the water vapour it contains so as to prevent any further condensation from forming inside the line pipes to which it is connected.
Hence, devices that lower the dew point by a few degrees above 0°C should be installed.
In the plus versions the setting up of the machine includes a dryer with a refrigerator cycle that guarantees an adequate compressed air quality.

The design of the compressor allows for integrating a dryer with refrigerator cycle directly installed on the machine.

An electronic controller controls the dryer, which manages its functional parameters according to the different operating load cycles.

089

WARNING!!!
For compressors in the ***plus*** version see tables "electricity supply for compressor and dryer" on page 4.03

381

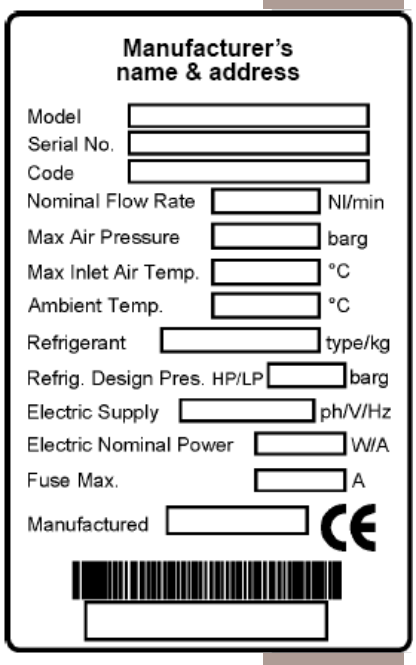

ID Plate
The product ID plate contains all the machine's essential data. Removing or tampering the id plate forfeits the right of guarantee.

Operating Mode

When the compressor is activated, the drier also starts after a preset delay.

Alarms are inserted with 5-minute delay to allow the drier to reach its operating mode.
Once this delay has elapsed, the alarms start and begin monitoring the system.

Once started, the dryer compressor group stays on until the following conditions occur:

✓ The compressor is stopped with the "STOP" push-button

✓ The dryer operating limit conditions are exceeded.

The controller manages the dryer operation by monitoring the dew point temperature that allows the system to run correctly.
The operating limits for such a parameter are as follows:

- ✔ The dew point temperature > 0°C;
- ✔ The dew point temperature < 6°C with Ambient Temperature ≤ 25°C;
- ✔ The dew point temperature < T.amb. – Δ ambient with Ambient Temperature > 25°C.

MATTEI sets the Δ ambient value.

If the dew point drops below 0°C, the controller will indicate the faulty condition [Ice Alarm] while the dryer compressor is kept active throughout the time corresponding to the parameter [Low Temperature Delay Time].
Once this time has elapsed, the dryer compressor is stopped so to prevent any ice from forming.
As soon as the temperature rises again above 0°C, the dryer compressor is re-started and the fault warning is automatically turned off.

Should the dew point temperature rise above the upper limit, the controller will indicate the fault condition [ALARM High Dew Point] for the time that corresponds to the parameter [High Temperature Delay Time].
When the set time has elapsed, the Alarm warning will stay on.
As soon as the temperature falls again within the above-mentioned operating interval, the fault warning will be automatically turned off.

NOTE:
The user can request Ing. ENEA MATTEI that the fault in the dryer corresponds to a machine BLOCK.

NOTE:
The design of the dryer prevents condensate from accumulating and ice from forming inside it.

In case of any failure in the dryer, by-passing the device is possible by disconnecting the hose linking it to the air radiator and connecting it directly to the delivery side. All joints installed are equivalent
In case of any failure in the dryer, by-passing the device is possible by disconnecting the hose linking it to the air radiator and connecting it directly to the delivery side. All joints installed are equivalent.

DOCUMENTATION
The machine comes complete with:
1 Use and Maintenance Manual complying with Machinery directive 2006/42/EC
1 CE Declaration of conformity
1 Start Report
1 Maintenance Sheet
1 Electrical Diagram (inside the control board)
Documents for the optional accessories

CERTIFICATIONS
Ing. Enea Mattei SpA has its company quality system certified according to standard UNI EN ISO 9001 by DNV while the final inspection procedures comply with standard ISO 1217.

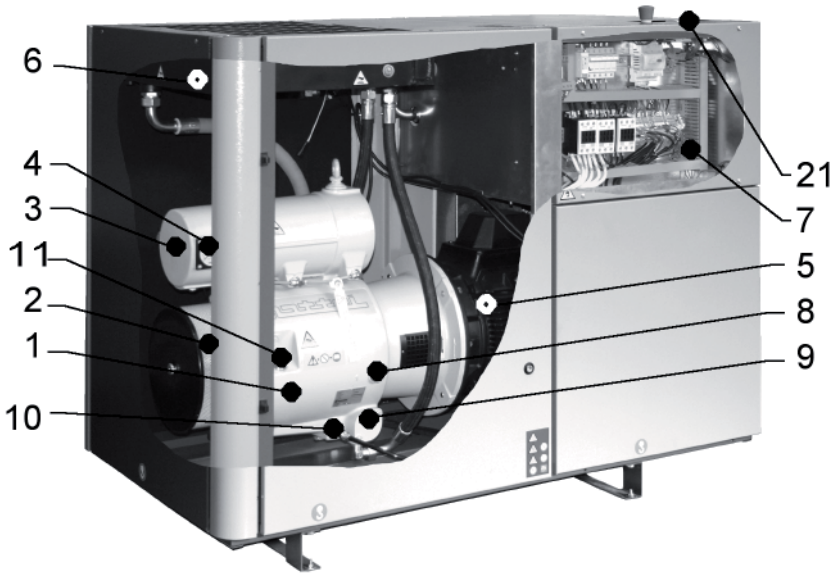

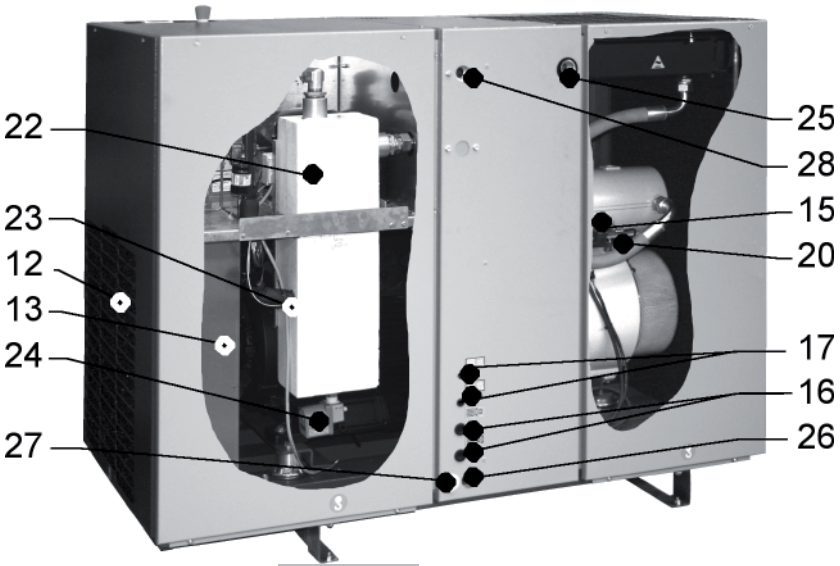

Position of main parts

1 - Compressor
2 - Air filter
3 - Air/oil separator
4 - Gauge
5 - Electric motor
6 - Air/oil radiator
7 - Electric starter
8 - Oil level indicator
9 - Oil filter cover
10 - Oil drain cock
11 - Oil filling cap
12 - Intake pre-filter
13 - Conveyor
15 - Off-load solenoid valve
16 - Arranged for water in/out connections for the heat recovery
17 - Arranged for condensate-drain connection for the dryer
20 - Oil temperature probe
21 - MAESTRO xs
22 - Dryer (2)
23 - Dewpoint probe
24 - Timed electronic drain (2)
25 - Air delivery
26 - Electricity supply
27 - Additional hole
28 - Air delivery

(**2**) - Dryer kit

Technical Data and Overall Dimensions

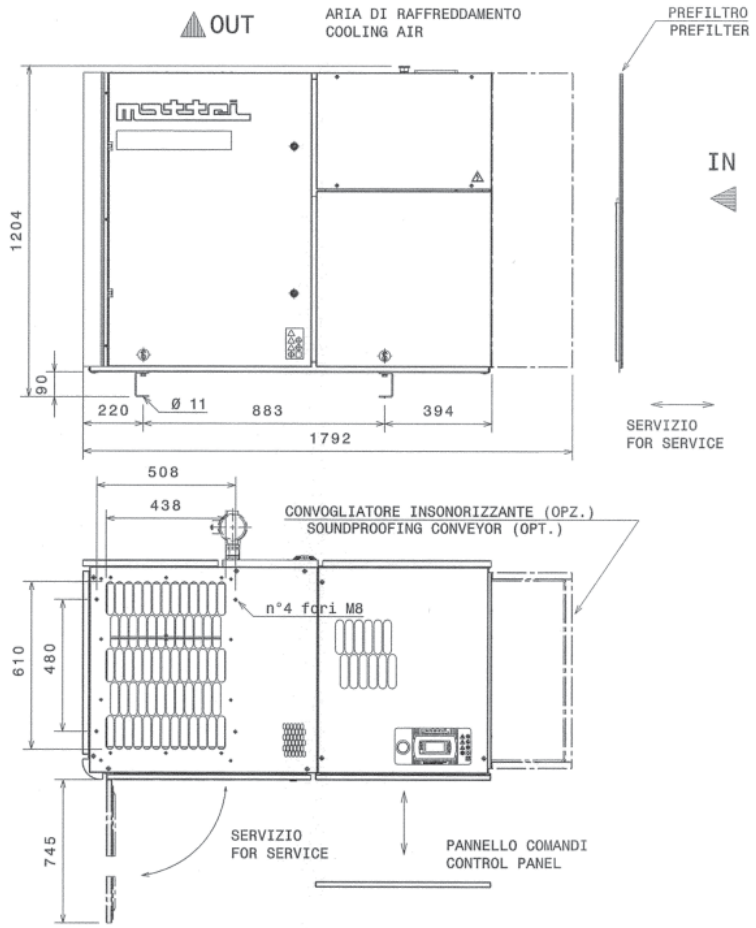

ITEM	CONNECTION	SIZE
A	INGRESSO LINEA EL.SUPPLY	Φ31 MAX
B 1)	SCARICO CONDENSA CONDENSATE DRAIN	---
B1 2)	SCARICO CONDENSA CONDENSATE DRAIN	Φ10
C	USCITA ARIA AIR OUTLET	Rp 1
D 3)	ENTRATA ACQUA WATER INLET	---
E 3)	USCITA ACQUA WATER OUTLET	---
F	FORO SUPPLEMENTARE SUPPLEMENTARY HOLE	Φ31 MAX
CG	CENTRO DI GRAVITA' CENTER OF GRAVITY	

AC 15 H-L-HH	Massa Kg Mass (con olio) (with oil)	445
= = PLUS		485
AC 18 H-L-HH		445
= = PLUS		485
AC 22 H-L-HH		450
= = PLUS		490
AC 30s H-HH		500
= = PLUS		540
SUPERFICIE DI CARICO LOADING AREA m2		~0,28
CARICO SULLE FONDAZIONI FLOOR LOAD max N/cm2		~19

1) VERSIONE "PLUS" 2 x Rp 1/4
"PLUS" VERSION

2) CON SEPARATORE DI CONDENSA Φ10
WITH CONDENSATE SEPARATOR

3) CON KIT RECUPERO CALORE (OPZIONALE) 2 x Rp 1/2
WITH HEAT RECOVERY KIT (OPTIONAL)

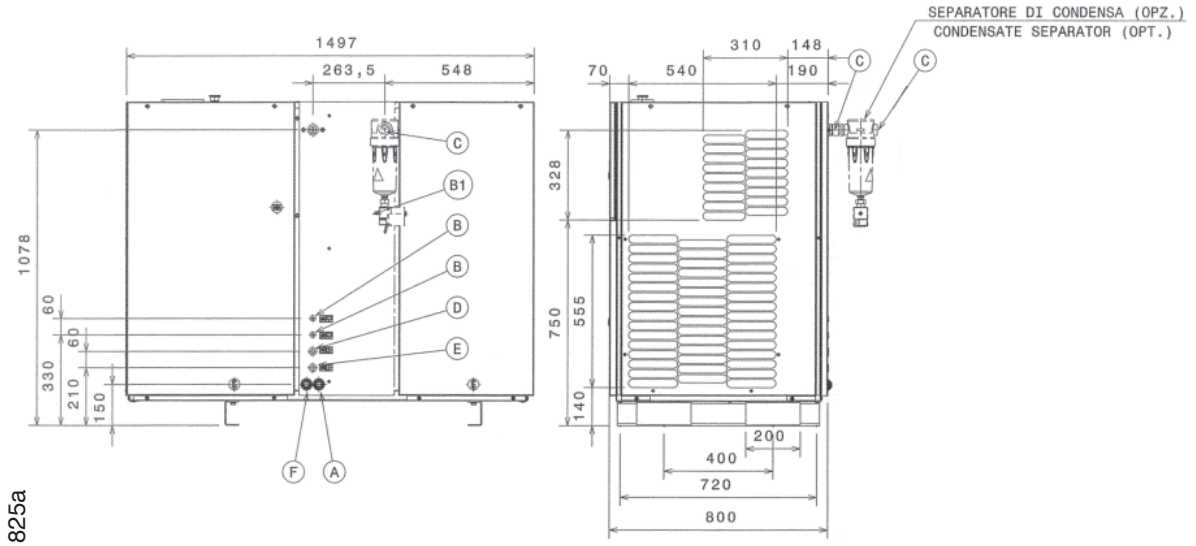

825a

003a

098

The whole area for the machine handling, including the space between the parking area for transport means and the machine installing area should be identified and inspected beforehand, to find any possible "**DANGEROUS AREAS**".

Be careful when handling, lifting and transporting the machine, not to damage it and not to damage things or cause injuries to persons.

826b

For this purpose:

❏ Verify the total mass of the machine and use a forlift truck or an adequate lifting means. Specific pictrograms indicate the lifting points.

❏ The centre of gravity is near the coupling between motor and compressor; before lifting, check (lift the unit from the ground just slightly) that lifting points are correct and there is not risk of overturning.

❏ When lifting, be careful not to damage the bearing structure (base) of the machine and the soundproof canopy.

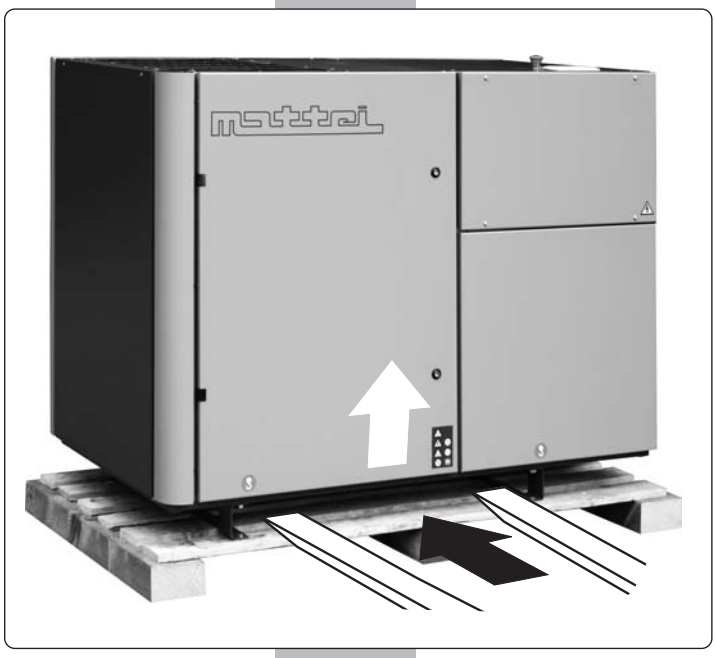

827b

During the transport, carefully fix the machine to the means used, by blocking it lengthways and sideways.

It is recommended to protect the machine from atmospheric agents with suitable covering.

Unpack the machine by removing the guards and place it on the floor by means of a forklift truck to remove the pallet.

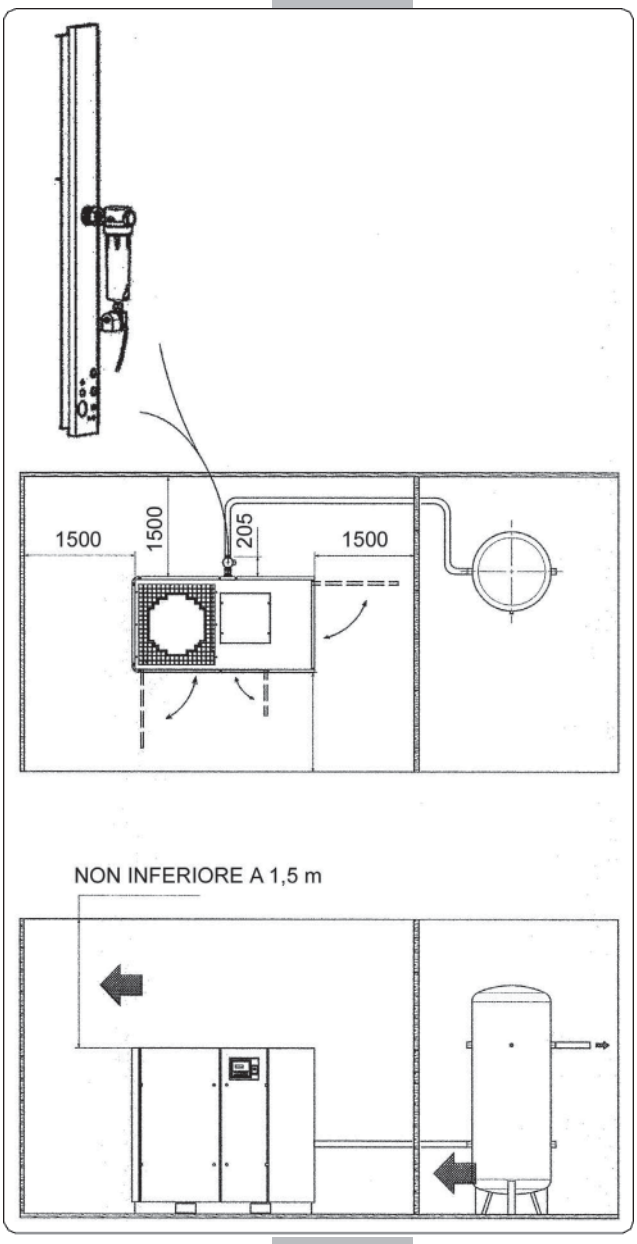

828

Position of compressor

In the section “Technical Data ”you can nd the overall dimensions, the weight,and the cooling values of the machine.
The compressor must be installed in a covered and well ventilated area ,away form heat sources.
It can be simply placed on a solid and level oor.
It does not require any type of special foundation.
Space and ventilation around the machine are essential.
An air-cooled compressor,driven by an electrical motor,produces heat equal to about 85% the absorbed power.
For the AC 1000 Series machines,having the cooling air outlet on the canopy top panel, the distance from the ceiling should not be lower than 1,5 meters.
If such a clearance is not possible, a hot air conveyor must be installed (see further on the section on ducts size and heat recovery).
The 1,5 meter distance, free from any obstructions, should be also kept on the intake end.
To make it easier to perform checks and maintenance operations on the compressor leave at least 1,5 m clearance from all other sides.

829

102

Far Electrical connection

Only qualified staff should connect the power to the electrical network and in compliance to the enforced regulations.

098

WARNING !!!

To permit safe maintenance of all the compressor parts, including the electrical board, the Customer should install an automatic line knife switch and a magnetothermal switch of an adequate size as close as possible to the machine.

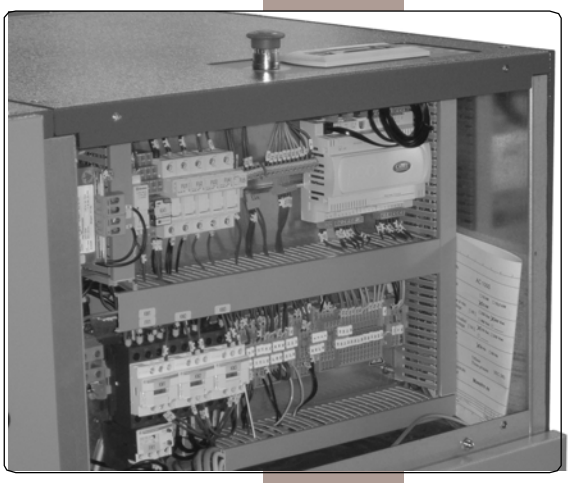

815a

The characteristics of the electrical motor start should be taken into consideration when choosing the line knife switch and the magnetothermal switch.

The size adaptation of the power cables between line knife switch and the control board of the compressor should be made using the values given on the technical sheet of section “SECTION DATA “.

All the machine auxiliary components are already connected to the control and check board and are powered with the transformer.

For further details, use the specific electrical diagram supplied with the machine or the general one attached to this Manual.

Alimentazione Compressore *Compressor Supply*			
400 Vac	50 Hz	Trifase *Three-phases*	(3F + ⏚)
460 Vac	60 Hz		
230 Vac	50 Hz	Trifase *Three-phases*	(3F + ⏚)
230 Vac	60 Hz		

Alimentazione Essiccatore *Dryer Supply*			
230 Vac	50 Hz	Monofase *Single Phase*	(1F + N + ⏚)
	60 Hz		

098

WARNING !!!

It is to be noted that the machine should ALWAYS be connected to the earthed equipment.

801a

Connection to the air distribution system

Compressed air distribution

101

Only qualified personnel should carry out the connection to the air distribution system, in compliance with the regulations in force.

The aim of distributing air is to bring compressed air from the machine to the end users, with the lowest pressure drop and energy waste.

To avoid losses and wastes, regularly check all pipings of the distribution equipment and all accessories.

Filters, regulators and other accessories should undergo proper maintenance.

The connecting pipe to the system should be exible and with a diameter not lower than the pipe leaving the machine.

A detect valve is required to isolate the machine from the air distribution system in case of maintenance.

WARNING !
The machine is equipped with a NON RETURN VALVE; if the detect valve is closed when the air distribution is operating some air under pressure could remain inside the connecting pipe !
Arrange a draining system for the piece of piping between the compressor and the detect valve.
In case there is the need to disconnect the machine, ensure that the internal pressure is exhausted before the dismantling procedure.

Near the machine, derive a exible hose from the distribution system and connect it to a blowing gun: it is needed for periodic cleaning of the radiator, the intake lter and all other machine components.

The air drawn in by compressors contains, in a variable quantity and depending on the ambient conditions, a certain quantity of water indicated as relative humidity.
After air has been compressed, it is cooled in a speci c radiator, which all versions of the Mattei compressors are supplied with.
Cooling air produces condensate of a good quantity of the water it contains.
The condensate produced is separated and drained with an automatic device (optional).

Please note that condensate should be collected and eliminated in compliance with current laws.

Dimensions of compressed air distribution pipings

We mention that the main causes for wastes are pipings with unsuitable diameter and losses due to an improper setting up of the equipment or deteriorated materials.

The pipe diameter must be duly selected so as to minimize the pressure drop between the compressor or the storage receiver and the point of use, based on the machine features, like air delivery and working pressure.

The pressure drop is proportional to the pipe length and most losses occur during the change of direction (curves, elbows) and in the valves.

With a pipe having the same diameter as the compressor outlet, the length should not exceed 50 m.
To make a check of one's own equipment, "Table 1" gives the load losses, over 100 metres straight piping, according to nominal diameters usually employed and at different air delivery and working pressure conditions.

A perfect air distribution system should limit the pressure drop from compressor to the point of use within few tenths of bar.

Table 1 – Load losses (bar) over 100 m straight piping

Pipe Diameter	Free Air Delivery [m^3/min]	PRESSURE [bar]				
		6	7	8	9	10
1"	1	0,087	0,076	0,068	0,061	0,056
	2	0,315	0,275	0,245	0,220	0,200
	3	0,666	0,583	0,518	0,467	0,424
	4	1,134	0,993	0,883	0,795	0,722
2"	4	0,038	0,033	0,030	0,027	0,024
	8	0,138	0,120	0,107	0,096	0,088
	16	0,496	0,434	0,386	0,347	0,316
	24	1,050	0,919	0,817	0,735	0,669
3"	8	0,019	0,017	0,015	0,013	0,011
	16	0,069	0,060	0,054	0,048	0,044
	32	0,248	0,217	0,193	0,174	0,158
	64	0,894	0,783	0,696	0,626	0,570
4"	16	0,018	0,015	0,014	0,012	0,011
	32	0,064	0,056	0,050	0,045	0,041
	64	0,230	0,201	0,179	0,161	0,146
	128	0,829	0,725	0,645	0,580	0,528

Heat Recovery

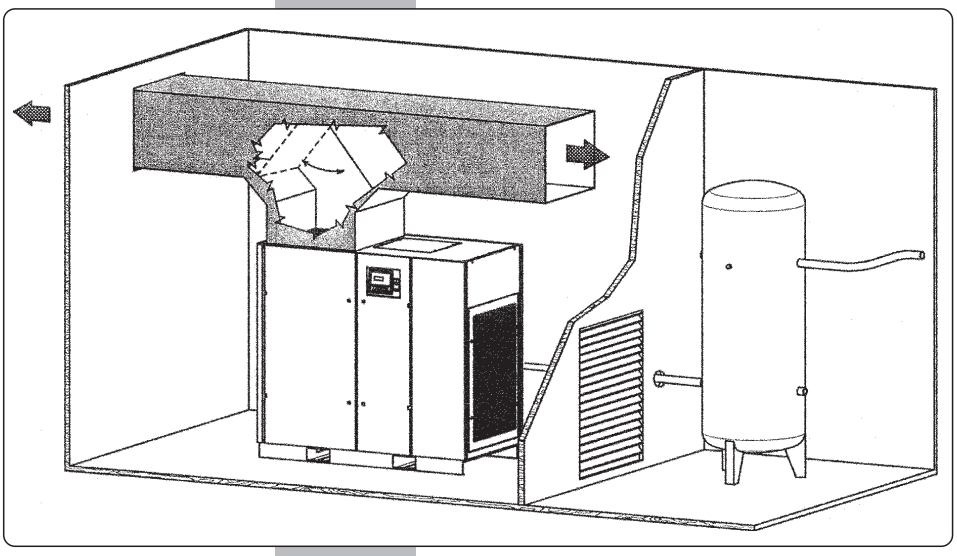

119

As mentioned in above section on Page 3.03, a fan produces an airflow that cools both the oil and the compressed air, heating up when it goes through the radiator.

The recoverable heat represents about 100% of the power installed in the AC 1000 SERIES machines.

The heat produced can be conveniently recovered and used to heat rooms.

Any duct should be adequately sized and, if necessary, shaped in such a way to allow for a correct use during Winter and the output of hot air during Summer.

The duct to recover/output hot air should be designed by a competent engineer and should limit the load loss at approximately 20 Pa.

If the duct offers greater resistance, an auxiliary extractor should be used to prevent any overheating of the machine.

As an example, a duct with a higher or equal section to the coming out of the machine (the output grid on those versions equipped with a soundproof case), made up of some 10 m of straight duct and two 90° elbows properly connected, allows the maximum tolerated limits to be maintained.

However, it should be noted that 10 Pa increase corresponds to some 2 - 3 °C increase in operating temperatures.
As for the recoverable heat, it should be noted that 1 kW of installed power allows for the heating up a volume of about 30 cubic meters by 1 K (1 kW = 860 kcal/h).

In the Section on “TECHNICAL DATA” attached to this manual the values required to realize that which is mentioned above are indicated.

012b

EMERGENCY - STOP button
The machine stops immediately when the button is pressed, while skipping the regular stop sequence provided by the STOP button.

098 This button is to be used also in an emergency situation.
Frequent stops of the compressor by means of this button **may damage its operation**.

WARNING
Please refer to the Manual of "**MAESTRO^{XS}**" Control attached to this Manual for detailed, description of keys, programming, and all of its functions.

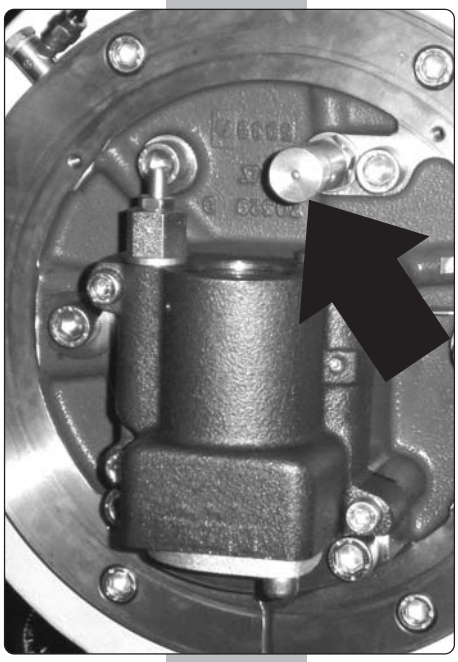
831

Safety Valve
A “SAFETY VALVE ”protects the compressor in case of air overpressure inside the chamber,while limiting the value to its own setting limit.
The safety valve is set at 12 bar for L and H version of compressors and 15 bar for HH versions.

Servovalve
Besides the operating pressure control perfomed by MAESTRO^{XS}, compressors of AC 1000 Series ,keep the modulation and off load functions by means of a “SERVOVALVE ”.
This servovalve limits the maximum operating pressure,during the CONTINUOUS mode operation by acting on the intake valve, which closes as the internal pressure increases.
The maximum operating pressure is set at its optimal value during the nal inspection and DOES NOT require any further adjustments.

Setting the Servo Valve Maximum Pressures

Version	L	H	HH
Servo valves	8 bar	10 bar	13 bar

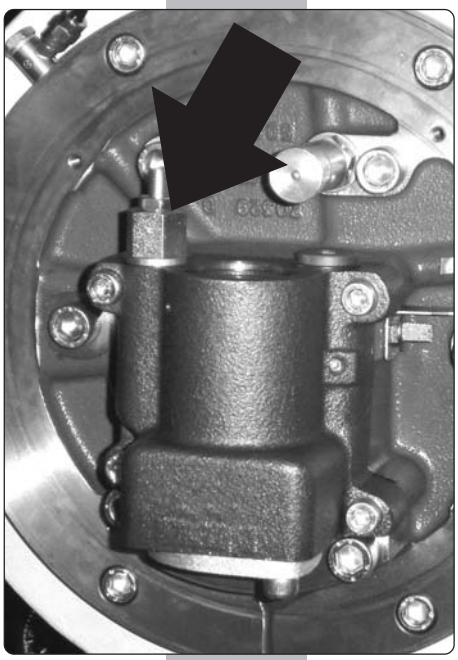
832

103

Note
Compressor operation depends on the set values; it is suggested to ask for modi cation of settings only in case of real need and with knowledge.
Only skilled personnel should make the setting.

098

WARNING !!!
DO NOT set the servovalve at HIGHER values than those used by the manufacturer, Ing. Enea Mattei S.p.A. In fact, if the machine works at higher pressures it requires more power; this could lead to overheating and machine shutdown.

851

099

MAESTRO^{xs} is a programmable device to control the machine that can adapt its operation to the speci c requirements of the network it is connected to.

It has several programming levels, with special possibilities of control/analysis of operation and of failures.
The advanced programming and analysis levels are protected by digital codes so as to prevent any unintentional tampering.
Maestro^{xs} has a storage that saves the settings made over time as well as the data on operation even if the machine is not connected to the electrical line or if voltage drops occur.
A weekly schedule of starts/stops can be set that is combined with the management of the connection to other machines so as to control any multiple installations as ef ciently as possible.
“Maestro xs” is a control device made up of two separate units:

- Display with keypad
- Data input-output device

Keypad

The buttons are backlit for enhanced clarity and, in some cases, in order to complete the information provided by the device.

852

Reset buttons: Resets any faults detected by the system. Eliminate the reason for the fault rst.

853

On / Off button: Enables and disables the compressor.

854

Esc button: Accesses the main menu and exits the current menu.

855

Up button: Moves around the various menus. Also increases the value of a variable in the edit mode.

856

Enter button: Accesses the selected menu and opens and closes the memory in the edit mode.

857

Down button: Moves around the various menus. Also decreases the value of a variable in the edit mode.

801a

Foreword

660

The user should appoint a quali ed person for operation and maintenance of the machine.

He should properly train all operators, so that they are acquainted with all needed measures to prevent any accident or injury to people.

All start and stop procedures as well as emergency ones should be known; they should be also periodically checked with the operators.

The operating and maintenance manual should be always available; in case of loss or damage, further copies can be purchased from Mattei's sales organisation.

Checks before start

Before starting the machine, ensure that:

- ❑ the electrical system complies with voltage and power of the machine and that wires are of suitable section;
- ❑ the machine is earth connected and protected against possible short circuits;
- ❑ the mains isolator is installed near the machine;
- ❑ the machine oil level is correct; with the compressor not operating and without pressure inside the chamber the oil should exceed the visual level indicator. In case of low level, top up with suitable oil of the same type as in use;
- ❑ the machine is connected to the compressed air system.

Operation Modes

Mattei compressors, to best comply with the users' need, have been designed to work in three main modes: Continuous, Automatic and Modulation.
The factory-preset mode is AUTOMATIC. To change the setting please refer to section 6.3.1 of MAESTRO^{XS} operating manual.

An overview of these three options is given below.

Continuous (Cont)

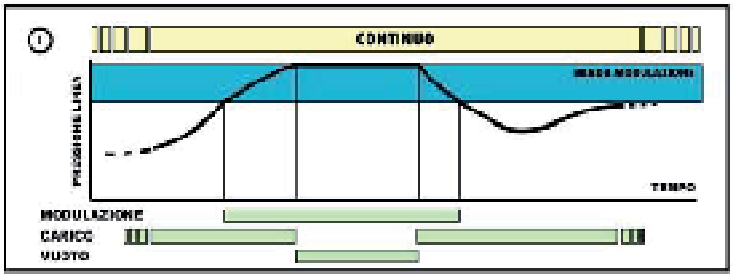

072

In this mode, the compressor delivers air within a clearly defined pressure range; maximum and minimum values are factory-set by Mattei though they can be customised using the programming functions in the [User] menu. When pressure reaches the maximum value (Pmax) the compressor is off-loaded (suction valve closed) and decompressed in order to reduce power consumption. As soon as a request for air from the network reduces pressure to the minimum value (Pmin) the compressor loads again and resumes air delivery. The compressor can be stopped at any time by pressing the stop button: the stopping procedure comprises a no-load run phase which lasts for a set time during which the compressor is decompressed.

Nota
If the unit is enabled with a line pressure greater than the set minimum pressure, the compressor does not start but waits for the pressure to fall below the minimum value.

Automatic (Auto) (**Preset** Mode)

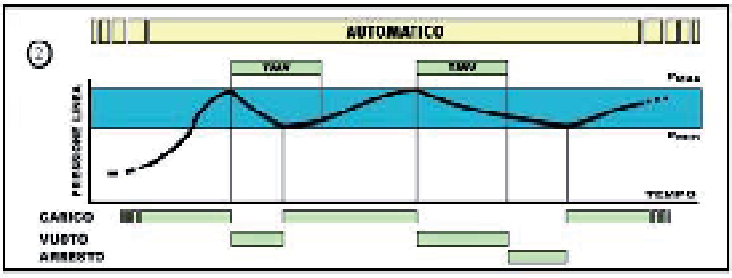

073

This mode adds another function to the previous one: the compressor can automatically stop at low or no air demand conditions. The cycle is the following. When line pressure reaches Pmax, the compressor is "off-loaded"; at this point, two things can happen:

1. if there is no demand for air it runs no-load for a certain period of time TMV (No-load Run Time) and stops when this period of time expires; it starts again as soon as line pressure falls below Pmin;
2. if line pressure falls to Pmin before TMV expires, the compressor is "recharged".

The above operating mode can be combined with a special characteristic of MATTEI rotary compressors, the MODULATION phase.

By suitably adjusting the its “servo-valve”, the compressor can modulate before reaching Pmax. This means that Pmax can only be reached in case of very low or nil demand.

Nota
If the unit is enabled with a line pressure greater than the set minimum pressure, the compressor does not start but waits for the pressure to fall below the minimum value.

Modulation

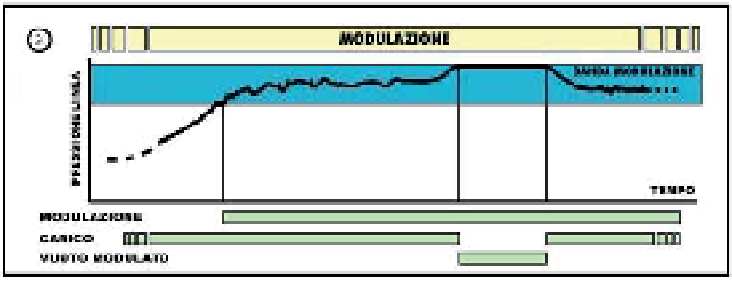

00744

All MATTEI compressors are fitted with an automatic system for adjusting pressure according to delivery pressure. The internal pressure of the compressor depends (partly) on line pressure and, consequently, on the demand for air; when the latter drops or is nil, line pressure and internal pressure increase. In Mattei compressors, the maximum pressure at which the unit runs no-load can be set (by calibrating a valve). For values slightly below maximum, the suction valve is only “partially” closed by suitably modulating machine capacity to line requirements. Maximum pressure and values slightly below this define a field or range which is known as a MODULATION BAND.
This operating mode exploits this potential. The control unit ignores the Pmax and Pmin. settings and operates the compressor without stopping except in case of an operator command.

Nota
The modulation bandwidth is typically 0.3 bar.

Suppose maximum no-load pressure is set (using the SERVO-VALVE) to 7.3 bar.

- For pressure values lower than 7 bar (7.3 - 0.3 = 7), the compressor delivers 100% of its capacity.
- For values ranging from 7 to 7.3 bar (the modulation band), the compressor delivers less than its rated capacity, suitable for line demand.

099

Upon delivery, the compressor is protected by an alphanumerical code which must be provided by Mattei and entered the first time it is switched on.
The compressor will not work if this code is not entered because, as soon as the compressor is powered, the screen shown appears with the cursor flashing in the top left-hand corner.

859

ENTERING THE CODE

Press < ↵ > to move the cursor to the first digit of the code to enter.
Press <↓> and <↑> to select the letters or numbers to enter and confirm with < ↵ >.
The cursor automatically moves on to the next position after each digit is confirmed and, if the code has been correctly entered, the first page of the menu appears [MONITOR].
If the code is entered incorrectly, instead, MAESTRO xs asks for the entire code to be re-entered.

After being entered correctly, the code will no longer be requested.
From now on, the compressor can be used and configured.

In order to communicate with the user, MAESTRO^{xs} features carious menus that allow the compressor to be monitored and programmed. These are divided by function and not all of them can be accessed by the final customer. Some of them are protected by one or more passwords.
The menus are divided according to the functions that they control.
The main menus used to manage the compressor are:

Menu	User access	Password	Menu ID
Monitor Menu	Yes	No	0
User Menu	Yes	No	1
Advanced Menu	No	Yes	2
Clock Menu	Yes	No	3
Log Menu	Yes	No	4
Network Menu	Yes	No	5
Info Menu	Yes	No	6

To simplify use of the compressor, some symbols are used to graphically represent certain functions, such as machine status and other settings.
Other symbols are used to report operating problems, special enabled functions, etc..
The various menus also use texts informing the user of the meaning of the variables and the functions they perform.
To simplify traceability of a variable, every menu is identified by a number, as shown in table 3. The same applies to the submenus and individual variables.

For a more detailed description of individual menus, please refer to the Maestro xs manual (code TE-CA2G-007) supplied with this manual.

Operational Failures

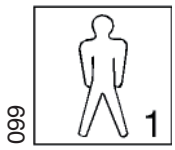

Failures can be divided as follows:
- ❑ Failures with an intervention signal (alarms)
- ❑ Failures causing the immediate stop of the compressor (blocks).

The card signals a failure by lighting of the reset button, together with a visual signal through icons and a sliding description.

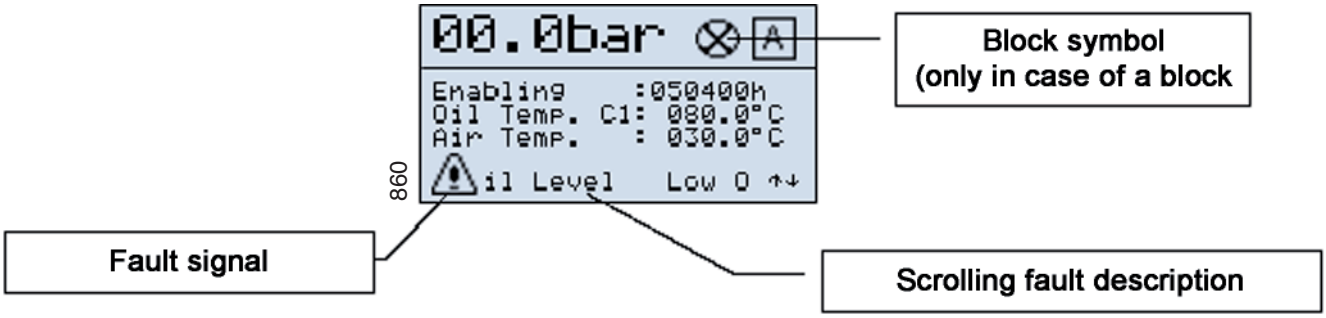

Press the “reset” key once, for more information about the kind of failure occured. A page appears that contains the information on the failure and speci cally:

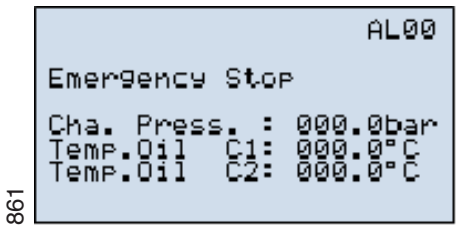

- ❑ The event code
- ❑ The working time at which the failure occurred
- ❑ The detailed description of failure to the main compressor (C1)
- ❑ The detailed description of failure to the additional compressor (C 2) when tted
- ❑ The chamber pressure at the moment of failure

All these information are stored in the incorporated historical archive together with other information, and it is possible to store up to 20 failures
When the failure number exceeds the allowed limit, the system clears the least recent failure to insert the latest one.
Press ““**Reset**” key a second time to reset the compressor operation.

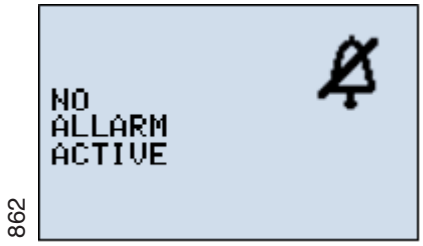

Note : for Plus versions the faults “frost alarm” and “high dewpoint” are visually signalled when the dewpoint temperature is out of the standard operating range, with automatic restoring as soon as the temperature goes back to the normal values.
See MAESTRO xs manual (code TECA2I-007) supplied together with this manual.

WARNING !!!
If the failure cause cannot be solved, the compressor will not start as the failure appears to be still active and re-displays the intervention request.

WARNING !!!
The rotation in the wrong direction can seriously damage the compressor.

099

Once all foreseen operations before starting have been performed, and which have been described in the Sections above, the Maestro page displayed to the operator is :

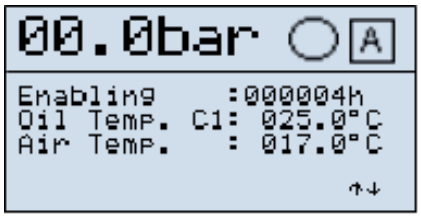

863

Starting
Press the key to switch the compressor “on”

853

The led lights with yellow colour.

The compressor is started. It starts off load (intake valve closed) and then goes on load after a pre-set time, subsequent to the star-delta switching delay

The compressor, from this moment on, delivers compressed air according to the set operation mode.

After starting, the page below appears within few seconds

864

Stop
To stop the compressor, press key

853

The yellow led of the ON key turns off.

The display shows:

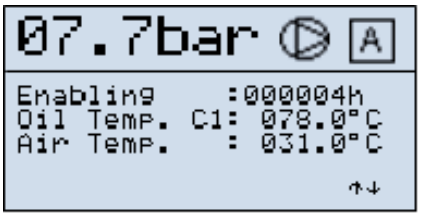

865

The compressor is unloaded (decompressed) for a preset time (basic programming).

After the motor has stopped the residual pressure inside the compressor discharges completely in approximately one minute.

The display will show the following page

866

099

The machine can be restarted according to the above sequence, but it will start again only if the internal pressure has lowered under the maximum allowed value for the re-start (preset factory data not changeable by the user)

NOTE

MAESTRO^{XS} has a control logic that prevents an excessive number of consecutives starts.

This logic is cleared by the user 's manual intervention, if he/she acts directly by turning off and on the machine manually.

WARNING

098

An excessive number of consecutive starts may damage the main motor.
Operate manually only in case of real need and wait for a reasonable amount of time before restarting the machine.

The number of starts depends now on many parameters,the rated power,the operation cycle,the working pressure,and the ambient temperature.

For any requirement,please contact MATTEI.

801a

Suggestions on maintenance

Machine cleaning

Cleaning of the equipment should be carried out at regular intervals, following the schedule in this manual.
To clean delicate parts of the machine direct the compressed air jet so that neither machining waste nor humidity can penetrate in the mechanic assemblies.
Only use lint-free cloths to clean internal and/or moving parts (in contact with lubricant).
Always use perfectlly dry air during the cleaning and at suitable pressure to avoid injuries to the operator.

Maintenance schedule

The time intervals in the maintenance tables are only reference values concerning the machine operation at the company's conditions.
Environment factors affecting these intervals are mainly: machine environment (temperature, humidity) and air pollution.

Machine lubrication

Use only the lubricant quantity needed to lubricate the involved mechanism. Carefully dry the excess oil or grease with a cloth.
Sometimes an excess or a lack of lubricant may jeopardize the machine operation.
Only recommended lubricants or well known and tested equivalent lubricants should be used for lubrication
Replacement of the exhausted oils should be made when the machine is warm. The oil temperature should range between 25 and 30 °C. (see section 8).
The draining and lling holes should not be left open for more than the time needed to replace the oil.

Jobs to be performed during maintenance

During maintenance operations pay attention to all signs that may precede a failure, and speci cally:
- presence of corrosion,
- presence of wear,
- presence of loose unions or connections,
- presence of oxidized contacts,
- after each maintenance operation, exhaust the air from the pneumatic pipings.

Minimizing downtimes after a failure

It should be noted that correctly performed maintenance interventions may minimize downtimes after a failure.
A repair made in due time prevents further deterioration.
Only use original spare parts and repair the damaged component thoroughly, by your factory or send it to the nearest authorised service centre.

098

Regular Checks
WARNING !!!

101

After the first 50 hours of operation and every 6 months or 1000 hours:
- tighten nuts and screws fixing the cables in the command and control electrical board and in the terminal board of electrical motors.

102

Within the first 300 hours of operation:
- clean the oil return valves (Page 7.04).

Weekly (or every 50 hours)
- Check the oil level
- Check and Clean the solenoid valve lter of condensate drain (with optional kit).

Monthly (or every 200 hours)
- Clean the suction lter.
- Clean the oil radiator
- Clean the air radiator
- Clean the intake pre lter

Every three months (or every 500 hours)
- Clean the oil return valves

Twice a year (or every 1.000 hours)
- Replace the suction lter
- Tighten nuts and screws xing the cables in the command and control electrical board and in the terminal board of the motor

Yearly (or every 2.000 hours)
- Replace the oil lter
- Replace the oil return valves

Oil change
Rotoroil 8000 F2:
- every 12 months or 5.000 hours

Rotoroil 8000 F4:
- every 12 months or 5.000 hours

Rotoroil 8000 FG:
- every 12 months or 1.000 hours

Replace the oil filter at every oil change.

098

WARNING !!!
In dusty environments and/or at high temperatures, maintenance operations should be carried out more frequently.
The manufacturing date is quoted on rubber hoses.
Their operating life span is 3 years, after which they should be replaced.

098

WARNING !!!
Preventive maintenance agreements are available that help the user maintain the machine in the best working and ef ciency condition.
Please refer to **Ing. ENEA MATTEI S.p.A.** / **M.T.A.** for further details.

098

WARNING !!!
For compressors equipped with INVERTER, before performing any maintenance job, wait at least 5 minutes after you have disconnected the electricity supply.

362

017

833

101

Check of oil level (Photo 1)
When the compressor is not running and without pressure in the chamber, the oil level should exceed the speci c visual indication pilot light.

When the compressor is running and on load, the oil level should be about half of the pilot light.

Cleaning and/or replacing the air suction filter (Photo 2)
Unscrew the blocking knob and remove seal.
Remove the cover and withdraw the ltering cartridge. Clean the cartridge with compressed air.
Direct the air jet to the inside of the cartridge. To reassemble apply the reverse procedure of the disassembly.
Check seal and replace it, if damaged.

Cleaning the oil/air radiator (Photos 3)
The radiator is in the machine body.
The cooling ow goes through the radiator from the inside to the outside of the machine.
Hence blow a jet of compressed air through the radiator on the side of the opening of the cooling air exhaust.
Remove any dirt that has come from the inside of the machine body.

Centrifugal fan
Considering the compressor cleaning air ow, an air current owing from bottom to top crosses the radiator.
Hence, dust will mainly deposit on the lower part.
To clean, proceed by removing the speci c door on the conveyor and blowing the radiator with a compressed air ow.

Axial fan
The same conditions as mentioned above in terms of air ow apply here too. In this case, the radiator is free from any obstruction preventing such an operation.

834a

101

Cleaning the pre-filters

The machine is equipped with a pre- lter to remove dust and is articulated by the in ow of air.

It glides on metallic guides in the side door and should be withdrawn from its housing for replacement or cleaning purposes.
It lters the suction air and washes the compressor while preventing foreign matters from entering the machine.

Frequent cleaning of panels is required. To do this, open the door from the xing locker, withdraw the panel and blow on it with a compressed air jet.

The synthetic material can be washed whenever necessary.

For washing no solvents should be used.

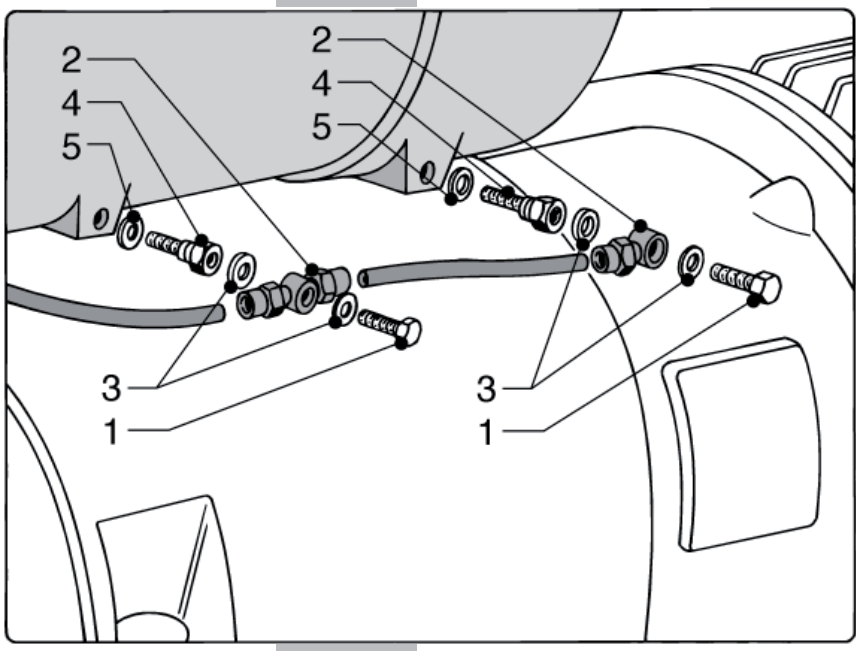

101

Cleaning and/or replacing the oil return valves

Unscrew the holed screws (1) blocking the oil return hose connections (2). Be very careful not to loosen the sealing washers (3). Unscrew and remove the oil return valves (4). Wash the valves with detergent and blow on them with some compressed air. Replace the sintered lter if it is very encrusted.
For the assembly, remember to always replace the OR-Ring (5) and proceed with the reverse procedure applied for disassembly.

044

101

Replacing the oil filter

Replace the oil filter every time the oil is changed. Once the oil has been drained (See section on the oil change), unscrew screws (Photo 1) from the filter cover and remove it after having rotated it 90° (Photo 2) in order to facilitate the grip.
Remove filter (Photo 3) from cover.
Before mounting a new filter, clean the housing.
To assemble, apply the reverse procedure while checking the condition of the OR-Ring on the cover and replace it if damaged.

047

048

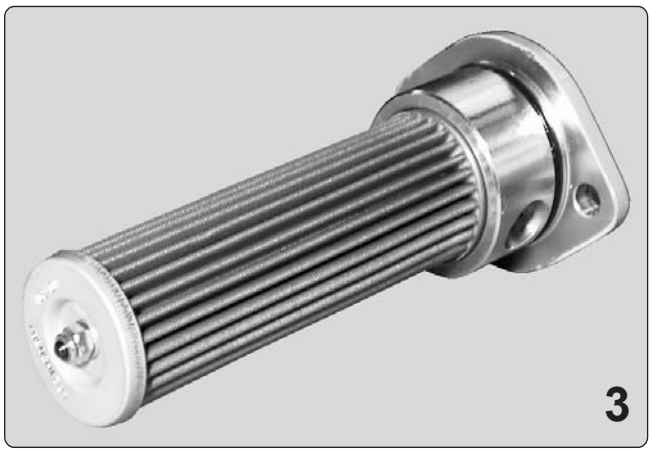

835

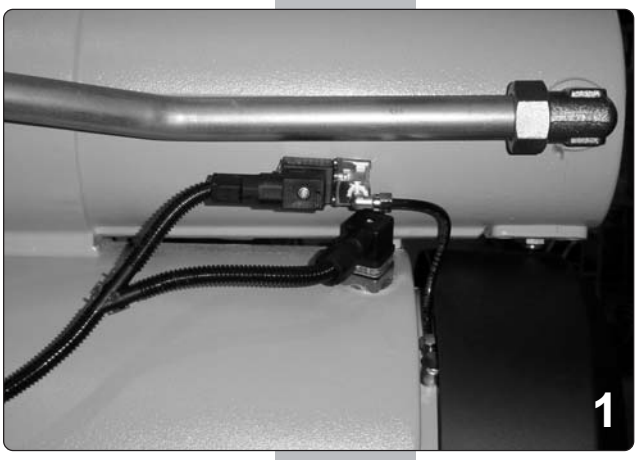

030

101

Replacing the air - oil separators elements

Under normal operating conditions, the separators should be replaced if an excessive consumption of oil or a high pressure drop through them occurs.

To accomplish this operation, proceed as shown in the subsequent photos regardless of the kind of fan used:

- Disassemble the solenoid valve connector for the off load, which is on the back of the separator body, and detach the relevant tube (photo 1).
- Proceeding as described in item 7.04 detach the small pipes of the oil return valves and the xing screws of the separator assembly (photo 2).
- Remove the delivery air tube. Loosen the ring nut (photo 3) of the holed screw (photo 4-5) xing the separator body to the oil chamber.
- Withdraw it while noting the reference notch position of the holed screw (photo 3-4):
  in the following mounting, it will have to be repositioned in the same way.

Now replace the ltering elements.

842

067

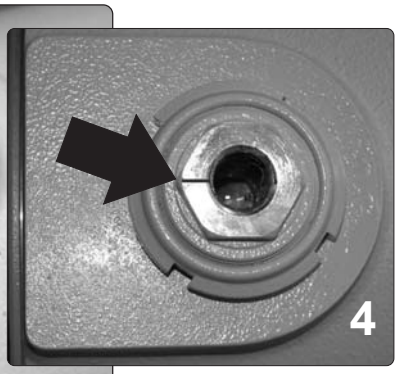

843

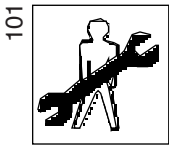

Replacing the air - oil separators

Withdraw the cover to which the separator element is xed while prizing with the suitable tools in the round groove of the cover (photo 6-7).
Loosen the ring nut, remove the sealing washer, the cover and the separator element with the relative O-ring.
Replace the element.
Replace the seal ring. Re-assemble the various parts, making especially sure that the O-rings (photo 9) are perfectly positioned in their corresponding housings.
Applying a veil of grease could help to keep them positioned during mounting.

Important: The holed screw should be re-positioned with its notch facing in the right direction (photo 3-4).

839

740

841

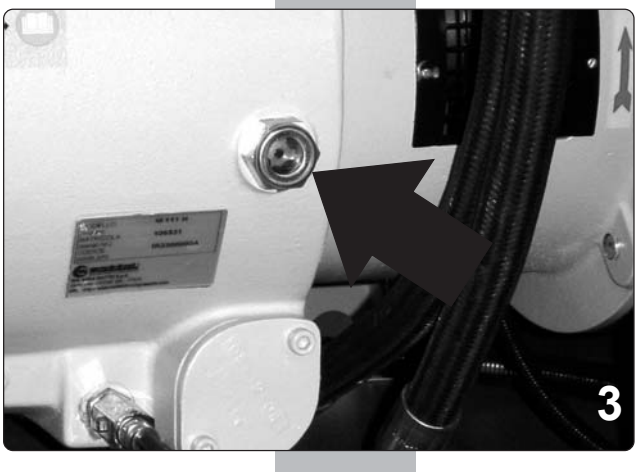

101

Foreword

As mentioned above, oil performs multiple functions that are crucial to the smooth operation of the compressor and, consequently, it is essential check both its quantity and condition at the recommended frequency.
Please refer to the speci c tables for selecting the oil types most suitable to the different operating conditions.

First change of oil

If not otherwise indicated on the speci c plate, the compressor is supplied with Rotoroil 8000 F2 oil.
The rst oil change and the rst oil lter change should take place within 5000 hours or a year.
It is to be noted that expired oil is dangerous for the smooth operation of the compressor, hence once the forecast interval for its change has elapsed, it should be replaced.
Oil replacement should be done with the machine off and with warm oil.

To drain oil, wait for the complete depressurization of the compressor, while verifying that the pressure gauge on the separator or on the tank shows that no more pressure exists inside.
Unscrew the cap of the lling gate slowly (Photo 1), while paying attention to the possible presence of foam. If necessary, wait for some minutes for the oil to demulsify.
Open the drain cock (Photo 2) and drain the oil into a suitable container.
Close the drain cock upon the operation end. Fill the oil chamber with new oil to lap the gate.
Replace the cap seal and tighten it well.
Start the compressor and let it run for some minutes, and then stop it. Check the correct level by means of the speci c indicator (Photo 3) and ll it up again, if necessary.

Using Rotoroil lubricants
It is recommended to use Mattei Rotoroil 8000 Lubricants.
The subsequent changes could be made at the forecasted intervals.
Should the machine have already worked for a long period with other oils, and should lacquers and deposits be present, then it is recommended to wash with Rotoroil 8000 F2/F4 for some 200 hours, so as to remove all residual impurities.
It is also recommended, when lling the machine up with new oil, to replace the oil lter and the ltering elements of the separator.

Lubricants are flammable products.

Observe the indications given on the containers !

During the disposal of exhausted lubricants it is necessary to comply with following environment protection rules:

• Lubricants may contaminate water and soil !
Never pour lubricants on the ground, into water, or in the sewerage system.
Any infringement of these rules can be legally prosecuted! When handling lubricants keep an oil agglomerative base near the working area.
• Recover the exhausted lubricants while separating the mineral based from synthetic lubricants. Upon disposal, please comply with current regulations concerning the disposal of exhausted oils.

Only the use of lubricants with suitable quality guarantees a safe operation of the machine.

It is forbidden to mix lubricants of a different quality, as their composition and additives are not the same.

This rule should be mainly applied to synthetic and mineral lubricant mixtures.

If other lubricants are to be used, it should be veri ed beforehand if the two products are compatible.
In case of doubts, the lubricant used up to that moment should be completely eliminated, by means of a washing procedure of the uid circuit.
To avoid any risk of contamination, the lubrication procedures should be carried out under “absolute cleanliness” conditions.
All manufacturers of lubricants mentioned in the table offer a technical information service that may answer all your questions on lubrication.

WARNING on lubricants

The correct use of suitable lubricants considerably helps to obtain the maximum performance and the elimination of failures.
During the handling of lubricants on equipments, it is essential to strictly comply with the following precautions, for sanitary protection:

- Avoid any prolonged, excessive or repeated contact of the skin with lubricating products as well as avoid inhalation of their vapours or fumes.
- Wear suitable clothing and protections to protect the skin (for instance overalls, eyeglasses or, as far as allowed by the safety rules, protection gloves) or apply a protective product.
- Clean dirty skin carefully by abundantly washing it with water and soap.
- Apply a skin cream after washing.
- Take out and change clothes and shoes soaked with oil.
- Never put oil soaked cloths in one’s pockets.

General

Several oils are available on the market and research continuously improves their characteristics and it changes the names and speci cations.

When the warranty period is over, during which the use of Mattei Rotoroil lubricant is compulsory, the user can decide to use the oil he believes most suitable or the available one, provided it is suitable for rotary vane compressors.

Only manufacturers of lubricants can recommend the most suitable oil for the kind of machine and for its speci c application.

The user should then purchase the lubricant from an oil company or a distributor that guarantees its suitability for the speci c use.

The cost of the best lubricant is a small percentage of the total running cost of the machine: it is suggested to purchase the best available on the market (see the section "**MATTEI LUBRICANTS**").

Please consider that in lubricated and injection cooled compressors the oil performs the listed tasks and it is subject to continuous working cycles; therefore, it should be highly resistant to oxidation to ensure long life.

The oil should also provide a good demulsivity.

Anti-oxidizing additives should provide low volatile substances at the compressor operating temperatures, so as to ensure protection between one oil lling and the other.

The user must adopt the kind of oil grade recommended by Mattei.

Please refer to the speci c table for the choice, according to the operating conditions.

Available oils on the market

There are several kinds of oils on the market, including:

- ❑ mineral based industrial oils;
- ❑ synthetic oils.

Mineral based industrial oils

These oils have been designed for different applications and also for some types of compressors.

In this case, too, there are standards specifying their features; please refer to DIN 51506 which classi es the oils as VB-L, VC-L e VD-L, according to their possibility of working at different temperatures.

The latter is suitable for high temperatures and it is resistant to oxidation caused by the continuous mixing with the air.

ISO 6743-3 classi es oils based on the operating temperature and pressure and, according to this rule, for rotary vane compressors ISO-L-DAH o DAJ oils are recommended, which are for medium and heavy applications.

The table indicates some typical values of the main characteristics."

Typical featuress of Industrial Oils	Measuring unit	Ambient temperature 5 ÷ 40	Ambient temperature -5 ÷ 30
Viscosity ISO VG	---	150	100
Viscosity at 40°	cSt	135 ÷ 165	90 ÷ 105
Viscosity at 100°	cSt	14 ÷ 16	10 ÷ 12
Viscosity Index		93 ÷ 100	100 ÷ 110
Pour point	°C	-10 ÷ -5	-15 ÷ -10
Flash point V.A.	°C	230 ÷ 265	250 ÷ 265
Volumes mass	Kg/m^3	940 ÷ 960	940 ÷ 960

Values in the Table are merely indicative

Synthetic oils

Many synthetic oils with different basis are available on the market (esters, glycols, etc) that sometimes have proved to be suitable and provide a longer life than mineral oils.
Normally they reduce carbon deposits, provide a high self-ignition temperature and are remarkably resistant to oxidation.
As synthetic lubricants are good detergents, to change the kind of lubricant in a machine and pass from a conventional mineral based to a synthetic one, it is necessary to carry out a thorough washing, following the supplier's instructions, to avoid damages to the machine if dirt, residues and deposits circulate.
It is also necessary to pay attention to condensate, as usually synthetic lubricants are more sensitive to water washing and their thin lm may not provide enough protection against rust.
This problem can be worsened if the compressor is not working continuously, but occasionally.
In this case, even though not suggesting its use, any responsibility for the choice is up to the user and to the lubricant supplier.

WARNING !!!
It is difficult to determine life of an oil, as there are different parameters affecting the same, among which the operating temperature and quality of the intake air are very important.
For this reason it is recommended to obtain precise guarantees from the supplier, validated by the analysis of samples taken from the machine, to determine the suitability of lubricant and its life.

MATTEI LUBRICANTS

Considering the important role of lubricant for operation of the compressor, Mattei offers special lubricants to the users and recommends their use.

These are:

- Mattei Rotoroil 8000 F2 (synthetic),
- Mattei Rotoroil 8000 F4 (synthetic),
- Mattei Rotoroil 8000 FG (synthetic, non toxic)

available in 2, 5 and 25 litres cans.

Their life can reach the hours shown in the table, depending on the operating temperature and conditions of the intake air.

MATTEI LUBRICANTS

Name	Ambient temperature	Operating hours (max.)
Rotoroil 8000 F2	From - 15° a + 45 °C	5000
Rotoroil 8000 F4	From - 30° a + 30 °C	5000
Rotoroil 8000 FG	From - 5° a + 40 °C	1000

Safety Precautions

There is a latent risk of re in almost all compressed air systems and ISO 5388 Standard explains the reasons.
In fact, in compressed air systems both oxygen and oil are always present and are combustible.
Should for any reason oil vapours form, these could burn in presence of a ame; an ignition source may start a re in case of use of excessive or unsuitable oil, or when neglecting maintenance.
Faulty maintenance has been mentioned, because a dirty radiator may cause a temperature rise, often quickly, which leads to oil damage and to the creation of deposits.
Such processes are accelerated if unsuitable oil is used.
Based on experience, res are almost never caused by the fact that the oil self-ignition temperature is reached (340-400 °C).
Usually the cause is that the oil, while decomposing, creates carbon residues that when in contact with air and high temperature, continue to oxidize and, under special conditions, may ignite. So it is essential to use suitable lubricants and carry out correct maintenance.

860

WARNING !!!

It is opportune that to prevent the risk of fires the best attention is given to the oil choice and to execution of all maintenance operations, and specifically:

- carry out regular and complete oil changes;
- ascertain that the coolling system is always ef cient, with often checks to the oil temperature;
- verify that protecting devices installed are always in perfect working order;
- keep the oil consumption under control;
- take care of the machine cleaning.

Storage and treatment of oils

Usually lubricant containers are built so as to prevent any contamination.
When the user receives the lubricant, it is under his responsibility to avoid damages or pollution to the same.

The lubricant may get damaged due to:

- dust and dirt;
- condensate, mainly due to absorbing humidity from the air;
- extreme temperatures;
- mixing with other oil types.

Please note that dirt in the oil reduces its ef ciency and causes wear of those parts it comes into contact with, therefore there is the need to increase maintenance.
Instead, condensate cancels the effect of some additives, often present in very limited quantities.
Oil containers should be stored in protected rooms, avoiding exposure to extreme temperatures.

860

WARNING !!!

Absolutely avoid the mixing of oils of a different grade and quality .
Although looking alike, they could not be compatible.
Also beware of oil leaks, not only being a waste, but also polluting, causing falls or injuries to people and also fires.

General

As mentioned in the section dedicated to protections, the command and control board controls the smooth operation of the compressor. It is possible that, due to the incorrect use of the machine, or incorrect maintenance or unforeseen conditions, etc., malfunctions occur and that
only their effects are indicated. The table below aims at helping the operator solve some dif culties should they arise while indicating their possible causes.

Problem - Cause - Solution

Below some possible failures are indicated with their causes and how to identify the correct solution.

PROBLEM	CAUSE	SOLUTION
A. Start MAESTRO^{XS} works, start is allowed but the star/triangle commutation does not take function correctly	The power supply line is insuf cient and the excessive drop of voltage following the start provokes the contactors to be released.	Check for the correct size of the supply line. Please refer to the “Installation, Use, and Maintenance Manual” in Section 4. Contact the nearest authorized service center.
MAESTRO^{XS} works, it enables the start by turning green LED on, but the compressor does not start.	Pressure inside the compressor is higher than the maximum tolerated value for the start: or for an abnormal return of the network air, or because the pressure transducer reads an incorrect value.	Check the inner pressure on the pressure gauge of the separator body and compare it with the value given by MAESTRO^{XS}. Verify the correct operation of the pressure detection system: transducer, collector and switching solenoid valves. Contact the nearest authorized service center.
	The hour programming has been enabled.	
	The compressor runs within a network with other compressors.	
B. Pressure The network pressure does not reach the required value.	The servo valve has not been correctly gauged.	Verify the setting. Contact the nearest authorized service center.
	The condensate drain solenoid valve is blocked in the open position (Optional kit separator/condensate drain).	Clean the specific filter to remove the cause of the block and then check operation. Please refer to the “Installation, Use, and Maintenance Manual”, Section 12.
	The minimum pressure valve does not function correctly.	Verify the operation. Contact the nearest authorized service center.
	Suction lter clogged.	Replace the lter. Please refer to the “Installation, Use, and Maintenance Manual” , Section 7.
	Request for air greater than the compressor maximum capacity.	Please refer to the Sales Organization of Ing. Enea Mattei S.p.A. to study equipment improvement..
The inner pressure exceeds the set value.	The servo valve has not been gauged correctly and/or the setting of the maximum pressure value in the [BASIC PROGRAM.] menu is incorrect.	Verify both the servo valve and the correct setting of operating parameters. Please refer to the “Installation, Use, and Maintenance Manual”, Sections 5 and 6.

PROBLEM	CAUSE	SOLUTION
C. Oil Excessive oil consumption; the level lowers too quickly; oil is detected within the network.	The filters of the oil return valves are clogged.	Replace filters and verify the causes of the clogging. (see Section 7)
D. Temperature The compressor stops due to its own over-heating.	The radiator or the filter of the cooling air is dirty; the environmental temperature is excessive for the compressor operation.	Verify the cause and remove the problem. (see Section 7)
The compressor stops due to the over-heating of the motor.	Excessive working pressure.	Verify the setting and re-set to the value foreseen for the machine. (see Section 7)
	The main motor cooling is insuf cient; the motor sucks too little air or too much warm air.	Verify the environmental conditions and the condition of the filtering panel. (see Sections 3 and 7)

General

The electric motor characteristics are given on the nameplate xed to the motor itself, and speci cally:

1. Model
2. Serial number
3. Protection degree
4. Insulation class
5. Maximum ambient temperature
6. Service
7. Service factor
8. Supply voltage [V]
9. Frequency [Hz]
10. Speed [rpm1]
11. Power [kW]
12. Power factor [cos _]
13. Rated intensity [A]
14. Motor weight
15. Type of bearings (front and rear)

Lubrication

The same plate also indicates the type of bearings mounted, for which it is recommended to use lithium based grease for lubrication.
Greasing (where necessary) should be carried out when the motor is running.
The lubrication intervals should never be longer than the solar year.

Cooling

The motor is equipped with a cover and fan, to guarantee proper cooling. Check that dirt does not form on this cover as it could reduce the cooling air passage.

Abnormal noises

Any vibration or abnormal noise is usually due to deterioration of the bearings. In this case it is recommended to replace the bearings rather than risking more serious problems to the motor or the machine.

Electrical checks

If the machine has been stored for a long period or in case of long stops in damp places, it is suggested to measure the winding insulation value by applying 500 V d.c. voltage for 60 seconds.
The insulation should be at least 10 MΩ (MegaOhms) in warm conditions or 100 MΩ in cold conditions.
Should these values not be detected and in case the motor has been exposed to damp, it is suggested to dry it for 24 hours in a furnace at 100-110 °C.
If no furnaces are available, please contact the manufacturer.

860

WARNING !!!
Before starting the machine, verify that the nuts locking the terminals of the power supply wires are well tightened.

Storage

The compressor is protected against corrosion and deterioration for the shipment period and for a relatively short (3 months) period of storage.
For any longer periods, please contact the manufacturer, while considering that the maximum time of 24 months.
However, it is suggested to keep the machine in a dry place, protected from atmospheric agents.
In case of damp climates, to protect both the electrical and the mechanical parts, the machine should be kept in a heated room or closed in a barrier- bag with heaters or light bulbs.
For the motor speci cally, please refer to that which has been indicated on the winding insulation.

Decommissioning

Decommissioning the machine does not imply special precautions but for the collection of the oil contained in the machine and the lubrication system components, i.e. the oil lter and the oil-air separators.

WARNING !!!

Both these elements and the oil should be collected and dumped in compliance with the current regulations on the environment in order to avoid any pollution and danger of fire.

Dismantling

Once the machine has reached the end of its technical and operating life, it can be demolished, i.e. decommissioned and put in such a condition so as not to be used any longer for the purposes it was designed and built, with the possible recycling of raw materials.

NOTE
Ing. ENEA MATTEI S.p.A. denies all responsibility for damage to people or things that may derive from the recycling of individual parts of the machine for functions or assembly situations different from the original ones.
Ing. ENEA MATTEI S.p.A. declines any acknowledgement, be it implicit or explicit, of the suitability to speci c purposes of parts of the machine reused after the nal dismantling the machine.

WARNING
The operations of deactivation and dismantling of the machine should be entrusted only to duly trained and equipped staff.

To deactivate the machine permanently, apply the following procedure:
- ❍ Drain the oil from the tank.
- ❍ Disconnect the machine from the power supply and pneumatic feed systems.
- ❍ Lift the machine with proper lifting apparatus.
- ❍ Remove the machine from its main components
- ❍ Block all moving parts of the machine.
- ❍ Dump all the machine components in controlled dumping sites

Residual risks after deactivation
After deactivating the machine, if all moving parts have been duly blocked, no residual risks exist.

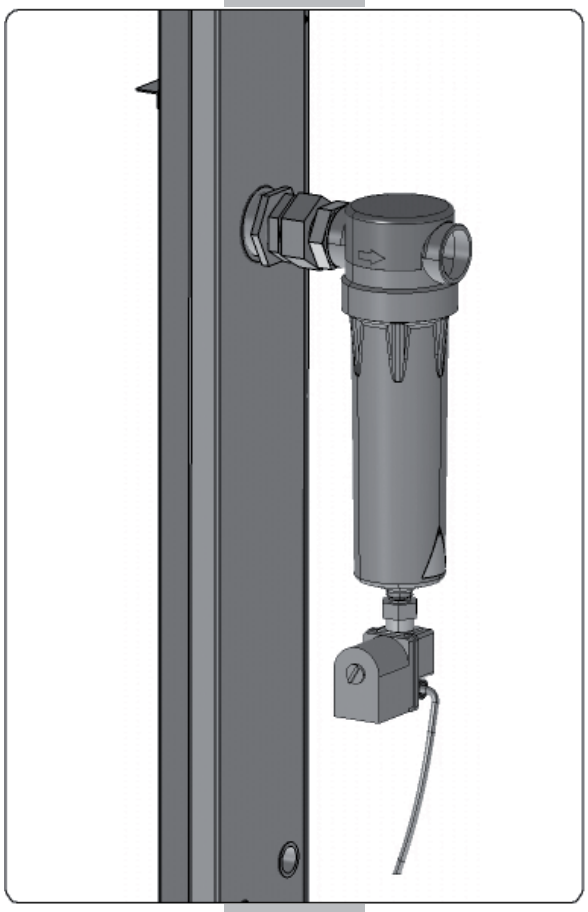

079

024

101

Cleaning the drain solenoid valve filter

Unscrew the connection and remove the drain solenoid valve.
Withdraw the solenoid valve lter using beak pliers, remove any dirt and wash with detergent.
Re-assemble in the reverse order while paying special attention to the position of the solenoid valve seal.

023

Form to request Technical Service

M.T.A. S.P.A. MECCANICA TECNICA ASSISTENZA
Corso Italia, 47 – 24049 VERDELLO - ZINGONIA (Bergamo) - Italy
TEL: +39 - 035/4186400 (Ric.Aut.) FAX: +39 - 035/4186490
e-mail: info@mta.bg.it
C.P. N° 69 Zingonia

Company _____

Address _____

Please note our request for intervention for our machine :

Modell _____ Serial Number _____

Intervention to be carried out at :

Contact Person _____

Telephone _____

Failure	**Description**
Electrical	_____
	_____
	_____
	_____
	_____
	_____
Mechanical	_____
	_____
	_____
	_____
	_____
	_____

Notes _____

_____

_____

On *(date)* _____ li, _____

Stamp and Signature

Form to request spare parts

M.T.A. S.P.A. MECCANICA TECNICA ASSISTENZA
Corso Italia, 47 – 24049 VERDELLO - ZINGONIA (Bergamo) - Italy
TEL: +39 - 035/4186400 (Ric.Aut.) FAX: +39 - 035/4186490
e-mail: info@mta.bg.it
C.P. N° 69 Zingonia

Company _____

Address _____

Please note our order no. _____ of _____ cwith required delivery on _____ for our machine :

Modell _____ Serial Number _____

Reference	Description	Quantity

Notes _____

_____

_____

On *(date)*_____ li, _____

Stamp and Signature

Parts to be replaced during maintenance

DESCRIPTION	CODE	COMPONENTS	QUANTITY
Maintenance Kit	IF57A22422	Air lter	1
		Air lter seal	1
		Oil return valve	2
		Oil return valve OR-ring	2
		Oil plug seal	2
		Oil lter OR-ring	2
		Oil lter	1
Separator oil kit	IF57A22421	Washer	3
		O-ring	6
		Separator	3
		O-ring	2
		O-ring	1
		O-ring	1
		Oil return valve	2
		Oil return valve O-ring	2
Pre lters	C098024079	Pre lter	1

Lubrificanti Mattei ROTOROIL 8000

COMPONENT	CODE	DESCRIPTION	QUANTITAY
Oil F2	BCL06FC002	Can	2 liters
	BCL06FC005	Can	5 liters
	BCL06FC025	Can	25 liters
Oil F4	BCL06SC002	Can	2 liters
	BCL06SC005	Can	5 liters
	BCL06SC025	Can	25 liters
Oil FG	BCL06AC002	Can	2 liters
	BCL06AC005	Can	5 liters
	BCL06AC025	Can	25 liters

mattei®
BEST SOLUTIONS IN COMPRESSED AIR

DESIGN DATA
SERIE 1000
SCHEDA TECNICA

TYPE / TIPO			**AC 15 / AC 15 *plus***		
VERSION / *VERSIONE*			**L**	**H**	**HH**
Air end nominal pressure [bar(g)] *Pressione nom. unità di compressione*			8	10	13
PERFORMANCES / *PRESTAZIONI*					
		bar (g)			
Air delivery / *Portata effettiva*	**[l/min]**	5	2750	-	-
Terminal power / *Potenza ai morsetti* (2)	**[kW]**		15,85		
	[l/min]	6	2740	2260	-
	[kW]		17,27	14,75	
	[l/min]	7	2710	2240	-
	[kW]		18,65	15,93	
	[l/min]	**7,5** (1)	**2700**	2230	-
	[kW]		**19,3**	16,49	
	[l/min]	8	-	2220	1910
	[kW]			17,05	16,02
	[l/min]	9	-	2210	1900
	[kW]			18,07	17,01
	[l/min]	**9,5**	-	**2200**	1895
	[kW]			**18,4**	17,28
	[l/min]	10	-	-	1890
	[kW]				17,81
	[l/min]	11	-	-	1880
	[kW]				18,52
	[l/min]	12	-	-	1875
	[kW]				19,07
	[l/min]	**12,5**	-	-	**1870**
	[kW]				**19,22**
Off load power / *Potenza assorbita a vuoto*		[kW]	3,38		
Sound pressure level **(3) (6)** / *Livello pressione acustica* **(3) (6)**		[dB(A)]	67		
REFERENCE CONDITION / *CONDIZIONI DI RIFERIMENTO*					
Intake pressure / *Pressione d'aspirazione*		[bar(a)]	1		
Intake temperature / *Temperatura aspirazione*		[°C]	20		
Relative humidity / *Umidità relativa*		%	0		
Nominal motor speed / *Velocità nominale motore*		[g/1']	1500		
ELECTRICAL CHARACTERISTICS / *CARATTERISTICHE ELETTRICHE*					
Motor rated power / *Potenza nominale motore*		[kW]	15		
Voltage **(4)** - Frequency / *Tensione* **(4)** - *Frequenza*		[V/Hz]	230/50 or / oppure 400/50		
Enclosure-Insulation class / *Grado prot.-Classe isolamento*			IP55-F		
Electric starting / *Tipo avviamento*			Star delta / *stella triangolo*		
Fan rated power **(6)** / *Potenza assorbita vent.* **(6)**		[kW]	--		
Auxiliary circuit voltage / *Tensione circuito ausiliario*		[V]	110		
Supply min wire section / *Sez. min cavo alimentazione*		[mm2]	25 or / oppure 10 (x 10 m)		
TYPE OF REGULATION / *TIPO DI REGOLAZIONE*					
Modulation / *Modulazione*			intake proportional valve / *valvola aspirazione proporzionale*		
On load, off load and stop / *Marcia a carico, a vuoto e arresto*			pressureswitch / *controllo pressostatico*		
On load, off load / *Marcia a carico, a vuoto*			pressureswitch / *controllo pressostatico*		
DRYER / *ESSICCATORE* (only Plus / *Solo Plus*)					
Absorbed power / *Potenza assorbita*		[kW]	1,05		
Gas			R 404 A		
Nominal dew point / *Punto di rugiada nominale*		[°C]	3		
OTHERS / *VARIE*					
Allowable ambient temperature / *Temp. Amb. min-max*		[°C]	+1 / +40		
Outlet air temperature **(5)** / *Temperatura uscita aria* **(5)**					
AC version / *Versione AC*	plus version / *Versione plus*	[°C]	≤ 30	20	
min-max oil temperature / *Temperatura min e max olio*		[°C]	80÷110		
Cooling air flow rate **(6)** / *Portata aria di raffreddamento* **(6)**		[m3/h]	70		
Fan residual head **(6)** / *Prevalenza residua ventilatore* **(6)**		[Pa]	20		
Total recoverable heat / *Calore totale recuperabile*		%	~ 95		
Oil system capacity / *Capacità circuito olio*		[l]	10		
Oil carry over / *Residuo olio nell'aria compressa*		[ppm]	≤ 3		
Air outlet size / *Attacco uscita aria*			Rp 1"		
Condensate drain outlet size / *Attacco scarico di condensa*			--		
plus version / *versione plus*			2 x Rp ¼		
with condensate sep. KIT **(7)** / *con KIT separ. condensa* **(7)**			ø 10		
Water inlet-outlet size / *Attacco ingresso-uscita acqua*			--		
With heat recovery kit **(7)** / *con KIT recupero calore* **(7)**			2 x Rp ½		
LxWxH / LxLxA		[mm]	1510 x 800 x 1200		
Weight with oil / *Peso con olio* AC	AC *plus*	[kg]	450	490	

(1)= According to ISO 1217 (annex "C") / *Secondo ISO 1217 (annesso "C")*
(2)= Whitout dryer power (only Plus version) / *Esclusa potenza essiccatore (versioni Plus)*
(3)= According to PN8NTC2.3 measured at 1m distance / *Secondo PN8NTC2.3 misurato alla distanza di 1m*
(4)= According to CEI 38 / *Secondo CEI 38*
(5)= According to reference conditions indicated / *Alle condizioni di riferimento indicate*
(6)= Frequency 50 Hz / *Frequenza 50 Hz*
(7)= Optional / *Opzionale*

mattei®
BEST SOLUTIONS IN COMPRESSED AIR

DESIGN DATA
SERIE 1000
SCHEDA TECNICA

TYPE / TIPO			**AC 15 / AC 15 *plus***		
VERSION / *VERSIONE*			**LX**	**HX**	
Air end nominal pressure [bar(g)] *Pressione nom. unità di compressione*			8	10	
PERFORMANCES / *PRESTAZIONI*					
		bar (g)			
Air delivery / *Portata effettiva*	**[l/min]**	5	3070	-	
Terminal power / *Potenza ai morsetti* (2)	**[kW]**		18,15		
	[l/min]	6	3050	2720	
	[kW]		19,77	17,96	
	[l/min]	7	3020	2700	
	[kW]		21,35	19,39	
	[l/min]	**7,5 (1)**	**3010**	2690	
	[kW]		**22,1**	20,07	
	[l/min]	8	-	2680	
	[kW]			20,75	
	[l/min]	9	-	2660	
	[kW]			21,99	
	[l/min]	**9,5**	-	**2650**	
	[kW]			**22,4**	
	[l/min]	10	-	-	
	[kW]				
	[l/min]	11	-	-	
	[kW]				
	[l/min]	12	-	-	
	[kW]				
	[l/min]	**12,5**	-	-	
	[kW]				
Off load power / *Potenza assorbita a vuoto*		[kW]	3,38		
Sound pressure level **(3) (6)** / *Livello pressione acustica* **(3) (6)**		[dB(A)]	69		
REFERENCE CONDITION / *CONDIZIONI DI RIFERIMENTO*					
Intake pressure / *Pressione d'aspirazione*		[bar(a)]	1		
Intake temperature / *Temperatura aspirazione*		[°C]	20		
Relative humidity / *Umidità relativa*		%	0		
Nominal motor speed / *Velocità nominale motore*		[g/1']	1750		
ELECTRICAL CHARACTERISTICS / *CARATTERISTICHE ELETTRICHE*					
Motor rated power / *Potenza nominale motore*		[kW]	15		
Voltage **(4)** - Frequency / *Tensione* **(4)** - *Frequenza*		[V/Hz]	230/60 or / oppure 460/60		
Enclosure-Insulation class / *Grado prot.-Classe isolamento*			IP55-F		
Electric starting / *Tipo avviamento*			Star delta / *stella triangolo*		
Fan rated power **(6)** / *Potenza assorbita vent.* **(6)**		[kW]	--		
Auxiliary circuit voltage / T*ensione circuito ausiliario*		[V]	110		
Supply min wire section / *Sez. min cavo alimentazione*		[mm2]	25 or / oppure 10 (x 10 m)		
TYPE OF REGULATION / *TIPO DI REGOLAZIONE*					
Modulation / *Modulazione*			intake proportional valve / *valvola aspirazione proporzionale*		
On load, off load and stop / *Marcia a carico, a vuoto e arresto*			pressureswitch / *controllo pressostatico*		
On load, off load / *Marcia a carico, a vuoto*			pressureswitch / *controllo pressostatico*		
DRYER / *ESSICCATORE* (Only plus / *Solo plus*)					
Absorbed power / *Potenza assorbita*		[kW]	--		
Gas			R 404 A		
Nominal dew point / *Punto di rugiada nominale*		[°C]	3		
OTHERS / *VARIE*					
Allowable ambient temperature / *Temp. Amb. min-max*		[°C]	+1 / +40		
Outlet air temperature **(5)** / *Temperatura uscita aria* **(5)**					
AC version / *Versione AC*	plus version / *Versione plus*	[°C]	≤ 30	20	
min-max oil temperature / *Temperatura min e max olio*		[°C]	80÷110		
Cooling air flow rate **(6)** / *Portata aria di raffreddamento* **(6)**		[m3/h]	77		
Fan residual head **(6)** / *Prevalenza residua ventilatore* **(6)**		[Pa]	20		
Total recoverable heat / *Calore totale recuperabile*		%	~ 95		
Oil system capacity / *Capacità circuito olio*		[l]	10		
Oil carry over / *Residuo olio nell'aria compressa*		[ppm]	≤ 3		
Air outlet size / *Attacco uscita aria*			Rp 1"		
Condensate drain outlet size / *Attacco scarico di condensa*			--		
plus version / *versione plus*			2 x Rp ¼		
with condensate sep. KIT **(7)** / *con KIT separ. condensa* **(7)**			ø 10		
Water inlet-outlet size / *Attacco ingresso-uscita acqua*			--		
With heat recovery kit **(7)** / *con KIT recupero calore* **(7)**			2 x Rp ½		
LxWxH / LxLxA		[mm]	1510 x 800 x 1200		
Weight with oil / *Peso con olio* AC	AC *plus*	[kg]	450	490	

(1)= According to ISO 1217 (annex "C") / *Secondo ISO 1217 (annesso "C")*
(2)= Whitout dryer power (only Plus version) / *Esclusa potenza essiccatore (versioni Plus)*
(3)= According to PN8NTC2.3 measured at 1m distance / *Secondo PN8NTC2.3 misurato alla distanza di 1m*
(4)= According to CEI 38 / *Secondo CEI 38*
(5)= According to reference conditions indicated / *Alle condizioni di riferimento indicate*
(6)= Frequency 60 Hz / *Frequenza 60 Hz*
(7)= Optional / *Opzionale*

mattei®
BEST SOLUTIONS IN COMPRESSED AIR

DESIGN DATA
SERIE 1000
SCHEDA TECNICA

TYPE / TIPO			**AC 18 / AC 18 *plus***		
VERSION / *VERSIONE*			**L**	**H**	**HH**
Air end nominal pressure [bar(g)] *Pressione nom. unità di compressione*			8	10	13
PERFORMANCES / *PRESTAZIONI*					
		bar (g)			
Air delivery / *Portata effettiva*	**[l/min]**	5	3340	-	-
Terminal power / *Potenza ai morsetti* (2)	**[kW]**		19,05		
	[l/min]	6	3320	2710	-
	[kW]		20,76	17,08	
	[l/min]	7	3290	2690	-
	[kW]		22,42	18,44	
	[l/min]	**7,5** (1)	**3280**	2680	-
	[kW]		**23,2**	19,09	
	[l/min]	8	-	2670	2310
	[kW]			19,73	18,67
	[l/min]	9	-	2650	2300
	[kW]			20,91	19,82
	[l/min]	**9,5**	-	**2640**	2290
	[kW]			**21,3**	20,13
	[l/min]	10	-	-	2280
	[kW]				20,76
	[l/min]	11	-	-	2270
	[kW]				21,58
	[l/min]	12	-	-	2262
	[kW]				22,22
	[l/min]	**12,5**	-	-	**2260**
	[kW]				**22,4**
Off load power / *Potenza assorbita a vuoto*		[kW]	4,09		
Sound pressure level **(3) (6)** / *Livello pressione acustica* **(3) (6)**		[dB(A)]	67		
REFERENCE CONDITION / *CONDIZIONI DI RIFERIMENTO*					
Intake pressure / *Pressione d'aspirazione*		[bar(a)]	1		
Intake temperature / *Temperatura aspirazione*		[°C]	20		
Relative humidity / *Umidità relativa*		%	0		
Nominal motor speed / *Velocità nominale motore*		[g/1']	1500		
ELECTRICAL CHARACTERISTICS / *CARATTERISTICHE ELETTRICHE*					
Motor rated power / *Potenza nominale motore*		[kW]	18,5		
Voltage **(4)** - Frequency / *Tensione* **(4)** - *Frequenza*		[V/Hz]	230/50 or / oppure 400/50		
Enclosure-Insulation class / *Grado prot.-Classe isolamento*			IP55-F		
Electric starting / *Tipo avviamento*			Star delta / *stella triangolo*		
Fan rated power **(6)** / *Potenza assorbita vent.* **(6)**		[kW]	--		
Auxiliary circuit voltage / T*ensione circuito ausiliario*		[V]	110		
Supply min wire section / *Sez. min cavo alimentazione*		[mm2]	25 or / oppure 10 (x 10 m)		
TYPE OF REGULATION / *TIPO DI REGOLAZIONE*					
Modulation / *Modulazione*			intake proportional valve / *valvola aspirazione proporzionale*		
On load, off load and stop / *Marcia a carico, a vuoto e arresto*			pressureswitch / *controllo pressostatico*		
On load, off load / *Marcia a carico, a vuoto*			pressureswitch / *controllo pressostatico*		
DRYER / *ESSICCATORE* (Only plus / *Solo plus*)					
Absorbed power / *Potenza assorbita*		[kW]	1,05		
Gas			R 404 A		
Nominal dew point / *Punto di rugiada nominale*		[°C]	3		
OTHERS / *VARIE*					
Allowable ambient temperature / *Temp. Amb. min-max*		[°C]	+1 / +40		
Outlet air temperature **(5)** / *Temperatura uscita aria* **(5)**					
AC version / *Versione AC*	plus version / *Versione plus*	[°C]	≤ 30	20	
min-max oil temperature / *Temperatura min e max olio*		[°C]	80÷110		
Cooling air flow rate **(6)** / *Portata aria di raffreddamento* **(6)**		[m3/h]	70		
Fan residual head **(6)** / *Prevalenza residua ventilatore* **(6)**		[Pa]	20		
Total recoverable heat / *Calore totale recuperabile*		%	~ 95		
Oil system capacity / *Capacità circuito olio*		[l]	10		
Oil carry over / *Residuo olio nell'aria compressa*		[ppm]	≤ 3		
Air outlet size / *Attacco uscita aria*			Rp 1"		
Condensate drain outlet size / *Attacco scarico di condensa*			--		
plus version / *versione plus*			2 x Rp ¼		
with condensate sep. KIT **(7)** / *con KIT separ. condensa* **(7)**			ø 10		
Water inlet-outlet size / *Attacco ingresso-uscita acqua*			--		
With heat recovery kit **(7)** / *con KIT recupero calore* **(7)**			2 x Rp ½		
LxWxH / LxLxA		[mm]	1510 x 800 x 1200		
Weight with oil / *Peso con olio* AC	AC *plus*	[kg]	450	490	

(1)= According to ISO 1217 (annex "C") / *Secondo ISO 1217 (annesso "C")*
(2)= Whitout dryer power (only Plus version) / *Esclusa potenza essiccatore (versioni Plus)*
(3)= According to PN8NTC2.3 measured at 1m distance / *Secondo PN8NTC2.3 misurato alla distanza di 1m*
(4)= According to CEI 38 / *Secondo CEI 38*
(5)= According to reference conditions indicated / *Alle condizioni di riferimento indicate*
(6)= Frequency 50 Hz / *Frequenza 50 Hz*
(7)= Optional / *Opzionale*

mattei®
BEST SOLUTIONS IN COMPRESSED AIR

DESIGN DATA
SERIE 1000
SCHEDA TECNICA

TYPE / TIPO			**AC 18 / AC 18 *plus***		
VERSION / *VERSIONE*			**LX**	**HX**	
Air end nominal pressure [bar(g)] *Pressione nom. unità di compressione*			8	10	
PERFORMANCES / *PRESTAZIONI*					
		bar (g)			
Air delivery / *Portata effettiva*	**[l/min]**	5	3740	-	
Terminal power / *Potenza ai morsetti* (2)	**[kW]**		21,76		
	[l/min]	6	3720	3270	
	[kW]		23,71	20,76	
	[l/min]	7	3685	3240	
	[kW]		25,60	22,42	
	[l/min]	**7,5 (1)**	**3670**	3225	
	[kW]		**26,5**	23,21	
	[l/min]	8	-	3210	
	[kW]			23,99	
	[l/min]	9	-	3190	
	[kW]			25,43	
	[l/min]	**9,5**	-	**3180**	
	[kW]			**25,9**	
	[l/min]	10	-	-	
	[kW]				
	[l/min]	11	-	-	
	[kW]				
	[l/min]	12	-	-	
	[kW]				
	[l/min]	**12,5**	-	-	
	[kW]				
Off load power / *Potenza assorbita a vuoto*		[kW]	4,09		
Sound pressure level **(3) (6)** / *Livello pressione acustica* **(3) (6)**		[dB(A)]	69		
REFERENCE CONDITION / *CONDIZIONI DI RIFERIMENTO*					
Intake pressure / *Pressione d'aspirazione*		[bar(a)]	1		
Intake temperature / *Temperatura aspirazione*		[°C]	20		
Relative humidity / *Umidità relativa*		%	0		
Nominal motor speed / *Velocità nominale motore*		[g/1']	1750		
ELECTRICAL CHARACTERISTICS / *CARATTERISTICHE ELETTRICHE*					
Motor rated power / *Potenza nominale motore*		[kW]	18,5		
Voltage **(4)** - Frequency / *Tensione* **(4)** - *Frequenza*		[V/Hz]	230/60 or / oppure 460/60		
Enclosure-Insulation class / *Grado prot.-Classe isolamento*			IP55-F		
Electric starting / *Tipo avviamento*			Star delta / *stella triangolo*		
Fan rated power **(6)** / *Potenza assorbita vent.* **(6)**		[kW]	--		
Auxiliary circuit voltage / T*ensione circuito ausiliario*		[V]	110		
Supply min wire section / *Sez. min cavo alimentazione*		[mm2]	25 or / oppure 10 (x 10 m)		
TYPE OF REGULATION / *TIPO DI REGOLAZIONE*					
Modulation / *Modulazione*			intake proportional valve / *valvola aspirazione proporzionale*		
On load, off load and stop / *Marcia a carico, a vuoto e arresto*			pressureswitch / *controllo pressostatico*		
On load, off load / *Marcia a carico, a vuoto*			pressureswitch / *controllo pressostatico*		
DRYER / *ESSICCATORE* (Only plus / *Solo plus*)					
Absorbed power / *Potenza assorbita*		[kW]	--		
Gas			R 404 A		
Nominal dew point / *Punto di rugiada nominale*		[°C]	3		
OTHERS / *VARIE*					
Allowable ambient temperature / *Temp. Amb. min-max*		[°C]	+1 / +40		
Outlet air temperature **(5)** / *Temperatura uscita aria* **(5)**					
AC version / *Versione AC*	plus version / *Versione plus*	[°C]	≤ 30	20	
min-max oil temperature / *Temperatura min e max olio*		[°C]	80÷110		
Cooling air flow rate **(6)** / *Portata aria di raffreddamento* **(6)**		[m3/h]	77		
Fan residual head **(6)** / *Prevalenza residua ventilatore* **(6)**		[Pa]	20		
Total recoverable heat / *Calore totale recuperabile*		%	~ 95		
Oil system capacity / *Capacità circuito olio*		[l]	10		
Oil carry over / *Residuo olio nell'aria compressa*		[ppm]	≤ 3		
Air outlet size / *Attacco uscita aria*			Rp 1"		
Condensate drain outlet size / *Attacco scarico di condensa*			--		
plus version / *versione plus*			2 x Rp ¼		
with condensate sep. KIT **(7)** / *con KIT separ. condensa* **(7)**			ø 10		
Water inlet-outlet size / *Attacco ingresso-uscita acqua*			--		
With heat recovery kit **(7)** / *con KIT recupero calore* **(7)**			2 x Rp ½		
LxWxH / LxLxA		[mm]	1510 x 800 x 1200		
Weight with oil / *Peso con olio*	AC / AC *plus*	[kg]	450	490	

(1)= According to ISO 1217 (annex "C") / *Secondo ISO 1217 (annesso "C")*
(2)= Whitout dryer power (only Plus version) / *Esclusa potenza essiccatore (versioni Plus)*
(3)= According to PN8NTC2.3 measured at 1m distance / *Secondo PN8NTC2.3 misurato alla distanza di 1m*
(4)= According to CEI 38 / *Secondo CEI 38*
(5)= According to reference conditions indicated / *Alle condizioni di riferimento indicate*
(6)= Frequency 60 Hz / *Frequenza 60 Hz*
(7)= Optional / *Opzionale*

mattei®
BEST SOLUTIONS IN COMPRESSED AIR

DESIGN DATA
SERIE 1000
SCHEDA TECNICA

TYPE / TIPO			**AC 22 / AC 22 *plus***		
VERSION / *VERSIONE*			**L**	**H**	**HH**
Air end nominal pressure [bar(g)] *Pressione nom. unità di compressione*			8	10	13
PERFORMANCES / *PRESTAZIONI*					
		bar (g)			
Air delivery / *Portata effettiva*	**[l/min]**	5	3820	-	-
Terminal power / *Potenza ai morsetti* (2)	**[kW]**		21,27		
	[l/min]	6	3800	3290	-
	[kW]		23,17	20,68	
	[l/min]	7	3765	3260	-
	[kW]		25,02	22,34	
	[l/min]	**7,5 (1)**	**3750**	3250	-
	[kW]		**25,9**	23,12	
	[l/min]	8	-	3230	2630
	[kW]			23,90	19,75
	[l/min]	9	-	3210	2610
	[kW]			25,33	20,97
	[l/min]	**9,5**	-	**3200**	2605
	[kW]			**25,8**	21,30
	[l/min]	10	-	-	2600
	[kW]				21,96
	[l/min]	11	-	-	2580
	[kW]				22,83
	[l/min]	12	-	-	2575
	[kW]				23,51
	[l/min]	**12,5**	-	-	**2570**
	[kW]				**23,7**
Off load power / *Potenza assorbita a vuoto*		[kW]	5,03		
Sound pressure level **(3) (6)** / *Livello pressione acustica* **(3) (6)**		[dB(A)]	67		
REFERENCE CONDITION / *CONDIZIONI DI RIFERIMENTO*					
Intake pressure / *Pressione d'aspirazione*		[bar(a)]	1		
Intake temperature / *Temperatura aspirazione*		[°C]	20		
Relative humidity / *Umidità relativa*		%	0		
Nominal motor speed / *Velocità nominale motore*		[g/1']	1500		
ELECTRICAL CHARACTERISTICS / *CARATTERISTICHE ELETTRICHE*					
Motor rated power / *Potenza nominale motore*		[kW]	22		
Voltage **(4)** - Frequency / *Tensione* **(4)** - *Frequenza*		[V/Hz]	230/50 or / oppure 400/50		
Enclosure-Insulation class / *Grado prot.-Classe isolamento*			IP55-F		
Electric starting / *Tipo avviamento*			Star delta / *stella triangolo*		
Fan rated power **(6)** / *Potenza assorbita vent.* **(6)**		[kW]	--		
Auxiliary circuit voltage / T*ensione circuito ausiliario*		[V]	110		
Supply min wire section / *Sez. min cavo alimentazione*		[mm2]	35 or / oppure 16 (x 10 m)		
TYPE OF REGULATION / *TIPO DI REGOLAZIONE*					
Modulation / *Modulazione*			intake proportional valve / *valvola aspirazione proporzionale*		
On load, off load and stop / *Marcia a carico, a vuoto e arresto*			pressureswitch / *controllo pressostatico*		
On load, off load / *Marcia a carico, a vuoto*			pressureswitch / *controllo pressostatico*		
DRYER / *ESSICCATORE* (Only Plus / *Solo Plus*)					
Absorbed power / *Potenza assorbita*		[kW]	1,05		
Gas			R 404 A		
Nominal dew point / *Punto di rugiada nominale*		[°C]	3		
OTHERS / *VARIE*					
Allowable ambient temperature / *Temp. Amb. min-max*		[°C]	+1 / +40		
Outlet air temperature **(5)** / *Temperatura uscita aria* **(5)**					
AC version / *Versione AC*	plus version / *Versione plus*	[°C]	≤ 30	20	
min-max oil temperature / *Temperatura min e max olio*		[°C]	80÷110		
Cooling air flow rate **(6)** / *Portata aria di raffreddamento* **(6)**		[m3/h]	70		
Fan residual head **(6)** / *Prevalenza residua ventilatore* **(6)**		[Pa]	20		
Total recoverable heat / *Calore totale recuperabile*		%	~ 95		
Oil system capacity / *Capacità circuito olio*		[l]	10		
Oil carry over / *Residuo olio nell'aria compressa*		[ppm]	≤ 3		
Air outlet size / *Attacco uscita aria*			Rp 1"		
Condensate drain outlet size / *Attacco scarico di condensa*			--		
plus version / *versione plus*			2 x Rp ¼		
with condensate sep. KIT **(7)** / *con KIT separ. condensa* **(7)**			ø 10		
Water inlet-outlet size / *Attacco ingresso-uscita acqua*			--		
With heat recovery kit **(7)** / *con KIT recupero calore* **(7)**			2 x Rp ½		
LxWxH / LxLxA		[mm]	1510 x 800 x 1200		
Weight with oil / *Peso con olio* AC	AC *plus*	[kg]	450	490	

(1)= According to ISO 1217 (annex "C") / *Secondo ISO 1217 (annesso "C")*
(2)= Whitout dryer power (only Plus version) / *Esclusa potenza essiccatore (versioni Plus)*
(3)= According to PN8NTC2.3 measured at 1m distance / *Secondo PN8NTC2.3 misurato alla distanza di 1m*
(4)= According to CEI 38 / *Secondo CEI 38*
(5)= According to reference conditions indicated / *Alle condizioni di riferimento indicate*
(6)= Frequency 50 Hz / *Frequenza 50 Hz*
(7)= Optional / *Opzionale*

mattei®
BEST SOLUTIONS IN COMPRESSED AIR

DESIGN DATA
SERIE 1000
SCHEDA TECNICA

TYPE / TIPO			**AC 22 / AC 22 PLUS**		
VERSION / *VERSIONE*			**LX**	**HX**	
Air end nominal pressure [bar(g)] *Pressione nom. unità di compressione*			8	10	
PERFORMANCES / *PRESTAZIONI*					
		bar (g)			
Air delivery / *Portata effettiva*	**[l/min]**	5	4030	-	
Terminal power / *Potenza ai morsetti* (2)	**[kW]**		23,08		
	[l/min]	6	4000	3700	
	[kW]		25,14	23,57	
	[l/min]	7	3970	3670	
	[kW]		27,15	25,45	
	[l/min]	**7,5 (1)**	**3950**	3650	
	[kW]		**28,1**	26,35	
	[l/min]	8	-	3640	
	[kW]			27,24	
	[l/min]	9	-	3610	
	[kW]			28,87	
	[l/min]	**9,5**	-	**3600**	
	[kW]			**29,4**	
	[l/min]	10	-	-	
	[kW]				
	[l/min]	11	-	-	
	[kW]				
	[l/min]	12	-	-	
	[kW]				
	[l/min]	**12,5**	-	-	
	[kW]				
Off load power / *Potenza assorbita a vuoto*		[kW]	5,03		
Sound pressure level **(3) (6)** / *Livello pressione acustica* **(3) (6)**		[dB(A)]	69		
REFERENCE CONDITION / *CONDIZIONI DI RIFERIMENTO*					
Intake pressure / *Pressione d'aspirazione*		[bar(a)]	1		
Intake temperature / *Temperatura aspirazione*		[°C]	20		
Relative humidity / *Umidità relativa*		%	0		
Nominal motor speed / *Velocità nominale motore*		[g/1']	1750		
ELECTRICAL CHARACTERISTICS / *CARATTERISTICHE ELETTRICHE*					
Motor rated power / *Potenza nominale motore*		[kW]	22		
Voltage **(4)** - Frequency / *Tensione* **(4)** - *Frequenza*		[V/Hz]	230/60 or / oppure 460/60		
Enclosure-Insulation class / *Grado prot.-Classe isolamento*			IP55-F		
Electric starting / *Tipo avviamento*			Star delta / *stella triangolo*		
Fan rated power **(6)** / *Potenza assorbita vent.* **(6)**		[kW]	--		
Auxiliary circuit voltage / T*ensione circuito ausiliario*		[V]	110		
Supply min wire section / *Sez. min cavo alimentazione*		[mm2]	35 or / oppure 16 (x 10 m)		
TYPE OF REGULATION / *TIPO DI REGOLAZIONE*					
Modulation / *Modulazione*			intake proportional valve / *valvola aspirazione proporzionale*		
On load, off load and stop / *Marcia a carico, a vuoto e arresto*			pressureswitch / *controllo pressostatico*		
On load, off load / *Marcia a carico, a vuoto*			pressureswitch / *controllo pressostatico*		
DRYER / *ESSICCATORE* (Only Plus / *Solo Plus*)					
Absorbed power / *Potenza assorbita*		[kW]	--		
Gas			R 404 A		
Nominal dew point / *Punto di rugiada nominale*		[°C]	3		
OTHERS / *VARIE*					
Allowable ambient temperature / *Temp. Amb. min-max*		[°C]	+1 / +40		
Outlet air temperature **(5)** / *Temperatura uscita aria* **(5)**					
AC version / *Versione AC*	plus version / *Versione plus*	[°C]	≤ 30	20	
min-max oil temperature / *Temperatura min e max olio*		[°C]	80÷110		
Cooling air flow rate **(6)** / *Portata aria di raffreddamento* **(6)**		[m3/h]	77		
Fan residual head **(6)** / *Prevalenza residua ventilatore* **(6)**		[Pa]	20		
Total recoverable heat / *Calore totale recuperabile*		%	~ 95		
Oil system capacity / *Capacità circuito olio*		[l]	10		
Oil carry over / *Residuo olio nell'aria compressa*		[ppm]	≤ 3		
Air outlet size / *Attacco uscita aria*			Rp 1"		
Condensate drain outlet size / *Attacco scarico di condensa*					
plus version / *versione plus*			2 x Rp ¼		
with condensate sep. KIT **(7)** / *con KIT separ. condensa* **(7)**			ø 10		
Water inlet-outlet size / *Attacco ingresso-uscita acqua*					
With heat recovery kit **(7)** / *con KIT recupero calore* **(7)**			2 x Rp ½		
LxWxH / LxLxA		[mm]	1510 x 800 x 1200		
Weight with oil / *Peso con olio* AC	AC *plus*	[kg]	450	490	

(1)= According to ISO 1217 (annex "C") / *Secondo ISO 1217 (annesso "C")*
(2)= Whitout dryer power (only Plus version) / *Esclusa potenza essiccatore (versioni Plus)*
(3)= According to PN8NTC2.3 measured at 1m distance / *Secondo PN8NTC2.3 misurato alla distanza di 1m*
(4)= According to CEI 38 / *Secondo CEI 38*
(5)= According to reference conditions indicated / *Alle condizioni di riferimento indicate*
(6)= Frequency 60 Hz / *Frequenza 60 Hz*
(7)= Optional / *Opzionale*

mattei®
BEST SOLUTIONS IN COMPRESSED AIR

DESIGN DATA
SERIE 1000
SCHEDA TECNICA

TYPE / TIPO			**AC 30s / AC 30s *plus***	
VERSION / *VERSIONE*			H	HH
Air end nominal pressure [bar(g)] *Pressione nom. unità di compressione*			9,5	12,5
PERFORMANCES / *PRESTAZIONI*				
		bar (g)		
Portata effettiva / *Free air delivery* (1)	**[l/min]**	5	-	-
Potenza ai morsetti / *Terminal power (2)*	**[kW]**		-	-
	[l/min]	6	-	-
	[kW]		-	-
	[l/min]	7	4260	-
	[kW]		28	-
	[l/min]	**7,5**	4240	-
	[kW]		29	-
	[l/min]	8	4225	-
	[kW]		30	-
	[l/min]	9	4195	3600
	[kW]		31,5	28
	[l/min]	**9,5**	4185	3595
	[kW]		32,5	28,7
	[l/min]	10	-	3585
	[kW]		-	29
	[l/min]	11	-	3565
	[kW]		-	30,5
	[l/min]	12	-	3555
	[kW]		-	31,4
	[l/min]	**12,5**	-	3550
	[kW]		-	31,7
Pot. Ass. a vuoto / *Off load power*	[kW]		7,5	6,7
Livello pressione acustica **(3) (6)** / *Sound pressure level* **(3) (6)**	[dB(A)]		68	
REFERENCE CONDITION / *CONDIZIONI DI RIFERIMENTO*				
Intake pressure / *Pressione d'aspirazione*	[bar(a)]		1	
Intake temperature / *Temperatura aspirazione*	[°C]		20	
Relative humidity / *Umidità relativa*	%		0	
Nominal motor speed / *Velocità nominale motore*	[g/1']		1500	
ELECTRICAL CHARACTERISTICS / *CARATTERISTICHE ELETTRICHE*				
Motor rated power / *Potenza nominale motore*	[kW]		30	
Voltage **(4)** - Frequency / *Tensione* **(4)** - *Frequenza*	[V/Hz]		400/50	
Enclosure-Insulation class / *Grado prot.-Classe isolamento*			IP55-F	
Electric starting / *Tipo avviamento*			Star delta / *stella triangolo*	
Fan rated power **(6)** / *Potenza assorbita vent.* **(6)**	[kW]		0,5	
Auxiliary circuit voltage / T*ensione circuito ausiliario*	[V]		110	
Supply min wire section / *Sez. min cavo alimentazione*	[mm2]		25 (x 10 m)	
TYPE OF REGULATION / *TIPO DI REGOLAZIONE*				
Modulation / *Modulazione*			intake proportional valve / *valvola aspirazione proporzionale*	
On load, off load and stop / *Marcia a carico, a vuoto e arresto*			pressureswitch / *controllo pressostatico*	
On load, off load / *Marcia a carico, a vuoto*			pressureswitch / *controllo pressostatico*	
DRYER / *ESSICCATORE* (Only Plus / *Solo Plus*)				
Absorbed power / *Potenza assorbita*	[kW]		1,05	
Gas			R 404 A	
Nominal dew point / *Punto di rugiada nominale*	[°C]		3	
OTHERS / *VARIE*				
Allowable ambient temperature / *Temp. Amb. min-max*	[°C]		+1 / +40	
Outlet air temperature **(5)** / *Temperatura uscita aria* **(5)**				
AC version / *Versione AC* / plus version / *Versione plus*	[°C]		≤ 30	20
min-max oil temperature / *Temperatura min e max olio*	[°C]		80÷110	
Cooling air flow rate **(6)** / *Portata aria di raffreddamento* **(6)**	[m3/h]		77	
Fan residual head **(6)** / *Prevalenza residua ventilatore* **(6)**	[Pa]		20	
Total recoverable heat / *Calore totale recuperabile*	%		~ 95	
Oil system capacity / *Capacità circuito olio*	[l]		10	
Oil carry over / *Residuo olio nell'aria compressa*	[ppm]		≤ 3	
Air outlet size / *Attacco uscita aria*			Rp 1"	
Condensate drain outlet size / *Attacco scarico di condensa*				
plus version / *versione plus*			Rp 1/4"	
with condensate sep. KIT **(7)** / *con KIT separ. condensa* **(7)**			ϕ 10	
Water inlet-outlet size / *Attacco ingresso-uscita acqua*				
With heat recovery kit **(7)** / *con KIT recupero calore* **(7)**			2 x Rp ½"	
LxWxH / LxLxA	[mm]		1510 x 800 x 1200	
Weight with oil / *Peso con olio* AC / AC *plus*	[kg]		500	540

(1)= According to ISO 1217 (annex "C") / *Secondo ISO 1217 (annesso "C")*
(2)= Whitout dryer power (only Plus version) / *Esclusa potenza essiccatore (versioni Plus)*
(3)= According to PN8NTC2.3 measured at 1m distance / *Secondo PN8NTC2.3 misurato alla distanza di 1m*
(4)= According to CEI 38 / *Secondo CEI 38*
(5)= According to reference conditions indicated / *Alle condizioni di riferimento indicate*
(6)= Frequency 50 Hz / *Frequenza 50 Hz*
(7)= Optional / *Opzionale*

17 Series General Purpose Regulator
3/4", 1", 1-1/4", and 1-1/2" Port Sizes

- **Accurate and quick response to changes in flow demand and line pressure variations**
- **Balanced valve minimizes effect of changes in inlet pressure on outlet pressure**
- **Standard relieving models allow reduction of outlet pressure even when the system is dead-ended**
- **Full flow gauge ports**
- **Low torque, non-rising adjusting knob**
- **Integral locking device on knob adjustment**
- **Can be serviced without removal from the air line**

Ordering Information. Models listed are knob adjustment, relieving type with gauge, 5 to 125 psig (0.3 to 8.5 bar) outlet pressure adjustment range*, and PTF threads.

Port Size	Model Number	Flow† scfm (dm^3/s)	Weight lbs (kg)
3/4"	R17-600-RGLA	440 (208)	2.31 (1.05)
1"	R17-800-RGLA	480 (227)	2.02 (0.92
1-1/4"	R17-A00-RGLA	400 (189)	2.68 (1.22)
1-1/2"	R17-B00-RGLA	440 (208)	2.59 (1.18)

† Typical flow with 150 psig (10 bar) inlet pressure, 90 psig (6.3 bar) set pressure and a 15 psig (1 bar) droop from set.

Alternative Models

R 1 7 - ★ ★ ★ - ★ ★ ★ ★

Port Size	Substitute
3/4″	6
1″	8
1-1/4″	A
1-1/2″	B

Option	Substitute
Not applicable	0

Adjustment	Substitute
Knob	0
T-bar	1

Diaphragm	Substitute
Relieving	R
Non relieving	N

Threads	Substitute
PTF	A
ISO Rc taper	B
BSPP (1-1/2″ ported units only)	C
ISO G parallel (not available with1-1/2″ ported units)	G

Outlet Pressure Adjustment Ranges*	Substitute
5 to 50 psig (0.3 to 3.5 bar)	E
5 to 125 psig (0.3 to 8.5 bar)	L
10 to 250 psig (0.7 to 17 bar)	S

Gauge	Substitute
With	G
Without	N

* Outlet pressure can be adjusted to pressures in excess of, and less than, those specified. Do not use these units to control pressures outside of the specified ranges.

ISO Symbols

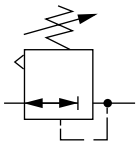

Relieving

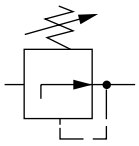

Non relieving

See Section ALE-24 for Accessories

Technical Data

Fluid: Compressed air
Maximum pressure: 300 psig (20 bar)
Operating temperature: -30° to 175°F (-34° to 80°C)*

* Air supply must be dry enough to avoid ice formation at temperatures 35°F (2°C).

Typical flow at 150 psig (10 bar) inlet pressure, 90 psig (6.3 bar) set pressure, and a droop of 15 psig (1 bar) from set: 480 scfm (227 dm^3/s)

Gauge ports:
- 1/4" PTF with PTF main ports
- R1/4 with ISO Rc, ISO G, and BSPP main ports

Materials
- Body: Aluminum
- Bonnet: Aluminum
- Bottom plug: Acetal
- Valve: Aluminum and nylon
- Elastomers: Nitrile

Typical Performance Characteristics

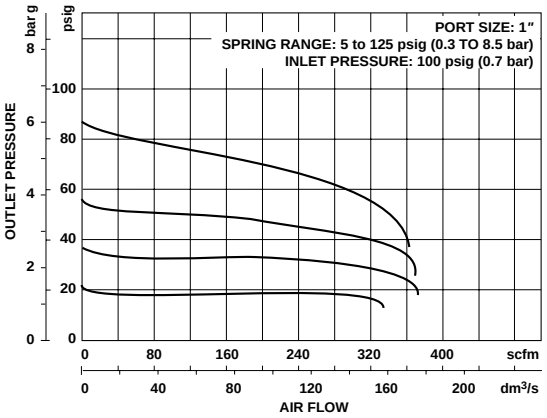

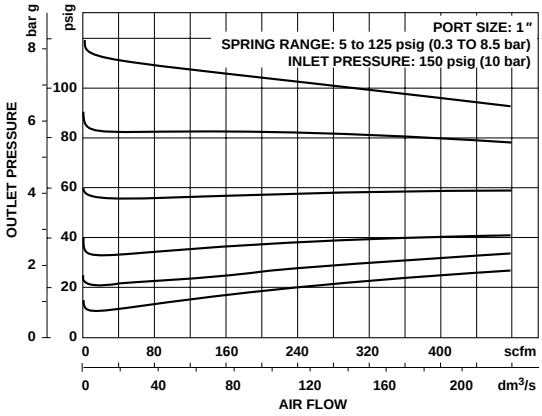

Service Kits

Item	Type	Part number
Service kit	Relieving	5578-02
	Non relieving	5578-01

Service kit contains, diaphragm, all o-rings, valve, and valve spring.

All Dimensions in Inches (mm)

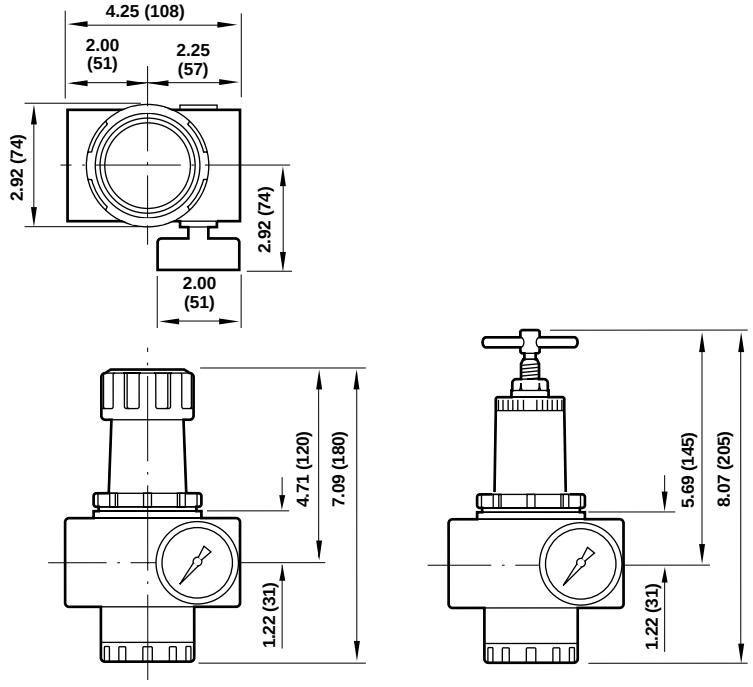

Panel mounting hole diameter: 2.28″ (58 mm)
Panel thickness: 0.06″ *to* 0.16″ (2 to 4 mm)

NORGREN

Pressure Regulator
R17 - ★★★ - ★★★★

R17
Installation & Maintenance Instructions

Port
6....3/4"
8....1"
A....1-1/4"
B....1-1/2"

Option
0....Not applicable

Adjustment Type
0....Knob
1....T-Handle

Relief Type
R....Relieving
N....Non relieving

Gauge
G....With
N....Without

Spring (Outlet Pressure Range) *
E....0,3 to 3,5 bar (5 to 50 psig)
L....0,3 to 8,5 bar (5 to 125 psig)
S....0,7 to 17 bar (10 to 250 psig)

Thread Form
A....PTF
B....ISO Rc taper
G....ISO G parallel

* Outlet pressure can be adjusted to pressures in excess of, and less than, those specified. Do not use these units to control pressures outside of the specified ranges.

TECHNICAL DATA
Fluid: Compressed air
Maximum pressure: 20 bar (300 psig)
Operating temperature: -34° to +80°C (-30° to +175°F)
* Air supply must be dry enough to avoid ice formation at temperatures +2°C (+35°F).
Typical flow at 10 bar (150 psig) inlet pressure, 6,3 bar (90 psig) set pressure, and a droop of 1 bar (15 psig) from set: 227 dm^3/s (480 scfm)
Gauge ports:
1/4" PTF with PTF main ports
Rc1/4 with ISO Rc and ISO G main ports
Materials:
Body: Aluminum
Bonnet: Aluminum
Bottom plug: Acetal
Valve: Aluminum and nylon
Elastomers: Nitrile

REPLACEMENT ITEMS
Service kit (includes items circled on exploded view)
Relieving.....5578-02
Non-relieving.....5578-01
Tamper resistant seal wire 2117-01

PANEL MOUNTING DIMENSIONS
Panel mounting hole diameter: 58 mm (2.28")
Panel thickness: 2 to 4 mm (0.06" to 0.16")

INSTALLATION
1. Shut off air pressure. Install regulator in air line -
   - with air flow in direction of arrow on body,
   - upstream of lubricators and cycling valves,
   - as close as possible to the device being serviced.
   - at any angle.
2. Connect piping to proper ports using pipe thread sealant on male threads only. Do not allow sealant to enter interior of regulator.
3. Install a pressure gauge or plug the gauge ports. Gauge ports can also be used as additional outlets for regulated air.
4. Install a Norgren general purpose filter upstream of the regulator.

ADJUSTMENT
1. Before applying inlet pressure to regulator, turn adjustment (1 or 3) counterclockwise to remove all force on regulating spring (7).
2. Apply inlet pressure, then turn adjustment (1 or 3) clockwise to increase and counterclockwise to decrease pressure setting.
3. Always approach the desired pressure from a lower pressure. When reducing from a higher to a lower setting, first reduce to some pressure less than that desired, then bring up to the desired pressure.

NOTE

With non-relieving regulators, make pressure reductions with some air flow in the system. If made under no flow (dead-end) conditions, the regulator will trap the over-pressure in the downstream line.

4. KNOB ADJUSTMENT. Push lockring on knob down to lock pressure setting. Pull lockring up to release. Install tamper resistant wire (see ***Replacement Items***) to make setting tamper resistant.
5. T-BAR ADJUSTMENT. Tighten lock nut (4) lock pressure setting.

DISASSEMBLY
1. Regulator can be disassembled without removal from air line.
2. Shut off inlet pressure. Reduce pressure in inlet and outlet lines to zero.
3. Turn adjustment (1 or 3) fully counterclockwise to remove all force on regulating spring (7).
4. Disassemble in general accordance with the item numbers on exploded view.

CLEANING
1. Clean parts with warm water and soap. Do not submerge knob type bonnets (1) in solution, as lubricant will be removed.
2. Rinse and dry parts. Blow out internal passages in body with clean, dry compressed air.
3. Inspect parts. Replace those found to be damaged.

ASSEMBLY
1. Lubricate o-rings, valve stem (15), valve bore in bottom plug (12), adjusting screw tip and adjusting screw threads inside bonnet (1, 6), threads on bonnets (1, 6) and bottom plug (12) with a light coat of good quality o-ring grease.
2. Assemble the unit as shown on the exploded view.
3. Torque Table

Item	Torque in Nm (Foot-Pounds)
1, 6 (Bonnets)	41 to 48 (30 to 35)
12 (Bottom plug)	Hand tight

WARNING
These products are intended for use in industrial compressed air systems only. Do not use these products where pressures and temperatures can exceed those listed under ***Technical Data***.

If outlet pressure in excess of the regulator pressure setting could cause downstream equipment to rupture or malfunction, install a pressure relief device downstream of the regulator. The relief pressure and flow capacity of the relief device must satisfy system requirements.

The accuracy of the indication of pressure gauges can change, both during shipment (despite care in packaging) and during the service life. If a pressure gauge is to be used with these products and if inaccurate indications may be hazardous to personnel or property, the gauge should be calibrated before initial installation and at regular intervals during use.

Before using these products with fluids other than air, for non industrial applications, or for life-support systems consult Norgren.

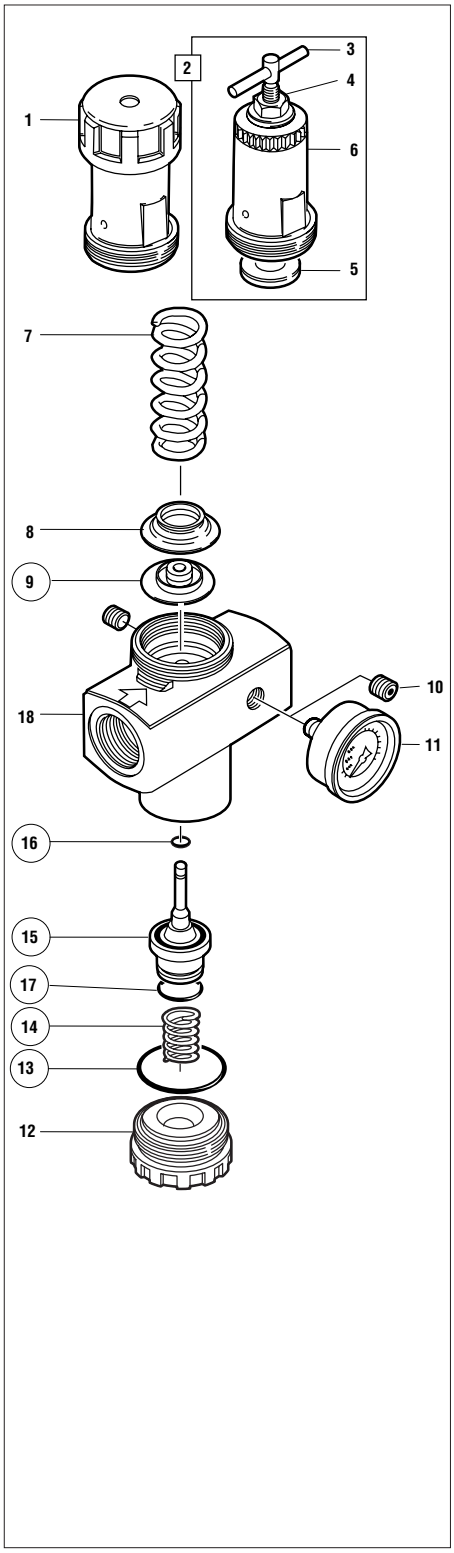

© Norgren 2001

17 Series General Purpose Filter
3/4", 1", 1-1/4", 1-1/2" Port Sizes

- **Protects air operated devices by removing liquid and solid contaminants from compressed air**
- **Screw-on bowl reduces maintenance time**
- **Can be serviced without the use of tools or removal from the air line**
- **Optional visual service indicator turns from green to red when the filter element needs to be cleaned or replaced**
- **Optional electrical service indicator also available**

Ordering Information. Models listed include automatic drain, 40 µm element, metal bowl with sight glass, and PTF threads.

Port Size	Model Numbers	Flow scfm (dm³/s)*	Weight lbs (kg)
3/4"	F17-600-A3DA	325 (153)	4.26 (1.93)
1"	F17-800-A3DA	425 (201)	4.15 (1.88)
1-1/4"	F17-A00-A3DA	425 (201)	4.39 (1.99)
1-1/2"	F17-B00-A3DA	425 (201)	4.30 (1.95)

* Typical flow with a 40 µm element at 90 psig (6.3 bar) inlet pressure and 5 psig (0.35 bar) pressure drop.

Alternative Models

F 1 7 - ★ ★ ★ - ★ ★ ★ ★

Port Size	Substitute
3/4″	6
1″	8
1-1/4″	A
1-1/2″	B

Option	Substitute
Not applicable	0

Service Indicator	Substitute
With (visual)	1
With (electrical)	4
Without	0

Threads	Substitute
PTF	A
ISO Rc taper	B
BSPP (1-1/2″ ported units only)	C
ISO G parallel (not available with 1-1/2″ ported units)	G

Bowl	Substitute
1 quart (1 liter) metal with sight glass	D
1 quart (1 liter) metal	M

Element	Substitute
5 µm	1
25 µm	2
40 µm	3
75 µm	4

Drain	Substitute
Automatic	A
Manual	M

ISO Symbols

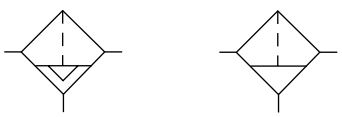

Auto Drain **Manual Drain**

See Section ALE-24 for Accessories

Technical Data

Fluid: Compressed air
Maximum pressure: 250 psig (17 bar)
Operating temperature:* -30° to 175°F (-34° to 80°C)
* Air supply must be dry enough to avoid ice formation at temperatures below 35°F (2°C)
Particle removal: 5 µm, 25 µm, 40 µm, or 75 µm filter element
Air quality: Within ISO 8573-1, Class 3 and Class 5 (particulates)
Typical flow with a 40 µm element at 90 psig (6.3 bar) inlet pressure and 5 psig (0.35 bar) pressure drop: 425 scfm (201 dm^3/s)
Nominal bowl size: 1 quart (1 liter)
Manual drain connection: Will fit 1/8-27 and 1/8-28 pipe thread.
Automatic drain connection: Will fit 1/8-27 and 1/8-28 pipe thread. - Flexible tube with 3/16" (5mm) minimum I.D. can be connected to the automatic drain. Drain may fail to operate if the tube I.D. is less than 3/16" (5mm). Avoid restrictions in the tube.
Automatic drain operating conditions (float operated):
Bowl pressure required to close drain: Greater than 5 psig (0.3 bar)
Bowl pressure required to open drain: Less than 3 psig (0.2 bar)
Minimum air flow required to close drain: 2 scfm (1 dm^3/s)
Manual operation: Depress pin inside drain outlet to drain bowl
Materials
Body: Aluminum
Bowl: Aluminum
Bowl sight glass: Pyrex
Elastomers: Neoprene and nitrile
Filter element
5 µm: Sintered bronze
25 µm: Sintered bronze
40 µm: Sintered bronze
75 µm: Stainless steel screen
An automatic drain is a two-way valve, which will close when the system is pressurized. The drain opens when the float rises due to accumulated liquid and on depressurization.

Typical Performance Characteristics

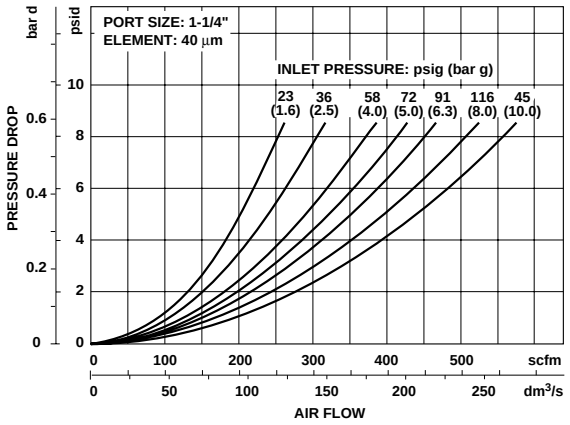

Service Kits

Item	Type	Part number
Service kits	All filters	5578-05
Replacement elements	5 µm	5311-01
	25 µm	5311-02
	40 µm	5311-03
	75 µm	5656-01
Replacement drain	Automatic	3000-10
	Manual (1/4 turn)	619-50

Service kit 5778-05 includes bowl o-ring, drain gasket, and element gasket.

All Dimensions in Inches (mm)

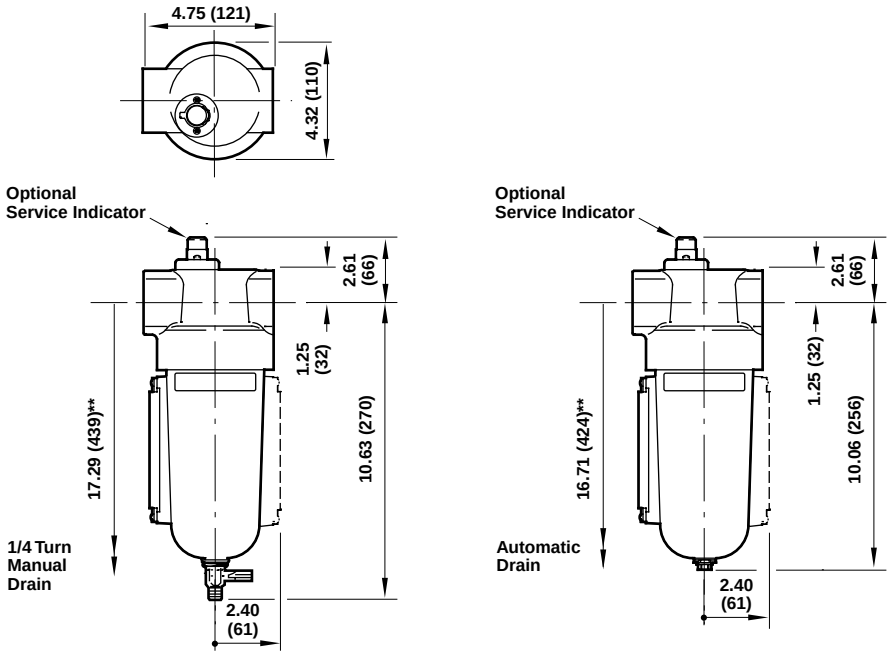

** Minimum clearance required to remove bowl

NORGREN

General Purpose Filter
F17 - ★★★ - ★★★★

F17
Installation & Maintenance Instructions

Port
6 ....3/4"
8 ....1"
A....1-1/4"
B....1-1/2"

Service Indicator
00 ..Without
01 ..With mechanical indicator
04 ..With electrical service indicator

Drain
A....Automatic
M...Manual, 1/4 turn

Element
1 ....5µm
2 ....25µm
3 ....40µm
4 ....75µm

Bowl
D...1 litre (1 quart U.S.) metal with sight glass
M ..1 litre (1 quart U.S.) metal without sight glass

Thread Form
A....PTF
B....ISO Rc taper
G....ISO G parallel

* See Norgren publication IM-900.920 for specifications and electrical wire connections of the optional electric service indicator.

TECHNICAL DATA
Fluid: Compressed air
Maximum pressure: 17 bar (250 psig)
Operating temperature:* -34° to +80°C (-30° to +175°F)
* Air supply must be dry enough to avoid ice formation at temperatures below +2°C (+35°F)
Particle removal: 5 µm, 25 µm, 40 µm, or 75 µm filter element
Air quality: Within ISO 8573-1, Class 3 and Class 5 (particulates)
Typical flow with a 40 µm element at 6,3 bar (90 psig) inlet pressure and 0,5 bar (7 psid) pressure drop:
1" ports: 236 dm^3/s (500 scfm)
Nominal bowl size: 1 litre (1 quart US)
Drain connection: 1/8" pipe thread
Automatic drain operating conditions:
Minimum pressure: 0,7 bar (10 psig).
Drain opens when bowl pressure drops below 0,2 bar (3 psig).
Minimum air flow required to close drain: 1 dm^3/s (2 scfm)
Materials:
Body: Aluminum
Bowl: Aluminum
Bowl sight glass: Pyrex
Elastomers: Neoprene and nitrile
Filter element:
5 µm: Sintered bronze
25 µm: Sintered bronze
40 µm: Sintered bronze
75 µm: Stainless steel screen

REPLACEMENT ITEMS
Service kit (includes items circled on exploded view) ...5778-05
Liquid level lens kit (20, 22 thru26) 2273-22
Filter element, 5µm (30) 5311-01
Filter element, 25µm (30) 5311-02
Filter element, 40µm (30) 5311-03
Filter element, screen, 75µm (30) 5656-01
Manual drain (14, 15, 16) 619-50
Automatic drain (17, 18, 19).....3000-10
Mechanical service Indicator (1) 5797-50
Electrical service Indicator (6) 4020-51R

INSTALLATION
1. Shut-off air pressure. Install filter in air line -
   - vertically (bowl down),
   - with air flow in direction of arrow on body,
   - upstream of regulators, lubricators, and cycling valves,
   - as close as possible to the air supply when used as a main line filter,
   - as close as possible to the device being serviced when used as a final filter.
2. Connect piping to proper ports using pipe thread sealant on male threads only. Do not allow sealant to enter interior of unit.
3. Turn bowl (27) into body until arrowhead on bowl is aligned with or to the right of the arrowhead on the body
4. Flexible tube with 3mm (0.125") minimum I.D. can be connected to the automatic drain. Avoid restrictions in the tube.

SERVICING
1. Open manual drain to expel accumulated liquids. Keep liquids below baffle (28).
2. Clean or replace filter element when dirty, when optional mechanical service indicator shows approximately all red, or when optional electrical service indicator provides an electrical output.

DISASSEMBLY
1. Filter can be disassembled without removal from air line.
2. Shut off inlet pressure. Reduce pressure in inlet and outlet lines to zero.
3. Disassemble in general accordance with the item numbers on exploded view.Do not remove the drains or the service indicators (1, 6) unless replacement is necessary. Remove and replace only if they malfunction.

CLEANING
1. Clean mechanical indicator lens (3) with warm water only. Clean electrical indicator (6) with dry, clean cloth. Clean other parts with warm water and soap.
2. Rinse and dry parts. Blow out internal passages in body (34) with clean, dry compressed air. Blow air through filter element (30) from inside to outside to remove surface contaminants.
3. Inspect parts. Replace those found to be damaged.

ASSEMBLY
1. Lubricate o-rings with o-ring grease.
2. If the 1/4 turn manual drain (14, 15, 16) was removed, lubricate the portion of the drain body (14) that contacts the bowl, and the hole in the manual drain body that accommodates the stem of drain valve (15) with o-ring grease. Press body (14,) thru hole from inside of bowl. Place retainer o-ring (16) over body (14) and position in groove. Press drain valve (15) thru hole in body (14).
3. Assemble the liquid indicator parts (20, 21, 22, 23, 24, 25) to bowl. Apply a 0,9 to 1,8 kg (2 to 4 pound) clamping force to upper and lower brackets (21) to pull brackets together. Tighten screws (20) to 0,9 to 1,1 N-m (8 to 10 inch-pounds).
4. Assemble filter as shown on the exploded view. Arrows on indicator (3, 8) and body (34) must point in same direction. Place o-ring (33) on louver (32), then press in place into body. Screw baffle (28) onto centerpost until contact is made with filter element (30).
5. Torque Table

	Torque in N-m (Inch-Pounds)
2, 7 (Screw)	2,8 to 3,9 (25 to 35)
18 (Nut), 28 (baffle)	2,3 to 2,8 (20 to 25)

6. Turn bowl (27) into body until arrowhead on bowl is aligned with or to the right of the arrowhead on the body.

CAUTION
Water vapor will pass through these units and could condense into liquid form downstream as air temperature drops. Install an air dryer if water condensation could have a detrimental effect on the application.

WARNING
These products are intended for use in industrial compressed air systems only. Do not use these products where pressures and temperatures can exceed those listed under ***Technical Data***.

Before using these products with fluids other than air, for nonindustrial applications, or for life-support systems consult Norgren.

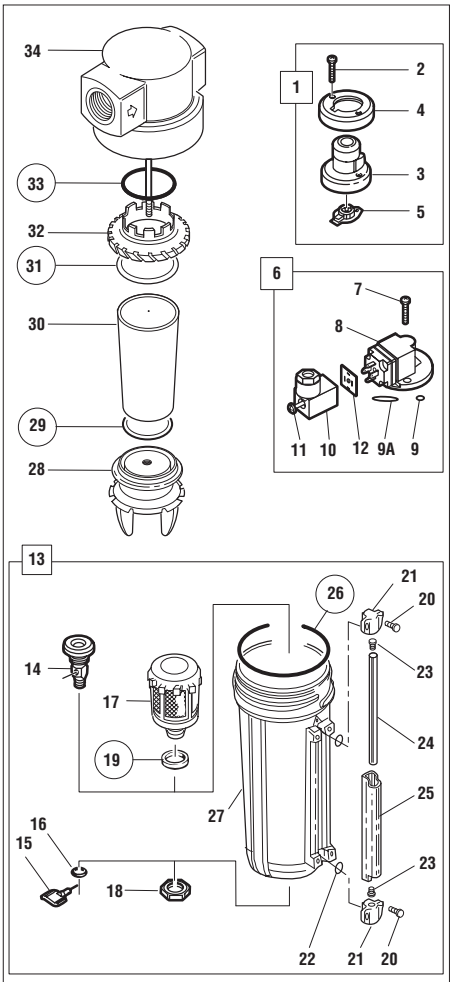

© Norgren 2001

F46 Oil Removal Filter

17 Series
Oil Removal (Coalescing) Filter
3/4″, 1″, 1 1/4″ Port Sizes

- **High efficiency oil and particle removal**
- **Screw-on bowl reduces maintenance time**
- **Can be disassembled without the use of tools or removal from the air line**
- **Standard service indicator turns from green to red when the filter element needs to be replaced**

Install an F17 filter with a 5 µm filter element upstream of the F46 filter for maximum service life.

Technical Data

Fluid: Compressed air
Maximum pressure: 17 bar (250 psig)
Operating temperature:* -20° to +65°C (0° to +150°F)

* Air supply must be dry enough to avoid ice formation at temperatures below +2°C (+35°F)

Particle removal: Down to 0,01 µm
Air quality: Within ISO 8573-1, Class 1 (particulates) and Class 2 (oil content)
Maximum remaining oil content in outlet air: 0,01ppm at +20°C (+70°F) with an inlet oil concentration of 17 ppm.
Maximum flow at 6,3 bar (90 psig) inlet pressure to maintain stated oil removal performance:

- 3/4″ ports: 42 dm^3/s (90 scfm)
- 1″ ports: 59 dm^3/s (125 scfm)
- 1 1/4″ ports: 59 dm^3/s (125 scfm)

Nominal bowl size: 1 litre (1 quart US)
Automatic drain connection: 1/8″
Automatic drain operating conditions:

- Minimum pressure: 0,7 bar (10 psig).
- Drain opens when bowl pressure drops below 0,2 bar (3 psig).
- Minimum air flow: 1 dm^3/s (2 scfm) required to close drain.

Materials:

- Body: Aluminum
- Bowl: Aluminum
- Bowl sight glass: Pyrex
- Elastomers: Neoprene and nitrile
- Filter element: Synthetic fiber and polyurethane foam

Ordering Information

See *Ordering Information* paragraphs on the following pages.

ISO Symbols

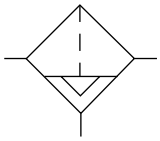

Automatic Drain

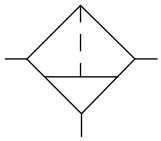

Manual Drain

Our policy is one of continuous research and development.
We reserve the right to amend, without notice, the specifications given in this document.

Typical Performance Characteristic

Inlet Pressure		Maximum Flow†	
bar	(psig)	dm³/s	(scfm)
2,5	(36)	33,0	(70)
4	(58)	44,4	(94)
6,3	(90)	60,8	(129)
8	(116)	79,8	(169)
10	(150)	96,3	(204)

† Maximum flow to maintain stated oil removal performance.

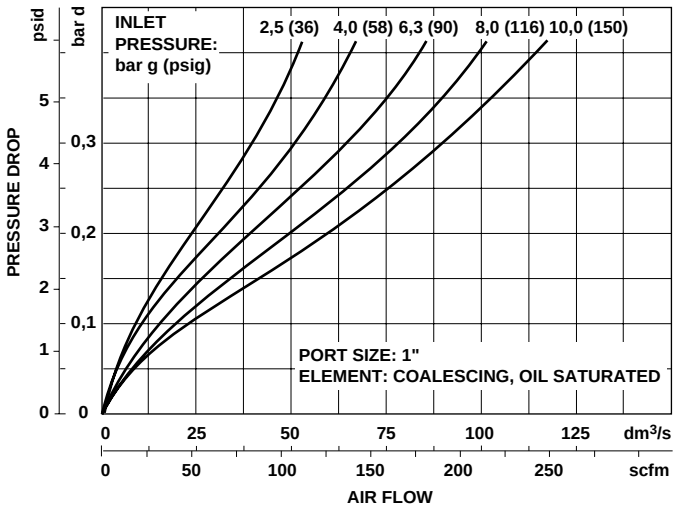

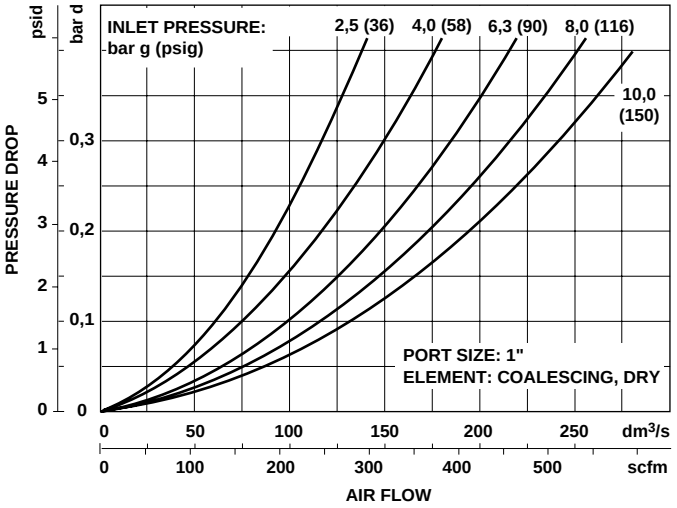

Ordering Information. Models listed include automatic drain, metal bowl with sight glass, and ISO G threads.

Port Size	Model Numbers	Maximum Flow* dm³/s (scfm)	Weight lbs (kg)
G3/4	F46-601-A0DG	42 (90)	1.86 (4.11)
G1	F46-801-A0DG	59 (125)	1.84 (4.05)
G1 1/4	F46-A01-A0DG	59 (125)	1.95 (4.29)

* Maximum flow for oil-saturated element at 6,3 bar (90 psig) inlet pressure to maintain stated oil removal performance.

Alternative Models

F 4 6 - ★ ★ ★ - ★ ★ ★ ★

Port Size	Substitute
3/4″	6
1″	8
1 1/4″	A

Option	Substitute
Not applicable	0

Service Life Indicator	Substitute
Without	0
With (visual)	1
With (electrical)	4

Threads	Substitute
PTF	A
ISO Rc taper	B
ISO G parallel	G

Bowl	Substitute
Metal with sight glass	D
Metal	M

Element	Substitute
Coalescing	0

Drain	Substitute
Automatic	A
Manual	M

Our policy is one of continuous research and development.
We reserve the right to amend, without notice, the specifications given in this document.

Accessories

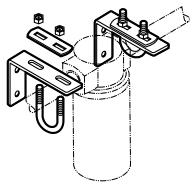	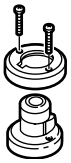	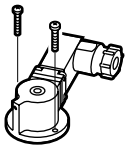
Wall Mounting Bracket	Service Life Indicator (visual)	Service Life Indicator (electrical)
3/4", 1" ports: 6212-50	5797-50	4020-51
1 1/4", ports: 6212-51		

Dimensions – mm (Inches)

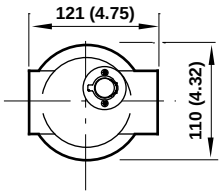

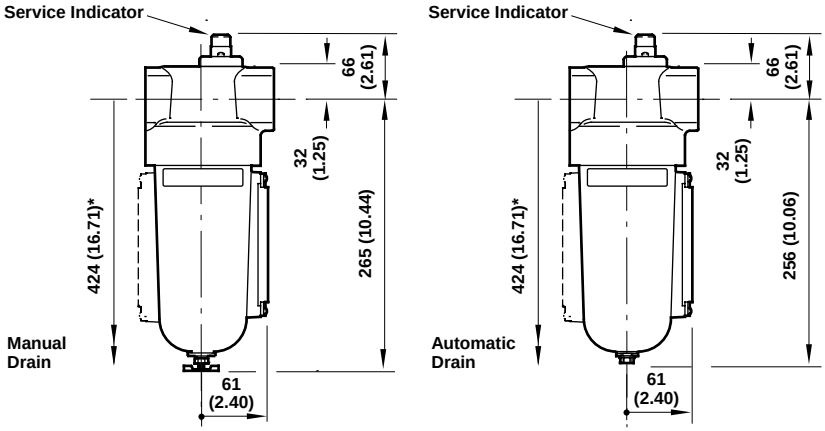

* Minimum clearance required to remove bowl.

Wall Bracket

Use 8 mm (5/16") screws to mount bracket to wall.

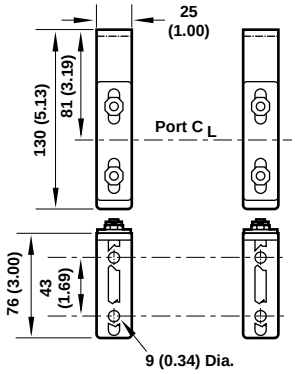

Wall Bracket Reference

Model	Part number
3/4", 1" ported units	6212-50
1 1/4", ported units	6212-51

Service Kits

Item	Type	Part number
Service kit	O-ring & gaskets	5351-04
Replacement drains	Automatic (1/8 NPT outlet)	3000-18
	Automatic (G1/8 outlet)	3000-97
	Petcock	684-01
Service life indicator	Visual	5797-50
	Electrical	4020-51

Service kit contains coalescing element, element o-ring, bowl o-ring, and drain gasket.

Our policy is one of continuous research and development.
We reserve the right to amend, without notice, the specifications given in this document.

NORGREN

Oil Removal Filter
F46 - ★★★ - ★★★★

F46
Installation & Maintenance Instructions

Port
6 ....3/4"
8 ....1"
A....1-1/4"

Service Indicator
00 ..Without
01 ..With mechanical indicator
04 ..With electrical service indicator

Drain
A....Automatic
M...Manual, 1/4 turn

Element
0 ....Coalescing

Bowl
D...1 litre (1 quart U.S.) metal with sight glass
M ..1 litre (1 quart U.S.) metal without sight glass

Thread Form
A....PTF
B....ISO Rc taper
G....ISO G parallel

* See Norgren publication IM-900.920 for specifications and electrical wire connections of the optional electric service indicator.

TECHNICAL DATA
Fluid: Compressed air
Maximum pressure: 17 bar (250 psig)
Operating temperature:* -34° to +65°C (-30° to +150°F)
* Air supply must be dry enough to avoid ice formation at temperatures below +2°C (+35°F)
Particle removal: Down to 0.01 µm
Air quality: Within ISO 8573-1, Class 1 (particulates) and Class 2 (oil content)
Maximum remaining oil content in outlet air: 0,01ppm at +20°C (+70°F) with an inlet oil concentration of 17 ppm.
Maximum flow at 6,3 bar (90 psig) inlet pressure to maintain stated oil removal performance:
3/4″ ports: 42 dm³/s (90 scfm)
1″ ports: 59 dm³/s (125 scfm)
1 1/4″ ports: 59 dm³/s (125 scfm)
Nominal bowl size: 1 litre (1 quart US)
Drain connection: 1/8" pipe thread
Automatic drain operating conditions:
Minimum pressure: 0,7 bar (10 psig).
Drain opens when bowl pressure drops below 0,2 bar (3 psig).
Minimum air flow required to close drain: 1 dm³/s (2 scfm)
Materials:
Body: Aluminum
Bowl: Aluminum
Bowl sight glass: Pyrex
Elastomers: Neoprene and nitrile
Filter element: Synthetic fiber and polyurethane foam

REPLACEMENT ITEMS
Service kit (includes items circled on exploded view) ...5351-04
Liquid level lens kit (20, 22 thru 26) 2273-22
Manual drain (14, 15, 16) 619-50
Automatic drain (17, 18, 19).....3000-18
Mechanical service Indicator (1).....5797-50
Electrical service Indicator (6) 4020-51R

INSTALLATION
1. Shut-off air pressure. Install filter in air line -
   - vertically (bowl down),
   - with air flow in direction of arrow on body,
   - upstream of regulators, lubricators, and cycling valves,
   - as close as possible to the air supply when used as a main line filter,
   - as close as possible to the device being serviced when used as a final filter.
2. Connect piping to proper ports using pipe thread sealant on male threads only. Do not allow sealant to enter interior of unit.
3. Turn bowl (27) into body until arrowhead on bowl is aligned with or to the right of the arrowhead on the body
4. Flexible tube with 3mm (0.125") minimum I.D. can be connected to the automatic drain. Avoid restrictions in the tube.
5. Install a Norgren general purpose filter with a 5 µm element upstream of the oil removal filter to obtain maximum element service life.

SERVICING
1. Open manual drain to expel accumulated liquids. Keep liquids below element (28).
2. Replace filter element when pressure drop across element exceeds 0,7 bar (10 psig). The mechanical service indicator shows approximately full red and the optional electrical service indicator provides an electrical output when pressure drop across element reaches 0,7 bar (10 psig).

DISASSEMBLY
1. Filter can be disassembled without removal from air line.
2. Shut off inlet pressure. Reduce pressure in inlet and outlet lines to zero.
3. Disassemble in general accordance with the item numbers on exploded view.Do not remove the drains or the service indicators (1, 6) unless replacement is necessary. Remove and replace only if they malfunction

CLEANING
1. Element (28) cannot be cleaned. Clean mechanical indicator lens (3) with warm water only. Clean electrical indicator (6) with dry, clean cloth. Clean other parts with warm water and soap.
2. Rinse and dry parts. Blow out internal passages in body (30) with clean, dry compressed air.
3. Inspect parts. Replace those found to be damaged.

ASSEMBLY
1. Lubricate o-rings with o-ring grease.
2. If the 1/4 turn manual drain (14, 15, 16) was removed, lubricate the portion of the drain body (14) that contacts the bowl, and the hole in the manual drain body that accommodates the stem of drain valve (15) with o-ring grease. Press body (14,) thru hole from inside of bowl. Place retainer o-ring (16) over body (14) and position in groove. Press drain valve (15) thru hole in body (14).
3. Assemble the liquid indicator parts (20, 21, 22, 23, 24, 25) to bowl. Apply a 0,9 to 1,8 kg (2 to 4 pound) clamping force to upper and lower brackets (21) to pull brackets together. Tighten screws (20) to 0,9 to 1,1 N-m (8 to 10 inch-pounds).
4. Assemble filter as shown on the exploded view. Arrows on indicator (3, 8) and body (30) must point in same direction.
5. Torque Table

	Torque in N-m (Inch-Pounds)
2, 7 (Screw)	2,8 to 3,9 (25 to 35)
18 (Nut)	2,3 to 2,8 (20 to 25)
28 (Element)	5 to 6 (45 to 55)

6. Turn bowl (27) into body until arrowhead on bowl is aligned with or to the right of the arrowhead on the body.

CAUTION
Water vapor will pass through these units and could condense into liquid form downstream as air temperature drops. Install an air dryer if water condensation could have a detrimental effect on the application.

WARNING
These products are intended for use in industrial compressed air systems only. Do not use these products where pressures and temperatures can exceed those listed under ***Technical Data***.

Before using these products with fluids other than air, for nonindustrial applications, or for life-support systems consult Norgren.

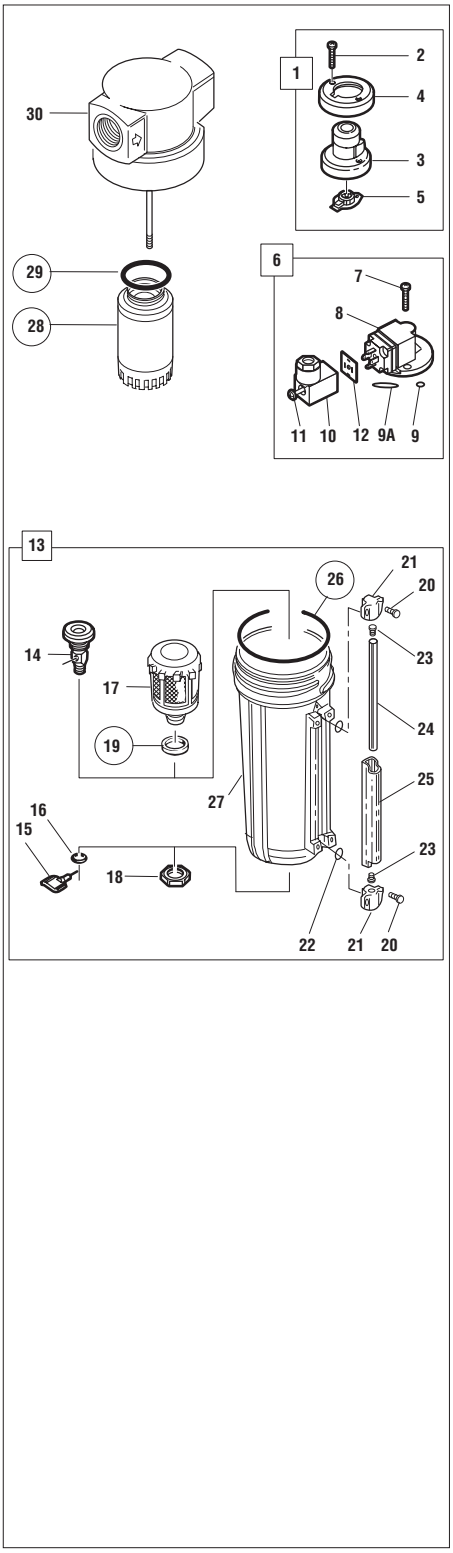

© Norgren 2001

Warning

These products are intended for use in industrial compressed air systems only. Do not use these products where *pressures* and *temperatures* can exceed those listed under **'Technical Data'**.

Before using these products with fluids other than those specified, for non-industrial applications, life-support systems, or other applications not within published specifications, consult Norgren.

Through misuse, age, or malfunction, components used in fluid power systems can fail in various modes. The system designer is warned to consider the failure modes of all component parts used in fluid power systems and to provide adequate safeguards to prevent personal injury or damage to equipment in the event of such failure.

System designers must provide a warning to end users in the system instructional manual if protection against a failure mode cannot be adequately provided.

System designers and end users are cautioned to review specific warnings found in instruction sheets packed and shipped with these products.

Water vapor will pass through these units and will condense into liquid if air temperature drops in the downstream system. Install an air dryer if water condensation could have a detrimental effect on the application.

Our policy is one of continuous research and development.
We reserve the right to amend, without notice, the specifications given in this document.

Influent and Effluent Tank Equipment

KPSI®

Level Transducers

KPSI® User's Manual

18th Edition

February 2010

©This User's Manual is a copyright product of Pressure Systems, Inc., 2009.

Permission is hereby granted to make copies and distribute verbatim copies of this manual, provided the copyright notice and this permission notice are preserved on all copies.

Our Company

Pressure Systems is an ISO9001:2000 certified U.S. manufacturer of submersible and non-submersible (above ground) pressure transducers for environmental, industrial and municipal applications. Our KPSI™ Level and Pressure Transducers have been specified in thousands of projects throughout the United States, Canada and Europe by geologists, system integrators, national engineering firms and a variety of government agencies. Typical applications include, but are not limited to, pump control, tank level monitoring, sewage lift station operation, reservoirs, weirs, flumes, site remediation, watershed management, storm water/well monitoring, pump/pipeline pressures and compressor pressures.

Website and E-Mail

You may visit our website at www.PressureSystems.com to look at our latest new product releases, application notes, product certifications and specifications, as well as Intrinsic Safety control installation drawings. E-mail your questions and comments to us: sales@PressureSystems.com.

E-commerce

Orders may be placed on-line by visiting our e-commerce site *(www.LEVELandPRESSURE.com)* or by contacting the factory or local representative.

Applicable Products

This manual provides information applicable to the use of the following KPSI Level and Pressure Transducers:

Please note: Series 500 and Series 550 (waterMONITOR) have separate manuals.

Level Transducers (Submersible)
Series 700/710/720/730/735
Series 320/330/335/340
Series 300DS
Series 705
Series 750

Pressure Transducers (Non-submersible)
Series 27/28/30

Table of Contents

1.0 Product Description 1
General Characteristics 1
Care and Handling 1
Calibration 1
Approvals 1

2.0 Product Accessories and Options 2
Nose Caps 2
810 SuperDry™ Vent Filter or 815 Aneroid Bellows 2
Sacrificial Anode 2
Absolute/Sealed Gage Transducer 3
Polyurethane & ETFE Jacketed Cable 3
Lightning Protection 4
½" Male NPT Conduit Fitting 4
Electrical Outputs 4
Reverse Signal Output 5
Temperature Output 5
Cable Hanger 5
Submersible Cable Splicing Kit 5

3.0 Installation & Maintenance Tips 6
General Installation Procedures 6
Transducer Anchors 6
Transducer Submersion 6
SuperDry™ Vent Filter (Desiccant) or 815 Aneroid Bellows Installation 6
Cable Protection 6
Bending of Cable 7
Cable Compression 7
4-20 mA Output Wiring 7
VDC Output Wiring 7
Model 750 7
Sealed-Gage Transducer Configured for Altitude Above Sea Level 7
Transducer Position Sensitivity 7
General Maintenance Tips 8
Desiccant Maintenance 8
Clogged Nose Piece or Dirty Diaphragm 8
Cleaning Your Transducer 9
Cleaning the Lightning Protection Data Line Protector 9

4.0 Warranty and Product Return Procedures 10
Restocking Policy 11

Appendix A - Drawings and Diagrams 13
Appendix B - Frequently Asked Questions 17
Appendix C - Field Checkout and Troubleshooting Techniques 20
Appendix D - Calibration Calculations 28

1.0 Product Description

General Characteristics

KPSI™ Level and Pressure Transducers use isolated-diaphragm sensors that are specifically designed for use with hostile fluids and gases. These sensors utilize a silicon pressure cell that has been fitted into a stainless steel or titanium package with an integral, compliant stainless steel or titanium barrier diaphragm. This sensor assembly is housed in a rugged 316 stainless steel or titanium case which provides for a variety of level ranges from 2.3 ft (0.75 m) H_2O through 4614 ft (1408 m) H_2O and pressure inputs from 0-1 (7 kPa) through 0-15000 psi (103 mPa). Our devices feature internal signal conditioning. Standard outputs are 4-20 mA and VDC.

All units containing active electronic components have surge and reverse polarity protection. For ease of use in the field, our transducers are permanently laser engraved with our logo and name, wiring information, part number (P/N), serial number (S/N), date of manufacture (DOM), range, excitation and output. Transducers are offered in diameters of 1.0 (25 mm) and 0.75 inches (19 mm).

Care and Handling

Our transducers are designed for rugged use. However, they need protection from over pressure and sharp impact. When lowering them into a liquid, penetrate the surface slowly and only to the depth necessary. Avoid dropping the unit from above the surface. Clean all transducers by rinsing them in a mild detergent. Direct probing of the diaphragm or attempts to remove protective screens will damage the sensor, voiding the warranty.

Calibration

All transducers are shipped with calibration information unique to each transducer. Make sure you keep each calibration report. However, should you misplace your calibration sheet, you can contact the factory and request a duplicate. All KPSI™ Transducer calibrations are traceable to the National Institute of Standards and Technology (NIST).

Approvals

Most of our products have UL and FM certification for intrinsic safety. Their respective installation control drawings can be downloaded from our website. Several of our product lines also carry ABS approval. Most products are CE compliant to EN 61326-1:2006 and EN 61326-2-3:2006. CE compliant units are labeled accordingly.

2.0 Product Accessories and Options

WARNING: POTENTIAL ELECTROSTATIC CHARGING HAZARD

In hazardous locations:

- **Avoid building up static charge on case of data protector and plastic accessories.**
- **Use damp rag to wipe data protector and plastic accessories to avoid static build up.**

Nose Caps

There are several different user-installable nose caps for the 700, 710, 720, 730, 735 submersible level transducers. The ported nose cap (Delrin) with #8-32UNC-2B threaded hole is best used where weights are required and for those installations where users may encounter sharp, protruding objects. The open-face nose cap which allows maximum contact with the liquid media is ideal for wastewater and "greasy" applications where clogging of the sensor is a concern. The piezometer nose cap allows the unit to be buried in saturated soil without damage to the sensor diaphragm. The 1/4" male NPT pressure nose cap is not only useful for calibration purposes but also allows the device to be used as a submersible or above ground pressure transducer.

WARNING: Caution must be exercised when inserting a screw into the nose cap as the maximum insertion length should not exceed 0.175".

810 SuperDry™ Vent Filter or 815 Aneroid Bellows

All submersible transducers with vented gauge format are supplied with a protective barrier that guards against moisture buildup in the cable vent tube. The 810 SuperDry™ vent filter is installed free of charge and is guaranteed to operate maintenance free for one year. We also offer the 815 Aneroid Bellows as a maintenance free option that can be used on submersibles with accuracies of: ±1%, ±0.5%, or ±0.25% FSO. These barriers ensure reliable operation and long life as they protect sensitive electronic components from mildew and prevent the formation of a liquid column in the vent tube. Any such liquid column directly affects calibration of the transducer.

Sacrificial Anodes

Our sacrificial anodes are made from a special zinc alloy formulated to guarantee continued effectiveness over long periods. Because the anodes are 95% galvanic, they will not corrode unless there is an electrolytic demand. The anode maintains a high driving potential throughout its 12 month life, is self-sluffing and always exposes new zinc for the best possible protection. For those applications where cable buoyancy is a problem, the sacrificial anode can be substituted for hanging weights.

Sacrificial Anodes provide cathodic protection against galvanic corrosion for our submersible pressure transducers. Galvanic corrosion occurs when dissimilar metals are placed in contact with an electrolyte. This condition causes a potential difference to exist between the two metals, causing electron flow between them. Corrosion of the less corrosion-resistant metal is increased and attack of the more resistant metal is decreased. The 820 Sacrificial Anode is clamped to the exterior of a one-inch bore submersible transducer. We also offer a 1" diameter pencil anode, the 825, that attaches to the nose cap of either a 3/4" or 1" bore submersible transducer.

Absolute/Sealed Gage Transducer

The sealed gage option for submersible transducers eliminates the need for a vent filter. The standard output of a sealed gauge transducer is 4 mA at 14.70 psia. Before ordering a sealed gauge transducer, the customer should determine the altitude (above sea level) of the installation and inform PSI's Customer Service of this value before order entry. During manufacture, the output of the transducer will be adjusted to compensate for the altitude difference, if applicable.

Polyurethane & ETFE Jacketed Cable

Most installations of our submersible level transducers connect our polyurethane or ETFE cable to a junction box. From this junction box (P/N 840), users typically run their own cable to the required instrumentation. Polyurethane-jacketed cable is used for most applications while ETFE material is recommended for more aggressive environments.

Specifications for our standard polyurethane and ETFE jacketed cable are as follows:

Specifications	Standard Submersible Cable	Standard Non-Submersible Cable
Weight	0.05 lbs/ft (0.07 kg/m)	0.025 lbs/ft (0.035 kg/m)
Min. OD	0.28" (7.10 mm)	0.189" (4.8 mm)
Max OD	0.31" (7.87 mm)	0.19" (4.9 mm)
Conductors	4 - 22 AWG	22 AWG
Insulation Conductors Outer jacket	PVC Polyurethane or ETFE	Color coded PVC
Shield	36 gauge spiral tinned copper wire foil shield with drain wire	Aluminum/polyester foil facing outward
Vent Tube	Polyethylene, .060" ID (1.52 mm)	Drain wire 7/32 tinned copper

- **Chemical resistance of polyurethane:** Potable Water, Wastewater, Borax, Butane, Animal Fat, Carbonic Acid, Citric Acid, Cod Liver Oil, Corn Oil, Glycerin, Glycol, Mineral Oils, Potassium Nitrate, Potassium Sulfate, Silicone Oils, Stoddard Solvent, Tannic Acid (10), Tartaric Acid, Turbine Oil.

- **Chemical resistance of ETFE:** Acetic Acid (Glacial), Acetic Anhydride, Acetone, Aluminum Chloride, Anti-Freeze, Bromine, Calcium Chloride, Calcium Hydroxide, Chlorine, Copper Chloride, Ferrous Chloride, Hydrochloric Acid, Ketones, Lacquer Thinners, Sulfuric Acid.

The vented cable termination end is specially prepared at the factory to eliminate the potential for moisture migration. Where the lead wires emerge from under the jacket, there's potting material and a shrink tube "boot", every effort should be made to leave this feature intact. Should the cable be longer than needed for the installation, it is recommended that the excess length be accommodated in a service loop and that the potted end of the cable **NOT** be shortened.

The cable attached to this instrument is specifically engineered for submersible applications. The polyurethane outer jacket provides long term reliability under most conditions. The cable should be handled carefully, however, as the jacket may be subject to cutting should it be "raked" over extremely sharp edges. To guard against water incursion should an inadvertent minor cut occur, we have incorporated an exclusive "water block" feature immediately beneath the jacket. The cable is fully shielded, with the shield connected to the metal housing at the transducer end and terminated in a drain wire at the termination or user end. The shield should always be terminated to a good earth ground, unless the transducer is installed in an area where galvanic corrosion is known to be a serious problem.

Lightning Protection

Lightning and surge protection for VDC, SDI-12 and 4-20 mA output are available. This is achieved through the use of 2 protectors, one is integral to the transducer housing and one is provided for the outside line located at the surface and grounded to a DIN-Rail. Please remember this option must be factory installed at the time of order entry or as a factory upgrade. **This option cannot be installed in the field.** Lightning protection is also available for unit only. Contact customer service for details.

Featuring quick response and low clamping voltages, these devices protect against fast rising voltage transients as well as severe current surges associated with lightning discharges up to 20,000 amperes. Following a surge, the protector automatically restores the line to normal operation and awaits the next surge without having to reset a breaker or replace a fuse. The power supply needs to be limited to 150 mA to avoid lock up of the gas tube after a suppression event. **Transducers installed with this option have a lifetime warranty *against damage due to voltage surge***.

Please note: When using the lightning protection option on 4-20 mA products, users should take into account the additional series resistance of this option when selecting the loop power supply. This option will increase total loop resistance by 88 Ohms.

½" Male NPT Conduit Fitting

Submersible level transducers can be attached to a rigid conduit and the cable run through the conduit. To achieve this, all of our submersible transducers can be fitted with an optional ½" NPT male conduit fitting (specify "Electrical Connection Option 4" when ordering) where the cable exits the transducer. This fitting can be mated to a standard rigid conduit.

Electrical Outputs

We offer the industry standard 0-5 VDC and 4-20 mA outputs. In addition we also offer a variety of voltage output ranges.

Reverse Signal Output

For some applications, it is important to know how far the water is from the top of the tank or the surface of the ground. If specified by the customer, our factory can set the transducer so that zero pressure reads full scale electrical output and maximum pressure reads zero electrical output.

Temperature Output

A temperature output option is available for most transducers having 4-20 mA pressure output. The temperature sensor requires an excitation of 9-28 VDC and is calibrated for a temperature range of -20 to 60ºC with an accuracy of ±4ºC.

Output Option 6 (4-20mA output for -20 to 60ºC) (mA Reading x 5) - 40 = Temperature ºC

Example:	Reading is 20mA	(20 x 5) - 40 = 60ºC
	Reading is 12mA	(12 x 5) - 40 = 20ºC
	Reading is 4mA	(4 x 5) - 40 = -20ºC

Cable Hanger

We can supply an optional cable hanger (P/N 12-90-0931) to help end users secure the cable. The cable hanger can be positioned anywhere on the cable by pushing the ends together. Once positioned, the cable hanger expands and provides a snug grip on the cable.

When mounting the transducer in a well casing, the cable hanger can be secured to a hook on the well plate or an eye bolt may be attached to the side of the well casing. The cable hanger loop is then secured to the eye bolt by using any number of types of fasteners. A similar technique can be used when working in stilling wells for surface water level measurement. In this case, the loop-end of the cable hanger can be attached directly to a screw or bolt bored into the still well shelf.

Submersible Cable Splicing Kit

Our field-installable cable splice kit (P/N 830) allows you to splice polyurethane and ETFE submersible cable. It is most commonly used for well applications where the more expensive ETFE cable is required for suspension in corrosive media where the liquid level is fairly shallow, but the well is hundreds of feet in depth. It is also used in emergency situations where cable must be spliced together to get an application up and running.

3.0 Installation & Maintenance Tips

WARNING: POTENTIAL ELECTROSTATIC CHARGING HAZARD

In hazardous locations:

- **Avoid building up static charge on case of data protector and plastic accessories.**
- **Use damp rag to wipe data protector and plastic accessories to avoid static build up.**

General Installation Procedures

The following is important installation and preventive maintenance information. Our Customer Service or Applications Engineering Support staff can provide additional instruction.

1. **Transducer Anchors:** Most users either suspend our submersible transducers in stilling wells or attach them to rigid conduit. This is done to prevent damage to the transducer from shock caused by water turbulence. It is not advisable to tie your transducer to a pump or to piping, as any problem with the transducer could require that the pump be pulled from the installation. This could prove to be *very expensive*. (Please refer to the Cable Anchoring Schemes drawing in **Appendix A**.)

   Some applications use our optional bracket (P/N 49-06-00PC) to clamp the transducer to a fixed object (i.e., wall, ladder, step) or require the unit to be suspended without any protective still well or attachment device. In all installations, care should be taken to ensure no damage occurs to the cable.

2. **Transducer Submersion:** Damage to submersible cable is one of the most frequent causes of transducer failure. Lower your transducer into the liquid slowly, making sure the cable does not drag over sharp edges and only to the depth necessary. Avoid dropping the unit from the surface. This does not apply to Series 27, 28, and 30 transducers.

3. **SuperDry™ Vent Filter (Desiccant) or Aneroid Bellows Installation** (For submersible transducers vented gage pressure format only) ***Always*** install a desiccant vent filter or aneroid bellows immediately after transducer installation**.** Failure to use one or the other could result in premature failure of the transducer; which would not be covered by warranty. If you use a desiccant filter, you should establish a regular maintenance schedule. You should change your vent filter when it is 75% spent (pink color). Replacement filters are available at a nominal cost from the factory. Do not remove the old vent filter until a new one is available. The most common failure mode of our transducers is moisture and corrosion damage due to lack of use or maintenance of the vent filter. This will allow air into the desiccant filter and allows the transducer to properly vent with changes in barometric pressure.

   To install/replace either the aneroid bellows or the vent filter, simply unplug the old unit from the vent tube and plug the 0.062" x 1" stainless steel connector tube (supplied with each filter or bellows) into the vent tube. (Installation and mounting instructions are supplied with each aneroid bellows and vent filter.) The diagram on page 16 shows typical vent filter and aneroid bellows hookups.

4. **Cable Protection** An inexpensive way to protect the cable from damage is to order the submersible pressure transducer with a ½" conduit attachment. Connect an inexpensive flexible 5/8" garden hose to the ½" conduit fitting with an equally inexpensive female PVC ½" NPT x 3/4" NHT swivel fitting, available at your local hardware store

5. **Bending of Cable** Our polyurethane and ETFE jacketed cables are quite flexible. Care needs to be taken to ensure that when bending the cable to suit your installation you do not crimp the vent tube inside the cable. Consequently, do not bend the cable more than a radius of 1 inch.

6. **Cable Compression** Many users require a compression fitting to secure our ETFE and polyurethane jacketed cable as it enters a junction box. Care needs to be taken that you do not over-tighten the fitting so as to damage the cable.

7. **4-20 mA Wiring** When connecting a 2-wire 4-20 mA transducer to a typical power supply and mA meter, verify that the meter has an input impedance of at least 10 Ohms. If you are unsure of the input impedance, then a 10 Ohm resistor may be placed in series with the meter and transducer. Connect the + (red) lead of the transducer to the + terminal of the power supply. If the 10 Ohm resistor is required, connect it to the - (black) lead of the transducer. Use a short length of 22 AWG or heavier wire to connect the + terminal of the meter to the resistor (if it is required) or the - (black) wire of the transducer. Connect the - terminal of the meter to the - terminal of the power supply with a length of 22 AWG or heavier wire. Connect the drain wire from the transducer to a good earth ground. (See **Appendix**, page **14** for wiring diagram.) Please refer to "**Maximum Cable Lengths and Minimum Supply Voltage**" in **Appendix C**, page **22** to verify minimum loop supply voltage requirements.

8. **VDC Wiring** To connect a 3 wire VDC output transducer to a typical power supply and the voltmeter, connect the - terminal of the power supply to the - input terminal of the meter with a length of 22 AWG or heavier wire. Connect the - excitation (black) lead of the transducer to the - input terminal of the meter. Connect the + input terminal of the meter to the signal lead (white) of the transducer. Connect the + terminal of the power supply to the + lead (red) of the transducer. Connect the drain wire to a good earth ground. (See **Appendix A**, **page 14**.)

9. **The Model 750** comes standard with a field removable diaphragm protector (one-inch or 25 mm standoff). The diaphragm protector can easily be taken off by removing six (6) fasteners located on the bottom of the unit.

10. **Sealed-Gage Transducer Configured For Altitude Above Sea Level** Since sealed-gauge transducers are normally calibrated at sea level, there may be considerable error induced when used at a higher elevation. If the transducer was calibrated without taking into consideration the difference in atmospheric pressure at sea level and the higher elevation, an offset error will occur. In order to eliminate error due to this difference, the customer must identify the elevation where the transducer will be installed. The nominal atmospheric pressure at the location is calculated and the transducer will be ranged accordingly. Not all KPSI Transducers are available in a sealed pressure format. Please refer to the appropriate datasheet for availability.

11. **Position Sensitivity** The transducer should be installed so that the diaphragm located behind the nose cap is oriented in a vertical position, otherwise the unit could exhibit an offset.

General Maintenance Tips for Submersible Transducers

1. **Desiccant Maintenance**

WARNING: POTENTIAL ELECTROSTATIC CHARGING HAZARD

In hazardous locations:

- **Avoid building up static charge on case of data protector and plastic accessories.**
- **Use damp rag to wipe data protector and plastic accessories to avoid static build up.**

If you use a desiccant vent filter, you should establish a regular maintenance schedule. You should change your vent filter when it is 75% spent (pink color). Replacement filters are available at a nominal cost from the factory. Do not remove the old vent filter until a new one is available. Remember that Pressure Systems' improved 810 SuperDry™ Vent Filter are designed to be effective for at least one year before requiring replacement.

2. **Clogged Nose Piece or Dirty Diaphragm**

Either of these conditions could result in erroneous readings from your transducer.

WARNING: NEVER attempt to clean your transducer's nose piece or diaphragm with any object. This will dent the sensor diaphragm and cause permanent damage to the transducer.

Your transducer may be cleaned in accordance with the procedures listed in step 4, below.

3. **Cleaning your transducer**

Materials required:

- Plastic bowls 8-12 inches (200-300 mm) in diameter and 4-6 inches (100 - 150 mm) deep
- Supply of clean, lint-free cleaning rags
- 32 ounce bottle of "The Works-Tub and Shower Cleaner" (a mild detergent) manufactured by Lime-O-Sol Company in Ashley, IN 46705 and available locally through Wal-Mart, K-Mart, Target, and Ace Hardware stores at $2 to $4 per bottle

Preparation: Prior to cleaning your pressure transducer, ensure that all procedures have been followed in the proper cleaning of the cable and transducer to remove any hazardous materials. The vent filter (or bellows) must be properly attached. The cable should be coiled to ensure ease of handling and it must be protected against the possibility of accidental abrasion and/or penetration of the cable jacket by sharp objects. A lead length of 1 to 1 ½ feet (0.3 - 0.45 m) of cable from the transducer should be allowed to facilitate handling during cleaning. The protective covering (or similar protective device) that is shipped with each transducer should be attached to the transducer at all times. It should only be removed prior to installation or cleaning.

Your work surface needs to be clean and free of clutter and large enough to accommodate all materials required in addition to the transducer and cable. Fill one of the bowls with fresh water, one with a mild detergent mixed with water and the last with 16 ounces (0.45 kg) of "The Works".

Cleaning:

Step 1: Holding the cable 6 inches (150 mm) from the transducer, immerse the unit in the bowl containing the mild detergent and stir for 20-30 seconds. Remove and rinse in the bowl containing the fresh water, using the same stirring motion used in the mild detergent. Rinse and wipe dry.

Step 2: Holding the body of the transducer with one hand so that you are looking at the retaining screen protecting the sensor, carefully remove the sensor nose piece by simply unscrewing it from the transducer body. *Do not touch the sensor diaphragm with your finger or any other object. Also, do not try to dry the inside portion of the transducer, as you risk damaging the pressure sensor*.

Step 3: Place the transducer in a vertical position with the sensing end facing downward in the bowl containing "The Works" solution for approximately 15-20 seconds. Rinse in the bowl containing clean water and wipe dry the external casing only. Place the protective screen in the same solution for 15-20 seconds, rinse and wipe dry.

Step 4: Holding the transducer in a vertical position so that you can see the face of the sensor, screw the protective nose piece back into place.

4. Cleaning the Lightning Protection Data Line Protector

WARNING: POTENTIAL ELECTROSTATIC CHARGING HAZARD

In hazardous locations:

- **Avoid building up static charge on case of data protector and plastic accessories.**
- **Use damp rag to wipe data protector and plastic accessories to avoid static build up.**

4.0 Warranty and Product Return Procedure

Any transducer/transmitter that is less than 2 years old (see DOM) which does not meet the product's specifications and exhibits **no obvious physical damage to the housing, sensor, or cable (cuts),** will be replaced under warranty.

Units 2-3 years old: Units that fall within this age group and exhibit no obvious physical damage to the housing, sensor, or cable (cuts), may be replaced at a discounted list price.

Units greater than 3 years old: Units that fall within this age group are not replaced under warranty.

Merchandise Return Procedures

Contact the **Applications Support Group** or the **Customer Service Department** at Pressure Systems if your transducer is not operating properly. Our staff is available for troubleshooting at **(757) 865-1243** or toll free at **1-800-328-3665** during normal working hours, Eastern time. If your transducer or accessory needs to be returned to Pressure Systems, obtain a *Returned Merchandise Authorization* (RMA) from the Customer Service Department prior to shipment. Be prepared to supply the following information when requesting the RMA:

- Part number
- Serial number
- Complete description of problems/symptoms
- **Bill To** and **Ship To** address
- Purchase order number (not required for warranty repairs)
- Customer contact and telephone number

The above information, including the RMA number, must be on the customer's shipping documents that accompany the equipment to be repaired. Pressure Systems also requests that the outside of the shipping container be labeled with the RMA number to assist in tracking the repairs. All equipment should be sent to the following address:

ATTN: KPSI TRANSDUCER REPAIR DEPARTMENT (7-digit RMA number)
Pressure Systems, Inc.
34 Research Drive
Hampton, Virginia 23666

Prior to returning to Pressure Systems, the transducer and cable must be cleaned per instructions provided on the cleaning certificate supplied when the transducer was delivered. The certificate can also be found on Pressure Systems website:

www.PressureSystems.com/cleaning.html

The completed certificate must accompany the transducer when shipped to Pressure Systems. If the transducer has been used in media other than potable water, PSI customer service must be notified at the same time an RMA number is requested. PSI reserves the right to reject any shipment deemed to be unsanitary or environmentally unsafe to handle. If these guidelines are not met, the package will be sent back unopened and at the customer's expense. ***Please***

include the attached vent filter or aneroid bellow with each returned vented gage submersible transducer.

Pressure Systems will return warranty items prepaid via UPS GROUND. If the customer desires another method of return shipment, Pressure Systems will prepay and add the shipping charges to the repair bill.

Incoming freight charges are the customer's responsibility. The customer is also responsible for shipping charges to and from Pressure Systems for all equipment not under warranty.

Once the return is received, it typically takes 5-10 working days for the technician to make a fault determination.

A cable reconnect fee will be charged when the customer requests a different length of cable.

Restocking Policy

Pressure Systems does allow standard products to be returned for credit in the event it is no longer required, providing the products are in new and unused condition. A restocking fee will be assessed depending on the model type and variety.

A **25% restocking fee** applies to the following models, providing they are vented-gage reference format and [pressure ranges above 3 psig (20 kPa) and below 100 psig (690 kPa)].

27	320	700	710
28	342	705	720
Display Meters - all models			750

A **50% restocking fee** applies to the following models. This also applies to all other models with sealed-gage and absolute pressure formats as well as vented-gage reference formats with [pressure ranges below 3 psig (20 kPa) and above 100 psig (690 kPa)].

30	335
300DS	730
330	735

NOTE: Expedite premiums and shipping charges are non-refundable.

Please consult the individual manuals for the Series 500 and Series 550 (waterMONITOR) for the restocking policy.

This page intentionally left blank.

Appendix A

Drawings and Diagrams

Wiring Diagram VDC, mA, and Temp Output 14
Cable Anchoring Schemes 15
Reference Connection Schemes 16
Submersible Cable Termination 17

Wiring Diagram VDC, mA, and Temp Output

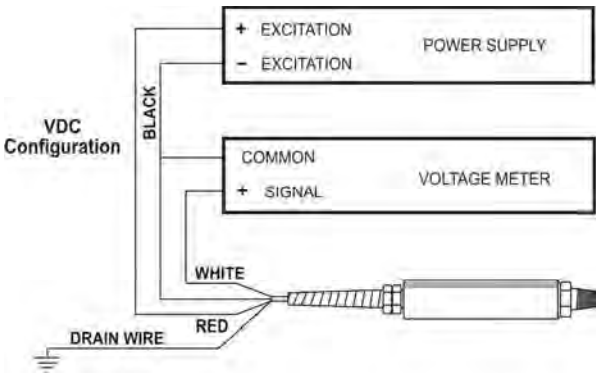

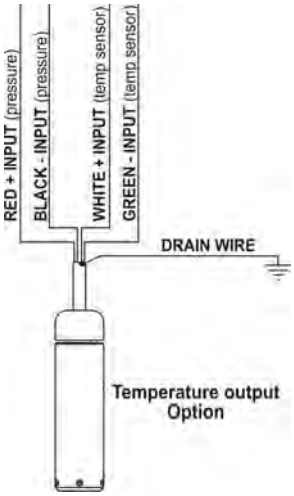

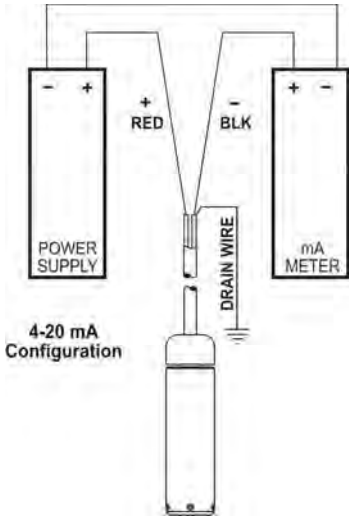

Notes:

1. These diagrams depict typical installations. Refer to your power supply and instrumentation Manufacturer for the specifics of your application.

Cable Anchoring Schemes

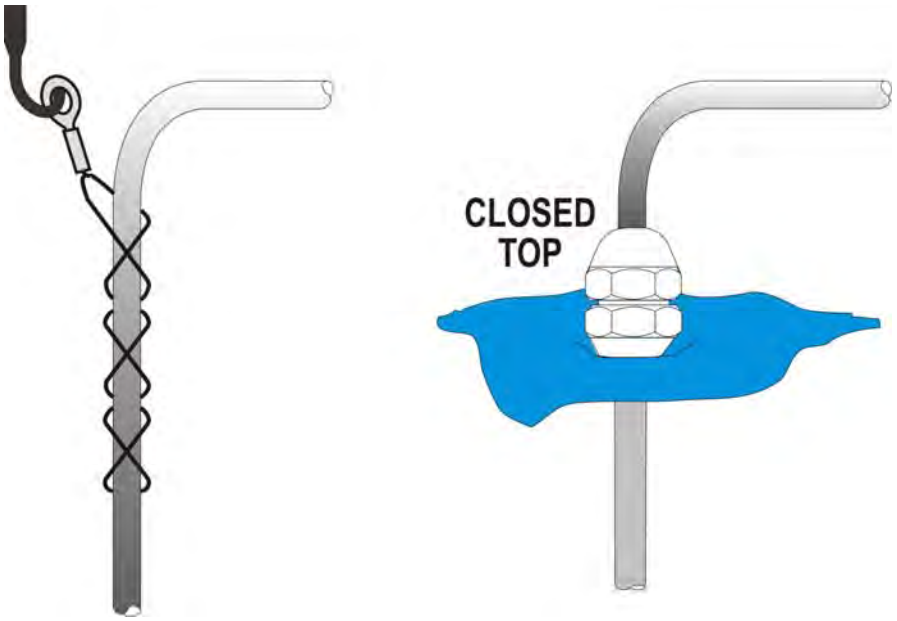

Reference Connection Schemes

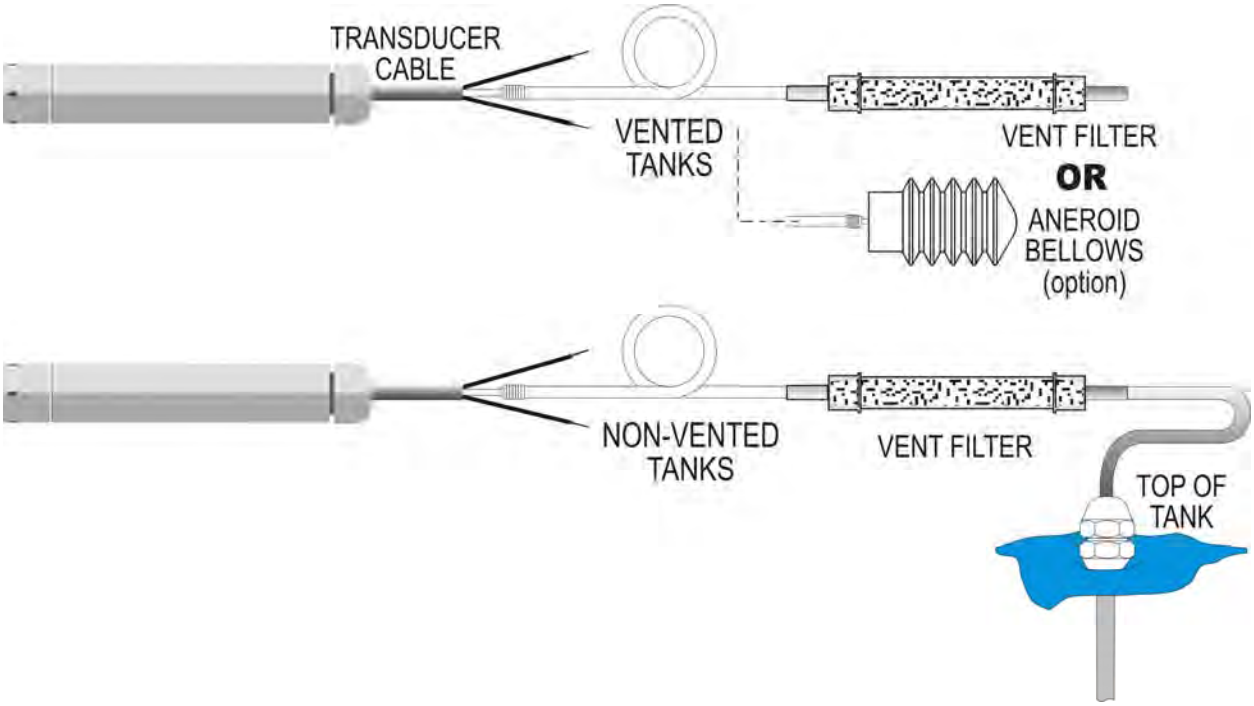

Submersible Cable Termination

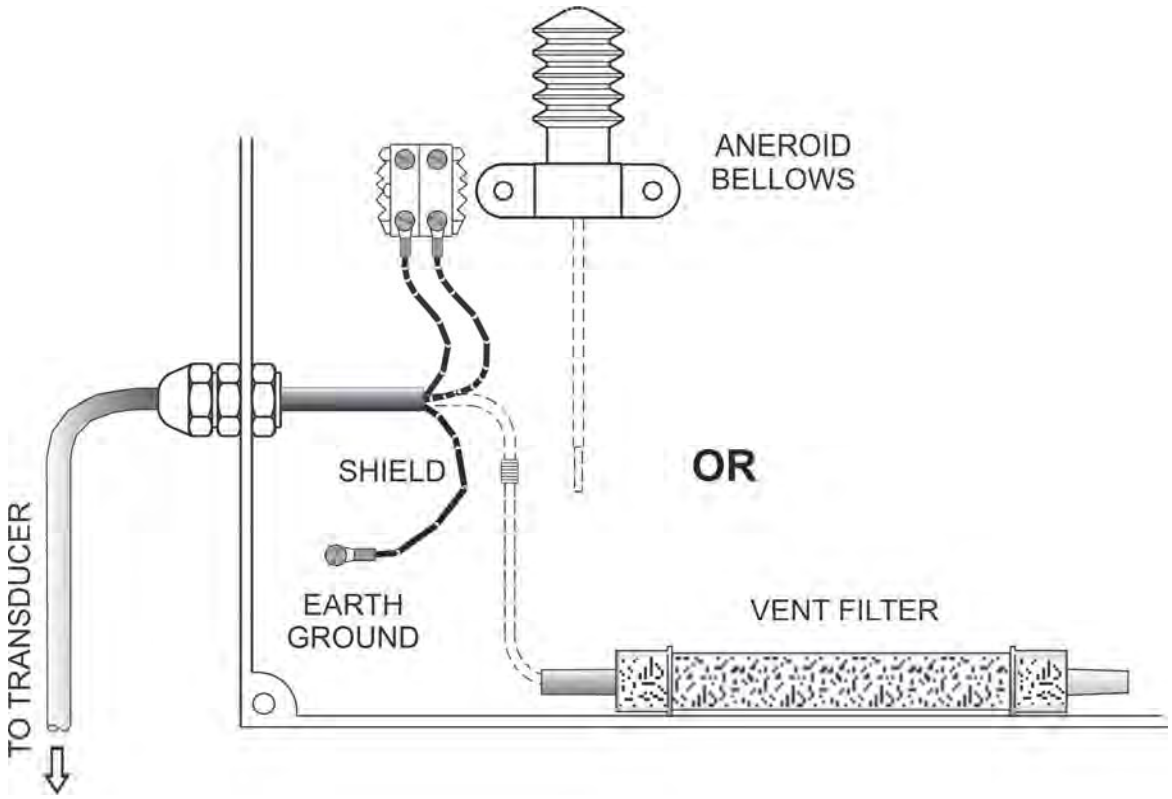

Appendix B

1. Question: What installation ideas do you have to help me get rid of electrical noise interfering with the signal?

Answer: An ounce of prevention goes a long way. Either try to eliminate the source of noise or move the transducer as far away from it as possible. We strongly encourage you to secure our cable shield to a good earth ground and that you use a 4-20 mA signal output. Armed with these precautions and the fact that many of our transducers are CE approved for electromagnetic interference, you should have few problems.

2. Question: The cable on the submersible transducer always seems to get cut and damaged. What am I doing wrong?

Answer: This is the most common problem that our users encounter. Make sure that all of your colleagues and staff understand the importance of handling the cable with care. The cable should not be bent around rough or sharp edges. Always use a cable reel during transport. Where possible, suspend the unit in a perforated 2" (50 mm) PVC pipe and thread the cable through protective conduit to the nearest junction box.

3. Question: I have an application where the transducer is frequently damaged by voltage spikes. What can be done to prevent this?

Answer: At a minimum, make sure the cable shield is connected to an earth ground as near as possible to the transducer. We can provide a surge protection kit for both our submersible and non-submersible transducers. See page 4. These kits will handle typical spikes that might come in through the power lines as well as surges that travel through the ground due to nearby lightning strikes

4. Question: How much impact shock can your submersible transducers withstand?

Answer: Our transducers are not shock tested and the lower pressure ranges can be damaged if dropped from several feet onto an unforgiving surface like concrete. We recommend that the protective shipping foam remain in place until the unit is installed.

5. Question: What is the response time of your transducer?

Answer: From initial power up, the transducer output will stabilize within a fraction of a second. The frequency response is rather low, probably less than 1 kHz, but it depends on the application, the media, plumbing, etc. Call our factory for application assistance if frequency response is critical in your application.

6. Question: How do I attach your vent filter or aneroid bellows to my cable vent tube?

Answer: The vent filter can be mounted anywhere convenient, preferably out of the weather. It can be mounted in any position and connects to the cable vent tube via the extension tube with metal connector tube provided. The aneroid bellows must be mounted in a way that its movement is not encumbered. It is provided with a mounting base.

7. Question: What is the best way to mark my cable?

Answer: Use white vinyl marking tape available from your local hardware or electronic stores. These same stores may also sell cable marking kits.

8. Question: Any ideas for preventing marine growth on your submersible transducers?

Answer: You might want to try waterproof grease. Remove the threaded nose cap to facilitate applying the grease**. Take care not to damage the diaphragm when applying the grease and not to trap air bubbles against the sensing diaphragm.**

9. Question: How many measurements can you make before the diaphragm on the sensor fails?

Answer: In normal operation - millions of cycles. We find that sensor failure is rarely due to diaphragm fatigue.

10. Question: What is the turnaround time on repairs?

Answer: Once we receive a unit into our facility it takes less than 10 working days to complete an evaluation.

11. Question: What is the longest length of cable you have attached to a submersible transducer?

Answer: Two thousand feet (610 meters).

12. Question: Why do you use 316 SS housings and sensors for your standard transducers?

Answer: It offers a good combination of corrosion resistance and reasonable cost. As an option, we do offer titanium for more aggressive environments.

13. Question: What wire gauge should I limit myself to when connecting to your 22 AWG wire?

Answer: Use 22 AWG or heavier.

14. Question: Does it make any difference if I mount the transducer in a vertical or horizontal position?

Answer: Yes. Our units will experience a certain amount of position sensitivity. You should mount it in a vertical position throughout the measurement cycle. If you lay the transducer down, the user must realize than an offset will occur.

15. Question: What happens when you freeze your transducer in a column of water?

Answer: We have frozen our transducers in a container of water in a home freezer, with no resulting damage. However, depending on the level range of the unit, over pressure of the unit is possible. In harsh environments where debris is common and ice shifts, you might expect damage to both the transducer and cable.

16. Question: Why would I choose a KPSI Transducer versus a competitor?

Answer: Reliable, long lasting products
Rapid delivery
Lightning protection lifetime warranty
Excellent pre & post sales/application support
No hassle service

Appendix C

Troubleshooting Techniques

Quick Check Procedure

The following is a quick field checkout procedure for KPSI Level and Pressure Transducers. It will be referred to throughout the troubleshooting section.

Should a problem be encountered with a transducer or transmitter, it is sometimes helpful to test the transducer independently from the rest of the system, thereby establishing where to concentrate the troubleshooting effort.

On the next page is a simple hookup diagram for the most common types of electrical output, a 0-5 VDC transducer and a 4-20 mA transmitter. In either case, the "power supply" can be a common 12 volt lantern battery, or even a 9 volt transistor radio battery, although the lifetime of a 9 volt battery will be limited. The meter should be a digital type capable of reading at least 2 digits to the right of the decimal point. Use 22 gage or heavier hookup wire or clip leads for jumpers. If your unit has other than a 0-5 VDC or 4-20 mA output, please call Applications Support at **(800) 328-3665** for assistance.

Once your transducer is correctly configured per one of the diagrams below, orient the transducer in a vertical position with the pressure port down and then read the zero output on your meter. For a 0-5 VDC output, the zero should be between 0 and 0.10 volts, and for a 4-20 mA output, between 3.80 and 4.20 mA. For Series 300, the values do not change for VDC output but the values for mA are between 3.80 and 4.20 mA. If the output is outside of these limits, you may, at your option, choose to troubleshoot the transducer per the suggested measurements shown below. Otherwise, contact our Customer Service Department at **(800) 328-3665** for a Return Material Authorization number (RMA).

If the zero output is within these limits, the problem will more than likely be found elsewhere in your system.

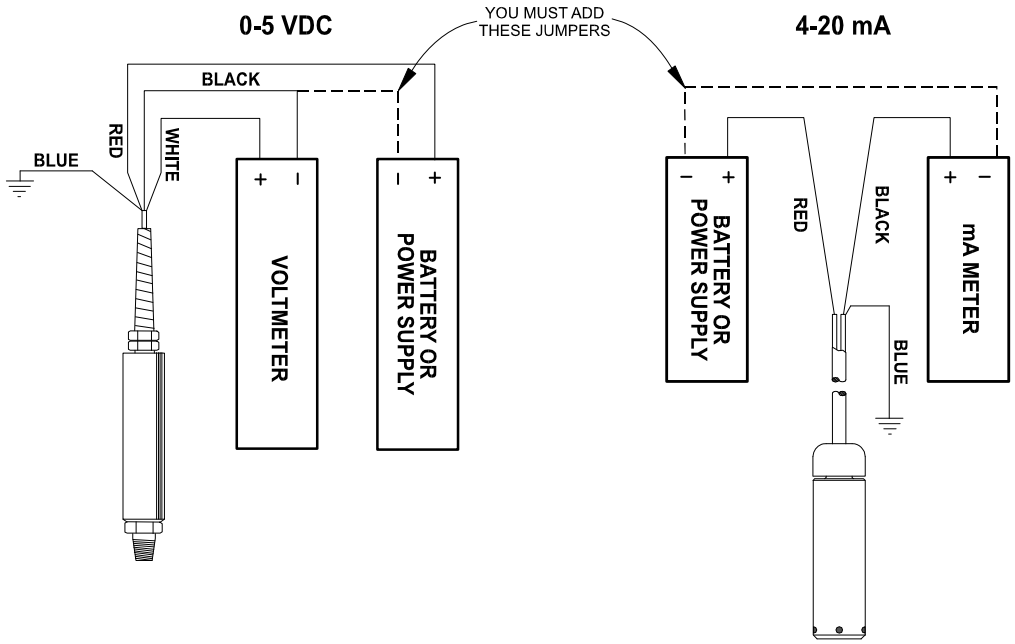

When an error is observed at a customer's installation, it is important to determine if the fault lies in the transducer or the instrument reading the transducer signal, ie. digital panel meter, programmable logic controller, etc. . To do this, a second instrument should be used to confirm the observations. The second instrument may be a handheld DMM (Digital Multi-Meter) or a dedicated milliammeter capable of reading 4-20 mA of current to a resolution of at least 0.1 mA. The diagram above illustrates the attachment of the meter in series with the black (negative signal) wire of the transducer using a 9-28 VDC power supply for transducer excitation. Some suggested power supplies are:

- 1 - 12 VDC automotive battery.
- 2 - 6 VDC lantern batteries connected in series (for a total of 12 VDC).
- 2 - 9 VDC transistor batteries connected in series (for a total of 18 VDC).

Batteries are suggested to power the transducer during testing to eliminate the possibility that line noise is passing through an improperly filtered, grounded, or damaged power supply. All measurements should be recorded and sent to Pressure Systems along with the transducer to assist in the evaluation process.

Further Measurements:

0-5 VDC	Should read:	4-20 mA	Should read:
+Excitation (white) to Shield (drain)	> 2.5 Mohms	+Excitation (red) to Shield (drain)	> 2.5 Mohms
-Excitation (black) to Shield (drain)	> 2.5 Mohms	-Excitation (black) to Shield (drain)	> 2.5 Mohms
+Output (red) to Shield (drain)	> 2.5 Mohms	Shield (drain) to Housing	< 2 ohms
Shield (blue) to Housing	< 2 ohms		

Maximum Cable Lengths and Minimum Supply Voltage

The maximum length of cable to be used with our submersible transducers is largely dependent upon the type of electrical output of the transducer. For a 0-5 VDC output, a maximum cable length of 100 feet (30 m) is recommended. A voltage output is more susceptible to electrical interference than a 4-20 mA signal. A 4-20 mA signal can be transmitted much longer distances, depending upon such factors as temperature, wire size, length of the wire, power supply, and voltage requirements of any devices to be powered. At 25ºC the 22 AWG conducting copper wire used in our polyurethane jacketed cable has a resistance of 16.45 ohms per 1000 feet (304 m).

Using Ohms Law (E=IR) where E=voltage, I=current and R =resistance, one finds that a 20 mA signal requires .329 volts to drive it along 1000 feet (304 m) of 22 AWG copper wire (E=16.45 x .020). This drop is seen on both the supply and return wire for a total loop voltage drop of 0.658 volts

To find out how much voltage is required to drive our Series 700 submersible level transducer's 4-20 mA signal 10,000 feet, just add the minimum power requirement of the 700 (9 VDC) to the resistance offered by 10,000 feet (3048 m) of our polyurethane jacketed cable (10,000÷1000 x .658=6.58). The resulting power requirement is 15.58 VDC (9 + 6.58).

Connect the cable shield (drain wire) to a good earth ground. This will protect the transducer from relatively minor transient voltages. The only exception to this rule is if high rates of electrolytic corrosion have been previously experienced with grounded submersible devices. In this case it may be better to leave the shield disconnected.

Please note: When using products with the lightning protection option on 4-20 mA products, users should take into account the additional series resistance of this option when selecting the loop power supply. This option will increase total loop resistance by 88 Ohms.

Troubleshooting Techniques

1. Symptom: ***Transducer fails to give output of any kind.***

Procedure: Isolate the problem to either the transducer or the power supply/readout. See the Quick Check Procedures (above) for this check. If it can be determined that the transducer is no longer operable, remove it from service for further analysis. If the transducer output falls within the limits described above, the fault lies somewhere else in your system.

2. Symptom: ***Transducer has failed and has been removed for analysis.***

Procedure: Inspect the cable for physical damage. Cuts in the cable jacket can result in liquid incursion into the transducer housing, which can cause permanent damage. If operational, the cable can be repaired by using a splice kit (P/N 830) supplied by Pressure Systems.

Inspect the transducer housing. It should be intact and free of corrosion. If the outer surface of the transducer is pitted, this could be an indication of galvanic corrosion caused by stray ground currents. If this is the case, the transducer will probably require replacement. If the external case exhibits none of these characteristics, carefully unscrew the nosepiece and look into the pressure sensing end of the transducer. The concentric rings of the sensing diaphragm should be visible. If they are not, it could be that residue has accumulated on the diaphragm, preventing it from responding properly to pressure changes. The transducer can be cleaned by gently swishing the transducer back and forth in a bucket of warm, soapy water until the residue softens and washes off. (See **Cleaning Your Transducer**, page 8.) ***Under no circumstances should any object or tool be used to remove residue from the sensing diaphragm or else permanent damage will be done.*** If cleaning the diaphragm does not solve the problem, the transducer should be returned to the factory for repair or replacement.

3. Symptom: ***Transducer develops a negative offset and gets worse over time (actual level exceeds specified level).***

Procedure: This may be a sign that moisture has entered the reference (vent) tube in the cable and is inside the transducer housing. This is usually the result of not maintaining the desiccant vent filter or of operating the transducer without a desiccant filter or aneroid bellows. If caught early enough, the transducer can be saved by coiling the cable and transducer in a pan and baking it in an oven at 50°C (122°F) for a minimum of 2 hours. *Be careful that the oven temperature does not exceed 50ºC (122°F)* or both the transducer and the cable can be damaged. **Alternatively**, suspend both the cable and transducer in a vertical position (with vent tube down), overnight to allow water to drain from the transducer and vent tube.

4. Symptom: ***Transducer suddenly fails during or just after a nearby lightning event.***

Procedure: This failure is usually caused by overvoltage due to ground transients resulting from a direct or indirect lightning event. These transients can travel

distances of a mile or more. The transducer may be returned to the factory for repair and optional retrofit of our ***lightning protection system.*** This system carries a lifetime warranty against transducer damage due to lightning.

5. Symptom: ***Transducer response to pressure/level input changes becomes sluggish.***

Procedure: This is usually a sign that the sensing end of the transducer has become fouled with residue. The transducer must be removed from service and the sensing diaphragm cleaned as described in Item 2, (warm, soapy water). If fouling persists, the transducer may be replaced with a Series 705 or Series 750 (non-fouling) transducer, which is specifically designed for trouble-free operation in a high residue environment.

6. Symptom: ***Output reading is within limits but "freezes" at one point.***

Procedure: In certain environments "crust" may form over the sensing diaphragm, preventing the sensor from identifying change in level. Removing the transducer from service and cleaning it (as described in Item 2) will generally solve the problem. To combat marine growth, you might try wrapping the transducer with copper wire similar to that found in wire scouring pads for cleaning dishes. Marine growth occurs on the copper and eventually erodes the copper and drops off or the copper is manually removed during routine maintenance. Alternatively, there are various companies that will impregnate/coat the 316 stainless steel with anti-fouling chemicals of coatings. Level transducers temporarily removed from the well or sump should not be stored dry, but should be stored in a bucket of fresh water in order to prevent "crust" formation.

7. Symptom: ***Readings increase very slowly over time***.

Procedure: Our cable is shipped coiled and consequently takes time to straighten when installed. Attaching a weight to the transducer (e.g., one of our sacrificial anodes) will help. To prevent cable stretch with lengths greater than 200 feet (60 m), secure the Kevlar fibers (just under the cable jacket) to your junction box or other secure object.

8. Symptom: ***No electrical output from your transducer.***

Procedure: Check all electrical connections to ensure they are correct and secure. Double check your power supply or use a battery (as described previously) to ensure the transducer is getting power. If all checks OK, the problem could be a circuit board or the sensor in your transducer. The unit must be returned to the factory for evaluation. The most probable cause of this type of failure is damage to the submersible cable jacket allowing water to leak down the cable and into the transducer housing or lightning damage.

9. Symptom: ***Formation of marine growth on a submersible transducer.***

Procedure: Certain transducer construction materials, for example, 316 stainless steel, attract marine life (snails) and algae. Clean the transducer diaphragm by

soaking it in a bucket of warm water with a non-aggressive cleaning solution. You can also coat the transducer with marine grease. This may be the most effective and inexpensive way to protect your transducer.

10. Symptom: ***Submersible transducer exhibits corrosion or pitting on body or diaphragm***

Procedure: Dissimilar metals (for example, your transducer housing and your pump housing) in an electrolytic environment (fluid in your well) can lead to *galvanic corrosion* of the metal that is nearer the anodic end of the galvanic series. Likewise, a voltage potential between the ground wire of the transducer and the ground of other equipment in the well can lead to *galvanic corrosion*. Installation of a P/N 820 or 825 sacrificial anode will help protect your transducer from *galvanic corrosion*. Our sacrificial anodes are made of a zinc alloy that, being nearer the anodic end of the galvanic series than the 316 stainless steel or titanium housing of the transducer, will corrode before the transducer.

11. Symptom: ***The transducer is buried in dirt or silt and the readings seem to be erroneous.***

Procedure: Use of a piezometer nosepiece in this application would help. This nosepiece can be easily installed in the field and features a very fine screen to keep dirt from fouling the diaphragm, but allows the diaphragm to sense moisture levels.

12. Symptom: ***Transducer has an offset error.***

Procedure: Our submersible transducers perform best when the sensing end is pointing in a downward manner. Keep in mind that you can experience offset error due to the position sensitivity or orientation change of the sensor. Offset errors are more prominent in low pressure applications with the sensing end of the transducer lying flat or pointing upward.

13. Symptom: ***I am testing a Series 700 4-20mA sensor for use with our data logger. On page A-2 of the KPSI Level and Pressure Transducers User's Manual, I see the standard 4-20mA configuration. Does the recording channel of my data logger become the mA meter?***

Procedure: Most data loggers cannot measure current (mA) directly. When this is the case a load resistor must be used to convert the current (mA) output into an appropriate voltage. If the User's Manual for your particular instrument does not illustrate a preferred method for recording current (mA) data then you should attach your transducer signal wires to your data logger in the following manner.

Transducer red wire - Data Logger Excitation Terminal
(The minimum excitation for a Series 700 Transducer is 9VDC)
Transducer black wire – Data Logger signal input (+) terminal

Attach a Load resistor between the Data Logger signal input (+) terminal and the Data Logger signal input (-) terminal.

Attach a separate piece of wire between the Data Logger signal input (-) and analog ground.

In this configuration you will turn your data logger into a milliammeter. The size of your load resistor can be calculated in the following manner.

D/0.02=R

Where:

Data logger input range = D
Full scale output of transducer = 0.02 A (20 mA)
Load Resistor Value = R

Pick an appropriate standard value

250 Ohms results in 1 to 5 VDC at 4 and 20 mADC
125 Ohms results in 0.5 to 2.5 VDC (500 to 2500 mVDC) at 4 and 20 mADC

At this point the discussion needs to address IR loss (voltage drop) in series circuits. Note that Series 700 transducers need a minimum of 9 VDC to operate correctly. When the transducer is operating correctly it will output a current which, when driven through a resistor, will generate some amount of voltage drop. If the resistor value is 250 Ohms then the voltage measured across that resistor will be 0.004 A * 250 Ohms = 1.000 VDC and 0.020 A * 250 Ohms = 5 VDC. Notice that, if the available voltage from the data logger is12 VDC then 12 VDC - 5 VDC = 7 VDC which is less than the voltage required by the transducer to operate. If this scenario were to occur the transducer would actually stop functioning correctly when its output reached 12 mADC (50% of transducer full scale range). In this case the appropriate choice for a load resistor value is 125 Ohms.

14. Symptom: ***I have a Series 700 4-20mA transducer rated for 7.5 PSIG attached to a pressure source that is outputting 7.5 PSIG. With 20VDC being supplied I am getting 19.94 mA. I can't find the upper range allowance for the sensor, but this seems low to me. Does this mA reading fall into the acceptable range for the transducer with the settings I've specified?***

Procedure: When evaluating a transducer it is sometimes convenient to make some broad generalizations in order to rapidly determine the condition of the unit. In general, transducers that output a 4-20 mADC signal have a 16 mADC span (4 - 20 = 16). If the transducers accuracy is reported as being some percentage of its full-scale range then the following table could be used in conjunction with the instructional notations to determine whether a more detailed analysis of data quality is required.

Model	Accuracy	Accuracy in mADC
700	1.00%FS	±0.16 ma
710	0.50%FS	±0.08 ma
720	0.25%FS	±0.05 ma
730	0.10%FS	±0.016 ma
735	0.05%FS	±0.008 ma

In order to approximately determine how many milliamps a transducer should output at a given depth.

1. Determine the depth (in feet) at which the transducer is sited.
2. Divide the depth value (from step 1) by the transducer full-scale range (in feet). - Record the value.
3. Multiply the value calculated in step 2 by 16 (the transducer span in milliamps).
4. Add 4 to the product of step 3. This is the approximate value in milliamps that should be output by the transducer at its current depth.

In order to approximately determine the depth of a transducer (in feet) using a given value of milliamps.

1. Divide the full-scale range of the transducer (in feet) by 16. Record this value.
2. Subtract 4 from the milliamp output of the transducer. Record this value
3. Multiply the result of step one by the result of step 2. This is the approximate depth at which the transducer is sited.

If the resulting numbers are reasonably close to some verified value for current water depth, then the unit is functioning. In order to determine the quality of measurement, additional steps need to be performed.

Appendix D

Calibration Calculations

Pressure Systems ships a calibration sheet with every KPSI™ Transducer. This sheet lists the actual values that were output by the transducer, when it was being manufactured, at several different pressures. In addition, two coefficients are provided that can be used to calculate the actual depth from any given mA output value. These coefficients are derived from a Least Squares Best Fit Straight Line (BFSL) calibration using the data listed on the datasheet. Our accuracy specification is referenced to the line described by the BFSL coefficients and so the transducer may not output exactly 4 mADC at zero pressure and 20 mADC at full-scale. As an example here is an example of data for a typical transducer.

Calibration Report

Test Date: 02/28/08
Test Time: 13:02:57
Model No: 320T14B0A008.670000.000B10030B
Serial No: 0802048
Pressure Range: 0.00 to 8.67 PSIG
Excitation: 9-28 VDC
Output: 4-20 mA

Test Temps: ROOM = 25.3 DegC

PCU Serial No: TRF048

Target Test Pressure	BFSL Rm Temp Outputs	Run #1 Rm Temp Outputs	Run #1 Error %FSO	Run #2 Rm Temp Outputs	Run #2 Error %FSO
0.00	4.0017	3.9995	-0.0134	3.9981	-0.0222
1.73	7.2050	7.2003	-0.0295	7.2066	0.0098
3.47	10.4096	10.4111	0.0091	10.4144	0.0297
5.20	13.6133	13.6182	0.0305	13.6207	0.0461
6.94	16.8176	16.8158	-0.0114	16.8174	-0.0014
8.67	20.0219	20.0173	-0.0290	20.0190	-0.0184
6.94	16.8171	16.8162	-0.0057	16.8172	0.0006
5.20	13.6127	13.6176	0.0305	13.6175	0.0299
3.47	10.4083	10.4131	0.0298	10.4110	0.0167
1.73	7.2049	7.2067	0.0115	7.2059	0.0065
0.00	4.0020	4.0001	-0.0118	4.0000	-0.0124

Maximum Static Error: 0.0523 %FSO
Maximum Non-repeatability: -0.0393 %FSO

Electrical termination: RED: +SUPPLY
BLACK: -SUPPLY
BLUE: SHIELD

Slope1:	0.5411	PSIG/mA
Zero Offset1:	0.0000	PSIG
Slope2:	1.8479	mA/PSIG
Zero Offset2:	4.0017	mA
Conversion Factor:	1.0000	

Notes:

Calculations:

Method 1: Calculate pressure in desired units, using sensor's output as independent variable.
PSIG = 0.5411(mA - 4.0017) + 0.0000

Method 2: Calculate predicted sensor output in desired units using pressure as the independent variable.
mA = 1.8479(PSIG - 0.0000) + 4.0017

In this case, even though the offset or 0 PSIG output was 4.0017 mADC and the full-scale point was 20.0219 mADC the unit actually performed better than its specified accuracy of ±0.25% of full-scale range as indicated in the Error % FS column.

The calculation for pressure is illustrated below:

PSIG = (Span*Output (in mA)) + Offset

And, to convert to feet of water

Feet H_2O = PSIG * 2.3073

measurement
SPECIALTIES
34 Research Drive, Hampton, VA 23666 USA
757-865-1243, Toll Free 800-328-3665
Fax 757-865-8744
E-mail sales@PressureSystems.com
www.PressureSystems.com
online orders www.LevelandPressure.com

Technical
specification

ENM-10 Level regulator

FLYGT
a xylem brand

Table of Contents

PRODUCT DESCRIPTION....2
Product description....2

CHEMICAL RESISTANCE LIST....6
Chemical resistance list....6

PRODUCT RANGE....8
Product range....8

PRODUCT DESCRIPTION

Product description

The simplest possible method for level control! A mechanical switch in a plastic casing, freely suspended at the desired height from its own cable. When the liquid level reaches the regulator, the casing will tilt and the mechanical switch will close or break the circuit, thereby starting or stopping a pump or actuating an alarm device. No wear, no maintenance! In sewage pumping stations, for ground water and drainage pumping – in fact, for most level control applications – the ENM-10 is the ideal solution.

The regulator casing is made of polypropylene and the cable is sheathed with a special PVC or Nitrile/PVC rubber compound. The plastic components are welded and screwed together. Adhesive is never used. Impurities and deposits will not adhere to the smooth casing.

This level regulator is available in different versions, depending upon the medium in which it is to be used. As standard, the regulator can be obtained with 6, 13, 20, 30 or 50 metres (20, 42, 65, 100 or 167 feet) of cable for liquids with specific density between 0.95 and 1.10 g/cm3; for other specific densities and for the Ex-version, the regulator is only available with 20 metres (65 ft) of cable. The regulator can withstand up to 60°C (140°F).

Technical data

Liquid temperature:	min. 0°C (32°F) max. 60°C (140°F)
Liquid density:	min. 0.65 g/cm^3 max. 1.5 g/cm^3
Degree of protection:	IP68, 20 m (65 ft)
Interrupting capacity of micro switch:	AC, resistive load, 250V 10A AC, inductive load, 250V 3A cos ϕ = 0.5 DC, 30V 5A
With gold plated micro switch:	same as above, except: DC, 24V 10mA

Note that local regulations may limit the voltage.

Materials

Body:	Body:
Bending relief:	EPDM rubber
Cable:	special compound PVC or NBR/PVC nitrile/PVC rubber

Dimensions

Table 1

For density g/cm^3	Regulator length mm (in.)	Diameter mm (in.)
0.65–0.80	194 (7 10/16)	100 (4)
0.80–0.95	177 (7)	100 (4)
0.95–1.10	162 (6 3/8)	100 (4)
1.05–1.20	142 (5 9/16)	100 (4)
1.20–1.30	133 (5 1/4)	100 (4)

For density g/cm^3	Regulator length mm (in.)	Diameter mm (in.)
1.30–1.40	130 (5 2/16)	100 (4)
1.40–1.50	126 (5)	100 (4)

Weight: approx. 2 kg (4.5 lb) for a standard density regulator with 20 m cable.

Approvals: CE, CSA, SEMKO, NEMKO, DEMKO

LVD approval according to EN61058

CSA approval: Cert no. 1330172

Cl.I Zone 0, Gr. IIC;

CL.I Div.1 Gr A, B, C&D;

Cl.II Gr. E, F&G;

Cl.III when installed to the certified Intrinsically Safe relay, Ex ia, rated for the locations per submitter controll drawing and installation manual.

Intrincically safe circuits are required for the automatic control system. - Use a EX-safety barrier (e.g. Prod. no. 84 01 07).

0080

Figure 1

Wiring alternative

To conform to local regulations, the level regulators are normally connected through a transformer to a low-tension control circuit.

Two regulators are used; one for starting and one for stopping. A third regulator can be connected if an alarm is required at a given level.

Identical regulators can be used for all functions.

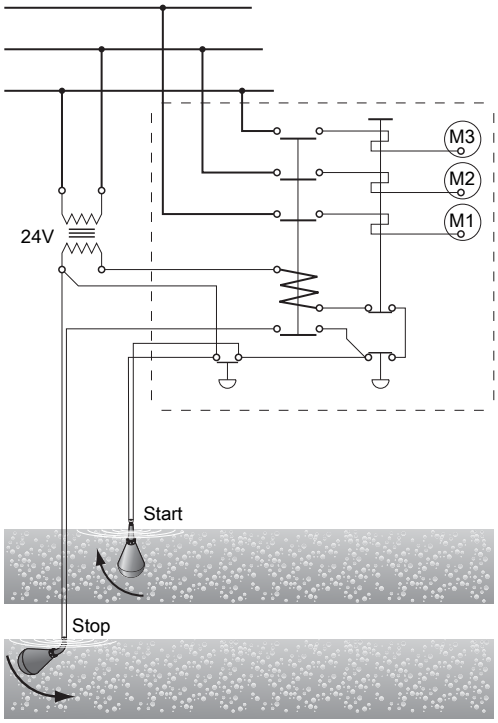

Connect the gray and black leads.

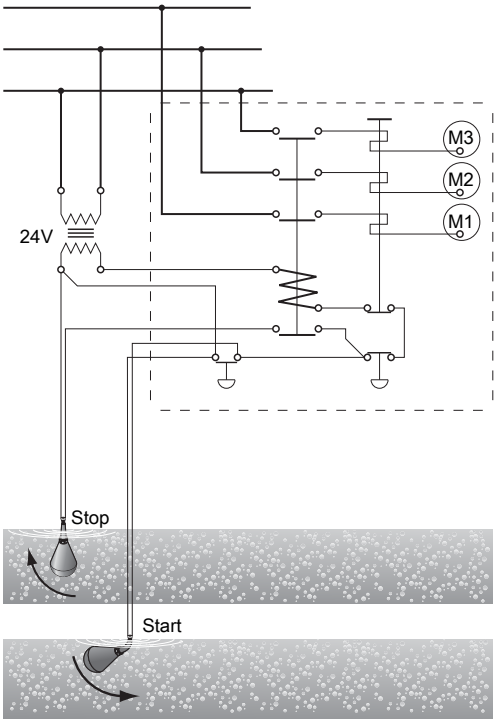

Connect the gray and brown leads.

Insulate the brown lead.
Figure 2: Connected for emptying

Insulate the black lead.
Figure 3: Connected for emptying

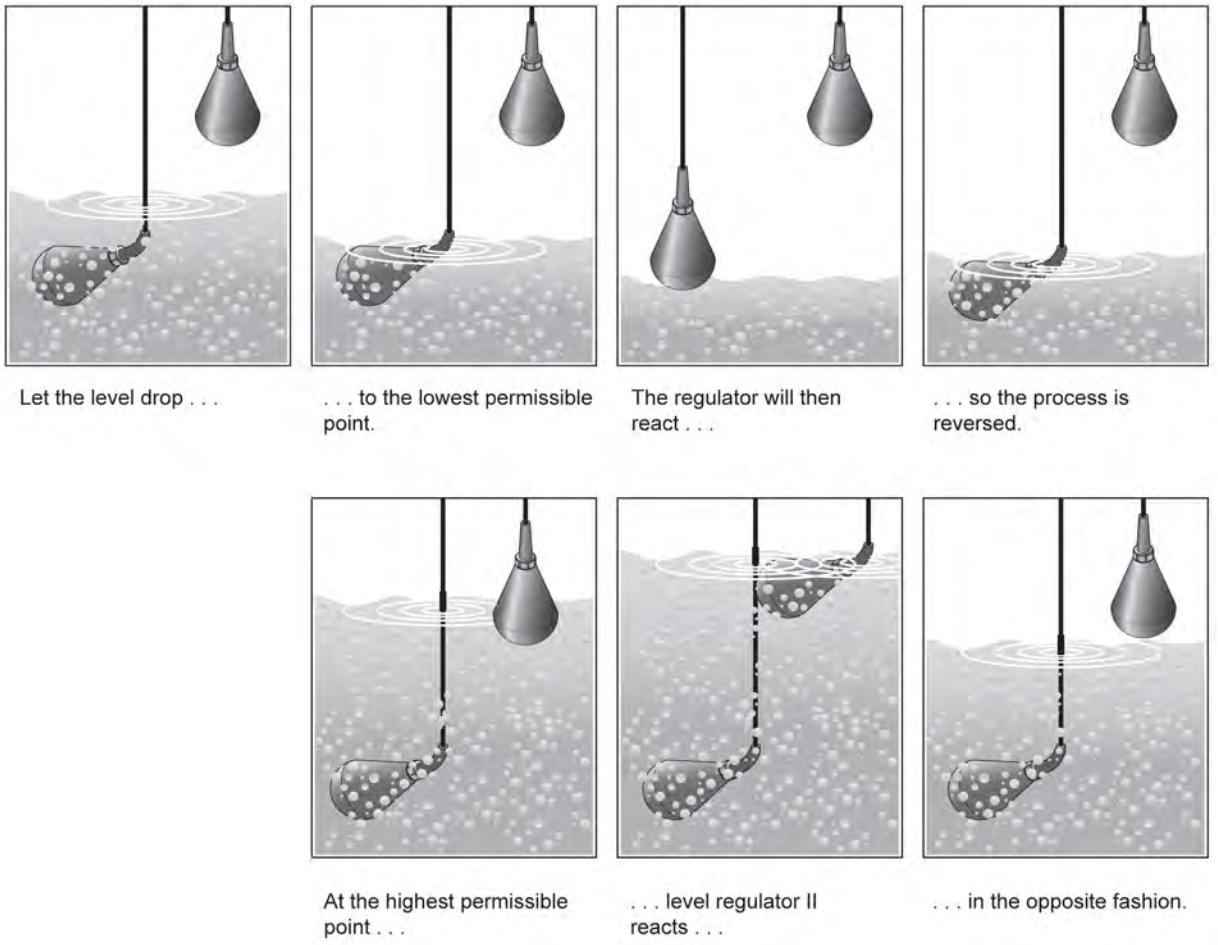

Figure 4

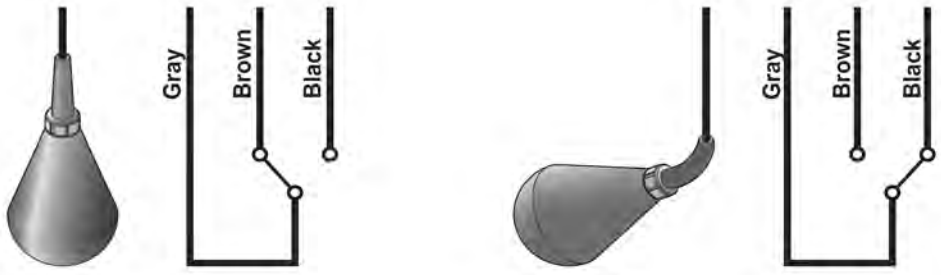

Figure 5: Colour code

Maintenance and repair

ENM-10 is very durable and practically maintenance free. You only have to check on it occasionally, to ensure its continual operation.

- It is recommended to occasionally clean ENM-10, and especially when fat/grease covers the plastic surface.
- At the same time, make an occular inspection of the regulator to make sure neither cable, protective sleeve or plastic casing show any signs of damage.

- A damaged ENM-10 cannot be repaired in any way, due to the hermetic encapsulation. If the unit is found to be damaged, replace it with a new one.
- For Ex-installations, also make absolutely sure that the Ex-barrier (e.g. Prod. no. 84 01 07) is operating correctly - The LED changes when the switch is toggled.

The manufacturers reserve the right to alter performance specification or design without notice.

CHEMICAL RESISTANCE LIST

Chemical resistance list

The liquid in which level regulation is practiced most frequently is, of course, water. Of the millions of regulators in use all over the world today, it is estimated that nine out of ten work in water.

However, with a float body of polypropylene, a cable of PVC or NBR/PVC nitrile/PVC rubber and a bending relief of EPDM rubber, the ENM-10 is virtually insensitive to many aggressive liquids.

The table shows how resistant the ENM-10 equipped with either PVC or NBR/PVC nitrile/PVC rubber cable, is to different chemicals at two different temperatures.

The classification is broken down into the following categories:

0 = No effect, 1 = Minor to moderate and 2 = Severe effect. The sign – means that information is not available.

Keep in mind also that the density of the liquid determines the bouyancy of the regulator. The ENM-10 is made for seven different densities. See *Product description* (page 2).

Always observe local regulations:

Take particular note of:

- risk of fire/explosion
- hygiene requirements

Acids	PVC cable		NBR/PVC nitrile/PVC rubber cable	
	20°C (68°F)	60°C (140°F)	20°C (68°F)	60°C (140°F)
Acetic Acid 50%	1	2	0	0
Acetic Acid 75%	2	2	0	0
Benzoic Acid	2	2	0	0
Boric Acid 5%	0	—	0	0
Butyric Acid	2	2	2	2
Chromic Acid 10%	0	2	2	2
Citric Acid	0	1	0	0
Hydrobromic Acid 5%	1	2	0	0
Hydrochloric Acid 10%	0	1	0	1
Hydrochloric Acid 37%	1	2	0	2
Hydrocyanic Acid 10%	0	0	1	2
Hydrofluoric Acid 5%	0	2	0	1
Hypochloric Acid	1	2	2	2
Maleic Acid	2	2	2	2
Nitric Acid 5%	1	1	1	1
Nitric Acid 65%	2	2	2	2
Oleic Acid	1	2	2	2
Oxalic Acid 50%	1	1	1	2
Phosphoric Acid 25%	0	0	1	2
Phosphoric Acid 85%	0	0	1	2
Sulphuric Acid 10%	1	2	1	2
Sulphuric Acid 78%	2	2	2	2
Tannic Acid	0	0	0	0
Tartaric Acid	1	1	1	1
Bases				
Ammonium Hydroxide	0	—	0	0
Calcium Hydroxide	0	0	0	0
Potassium Hydroxide	1	2	0	0
Sodium Hydroxide	1	2	0	0

Salts	PVC cable		NBR/PVC nitrile/PVC rubber cable	
	20°C (68°F)	60°C (140°F)	20°C (68°F)	60°C (140°F)
Aluminium Chloride	0	0	0	0
Calcium Sulphate	0	0	0	0
Calcium Chloride	0	0	0	0
Calcium Nitrate	0	0	0	0
Copper Chloride	0	0	0	0
Copper Sulphate	0	0	0	0
Ferric Chloride	0	0	0	0
Ferrous Sulphate	0	0	0	0
Magnesium Chloride	0	0	0	0
Potassium Sulphate	0	0	0	0
Potassium Nitrate	0	0	0	0
Potassium Carbonate	1	1	1	1
Potassium Bicarbonate	0	0	0	0
Sodium Sulphate	0	0	0	0
Sodium Chloride	0	0	0	0
Sodium Nitrate	0	0	0	0
Sodium Bicarbonate	0	0	0	0
Sodium Carbonate	0	0	0	0
Tin Chloride	1	1	1	1
Zinc Sulphate	0	0	0	0
Zinc Chloride	0	0	0	0
Oils				
Castor Oil	1	1	1	1
Cocoanut Oil	0	—	0	2
Corn Oil	2	2	2	2
Diesel Oil	2	2	2	2
Linseed Oil	2	2	2	2
Mineral Oils	2	2	2	2
Olive Oil	1	1	1	1
Silicone Oils	0	0	0	0

Solvents and miscellaneous	PVC cable		NBR/PVC nitrile/PVC rubber cable	
	20°C (68°F)	60°C (140°F)	20°C (68°F)	60°C (140°F)
Aceton	2	2	2	2
Aniline	2	2	1	2
Benzene	2	2	2	2
Butyl Alcohol	2	2	0	1
Carbon Tetrachloride	2	2	2	2
Chlorobenzene	2	2	2	2
Chloroform	2	2	2	2
Ethyl Alcohol	2	2	0	1
Ethyl Ether	2	2	2	2
Ethyl Acetate	2	2	2	2
Ethylene Dichloride	2	2	2	2
Ethylene Chloride	2	2	2	2
Formaldehyde 37%	1	2	0	0
Gasoline	2	2	2	2
Kerosene	2	2	2	2
Methyl Alcohol	2	2	0	0
Methyl Ethyl Ketone	2	2	2	2
Methylene Chloride	2	2	2	2
Nitrobenzene	2	2	2	2
Phenol	2	2	2	2
Toluene	2	2	2	2
Trichlorethylene	2	2	2	2
Turpentine	2	2	2	2
Xylene	2	2	2	2
Gases				
Carbon Dioxide	0	0	0	0
Carbon Monoxide	0	0	0	0
Chlorine (wet)	2	2	2	2
Hydrogen Sulphide	0	0	1	1
Sulphur Dioxide (wet)	1	1	2	2

0 = No effect, 1 = Minor to moderate, 2 = Severe effect. – = No information available.

Figure 6

PRODUCT RANGE

Product range

Part no.	For density [g/cm³]	Color of level switch	Type of cable	Cable length [m]	Approvals	For market	Notes
5828800	0,65-0,80	Blue	1	20	CE		
5828801	0,80-0,95	Blue	1	20	CE		
5828802	0,95-1,10	Blue	1	6	CE		
5828803	0,95-1,10	Blue	1	13	CE		
5828804	0,95-1,10	Blue	1	20	CE		
5828805	1,05-1,20	Blue	1	20	CE		
5828806	1,2-1,3	Blue	1	20	CE		
5828807	1,3-1,4	Blue	1	20	CE		
5828808	1,4-1,5	Blue	1	20	CE		
5828809	0,65-0,80	Grey	5	20	CSA/CE	Canada	
5828810	0,80-0,95	Grey	5	20	CSA/CE	Canada	
5828811	0,95-1,10	Grey	5	6	CSA/CE	Canada	
5828812	0,95-1,10	Grey	5	13	CSA/CE	Canada	
5828813	0,95-1,10	Grey	5	20	CSA/CE	Canada	
5828814	1,05-1,20	Grey	5	20	CSA/CE	Canada	
5828815	1,2-1,3	Grey	5	20	CSA/CE	Canada	
5828816	1,3-1,4	Grey	5	20	CSA/CE	Canada	
5828817	1,4-1,5	Grey	5	20	CSA/CE	Canada	
5828818	0,65-0,80	Grey	1	20	CSA/CE	Canada	
5828819	0,80-0,95	Grey	1	20	CSA/CE	Canada	
5828820	0,95-1,10	Grey	1	6	CSA/CE	Canada	
5828821	0,95-1,10	Grey	1	13	CSA/CE	Canada	
5828822	0,95-1,10	Grey	1	20	CSA/CE	Canada	
5828823	1,05-1,20	Grey	1	20	CSA/CE	Canada	
5828824	1,2-1,3	Grey	1	20	CSA/CE	Canada	
5828825	1,3-1,4	Grey	1	20	CSA/CE	Canada	
5828826	1,4-1,5	Grey	1	20	CSA/CE	Canada	
5828827	0,65-0,80	Blue	2	20	CE	USA	
5828828	0,80-0,95	Blue	2	20	CE	USA	
5828829	0,95-1,10	Blue	2	6	CE	USA	
5828830	0,95-1,10	Blue	2	13	CE	USA	
5828831	0,95-1,10	Blue	2	20	CE	USA	
5828832	1,05-1,20	Blue	2	20	CE	USA	
5828833	1,2-1,3	Blue	2	20	CE	USA	
5828834	1,3-1,4	Blue	2	20	CE	USA	
5828835	1,4-1,5	Blue	2	20	CE	USA	
5828836	0,95-1,10	Grey	5	30	CSA/CE	Canada	
5828837	0,95-1,10	Grey	5	50	CSA/CE	Canada	
5828838	0,95-1,10	Grey	5	100	CSA/CE	Canada	
5828839	0,95-1,10	Grey	5	150	CSA/CE	Canada	
5828851	0,95-1,10	Red	3	65	CE		
5828852	0,95-1,10	Red	3	6	CE		
5828853	0,95-1,10	Red	3	13	CE		
5828854	0,95-1,10	Red	3	20	CE		
5828855	0,95-1,10	Red	3	6	CSA/CE	Canada	
5828856	0,95-1,10	Red	3	13	CSA/CE	Canada	
5828857	0,95-1,10	Red	3	20	CSA/CE	Canada	

Cont. →

Figure 7

5828858	0,95-1,10	Red	4	6	CE	USA	
5828859	0,95-1,10	Red	4	13	CE	USA	
5828860	0,95-1,10	Red	4	20	CE	USA	
5828870	0,65-0,80	Blue	5	20	CE		
5828871	0,80-0,95	Blue	5	20	CE		
5828872	0,95-1,10	Blue	5	6	CE		
5828873	0,95-1,10	Blue	5	13	CE		
5828874	0,95-1,10	Blue	5	20	CE		
5828875	1,05-1,20	Blue	5	20	CE		
5828876	1,2-1,3	Blue	5	20	CE		
5828877	1,3-1,4	Blue	5	20	CE		
5828878	1,4-1,5	Blue	5	20	CE		
5828879	0,95-1,10	Blue	1	65	CE		
5828880	0,95-1,10	Blue	1	30	CE		
5828881	0,95-1,10	Blue	1	50	CE		
5828882	0,95-1,10	Grey	1	30	CSA/CE	Canada	
5828883	0,95-1,10	Grey	1	50	CSA/CE	Canada	
5828884	0,95-1,10	Blue	2	30	CE	USA	
5828885	0,95-1,10	Blue	2	50	CE	USA	
5828886	0,95-1,10	Red	3	30	CE		
5828887	0,95-1,10	Red	3	50	CE		
5828890	0,95-1,10	Blue	5	30	CE		
5828891	0,95-1,10	Blue	5	50	CE		
5828892	0,95-1,10	Red	3	6	CE	Japan	
5828893	0,95-1,10	Red	3	13	CE	Japan	
5828894	0,95-1,10	Red	3	20	CE	Japan	
5828895	0,95-1,10	Blue	1	6	CE	Japan	
5828896	0,95-1,10	Blue	1	13	CE	Japan	
5828897	0,95-1,10	Blue	1	20	CE	Japan	
5828898	0,95-1,10	Blue	1	50	CE	Japan	
5947919	0,95-1,10	Blue	5	20	CE		Designed for low current and slow movements
5947920	0,95-1,10	Grey	5	20	CSA/CE		Designed for low current and slow movements

Type of cable:

1. Blue PVC jacket with color coding of wires: Grey/Brown/Black
2. Blue PVC jacket with color coding of wires: Red/White/Black
3. Red PVC jacket with color coding of wires: Grey/Brown/Black
4. Red PVC jacket with color coding of wires: Red/White/Black
5. BLACK NBR/PVC jacket with color coding of wires: Grey/Brown/Black (NBR=Nitrile rubber)

Xylem |ˈzīləm|

1) The tissue in plants that brings water upward from the roots
2) A leading global water technology company

We're 12,000 people unified in a common purpose: creating innovative solutions to meet our world's water needs. Developing new technologies that will improve the way water is used, conserved, and re-used in the future is central to our work. We move, treat, analyze, and return water to the environment, and we help people use water efficiently, in their homes, buildings, factories and farms. In more than 150 countries, we have strong, long-standing relationships with customers who know us for our powerful combination of leading product brands and applications expertise, backed by a legacy of innovation.

For more information on how Xylem can help you, go to xyleminc.com

xylem
Let's Solve Water

Xylem Water Solutions AB
Gesällvägen 33
174 87 Sundbyberg
Sweden
Tel. +46-8-475 60 00
Fax +46-8-475 69 00
http://tpi.xyleminc.com

Visit our Web site for the latest version of this document and more information

The original instruction is in English. All non-English instructions are translations of the original instruction.

© 2011 Xylem Inc

891480_11.1_en.GB_2012-01_TS_ENM-10

GWTS Equipment

Installation Manual Pub. 0300277-02 Rev. B

InView Message Displays

Catalog Number: Catalog Number 2706-P22-SC, 2706-P42-SC, 2706-P44-SC, 2706-P72-SC, 2706-P74-SC, 2706-P92-SC, 2706-P92C2, 2706-P94-SC 2706-P94C2

SPECTRUM
CONTROLS

About This Publication

This publication describes the InView Display Modules.

Appendix A describes installing, wiring , and additional language messaging format codes for the 2706-P92C2 and 2706-P94C2 displays.

Important User Information

Solid state equipment has operational characteristics differing from those of electromechanical equipment. Because of this difference, and also because of the wide variety of uses for solid state equipment, all persons responsible for applying this equipment must satisfy themselves that each intended application of this equipment is acceptable.

In no event will Spectrum Controls, Inc. be responsible or liable for indirect or consequential damages resulting from the use or application of this equipment.

The examples and diagrams in this manual are included solely for illustrative purposes. Because of the many variables and requirements associated with any particular installation, Spectrum Controls, Inc. cannot assume responsibility or liability for actual use based on the examples and diagrams.

No patent liability is assumed by Spectrum Controls, Inc. with respect to use of information, circuits, equipment, or software described in this manual.

Reproduction of the contents of this manual, in whole or in part, without written permission of Spectrum Controls, Inc., is prohibited.

Throughout this manual, when necessary, we use notes to make you aware of safety considerations.

EXPLOSION HAZARD	Identifies information about practices or circumstances that can cause an explosion in a hazardous environment, which may lead to personal injury or death, property damage, or economic loss.
NOTE	Identifies information that is critical for successful application and understanding of the product.
WARNING	Identifies information about practices or circumstances that can lead to personal injury or death, property damage, or economic loss. Warnings help you to identify a hazard, avoid a hazard, and recognize the consequences.
SHOCK HAZARD	Labels may be on or inside the equipment, for example, a drive or motor, to alert people that dangerous voltage may be present.
BURN HAZARD	Labels may be on or inside the equipment, for example, a drive or motor, to alert people that surfaces may reach high temperatures.

AVERTISSEMENT	Actions ou situations risquant de provoquer une explosion dans un environnement dangereux et d'entraîner des blessures pouvant être mortelles, des dégâts matériels ou des pertes financières.
NOTE	Informations particulièrement importantes dans le cadre de l'utilisation du produit.
ATTENTION	Actions ou situations risquant d'entraîner des blessures pouvant être mortelles, des dégâts matériels ou des pertes financières. Les messages « Attention » vous aident à identifier un danger, à éviter ce danger et en discerner les conséquences.
DANGER D'ÉLECTROCUTION	Les étiquettes ci-contre, placées sur l'équipement ou à l'intérieur (un variateur ou un moteur, par ex.), signalent la présence éventuelle de tensions électriques dangereuses.
RISQUE DE BRÛLLURE	Les étiquettes ci-contre, placées sur l'équipement ou à l'intérieur (un variateur ou un moteur, par ex.), indiquent au personnel que certaines surfaces peuvent atteindre des températures particulièrement élevées.

Table of Contents

ABOUT THIS PUBLICATION II
IMPORTANT USER INFORMATION II
CHAPTER 1 INSTALLING INVIEW MARQUEE MESSAGE DISPLAY 1-1
INTRODUCTION 1-1
WIRE AND SAFETY GUIDELINES 1-1
CHANGE THE SERIAL ADDRESS 1-2
CHECKOUT PROCEDURE 1-2
MOUNT THE 2706-P42-SC AND 2706-P44-SC DISPLAYS 1-7
MOUNT THE 2706-P72-SC AND 2706-P74-SC SERIES NEMA 4 AND 4X MODELS 1-15
MOUNT THE 2706-P92-SC AND 2706-P94-SC DISPLAYS 1-19
ELECTRICAL CONNECTIONS FOR 2706-P92-SC AND 2706-P94-SC SIGNS 1-21
MOUNT THE 2706-P22-SC DISPLAY 1-24
PANEL CUTOUT DIMENSIONS FOR 2706-P22-SC DISPLAY 1-25
ELECTRICAL CONNECTIONS FOR 2706-P22-SC DISPLAY 1-25
COMMUNICATION CONNECTIONS FOR 2706-P22-SC DISPLAY 1-26
DIP SWITCH SETTINGS FOR 2706-P22-SC DISPLAY 1-27
DOWNLOAD A MESSAGE APPLICATION 1-28
RS-232 TO RS-485 NETWORKING 1-29
RS-485 ECHO 1-29
GLOBAL ADDRESSING 1-30
GROUND AND TERMINATE THE RS-485 NETWORK 1-30
CHAPTER 2 INVIEW SYSTEM CONNECTIVITY 2-1
SERIAL ASCII COMMUNICATIONS 2-1
FEATURES 2-1
DIP SWITCH INFORMATION FOR THE 2706-P9*X*-SC 2-5
POWER-UP MESSAGES 2-10
DISPLAY SETUP 2-10
SET THE IP ADDRESS 2-11
GATEWAY ADDRESS AND SUBNET MASK SETUP 2-13
CREATE THE MESSAGE FILE 2-14
CHAPTER 3 SERIAL ASCII COMMUNICATIONS 3-1
USE A PLC5 OUT CHANNEL ZERO 3-1
USE AN SLC 5/03, 5/04, OR 5/05 OUT CHANNEL ZERO 3-2
USE A MICROLOGIX OUT CHANNEL ZERO OR ONE 3-3

USE CONTROLLOGIX PROCESSOR OUT CHANNEL ZERO 3-4
USE THE COMPACTLOGIX PROCESSOR OUT CHANNEL ZERO OR ONE 3-5
USE FLEXLOGIX PROCESSOR OUT CHANNEL ZERO 3-6
CHAPTER 4 INVIEW PROTOCOL 3-1
INTRODUCTION 3-1
TRIGGER MESSAGE AND UPDATE VARIABLES 3-1
THE CTRL-T FUNCTION FRAME 3-1
EXAMPLES OF THE CONTROL-T FUNCTION 3-5
EXAMPLES OF THE CONTROL-V FUNCTION 3-8
UPDATE VARIABLE ON A SPECIFIC DISPLAY 3-9
MODBUS ASCII PROTOCOL TO DOWNLOAD AND PREVIEW MESSAGES 3-9
HOW INVIEW SIGN COMMUNICATION PROTOCOL IS USED WITH MODBUS ASCII PROTOCOL 3-9
EXAMPLES OF MODBUS ASCII FUNCTIONS 3-15
INVIEW DISPLAY COMMUNICATION PROTOCOL FUNCTIONS AND DESCRIPTIONS 3-33
INVIEW MESSAGE FORMAT USED WITHIN MODBUS ASCII PROTOCOL 3-33
ASCII CHARACTERS 3-44
REFERENCE MATERIAL 3-45
CHAPTER 5 INVIEW CONTROL AND INVIEW CONTROL API 5-1
INTRODUCTION 5-1
QUICK OVERVIEW 5-1
REFERENCE 5-1
PROPERTIES 5-2
METHODS 5-2
PROPERTIES 5-4
METHODS 5-8
CATALOG NUMBER EXPLANATION 5-18
TEMPERATURE PROTECTION IN NEMA-RATED ENCLOSURES 5-19
ADDITIONAL RESOURCES 5-20
GETTING TECHNICAL ASSISTANCE 5-20
APPENDIX A: INSTALLING INVIEW MARQUEE 2706-P92*X*C2-SC MESSAGE DISPLAYS A-1
OVERVIEW A-1
WIRE AND SAFETY GUIDELINES A-1
DESCRIPTION OF THE 2706-P92C2-SC AND 2706-P94C2-SC DISPLAYS A-1
MOUNTING THE 2706-P92C2-SC AND 2706-P94C2-SC DISPLAYS A-2
WIRING THE 2706-P92C2-SC AND 2706-P94-SC DISPLAYS A-4
SPECIFICATIONS A-7
2706-P9*X*C2 DISPLAY LANGUAGE MESSAGE FORMATTING CODES A-8

ADDITIONAL RESOURCES **A-9**

GETTING TECHNICAL ASSISTANCE **A-9**

Chapter 1 Installing InView Marquee Message Display

Introduction

These instructions show you how to change the serial address, and how to mount InView series signs with NEMA Types 4, 4X, and 12 enclosures. These signs are intended for indoor or outdoor use depending on the NEMA standard.

- Type 4 enclosures are intended to provide a degree of protection against windblown dust and rain, splashing water, and hose-directed water.
- Type 4X enclosures are intended to provide a degree of protection against corrosion, windblown dust and rain, splashing water, and hose-directed water.
- Type 12 enclosures are in a sealed case that is, dust free, gasketing, and spray-down resistant.

Wire and Safety Guidelines

Install the InView display conforming to NFPA 70E, Electrical Safety Requirements for Employee Workplaces. In addition to the NFPA general guidelines, refer to the following.

- Careful cable routing helps minimize electrical noise. Route incoming power to the module by a separate path from the communication cables.

NOTE You can configure your InView Messaging software without having an InView display connected.

- Where communication and wire paths must cross, make their intersection perpendicular.
- Grounding helps limit the effects of noise due to electromagnetic interference (EMI). To avoid problems caused by EMI, properly ground all equipment and use shielded cables.

EXPLOSION HAZARD	Identifies information about practices or circumstances that can cause an explosion in a hazardous environment, which may lead to personal injury or death, property damage, or economic loss.

AVERTISSEMENT	Actions ou situations risquant de provoquer une explosion dans un environnement dangereux et d'entraîner des blessures pouvant être mortelles, des dégâts matériels ou des pertes financières.

NOTE	Power wiring must be in accordance with Class I, Class II and Class III Division 2 wiring methods (Articles 501-4(b), 502-4(b) and 503-3(b) of the National Electrical Code, NFPA 70) and in accordance with the local authority having jurisdiction.

Change the Serial Address

A serial address for an InView sign is a number from 1 to 254 in hexadecimal (01 to FE). All signs leave the factory with a default address of 1 or 01.

This serial address is resident in the InView display and is used for RS-485 networking. If one of the factory network communications modules are used (2706-P*xxx*-SC*x*), this serial address is typically left at its factory default and the network node or IP address is set in the factory network communication module.

Checkout Procedure

After you install a sign according to the Electrical and Mounting Instructions, make sure the sign is installed properly by applying power to it. The following information should be displayed on the sign.

- Firmware part number and version letter (*xxxx*).
- Amount of RAM in the sign, (256 K).
- Serial address of the sign (a number from 01 to FE or from 1 to 254).

WARNING	**Hazardous voltage.** **Contact with high voltage may cause death or serious injury.** Always disconnect power to sign prior to servicing.

AVERTISSEMENT	**Tension dangereuse.** Tout contact avec une tension élevée peut entraîner la mort ou des blessures graves. Déconnectez toujours l'alimentation de l'afficheur avant toute opération de maintenance.

To connect the 2706-P42-SC and 2706-P44-SC displays:

1. Remove the power supply cover by unscrewing its six screws.
   Save the screws for a later step.

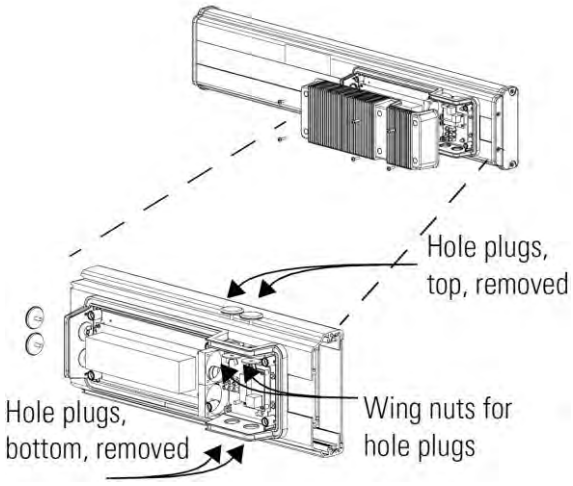

NOTE

It is recommended that you install power and serial wires at the bottom of the power supply enclosure to reduce noise from power wires crossing serial wires.

You can install the power or serial wires at the top of the enclosure if necessary.

2. Remove the left or right conduit hole plug from the top of the enclosure by removing its wing nut inside the enclosure.
   Save the hole plug for a later step.
3. Insert the power wires through the left conduit hole on either the top or the bottom of the sign.

NOTE

Use watertight conduit connectors only.

Also, only use flexible conduit.

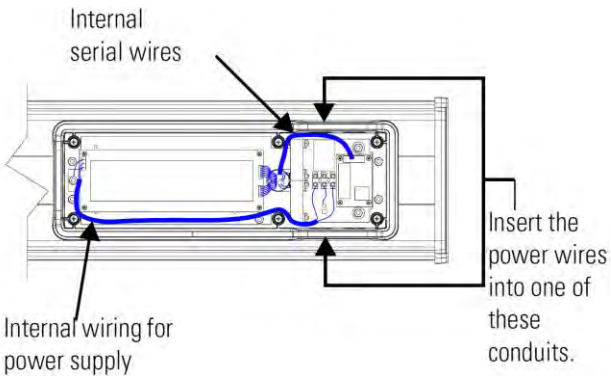

4. Strip the wires back 6.35 mm (1/4-in.). Connect the incoming electrical wires.

NOTE Be sure to place the wires so they are not caught by screws when replacing the power supply cover, and also so that they do not interfere with fan operation.

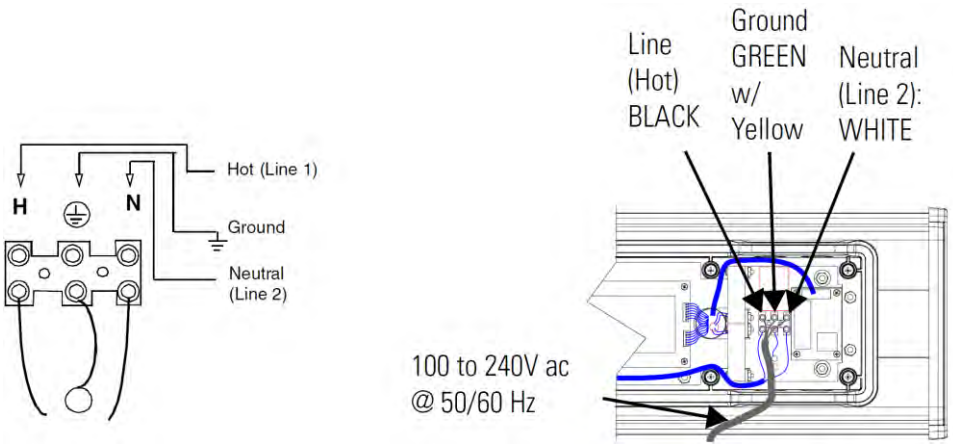

5. Insert the serial wires through the right conduit hole on either the top or the bottom of the sign.

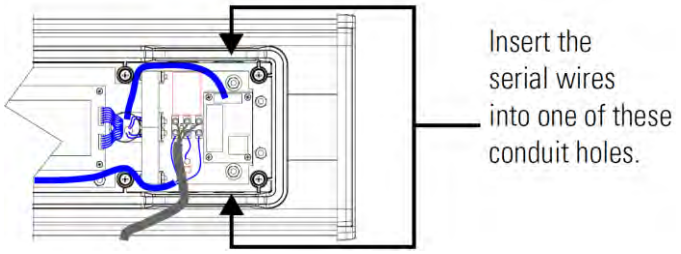

NOTE TB1 may be used for incoming serial connections for RS-232 or RS-485.

TB1-Full

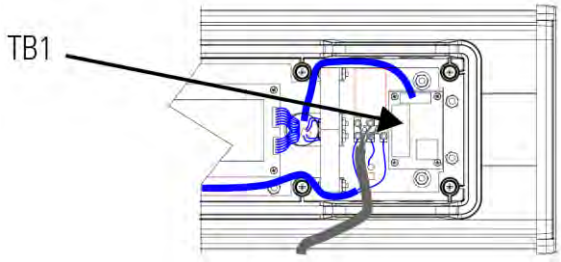

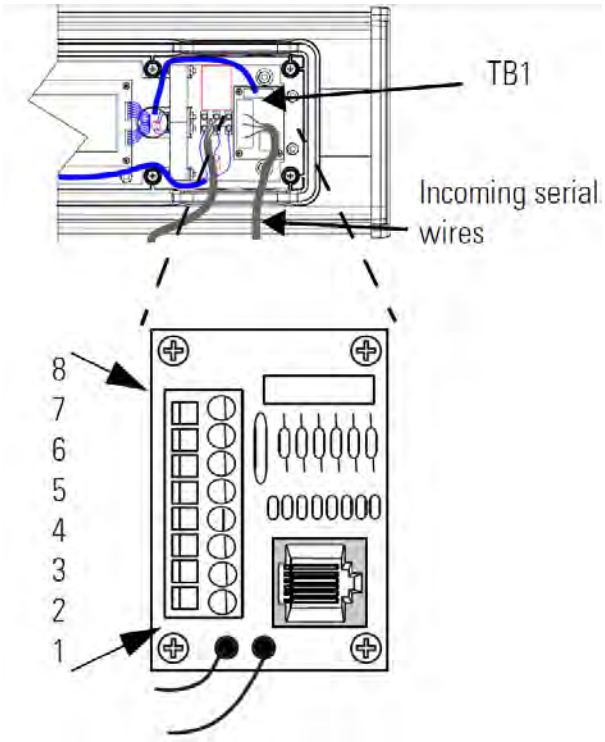

Pin	Pin Name	Pin	Pin Name
1	GND	5	RS-485+
2	+5V	6	RS-485-
3	RS-232 TX	7	NC
4	RS-232 RX	8	Shield

6. Connect the incoming serial wires.
   TB1 may be used for incoming RS-232 or RS-485 serial connections. They cannot be connected at the same time. RS-485 is recommended to reduce undesirable electrical interference.

NOTE Be sure to place the wires so they are not caught by screws when replacing the power supply cover, and also so that they do not interfere with fan operation.

TB1-RS-232

Pin	Pin Name	Pin	Pin Name
1	NC	5	RS-485+
2	NC	6	RS-485-
3	NC	7	NC
4	NC	8	Shield

TB1-RS-485

Pin	Pin Name	Pin	Pin Name
1	GND	5	NC
2	+5 V	6	NC
3	RS-232 TX	7	NC
4	RS-232 RX	8	NC

7. P1 can be used for incoming RS-232 only, although it is optional and not recommended.
   P1 is intended for RS-232 application downloads and RS-485 terminating resistor connection.
   See 0100215-02_A0(INSTALLATION_INSTRUCTIONS_2706-IN007B-EN-P) for more information about RS-485 end-of-line, terminating resistors.

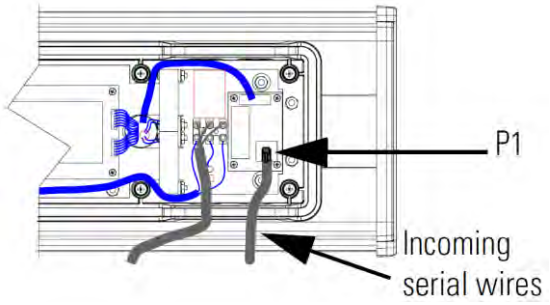

NOTE Be sure to place the wires so they are not caught by screws when replacing the power supply cover, and also so that they do not interfere with fan operation.

To maintain NEMA compliance, and to prevent EMI emissions, install hole plugs in any open conduit holes in the power supply enclosure. If needed, an extra hole plug is shipped with the sign, in addition to any hole plugs removed in step 2 of this procedure.

8. Replace the power supply cover using the 6 screws removed when the cover was removed.
9. Torque the screws to 2.7 Nm (24-lb in.).
10. Connect the power cable to a power source.

Mount the 2706-P42-SC and 2706-P44-SC Displays

NOTE

Only qualified personnel should install InView displays. InView displays are for indoor use only, and should not be exposed to direct sunlight.

Mounting hardware that is used to hang or suspend signs must be capable of supporting at least four times the total weight of any/all signs mounted together.

To preserve integrity of the case, do not drill holes in, or modify, the case.

WARNING	**Hazardous voltage.** **Contact with high voltage may cause death or serious injury.** Always disconnect power to sign prior to servicing.

WARNING	**Tension dangereuse.** **Tout contact avec une tension élevée peut entraîner la mort ou des blessures graves.** Déconnectez toujours l'alimentation de l'afficheur avant toute opération de maintenance

1. Before you mount a display, disconnect power.

NOTE

Remove only one end cap at a time.

Wall Mount

To mount a display on a wall:

1. Remove the 4 screws and end cap from one end of the sign.

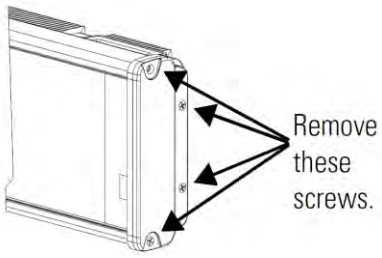

2. Slide one of the wall mounting brackets onto the back of the sign until it is approximately 13 mm (0.5 in.) away from the end of the sign.

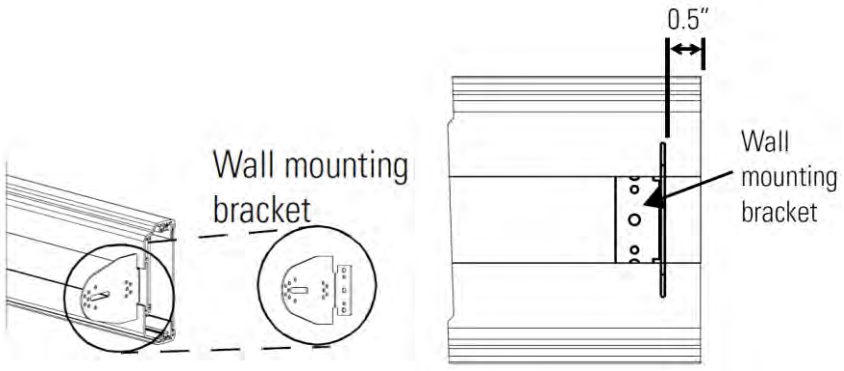

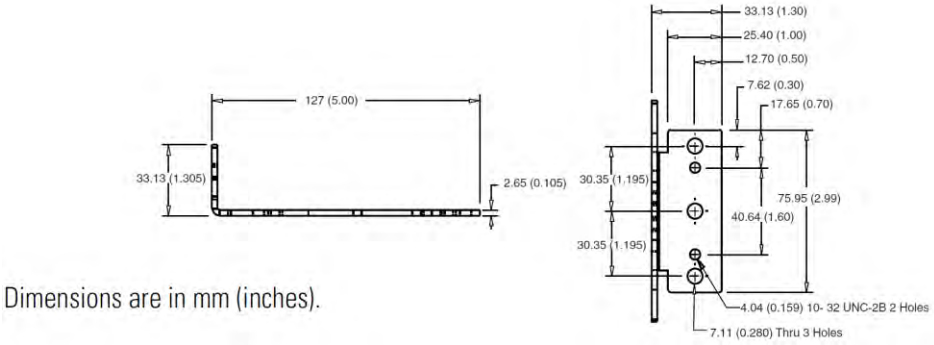

Dimensions are in mm (inches).

3. Use two 10-32 × 1/4 Phillips screws (supplied) to secure the wall mounting bracket to the back of the sign.

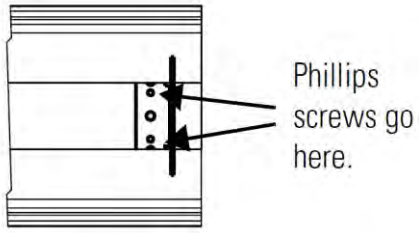

4. Torque the screws to 2.7 Nm (24 lb-in).
5. Replace the end cap using the 4 screws removed in Step 1 above.

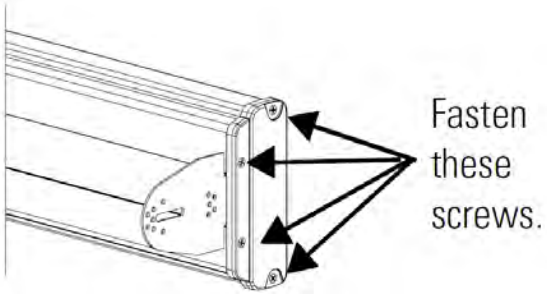

6. Torque the screws to 2.7 Nm (24 lb-in).
7. Repeat Steps 1 to 6 for the other end of the sign.

Approximate distances between the bracket holes, center-to-center, are shown below.

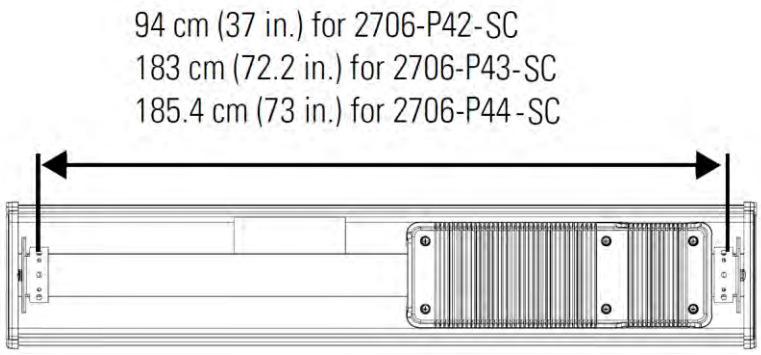

8. Attach the two remaining wall mounting brackets to a wall so that they align with the brackets on the sign.

NOTE Do not install the sign directly to drywall or plaster-board. The sign must be fastened to a wall capable of supporting at least four times the weight of the sign.

9. Connect the mounting brackets on each end of the sign together using a 5/16 Phillips screw and a 5/16 washer through the mounting holes, as shown below, securing with a 5/16 nut.
   Do not tighten the nut at this time.

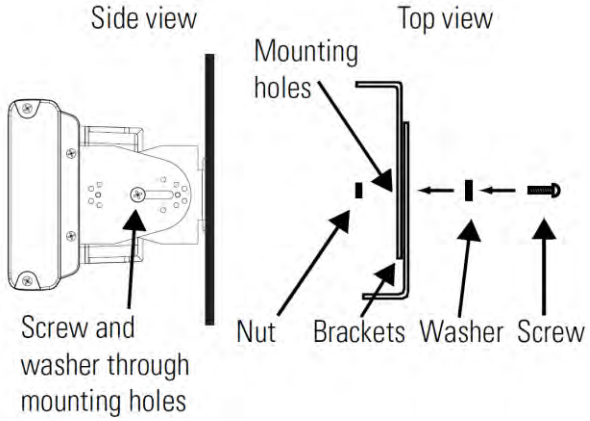

10. Match the alignment holes of the brackets on the sign with the alignment holes of the brackets on the wall so that the sign is at the desired viewing angle.

NOTE The second mounting bracket is shown here for illustration only. It is actually mounted to the wall.

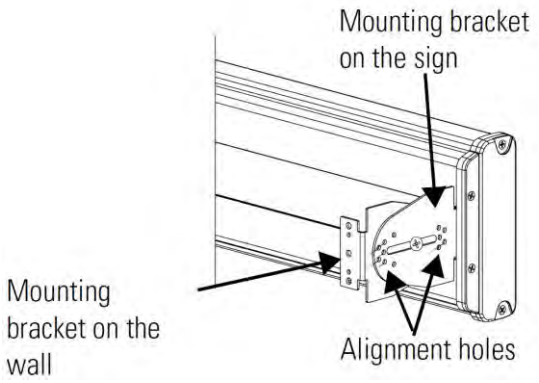

11. Fasten the mounting brackets together using two 10-32 × 3/4 Phillips screws, two 10-32 washers, and two 10-32 lock nuts through selected alignment holes on each end of the sign.
12. Torque the 5/16 nuts in the mounting holes (See Step 9) to 2.7 Nm (24 lb-in).

Ceiling Mount

To mount the display to the ceiling:

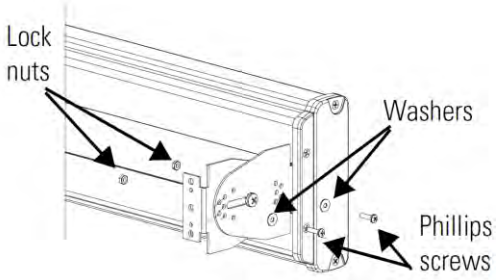

1. Remove one screw from the top of the end cap.

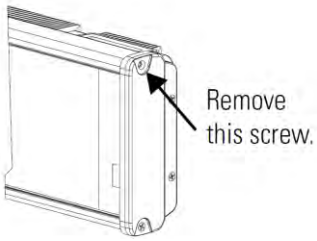

2. Line up a ceiling bracket with the top hole on the sign's end cap so the bracket fits in the indentation.
3. There are left and right ceiling brackets. Use the one that fits with the screw hole's countersunk side facing out.
4. Secure the ceiling bracket with the screw removed in Step 1 and torque the screw to 2.7 Nm (24 in-lb).

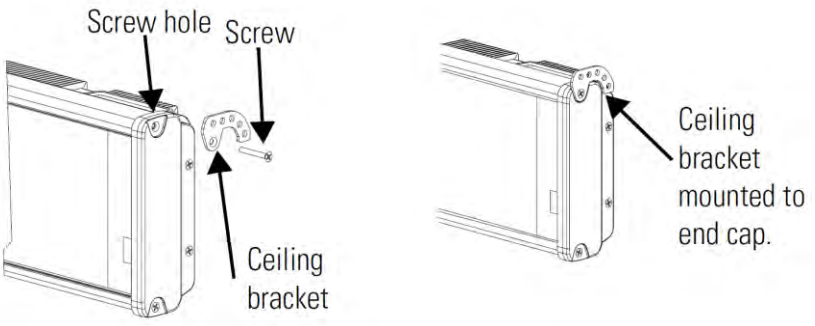

5. Repeat steps 1 through 3 for the other end of the sign.
6. Use chains (not supplied) to hang the sign from a ceiling.

NOTE Use chains capable of supporting 4 times the total weight of the sign(s).

NOTE The hole you select in the ceiling bracket for the chain determines the angle at which the sign hangs.

Stack Mount

NOTE Up to 4 signs can be hung together vertically ('stacked'). Mounting system for stack mounting must support a minimum of four times the total weight of all signs being stacked.

WARNING	**Possible crush Hazard.** **Stacking too many signs may cause signs to fall causing serious injury or death.** Do not stack more than 4 signs.

WARNING	**Danger de chute possible.** **Ils risquent de tomber et d'entraîner des blessures graves voire la mort.** **N'empilez pas plus de 4 afficheurs sinon.**

To stack the signs:

1. Remove the top screw from each end cap of the bottom sign.

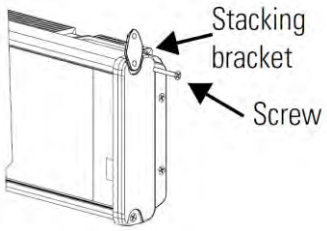

2. Use the screw removed in Step 1 to fasten a stacking bracket to each end cap, countersunk side out, and torque to 2.7 Nm (24 lb-in).
3. Remove the top and bottom screws from each end of the remaining signs.
4. Remove the top and bottom screws from each end of the remaining signs.

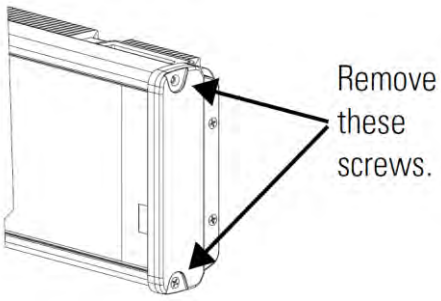

5. For each end of the signs, secure the stacking bracket from the bottom sign to the next sign using one of the screws removed in Step 3 and torque to 2.7 Nm (24 lb-in).

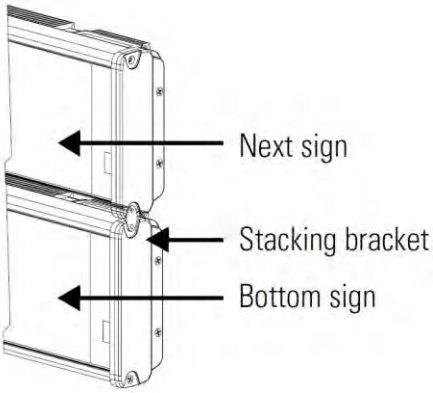

6. Secure a ceiling bracket to the top of each end cap on the top sign. See Step 2 of the Ceiling Mount instruction

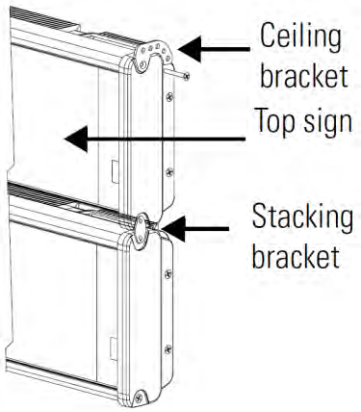

7. Use a chain (not supplied) to hang the signs from the ceiling.
   Follow the notes in Step 4 of the Ceiling Mount instructions.

Back-to-Back Mount

NOTE Remove only one end cap at a time for each sign.

To mount the signs back-to-back:

1. Attach a mounting bracket on each end of the signs and replace the end caps.
   Follow Steps 1 to 5 of the Wall Mount instructions.
2. However, replace only the bottom three screws for each end cap and torque the screws to 2.7 Nm (24 lb-in).
   Do this for each end of both signs.

NOTE Do NOT fasten the top screws to the end caps. The top screws are used to fasten the ceiling mounting brackets to the end caps in the next step

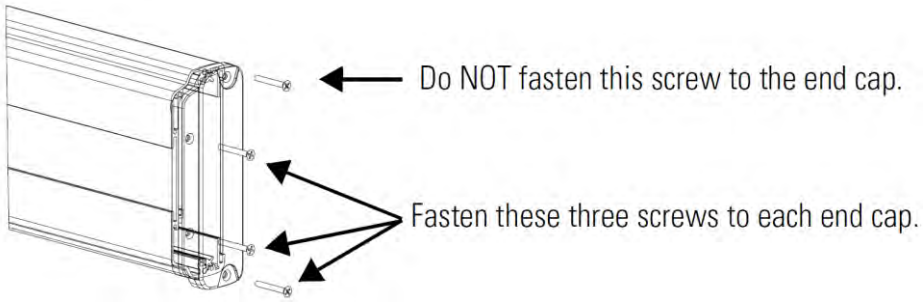

3. Attach ceiling mounting brackets to all the end caps and torque the screws to 2.7 Nm (24 lb-in).
   See Step 2 of the Ceiling Mount instructions.
4. Match the signs together back-to-back and connect them together.

See Step 2 of the Ceiling Mount instructions.

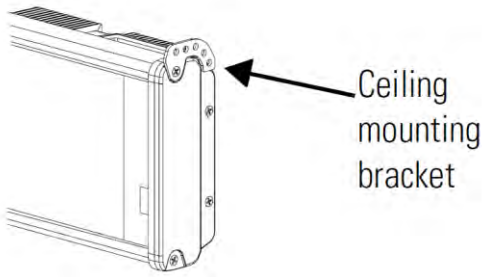

Follow Steps 7 through 10 of the Wall Mount instructions.

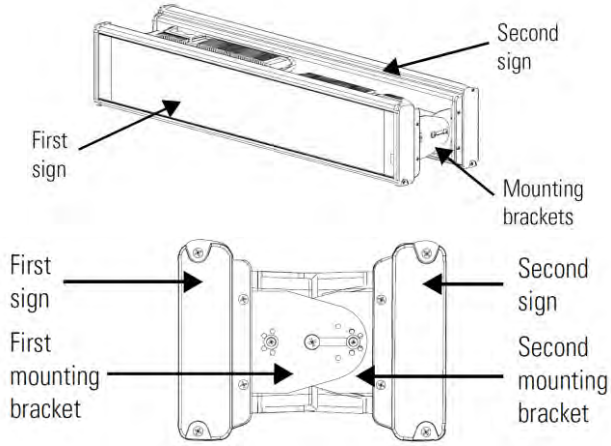

5. Use chains (not supplied) to hang the signs from the ceiling.

NOTE Use chains capable of supporting 4 times the total weight of the sign(s).

Mount the 2706-P72-SC and 2706-P74-SC Series NEMA 4 and 4X Models

To mount the sign:

1. Attach the two sign brackets to a wall, ceiling, or other surface.
   Be sure to place the brackets so the bracket flanges face appropriately as shown below. Mount the brackets the following distance apart (measured from the center of the mounting holes in each bracket):

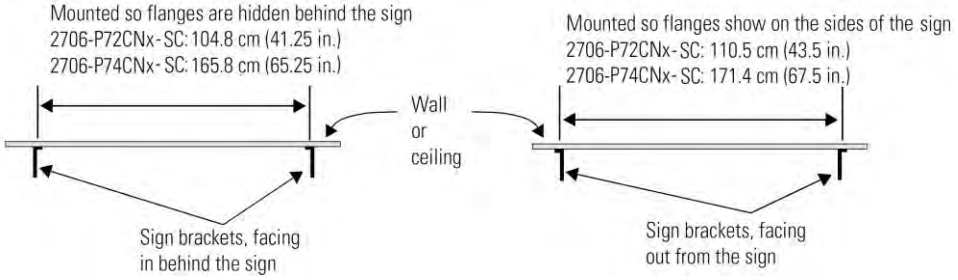

2. Mount the sign on the sign brackets using the two large hex bolts supplied.

NOTE Do not install the sign directly to drywall or plaster-board. The sign must be fastened to a wall capable of supporting at least four times the weight of the sign.

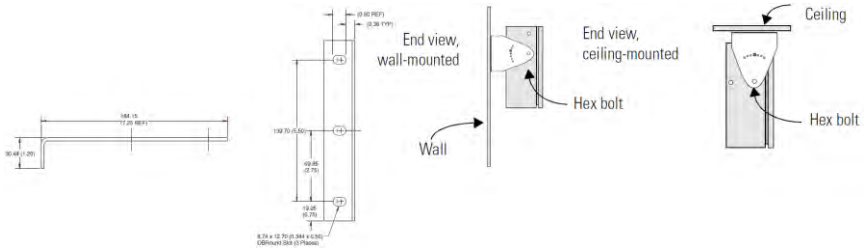

3. Tilt the sign to select a viewing angle.
4. To hold the sign in place, insert a Phillips screw (supplied) through one of the small holes on each bracket into the screw hole in the sign case.

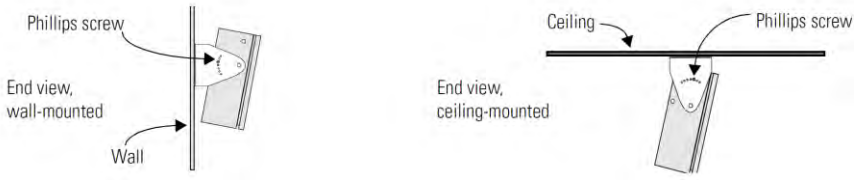

NOTE Keep a minimum 2.54 cm (1.0 in.) clearance on all sides of the sign for adequate ventilation.

WARNING	**Hazardous voltage.** **Contact with high voltage may cause death or serious injury.** Always disconnect power to sign prior to servicing.

WARNING	**Tension dangereuse.** **Tout contact avec une tension élevée peut entraîner la mort ou des blessures graves.** Déconnectez toujours l'alimentation de l'afficheur avant toute opération de maintenance

To connect the sign:

1. Open the front of the sign case by turning the quarter-turn latches to the left with a large screwdriver.
   (On the 2706-P72-CN*x*-SC, there are 3 quarter-turn latches; on the 2706-P74-CN*x*-SC there are 4.) Carefully let the front of the case drop forward.

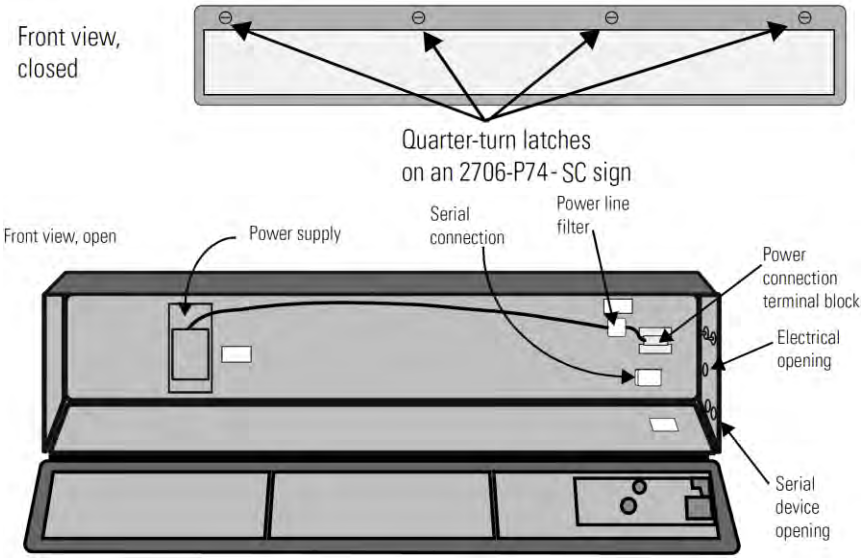

2. Feed electrical cable through 2.54 cm (1 in.) water-tight conduit, the outside end of the connector (supplied), the electrical opening in the sign case, and then through the inside end of the connector.
3. Screw the inside and outside ends of the connector together until water-tight.

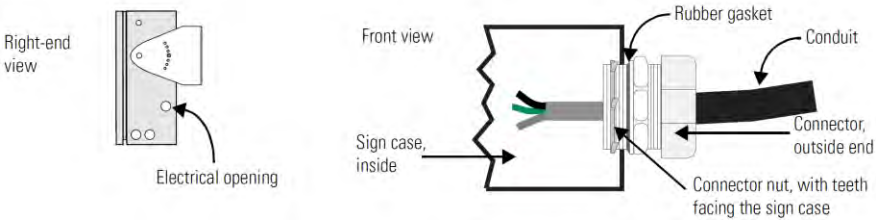

4. Strip the electrical wires back 6.35 cm (0.25 in.).

5. Connect the wires by screwing the end of each wire into the power connection.

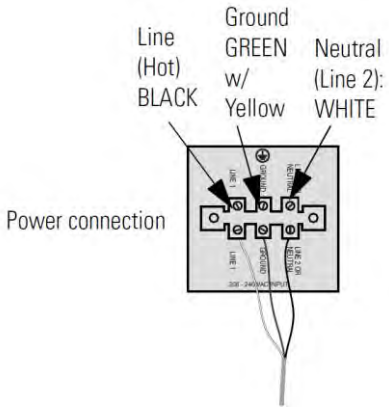

6. If the sign is to be used with serial communications, remove one or both of the hole plugs from the lowest holes on the right end of the sign case. Otherwise, proceed to Step 7.

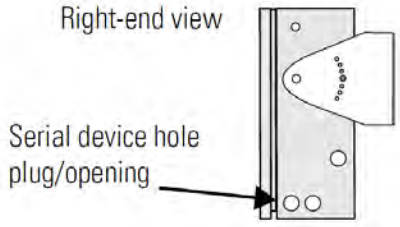

NOTE TB1 can be used for incoming RS-485 or RS-232 serial connection. The full pinout diagram is shown below.

TB1 Full

Pin	Pin Name	Pin	Pin Name
1	GND	5	RS-485+
2	+5V	6	RS-485-
3	RS-232 TX	7	NC
4	RS-232 RX	8	Shield

7. Connect the incoming serial wires per pinout.
   TB1 can be used for incoming RS-485 or RS-232 serial connection. They cannot be connected at the same time.
   RS-485 is recommended to reduce undesirable electrical interference.

TB1-RS-485

Pin	Pin Name	Pin	Pin Name
1	NC	5	RS-485+
2	NC	6	RS-485-
3	NC	7	NC
4	NC	8	Shield

TB1-RS-232

Pin	Pin Name	Pin	Pin Name
1	GND	5	NC
2	+5 V	6	NC
3	RS-232 TX	7	NC
4	RS-232 RX	8	NC

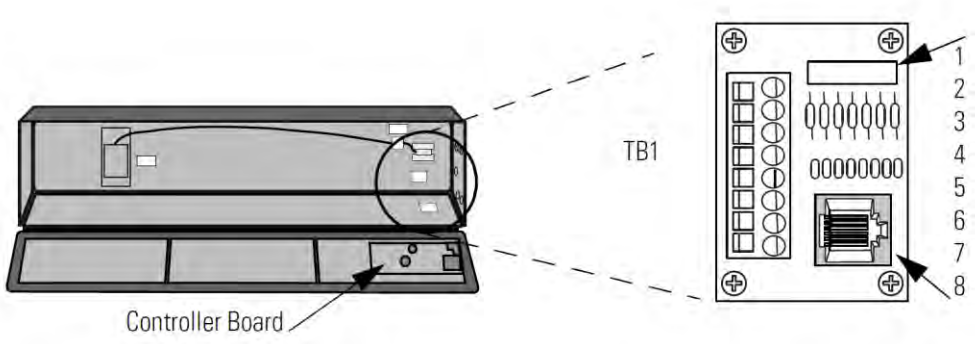

P1 can be used for incoming RS-232 only, although it is optional and not recommended. P1 is intended for RS-232 application downloads and RS-485 terminating resistor connection.

See Spectrum PN: 0100215-02 InView Display RS-485 End-of-Line Installation Instructions, for more information on RS-485 termination.

8. Carefully close the front of the sign case and turn the quarter-turn latches to the right with a large screwdriver.

Mount the 2706-P92-SC and 2706-P94-SC Displays

To mount the sign:

1. Attach the two sign brackets to a wall, ceiling, or other surface.
2. Be sure to place the brackets so the bracket flanges face appropriately as shown below. Mount the brackets the following distance apart (measured from the center of the mounting holes in each bracket):

NOTE Do not install the sign directly to drywall or plaster-board. The sign must be fastened to a wall capable of supporting at least four times the weight of the sign.

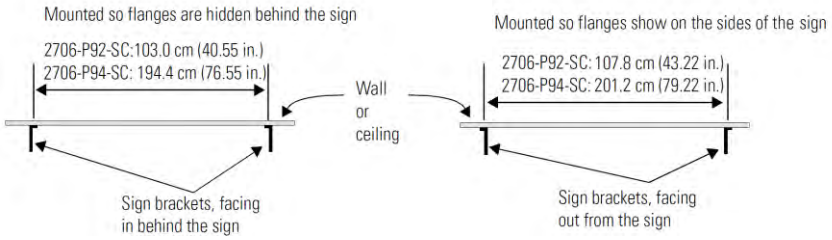

3. Mount the sign on the sign brackets using the two large hex bolts supplied.
4. Insert the bolts into the far single holes first, until the desired viewing angle is determined.

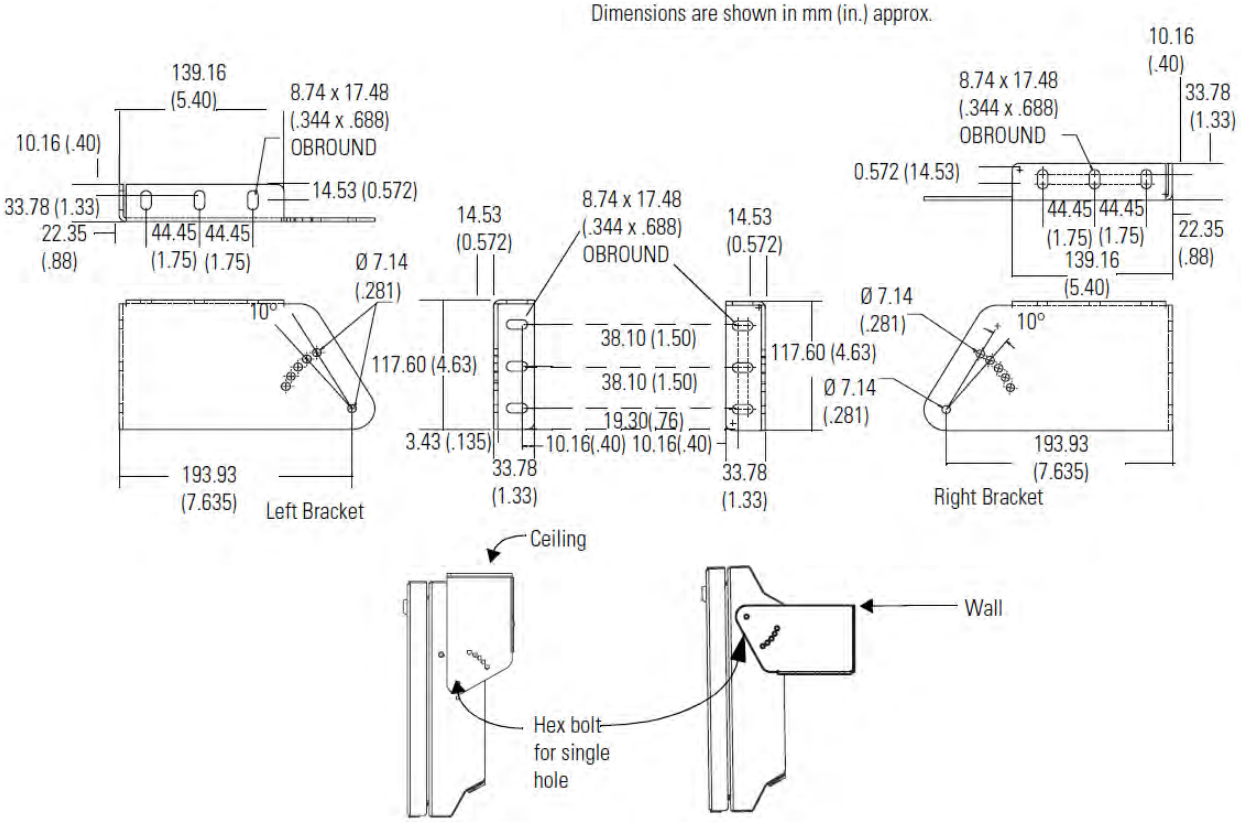

5. Tilt the sign to select a viewing angle.

6. To hold the sign in place, insert the remaining bolts into the desired viewing angle hole on each bracket.

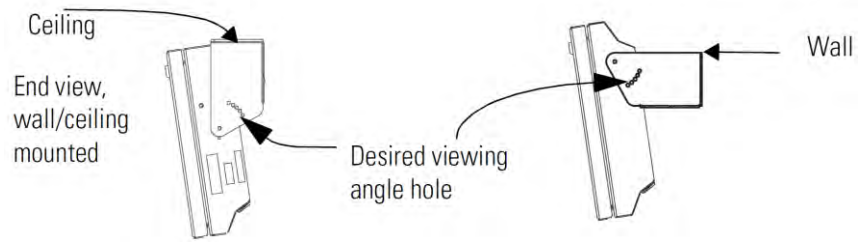

NOTE Keep a minimum 2.54 cm (1.0 in.) clearance on all sides of the sign for adequate ventilation.

Back-To-Back-Mount

To connect the sign:

1. Attach the brackets to the sign in the ceiling mount position with the hex bolts supplied.

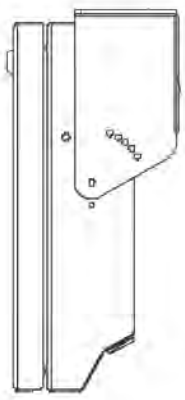

2. Match the signs together back-to-back and connect them together using a total of six 5/16” bolts and nuts (not supplied).
3. Attach chains (not supplied) to the top mounting holes of the bracket to hang the signs from the ceiling.

NOTE Use chains capable of supporting 4 times the total weight of the signs.

Electrical Connections for 2706-P92-SC and 2706-P94-SC Signs

WARNING	**Hazardous voltage.** **Contact with high voltage may cause death or serious injury**. Always disconnect power to sign prior to servicing. **Maintain Separation of circuits.** Route the incoming power directly to the power connection terminal block. **Do not run the power wiring over the logic board or optional Communication board.**

WARNING	**Tension dangereuse.** **Toucher un câble a haute tension peut provoquer la mort ou des blessures graves.** Sortir la prise d'alimentation de l'afficheur avant de le réparer. **Maintenir la séparation des câbles.** Brancher le câble d'alimentation directement au bornier d'alimentation électrique. **Ne pas faire cheminer le câble d'alimentation le long de la carte electronique numerique ou le long de la carte de communication.**

Open the front of the sign case by turning the half-turn latches to the left with a large screwdriver. On the 2706-P92-SC, there are 3 half-turn latches; on the 2706-P94-SC there are 5. Carefully let the front of the case drop forward.

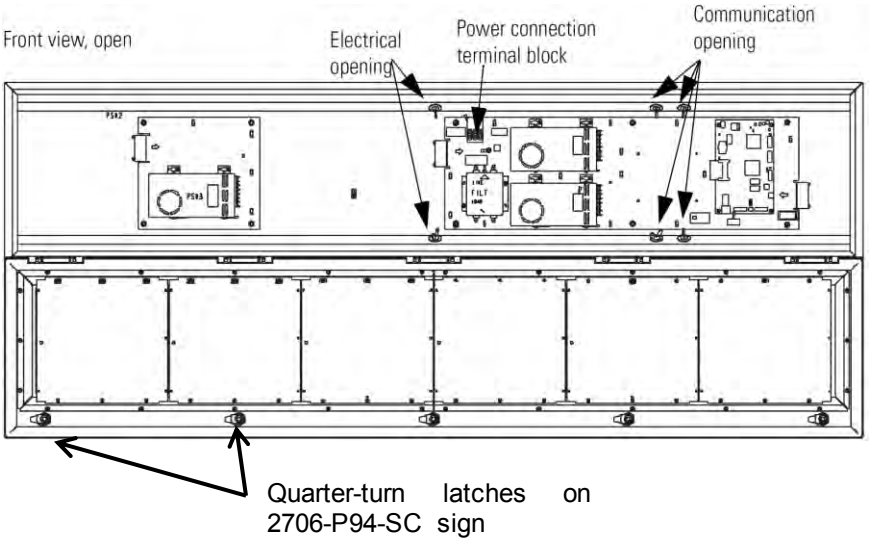

4. Feed electrical cable through 12.7 mm (0.5 in.) water-tight conduit, the outside end of the connector (supplied), the electrical opening in the sign case, and then through the inside end of the connector.
5. Screw the inside and outside ends of the connector together until water-tight.

NOTE Use either of the two holes nearest the power connection terminal block.

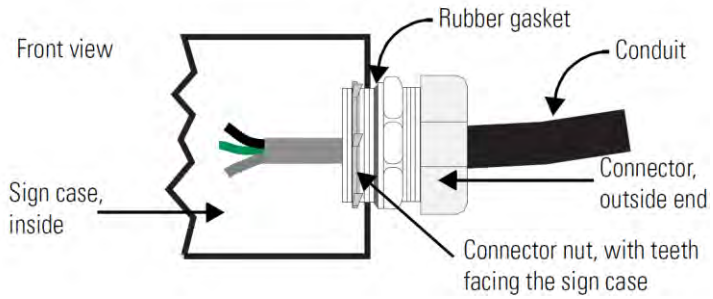

6. Strip the electrical wires back 6.35 mm (0.25 in.).
7. Insert the wires into the appropriate terminal connection and tighten the screw to 0.79 Nm (7 lb-in).
   The terminal block is UL rated for wire ranges of 14 to 8 AWG.

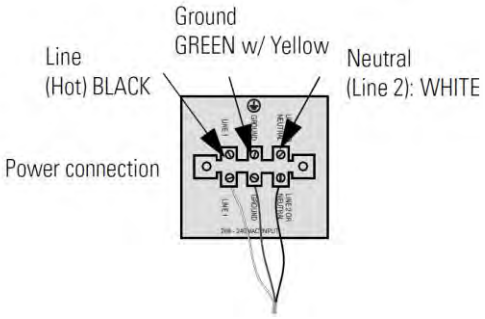

8. Remove the necessary hole plugs before connecting the communications cables.
9. Connect the incoming communication wires per the tables below.

WARNING	Use shielded Ethernet cable. Shielded Ethernet cable is required to maintain noise immunity. The 2706-PCable1-SC is used for downloading messages only, and must be removed after downloading is complete.

WARNING	Utiliser un câble Ethernet blindé. Câble Ethernet blindé est nécessaire pour maintenir l'immunité au bruit. Le 2706-PCable1-sc est utilisé pour le téléchargement des messages uniquement, et doit être retirée après le téléchargement est terminé.

TB1 is used for P9*x* pass-through. TB2 is used for supplying power to the options InView Legacy Communication board kit.

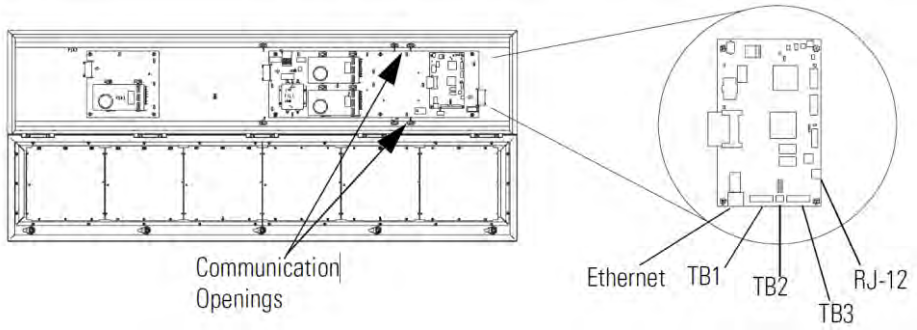

TB1-RS-485

Pin	Pin Name	Pin	Pin Name
1	GND	4	CH A
2	SHLD	5	CH B
3	COMM	6	TERM

TB2-AUX +5V

Pin	Pin Name	Pin	Pin Name
1	+5 V	2	GND

TB3-RS-232

Pin	Pin Name	Pin	Pin Name
1	TXD	4	CTS
2	RXD	5	GND
3	RTS	6	EGND

Ethernet (RJ45)

NOTE To maintain noise immunity, use shielded Ethernet cable.

Pin	Pin Name	Pin	Pin Name
1	TD+	5	NC
2	TD-	6	RD-
3	RD+	7	NC
4	NCRD-	8	NC

Download Port (RJ12)

NOTE The 2706-PCable1-SC is used for downloading messages only, and must be removed after downloading is complete.

Pin	Pin Name	Pin	Pin Name
1	AUX +5 V	4	RX
2	NC	5	NC
3	TX	6	GND

10. Carefully close the front of the sign case and turn the half-turn latches to the right with a large screwdriver.

Mount the 2706-P22-SC Display

The following provides panel cutout dimensions and overall dimensions for the InView P22R-SC panel mount display.

The InView P22R-SC mounts in a custom panel or enclosure. When it is properly installed, the faceplate provides a NEMA Type 12, 13, and 4X (indoor) rating.

To mount the display:

1. Cut and drill the appropriate mounting holes in the enclosure or panel. Refer to Panel Cutout Dimensions for 2706-P22R-SC Display earlier in this section.
2. Remove the six mounting nuts and washers from the hardware bag provided with the display.
3. Position the InView Display in the panel or enclosure mounting hole.
4. Install washers and nuts and alternately tighten the nuts to a torque of 0.904 Nm (8 lb-in).

NOTE InView P22R-SC mounting and panel cutout are identical to DL40 Plus, DL40, DL20 and DL10 two-line displays.

Panel Cutout Dimensions for 2706-P22-SC Display

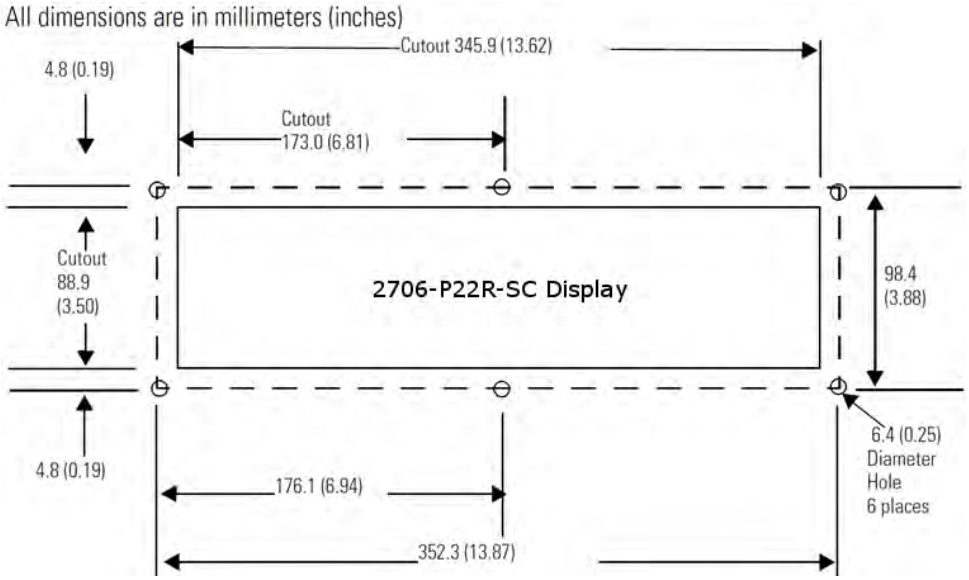

Electrical Connections for 2706-P22-SC Display

The InView display requires 18 to 30 VDC, 0.5 A at 18 VDC.

NOTE The 2706-PCable1-SC is used for downloading messages only, and must be removed after downloading is complete.

WARNING	Before making power connections, make sure that the power is turned off. Improper wiring of the power connections may result in personal injury or damage to the InView display. Make sure the area around the panel cutout is clear. Make sure metal cuttings or debris did not enter any components that may have been installed in the panel.

WARNING	Avant d'effectuer les connexions électriques, assurez-vous que l'alimentation est coupée. Un mauvais câblage de l'alimentation risque d'occasionner des blessures corporelles ou d'endommager l'afficheur InView. Vérifiez que la zone autour de la découpe du panneau est dégagée. Assurez-vous qu'aucun copeau de métal n'a pénétré dans les composants déjà installés sur le panneau.

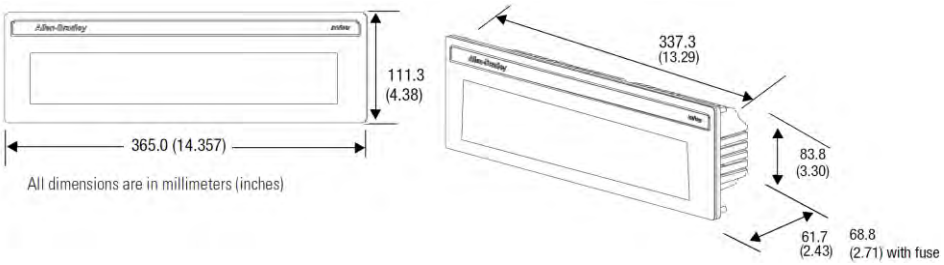

NOTE To satisfy all agency requirements and ensure proper operation, power this product using a 24 VDC, class 2 SELV power supply.

NOTE Use a small screwdriver to remove the terminal block's header to ease product wiring.

Communication Connections for 2706-P22-SC Display

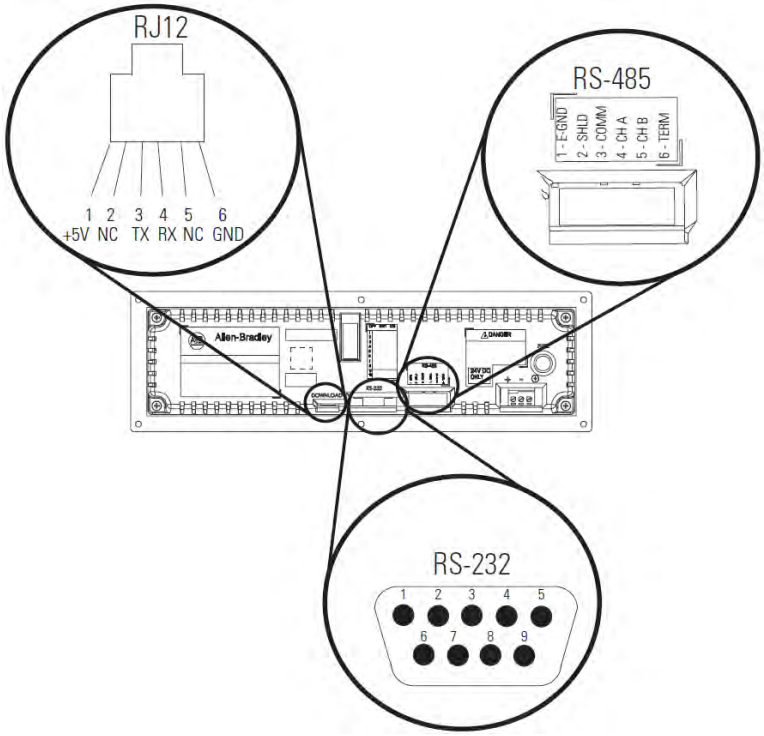

RJ12 Connections

Pin	Pin Name	Pin	Pin Name
1	+5 V	4	RX
2	NC	5	NC
3	TX	6	GND

RS-485 Connections

Pin	Pin Name	Pin	Pin Name
1	E-GND	4	CH A
2	SHLD	5	CH B
3	COMM	6	TERM

RS-232 Connection

Pin	Pin Name	Pin	Pin Name
1	NC	6	NC
2	TXD	7	CTS
3	RXD	8	RTS
4	NC	9	NC
5	GND		

DIP Switch Settings for 2706-P22-SC Display

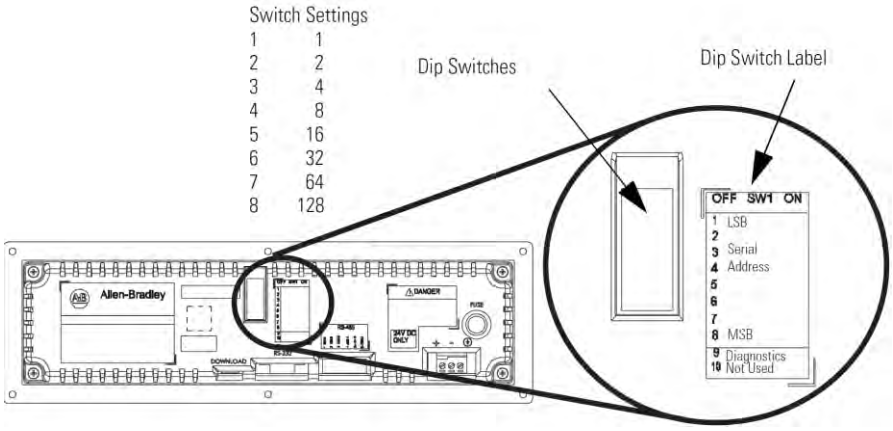

The 2706-PCable1-SC is used for downloading messages only, and must be removed after downloading is complete.

WARNING	Disconnect power from the InView display before setting any switch. Switch settings are scanned only on power-up.

WARNING	Coupez l'alimentation de l'afficheur InView avant de régler tout interrupteur. Les réglages des interrupteurs ne sont scrutés qu'à la mise sous tension.

DIP Switch Settings

Pin	Pin Name	Pin	Pin Name
1	1 (LSB)	6	32
2	2	7	64
3	4	8	128 (MSB)
4	8	9	Diagnostics
3	16	10	Not Used

Download a Message Application

InView message applications are created using the InView messaging software (2706-PSW1-SC). After creating the Message Application, you need to download it into your InView display memory.

InView applications can be downloaded using:

- Point-to-point serial communications (RS-232) from the communication port on a personal computer.
- Multi-drop RS-485 serial communications. Utilizing a 1761-NET-AIC to convert RS-232 to RS-485 from a personal computer allows you to download to multiple displays over RS-485.
- 2706-PCABLE1-SC which connects from your PC, running InView messaging software, to the phone jack type connector on your InView display. In larger InView models, this phone jack may be behind the power supply cover.
- EtherNet TCP/IP networking. With the InView 2706-PENET1-SC EtherNet TCP/IP communication module you can download message applications from a personal computer over Ethernet.
- For more information on this communications option, see 0100233-01_A0(INSTALLATION_INSTRUCTIONS,2706-PENET1-SC).
- InView communication modules. The communication modules allow the displays to communicate on the core Allen-Bradley networks.

RS-232 to RS-485 Networking

With the use of an Allen-Bradley 1761-NET-AIC, you can convert RS-232 to RS-485 and daisy chain InView Displays up to 1219 m (4000 ft).

1761-NET-AIC (AIC+)

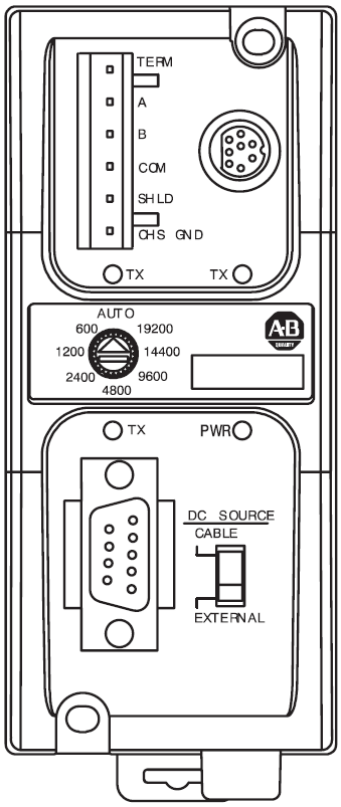

RS-485 Echo

The RS-485 echo feature addresses the issue of increased network traffic often caused by multiple node addresses and high consumption of communication bandwidth. The display's design enables users to daisy-chain numerous InView displays off an InView P9x-SC via the RS-485 communication network.

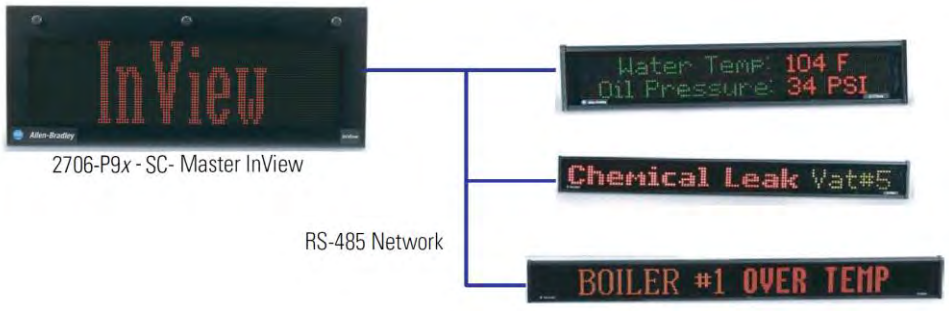

In order to set the 2706-P92-SC display or the 2706-P94-SC display as a Master, the echo dip switch must be enabled.

See Dip Switch Information for the 2706-P9*x*-SC in Chapter 2.

NOTE Only one 2706-P9*x*-SC InView display can be set as the master per RS-485 network.

When the echo feature is enabled, all incoming packets, whether it is over the RS-232 port, RJ12 download port, or the RJ45 10/100 base-T Ethernet port, are echoed out the RS-485 port.

An InView master display inspects the incoming packets and determines if the packet is addressed to itself and take the appropriate action. The master ignores all packets that are not addressed to itself. The only exception is for a packet with an address of 255. This is the broadcast address and must be accepted by all displays on the network.

NOTE When the 2706-P9*x*-SC display, echo feature is enabled, the RS-485 port of the 2706-P9*x*-SC display, does not accept incoming packets. The port is exclusively used to echo out data.

Global Addressing

The 2706-P92-SC and 2706-P94-SC displays can both set their serial address to 255, which is the global (broadcast) address. A display with the serial address of 255, accepts all message packets regardless of the address actually given in the packet. This allows the user to route all messages to the 2706-P9*x*-SC InView display.

See Dip Switch Information for the 2706-P9*x*-SC in Chapter 2, for serial address configuration.

NOTE A global address of 255 can only be set by hardware and cannot be set using software.

Ground and Terminate the RS-485 Network

Only one device at either end of the link must have earth ground and shield jumpered together. This provides an earth ground connection for the shield of this communication cable.

- If the connection is made at an AIC or AIC+, jumper terminals 1 and 2.
- If the connection is made at a 2706-P4*x*-SC or 2706-P7*x*-SC display, jumper terminals 1 and 8.
- If the connection is made at a 2706-P22R-SC display, jumper terminals 1 and 2.

Both ends of the network must be terminated. There is an impedance of 120 ohms built into each AIC and AIC+ as required by the RS-485 specification. Jumper terminals 5 and 6 of the AIC or AIC+ for end-of-line termination.

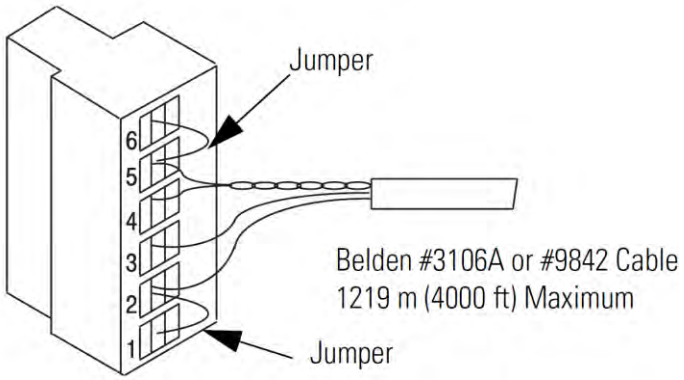

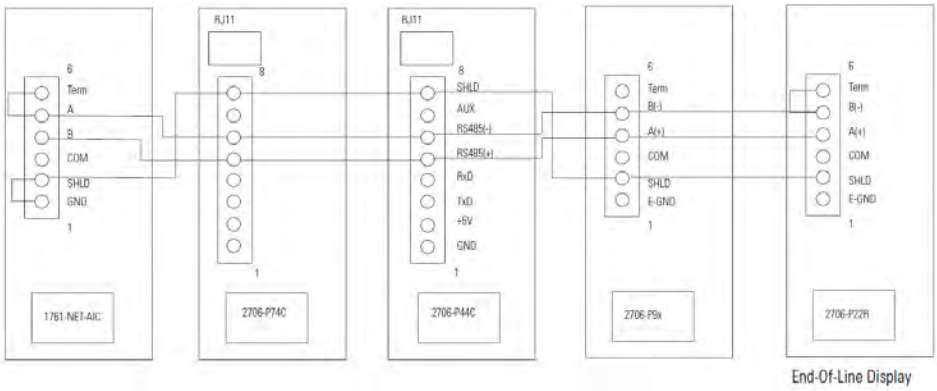

NOTE

End-of-line InView display should have a terminating resistor in RJ11 (P1). If a 2706-P22-SC display is the end-of-line display, jumper terminals 5 and 6. There is a built in impedance of 120 ohms similar to that of the AIC and AIC+.

Chapter 2 InView System Connectivity

This chapter demonstrates how the InView display connects to control networks. In the following chapters we show controller configuration and sample ladder for serial ASCII networks. This chapter also discusses how to set-up the display attributes, communications and create messages.

Serial ASCII Communications

Refer to Chapter 3 for more information on Serial ASCII communications from Channel Zero of an Allen-Bradley controller

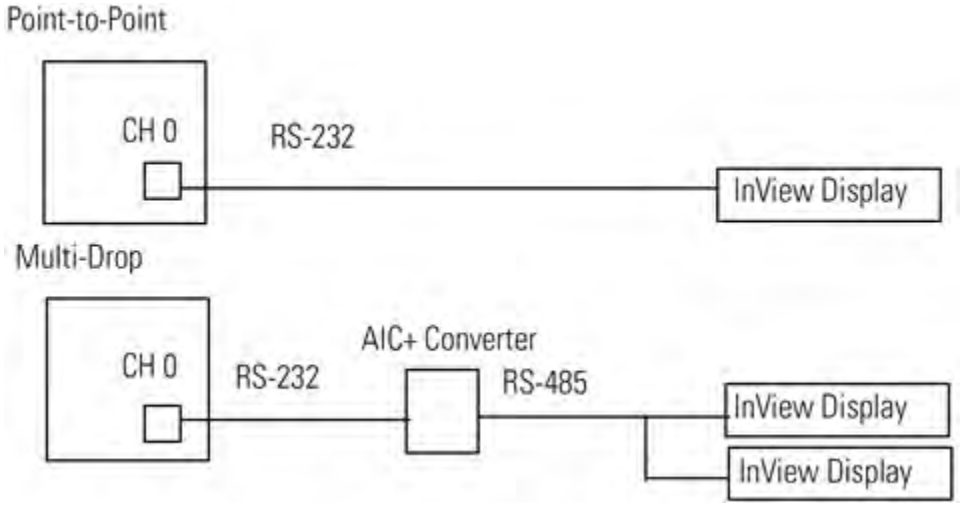

Features

The features are separated into sections for the 2706-P4*x*-SC and 2706-P7*x*-SC displays and the 2706-P22R-SC displays.

2706-P42-SC, 2706-P44-SC, 2706-P72-SC, and 2706-P74-SC Displays

These displays operate at 100 to 240 VAC. They have an eight-position terminal block that contains an auxiliary +5 VDC, RS-232 signals, and RS-485 signals. There is also an RJ12 port that is in parallel with the RS-232 signals from the terminal block. The RJ12 port is used primarily for downloading messages to the display via the 2706-PCABLE1-SC download cable.

These displays have a single channel UART and therefore can only have one of the three communication options connected at a time:

- RJ12
- RS-232 terminal block connections
- RS-485 terminal block connections

TB1 Connections

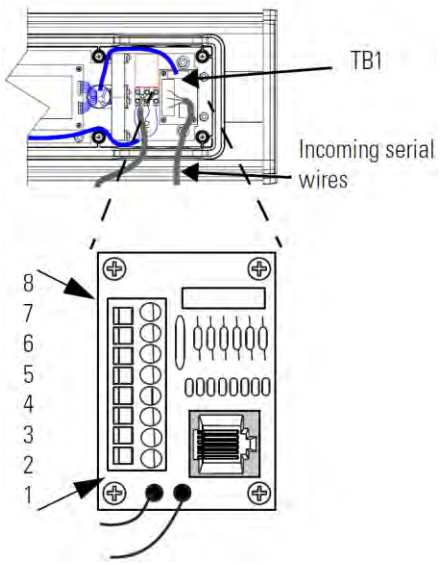

TB1-FULL

Pin	Pin Name	Pin	Pin Name
1	GND	5	RS-485+
2	+5 V	6	RS-485-
3	RS-232 TX	7	NC
4	RS-232 RX	8	Shield

2706-P22-SC Display

This display operates at 18 to 30 VDC. It has three communication ports. These are the RJ12, DB-9, and a six-position terminal block port. The RJ12 port is used primarily for downloading messages to the display via the 2706-PCABLE1-SC download cable. The DB-9 port is used for RS-232 communications and the signals are in parallel with the RJ12 port. Therefore, only one of the ports may be connected at a time. The six-position terminal block is used for RS-485 communications. The 2706-P22R-SC display has a two-channel UART. This means that one of the RS-232 ports and the RS-485 port can be connected at the same time.

2706-P22R-SC Display Communication Connections

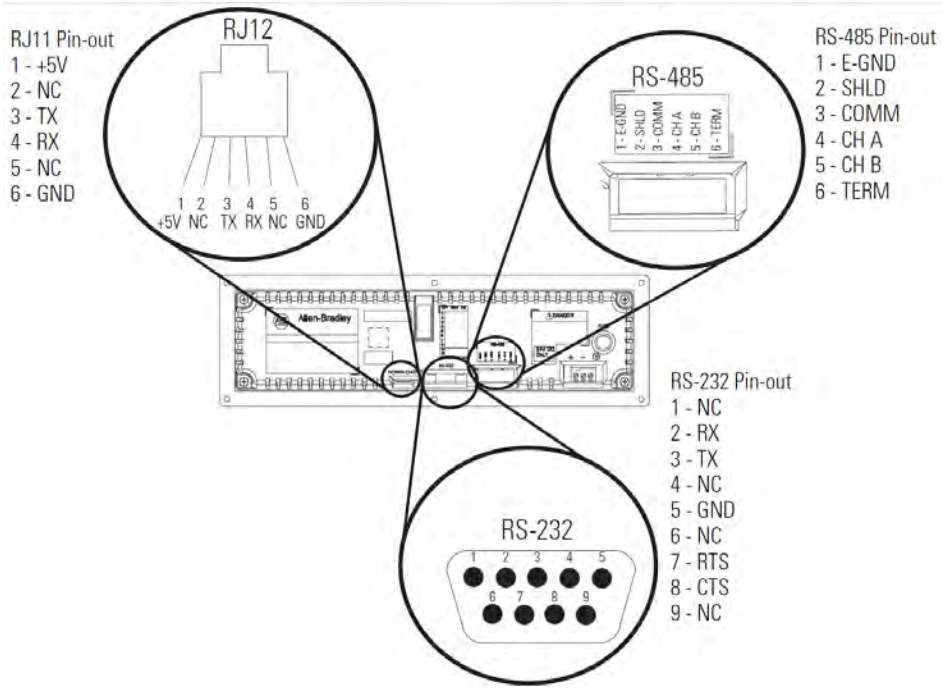

RJ11 Connections

Pin	Pin Name	Pin	Pin Name
1	+5 V	4	RX
2	NC	5	NC
3	TX	6	GND

RS-485 Connections

Pin	Pin Name	Pin	Pin Name
1	E-GND	4	CH A
2	SHLD	5	CH B
3	COMM	6	TERM

RS-232 Connection

Pin	Pin Name	Pin	Pin Name
1	NC	6	NC
2	TXD	5	RTS
3	RXD	8	CTS
4	NC	9	NC
5	GND		

The 2706-P22R-SC display has a ten-position dip switch. The first eight positions are used to set the address of the display. Position nine is used to put the display in diagnostic mode. Position ten is a spare. The dip switch is read only on power-up.

The diagnostic mode causes the display of LED patterns to visually indicate if any pixels are not turning on. It also performs a memory check.

NOTE

After one complete LED scan is done, a RAM check is performed and the display's memory is cleared. To ensure that the display's memory is not cleared, turn off power to the display after the LED block test is performed. Make sure that the download or message file has been saved before the diagnostic test is allowed to run completely through.

2706-P22-SC Display Dip Switch Settings

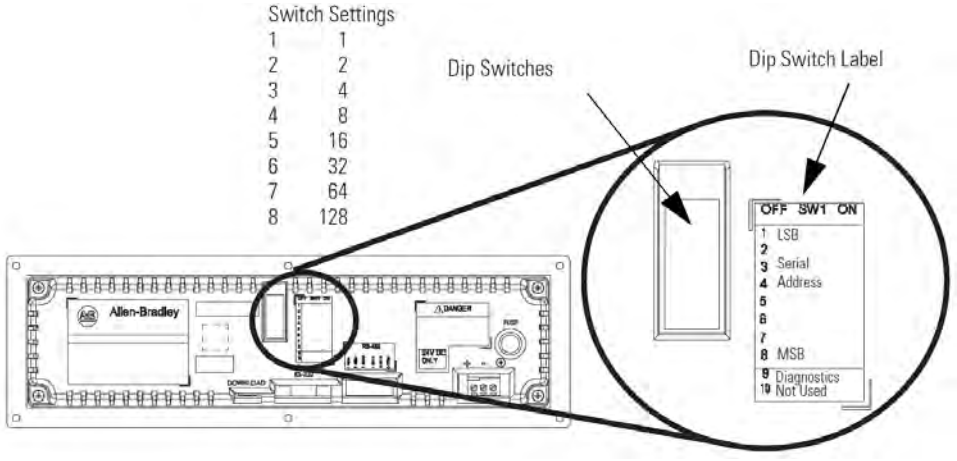

DIP Switch Settings

Pin	Pin Name	Pin	Pin Name
1	1 (LSB)	6	32
2	2	7	64
3	4	8	128 (MSB)
4	8	9	Diagnostics
3	16	10	Not Used

Dip Switch Information for the 2706-P9*x*-SC

There are two dip switches located on the controller board, Switch 1 and Switch 2.

2706-P9*x*-SC Dip Switch

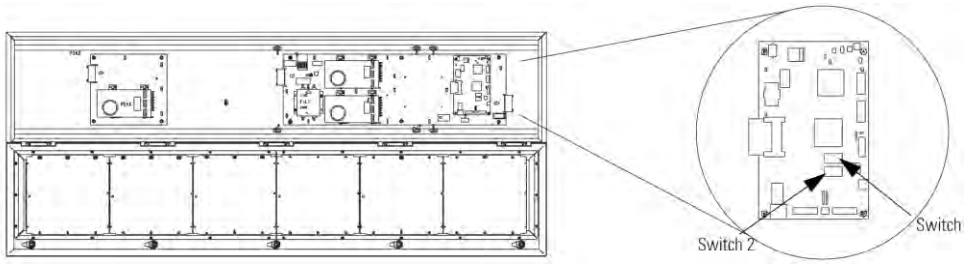

Switch 1

Switch 1 is used to configure the display's RS-485 echo enable, communication rate settings, and display size.

Position 1 enables or disables the echo function.

When you enable the RS-485 echo function, this allows any packets that come in on COM 0 (download, RJ12 port), COM 1 (RS-232, TB3 port), and the Ethernet TCP/IP port to be sent out the RS-485 port. This allows Ethernet TCP/IP and other communication protocols to be converted to RS-485 by a single 2706-P92-SC or 2706-P94-SC and then sent out to multiple RS-485 networked displays.

NOTE Only enable the echo function on one 2706-P9*x*-SC display.

Positions 3 and 4 set the communication rate.

Refer to page 2-6 for default positions.

If both switches are off, the communication rate can be set via the InView messaging software. The dip switches take priority over the software setting. If the communication rate is set to 19200 using the software (positions 3 and 4 set to off) and then set to 9600 using Switch 1 (position 3 on and 4 off), the communication rate is 9600. Also, once positions 3 and 4 are used to set the communication rate and then they are switched off, the communication rate setting remains until it is changed by software or a different dip switch setting.

Position 5 is used to set the display size. This is set by the factory.

Position 6 is used to turn on diagnostics.

Position 7 disables download message.

Switch 2

Switch 2 is used to set the serial address of the display.

Position 1 is the LSB of the address and position 8 is the MSB of the address.

If position 1 is on and all other positions are off, the display address is 1.

If position 8 is on and all other positions are off, the display address is 128.

If all positions are set to off, the display address is 128.

The dip switch setting takes priority over the software setting. If the serial address is set to 2 using the software (all the dip switches set to off) and then Switch 2 is used to set the serial address to 3 (position 1 and 2 set to on and the remaining positions set to off), the serial address is 3. Also, once Switch 2 is used to set the serial address and then all switch positions are set to off, the serial address setting remains until it is changed by software or the dip switch is set.

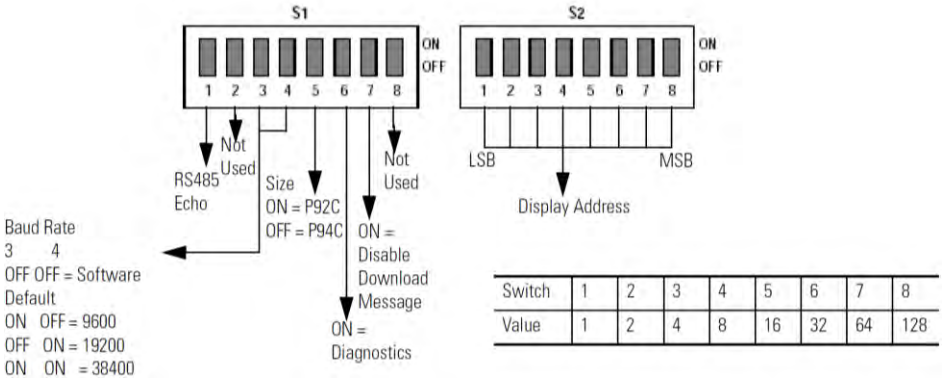

Switch	1	2	3	4	5	6	7	8
Value	1	2	4	8	16	32	64	128

Additional Information for 2706-P9*x*-SC Displays

For additional information on communication port wiring and display configuration, refer to the InView Marquee Message Display User Manual, publication 0300281-02_A0(MANUAL_2706-UM016D-EN-P).

This product contains a Lithium battery. See publication 0100214-02_A0(INSTALLATION_INSTRUCTIONS_2706-IN009C-EN-P) for information regarding battery replacement and disposal.

Communications Board Kits

There are optional Communications Board Kits available for the 2706-P9*x*-SC series displays. There are a total of six board kits:

- Remote I/O (2706-PRIOK-SC)
- DH+ (2706-PDHPK-SC)
- DH-485 (2706-PDH485K-SC)
- ControlNet (2706-PCNETK-SC)
- DeviceNet (2706-PDNETK-SC)
- EtherNet/IP (2706-PENETK-SC).

The Communications Board Kits convert the six protocols to RS-232.

The board kit mounts on the four PEM spacers that are attached to the internal mounting plate.

See publication 2706-IN015 for more information on how to install the board kits.

Spacer Location

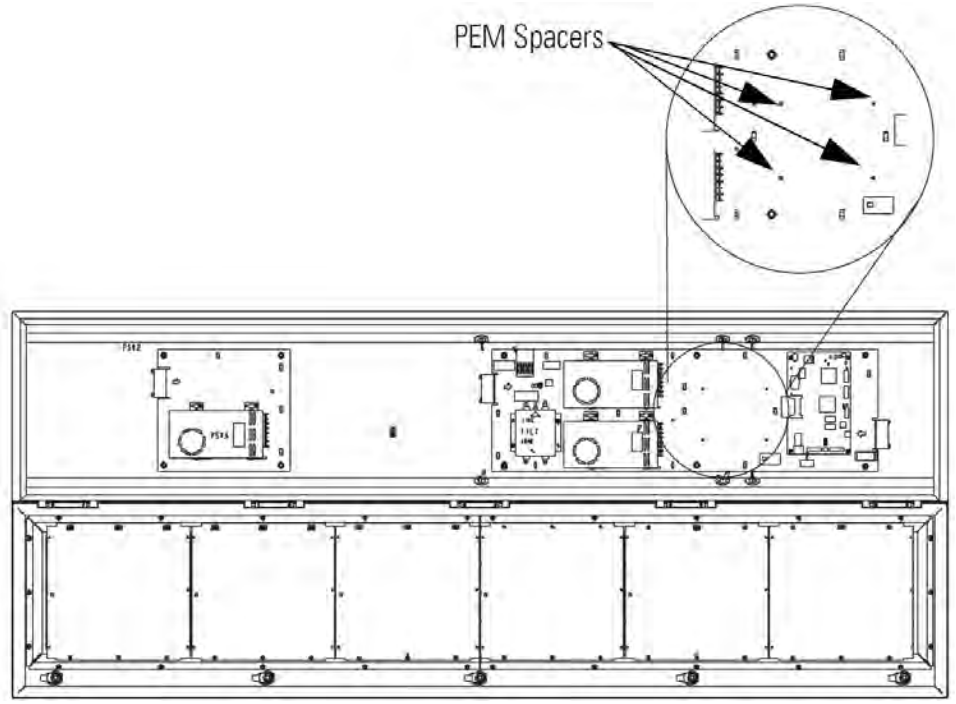

Compact Flash Card

This product uses a Type I Compact Flash Card for message file storage. Refer to publication 2706-IN017 for information on replacement and installation of the Compact Flash Card.

Multiple Communication Rate Support

The 2706-P92C-SC and 2706-P94C-SC displays allow you to select serial communication rates of 9600, 19200, or 38400 bps. The communication rates are both hardware (dip switches) and software selectable.

NOTE For selecting the communication rate using the dip switches, see the section entitled Dip Switch Settings.

The communication rate of the display is set using the InView messaging software, provided the communication rate dip switches are all off.

To set the communication rate using the messaging software:

1. Highlight the 2706-P9*x*-SC display you wish to set the communication rate:

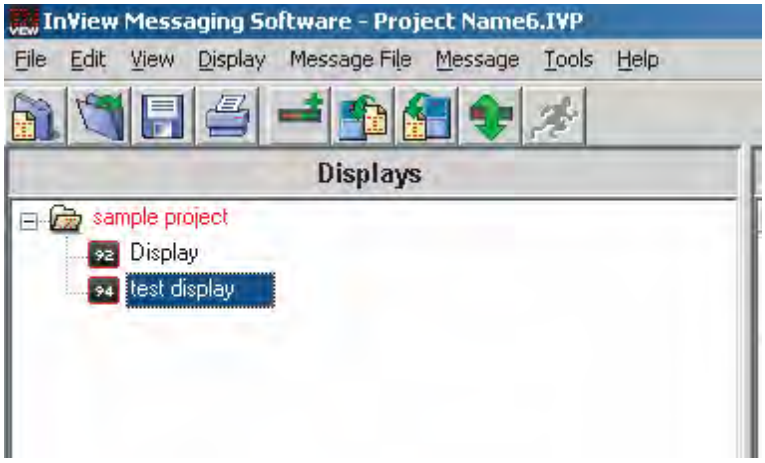

2. Select Set Display Baud Rate under the Tools menu:

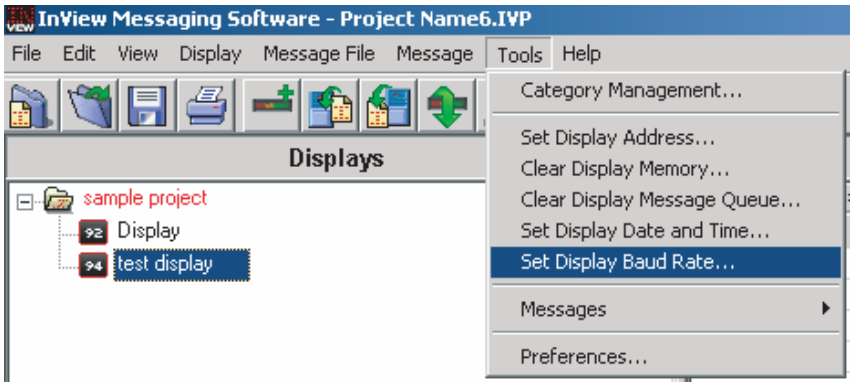

3. Choose the communication rate you wish to set the display at and click on the Set button:

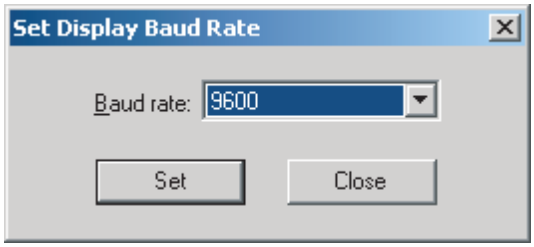

NOTE There is no confirmation that the command was sent. The display must be power cycled to view the new communication rate settings.

Isolated Communication Ports

The isolated communication ports consist of RS-232, RS485, 10/100 Ethernet port and a RS-232 download port. This allows the 2706-P92C-SC and 2706-P94C-SC displays to support multiple networks simultaneously. This allows programmers to change the messages or tie into an information database, while control operators can continue delivering alarms and messages to the plant floor.

Flash Programmable Firmware

The programmable Compact Flash card is located inside the 2706-P9*x*-SC display on the controller board as shown below.

NOTE The Compact Flash card must be at least 32 MB; anything less is not supported.

Power-Up Messages

After the power cable and the download cable (attaches to the RJ12 port) have been attached per the installation document, apply power to the display.

NOTE

If a display is connected to Ethernet via TCP/IP by using a 2706-PENET1-SC module or a 2706-P9*x*-SC display is connected to Ethernet via TCP/IP, the display configuration and message download can be done over Ethernet. For more information on this communication option, see publication 0100233-01_A0(INSTALLATION_INSTRUCTIONS,2706-PENET1-SC).

2706-P42-SC, 2706-P44-SC, 2706-P72-SC, 2706-P74-SC, 2706-P92-SC, and 2706-P94-SC Displays

After power is applied to the display the following messages are displayed.

- Firmware number and revision
- Memory size and partition
- Memory checksum message
- Date and time
- Address of the display; and background message, if one was created

P2706-P22-SC

After power is applied to the display the catalog number, firmware revision, and address is displayed on one screen. Then the background message is displayed.

See the help file for more details on the following topics.

Display Setup

To set up your display:

1. Start the InView messaging software.
2. Create a project.
   The software prompts for a project file name, a project name, and description. Once this is done, the project name and description appears in the Displays box.
3. The software then prompts for a display name, display description, display type, and the number of that particular display that is used in the system (1 to 100 of the same display type).
4. Select one for the number of displays (once displays have been assigned a unique address, more than one can be added at once).
5. Select Next.
   The software then prompts for the address of the display, heartbeat, TCP/IP settings (if applicable), and the serial com port settings.
   Use the default settings of 9600, None, 8, and 1.
6. Select Next.
7. When the software prompts for a message file association, check Create a New Message File.
8. Enter the message file name and select Finish.
   The message editor window is displayed.

Set the IP Address

For the 2706-P22-SC, 2706-P4*x*-SC, and 2706-P7*x*-SC terminals, separate communication modules are needed to place the display on the network. The 2706-P9*x*-SC displays have Ethernet TCP/IP built in. To add any other network protocol to the 2706-P9*x*-SC, a separate communication module is needed.

The Ethernet TCP/IP configuration utility is installed as part of the InView messaging software package. When first opening the InView messaging software, you are asked to create a display and a message file. After the display is created you can configure the IP address of the 2706-PENET1-SC module.

The 2706-PENET1-SC module is the communication interface for Ethernet TCP/IP. This module is used with the 2706-P22-SC, 2706-P4*x*-SC, and 2706-P7*x*-SC displays. The 2706-P9*x*-SC displays have this protocol built in.

Note that the 2706-PENET1-SC is Ethernet TCP/IP or Office type Ethernet and is not Ethernet I/P, which is Ethernet Industrial Protocol available on Rockwell Automation logic controllers.

To set the IP address:

1. Select the display you created, which use the Ethernet module.
2. Right click on the display and select Edit Display:

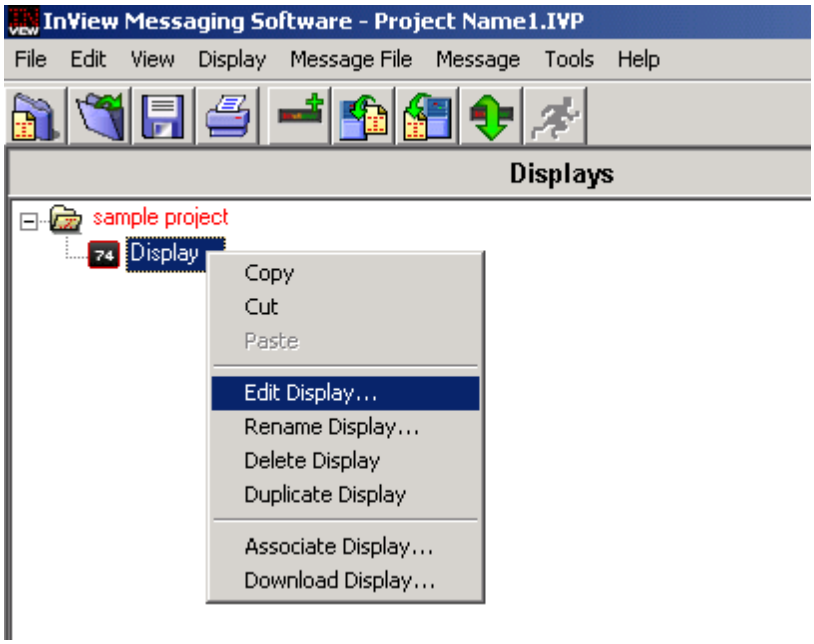

NOTE Double clicking on the display takes you to the same window.

3. When the Edit Display window appears, go to the Communications tab. This is where the configuration utility is located.

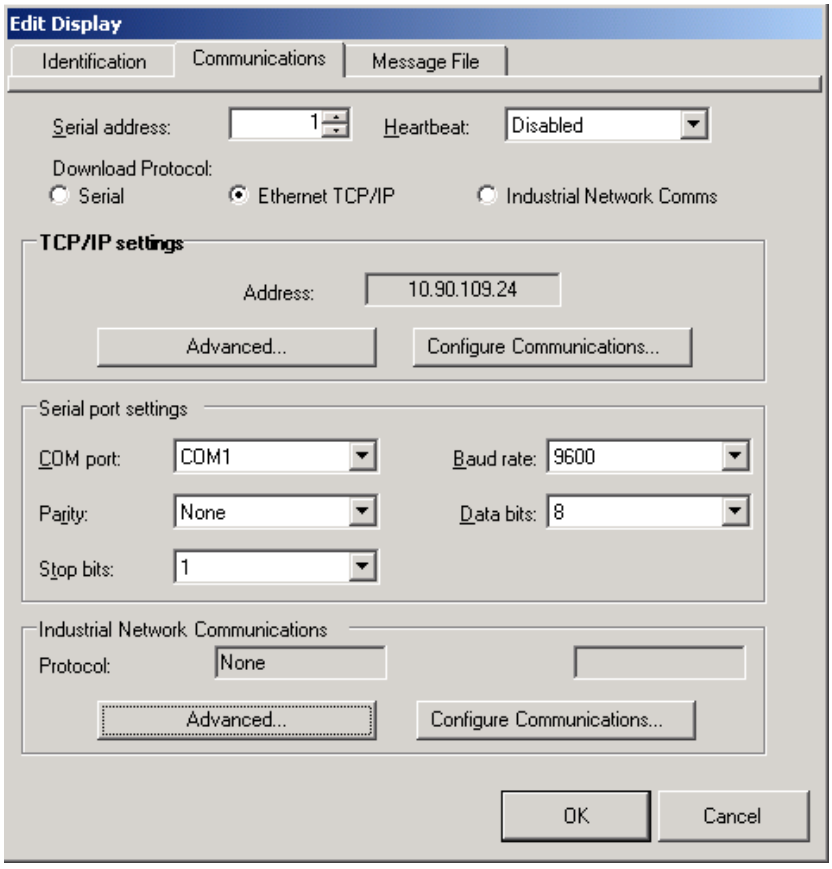

Under the section with the Heading TCP/IP settings is the Configure Communications button.

4. Click to access the Ethernet TCP/IP Communications window to set the IP address.

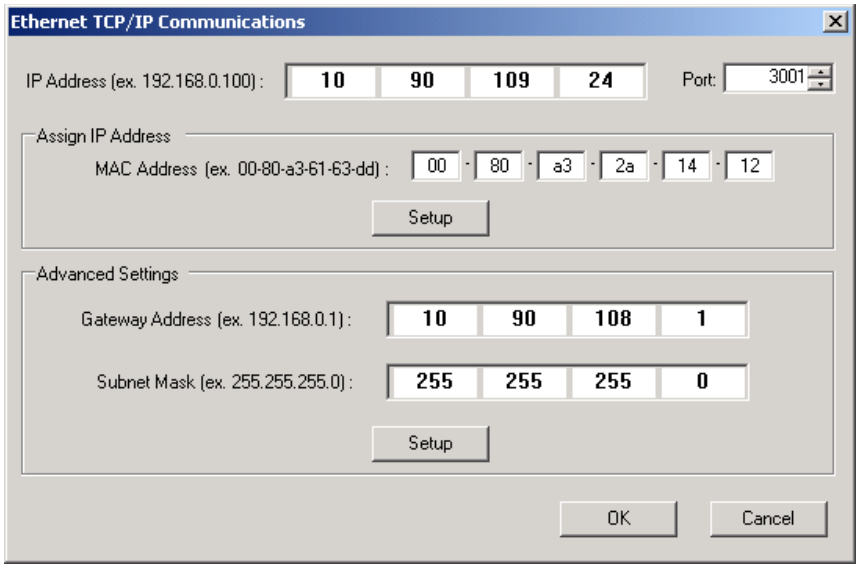

5. In the IP Address field, specify the IP address.
6. If you are using the 2706-PENET1-SC, specify 3001 for the Port address.

7. Enter the MAC Address of the module under the heading Assign IP Address. The MAC Address is found on the module itself.

NOTE The 2706-P9*x*-SC display does not use MAC Address. IP Address changes must be done serially.

8. Click the Setup button located in the section titled Assign IP Address once the desired IP Address, Port, and MAC Address have been entered.
9. If the IP Address is already in use, an error message window appears.

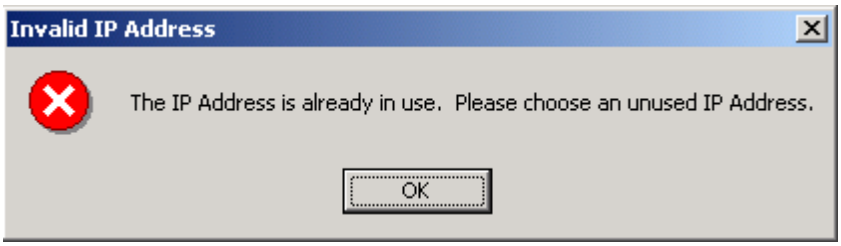

NOTE If the Invalid IP Address window appears, click OK, choose a different desired IP Address, and click the Setup button again. Once a valid IP Address is entered, the following window should appear saying it is ready to assign an IP address:

10. You need to either turn the display on or power cycle the display if it is already turned on. Upon successful assignment of an IP Address, the following window appears:

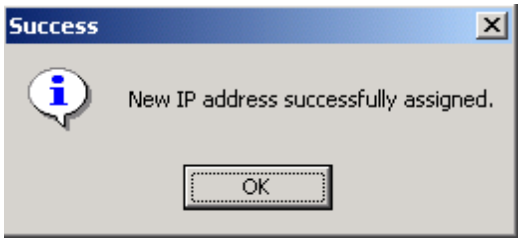

Gateway Address and Subnet Mask Setup

Set up the Gateway address and Subnet Mask if needed based on your Ethernet Network configuration. Default values typically are for Subnet Mask, 255.255.255.0 and as a default the Gateway address is left blank.

Subnet Mask is a parameter that interprets IP addresses when the network is divided into multiple networks. The IP address is formatted as four sets of decimal numbers with periods between them (255.255.255.1). The range of values for the first set of decimal numbers is 1 to 255. The range of values for the last three sets of decimal numbers is 0 to 255. The value 0.0.0.0 is not a valid

subnet mask.

Gateway Address is a unique address of the Gateway connecting two individual IP networks into a system of networks. When a node needs to communicate with a node on another network, the Gateway transfers the data between the two networks. The IP address is formatted as four sets of decimal numbers (from 1 to 255) with periods between them (130.0.0.1). The first field cannot be 0 if any other fields contain a 0.

Once the desired Gateway Address and Subnet Mask have been entered, click on the Setup button located just below where the Subnet Mask was entered. If for some reason, the settings are not received by the 2706-PENET1-SC module, the following error message will appear:

However, upon successfully setting up the Gateway Address and Subnet Mask, the following message appears telling you to cycle power to the module:

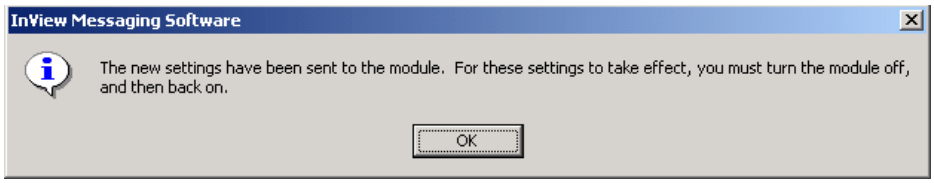

After the IP Address, Gateway Address and Subnet Mask have all been established, click the OK button on the bottom of the Ethernet TCP/IP Communications window. This allows the settings to be saved and configuration is now complete.

Once the settings have been saved, they can now be viewed by clicking on the Advanced button located in the section titled TCP/IP settings on the Edit Display window

Create the Message File

A background message of Rockwell Automation is automatically created. This is also indicated by the letter B in the message list below the message creation box. Message number 1 is highlighted and ready for creation. Create a message by typing in the message box. Attributes for the messages can be changed or added using the pull down menus located above the message creation box or from the toolbar. Once message number 1 has been created, select the down arrow or type 2 in the box and select the Goto button. This allows message number 2 to be created.

There is a size displayed in the lower right of the window. This is the size of the message that is being created. This number starts from 11 and increases to a maximum number that is determined by setting the partition size in software. This is based on a total of 200,000 bytes. The smaller the partition size the more messages are available. The limits are 450 bytes per message, 444 messages minimum to 50 bytes per message, 4000 messages maximum. To change the partition size, select File, followed by Partition.

See the following sections for more information regarding the message attributes.

Message File Additional Information

Additional tasks covered in the following section are:

- Attach a Note to a Message
- Text Color
- Date, Time and Variables
- Category
- Message Priorities
- Pause
- Message Header
- Preview Messages
- Set the Display Address
- Download Messages
- Clear Memory/Message Queue

Attach a Note to a Message

Select a message from the message list. Select Tools and Edit Note. Then a Message *X* Note window appears. The *X* is the message number for the message that a note is being created for. These message notes can only be viewed with the InView messaging software and are not downloaded to the display.

Text Color

There are three color options if a display is classified as color. They are red, green, or yellow. The color of the message is the color that is selected. The color of individual text within the message is changed by inserting a color before the text. The text after the color insert stays that color until a new color insert is performed.

Date, Time and Variables

The date, time and variables are also inserted into a message. These are found under the Edit menu then Insert or via the toolbar buttons. If inserting the date, a pop-up window appears and shows various formats and a pre-viewer that displays the data for the selected format. If inserting a variable, a pop-up window appears that allows the selection of the variable number and whether the variable is numeric or alpha numeric. The maximum number of variables per message file is 100 (00 to 99). The numeric variable ranges from 32,767 to -32,768 decimal. It also allows the selection of the type of padding and a check box for a sign (+/-). An alpha numeric variable is ASCII text except for the ". It also varies in length from 1 to 128 characters. There is a pre-viewer that displays the options selected. The format for the time is either standard or military. The selection for this is found in the InView configuration window (the project window) under Tools and Set Display Date and Time. Note that the time format is set for each display individually by address. The default format is standard. The data and time is also set here.

Category

The Category option is used to assign categories to messages. This helps in organizing messages for certain operations and when performing a Find.

Message Priorities

The Priority option is used to give messages a priority of low, medium, and high. As an example, a normal operating water temperature reading of a generator is a low priority message. A pre-alarm message of high water temperature is a

medium priority message. An alarm message of high water temperature shutdown is a high priority message.

In our example, the water temperature is part of the generator signals that are constantly being monitored and displayed as low priority signals in the message queue (the message queue can hold up to 64 messages). When the water temperature rises above a pre-alarm threshold, the medium priority high water temperature message is added to the message queue. When this happens, only medium priority messages are displayed. If other medium priority messages were added to the queue, they are also displayed until a high priority message is added to the queue. When the water temperature rises above an alarm threshold, the high priority high water temperature shutdown messages are displayed.

In order to view the low priority messages, the medium and high priority messages need to be removed from the message queue. See InView Protocol, Chapter 4, for information on how to add or remove messages from the message queue.

Pause

The Pause option determines how long a message is displayed when a message queue (two or more messages are being displayed due to a download and display or messages were added to a message queue) is running.

See InView Protocol, Chapter 4, for information on how to messages to the message queue.

Message Header

A header is added to a message by clicking the H button. Once this button is clicked, the button appears depressed and any text in the message creation box shifts from the top line to the bottom line.

Preview Messages

Messages are previewed before downloading. This option is found under the View menu, followed by accessing Preview Mode or by clicking the magnifying glass button.

After the message file is created, exit the message editor. The message file is automatically saved as it is created. If an edit is needed to a message file, double click a message in the Message File Details list in the project window. This brings up the message editor window.

Set the Display Address

All displays except for the 2706-P9*x*-SC and 2706-P22R-SC displays must have their addresses set through software. The factory default address setting for all InView displays is 01. This is the old address when setting up the display for the first time. To set the display address using the software, select Tools and Set Display Address. The display communication settings (com port and communication rate, or TCP/IP settings) should have been set when the display was added to the project.

The 2706-P22R-SC display address is set either in the software using InView messaging or by using the dip switch. The first eight positions of the dip switch are used for setting the display address. If all the dip switches are off, the address is set in the software. If any of the first eight dip switch positions are on, this is the display address and the software setting is overwritten. Once an address is selected by the dip switches, it is retained until it is overwritten by the software (only done when all switches are off) or the dip switches are changed. Once a unique address has been set, future display properties and message communications are downloaded to networked signs via RS-485. Message downloads, communications, and display properties are downloaded to

networked signs via Ethernet TCP/IP. See the 2706-PENET1-SC documentation for more information on using this communication option.

Download Messages

Once the message file has been created, there are several download Options:

- Download the entire file - Download Message File and
- Broadcast Download
- Download selected messages - Download Message
- Download and display selected messages - Trigger Message and
- Broadcast Trigger Message
- Message broadcast – Broadcast Download Message

A pop-up window appears when any of these options, except for broadcast, are selected. This window allows the selection of which displays to download to.

NOTE Assign the address and communication settings for each display before any messages are downloaded. These options are found under Message File and Message.

Download Message File and Broadcast Download

Broadcast Download downloads the entire file to all displays on the network. Download Message File downloads the entire file to the display specified. Download Message File and Broadcast Download overwrite the old messages starting at message number one to where the new messages end. If the old message file has more messages than the new message file, the old messages remain above the new message

Assign the address and communication settings for each display before any messages are downloaded. These options are found under Message File and Message.

The files at the end remain. For example, the old message file had messages 1 through 10 and a background message. The new message file has messages 1 through 2 and a background message. After the new message file is downloaded, the new message file contains new messages 1 through 2, a new background message, and old messages 3 through 10. If the new message file does not contain a background message, the background message is blank. If just the new message file is to be retained in memory, a clear memory operation should be performed before downloading a new message file. This erases the entire memory of the display. A message trigger or addition to the queue is required in order to view the downloaded messages. See InView Protocol, Chapter 4, for information on how to trigger a message or add it to the queue.

Download Message

Download Message downloads only those messages selected from the message list. To select messages, highlight them from the Message File Details box in the InView messaging software (project) window. Once they have been downloaded, the display behaves the same as if the entire message file were downloaded. A message trigger or addition to the queue is required in order to view the downloaded messages.

See InView Protocol, Chapter 4, for information on how to trigger a message or add it to the queue.

Trigger Message and Broadcast Trigger Message

Trigger Message and Broadcast Trigger Message allows up to 64 messages selected from the message list to be displayed after download. This is the message queue. Each message is displayed for the amount of the pause time that is set when the message is created.

NOTE Only messages of the highest priority are displayed. When using this option, ensure that all the messages have the same priority.

If new messages are downloaded using this option, a clear message queue command is done before the messages are downloaded. The old messages are erased and replaced with the new ones. Broadcast Trigger Message downloads the selected messages to all displays on the network

Clear Memory/Message Queue

These options are found under Tools then Clear Display Memory and Clear Display Message Queue. The clear memory option erases the entire memory of the display. Memory Cleared is displayed and then the display goes through a reset cycle. The clear message queue option just erases the queue, not the display memory. If there is a background message, it is displayed after a clear message queue command has been issued.

Chapter 3 Serial ASCII Communications

Use a PLC5 Out Channel Zero

To use a PLC5 out Channel Zero on a display:

1. Create a new application.
2. Set up the channel configuration.

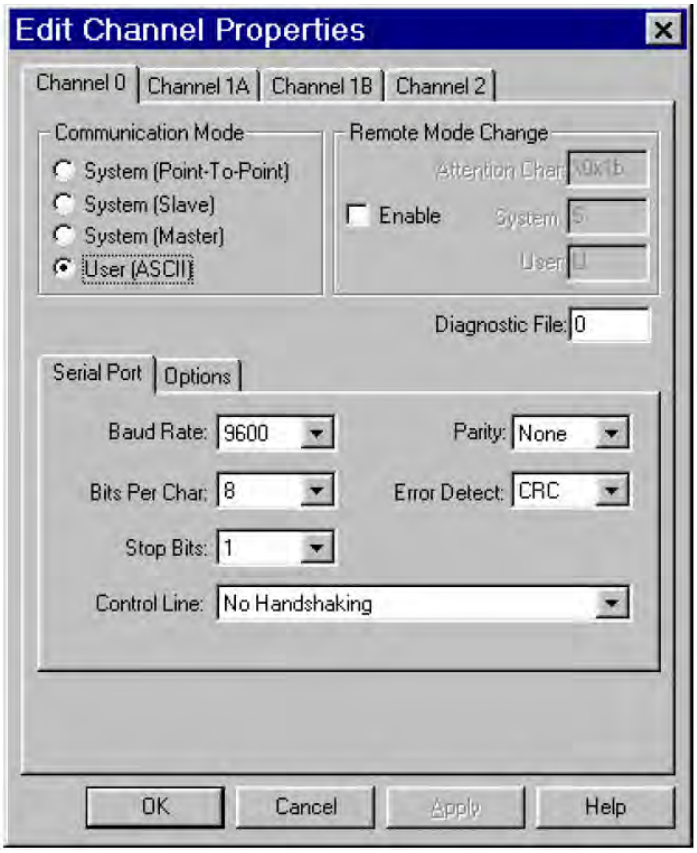

3. Create a file type String (ST). You insert ASCII/Hex commands in this file.
4. Set up the ladder logic.

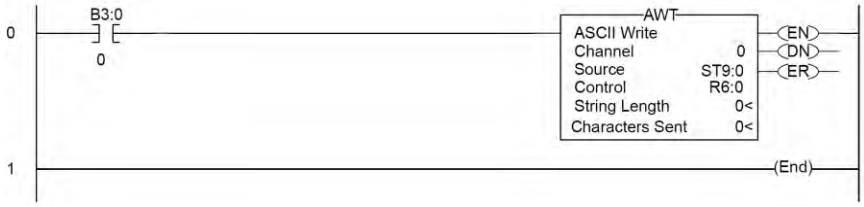

Use an SLC 5/03, 5/04, or 5/05 Out Channel Zero

The SLC processor is set up very similar to the PLC processor. The SLC processor uses the same ladder logic as the PLC processor shown below.

To use an SLC processor out Channel Zero on a display:

1. Create a new application and then set up the channel configuration as shown:

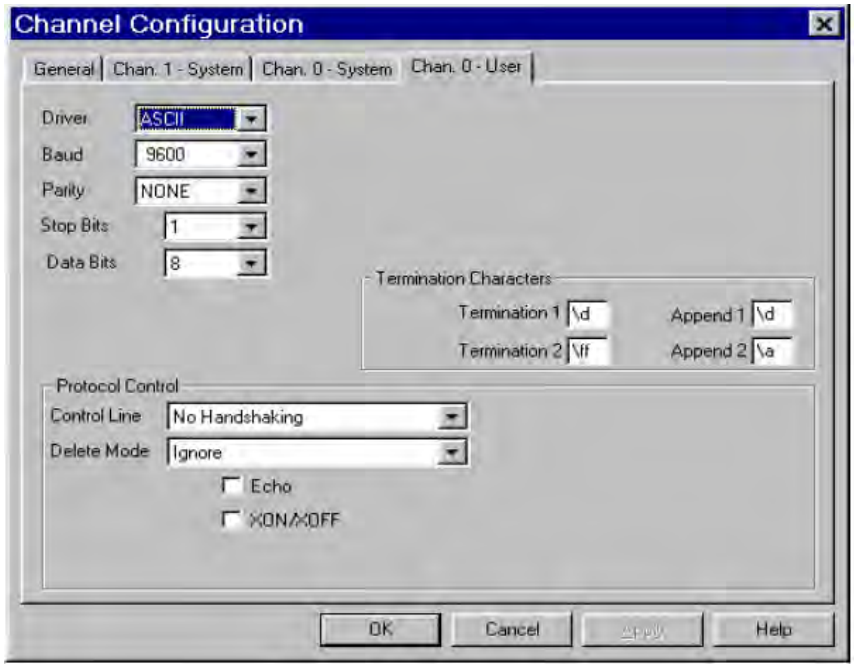

2. Under the General tab, make sure the mode for channel 0 is set to USER.

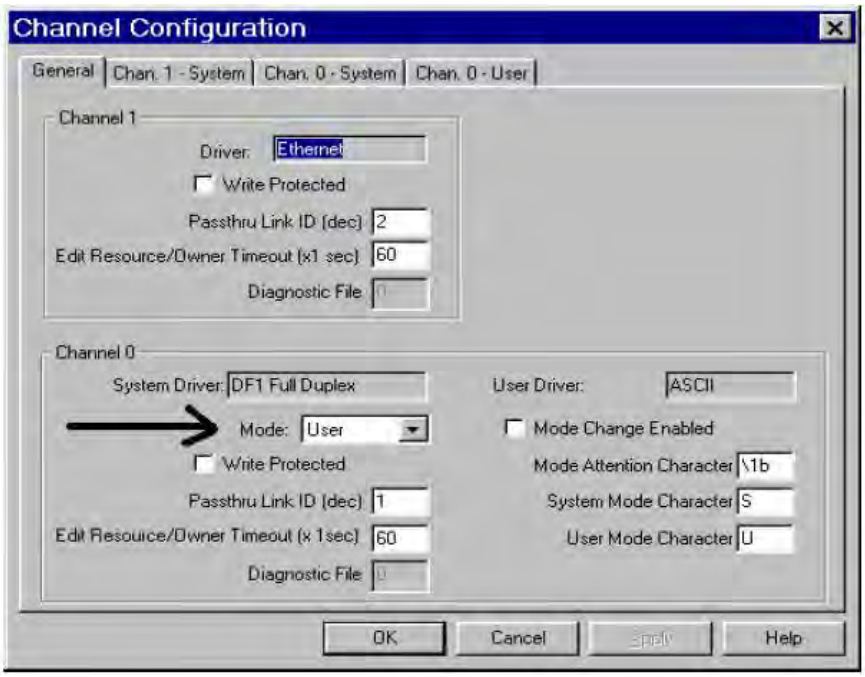

Use a MicroLogix Out Channel Zero or One

The MicroLogix processor is set-up similar to the SLC processor. They both use RSLogix 500 software to communicate; however the channel configuration and ladder is slightly different.

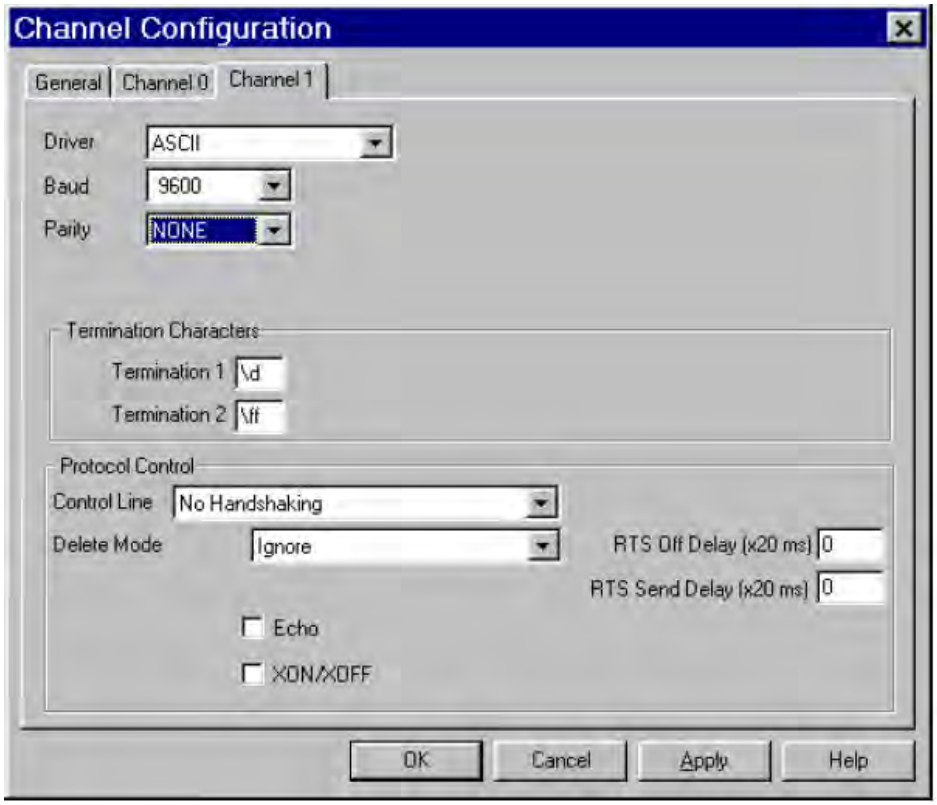

With the MicroLogix processor, you may download with either channel 0 or 1 and you may also write ASCII using channel 0 or 1.

In this example the ASCII is done using channel 1.

Use ControlLogix Processor Out Channel Zero

To use a ControlLogix processor out Channel Zero on a display:

1. Open a new application.
2. Set up the controller properties by right-clicking on the controller name and selecting properties and then the serial port tab as follows:

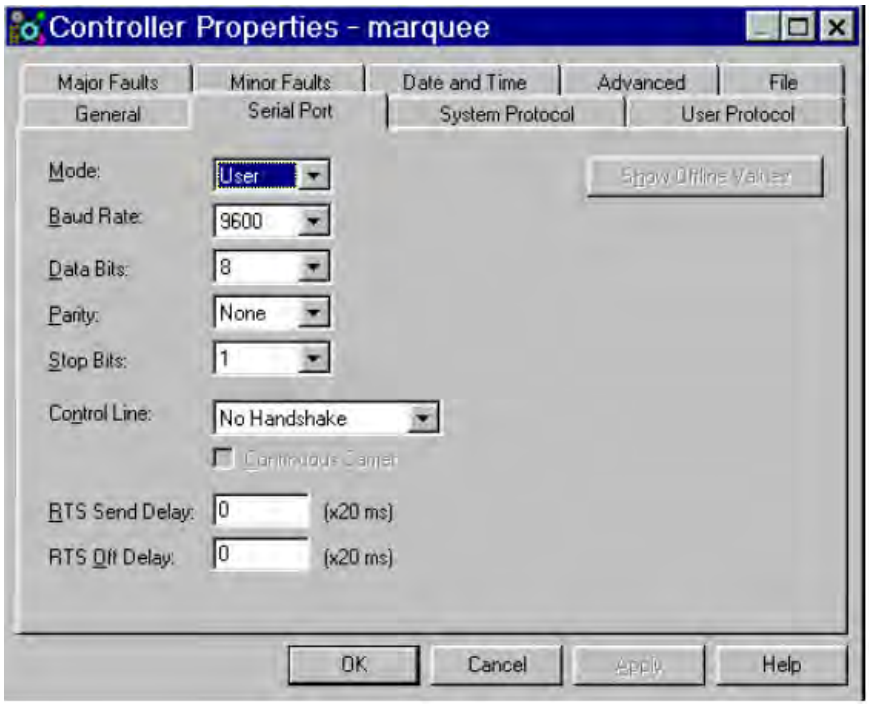

3. Set up ladder logic and controller tags:

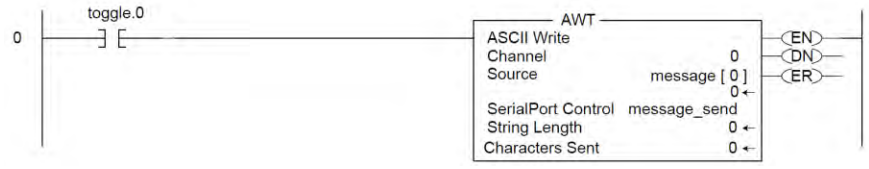

4. The tag setup for this example is:
   - Toggle is of type DINT.
   - Message_send is of type SERIAL_PORT_CONTROL
   - Message is of type SINT[50]

Use the CompactLogix Processor Out Channel Zero or One

To use a CompactLogix processor out Channel Zero on a display:

1. Open a new application.
2. Set up the controller properties by right-clicking on the controller name and selecting properties and then the serial port tab.
   The ladder is the same as a ControlLogix except that the user can select either channel zero or one:

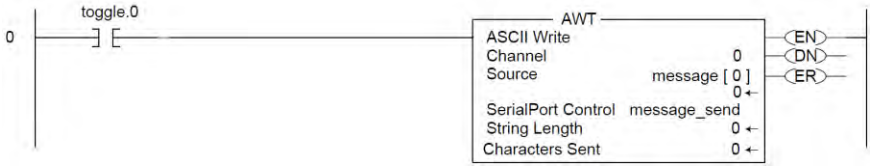

3. The tag setup for this example is:
   - Toggle is of type DINT.
   - Message_send is of type SERIAL_PORT_CONTROL
   - Message is of type SINT[50]

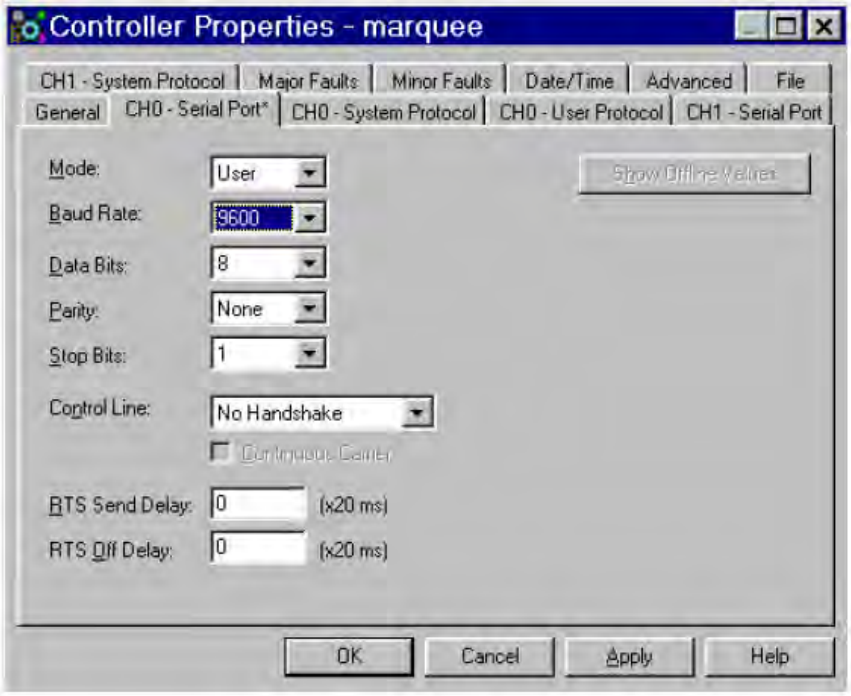

NOTE This same setup would need to be done for CH1-System Protocol if using you are using channel one instead of channel zero.

Use FlexLogix Processor Out Channel Zero

To use a FlexLogix Processor out Channel Zero on a display:

1. Open a new application.
2. Set up the controller properties by right-clicking on the controller name and selecting properties and then the serial port tab:

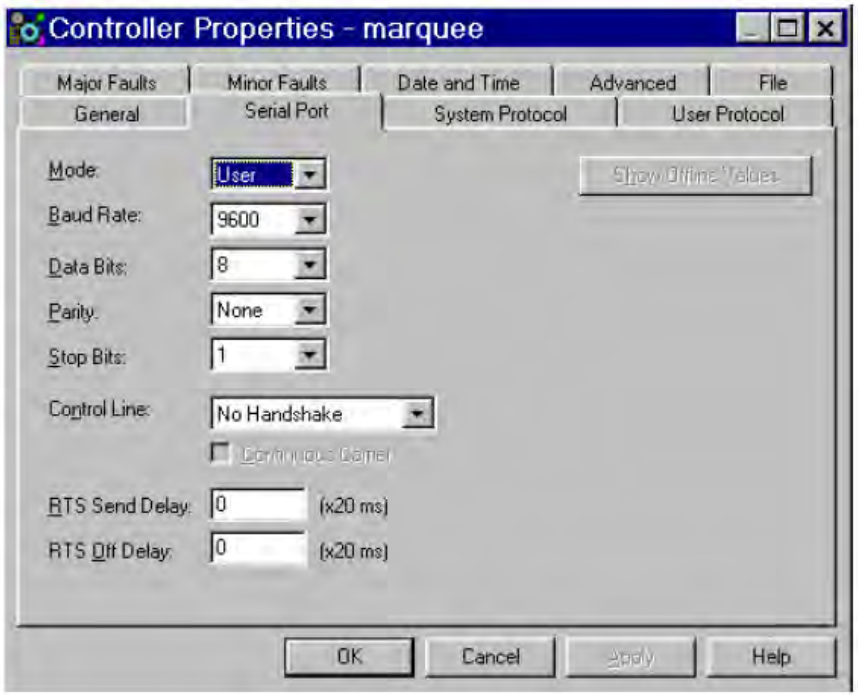

3. Set up ladder logic and controller tags:

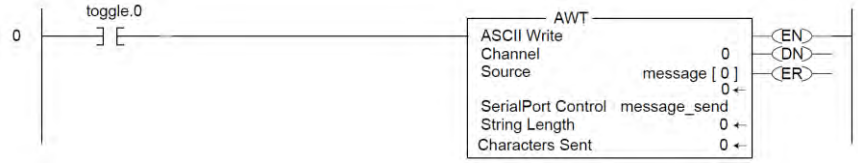

4. The tag setup for this example is:
   - Toggle is of type DINT.
   - Message_send is of type SERIAL_PORT_CONTROL
   - Message is of type SINT[50]

Chapter 4
InView Protocol

Introduction

The purpose of this chapter is to show the protocol that is required to trigger messages and update variables on InView displays with the InView protocol.

In general, messages are downloaded through the software and stored within the display memory. Up to 4000 messages and 100 (0 to 99) variables can be created with the InView software.

Messages are displayed using the Control-T function or Modbus ASCII.

One of three different methods can be used:

- Priority messaging.
- Add a message.
- Remove a displayed message.

Variables are updated using the Control-V function or Modbus ASCII.

Trigger Message and Update Variables

The two functions that are used to trigger messages and update variables are the Control-T (CRTL-T) and the Control-V (CTRL-V). The CTRL-T function allows for two different ways of displaying messages; priority messaging and add/remove messages. The CTRL-V function is used to update variables on all displays or a specific display.

Priority messaging displays the message number that was just transmitted to the display. Using this function has precedence over any priority levels that are used with add/remove messages. Add/remove messages allows for up to 64 concurrently running messages to be shown on the display. Messages are cleared one at a time or all at once. These messages have priority levels assigned to them that are used to determine how they are displayed.

The CTRL-T Function Frame

The CTRL-T function is used to trigger messages. This function requires an ASCII decimal value to be used to trigger the desired message number. The CTRL-T function has the ability for priority messaging, add a message, or remove a message. Control-T Frame Format shows the format for the Control-T function and Control-T Frame Description shows the acceptable values.

Control-T Frame Format

			Optional[1]				
Name	[CTRL][T]	MSG#	Backslash	Function	Backslash	Display Address	<CR>

[1] If not used, the message is shown as a Priority Message on all displays.

Control-T Frame Description

Data	Acceptable Values		Description
[CTRL][T[	ASCII	Hex	
MSG #	1 ... 4000 (Decimal)	\31 to \34\30\30\30	Message number
	4095 (Decimal)	\34\30\39\35	Background message number
	-1 (Decimal)	\2D\31	
Backslash	\	\5C	Backslash
Function	1 (Decimal) = Priority message 2 (Decimal) = dd message 3 (Decimal) = Remove message	\31 \32 \33	Message Function
Backslash	\	\5C	Backslash
Display Address	1 … 255	\31 to \32\35\35	Display address where 255 is a broadcast address.
<CR> or CTRL][M]	^M	\0D	Carriage Return

Use a priority message to clear all concurrently running messages and display the message number just sent. This supersedes any message added to the queue regardless of priority levels assigned to them. Add/remove messages allows for the ability of up to 64 concurrently running messages to be displayed. Messages are added to the queue, and are displayed for the length of time based on the message pause setting (1 to 5 seconds).

Messages have three different priority levels assigned to them; low, medium, and high. Messages with the highest priority level in the queue are displayed until they are cleared. When all messages are removed or cleared, the background message (message # 4095) is displayed.

NOTE If no background message is programmed, the default message NO BACKGROUND MESSAGE appears.

The CTRL-V Function Frame - Numeric Variables

The CTRL-V function is used to update variables that are embedded within messages. The value of the variable number determines which variable register is updated in the display. If no display address is used, it updates all displays with the variable data. The Control-V Frame Format shows the format for updating variables, and the Control-V Frame Description shows the acceptable values for the CTRL-V function.

Control-V Frame Format

			Optional[1]				
Name	[CTRL][V]	Variable Data	Backslash	Variable #	Backslash	Display Address	<CR>

The following table indicates the values to use in the Control-V format,

Control-V Frame Description

Data	Acceptable Values		Description
[CTRL][V[	ASCII	Hex	
Variable Data	-32768 to 32767 (ASCII decimal)[2]	\2D\33\32\37\36\38 to \33\32\37\36\37	Data
Backslash	\	\5C	Backslash
Function	1 (Decimal) = Priority message 2 (Decimal) = dd message 3 (Decimal) = Remove message	\31 \32 \33	Message Function
Backslash	\	\5C	Backslash
Display Address	1 … 255	\31 to \32\35\35	Display address where 255 is a broadcast address.
<CR> or CTRL][M]	^M	\0D	Carriage Return

NOTE To send floating point numbers, you need to use 2 variables; one for the integer portion, and one for the decimal portion. i.e {var1;}.{var2;}.

The CTRL-V Function Frame - Alphanumeric Variables

The Ctrl-V Function is used to update variables that are embedded within messages. The value of the variable number determines which register to update in the message display. If no variable number is used, only variable 0 is updated. In addition, you can flash or change the color of the variable data.

[1] If the Variable # and Display address are not used; only variable 0 on all displays will be updated. If the Variable # is used and not the Display address, that variable number will be updated on all displays.
[2] See previous footnote

Control-V Frame Format – Alphanumeric

			Optional[1]				
Name	[CTRL][V]	'Variable Data'	Backslash	Variable #	Backslash	Display Address	<CR>

The following table indicates the values to use in the Control-V format,

Control-V Frame Description - Alphanumeric

Data	Acceptable Values		Description
[CTRL][V[	ASCII	Hex	
Quote	"	\22	Quote Character
Variable Data	Any ASCII Character (except " character)	\20 to \126 (except \22)	Data
Quote	"	\22	Quote Character
Backslash	\	\5C	Backslash
Variable #	0 … 99 (ASCII decimal)	\30 to \39\39	Variable ID number
Backslash	\	\5C	Backslash
Display Address	1 … 255	\31 to \32\35\35	Display address where 255 is a broadcast address.
<CR> or CTRL][M]	^M	\0D	Carriage Return

Flash Variable Data

You can enable/disable flashing for the variable data by using [Ctrl] G1 to turn the variable on and [Ctrl] G0 to turn the variable off. For example, to flash the word text in the variable data how to flash text, you must enter the variable data as:

how to flash [Ctrl]G[1]text[Ctrl]G[0]

Change Color of Variable Data

To change the color of variable data, you must add the following characters to the variable data for the specific color:

\1C1 for red

\1C2 for green

\1C3 for yellow

For example, the variable data how to show the color is set to display as red. If you want to modify the variable data so the words to change the display as green

[1] If the Variable # and Display address are not used; only variable 0 on all displays will be updated. If the Variable # is used and not the Display address, that variable number will be updated on all displays.

with the remaining data red, you must set the variable data up as follows:
how \1C2 to change the \1C1 color

Examples of the Control-T Function

There are two basic ways in which messages are displayed: priority messaging or add/remove messages. When using either of these methods, the messages are shown on one or all displays.

Trigger a Message on all Displays using Priority Messaging

A message can be shown on all displays one of three different ways. These examples show the Control-T function being used to show message number 45 on all displays.

Trigger a Message on All Displays

Name	[CTRL][T]	MSG #	Return
ASCII	^T	45	^M
Hex	\14	\34\35	\0D

Name	[CTRL][T]	MSG #	Backslash	Display Address	RETURN
ASCII	^T	45	\	255	^M
Hex	\14	\34\35	\5C	\32\35\35	\0D

OR

Name	[CTRL][T]	MSG #	Backslash	Function	Backslash	Display Address	Return
ASCII	^T	45	\	1	\	255	^M
Hex	\14	\34\35	\5C	\31	\5C	\32\32\35	\0D

NOTE Allen-Bradley PLC processors require two backslashes (\\) to be used as a delimiter. Other PLC manufactures may only require one backslash (\).

Trigger a Message on a Specific Display using Priority Messaging

The following are examples of triggering message 39 on display address 031.

Trigger a Message on a Specific Display

Name	[CTRL][T]	MSG #	Backslash	Display Address	Return
ASCII	^T	39	\	31	^M
Hex	\14	\33\39	\5C	\33\31	\0D

OR

Name	[CTRL][T]	MSG #	Backslash	Function	Backslash	Display Address	Return
ASCII	^T	39	\	1	\	31	^M
Hex	\14	\33\39	\5C	\31	\5C	\33\31	\0D

Add a Message on all Displays

This is an example of how to add message 2011 to all displays.

Add a Message on all Displays

Name	[CTRL][T]	MSG #	Backslash	Function	Backslash	Display Address	Return
ASCII	^T	2011	\	2	\	255	^M
Hex	\14	\32\30\31\31 \	\5C	\32	\5C	\32\35\35	\0D

Adding a Message on a Specific Display

The following adds message 348 to display address 055.

Adding a Message on a Specific Display

Name	[CTRL][T]	MSG #	Backslash	Function	Backslash	Display Address	Return
ASCII	^T	348	\	2	\	55	^M
Hex	\14	\33\34\38	\5C	\32	\5C	\35\35	\0D

Remove all Messages on all Displays

The following removes all messages on all displays and automatically displays the background message (4095) without adding the background message number to the message queue. The following removes all messages on all displays and add the background message (4095) to the message queue using priority messaging.

Remove a Message on all Displays

Name	[CTRL][T]	MSG #	Backslash	Function	Backslash	Display Address	Return
ASCII	^T	-1	\	3	\	255	^M
Hex	\14	\2D\31	\5C	\33	\5C	\32\35\35	\0D

The following removes all messages on all displays and add the background message (4095) to the message queue using priority messaging.

Remove a Message on All Displays

Name	[CTRL][T]	MSG #	Return
ASCII	^T	4095	^M
Hex	\14	\34\30\39\35	\0D

OR

Name	[CTRL][T]	MSG #	Backslash	Display Address	Return
ASCII	^T	4095	\	255	^M
Hex	\14	\34\30\39\35	\5C	\32\35\35	\0D

OR

Name	[CTRL][T]	MSG #	Backslash	Function	Backslash	Display Address	Return
ASCII	^T	4095	\	1	\	255	^M
Hex	\14	\34\30\39\35	\5C	\31	\5C	\32\35\35	\0D

Remove all Messages on a Specific Display

The following removes all currently running messages on a display address 024 and automatically displays the background message (4095) without adding the background message number to the message queue.

Name	[CTRL][T]	MSG #	Backslash	Function	Backslash	Display Address	Return
ASCII	^T	-1	\	3	\	24	^M
Hex	\14	\2D\31	\5C	\33	\5C	\32\34	\0D

The following removes all messages on display address 024 and adds the background message (4095) to the message queue using priority messaging.

Remove all Messages on a Specific Display

Name	[CTRL][T]	MSG #	Backslash	Display Address	Return
ASCII	^T	4095	\	24	^M
Hex	\14	\34\30\39\35	\5C	\32\34	\0D

OR

Name	[CTRL][T]	MSG #	Backslash	Function	Backslash	Display Address	Return
ASCII	^T	4095	\	1	\	24	^M
Hex	\14	\34\30\39\35	\5C	\31	\5C	\32\34	\0D

Remove a Message on a Specific Display

The following removes message 367 on a display address 4.

Remove a Message on a Specific Display

Name	[CTRL][T]	MSG #	Backslash	Function	Backslash	Display Address	Return
ASCII	^T	367	\	3	\	4	^M
Hex	\14	\33\36\37	\5C	\33	\5C	\34	\0D

Examples of the Control-V Function

This function allows for the updating of variables that are embedded in messages. If no display address is used, it updates all displays with the variable data. The following example updates variable 0 in all displays.

Update a Variable on all Displays

Update variable 0 with the value of 2395 on all displays

Update a Variable on all Displays

Name	[CTRL][V]	Variable Data	Return
ASCII	^V	2395	^M
Hex	\16	\32\33\39\35	\0D

OR

Name	[CTRL][V]	Variable Data	Backslash	Variable #	Return
ASCII	^V	2395	\	0	^M
Hex	\16	\32\33\39\35	\5C	\30	\0D

OR

Name	[CTRL][V]	Variable Data	Backslash	Variable #	Backslash	Display Address	Return
ASCII	^V	2395	\	0	\	255	^M
Hex	\16	\32\33\39\35	\5C	\30	\5C	\32\35\35	\0D

Update Variable on a Specific Display

Update variable 5 with the value of 87 on display address 006.

Update a Variable on a Specific Display

Name	[CTRL][V]	Variable Data	Backslash	Variable #	Backslash	Display Address	Return
ASCII	^V	87	\	5	\	6	^M
Hex	\16	\38\37	\5C	\35	\5C	\36	\0D

Modbus ASCII Protocol to Download and Preview Messages

Modbus ASCII is an industrial data communications protocol that has been implemented in Allen-Bradley's InView Protocol. It is a master and slave protocol providing for one master and up to 247 slaves. Each slave is assigned a unique address, because only the master can initiate a transaction. The protocol controls the query and response that takes place between master and slave devices as in Figure.

The Modbus ASCII protocol is incorporated into the InView Industrial Protocol that allows displays to connect to a Modbus ASCII communications network. These displays receive applicable Modbus ASCII protocol and limited InView Sign Communication protocol (used during the download and preview of messages). Messages are pre-loaded into the displays, and then triggered by writing Modbus ASCII instructions to specific registers in the display.

Master and Slave Query/Response Cycle

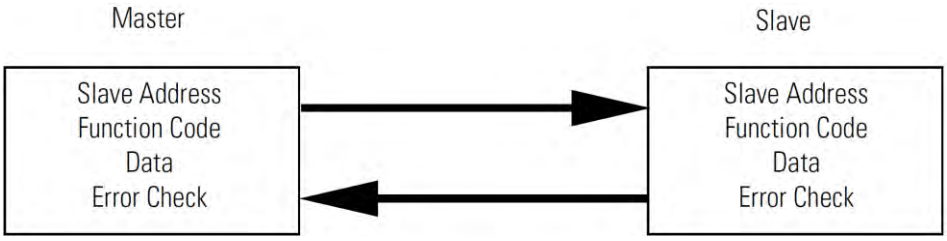

Below are several terms used throughout the Modbus ASCII section.

- ASCII–American Standard Code for Information Interchange.
- LRC–Longitudinal Redundancy Check used for error checking.
- RTU–Remote Terminal Unit.
- Query–Sending information to a node address where a response is expected.
- Response–A response is given to a Query.
- Transmission–Sending information to all node addresses where no response is expected.

How InView Sign Communication Protocol is used with Modbus ASCII Protocol

There are two different modes of transmission used with Modbus protocol, Modbus ASCII and Modbus RTU. In this case, Modbus ASCII is used. Modbus ASCII protocol is used to accomplish such functions as Priority Messaging, Add a Message, Remove a Message, Update Variables, and reading register in the Message Queue or Variable. The basic framing format that is used in the Modbus ASCII is shown in the section Add a Message on all Displays.

ASCII Message Frame Format

Beg of Frame	Address	Function	Data	Error Check	EOF	Ready to receive response
:	2-char 16 bits	2-char 16 bits	N × 4-char N × 16 Bits	2-char	CR	LF

Downloading messages to the displays using Modbus ASCII protocol requires a special function in order to pass Allen-Bradley's InView industrial protocol to the displays. To accomplish this, a Modbus 01 function or frame is specifically used to encapsulate the InView protocol. The downloading of messages that are created using automation software automatically encapsulates the protocol in the Modbus ASCII string.

To encapsulate the InView protocol a Modbus ASCII header and trailer are used. The automation software has message length range from 50 to 450 Bytes. This is only the maximum length of the InView protocol that is encapsulated within the Modbus ASCII protocol. When downloading messages on a Modbus network, the maximum length of the Modbus ASCII and the InView protocol is 500 bytes. The following table shows the format of the 01 Frame used for the downloading of messages to the displays.

Function 01 Used for Downloading of Messages

Beg of Frame	Address	Function	Starting Register Lo	Starting Register Hi	Data	Error Check	EOF	Ready to receive response
:	2-char 16 bits	2-char 16 bits	2-char 16 bits	2-char 16 bits	N × 4-char N × 16 Bits	2-char 16 bits	CR	LF

Messages are downloaded to all displays on the Modbus ASCII display network. A broadcast address is used that requires no response from the displays. Modbus ASCII protocol uses address 00h for broadcasting information from one device to the next. This is generally reserved for PLC to PLC communications. For this reason, address 255 (0×ff) is used.

Mode of Transmission

Mode of transmission is the format in which messages are transmitted over the network. Characteristics of the Modbus ASCII system are:

- Coding Systems - hexadecimal (uses ASCII printable characters: 0-9, A-F).

Modbus allows the format for data transmission.

- Communication rate: user selectable
- Format: Number of bits per character - 1 start bit, 7 data, 1 (optional) parity bit, 1 or 2 stop bits.

For the products, the data communication rate and format is 9600 baud (maximum), 1 start bit, 7 data bits, even parity, 2 stop bits.

InView Display Memory Map

Information transmitted to the displays writes or reads information into holding

registers. The holding registers used in the products are 40001 to 40167. Holding registers 40001 to 40103 can be written to. Registers 40001 to 40100, and 40103 to 40167 can be read from.

The product has three basic areas for registers, 100 registers for variables, 3 registers for message control, and 64 registers for the message queue. When referencing a holding register, Modbus ASCII requires that 40001 be subtracted from the holding register address.

For example, when using priority messaging, messages are sent to holding register 40103. The register number that is transmitted would be (40103-40001=102) or 102 (0×66) would be transmitted at 100 (64h). The following shows the memory map for the displays.

Memory Map

Modbus Holding Registers	Registers	Description
4001	001	Variables Registers Variables 001-100 (00-99 with automation software
….		
40100	100	
40101	101	Add a Message/Downloading of messages
400102	102	Remove a Message
400103	103	Message Queue/Priority Messaging
…		
400167	167	

Methods of Transmission

There are eight different methods of transmission of data to and from the display. Each one of these uses 1 of 4 different Modbus function codes.

The table, Modbus Function Codes used in InView Products, explains each of the four Modbus ASCII function codes used. The table, Methods of Transportation, shows the eight methods of using these codes with the product.

Modbus Function Codes Used in InView Products

Function Code	Function Code Hex	Modbus Meaning	Action
01	01	Read Coil Status	Used to signal the downloading of messages to the display.
03	03	Read Output Registers Query	Used to read registers in a display.

Function Code	Function Code Hex	Modbus Meaning	Action
06	06	Preset Single Register	Used to preset a single register in a display (Priority Messaging, Update Variables, and Add/Remove a Message).
16	10	Preset Multiple Registers	Used to preset multiple registers in a display (Add/Remove a Message or Update Variables).

Methods of Transportation

Method	Description	Modbus Function Code	Display Action
Add/Remove a Message using a Broadcast transmission	Triggers a message(s) on all displays using address 255	10	Writes information into registers 101 and 102. The display will give no response to transmission.
Add/Remove a Message using a Guaranteed transmission	Triggers a message(s) on a specific display address.	10	Writes information into register 101 and 102. The display will respond to the query
Priority Messaging using a Broadcast transmission	Triggers a message on all displays using address 255	06	Write information into register 103. The display will give no response to transmission.
Priority Messaging using a Guaranteed transmission	Triggers a message(s) on a specific display address	06	Write information into register 103. The display will respond to the query.
Read register data	Request information from a group of registers in the display	03	Transmit back the information in the registers queried.
Variables Broadcast	Update variables in all displays using address 255	06 or 10	Update variable registers. The display will give no response to the transmission.
Variable Guaranteed	Update variable in a specific display address	06 or 10	Update variable registers. The display will respond to the query.
Message Download	Download messages to all display(s) using a specific function code using address 255	01	Signals the displays that the following data will be InView protocol. The display will give no response to the transmission.

Message Format

Messages are transmitted at 9600 baud, and starts with a beginning of frame : and ends with a carriage return (CR) line feed (LF) to indicate the end of frame. The line feed character also serves as a synchronizing character to indicate that the transmitting station is ready to receive an immediate reply.

The Modbus ASCII message frame format consists of an address field, a function field, a data field, an LRC or error check field, an end of frame field (EOF), and a ready to receive response field (LF). The EOF is a carriage return (0×0d), and the

LF is a line feed (0×0a).

ASCII Message Frame Format

Beg of Frame	Address	Function	Data	Error Check (LRC)	EOF	LF
:	2-char 16-bits	2-char 16-bits	N × 4-char N × 16-bits	2-char 16-bits	0×0d	0×0a

Beginning of Frame Field

Each transmission will start with a colon (:) and is used to signal the receiving device that message packet follows.

Address Field

Each slave must be assigned a unique address. When a master sends to a specific slave address (query), the slave sends a response (response) message back to the master. When a master sends a message to a specific display address (001 to 247), the slave will give a response if the message data is correct. All other slaves will ignore the data transmission.

When a master sends a broadcast message addressed of 255 (0×ff), then all slaves interpret this as an instruction to read and take action on the message. No response message is required.

Modbus allows 001 through 247 for unique addresses that are used on a network. The products allow for address 001 through 255, with 255 being the broadcast address. Since some networks may not support address 248 through 255, then the broadcast address may not be used, and message queries are always guaranteed. If Modbus message transmissions are being generated from a serial port, then addressing from 001 through 255 are valid.

NOTE When a query/response is used for sending messages to the display, the display responds back to the host in less than 10 ms after receiving the LineFeed field (0×0a).

Function Field

The function field tells the address slave what function to perform. There are only four functions that are applicable to the display application.

Data Field

The data field contains information on the specific action that the slave must perform.

Error Check Field

The error checking is the LRC of the message and allows for the master and slave to detect message errors. A response message is only sent, if the original message was received correctly. The following shows a simulated query and response.

Simulated Query and Response

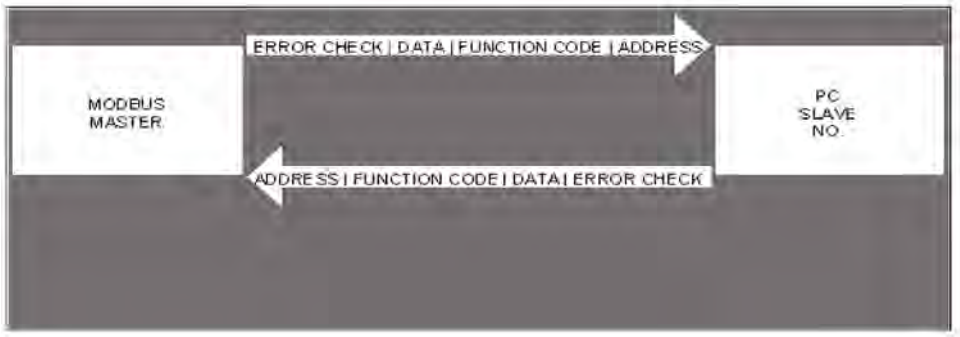

End Of File Field

This field is used to signify the end of file for the transmission. It uses a Carriage Return (0×0d).

Line Feed Field

This is the ready to respond field file (LF) and uses a line feed (0×0a).

Longitudinal Redundancy Check (LRC) Error Detection and Calculation

Some sort of error detection is needed, because communication errors can occur in an industrial environment due to machinery noise and electromagnetic interference. The method for error detection used with Modbus ASCII is Longitudinal Redundancy Check (LRC). The LRC is an 8-bit binary number represented and transmitted as two ASCII Hexadecimal characters. The LRC is produced by adding the message characters (ignoring the carry bit) and taking the two's compliment of the result. The error check byte is done from the address up to the data field.

The following is an example of how to calculate the LRC in a Modbus ASCII transmission.

Example of LRC Calculations

Beg of Frame	ADDR	FUNC	H.O ADDR	L.O ADDR	DATA	LRC Error	EOF	Ready to rec. response
	05	06	00	1F	0265	70	CR	LF

Modbus ASCII Transmission

Message	Transmitted Bytes	Binary
Address	05	0000 0101
Function	06	0000 0110
Start Add H.O.	00	0000 0000
Start Add L.O.	1F	0001 1111
Data H.O.	02	0000 0010
Data L.O.	64	0110 0100

Message	Transmitted Bytes	Binary
Sum	90	1001 0000
1's Complement		0110 1111
+1		+0000 0001
2's Complement		0111 0000
Transmitted as	70	

Examples of Modbus ASCII Functions

The following sections show examples of Modbus ASCII protocol Query/Response transmissions to/from a display for each command instruction listed above. Modbus ASCII will write/read to the holding registers in the display. These registers are in the 40000 range. When writing to register 40101, 40001 is dropped from the address leaving 100 (0×64). The following example shows the transmission of data to holding register 40102 in all displays. The display adds 40001 to the starting address upon receiving the transmission before updating the appropriate holding register.

Example of a Target Holding Register

Beg of Frame	ADDR	FUNC	H.O ADDR	L.O ADDR	DATA	LRC Error	EOF	Ready to rec. response
:	FF	06	00	65	FFFF	98	CR	LF

Target holding register 40102 – 40001 = 101 (0×65)

Format for the following sections is the use of a query/response or a transmission. Each section shows the complete transmission and response (if applicable). In some examples, there are multiple steps that are needed to complete the function requested. Within these steps, there are pause or delay times that must be used in-between each step.

The data that is sent is ASCII information and the CR and LF represents 0×0d and 0×0a respectively. The beginning of frame (:) represents (03a).

Heartbeat Function

The heartbeat function, when enabled, allows the display to determine if it is no longer on the network or if the host device is not functioning properly (not sending data or a heartbeat). Should the display not see any serial activity (valid or invalid) within 3 seconds, an error message No Network Activity is displayed. The heartbeat is either enabled or disabled via protocol or software.

Factory Default: DISABLED.

Enable the Heartbeat Function

The displays are shipped with the heartbeat disabled. Should the heartbeat function be required, the following string of information enables the display to look for a heartbeat or serial activity.

Transmission is as follows:

Transmission for Enabling the Heartbeat Function

Beg of Frame	ADDR	FUNC	H.O ADDR	L.O ADDR	DATA	EOF	Ready to rec. response
:	FF	01	00	64	^AZFF^BE01^D9C	CR	LF

NOTE See InView Display Communication Protocol Functions and Descriptions on for further explanation of the InView sign protocol being used.

Response: NONE

Disable the Heartbeat Function

Transmission is as follows:

Transmission for Disabling the Heartbeat Function

Beg of Frame	ADDR	FUNC	H.O ADDR	L.O ADDR	DATA	EOF	Ready to rec. response
:	FF	01	00	64	^AZFF^BE00^D9D	CR	LF

NOTE See InView Display Communication Protocol Functions and Descriptions on for further explanation of the InView sign protocol being used.

Response: NONE

Heartbeat Transmission

The following is the transmission for the heartbeat that is required for the display once the heartbeat function is enabled/

Transmission for the Heartbeat

Beg of Frame	Data	EOF	Ready to rec. response
:	00	CR	LF

NOTE Recommended interval to be transmitted: once every 500 ms.

Variable data or message data that is being updated in the displays acts as a heartbeat for the No Network Activity error message.

Response: NONE

Clear the Display Memory

This command is used to clear all of the memory (messages) in the displays, resize the memory partitions to 100 bytes (2,000 messages), and load each memory slot with a default message number (for example, Message #0002)

NOTE The Clearing Memory string may be required prior to the downloading of messages.

Transmission is as follows:

Transmission for Clearing Display Memory

Beg of Frame	ADDR	FUNC	H.O ADDR	L.O ADDR	DATA	EOF	Ready to rec. response
:	FF	01	00	64	^AZ00^BE$^D	CR	LF

NOTE See InView Display Communication Protocol Functions and Descriptions on for further explanation of the InView sign protocol being used.

Response: NONE

Clear the Message Queue using Modbus ASCII in Broadcast Mode (Recommended)

The display uses a message queue for all currently running messages on the display. This command is used to remove all currently running messages being displayed on all displays. This is also required when switching between priority messages and add/remove messages modes of operation.

Transmission is as follows:

Transmission for Clearing the Message Queue with 06 Frame Broadcast

Beg of Frame	ADDR	FUNC	H.O ADDR	L.O ADDR	DATA	LRC Error	EOF	Ready to rec. response
:	FF	06	00	65	FFFF	98	CR	LF

Response: NONE

Clear the Message Queue using Modbus ASCII in Guaranteed Mode

The following transmission is used to remove all currently running messages on a specific display address. For example, clearing all messages being displayed for display address 001:

Transmission is as follows:

Query for Clearing the Message Queue with 06 Frame Guaranteed

Beg of Frame	ADDR	FUNC	H.O ADDR	L.O ADDR	DATA	LRC Error	EOF	Ready to rec. response
:	01	06	00	65	FFFF	96	CR	LF

Response: The normal response to a function 06 is to echo (or re-transmit) the query after the holding register is updated.

Response from Clear Queue with a 06 Frame Guaranteed

ADDR	Beg of Frame	FUNC	H.O ADDR	L.O ADDR	DATA	LRC Error	EOF	Ready to rec. response
:	01	06	00	65	FFFF	96	CR	LF

Set Time in Broadcast Mode with AM/PM Format

The Set Time in Broadcast Mode with 24 Hour Format command is used to set the time and the format for the time in all displays. It is used primarily with the automation software to synchronize the time in the displays with the computer. This requires two separate transmissions. First, set the time and format for the time. Second, clear the queue.

The following is an example of setting the time to 1034 and the format for the time to be AM/PM.

1. Set the time and time format.

   Transmission is as follows:

Transmission for Setting Time with AM/PM Format

ADDR	Beg of Frame	FUNC	H.O ADDR	L.O ADDR	DATA	EOF	Ready to rec. response
:	FF	01	00	64	^AZ00^BE 1034^C^BE'S^C^D	CR	LF

NOTE See InView Display Communication Protocol Functions and Descriptions on for further explanation of the InView sign protocol being used.

Response: NONE

300 ms pause.

2. Clear the message queue.

The following transmission is used to remove the time that was just loaded into the message queue.

Transmission is as follows:

Transmission for Clearing the Message Queue

Beg of Frame	ADDR	FUNC	H.O ADDR	L.O ADDR	DATA	LRC Error	EOF	Ready to rec. response
:	FF	06	00	65	FFFF	98	CR	LF

Response: NONE

Set Time in Broadcast Mode with 24-Hour Format

This command is used to set the time and the format for the time in all displays. This is primarily done using the automation software to synchronize the time in the displays with the computer. This requires two separate transmissions. First, set the time and format for the time. Second, clear the queue. The following is an example of setting the time to 1035 and the format for the time to be 24 hour (military) format:

1. Set the time and time format.
   Transmission is as follows:

Transmission for Setting Time with AM/PM Format

ADDR	Beg of Frame	FUNC	H.O ADDR	L.O ADDR	DATA	EOF	Ready to rec. response
:	FF	01	00	64	^AZ00^BE 1034^C^BE'S^C^D	CR	LF

NOTE See InView Display Communication Protocol Functions and Descriptions on for further explanation of the InView sign protocol being used.

Response: NONE
300 ms pause.

2. Clear the message queue.

The following transmission is used to remove the time that was just loaded into the message queue.
Transmission is as follows:

Transmission for Clearing the Message Queue

Beg of Frame	ADDR	FUNC	H.O ADDR	L.O ADDR	DATA	LRC Error	EOF	Ready to rec. response
:	FF	06	00	65	FFFF	98	CR	LF

Response: NONE

Set Time in Broadcast Mode with 24 Hour Format

This command is used to set the time and the format for the time in all displays. This is primarily done using the automation software to synchronize the time in the displays with the computer. This requires two separate transmissions. First, set the time and format for the time. Second, clear the queue. The following is an example of setting the time to 1035 and the format for the time to be 24 hour (military) format.

1. Set the time and time format.
   Transmission is as follows:

Transmission for Setting Time with 24 Hour Format

ADDR	Beg of Frame	FUNC	H.O ADDR	L.O ADDR	DATA	EOF	Ready to rec. response
:	FF	01	00	64	^AZ00^BE 1035^C^BE'M^C^D	CR	LF

NOTE See InView Display Communication Protocol Functions and Descriptions on for further explanation of the InView sign protocol being used.

   Response: NONE
   300 ms pause.
2. Clear the message queue.

The following transmission is used to remove the time that was just loaded into the message queue.
Transmission is as follows:

Transmission for Clearing the Message Queue

Beg of Frame	ADDR	FUNC	H.O ADDR	L.O ADDR	DATA	LRC Error	EOF	Ready to rec. response
:	FF	06	00	65	FFFF	98	CR	LF

Response: NONE

Set Day and Date in Broadcast Mode

This command is used to set the date in all displays. This is primarily done using the automation software to synchronize the date in the displays with the computer. This requires three separate transmissions. First, set the date. Second, set the day of week. Third, clear the queue. The following is an example of setting the day and date to Thursday, January 4, 2001.

1. Set the date.
   Transmission is as follows:

Transmission for Setting Date

Beg of Frame	ADDR	FUNC	H.O ADDR	L.O ADDR	DATA	EOF	Ready to rec. response
:	FF	01	00	64	^AZ00^BE;01040^D	CR	LF

NOTE See InView Display Communication Protocol Functions and Descriptions on for further explanation of the InView sign protocol being used.

Response: NONE

300 ms pause.

2. Set the day of the week.
   The following transmission is used to remove the time that was just loaded into the message queue.
   Transmission is as follows:

Transmission for Setting Day of Week

Beg of Frame	ADDR	FUNC	H.O ADDR	L.O ADDR	DATA	EOF	Ready to rec. response
:	FF	01	00	64	^AZ00^BE&5^D	CR	LF

NOTE See InView Display Communication Protocol Functions and Descriptions on for further explanation of the InView sign protocol being used.

Response: NONE

300 ms pause.

3. Clear the message queue.

The following transmission is used to remove the date and day of week that was just loaded into the message queue.

Transmission is as follows:

Transmission for Clearing the Message Queue

Beg of Frame	ADDR	FUNC	H.O ADDR	L.O ADDR	DATA	LRC Error	EOF	Ready to rec. response
:	FF	06	00	65	FFFF	98	CR	LF

Response: NONE.

Preview a Message

NOTE A message preview is not recommended for run-time.

Four separate types of transmissions are required for message preview. This is primarily done using the automation software to preview a message. First, clear the Message Queue. Second, download the message to the appropriate memory partition. Third, trigger the message triggered for viewing. Fourth, generate a heartbeat (if enabled) so that there is some serial network activity allowing the message to be previewed. The software automatically performs these steps.

NOTE Message preview causes the loss of data in the memory partition where the message is stored.

This is an example of previewing Message #0001 as a target memory position.

1. Clear the message queue.
   This transmission is used to remove all currently running messages on the display for all displays.
   Transmission is as follows:

Transmission for Clearing the Message Queue

Beg of Frame	ADDR	FUNC	H.O ADDR	L.O ADDR	DATA	LRC Error	EOF	Ready to rec. response
:	FF	06	00	65	FFFF	98	CR	LF

Response: NONE.

300 ms pause.

Download Message #0001 to the appropriate memory position. This stores the message in the message number used within the data field. It overwrites any data already stored in the memory position.

NOTE Messages are downloaded to register 101 (40101), which then moves the InView message to the appropriate memory position.

Transmission is as follows:

Download Message 1 to be Previewed

Beg of Frame	ADDR	FUNC	H.O ADDR	L.O ADDR	DATA	EOF	Ready to rec. response
:	FF	01	00	64	^AZ00^BA2001^[”b^I^^1^\1Hello^D	CR	LF

NOTE See InView Display Communication Protocol Functions and Descriptions on for further explanation of the InView sign protocol being used.

Response: NONE

300 ms pause.

2. Trigger the message that was just downloaded.
   Trigger the message that was just downloaded by activating the message number that you want to preview in the message queue.

Trigger Message for Viewing

Beg of Frame	ADDR	FUNC	H.O ADDR	L.O ADDR	DATA	LRC Error	EOF	Ready to rec. response
:	FF	06	00	66	0001	94	CR	LF

Response: NONE.

300 ms pause.

3. Generate a heartbeat to view the message that was downloaded (if the Heartbeat function has been enabled).
   Use the heartbeat to provide serial activity so the message may be previewed. Disabling the heartbeat causes the previewed message to turn off after a 3-second internal time-out.
   Transmission is as follows:

Transmission for Heartbeat

Beg of Frame	DATA	EOF	Ready to rec. response
:	00	CR	LF

NOTE Send the Heartbeat every 500 ms until no longer needed for the previewing of the message.

Response: NONE.

500 ms pause between heartbeat transmissions.

Download Messages

Messages can be downloaded to the display so that they can be triggered (or activated) at a later time. The download of messages is generally done using the InView messaging software, but can be done from ladder logic using the instructions below. There are three basic steps that must be done to accomplish this.

- First, set the memory size.
- Second, messages are then downloaded.
- Third, clear the queue.

It may be necessary to clear the memory in the display prior to downloading of messages. This can be done either through a serial transmission from the InView messaging software (2706-PSW1-SC), or ladder logic commands.

Download Three Messages Example

This example shows the display downloading three messages (with three different priority levels). Setting the message size to 200 bytes (0×C8) for each message.

1. Set the message partition size in the display(s) to 200 bytes.

   Transmission:

Transmission for Setting Message size to 200 Bytes (Example 1)

Beg of Frame	ADDR	FUNC	H.O ADDR	L.O ADDR	DATA	EOF	Ready to rec. response
:	FF	06	00	64	^AZ00^BEa00C8^D	CR	LF

NOTE See InView Display Communication Protocol Functions and Descriptions on for further explanation of the InView sign protocol being used.

   Response: NONE

   2000 ms pause

2. Download three messages.

   This step is accomplished with three separate transmissions to the display, one for each message

NOTE The total number of bytes for each transmission (from the Beg of Frame to Ready to rec. resp.) must not exceed 500 bytes.

   Download message file #001

   Transmission is as follows:

Transmission for Downloading Message 1 (Example 1)

Beg of Frame	ADDR	FUNC	H.O ADDR	L.O ADDR	DATA	EOF	Ready to rec. response
:	FF	01	00	64	^AZ00^BA2001^[”b^I^^1^\1Priority High^D	CR	LF

NOTE See InView Display Communication Protocol Functions and Descriptions on for further explanation of the InView sign protocol being used.

Response: NONE
300 ms pause
Download message file #002
Transmission is as follows:

Transmission for Downloading Message 2 (Example 1)

Beg of Frame	ADDR	FUNC	H.O ADDR	L.O ADDR	DATA	EOF	Ready to rec. response
:	FF	01	00	64	^AZ00^BA1002^[”b^I^^1^\1Priority Medium^D	CR	LF

NOTE See InView Display Communication Protocol Functions and Descriptions on for further explanation of the InView sign protocol being used.

Response: NONE
300 ms pause
Download message file #003
Transmission is as follows:

Transmission for Downloading Message 3 (Example 1)

Beg of Frame	ADDR	FUNC	H.O ADDR	L.O ADDR	DATA	EOF	Ready to rec. response
:	FF	01	00	64	^AZ00^BA0003^[”b^I^^1^\1Priority Low^D	CR	LF

NOTE See InView Display Communication Protocol Functions and Descriptions on for further explanation of the InView sign protocol being used.

Response: NONE
300 ms pause

3. Clear the message queue.
   This transmission is used to remove all currently running messages downloaded to the queue.
   Transmission is as follows:

Transmission for Clearing the Message Queue

Beg of Frame	ADDR	FUNC	H.O ADDR	L.O ADDR	DATA	LRC Error	EOF	Ready to rec. response
:	FF	06	00	65	FFFF	98	CR	LF

Response: NONE.

Download Two Messages with a Variable Example

This example shows downloading two messages (one with a variable). Set the message size to 60 bytes (0×3C) for each message.

1. Set message partitions in the display(s) to 60 bytes.
   Transmission is as follows:

Transmission for Setting Message Size to 60 Bytes (Example 2)

Beg of Frame	ADDR	FUNC	H.O ADDR	L.O ADDR	DATA	EOF	Ready to rec. response
:	FF	01	00	64	^AZ00^BEa003C^D	CR	LF

NOTE See InView Display Communication Protocol Functions and Descriptions on for further explanation of the InView sign protocol being used.

Response: NONE

2000 ms pause

1. Download two messages.
   This step is accomplished with two separate transmissions to the display, one for each message.
   Transmission is as follows:

NOTE The total number of bytes for each transmission (from the beginning of frame to ready to rec. resp.) must not exceed 500 bytes.

Download message file #0001

Transmission for Downloading Message 1 (Example 2)

Beg of Frame	ADDR	FUNC	H.O ADDR	L.O ADDR	DATA	EOF	Ready to rec. response
:	FF	01	00	64	^AZ00^BA2001^[”b^I^^1^\1Hello^D	CR	LF

NOTE See InView Display Communication Protocol Functions and Descriptions on for further explanation of the InView sign protocol being used.

Response: NONE
300 ms pause
Download message file #0002

Transmission for Downloading Message 2 (Example 2)

Beg of Frame	ADDR	FUNC	H.O ADDR	L.O ADDR	DATA	EOF	Ready to rec. response
:	FF	01	00	64	^AZ00^BA1002^[b^I^^1^\2Part count = ^]A0^]B0^P00^D	CR	LF

NOTE See InView Display Communication Protocol Functions and Descriptions on for further explanation of the InView sign protocol being used.

Response: NONE
300 ms pause

2. Clear the message queue.
   This transmission is used to remove all currently running messages downloaded to the queue.
   Transmission is as follows:

Transmission for Clearing the Message Queue

Beg of Frame	ADDR	FUNC	H.O ADDR	L.O ADDR	DATA	LRC Error	EOF	Ready to rec. response
:	FF	06	00	65	FFFF	98	CR	LF

Response: NONE.

Add/Remove a Message using a Modbus ASCII 10 Frame Query (Recommended)

This method uses both registers 40101 and 40102 in the display to add and remove a message from the message queue respectively. By using the Guaranteed mode, only the display that is addressed on the network accepts and

processes the information it receives. The following is an example of adding message #0015 and removing message #0045 from the message queue on display number 019.

Transmission is as follows:

Query to Add/Remove the Message Queue

Beg of Frame	ADDR	FUNC	H.O ADDR	L.O ADDR	QUANTITY	BYTE CNT	DATA	
:	13	10	00	64	0002	04	000F	002D

LRC Error	EOF	Ready to rec. response
37	CR	LF

Response:

The normal response to a function 10 is to echo the address, function code, starting address, and the number of registers that were loaded.

Response to Add/Remove the Message Queue

Beg of Frame	ADDR	FUNC	H.O ADDR	L.O ADDR	QUANTITY	LRC Error	EOF	Ready to rec. response
:	13	10	00	64	0002	77	CR	LF

Add/Remove a Message using Modbus ASCII 10 Frame Transmission

This method uses both registers 40101 and 40102 in the display to activate and de-activate messages respectively. By using the Broadcast mode, all displays on the network will accept and process the information received. The following is an example of adding message #0003 and removing message #0002 from the message queue.

Transmission is as follows:

Transmission for Add/Remove a Message

Beg of Frame	ADDR	FUNC	H.O ADDR	L.O ADDR	QUANTITY	BYTE CNT	DATA	
:	FF	10	00	64	0002	04	0003	0002

LRC Error	EOF	Ready to rec. response
7E	CR	LF

Response: NONE

Priority Messaging using a Modbus ASCII Query (Recommended)

This method writes to the first register in the message queue (40103). When this happens, the previous message in the queue is replaced with the new message to be loaded.

This is an example of sending a Priority Message #0099 to display address 001.

Transmission is as follows:

Query for a Priority Message

Beg of Frame	ADDR	FUNC	H.O ADDR	L.O ADDR	DATA	LRC Error	EOF	Ready to rec. response
:	01	06	00	66	0063	30	CR	LF

Response:

The normal response to a function 06 is to echo (or re-transmit) the query after the holding register is updated.

Response for a Priority Message

Beg of Frame	ADDR	FUNC	H.O ADDR	L.O ADDR	DATA	LRC Error	EOF	Ready to rec. response
:	01	06	00	66	0063	30	CR	LF

Priority Messaging using a Modbus ASCII Transmission

This method writes to the first register in the message queue (40103). When this happens, the previous message in the queue is replaced with the new message to be activated. This is an example sending a Priority Message #0800 to all displays that are on the network.

Transmission is as follows:

Transmission for Priority Messaging

Beg of Frame	ADDR	FUNC	H.O ADDR	L.O ADDR	DATA	LRC Error	EOF	Ready to rec. response
:	FF	06	00	66	0320	72	CR	LF

Response: NONE

Update a Variable using a Modbus ASCII 06 Frame in Broadcast Mode (Recommended)

This method writes (or loads) variable data to the appropriate variable registers in all displays. The following is an example of loading variable 20 (register 40020) with the value of 3656 for all displays on the network.

Transmission is as follows:

Query for Updating a Variable Register

Beg of Frame	ADDR	FUNC	H.O ADDR	L.O ADDR	DATA	LRC Error	EOF	Ready to rec. response
:	05	06	00	1F	0264	70	CR	LF

Response:
The normal response to a function 06 is to echo (or re-transmit) the query after the holding register is updated.

Response for Updating a Variable Register

Beg of Frame	ADDR	FUNC	H.O ADDR	L.O ADDR	DATA	LRC Error	EOF	Ready to rec. response
:	05	06	00	1F	0264	70	CR	LF

NOTE Use of the Guaranteed mode for variable updates may slow down variable updates due to the response transmission.

Update Variables using a Modbus ASCII 10 frame in Broadcast mode (Recommended)

This method allows the ability to update more than one variable register in all displays. A maximum of 60 registers can be updated in one transmission.
The following example shows how to update variables 1, 2, and 3 (registers 40001, 40002, and 40003) with values 24, 53, and 56 respectively in all displays.
Transmission is as follows:

Transmission for Updating Variable Registers with 10 Frame Broadcast

Beg of Frame	ADDR	FUNC	H.O ADDR	L.O ADDR	QUANTITY	BYTE CNT	DATA		
:	FF	10	00	00	0003	06	00018	0035	0038

LRC Error	EOF	Ready to rec. response
63	CR	LF

Response: NONE

Update Variables using a Modbus ASCII 10 frame in Guaranteed Mode

This method allows the ability to update more than one variable in a specific display address. A maximum of 60 registers can be updated in one transmission. Unused high order bits must be set to zero. The following is an example of updating variables 1, 2, and 3 with values 23, 734, and 7 respectively in display address 003. Below is an example of a preset multiple register transmission.
Transmission is as follows:

Query for Updating Variable Registers using a 10 Frame

Beg of Frame	ADDR	FUNC	H.O ADDR	L.O ADDR	QUANTITY	BYTE CNT	DATA		
:	03	10	00	00	0003	06	00017	02DE	0007

LRC Error	EOF	Ready to rec. response
E6	CR	LF

NOTE Use of the Guaranteed mode for variable updates means messages may not be displayed as expected.

Response:
The normal response to a function 10 query is to echo the address, function code, starting address and the number of registers that were loaded.

Response for Updating Variable Registers using a 10 Frame

Beg of Frame	ADDR	FUNC	H.O ADDR	L.O ADDR	DATA	LRC Error	EOF	Ready to rec. response
:	03	10	00	00	0003	EA	CR	LF

Read the Message Queue using a Modbus ASCII 03 frame

This function allows the ability to read message numbers that are currently running in the message queue on a display. A maximum of 64 registers can be read since there is a maximum of 64 registers (or concurrently running messages) in the message queue. The following is an example of request for the first 3 registers in the message queue (Registers 40103 through 40105) which contain message data values 4, 6, and 11 respectively in display address 010.
Transmission is as follows:

Query for Requesting Message Data

Beg of Frame	ADDR	FUNC	H.O ADDR	L.O ADDR	DATA Number of register to read	LRC Error	EOF	Ready to rec. response
:	0A	03	00	66	0003	8A	CR	LF

Response:
The addressed slave responds with its address and the function code, followed by the information field. The information field contains 2 bytes describing the quantity of data bytes to be returned. The contents of the registers requested (DATA) are two bytes each, with the binary content right justified within each

pair of characters.
The normal response to a function 03 query is to echo the address, function code, starting address and the data for the registers that were requested.

Response for Requesting Message Data

Beg of Frame	ADDR	FUNC	BYTE COUNT	DATA OUTPUT REG H.O. 0066	DATA OUTPUT REG L.O. 0066	DATA OUTPUT REG H.O. 0067	DATA OUTPUT REG L.O. 0067
:	0A	03	00	00	04	00	06

DATA OUTPUT REG H.O. 0068	DATA OUTPUT REG L.O. 0068	LRC Error	EOF	Ready to rec. response
00	0B	D8	CR	LF

Read Variables in a Display using a Modbus ASCII 03 frame

This function allows the ability to read variable data stored in a display. A maximum of 100 registers can be read since there is a maximum of 100 registers of data. Below is an example of the request for registers 40002 through 40004 in display address 020.
Transmission as follows:

Query for Requesting Variable Data

Beg of Frame	ADDR	FUNC	H.O ADDR	L.O ADDR	DATA Number of register to read	LRC Error	EOF	Ready to rec. response
:	14	03	00	01	0003	E5	CR	LF

Response:
The addressed slave responds with its address and the function code, followed by the information field. The information field contains 2 bytes describing the quantity of data bytes to be returned. The contents of the registers requested (DATA) are two bytes each, with the binary content right justified within each pair of characters. Below shows the response to query for registers 40002 through 40004 having the decimal contents of 44, 63, and 1 respectively.
The normal response to a function 03 query is to echo the address, function code, starting address and the data for the registers that were requested.

Response for Requesting Variable Data

Beg of Frame	ADDR	FUNC	BYTE COUNT	DATA OUTPUT REG H.O. 0002	DATA OUTPUT REG L.O. 0002	DATA OUTPUT REG H.O. 0003	DATA OUTPUT REG L.O. 0003
:	14	03	006	00	2C	00	3F

DATA OUTPUT REG H.O. 0068	DATA OUTPUT REG L.O. 0068	LRC Error	EOF	Ready to rec. response
00	01	77	CR	LF

Change the InView Display Address

This function allows the ability to change the serial address in a display. For example, change display address 001 to address 020. When doing this, you need to know the address of the display you want to change. This is typically done using the automation software. The following is an example of changing a display (with the address of 005) to address 004.

Transmission is as follows:

Transmission for Changing the Serial Address

Beg of Frame	ADDR	FUNC	H.O ADDR	L.O ADDR	DATA	EOF	Ready to rec. response
:	05	01	00	64	^AZ05^BE704^D	CR	LF

NOTE See InView Display Communication Protocol Functions and Descriptions on for further explanation of the InView sign protocol being used.

Response: NONE

InView Display Communication Protocol Functions and Descriptions

The InView display communication protocol that is used in conjunction with the Modbus ASCII protocol is mostly limited due to the number of functions and features that required by the InView products. This Protocol can be used for downloading new messages of alpha numeric messages from an Allen-Bradley controller.

InView Message Format used within Modbus ASCII Protocol

Information that is used within the InView message is formatted differently than that of the standard protocol. The following table shows the basic message structure with a brief explanation of each part.

Basic InView Message Format

<SOH>	Type Code	Display Address	<STX>	Command Code	Message Control	Message Attributes	Insert Objects	Insert Variables	Message Data	EOT

Name	Description
<SOH>	Start of Header
Type Code	Display type with which to communicate
Display Address	Address of display where information is written
<STX>	Start of Text
Command Code	Describes what type function to perform, message priority, and message number
Message Control	Describes how the message is displayed, including Position, Mode, Pause, and Justification.
Message Attributes	Describes any Font, Color, Width/Height, and Flash
Insert Objects	Describes any special items that are inserted within a message such as Time, Date, and Extended Character set.
Message Data	Data for the Message itself.
<EOT>	End of Transmission

Items in Bold must be used in each transmission. The automation software will automatically put this information into the message that is transmitted. Some of these functions are modified from the InView protocol that is used in the standard product line, for example, message number versus file labels. Below is a list of the valid values for each of the fields shown above. Each of these are concatenated together to make up the InView message.

InView Message Format

<SOH>			**Type Code**			**Display Address**		
Description	**ASCII**	**Hex**	**Description**	**ASCII**	**Hex**	**Description**	**ASCII**	**Hex**
Start of Header	^A	01	All displays	Z	5A	Display Address	00	3030

<STX>			Command Code Command			Priority		
Description	**ASCII**	**Hex**	**Description**	**ASCII**	**Hex**	**Description**	**ASCII**	**Hex**
Start of Text	^B	02	Write Text file	A	41	Low	0	30
			Write Special Function	E[1]	45	Medium	1	31
						High	2	32

Command Code, continued			Message Control					
Message #			<ESC>			Display Position		
Description	**ASCII**	**Hex**	**Description**	**ASCII**	**Hex**	**Description**	**ASCII**	**Hex**
0001	001	303031	Start of Mode Field	^[	1B	Middle	(space)	20
Through						Top	“	22
4000	FA0	464130				Bottom	&	26
4095	FFF	464646				Fill	0	30

Mode			Speed			Justification		
Description	**ASCII**	**Hex**	**Description**	**ASCII**	**Hex**	**Description**	**ASCII**	**Hex**
Rotate left	a	61	(No Hold)	^I	09	Left	^^1	1E31
Hold	b	62	(1 sec)	^U	15	Center	^^0	IE30
			(2 sec)	^V	16			
			(3sec)	^W	17			
			(4 sec)	^X	18			
			(5 sec)	^Y	19			

[1] Refer to Trigger a Message on a Specific Display using Priority Messaging on page 6 for further explanation of the Special Function command

Message Attributes

Character Font			Character Color			Character Width/Height		
Description	**ASCII**	**Hex**	**Description**	**ASCII**	**Hex**	**Description**	**ASCII**	**Hex**
5 High Standard	^Z1	1A31	Red	^\1	1C31	Standard	^Q^]10	111D3130
7 High Standard	^Z3	1A33	Green	^\2	1C32	Wide	^R^]10	121D3130
7 High Fancy	^Z5	1A35	Yellow	^\3	1C33	Double Wide	^Q^]11	111D3131
10 High Standard	^Z6	1A36				Double High	^Q^]21	111D3231
16 High Fancy (Full Height)	^Z8	1A38						
16 High Standard (Full Height	^Z9	1A39						
24/32 Fancy	^Z8^E1	1A380531						
24/32 High	^Z9^E1	1A390531						

Message Attributes, continued			Insert Objects					
Character Flash			Time			Date		
Description	**ASCII**	**Hex**	**Description**	**ASCII**	**Hex**	**Description**	**ASCII**	**Hex**
Flash ON	^G1	0731	Time	^S	13	MM/DD/YY	^K0	0B30
Flash OFF	^G0	0730				DD/MM/YY	^K1	0B31
						MM-DD-YY	^K2	0B32
						DD-MM-YY	^K3	0B33
						MM.DD.YY	^K4	0B34
						DD.MM.YY	^K5	0B35
						MM DD YY	^K6	0B36
						DD MM YY	^K7	0B37
						MMM.DD YYYY	^K8	0B38

Insert Object, continued			**Insert Variable - Numeric**		
Miscellaneous			**Variable Format**		
Description	**ASCII**	**Hex**	**Description**	**ASCII**	**Hex**
See Appendix A			No Padding, XX	^]A0^]B0	1D41301D4230
			Leading 0, 000XX	^]A1^]B0	1D41311D4230
			Leading Space, ___XX	^]A2^]B0	1D41321D4230
			_+/- No Padding, +/- XX	^]A0^]B1	1D41301D4231
			+/- leading 0, +/- 000XX	^]A1^]B1	1D41311D4231
			+/- Leading Space, +/-, ___X	^]A2^]B1	1D41321D4231

Insert Variable – Numeric			**Message Field**			**<EOT>**		
Call Variable			**Message or Data**					
Description	**ASCII**	**Hex**	**Description**	**ASCII**	**Hex**	**Description**	**ASCII**	**Hex**
Variable 1	^P00	103030	ASCII Data	(space) – DEL	20-7F	End of Transmission	^D	04
Variable 2	^P01	103031						
…	…	…						
Variable 99	^P62	103632						
Variable 100	^P63	1030633						

Insert Variable - Alphanumeric					
Variable Format			**Call Variable**		
Description	**ASCII**	**Hex**	**Description**	**ASCII**	**Hex**
Alpha Length 1	^]A301	1D41333031	Variable 1	^PA00	10413030
…			…		
Alpha Length 128	^]A380	1D41333830	Variable 100	^PA63	10413633

Insert Bitmaps		
Bitmaps		
Description	**ASCII**	**Hex**
Bitmap 0	^N0000	0E30303030
…		
Bitmap 2047	^N07FF	0E30374646

<EOT>		
Description	**ASCII**	**Hex**
End of Transmission	^D	04

Special Function Command

The Special Function Command is used to; Clear the Display Memory, Set Message Size, Set Time and Date, Read Memory from a display on the network, and set the serial address.

The following tables show the valid information to perform each on the commands

Clear the Display Memory

Special Function Command to Clear Display Memory

<SOH>			Type Code			Display Address		
Description	**ASCII**	**Hex**	**Description**	**ASCII**	**Hex**	**Description**	**ASCII**	**Hex**
Start of Header	^A	01	All displays	Z	5A	Display Address	00	3030

<STX>			Command Code					
			Command			**Function**		
Description	**ASCII**	**Hex**	**Description**	**ASCII**	**Hex**	**Description**	**ASCII**	**Hex**
Start of Text	^B	02	Write Special Function	E	45	Clear Memory	$	24

Special Function Command to Clear Display Memory

<EOT>		
Description	**ASCII**	**Hex**
End of Transmission	^D	04

Set Message Size

The message size is the number of bytes that each message can be stored in. This message size will partition the displays memory based on the number of bytes used in the message size. When this command is used, it (generally, based on model of display) takes 200,000 bytes and divides it by the number of bytes used for the message size. For example, 2,000 message partitions would be available if the message size was set to 100 bytes (200,000 bytes/100 bytes/message = 2,000 messages).

The number of bytes used in each message is the number of bytes used from the <SOH> to the <EOT> inclusive. Therefore, care must be used to ensure that the number of bytes sent does not exceed the Message Size. The range for the message size is 50 bytes to 450 bytes. The following is the message data used to set the message size.

Special Function Command to Set Memory Size

<SOH>			**Type Code**			**Display Address**		
Description	**ASCII**	**Hex**	**Description**	**ASCII**	**Hex**	**Description**	**ASCII**	**Hex**
Start of Header	^A	01	All displays	Z	5A	Display Address	00	3030

<STX>			**Command Code**					
			Command			**Function**		
Description	**ASCII**	**Hex**	**Description**	**ASCII**	**Hex**	**Description**	**ASCII**	**Hex**
Start of Text	^B	02	Write Special Function	E	45	Clear Memory	a	61

Command Code			**<EOT>**		
Description	**ASCII**	**Hex**	**Description**	**ASCII**	**Hex**
Message Size (minimum) 50 Bytes	0032	30303332	End of Transmission	^D	04

Set Time

Time can be set in either AM/PM format or 24 hour (military) format. The following shows the valid values for this command:

Special Function Command to Set Time and Time Format

<SOH>			Type Code			Display Address		
Description	**ASCII**	**Hex**	**Description**	**ASCII**	**Hex**	**Description**	**ASCII**	**Hex**
Start of Header	^A	01	All displays	Z	5A	Display Address	00	3030

<STX>			Command Code					
			Command			Function		
Description	**ASCII**	**Hex**	**Description**	**ASCII**	**Hex**	**Description**	**ASCII**	**Hex**
Start of Text	^B	02	Write Special Function	E	45	Set Time	(Sp)	20

Command Code, continued			<ETX		
Set Time					
Set Hour and Minutes HhMm	**ASCII**	**Hex**	**Description**	**ASCII**	**Hex**
HhMm 1034 (Example)	1034	31303334	End of Text	^C	03
HhMm 0945 (Example)	0945	30393435			
H = ASCII digit for hours (10's digit)					
h = ASCII digit for hours (1's digit)					
M = ASCII digit for Minutes (10's digit)					
m = ASCII digit for Minutes (1's digit)					

<STX>			Command Code			<ETX		
Description	**ASCII**	**Hex**	**Description**	**ASCII**	**Hex**	**Description**	**ASCII**	**Hex**
Start of Text	^B	42	Set Time Format AM/PM	‘S	2753	End of Text	^C	03
			Set Time Format 24 Hr (Military)	‘M	274D			

<EOT>		
Description	**ASCII**	**Hex**
End of Transmission	^D	04

Set Date

This command is used to set the date.

Format for displaying the date is shown under Insert Object later in this section.

Special Function Command to Set Time and Date

<SOH>			Type Code			Display Address		
Description	**ASCII**	**Hex**	**Description**	**ASCII**	**Hex**	**Description**	**ASCII**	**Hex**
Start of Header	^A	01	All displays	Z	5A	Display Address	00	3030

<STX>			Command Code Command			Function		
Description	**ASCII**	**Hex**	**Description**	**ASCII**	**Hex**	**Description**	**ASCII**	**Hex**
Start of Text	^B	42	Write Special Function	E	45	Set Date	;	

Command Code, continued			<ETX		
Set Date					
Set Hour and Minutes HhMm	**ASCII**	**Hex**	**Description**	**ASCII**	**Hex**
January 4, 2001 (Example)	010401	303130343031	End of Text	^C	03
December 5, 2002 (Example)	120502	31323035303			

<STX>			Command Code			<ETX		
Description	**ASCII**	**Hex**	**Description**	**ASCII**	**Hex**	**Description**	**ASCII**	**Hex**
Start of Text	^B	42	Set Time Format AM/PM	‘S	2753	End of Text	^C	03
			Set Time Format 24Hr (Military)	‘M	274D			

<EOT>		
Description	**ASCII**	**Hex**
End of Transmission	^D	04

Set Day of Week

This command sets the day of the week once the date is set.

Special Function Command to Set Day of Week

<SOH>			Type Code			Display Address		
Description	**ASCII**	**Hex**	**Description**	**ASCII**	**Hex**	**Description**	**ASCII**	**Hex**
Start of Header	^A	01	All displays	Z	5A	Display Address	00	3030

<STX>			Command Code Command			Function		
Description	**ASCII**	**Hex**	**Description**	**ASCII**	**Hex**	**Description**	**ASCII**	**Hex**
Start of Text	^B	02	Write Special Function	E	45	Set Date	&	26

Command Code, continued			<EOT>		
Set Day of Week	**ASCII**	**Hex**	**Description**	**ASCII**	**Hex**
Sunday	1	31	End of Transmission	^D	04
Monday	2	32			
Tuesday	3	33			
Wednesday	4	34			
Thursday	5	35			
Friday	6	36			
Saturday	7	37			

Set Serial Address

This command changes a serial address for a display.

Special Function Command to Set Serial Address

<SOH>			Type Code			Display Address		
Description	**ASCII**	**Hex**	**Description**	**ASCII**	**Hex**	**Description**	**ASCII**	**Hex**
Start of Header	^A	01	All displays	Z	5A	Display Address	01-FF	3031-4646

<STX>			Command Code Command			Function		
Description	**ASCII**	**Hex**	**Description**	**ASCII**	**Hex**	**Description**	**ASCII**	**Hex**
Start of Text	^B	02	Write Special Function	E	45	Set address	7	37

Command Code, continued			<EOT>		
Serial Address	**ASCII**	**Hex**	**Description**	**ASCII**	**Hex**
New serial address	01-FE	3031-4645	End of Transmission	^D	04

Text Position Placement

Allen-Bradley uses the 2706-P42-SC, 2706-P44-SC, and 2706-P72-SC series displays with InView industrial protocol. The displays can be single line, two-

line or 3-line. Displaying of messages using protocol is slightly different based on which display is being used. Below are some rules for the 2706-P44-SC and 2706-P72-SC display. The 2706-P42-SC display ignores the display position and show (display) the text.

Valid Modes used in P44-SC Series Displays

P44 Series	
Display Position	**Description**
Top	Displays text on top line only.
Bottom	Displays text on bottom line only.
Middle	Used to display full height text (Fancy 16 Pixel or 16 Pixel).
Fill	Displays two lines of 7 pixel characters.

Valid Modes used in P72 Series Displays

P74 Series			
Display Position	**Description**	**Comment 1**	**Comment 2**
Top	Displays text on top line only.	If the top line has only one row of text, the remaining bottom rows are considered bottom.	If the top line has only two rows of text. The remaining bottom row is considered bottom.
Bottom	Displays text on bottom line only.	If the bottom line only has one row of text, the remaining top rows are considered top.	If the bottom line has two rows of text, the remaining top row is considered top.
Middle	Not used.	Not used.	Not used.
Fill	Displays full screen of text.	Can be used to display Fancy 16 Pixel or 16 Pixel characters.	

ASCII Characters

You can enter extended ASCII characters directly within the text of a message. Some of the characters may not show up depending on the fonts on your PC. Please refer to the software help, 2706-PSW1-SC, for a complete listing of the extended ASCII character set.

NOTE You must preview your message to view the extended characters when using the InView Messaging Software.

Reference Material

For additional information refer to, Modicon Modbus Protocol Reference Guide, PI-MBUS-300 Rev C.

Chapter 5 InView Control and InView Control API

Introduction

The purpose of this chapter is to describe the API for the InView control. The chapter is divided into two sections. The first section is a quick overview on how to use the control. It highlights the basic steps needed to get the control up and running. The second section is a detailed reference of the properties and methods available in the control. Each property and method is listed in a table with a brief description and a link to a more complete description.

Quick Overview

The InView control is designed primarily for use with the InView messaging software. The InView messaging software is used to create and download messages to the display, and the InView control is used to trigger the messages and update variables within those messages. Assuming that the InView messaging software has already been used to load the display with messages, there are five basic steps to using the control to trigger a message:

1. Add the control to your project. It appears as InView control under Project|Components… in Visual Basic.
2. Call the Initialize method to open a connection to the display.
3. Set the heartbeat property to 2 to disable the display's heartbeat requirement.
4. Call the AddMessage method to trigger a message on the display.
5. Call the UpdateVariable method to change the value of a variable.

Following is a snapshot of a Visual Basic form and its associated code that illustrates these five steps. This code assumes that the display contains a message in slot number 1, and that the message contains variable 0 within its body. It also uses the controls default communications settings of serial on COM1 to connect with the display:

```
Private Sub Command1_Click()
 InViewCtrl1.UpdateVariable 0, Text1.Text      'Update variable
                                                0 with
End Sub                                         'number in edit box
Private Sub Form_Load()
       InViewCtrl1.Initialize                   'Open COM1
       InViewCtrl1.Heartbeat = 2                'Disable heartbeat
       InViewCtrl1.AddMessage 1                 'Trigger message #1
End Sub
```

Reference

```
Name: InView Control
ProgID: Invwctrl.InView
Interface: InViewCtrl SupportErrorInfo
```

Properties

InViewCtrl Properties	Description
ConnectMode	Sets/Returns method by which the control communicates with the display.
NetworkAddress	Sets/Returns IP address used to communicate with the display.
NetworkPort	Sets/Returns socket port used to communicate with the display.
SerialComPort	Sets/Returns serial port used to communicate with the display.
SerialBaudRate	Sets/Returns serial baud rate used to communicate with the display.
SerialParity	Sets/Returns serial parity used to communicate with the display.
SerialDataBits	Sets/Returns serial data bits used to communicate with the display.
SerialStopBits	Sets/Returns serial stop bits used to communicate with the display.
DisplayAddress	Sets/Returns the address being used to communicate with the display.
PartitionSize	Sets/Returns the maximum size (in bytes) per message in the display.
Heartbeat	Sets/Returns the use of a heartbeat while communicating with the display.

Methods

InViewCtrl Methods	Description
Initialize	Establishes or re-establishes a connection with the display.
Close	Terminates a connection with the display.
Partition	Configures the maximum size per message (and number of messages) in the display.
ClearMessageQueue	Turns off any messages running on the display.
ClearMemory	Clears all memory in the display and reset the display.
DownloadMessage	Downloads a simple message to the display.

InViewCtrl Methods	Description
DownloadMessageEx	Downloads any type of message to the display (Advanced Use Only).
AddMessage	Starts a previously downloaded message running on the display.
RemoveMessage	Stops a message from running on the display.
SingleMessage	Stops any currently running messages on the display and run a single previously downloaded message.
UpdateVariable	Updates the value of a single variable.
UpdateVariableEx	Updates the values of a range of variables.
SetTime	Sets the time stored in the display.
SetDate	Sets the date stored in the display.
ChangeDisplayAddress	Changes the address of the display.
ChangeDisplayBaudRate	Changes the display's communication rate.
ChangeDisplayIPAddress	Changes the display's IPAddress (part of the TCP/IP protocol).
ChangeDisplaySubnetMask	Changes the display's subnet mask (part of the TCP/IP protocol).
ChangeDisplayGateway	Changes the display's gateway (part of the TCP/IP protocol).
ClearBitmapTable	Clears the contents of the display's bitmap table.
DownloadBitmaps	Downloads a range of bitmaps to the display's sbitmap table.

Properties

InViewCtrl Properties	Properties	Description
ConnectMode	Syntax	object.ConnectMode = value Read/Write (short)
	Values	0 - Serial Communication 1 - TCP/IP Communication
	Default	0
	Description	This property is used to set the method by which the control communicates with the display
NetworkAddress	Syntax	object.NetworkAddress = string Read/Write (BSTR)
	Values	A valid IP address on the network such as 207.67.12.57.
	Default	None
	Description	This property is used to set the IP address that the control uses to communicate with the display. It is only necessary to set this property if the ConnectMode is set to a value of 1 - TCP/IP.
Network Port	Syntax	object.NetworkPort = value Read/Write [short]
	Values	A listening socket port such as 3001 (the Ethernet Adapter's port is 3001).
	Default	3001
	Description	This property is used to set the socket port that the control will use to communicate with the display. It is only necessary to set this property if the ConnectMode is set to a value of 1 - TCP/IP.
SerialComPort	Syntax	object.SerialComPort = string Read/Write [BSTR]
	Values	COM1 COM2 COM3 COM4
	Default	COM1
	Description	This property is used to set the serial port that the control will use to communicate with the display. It is only necessary to set this property if the ConnectMode is set to a value of 0 - Serial.

InViewCtrl Properties	Properties	Description
SerialBaudRate	Syntax	object.SerialBaudRate = value Read/Write [long]
	Values	110, 300, 600, 1200, 2400, 4800, 9600, 14400, 19200, 28800, 38400, 56000, 57600, 115200, 128000, 256000
	Default	9600
	Description	This property is used to set the serial baud rate that the control will use to communicate with the display. It is only necessary to set this property if the ConnectMode is set to a value of 0 - Serial. Currently, 9600 baud is the rate supported by the display.
SerialParity	Syntax	object.SerialParity = string Read/Write [BSTR]
	Values	Even Odd None Mark Space
	Default	Even
	Description	This property is used to set the serial parity that the control will use to communicate with the display. It is only necessary to set this property if the ConnectMode is set to a value of 0 - Serial. Currently, Even parity is the parity supported by the display.
SerialDataBits	Syntax	object.SerialDataBits = value Read/Write [short]
	Values	4 5 6 7 8
	Default	7
	Description	This property is used to set the serial data bits that the control will use to communicate with the display. It is only necessary to set this property if the ConnectMode is set to a value of 0 - Serial. Currently, 7 bits is the data bit setting supported by the display.

InViewCtrl Properties	Properties	Description
SerialStopBits	Syntax	object.SerialStopBits = value Read/Write [float]
	Values	1 and 2
	Default	2
	Description	This property is used to set the serial stop bits that the control will use to communicate with the display. It is only necessary to set this property if the ConnectMode is set to a value of 0 - Serial. Currently, 2 bits is the stop bit setting supported by the display.
DisplayAddress	Syntax	object.DisplayAddress = value Read/Write [short]
	Values	255 - Broadcast to all displays 254 - Display address 254 only 253 - Display address 253 only … 1 - Display address 1 only
	Default	255
	Description	This property is used to set the address the control will use to communicate with the display. If the address is set to 255, all of the connected displays will receive transmissions from the control.
PartitionSize	Syntax	object.PartitionSize = value Read/Write [short]
	Values	50, 51, … 450
	Default	100
	Description	This property is used to set the maximum size in bytes reserved for each message in the display. The size of each message also determines the maximum number of messages that can be stored in the display. The number of messages is calculated as 200000 / PartitionSize. For example, with the default size of 100 the display can hold 2000 messages. It is only necessary to set this property if the Partition method will be used to partition the display's memory.

InViewCtrl Properties	Properties	Description
HeartBeat	Syntax	object.Heartbeat = value Read/Write [short]
	Values	0 - No heartbeat from control 1 - Heartbeat generated by control 2 - Heartbeat disabled
	Default	0
	Description	This property is used to set how the control will handle the heartbeat requirement of the display. The display requires serial activity approximately every 3 seconds. In the absence of such activity the display will show a No Network Activity message. If the heartbeat property is set to 0, the activity is assumed to come from sources such as variable updates. If the heartbeat property is set to 1, the control will generate a serial heartbeat command that prevents the display from displaying the no activity message. If the heartbeat property is set to 2, the need for constant serial activity will be disabled in the display.

Methods

InViewCtrl Methods	Properties	Description
Initialize	Syntax	HRESULT Initialize()
	Parameters	None
	Return Value	S_OK - Success E_FAIL - Failure
	Description	This method is used to open the COM port or socket that will be used to communicate with the display. If Initialize is called more than once, any open connection will be closed, and a new connection opened.
Close	Syntax	HRESULT Close()
	Parameters	None
	Return Value	S_OK - Success E_FAIL - Failure
	Description	This method is used to close any open connection to free its resources for other applications. Any open connection is automatically closed when the control is unloaded
Partition	Syntax	HRESULT Partition()
	Parameters	None
	Return Value	S_OK - Success E_FAIL - Failure
	Description	This method is used to partition the memory in the display. A partition command will be sent to the display address set by the DisplayAddress property. The size of the partitions is set to the PartitionSize property. Both DisplayAddress and PartitionSize should be set before calling this method.
ClearMessageQueue	Syntax	HRESULT ClearMessageQueue()
	Parameters	None
	Return Value	S_OK - Success E_FAIL - Failure
	Description	This method is used to clear the queue of messages that are running on the display. Once the queue is cleared the background message (if any) will be displayed. The clear message queue command will be sent to the display address set by the DisplayAddress property. DisplayAddress should be set before calling this method.

InViewCtrl Methods	Properties	Description
ClearMemory	Syntax	HRESULT ClearMemory()
	Parameters	None
	Return Value	S_OK - Success E_FAIL - Failure
	Description	This method is used to reset the display and clear its memory. After clearing memory the display will be set to 2000 messages of 100 bytes each, and each message slot will be set to a message of Message #*n* where *n* is the message number. The clear memory command will be sent to the display address set by the DisplayAddress property. DisplayAddress should be set before calling this method.

InViewCtrl Methods	Properties	Description
DownloadMessage	Syntax	HRESULT DownloadMessage(short nMessageNumber, short nPriority, short nPosition, short nMode, short nSpeed, short nFont, short nColor, BSTR bstrBody)
	Parameters	nMessageNumber The number of the message slot in the display to receive the message. nPriority The priority assigned to the message. 0 - Low 1 - Medium 2 - High nPosition The position on the display where the message will run. 0 - Fill 1 - Top 2 - Bottom 3 - Middle nMode The presentation mode of the running message. 0 - Rotate 1 - Hold nSpeed The pause time between transitions of screens of the message. 0 - 0 Second 1 - 1 Second 2 - 2 Second 3 - 3 Second 4 - 4 Second 5 - 5 Second nFont The font used to display the message text. 0 - Five high 1 - Seven high 2 - Seven high fancy 3 - Ten high 4 - Sixteen high fancy 5 - Sixteen high 6 - Twenty-four/Thirty-two high 7 - Twenty-four/Thirty-two high fancy nColor The color used to display the message text. 0 - Red 1 - Green 2 - Yellow bstrBody The actual text of the message displayed. The length of the text and attributes cannot exceed the PartitionSize.
	Return Value	S_OK - Success E_FAIL - Failure

InViewCtrl Methods	Properties	Description
DownloadMessage continued	Description	This method is used to download a simple message to the display. The download message command will be sent to the display address set by the DisplayAddress property. DisplayAddress should be set before calling this method.
DownloadMessageEx	Syntax	HRESULT DownloadMessageEx (BSTR bstrMessage)
	Parameters	bstrMessage A complete InView protocol formatted download message string.
	Return Value	S_OK - Success E_FAIL - Failure
	Description	This method is for advanced users only and requires knowledge of the InView Protocol. It allows you to download a message of any complexity to the display. The download message command will be sent to the display address set by the DisplayAddress property. DisplayAddress should be set before calling this method.
AddMessage	Syntax	HRESULT AddMessage (short nMessageNumber)
	Parameters	nMessageNumber The number of the message to be added to the queue of running messages.
	Return Value	S_OK - Success E_FAIL - Failure
	Description	This method is used to trigger a message to run on the display. A message of lower priority will not be visible if a higher priority message is running. The message to trigger must be downloaded to the display before it can be triggered. The maximum number of messages that can be queued to run is 60. The add message command will be sent to the display address set by the DisplayAddress property. DisplayAddress should be set before calling this method.

InViewCtrl Methods	Properties	Description
RemoveMessage	Syntax	HRESULT RemoveMessage (short nMessageNumber)
	Parameters	nMessageNumber The number of the message to be removed from the queue of running messages.
	Return Value	S_OK - Success E_FAIL - Failure
	Description	This method is used to trigger a message to stop running on the display. The remove message command will be sent to the display address set by the DisplayAddress property. DisplayAddress should be set before calling this method.
SingleMessage	Syntax	HRESULT SingleMessage (short nMessageNumber)
	Parameters	nMessageNumber The number of the sole message to be added to the queue of running messages.
	Return Value	S_OK - Success E_FAIL - Failure
	Description	This method is used to trigger a single message to run on the display. Any messages currently running on the display will be removed. The message to trigger must be downloaded to the display before it can be triggered. The single message command will be sent to the display address set by the DisplayAddress property. DisplayAddress should be set before calling this method.

InViewCtrl Methods	Properties	Description
UpdateVariable	Syntax	HRESULT UpdateVariable (short nVariable, long nValue)
	Parameters	nVariable The variable number to update. Valid values are 0 … 99. nValue The new value for the variable. The display is limited to 16-bit numbers, which can be signed or unsigned.
	Return Value	S_OK - Success E_FAIL - Failure
	Description	This method is used to update a variable in the display. If the variable is embedded in a running message, the new value will be shown. The update variable command will be sent to the display address set by the DisplayAddress property. DisplayAddress should be set before calling this method.
UpdateVariableEx	Syntax	HRESULT UpdateVariableEx (short nVariable, long nValue)
	Parameters	nVariable The variable number to update. Valid values are 0 … 99. nValues The new value for the variable. The display is limited to 16-bit numbers, which can be signed or unsigned.
	Return Value	S_OK - Success E_FAIL - Failure
	Description	This method is used to update a variable in the display. If the variable is embedded in a running message, the new value will be shown. The update variable command will be sent to the display address set by the DisplayAddress property. DisplayAddress should be set before calling this method.

InViewCtrl Methods	Properties	Description
SetTime	Syntax	HRESULT SetTime (DATE dtTime, BOOL fMilitary)
	Parameters	dtTime The time used to update the display's clock. fMilitary A flag used to indicate if the time should be displayed using 24-hour format. TRUE - use 24-hour format FALSE - use AM/PM format
	Return Value	S_OK - Success E_FAIL - Failure
	Description	This method is used to set the display's clock and to set how the time will be shown on the display (AM/PM vs. 24-Hour). The set time command will be sent to the display address set by the DisplayAddress property. DisplayAddress should be set before calling this method.
SetDate	Syntax	HRESULT SetDate (DATE dtDate)
	Parameters	dtDate The date used to update the display's calendar.
	Return Value	S_OK - Success E_FAIL - Failure
	Description	This method is used to set the display's calendar. The set date command will be sent to the display address set by the DisplayAddress property. DisplayAddress should be set before calling this method.
ChangeDisplayAddress	Syntax	HRESULT ChangeDisplayAddress (short nNewDisplayAddress)
	Parameters	nNewDisplayAddress The new address to which the display will be set.
	Return Value	S_OK - Success E_FAIL - Failure
	Description	This method is used to change the address of a display. The change display address command will be sent to the display address set by the DisplayAddress property. DisplayAddress should be set before calling this method. Be careful when using the broadcast address (255) with this method on a network of displays.

InViewCtrl Methods	Properties	Description
`ChangeDisplayBaudRate` This method is only recognized by the P9*x* series of displays.	Syntax	HRESULT ChangeDisplayBaudRate short nNewDisplayBaudRate)
	Parameters	nNewDisplayBaudRate An enumerated value of the currently available baud rates. 0 = 9600 baud, 1 = 19200 baud, and 2 = 38400 baud.
	Return Value	S_OK - Success E_FAIL - Failure
	Description	This method is used to change the display's baud rate for communication transmissions. The change display baud rate command will be sent to the display address set by the DisplayAddress property. DisplayAddress should be set before calling this method.
	Example	ChangeDisplayBaudRate(1) Changes the display's baud rate to 19200 baud.
`ChangeDisplayIPAddress` This method is only recognized by the P9*x* series of displays.	Syntax	HRESULT ChangeDisplayIPAddress (BSTR ipaddress)
	Parameters	ipaddress An IPAddress string with the syntax of NNN.NNN.NNN.NNN, where each octet is between 0 and 255.
	Return Value	S_OK - Success E_FAIL - Failure
	Description	This method is used to change the display's IPAddress for TCP/IP communication. The change display IPAddress command will be sent to the display address set by the DisplayAddress property. DisplayAddress should be set before calling this method.
	Example	ChangeDisplayIPAddress (192.168.0.1) Changes the display's IPAddress to 192.168.0.1

InViewCtrl Methods	Properties	Description
`ChangeDisplaySubnetMask` This method is only recognized by the P9*x* series of displays.	Syntax	HRESULT ChangeDisplaySubnetMask (BSTR ipaddress)
	Parameters	ipaddress An IPAddress string with the syntax of NNN.NNN.NNN.NNN, where each octet is between 0 and 255.
	Return Value	S_OK - Success E_FAIL - Failure
	Description	This method is used to change the display's subnet mask for TCP/IP communication. The change display subnet mask command will be sent to the display address set by the DisplayAddress property. DisplayAddress should be set before calling this method.
	Example	ChangeDisplaySubnetMask (255.255.255.0) Changes the display's subnet mask to 255.255.255.0.
`ChangeDisplayGateway` This method is only recognized by the P9*x* series of displays.	Syntax	HRESULT ChangeDisplayGateway (BSTR ipaddress)
	Parameters	ipaddress An IPAddress string with the syntax of NNN>NNN>NNN>NNN, where each octet is between 0 and 255.
	Return Value	S_OK - Success E_FAIL - Failure
	Description	This method is used to change the display's gateway for TCP/IP communication. The change display gateway command will be sent to the display address set by the DisplayAddress property. DisplayAddress should be set before calling this method.
	Example	ChangeDisplayGateway (192.168.0.1) Changes the display's gateway to 192.168.0.1.

InViewCtrl Methods	Properties	Description
`ClearBitmapTable` This method is only recognized by the P9*x* series of displays.	Syntax	HRESULT ClearBitmapTable()
	Parameters	None
	Return Value	S_OK - Success E_FAIL - Failure
	Description	This method is used to clear the contents of the display's bitmap table. The clear bitmap table command will be sent to the display address set by the DisplayAddress property. DisplayAddress should be set before calling this method.
	Example	ClearBitmapTable() Clears the bitmap table for the display with the display address set through the DisplayAddress property.
`DownloadBitmaps` This method is only recognized by the P9*x* series of displays.	Syntax	HRESULT DownloadBitmaps (short nBitmapCount, BSTR bstrBitmaps)
	Parameters	The number of bitmaps that will be included in the bstrBitmaps string. The maximum that can be downloaded is 2048. bstrBitmaps A string that contains the contents of each bitmap that will be downloaded concatenated together. The format of a single bitmap string is as follows: OOOOWWWHH[bitmap definition] OOOO = the ASCII hex offset (0 to 0×07FF) WWW = the bitmap width (0 to 0×020) HH = the bitmap height (0 to 0×20) [bitmap definition] = the bitmap information, where each row of the bitmap is compressed into a series of bytes. For example, a 24 × 24 bitmap will have 72 bytes of information (3 bytes for each row and the last 4 bits of the third byte being zeroed out because they are not used).
	Return Value	S_OK - Success E_FAIL - Failure
	Description	This method is used to download a range of bitmaps to a display. The range of bitmaps to be downloaded is based on the bitmap count passed into the method and the data for each bitmap is based on the string holding the concatenation of bitmap information. The download bitmaps command will be sent to the display address set by the DisplayAddress property. DisplayAddress should be set before calling this method.

Catalog Number Explanation

NOTE

The 4-inch displays are available only in NEMA 12.
The 7-inch displays are available only with the standard LED.
The 7-inch displays are only available in color.
The 9-inch displays are only available in color.

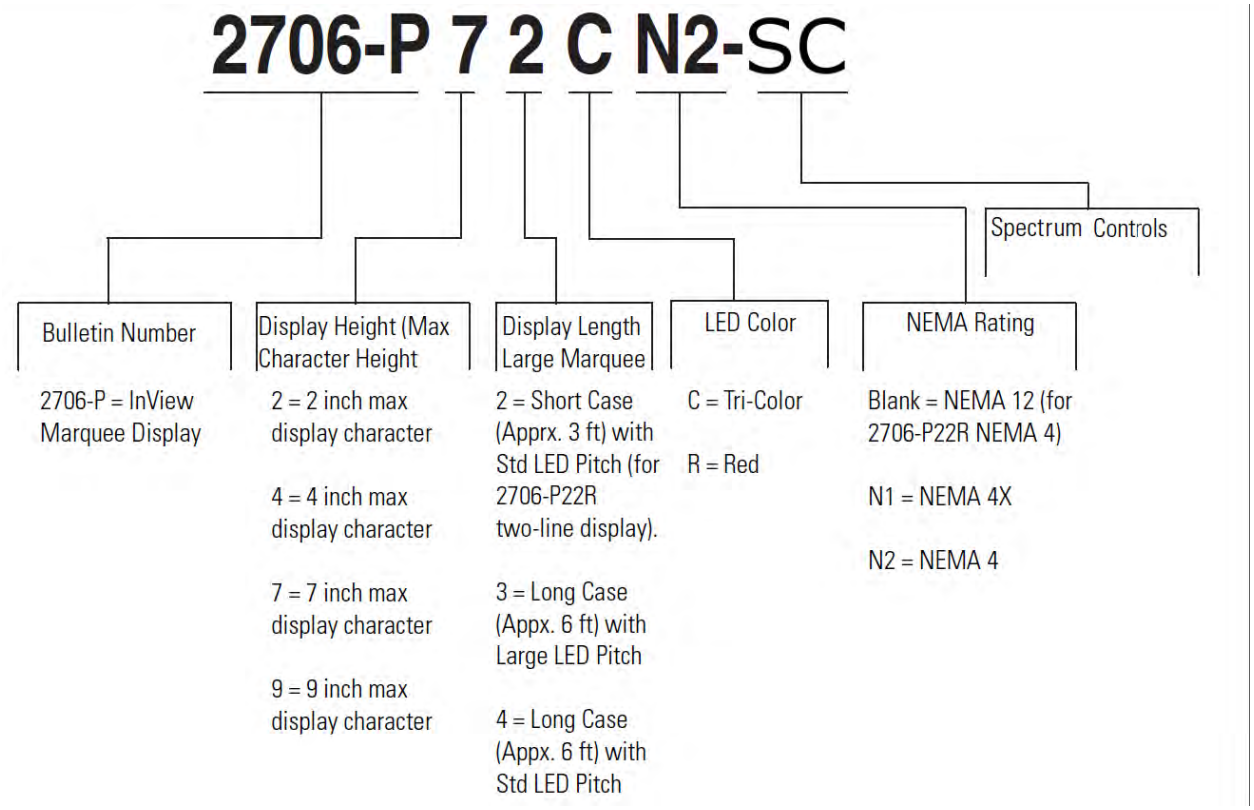

Temperature Protection in NEMA-Rated Enclosures

Some InView signs in NEMA-rated enclosures have automatic temperature controls that help to protect the sign from damage when the internal temperature of the sign is too hot to continue normal operation.

If the internal temperature of the sign reaches a pre-determined dimming point, the LED output from the sign is forced into a 50 percent reduced power mode, effectively dimming the brightness of LED output by about 50 percent.

If the internal temperature of the sign continues to increase, another sensing circuit will execute an automatic shutdown to protect the sign from damage. The LED output from the sign is turned off.

The dimming and shutdown points are listed in the table below. Once the temperature drops below the auto-shutdown threshold, the LED output is turned on at the dimming level. Once the temperature drops below the dimming threshold, auto-dimming is disabled and the LED brightness is back to 100 percent.

Model	Enclosure	Dimming Point	Auto-Shutdown On
2706-P42-SC, 2706-P44-SC	NEMA 2	55°C (131°F)	70°C (158°F)
	NEMA 12	55°C (131°F)	70°C (158°F)
2706-P72-SC, 2706-P74-SC	NEMA 2	55°C (131°F)	70°C (158°F)
	NEMA 12	55°C (131°F)	70°C (158°F)
2706-P92-SC, 2706-P94-SC	NEMA 4, NEMA 4X	55°C (131°F)	70°C (158°F)
	NEMA	55°C (131°F)	75°C (167°F)

NOTE

When evaluating mounting locations for the sign, take into account the effects of ambient temperature

You should always maintain recommended clearance distances around the sign and avoid poorly ventilated mounting locations that could be subject to radiation, convection, conduction or other thermal transfer effects.

Additional Resources

Resource	Description
InView Online Help 2706-PSW1-SC	Details configuration setup software.

You can view or download publications at http://www.spectrumcontrols.com

Getting Technical Assistance

Note that your display contains electrostatic components that are susceptible to damage from electrostatic discharge (ESD). An electrostatic charge can accumulate on the surface of ordinary wrapping or cushioning material. **In the unlikely event that the module should need to be returned to Spectrum Controls, Inc., please ensure that the unit is enclosed in approved ESD packaging (such as static-shielding/metallized bag or black conductive container).** Spectrum Controls, Inc. reserves the right to void the warranty on any unit that is improperly packaged for shipment.

RMA (Return Material Authorization) form required for all product returns.

Please note that Spectrum Controls, Inc. contracts with Rockwell Automation TechConnect telephone support. There is no cost to Spectrum Controls, Inc. customers to use this technical support as the service is funded by Spectrum Controls, Inc. for all InView customers.

For further information or assistance, please contact your local distributor, or call the Spectrum Controls, Inc. technical support at:

- United States: 1-440-646-6900
- United Kingdom: 01908-635230
- Australia: 1800-809-929
- Brazil: 011 (55) 11 3619 8800
- Mexico: 001-888-365-8677
- Europe: (49) 2104 960 630

or send an email to support@spectrumcontrols.com

To order paper copies, contact your local Spectrum Controls, Inc. distributor or sales representative

Appendix A: Installing InView Marquee 2706-P92*x*C2-SC Message Displays

NOTE The information in the following section applies only to the C2 displays and is identical to the information provided in the installation instruction booklet, PN 0100267-01_A0(INSTALLATION_INSTRUCTIONS,2706-P9xC2-SC) shipped with your display.

Overview

These instructions show you how to mount InView 2706-92C2-SC and 2706-94C2-SC signs with NEMA Types 4, and 4X enclosures. These signs are intended for indoor use.

- Type 4 enclosures are intended to provide a degree of protection against windblown dust and rain, splashing water, and hose-directed water.
- Type 4X enclosures are intended to provide a degree of protection against corrosion, windblown dust and rain, splashing water, and hose-directed water.

Wire and Safety Guidelines

Install the InView display conforming to all locally in effect, Electrical Safety Requirements for Employee Workplaces. In addition to the NFPA general guidelines, refer to the following:

- Careful cable routing helps minimize electrical noise. Route incoming power to the module by a separate path from the communication cables.
- Wire used for installation must be rated higher than 75° C (167° F) or 15° C (59° F) above ambient temperature.

NOTE You can configure your InView Communications module or Messaging software without having an InView display connected.

Description of the 2706-P92C2-SC and 2706-P94C2-SC Displays

There are two InView C2 models, 2706-92C2-SC and 2706-94C2-SC. These displays provide 10, user-selectable colors for fonts and bitmaps. The displays provide a 1800 NITs brightness level. Power consumption is also much lower than the previous models of P9 InView displays. The resolution is 6.25 mm versus 7.5 mm. You may scroll images and characters from right-to-left, or left-to-right, depending on the language. The displays comply with NEMA 4 and IP66 housing standards.

NOTE

If you use the equipment in a manner not specified by Spectrum Controls, Inc. may impair the protection provided by the equipment.

Mount the sign so that it is easy to disconnect power when servicing.

Mounting the 2706-P92C2-SC and 2706-P94C2-SC Displays

To mount the sign:

1. Attach the two sign brackets to a metal post, wall, ceiling, or other surface with sufficient weight bearing rating. It is preferable that you install the display on metal posts attached directly to studs. Never install the brackets only on sheetrock with toggle bolts:
   - If installing directly onto a wall or ceiling, use two 5/16-inch lug bolts and washers per bracket, screwed at least one-inch into the center of wood studs. The washer must be snug against the bracket. The bracket must be snug against the sheetrock or other wall surface.
   - If a wooden stud is not available in the correct spot, use 3/4 – inch thick plywood or a 3/4-inch metal backing plate attached to studs to secure the bracket.
2. Be sure to place the brackets so the bracket flanges face appropriately as shown below. Mount the brackets the following distance apart (measured from the center of the mounting holes in each bracket):

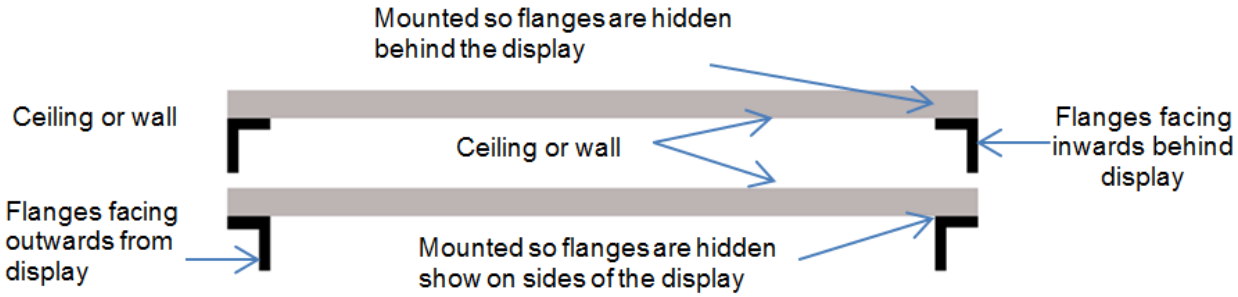

3. Mount the sign onto the sign brackets using the two hex bolts supplied.
4. Insert the bolts into the far single holes first, until the desired viewing angle is determined. Dimensions are shown in mm (in) approximately.

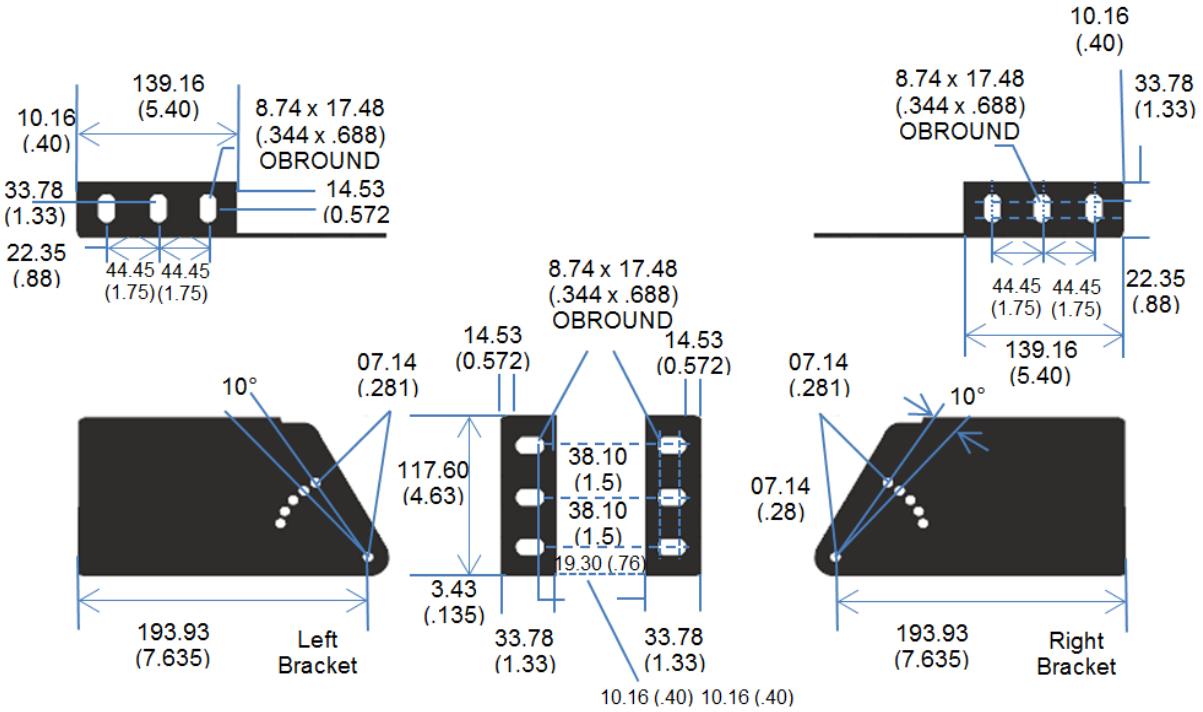

5. Tilt the sign to select a viewing angle.
6. To hold the sign in place, insert the remaining bolts into the desired viewing angle hole on each bracket.

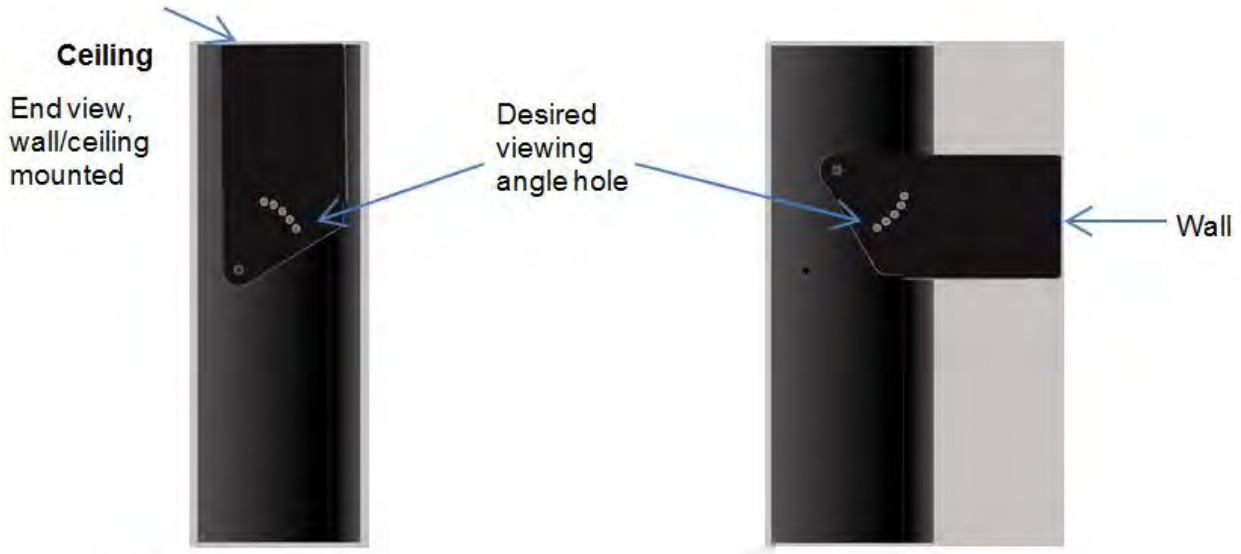

NOTE Keep a minimum 2.54 cm (1.0 in.) clearance on all sides of the sign for adequate ventilation.

Back-to-Back Mount

To connect the sign:

1. Attach the brackets to the sign in the ceiling mount position with the hex bolts supplied.

2. Match the signs together back-to-back and connect them together using a total of six 5/16” bolts and nuts (not supplied).
3. Attach chains (not supplied) to the top mounting holes of the bracket to hang the signs from the ceiling.

NOTE	Use chains capable of supporting 4 times the total weight of the signs.

Wiring the 2706-P92C2-SC and 2706-P94-SC Displays

WARNING	**Hazardous voltage.** **Contact with high voltage may cause death or serious injury.** Always disconnect power to the InView display prior to servicing. Maintain separation of circuits. Route the incoming power directly to the power connections terminal block. Do not run the power wiring over the logic board.

WARNING	**Tension dangereuse.** **Toucher un câble a haute tension peut provoquer la mort ou des blessures graves.** Sortir la prise d'alimentation de l'afficheur avant de le réparer. Maintenir la séparation des câbles. Brancher le câble d’alimentation directement au bornier d’alimentation électrique. Ne pas faire cheminer le câble d'alimentation le long de la carte

1. Disconnect power to the InView display.
2. Loosen the right-hand drawer by unscrewing its 4 screws until you can pull the drawer out. Set the screws aside for later step.

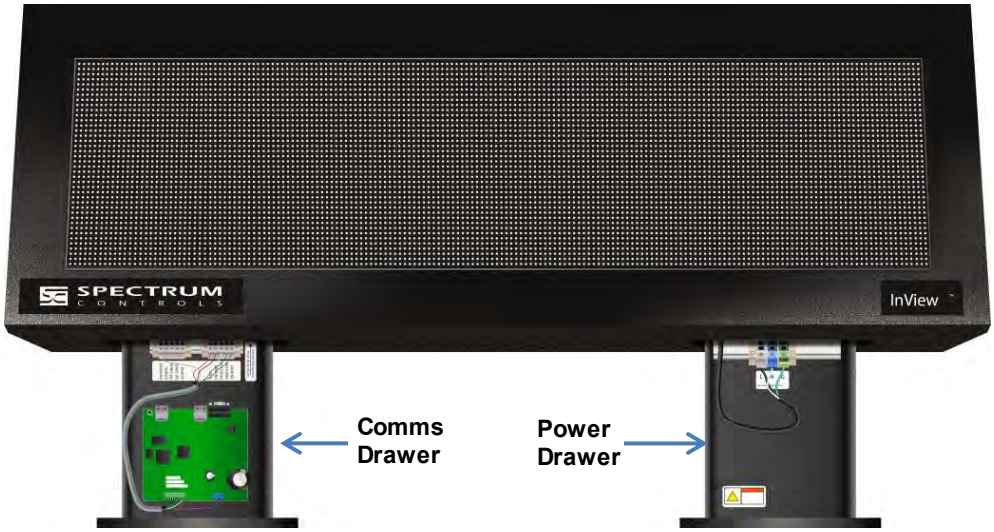

3. Connect power conduit through the power drawer conduit opening on the left side of the drawer. Pull wires through the conduit and wire as shown below. Ensure you follow all applicable, local, electrical codes for completion of the wiring.
4. The InView Display power terminal block in the right-hand drawer is rated for wire ranges of 20 to 6 AWG for the power wiring. Strip the electrical wires back 6.35 mm (0.25 in).
5. Insert the wires into the appropriate terminal connection as shown below and tighten the screw to 1.47 to 1.7 N-m (13 to 15 in-lbs). Enlarged label is shown following image below:

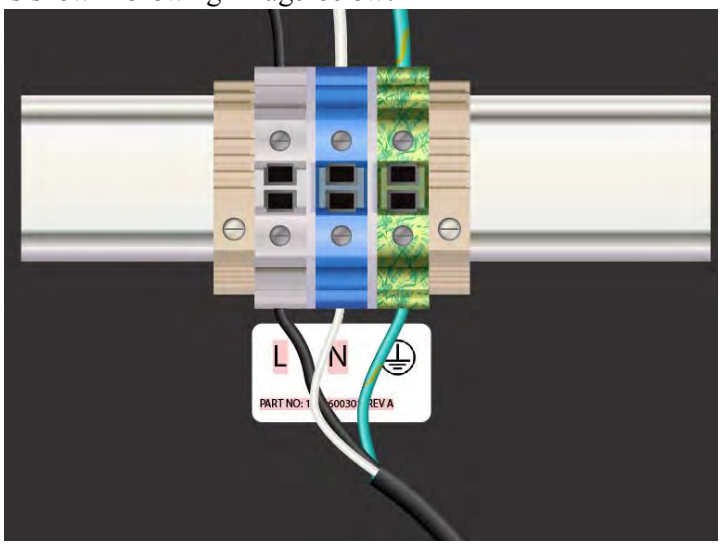

Wire Color	Wire Name
Black	Line (Hot) connect to L (White terminal)
White	Neutral connect to N (Blue terminal)
Green	Ground connect to G (Green and Yellow terminal)

6. If you are installing a Communications Module in the left-hand drawer, install it now (refer to the 0300289-05_A0(Users_Guide_InView_COMMS_MODULE) manual) for additional details.

NOTE Cable tie locations are supplied within the drawer to help ensure loose wires are not obstructed by adjacent mechanical obstructions.

7. Route the Comms cable and tie down the cable as shown below. The cable must be kept above the board until it is past the slots in the drawer. Individual wires must also be kept clear of the slots. The InView Comms Module screws must be torqued to 0.68 N-m (6.0 in-lbs ± 0.100).
8. Route sixteen inches of the Ethernet cable inside the closure and between the two terminal blocks as shown. This avoids a tight curve in the cable.

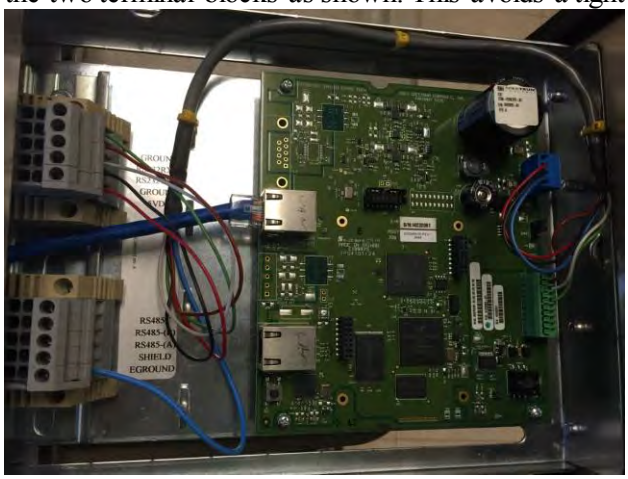

9. Use the 0300289-0*n*_A0(Users_Guide_InView_COMMS_MODULE) manual to complete setup.
10. Replace the drawers using the 4 screws. Torque the screws to 1.8 N-m (16 in-lbs) for NEMA 4 models, and 3 N-m (26.5 in-lbs) for NEMA 4X models.

11. Connect the power wiring to a power source.

Specifications

Display Specifications	2706-P92C2-SC	2706-P94C2-SC
Active Display Area	39.37 in × 9.84 in (100 cm × 25 cm)	68.90 in × 9.84 in (175 cm × 25 cm)
Array/ Pixel pitch	160 × 40 pixels/ 6.25 mm pitch	280 × 40 pixels/ 6.25 mm pitch
Lines of Text/ Character height/ Max characters per line	1 line/9.9 in/13 2 lines/4.75 in/13 3 lines/3.0 in/13 4 lines/2.25 in/20 5 lines/1.75 in/24	1 line/9.9 in/13 2 lines/4.75 in/13 3 lines/3.0 in/13 4 lines/2.25 in/20 5 lines/1.75 in/24
Default Brightness Setting	1,800 Nits	
Colors	10 colors	
Viewing Distance	450 ft (137 m)	
Character Set	Standard and extended ASCII	
Physical Dimensions	44.8 in W 15.7 in H 5.2 in D 113.8 mm W 39.9 cm H 132 cm D	74.3 in W 15.7 in H 5.2 in D 188.8 cm W 39.9 cm H 13.2 cm D
Unit Weight	62 lbs/28.13 kg	93.5 lbs/42.41 kg
Packaged (Shipping) Weight	74 lbs/33.64 kg	111 lbs/50.45 kg
Electrical and Environmental Specifications		
Input Voltage	100-264 VAC 50/60 Hz	100-264 VAC 50/60 Hz
Power Consumption (blank display)	20 W	35 W
Typical Power Consumption (35% lit) Full brightness	50 W	90 W
Typical Power Consumption (35% lit) Default brightness	35 W	62.5 W
Maximum Power Consumption Full brightness	160 W	280 W
Enclosure Rating	NEMA 4 / IP66	NEMA 4 / IP66
Safety and Compliance Rating	UL, CE,	UL, CE,
Operating Temperature	0˚ C to 60˚ C (32˚ F to 140˚ F)	

Display Specifications	2706-P92C2-SC	2706-P94C2-SC
Storage Temperature	-40˚ C to 85˚ C (-40˚ F to 185˚ F)	
Relative humidity (operating and none-condensing	5% to 95% non-condensing	

2706-P9xC2 Display Language Message Formatting Codes

The following message formatting codes have been added for the C2 displays:

Mode		
Description	**ASCII**	**Hex**
Rotate right	A	41
Justification		
Description	**ASCII**	**Hex**
Right	^^2	IE32
Message Attributes		
Description	**ASCII**	**Hex**
20High	^Z2	IA32
20Fancy	^Z4	IA34
40High	^Z<	IA3C
40Fancy	^Z=	IA3D
Character Color		
Description	**ASCII**	**Hex**
RGB Color	^\Zrrggbb	IC5Arrggbb Where: rr=ASCII hex value (00 - FF) for red channel gg=ASCII hex value (00 - FF) for green channel bb=ASCII hex value (00 - FF) for blue channel
Character Width/Height		
Description	**ASCII**	**Hex**
Bold	^Q^]01	111D3031

Additional Resources

Resource	Description
InView Communication Module User Manual, Publication 0300289-05	Provides all setup information for the InView Communications module.
All other InView Manuals	http://spectrumcontrols.com/InView.htm
Declaration of Conformity	http://spectrumcontrols.com/InView.htm

You can view or download publications at http://www.spectrumcontrols.com

Getting Technical Assistance

Note that your display contains electrostatic components that are susceptible to damage from electrostatic discharge (ESD). An electrostatic charge can accumulate on the surface of ordinary wrapping or cushioning material. **In the unlikely event that the display should need to be returned to Spectrum Controls, Inc., please ensure that the unit is enclosed in approved ESD packaging (such as static-shielding/metallized bag or black conductive container).** Spectrum Controls, Inc. reserves the right to void the warranty on any unit that is improperly packaged for shipment.

RMA (Return Material Authorization) form required for all product returns.

Please note that Spectrum Controls, Inc. contracts with Rockwell Automation TechConnect telephone support. There is no cost to Spectrum Controls, Inc. customers to use this technical support as the service is funded by Spectrum Controls, Inc. for all InView customers.

For further information or assistance, please contact your local distributor, or call the Spectrum Controls, Inc. technical support at:

- United States: 1-440-646-6900
- United Kingdom: 01908-635230
- Australia: 1800-809-929
- Brazil: 011 (55) 11 3619 8800
- Mexico: 001-888-365-8677
- Europe: (49) 2104 960 630

or send an email to support@spectrumcontrols.com

To order paper copies of this document, contact your local Spectrum Controls, Inc. distributor or Spectrum Controls sales representative

©2009-2016 Spectrum Controls, Inc. All rights reserved. Specifications subject to change without notice. The Encompass logo and ControlLogix are trademarks of Rockwell Automation.

Corporate Headquarters
Spectrum Controls Inc.
1705 132nd Ave NE
Bellevue, WA 98005 USA
Fax: 425-641-9473
Tel: 425-746-9481

Web Site: www.spectrumcontrols.com
E-mail: spectrum@spectrumcontrols

A User's Manual Pub. 0300289-07 Rev. A

User's Guide, InView® Communications Module

SPECTRUM
CONTROLS

Important Notes

Please read all the information in this manual before installing the product.

The information in the manual applies through InView Messaging Software Version 1.04.

This manual assumes that you have a full working knowledge of the relevant equipment.

Notice

The product described in this manual is useful in a wide variety of applications. Therefore, you and others responsible for applying the product described herein are responsible for determining its acceptability for each application. While efforts have been made to provide accurate information within this manual, Spectrum Controls, Inc. assumes no responsibility for the accuracy, completeness, or usefulness of the information herein.

Under no circumstances will Spectrum Controls, Inc. be responsible or liable for any damages or losses, including indirect or consequential damages or losses, arising out of either the use of any information within this manual or the use of any product referenced herein.

No patent liability is assumed by Spectrum Controls, Inc. with respect to the use of any of the information, or product referenced herein.

The information in this manual is subject to change without notice.

Limited Warranty

We warrant to you that, for a period of 60 days after delivery of this copy of the Software to you:

1. The physical media on which this copy of the Software is distributed will be free from defects in materials and workmanship under normal use,
2. The Software will perform in accordance with the printed documentation distributed with it by us, and
3. To the best of our knowledge your use of the Software in accordance with its printed documentation will not, in and of itself, infringe any third party's copyright, patent, or other intellectual property right.

To the extent permitted by applicable law, THE FOREGOING LIMITED WARRANTY IS IN LIEU OF ALL OTHER WARRANTIES OR CONDITIONS, EXPRESS OR IMPLIED, AND WE DISCLAIM ANY AND ALL IMPLIED WARRANTIES OR CONDITIONS, INCLUDING ANY IMPLIED WARRANTY OF TITLE, OF NON-INFRINGEMENT, OF MERCHANT ABILITY, OR OF FITNESS FOR A PARTICULAR PURPOSE, regardless whether we know or have reason to know of your particular needs.

No employee, agent, dealer, or distributor of ours is authorized to modify this limited warranty, nor to make any additional warranties.

No action for any breach of the above limited warranty may be commenced more than one (1) year following the expiration date of the warranty.

If implied warranties may not be disclaimed under applicable law, then ANY IMPLIED WARRANTIES ARE LIMITED IN DURATION TO 60 DAYS AFTER DELIVERY OF THIS COPY OF THE SOFTWARE TO YOU.

Some states do not allow limitations on how long an implied warranty lasts, so the above limitation may not apply to you.

This warranty gives you specific legal rights, and you may also have other rights which vary from state to state.

Limited Remedy

Your exclusive remedy in the event of a breach of the foregoing limited warranty, TO THE EXCLUSION OF ALL OTHER REMEDIES, is set forth in this paragraph.

In such event, you shall return all copies of the Software to us and pay for shipping; you must include a dated proof of the date on which this copy of the Software was delivered to you, such as a copy of your dated receipt or invoice for this copy.

We will, at our option, either (i) ship you a replacement copy of the Software on non-defective physical media at our expense or (ii) refund your license fee in full.

Trademarks

InView is a trademark of Spectrum Controls, Inc.

Microsoft and Microsoft Windows are registered trademarks of Microsoft Corporation.

The Encompass logo, ControlLogix, and RSLinx are trademarks of Rockwell Automation.

Other brands and their products are trademarks or registered trademarks of their respective holders and should be noted as such.

Table of Contents

IMPORTANT NOTES II

CHAPTER 1 INVIEW MESSAGING OVERVIEW 1-1

SECTION 1.1 START HERE 1-1
SECTION 1.2 INVIEW OVERVIEW 1-1

CHAPTER 2 INSTALLING INVIEW COMMS MODULE 2-1

SECTION 2.1 ABOUT THE INVIEW COMMS MODULE® 2-3
SECTION 2.2 HARDWARE SPECIFICATIONS 2-5
SECTION 2.3 ENVIRONMENTAL AND EMC SPECIFICATIONS 2-6
SECTION 2.4 CERTIFICATIONS FOR INVIEW COMMS MODULES 2-7
SECTION 2.5 INSTALLING THE INVIEW COMMS MODULE 2-8
2.5.1 Mount the Comms Module to the 2706-P42-SC and 2706-P44-SC Displays *2-10*
2.5.2 Wire the Comms Module to the 2706-P42-SC and 2706-P44-SC *2-11*
2.5.3 Mount the Comms Module to the 2706-P72-SC and 2706-P74-SC Displays *2-15*
2.5.4 Wire the Comms Module to the 2706-P72-SC and 2706-P74-SC Displays *2-16*
2.5.5 Mount the Comms Module to the 2706-P92-SC and 2706-P94-SC Displays *2-19*
2.5.6 Wire the Comms Module to the 2706-P92-SC and 2706-P94-SC Displays *2-20*
2.5.7 Mount the Comms Module to the 2706-P92C2-SC and 2706-P94C2-SC Displays *2-23*
2.5.8 Wire the Comms Module to the 2706-P92C2-SC and 2706-P94C2-SC Displays *2-24*
SECTION 2.6 USING THE COMMS MODULE WITH A 2706-P22R-SC DISPLAY 2-27
SECTION 2.7 GETTING HARDWARE AND SOFTWARE INFORMATION 2-30
SECTION 2.8 GETTING IP ADDRESS INFORMATION 2-32
SECTION 2.9 PINGING IP ADDRESSES 2-33
SECTION 2.10 GENERAL PUBLIC LICENSE INFORMATION 2-34
SECTION 2.11 LIMITED WARRANTY 2-34

CHAPTER 3 USING THE INVIEW MESSAGING SOFTWARE INTERFACE 3-1

SECTION 3.1 USING THE INVIEW MESSAGING SOFTWARE USER INTERFACE 3-1
SECTION 3.2 LOGGING ONTO THE INVIEW COMMS MODULE 3-1
SECTION 3.3 ABOUT THE INVIEW USER INTERFACE WINDOW 3-4
3.3.1 InView Comms Module User Interface Title Bar *3-5*
3.3.2 InView User Interface Menu Bar *3-5*
3.3.3 InView User Interface Configuration Work Area *3-6*
SECTION 3.4 CONFIGURING PLC SERVER SETUP FOR THE INVIEW COMMS MODULE 3-6
SECTION 3.5 CONFIGURING CONTROLLOGIX MESSAGE SERVER SETUP FOR THE INVIEW COMMS MODULE 3-9
SECTION 3.6 CONFIGURING COMPACTLOGIX MESSAGE SERVER SETUP FOR THE INVIEW COMMS MODULE 3-14
SECTION 3.7 CONFIGURING MICROLOGIX/PLC5/SLC MESSAGE SERVER SETUP FOR THE INVIEW COMMS MODULE 3-20
SECTION 3.8 CONFIGURING TCP/IP PASSTHROUGH 3-26
SECTION 3.9 CONFIGURING MODBUS TCP MESSAGE SERVER SETUP 3-28
SECTION 3.10 TESTING DEVICE CONNECTIONS 3-31
SECTION 3.11 CONFIGURING NETWORK SETTINGS FOR THE INVIEW COMMS MODULE 3-33
3.11.1 Configuring Eth1 Settings for the InView Comms Module *3-34*
3.11.2 Configuring Eth2 Settings for the InView Comms Module *3-36*
3.11.3 Configuring Web Server Setup for the InView Comms Module *3-38*
3.11.4 Configuring InView Comms Card *3-39*
SECTION 3.12 MANAGING DISPLAYS 3-40
SECTION 3.13 ADDING DISPLAYS 3-41
SECTION 3.14 MODIFYING DISPLAYS 3-43

SECTION 3.15 DELETING DISPLAYS....3-44
SECTION 3.16 SETTING A DISPLAY ADDRESS....3-45
SECTION 3.17 CLEARING DISPLAY MEMORY....3-46
SECTION 3.18 SETTING DATE AND TIME....3-48
SECTION 3.19 CONFIGURING MESSAGE GROUPS....3-49
SECTION 3.20 ADDING MESSAGE GROUPS....3-50
SECTION 3.21 MODIFYING MESSAGE GROUPS....3-52
SECTION 3.22 REORDERING MESSAGES....3-53
SECTION 3.23 DELETING MESSAGE GROUPS....3-54
SECTION 3.24 DOWNLOADING A MESSAGE GROUP....3-55
SECTION 3.25 CONFIGURING MESSAGES....3-56
SECTION 3.26 ADDING MESSAGES....3-58
SECTION 3.27 INSERTING CUSTOM CHARACTERS....3-66
SECTION 3.28 MODIFYING MESSAGES....3-69
SECTION 3.29 DELETING MESSAGES....3-71
SECTION 3.30 MANAGING INVIEW COMMS MODULE MAINTENANCE OPTIONS....3-72
SECTION 3.31 IMPORTING INVIEW COMMS MESSAGES....3-73
SECTION 3.32 IMPORTING CUSTOM CHARACTERS....3-75
SECTION 3.33 RESTORING THE INVIEW COMMS MODULE....3-77
SECTION 3.34 EXPORTING INVIEW COMMS MODULE MESSAGES....3-78
SECTION 3.35 EXPORTING CUSTOM CHARACTERS....3-80
SECTION 3.36 BACKING UP THE INVIEW COMMS MODULE....3-81
SECTION 3.37 UPDATING FIRMWARE....3-82
SECTION 3.38 RESETTING THE INVIEW COMMS MODULE TO DEFAULT CONFIGURATION....3-84
SECTION 3.39 REBOOTING THE INVIEW COMMS MODULE....3-85
SECTION 3.40 CONFIGURING SECURITY SETUP FOR THE INVIEW COMMS MODULE....3-86
SECTION 3.41 CONFIGURING TOOLS....3-87
SECTION 3.42 ADDING MESSAGE TO A QUEUE....3-88
SECTION 3.43 DELETING MESSAGE FROM QUEUE....3-89
SECTION 3.44 CLEARING MESSAGE QUEUE....3-90
SECTION 3.45 TRIGGERING A PRIORITY MESSAGE....3-91
SECTION 3.46 TRIGGERING A VARIABLE UPDATE....3-92
SECTION 3.47 VIEWING DIAGNOSTICS, STORAGE, AND LOG INFORMATION....3-94
3.47.1 Viewing System Report Information....3-96
3.47.2 Viewing System Engineering Error Log Data....3-98
SECTION 3.48 CONFIGURING SERIAL COMMUNICATIONS SETUP....3-101
SECTION 3.49 VIEWING ETH1 COMMUNICATIONS STATUS INFORMATION....3-102
SECTION 3.50 VIEWING ETH2 COMMUNICATIONS STATUS INFORMATION....3-103
SECTION 3.51 VIEWING HELP INFORMATION....3-104

CHAPTER 4 TECHNICAL REFERENCE....4-1

SECTION 4.1 INVIEW COMMS MODULES MESSAGES....4-1
SECTION 4.2 CONCEPTS....4-5
SECTION 4.3 CALCULATING MESSAGE SIZE....4-7
SECTION 4.4 ABOUT COMMUNICATION TAGS....4-8
SECTION 4.5 HOW MESSAGE PRIORITIES WORK....4-8
SECTION 4.6 EXTENDED ASCII CHARACTER SET....4-11
SECTION 4.7 HOW INVIEW LEDS WORK....4-12
SECTION 4.8 EASY TAGS SUMMARY....4-13

INDEX....I-1

Read this introduction to become familiar with the rest of the manual. This preface covers the following topics:

- Who should use this manual
- How to use this manual
- Technical support
- Conventions used in this manual

Who Should Use This Manual

Use this manual if you are responsible for installing and running an InView Comms Module using v1.04 software.

How to Use This Manual

This manual provides step-by-step instructions for installing and running an InView Message Display using InView software.

Technical Support

For technical support, please contact your local distributor or contact Spectrum Controls, Inc. at: (425) 746-9481 from 8:00 am to 4:00 pm Pacific Time or send an email to support@spectrumcontrols.com

Conventions Used in This Manual

The following conventions are used throughout this manual:

- Bulleted lists (like this one) provide information not procedural steps.
- Numbered lists provide sequential steps or hierarchical information.
- *Italic* type is used for emphasis.
- **Bold** type identifies headings and sub-headings.

  WARNING

- Are used to identify critical information to the reader.

Chapter 1
InView Messaging Overview

This manual provides comprehensive information about installing, configuring, and using your InView Message Display and embedded GUI Software.
You use the InView Comms Module Graphic User Interface to configure and interact with one or more InView Message Displays.

Section 1.1
Start Here

Your InView Comms Module ships with an easy-to-use Quick Start Guide. Instructions are also provided in the InView Software's online help.
When running the InView Software, to access context-sensitive online help from each of the main InView dialogs, click the following button on the upper right-hand side of the InView menu bar:

Section 1.2
InView Overview

Refer to the listed chapter for the following information:

- Chapter 2, Installing the InView Comms Module
- Chapter 3, Using the InView Messaging Software Interface
- Chapter 4, Technical Reference
- Index

Chapter 2
Installing InView Comms Module

The help topics listed here provide technical information that is useful when you install your InView Comms Module and InView Message Displays. The Quick Start Guide shipped with your InView Comms Module shows you how to physically install the InView Comms Module and InView Message Display. You may also access this manual online from www.spectrumcontrols.com.

The Spectrum Controls, Inc. InView Comms Modules, catalog numbers 2706-PENETK2-SC, 2706-PENETM2-SC, and 2706-PENETP2-SC, are designed to work with InView displays.

InView Comms Modules replace previous versions as follows:

Replacement Comms Module Model	Existing Comms Module Model
2706-PENETK2-SC	2706-PENETK-SC/2706-PENET1-SC
2706-PENETM2-SC	2706-PENETM-SC/2706-PENET1-SC
2706-PENETP2-SC	2706-PENETP-SC/2706-PENET1-SC

You use the Passthrough (TCP/IP) option to connect your own PC-based message server application to an InView message display. The Passthrough (TCP/IP) software option implements full 2706-PENET1 functionality, and replaces the PENET1 hardware. You use your third-party PC-based application to communicate with the InView display via TCP Port 3001 on the InView Comms Module installed with your InView display.

InView Cables are provided as follows:

Cable PN	Use with
6010105-*nn*, InView Display, 0.254 Meter (10-inch)	Used when installing Comms Modules in drawer of 2706-P9*x*C2-SC displays.
6010104-*nn*, InView Display, 3 Meter	Used on 2705-PENETK2-SC and 2706-PENETM2-SC
6010100-*nn*, InView Display, 5 Meter, shielded	2706-PENETP2-SC only

To help transition to the new interface, the new user interface software allows you to import existing InView Project .ivp, .ivl, and .csv files generated by the legacy InView Messaging software. The legacy software extracts current settings

and message tables for display in the user interface. This allows you to remain compatible with existing Allen-Bradley 2706-P*xxxx* Comms Modules.

You configure the new InView Comms Module using the embedded web page interface. The InView Comms Module makes it possible for either PLC ladder logic or a host PC message server application to display information on the different types of InView display. Example: The InView Comms Module retrieves updates from a PLC message server via your chosen protocol.

Communications to the display itself from the ICM occurs over either an RS-232 or RS-485 serial interface following the InView communications protocol.

The InView displays are powered from an external AC source (except for 2706-P22R, which uses 24 VDC). Each InView display receives its power from an external 120/240 VAC source. Larger displays generate their own regulated supply and output a regulated +5 VDC at 1 Ampere to the InView Comms Module. Smaller displays do not have a power supply with the capacity to power an ICM. In this case the ICM is powered by an external DC supply. The module ships with a jumper that sets whether the board uses 24 VDC or 5 VDC. You must check to ensure the jumper is correctly set for your usage.

The InView Comms Module input power summary is as follows:

- 5 VDC ±2% at 1.0 Ampere maximum from the InView display.
- External voltage. The external supply voltage can range from +9.6 VDC to +28.8 VDC at 10 W (maximum).
- Inrush current is less than 1.75 A.
- Jumper J2 settings are shown as labeled on the board and in 24 VDC or 5 VDC positions:

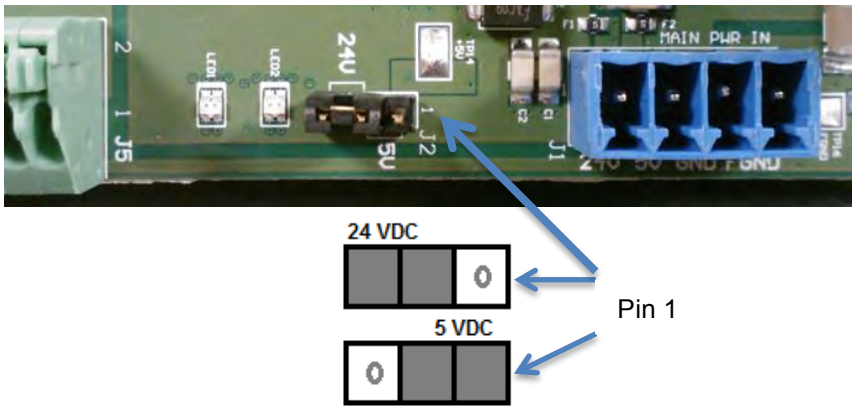

Section 2.1 About the InView Comms Module®

NOTE You can use the Passthrough (TCP/IP) option to connect a host personal computer running the InView Comms Module software application to an InView message display. The Passthrough (TCP/IP) software option implements full 2706-PENET1 functionality, and replaces the PENET1 hardware. You use your third-party PC-based application to communicate with the InView display via TCP Port 3001 on the InView Comms Module installed with your InView display.

NOTE The Spectrum Controls, Inc. InView Comms Module may also be used to manually trigger messages, manually manage the message queue, and manually update variables on the display for systems that do not contain PLCs.

The supported protocols are EtherNet/IP, TCP/IP Passthrough, and Modbus TCP. The InView Comms Module provides Ethernet access to a message server PLC or Passthrough access to a message display. The PLCs use ladder logic that includes InView tags and/or InView Add-On instructions that are queried by the Comms Module. You interact with the Spectrum Controls, Inc. InView Comms Module via an embedded webpage that provides configuration and management access, or via third-party access that uses Passthrough on the Comms Module to access the display directly from a PC-based message server application. The web page opens and runs in an Internet browser. (The legacy InView Messaging Software functions only on Windows XP, and requires a separate host PC application. You cannot use this software to configure the Spectrum Controls InView Comms Module.

NOTE To physically install the InView Comms Module Series 2 hardware, which is drop-in compatible with the existing 2706-PENET (P/M/K) Ethernet/IP Comms Modules and the 2706-PENET1 TCP/IP Passthrough option, refer to the document provided with your InView Comms Module when it shipped. Additional documentation is available from the Spectrum Controls website.

To help transition to the new interface, the new user interface software allows you to import existing InView Project .ivp, .ivl, and .csv files generated by the legacy InView Messaging software. The legacy software extracts current settings and message tables for display in the user interface. This allows you to remain compatible with existing Allen-Bradley 2706-P*xxxx* Comms Modules.

You configure the new InView Comms Module using an embedded webpage. The InView Comms Module makes it possible for either PLC ladder logic or a host PC message server application to display information on the different types of InView display. Example: The InView Comms Module retrieves updates from a PLC message server via EtherNet/IP.

NOTE In order to view the InView Comms Module interface, your personal computer or hand-held device must be able to run an Adobe Flash Player compatible browser. (Adobe and Flash are either registered trademarks or trademarks of Adobe Systems Incorporated in the United States and/or other countries.) All other copyrights and registered trademarks are the property of their respective owners.

NOTE The images that appear are dependent on your choice of browser and browser version. If you are using a different operating system, your windows may appear different.

Section 2.2 Hardware Specifications

Spectrum Controls, Inc. InView specifications replace previous versions as follows:

Specification	Description
Fault Detection	Expansion Memory
Input Protection	30 VDC
Connectors	• Power: 4-pin plug and socket power connector. • Ethernet: 2 RJ-45 connectors. **Eth1** is the recommended default. • Terminal Block: 10-pin RS-232/485 connector to the InView display. • Plug-In Modules: Main board-to-daughter board connectors are to be installed for future, expanded functionality such as cell modem and wireless.
RTC	Inaccuracy: 1 minute per month maximum. Keep-alive time on power OFF is 3 days minimum.
Isolation	Power supply, Ethernet: • 250 VAC, Continuous, Class 1 • 1500 VAC, one minute • 2100 VDC, one minute RS-232/RS-485 • 120 VAC, Continuous, Class 1 • 1000 VAC, one minute • 1410 VDC, one minute
Number of Inputs/Outputs	• 1 Power • 2 Ethernet • 1 RS-232/RS-485
Power Requirements	• 24 V nominal input • Ranges from 9.6 VDC at 0.625 mA maximum to 28.8 VDC at 210 mA maximum • 5 V nominal input • 5 VDC +/-2% at 1.0 ADC maximum
Power Dissipation within Module	Less than, or equal to 6 W
Dimensions	Circuit board no larger than 13.70 by 13.34 cm (5 by 5.625 inches) with a minimum of 4 mounting hole locations with grounded standoffs.
Weight (unpackaged)	0.20 Kg (0.45 lbs) PCB and cable

Specification	Description
Weight (packaged)	• 0.36 Kg (0.80 lbs) PCB, cable, and cardboard box • 0.82 Kg (1.80 lbs) PCB, cable, enclosure (plastic DIN clips), and cardboard box • 1.38 Kg (3.05 lbs) PCB, cable, enclosure (metal DIN clips), and cardboard box

Section 2.3 Environmental and EMC Specifications

The following table lists the environmental specifications for the InView Comms Modules:

Environmental Test Description

Attribute	Standard	Class/Limit
Mechanical		
Vibration of Unpackaged Products	IEC 60068-2-6 FC	Channel Mount: 10 Hz < f < 57 Hz 0.012 in. p-p displacement 57 Hz < f 500 Hz 1.0 g DIN Rail Mount: 10 Hz < f < 57 Hz 0.012 in
Shock of Unpackaged Products, Operating	IEC 60068-2-27; Ea	15 g peak acceleration 11(±1) mS pulse width, half-sine
Shock of Unpackaged Products, Non-Operating	IEC 60068-2-27; Ea	30 g peak acceleration 11(±1) mS pulse width, half-sine
Vibration of Packaged Products		NIST 1A; ASTM D999-75(81)
Shock of Packaged Products	IEC 60068-2-32, Ed Procedure 1	Packaged drop at 122 cm (48 in.), all sides, 3 edges, 1 corner (Not applicable for phase 1 development)
Temperature / Humidity		
Operating Temperature Cycling	IEC 60068-2-3	0°C to +55°C (32°F to 131°F)
Non-Operational Storage Temperature	IEC 60068-2-3	-25°C to +70°C (-13°F to 158°F)
Humidity	IEC 60068-2-3	5 to 95% non-condensing at 60°C

Section 2.4 Certifications for InView Comms Modules

Certification	2706-PENETK2-SC, 2706-PENETM2-SC, 2706-PENETP2-SC
c-UL-us	UL Listed Industrial Control Equipment, certified for US and Canada. • UL listed for UL508C-Industrial Control Products • UL listed for ANSI/ISA 12.12.01-Hazardous Environments Class 1, Division 2, Groups A, B, C, and D; Class II, Division 2, Groups F and G; and Class III, Division 2 • UL Listed for Canadian Safety Standards CSA 22.2 No. 14-M91
CE	European Union 89/336/EEC EMC Directive, compliant with: • 2006/95/EC • 2004/108/EC • EN 61000-4; Conducted Emissions, AC P/S Input • EN 61000-4; Radiated Emissions, entire product • EN 61000-4-2; ESD Immunity, Conductive Non-operator Interface • EN 61000-4-3; Radiated Immunity, Non-conductive, Non-operator Interface • EN 61000-4-4; Fast Transient Immunity; Analog I/O and associated power input • EN 61000-4-5; Surge Immunity, Information communications and analog shielded lines • EN 61000-4-6; Conducted Immunity, Analog I/O and associated power input • EN 61000-4-11; Line, AC P/S input • EN 61000-6-6; Electromagnetic Compatibility • IEC 61131-2:2007; Programmable Controllers-Equipment Class 1, Dielectric, port to backplane/port to port
C-Tick	Australian Radiocommunications Act, compliant with: AS/NZS CISPR 11-Group 1, Class A
	The PCA must be installed in a UL 1212 approved display module. HAZLOC is not required.

Performance Criteria A

The equipment shall operate without malfunction or loss of performance during the whole time test stimulus is applied, and after removal of test stimulus (at the conclusion of the entire test). A loss of performance is acceptable provided the level of performance is no worse than the stated tolerance allowed.

Performance Criteria B

"Self-recoverable." The equipment may suffer a temporary malfunction or loss of performance during test stimulus, but shall recover following the removal of test stimulus without operator intervention. Examples:

- Temporary loss of communications
- Loss and subsequent addition of module

Performance Criteria C

"Operator-recoverable." The equipment may suffer a malfunction during the test, but shall fully recover following a reset or other immediate operator intervention. Examples:

- Watchdog Timer faults
- Having to recycle power

Performance Criteria D

"Non-recoverable"; Degradation or loss of function which is not recoverable due to damage of equipment (components), software, or loss of data. Examples**:**

- Blown fuses (soldered), memories, and FETs.
- Replacement of hardware devices needed to restore equipment to working condition.

Section 2.5 Installing the InView Comms Module

The label supplied with your InView Comms Module contains important information you need, including the part number and certifications for the device:

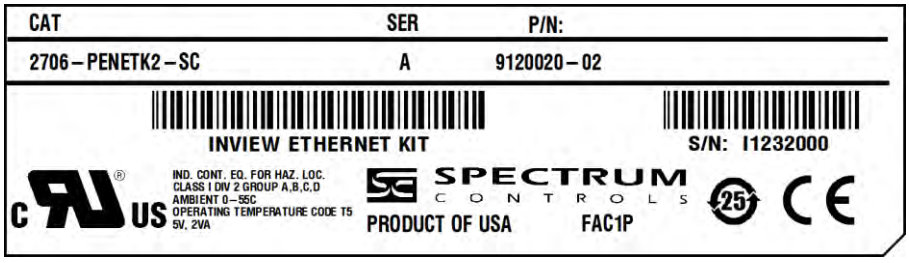

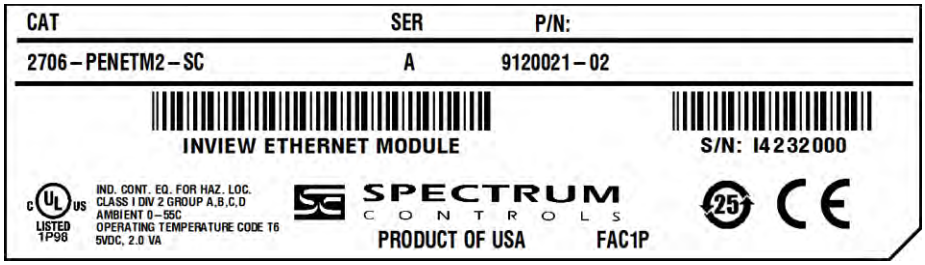

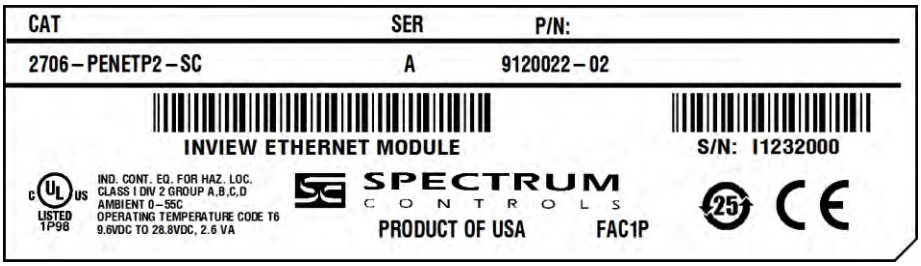

WARNING	**Hazardous voltage.** Contact with high voltage may cause death or serious injury. Always disconnect power to the InView display prior to servicing.

WARNING	**Tension dangereuse.** Tout contact avec une tension élevée peut entraîner la mort ou des blessures graves. Déconnectez toujours l'alimentation de l'afficheur avant toute opération de maintenance.

WARNING	**EXPLOSION HAZARD** • Substitution of components may impair suitability for Class I, Division 2; Class II, Division 2; and Class III, Division 2. Do not replace components or disconnect equipment unless power has been switched off or the area is known to be non-hazardous. • Do not connect or disconnect components unless power has been switched off or the area is known to be non-hazardous. • This product must be installed in an enclosure. • All wiring must comply with N.E.C. article 501-4(b), 502-4(b), or 503-3(b), as appropriate for Class I, Class II, and Class III equipment.

WARNING	**DANGER D'EXPLOSION** • La substitution de composants peut rendre cet équipement impropre à une utilisation en environnement de Classe I, Division 2, de Classe II, Division 2 et de Classe III, Division 2. • Mettre l'appareil hors tension et vérifier que l'environnement est classé non dangereux avant de remplacer des composants ou de débrancher l'appareil. • Mettre l'appareil hors tension et vérifier que l'environnement est classé non dangereux avant de connecter ou de déconnecter des composants. • Ce produit doit être installé dans une armoire. • Le câblage doit être conforme à l'article 501-4(b), 502-4(b) ou 503-3(b) du Code national de l'électricité des Etats-Unis, selon que l'équipement est de Classe I, Classe II, ou Classe III.

Power Supply Requirements

- The 2706-PENETM2-SC and 2706-PENETK2-SC modules are powered at 5 VDC ±2% at 1.0 ADC maximum from the InView 2706-P4*x*-SC, 2706-P7*x*-SC, and 2706-P9*x*-SC displays.
- The 2706-PENETP2-SC module requires an external 24V ±25%, 1 A DC power supply for use with the InView 2706-P22R-SC panel mount display. External supply voltage can range from +9.6 VDC to +28.8 VDC at 10 W (maximum). Inrush current must be less than 1.75 A.

2.5.1 Mount the Comms Module to the 2706-P42-SC and 2706-P44-SC Displays

The InView Comms module, catalog number 2706-PENETM2-SC, is designed to mount to the track of the InView 2706-P42-SC and 2706-P44-SC displays. The back plate of the module has tabs for attaching to the track. Tighten mounting screws until they bottom out against the back plate.

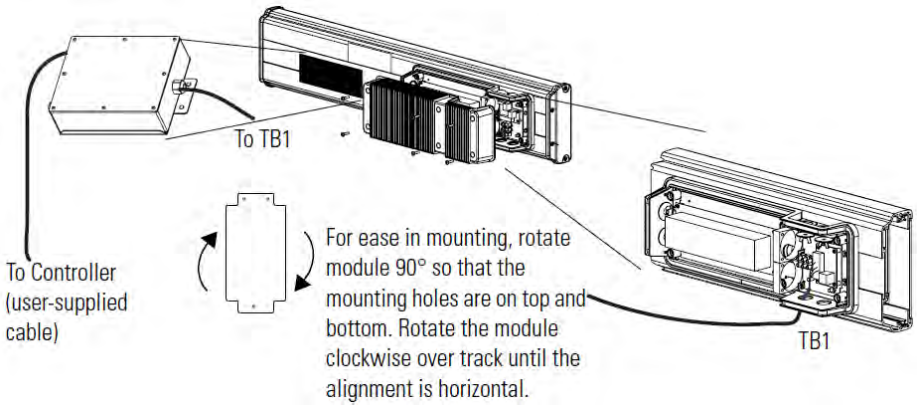

2.5.2 Wire the Comms Module to the 2706-P42-SC and 2706-P44-SC

Below is an illustration and description of the InView Comms module and its connectors with relation to an InView 2706-P4*x*-SC display.

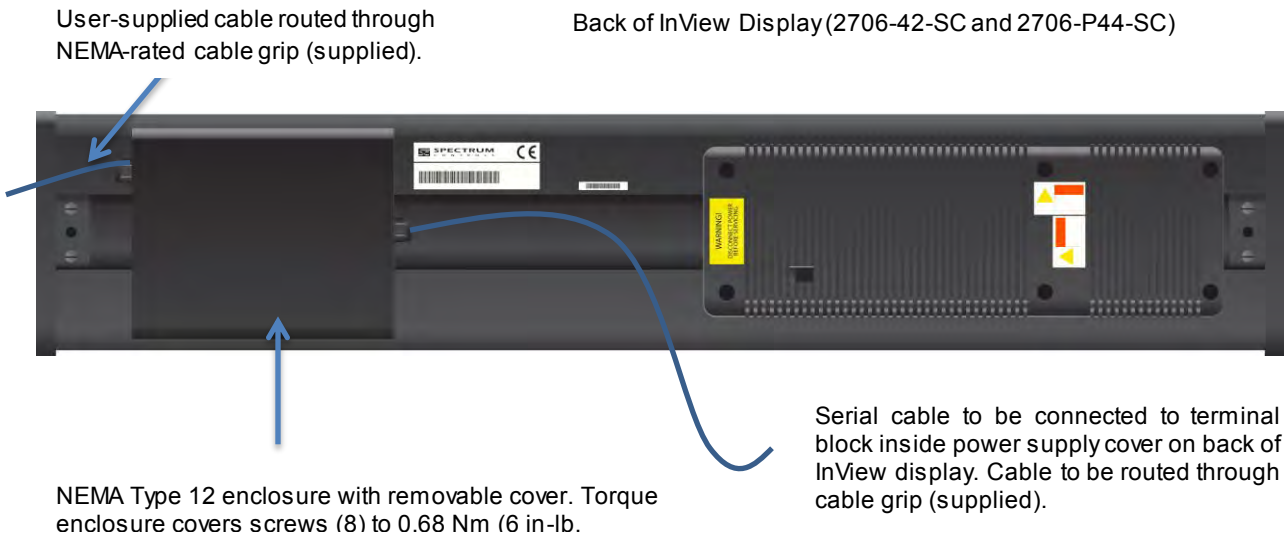

WARNING	**Hazardous voltage.** Contact with high voltage may cause death or serious injury. Always disconnect power to the InView display prior to servicing.

WARNING	**Tension dangereuse.** Tout contact avec une tension élevée peut entraîner la mort ou des blessures graves. Déconnectez toujours l'alimentation de l'afficheur avant toute opération de maintenance.

1. Disconnect power to the InView display.
2. Remove the six screws from the power supply cover and remove cover (2706-P42-SC and 2706-P44-SC).

Set the screws aside for a later step:

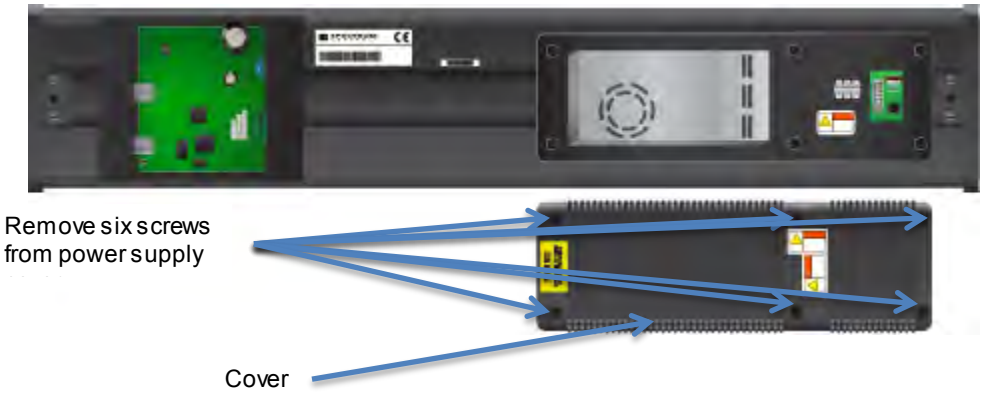

3. Mount the Comms module onto the mounting plate located on the outside of the display back to the left of the label as shown above.
4. Feed the serial cable through the cable grip (shipped with module).
5. Insert the serial wires through the conduit opening on either the top or the bottom of the InView display.

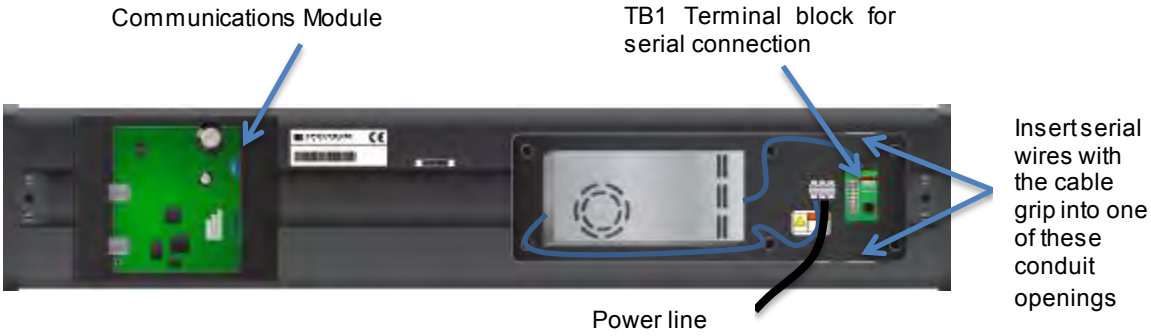

6. Mount the cable grip to the InView display housing, tighten the locknut finger-tight, and rotate an additional 1/2 turn.

WARNING	**Hazard of damage to electronic equipment.** **Failure to ensure that jumper J2 is in the correct position for the voltage supplied to the InView Comms module can result in damage to the module circuitry.** Before applying power to the InView Comms Module, check that the jumper is in the correct position for your application.

WARNING	**Danger de dommage pour l'équipement électronique.** **S'assurez que le cavalier J2 est dans la position correcte pour la tension fournie au module de communication InView sinon cela pourrait entrainer des dommages a l'ensemble des circuits du module.** InView en tension, vérifiez que le cavalier est dans la position de voltage adequat pour votre application.

7. Jumper J2 settings are shown as labeled on the board and in 24 VDC or 5 VDC positions. Check jumper J2 is correctly positioned for your application:

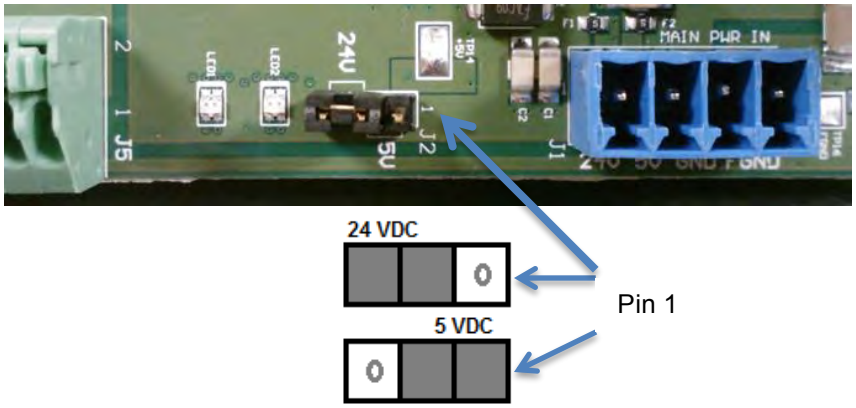

8. Connect the display to the Comms module.
9. Connect the display to the Comms module using the supplied cable.
10. Wire the Comms module as shown in the wiring diagram below. Connect incoming power (Black and Red), serial (White and Brown), and GND (Green and Blue) wires from the Comms module to the **TB1** terminal block and to the power terminal block as shown.
11. With a CAT5 cable, connect the Comms module to an unmanaged switch.
12. Connect the unmanaged switch to both your PLC and PC with a CAT5 cable.

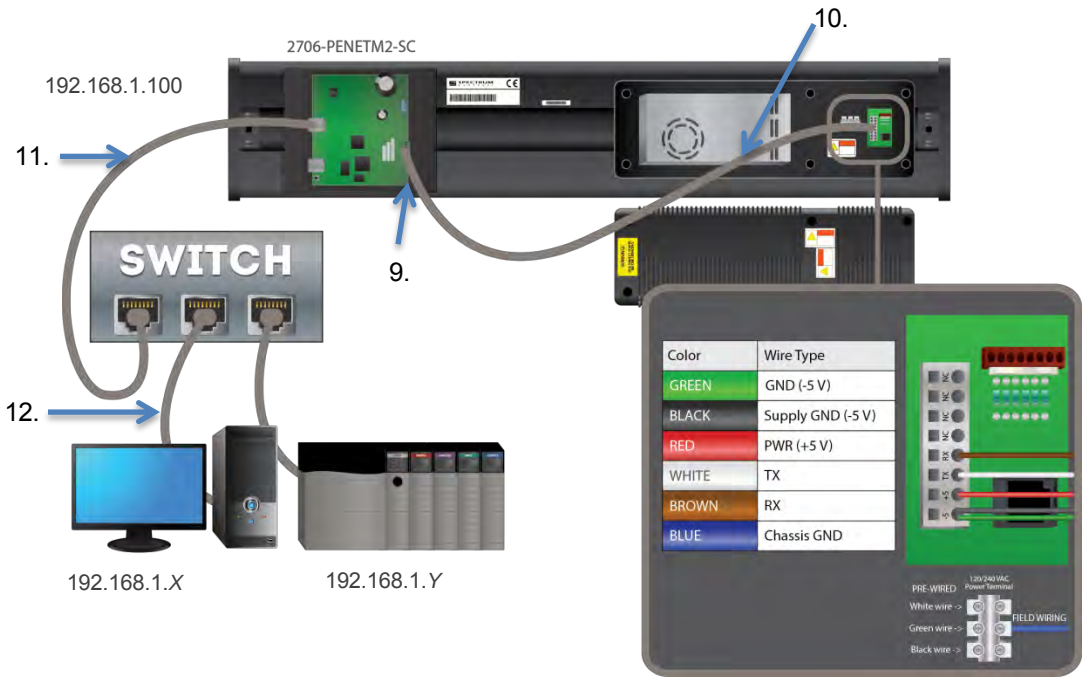

TB1 Connector (on Display) Pin	Stranded wire from Comms Module Cable 6010*nn-nn*	Connectors on InView Comms Module J5/J1
1: GND (Insert Two Ground wires in Pin 1)	GREEN: Isolated Signal GND BLACK: Supply GND (-5 V)	**J5** Pin 5 **J1** Pin 3
2: PWR (+ 5 V)	RED + 5 V Power	**J1** Pin 2
4: RX	BROWN	**J5** Pin 2
3: TX	WHITE	**J5** Pin 3
Power Connection Terminal block (on Display Pin)	Stranded wire from Comms Module Cable 6010*nn-nn*	Connectors on InView Comms Module
GND	Blue Chassis Ground	**J1** Pin 4

IMPORTANT	The 2706-P*x*M-SC Comms modules are provided with cable PN 6010104-*nn*, (3 meters long). The cable combines power and serial communications (connected as shown in diagram **TB1**). Power for the Comms module comes from display terminals #1 and #2. Serial communications are via RS-232 from the module to the display using terminals #3 and #4.

13. Torque the cable grip cap until the cable is securely fastened.
14. Replace the power supply back-cover with the six screws, and torque the screws to 2.7 Nm (24 in-lb).
15. Connect the power supply to a power source.
16. If you press the reset button in the module, the module restarts, initializes, and displays the Comms Module's MAC address, its Ethernet IP address, and its Gateway IP addresses as part of the associated InView display.
17. Write down the values. Example: **192.168.1.100**
18. Connect your PC to the other end of the Ethernet network cable installed on the Comms module and start an Internet browser.
19. In the Address field, type the IP address you obtained from the display to which the Comms Module is connected.
20. Example entry only. Your value will be different: **192.168.1.100**
21. The InView User Interface starts up. If you do not have Adobe Flash Player installed on your computer, the software provides a link for you to access, download, and install the Flash Player. Follow Adobe's instructions to install the Flash Player.
22. If needed, re-enter the IP address in the Browser.
23. The InView User Interface software starts up and provides you with a login screen. Enter the default password:

    spectrum

    The main InView User Interface View window appears.

24. Use the online help or Chapter 3 to finish setting up your InView and display.
25. Follow directions. If needed, click **Help** button for specific instructions:

2.5.3 Mount the Comms Module to the 2706-P72-SC and 2706-P74-SC Displays

The 2706-P72-SC and 2706-P74-SC displays are equipped with a mounting plate inside the case for mounting the 2706-PENETK2-SC Communications kit.

To mount the communications kit:

WARNING	**Hazardous voltage.** Contact with high voltage may cause death or serious injury. Always disconnect power to the InView display prior to servicing.

WARNING	**Tension dangereuse.** Tout contact avec une tension élevée peut entraîner la mort ou des blessures graves. Déconnectez toujours l'alimentation de l'afficheur avant toute opération de maintenance.

1. Disconnect power to the InView display.
2. Open the front of the InView display case by turning the latches counter clockwise, and carefully lowering (opening) the front of the case.
1. If necessary, remove the previous Comms module and set aside.
3. Install the Comms module to the mounting plate located near the **TB1** terminal block by using the supplied standoffs and screws (also see image later in this section).

4. Torque the screws to 0.68 Nm (6 in-lb).

IMPORTANT	A label is included in the hardware kit that indicates the default IP address for the 2706-PENETK2-SC EtherNet/IP Comms module. The module is shipped with a default IP address of 192.168.1.100. Please consult with personnel who will be configuring communications for the most appropriate placement of the label.

2.5.4 Wire the Comms Module to the 2706-P72-SC and 2706-P74-SC Displays

The power to the Comms module is provided by the InView display (series C).

WARNING	**Hazard of damage to electronic equipment.** **Failure to ensure that jumper J2 is in the correct position for the voltage supplied to the InView Comms module can result in damage to the module circuitry.** Before applying power to the InView Comms Module, check that the jumper is in the correct position for your application.

WARNING	**Danger de dommage pour l'équipement électronique**. **S'assurez que le cavalier J2 est dans la position correcte pour la tension fournie au module de communication InView sinon cela pourrait entrainer des dommages a l'ensemble des circuits du module.** InView en tension, vérifiez que le cavalier est dans la position de voltage adequat pour votre application.

To wire the Comms module:

1. Jumper J2 settings are shown as labeled on the board and in 24 VDC or 5 VDC positions. Check jumper J2 is correctly positioned for your application:

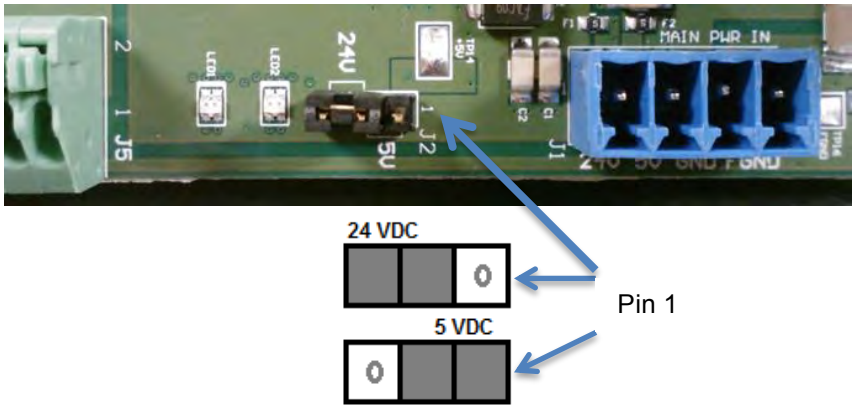

NOTE Personal computer and PLC must be in the 192.168.1.*X* subnet.

2. Connect the display to the Comms Module using the supplied cable.
3. Connect the incoming power (Black and Red) wires, serial (White and Brown), and GND (Green and Blue) wires from the Comms module to the **TB1** terminal block and to the power terminal block as shown.

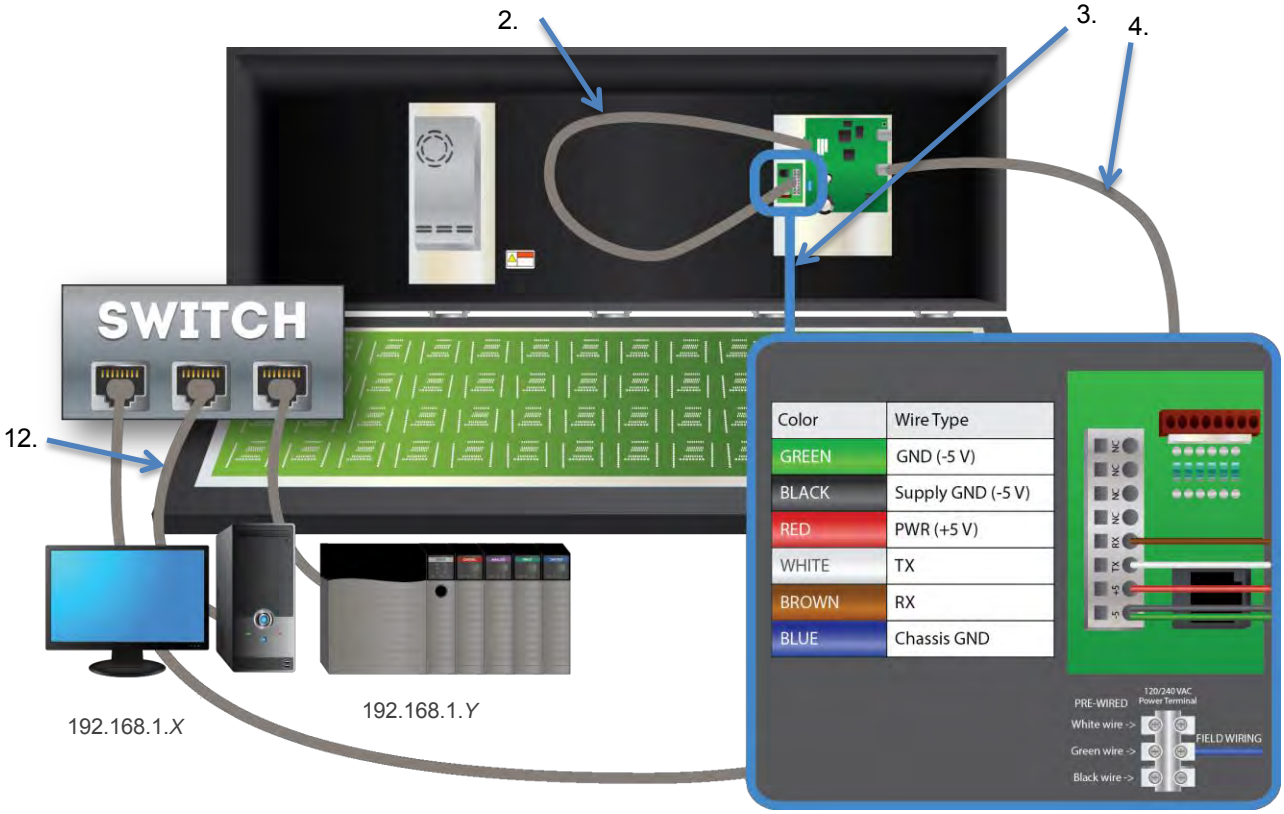

IMPORTANT	The 2706-PENETK2-SC and 2706-PENETM2-SC Comms modules are provided with cable PN 6010104-*nn*, (3 meters long). The cables combine power and serial communications (connected as shown in diagram **TB1**). Power for the Comms module comes from display terminals #1 and #2. Serial communications are via RS-232 from the module to the display using terminals #3 and #4.

4. Connect the user-supplied network cable to the Comms module, and route the user-supplied network cable through the cable grip and locknut that is provided, to an unmanaged switch.
5. Verify that there is adequate slack in the cable by making a loop of the cable inside the InView case.
6. Mount the cable grip to the InView display housing, tighten the locknut finger-tight, and rotate an additional ½ turn.
7. Torque the cable grip cap until the cable is securely fastened.
8. Carefully close the InView case, and tighten the latches by turning them clockwise.
9. Connect the InView display to a power source.
10. If you press the reset button in the module, the module restarts, initializes, and displays the Comms Module's MAC address, its Ethernet IP address, and its Gateway IP addresses as part of the associated InView display.
11. Write down the values. Example: **192.168.1.100**
12. Connect your PC and PLC to the unmanaged switch, and start an Internet browser.
13. In the Address field, type the IP address you obtained from the display to which the Comms Module is connected.
14. Example entry only. Your value will be different: **192.168.1.100**
15. The InView User Interface starts up. If you do not have Adobe Flash Player installed on your computer, the software provides a link for you to access, download, and install the Flash Player. Follow Adobe's instructions to install the Flash Player.
16. If needed, re-enter the IP address in the Browser.
17. The InView User Interface software starts up and provides you with a login screen. Enter the default password:

    spectrum

    The main InView User Interface View window appears.
18. Use the online help or Chapter 3 to finish setting up your InView and display.
19. Follow directions. If needed, click **Help** button for specific instructions:

2.5.5 Mount the Comms Module to the 2706-P92-SC and 2706-P94-SC Displays

The 2706-P92-SC and 2706-P94-SC displays are equipped with a mounting plate inside the case for mounting the 2706-PENETK2-SC Comms module.

To mount the communications kit:

WARNING	**Hazardous voltage.** Contact with high voltage may cause death or serious injury. Always disconnect power to the InView display prior to servicing.

WARNING	**Tension dangereuse.** Tout contact avec une tension élevée peut entraîner la mort ou des blessures graves. Déconnectez toujours l'alimentation de l'afficheur avant toute opération de maintenance.

NOTE Personal computer and PLC must be in the 192.168.1.*X* subnet.

1. Disconnect power to the InView display.
2. Open the front of the InView display case by turning the latches counterclockwise and carefully lowering (opening) the front of the case.

3. If necessary, remove the previous Comms Module and set aside.

4. Install the Comms module to the mounting plate located near the **TB1** terminal block by using the supplied standoffs and screws.
5. Torque the screws to 0.68 Nm (6 in-lb).

IMPORTANT	A label is included in the hardware kit that indicates the default IP address for the 2706-PENETK2-SC EtherNet/IP Comms module. The module is shipped with a default IP address of 192.168.100. Please consult with personnel who will be configuring communications for the most appropriate placement of the label.

2.5.6 Wire the Comms Module to the 2706-P92-SC and 2706-P94-SC Displays

The power to the Comms module is provided by the InView display.

WARNING	**Hazard of damage to electronic equipment.** **Failure to ensure that jumper J2 is in the correct position for the voltage supplied to the InView Comms module can result in damage to the module circuitry.** Before applying power to the InView Comms Module, check that the jumper is in the correct position for your application.

WARNING	**Danger de dommage pour l'équipement électronique**. **S'assurez que le cavalier J2 est dans la position correcte pour la tension fournie au module de communication InView sinon cela pourrait entrainer des dommages a l'ensemble des circuits du module.** InView en tension, vérifiez que le cavalier est dans la position de voltage adequat pour votre application.

To wire the Comms module:

1. Jumper J2 settings are shown as labeled on the board and in 24 VDC or 5 VDC positions. Check jumper J2 is correctly positioned for your application:

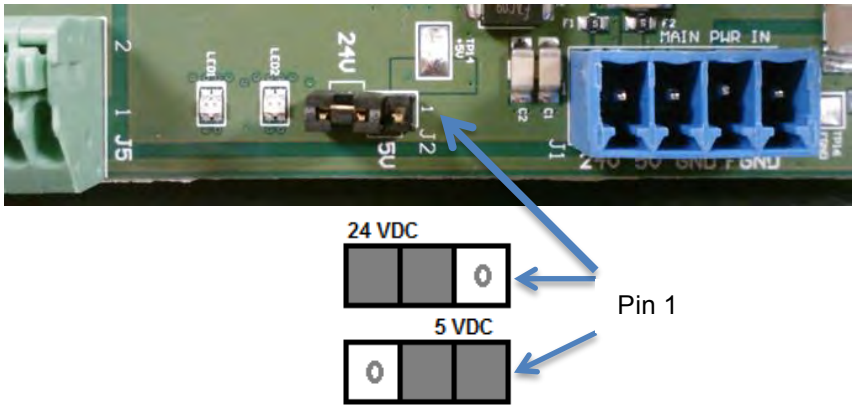

2. Route the user-supplied CAT5 network cable through the cable grip and locknut that is provided. Connect the CAT5 cable to the Comms module by plugging in the Ethernet cable to the **Ethernet1** RJ-45 connector as shown. Connect the other end of the cable to an unmanaged switch.
3. Connect the display to the comms module using the supplied cable. Connect the power and serial wires to the **TB2**, **TB3** terminal block in the InView display.

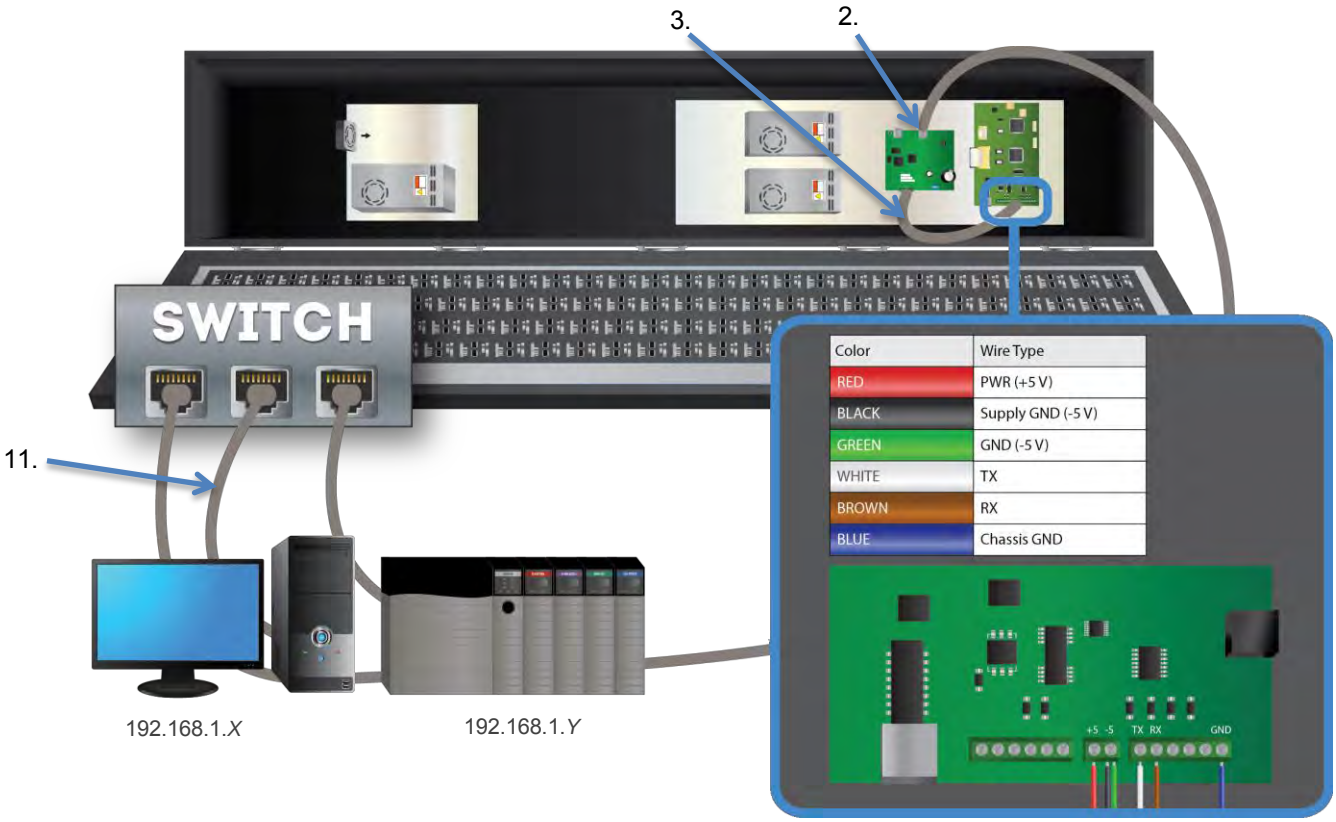

TB2 Connector (on Display) Pin	Stranded wire from Comms Module Cable 6010*nn-nn*	Connectors on InView Comms Module J5/J1
1: GND (Insert Two Ground wires in Pin 1)	GREEN: Isolated Signal GND BLACK: Supply GND (-5 V)	**J5** Pin 5 **J1** Pin 3
2: PWR (+ 5 V)	RED + 5 V Power	**J1** Pin 2
TB3 Connector (On Display) Pin	**Stranded wire from Comms Module Cable 6010*nn-nn***	**Connectors on InView Comms Module J5/J1**
4: RX	BROWN	**J5** Pin 2
3: TX	WHITE	**J5** Pin 3
Power Connection Terminal block (on Display Pin	Stranded wire from Comms Module Cable 6010*nn-nn*	Connectors on InView Comms Module
GND	Blue Chassis Ground	**J1** Pin 4

IMPORTANT	The 2706-P*x*K-SC Comms modules are powered through the serial cable by the display (series A).

4. Verify that there is adequate slack in the cable by making a loop of cable inside the InView case.
5. Mount the cable grip to the InView display housing, tighten the locknut finger-tight, and rotate an additional 1/2 turn.
6. Torque the cable grip cap until the cable is securely fastened.
7. Carefully close the InView case and tighten the latches by turning them clockwise.
8. Connect the InView display to a power source.
9. If you press the reset button in the module, the module restarts, initializes, and displays the Comms Module's MAC address, its Ethernet IP address, and its Gateway IP addresses as part of the associated InView display.
10. Write down the values. Example: **192.168.1.100**
11. Connect your PC and PLC to the unmanaged switch with a CAT5 cable and start an Internet browser.
12. In the Address field, type the IP address you obtained from the display to which the Comms Module is connected.
13. Example entry only. Your value will be different: **192.168.1.100**
14. The InView User Interface starts up. If you do not have Adobe Flash Player installed on your computer, the software provides a link for you to access, download, and install the Flash Player. Follow Adobe's instructions to install the Flash Player.
15. If needed, re-enter the IP address in the Browser.
16. The InView User Interface software starts up and provides you with a login screen. Enter the default password:

    spectrum

    The main InView User Interface View window appears.
17. Use the online help to finish setting up your InView and display.
18. Follow directions. If needed, click **Help** button for specific instructions:

2.5.7 Mount the Comms Module to the 2706-P92C2-SC and 2706-P94C2-SC Displays

The 2706-P92-SC and 2706-P94-SC displays are equipped with a mounting plate inside the case for mounting the 2706-PENETK2-SC Comms module.

To mount the communications kit:

WARNING	**Hazardous voltage.** Contact with high voltage may cause death or serious injury. Always disconnect power to the InView display prior to servicing.

WARNING	**Tension dangereuse.** Tout contact avec une tension élevée peut entraîner la mort ou des blessures graves. Déconnectez toujours l'alimentation de l'afficheur avant toute opération de maintenance.

NOTE Personal computer and PLC must be in the 192.168.1.*X* subnet.

1. If needed, disconnect power to the InView display.
2. Unscrew the four screws on the front of the two drawers located on the bottom panel of the InView display. The padding on the inside of the drawer fronts may allow you to leave the screws in the drawer front.
3. Pull out both drawers to their fullest extent.
4. If necessary, remove the previous Comms module and set aside.
5. In the left-hand drawer (as you face the display), install the Comms module on the mounting stands located at the front of the drawer, using the supplied standoffs and screws.
6. Torque the screws to 0.68 Nm (6 in-lb).

IMPORTANT	A label is included in the hardware kit that indicates the default IP address for the 2706-PENETK2-SC EtherNet/IP Comms module. The module is shipped with a default IP address of 192.168.100. Please consult with personnel who will be configuring communications for the most appropriate placement of the label.

2.5.8 Wire the Comms Module to the 2706-P92C2-SC and 2706-P94C2-SC Displays

The power to the Comms module is provided by the InView display.

WARNING	**Hazard of damage to electronic equipment.** **Failure to ensure that jumper J2 is in the correct position for the voltage supplied to the InView Comms module can result in damage to the module circuitry.** Before applying power to the InView Comms Module, check that the jumper is in the correct position for your application.

WARNING	**Danger de dommage pour l'équipement électronique.** **S'assurez que le cavalier J2 est dans la position correcte pour la tension fournie au module de communication InView sinon cela pourrait entrainer des dommages a l'ensemble des circuits du module.** InView en tension, vérifiez que le cavalier est dans la position de voltage adequat pour votre application.

To wire the Comms module:

1. Jumper J2 settings are shown as labeled on the Comms module board and in 24 VDC or 5 VDC positions. Check jumper J2 is correctly positioned for your application. Default jumper setting is 5 VDC:

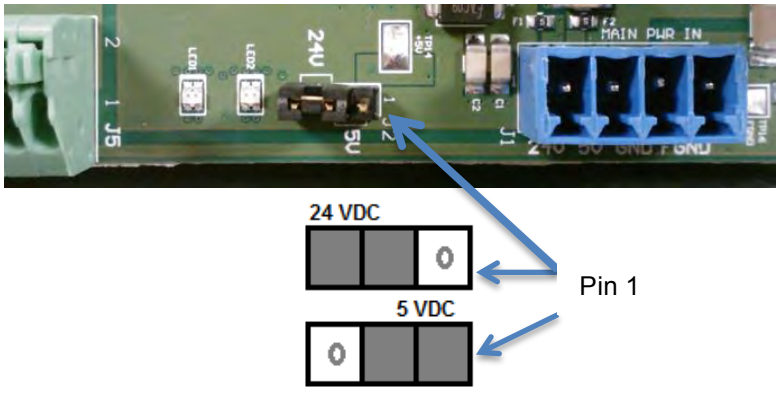

2. In the same drawer in which you install the Comms module board, route the user-supplied CAT5 network cable through the cable grip and locknut that is provided. Connect the CAT5 cable to the Comms module by plugging in the Ethernet cable to the **Ethernet1** RJ-45 connector as shown. Connect the other end of the cable to an unmanaged switch.
3. Connect the display terminal serial and power connectors in the left-hand drawer to the installed Comms module, using the supplied Comms Module cable as shown in the image and table provided.
4. The InView Display terminal blocks in the left-hand drawer are rated for wire ranges of 26 AWG to 12 AWG for the Comms Module serial and power wiring connections to the InView display. Ensure you follow all applicable,

local, electrical codes for placing wiring cable in conduit outside the display.

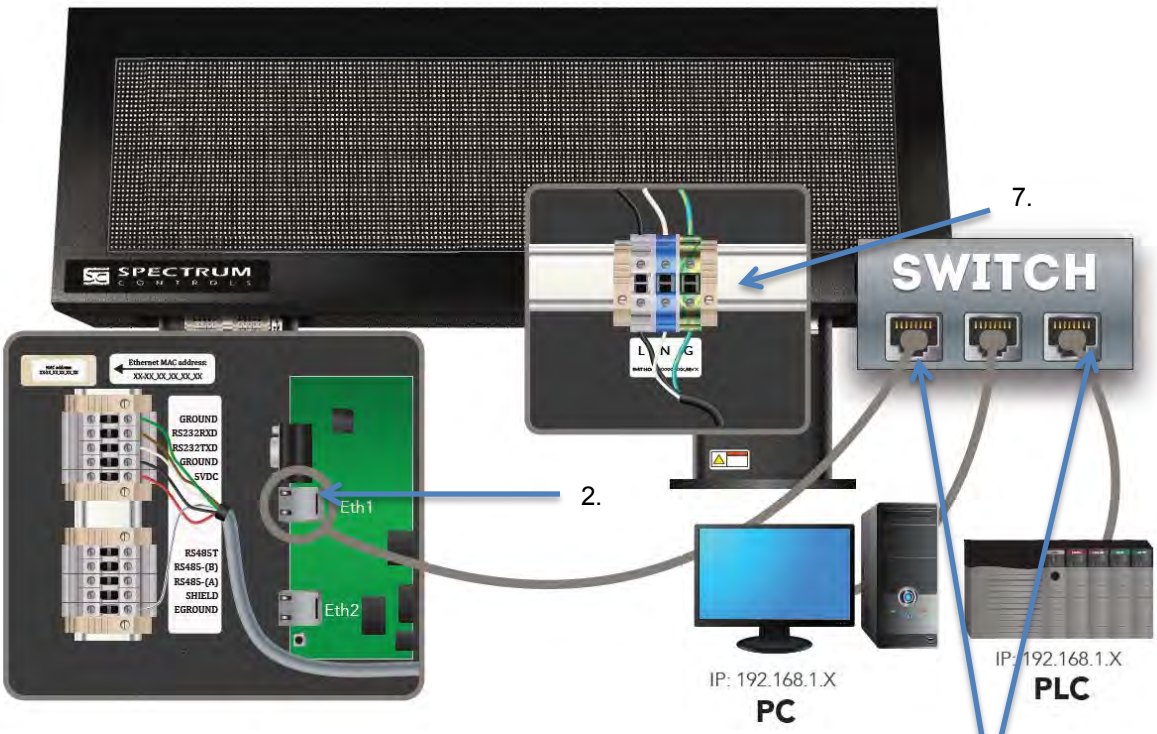

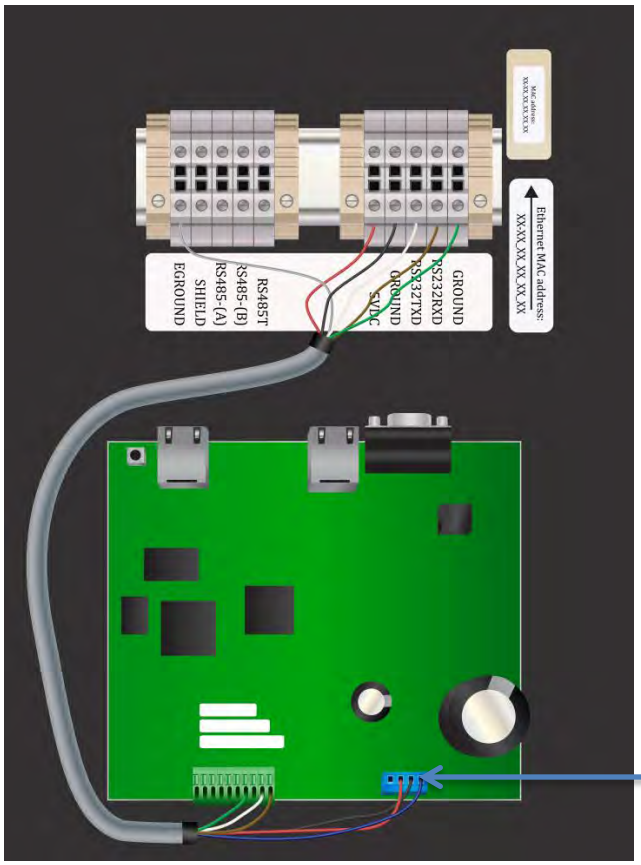

Stranded wire from Comms Module Cable 6010*nn-nn*	**Connectors on InView Comms Module J5/J1**
GREEN: Isolated Signal GND	**J5** Pin 5
BLACK: Supply GND (-5 V)	**J1** Pin 3
RED + 5 V Power	**J1** Pin 2
Stranded wire from Comms Module Cable 6010*nn-nn*	**Connectors on InView Comms Module J5/J1**
BROWN: RX	**J5** Pin 2
WHITE: TX	**J5** Pin 3
Blue: Chassis Ground	**J1** Pin 4

IMPORTANT	The 2706-P*x*K-SC Comms modules are powered through the serial cable by the display (series A).

5. Verify that there is adequate slack in the cable by making a loop of cable inside the InView case. Shorten cable as needed.
6. Torque the cable grip cap until the cable is securely fastened.
7. Connect the InView display to a power source.
8. The display initializes, and displays the Comms Module's MAC address, its Ethernet IP address, and its Gateway IP addresses as part of the associated InView display.
9. Write down the values. Example: **192.168.1.100**
10. Connect your PC and PLC to the unmanaged switch with a CAT5 cable and start an Internet browser.
11. In the Browser Address field, type the IP address you obtained from the display to which the Comms Module is connected.
12. Example entry only. Your value will be different: **192.168.1.100**
13. The InView User Interface starts up. If you do not have Adobe Flash Player installed on your computer, the software provides a link for you to access, download, and install the Flash Player. Follow Adobe's instructions to install the Flash Player.
14. If needed, re-enter the IP address in the Browser.
15. The InView User Interface software starts up and provides you with a login screen. Enter the default password:

    spectrum

    The main InView User Interface View window appears.
16. Use the online help to finish setting up your InView and display.
17. Follow directions. If needed, click **Help** button for specific instructions:

Section 2.6 Using the Comms Module with a 2706-P22R-SC Display

The 2706-P22R-SC InView panel-mount display can be used with a 2706-P*x*P-SC Comms module. The module is mounted on a DIN rail inside the enclosure in which the 2706-P22R-SC display is mounted. This maintains the NEMA 4*x*, 12, or 13 rating. The 2706-P*x*P-SC Comms module also requires a separate 24 VDC power supply. This module does not receive power from the InView display.

To mount and connect the Comms module:

WARNING	**Hazardous voltage.** Contact with high voltage may cause death or serious injury. Always disconnect power to the InView display prior to servicing.

WARNING	**Tension dangereuse.** Tout contact avec une tension élevée peut entraîner la mort ou des blessures graves. Déconnectez toujours l'alimentation de l'afficheur avant toute opération de maintenance.

1. Disconnect power to the enclosure.
2. Mount the DIN rail somewhere in the enclosure, near the 2706-P22R-SC display.
3. Snap the Comms module to the DIN rail and lock the latches.
4. Unscrew the top of Comms Module container.
5. Connect the Comms module to the 2706-P22R-SC display using the supplied serial cable.
6. Connect the user-supplied CAT5 network cable to the Comms module as shown below. Connect the other end of the network cable to an unmanaged switch.

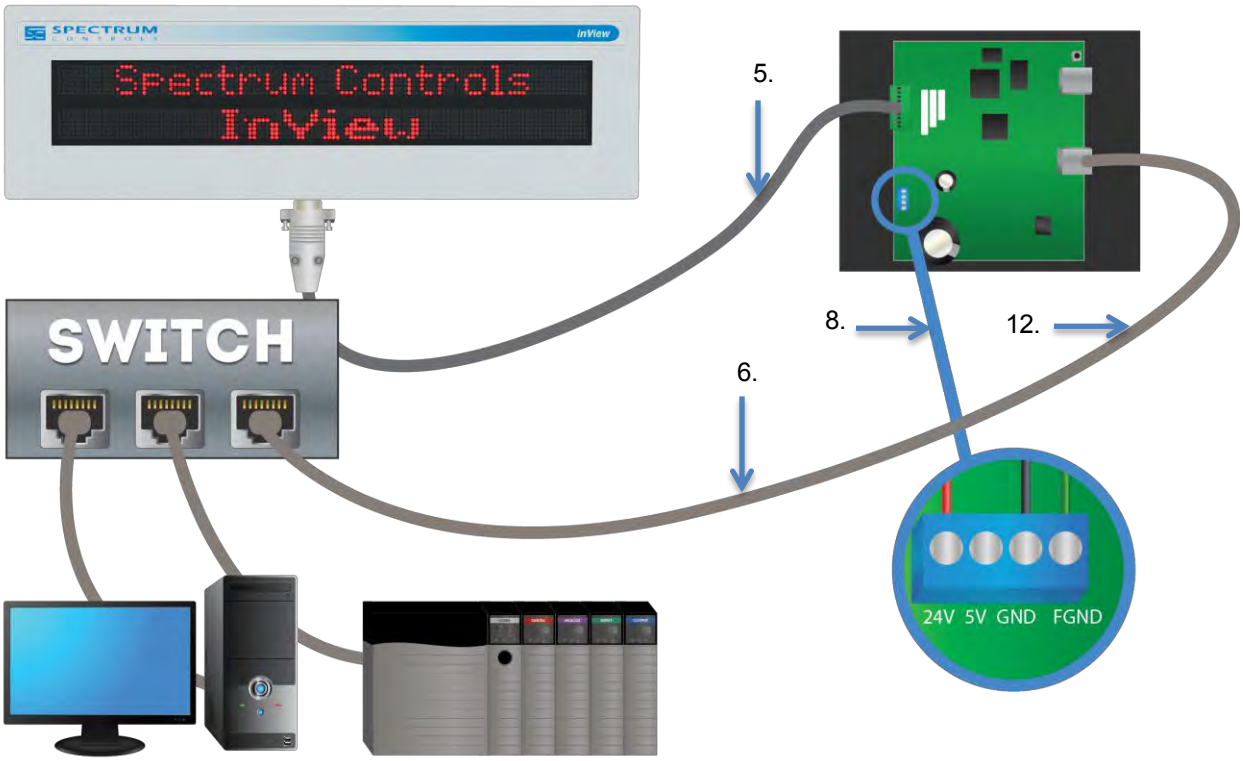

IMPORTANT	The 2706-PENETP2-SC Comms module is provided with cable PN 6010100-*nn*, (5 meters long). Pinouts are shown below.

Terminal Block J5 on Comms Module		
Pin	**Signal**	**Color**
10	Frame GND	Shield
9	RI (NC)	
8	RTS (O)	Green
7	CTS (I)	Brown or Orange
6	NC	-
5	Isolated GND	Black
4	NC	
2	TX (O)	White
3	RX (I)	Red
1	CD (NC)	-

DB-9F Connector plugged into P22 Display		
Pin	**Signal**	**Color**
1	NC	-
2	RX	White
3	TX	Red
4	NC	-
5	GND	Black
6	NC	-
7	CTS	Green
8	RTS	Brown or Orange
9	NC	-

WARNING	**Hazard of damage to electronic equipment.** **Failure to ensure that jumper J2 is in the correct position for the voltage supplied to the InView Comms module can result in damage to the module circuitry.** Before applying power to the InView Comms Module, check that the jumper is in the correct position for your application.

WARNING	**Danger de dommage pour l'équipement électronique**. **S'assurez que le cavalier J2 est dans la position correcte pour la tension fournie au module de communication InView sinon cela pourrait entrainer des dommages a l'ensemble des circuits du module.** InView en tension, vérifiez que le cavalier est dans la position de voltage adequat pour votre application.

7. Jumper J2 settings are shown as labeled on the board and in 24 VDC or 5 VDC positions.

   Check jumper J2 is correctly positioned for your application:

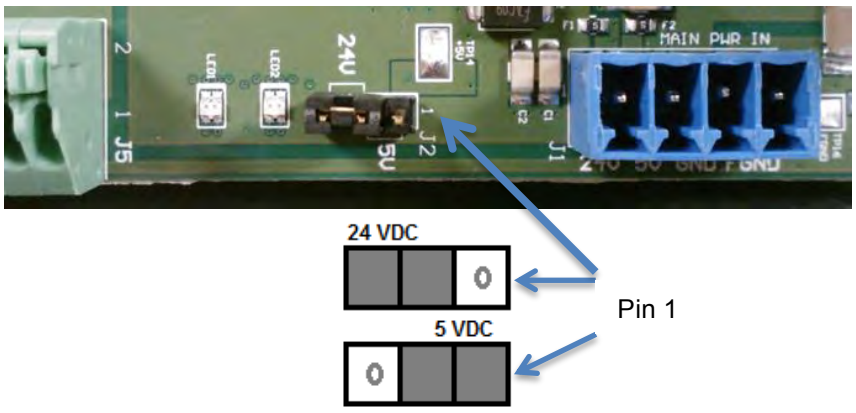

8. Connect 24 VDC to the comms module. Wire **+24 V** to Pin **J1-1**. Wire **-24 V** to Pin **J1-3**.
9. Turn +24 VDC power on.

   The Comms Module starts up.
10. If you press the reset button in the module, the module restarts, initializes, and displays the Comms Module's MAC address, its Ethernet IP address, and its Gateway IP addresses as part of the associated InView display.
11. Write down the values. Example: **192.168.1.100**
12. Connect your PC and PLC to the unmanaged switch and start an Internet browser.
13. In the Address field, type the IP address you obtained from the display to which the Comms Module is connected.
14. Example entry only. Your value will be different: **192.168.1.100**

15. The InView User Interface starts up. If you do not have Adobe Flash Player installed on your computer, the software provides a link for you to access, download, and install the Flash Player. Follow Adobe's instructions to install the Flash Player.
16. If needed, re-enter the IP address in the Browser.
17. The InView User Interface software starts up and provides you with a login screen. Enter the default password:

    spectrum

    The main InView User Interface View window appears.
18. Use the online help or Chapter 3 to finish setting up your InView and display.
19. Follow directions. If needed, click **Help** button for specific instructions:

Section 2.7 Getting Hardware and Software Information

You can get hardware equipment and software version information using a web browser. To access this information:

To save database record files:

1. If needed, log onto the InView:

   See Logging onto the InView User Interface
2. Right click on the window:

   The following popup menu appears:

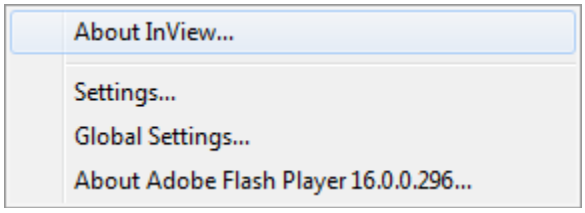

3. View the information using the following options:
   - **About InView**. Displays the current InView Messaging Software User Interface software version, InView Comms Module serial number, and its model number:

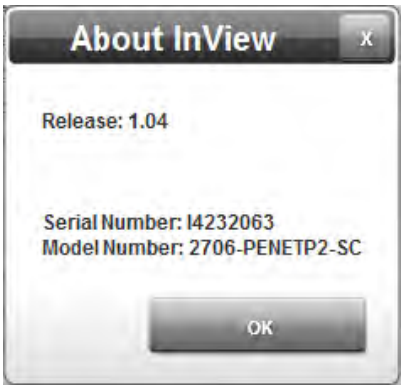

- **Settings...**. Displays software that allows you to view and modify all Adobe Flash Player settings documentation for further help):

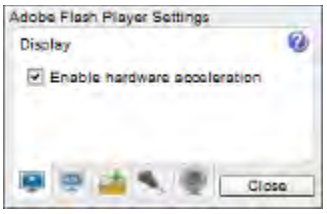

- **Global Settings...**. Displays the Flash Player Settings Manager dialog. You may need to give permission for this to run (allow):

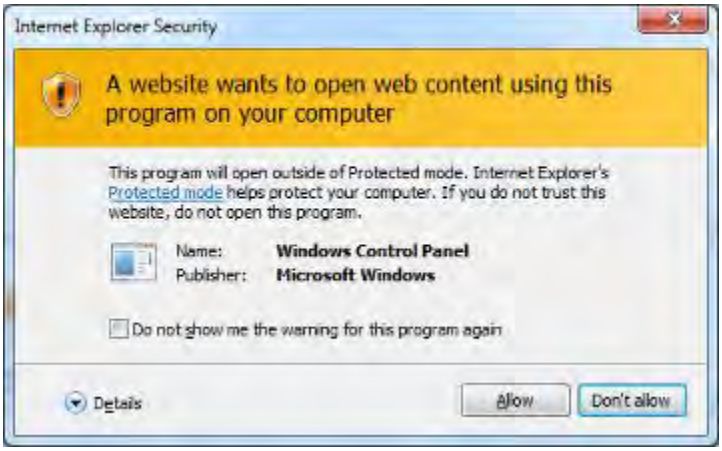

- Use the software to change settings as needed:

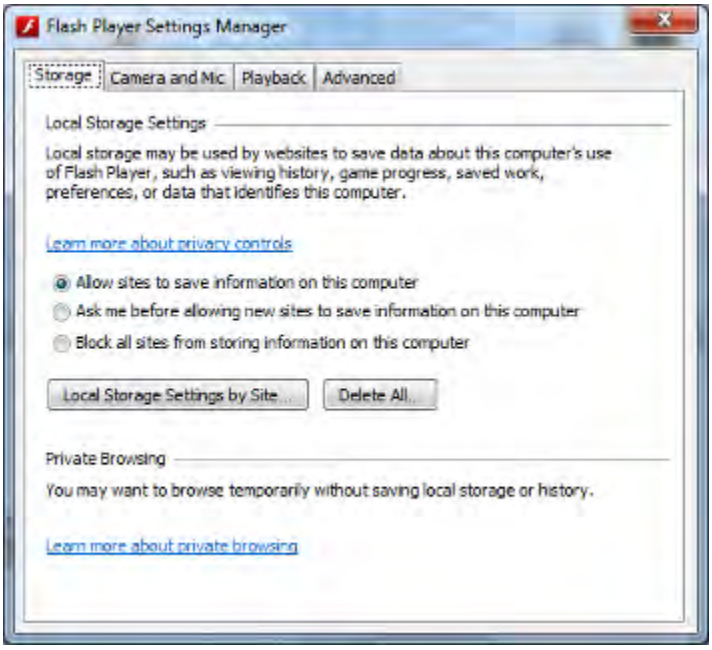

- **About Adobe Flash Player *version*...**. Displays current version of the Adobe Flash Player in use and opens the Adobe Flash Player website (refer to Adobe documentation for further help).

Section 2.8 Getting IP Address Information

You can determine the IP address and other addresses, including the MAC address for your personal computer as follows:

1. From the main window on your personal computer, click **Start**: The following field appears:

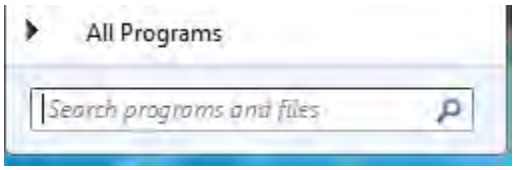

2. In the field, type **cmd** and press **Enter**: The command window appears:

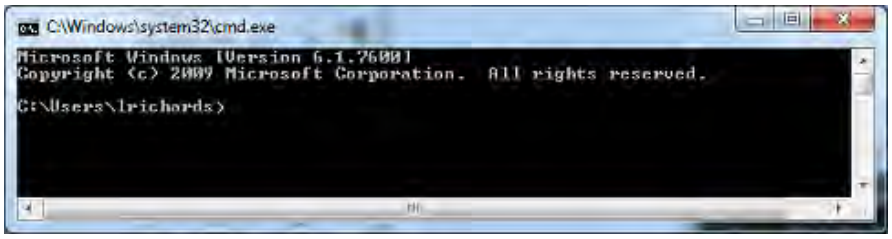

3. At the command prompt, type **ipconfig /all**, and press **Enter**: The following list of all addresses associated with your device appears:

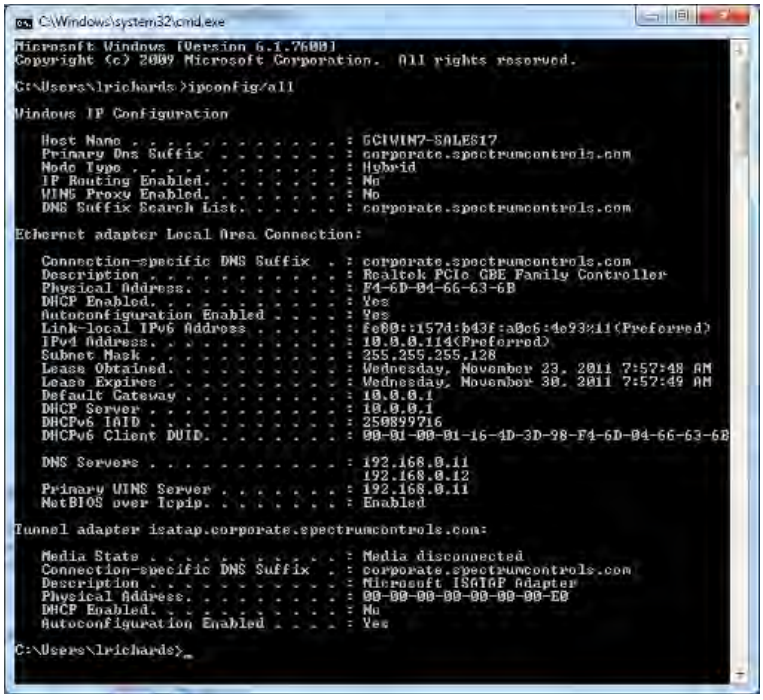

4. Use this list to set up your communications network (if you wish to have your Comms module on the same network as your personal computer).
5. To exit this window, at the command prompt, type **exit**, and press **Enter**.

Section 2.9 Pinging IP Addresses

Whether or not you are able to ping an individual InView Comms Module is dependent on your PC's security settings, and whether or not you have chosen to allow pings over your network.

You can determine whether or not a device such as a computer, InView Comms Module, router, or other device that has an IP address is reachable from your device by using the **ping** command. Example: You have connected a personal computer to an InView Comms Module, and you wish to determine whether or not the computer is able to communicate with the module.

To ping the InView Comms Module from the personal computer:

1. From the main window on your personal computer, click **Start**:

   The following field appears:

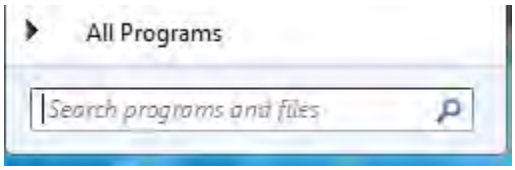

2. In the field, type **cmd** and press **Enter**:

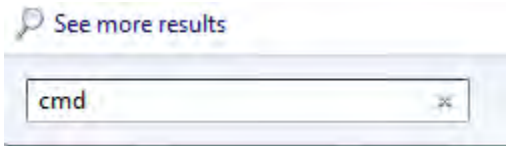

   The **C:\Windows\system32\cmd.exe** command window appears.

3. At the command prompt, type **ping *IP address*** where ***IP address*** is the address of the InView Comms Module you wish to access, and press **Enter**. Example: **10.0.0.13**:

   The following data appears in the command window:

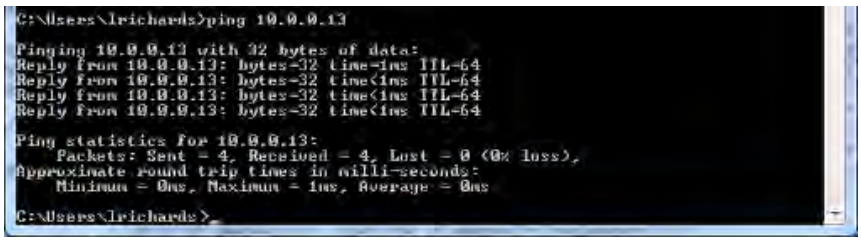

   This data lets you know that you were successful in reaching the device belonging to the IP address you entered.

4. If you were not successful in reaching the device, you will instead be informed that the device is unreachable:

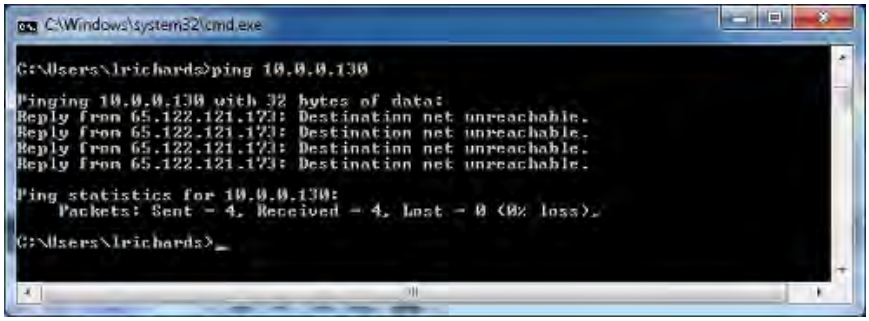

If you cannot reach the device using this command, you can contact your system administrator or technical support for additional assistance in connecting to the device you are trying to access.

Section 2.10 General Public License Information

As part of the InView product, Spectrum Controls, Inc. uses software licensed under GNU General Public License, version 2:

GPL version 2.0

Spectrum Controls, Inc. also uses software licensed under GNU General Public License, version 3:

GPL version 3.0

Please refer to the websites listed above for further information about these licenses, and how they are to be used.

Section 2.11 Limited Warranty

Spectrum Controls, Inc. warrants that its products are free from defects in material and workmanship under normal use and service, as described in Spectrum Controls, Inc. literature covering this product, for a period of 1 year. The obligations of Spectrum Controls, Inc. under this warranty are limited to replacing or repairing, at its option, at its factory or facility, any product which shall, in the applicable period after shipment, be returned to the Spectrum Controls, Inc. facility, transportation charges prepaid, and which after examination is determined, to the satisfaction of Spectrum Controls, Inc., to be thus defective.

This warranty shall not apply to any such equipment which shall have been repaired or altered except by Spectrum Controls, Inc. or which shall have been subject to misuse, neglect, or accident. In no case shall the liability of Spectrum Controls, Inc. exceed the purchase price. The aforementioned provisions do not extend the original warranty period of any product which has either been repaired or replaced by Spectrum Controls, Inc.

Chapter 3
Using the InView Messaging Software Interface

Section 3.1 Using the InView Messaging Software User Interface

NOTE Running the InView Messaging Software User Interface requires an Adobe Flash compatible web browser. The first time you run the InView Messaging Software User Interface, if you do not have the Adobe Flash Player, the User Interface prompts you to download and install the Adobe Flash Player.

NOTE Before you can use the InView Comms Module to configure the InView Display both systems must be powered on and connected to the network.

Section 3.2 Logging onto the InView Comms Module

You log onto the InView Comms Module to set up and manage all InView Comms Module functions:

NOTE All fields that show a red asterisk (*) are required.

To log onto the InView Comms Module:

1. Start web browser software. Examples: **Microsoft ® Internet Explorer**, **Mozilla Firefox**.

   The browser window appears:

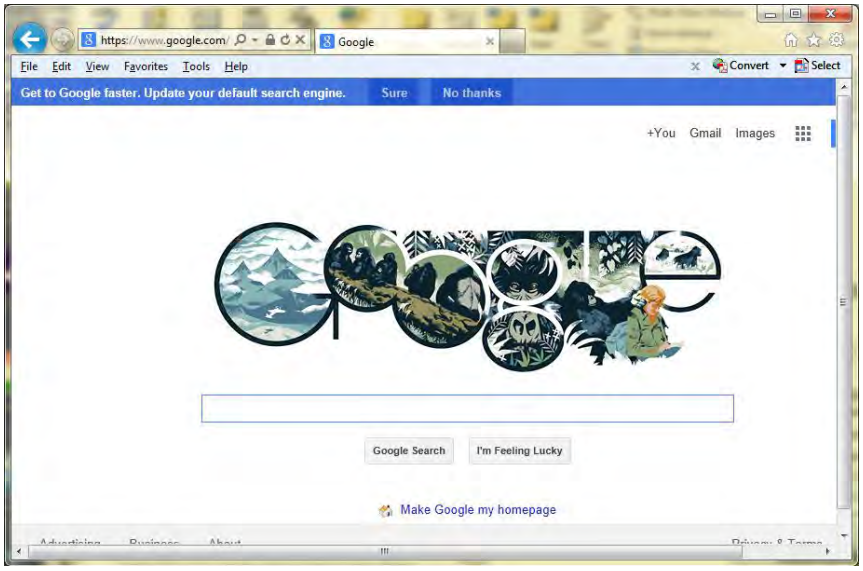

2. In the address bar, type the IP address preprogrammed on the InView Comms Module you are going to work with:

NOTE You may find that you need to install an Adobe Flash Player. If that is the case, the InView Comms Module UI appears with an Adobe Flash link on the window. Click the link and follow the Adobe instructions for installing the Player:

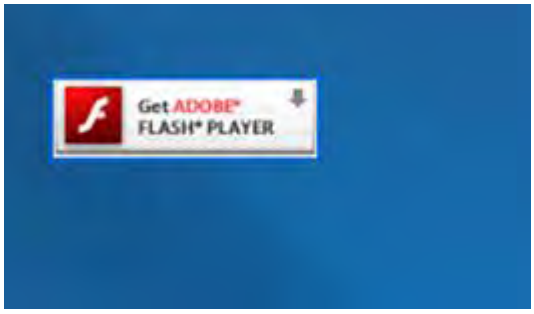

- Enter the IP address you specified during system installation. Example: **10.0.0.19**

The InView User Interface login dialog appears:

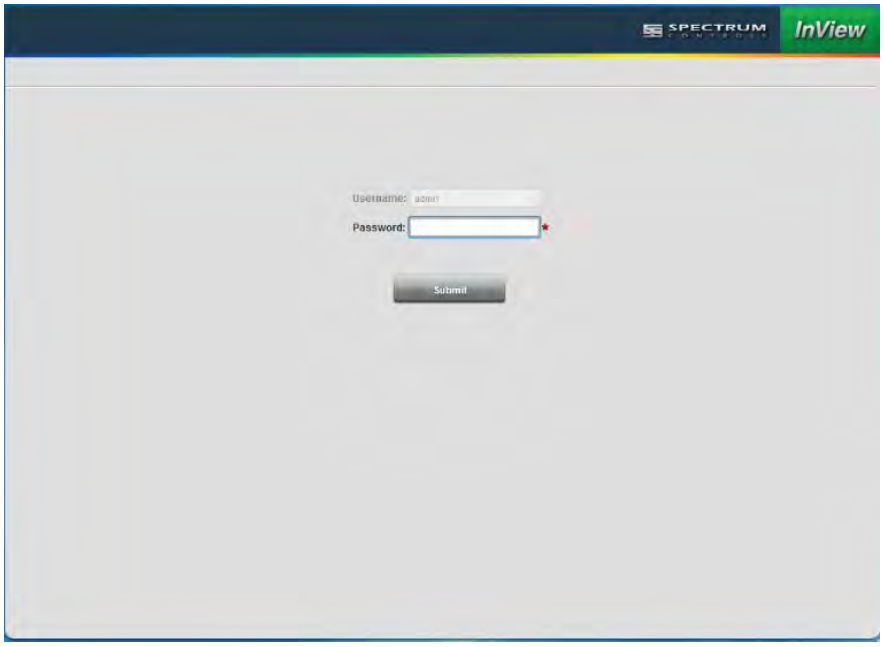

3. Type in (enter) your password. The asterisk [*] beside the field tells you that you must enter information in this field.
4. The default username is not editable. The default password provided with your InView Comms Module is:
   - **Username**. Default user name (**admin)** is not editable.
   - **Password**. Default password is **spectrum**.

   - Change the password for additional security. See Configuring Security Setup for the InView Comms Module
5. Click **Submit**.

   The software informs you that it is retrieving data and displays the InView User Interface window.

   See About the InView User Interface Window

Section 3.3 About the InView User Interface Window

NOTE Before you can configure your InView Comms Module, you must have the InView Comms Module powered on.

NOTE The Comms module software has replaced the 2706-PENET1 hardware and software. An external, PC-based message server is still required.

See Installing the InView Comms Module

The Spectrum Controls, Inc. InView Messaging Software uses message groups to define and store information for an InView display. The information includes display type and message content. Typically, a message group contains information for a specific display type. All message group tasks are performed from the InView software using typical dialog controls, menus, and toolbar buttons.

You use the InView Comms Module User Interface Window to interact with the InView Comms Module to configure communications between message server PLCs, InView displays, and a personal computer, and to create, view and send messages to InView displays:

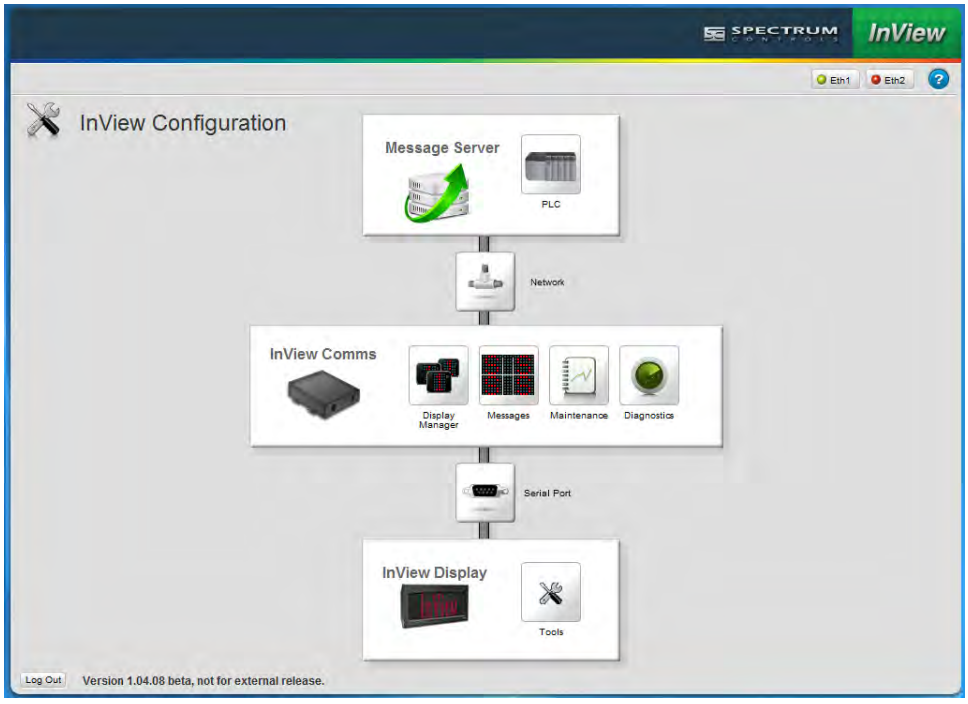

The InView Comms Module User Interface Window contains:

- **InView Comms Module User Interface Title Bar**. Accesses **InView Configuration** work area, and displays company name and logo.
- **InView Comms Module User Interface Menu Bar**. Accesses **Eth1** and **Eth2** communications connection information, and online help.
- **InView Comms Module User Interface Work Area**. Provides access to InView Messaging Software for configuration and messaging, and to view maintenance and diagnostic information.

3.3.1 InView Comms Module User Interface Title Bar

The InView User title bar shows the company name and InView Comms Module logo.

3.3.2 InView User Interface Menu Bar

The InView Comms Module User Interface menu bar provides access to InView Comms Module Eth1 and Eth2 communications status data and online help:

The status panel updates every ten seconds.

NOTE

- When green, a connection is active.
- When red, a connection is not active.

To access Eth1 communications status information, mouse over the Eth1 icon:

See Viewing Eth1 Communications Status Information

To access Eth2 communications status information, mouse over the Eth2 icon:

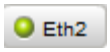

See Viewing Eth2 Communications Status Information

To access online help, select the Help icon:

See Viewing Help Information

3.3.3 InView User Interface Configuration Work Area

To access the Configuration work area, bring up the InView embedded web page. See Logging into the InView Comms Module User Interface.

The InView Configuration work area appears:

Use the InView Configuration work area for setting up your entire InView Comms Module configuration. You may access help about all configuration software options from this dialog.

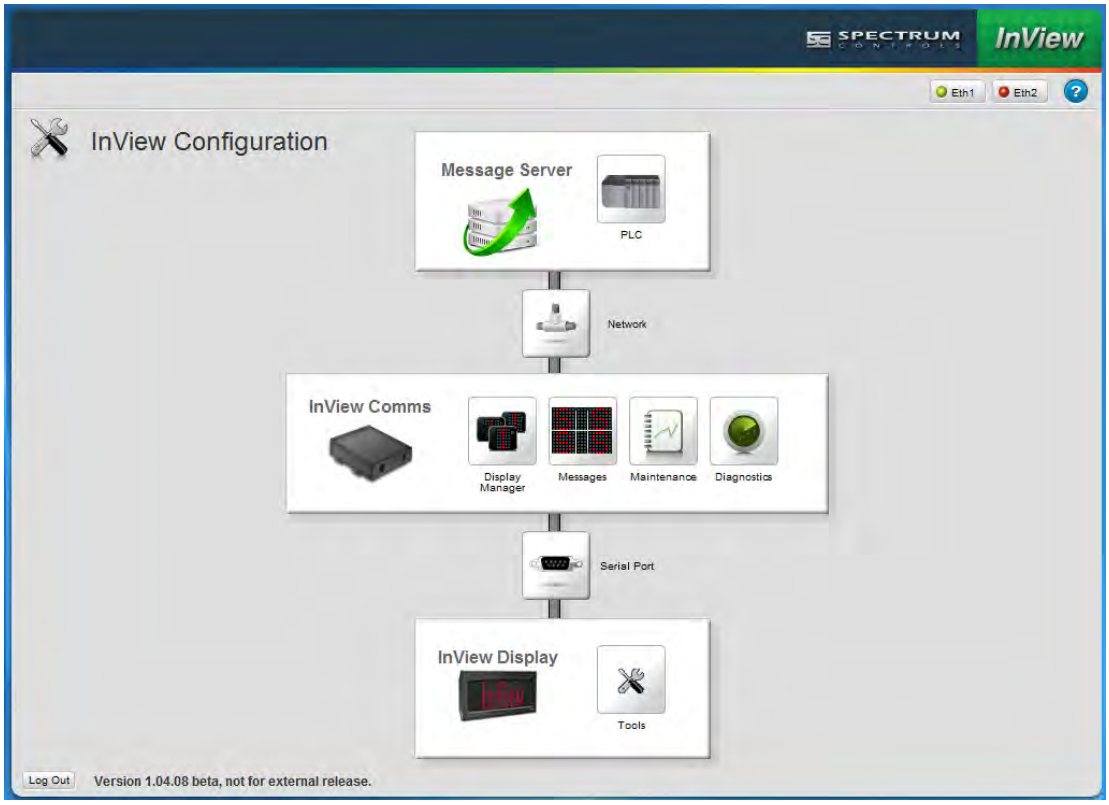

Section 3.4 Configuring PLC Server Setup for the InView Comms Module

You may configure message server access using one of three modes:

- **Classic mode**. Provides compatibility with older RA ladder logic Add-On-Instructions commonly used in conjunction with legacy Rockwell Automation InView Comms Modules.
- **Easy mode**. Forms the **Ctrl-T** and **Ctrl-V** InView Display language commands for you.
- **TCP/IP Passthrough**. Provides message server access to a PC message server application (TCP/IP Passthrough option replaces the PENET1 hardware and software).

Classic and Easy modes function as follows:

- **Classic Mode**. This mode provides backwards compatibility with the legacy ladder logic on PLC message servers used with older, legacy, Rockwell Automation Comms modules. A message server is typically used to update system variables and to trigger system messages. The InView Comms Module setup

defines the settings for communication between a PLC Message Server, a personal computer, or a communications protocol, and the Comms Module. The Spectrum InView Comms Module then monitors the **Message Trigger Address** and the **Variable Update Address** on the host message server. When the tag changes state, the Comms Module reads the **CTRL-T** (Trigger) ASCII commands from the PLC message server. The Comms Module forwards these as a Function Frame to the InView display using the serial link (RS-232 or RS-485).

This mode also requires a Rockwell Add On Instruction in the PLC's ladder logic in order to form the complete InView language CTRL-T or CTRL-V ASCII string Function Frame from the PLC Message Data Address or Variable Data Address. The Comms Module then relays that Function Frame to the InView display's control module using the serial link. If you are sufficiently familiar with InView Modbus ASCII language, you may also form your own CTRL-T or CTRL-V Function Frame strings.

- **Easy Mode** . Easy mode allows you to provide plain INT or SINT/STRING tag values for the prescribed Message Trigger update tags instead of having to form the completed InView language Function Frame string in the PLC ladder logic. The InView Communications Module converts the tags to InView Function Frame strings and sends them to the InView display. Monitoring for Message Trigger tags and Variable Update Trigger tags functions the same way as in Classic mode. In Easy Mode, the Comms Module is able to scan tags on PLCs that use the specified communications protocol, regardless of the make of the PLC you are using as a message server. Example. If you select the Modbus TCP protocol, the Comms Module can scan tags on most PLCs that use Modbus TCP.

For PLCs, you may specify an interscan delay if tag polling traffic generates too many requests for the message server.

To determine which protocol matches which message server, see About Available Protocols Using Existing Hardware.

NOTE

If you select a PLC type that uses a different protocol than that used by the previous message server type selection, (changing from PCCC to CIP or CIP to PCCC, for example), several changes occur:

- Polling is disabled.
- The tag configuration is cleared and set to a default. This is necessary because tag settings that are valid between an existing protocol and the InView controller may need to be cleared of data that is not valid for the new protocol.
- The setup dialog changes according to the selected PLC type. Differences are documented in the options for individual PLC types.

To configure the message server setup:

1. From the InView Configuration Work Area, select the following icon:

The PLC/Tag Setup dialog appears:

2. View or specify the following options:
   - **PLC**. Lists message server options:
     - *Msg Server Type*. From this list choose the PLC type or protocol you wish to configure:
     - PLC type. Lists PLCs or protocols you can select as a message server:

       If you change between PLCs, the software warns you that the change will clear your tag configuration. Confirm that this is the case as shown in the example below:

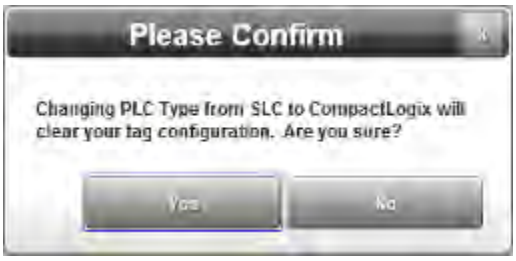

       - CompactLogix. See Configuring CompactLogix Message Server Setup for the InView Comms Module.
       - ControlLogix. See Configuring ControlLogix Message Server Setup for the InView Comms Module.
       - MicroLogix/PLC5/SLC. See Configuring MicroLogix/PLC5/SLC Message Server Setup for the InView Comms Module.

- Passthrough. See Configuring Passthrough.
- Modbus TCP. See Configuring Modbus TCP Message Server Setup.

3. **Submit**. Click to save entered changes (applies to both **PLC** and **Tag Setup** fields.
4. **Cancel**. Click to cancel any changes and restore the current settings (applies to both **PLC** and **Tag Setup** fields.

Section 3.5 Configuring ControlLogix Message Server Setup for the InView Comms Module

You may configure a ControlLogix Message Server using one of two modes:

- Classic mode. Provides compatibility with older RA ladder logic Add-On-Instructions commonly used in conjunction with legacy Rockwell Automation InView Comms Modules.
- Easy mode. Forms the Ctrl-T and Ctrl-V InView Display language commands for you.

The two modes function as follows:

- **Classic Mode**. This mode provides backwards compatibility with the legacy ladder logic on PLC message servers used with older, legacy, Rockwell Automation Comms modules. A message server is typically used to update system variables and to trigger system messages. The InView Comms Module setup defines the settings for communication between a PLC Message Server, a personal computer, or a communications protocol, and the Comms Module. The Spectrum InView Comms Module then monitors the **Message Trigger Address** and the **Variable Update Address** on the host message server. When the tag changes state, the Comms Module reads the **CTRL-T** (Trigger) ASCII commands from the PLC message server. The Comms Module forwards these as a Function Frame to the InView display using the serial link (RS-232 or RS-485).
- This mode also requires a Rockwell Add On Instruction in the PLC's ladder logic in order to form the complete InView language CTRL-T or CTRL-V ASCII string Function Frame from the PLC Message Data Address or Variable Data Address. The Comms Module then relays that Function Frame to the InView display's control module using the serial link. If you are sufficiently familiar with InView Modbus ASCII language, you may also form your own CTRL-T or CTRL-V Function Frame strings.
- **Easy Mode**. Easy mode allows you to provide plain INT or SINT/STRING tag values for the prescribed Message Trigger update tags instead of having to form the completed InView language Function Frame string in the PLC ladder logic. The InView Communications Module converts the tags to InView Function Frame strings and sends them to the InView display. Monitoring for Message Trigger tags and Variable Update Trigger tags functions the same way as in Classic mode. In Easy

Mode, the Comms Module is able to scan tags on PLCs that use the specified communications protocol, regardless of the make of the PLC you are using as a message server. Example. If you select the Modbus TCP protocol, the Comms Module can scan tags on most PLCs that use Modbus TCP.

You may also specify an interscan delay if tag polling traffic generates too many requests for the message server.

To access the setup dialog, see Configuring PLC Message Server Setup for the InView Comms Module.

NOTE

If you select a PLC type that uses a different protocol than that used by the previous message server type selection, (changing from PCCC to CIP or CIP to PCCC, for example), several changes occur:

- Polling is disabled.
- The tag configuration is cleared and set to a default. This is necessary because tag settings that are valid between an existing protocol and the InView controller may need to be cleared of data that is not valid for the new protocol.
- The setup dialog changes according to the selected PLC type. Differences are documented in the options for individual PLC types.

To configure the setup:

1. From **PLC:Msg Server Type** drop down list, select **ControlLogix**:

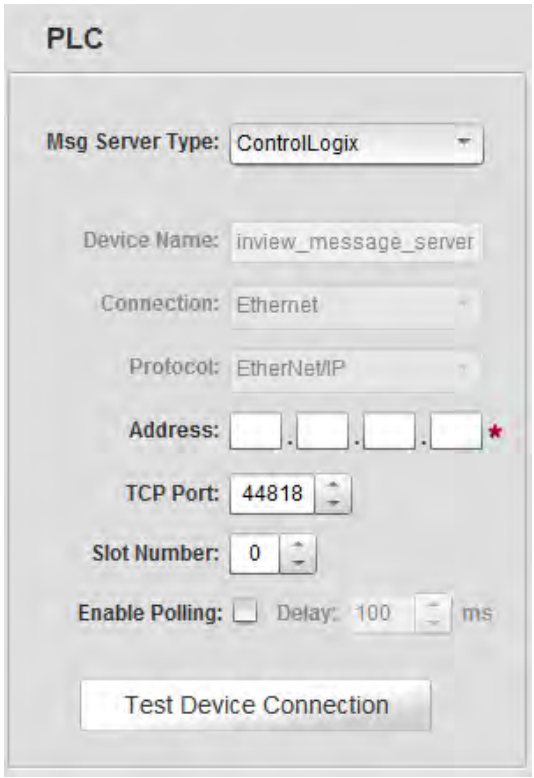

2. View or specify the following options in the PLC dialog:
   - **Device Name**. The name of the PLC message controller with which the InView display communicates. Not editable.
   - **Connection**. Shows communications connection type (Ethernet). Not editable.
   - **Protocol**. Shows communications protocol type (EtherNet/IP). Not editable.
   - **Address**. The IP address of the PLC message server with which the InView display communicates on the EtherNet/IP network. The IP address is formatted as four sets of decimal numbers with periods between them (10.0.0.1). The range of values for the first set of numbers is 1 to 255, unless all fields are 0.0.0.0. The range of values for the last three sets of decimal numbers is 0 to 255.
   - **TCP Port**. Specifies port used to communicate with controller. Default port for any PLC selected under **Message Server Type** option is **44818**. Port selection range is 1 to 50000.
   - **Slot Number**. Specify slot position of PLC controller. Range is 0 to 16.
   - **Enable Polling**. Specifies whether to enable a polling delay. Disabled by default until the user is ready to commence polling. The tag polling engine of the InView Comms is capable of putting a substantial load on the message server by flooding it with requests. Too much load will create slow response times from the server as well as generating substantial network traffic. In order to reduce the possibility of this occurring, use the **Delay** field to introduce a delay between packet reads.

NOTE After updating firmware, ensure that this option is correctly on or off for your own application. If you have turned this option on in the previous software version, check to ensure that your setting is still on.

   - **Delay *n* ms**. Specify how much polling delay to use. The default setting for this field is **100 ms**. The range is 10 ms to 500 ms.
   - **Test Device Connection**. Tests connection between InView Comms Module and PLC message server and informs you whether or not connection is active. See Testing Device Connections

3. Specify each classic or easy setup in the Tag Setup dialog:

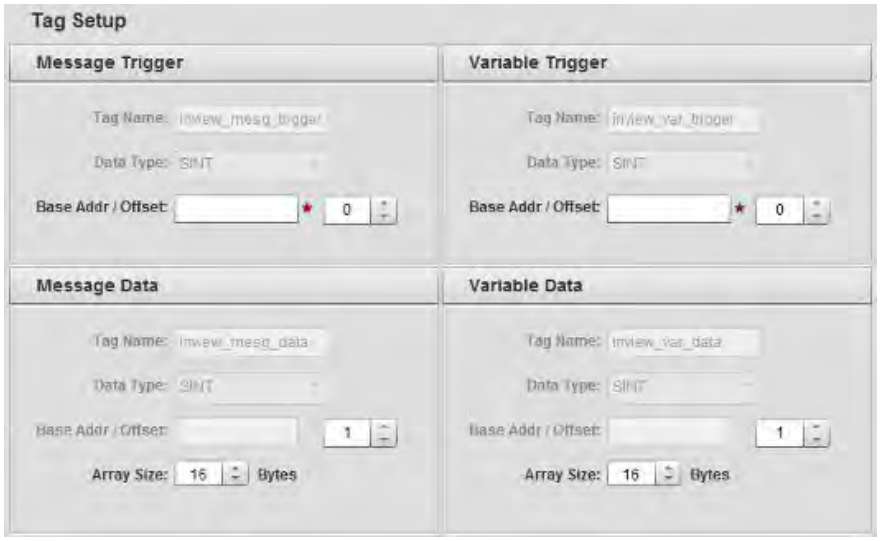

- **Message Trigger**. Specify the following:
  - *Tag Name*. View name of trigger tag. Example: **inview_mesg_trigger**. Not editable.
  - *Data Type*. View data type for tag. Not editable.
  - *Base Addr/Offset*. The controller address that will trigger a message to the display. Characters allowed for naming address are alphanumeric, underscore, and hyphen. Example: **Msg_Data**. Offset is number from 0 to 254 that references an element in an array starting at the specified offset. Range is 0 to 254.
- **Message Data**. Specify the following:
  - *Tag Name*. View name of data tag. Example: **inview_mesg_data**. Not editable.
  - *Data Type*. View data type for tag. Not editable.
  - *Base Addr/Offset*. Same as Message Trigger value. Not editable. Offset starts at [Message Trigger base address+1]. However, you can enter a different offset as long it is at least 1 increment above the Message Trigger address.
  - *Array Size*. Specifies the size of the array (from 15 to 255 characters). The array contains the variable data. The maximum array size is dependent on the controller, and must be an even integer.
- **Variable Trigger**. Specify the following:
  - *Tag Name*. View name of variable trigger tag. Not editable Example: **inview_var_trigger**.
  - *Data Type*. View data type for tag. Not editable.
  - *Base Addr/Offset*. Base address here is set from Variable

Trigger Address field. Not editable. The Offset value is the offset from the Base Address as to where the Variable Data starts.

- **Variable Data**. Specify the following:
  - *Tag Name*. Lists name of tag. Example: **inview_var_data**. Not editable.
  - *Data Type*. Lists data type for tag. Not editable.
  - *Base Addr/Offset*. Same as Variable Trigger value. Not editable. The Offset value is the offset from the Base Address as to where the Variable Data starts.
  - *Array*. Specifies the size of the variable data array. The size of the array, which contains the variable data, is 15 to 255 characters. The maximum array size is dependent on the controller and must be an even integer.
- **Easy**. Specify the following **Preset InView Tags**. You may individually edit each tag:

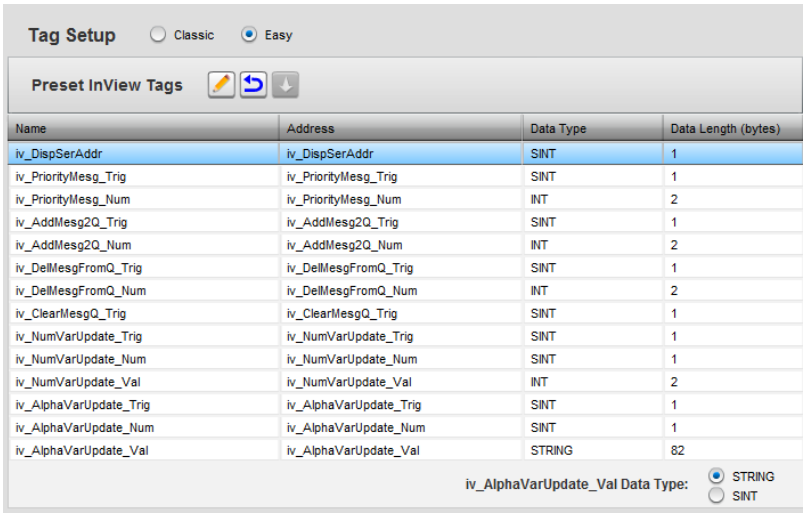

For an explanation of the easy tags, and a summary of their function, see Easy Tags Summary (Chapter 4).

  - Choose tag for **iv_AlphaVarUpdate_Val** Data Type. Options are:
    - STRING. Specifies a string with a fixed length of 82 characters. Not editable.
    - SINT. Specifies a string with a fixed length of 16 characters, range is from 16 to 128 characters. Editable.
  - *Modify*. To modify a tag entry, select the row of interest and click the following icon: Specify the following option for addresses for tags:

    - Address. If needed, specify a user-defined address for each of the tags.

- *Reset*. Select to reset any of altered tag names, addresses or integer types to the preset versions.

  Confirm that you wish to reset the tag names:

- *Download*. Select to download the tags to the PLC specified in the PLC dialog.

- **Submit**. Click to save entered changes.
- **Cancel**. Click to cancel any changes and exit.

Section 3.6 Configuring CompactLogix Message Server Setup for the InView Comms Module

You may configure a CompactLogix Message Server using one of two modes:

- Classic mode. Provides compatibility with older RA ladder logic Add-On-Instructions commonly used in conjunction with legacy Rockwell Automation InView Comms Modules.
- Easy mode. Forms the Ctrl-T and Ctrl-V InView Display language commands for you.

The two modes function as follows:

- **Classic Mode**. This mode provides backwards compatibility with the legacy ladder logic on PLC message servers used with older, legacy, Rockwell Automation Comms modules. A message server is typically used to update system variables and to trigger system messages. The InView Comms Module setup defines the settings for communication between a PLC Message Server, a personal computer, or a communications protocol, and the Comms Module. The Spectrum InView Comms Module then monitors the **Message Trigger Address** and the **Variable Update Address** on the host message server. When the tag changes state, the Comms Module reads the **CTRL-T** (Trigger) ASCII commands from the PLC message server. The Comms Module forwards these as a Function Frame to the InView display using the serial link (RS-232 or RS-485).
- This mode also requires a Rockwell Add On Instruction in the PLC's ladder logic in order to form the complete InView language CTRL-T or CTRL-V ASCII string Function Frame from the PLC Message Data Address or Variable Data Address. The Comms Module then relays that Function Frame to the

InView display's control module using the serial link. If you are sufficiently familiar with InView Modbus ASCII language, you may also form your own CTRL-T or CTRL-V Function Frame strings.

- **Easy Mode**. Easy mode allows you to provide plain INT or SINT/STRING tag values for the prescribed Message Trigger update tags instead of having to form the completed InView language Function Frame string in the PLC ladder logic. The InView Communications Module converts the tags to InView Function Frame strings and sends them to the InView display. Monitoring for Message Trigger tags and Variable Update Trigger tags functions the same way as in Classic mode. In Easy Mode, the Comms Module is able to scan tags on PLCs that use the specified communications protocol, regardless of the make of the PLC you are using as a message server. Example. If you select the Modbus TCP protocol, the Comms Module can scan tags on most PLCs that use Modbus TCP

You may also specify an interscan delay if tag polling traffic generates too many requests for the message server.

To access the setup dialog, see Configuring PLC Message Server Setup for the InView Comms Module.

NOTE

If you select a PLC type that uses a different protocol than that used by the previous message server type selection, (changing from PCCC to CIP or CIP to PCCC, for example), several changes occur:

- Polling is disabled.
- The tag configuration is cleared and set to a default. This is necessary because tag settings that are valid between an existing protocol and the InView controller may need to be cleared of data that is not valid for the new protocol.
- The setup dialog changes according to the selected PLC type. Differences are documented in the options for individual PLC types.

To configure the setup:

1. From the **PLC:Msg Server Type** drop down list, select CompactLogix:

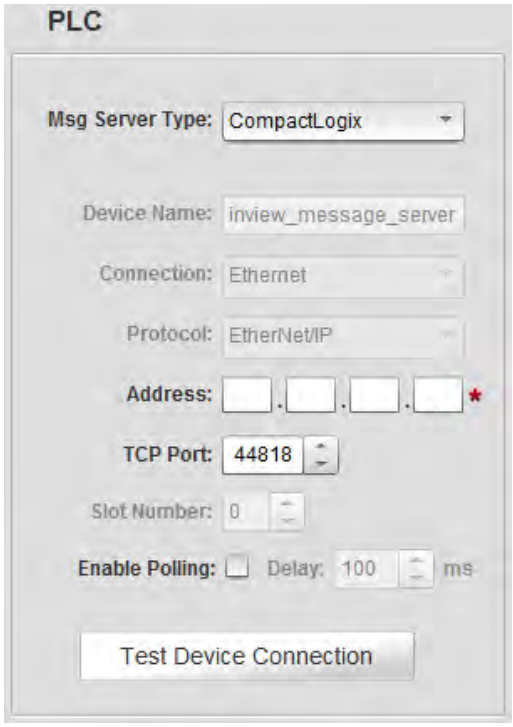

2. View or specify the following options in the PLC dialog:
   - **Device Name**. The name of the PLC message controller with which the InView display communicates. Not editable.
   - **Connection**. Shows communications connection type (Ethernet). Not editable.
   - **Protocol**. Shows communications protocol type (Ethernet/IP). Not editable.
   - **Address**. The IP address of the PLC message server with which the InView display communicates on the EtherNet/IP network. The IP address is formatted as four sets of decimal numbers with periods between them (10.0.0.1). The range of values for the first set of numbers is 1 to 255, unless all fields are 0.0.0.0. The range of values for the last three sets of decimal numbers is 0 to 255.
   - **TCP Port**. Specifies port used to communicate with controller. Default port for any PLC selected under **Message Server Type** option is **44818**. Port selection range is 1 to 50000.
   - **Slot Number**. Slot position of PLC controller. Not editable.
   - **Enable Polling**. Specifies whether to enable a polling delay. Disabled by default until the user is ready to commence polling. The tag polling engine of the InView Comms is capable of putting a substantial load on the message server by flooding it with requests. Too much load will create slow response times from the server as well as generating substantial network traffic. In order to reduce the possibility of this occurring, use the **Delay** field to introduce a delay between packet reads.

NOTE After updating firmware, ensure that this option is correctly on or off for your own application. If you have turned this option on in the previous software version, check to ensure that your setting is still on.

- **Delay *n* ms**. Specify how much polling delay to use. The default setting for this field is **100 ms**. The range is 10 ms to 500 ms.
- **Test Device Connection**. Tests connection between InView Comms Module and PLC message server and informs you whether or not connection is active. See Testing Device Connections

3. View or specify the following options in the Tag Setup dialog:

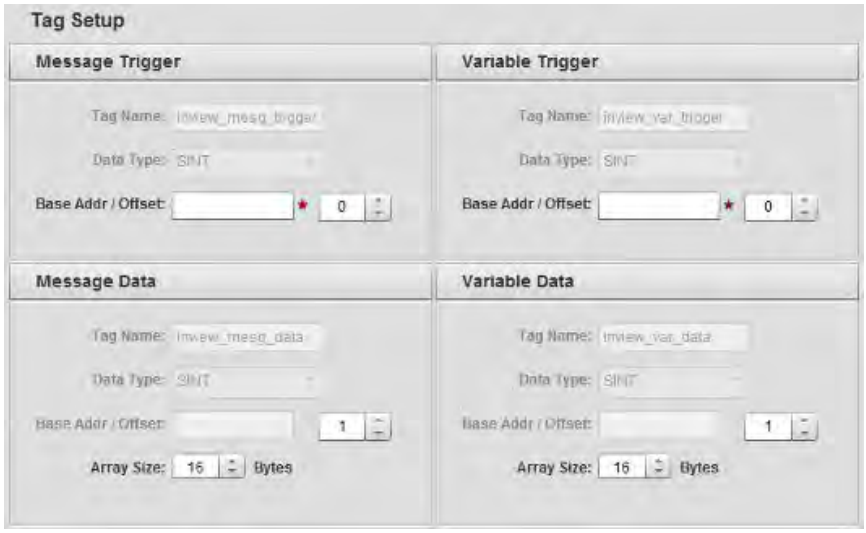

- **Message Trigger**. Specify the following:
  - *Tag Name*. View name of trigger tag. Example: **inview_mesg_trigger**. Not editable.
  - *Data Type*. View data type for tag. Not editable.
  - *Base Addr/Offset*. The controller address that will trigger a message to the display. Characters allowed for naming address are alphanumeric, underscore, and hyphen. Example: **Msg_Data**. Offset is number from 0 to 254 that references an element in an array starting at the specified offset. Range is 0 to 254.
- **Message Data**. Specify the following:
  - *Tag Name*. View name of data tag. Example: **inview_mesg_data**. Not editable.
  - *Data Type*. View data type for tag. Not editable.
  - *Base Addr/Offset*. Same as Message Trigger value. Not editable. Offset starts at [Message Trigger base address+1]. However, you can enter a different offset as

long it is at least 1 increment above the Message Trigger address.

- *Array Size*. Specifies the size of the array (from 15 to 255 characters). The array contains the variable data. The maximum array size is dependent on the controller and must be an even integer.

- **Variable Trigger**. Specify the following:
  - *Tag Name*. View name of variable trigger tag. Not editable Example: **inview_var_trigger**.
  - *Data Type*. View data type for tag. Not editable.
  - *Base Addr/Offset*. The controller address that will trigger a message variable to the display. Base address here is set from Variable Trigger Address field. Not editable. The Offset value is the offset from the Base Address as to where the Variable Data starts.
- **Variable Data**. Specify the following:
  - *Tag Name*. Lists name of tag. Example: **inview_var_data**. Not editable.
  - *Data Type*. Lists data type for tag. Not editable.
  - *Base Addr/Offset*. The starting address of the variable data to be displayed. Base address here is set from Variable Trigger Address field. Not editable. The Offset value is the offset from the Base Address as to where the Variable Data starts.
  - *Array Size*. Specifies the size of the array. The array contains the variable data. The maximum array size is dependent on the controller and must be an even integer.
- **Easy**. Specify the following **Preset InView Tags**. You may individually edit each tag:

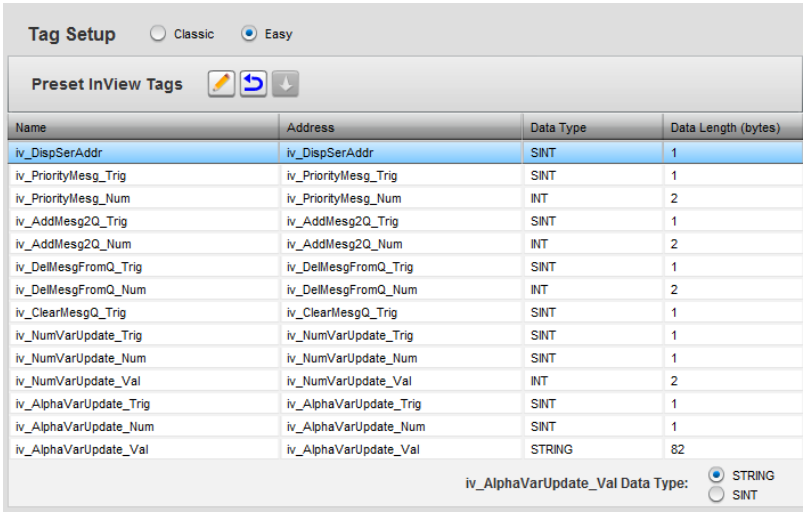

For an explanation of the easy tags, and a summary of their function, see Easy Tags Summary (Chapter 4).

- Choose tag for **iv_AlphaVarUpdate_Val** Data Type. Options are:
  - STRING. Specifies a string with a fixed length of 82 characters. Not editable.
  - SINT. Specifies a string with a fixed length of 16 characters, range is from 16 to 128 characters. Editable.
- *Modify*. To modify a tag entry, select the row of interest and click the following icon: Specify the following option for addresses for tags:

  - Address. If needed, specify a user-defined address for each of the tags.
- *Reset*. Select to reset any of altered tag names, addresses or integer types to the preset versions.

Confirm that you wish to reset the tag names:

- *Download*. Select to download the tags to the PLC specified in the PLC dialog.

- **Submit**. Click to save entered changes.
- **Cancel**. Click to cancel any changes and exit.

Section 3.7 Configuring MicroLogix/PLC5/SLC Message Server Setup for the InView Comms Module

You may configure a MicroLogix/PLC5 or SLC Message Server using one of two modes:

- Classic mode. Provides compatibility with older RA ladder logic Add-On-Instructions commonly used in conjunction with legacy Rockwell Automation InView Comms Modules.
- Easy mode. Forms the Ctrl-T and Ctrl-V InView Display language commands for you.

The two modes function as follows:

- **Classic Mode**. This mode provides backwards compatibility with the legacy ladder logic on PLC message servers used with older, legacy, Rockwell Automation Comms modules. A message server is typically used to update system variables and to trigger system messages. The InView Comms Module setup defines the settings for communication between a PLC Message Server, a personal computer, or a communications protocol, and the Comms Module. The Spectrum InView Comms Module then monitors the **Message Trigger Address** and the **Variable Update Address** on the host message server. When the tag changes state, the Comms Module reads the **CTRL-T** (Trigger) ASCII commands from the PLC message server. The Comms Module forwards these as a Function Frame to the InView display using the serial link (RS-232 or RS-485).

  The user is required to implement in ladder logic the fully formed InView display language **CTRL-T** and **CTRL-V** function frames stored at the specified Message Data Address & Variable Data address for MicroLogix/PLC5/SLC.
- **Easy Mode**. Easy mode allows you to provide plain INT or SINT tag values for the prescribed Message Trigger update tags instead of having to form the completed InView language Function Frame string in the PLC ladder logic. The InView Communications Module converts the tags to InView Function Frame strings and sends them to the InView display. Monitoring for Message Trigger tags and Variable Update Trigger tags functions the same way as in Classic mode. In Easy Mode, the Comms Module is able to scan tags on PLCs that use the specified communications protocol, regardless of the make of the PLC you are using as a message server. Example. If you select the Modbus TCP protocol, the Comms Module can scan tags on most PLCs that use Modbus TCP

You may also specify a delay if tag polling traffic generates too many requests for the message server.

To access the setup dialog, see Configuring PLC Message Server Setup for the InView Comms Module.

NOTE

If you select a PLC type that uses a different protocol than that used by the previous message server type selection, (changing from PCCC to CIP or CIP to PCCC, for example), several changes occur:

- Polling is disabled.
- The tag configuration is cleared and set to a default. This is necessary because tag settings that are valid between an existing protocol and the InView controller may need to be cleared of data that is not valid for the new protocol.
- The setup dialog changes according to the selected PLC type. Differences are documented in the options for individual PLC types.

1. From the **PLC:Msg Server Type** drop down list, select **MicroLogix**, **PLC5**, or **SLC**:

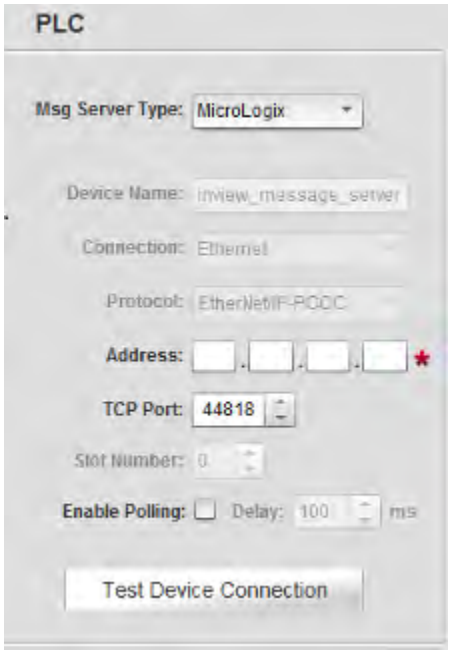

2. View or specify the following options in the PLC dialog:
   - **Device Name**. The name of the PLC message controller with which the InView display communicates. Not editable.
   - **Connection**. Shows communications connection type (Ethernet). Not editable.
   - **Protocol**. Shows communications protocol type (EtherNet/IP-PCCC). Not editable.
   - **Address**. The IP address of the PLC message server with which the InView display communicates on the EtherNet/IP network. The IP address is formatted as four sets of decimal numbers with periods between them (10.0.0.1). The range of values for the first set of numbers is 1 to 255, unless all fields are 0.0.0.0. The range of values for the last three sets of decimal numbers is 0 to 255.

- **TCP Port**. Specifies port used to communicate with controller. Default port for any PLC selected under **Message Server Type** option is **44818**. Port selection range is 1 to 50000.
- **Slot Number**. Specify slot position of PLC controller. Range is 0 to 16.
- **Enable Polling**. Specifies whether to enable a polling delay. Disabled by default until the user is ready to commence polling. The tag polling engine of the InView Comms is capable of putting a substantial load on the message server by flooding it with requests. Too much load will create slow response times from the server as well as generating substantial network traffic. In order to reduce the possibility of this occurring, use the **Delay** field to introduce a delay between packet reads.

NOTE After updating firmware, ensure that this option is correctly on or off for your own application. If you have turned this option on in the previous software version, check to ensure that your setting is still on.

- **Delay *n* ms**. Specify how much polling delay to use. The default setting for this field is **100 ms**. The range is 10 ms to 500 ms.
- **Test Device Connection**. Tests connection between InView Comms Module and PLC message server and informs you whether or not connection is active. See Testing Device Connections.

3. Specify each classic or easy setup in the Tag Setup dialog:

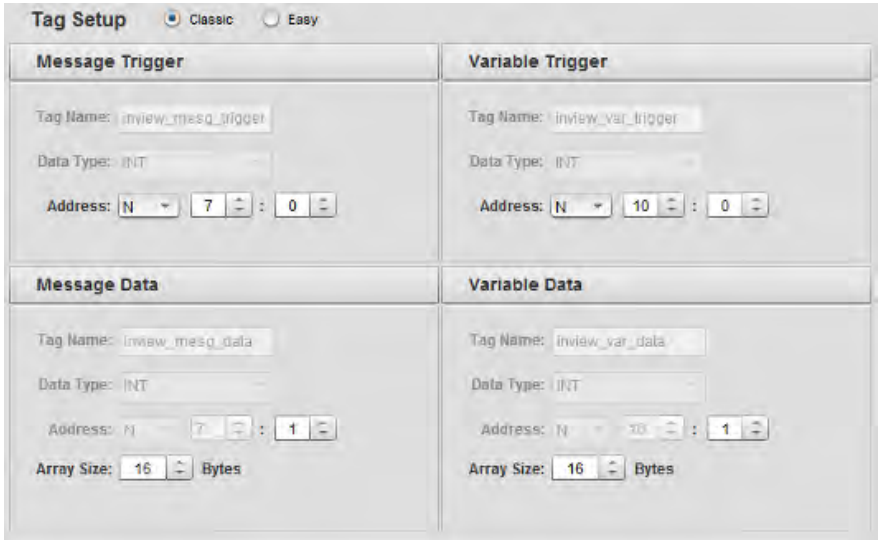

- **Message Trigger**. Specify the following:
  - *Tag Name*. View name of trigger tag. Example: **inview_mesg_trigger**. Not editable.
  - *Data Type*. View data type for tag. Not editable.
  - *Address*. The controller address that will trigger a

message to the display. Lists address in N:7:0 (PCCC tag address) format.

- **Message Data**. Specify the following:
  - *Tag Name*. View name of data tag. Example: **inview_mesg_data**. Not editable.
  - *Data Type*. View data type for tag. Not editable.
  - *Address*. The starting address of the data to be displayed. Lists address in N:7:0 (PCCC tag address) format.
  - *Array Size*. Specifies the size of the array (from 15 to 255 bytes). MicroLogix is 16 to 78 bytes, PLC5 is 16 to 228 bytes, and SLC is 16to 78 bytes. The array contains the variable data. The maximum array size is dependent on the controller and must be an even integer.
- **Variable Trigger**. Specify the following:
  - *Tag Name*. View name of variable trigger tag. Not editable Example: **inview_var_trigger**.
  - *Data Type*. View data type for tag. Not editable.
  - *Address*. The controller address that will trigger a message variable to the display. Not editable. Lists address in N:7:0 (PCCC tag address) format.
- **Variable Data**. Specify the following:
  - *Tag Name*. Lists name of tag. Example: **inview_var_data**. Not editable.
  - *Data Type*. Lists data type for tag. Not editable.
  - *Address*. The starting address of the variable data to be displayed. Not editable. Lists address in N:7:0 (PCCC tag address) format.
  - *Array Size*. Specifies the size of the array. The array contains the variable data. The maximum array size is dependent on the controller and must be an even integer.

- **Easy**. Specify the following **Preset InView Tags**. You may individually edit each tag:

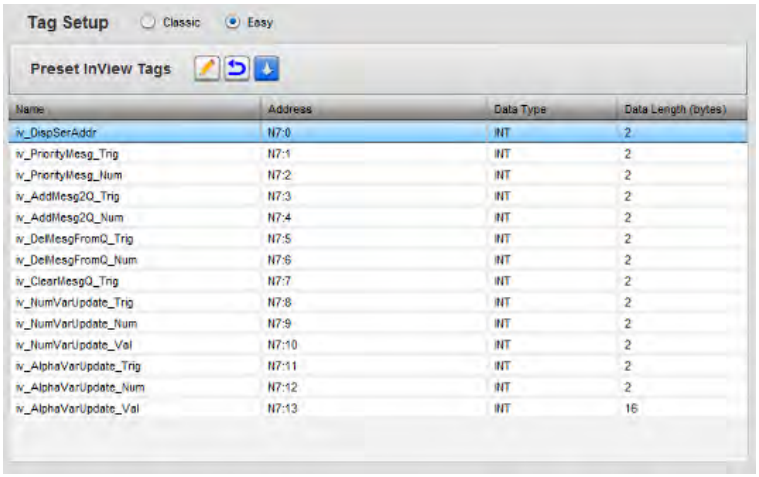

Name	Address	Data Type	Data Length (bytes)
iv_DispSerAddr	N7:0	INT	2
iv_PriorityMesg_Trig	N7:1	INT	2
iv_PriorityMesg_Num	N7:2	INT	2
iv_AddMesg2Q_Trig	N7:3	INT	2
iv_AddMesg2Q_Num	N7:4	INT	2
iv_DelMesgFromQ_Trig	N7:5	INT	2
iv_DelMesgFromQ_Num	N7:6	INT	2
iv_ClearMesgQ_Trig	N7:7	INT	2
iv_NumVarUpdate_Trig	N7:8	INT	2
iv_NumVarUpdate_Num	N7:9	INT	2
iv_NumVarUpdate_Val	N7:10	INT	2
iv_AlphaVarUpdate_Trig	N7:11	INT	2
iv_AlphaVarUpdate_Num	N7:12	INT	2
iv_AlphaVarUpdate_Val	N7:13	INT	16

For an explanation of the easy tags, and a summary of their function, see Easy Tags Summary (Chapter 4).

  - *Modify*. To modify a tag entry, select the row of interest and click the following icon:

Specify the following starting address for the generated addresses for tags:

    - Starting Address. Specify the starting address for InView Message Server tags. Addresses will be generated and incremented by one for all tags in the list.
    - Variable Update Array Size. Specifies size of array (must be even integer).
    - Submit. Submits information so software can generate addresses for preset tags.
    - Cancel. Cancels information submission. No addresses are generated for preset tags.

  - *Reset*. Select to reset any of altered tag names, addresses or integer types to the preset versions.

Confirm that you wish to reset the tag names:

- *Download*. Select to download the tags to the PLC specified in the PLC dialog.

- **Submit**. Click to save entered changes.
- **Cancel**. Click to cancel any changes.

Section 3.8 Configuring TCP/IP Passthrough

TCP/Passthrough provides message server access to a PC message server application. The TCP/IP Passthrough option replaces the PENET1 hardware and software. You then use third-party software to communicate with the display via the Comms Module.

To configure TCP/IP assthrough setup:

1. From the InView Configuration Work Area, select the following icon:

The following dialog appears:

2. View or specify the following options:
   - **PLC**. Lists message server options:
     - *Msg Server Type*. From this list, choose Passthrough. Options are:
       - TCP/IP Passthrough. **Does not use a PLC**. Specifies that the Comms module is to function as a passthrough module. The TCP/IP Passthrough option replaces 2706-PENET1 TCP/IP hardware functionality, and allows you to use a PC message server application instead of a PLC message server to drive the InView display.

- View or specify the following options:

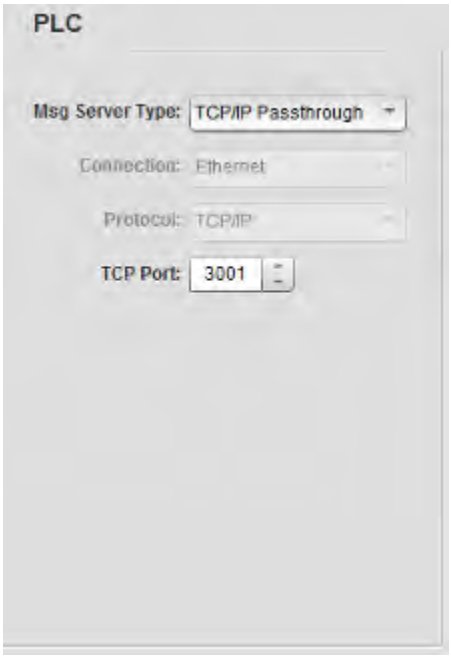

  - Connection. Lists Ethernet connection used for TCP/IP Passthrough. Not editable.
  - Protocol. Lists TCP/IP protocol used with Passthrough. Not editable.
  - TCP Port. When the **TCP/IP Passthrough** option is selected, specify which port the host PC message server application uses to communicate with the InView Comms module. (Port 3001, by default.)

3. **Submit**. Click to save entered changes.
4. **Cancel**. Click to cancel any changes and restore the current settings.

Section 3.9 Configuring Modbus TCP Message Server Setup

Easy mode allows you to provide plain INT or SINT tag values for the prescribed Message Trigger update tags instead of having to form the completed InView language Function Frame string in the PLC ladder logic. The InView Communications Module converts the tags to InView Function Frame strings and sends them to the InView display. Monitoring for Message Trigger tags and Variable Update Trigger tags functions the same way as in Classic mode. In Easy Mode, the Comms Module is able to scan tags on PLCs that use the specified communications protocol, regardless of the make of the PLC you are using as a message server. Example. If you select the Modbus TCP protocol, the Comms Module can scan tags on most PLCs that use Modbus TCP.

To configure the Modbus TCP setup:

1. From the InView Configuration Work Area, select the following icon:

The PLC/Tag Setup dialog appears:

2. View or specify the following options:
   - **PLC**. Lists message server options:
     - *Msg Server Type*. From this list, choose Modbus TCP. Options are:

- Modbus TCP. Allows you to communicate with controllers such as Schneider controllers. This protocol is not master/slave protocol. Communication is possible in both directions. View or specify the following options:

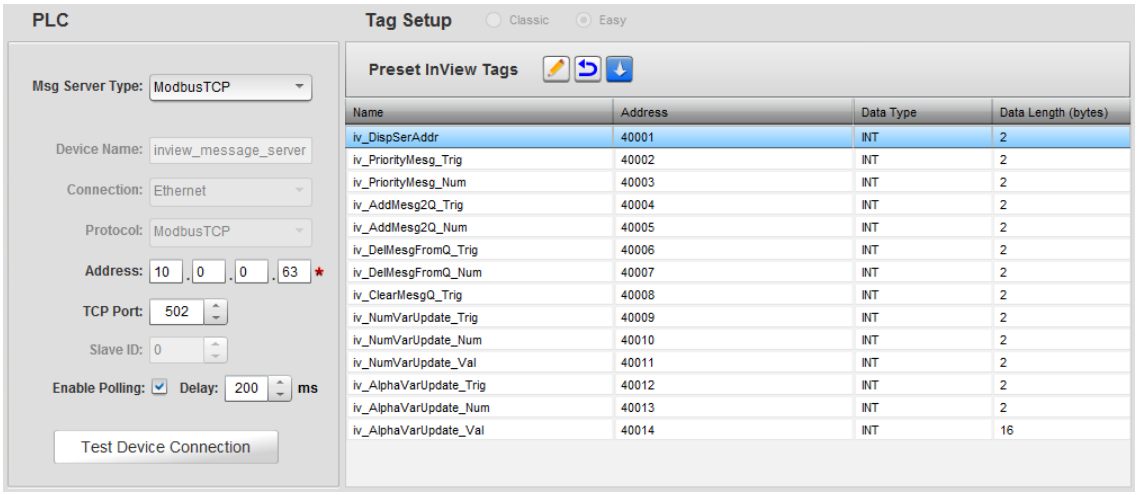

  - Device Name. The default name of the PLC with which the InView display communicates. Not editable.
  - Connection. Shows communications connection type (Ethernet). Not editable.
  - Protocol. Shows communications protocol type (Modbus TCP). Not editable.
  - Address. The IP address or host name of the controller on the Ethernet network with which the InView display communicates. The IP address is formatted as four sets of decimal numbers with periods between them (10.0.0.1). The range of values for the first set of numbers is 1 to 255, unless all fields are 0.0.0.0. The range of values for the last three sets of decimal numbers is 0 to 255.
  - TCP Port. Specifies port used to communicate with controller. Default port is **502**.
  - Slave ID. Specify value for the controller's **Slave ID**. This value is usually **1**.
  - Enable Polling. Specifies whether to enable a polling delay. Default is enabled (checked). The tag polling engine of the InView Comms is capable of putting a substantial load on the

message server by flooding it with requests. Too much load will create slow response times from the server as well as generating substantial network traffic. In order to reduce the possibility of this occurring, use the **Delay** field to introduce a delay between packet reads.

- Delay *n* ms. Specify how much polling delay to use. The default setting for this field is **100 ms**. The range is 10 ms to 500 ms.
- Test Device Connection. Tests connection between InView Comms Module and PLC message server and informs you whether or not connection is active. See Testing Device Connections

- **Preset InView Tags**. Easy setup is the only option available for setting up tags using Modbus TCP. For an explanation of the easy tags, and a summary of their function, see Easy Tags Summary (Chapter 4):
  - *Generate*. To generate addresses for tags, click the following icon:

    The following dialog appears:

    View or specify the following options:
    - Starting Address. Specify the starting address for InView Message Server tags. Addresses will be generated and incremented by one for all tags in the list.
    - Variable Update Array Size. Specifies the size of the **iv_AlphaVarUpdate_Val** array containing the variable data. The maximum array size is dependent on the controller and must be an even integer. The array range is from 15 to 255 characters.
    - Submit. Submits information so software can generate addresses for preset tags.
    - Cancel. Cancels information submission. No

addresses are generated for preset tags.

- *Reset*. To reset any of altered tag names, addresses or integer types to the preset versions, select the following icon:

- *Download*. To download the tags to the PLC specified in the PLC dialog, select the following icon:

3. **Submit**. Click to save entered changes (applies to both **PLC** and **Tag Setup** fields).
4. **Cancel**. Click to cancel any changes and restore the current settings (applies to both **PLC** and **Tag Setup** fields).

Section 3.10 Testing Device Connections

You may test connections between a PLC and an InView Comms Module. To test the connection, after setting up your PLC Message Server, click the **Test Device Connection** button.

To test connections:

1. From the InView Configuration Work Area, select the following icon:

The PLC/Tag Setup dialog appears:

2. Click the Test Device Connection icon:

The software tests the connection. The dialog that appears shows the connected device tested, the time it took for three pings of the connected device to return, and whether or not the communications protocol is actually working properly between the two devices:

- If successful, the following dialog appears:

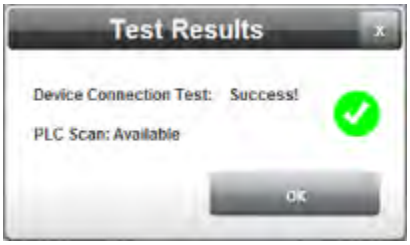

- If unsuccessful, the following dialog appears.
  The dialog contains an error message that lets you know the type of problem encountered:

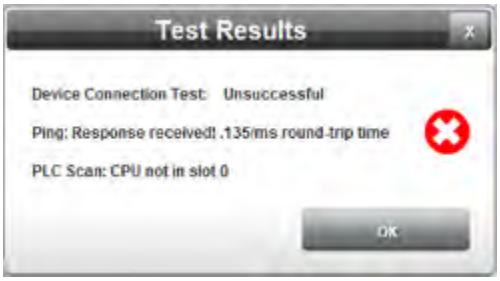

Section 3.11 Configuring Network Settings for the InView Comms Module

You use the InView Comms Module Network Settings options to configure InView Comms Module web server, network and Ethernet settings. You may also enter a name for the module.

To configure network settings:

1. From the InView Configuration Work Area, select the following icon:

The Network Setup dialog appears:

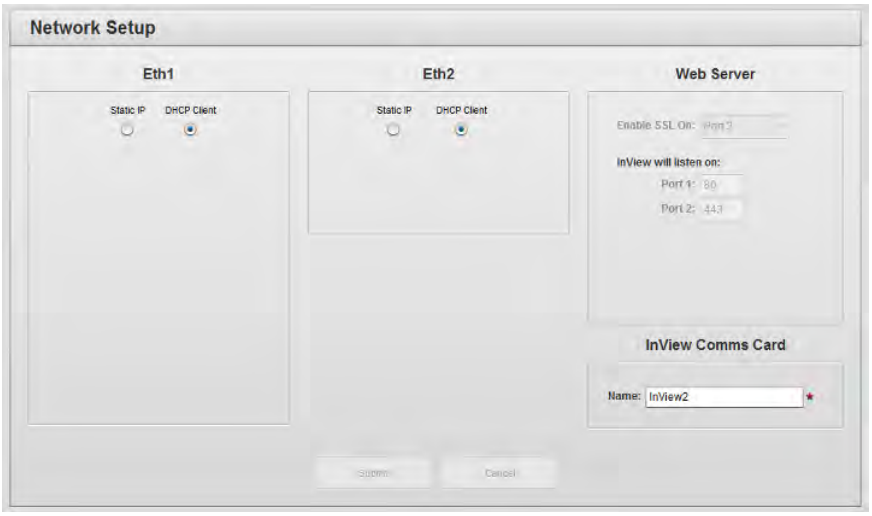

2. View or specify the options listed in the following sections.
   - Configuring Eth1 Settings for the InView Comms Module
   - Configuring Eth2 Settings for the InView Comms Module
   - Configuring InView Comms Card
   - Configuring Web Server Setup for the InView Comms Module

3.11.1 Configuring Eth1 Settings for the InView Comms Module

NOTE Keep the following in mind:

- If you configure the InView Comms Module's Eth1 port as a DHCP client, the Eth1 IP address is allocated by the DHCP server on the network to which you connect the InView Comms Module. You do not need to change the address.
- If you leave the Eth1 port with its default Static IP address, you have the option of specifying a new IP address, subnet mask, gateway, and one or two DNS addresses for your network.

The InView Comms Module Eth1 port is a single Ethernet port that provides an interface between a network and the InView Comms Module. Each InView Comms Module Ethernet port is assigned a unique Spectrum Controls MAC address. This address is listed on the label on your InView Comms Module. During setup, you can configure the Eth1 as a DHCP client or with a static IP address. The Eth1 port communicates at 10/100 Mbytes per second over an Ethernet connection.

To configure Eth1 settings for the InView Comms Module:

1. Upon startup, type the address into a web browser address field:

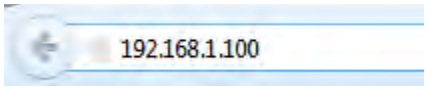

The InView Configuration Work Area dialog appears.

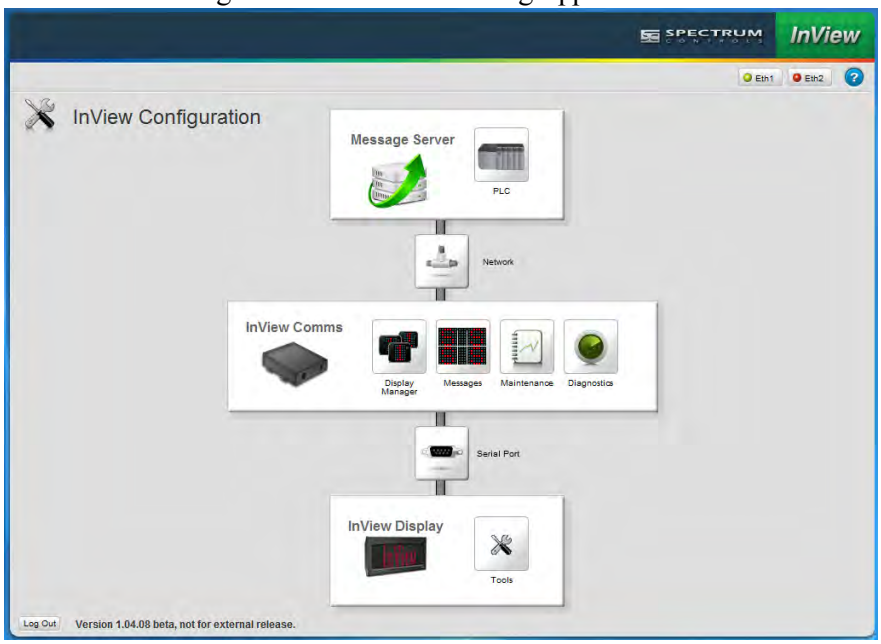

2. From the InView Configuration Work Area, select the following icon:

The Network Setup dialog appears:

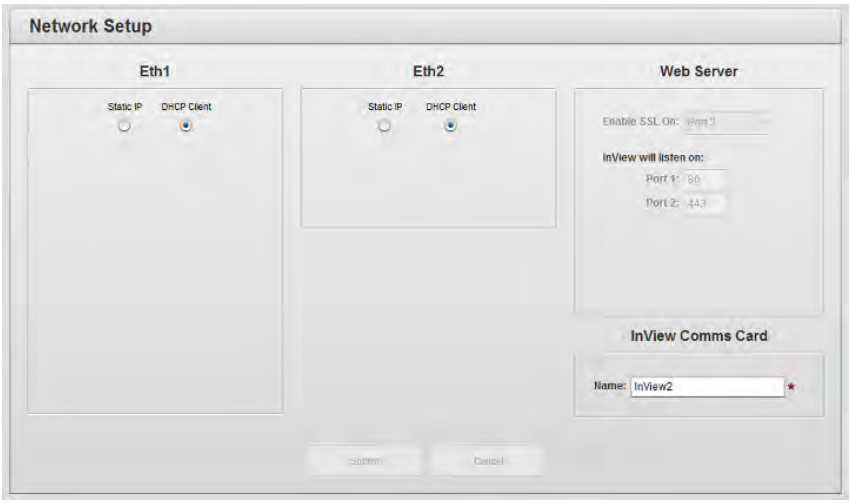

3. View or specify the following Eth1 Settings options:
   - ***Connection type***. Identifies whether to use static or dynamic address configuration for the Eth1 network:
     - *Static IP*. Select this option if you want the IP address for the InView Comms Module to be static. This means that the IP address is entered manually and does not change.
     - *DHCP Client*. If you have a DHCP Server installed and configured on the network, select this option to allow the InView Comms Module to get an Eth1 IP address from the designated DHCP server for a designated lease period when the InView Comms Module starts up. The DHCP client IP address can change each time the lease period expires although it usually does not.
   - **Eth1 IP**. Select a valid Static IP address in the Network. Enter InView Comms Module Eth1 IP Address. This option is enabled only if you select **Static IP** addressing. Example: **10.0.0.2**.
   - **Subnet Mask**. Enter subnet mask address. This value is typically **255.255.255.0**. This option is enabled only if you select **Static IP** addressing
   - **Gateway**. Enter Gateway address (optional). Example: **10.0.0.1**. This option is enabled only if you select **Static IP** addressing.
   - **DNS1**. Enter the primary DNS value (optional). This option is enabled only if you select Static IP addressing. Example: **8.8.8.8**
   - **DNS2**. Lists a secondary DNS value. For the InView Comms

Module, this value may be set to a different value. If the primary connection fails, the secondary is available. This option is enabled only if you select Static IP addressing. If you do not wish to use the Google DNS address, try Google's Namebench to determine which public DNS server will best suit your purposes.

- **Submit**. Saves data on InView Comms Module and exits.
- **Cancel**. Does not save data from InView Comms Module.

3.11.2 Configuring Eth2 Settings for the InView Comms Module

The InView Comms Module Eth2 port provides a local network interface between a personal computer and the InView configuration software on the InView Comms Module.

To configure Eth2 settings for the InView Comms Module:

1. Upon startup, type the InView Comms Module IP address into a web browser address field:

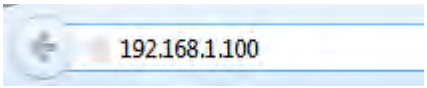

2. Login to the Interface: Logging Onto the InView Comms Module User Interface:
3. The InView Configuration Work Area dialog appears.

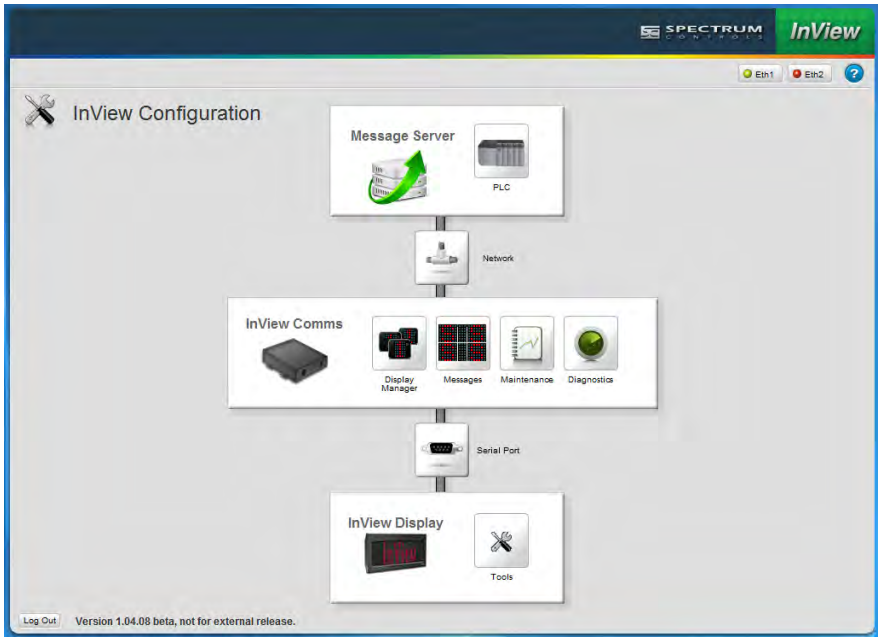

4. From the InView Configuration Work Area, select the following icon:

The Network Setup dialog appears:

5. View or specify the following Eth2 Settings options:
   - ***Connection type***. Identifies whether to use static or dynamic address configuration for the Eth2 network:
     - *Static IP*. Select this option if you want the local IP address for the InView Comms Module to be static. This means that the IP address is entered manually and does not change.

     - *DHCP Client*. If you have a DHCP Server installed and configured on the network, select this option to allow the InView Comms Module to get an Eth2 IP address from the designated DHCP server for a designated lease period when the InView Comms Module starts up. The DHCP client IP address can change each time the lease period expires although it usually does not.
   - **Eth2 IP**. Select a valid Static IP address in the Network. Enter InView Comms Module Eth2 IP Address. This option is enabled only if you select **Static IP** addressing. Example: **192.168.1.102.**
   - **Subnet Mask**. Enter subnet mask address. This value is typically 255.255.255.0. This option is enabled only if you select Static IP addressing.
   - **Submit.** Saves data on InView Comms Module and exits.
   - **Cancel.** Does not save data from InView Comms Module.

3.11.3 Configuring Web Server Setup for the InView Comms Module

The InView Comms Module setup information is shown for information only as you cannot change the settings.

To view the server setup information:

1. From the InView Configuration work area, select the following icon:

   The Network Setup dialog appears, including the Web Server information:

2. View the following Web Server Setup options:
   - **Enable SSL On** *port number*. Not editable. Shows the port on which InView Comms Module communicates using the Secure Socket Layer (SSL) protocol. **Port 1** and **Port 2** have different numbers:

     InView will listen on. Not editable. Shows port on which module listens for data:

     - *Port 1 number*. Shows default port value (80). Port 80 is the commonly used port for HTTP connections (unsecure websites).
     - *Port 2 number*. Shows default port value (443). Port 443 is the commonly used port for HTTPS connections (secure websites).

3.11.4 Configuring InView Comms Card

Gives a name to your InView Comms Module.

To enter a name:

1. From the InView Configuration Work Area, select the following icon:

The Network Setup dialog appears:

2. View or specify the following InView Comms Cards information:
   - **Name**. Specify the name of your InView Comms card.
   - **Submit**. Defines the module name. The name appears on InView module's tab.
   - **Cancel**. Cancels entry of the module name. No change is made.

Section 3.12 Managing Displays

You may add, modify, or delete display profiles. A profile is a record of display information for use by the Comms Module user interface, and is distinct from the actual physical display.

To add, modify, or delete display profiles:

1. From the InView Configuration Work Area, select the following icon:

The Configured Displays dialog appears:

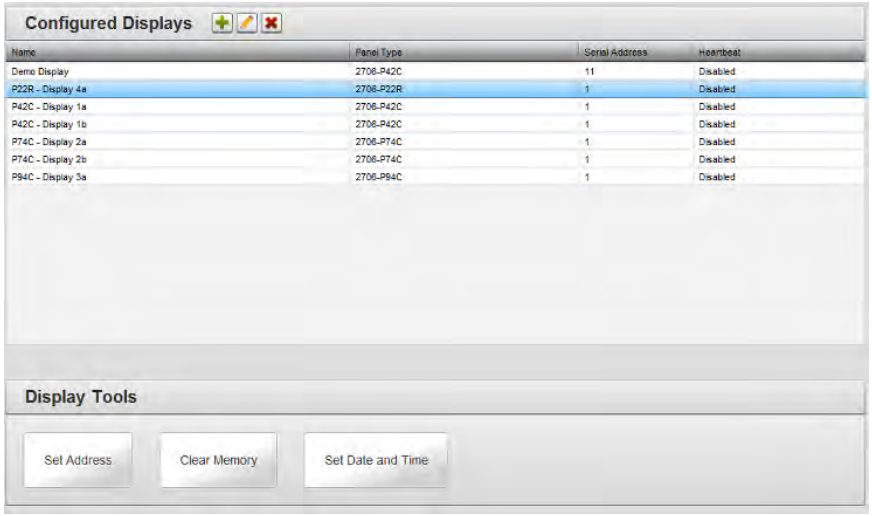

2. View or specify the following options:

Icon	Function	Access
	Add a display:	Adding Displays
	Modify a display:	Modifying Displays
	Delete a display from the InView Comms Module:	Deleting Displays
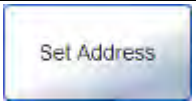	Set a display serial address:	Setting a Display Address
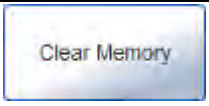	Clear display memory:	Clearing Display Memory
	Set date and time	Setting Date and Time

Section 3.13 Adding Displays

You may add any current InView display model to the InView Comms Module software.

To add a display:

1. From the InView Configuration Work Area, select the following icon:

The Configured Displays dialog appears:

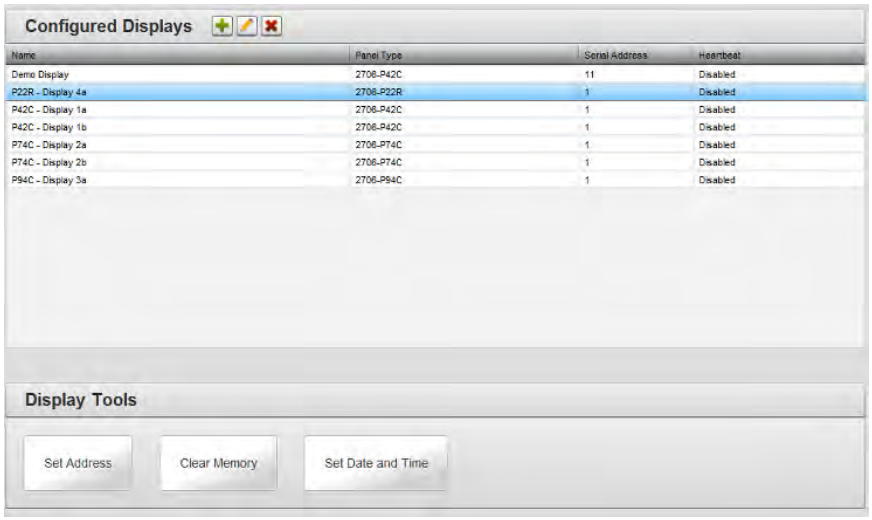

2. In the Configured Displays section, click the following icon:

The Display Properties dialog appears:

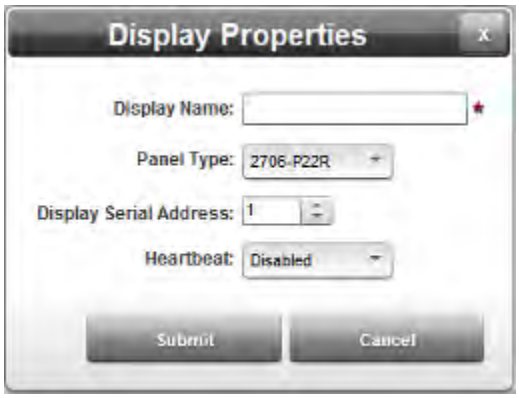

3. View or specify the following Display options:
   - **Display Name**. Enter the display name. Example: **West Wing Messages**

- **Panel Type**. Defines the type of display panel you are adding. This affects the type of message you can create. Select the panel type from the drop down list:
  - *2706-P22R*. InView Message Display with 2 lines, 20 characters, Red LEDs. When panel-mounted, NEMA Type 4.
  - *2706-42C*. InView Message Display with 1 or 2 lines, 12 or 20 characters, 4.8, or 2.1 in. high, tri-color LEDs, NEMA Type 12.
  - *2706-42R*. InView Message Display with 1 or 2 lines, 12 or 20 characters, 4.8, or 2.1 in. high, red LEDs, NEMA Type 12.
  - *2706-44C*. InView Message Display with 1 or 2 lines, 24 or 40 characters, 4.8, or 2.1 in. high, tri-color LEDs, NEMA Type 12.
  - *2706-44R*. InView Message Display with 1 or 2 lines, 24 or 40 characters, 4.8, or 2.1 in. high, red LEDs, NEMA Type 12.
  - *2706-72C*. InView Message Display with 1 or 2 lines, 12 or 20 characters, 7.2, 3.0, 2.1, or 1.5 in. high, tri-color LEDs, NEMA Type 4.
  - *2706-74C*. InView Message Display with 1 or 2 lines, 12 or 20 characters, 7.2, 3.0, 2.1, or 1.5 in. high, tri-color LEDs, NEMA Type 4X.
  - *2706-92C*. InView Message Display with 1 or 2 lines, 13 or 24 characters, 9.6, 4.5, 3.0, 2.1, or 1.5 in. high, tri-color LEDs, NEMA Type 12, 13.
  - *2706-92C2*. InView Message Display, with up to five lines, 9.9, 4.75, 3.0, 2.25, or 1.75 in. high, ten-color LEDs, NEMA Type 4, 4X
  - *2706-94C*. InView Message Display with 1 or 2 lines, 26 or 48 characters, 9.6, 4.5, 3.0, 2.1, or 1.5 in. high, tri-color LEDs, NEMA Type 12, 13
  - *2706-94C2*. InView Message Display, with up to five lines, 9.9, 4.75, 3.0, 2.25, or 1.75 in. high, ten-color LEDs, NEMA Type 4, 4X.
- **Display Serial Address**. Specifies the address of the display to which a message is downloaded. Before downloading messages to the InView Message Display you must set the address of the target display. The serial address of the InView display is a number from 1 to 254. The default address is 1.
- **Heartbeat**. The display requires serial activity approximately every three seconds. In the absence of such activity, the display will show a **No Network Activity** message. Options are:
  - *Disabled*. When the heartbeat property is set to

Disabled, disables the need for constant serial activity in the display.

- *None*. When the heartbeat property is set to **None**, the activity is assumed to come from sources such as variable updates.
- *Control*. When the heartbeat property is set to **Control**, the control generates a serial heartbeat command that prevents the display from showing the **No Network Activity** message.

- **Submit**. Saves changes on InView Comms Module and exits.
- **Cancel**. Exits without saving changes on InView Comms Module.

Section 3.14 Modifying Displays

To modify display information:

1. Access the Configured Displays dialog:

   See Managing Displays

   The Configured Displays dialog appears:

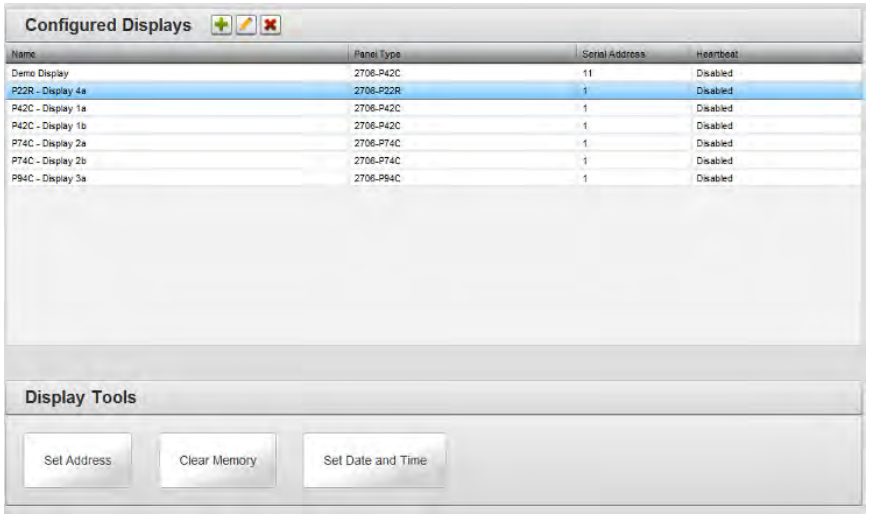

2. Select a listing and click the following icon:

   The Display Properties dialog appears. Change information in the listed fields:

   See Adding Displays

3. When finished making changes, click either of the following to exit:
   - **Submit**. Saves changes on the InView Comms Module and exits.
   - **Cancel**. Exits without saving changes on InView Comms Module.

Section 3.15 Deleting Displays

To delete a display:

1. Access the Configured Displays dialog:

   See Managing Displays

   The Configured Displays dialog appears:

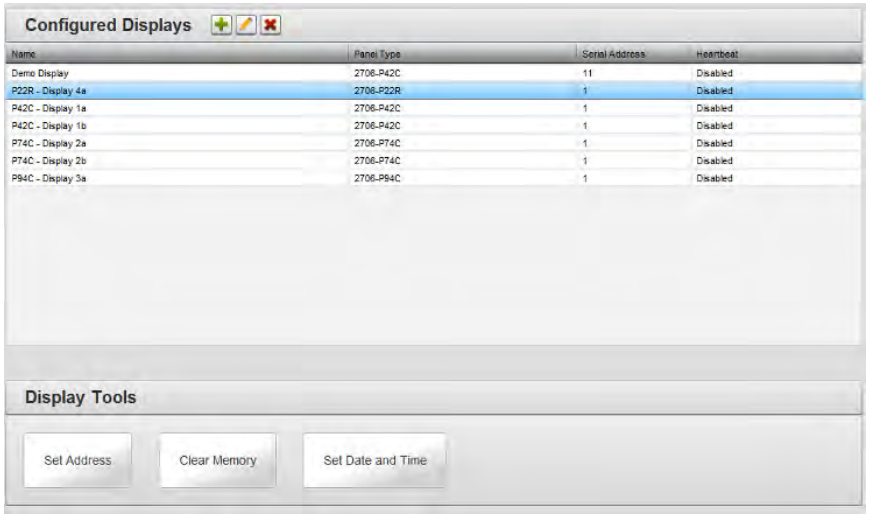

2. Select a display from the list.
3. Click the Delete icon:

   A confirmation dialog appears:

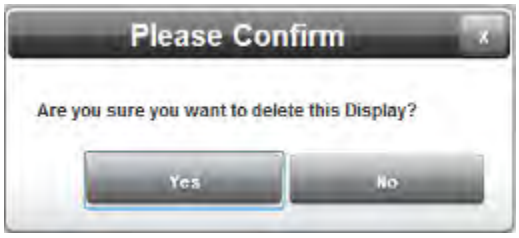

4. Confirm the deletion:
   - **Yes**. Deletes the selected display from the InView Comms Module and exits.
   - **No**. Exits without deleting the selected display from the InView Comms Module.

Section 3.16 Setting a Display Address

Before downloading messages to the InView Message Display you must set the address of the target display. All InView displays leave the factory with a default address of 1. You must know what the current display address is before setting a new address. If you are not sure of the current address, cycle power to the InView display to check the address.

To set a display address:

1. Access the Configured Displays dialog:

   See Managing Displays

   The Configured Displays dialog appears:

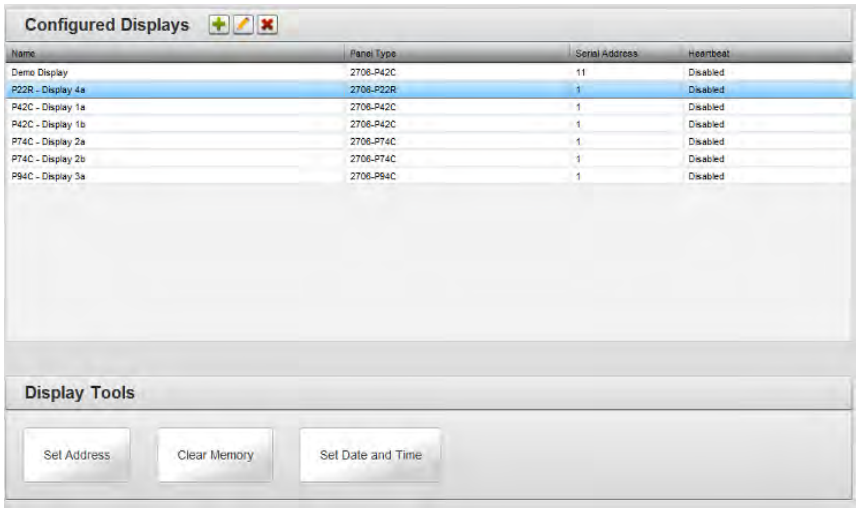

2. Select the Set Address icon:

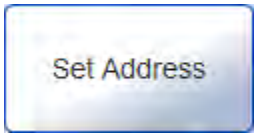

3. The Set Address dialog appears. Change information in the listed fields.

   - **Old Display Address**. Lists the current display address (1 to 254). If you do not know what this address is, power cycle the InView display and observe the Display Serial Address as shown on the display power-up message.
   - **New Display Address**. Specify the new display address. (1 to 254).

4. When finished making changes, click either of the following to exit:
   - **Submit**. Saves changes on the InView Comms Module and exits.
   - **Cancel**. Exits without saving changes on InView Comms Module.

Section 3.17 Clearing Display Memory

Clears all messages from the display's memory, and resets the display. When memory is cleared, the background message becomes **NO BACKGROUND MESSAGE**.

To clear display memory:

1. Access the Configured Displays dialog:

   See Managing Displays

   The Configured Displays dialog appears:

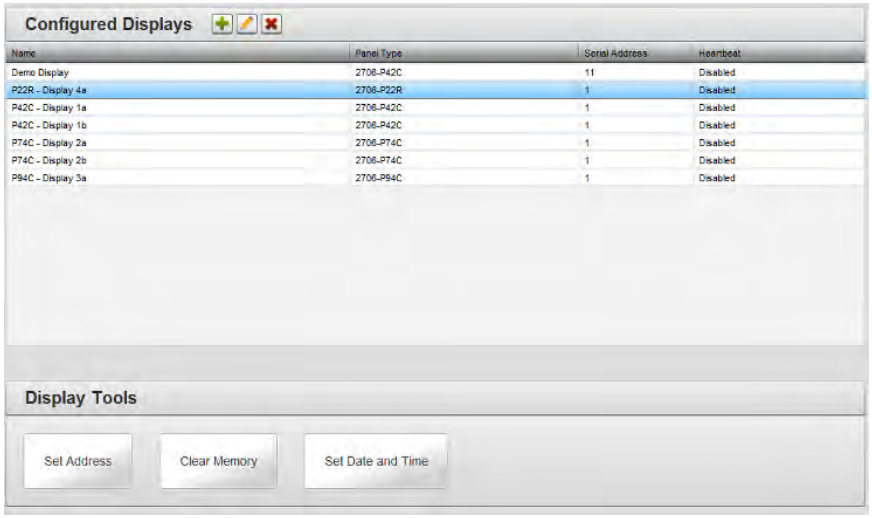

2. Select the Clear Memory icon:

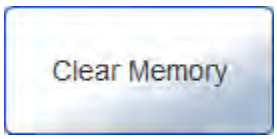

3. The Clear Memory dialog appears. Enter information in the listed fields.

   - **Display**. Specifies the display for which you wish to clear memory. Select from the dropdown list.
   - **Serial Address**. Lists the current serial display address (1 to 254). If you do not know what this address is, power cycle the InView display and write down the address you see displayed on startup.
   - **Apply to All Displays**. Specify whether to apply the clear memory to all displays accessible from the InView Comms module.

4. When finished making changes, click either of the following to exit:
   - **Submit**. Saves changes on the InView Comms Module and exits.
   - **Cancel**. Exits without saving changes on InView Comms Module.

Section 3.18 Setting Date and Time

To configure InView display time and date settings:

1. Access the Configured Displays dialog:

   See Managing Displays

   The Configured Displays dialog appears:

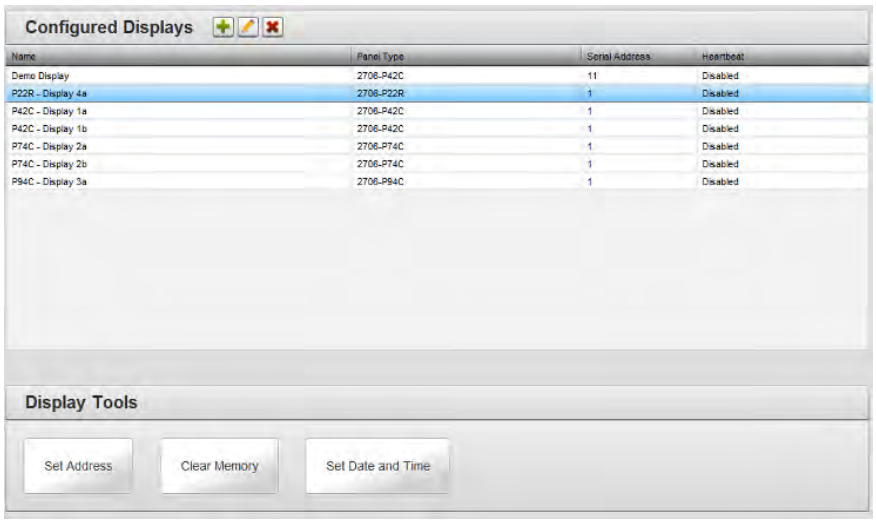

2. Select the Set Date and Time icon:

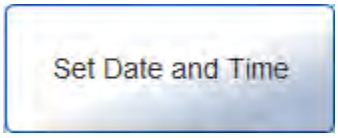

3. The Set Date and Time dialog appears. Enter information in the listed fields.

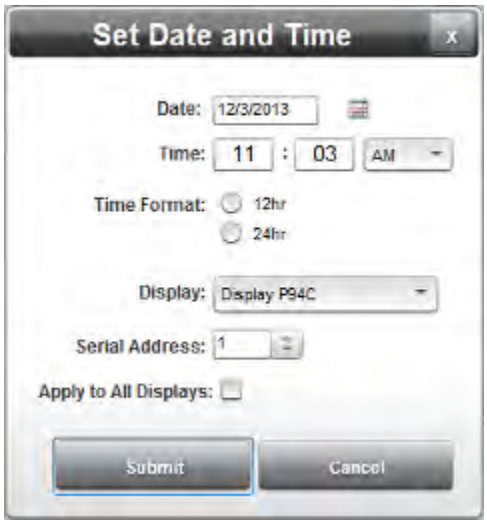

   - **Date**. Enter the date or select the date you wish to use from the popup calendar.
   - **Time: *HH:MM* AM/PM**. Enter the time you wish to use in hours and minutes.
   - **Time Format**. Specifies whether to use standard (12-hour) or

military (24-hour) time.

- **Display**. Specifies the display for which you wish to set date and time. If needed, select from the dropdown list.
- **Serial Address**. Lists the current serial display address (1 to 254). If you do not know what this address is, power cycle the InView display and write down the address you see displayed on startup.
- **Apply to All Displays**. Specify whether to apply the set date and time to all displays accessible from the InView Comms module.

4. When finished making changes, click either of the following to exit:
   - **Submit**. Saves changes on the InView Comms Module and exits.
   - **Cancel**. Exits without saving changes on InView Comms Module.

Section 3.19 Configuring Message Groups

To configure message groups:

1. From the InView Configuration Work Area, select the following icon:

The Message Groups dialog appears:

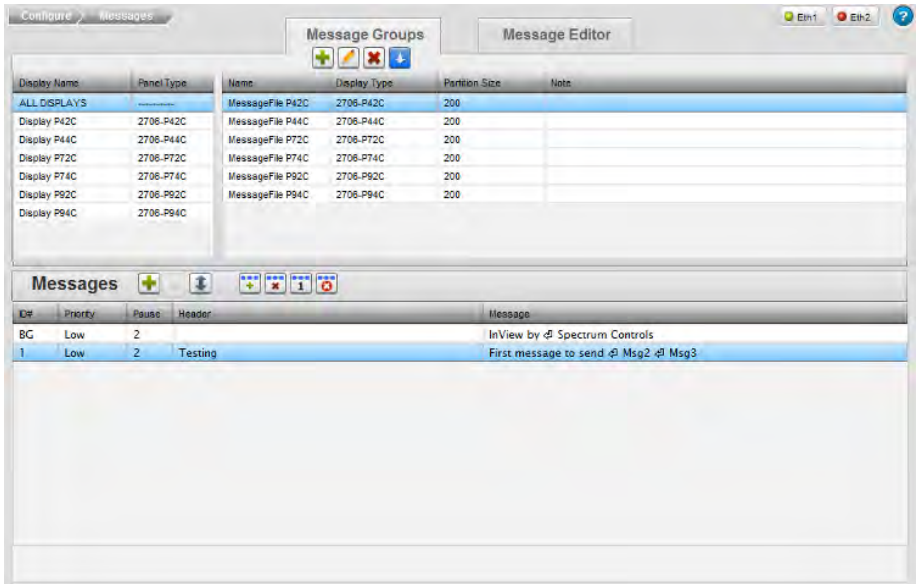

2. View or specify the following options:

Icon	Function	Access
	Add a message group:	Adding Message Groups
	Delete a message group:	Deleting Message Groups
	Reorder a message group:	Reordering Message Groups
	Download message to display	Downloading a Message Group

Section 3.20 Adding Message Groups

You must assign a display type group to each message you create. Groups are useful if you wish to organize messages by display types. For example, you might want to create a group of messages for a 2706-P22R-SC display and another group for a 2706-P94C-SC display. You may then sort the messages by the **Display Type** column to organize them into groups. This makes it very easy to edit or download a specific group of messages to a display.

You may also convert a P92C or P94C message group to a P92C2 or P94C2 message group. This allows you to import existing message files groups for use in the C2 displays. You use the editing function for message groups to convert the files. See Modifying Message Groups.

To add a message group:

1. From the InView Configuration Work Area, select the following icon:

The Message Server dialog appears:

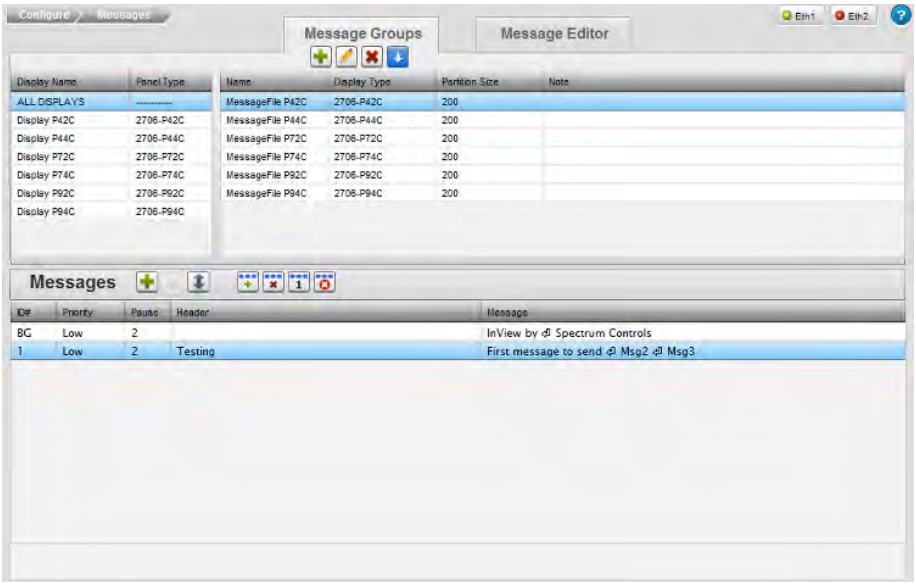

2. In the Message Groups section, click the following icon:

The Message Group Properties dialog appears:

3. View or specify the following options:
   - **Group Name**. Specify the name of the group.
   - **Display Type**. From the pull down menu, select the display type. Options are 2706-P22R, 2706-P42C, 2706-P42R, 2706-P44C, 2706-P44R, 2706-P72C, 2706-P74C, 2706-P92C, 2706-P94C.
   - **Partition Size**. Partitions the memory in the display. The InView Message Displays supports 256 K of memory. You can specify how much memory to allocate for each message. The message size ranges from 50 to 450 bytes. To determine the required length for messages, see Calculating Message Size. The maximum number of messages ranges from 444 to 4,000. The default message size is 200 bytes, which results in 1,000 messages. If you select another message size, the maximum number of messages is automatically recalculated.
     Range is 50 to 450 bytes, even numbers only. Default size is 200 bytes.
   - **Note**. Adds a note to the message group. The note appears in the Message Groups list but is not downloaded to the display.
   - **Submit**. Click to save entered changes.
   - **Cancel**. Click to cancel any changes and exit.

Section 3.21 Modifying Message Groups

You may convert a P92C or P94C message group to a P92C2 or P94C2 message group. This allows you to import existing message files groups for use in the C2 displays. You use the editing function for message groups to convert the files. See Modifying Message Groups.

1. Access the Message Groups dialog:

   See Adding Message Groups

   The Message Groups dialog appears:

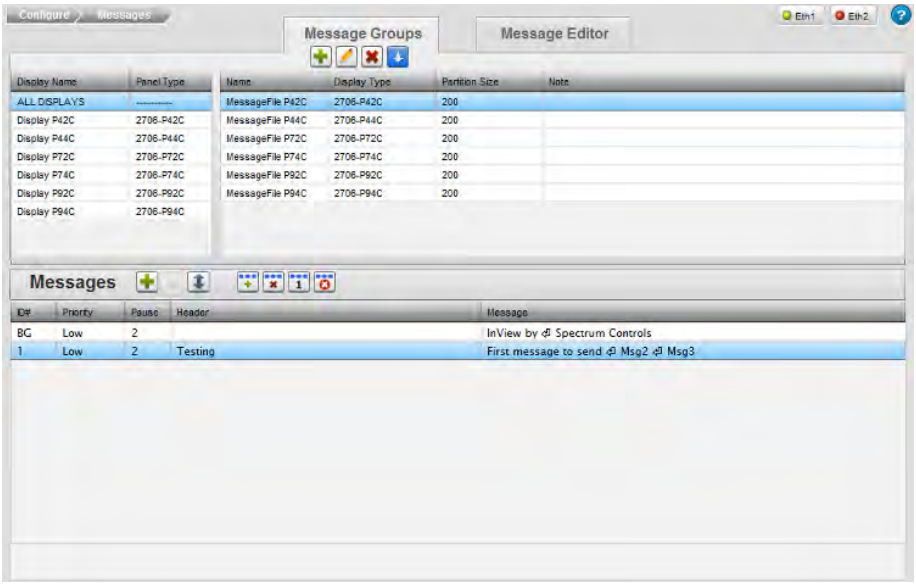

2. Select a listing and click the following icon:

   The Message Group Properties dialog appears:

3. Change information in the listed fields.

See Adding Message Groups

4. If you also wish to convert the message you are modifying to run on a P92C2 or a P94C2, click the **Copy & Convert to 2706-P9*x*C2** button. The file is converted to the selected message format. The converted file appears using the same file name as the selected file, with **Copy** added to the file name. You will need to select the display type to view the converted file.
5. When finishing making changes, click either of the following to exit:
   - **Submit**. Saves changes on the InView Comms Module and exits.
   - **Cancel**. Exits without saving changes on the InView Comms Module.

Section 3.22 Reordering Messages

To reorder messages:

1. Access the Message Groups dialog:

   See Adding Message Groups

   The Message Groups dialog appears:

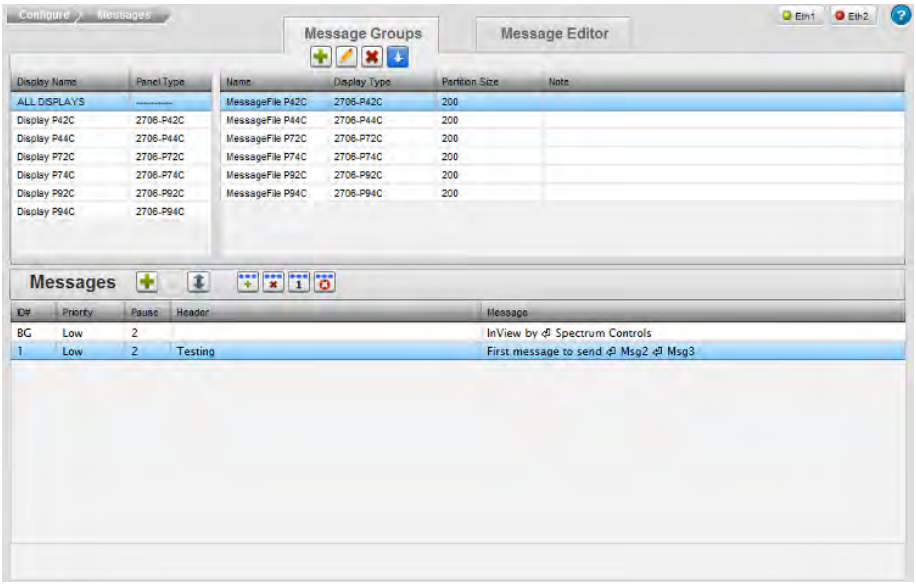

   Click the following icon:

2. The Re-order Messages dialog appears. Enter new number(s) for the message(s).

Message IDs must be whole numbers. Zero (0) is invalid.

3. When finished making changes, click either of the following to exit:
   - **Submit**. Saves changes on the InView Comms Module and exits.
   - **Cancel**. Exits without saving changes on InView Comms Module.

Section 3.23 Deleting Message Groups

To delete a message group:

1. Access the Message Groups dialog:

   See Adding Message Groups

   The Message Groups dialog appears:

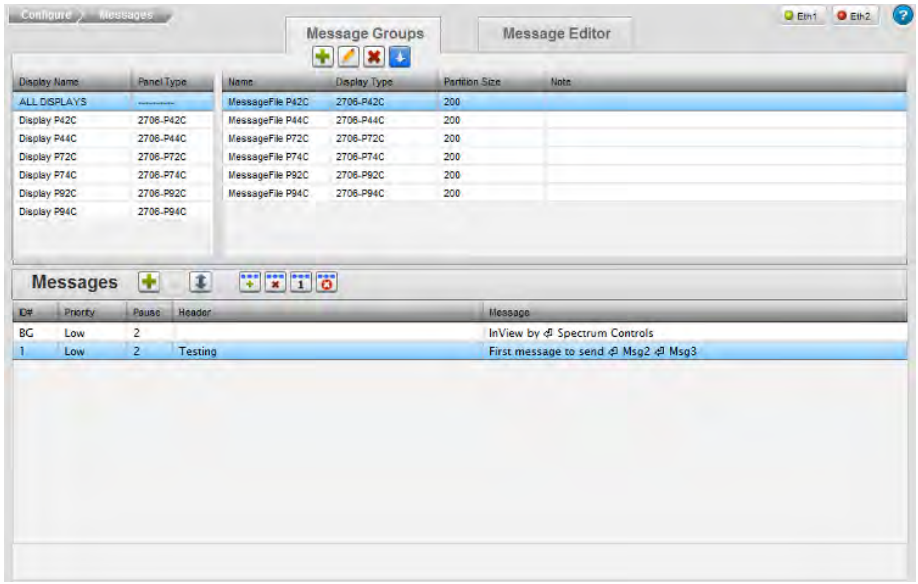

2. Select a message group from the list.
3. Click the Delete icon:

A confirmation dialog appears:

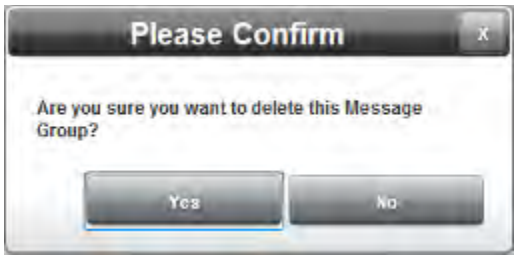

4. Confirm the deletion:

NOTE

Deleting a message group also removes any associated messages that are associated with the group.

- **Yes**. Deletes the selected message group from the InView Comms Module and exits.
- **No**. Exits without deleting the selected message group from the InView Comms Module.

Section 3.24 Downloading a Message Group

To download a message group to an InView display:

1. Access the Message Groups dialog:

   See Adding Message Groups

   The Message Groups dialog appears:

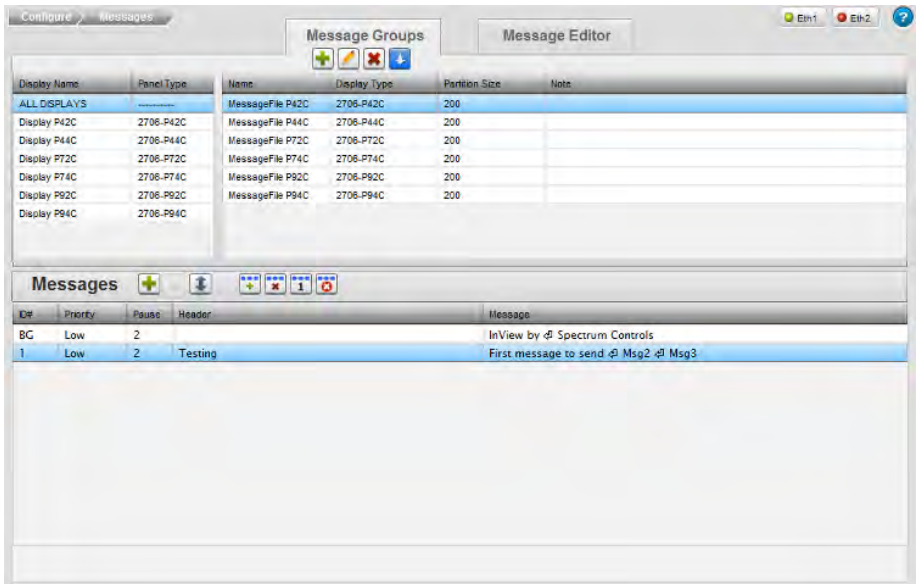

2. Select a message group from the Message Groups list.

3. Click the Download icon:

A Download Group to Display dialog appears:

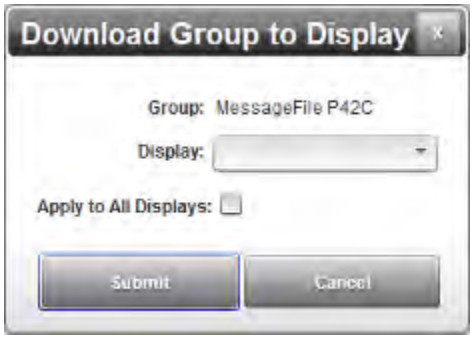

4. View or specify the following options:
   - **Group**. Shows group selected for download. Not editable.
   - **Display**. Select the target display from the dropdown list.
   - **Apply to All Displays**. Specify whether to apply the instruction to all displays accessible from the InView Comms module.
5. Download the message group:
   - **Submit**. Downloads the selected group to the specified display.
   - **Cancel**. Cancel downloading the selected group the specified display.

Section 3.25 Configuring Messages

You may add messages to groups.

To add, modify, or delete messages:

1. From the InView Configuration Work Area, select the following icon:

The Messages dialog appears:

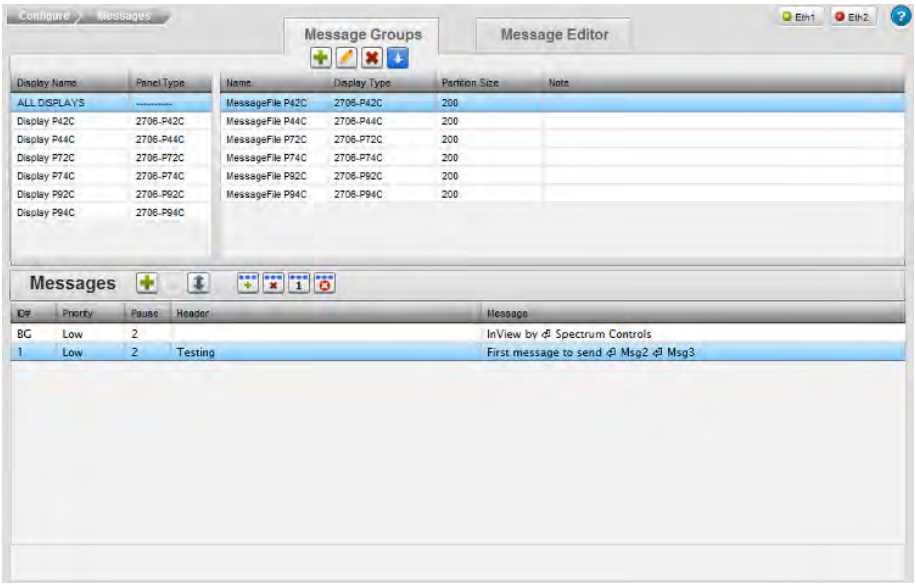

2. View or specify the following options:

Icon	Function	Access
	Add a message to a group:	Adding Messages
	Reordering messages in a group:	Reordering Messages
	Delete a message from a group:	Deleting Messages
	Add a message to the message queue:	Adding Message to the Queue
	Delete a message from the message queue:	Deleting a Message from the Queue
	Trigger a priority message (operates on the message queue):	Triggering a Priority Message
	Clear message queue:	Clearing Message Queue

Section 3.26 Adding Messages

NOTE The P22R display allows you to have two messages displaying on the P22R at the same time. One message is set to Line 1. The second message is set to Line 2. You may also have an All Lines setting where one message displays on one or both lines.

NOTE If you select a message that has missing bitmaps, the software informs you that is the case. However, the software still opens the file but adds place holder bitmaps when previewing the message:

NOTE You see this message when the software allows you to enter a font height that is impossible to display correctly. For example, if you set up both a header and a message with font heights that do not allow both lines to be displayed at the same time:

NOTE In Rotate mode, all Justification buttons are disabled.

Adds a message to a display.

To add a message:

1. From the InView Configuration Work Area, select the following icon:

The Message Group/Message Editor dialog appears:

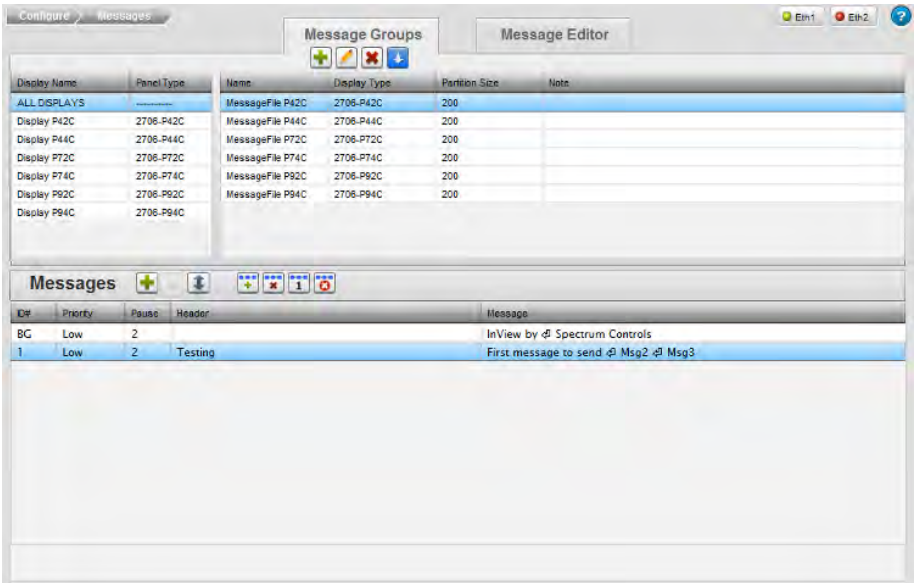

2. In the Messages section, click the following icon:

When you click on the Add Message icon, the software creates a blank message and switches to the Messages Editor dialog tab:

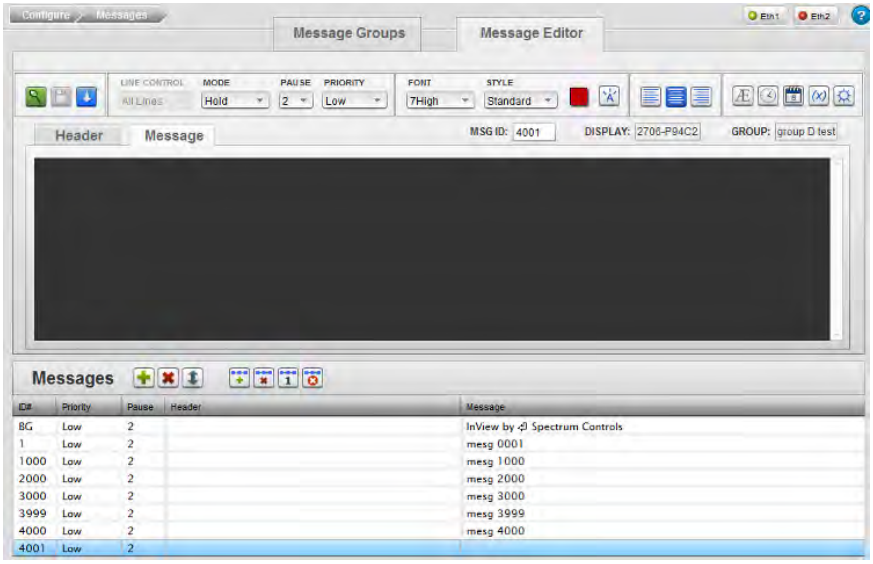

3. Use the following Message Editor options to add a message to the blank message window and to format the message's appearance. Formatting options are defined by the type of display on which the message is to appear:

   - In the message display window, type in your message:

   - ***GROUP/DISPLAY***. Shows category to which message will

belong after it is created and display type on which message will be shown:

- **HEADER**. Uses the Header tab create a heading for each message. The heading is centered on the first line of the display above the message. You can assign attributes to the heading, which can differ from the message text. To add a header, click the tab. To remove a header you have added, delete the text. Header example:

- **LINE CONTROL**. Allows you to display two messages on the 22R, 2-line display at one time. To activate this feature, you must assign each message to a specific line, Line 1, or Line 2, in the Message Editor. Options are:
  - *All Lines*. Displays a message on Line 2 only.
  - *Line 1*. Displays a message on Line 1 only.
  - *Line 2*. Displays a message on Line 2 only.
- When displaying messages, the line controls options function as follows:
  - If a Line 1 message is active on the display, and a Line 2 message is downloaded, the Line 1 message remains active on Line 1, and the downloaded Line 2 message appears on Line 2.
  - If a Line 1 message is active on the display, and a new Line 1 message is downloaded to the display, the active Line 1 message is replaced with the downloaded Line 1 message.
  - If a Line 1 or Line 2 message is downloaded while All Lines message is active, the All Lines message is cleared, and the Line 1 or Line 2 message is displayed.
  - If an All Lines message is downloaded while a Line 1 and/or Line 2 message is active, the Line 1 and/or Line 2 messages are cleared, and the All Lines Message is displayed.

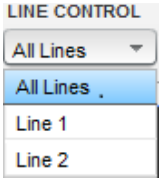

- **MODE**. Specifies whether message display is fixed or rotating. To select a mode, from the dropdown menu, select:

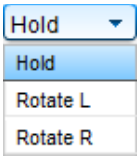

  - *Hold*. Specifies stationary message display. You may rotate messages to the left, or to the right, depending on your character set. Arabic characters may be rotated right to left. However, you must also insert the characters in the correct order (reversed from English language characters) so that the text meaning displays correctly.
  - *Rotate L*. Message rotates on displays from right to left (English and other languages that are read from left to right).
  - *Rotate R*. P9*x*C2 only. Message rotates on displays from left to right (Arabic and other languages that are read from right to left).
- **PAUSE**. Refreshes and displays the message after the specified number of seconds (1 to 5). Default is 2 seconds. To select a pause, from the dropdown menu, select:

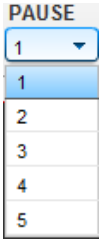

- **PRIORITY**. Specifies the importance of a message. Messages of a lower priority do not run if any message of a higher priority is running. To select a priority, from the dropdown menu, select:

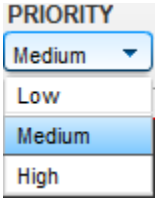

- **FONT**. Specifies the maximum number of pixels to use for the height of the characters. The font is sans-serif. Fancy indicates the maximum height of the characters using a serif font. To select a font style, from the dropdown menu select:

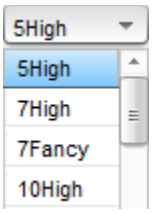

Font sizes are:

  - 5High
  - 7High (default value)
  - 7Fancy
  - 10High
  - 16High
  - 16Fancy
  - 20High (2706-92C2-SC, 2706-94C2-SC only)
  - 20Fancy (2706-92C2-SC, 2706-94C2-SC only)
  - 24High (2706-92C2-SC, 2706-94C2-SC only)
  - 24Fancy (2706-92C2-SC, 2706-94C2-SC only)
  - 32High
  - 32Fancy
  - 40High (2706-92C2-SC, 2706-94C2-SC only)
  - 40Fancy (2706-92C2-SC, 2706-94C2-SC only)
  - **STYLE**. Specifies font style. To select a style, from the dropdown menu, select:

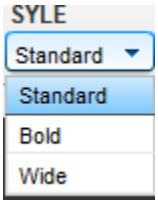

- **COLOR**. Specifies a color. R displays only show red. For C/C2 displays, specifies a color (3 colors or 10 colors, depending on the display model. C2 models provide 10 color selections). Select the color you wish to use:

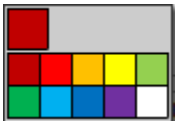

- **Left-align text**. To align the text justified to the left, click the following icon:

- **Center text**. To align the text in the center of the display, click the following icon:

- **Right-align text**. P9*x*C2 only. To align the text justified to the right, click the following icon:

- **Blinking text**. To make text blink, highlight the text you wish to blink, and click the following icon:

- **Insert Extended Character Set**. To insert a special character in the set, click the following icon:

- The Extended ASCII dialog appears:

From this dialog, select the character of interest. The dialog closes and the character appears in the text window.

- **Insert time in message**. To insert the time in a message, click where you wish to insert the time and click the following icon:

- **Insert date in message**. To insert the date in a message, click where you wish to insert the date and click the following icon:

- **Insert variable in message**. To insert a variable in a message, click where you wish to insert the variable, and click the

following icon:

The Insert Variable dialog appears:

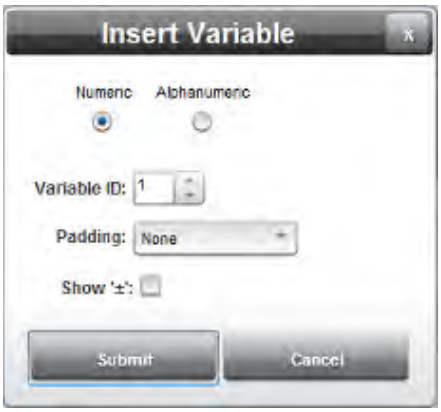

Specify the variable to insert in the list:

- Choose either numbers, or numbers and letters:
  - *Numeric*. Specifies that variable can only be a number.
  - *Alphanumeric*. Specifies that variable can be either a number or a letter.
  - *Variable ID*. Lists ID associated with variable.
  - *Padding*. Defines whether or not to place no space, spaces, or zeroes before or after the variable.
  - ±. Show plus or minus sign on variable entry.
  - *Min Text Length*. Defines minimum text length.

- Insert a custom character in message.

  To insert a custom character in an image, click where you wish to insert the character and click the following icon. See Inserting Custom Characters for further information.

  Example: If you have selected a rotating or blinking message, the message rotates or starts blinking.

4. Once you have downloaded a message group, you may add the message to the queue, delete a message from a queue, or trigger a priority message using the following icons:

   - **Preview**. When you have finished creating your message, click the following icon to preview how your message appears on the display. If you selected a rotating or blinking message, the message rotates or starts blinking. If you try to preview a message containing too long an embedded object, the software warns you it cannot display the object and does not show the preview:

- **Save**. Before exiting the editor, you need to save your changes. To save the changes, click the following icon:

- **Download Message Group to InView Display**. To download the message, click the following icon:

- Once you have added a message you may add the message to the queue, delete a message from a queue, or trigger a priority message using the following icons:
  - To add a message to a queue, click the following icon:

    See also Adding Message to a Queue
  - To delete a message from a queue, click the following icon:

    See also Deleting Message from Queue
  - To trigger a priority message, click the following icon:

    See also Triggering a Priority Message
  - To clear a message queue, click the following icon:

    See also Clearing Message Queue
- **Save**. Click to save the messages in the current message file.
- **Submit**. Click to save entered changes.
- **Cancel**. Click to cancel any changes and exit.

Section 3.27 Inserting Custom Characters

NOTE Custom characters should be monochrome (1-bit color depth), and must be 16 × 16, 24 × 24, 32 × 32, or 40 × 40 pixels in dimension.

Inserts a custom character into a message.

To insert a custom character:

1. Access the InView Configuration Message Editor dialog. See Adding Messages earlier in this section.
2. From the InView Configuration Message Editor dialog, click where you wish to insert the character and click the following icon:

3. From the popup dialog that appears, select your character type or character and your type size as follows. If needed, scroll down to find the character:

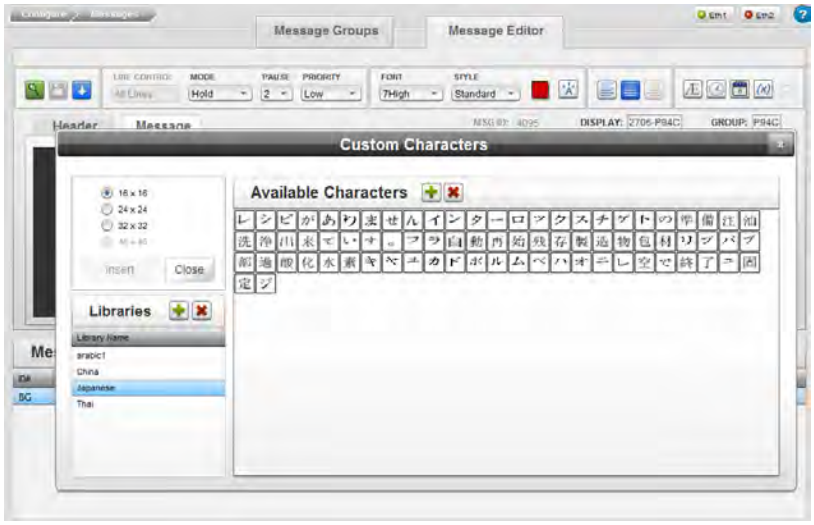

- ***bitmap size***. Defines how large the bitmap image will be for the selected character. Image sizes may be 16 × 16, 24 × 24, 32 × 32, or 40 × 40 (92*x*C2 only) pixels. Different displays may not accept all image sizes. To review all characters available for the selected library, click each of the image size selections in turn.
- **Libraries**. To review a set of available characters, choose a library. You can add and delete libraries:
  - *add*. To add a library, click the following icon:

    - The Add Library dialog appears. View or specify the following options:

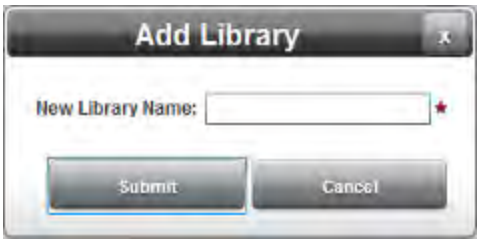

- New Library Name. Enter the name of the new library.
- Submit. Adds new library name to **Libraries** list.
- Cancel. Cancels addition of new library name to **Libraries** list.

- *delete*. To delete a library, click the following icon:

The following dialog appears. Confirm the deletion:

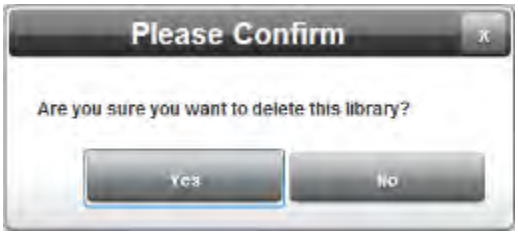

- Submit. Deletes the selected library from the **Libraries** list.
- Cancel. Cancels deletion of the selected library name from the **Libraries** list.

- **Available Characters**. Lists available characters for the selected image size for the selected library. You may add and delete characters for each library. To add a custom character, click the following icon in the Available Characters dialog:

- Navigate to your bitmap location and choose the character you wish to insert, and then click **Open**:

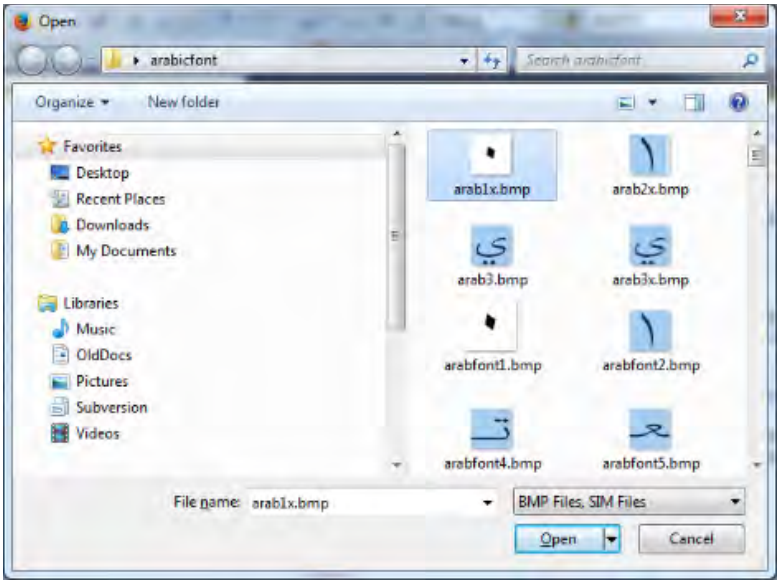

4. Once you select a character, the Message Editor field shows a placeholder for the character. To see which character is selected, mouse over the placeholder:

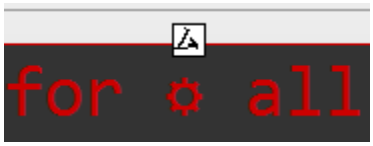

5. If the character you select no longer exists because it has been deleted from the library, you will see the following message:

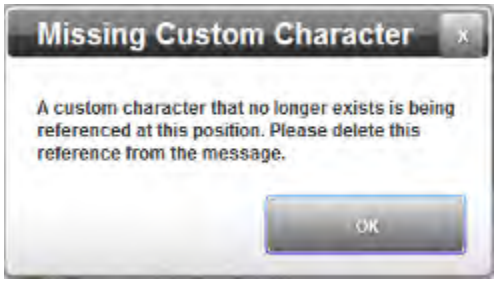

   Remove the deleted or unavailable character from the message.

6. **Close**. Saves the changes and exits the dialog.

Section 3.28 Modifying Messages

You can modify messages that you import. For example, you can change the font size on text characters and custom characters after you import a message group onto a Comms Module associated with a new 92C2 or 94C2 display.

To modify messages:

1. Access the Message Groups dialog:

   See Adding Message Groups

   The Messages dialog appears:

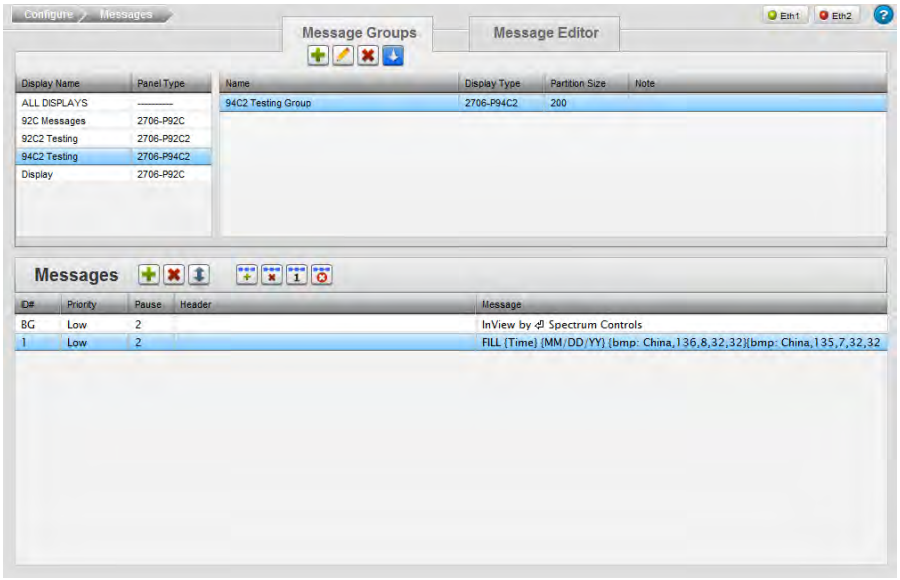

2. Select a message group and a message from that group and click the Message Editor tab.

   The Message Editor dialog appears:

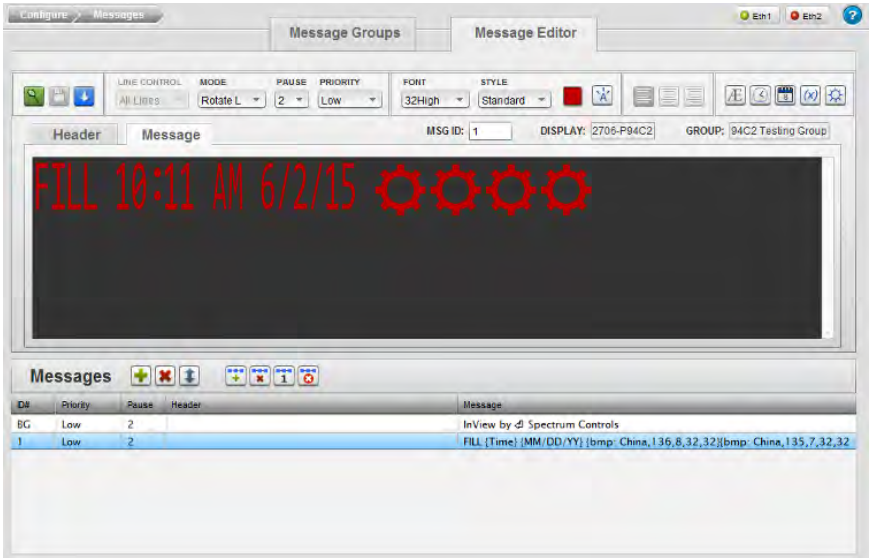

3. Highlight the message characters you wish to change to 40 pixels in size.

The option only functions if you select bitmap characters:

The FONTS dropdown option changes to **SIZE** and the listed options change to bitmap sizes:

4. From the drop-down list, select the **40 × 40** font size.

   The select characters change to the 40High font size:

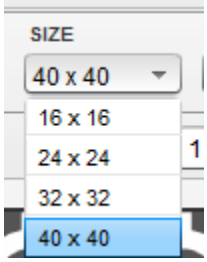

5. When finished making changes, to save your changes, click the following icon:

Section 3.29 Deleting Messages

To delete a message:

1. Access the Messages dialog:

   See Adding Message Groups

   The Messages dialog appears:

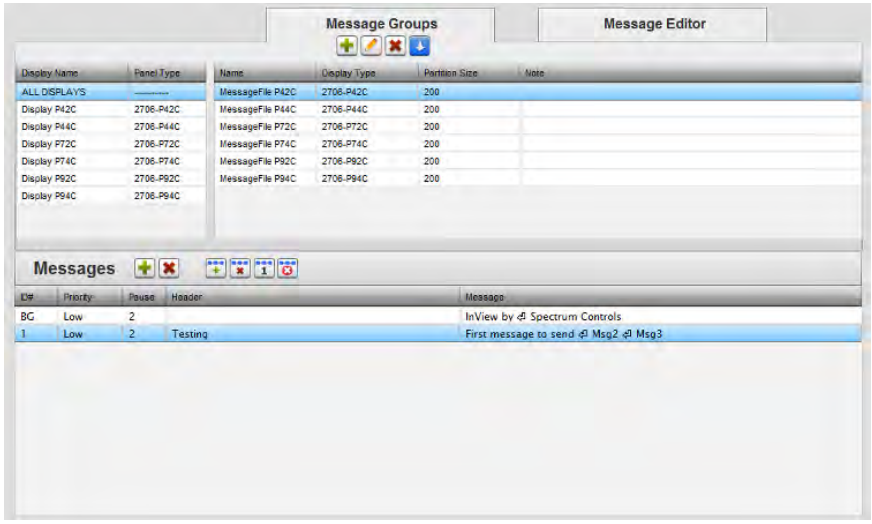

2. Select a message from the list.
3. Click the Delete icon:

   A confirmation dialog appears:

4. Confirm the deletion:
   - **Yes**. Deletes the selected message from the message group and exits.
   - **No**. Exits without deleting the selected message from the message group.

Section 3.30 Managing InView Comms Module Maintenance Options

You use the maintenance options to export and import characters and messages, update firmware, reset the InView Comms Module to the factory default configuration, back up your data, change your password, and to reboot the InView Comms Module.

To manage maintenance operations:

1. From the Configuration Work Area, select the following icon:

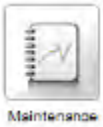

The Maintenance dialog with Import/Export/Configure areas appears:

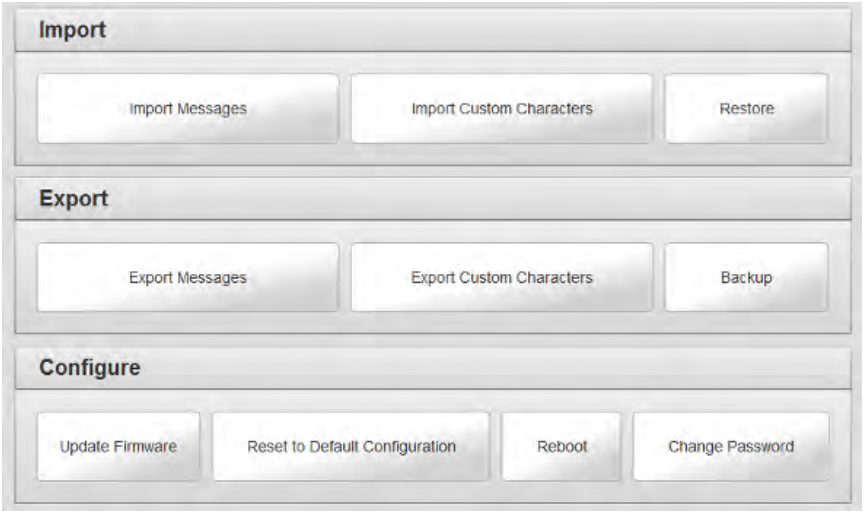

2. View or specify the following options:
   - Importing InView Messages
   - Importing InView Comms Module Custom Characters
   - Restoring InView Comms Module
   - Exporting InView Messages
   - Exporting InView Comms Module Custom Characters
   - Backing Up InView Comms Module
   - Updating Firmware
   - Resetting the InView Comms Module to Default Configuration
   - Rebooting the InView Comms Module

Section 3.31 Importing InView Comms Messages

NOTE If you are importing a .csv file, you need to ensure that the partition size you choose is large enough to accommodate the message group you are importing. Review the partition size set of the message group in the IMS .ivp project from which the *messages*.csv file was originally exported to ensure you specify a sufficiently large partition.

Imports messages from an existing, legacy .IVP file, a .csv, or a new Spectrum .sim file.

This option imports an existing set of messages created by the Rockwell Automation InView Messaging Software into the Spectrum Controls, Inc. InView Comms Module software. This allows you to view the configuration information and messages in the current InView software. You may also import legacy .IVL flies that contain custom character libraries.

To import an existing .IVP file:

1. Save the contents of an existing message table and configuration to a .IVP file using the legacy InView Message Software.
2. Start up the Spectrum Controls, Inc. InView Messaging Software.
3. From the Configuration Work Area, select the following icon:

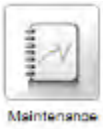

The Maintenance dialog with Import/Export/Configure areas appears:

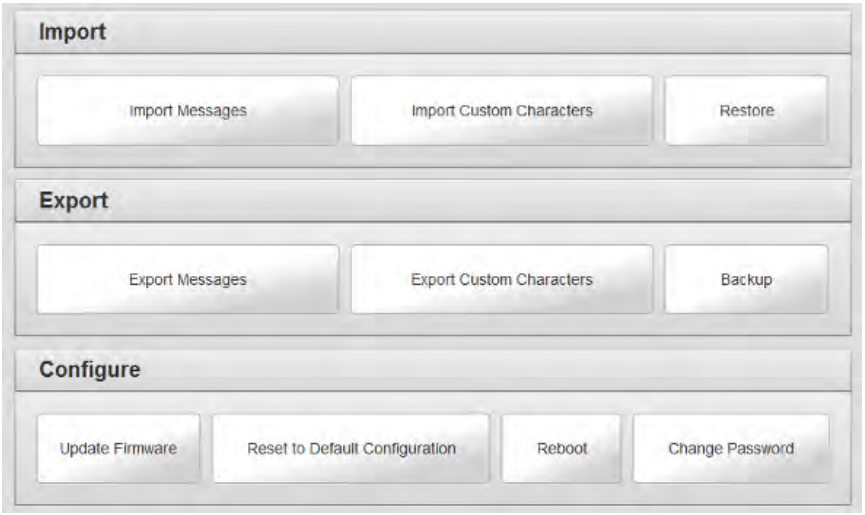

4. From the Import area, select the Import Messages button:

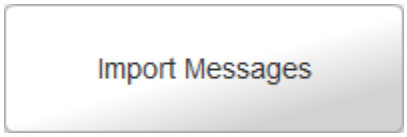

The confirmation dialog appears.

Confirm that you wish to continue to import messages:

- To confirm the import, click **Yes**.
- To cancel the import, click **No**.

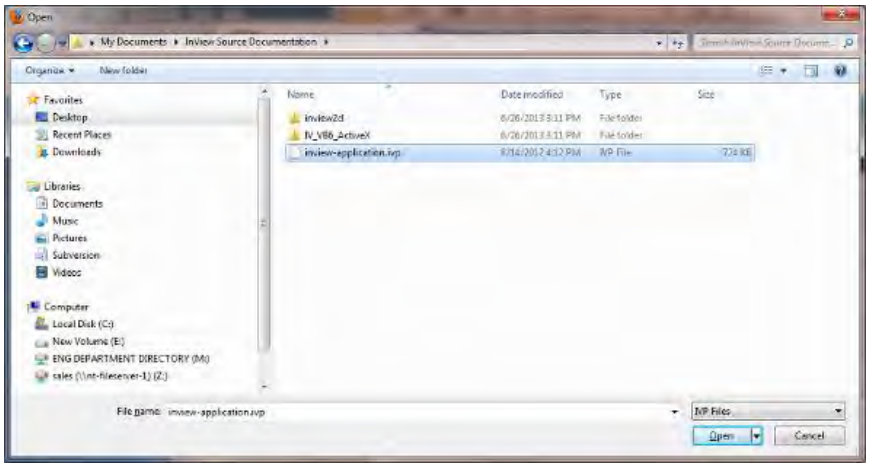

5. Navigate to the directory in which the .ivp, .csv, or .sim file you created is located.
6. Click **Open**. The software informs you that it is importing the data.

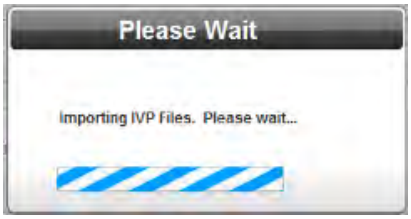

After the import is completed, you are able to access the messages in the software interface.

Section 3.32 Importing Custom Characters

Imports custom character libraries into the InView Comms Module.

To import custom characters:

1. Using the Rockwell Automation InView Messaging Software, export the custom character libraries to a .IVL file, or choose a new Spectrum .sic file.
2. Start up the Spectrum Controls, Inc. InView Messaging Software.
3. From the Configuration Work Area, select the following icon:

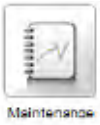

The Maintenance dialog with Import/Export/Configure areas appears:

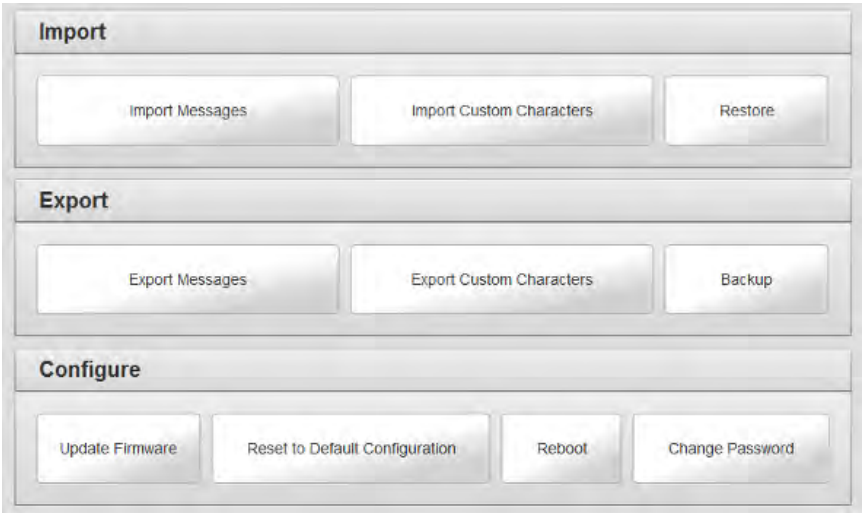

4. From the Import area, select the Import Custom Characters button:

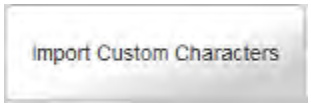

The following dialog appears:

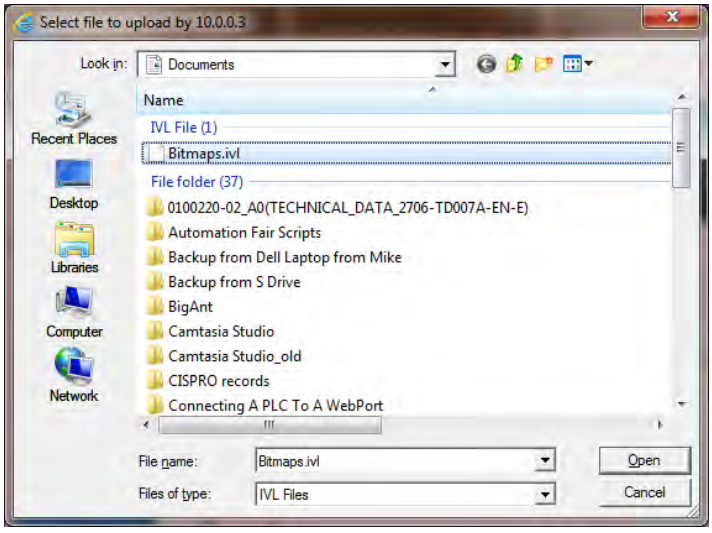

5. Navigate to the directory containing the .IVL or .sic file.
6. Click **Open**. The software informs you that it is importing the data:

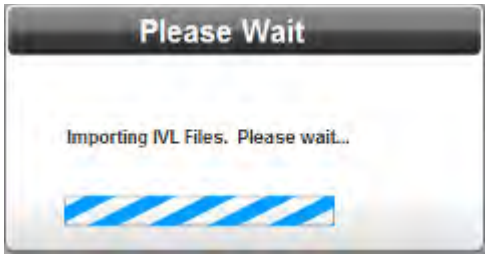

7. After the import is completed, you will be able to access the imported characters in the software interface.

Section 3.33 Restoring the InView Comms Module

Restores the InView Comms Module data. To restore the InView Comms Module:

1. Access the Configure:Maintenance dialog. See Managing InView Comms Module Maintenance.
2. Click **Restore**:

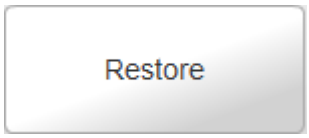

3. From the file dialog that appears, select the backup file you wish to use to restore your InView Comms Module and click **Open**:

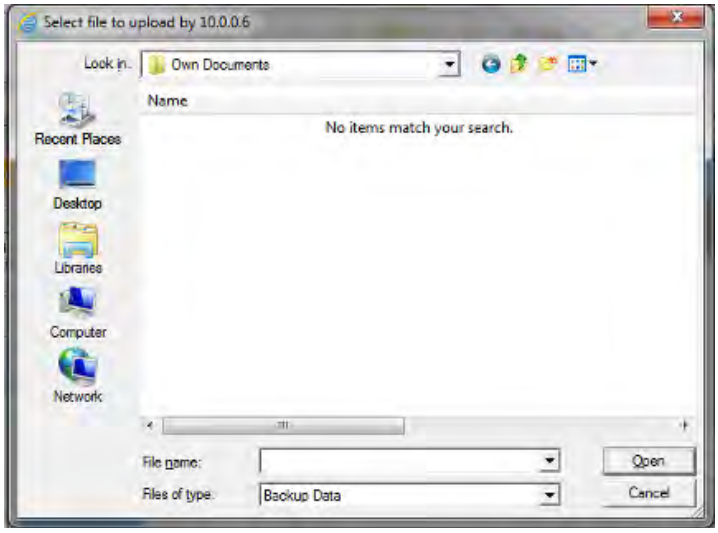

The software restores the data.

Section 3.34 Exporting InView Comms Module Messages

You can export InView Comms Module messages to other InView Comms Modules on the network, or to a file on a local personal computer.

To export an InView Comms Module message file:

1. Access the **Configuration:Maintenance** menu by clicking the Maintenance icon:

The Maintenance dialog appears:

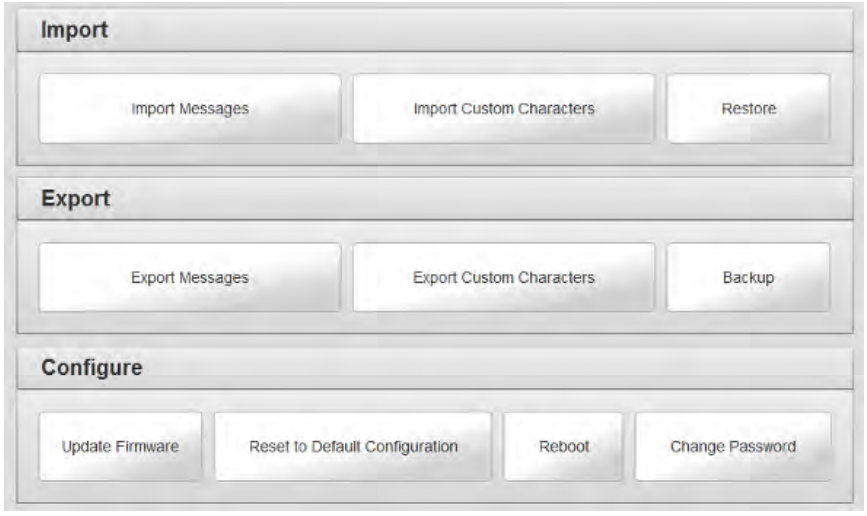

2. Click the **Export Messages** button:

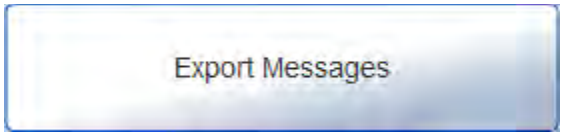

The following dialog appears:

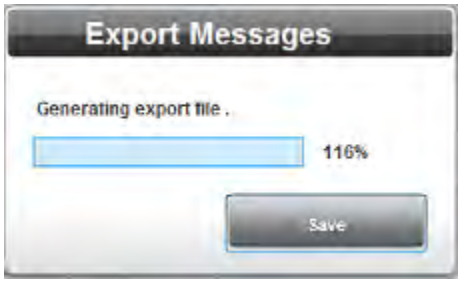

3. Click **Save** to bring up the download location:

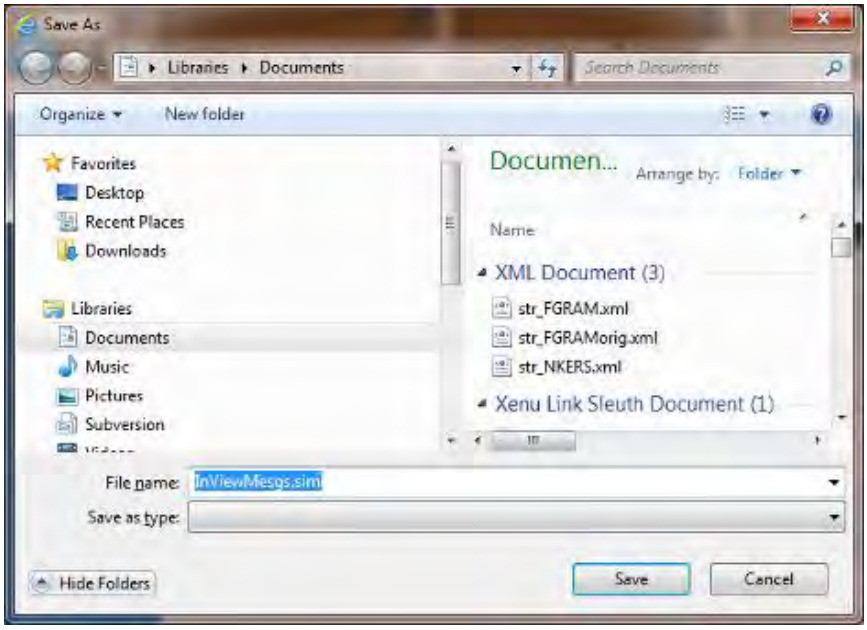

- Navigate to the folder where you wish to save the exported messages and enter a name. The exported file has a **.sim** (Spectrum InView Message file) extension. To ensure continued file access, the file must have the extension added.
- Click **Save** to save exported message in the designated file and to exit.

- **Cancel**. Exits without saving the exported messages.

Section 3.35 Exporting Custom Characters

You can export custom characters to a file.

To export an InView Comms Module file:

1. To access the **Configuration:Maintenance** menu, click the Maintenance icon:

The Maintenance dialog appears:

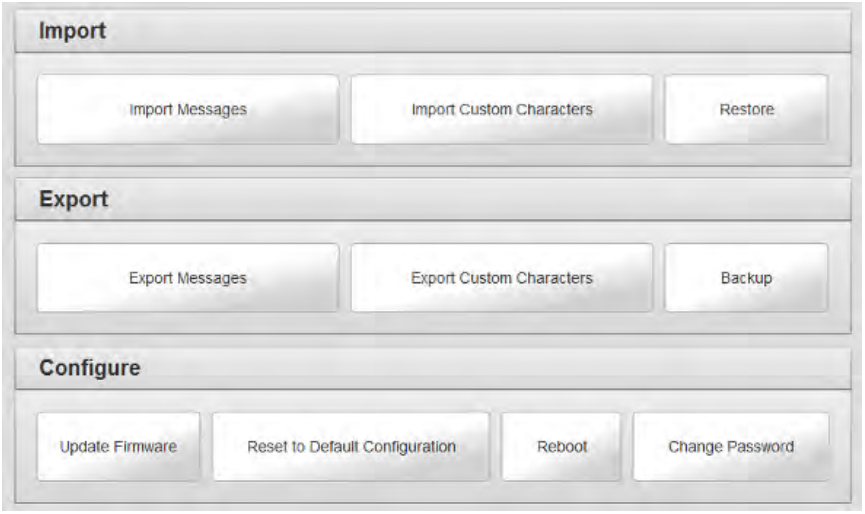

2. Click the **Export Custom Characters** button:

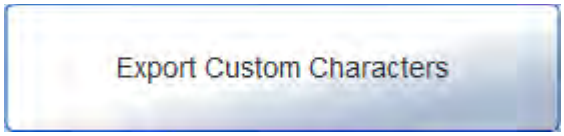

The following dialog appears:

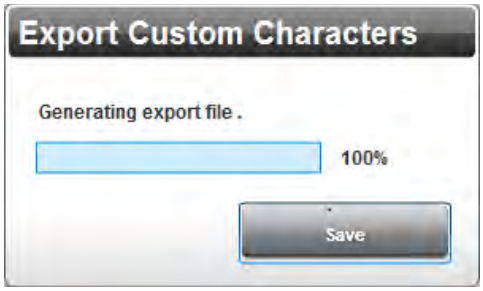

3. Click **Save** to bring up the download location:

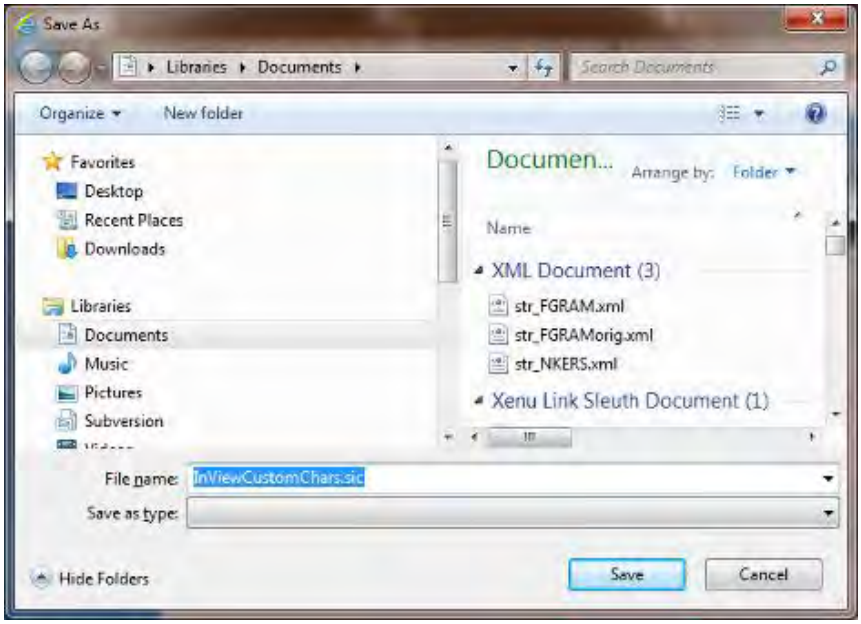

   - Navigate to the folder where you wish to save the exported characters file.
   - Click **Save** to save the exported file. The exported file has a **.sic** (Spectrum InView Custom Character file) extension. To ensure continued file access, the file must have the extension added.

- **Cancel**. Exits without saving the exported characters file.

Section 3.36 Backing Up the InView Comms Module

Backs up the InView Comms Module data. To back up the InView Comms Module:

1. Access the Configure:Maintenance dialog. See Managing InView Comms Module Maintenance.
2. Click **Backup**:

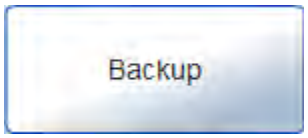

The software creates a backup file and informs you of progress:

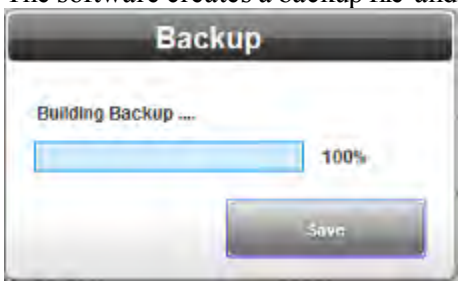

3. When progress reaches 100%, click **Save**. The following dialog appears:

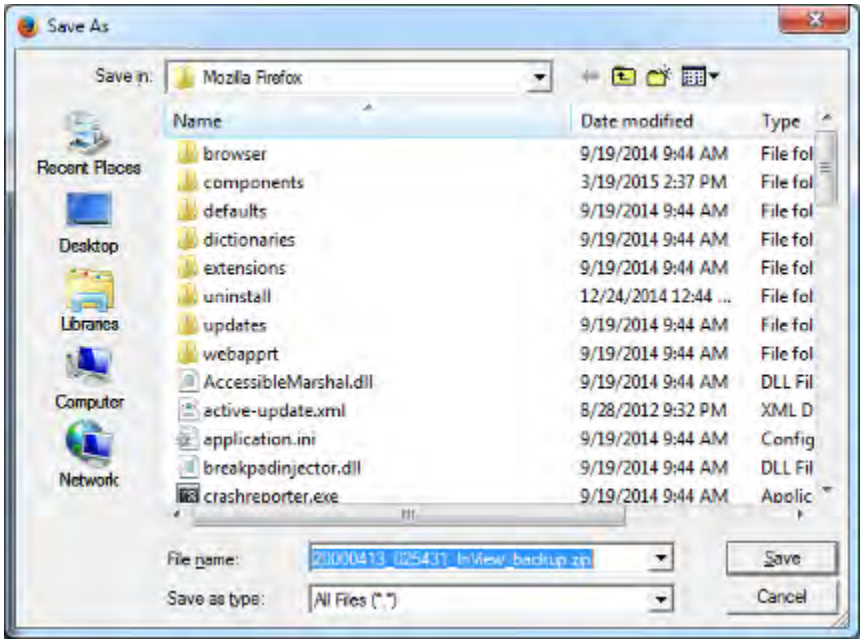

4. If necessary, navigate to the folder where you wish to save your backup and click **Save**.

   The software saves the InView Comms Module backup file with date, time, and code.

Section 3.37 Updating Firmware

Replaces firmware on the InView Comms Module. The firmware is the software that runs your InView Comms Module. Replacing firmware does not change or replace your data or settings on the InView Comms Module. While you install the firmware, the software informs you what is happening during the installation, and lets you know whether the process is successful. This takes several minutes.

To replace firmware:

1. Access the Configure:Maintenance dialog. See Managing InView Comms Module Maintenance
2. Click **Update Firmware**:

The following dialog appears:

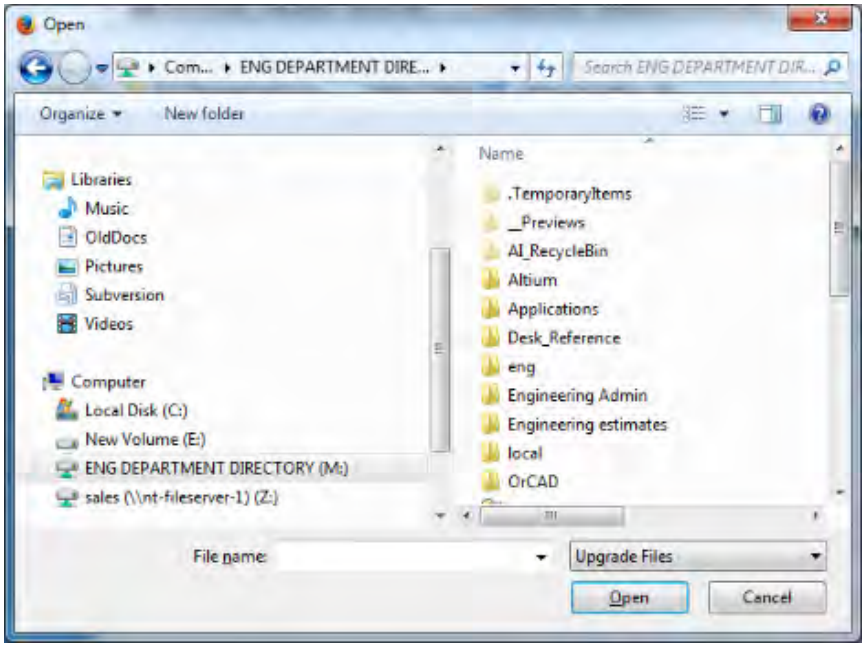

3. Navigate to the directory in which your firmware file is located. This directory can be on a personal computer drive or a network server. Select the correct file. Example: **InView Comms-*n.n.n*.fup** where *n.n.n* is the version. Your version may be different.

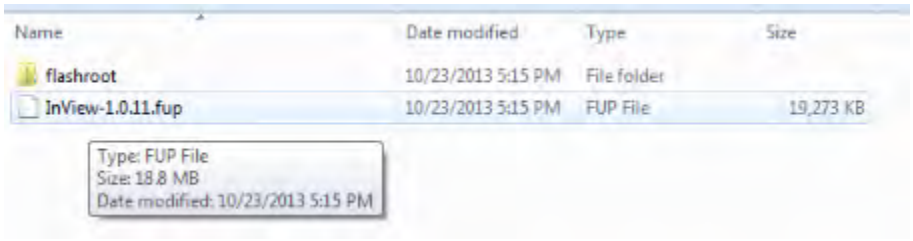

The software downloads the selected firmware to the InView Comms Module. It installs the software, displaying a progress bar during the installation:

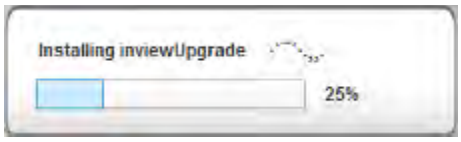

The software informs you **Firmware upgrade is completed** when done:

Section 3.38 Resetting the InView Comms Module to Default Configuration

If the InView Comms Module has stopped functioning for some reason, you may not need to reset an InView Comms Module to its default configuration. First try restarting the InView Comms Module using the software. This restarts the Comms Module using the current configuration. To reset the InView Comms Module and retain its current configuration, you may also press the **Reset** switch gently and briefly on the InView Comms Module board. You can now either remove power, or wait a short period. If you do not remove power, the InView Comms Module reboots itself after a short period.

If either a software reboot or a hardware reset fails to restart the InView Comms Module normally, you can reset the InView Comms Module to its default configuration using either the software or the **Reset** switch on the InView Comms Module board. If you wish to reset the InView Comms Module to its factory default settings using the hardware, press the **Reset** switch for an interval of thirty seconds. The InView Comms Module resets itself to its factory configuration settings. If the reset fails, call Technical Services for further help.

Pressing the Reset button for less than five seconds shows the IP address of the Comms Module on the attached display.

To reset the InView Comms Module to these settings using software:

1. Access the Configure:Maintenance dialog. See Managing InView Comms Module Maintenance Options.
2. Click **Reset to Default Config**:

   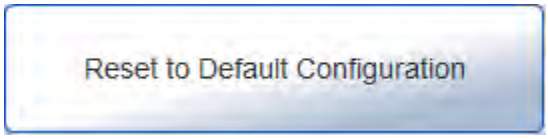

   The following dialog appears:

3. Confirm the reset:
   - **Yes**. Restores the factory default settings and exits.
   - **Cancel**. Exits without restoring the factory default settings.
4. The software informs you when the reset is done. To continue, click **OK**:

   The software restores the initial settings. For example, your InView Comms Module name is restored to **InView Comms Module**.

Section 3.39 Rebooting the InView Comms Module

Restarts the InView Comms Module. To reboot the InView Comms Module:

1. Access the Configure:Maintenance dialog. See Managing InView Comms Module Maintenance Options.
2. Click **Reboot**:

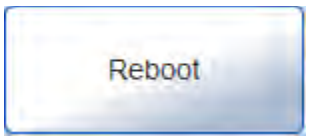

The following dialog appears:

3. Confirm the reboot:
   - **Yes**. Reboots the InView Comms Module and exits the InView Comms Module user login.
   - **No**. Exits without rebooting the InView Comms Module.

   The software reboots the InView Comms Module:
4. After about five minutes, reload your web browser and log back in to your InView Comms Module.

Section 3.40 Configuring Security Setup for the InView Comms Module

The InView Comms Module allows you to change password access for the InView Comms Module web page. To guard against unauthorized access to settings and log information, access is restricted by password. The InView Comms Module does not use user accounts or multiple passwords.

To change the password for accessing the InView Comms Module:

1. From the InView Configuration Work Area, select the following icon:

The Serial Communications Setup dialog appears:

2. View or specify the following options:
   - **Old Password**. Enter the password you used to log onto the InView Comms Module software.
   - **New Password**. Enter the new password.
   - **Confirm**. Re-enter the new password for confirmation.
   - **Submit**. Saves the new password on the InView Comms Module and exits.
   - **Cancel**. Exits without saving the new password on the InView Comms Module.

Section 3.41 Configuring Tools

You can change display and message queue information.

To add, modify, clear, or delete display and message queue information:

1. From the InView Configuration Work Area, select the following icon:

The Configure Tools dialog appears:

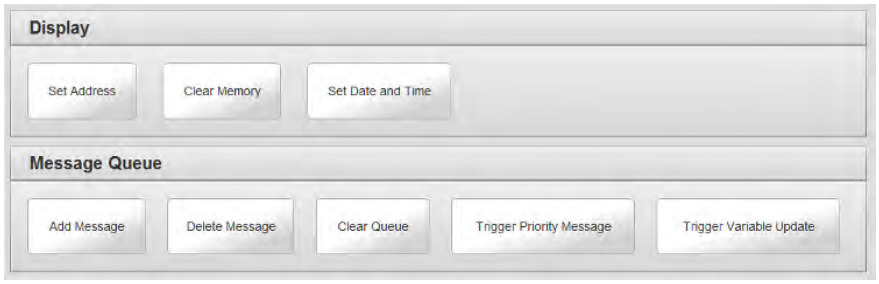

2. View or specify the following options for displays and the message queue:

Icon	Function	Access
Set Address	Set a display address:	Setting a Display Address
Clear Memory	Clear display memory:	Clearing Display Memory
Set Date and Time	Set date and time:	Setting Date and Time
Add Message	Add message to queue:	Adding Message to Queue
Delete Message	Delete message from queue:	Deleting Message From Queue
Clear Queue	Clear message queue:	Clearing Message Queue
Trigger Priority Message	Trigger priority message:	Triggering Priority Message
Trigger Variable Update	Trigger variable update	Triggering Variable Update

Section 3.42 Adding Message to a Queue

Once you have downloaded a message group, you can add it to a message queue. This queues a message to run on a single display, or all displays. Once queued, whether the message is visible or not depends on whether a higher priority message is already running on the display. The maximum number of messages that can run is 64. You may also add messages to a queue, delete messages from a queue, or trigger a priority message from the Messages dialog.

You may add a message to a queue from the Tools option, or from the Messages option (see Adding Messages)

To add a message to the queue of a display:

1. From the InView Configuration Work Area, select the following icon:

The Configure Tools dialog appears:

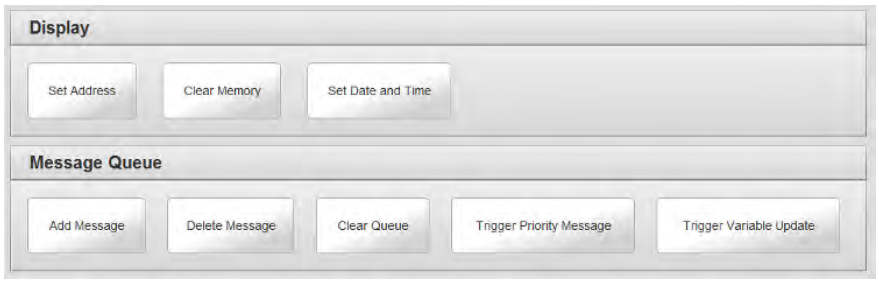

2. Select the Add Message icon:

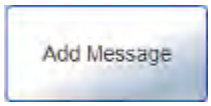

3. The Add Message To Queue dialog appears. Enter information in the listed fields.

- **Display**. From the dropdown list, select the display for which you wish to add the message to the queue.
- **Serial Address**. Lists the current serial display address (1 to 254). If you do not know what this address is, power cycle the InView display and write down the address you see displayed on startup.

- **Apply to All Displays**. Specify whether to apply the add message to queue instruction to all displays accessible from the InView Comms module.
- **Message ID**. Specifies the message ID (number 1 to *n* that is associated with the message when you create the message.

4. When finished making changes, click either of the following to exit:
   - **Submit**. Saves changes on the InView Comms Module and exits.
   - **Apply**. Applies the change to the display(s).

Section 3.43 Deleting Message From Queue

To delete a message from a queue:

1. Access the Tools dialog:

   See Adding Message to Queue

   The Configure Tools dialog appears:

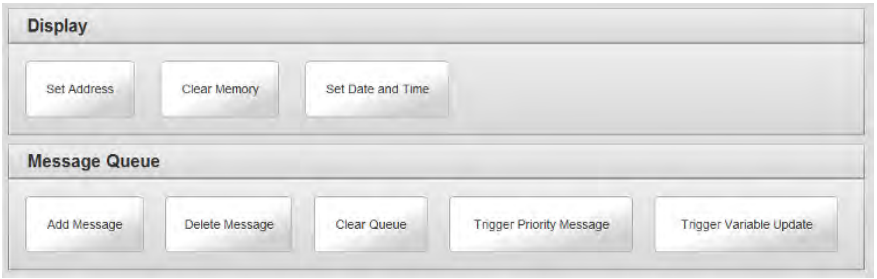

2. Select the Delete Message icon:

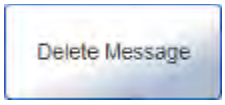

3. The Delete Message From Queue dialog appears.

   Enter information in the listed fields.

   - **Displays**. From the dropdown list, select the display for which you wish to delete the queued message.
   - **Serial Address**. Lists the current serial display address (1 to 254). If you do not know what this address is, power cycle the InView display and write down the address you see displayed on

startup.

- **Apply to All Displays**. Specify whether to apply the delete message from queue instruction to all displays accessible from the InView Comms module.
- **Message ID**. Specifies the message ID (number 1 to *n* that is associated with the message when you create the message.

4. When finished making changes, click either of the following to exit:
   - **Submit**. Saves changes on the InView Comms Module and exits.
   - **Apply**. Applies the change to the display(s).

Section 3.44 Clearing Message Queue

You can clear the queue of active messages that are running on a specific InView display. Once the queue is cleared, the background message (if any) is displayed. Even though the messages are cleared from the queue, they remain in the display's memory. Before clearing the message queue, the InView message display must be running, and you must know the address of the display.

To clear the message queue of a display:

1. From the InView Configuration Work Area, select the following icon:

The Configure Tools dialog appears:

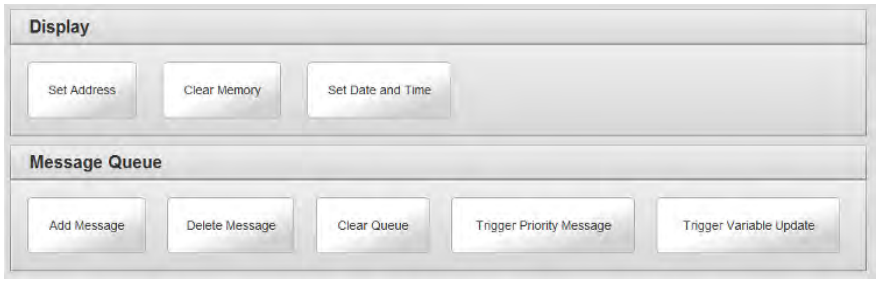

2. Select the Clear Queue icon:

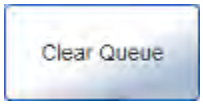

3. The Clear Message Queue dialog appears. Enter information in the listed fields.

- **Display**. From the dropdown list, select the display for which you wish to clear the message queue.
- **Serial Address**. Lists the current serial display address (1 to 254). If you do not know what this address is, power cycle the InView display and write down the serial address you see displayed on startup.
- **Apply to All Displays**. Specify whether to apply the clear message queue to all displays accessible from the InView Comms module.

4. When finished making changes, click either of the following to exit:
   - **Submit**. Saves changes on the InView Comms Module and exits.
   - **Cancel**. Exits without saving changes on InView Comms Module.

Section 3.45 Triggering a Priority Message

Once you have a message created, you can trigger the message as a priority message to one display, or all displays.

To trigger a priority message one or more displays:

1. From the InView Configuration Work Area, select the following icon:

The Configure Tools dialog appears:

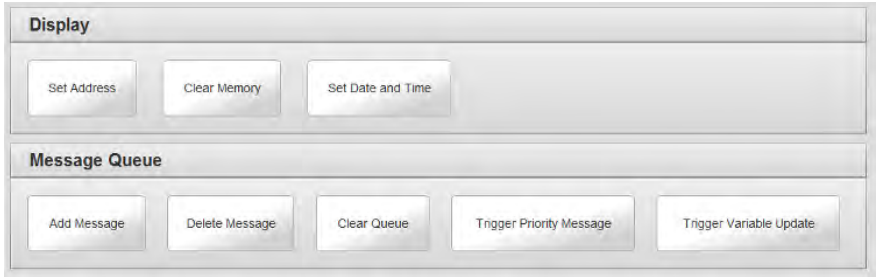

2. Select the Trigger Priority Message icon:

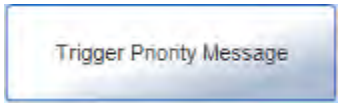

3. The Trigger Priority Message dialog appears. Enter information in the listed fields.

- **Display**. From the dropdown list, select the display for which you wish to trigger the priority message.
- **Serial Address**. Lists the current serial display address (1 to 254). If you do not know what this address is, power cycle on the InView display and write down the display serial address you see displayed on startup.
- **Apply to All Displays**. Specify whether to apply the trigger priority message to all displays accessible from the InView Comms module.
- **Message ID**. Specifies the message ID (number 1 to *n* that is associated with the message when you create the message.

4. When finished making changes, click either of the following to exit:
   - **Submit**. Saves changes on the InView Comms Module and exits.
   - **Apply**. Applies the change to the display(s).

Section 3.46 Triggering a Variable Update

Once you have a variable created, you can trigger an update to the variable on the display directly from the Comms Module.

To trigger a variable update on one or more displays:

1. From the InView Configuration Work Area, select the following icon:

The Configure Tools dialog appears:

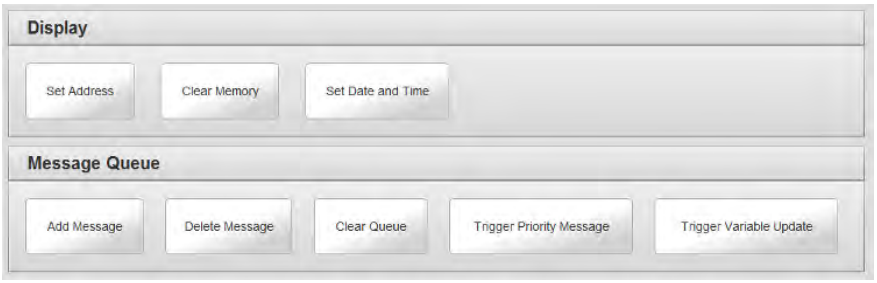

2. Select the Trigger Variable Update icon:

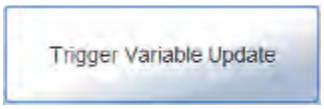

3. The Trigger Variable Update dialog appears. Enter information in the listed fields.

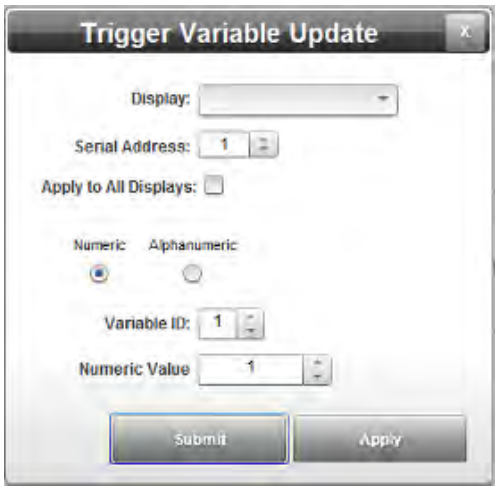

- **Display**. From the dropdown list, select the display for which you wish to trigger the variable update.
- **Serial Address**. Lists the current serial display address (1 to 254). If you do not know what this address is, power cycle on the InView display and write down the display serial address you see displayed on startup.
- **Apply to All Displays**. Specify whether to apply the trigger variable update to all displays accessible from the InView Comms module.
- **Variable ID**. Specifies the variable ID (number 1 to *n* that is associated with the variable when you create the variable. Variable may be **Numeric** or **Alphanumeric**:
  - *Numeric Value*. Specifies number to use when triggering the update. Example: **0**, **1**.
  - *Alphanumeric Value*. Specifies number or a letter.

4. When finished making changes, click either of the following to exit:
   - **Submit**. Saves changes on the InView Comms Module and exits.
   - **Apply**. Applies the change to the display(s).

Section 3.47 Viewing Diagnostics, Storage, and Log Information

Lists the following sets of information:

- The Processes groups list whether processes are running that are needed for your software to function properly.
- The Resources group shows how much of the system resources are being used for available memory, Flash memory, and the central processing unit (CPU).
- The Connectivity group allows you to test whether the Comms module is able to access a specific message server.

1. From the InView Configuration Work Area, select the following icon:

The following dialog appears:

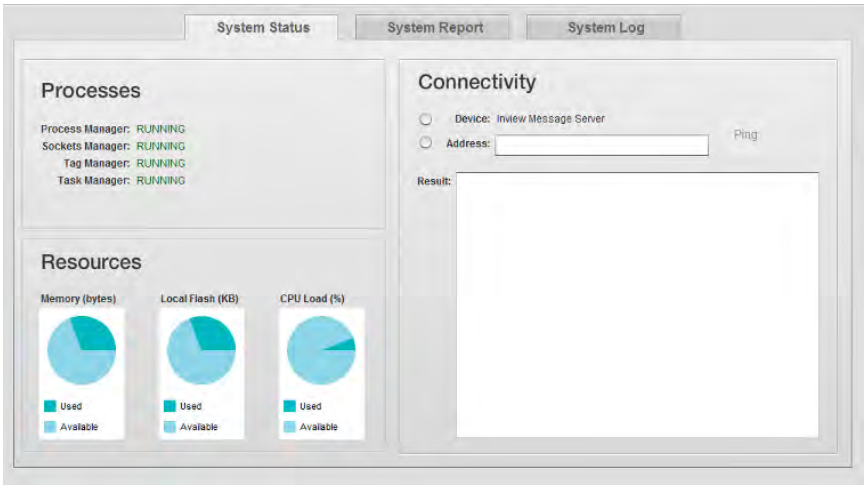

2. View the following options:
   - **Processes**. Lists all InView Comms Module processes and whether or not they are running. If any of these processes has stopped, please restart your InView Comms Module:
     - *Process Manager*. Shows whether this process is running or stopped.
     - *Sockets Manager*. Shows whether this process is running or stopped.
     - *Tag Manager*. Shows whether this process is running or stopped.
     - *Task Manager*. Shows whether this process is running or

stopped.

- **Resources**. Graphically shows available memory, Flash memory, and central processing unit (CPU) load:
  - *Memory (bytes)*. To view amount of memory usage in bytes and percentages, mouse over the graphic.
  - *Local Flash (KB)*. To view amount of memory usage in kilobytes and percentages, mouse over the graphic.
  - *CPU Load %*. To view CPU load in percentages, mouse over the graphic.
- **Connectivity**. Allows you to attempt to ping any IP address or server name from the InView Comms Module:
  - *Device*. To ping a message server by name, select the option; then choose the device from the dropdown list (if present).
  - *Address*. To ping a device by address, select the option; then enter the IP address for the device.
  - *Ping*. When clicked, pings the specified device.
  - *Result*. Tells you whether ping was successful and provides information about the ping.

    Whether or not the ping is successful is shown in a Test Results dialog and in the **Result** text box:
    - *Successful ping message* (for a device) appears in the **Result** text box:

      PING 10.0.0.232 (10.0.0.232): 56 data bytes

      64 bytes from 10.0.0.232: icmp_seq=0 ttl=63 time=8.312 ms

      64 bytes from 10.0.0.232: icmp_seq=1 ttl=63 time=1.414 ms

      64 bytes from 10.0.0.232: icmp_seq=2 ttl=63 time=1.424 ms

      --- 10.0.0.232 ping statistics ---

      3 packets transmitted, 3 packets received, 0% packet loss

      round-trip min/avg/max/stddev = 1.414/3.717/8.312/3.249 ms
    - *Unsuccessful ping message* appears in the **Result** text box:

      inview_message_server - Unsuccessful (10.0.0.8): 56 data bytes

      Ping: Success! 0.92/ms round-trip time

      EthernetIP: CPU not in slot 0

3.47.1 Viewing System Report Information

Lists the following report information:

- Product ID/Model name/Serial number.
- Firmware revision.
- GUI revision.
- Eth1 address and network information (including MAC address).
- Eth2 address and network information (including MAC address).
- User-defined name.
- PLC Message server details.
- Display profile information.

1. From the InView Configuration Work Area, select the following icon:

The following dialog appears:

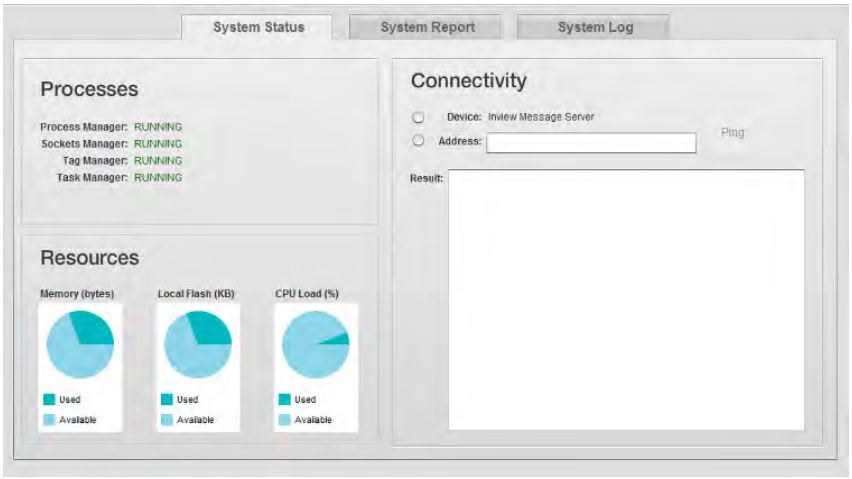

2. Select the System Report tab.

The following dialog appears:

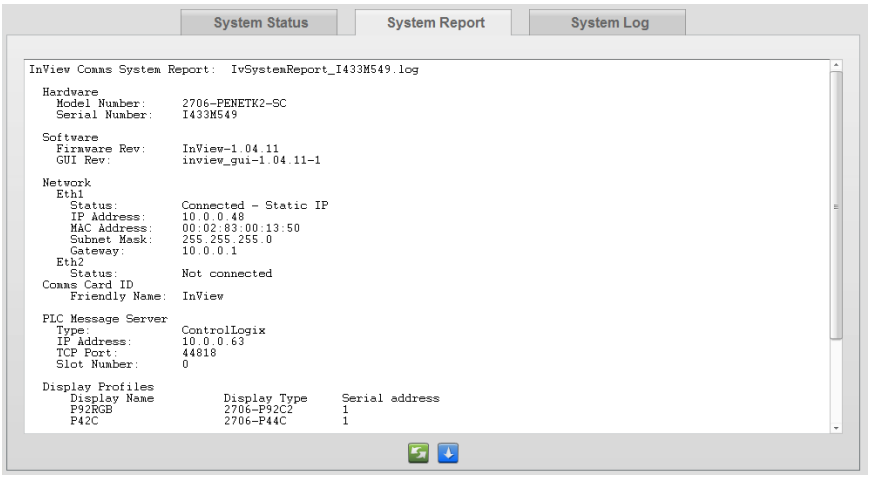

3. View the following options:
   - ***report_information***. Shows information for selected display, including hardware, software, network, PLC server and display profile settings.
   - **Refresh**. Refreshes report information. Click the following icon to update:

   - **Download**. Allows you to download the report contents to a file. Click the following icon to download:

     The following dialog appears

     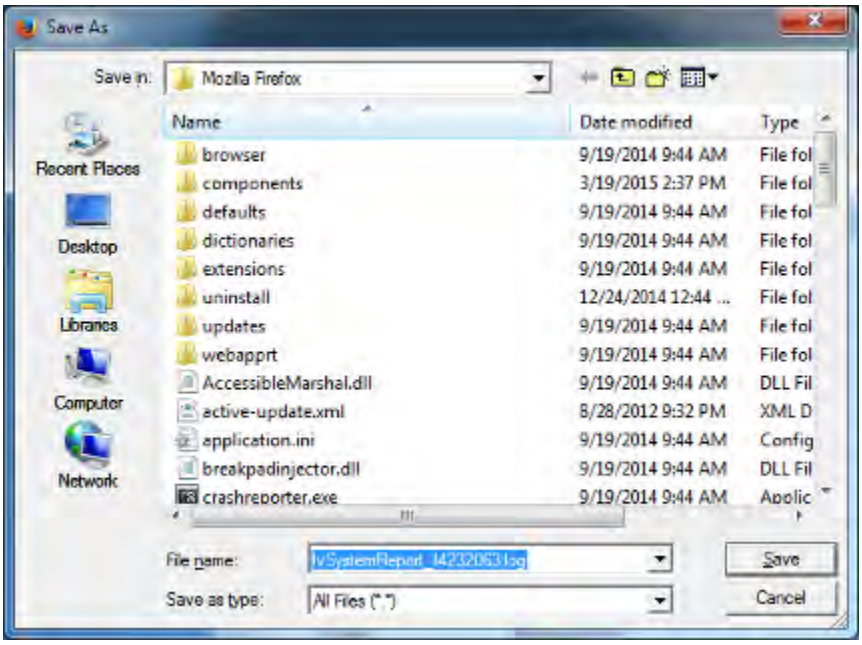

     Navigate to the directory where wish to store the saved report, edit the file name as needed, and click **Save**. The report saves.

3.47.2 Viewing System Engineering Error Log Data

Shows current InView Comms Module system engineering error details.

You can navigate through the pages using the buttons provided, or use the slider or next or previous page buttons.

The errors are viewed most recent date first, and as either LIVE or HISTORICAL:

- LIVE mode. Shows continual updates every ten seconds when you are on first page of logs, and you do not have any form of filtering activated. Default setting.
- HISTORICAL mode. When you move past the first page in the logs, or when you have a filter active, this mode activates. You do not receive updates when in this mode.

To view the logs:

1. Click the System Log tab on the Diagnostics dialog:

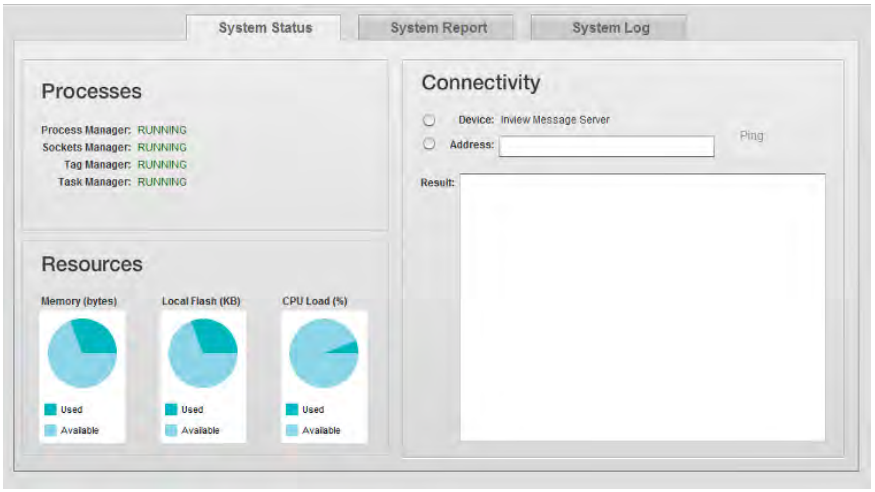

2. The following Engineering Log dialog appears:

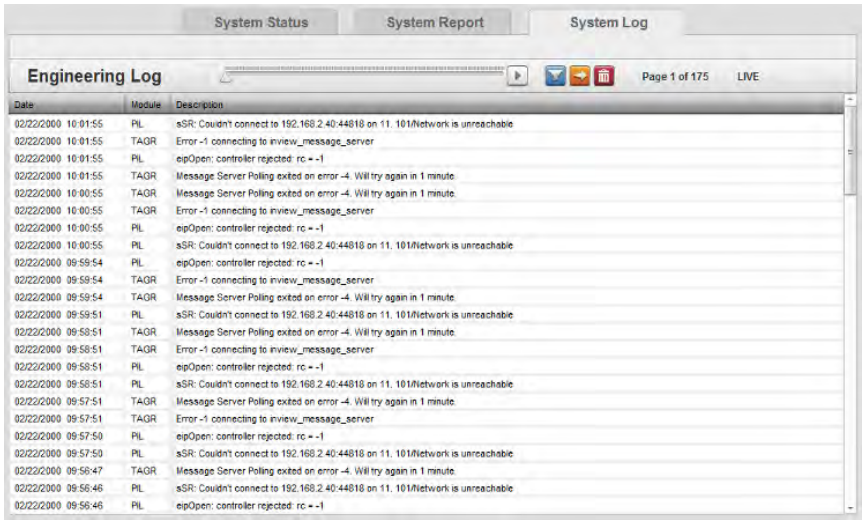

3. View the following options.
   - **Date**. Lists time and date stamp associated with the error as *MM/DD/YYYY HH/MM/SS* where *MM* is month, *DD* is day, *YYYY* is year, *HH* is hours, *MM* is minutes, and *SS* is seconds.
   - **Module**. Lists error module.
   - **Description**. Lists error description.
4. To filter error log entries by date range, click the following icon:

   - The Filter dialog appears. View or specify the following options:

     - **From**. Defines a starting date in the date range (must be earlier than ending date). Enter a new date in the field provided, or select a date from the calendar. To make changes, click the field or the calendar.

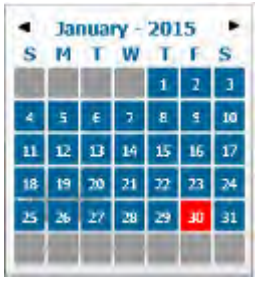

     - **To**. Defines an ending date in the date range (must be

later than starting date). You can also select the date from a calendar, as shown above.

- **Clear**. Clears filtering selections.
- **Apply**. Applies filtering selections.
- **Submit**. Saves changes on InView Comms Module and exits.
- **Cancel**. Exits without saving changes on InView Comms Module.

5. To export and download the engineering error data to a storage device, click the following icon:

- Confirm you wish to download the data:

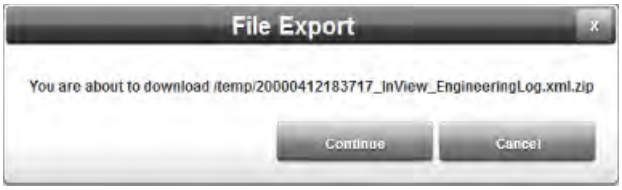

  - **Continue**. Brings up download location:

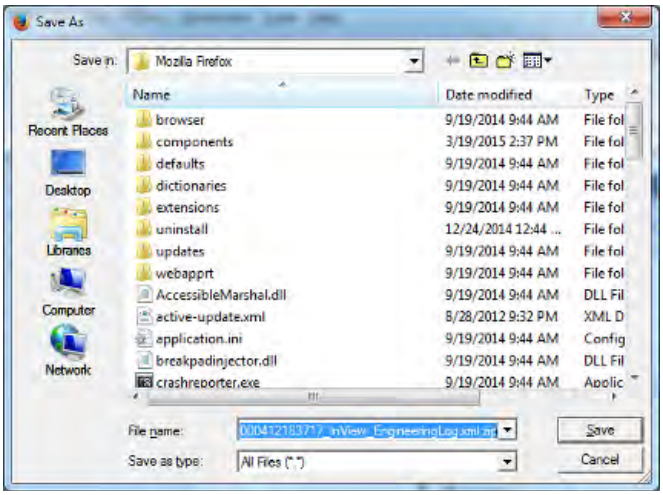

    - Navigate to the folder where you wish to save the log.
    - Click **Save** to download data from InView Comms Module and exit.
  - **Cancel**. Exits without downloading data from InView Comms Module.

6. To permanently delete all engineering error log entries, use the following icon:

7. Confirm the data purge:

- **Yes**. Purges all engineering error log data on InView Comms Module and exits.
- **Cancel**. Exits without purging engineering error log data on InView Comms Module.

Section 3.48 Configuring Serial Communications Setup

The InView Comms Module provides RS-232/RS-485 serial communications via terminal block J5.

InView Comms Modules replace previous versions as follows:

Pinout	RS-232	RS-485/422 Half Duplex	RS-485/422 Full Duplex
1	CD		
2	TXD	T-/R-	T-
3	RXD		R+
4	N/C	N/C	N/C
5	Isolated Common/Signal Ground	Isolated Common/Signal Ground	Signal Ground
6	N/C	N/C	N/C
7	CTS		R-
8	RTS	T+/R+	T+
9	RI		
10	Frame/Shield Ground		

To configure the serial port for the InView Comms Module:

1. From the InView Configuration Work Area, select the following icon:

The following dialog appears:

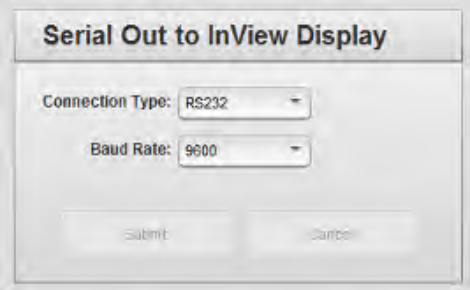

2. View or specify the following options:
   - Serial Out to InView Display. Specify:
     - *Connection Type*. Defines whether to use the InView Comms Module's RS-232 or RS-485 serial communication. RS-232 is a single-drop protocol (can only connect one device per port) that usually runs on cables shorter than fifty feet, and may be susceptible to noise. Select this option for point-to-point communication on the serial port. RS-485 is a multi-drop protocol (up to thirty-two devices per port), that runs up to five hundred feet (or more with repeaters), and is noise resistant. Select this option for multi-point network communication.
     - *Baud Rate*. Specifies the speed at which the serial port sends data. Rates are **9600**, **19200**, and **38400**. All displays except for the 2706-9*x*-SC use only the 9600 baud rate. Select the desired rate from the dropdown menu.
   - **Submit**. Saves the entered connection data on InView Comms Module. The software informs you that the data settings were successfully modified. Click **OK**.
   - **Cancel**. Exits without saving data from InView Comms Module.

Section 3.49 Viewing Eth1 Communications Status Information

You may view the Eth1 local network static or DHCP connection status (from the Network Setup dialog) on the title bar.

To view the information:

1. Mouse over the following icon on the menu bar:

   - When green, the Eth1 connection is configured with an IP address.
   - When red, the Eth1 connection is not active.

The following dialog appears:

2. View the following options:
   - **Connection Status**. Identifies whether, and how, the InView Comms Module communicates via the Internet:
     - *connected*. InView Comms Module is connected to the Internet.
     - *not connected*. InView Comms Module is not connected via the Internet.
   - **IP Address**. Lists InView Comms Module IP Address.
   - **Subnet Mask**. Lists the subnet mask for the Eth1 setting. The default value **is 255.255.255.0**.
   - **Gateway**. Lists Gateway address.
3. To modify connection information, double click the popup menu. This opens the Network Setup dialog:

   See Configuring WAN Settings for the InView Comms Module.

Section 3.50 Viewing Eth2 Communications Status Information

You may view the InView Comms Module DHCP or Static IP Eth2 settings (from the Network Setup dialog) on the title bar:

To view the information:

1. Mouse over the following icon on the menu bar:

   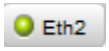

   - When green, the WAN connection is active.
   - When red, the WAN connection is not active.

   The following dialog appears:

2. View the following options:
   - **Connection Status**. Identifies whether, and how, the InView Comms Module communicates via the Eth2:

- *connected*. InView Comms Module is connected via Eth2.
- *not connected*. InView Comms Module is not connected via Eth2.

- **IP Address**. Lists InView Comms Module IP Address.
- **Subnet Mask**. Lists the subnet mask for the WAN setting. The default value is **255.255.255.0**.

3. To modify connection information, double click the popup menu. This opens the Network Setup dialog:

   See Configuring WAN Settings for the InView Comms Module.

Section 3.51 Viewing Help Information

To view help information:

1. Click the following icon on the menu bar:

   The following dialog appears:

   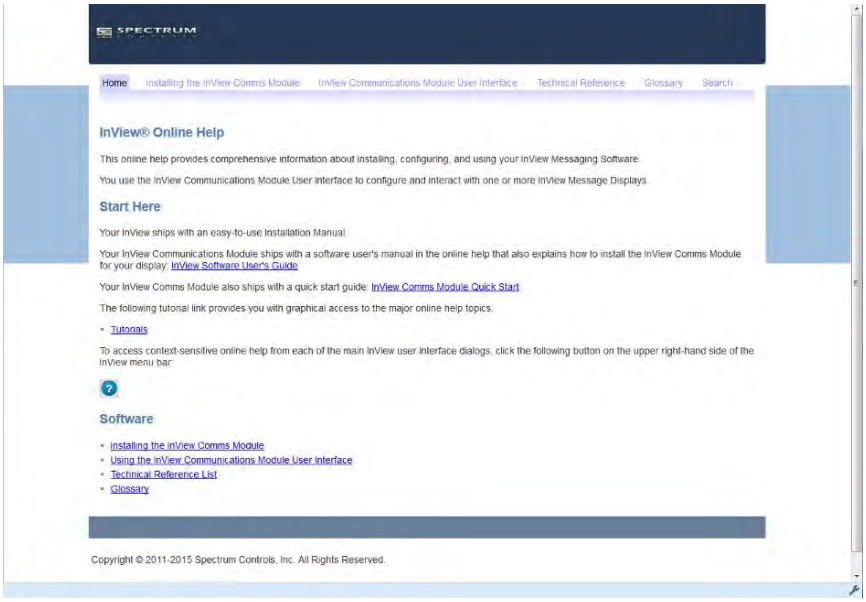

2. Either navigate to the topic of interest using the provided links, or search for a term using the search capability:
   - For context-sensitive help, select the help icon from the dialog that is currently displayed.
   - For a software table of contents, see Using the InView Comms Module User Interface.

Chapter 4
Technical Reference

The technical reference contains reference material that provides greater detail about some of the InView functions than you find in the general body of the documentation.

Section 4.1 InView Comms Modules Messages

InView Comms Modules Messages appear when a user enters incorrect information, or makes an incorrect selection. Most messages are self-explanatory:

Message	Explanation	Possible Cause
ALL the current messages and configured displays will be replaced. Do you wish to continue?	User Message. If you continue with the import of a new set of messages, all the existing messages and configured display data on the InView Comms Module will be replaced by the incoming message and display data. Confirm that you wish to do this, or cancel the import.	Choose whether to continue and delete your existing data, or cancel to retain the data.
Addresses must be unique.	User Input Error. You specified an address for a message server that was not unique.	Specify a unique address.
Address Word Offset cannot be '8'	User Input Error. You entered a word offset of 8 and this is not a valid offset for an SLC or MicroLogix PLC	Change the offset.
A Memory range conflict exists in the *named_offset*	User Input Error. You see this message when there is a range overlap in the Message Trigger, or Message Data offset value, or the Message Data Array size.	Change the relevant value to one where no range overlap exists.
Are you sure you want to reboot the InView Comms Module?	User Message. You see this message when you choose the option to reboot the InView Comms Module.	This will shut down and then reboot the InView Comms Module. Confirm that this is what you wish to do, or cancel the reboot.
Are you sure you want to reset to the default configuration?	User Message. You see this message when you choose the option to reset the InView Comms Module to factory default settings.	The reset will erase all user-defined data on the module. Confirm that this is what you wish to do, or cancel the reset.

Message	Explanation	Possible Cause
Array Size must be an even number.	User Input Error. You see this error because you entered an odd number in the array size field.	Enter an even number for the array size.
Block size is: *block size* bytes.	User Message. Identifies number of bytes in the block of interest. If the block size is greater than the block limit, you will see an additional error message showing the actual range.	Reduce the block size to a valid value.
Cannot parse XML data, Unable to Retrieve Data	Error Message. Error Log: Sockets Manager Message. The software was unable to receive the requested data.	You may see this message as a result of a low-level error. Contact Technical Service.
Custom character library not found: *library name*. Any references to the missing custom characters will be stripped from the message.	User Input Error. You wish to delete a library that is currently being referenced in a message.	If you do this, the characters from the library that are currently being used in messages will be removed from the messages.
Data successfully modified	User Message. You see this message when you change information in a dialog and the software successfully adds your changes.	No further action is needed.
Display Name '*name display data* already exists.	User Input Error. You see this message because you entered a display name that already exists.	Enter a different name.
Display Specs not found for *display_type*	User Input Error. You should never see this message. If you do, essential device information is missing from the configuration.	Try deleting the device from the software and adding it back in. If the problem continues, call Technical Services.
Invalid Eth1 Subnet Mask	User Input Error. The Eth1 subnet mask entry must be from the following list: • 255.128.0.0, 255.192.0.0, 255.224.0.0, 255.240.0.0, 255.248.0.0, 255.252.0.0, 255.254.0.0, 255.255.0.0, 255.255.128.0, 255.255.192.0, 255.255.224.0, 255.255.248.0, 255.255.252.0, 255.255.254.0, 255.255.255.0, 255.255.255.128, 255.255.255.192, 255.255.255.224, 255.255.255.240, 255.255.255.248, 255.255.255.252	You see this message if your Eth1 subnet mask does not match one of these entries.

Message	Explanation	Possible Cause
Invalid Eth2 Subnet Mask	User Input Error. The Eth2 subnet mask entry must be from the following list: • 255.128.0.0, 255.192.0.0, 255.224.0.0, 255.240.0.0, 255.248.0.0, 255.252.0.0, 255.254.0.0, 255.255.0.0, 255.255.128.0, 255.255.192.0, 255.255.224.0, 255.255.248.0, 255.255.252.0, 255.255.254.0, 255.255.255.0, 255.255.255.128, 255.255.255.192, 255.255.255.224, 255.255.255.240, 255.255.255.248, 255.255.255.252	You see this message if your Eth2 subnet mask does not match one of these entries.
library name already exists	User Input Error. You see this message when you entered a library name that matches one that already exists.	Enter a different library name.
Message ID is not an integer: *id*	User Input Error. You see this message if you entered any other value than a whole number for a message ID.	Use a whole number for your message ID.
Message ID must be between 1 and 4000	User Input Error. You see this message if you enter a message ID that is beyond this range during an add, delete, clear, or trigger a message.	Check for the correct ID in your list of messages.
Messages import completed. Restarting InView services.	User Message. You see this message when you have successfully imported an .ivp, .ivl, or .csv message group file into the software.	No further action is needed. You will shortly see a message group appear in the GUI.
Message Group '*name* already exists	User Input Error. You see this message when you enter a new group name that exactly matches an existing group name.	Modify the group name to be unique.
Message Base Address and Variable Base Address cannot have the same value.	User Input Error. You see this message if you enter the same value in both fields.	You must enter a different value in each field.
Message Trigger Offset and Message Data Offset cannot have the same value	User Input Error. You see this message if you enter the same value in both fields.	You must enter a different value in each field.
Modified data has not saved. Are you sure you wish to navigate away from this screen?	User Message. You usually see this message when you have made changes in a dialog but have not chosen to save them.	Confirm that you wish to exit without saving your changes, or save the changes.
New Password and Confirmation do not match	User Input Error. The characters entered in the new password and confirmation fields were not an exact match.	Enter a new password and confirmation that match exactly.

Message	Explanation	Possible Cause
New Password must be at least eight letters	User Input Error. You entered a new password that is not eight letters long.	Add enough letters to the new password to make it at least eight letters long. Longer is stronger.
Old Password is incorrect	User Input Error. Under Security Setup, while trying to change an existing password to a new password, you entered an incorrect password for the existing (old) password.	You will have to enter the correct existing password before you can change the password.
The following new message IDs are duplicates: *id1*, *id2*	User Input Error. You see this error when you entered the same values as existing messages.	Enter different message IDs.
This message cannot be downloaded for one of the following reasons: There are messages that reference custom character libraries that cannot be found. This includes the following libraries: *library_names*; You must either upload the missing libraries or remove any references to them in the messages.	User Input Error. You see s message when you have imported existing messages that require characters such as bitmaps from libraries that are not already in libraries in the software.	Use the InView Comms Module software to import the missing library, or edit the messages to remove any obsolete characters.
This message cannot be previewed. It contains an element that does not fit within the display.	User Input Error. If you try to preview a message containing too long an embedded object in a 40H font, the software warns you it cannot display the object and does not show the preview:	Remove the embedded object, or separate the letters.
Trigger and Data must fit within a block of *number* bytes.	User Input Error. You have entered a value that exceeds the valid number of bytes allowed in the block.	Reduce the value entered so that it is equal to, or less than, the value shown in the error message, keeping in mind that the upper limit shown applies to a combined total of the Trigger and Data bytes.
Unable to receive data	Error Message. You see this message if the software was unable to successfully read and/or decompress data from a socket.	This is a low-level error.
Variable Trigger Offset and Variable Data Offset cannot have the same value.	User Input Error. You see this message if you enter the same value in both fields.	You must enter a different value in each field.

Message	Explanation	Possible Cause
You can only import bitmaps that are 16 × 16, 24 × 24, or 32 × 32	User Input Error. You tried to import a bitmap that did not fit the stated pixel counts.	Use a graphics software package to re-size your bitmap to fit the valid pixel counts.
You entered an incorrect password	User Input Error. You see this message if you entered one or more characters incorrectly in the **Password** field.	Re-enter the password correctly.
ALL the current messages and configured displays will be replaced. Do you wish to continue?	User Message. If you continue with the import of a new set of messages, all the existing messages and configured display data on the InView Comms Module will be replaced by the incoming message and display data. Confirm that you wish to do this, or cancel the import.	Choose whether to continue and delete your existing data, or cancel to retain the data.

Section 4.2 Concepts

The following list contains further information about concepts that you may encounter when setting up and using your InView Comms Modules:

Concept	Information
Application service provider (ASP)	Application service provider. Software that is provided over a network as a service to businesses that do not wish to, or cannot afford to, provide the software services for themselves.
API	Application Programmer Interface. Software that provides source code specifications intended for use by developers to create interfaces that communicate with each other using the code routines, data structures, and object classes that may be provided by the API.
CPU	Central Processing Unit. Carries out the instructions provided by a computer program. Normally these are basic logical, input/output, and arithmetical operations that form the basis of most software operations on a computer.
Domain Name Server (DNS)	This is the value that is associated with the Domain Name Server that your system interacts with on the Internet. Domain name servers convert text names that are easy to remember (google.com, spectrumcontrols.com) to IP address values.
DHCP Client	Dynamic Host Configuration Protocol Client. When you connect a new device such as a computer, or an InView Comms Module to a network that has a DHCP Server set up, the client device gets its IP address and other configuration information such as default gateway and domain name from a group of IP addresses maintained by the DHCP server for a defined time period.
Flash	A type of non-volatile memory that can be electronically erased and re-written.
FTP/FTPS	File Transfer Protocol/Secure File Transfer Protocol. A standard network protocol standard used to transfer files from one computer or host to another over a network that uses the TCP/IP communications protocol. FTP is therefore frequently used to transfer files over the Internet.

Concept	Information
FSF	Free Software Foundation. A non-profit foundation that supports free software. It wrote an operating system, GNU, that is similar to Unix but is free to all users. The General Public License (GPL) was written for distribution with the operating system but is frequently used for other free software packages.
Gateway Address	A gateway address is the default address of your network or web site. This is usually the next address in line when connecting to the Internet from a local area network and is usually the address assigned to a router or a firewall. Communications traffic goes out and comes in through the gateway.
GPL	GNU Public License. A license offered by the Free Software Foundation that covers licensing and distribution of free software.
HTTP/HTTPS	Hypertext Transfer Protocol. Communication protocols that access the world-wide web. HTTP protocol is not secure. HTTPS is secure. The S designation means that the transfer protocol is combined with the Secure Socket Layer/Transport Security Layer (SSL/TLS) protocol to provide secure communication for transactions such as payments across the Internet.
Internet Protocol (IP) Address	An IP address is a unique number that every device that connects to the Internet must have. Devices include personal computers, printers, removable hard drives, routers such as the InView Comms Module, and hardware firewalls. The addresses are assigned by your system administrator or by the protocol that is running on your device. The connection method you choose defines how that address is assigned.
Local Area Network (LAN)	A local area network (LAN) is a network that is normally made of devices such as personal computers that are located near to each other, such as in the same office building or plant.
LED	Light-emitting diode. Photons emitted from a semi-conductor provide indicator signals for electronic devices and various forms of lighting. An LED can emit light photons in different colors, including red, green, and purple, and different frequencies (visible, infrared, and ultraviolet). InView has no LEDs visible outside the Inview Comms Module case enclosure.
MAC	Media Access Control address. A unique set of numbers assigned to a network interface card and stored in the read-only memory. A MAC address may also be called the Ethernet hardware address or the physical address of a device.
NAT	Network Address Translation. Used for port forwarding and 'masquerading'.
PLC	Programmable logic controller. A digital computer used to automate industrial processes such as controlling electrical turbine operation, assembly lines, and manufacturing machinery. The controllers are frequently ruggedized to withstand difficult operating environments.
Static IP Address	A permanent IP address assigned to a computer by the network administrator or a domain name server.
Transmission Control Protocol, Internet Protocol (TCP/IP)	Transmission Control Protocol, Internet Protocol. A group of communications protocols used to communicate between computers on the Internet or other networks. Also called The Internet protocol suite. The suite sends data across the Internet in packets.

Section 4.3 Calculating Message Size

By calculating the message size, you can determine the maximum number of messages allowed for messages of a set length.

To calculate message size, use the following table:

Message Attribute	Size	Note
Heading *	9	A heading adds 9 bytes to a message.
Message*	11	A message always uses a minimum of 11 bytes
Char(0×0D)	1	Carriage return adds 1 byte to a message
Char(0×20-0×7F)	2	Standard ASCII characters add 1 byte to a message
Char(0×E0-0×FF)	2	Most international characters add 2 bytes to a message
Symbol	3	Select international characters add 3 bytes
Time	5	Inserting the time adds 1 byte to a message
Date	1	Inserting the date adds 2 bytes to a message.
Color	2	Each color added to a message (over and above the message attribute color) adds 2 bytes to the message.
Flash	2	Add 2 bytes each time flash is enabled for text and 2 bytes for each line that has flash enabled.
Font Style	4	Each font style added to a message adds 4 bytes to message.
Variable	9	Inserting a variable adds 9 bytes to a messages

* The Heading and Message include settings for mode, font, color, and justification. If using a font size of 24 or 32, add 2 bytes to the minimum message size.

The formula for maximum number of messages is:

200,000/Message Size = Maximum Number of Messages

- If the default message size is 100 bytes, then the maximum number of messages is 2,000.
- 200,000/100=2000
- If the default message size is 50 bytes, then the maximum number of messages is 4,000.
- 200,000/50=4,000
- If the default message size is 200 bytes, then the maximum number of messages is 1,000.
- 200,000/200=1,000

Section 4.4 About Communication Tags

You must define tag parameters for the InView message data and variable that is transferred to/from the controller for each communication protocol. The tags must be ASCII or Integer.

Tags are as follows:

Tag	Description
Message Trigger Address	The controller address that triggers a message to display.
Message Data Address	The starting address of the message data to be displayed.
Message Array Size	The size of the array, 16 to 230 characters (depending on the PLC message server), containing the message data. The maximum array size is dependent on the controller and must be an even integer.
Message Data Swap Bytes	(DeviceNet not available at present.) For DeviceNet, each message data tag can be set to swap (or not swap) the order of bytes within a 16-bit word. To enable swapping, select the check box. To disable swapping, uncheck the box.
Variable Trigger Address	The controller address that will trigger a message variable to display.
Variable Data Address	The starting address of the variable data to be displayed.
Variable Array Size	The size of the array, 15 to 255 characters, containing the variable data. The maximum array size is dependent on the controller and must be an even integer.
Variable Data Swap Bytes	(DeviceNet not available at present.) For DeviceNet, each variable data tag can be set to swap, or not swap, the order of bytes within a 16-bit word. To enable swapping, select the check box. To disable swapping, uncheck the box.

The maximum array size for the Ethernet protocol is as follows:

Controller Type	Array Size
SLC	80
MicroLogix	80
PLC	230
Compact with ENI	230
ControlLogix with ENI	230
FlexLogix with ENI	254

Section 4.5 How Message Priorities Work

Message priority specifies the importance of a message. You can assign low, medium, or high priority to a message. Messages of a lower priority will not run if any message of a higher priority is running.

The third column of each row in the message list shows the priority assigned to a message: **Low**, **Medium**, or **High**.

The following table shows a sample of priorities set for messages:

Message Number	Priority
5	Low
4	Low
3	Medium
2	High
1	High

The result of sending these sample priority messages is as follows:

Message queue	Message number shown on display	Highest priority message displayed
5	5	Low
4,5	4,5 both messages toggle	Low
5,4,3	3	Medium
5,4,3,2	2	High
5,4,3,2,1	1,2	High
5,4,2,1	1,2	High
4,3,2,1	1,2	High
4,3,1	1	High
3,4	3	Medium
4	4	Low
-	-	Background Message

The following example shows a more complicated set of priorities:

Message Number	Priority
1	Low
2	Low
3	Low
4	Medium
5	Medium
6	Medium
7	High
8	High
9	High

The following example shows a more complicated set of priorities (XX means 'does not matter'):

Message Number in Activation Register	Message Number in Deactivation Register	Message queue	Number of message displayed	Highest priority message displayed
1	XX	1	1	Low
2	XX	1,2	1	Low
3	XX	1,2,3	1	Low
5	XX	1,2,3,5	5	Medium
4	XX	1,2,3,5,4	5,4	Medium
6	XX	1,2,3,5,4,6	5,4,6	Medium
9	XX	1,2,3,5,4,6,9	9	High
8	XX	1,2,3,5,4,6,9,8	9,8	High
8	XX	2,3,5,4,6,9,8	9,8	High
7	1	2,3,5,4,6,9,8,7	9,8,7	High
7	5	2,3,4,6,9,8,7	9,8,7	High
XX	7	2,3,4,6,9,8	9,8	High
XX	9	2,3,4,6,8	8	High
XX	8	2,3,4,6	4,6	Medium
XX	4	2,3,6	6	Medium
XX	6	2,3	2,3	Low
XX	2	3	3	Low
XX	3	-	-	Background Message

Section 4.6 Extended ASCII Character Set

The following table lists the extended ASCII character set and hexadecimal and decimal values associated with the ASCII character:

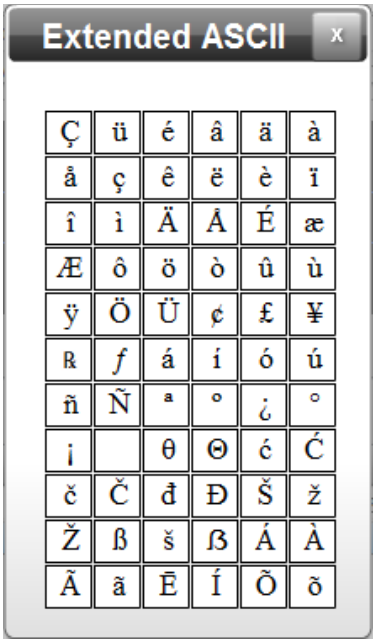

Character	Hex	Dec	Character	Hex	Dec
Ç	80H	128	í	A1H	161
ü	81H	129	ó	A2H	162
é	82H	130	ú	A3H	163
â	83H	131	ñ	A4H	164
ä	84H	132	Ñ	A5H	165
à	85H	133	ª	A6H	166
å	86H	134	º	A7H	167
ç	87H	135	¿	A8H	168
ê	88H	136	°	A9H	169
ë	89H	137	¡	AAH	170
è	8AH	138	(thin space)	ABH	171
ï	8BH	139	θ	ACH	172
î	8CH	140	Θ	ADH	173
ì	8DH	141	ć	AEH	174
Ä	8EH	142	Ć	AFH	175
Å	8FH	143	č	B0H	176
É	90H	144	Č	B1H	177
æ	91H	145	đ	B2H	178

Character	Hex	Dec	Character	Hex	Dec
Æ	92H	146	Đ	B3H	179
ô	93H	147	Š	B4H	180
ö	94H	148	ž	B5H	181
ò	95H	149	Ž	B6H	182
û	96H	150	β	B7H	183
ù	97H	151	š	BH8	184
ÿ	98H	152	ß	B9H	185
Ö	99H	153	Á	BAH	186
Ü	9AH	154	À	BBH	187
¢	9BH	155	Ã	BCH	188
£	9CH	156	ã	BDH	189
¥	9DH	157	É	BEH	190
Pt	9EH	158	Í	BFH	191
f	9fH	159	Õ	C0H	192
à	AOH	160	õ	C1H	193

Section 4.7 How InView LEDs Work

InView Comms Module LEDs function as follows.

LED Operation	Function Indication
Solid ON	Normal Operation (no fault)
Solid OFF	Hardware failure
Blinking	POR Initialization OR no communications

LED Operation	Function Indication
Solid ON	Hardware failure
Solid OFF	Normal Operation (no fault}
Blinking	Application failure

Section 4.8 Easy Tags Summary

Tag Name	Description	Function
iv_DispSerAddr	Display Serial Address	Used in conjunction with all other Easy Tags to specify the target display.
iv_PriorityMesg_Trig	Priority Message Trigger	When the value for iv_PriorityMesg_Trig changes then the Message Number contained in tag iv_PriorityMesg_Num will be activated on the display specified by iv_DispSerAddr.
iv_PriorityMesg_Num	Priority Message Number	Message Number to be activated whenever the value for iv_PriorityMesg_Trig is changed.
iv_AddMesg2Q_Trig	Add Message to Message Queue Trigger	When the value for iv_AddMesg2Q_Trig changes then the Message Number contained in tag iv_AddMesg2Q_Num will be added to the Message Queue for the display specified by iv_DispSerAddr.
iv_AddMesg2Q_Num	Add Message to Message Queue Number	Message Number to be added to the Message Queue whenever the value for iv_AddMesg2Q_Trig is changed.
iv_DelMesgFromQ_Trig	Delete Message from Message Queue Trigger	When the value for iv_DelMesgFromQ_Trig changes then the Message Number contained in tag iv_DelMesgFromQ_Num will be deleted from the Message Queue for the display specified by iv_DispSerAddr.
iv_DelMesgFromQ_Num	Delete Message from Message Queue Number	Message Number to be deleted from the Message Queue whenever the value for iv_DelMesgFromQ_Trig is changed.
iv_ClearMesgQ_Trig	Clear Message Queue Trigger	When the value for iv_ClearMesgQ_Trig changes then the Message Queue will be cleared for the display specified by iv_DispSerAddr.
iv_NumVarUpdate_Trig	Update Numeric Variable Trigger	When the value for iv_NumVarUpdate_Trig changes then the Numeric Variable Number contained in tag iv_NumVarUpdate_Num will be updated with the Numeric Variable value contained in tag iv_NumVarUpdate_Val for the display specified by iv_DispSerAddr.
iv_NumVarUpdate_Num	Numeric Variable Update Number	Numeric Variable ID number to be updated whenever the value for iv_NumVarUpdate_Trig is changed.
iv_NumVarUpdate_Val	Numeric Variable Update Value	Numeric Variable value to be updated whenever the value for iv_NumVarUpdate_Trig is changed.

Tag Name	Description	Function
iv_AlphaVarUpdate_Trig	Update Alphanumeric Variable Trigger	When the value for iv_AlphaVarUpdate_Trig changes then the Alphanumeric Variable Number contained in tag iv_AlphaVarUpdate_Num will be updated with the Alphanumeric Variable text string contained in array iv_AlphaVarUpdate_Val for the display specified by iv_DispSerAddr.
iv_AlphaVarUpdate_Num	Alphanumeric Variable Update Number	Alphanumeric Variable ID number to be updated whenever the value for iv_AlphaVarUpdate_Trig is changed.
iv_AlphaVarUpdate_Val	Alphanumeric Variable Update Value	Alphanumeric Variable text string to be updated whenever the value for iv_AlphaVarUpdate_Trig is changed.

Index

.IVL file
  importing 3-75
.IVP data
  importing 3-73
.csv file
  importing 3-73
.SIC file 3-81
.SIM file 3-79
2706-42C
  field 3-42
2706-42R
  field 3-42
2706-44C
  field 3-42
2706-44R
  field 3-42
2706-72C
  field 3-42
2706-74C
  field 3-42
2706-922C
  field 3-42
2706-92C
  field 3-42
2706-942C
  field 3-42
2706-94C
  field 3-42
2706-P22R
  field 3-42
2706-PENETK2-SC
  2-1
2706-PENETM2-SC 2-1
2706-PENETP2-SC 2-1
6010100-01, InView Display, 5 Meter, shielded
  Cable 2-1
6010104-01, InView Display, 3 Meter
  Cable 2-1
add
  field 3-66
Add message to a queue
  icon 3-65
Adding
  displays 3-41
  message groups 3-50
  message to queue 3-88
  messages 3-58
Address
  field 3-11, 3-13, 3-16, 3-19, 3-21, 3-22, 3-23, 3-29, 3-95
Adobe Flash Player
  download and install 3-1, 3-2
  installing 2-31
  requirement for 3-1
  settings 2-31
  version 2-31
All Lines
  field 3-60
Alphanumeric
  field 3-64
Alphanumeric Value
  field 3-93
Apply to All Displays
  field 3-47, 3-49, 3-56, 3-89, 3-90, 3-91, 3-92, 3-93
Array
  field 3-13, 3-17
Array Size
  field 3-12, 3-18, 3-23
ASCII
  extended character set 4-11
Available Characters
  field 3-67
Backing up
  InView Comms module 3-81
Base Addr/Offset
  field 3-12, 3-13, 3-17, 3-18
Baud Rate
  field 3-102
bitmap size
  field 3-66
Blinking text
  icon 3-63
Cables
  InView Comms Module 2-.
Center text
  icon 3-63
Certifications
  InView 2-7
Characters
  Exporting custom 3-80
  extended ASCII set 4-11
  inserting custom 3-66
Classic
  description of mode 3-6, 3-9, 3-14, 3-20
Clearing
  display memory 3-46
  message queue 3-90
COLOR
  field 3-62
Communication tags
  about 4-8
Communications
  module, installing P22 2-27

module, mounting P42, P44 2-10
module, mounting P72, P74 2-15
module, mounting P92, P94 2-19
module, mounting P92C2, P94C2 2-23
module, wiring P42, P44 2-11
module, wiring P72, P74 2-16
module, wiring P92, P94 2-20
module, wiring P92C2, P94C2 2-24
CompactLogix
setup 3-8
Concepts, 4-5
Configuration
resetting to default 3-84
Configuring
CompactLogix Message Server Setup 3-14
ControlLogix Message Server Setup 3-9
InView Comms card 3-39
message groups 3-49
messages 3-56
MicroLogix/PLC5/SLC Message Server Setup 3-20
Modbus TCP 3-28
PLC Server Setup 3-6
security setup 3-86
serial communications setup 3-101
TCP/IP passthrough 3-26
tools 3-87
Configuring CompactLogix Message Server Setup
configuring 3-14
Configuring ControlLogix Message Server Setup
configuring 3-9
connected
field 3-103, 3-104
Connection
field 3-11, 3-16, 3-21, 3-27, 3-29
Connection Status
field 3-103
Connection type
field 3-35, 3-37
Connection Type
field 3-102
Connectivity
field 3-95
context-sensitive online 1-1
Control
field 3-43
ControlLogix
setup 3-8
Conventions, iii
CPU Load %
field 3-95
Custom characters
importing 3-75
Data Type
field 3-12, 3-13, 3-17, 3-18, 3-22, 3-23
Date
field 3-48, 3-99
Definitions
of terms 4-5
Delay *n* ms
field 3-11, 3-17, 3-22, 3-30
delete
field 3-67
Delete a message from a queue
icon 3-65
Deleting
displays 3-44
message from queue 3-89
message groups 3-54
messages 3-71
Description
field 3-99
Device
field 3-95
Device connections 3-
testing 3-31
Device Name
field 3-11, 3-16, 3-21, 3-29
DHCP Client
field 3-35, 3-37
Diagnostics
retrieving from InView 2-30
viewing information 3-94
Disabled
field 3-42
Display
clearing memory 3-46
field 3-47, 3-49, 3-56, 3-88, 3-91
setting address 3-45
Display Name
field 3-41
Display profiles
managing 3-40
Display Serial Address
field 3-42
Display Type
field 3-51
Displays
adding 3-41
deleting 3-44
field 3-89, 3-3-92, 3-93
modifying 3-43
DNS1
field 3-35
DNS2
field 3-35
Download
field 3-14, 3-19, 3-25, 3-31, 3-97
Download Message Group to InView Display
field 3-65
Easy
description of mode 3-7, 3-9, 3-15, 3-20
field 3-18
Easy tags
summary 4-13
Enable Polling
field 3-11, 3-16, 3-22, 3-29

Enable SSL On port number
select port 3-38
Engineering
viewing erro log information 3-98
Eth1
communications status, viewing 3-102
entering IP address in address bar 3-2
Eth1 IP
field 3-35
Eth2
communications status, viewing 3-103
Eth2IP
field 3-37
EtherNet/IP
protocol 2-3
Exporting
custom characters 3-80
messages 3-78
Fields
required, red asterisk 3-1
Firmware
updating 3-82
FONT
field 3-62
Gateway
field 3-35, 3-103
General Public License
information 2-34
Generate
field 3-30
Global Settings
Adobe Flash Player 2-31
Group
field 3-56
Group Name
field 3-51
GROUP/DISPLAY
field 3-59
Hardware Specifications
information 2-5
HEADER
field 3-60
Heartbeat
field 3-42
Help
viewing online help 3-104
HISTORICAL
field 3-98
Hold
field 3-61
Important Notes, ii
Importing
custom characters in .IVL file 3-75
InView Comms Messages (.IVP data) 3-73
.csv files 3-73
Insert a custom (foreign language or bitmap) character in message
icon 3-64
Insert date in message
icon 3-63
Insert Extended Character Set
field 3-63
Insert time in message
icon 3-63
Insert variable in message
icon 3-63
Inserting
custom characters 3-66
Installation
InView 2-8
Introduction, iii
InView
accessing hardware and software information 2-30
backing up Comms module 3-81
get diagnostics 2-30
installation steps 2-8
logging onto the InView Messaging Software User Interface 3-1
restoring module 3-77
setting up 3-38
User Interface Window components 3-5
using the graphical user interface 3-1
InView Comms Card
configuring 3-39
InView Comms Module
rebooting 3-85
InView Communications Module
setting up Eth1 3-34
setting up Eth2 3-36
setting up networking 3-33
InView User Interface
about 3-4
InView will listen on
field 3-38
IP Address
field 3-103, 3-104
getting 2-32
pinging 2-33
Label
InView label information 2-8
LEDs
how they work 4-12
Left-align text
icon 3-63
Libraries
field 3-66
Limited Remedy
software return, iii
Line 1
field 3-60
Line 2
field 3-60
LINE CONTROL
field 3-60
LIVE
field 3-98

Local Flash (KB)
field 3-95
Log
viewing engineering error information 3-98
Logging
onto the InView Messaging Software User Interface 3-1
Login
InView dialog 3-3
Logs
viewing engineering error information 3-94
Maintenance
on InView Comms Module 3-72
Managing
display profiles 3-40
maintenance on InView Comms Module 3-72
Memory (bytes)
field 3-95
Menu Bar
InView User Interface Window 3-5
Message
adidng to queue 3-88
calculating size 4-7
clearing queue 3-90
deleting from queue 3-89
how priorities work 4-8
triggering priority 3-91
Message Data
field 3-12, 3-23
Message Groups
adding 3-50
configuring 3-49
deleting 3-54
Message ID
field 3-89, 3-90, 3-92
Message Server Type
field 3-8
Message Trigger
field 3-12, 3-17, 3-22
Messages
adding 3-58
configuring 3-56
deleting 3-71
exporting 3-78
InView Comms module software 4-1
modifying 3-69
reordering 3-53
MicroLogix
setup 3-8
MicroLogix Message Server Setup
configuring 3-20
Min Text Length
field 3-64
Modbus TCP
configuring 3-28
field 3-29
setup 3-9
MODE
field 3-61
Modify
field 3-14, 3-19, 3-24
Modifying
displays 3-43
messages 3-69
Module
field 3-99
Msg Server Type
field 3-10, 3-16, 3-21, 3-26, 3-28
Name
field 3-39
New Display Address
field 3-45
New Library Name
field 3-67
None
field 3-43
not connected
field 3-103
Note
field 3-51
Numeric
field 3-64
Numeric Value
field 3-93
Old Display Address
field 3-45
Padding
field 3-64
Panel Type
field 3-42
Partition Size
field 3-51
Passthrough
field 3-26
setup 3-9
Passthrough, TPC/IP
configuring 3-26
Password
change 3-3
logging into InView 3-3
logging into InView Comms Module 3-3
PAUSE
field 3-61
Performance Criteria
A, B, C, D 2-7
Ping
field 3-95
PLC
field 3-8, 3-26, 3-28
PLC Server Setup
configuring 3-6
PLC type
field 3-8
PLC5
setup 3-8
PLC5 Message Server Setup
configuring 3-20

Port 1 number
field 3-38
Port 2 number
field 3-38
Power
InView requirements 2-2
supply requirements 2-10
Preset InView Tags
field 3-30
Preview
field 3-64
PRIORITY
field 3-61
Process Manager
field 3-94
Processes
field 3-94
Product information
legal, ii
Protocol
field 3-11, 3-16, 3-21, 3-27, 3-29
Rebooting
InView Comms Module 3-85
Refresh
field 3-97
Reordering
Message Groups 3-53
report_information
field 3-97
Reset
field 3-14, 3-19, 3-24, 3-31
Resetting
default configuration 3-84
Resources
field 3-95
Restoring
InView module 3-77
Result
field 3-95
Rotate L
field 3-61
Rotate R
field 3-61
Save
field 3-65
Security
configuring setup 3-86
Serial Address
field 3-47, 3-49, 3-88, 3-89, 3-91, 3-92, 3-93
Serial communications setup
configuring 3-101
Setting
display address 3-45
up InView 3-38
up InView Communications Module Eth1 3-34
up InView Communications Module Eth2 3-36
up InView Communications Module networking 3-33
Settings
Adobe Flash Player 2-31
Slave ID
field 3-29
SLC
setup 3-8
SLC5 Message Server Setup
configuring 3-20
Slot Number
field 3-11, 3-16, 3-22
Sockets Manager
field 3-94
Specifications
InView certifications 2-7
InView Environmental and EMC 2-6
InView hardware 2-5
Spectrum InView Custom Character file 3-81
Starting Address
field 3-24, 3-30
Static IP
field 3-35, 3-37
Storage
viewing information 3-94
STYLE
field 3-62
Subnet Mask
field 3-35, 3-37, 3-103, 3-104
Tag Manager
field 3-94
Tag Name
field 3-12, 3-13, 3-17, 3-18, 3-22, 3-23
Tags
about communication 4-8
easy summary 4-13
Task Manager
field 3-94
TCP Port
field 3-11, 3-16, 3-22, 3-27, 3-29
Technical Reference
concepts 4-5
Technical support, iii
Test Device Connection
field 3-11, 3-17, 3-22, 3-30
Testing device connections 3-31
Time
field 3-48
Title Bar
InView Comms Module User Interface Window 3-5
InView User Interface Window 3-5
Tools
configuring 3-87
Trademarks
list of, iii
Trigger priority message
icon 3-65
Triggering
priority message 3-91
variable update 3-92
Updating

firmware 3-82
User interface
using 3-1
Username
logging into InView 3-3
logging into InView Comms Module 3-3
Variable
triggering update 3-92
Variable Data
field 3-13, 3-18, 3-23
Variable ID
field 3-64, 3-93
Variable Trigger
field 3-12, 3-18, 3-23
Variable Update Array Size
field 3-24, 3-30
Viewing
Eth1 communication status 3-102
Eth2 communication status 3-103
online help 3-104
Warranty
limited, ii, 2-34
Work Area
access functions 3-6
InView User Interface Window 3-5, 3-6

©2009-2016 Spectrum Controls, Inc. All rights reserved. Specifications are subject to change without notice. The Encompass logo and ControlLogix are trademarks of Rockwell Automation.

Corporate Headquarters
Spectrum Controls Inc.
1705 132nd Avenue NE
Bellevue, WA 98005 USA
Fax: 425-641-9473
Tel: 425-746-9481

Web Site: www.spectrumcontrols.com
E-mail: spectrum@spectrumcontrols.com

Initial Construction Warranty Information

January 31, 2017

Ed Butler
Techsas, Inc
4819 West Bayshore Drive
Bacliff, Texas 77518

Subject: KAFB – Bulk Fuels Facility Mid-Plume Pump & Treat System Expansion

Reference: Project Warranty

Mick Rich Contractors, Inc. warrants and guarantees all workmanship performed by us, and material supplied by us for a period of one year from the date of substantial completion of the contract.

Date of substantial completion: January 9, 2017.

Very truly yours,

Jim Rich
Vice-President

MICK RICH
CONTRACTORS
Solving complexity with creativity
MICK RICH CONTRACTORS, INC.
P.O. BOX 90727
ALBUQUERQUE, NM 87199
Tele. (505) 823-9782
E-Mail: contact@mickrichcontractors.com
Web Site: www.mickrichcontractors.com

Rupert Plumbing & Heating Co., Inc.

1401 Candelaria Rd. NE Albuquerque, New Mexico 87107
Phone (505) 247-8138 Fax (505) 764-9704

January 9, 2016

PROJECT WARRANTY

Project: KAFB Bulk Fuels Facility phase II

Rupert Plumbing and Heating Co Inc guarantees that this installation is free from mechanical defects. Rupert Plumbing agrees to repair any part of the installation which may fail within a period of one year after date of final acceptance or occupancy, whichever occurs first, provided that such failure is due to defects in materials or workmanship.

Rupert Plumbing and Heating Co Inc

Michael Rupert

TECHSAS Incorporated

Providing Technical Sales and Service
4819 West Bayshore Drive Bacliff, TX 77518

Tuesday, March 07, 2017

Devon E. Jercinovic, PG, PMP
EA Engineering, Science, and Technology, Inc., PBC
Program Manager I
320 Gold Ave. SW, Suite 1300
Albuquerque, NM 87102

Re: Kirtland BFF GWTS Expansion – Project Warranty

WARRANTY STATEMENT

Techsas, Inc. warrants and guarantees products of its manufacture against defective workmanship or material for a period of one year from the date of shipment from the factory.

This warranty is expressly and strictly limited to replacing, without charge, any part or parts which prove to Techsas's satisfaction upon examination, to have been defective and which have not been neglected, abused or misapplied, provided the buyer gives Techsas immediate written notice upon discovery of any claimed defect.

Techsas will also guarantee component parts manufactured by others to the extent of the guarantee made by the manufacturer of such equipment. In any case, guarantees on specific components will be extended a minimum of one year from date of shipment.

Warranty Exclusions:

Warranty coverage does not include:

(A) Freight, labor, travel, and living expenses associated with parts replacement;
(B) Normal maintenance items such as lubrication, fan belts, and cleaning of the equipment.

In the event the customer, or any installation contractor employed by the customer, contracts outside Techsas for installation work or erection of quoted equipment, the customer shall assume full responsibility for said contract.

Sincerely,

Edwin J. Butler

Edwin J. Butler - VP

Ultra Painting Inc.

State Labor and Industrial Reg. # 0046720050604

ultrapainting@aol.com

Bonding rate 3%

Phone: (505) 792-5153 Fax: (505) 792-7226

Date: 31 January 2017

To: Mick Rich Contractors

From: Andrew Sanchez

RE: Warranty

Please accept this as a warranty that Ultra Painting Inc. will guarantee out workmanship and material for a one year period after the final acceptance date.

Project: KAFB Bulk Fuel Facility Mid-Plume Pump & Treatment Facility

Final Acceptance Date: 9 January 2017

Expiration Date: 9 January 2018

Scope of work: Painting- Subcontractor

Address: P.O. Box 3835

Corrales, New Mexico 87048

Signed :

Andrew Sanchez

Date: 31 January 2017

Influent and Effluent Pump Skid Equipment

Electromagnetic flowmeters

SITRANS F M MAG 5100 W

Operating Instructions • 11/2010

SITRANS F

SIEMENS

SIEMENS

SITRANS F

Electromagnetic Flowmeters SITRANS F M MAG 5100 W

Operating Instructions

Introduction 1

Safety notes 2

Description 3

Installing/Mounting 4

Connecting 5

Service and maintenance 6

Troubleshooting/FAQs 7

Technical data 8

Appendix A

Electromagnetic sensor type SITRANS F M MAG 5100 W for use with transmitter types SITRANS F M MAG 5000/6000/6000I

11/2010
A5E03063678-02

Legal information

Warning notice system

This manual contains notices you have to observe in order to ensure your personal safety, as well as to prevent damage to property. The notices referring to your personal safety are highlighted in the manual by a safety alert symbol, notices referring only to property damage have no safety alert symbol. These notices shown below are graded according to the degree of danger.

⚠ DANGER

indicates that death or severe personal injury **will** result if proper precautions are not taken.

⚠ WARNING

indicates that death or severe personal injury **may** result if proper precautions are not taken.

⚠ CAUTION

with a safety alert symbol, indicates that minor personal injury can result if proper precautions are not taken.

CAUTION

without a safety alert symbol, indicates that property damage can result if proper precautions are not taken.

NOTICE

indicates that an unintended result or situation can occur if the corresponding information is not taken into account.

If more than one degree of danger is present, the warning notice representing the highest degree of danger will be used. A notice warning of injury to persons with a safety alert symbol may also include a warning relating to property damage.

Qualified Personnel

The product/system described in this documentation may be operated only by **personnel qualified** for the specific task in accordance with the relevant documentation for the specific task, in particular its warning notices and safety instructions. Qualified personnel are those who, based on their training and experience, are capable of identifying risks and avoiding potential hazards when working with these products/systems.

Proper use of Siemens products

Note the following:

⚠ WARNING

Siemens products may only be used for the applications described in the catalog and in the relevant technical documentation. If products and components from other manufacturers are used, these must be recommended or approved by Siemens. Proper transport, storage, installation, assembly, commissioning, operation and maintenance are required to ensure that the products operate safely and without any problems. The permissible ambient conditions must be adhered to. The information in the relevant documentation must be observed.

Trademarks

All names identified by ® are registered trademarks of the Siemens AG. The remaining trademarks in this publication may be trademarks whose use by third parties for their own purposes could violate the rights of the owner.

Disclaimer of Liability

We have reviewed the contents of this publication to ensure consistency with the hardware and software described. Since variance cannot be precluded entirely, we cannot guarantee full consistency. However, the information in this publication is reviewed regularly and any necessary corrections are included in subsequent editions.

Siemens AG
Industry Sector
Postfach 48 48
90026 NÜRNBERG
GERMANY

order number: A5E03063678
℗ 11/2010

Copyright © Siemens AG 2010.
Technical data subject to change

Table of contents

1 Introduction 5

1.1 Items supplied 5

1.2 History 5

1.3 Further Information 6

2 Safety notes 7

2.1 Laws and directives 7

2.2 Installation in hazardous area 9

2.3 Certificates 10

3 Description 11

3.1 System components 11

3.2 Theory of operation 12

4 Installing/Mounting 15

4.1 Installation safety precautions 15

4.2 Determining a location 16

4.3 Orienting the sensor 18

4.4 Mounting 19

4.5 Potential equalization 21

5 Connecting 23

5.1 Remote installation 24

5.2 Installation check 26

5.3 Potting 26

5.4 Direct burial 28

6 Service and maintenance 29

6.1 Maintenance 29

6.2 Recalibration 29

6.3 Transportation/storage 29

6.4 Unit repair 30

6.5 Technical support 30

6.6 Return procedures 31

7 Troubleshooting/FAQs 33

7.1 Sensor check 33

7.2 Fluctuating process values 35

8 Technical data 37
8.1 MAG 5100 W 37
8.2 Cable data 40
8.3 Effect of temperature on working pressure 41
8.4 Process fluid conductivity 42
8.5 Liner selection 43
8.6 Electrode selection 43
8.7 Sizing tables 44
8.8 Dimensions and weight 46
A Appendix 51
A.1 Flange mating dimensions (metric) 51
A.2 Factory settings 53
A.3 Coil resistance 55
A.4 Ordering 57
Glossary 59
Index 61

Introduction

1

These instructions contain all the information you need for using the device.

The instructions are aimed at persons mechanically installing the device, connecting it electronically, configuring the parameters and commissioning it as well as service and maintenance engineers.

Note

It is the responsibility of the customer that the instructions and directions provided in the manual are read, understood and followed by the relevant personnel before installing the device.

1.1 Items supplied

- SITRANS F M MAG 5100 W
- Calibration report
- SITRANS F M literature CD
- Quick Start guide

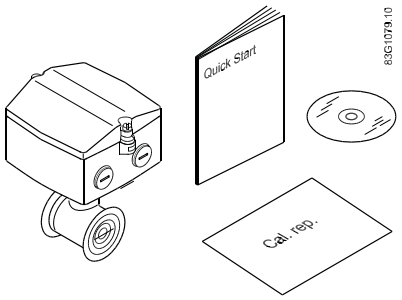

1.2 History

The contents of these instructions are regularly reviewed and corrections are included in subsequent editions. We welcome all suggestions for improvement.

The following table shows the most important changes in the documentation compared to each previous edition.

Edition	Remarks
11/2010	Minor updates
07/2010	First edition Replaces MAG 5100 W part of SITRANS F M Handbook (A5E02435647) and MAG 5100 W instruction (A5E00718677)

1.3 Further Information

The contents of these Operating Instructions shall not become part of or modify any prior or existing agreement, commitment or legal relationship. All obligations on the part of Siemens AG are contained in the respective sales contract which also contains the complete and solely applicable warranty conditions. Any statements contained herein do not create new warranties or modify the existing warranty.

Product information on the Internet

The Operating Instructions are available on the CD-ROM shipped with the device, and on the Internet on the Siemens homepage, where further information on the range of SITRANS F flowmeters may also be found:

Product information on the internet (http://www.siemens.com/flowdocumentation)

Worldwide contact person

If you need more information or have particular problems not covered sufficiently by the operating instructions, please get in touch with your contact person. You can find contact information for your local contact person on the Internet:

Local contact person (http://www.automation.siemens.com/partner)

See also

Technical support (Page 30)

Safety notes

2

⚠ CAUTION
Correct, reliable operation of the product requires proper transport, storage, positioning and assembly as well as careful operation and maintenance. Only qualified personnel should install or operate this instrument.

Note

Alterations to the product, including opening or improper repairs of the product, are not permitted.

If this requirement is not observed, the CE mark and the manufacturer's warranty will expire.

2.1 Laws and directives

General requirements

Installation of the equipment must comply with national regulations.

Instrument safety standards

The device has been tested at the factory, based on the safety requirements. In order to maintain this condition over the expected life of the device the requirements described in these Operating Instructions must be observed.

CAUTION
Material compatibility Siemens Flow Instruments can provide assistance with the selection of wetted sensor parts. However, the full responsibility for the selection rests with the customer and Siemens Flow Instruments can take no responsibility for any failure due to material incompatibility.

CE marked equipment

All meters carry either a CE mark or a CE mark followed by eg.200

- CE200: This indicates that the product conforms to:
  - PED 97/23/EC
  - LVD 2006/95/EC
  - EMC 2004/108/EC
- CE: This indicates that the product conforms to:
  - LVD 2006/95/EC
  - EMC 2004/108/EC

Compliance with PED directive

"Pressure Equipment Directive" (PED) is mandatory for all pressure equipment sold within the EU and EFTA.

Siemens Flow Instruments products confirms to PED by following the tables below.

Table 2- 1 MAG 5100 W (7ME6580 only DN15 ... 600 (½" ... 24"))

Flange mm	PN 10	PN 16	PN 40	150 lb	300 lb
15	N/A	N/A	SEP	SEP	N/A
25	N/A	N/A	SEP	SEP	N/A
40	N/A	N/A	SEP	SEP	N/A
50	N/A	SEP	N/A	SEP	N/A
65	N/A	SEP	N/A	SEP	N/A
80	N/A	SEP	N/A	SEP	N/A
100	SEP	SEP	N/A	SEP	N/A
125	N/A	SEP	N/A	PED	N/A
150	N/A	PED	N/A	PED	N/A
200	SEP	PED	N/A	PED	N/A
250	LVD	PED	N/A	PED	N/A
300	LVD	PED	N/A	PED	N/A
350	LVD	PED	N/A	PED	N/A
400	LVD	PED	N/A	PED	N/A
450	LVD	PED	N/A	PED	N/A
500	LVD	PED	N/A	PED	N/A
600	LVD	PED	N/A	PED	N/A
700	LVD	PED*	N/A	N/A	PED
750	N/A	N/A	N/A	N/A	PED

800	LVD	PED*	N/A	N/A	PED
900	LVD	PED*	N/A	N/A	PED
1000	LVD	PED*	N/A	N/A	PED
1050	N/A	N/A	N/A	N/A	PED
1100	N/A	N/A	N/A	N/A	PED
1200	LVD	PED*	N/A	N/A	PED

The key to the tables is as follows:

PED	Product covered by PED and only available as fully PED-conforming
PED*	Product covered by PED but available as either conforming or non-conforming to PED
SEP	Excluded from PED under Sound Engineering Practice
LVD	Excluded from PED under the Low Voltage Directive

2.2 Installation in hazardous area

⚠ WARNING

Equipment used in hazardous areas must be approved for use in hazardous area and marked accordingly. It is required that the special conditions for safe use provided in the manual and in the FM / CSA certificates are followed!

Hazardous area approvals

The device is approved for use in hazardous area and has the following approvals:

- MAG 5100 W DN 15 ... 1200: FM / CSA Class I, Div. 2

WARNING

Make sure the hazardous area approval is suitable for the environment in which the device will be installed.

WARNING

All approvals are based on non-flammable processes only!

WARNING

Potential equalization

In operation, the output is earthed through the conductive medium being measured and therefore potential equalisation is necessary throughout the hazardous area.

The apparatus housing shall be connected to the potential equalising conductor in the hazardous area.

WARNING

Laying of cables

Cables for use in hazardous area must satisfy the requirements for having a proof voltage < AC 500 V applied between the conductor/ground, conductor/shield and shield/ground.

Connect the devices that are operated in hazardous areas as per the stipulations applicable in the country of operation.

2.3 Certificates

Certificates are posted on the Internet and on the documentation CD-ROM shipped with the device.

See also

Technical data (Page 37)

Certificates on the Internet (http://www.siemens.com/processinstrumentation/certificates)

Description

3

The main applications of the SITRANS F M electromagnetic flow sensors can be found in the following fields:

- Process industry
- Chemical industry
- Steel industry
- Mining
- Utility
- Power generation & distribution
- Oil & gas / HPI
- Water & waste water
- Pulp & paper

3.1 System components

The SITRANS F M USM II flowmeter system includes:

- Transmitter (types: SITRANS F M MAG 5000/6000 or MAG 6000 I)
- Sensor (types: SITRANS F M MAG 1100/1100F, MAG 3100/3100 P or MAG 5100 W)
- Communication module (optional) (types: HART, PROFIBUS PA/DP, MODBUS RTU RS 485, Foundation Fieldbus H1, Devicenet)
- SENSORPROM memory unit

Communication solutions

The SITRANS F USM II range of add on modules, presently including HART, Foundation Fieldbus. MODBUS RTU RS 485, PROFIBUS PA / DP and Devicenet, are all applicable with the SITRANS F M MAG 6000 transmitter.

The SITRANS F M MAG 5100 W sensor housing and flanges are designed in carbon steel and terminal box in fibre glass reinforced polyamide. Measuring pipe is made of stainless steel (AISI 304) and liners are available in NBR Hard Rubber, Ebonite Hard Rubber, or EPDM, which makes the sensor highly resistant to a wide range of chemicals. Electrodes are made of Hastelloy.

MAG 5100W DN15 ... 40

MAG 5100W DN50 ... 300

MAG 5100W DN350 ... 1200 (7ME6520)

MAG 5100W DN25 ... 2000 (7ME6580)

MAG 5100W compact installation with MAG 5000/6000 IP67

MAG 5100W compact installation with MAG 6000 I

The sensors carry a wide range of approvals, see Technical data (Page 37).

3.2 Theory of operation

The flow measuring principle is based on Faraday's law of electromagnetic induction.

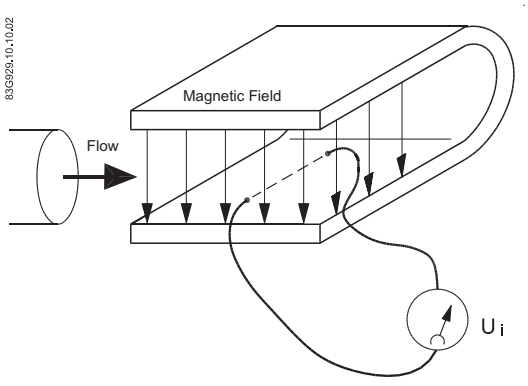

U_i = When an electrical conductor of length L is moved at velocity v, perpendicular to the lines of flux through a magnetic field of strength B, the voltage Ui is induced at the ends of the conductor

$U_i = L \times B \times v$

- Ui = Induced voltage
- L = Conductor length = Inner pipe diameter = k_1
- B = Magnetic field strength = k_2
- v = Velocity of conductor (media)
- $k = k_1 \times k_2$

Ui = k x v, the electrode signal is directly proportional to the fluid velocity

Operating principle

The coil current module generates a pulsating magnetizing current that drives the coils in the sensor. The current is permanently monitored and corrected. Errors or cable faults are registered by the self-monitoring circuit.

Input circuit amplifies the flow-proportional induced voltage signal from the electrodes. The input impedance is extremely high: $>10^{14}$ Ω which allows flow measurements on fluids with conductivities as low as 5 µS/cm. Measuring errors due to cable capacitance are eliminated due to active cable screening.

Digital signal processor converts the analog flow signal to a digital signal and suppresses electrode noise through a digital filter. Inaccuracies in the transmitter as a result of long-term drift and temperature drift are monitored and continuously compensated for via the self-monitoring circuit. The analog to digital conversion takes place in an ultra low noise ASIC with 23 bit signal resolution. This has eliminated the need for range switching. The dynamic range of the transmitter is therefore unsurpassed with a turn down ratio of minimum 3000:1.

Installing/Mounting

4

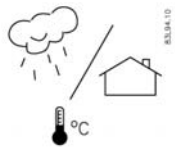

SITRANS F flowmeters with minimum IP67/NEMA 4X enclosure rating are suitable for in- and outdoor installations.

- Make sure that pressure and temperature specifications indicated on the device nameplate / label will not be exceeded.

WARNING

Installation in hazardous location

Special requirements apply to the location and interconnection of sensor and transmitter. See "Installation in hazardous area" (Page 9)

4.1 Installation safety precautions

WARNING

In applications with working pressures/media that can be dangerous to people, surroundings, equipment or others in case of pipe fracture, we recommend that special precautions such as special placement, shielding or installation of a security guard or a security valve are taken when the sensor is mounted.

- Ensure that stresses and loading caused by e.g. earthquakes, traffic, high winds and fire damage if appropriate are taken into account during installation.
- Ensure that the flowmeter is installed such that it does not act as a focus for pipeline stresses. External loadings are not taken into account in the flowmeter design.
- Provide adequate protection to minimise any risk of contact with hot surfaces.

WARNING

Prevent personal injuries by assuring that operation below pressure guards cannot take place, if working with vacuum or fluids boiling readily.

4.2 Determining a location

NOTICE
The sensor must always be completely filled with liquid.

- Locate the the flowmeter in u-shaped pipes if pipes are only partially filled or have free outlet

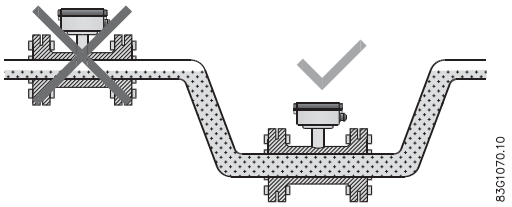

Figure 4-1 Correct installation in U-tube

- Avoid the following installations
  - Installation at the highest point in the pipe system
  - Installation in vertical pipes with free outlet

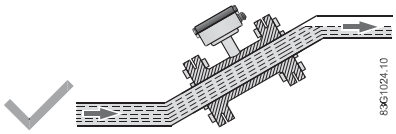

Figure 4-2 Correct installation with filled pipes

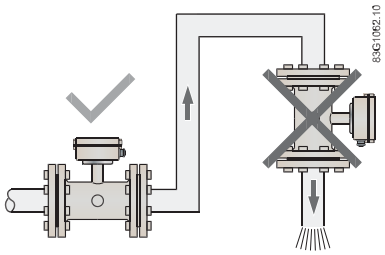

Figure 4-3 Correct installation at low point in system before outlet

Inlet and outlet conditions

To achieve accurate flow measurement it is essential to have straight lengths of inlet and outlet pipes and a certain distance to pumps and valves.

It is also important to centre the flowmeter in relation to pipe flanges and gaskets.

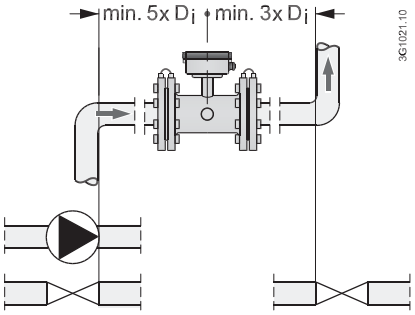

Figure 4-4 Inlet and outlet conditions

Installation in large pipes

The flowmeter can be installed between two reducers (e.g. DIN 28545). At 8° the following pressure drop curves apply. The curves are applicable to water.

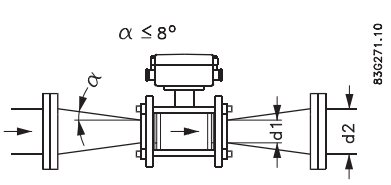

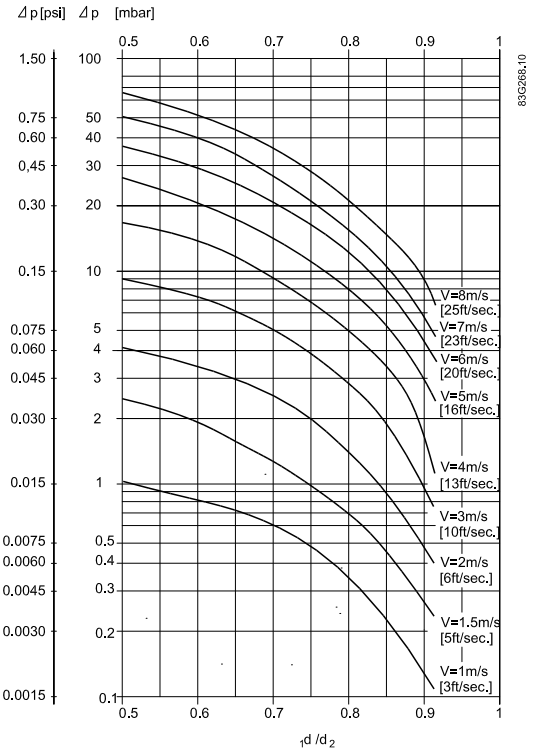

Example:

A flow of 3 m/s (V) in a sensor with a diameter reduction from DN 100 to DN 80 (d_1/d_2 = 0.8) gives a pressure drop of 2.9 mbar.

4.3 Orienting the sensor

The sensor operates in all orientations, but Siemens has the following recommendations:

- Vertical installation with an upwards flow

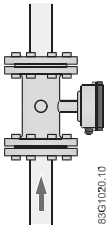

Figure 4-5 Vertical orientation, upwards flow

CAUTION
Abrasive liquids / liquids containing solid particles A vertical installation minimizes wear and deposits in the sensor

NOTICE
Gas/air bubbles in the liquid A vertical installation minimizes any negative effect of gas/air bubbles in the liquid

- Horizontal installation, terminal box upwards or downwards

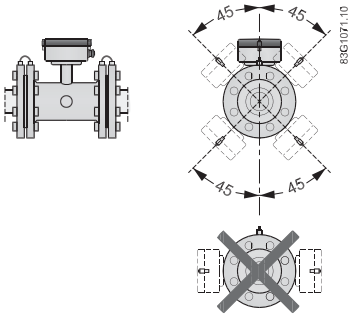

Figure 4-6 Horizontal installation, various terminal box positions

CAUTION
Do NOT mount the sensor with the terminal box sideways This will position the electrodes at the top where there is possibility for air bubbles and at the bottom where there is possibility for mud, sludge, sand etc.

NOTICE
Empty pipe detection For applications with empty pipe detection, the sensor can be tilted 45°, as shown above.

4.4 Mounting

- Install the sensor in rigid pipelines in order to support the weight of the meter.
- Center the connecting pipelines axially in order to avoid turbulent flow profiles.
- Use proper gaskets according to liner type

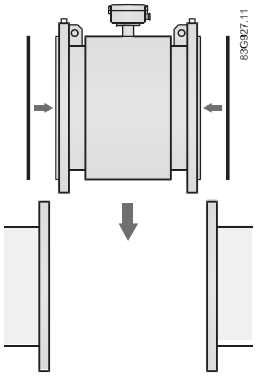

Figure 4-7 Correct installation with gaskets

Vibrations

Avoid strong vibrations.

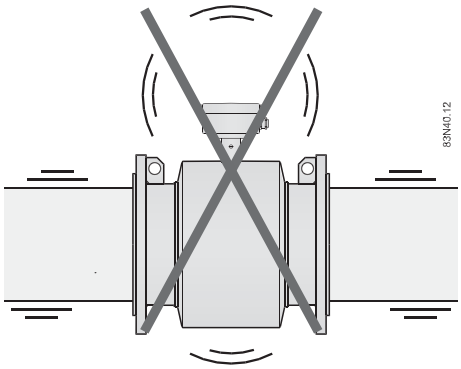

Figure 4-8 Avoid vibrations

⚠ CAUTION
In applications with strong vibrations, Siemens recommend remote mounting of the transmitter!

Torques

Fasten screws according to the torques values below

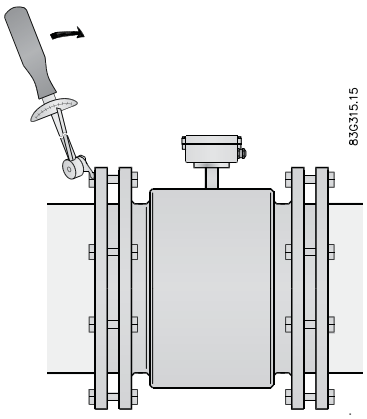

Figure 4-9 Torques values

NOTICE
Torque values are calculated on the basis of use of gaskets.

Table 4- 1 Maximum allowable torques

DN		PN 10		PN 16		PN 40		Class 150		AWWA	
Mm	Inch	Nm	F/lbs	Nm	F/lbs	Nm	F/lbs	Nm	F/lbs	Nm	F/lbs
15	½	N/A	N/A	N/A	N/A	10	7	6	5	N/A	N/A
25	1"	N/A	N/A	N/A	N/A	10	7	7	5	N/A	N/A
40	1½"	N/A	N/A	N/A	N/A	16	12	9	7	N/A	N/A
50	2"	N/A	N/A	N/A	N/A	N/A	N/A	25	18	N/A	N/A
65	2½"	N/A	N/A	25/25	18/18	N/A	N/A	25	18	N/A	N/A
80	3"	N/A	N/A	25/25	18/18	N/A	N/A	34	25	N/A	N/A
100	4"	N/A	N/A	25/25	18/18	N/A	N/A	26	19	N/A	N/A
125	5"	N/A	N/A	29/32	21/24	N/A	N/A	42	31	N/A	N/A
150	6"	N/A	N/A	50/50	37/37	N/A	N/A	57	42	N/A	N/A
200	8"	50/50	37/37	50/52	37/38	N/A	N/A	88	65	N/A	N/A
250	10"	50/50	37/37	82/88	61/65	N/A	N/A	99	73	N/A	N/A
300	12"	57/62	42/46	111/117	82/86	N/A	N/A	132	97	N/A	N/A
350	14"	60/60	44/44	120/120	89/89	N/A	N/A	225	166	N/A	N/A
400	16"	88/88	65/65	170/170	125/125	N/A	N/A	210	155	N/A	N/A
450	18"	92/92	68/68	170/170	125/125	N/A	N/A	220	162	N/A	N/A
500	20"	103/103	76/76	230/230	170/170	N/A	N/A	200	148	N/A	N/A
600	24"	161/161	119/119	350/350	258/258	N/A	N/A	280	207	N/A	N/A
700	28"	200/200	148/148	304/304	224/224	N/A	N/A	N/A	N/A	200	148
750	30"	N/A	N/A	N/A	N/A	N/A	N/A	N/A	N/A	240	177

DN		PN 10		PN 16		PN 40		Class 150		AWWA	
800	32"	274/274	202/202	386/380	285/285	N/A	N/A	N/A	N/A	260	192
900	36"	288/288	213/213	408/408	301/301	N/A	N/A	N/A	N/A	240	177
1000	40"	382/382	282/282	546/546	403/403	N/A	N/A	N/A	N/A	280	207
1050	42"	N/A	N/A	N/A	N/A	N/A	N/A	N/A	N/A	280	207
1100	44"	N/A	N/A	N/A	N/A	N/A	N/A	N/A	N/A	290	214
1200	48"	395/395	292/292	731/731	539/538	N/A	N/A	N/A	N/A	310	229
1400	54"	-/503	-/317	-/736	-/543	N/A	N/A	N/A	N/A	528	389
1600	66"	-/684	-/505	-/913	-/674	N/A	N/A	N/A	N/A	698	515
1800	72"	-/771	-/569	-/937	-/692	N/A	N/A	N/A	N/A	700	516
2000	78"	-/867	-/640	-/1128	-/832	N/A	N/A	N/A	N/A	890	656

4.5 Potential equalization

To obtain optimum results from the measuring system, the sensor must have the same electrical potential as the liquid being measured.

This is achieved by means of built-in grounding electrodes.

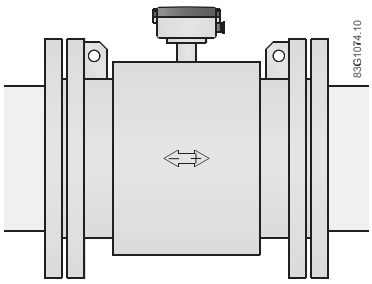

Figure 4-10 Potential equalization with earthing electrodes

Cathodic protected piping

Special attention must be paid to systems with cathodic protection

⚠ WARNING

Use in hazardous area!

Cathodic pipe protection is not allowed in hazardous areas

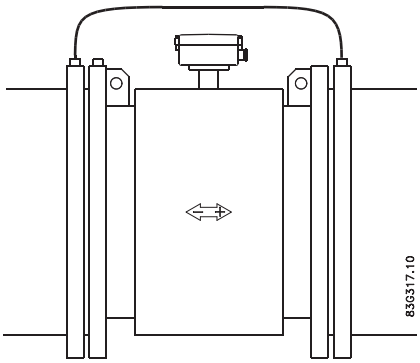

Figure 4-11 Cathodic protection

- Isolate the sensor from cathodic protected pipes using insulated bolts.
- Use bypass cable between the mating flanges

NOTICE
Remote mounted sensor versions If the above is not acceptable, remote mounted sensors can alternatively be connected as follows: • Connect coil current cable shield at sensor end via a 1.5 µF condensator • Make sure that electrode cable shield is not connected at both ends

Connecting

5

The following contains a short description of how to connect a remote mounted sensor to a transmitter type SITRANS F M MAG 5000 / 6000 or MAG 6000 I. For more information, e.g. about wiring of power supply and outputs, refer to the Operating Instructions for the respective transmitters.

Before connecting

- Check that serial numbers on sensor and SENSORPROM® unit are identical.

⚠ WARNING

The pertinent regulations must be observed for electrical installation.

- Never install the device with the mains voltage switched on!
- Danger of electric shock!
- The electrodes and magnetic current line may only be connected when the device is not connected to the power supply.
- If the housing is under voltage (power supply), the cover may be unscrewed by qualified personnel only.

⚠ WARNING

Mains supply from building installation Class II

A switch or circuit breaker (max. 15 A) must be installed in close proximity to the equipment and within easy reach of the operator. It must be marked as the disconnecting device for the equipment.

Cable specifications

- Only use cables with at least the same degree of protection as the sensor to install the sensor.
- The line length from the cable gland to the terminals must be kept as short as possible. Line loops in the terminal box must be avoided.

- To guarantee the IP 67 degree of protection, use cables with the required specifications.

⚠ WARNING
Protective conductor terminal The required cable is min. AGW16 or 1.5 Cu.

⚠ WARNING
Wire insulation The insulation between the connected mains supply and 24 V AC/DC supply for the flowmeter must at least be rated with double or reinforced insulation at mains voltage. For field wiring installation: Ensure that the **National Installation Code** of the country in which the flowmeters are installed is met.

See also

Cable data (Page 40)

5.1 Remote installation

NOTICE
Remote installation only The following applies to remote installation of MAG 5000 / 6000 or MAG 6000 I.

1. Unscrew and remove terminal box lid.

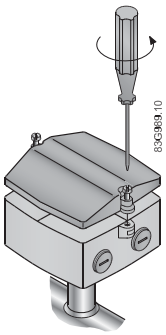

2. Remove SENSORPROM® unit from sensor and mount it on connection plate in transmitter, see relevant transmitter operating instructions.

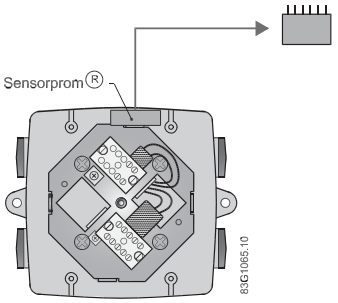

3. Fit the ½" NPT or M20 cable glands for supply and output cables.
4. Fit and connect electrode and coil cables as shown below.

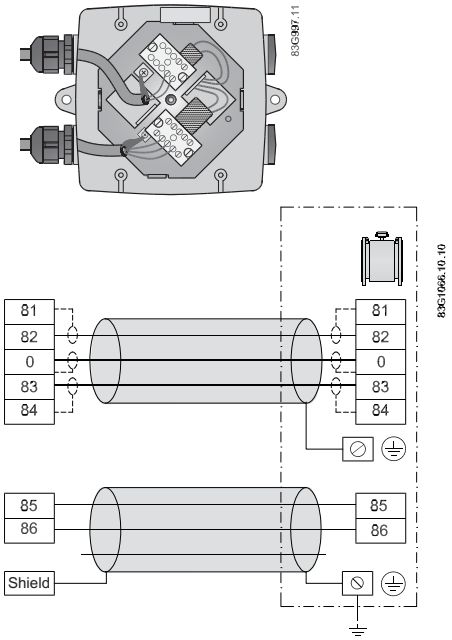

CAUTION

Unshielded cable ends

Keep unscreened cable ends as short as possible.

CAUTION

Prevent interference

Separate electrode and coil cables to prevent interference.

5. Tighten cable glands well to obtain optimum sealing.

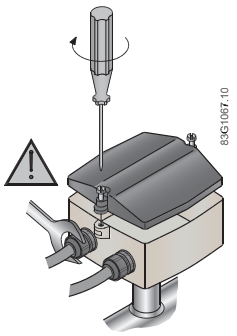

WARNING
Mount terminal box lid before power up.

5.2 Installation check

The meter is now ready to go into normal operation - for commissioning and setting of parameters refer to the relevant transmitter manual.

Before commissioning it must be checked that:

- The device has been installed and connected in accordance with the guidelines provided in chapter 4 Installing/mounting (Page 15) and 5 Connecting (Page 23)

5.3 Potting

If sensor is buried or permanently submerged, terminal box must be encapsulated with silicon dielectric gel (non-toxic, transparent and self-healing gel)

CAUTION
Do **not** pot meter before electrical connections have been made.

- Mix the two components of the potting kit well and pour into terminal box.
- Let cure for approximately 24 hours at approximately 25°C (77°F). Curing time increases by 100% per -10°C (-18°F).

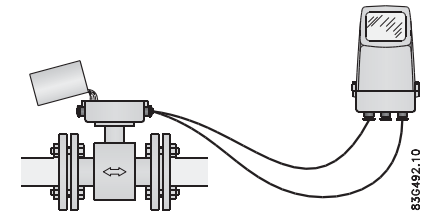

Horizontal orientation

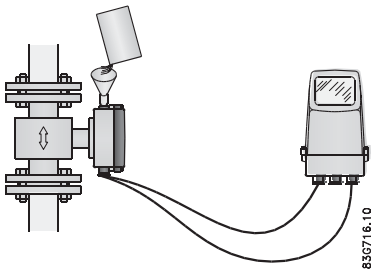

Vertical orientation

NOTICE
Gel can be penetrated with test instruments or be removed in case of cable replacement.

5.4 Direct burial

Recommendations for direct burial of remote sensor:

- Check for visible damages in paint finish !
- Use protection conduit !
- Protect sensor with pea gravel at least 3000 mm around sensor. This provides some drainage and also avoids caking sensor with earth. It also helps to locate sensor in case excavation takes place.

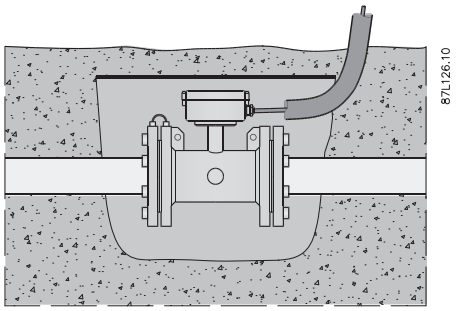

Figure 5-1 Direct burial of sensor

⚠ CAUTION

Sensor should not be subject to heavy vehicles applying excessive weight above sensor or pipeline

CAUTION

SENSORPROM® memory unit

Remove the SENSORPROM® from terminal box on sensor and relocate in remote transmitter prior to burying sensor.

All sensor data plate information and serial number should be recorded for each sensor prior to burying. This will ensure correct matching with SENSORPROM® unit.

⚠ WARNING

Electrical cable identification

Use suitable coil and electrode cables

Lay electrical cable identification tape above pea gravel before it is covered with earth.

Service and maintenance 6

6.1 Maintenance

The device is maintenance-free, however, a periodic inspection according pertinent directives and regulations must be carried out.

An inspection can include check of:

- Ambient conditions
- Seal integrity of the process connections, cable entries, and cover screws
- Reliability of power supply, lightning protection, and grounds

6.2 Recalibration

Siemens A/S Flow Instruments offers to recalibrate the sensor. The following calibrations are offered as standard:

- Standard matched pair calibration

Note

For recalibration the memory unit must always be returned with the sensor

6.3 Transportation/storage

The sensor is a fragile piece of equipment. Impact and shock can cause measuring inaccuracy. Therefore during transportation it must be placed in the transportation box delivered by Siemens Flow Instruments. If this is not possible, the alternative sensor packaging must be able to withstand the hazards from transportation.

Handling

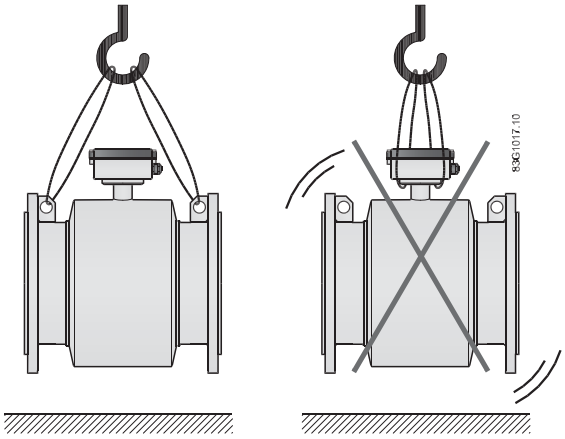

Figure 6-1 Handling of sensor

6.4 Unit repair

CAUTION
Repair and service must be carried out by Siemens authorized personnel only.

Note

Siemens Flow Instruments defines sensors as non-repairable products.

6.5 Technical support

If you have any technical questions about the device described in these Operating Instructions and do not find the right answers, you can contact Technical Support:

- Via the Internet using the **Support Request:**
  Support request (http://www.siemens.com/automation/support-request)
- Via Phone:
  - Europe: +49 (0)911 895 7222
  - America: +1 423 262 5710
  - Asia-Pacific: +86 10 6475 7575

Further information about our technical support is available in the Internet at Technical support (http://support.automation.siemens.com/WW/view/en/16604318)

Service & Support on the Internet

In addition to our documentation, we offer a comprehensive knowledge base online on the Internet at:

Service and support (http://www.siemens.com/automation/service&support)

There you will find:

- The latest product information, FAQs, downloads, tips and tricks.
- Our newsletter, providing you with the latest information about your products.
- A Knowledge Manager to find the right documents for you.
- Our bulletin board, where users and specialists share their knowledge worldwide.
- You can find your local contact partner for Industry Automation and Drives Technologies in our partner database.
- Information about field service, repairs, spare parts and lots more under "Services."

Additional Support

Please contact your local Siemens representative and offices if you have additional questions about the device

Find your contact partner at:

Local contact person (http://www.automation.siemens.com/partner)

6.6 Return procedures

Enclose the delivery note, the cover note for return delivery together with the declaration of decontamination form on the outside of the package in a well-fastened clear document pouch.

Required forms

- **Delivery Note**
- **Cover Note for Return Delivery** with the following information

  Cover note (http://support.automation.siemens.com/WW/view/en/16604370)
  - product (ordering number)
  - number of devices or spare parts returned
  - reason for the return

- **Declaration of Decontamination**

  Declaration of Decontamination (http://pia.khe.siemens.com/efiles/feldg/files/Service/declaration_of_decontamination_en.pdf)

  With this declaration you certify *that the returned products/spare parts have been carefully cleaned and are free from any residues.*

  If the device has been operated together with toxic, caustic, flammable or water-damaging products, clean the device before return by rinsing or neutralizing. Ensure that all cavities are free from dangerous substances. Then, double-check the device to ensure the cleaning is completed.

  We shall not service a device or spare part unless the declaration of decontamination confirms proper decontamination of the device or spare part. Shipments without a declaration of decontamination shall be cleaned professionally at your expense before further proceeding.

You can find the forms on the Internet and on the CD delivered with the device.

Troubleshooting/FAQs 7

7.1 Sensor check

Requirement

To check the SITRANS F M sensors the following test instruments will be required:

- Digital Meter/Multimeter
- Megger
- (Moving Coil Meter)

Sensor check

Remove the transmitter from the sensor or remote position before making the following checks.

Coil resistance check

- Measure the coil resistance between connection numbers 85 and 86 using a digital meter.
  Resistance should be around 100 ohms ±10 ohms. (See Coil resistence table)

A low reading may indicate moisture within the coil housing or shorted coil tums.

A high reading would indicate an open circuit coil.

NOTICE
In case of deviation from nominal coil values, the sensor is damaged and must be replaced

Coil insulation check

⚠ WARNING
Potential hazard!
Only carry our a coil insulation check in non-hazardous area!

- Megger between connection number 85 and the sensor body.
  The resistance should be above 20 Megohms.

A low megger reading would indicate the coil insulation is braking down. This is normally due to fluid ingress into the coil housing.

Sensors with an insulation resistance down to 1 Megohms may still work satisfactorily but this is not guaranteed.

Electrode resistance check

- Measure the electrode resistance between connections 82 and Zero with a moving coil meter.
  With a sensor full of fluid the resistance should be between 5Kohms and 50Kohms.
  If the sensor is empty the resistance will be infinite.
- Repeat the resistance measurements between connections 83 and Zero.
  The results should be the same.

If the resistance is low there may be a short on the electrodes or wiring (in the case of a remote mounted transmitter). Alternatively there may be water ingress or moisture in the terminal box.

If the resistance is high and the pipe is completely full of fluid check the following:

1. The fluid is electrically conductive.
2. Electrodes are not coated with grease or any deposit.
3. Electrode circuit is not open
4. The remote mounted transmitter has a 3 core cable with an overall shield continuously from the sensor to the transmitter, including junction boxes and terminal rails inside panels.
5. The shield is connected to the Zero or to the earth terminal (PE) on the sensor.

NOTICE
Sensors removed from line For sensors removed from line with dry bore, use megger between terminal 82 and compression plate, and 83 and compression plate to show any water ingress behind electrodes or within enclosure.

7.2 Fluctuating process values

Question

Why do the displayed process values fluctuate when the electrode cable is moved?

Answer

There are several causes to the fluctuating process values:

- Deposits on electrodes
  - Clean the electrodes.
- Defect electrode cable
  - Replace the cable
- Incorrect cable connection
  - Connect the electrode cable (82, 83, 0 and shield) according to the instructions in chapter Connecting (Page 23)

NOTICE
Vibrating environments It is recommended to use special low noise cables for sensor sizes DN 2 and 3 installed in vibrating environments.

Technical data

8

8.1 MAG 5100 W

Table 8- 1 Technical data

Version	MAG 5100W (7ME6520)	MAG 5100W (7ME6580)
Product characteristic	Mainly for the European market EPDM or NBR lining	Mainly for the non-European market Ebonite lining
Design and nominal size	*Coned sensor:* • DN 15 ... 300 (½" ... 12") *Full bore sensor:* • DN 350 ... 1200 (14" ... 48")	*Full bore sensor:* • DN 25 ... 2000 (1" ... 78")
Measuring principle	Electromagnetic induction	
Excitation frequency (Mains supply: 50 Hz/60 Hz)	*DN 15 ... 65 (½" ... 2½"):* • 12.5 Hz / 15 Hz *DN 80 ... 150 (3" ... 6"):* • 6.25 Hz / 7.5 Hz *DN 200 ... 300 (8" ... 12"):* • 3.125 Hz / 3.75 Hz *DN 350 ... 1200 (14" ... 48"):* • 1.5625 Hz / 1.875 Hz	*DN 25 ... 65 (1" ... 2½"):* • 12.5 Hz / 15 Hz *DN 80 ... 150 (3" ... 6"):* • 6.25 Hz / 7.5 Hz *DN 200 ... 1200 (8" ... 48"):* • 3.125 Hz / 3.75 Hz *DN 1400 ... 2000 (54" ... 78"):* • 1.5625 Hz / 1.875 Hz

Table 8- 2 Process connections

Version	MAG 5100W (7ME6520)	MAG 5100W (7ME6580)
EN 1092-1	*PN 10 (145 psi):* • DN 200 ... 300 (8" ... 12") Flat face flanges *PN 10 (145 psi):* • DN 350 ... 1200 (14" ... 48") Raised face flanges *PN 16 (232 psi):* • DN 50 ... 300 (2" ... 12") Flat face flanges *PN 16 (232 psi):* • DN 350 ... 1200 (14" ... 48") Raised face flanges *PN 40 (580 psi):* • DN 15 ... 40 (½" ... 1½") Flat face flanges	Raised face (EN 1092-1, DIN 3501 and BS4504 have the same mating dimensions) PN 16 (87 psi): • DN 1400 ... 2000 (54" ... 78") PN 10 (145 psi): • DN 200 ... 2000 (8" ... 78") PN16 (232 psi): • DN 65 ... 600 (2½" ... 24") PN 40 (580 psi): • DN 25 ... 50 (1" ... 2")
ANSI B16.5	Class 150 lb: ½" ... 24"	Class 150 lb: 1" ... 24"

Version	MAG 5100W (7ME6520)	MAG 5100W (7ME6580)
AWWA C-207	Class D: • 28" ... 48", Flat face flanges	Class D: • 28" ... 78", Flat face flanges
AS4087	*PN 16 (230 psi):* • DN 50 ... 1200 (2" ... 48")	*PN 16 (230 psi):* • DN 50 ... 1200 (2" ... 48")
JIS B 2220:2004	-	K10 (1" ... 24")

Table 8- 3 Rated operating conditions

Version	MAG 5100W (7ME6520)	MAG 5100W (7ME6580)
Ambient temperature • Sensor	-40 ... +70 °C (-40 ... +158 °F)	-40 ... +70 °C (-40 ... +158 °F)
• With compact transmitter		
MAG 5000/6000	-20 ... +60 °C (-4 ... +140 °F)	-20 ... +60 °C (-4 ... +140 °F)
MAG 6000 I	-20 ... +60 °C (-4 ... +140 °F)	-20 ... +60 °C (-4 ... +140 °F)
Operating pressure [abs. bar][1]	DN 15 ... 40 (½" ... 1½") 0.01 ... 40 bar (0.15 ... 580 psi) DN 50 ... 300 (2" ... 12") 0.03 ... 20 bar (0.44 ... 290 psi) DN 350 ... 1200 (14" ... 48") 0.01 ... 16 bar (0.15 ... 232 psi)	DN 25 ... 50 (1" ... 2") 0.01 ... 40 bar (0.15 ... 580 psi) DN 65 ... 1200 (2½" ... 48") 0.01 ... 16 bar (0.15 ... 232 psi) DN 1400 ... 2000 (54" ... 78") 0.01 ... 10 bar (0.15 ... 145 psi)
Enclosure rating		
Standard	IP67 to EN 60529 / NEMA 4X/6 (1 mH_2O for 30 minutes)	IP67 to EN 60529 / NEMA 4X/6 (1 mH_2O for 30 minutes)
Option	IP68 to EN 60529 / NEMA 6P (10 mH_2O continuously)	IP68 to EN 60529 / NEMA 6P (10 mH_2O continuously)
Corrosive category	C4 according to ISO 12944-2	C4 according to ISO 12944-2
Pressure drop	DN 15 and 25 (½" and 1"): • Max. 20 mbar (0.29 psi) at 1 m/s (3 ft/s) DN 40 ... 300 (1½" ... 12"): • Max. 25 mbar (0.36 psi) at 3 m/s (10ft/s) DN 350 ... 1200 (14" ... 48"): • Insginificant	Insignificant
Test pressure	1.5 x PN (where applicable)	1.5 x PN (where applicable)
Mechanical load (vibration)	18 ... 1000 Hz random in x,y, z directions for 2 hours according to EN 60068-2-36 Sensor: 3.17 grms Sensor with compact MAG 5000/6000 transmittter mounted: 3.17 grms Sensor with compact MAG 6000 I transmitter mounted: 1.14 grms	18 ... 1000 Hz random in x,y, z directions for 2 hours according to EN 60068-2-36 Sensor: 3.17 grms Sensor with compact MAG 5000/6000 transmittter mounted: 3.17 grms Sensor with compact MAG 6000 I transmitter mounted: 1.14 grms

Version	MAG 5100W (7ME6520)	MAG 5100W (7ME6580)
Process fluid temperature		
NBR	-10 ... +70 °C (14 ... 158 °F)	-
EPDM	-10 ... +70 °C (14 ... 158 °F)	-
EPDM (MI-001)	+0.1 ... +30 °C (32 ... 76 °C)	-
Ebonite	-	-10 ... +70 °C (14 ... 158 °F)
EMC	EMC 2004/108/EC	EMC 2004/108/EC

Maximum operating pressure decreases with increasing operating temperature

Table 8- 4 Design

Version	MAG 5100W (7ME6520)	MAG 5100W (7ME6580)
Housing and flange material	Carbon steel, with corrosion-resistant two-component epoxy coating (min. 150 µm) Corrosive category C4, according to ISO 12944-2	Carbon steel ASTM A 105, with corrosion-resistant two-component epoxy coating (min. 150 µm)
Measuring pipe	AISI 304 (1.4301)	AISI 304 (1.4301)
Electrodes	Hastelloy	Hastelloy
Grounding electrodes (standard	Hastelloy	Hastelloy
Terminal box	Fibre glass reinforced polyamide	Fibre glass reinforced polyamide

Table 8- 5 Certificates and approvals

Version	MAG 5100W (7ME6520)	MAG 5100W (7ME6580)
Calibration Standard production calibration, calibration report shipped with sensor	DN 15 ... 300: • Zero-point, 2 x 25 % and 2 x 90 % DN 350 ... 1200: • Zero-point, 1 x 25 % and 1 x 90 %	Zero-point, 2 x 25 % and 2 x 90 %
Custody transfer (only with MAG 5000/6000 CT)	*OIML R 49 pattern approval cold water (Denmark and Germany):* • DN 50 ... 300 (2" ... 12") *MI 001 cold water (EU):* • DN 50 ... 300 (2" ... 12")	-

Version	MAG 5100W (7ME6520)	MAG 5100W (7ME6580)
Drinking water approvals	*EPDM liner:* • ANSI/NSF 61 Standard (Cold water, US) • WRAS (WRc, BS6920 cold water, GB) • ACS (F) • DVGW W270 (D) • Belgaqua (NBR) *NBR liner:* • ANSI/NSF 61 Standard (Cold water, US), only ANSI and AWWA flanges)	• NSF/ANSI Standard 61 (Cold water, US) • WRAS (WRc, BS6920 cold water, GB)
Other approvals	• MCERTS • PED - 97/23 EC[1)], CRN • FM Class 1, Div 2 • CSA Class 1, Div 2	• PED - 97/23 EC[1)] (only < DN 600 (< 24")) • FM Class 1, Div 2 • CSA Class 1, Div 2

1) : For sizes larger than 600 mm (24") in PN 16, PED conformity is available as cost-added option. The basic unit will carry the LVD (Low Voltage Directive) and EMC approval.

8.2 Cable data

Description

Cable for standard electrode or coil	
Electrode cable, double shielded	
Cable kit with standard coil cable and electrode cable double shielded (also available as low noise cable for MAG 1100 sensor)	

Standard applications

Table 8- 6 Technical data, standard application cables

		Coil cable	Standard electrode cable
Basic data	No. of conductors	2	3
	Min. sqr. area	0.5 mm^2	0.2 mm^2
	Shield	Yes	Yes
	Max. capacitance	N/A	350 pF/m

		Coil cable	Standard electrode cable
Max. cable loop resistance	Media temperature:		
	< 100 °C	40 Ω	N/A
	> 200 °C	6 Ω	N/A
Cable glands on sensor and transmitter	M20x1.5 gland - Cable ø 5 ... 13 mm (0.20 ... 0.51 inches)		
	½ NPT gland - cable ø 5 ... 9 mm (0.20 ... 0.35 inches)		

Special applications, e.g. low conductivity or electrical noise

Table 8- 7 Technical data, special application cables

		Coil cable	Special electrode cable
Basic data	No. of conductors	3	3
	Sqr. area	1.5 mm^2	0.25 mm^2
	Shield	Yes	Double
	Color code	Brown, blue, black	Brown, blue, black
	Outside color	Grey	Grey
	Ext. diameter	7.8 mm	8.1 mm
	Conductor	Flexible CU	Flexible CU
	Isolation material	PVC	PVC
Ambient temperature	Flexible installation	-5 ... +70°C (23 ... 158°F)	-5 ... +70°C (23 ... 158°F)
	Non-flexible installtaion	-30 ... +70°C (-22 ... 158°F)	-30 ... +70°C (-22 ... 158°F)
Cable parameter	Capacity	161.50 pF/m	N/A
	Inductance	0.583 µH/m	N/A
	L/R	43.83 þH/Ω	N/A

8.3 Effect of temperature on working pressure

Effect of temperature on working pressure.

Table 8- 8 Metric measures (pressure in bar)

Flange specifications	Flange rating	Temperature (°C)			
		-5	10	50	90
Sizes DN25 ... 2000					
EN 1092-1	PN 10	10.0	10.0	9.7	9.4
	PN 16	16.0	16.0	15.5	15.1
	PN 40	40.0	40.0	38.7	37.7
ANSI B16.5	150 lb	19.7	19.7	19.3	18.0
AWWA C-207	Class D	10.3	10.3	10.3	10.3

Flange specifications	Flange rating	Temperature (°C)			
		-5	10	50	90
Sizes DN 15 ... 300 (order no. 7ME6520 only)					
EN 1092-1	PN 10	10.0	10.0	10.0	8.2
	PN 16	10.0	16.0	16.0	13.2
	PN 40	40.0	40.0	38.7	37.7
ANSI B16.5	150 lb	10.0	19.7	19.7	16.2

Table 8- 9 Imperial measures (pressure in psi)

Flange specifications	Flange rating	Temperature (°F)			
		23	50	120	200
Sizes 1" ... 78"					
EN 1092-1	PN 10	145	145	141	136
	PN 16	232	232	225	219
	PN 40	580	580	561	547
ANSI B16.5	150 lb	286	286	280	261
AWWA C-207	Class D	150	150	150	150l
Sizes ½"... 12" (order no. 7ME6520 only)					
EN 1092-1	PN 10	145	145	145	119
	PN 16	145	232	232	191
ANSI B16.5	150 lb	145	286	286	235

8.4 Process fluid conductivity

Compact installation

Liquids with an electrical conductivity ≥ 5 µS/cm.

Remote installation

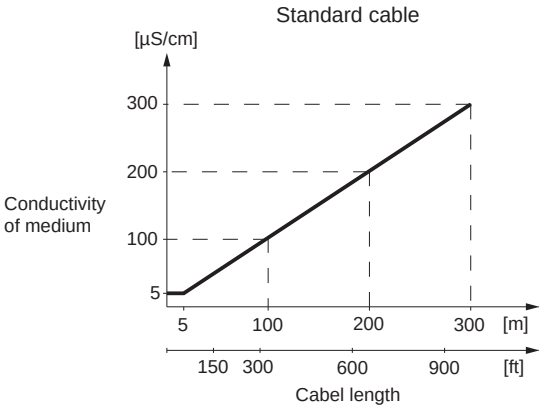

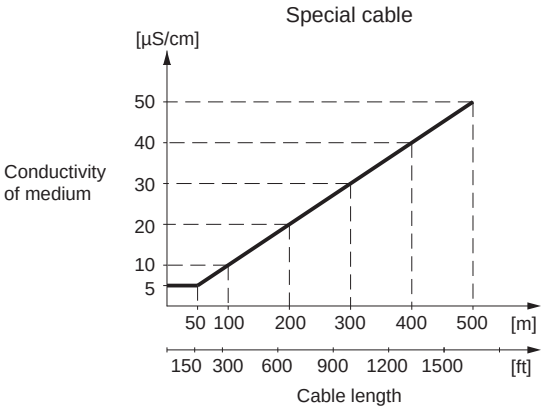

WARNING

For detection of empty sensor the min. conductivity must always be >50 µS/cm and the max. length of the electrode cable when remote mounted is 50 meters (164 ft). Special cable must be used!

For remote MID installations the max. cable length is 3 meters (9.8 ft). For other CT application standard requirements are applicable.

8.5 Liner selection

Liner	Applications
EPDM	Drinking water applications (not hydrocarbons)
Ebonite	Drinking water applications wastewater applications and certain chemicals applications
NBR	General purpose. Drinking water, sea waters

8.6 Electrode selection

Electrodes	
Hastelloy C	The preferred choice for water and wastewater, chemicals, food and beverage, and pharmaceutical industries

8.7 Sizing tables

Sizing table (DN 2 ... DN 2000)

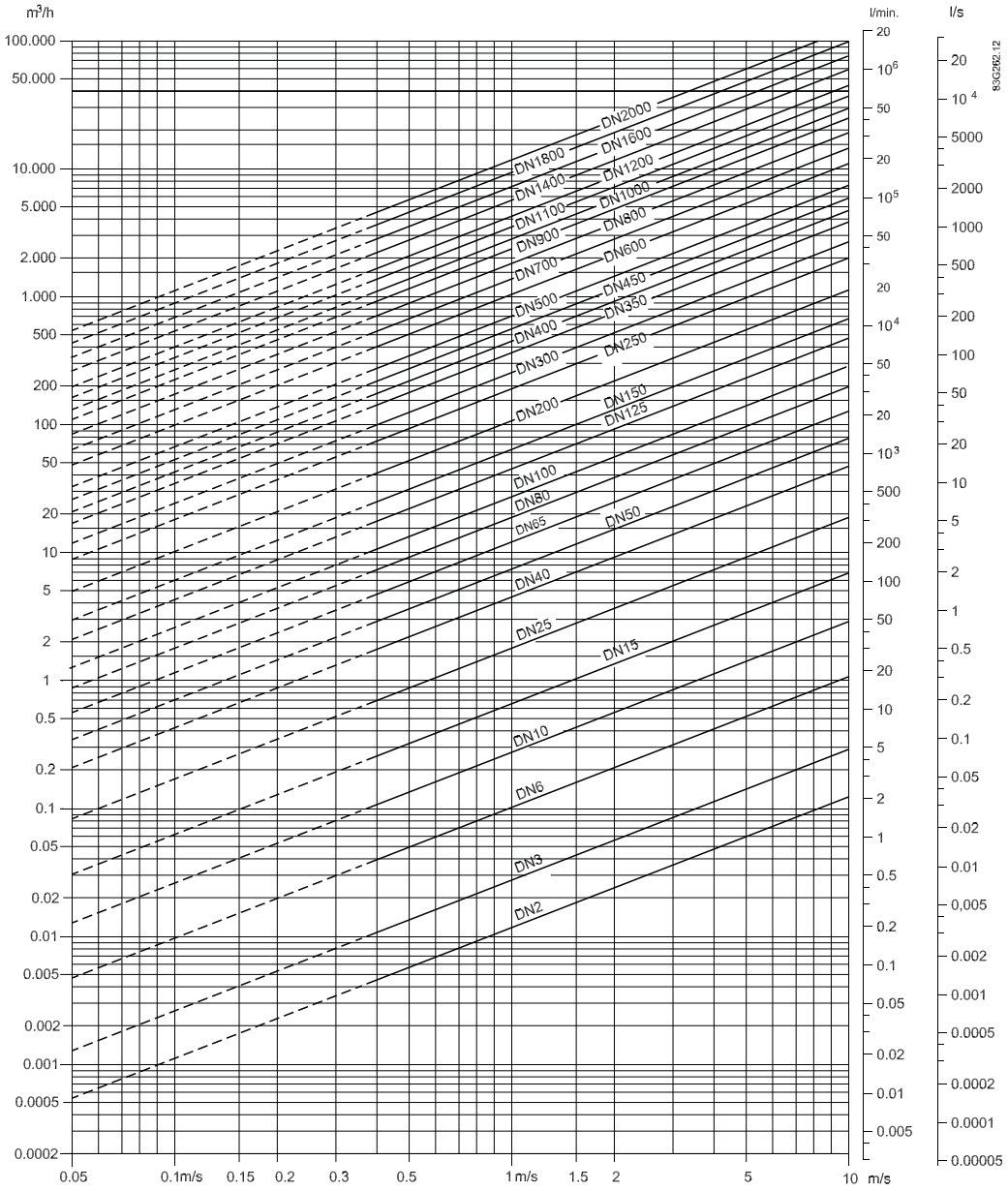

Sizing table (DN 1/12" ... DN 78")

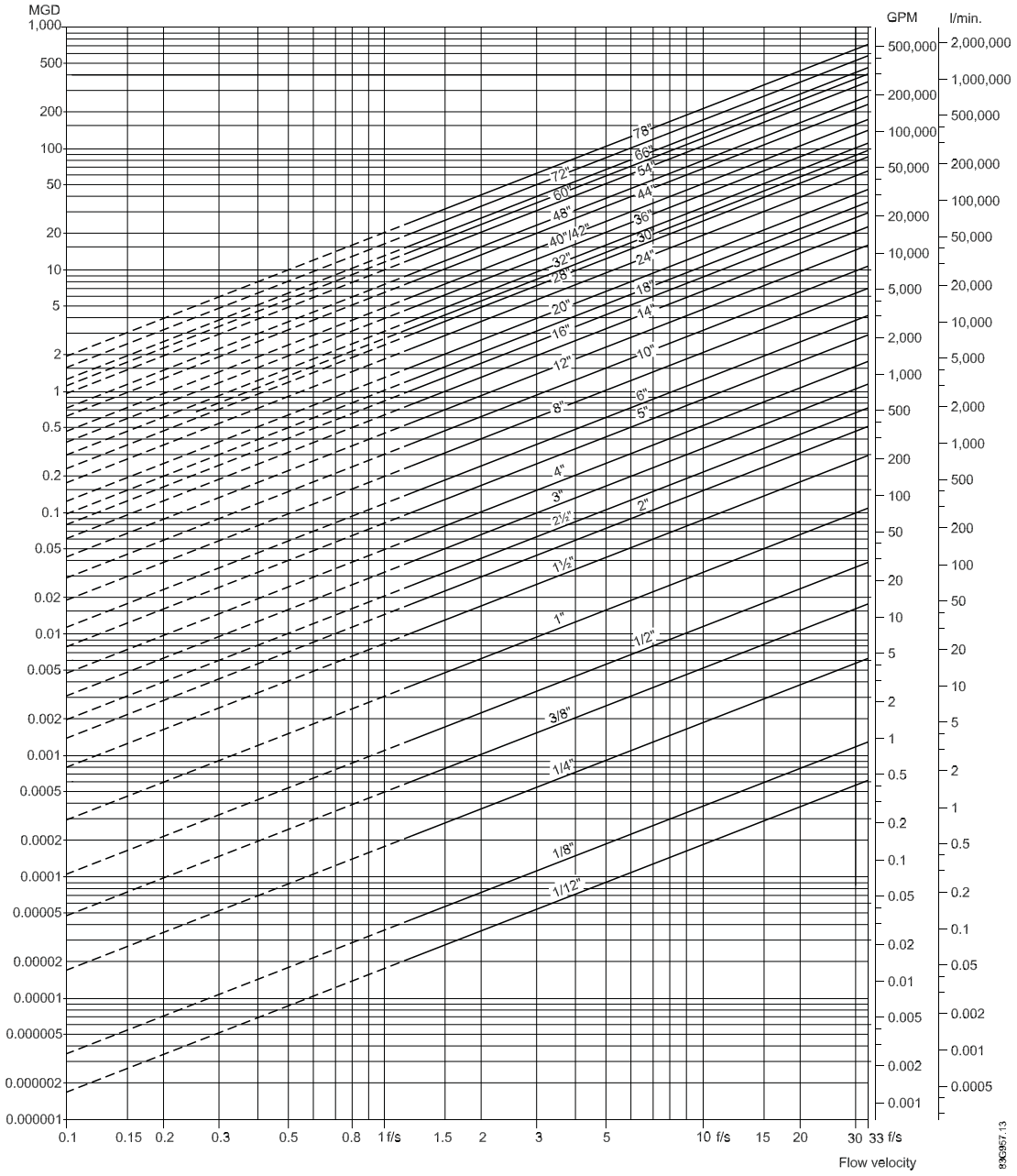

The tables show the relationship between flow velocity v, flow quantity Q and sensor dimension DN.

Guidelines for selection of sensor

Min. measuring range: 0 ... 0.25 m/s (0 ... 0.8 ft/s)

Max. measuring range: 0 ... 10 m/s (0 ... ft/s)

Normally the sensor size is selected so that the nominal flow velocity v lies within the measuring range 1 ... 3 m/s (1 ... 15 ft/s).

Flow velocity calculation formula:

(metric measures)

$$V = \frac{1273.24 \times Q\ [l/s]}{DN^2\ [mm]}\ [m/s] \text{ or } V = \frac{353.68 \times Q\ [m^3/h]}{DN^2\ [mm]}\ [m/s]$$

(imperial measures)

$$V = \frac{0.408 \times Q\ [GPM]}{(\text{Pipe ID})^2\ [inch]}\ [ft/s] \text{ or } V = \frac{283.67 \times Q\ [MGD]}{(\text{Pipe ID})^2\ [inch]}\ [ft/s]$$

8.8 Dimensions and weight

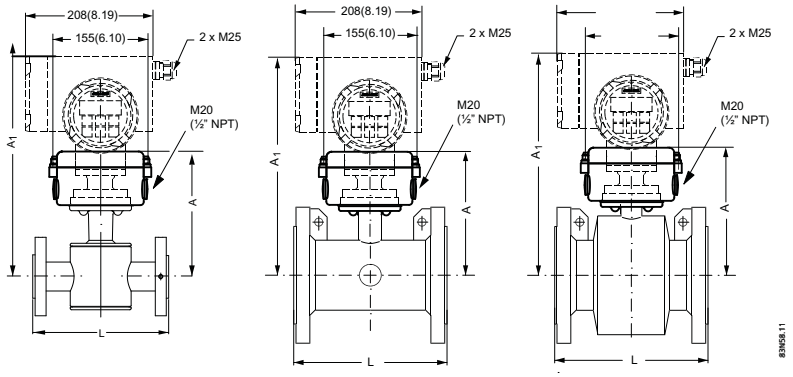

Figure 8-1 MAG 5100 W with MAG 6000 I / MAG 6000 I Ex d

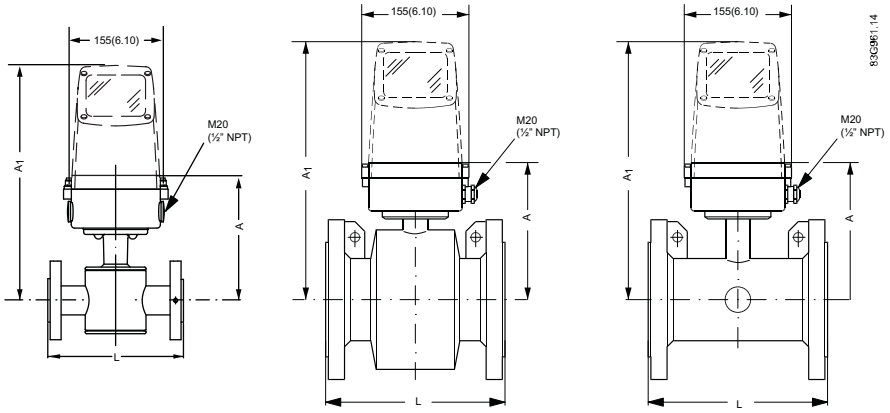

Figure 8-2 MAG 5100 W with MAG 5000 / 6000

Dimensions

Table 8- 10 Nominal size A

Nominal size		**A**			
		Order no. 7ME6520 NBR or EPDM liner		**Order no. 7ME6580 Ebonite liner**	
mm	inch	mm	inch	mm	inch
15	½	177	7	-	-
25	1	187	7.4	187	7.4
40	1½	202	8	197	7.8
50	2	188	7.4	205	8.1
65	2½	194	7.6	212	8.3
80	3	200	7.9	222	8.7
100	4	207	8.1	242	9.5
125	5	217	8.5	255	10.0
150	6	232	9.1	276	10.9
200	8	257	10.1	304	12.0
250	10	284	11.2	332	13.1
300	12	310	12.2	357	14.1
350	14	382	15.0	362	14.3
400	16	407	16.0	387	15.2
450	18	438	17.2	418	16.5
500	20	463	18.2	443	17.4
600	24	514	20.2	494	19.4
700	28	564	22.2	544	21.4
750	30	591	23.3	571	22.5
800	32	616	24.3	606	23.9
900	36	663	26.1	653	25.7
1000	40	714	28.1	704	27.7
1050	42	714	28.1	704	27.7
1100	44	765	30.1	755	29.7
1200	48	820	32.3	810	31.9
1400	54	N/A	N/A	925	36.4
1500	60	N/A	N/A	972	38.2
1600	66	N/A	N/A	1025	40.4
1800	72	N/A	N/A	1123	44.2
2000	78	N/A	N/A	1223	48.1

Table 8- 11 Nominal size L

Nominal size		L											
		PN 10		PN 16		PN 16 non-PED		PN 40		Class 150 AWWA		AS / JIS10K	
mm	inch	mm	inch	mm	inch	mm	inch	mm	inch	mm	inch	mm	inch
15	½	N/A	N/A	N/A	N/A	N/A	N/A	200	7.9	200	7.9	N/A	N/A
25	1	N/A	N/A	N/A	N/A	N/A	N/A	200	7.9	200	7.9	200	7.9
40	1½	N/A	N/A	N/A	N/A	N/A	N/A	200	7.9	200	7.9	200	7.9
50	2	N/A	N/A	200	7.9	N/A	N/A	N/A	N/A	200	7.9	200	7.9
65	2½	N/A	N/A	200	7.9	N/A	N/A	N/A	N/A	200	7.9	200	7.9
80	3	N/A	N/A	200	7.9	N/A	N/A	N/A	N/A	200	7.9	200	7.9
100	4	N/A	N/A	250	9.8	N/A	N/A	N/A	N/A	250	9.8	250	9.8
125	5	N/A	N/A	250	9.8	N/A	N/A	N/A	N/A	250	9.8	250[1)]	9.8[1)]
150	6	N/A	N/A	300	11.8	N/A	N/A	N/A	N/A	300	11.8	300	11.8
200	8	350	13.8	350	13.8	N/A	N/A	N/A	N/A	350	13.8	350	13.8
250	10	450	17.7	450	17.7	N/A	N/A	N/A	N/A	450	17.7	450	17.7
300	12	500	19.7	500	19.7	N/A	N/A	N/A	N/A	500	19.7	500	19.7
350	14	550	21.7	550	21.7	N/A	N/A	N/A	N/A	550	21.7	550	21.7
400	16	600	23.6	600	23.6	N/A	N/A	N/A	N/A	600	23.6	N/A	23.6
450	18	600	23.6	600	23.6	N/A	N/A	N/A	N/A	600	23.6	600	23.6
500	20	600	23.6	600	23.6	N/A	N/A	N/A	N/A	600	23.6	600	23.6
600	24	600	23.6	600	23.6	N/A	N/A	N/A	N/A	600	23.6	600	23.6
700	28	700	27.6	700	27.6	N/A	N/A	N/A	N/A	700	27.6	700[2)]	27.6[2)]
750	30	N/A	N/A	N/A	N/A	N/A	N/A	N/A	N/A	750	29.5	750[2)]	N/A
800	32	800	31.5	800	31.5	N/A	N/A	N/A	N/A	800	31.5	800[2)]	31.5[2)]
900	36	900	35.4	900	35.4	N/A	N/A	N/A	N/A	900	35.4	900[2)]	35.4[2)]
1000	40	1000	39.4	1000	39.4	N/A	N/A	N/A	N/A	1000	39.4	1000[2)]	39.4[2)]
1050	42	N/A	N/A	N/A	N/A	N/A	N/A	N/A	N/A	1000	39.4	N/A	N/A
1100	44	N/A	N/A	N/A	N/A	N/A	N/A	N/A	N/A	1100	43.3	N/A	N/A
1200	48	1200	47.2	1200	47.2	N/A	N/A	N/A	N/A	1200	47.2	1200[2)]	47.2[2)]
1400	54	1400	55.1	N/A	N/A	1400	55.1	N/A	N/A	1200	47.2	N/A	N/A
1500	60	1500	59.1	N/A	N/A	1500	59.1	N/A	N/A	1200	47.2	N/A	N/A
1600	66	1600	63.0	N/A	N/A	1600	63.0	N/A	N/A	1200	47.2	N/A	N/A
1800	72	1800	70.9	N/A	N/A	1800	70.9	N/A	N/A	1200	47.2	N/A	N/A
2000	78	2000	78.7	N/A	N/A	2000	78.7	N/A	N/A	1200	47.2	N/A	N/A

1) Not available with AS flange

2) Not available with JIS 10K flange

Weight

Table 8- 12 Weight

Nominal size		Order no. 7ME6520										Order no. 7ME6580	
		PN 10		PN 16		PN 40		Class 150 / AWWA		AS		PN / ANSI / AWWA / AS	
mm	inch	kg	lbs	kg	lbs	kg	lbs	kg	lbs	kg	lbs	kg	lbs
15	½	N/A	N/A	N/A	N/A	4	9	4	9	N/A	N/A	-	-
25	1	N/A	N/A	N/A	N/A	6	12	5	11	N/A	N/A	5	11
40	1½	N/A	N/A	N/A	N/A	8	18	7	15	N/A	N/A	8	17
50	2	N/A	N/A	9	20	N/A	N/A	8	20	N/A	N/A	9	20
65	2½	N/A	N/A	10.7	24	N/A	N/A	11	24	N/A	N/A	11	24
80	3	N/A	N/A	11.6	26	N/A	N/A	13	28	N/A	N/A	12	24
100	4	N/A	N/A	15.2	33	N/A	N/A	19	41	N/A	N/A	16	35
125	5	N/A	N/A	20.4	45	N/A	N/A	24	52	N/A	N/A	19	42
150	6	N/A	N/A	26	57	N/A	N/A	29	64	N/A	N/A	27	60
200	8	48	106	48	106	N/A	N/A	56	124	N/A	N/A	40	68
250	10	64	141	69	152	N/A	N/A	79	174	N/A	N/A	60	132
300	12	76	167	86	189	N/A	N/A	110	243	N/A	N/A	80	176
350	14	104	229	125	274	N/A	N/A	139	307	N/A	N/A	110	242
400	16	119	263	143	314	N/A	N/A	159	351	N/A	N/A	125	275
450	18	136	299	173	381	N/A	N/A	182	400	N/A	N/A	175	385
500	20	163	359	223	491	N/A	N/A	225	495	N/A	N/A	200	440
600	24	236	519	338	744	N/A	N/A	320	704	N/A	N/A	187	633
700	28	270	595	314	692	N/A	N/A	273	602	320	70	330	728
750	30	N/A	N/A	N/A	N/A	N/A	N/A	329	725	N/A	N/A	360	794
800	32	346	763	396	873	N/A	N/A	365	804	428	944	450	992
900	36	432	951	474	1043	N/A	N/A	495	1089	618	1362	53	1168
1000	40	513	1130	600	1321	N/A	N/A	583	1282	636	1399	66	1455
1050	42	N/A	N/A	N/A	N/A	N/A	N/A	687	1512	N/A	N/A	N/A	N/A
1100	44	N/A	N/A	N/A	N/A	N/A	N/A	763	1680	N/A	N/A	1140	2513
1200	48	643	1415	885	1948	N/A	N/A	861	1896	813	1789	1180	2601
1400	54	1592	3510	N/A	N/A	N/A	N/A	N/A	N/A	N/A	N/A	1600	3528
1500	60	N/A	N/A	N/A	N/A	N/A	N/A	N/A	N/A	N/A	N/A	2460	5423
1600	66	2110	4652	N/A	N/A	N/A	N/A	N/A	N/A	N/A	N/A	2525	5566
1800	72	2560	5644	N/A	N/A	N/A	N/A	N/A	N/A	N/A	N/A	2930	6460
2000	78	3640	8025	N/A	N/A	N/A	N/A	N/A	N/A	N/A	N/A	3665	8080

Appendix

A

A.1 Flange mating dimensions (metric)

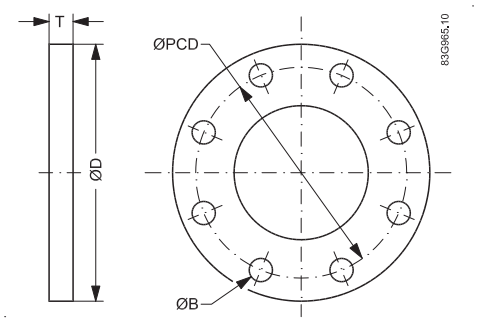

Figure A-1 Flange mating dimensions

Table A- 1 Flange mating dimensions (metric)

	Dimensions (mm)				Bolting	
mm	D	PCD	T	B	Holes	Bolts
PN10						
200	340	295	24	22	8	M20
250	395	350	26	22	12	M20
300	445	400	26	22	12	M20
350	505	460	28	22	16	M20
400	565	515	32	26	16	M24
450	615	565	36	26	20	M24
500	670	620	38	26	20	M24
600	780	725	42	3	20	M27
700	895	840	30	30	24	M27
800	1015	950	32	33	24	M30
900	1115	1050	34	33	28	M30
1000	1230	1160	34	36	28	M33
1200	1455	1380	38	39	32	M36
PN16						
50	165	125	19	18	4	M16
65	185	145	20	18	8	M16
80	200	160	20	18	8	M16
100	220	180	22	18	8	M16
125	250	210	22	18	8	M16
150	285	240	24	22	8	M20
200	340	295	26	22	12	M20
250	405	355	29	26	12	M24

	Dimensions (mm)				Bolting	
mm	**D**	**PCD**	**T**	**B**	**Holes**	**Bolts**
300	460	410	32	26	12	M24
350	520	470	35	26	16	M24
400	580	525	38	30	16	M27
450	640	585	42	30	20	M27
500	715	650	46	33	20	M30
600	840	770	52	36	20	M33
700	910	840	36	36	24	M33
800	1025	950	38	39	24	M36
900	1125	1050	40	39	28	M36
1000	1255	1170	42	42	28	M39
1200	1485	1390	48	48	32	M45
PN40						
15	95	65	14	14	4	M12
25	115	85	16	14	4	M16
40	150	110	18	18	4	M16
150 lb						
15	89	60	12	16	4	M12
25	108	79	16	16	4	M16
40	127	98	18	16	4	M16
50	152	121	19	19	4	M16
65	178	140	22	19	4	M16
80	190	152	24	19	4	M16
100	229	191	24	19	8	M16
125	254	216	24	22	8	M20
150	279	241	25	22	8	M20
200	343	298	29	22	8	M20
250	406	362	30	25	12	M24
300	483	432	32	25	12	M24
350	533	476	35	28	12	M27
400	597	540	36.5	28	16	M27
450	635	578	40	32	16	M30
500	699	635	43	32	20	M30
600	813	749	48	35	20	M33

	Dimensions (mm)				Bolting	
mm	D	PCD	T	B	Holes	Bolts
AWWA						
700	927	864	33	35	28	M33
750	984	914	35	35	28	M33
800	1060	978	38	41	28	M39
900	1168	1068	41	41	32	M39
1000	1289	1200	41	41	36	M39
1050	1346	1257	44	41	36	M39
1200	1511	1422	48	41	44	M39

A.2 Factory settings

Dimension-dependent factory settings

Table A- 2 50 Hz version

DN			Qmax				Unit	Volume/ pulse	Pulse unit	Totalizer unit
			Order no. 7ME6520		Order no. 7ME6580					
mm	Inch	Fac settings	Min.	Max.	Min.	Max.				
15	½	**2000**	159	6361	-	-	l/h	1	l	l
25	1	**5000**	441	17671	441	17671	l/h	10	l	l
40	1½	**12**	1.1	45	1.1	45	m^3/h	10	l	l
50	2	**20**	1.7	63	1.7	70	m^3/h	10	l	l
65	2½	**30**	2.9	100	2.9	119	m^3/h	100	l	l
80	3	**50**	4.0	160	4.5	180	m^3/h	100	l	l
100	4	**120**	6.2	250	7	282	m^3/h	100	l	l
125	5	**180**	10.0	400	11	441	m^3/h	100	l	m^3
150	6	**250**	15.7	629	15.9	636	m^3/h	100	l	m^3
200	8	**400**	24.9	997	28.2	1130	m^3/h	1	m^3	m^3
250	10	**700**	40.0	1600	44.1	1767	m^3/h	1	m^3	m^3
300	12	**1000**	62.5	2500	63.6	2544	m^3/h	1	m^3	m^3
350	14	**1200**	86.5	3463	86.5	3463	m^3/h	1	m^3	m^3
400	16	**1800**	113	4523	113	4523	m^3/h	1	m^3	m^3
450	18	**2000**	143.1	5725	143.1	5725	m^3/h	1	m^3	m^3
500	20	**3000**	176.7	7068	176.7	7068	m^3/h	1	m^3	m^3
600	24	**4000**	254.4	10178	254.4	10178	m^3/h	10	m^3	m^3
700	28	**5000**	346.3	13854	346.3	13854	m^3/h	10	m^3	m^3
750	30	**6000**	397.6	15904	397.6	15904	m^3/h	10	m^3	m^3
800	32	**7000**	452.3	18095	452.3	18095	m^3/h	10	m^3	m^3

DN			Qmax				Unit	Volume/ pulse	Pulse unit	Totalizer unit
			Order no. 7ME6520		Order no. 7ME6580					
900	36	**9000**	572.5	22902	572.5	22902	m^3/h	10	m^3	m^3
1000	40	**12000**	706.8	28274	706.8	28274	m^3/h	10	m^3	m^3
1050	42	**12000**	706.8	28274	706.8	28274	m^3/h	10	m^3	m^3
1100	44	**14000**	855.2	34211	855.2	34211	m^3/h	10	m^3	m^3
1200	48	**15000**	1017.8	40715	1017.8	40715	m^3/h	10	m^3	m^3
1400	54	**25000**	-	-	1385.4	55417	m^3/h	10	m^3	m^3
1500	60	**30000**	-	-	1590.4	63617	m^3/h	10	m^3	m^3
1600	66	**35000**	-	-	1809.5	72382	m^3/h	10	m^3	m^3
1800	72	**40000**	-	-	2290.2	91608	m^3/h	10	m^3	m^3
2000	78	**45000**	-	-	2827.4	113097	m^3/h	10	m^3	m^3

Table A- 3 60 Hz version

DN			Qmax				Unit	Volume/ pulse	Pulse unit	Totalizer unit
			Order no. 7ME6520		Order no. 7ME6580					
mm	Inch	**Fac. settings**	Min.	Max.	Min.	Max.				
15	½	9	0.7	28	-	-	US GPM	1	US G	US G
25	1	**22**	1.9	77.8	1.9	77.8	US GPM	1	US G	US G
40	1½	**52**	4.9	199.1	4.9	199.1	US GPM	1	US G	US G
50	2	**88**	6.9	277.2	7.7	311.2	US GPM	1	US G	US G
65	2½	**132**	11.0	440.2	13.1	525.9	US GPM	1	US G	US G
80	3	**220**	17.6	705.1	19.9	796.7	US GPM	1	US G	US MG
100	4	**528**	27.5	1101	31.1	1244.8	US GPM	1	US G	US MG
125	5	**793**	44.0	1762.2	48.6	1945.1	US GPM	1	US G	US MG
150	6	**1101**	69.3	2772.9	70	2800.9	US GPM	1	US G	US MG
200	8	**1761**	109.7	4391.9	124.4	4979.5	US GPM	1	US G	US MG
250	10	**3082**	176.1	7045.2	194.5	7780.5	US GPM	1	US G	US MG
300	12	**4402**	275.1	11007.8	280	11203.9	US GPM	1	US G	US MG
350	14	**5283**	381.2	15249.7	381.2	15249.7	US GPM	1	US G	US MG
400	16	**7925**	497.9	19918.1	497.9	19918.1	US GPM	1	US G	US MG
450	18	**8806**	630.2	25208.8	630.2	25208.8	US GPM	1	US G	US MG
500	20	**13209**	778	31122	778	31122	US GPM	1	US G	US MG
600	24	**17611**	1120.3	44815.7	1120.3	44815.7	US GPM	10	US G	US MG
700	28	**19812**	1524.9	60999.1	1524.9	60999.1	US GPM	10	US G	US MG
750	30	**22014**	1750.6	70024.5	1750.6	70024.5	US GPM	10	US G	US MG
800	32	**30820**	1991.8	79672.4	1991.8	79672.4	US GPM	10	US G	US MG
900	36	**39626**	2522.8	100835.3	2522.8	100835.3	US GPM	10	US G	US MG
1000	40	**52834**	3112.2	124488.1	3112.2	124488.1	US GPM	10	US G	US MG
1050	42	**52834**	3431.2	137248.1	3431.2	137248.1	US GPM	10	US G	US MG
1100	44	**61640**	3765.7	150630.6	3765.7	150630.6	US GPM	10	US G	US MG

DN			Qmax				Unit	Volume/ pulse	Pulse unit	Totalizer unit
			Order no. 7ME6520		Order no. 7ME6580					
1200	48	**66043**	4481	179262.9	4481	179262.9	US GPM	10	US G	US MG
1400	54	**110072**	-	-	6099.9	243993.7	US GPM	1000	US G	US MG
1500	60	**132086**	-	-	7002.4	280098.3	US GPM	1000	US G	US MG
1600	66	**154100**	-	-	7967.2	318689.6	US GPM	1000	US G	US MG
1800	72	**176115**	-	-	10083.5	403341.5	US GPM	1000	US G	US MG
2000	78	**198129**	-	-	12448.8	497952.5	US GPM	1000	US G	US MG

A.3 Coil resistance

Table A- 4 Coil resistance

		MAG 1100, MAG 1100F		MAG 3100, MAG 3100P, MAG 5100 W (Order no. 7ME6580)		MAG 5100 W (Order no. 7ME6520)	
DN	Inch	Resistance	Tolerance	Resistance	Tolerance	Resistance	Tolerance
2	1/12	104 Ω	+/− 5	104			
3	1/8	104 Ω	+/− 5	104			
6	1/4	99 Ω	+/− 17	104			
10	3/8	99 Ω	+/− 17	104			
15[1)]	1/2	91 Ω	+/− 9	104			
25	1	91 Ω	+/− 17	104	+/− 2	104	+/− 10
40	11/2	91 Ω	+/− 9	92	+/− 2	92	+/− 10
50	2	91 Ω	+/− 9	92	+/− 2	119.4	+/− 10
65	21/2	99 Ω	+/− 17	100	+/− 2	127	+/− 10
80	3	91 Ω	+/− 17	94	+/− 2	126	+/− 10
100	4	91 Ω	+/− 9	92	+/− 2	125	+/− 10
125	5	92	+/− 2	126	+/− 10		
150	6	94	+/− 2	116	+/− 10		
200	8	90	+/− 2	109	+/− 10		
250	10	92	+/− 2	104	+/− 10		
300	12	100	+/− 2	108	+/− 10		
350	14	112	+/− 2	100	+/− 6		
400	16	100	+/− 4	100	+/− 6		
450	18	108	+/− 4	100	+/− 6		
500	20	122	+/− 4	100	+/− 6		
600	24	115	+/− 4	98	+/− 6		
700	28	128	+/− 4	98	+/− 6		
750	30	133					
800	32	128	+/− 4	98	+/− 6		
900	36	131	+/− 4	98	+/− 6		

		MAG 1100, MAG 1100F		MAG 3100, MAG 3100P, MAG 5100 W (Order no. 7ME6580)		MAG 5100 W (Order no. 7ME6520)	
1000	40	131	+/− 4	88	+/− 6		
1100	44	126					
1200	48	130	+/− 4	88	+/− 6		
1400	54	130					
1500	60	124					
1600	66	133					
1800	72	133					
2000	78	147					

1) On MAG 1100 DN 15 produced as from May 1999 the coil resistance must be 86 ohm, +8/−4 ohm.

NOTICE

Reference values

- All resistance values are at 20 °C
- The resistance changes proportionally 0.4% / °C

Spare parts

Description	
Cable glands, 2 pcs. M20 ½" NPT	
Sealing screws for sensor/transmitter, 2 pcs.	
Terminal box, in polyamide, inclusive of lid M20 ½" NPT	

Description	
Terminal box lid, in polyamide	
Terminal box, in stainless steel, inclusive of lid M20 ½" NPT	
Potting kit for terminal box of MAG sensors for I P68/NEMA 6P (not for EX)	

A.4 Ordering

In order to ensure that the ordering data you are using is not outdated, the latest ordering data is always available on the Internet: Catalog process instrumentation (http://www.siemens.com/processinstrumentation/catalogs)

Glossary

ASIC

Application-Specific Integrated Circuit is an integrated circuit (IC) customized for a particular use, rather than intended for general-purpose use.

EMC

Electromagnetic compatibility (EMC) is the branch of electrical sciences which studies the unintentional generation, propagation and reception of electromagnetic energy with reference to the unwanted effects (Electromagnetic Interference, or EMI) that such energy may induce. The goal of EMC is the correct operation, in the same electromagnetic environment, of different equipment which use electromagnetic phenomena, and the avoidance of any interference effects.

IP

An IP (Ingress Protection) number is used to specify the environmental protection of enclosures around electronic equipment. These ratings are determined by specific tests. The IP number is composed of two numbers, the first referring to the protection against solid objects and the second against liquids. The higher the number, the better the protection. For example, in IP67 the first Number (6) means that the device is totally protected against dust, and the second (7) that it is protected against the effect of immersion between 15cm and 1m

PED

The Pressure Equipment Directive (97/23/EC) is the legislative framework on European level for equipment subject to a pressure hazard. It was adopted by the European Parliament and the European Council in May 1997 and has been obligatory throughout the European Union since May 2002.

SENSORPROM

All sensor related settings/data saved on an EPROM. SENSORPROM technology automatically configures the transmitter at start up providing calibration data, pipe size, sensor type, and output settings. The SENSORPROM automatically stores values or settings changed by users, and automatically re-programs any new transmitter without loss of accuracy.

USM

USM II is a Communication Platform. The Siemens USM II concept enables fitting of add-on bus modules without loss of functionality:

1. All modules can be fitted as true "plug & play"
2. Module and transmitter are automatically configured through the SENSORPROM

Index

A

Abrasive liquids, 18
Add-on modules, (See Communication module)
Applications, 11

C

Cable specifications, 24, 40
Cathodic protection, 21
Coil insulation check, 33
Coil resistance check, 33
Communication modules, 11
Compliance, 7
Contact person, 6
Customer Support Hotline, 30

D

Decontamination, 31
Dimensions, 47
Direct burial, 28
Document history, 5

E

Electrical connection
  Cable specifications, 24
  Remote installations, 24
  Safety instructions, 23
Electrode resistance check, 34
Empty pipe detection, 18

F

FAQ
  Fluctuating process values, 34
Flange mating dimensions, 51

G

Gas / Air bubbles, 18

H

Hazardous area
  Approvals, 10
Horizontal pipes
  Installation in, 18
Hotline, 30

I

Inlet / outlet conditions, 16
Installation
  in U-tube, 16
  Indoor/outdoor, 15
  Large pipes, 17
  Location in system, 16
  Mounting of sensor, 19
  Pipes with free outlet, 16
  Remote, 24
  Safety instructions, 15
Internet
  Contact person, 6, 31
  Flowdocumentation, 6
  Support, 31
Introduction, 5
Items supplied, 5

L

Laws and directives, 7

M

Mains supply, 23
Maintenance, 29
Material compatibility, 7
Measurement principle, 12
Mounting, (See Installation)

P

Potential equalization, 21
Potting, 27
Pressure
  Safety instructions, 15

Pressure Equipment Directive, 8
Process fluid
    Conductivity, 42
Protective conductor terminal, 24
Protective earth, 24

R

Recalibration, 29
Repair, 30
Return procedures, 31

S

Safety
    Instrument safety standards, 7
Safety instructions
    Electrical connection, 23
    Installation, 15
Safety notes, 7
Sensor check, 33
Sensor orientation, 18
Service, 30, 31
Support, 31
System components, 11

T

Theory of operation, 12
Torques values, 20
Transportation, 29

V

Vertical pipes
    Installation in, 18
Vibrations, 19

W

Weight, 49
Wire insulation, 24
Wiring, (See Electrical connection)

For more information

www.siemens.com/flow

Siemens A/S
Flow Instruments
DK-6430 Nordborg
Denmark

Subject to change without prior notice
Order No.: A5E03063678
Literature No.: A5E03063678-02
Copyright Siemens AG 11.2010
All rights reserved

www.siemens.com/processautomation

SIEMENS

SITRANS F

Electromagnetic flowmeters

SITRANS F M MAG 5000/6000

Operating Instructions

Edition 12/2013

Answers for industry.

SIEMENS

SITRANS F

Flowmeters
SITRANS F M MAG 5000/6000

Operating Instructions

Introduction 1

Safety notes 2

Description 3

Installing/Mounting 4

Connecting 5

Commissioning 6

Functions 7

Alarm, error, and system messages 8

Service and maintenance 9

Troubleshooting/FAQs 10

Technical data 11

Spare parts/Accessories 12

Menu diagrams A

Factory settings B

Approvals/Certificates C

Electromagnetic flow transmitter designed for use with flow sensor types
MAG 1100/1100 F/3100/3100 P/5100 W
Compact and remote installation

12/2013
A5E02338368-002

Legal information

Warning notice system

This manual contains notices you have to observe in order to ensure your personal safety, as well as to prevent damage to property. The notices referring to your personal safety are highlighted in the manual by a safety alert symbol, notices referring only to property damage have no safety alert symbol. These notices shown below are graded according to the degree of danger.

⚠DANGER

indicates that death or severe personal injury **will** result if proper precautions are not taken.

⚠WARNING

indicates that death or severe personal injury **may** result if proper precautions are not taken.

⚠CAUTION

indicates that minor personal injury can result if proper precautions are not taken.

NOTICE

indicates that property damage can result if proper precautions are not taken.

If more than one degree of danger is present, the warning notice representing the highest degree of danger will be used. A notice warning of injury to persons with a safety alert symbol may also include a warning relating to property damage.

Qualified Personnel

The product/system described in this documentation may be operated only by **personnel qualified** for the specific task in accordance with the relevant documentation, in particular its warning notices and safety instructions. Qualified personnel are those who, based on their training and experience, are capable of identifying risks and avoiding potential hazards when working with these products/systems.

Proper use of Siemens products

Note the following:

⚠WARNING

Siemens products may only be used for the applications described in the catalog and in the relevant technical documentation. If products and components from other manufacturers are used, these must be recommended or approved by Siemens. Proper transport, storage, installation, assembly, commissioning, operation and maintenance are required to ensure that the products operate safely and without any problems. The permissible ambient conditions must be complied with. The information in the relevant documentation must be observed.

Trademarks

All names identified by ® are registered trademarks of Siemens AG. The remaining trademarks in this publication may be trademarks whose use by third parties for their own purposes could violate the rights of the owner.

Disclaimer of Liability

We have reviewed the contents of this publication to ensure consistency with the hardware and software described. Since variance cannot be precluded entirely, we cannot guarantee full consistency. However, the information in this publication is reviewed regularly and any necessary corrections are included in subsequent editions.

Siemens AG
Industry Sector
Postfach 48 48
90026 NÜRNBERG
GERMANY

Order number: A5E02338368
℗ 12/2013 Technical data subject to change

Copyright © Siemens AG 2013.
All rights reserved

Table of contents

1 Introduction 7

1.1 Preface 7

1.2 Items supplied 7

1.3 History 8

1.4 Further Information 9

2 Safety notes 11

2.1 Laws and directives 11

2.2 Installation in hazardous location 12

3 Description 15

3.1 System components 15

3.2 Operating principle 15

3.3 Applications 15

3.4 Features 16

3.5 MAG 5000/MAG 6000 versions 17

4 Installing/Mounting 19

4.1 Introduction 19

4.2 Installation conditions 20

4.3 MAG 5000/6000 compact 22

4.4 Remote installation 24

4.5 MAG 5000/6000 CT 28

4.5.1 Installing hardware key 29

4.5.2 Seal device 29

4.5.3 Installation conditions 31

4.5.3.1 MI-001 31

4.5.3.2 PTB K7.2 31

4.6 Turning transmitter/keypad 31

5 Connecting 35

5.1 Electrical connection 36

5.2 Electrical connection PTB K7.2 38

5.3 Connection of add-on modules 38

6 Commissioning 39

6.1 MAG 5000/6000 Blind 39

6.2 Local user interface 40

6.3 Menu structure ... 41
6.4 Changing password ... 42
6.5 Changing basic settings ... 43
6.6 Changing operator menu setup ... 45
6.7 Changing language ... 46
7 Functions ... 47
7.1 Output settings ... 47
7.2 External input ... 49
7.3 Sensor characteristics ... 49
7.4 Reset mode ... 49
7.5 Service mode ... 51
7.6 MAG 5000 CT and MAG 6000 CT settings ... 51
7.7 MAG 6000 SV ... 52
8 Alarm, error, and system messages ... 53
8.1 Diagnostics ... 53
8.2 List of error numbers ... 55
9 Service and maintenance ... 57
9.1 Transmitter check list ... 57
9.2 Technical support ... 58
9.3 Return procedures ... 59
9.4 Recalibration ... 60
10 Troubleshooting/FAQs ... 61
11 Technical data ... 63
11.1 Technical specifications ... 63
11.2 Accuracy ... 66
11.3 Output characteristics ... 68
11.4 Cable data ... 71
11.5 Cable requirements ... 72
12 Spare parts/Accessories ... 73
12.1 Ordering ... 73
12.2 Accessories ... 73
12.3 Spare parts ... 74
12.4 Sun shield ... 74
A Menu diagrams ... 75
A.1 Transmitter menu overview ... 75

A.2 Basic settings 76
A.3 Current output 77
A.4 Digital output - pulse 78
A.5 Digital output - frequency 78
A.6 Error level 78
A.7 Error number 79
A.8 Direction/limit 79
A.9 Batch 79
A.10 External input 80
A.11 Sensor characteristics 81
A.12 Reset mode 82
A.13 Reset mode - MAG 6000 SV 83
A.14 Service mode 84
A.15 Operator menu setup 85
A.16 Product identity 86
A.17 Add-on communication module 87
A.18 Cleaning 87
A.19 MAG 5000/6000 CT menu overview 88
A.20 Change password 89
B Factory settings 91
B.1 Transmitter factory settings 91
B.2 50 Hz Dimension dependent 93
B.3 60 Hz Dimension dependent 94
B.4 50 Hz Dimension dependent batch and pulse output settings 96
B.5 60 Hz Dimension dependent batch and pulse output settings 97
C Approvals/Certificates 99
Index 101

Introduction

1

1.1 Preface

These instructions contain all the information you need for using the device.

The instructions are aimed at persons mechanically installing the device, connecting it electronically, configuring the parameters and commissioning it as well as service and maintenance engineers.

Note

It is the responsibility of the customer that the instructions and directions provided in the manual are read, understood and followed by the relevant personnel before installing the device.

1.2 Items supplied

- SITRANS F M MAG 5000/6000 transmitter
- Calibration report
- SITRANS F literature CD
- Quick start guide

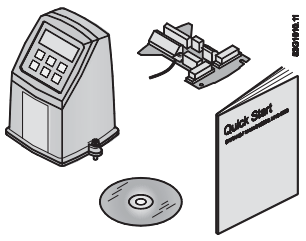

Inspection

1. Check for mechanical damage due to possible improper handling during shipment. All claims for damage are to be made promptly to the shipper.
2. Make sure the scope of delivery, and the information on the type plate corresponds to the ordering information

Device identification

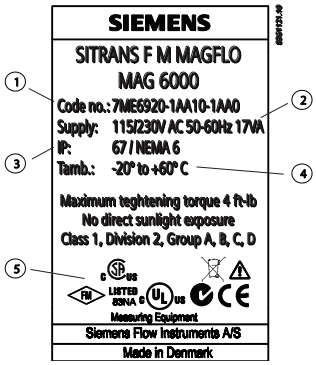

① Code number
② Power supply
③ Enclosure rating
④ Ambient temperature
⑤ Approvals

Figure 1-1 MAG 5000/6000 nameplate

1.3 History

This document describes:

- SITRANS F MAG 5000 and MAG 6000 transmitters (standard version).
- Optional versions:
  - MAG 5000 Blind and MAG 6000 Blind
  - MAG 5000 CT and MAG 6000 CT
  - MAG 6000 SV

Documentation history

The contents of these instructions are regularly reviewed and corrections are included in subsequent editions. We welcome all suggestions for improvement.

The following table shows the most important changes in the documentation compared to each previous edition.

Edition	Remarks	FW version
01 01/2010	First edition	
02 01/2012		4.04
03 12/2013	• Customer defined unit • Velocity value with unit • Operational without SensorProm • EPD for 60 Hz mains	4.07

1.4 Further Information

Product information on the Internet

The Operating Instructions are available on the CD-ROM shipped with the device, and on the Internet on the Siemens homepage, where further information on the range of SITRANS F flowmeters may also be found:

Product information on the internet (http://www.siemens.com/flow)

Worldwide contact person

If you need more information or have particular problems not covered sufficiently by these Operating Instructions, get in touch with your contact person. You can find contact information for your local contact person on the Internet:

Local contact person (http://www.automation.siemens.com/partner)

Safety notes

2

⚠ CAUTION

Correct, reliable operation of the product requires proper transport, storage, positioning and assembly as well as careful operation and maintenance. Only qualified personnel should install or operate this instrument.

Note

Alterations to the product, including opening or improper repairs of the product, are not permitted.

If this requirement is not observed, the CE mark and the manufacturer's warranty will expire.

2.1 Laws and directives

General requirements

Installation of the equipment must comply with national regulations. For example EN 60079-14 for the European Community.

Instrument safety standards

The device has been tested at the factory, based on the safety requirements. In order to maintain this condition over the expected life of the device the requirements described in these Operating Instructions must be observed.

Environmental conditions according to IEC 61010-1 (2001)

- Indoor use
- Altitude up to 2000m
- Maximum relative humidity 80% for temperatures up to 31°C (88°F) decreasing linearly up to 50% relative humidity from 40°C (104°F)
- Main supply voltage fluctuations up to ±10% of the nominal voltage (see technical specifications)
- Overvoltage category II
- Pollution degree 2

CE-marked equipment

The CE mark symbolizes the compliance of the device with the following guidelines:

- EMC-guideline 89/336/EEC
- Low voltage guideline 73/23/EWG
- ATEX Directive 94/9/EG
- CT: (MI-001) Directive 2004/22/EC

2.2 Installation in hazardous location

⚠ WARNING

Equipment used in hazardous locations must be Ex-approved and marked accordingly.

It is required that the special conditions for safe use provided in the manual and in the Ex certificate are followed!

Ex approvals

CSA Class I, Division 2, Groups A, B, C and D. Code T5 for an ambient temperature of +60 °C.

FM Class I, Division 2, Groups A, B, C and D and Class I, Zone 2, Group IIC indoor/outdoor Type IP67 hazardous (classified) locations

Temperature specifications for Ex use

Temperature class	Ambient temperature [°C]		
	-40 to +40	-40 to +50	-40 to +60
T2	180 (process temperature)	-	-
T3	165 (process temperature)	140 (process temperature)	-
T4	100 (process temperature)	100 (process temperature)	80 (process temperature)
T5	65 (process temperature)	65 (process temperature)	65 (process temperature)
T6	50 (process temperature)	50 (process temperature)	50 (process temperature)

EX requirements

It is required that:

- Electrical connections are in accordance with Elex V (VO in explosion hazardous areas) and EN60079-14 (Installing Electrical Systems in Explosion Hazardous Areas).
- The protective cover over the power supply is properly installed. For intrinsically safe circuits the connection area can be opened.

- Appropriate cable connectors are used for the output cicuits: intrinsically safe: blue, non-intrinsically safe: black
- Sensor and transmitter are connected to the potential equalization. For intrinsically safe output circuits potential equalization must be maintained along the entire connection path.
- Sensor insulation thickness is max. 100mm (only insulated sensors).
- EN50281-1-2 is considered for installation in areas with combustible dust.
- When protective earth (PE) is connected, no potential difference between the protective earth (PE) and the potential equalization (PA) can exist, even during a fault condition.

Description

3

3.1 System components

A SITRANS F M MAG 5000/6000 flowmeter system includes:

- Transmitter (type SITRANS F M MAG 5000/6000)
- Sensor (types: SITRANS F MAG 1100/1100F/3100/3100 P/5100 W)
- Communication module (optional) (types: HART, PROFIBUS PA/DP, MODBUS RTU RS 485, Foundation Fieldbus H1, Devicenet)
- SENSORPROM memory unit

Communication solutions

The SITRANS F USM II range of add on modules, presently including HART, Foundation Fieldbus. MODBUS RTU RS 485, PROFIBUS PA / DP and Devicenet, are all applicable with the SITRANS F M MAG 6000 transmitter.

3.2 Operating principle

The transmitters are microprocessor-based with a built-in alphanumeric display in several languages. The flow measuring principle is based on Faraday's law of electromagnetic induction. Magnet coils mounted diametrically on the measuring pipe generate a pulsed electromagnetic field. The liquid flowing through this electromagnetic field induces a voltage.

The transmitters evaluate the signals from the associated electromagnetic sensors, convert the signals into appropriate standard signals such as 4 ... 20 mA, and also fulfil the task of a power supply unit providing the magnet coils with a constant current.

The transmitter consists of a number of function blocks which convert the sensor voltage into flow readings.

3.3 Applications

The pulsed DC-powered magnetic flowmeters are suitable for measuring the flow of almost all electrically conductive liquids, pastes, and slurries with max. 40% solids.

The main applications can be found in the following sectors:

- Water and waste water
- Chemical and pharmaceutical industries
- Food & beverage industry
- Mining and cements industries

- Pulp and paper industry
- Steel industry
- Power generation; utility and chilled water industry

3.4 Features

Power supply

2 different types of power supply are available. A 12 ... 24 V AC/DC and a 115 ... 230 V AC switch mode type.

Coil current module generates a pulsating magnetizing current that drives the coils in the sensor. The current is permanently monitored and corrected. Errors or cable faults are registered by the self-monitoring circuit.

Input circuit amplifies the flow-proportional signal from the electrodes. The input impedance is extremely high: $>10^{14}$ Ω which allows flow measurements on fluids with conductivities as low as 5 µS/cm. Measuring errors due to cable capacitance are eliminated due to active cable screening.

Digital signal processor converts the analog flow signal to a digital signal and suppresses electrode noise through a digital filter. Inaccuracies in the transmitter as a result of long-term drift and temperature drift are monitored and continuously compensated for via the self-monitoring circuit. The analog to digital conversion takes place in an ultra low noise ASIC with 23 bit signal resolution. This has eliminated the need for range switching. The dynamic range of the transmitter is therefore unsurpassed with a turn down ratio of minimum 3000:1.

CAN communication

The transmitter operates internally via an internal CAN communication bus. Signals are transferred through a signal conditioner to the display module and to/from internal/external option modules and the dialog module.

Dialog module

The display unit consists of a 3-line display and a 6-key keypad. The display shows a flow rate or a totalizer value as a primary reading.

Output module

The output module converts flow data to analog, digital and relay outputs. The outputs are galvanically isolated and can be individually set to suit a particular application.

3.5 MAG 5000/MAG 6000 versions

The transmitters are designed in various versions and offer high performance and easy installation, commissioning and maintenance.

Standard version

The standard version is an IP67 version for compact or remote installation. Its robust design ensures a long lifetime if installed outdoors.

Blind version

This version carries all the normal MAG 5000/6000 features, except those associated with the display and keypad.

Both current and digital outputs are available.

Factory setting of current output in unit is switched off when delivered.

CT version

The MAG 5000/6000 CT version is a custody transfer-approved transmitter.

It is approved according to:

- Cold water pattern approval (MAG 5000/6000 CT):
  - OIML R 49
- Cold water pattern approval (MAG 6000 CT only):
  - MI-001
- Hot water pattern approval (MAG 6000 CT only):
- Heat meter pattern approval (MAG 6000 CT only):
  - OIML R 75
- Other media than water (MAG 6000 CT only):
  - OIML R 117

* Energy metering

- PTB K7.2

SV version (MAG 6000 only)

This version is identical to the standard MAG 6000 transmitters except for the following additional functions:

- Zero point adjustment
- Adjustable excitation frequency up to 44 Hz

Installing/Mounting

4

4.1 Introduction

- SITRANS F flowmeters are suitable for indoor and outdoor installations.

WARNING
Installation in hazardous location
Special requirements apply to the location and interconnection of sensor and transmitter. See "Installation in hazardous area"

This chapter describes how to install the flowmeter in the compact version as well as in the remote version.

The transmitter is delivered ready for mounting on the sensor. The transmitter is delivered with a compression plate ready for mounting on the sensor. No further assembling is necessary.

The transmitter can be installed either compact on the sensor or remote.

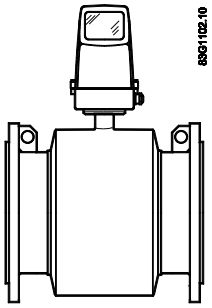

Figure 4-1 Compact installation

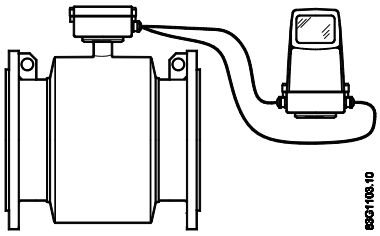

Figure 4-2 Remote installation

⚠ CAUTION
See Cable requirements (Page 72) before installing transmitter

4.2 Installation conditions

Reading and operating the flowmeter is possible under almost any installation conditions because the display can be oriented in relation to the sensor. To ensure optimum flow measurement, attention should be paid to the following:

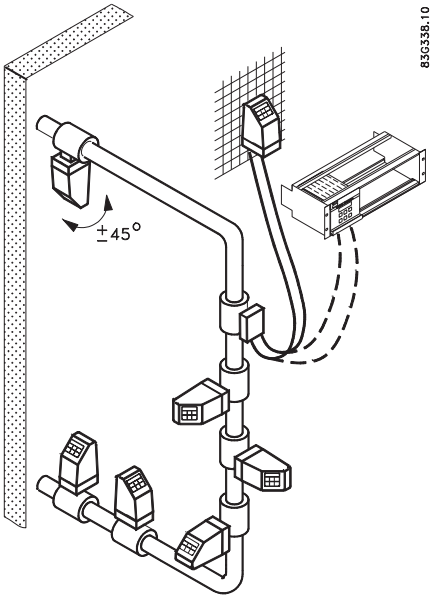

Vibrations

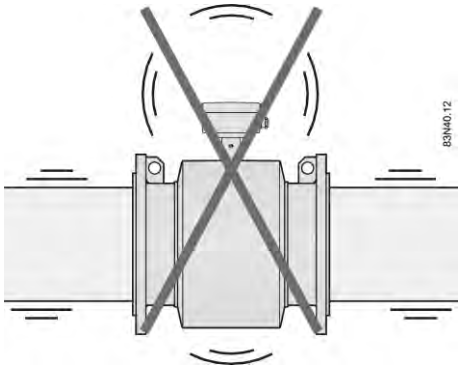

Figure 4-3 Avoid strong vibrations

Compact installation

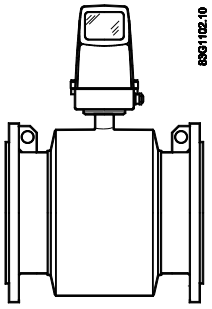

Medium temperature must be in accordance with the graphs showing max. ambient temperature as a function of medium temperature.

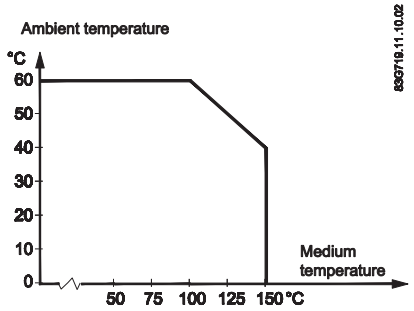

Figure 4-4 Standard, blind and SV versions

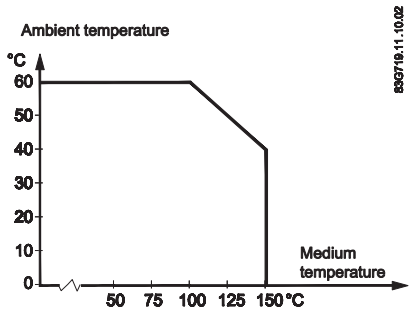

Figure 4-5 CT version

Remote installation

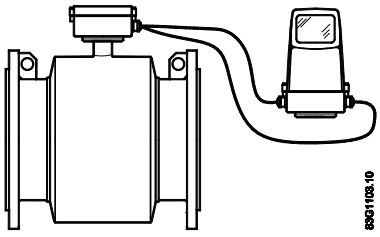

Cable length and type (as described in Cable requirements (Page 72)) must be used.

For installation conditions for sensors, see respective sensor operating instructions.

4.3 MAG 5000/6000 compact

Install MAG 5000 / MAG 6000 compact version

1. Remove and discard terminal box lid of sensor.

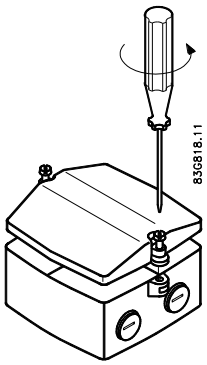

2. Ensure SENSORPROM® memory unit is installed.
3. Fit M20 or ½" NPT cable glands for supply and output cables.
4. Unplug the two black plug assemblies for coil and electrode cables in terminal box.
5. Connect earth wire from connection board to bottom of terminal box.
6. Connect 2-pin connector and 3-pin connector as shown to their corresponding terminal numbers on connection board as shown in Electrical connection (Page 36).

Note

System will not register flow if black plugs are not connected to connection board.

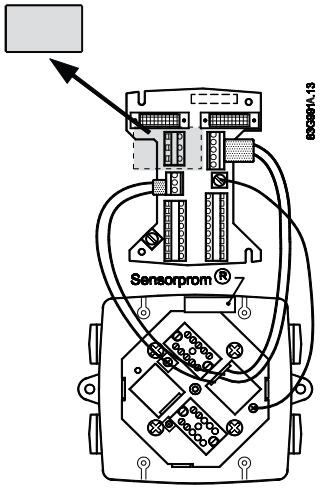

7. Fit supply and output cables through cable glands and connect to connection plate as shown in Electrical connection (Page 36).

8. Mount connection plate in terminal box.

Note

Check that your connection board lines up with SENSORPROM® unit, if not, move SENSORPROM® unit to the other side of terminal box.

SENSORPROM® memory unit connections will be established automatically when connection plate is mounted in terminal box.

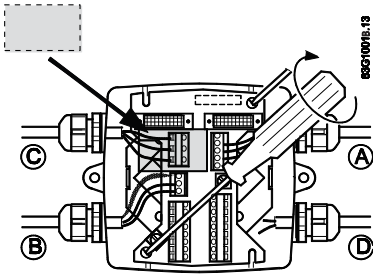

9. Tighten cable glands to obtain optimum sealing.
10. Mount transmitter on terminal box.

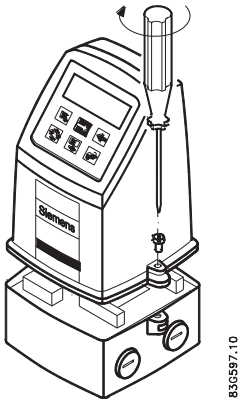

11. Transmitter is ready to be powered up.

NOTICE
Exposing transmitter to direct sunlight may increase operating temperature above its specified limit, and decrease display visibility.
A sunshield is available as accessory.

4.4 Remote installation

At sensor

1. Remove terminal box lid.

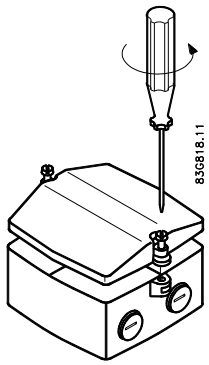

2. Remove SENSORPROM® unit from sensor terminal box and mount it in terminal box of wall mounting unit.

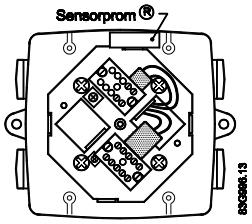

3. Fit M20 or ½" NPT cable glands for cables.

4. Fit and connect electrode (1) and coil (2) cables as shown in Electrical connection (Page 36).

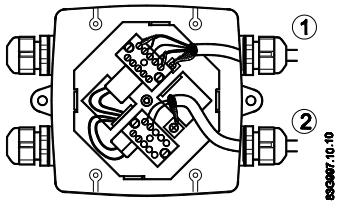

Note

Unscreened cable ends must be kept as short as possible.

Electrode cable and coil cable must be kept separate to prevent interference.

5. Tighten cable glands well to obtain optimum sealing.

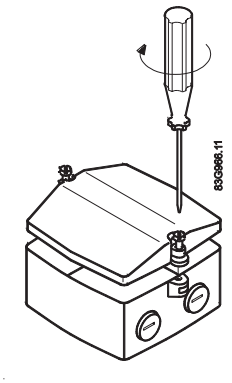

⚠ WARNING

Mount terminal box lid before power up.

Wall mounting

1. Mount bracket on a wall or on a horizontal or a vertical pipe using ordinary hose clips or duct straps.

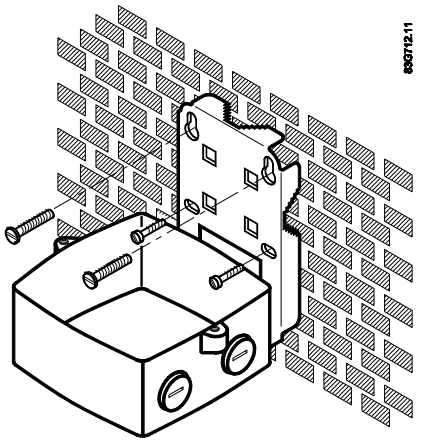

Figure 4-6 Wall mounting

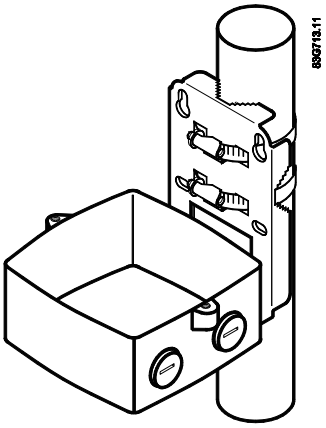

Figure 4-7 Pipe mounting - vertical

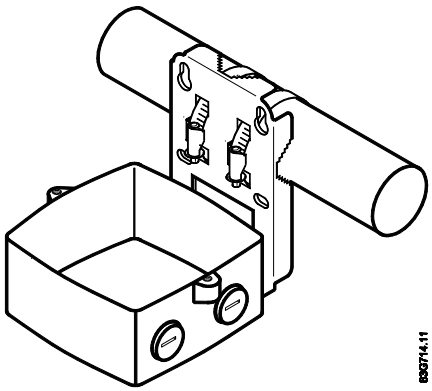

Figure 4-8 Pipe mounting - horizontal

2. Ensure that correct SENSORPROM® memory unit is mounted in wall/pipe mounting unit.

3. Fit M20 or ½" NPT cable glands for cables from bottom or sides of terminal box.
4. Mount earth wire in bottom of terminal box.

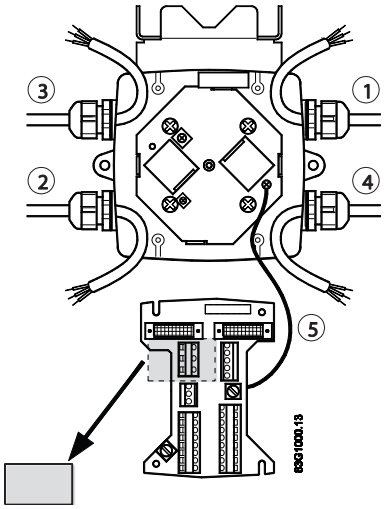

① Connect electrode cable
② Connect coil cable - keep separate from electrode cable
③ Connect power supply
④ Connect output cable
⑤ Connect PE (ground) wire

5. Mount connection plate in terminal box.

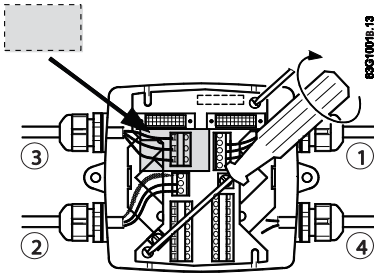

① Electrode cable
② Coil cable
③ Power supply
④ Output cable

6. Fit coil, electrode, supply and output cables through cable glands and connect to connection plate as shown in Electrical connection (Page 36).
7. Fix connection plate with the two diagonally opposite screws.

8. Tighten cable glands to obtain optimum sealing.

⚠ CAUTION
When remote mounted, power supply PE wire must be connected to PE terminal (⏚). Coil cable shield must be connected to SHIELD terminal.

9. Mount transmitter on terminal box.

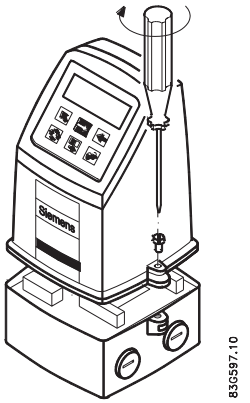

10. Transmitter is ready to be powered up.

NOTICE
Exposing the transmitter to direct sunlight may increase the operating temperature above its specified limit, and decrease display visibility. A sun shield is available as accessory.

4.5 MAG 5000/6000 CT

To ensure that the settings of this custody transfer-approved MAG 5000/6000 CT transmitter are not changed, it is necessary to install a hardware key to lock the software functions and to seal the device.

MAG 6000 CT is installed like a Standard MAG 6000 except for the final sealing.

Calibration sealing has been carried out at calibration.

4.5.1 Installing hardware key

Use hardware key on non-verified transmitter

1. Mount hardware key on transmitter connection plate during setting of primary operating parameters such as $Q_{max.}$, low-flow cut-off, units, approvals, etc. in connection with commissioning or calibration. See setup menus in appendix menu diagrams.

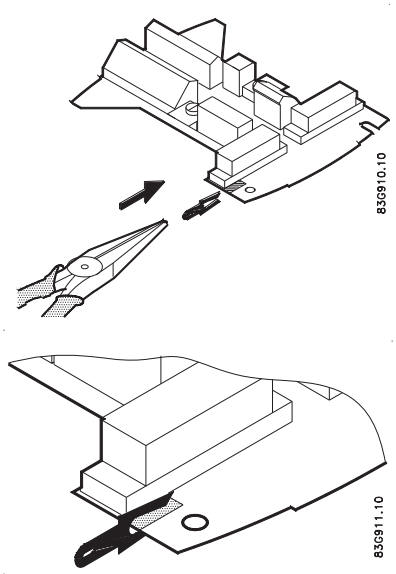

2. Remove hardware key after setting up and calibrating unit.

   This locks the menu structure and the selected settings.

Note

Hardware key function

Setting of primary operating parameters is blocked during normal operation.

When key is mounted, access to all menu items is gained. When key is removed, primary settings are blocked in accordance with requirements in authorisation.

4.5.2 Seal device

Seal transmitter

⚠ CAUTION
Seal transmitter to prevent unauthorized access.

1. Seal connection plate to prevent access to SENSORPROM® memory unit as shown below. 1 indicates sealing locations.

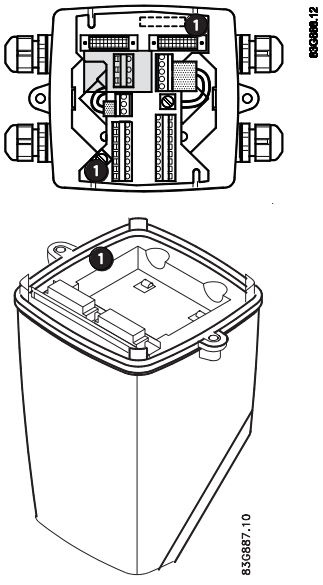

2. Drill through marked drilling holes in terminal box and transmitter/lid. Seal transmitter externally as shown below.

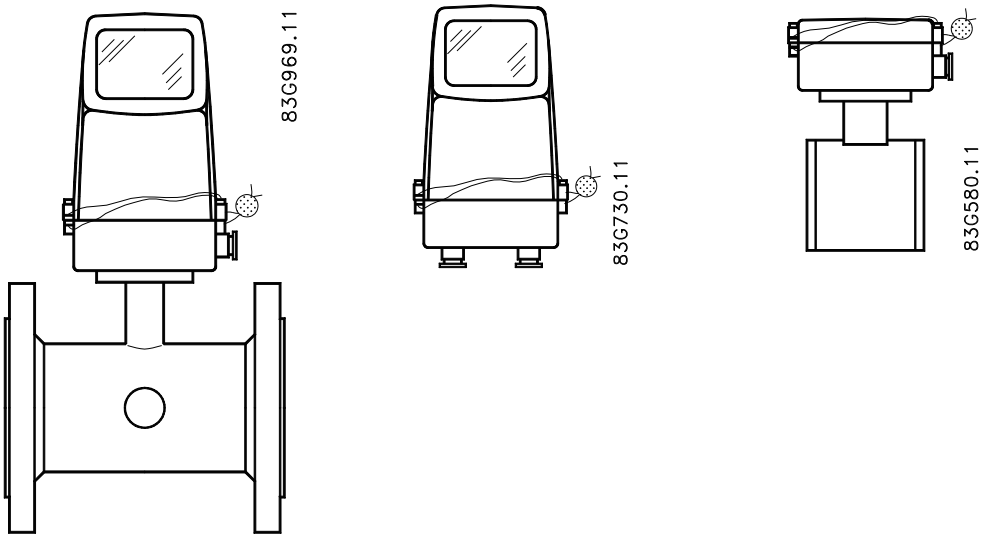

4.5.3 Installation conditions

4.5.3.1 MI-001

MAG 5000/6000 CT together with MAG 5100W (7ME652) are approved for Mi-001 under the following installation conditions.

- DN 50 to 300 mm (2" to 12")
- Horizontal installation
- Compact or remote with max. 3 m cable
- Power supply 115/230 V AC

Other restrictions may apply (see certificate).

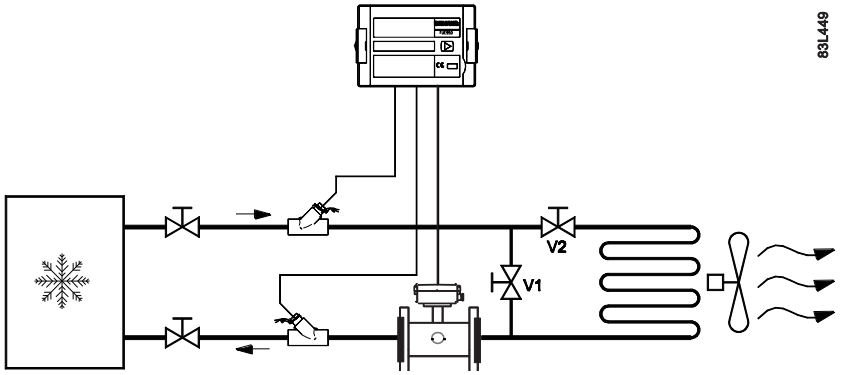

4.5.3.2 PTB K7.2

MAG 5000/6000 CT together with MAG 5100W (7ME652) are approved for PTB K7.2 under the following installation conditions.

SITRANS F M MAG 5100 W with MAG 5000/6000CT

- DN 50 to 300 mm (2" to 12")
- Horizontal installation
- Compact or remote with max. 10 m (33 ft.) cable

Other restrictions may apply (see certificate 22.76/10.02)

**insert installation conditions as pasted

4.6 Turning transmitter/keypad

It is possible to alter the standard assembly, e.g. to turn transmitter or keypad.

Transmitter

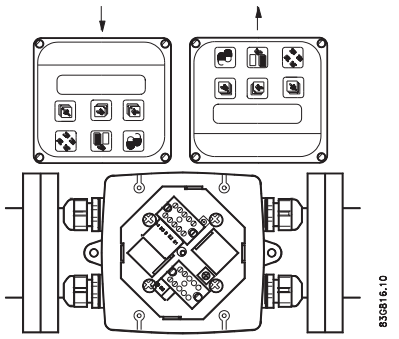

Figure 4-9 Transmitter can be mounted with its front in either direction indicated by the arrows without turning terminal box

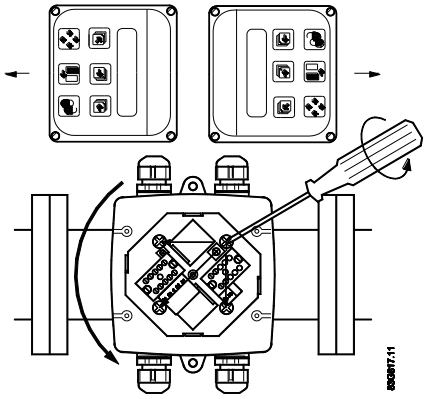

Figure 4-10 Terminal box can be rotated ±90° in order to optimize viewing angle of transmitter display/keypad

1. Unscrew the four screws in bottom of terminal box.
2. Turn terminal box to required position.
3. Retighten screws firmly.

Keypad

1. Remove outer frame using a screwdriver.

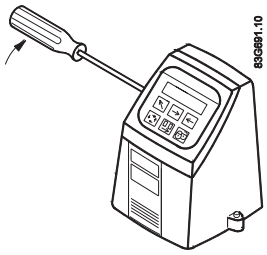

2. Loosen the four screws retaining keypad.

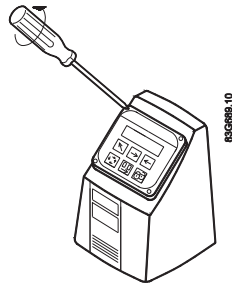

3. Withdraw keypad and turn it to required orientation.

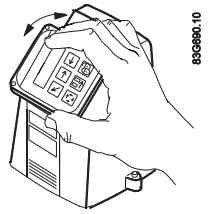

4. Tighten the four screws until a mechanical stop is felt in order to obtain IP67 enclosure.

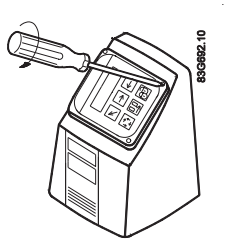

5. Snaplock outer frame onto keypad (click).

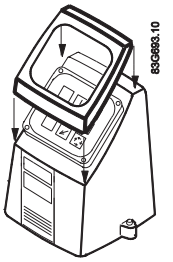

Connecting

5

⚠ WARNING

Mains supply from building installation Class II

A switch or circuit breaker (Max. 15 A) must be installed in close proximity to the equipment and within easy reach of the operator. It must be marked as the disconnecting device for the equipment.

⚠ WARNING

Protective conductor terminal

The required cable is min. AGW16 or 1.5 Cu.

⚠ WARNING

Wire insulation

The insulation between the connected mains supply and 24 V AC/DC supply for the flowmeter must at least be rated with double or reinforced insulation at mains voltage.

For field wiring installation: Ensure that the **National Installation Code** of the country in which the flowmeters are installed is met.

Note

National installation code

Observe country specific installation directives for field wiring.

5.1 Electrical connection

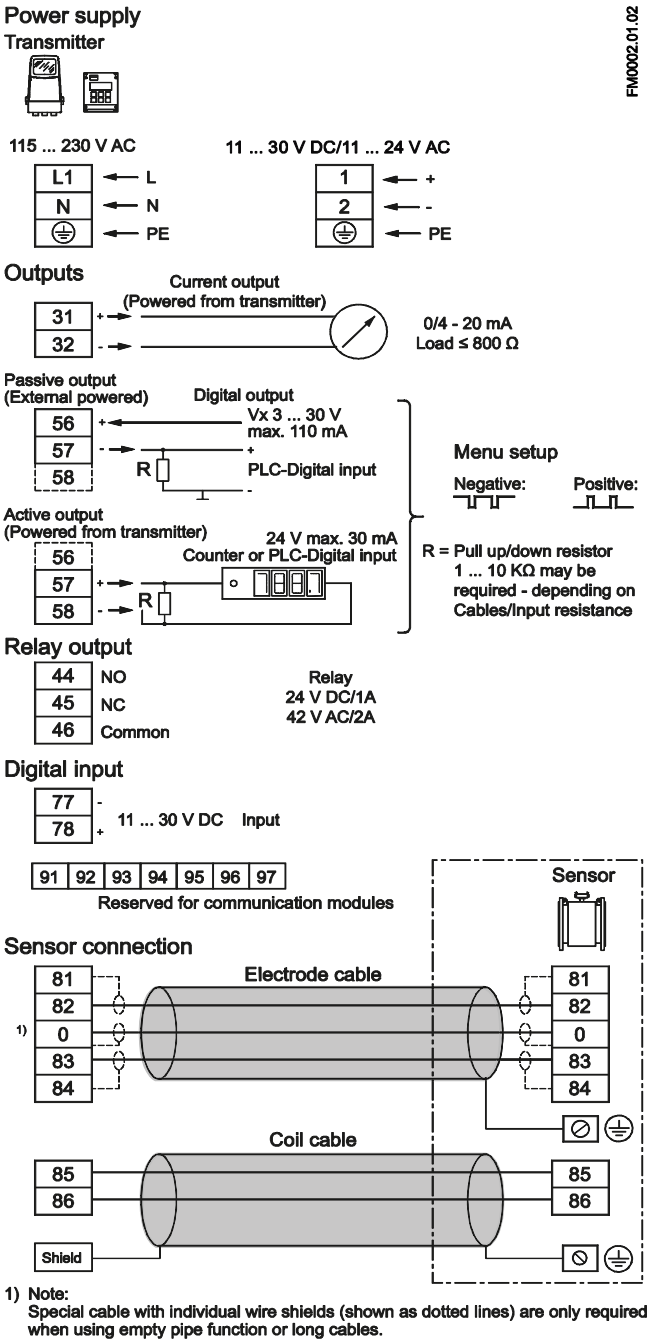

Figure 5-1 Wiring diagram

Note

Terminals 81 and 84 are only to be connected if special electrode cable with double screening is used, e.g. when empty pipe function or long cables are used.

Mains supply

Mains supply 115 ... 230 V AC from building installation Class II.

Note

For DC installations it is recommend to install an under voltage relay or protection circuit in the application where there is a risk of low power supply below the specifications for more than 10 minutes.

⚠ WARNING

Grounding

Connect mains protective earth wire to PE terminal in accordance with diagram (due to class 1 power supply).

Mechanical counter

Connect a 1000 µF capacitor (capacitor+ to terminal 56 and capacitor- to terminal 58) if a mechanical counter is connected to terminals 57 and 58 (active output).

Output cables

Use screened cables if long cables are used in noisy environments.

Digital output

If internal resistance of a load exceeds 10 kΩ, connect an external 10 kΩ load resistor in parallel to this load.

⚠ WARNING

Intrinsically safe terminals

Always ensure that distance between cables/wires is **minimum 50 mm** in order to avoid that wires/terminals of intrinsically safe circuits get into contact with wires of other cables.

Fasten cables/wires in a way that they **cannot** get into contact with each other, not even in case of an error. Keep wire ends as short as possible.

5.2 Electrical connection PTB K7.2

Additional Electrical connection for PTB K7.2 approved MAG5000/6000 with MAG5100W (7ME652)

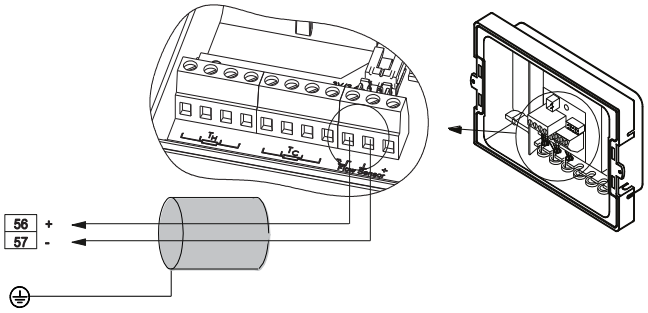

5.3 Connection of add-on modules

When the add-on module has been installed, the electrical connections are available on terminal rows 91-97.

For more information

Refer to the relevant BUS communication Quick Start or Operating Instructions available at the SITRANS F literature CD or on the internet, at : www.siemens.com/flowdocumentation (www.siemens.com/flowdocumentation).

Commissioning

6

In this chapter it is described how to commission the device via the local user interface (LUI).

The display is described in details in section Local user interface (Page 40).

Furthermore, the following functions are described in details:

- Changing password (Page 42)
- Changing basic settings (Page 43)
- Changing operator menu setup (Page 45)
- Changing language (Page 46)

Detailed diagrams concerning the specific menu are shown in appendix menu diagrams.

For factory settings, see Factory settings.

6.1 MAG 5000/6000 Blind

Note

Does not have a display. All factory settings will be uploaded from the SENSORPROM® unit after power-up.

For sensor dependent factory settings, see Appendix B.

Changing settings

If other settings are required, a standard transmitter with display and similar power supply can be used.

1. Unscrew and remove MAG 5000/6000 Blind.
2. Mount standard MAG 5000/6000 transmitter.
3. Change required settings via display and keypad.

   All changed data will be stored in SENSORPROM® memory unit.
4. Remove standard transmitter and remount Blind transmitter.
5. Fasten screws holding transmitter.

New settings stored in SENSORPROM® memory unit will be uploaded in blind transmitter.

6.2 Local user interface

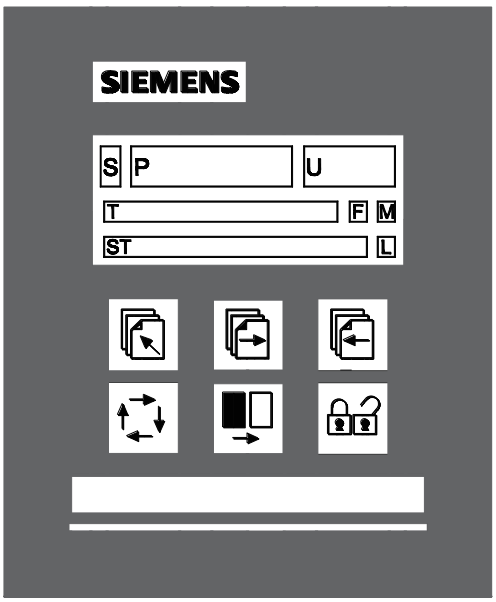

S Sign field

P Primary field for numeric value flow rate, Totalizer 1 or Totalizer 2)

U Unit field

T Title line with individual information according to operator or setup menu selected.

ST Subtitle line which will either add information to the title line or keep individual information independent of the title line.

F Alarm field. Two flashing triangles will appear in case of a fault condition.

M Mode field

L Lock field

Figure 6-1 Local User Interface

Mode field symbols

Communication mode	Language mode	Sensor characteristics
Service mode	Basic settings	Reset mode
Operator menu	Output	Operator-active
Product identity	External input	Operator-inactive

Lock field symbols

	Ready for change		Access to submenu
	Value locked		RESET MODE: Zero setting of totalizers and initialization of setting

Keypad

The keypad is used to set the flowmeter. The keys function as follows:

TOP UP KEY		This key (when held for 2 sec.) is used to switch between operator menu and setup menu. In transmitter setup menu, a short press will cause a return to previous level.
FORWARD KEY		This key is used to step forward through the menus. It is the only key normally used by the operator.
BACKWARD KEY		This key is used to step backwards through the menus.
CHANGE KEY		With this key settings or numerical values are changed.
SELECT KEY		With this key figures to be changed are selected.
LOCK/UNLOCK KEY		This key enables the operator to change settings and it gives access to submenus.

6.3 Menu structure

The menu is built up of two parts. An **operator menu** and a **setup menu**, see also overview diagrams MAG 5000/6000 and MAG 5000/6000 CT.

Operator menu

The operator menu is for daily operation. It is customized in the operator menu setup. The transmitter always starts up in operator menu No. 1. The forward and the backward keys are used to step through the operator menus.

Setup menu

The setup menu is for commissioning and service only. Access to the setup menu is gained by pressing the top up key for 2 seconds. The setup menu operates in two modes:

- View mode
- Setup mode

View mode is a read-only mode. The pre-selected settings can only be scanned.

Setup mode is a read and write mode. The pre-selected settings can be scanned and changed. Access to the setup mode is password-protected. The factory set password is 1000.

Access to a submenu in the setup menu is gained by pressing the lock key. Press the top up key briefly to return to the previous menu. Press longer (2 sec.) to exit the setup menu and return to operator menu No. 1.

6.4 Changing password

The setup menu is password-protected in order to ensure that only authorized personnel can make any changes in transmitter settings.

Change password as follows:

1. Press top up key for 2 sec.
2. Enter password.
3. Use forward key or backward key to reach password menu.
4. Press lock/unlock key to unlock password.
5. Use select key and change key to change password.
6. Press lock/unlock key to confirm new password.
7. Press top up key two times to exit setup mode.

See change password diagram.

The factory-set password is 1000, but it can be changed to any value between 1000 and 9999.

Factory setting of password can be re-established as follows:

1. Switch off power supply.
2. While pressing top up key - switch on power supply.
3. Release top up key after 10 sec.

6.5 Changing basic settings

In the basic settings menu it is possible to set the following parameters:

Parameter	Description
Main frequency	Selection of main power supply frequency corresponding to the country in which the flowmeter is installed (e.g. 60 Hz in America).
Flow direction	Selection of correct flow direction in pipe.
Customer units	Setting of user defined volume and time units.
Q_{max}	Setting of measuring range, analog outputs and frequency output. Also individual dimension-dependent setting of value, decimal point, unit and time.
Q_{max} 2	Setting of measuring range, analog outputs and frequency output. Also individual dimension-dependent setting of value, decimal point, unit and time. This menu is only visible if chosen as external digital input.
Totalizer	Setting of unit and decimal point.
Low flow cut-off	Setting of a percentage of selected Q_{max}. This filters noise in installation reducing fluctuations in display and all outputs.
Empty pipe cut-off	When set to "On" the alarm will indicate when sensor is running empty. All readings, display and outputs, will indicate zero.
Velocity unit	Setting of velocity unit per time unit
Error level	Selecting error level at which flowmeter will detect an error.

Note

Totalizer 2 is not visible when batch is selected as digital output.

Note

Q_{max} 2 is visible only when chosen as digital input.

Change basic settings as follows:

1. Press top up key for 2 sec.
2. Enter password.
3. Use forward key to reach basic settings menu.
4. Press lock/unlock key to unlock settings.
5. Use forward key or backward key to reach relevant menu.
6. Press lock/unlock key to unlock settings.
7. Use select key and change key to change settings.
8. Press lock/unlock key to confirm new settings.

9. Repeat steps 5-8 to change other settings.
10. Press top up key ⇱ two times to exit setup mode.

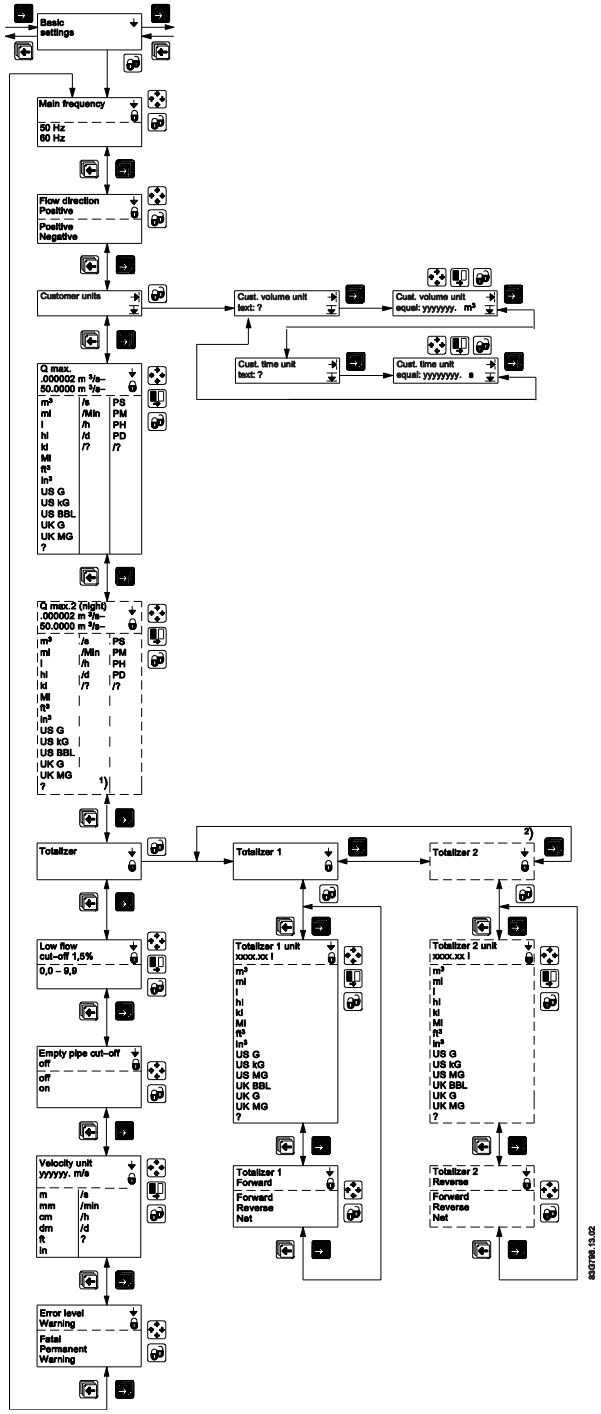

Decimal point can be positioned and units set individually for flow rate in totalizer 1 and totalizer 2.

Changing decimal point position

1. Enter the respective totalizer menu.
2. Use select key to position cursor below decimal point.
3. Use change key to move decimal point to requested position.

Changing units

1. Use select key to position cursor below unit.
2. Press change key until requested unit is displayed.

6.6 Changing operator menu setup

In the operator menu the menus required for daily operation of the flowmeter are shown. It is possible to hide and change some of the menus in the operator menu. This is done in the operator menu setup menu, see operator menu setup diagram.

Customizing menus in operator menu

To customize the menus in the operator menu perform the following steps:

1. Press top up key for 2 sec.
2. Enter password.
3. Use forward key or backward key to reach operator menu.

Changing text in line 1

1. Press lock/unlock key to unlock setting.
2. Use change key to select desired text.
3. Press lock/unlock key to confirm selected text.

Note

If "Text" is selected in line 2, this line functions as a heading for the value shown in line 3. Otherwise it shows the actual value of the reading selected.

Enabling two readings

1. Use forward key to reach requested menu.
2. Press lock/unlock key to unlock setting.
3. Use select key to move cursor to upper line.
4. Use change key to select requested reading.
5. Press lock/unlock key to confirm selection.

6. Use select key to move cursor to line 3.
7. Use change key to select desired setting.
8. Press lock/unlock key to confirm new setting.
9. Repeat steps 1-8 for each requested menu.

Showing/hiding menus in operator menu

1. Use forward key to reach requested menu.
2. Press lock/unlock key to unlock setting.
3. Use select key to move cursor to √/÷ symbol.
4. Press change key to select visible (√) or hidden (÷).
5. Press lock/unlock key to confirm new setting.

6.7 Changing language

It is possible to change language in transmitter. Default language is English, but it can be changed to various other languages.

Change language as follows:

1. Press top up key for 2 sec.
2. Enter password.
3. Use forward key or backward key to reach language menu.
4. Press lock/unlock key to unlock language.
5. Use change key to select desired language.
6. Press lock/unlock key to confirm new language.
7. Press top up key two times to exit setup mode.

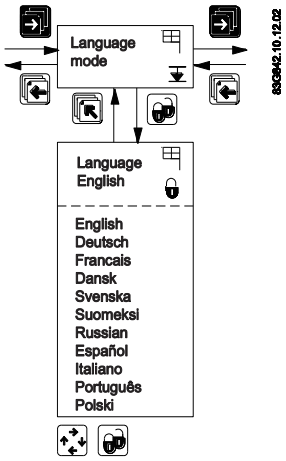

Functions

7

This chapter describes the various menus of the transmitter in details. The menu diagrams are shown in appendix menu diagrams.

7.1 Output settings

Three outputs are available:

- Current output (range and time constant); terminals 31 and 32.
- Digital output (pulse, frequency, error, limit, or batch settings); terminals 56, 57, and 58.
- Relay output (error, limit, and batch settings); terminals 44, 45, and 46.

Current output

In the current output menu it is possible to select current output direction, range and time constant, see also Current output menu diagram.

If current output "4-20 mA + Alarm" is selected, then alarm level and alarm differentiation may also be defined.

"Alarm level" defines if an alarm should be above 21 mA "High" or below 3.6 mA "Low".

"Alarm diff." defines whether or not the alarm should vary according to selected error level. Error level "Fatal". "Permanent" or "Warning" is selected in "Basic settings".

If Alarm differentiation is set to "Yes", depending on the Alarm level setting, the current output will show:

Alarm level	Output / Error level		
	Fatal	Permanent	Warning
Low	1.3 mA	2 mA	3 mA
High	23 mA	22 mA	21.5 mA

If Alarm differentiation is set to "No", depending on the Alarm level setting, the current output will show:

Alarm level	Output
Low	3.5 mA
High	22.6 mA

For setting of error level, see Error level menu diagram.

If current output is not used, it must be set to "Off".

Digital output

Digital output can be used to configure various settings:

- Pulse (volume/pulse, pulse output, pulse width, pulse polarity, and time constant), see pulse menu diagram.
- Frequency (frequency output, max frequency, and time constant), see frequency menu diagram.
- Error settings (level and number), see error level menu diagram and error number menu diagram.
- Limit settings (number of setpoints, setpoint settings, and hysteresis), see direction/limit menu diagram.
- Batch settings (quantity, time and counter settings, and time constant), see batch menu diagram.

Note

Batch settings

Only MAG 6000.

Not available in MAG 5000, MAG 5000 CT and MAG 6000 CT.

Note

When relay is set to batch function, pulse/frequency is not available on digital output.

Relay outputs

Relay output can be used to configure various settings:

- Error settings (level and number), see error level menu diagram and error number menu diagram.
- Limit settings (number of setpoints, setpoint settings, and hysteresis), see direction/limit menu diagram.
- Batch settings (quantity, time and counter settings, and time constant), see batch menu diagram.
- Cleaning (cycle time), see cleaning menu diagram.

Note

Batch settings

Only MAG 6000.

Not available in MAG 5000, MAG 5000 CT and MAG 6000 CT.

Note

Cleaning

If a cleaning unit is installed together with transmitter, relay output must **always** be used to operate this unit. It cannot be used for other purposes.

7.2 External input

By applying 11 … 30 V DC to terminals 77 and 78, it is possible to perform:

- Batch control (start, stop, hold/continue)
- Reset totalizer
- Force/freeze output
- Q_{max} 2 (night)

See external input menu diagram.

Note

Batch settings

Only MAG 6000.

Not available in MAG 5000, MAG 5000 CT and MAG 6000 CT.

Note

Manual cleaning

If the digital input is used for manual cleaning, the relay output also automatically changes to "cleaning".

7.3 Sensor characteristics

The sensor characteristics menu shows:

- If a SENSORPROM® is installed or not.
- Suppress error P 40 (SENSORPROM® not installed)
- Sensor size.
- Calibration factor.
- Correction factor.
- Excitation.

See also sensor characteristics menu diagram.

7.4 Reset mode

The reset mode is used for resetting totalizers/counters or for restoring MAG 5000/6000 to its factory settings.

Resetting

1. Press top up key for 2 sec.
2. Enter password.
3. Use forward key or backward key to reach reset mode menu.
4. Press lock/unlock key to enter reset menu.
5. Press forward key to reach totalizer/counter to be reset or default setting menu.
6. Press lock/unlock key to start resetting.

If restoring of factory settings is required:

1. Press lock/unlock key again to confirm destruction of customized settings.

See also reset menu diagram.

Zero point adjustment (MAG 6000 SV only)

Auto adjustment

Before auto zero point adjustment is carried out ensure that valves to and from flowmeter are completely closed and that flow velocity in sensor is zero.

1. Press top up key for 2 sec.
2. Enter password.
3. Use forward key or backward key to reach reset mode menu.
4. Press lock/unlock key to enter reset menu.
5. Press forward key to reach zero adjust menu.
6. Press lock/unlock key to enter the menu.
7. Use change key to select "auto".
8. Press forward key to view actual offset (lower line in display). Value will be zero after adjustment has been performed.
9. Press lock/unlock key to start adjustment.

Manual adjustment.

1. Press top up key for 2 sec.
2. Enter password.
3. Use forward key or backward key to reach reset mode menu.
4. Press lock/unlock key to enter reset menu.
5. Press forward key to reach zero adjust menu.
6. Press lock/unlock key to enter the menu.
7. Use change key to select "manual".

8. Press forward key and then select key and change key to key in offset value.
9. Press lock/unlock key to start adjustment.

Zero point can be adjusted manually in range -1.000 ... +1.000 m^3/s. If value outside this range is keyed in, zero point adjustment will not be implemented.

See also reset mode menu diagram (MAG 6000 SV).

7.5 Service mode

All outputs of the transmitter can be forced-controlled in the service mode menu, see also service mode menu diagram.

Here it is possible to check whether e.g. the current output is functioning.

Error pending and status log lists are also accessible from this menu and the operating time (in days) can be read.

The forced control is cut off and all previous settings are reinitialized the moment the service mode is left by pressing top up key .

7.6 MAG 5000 CT and MAG 6000 CT settings

Internal totallizers

Depending on the type of approval it is possible to reset the internal totalizers. The type of approval is selected in the reset menu with the hardware key mounted. It is possible to choose between:

- Hot/cold water
- Other liquids

Resetting of totalizers by electrical input is not possible.

Hot/cold water

- Totalizer 1 is allocated to forward flow (cannot be reset)
- Totalizer 2 is allocated to reverse flow (cannot be reset)

Other liquids

Both totalizer 1 and totalizer 2 are allocated to measure the net flow, i.e. any reverse flow will make the totalizers count backwards.

- Totalizer 1 cannot be reset.
- Totalizer 2 can be reset if the flow velocity in the meter pipe is <0.25 m/s. When the totalizer is reset, the pulse output register will also be reset.

Output

- When choosing hot water, changing the output settings is not allowed and the output setting menus are not shown in display.
- When choosing cold water or other liquids, all output settings can be changed.

7.7 MAG 6000 SV

Excitation frequency

The MAG 6000 SV excitation frequency can be changed in sensor characteristics menu to one of the following frequencies:

- 1 $^{9}/_{16}$ Hz
- 3 $^{1}/_{8}$ Hz
- 6 ¼ Hz
- 12½ Hz
- 25 Hz
- 44 Hz

Note

Calibration has been made with the frequency stored in SENSORPROM® memory unit. A change in excitation frequency is not recommended and will always mean decreased measuring accuracy. In some instances, however, it may be necessary to change frequency due to pulsating flow from piston pumps or other resonance frequencies from surroundings.

It is highly recommended to carry out a External input (Page 49) after changing the excitation frequency as the offset is affected by the frequency selected. When this is done, the decrease in measuring accuracy can be kept below 1% o.r.

A too high frequency for the sensor used will cause a coil current alarm indication.

Alarm, error, and system messages

8

8.1 Diagnostics

Error system

Transmitter system is equipped with an error and status log system with 4 groups of information.

(**I**) Information - system will continue to measure as normal, relay and current outputs will not be affected.

(**W**) Warning - system will continue to measure, but an event that may cause a system malfunction and require operator attention has occurred. The cause of the error may disappear on its own.

(**P**) Permanent error - may cause malfunction in the application and operator attention is required.

(**F**) Fatal error - is essential for the operation of the flowmeter. Immediate operator attention is required.

Two menus are available in service and operator menus for registration of information and errors.

- Error pending
- Status log

Note

Registration of errors in different modes

- In setup mode (local dialog) errors are entered only to Error pending list and not to Error log list, and not registered on physical outputs (current or relay).
- In service mode errors are entered to both Error pending and Error log lists, but not registered on physical outputs (current or relay).

Note

Power-off

Both error pending and status logs are reset at power-off.

Error pending

The first 9 pending errors are stored in the error pending list. When the error is corrected, it is removed from the error pending list.

The acceptance level for "error pending" can be individually configured to a particular application.

The acceptance level is set in the basic settings menu (Page 43).

Acceptance levels

The following three acceptance levels are selectable.

- Fatal error: Only fatal errors are registered as errors
- Permanent error: Permanent and fatal errors are registered as errors
- Warning (Default value): Warnings, permanent and fatal errors are registered as errors

Error information is displayed in title and subtitle lines, see display layout (Page 40). Title line will show time since occurrence of error in days, hours and minutes. Subtitle line will flash between an error text and a remedy text. Error text will indicate type of error (I, W, P or F), error number, and error text. Remedy text will inform operator of action to take to remove error.

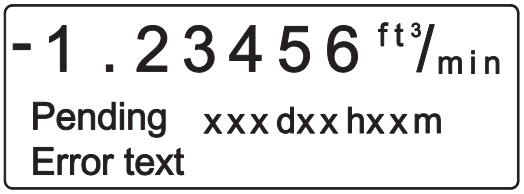

Status log

The latest 9 errors are stored in the status log. Errors are stored in the status log for 180 days, even if they are corrected.

Alarm field

The alarm field on the display will always flash when an error is pending.

Error output

The digital and relay output can be activated individually error by error (error level). The relay output is default selected to error level. An output can also be selected to activate on a single error number.

The alarm field, error output and error pending always operate together.

Operator menu

Error pending and status log are as default enabled (√) in the operator menu.

8.2 List of error numbers

Error No.	*Error text* Remedy text	Comment	Output status	Input status
1	*I1 - Power on* OK	Device powered on	Active	Active
2	*I2 - Add-on module* Applied	A new module has been applied to the system	Active	Active
3	*I3 - Add-on module* Install	An add-on module is defect or has been removed. This can be an internal add-on module	Active	Active
4	*I4 - Param. corrected* OK	A less vital parameter in the transmitter has been replaced by its default value	Active	Active
20	*W20 - Totalizer 1* Reset manually	During initialisation the check of the saved totalizer value has failed. It is not possible to rely on the saved totalizer value anymore. The totalizer value must be reset manually in order to rely on future readings	Active	Active
20	*W20 - Totalizer 2* Reset manually	During initialisation the check of the saved totalizer value has failed. It is not possible to rely on the saved totalizer value anymore. The totalizer value must be reset manually in order to rely on future readings	Active	Active
21	*W21 - Pulse overflow* Adj. pulse settings	Actual flow is too big compared with pulse width and volume/pulse	Reduced pulse width	Active
22	*W22 - Batch timeout* Check installation	Duration of batching has exceeded a predefined maximum time	Batch output on zero	Active
23	*W23 - Batch overrun* Check installation	Batch volume has exceeded a predefined maximum overrun volume	Batch output on zero	Active
24	*W24 - Batch neg. flow* Check flow direction	Negative flow direction during batch	Active	Active
30	*W30 - Overflow* Adj. Q_{max}	Flow is above Q_{max} settings	Max. 120 %	Active
31	*W31 - Empty pipe*	Pipe is empty	Zero	Active
40	*P40 - SENSORPROM®* Insert/change	SENSORPROM® unit not installed	Active	Active
41	*P41 - Parameter range* Switch off and on	A parameter is out of range. The parameter could not be replaced by its default value. The error will disappear at the next power-on	Active	Active

Error No.	*Error text* Remedy text	Comment	Output status	Input status
42	*P42 - Current output* Check cables	Current loop is disconnected or the loop resistance is too big	Active	Active
43	*P43 - Internal error* Switch off and on	Too many errors occurred at the same time. Some errors are not detected correctly	Active	Active
44	*P44 - CT SENSORPROM®*	SENSORPROM® unit has been used as CT version	Active	Active
60	*F60 - CAN comm. error* Transmitter/AOM	CAN bus communication error. An add-on module, the display module or the transmitter is defective	Zero	Inactive
61	*F60 - SENSORPROM® error* Replace	It is not possible to rely on the data in SENSORPROM® unit anymore	Active	Active
62	*F62 - SENSORPROM® ID* Replace	The SENSORPROM® unit ID does not comply with the product ID. The SENSORPROM® unit is from another type of product SITRANS F C, SITRANS F US etc.	Zero	Inactive
63	*F63 - SENSORPROM®* Replace	It is not possible to read from the SENSORPROM® unit anymore	Active	Active
70	*F70 - Coil current* Check cables	Coil excitation has failed	Active	Active
71	*F71 - Internal error* Replace transmitter	Internal convertion error in ASIC	Active	Active

Service and maintenance

9

The device is maintenance-free, however, a periodic inspection according pertinent directives and regulations must be carried out.

An inspection can include check of:

- Ambient conditions
- Seal integrity of the process connections, cable entries, and cover screws
- Reliability of power supply, lightning protection, and grounds

Under ideal conditions the flowmeter will operate continuously with no manual adjustment or intervention required.

The SITRANS F M Verificator is an external tool developed for verifying the MAG 5000/6000 system, installation, and application. It is a highly advanced instrument, which carries out the complex verification of the entire flowmeter system according to unique SIEMENS patented principles. The verification test is automated and the instrument easy to use, so no human error or influence will affect the verification.

9.1 Transmitter check list

If unstable/wrong measurements occur, it is often due to insufficient/wrong earthing or potential equalization. If earthing connection is OK, check transmitter as described below, and sensor as described in sensor check lists (see the respective operating instructions).

The easiest way to check the transmitter in a SITRANS F M installation is to replace the transmitter with another MAG 5000/6000 with a similar power supply.

As all settings are stored in and downloaded from the SENSORPROM®, replacement is easily done and no extra settings need to be made.

Check transmitter

If no replacement transmitter is available, check transmitter according to the following check table.

Power on transmitter		
0	Display light on?	Yes ⇒ 1
		No ⇒ 2
1	Flashing error triangles?	Yes ⇒ Check error table
		No ⇒ 1.2
1.2	Output and display readings OK?	Yes ⇒ 1.2.1
		No ⇒ 1.2.2

Power on transmitter		
1.2.1	Transmitter OK	Check application Check installation/sensor/earthing connection etc.
1.2.2	Check cables/conndections Check connection board Check pins in transmitter multiplug	OK ⇒ 1.2.1
		Not OK ⇒ correct fault
2	Check cables/conndections Check connection board Check pins in transmitter multiplug	OK ⇒ 2.1
		Not OK ⇒ Correct fault
2.1	Output readings OK?	Yes ⇒ 2.1.1
		No ⇒ 2.1.2.
2.1.1	Dispaly defective	Replace display
2.1.2	Transmitter defective	Replace transmitter

Note

Sensor check list

Check list for sensors are included in the respective sensor operating instructions.

9.2 Technical support

NOTICE
Repair and service must be carried out by approved Siemens Flow Instruments personnel only.

Note

Siemens Flow Instrument defines sensors as non-repairable products.

Technical Support

If you have any technical questions about the device described in these Operating Instructions and do not find the right answers, you can contact Technical Support:

- Via the Internet using the **Support Request:**
  Support request (http://www.siemens.com/automation/support-request)
- Phone: +49 (0) 180 5050 222

Further information about our technical support is available in the Internet at
Technical support (http://support.automation.siemens.com/WW/view/en/16604318)

Service & Support on the Internet

In addition to our documentation, we offer a comprehensive knowledge base online on the Internet at:

Service and support (http://www.siemens.com/automation/service&support)

There you will find:

- The latest product information, FAQs, downloads, tips and tricks.
- Our newsletter, providing you with the latest information about your products.
- A Knowledge Manager to find the right documents for you.
- Our bulletin board, where users and specialists share their knowledge worldwide.
- You can find your local contact partner for Industry Automation and Drives Technologies in our partner database.
- Information about field service, repairs, spare parts and lots more under "Services."

Additional Support

Please contact your local Siemens representative and offices if you have additional questions about the device

Find your contact partner at:

Local contact person (http://www.automation.siemens.com/partner)

9.3 Return procedures

Enclose the delivery note, the cover note for return delivery together with the declaration of decontamination form on the outside of the package in a well-fastened clear document pouch.

Required forms

- **Delivery Note**
- **Cover Note for Return Delivery** with the following information

  Cover note
  (http://cache.automation.siemens.com/dnl/zY/zY0OTg1AAAA_16604370_TxtObj/Begleitschein_RW_AD.pdf)

  – product (ordering number)

  – number of devices or spare parts returned

  – reason for the return

- **Declaration of Decontamination**

  Decontamination declaration
  (http://pia.khe.siemens.com/efiles/feldg/files/Service/declaration_of_decontamination_en.pdf)

  With this declaration you certify *that the returned products/spare parts have been carefully cleaned and are free from any residues.*

  If the device has been operated together with toxic, caustic, flammable or water-damaging products, clean the device before return by rinsing or neutralizing. Ensure that all cavities are free from dangerous substances. Then, double-check the device to ensure the cleaning is completed.

  We will not service a device or spare part unless the declaration of decontamination confirms proper decontamination of the device or spare part. Shipments without a declaration of decontamination will be cleaned professionally at your expense before further proceeding.

You can find the forms on the Internet and on the CD delivered with the device.

9.4 Recalibration

Siemens A/S Flow Instruments offers to recalibrate the sensor. The following calibrations are offered as standard:

- Standard matched pair calibration

Note

For recalibration the SENSORPROM® memory unit must always be returned with the sensor.

Troubleshooting/FAQs

10

Symptom	Output signals	Error code	Cause	Remedy
Empty display	Minimum		1. No power supply	Power supply Check MAG 5000/6000 for bended pins on the connector
			2. MAG 5000/6000 defective	Replace MAG 5000/6000
No flow signal	Minimum		1. Current output disabled	Turn on current output
			2. Digital output disabled	Turn on digital output
			3. Reverse flow direction	Change direction
		F70	Incorrect or no coil current	Check cables/connections
		W31	Measuring pipe empty	Ensure that the measuring pipe is full
		F60	Internal error	Replace MAG 5000/6000
	Undefined	P42	1. No load on current output	Check cables/connections
			2. MAG 5000/6000 defective	Replace MAG 5000/6000
		P41	Initializing error	Switch off MAG 5000/6000, wait 5 sec. and switch on again
Indicates flow with no flow in pipe	Undefined		Measuring pipe empty	Select empty pipe cut-off
			Empty pipe cut-off is OFF	Ensure that the measuring pipe is full
			Electrode connection missing/electrode cable is insufficiently screened	Ensure that electrode cable is connected and sufficiently screened
Unstable flow signal	Unstable		1. Pulsating flow	Increase time constant
			2. Conductivity of medium too low	Use special electrode cable
			3. Electrical noise potential between medium and sensor	Ensure sufficient potential equalization
			4. Air bubbles in medium	Ensure medium does not contain air bubbles
			5. High concentration of particles or fibres	Increase time constant
Measuring error	Undefined		Incorrect installation	Check installation
		P40	No SENSORPROM® unit	Install SENSORPROM® unit
		P44	CT SENSORPROM® unit	Replace SENSORPROM® unit or reset SENSORPROM® unit with MAG CT transmitter
		F61	Defective SENSORPROM® unit	Replace SENSORPROM® unit
		F62	Wrong type of SENSORPROM® unit	Replace SENSORPROM® unit

Symptom	Output signals	Error code	Cause	Remedy
		F63	Defective SENSORPROM® unit	Replace SENSORPROM® unit
		F71	Loss of internal data	Replace MAG 5000/6000
	Maximum	W30	Flow exceeds 100% of Qmax.	Check Q_{max} (Basic Settings)
		W21	Pulse overflow Volume/pulse too small	Change volume/pulse
			Pulse width too large	Change pulse width
Measuring approx. 50%			Missing one electrode connection	Check cables
Loss of totalizer data	OK	W20	Initializing error	Reset totalizer manually
##### Signs in display	OK		Totalizer roll over	Reset totalizer or increase totalizer unit

Technical data

11

11.1 Technical specifications

Mode of operation and design	Measuring principle	Electromagnetic with pulsed constant field
	Empty pipe	Detection of empty pipe (special cable required in remote mounted installation)
	Excitation frequency	Depends on sensor size
	Electrode input impedance	> 1 x 10^{14} Ω
Input	**Digital input**	11 ... 30 V DC, R_i = 4.4 KΩ
	Activation time	50 ms
	Current	$I_{DC\ 11\ V}$ = 2.5 mA, $I_{DC\ 30\ V}$ = 7 mA
Output	**Current output**	
	Signal range	0 ... 20 mA or 4 ... 20 mA, Alarm
	Load	< 800 Ω
	Time constant	0.1 … 30 s, adjustable (for batch: fixed at 0.1 s)
	Digital output	
	Frequency	0 ... 10 kHz, 50% duty cycle (uni/bidirectional)
	Pulse (active)	DC 24 V, 30 mA, 1 kΩ ≤ R_i ≤10 kΩ, short-circuit protected (power supplied from flowmeter)
	Pulse (passive)	DC 3 … 30 V, max. 110 mA, 200 Ω ≤ R_i ≤10 kΩ (powered from connected equipment)
	Time constant	0.1 … 30 s, adjustable (for batch: fixed at 0.1 s)
	Relay output	
	Time constant	Changeover relay, same as current output
	Load	42 V AC/2 A, 24 V DC/1 A
Low flow cut off	0 ... 9.9% of maximum flow	
Galvanic isolation	All inputs and outputs are galvanically isolated	
Max. measuring error (incl. sensor and zero point)	MAG 5000	0.4% ± 1 mm/s (for v > 0.1 m/s)

	MAG 6000	0.2% ± 1 mm/s (for v > 0.1 m/s)
Functions	Flow rate, 2 totalizers, low-flow cut-off, empty pipe cut-off, flow direction, error system, operating time, uni/bidirectional flow, limit switches, pulse output, control for cleaning and batch	
Rated operation conditions	**Ambient temperature**	
	Operation	Standard IP67, 19", blind and SV versions: -20 ... +60 °C (-4 ... +140 °F) CT version: -20 ... +50 °C (-4 ... +122 °F)
	Storage	-40 ... +70 °C (-40 ... +158 °F)
Mechanical load	18 ... 1000 Hz, 3.17 G rms, sinusoidal in all directions to IEC 68-2-36	
Degree of protection	IP67/NEMA 4X/6 to IEC 529 and DIN 40050 (1 mH_2O 30 min.)	
EMC performance	EN 61326-1 (industrial environments)	
	EN 61326-2-5	
Display and keypad	Totalizer	Two eight-digit counters for forward, net or reverse flow
	Display	Background illumination with alphanumeric text, 3 x 20 characters to indicate flow rate, totalized values, settings and faults; Reverse flow indicated by negative sign
	Time constant	Time constant as current output time constant
Design	Enclosure material	Fiber glass reinforced polyamide; optional (IP67 only): AISI 316 stainless steel
	Dimensions	See dimensional drawings
	Weight	0.75 kg (2 lb)
Power supply	115 ... 230 V AC +10% -15%, 50 ... 60 Hz, Fuse: 500 mA T 11 ... 30 V DC or 11 ... 24 V AC; Fuse 2 A T	
Power consumption	115 ... 230 V AC: 17 VA 24 V AC: 9 VA, I_N = 380 mA, I_{ST} = 8 A (30 ms) 12 V DC: 11 W, I_N = 920 mA, I_{ST} = 4 A (250 ms)	
Certificates and approvals	CE, C-UL US general purpose, C-tick, CSA/FM Class 1, div 2	
	Custody transfer approval (MAG 5000/6000 CT)	Cold water pattern approval: PTB OIML R 49, MI-001 Hot water pattern approval: DANAK OIML R 75 (MAG 6000 CT) Other media than water (milk, beer etc.) pattern approval: DANAK OIML R 117 (MAG 6000 CT) Energy metering : PTB K7.2
Communication	MAG 5000	Without communication or HART as option
	MAG 6000	Prepared for client mounted add-on modules: HART, MODBUS RTU/RS485, FOUNDATION Fieldbus H1, DeviceNet, PROFIBUS PA, PROFIBUS DP as add-on modules
	MAG 5000 CT / MAG 6000 CT	No communication modules approved

Transmitter IP67/NEMA 4X/6 compact polyamide

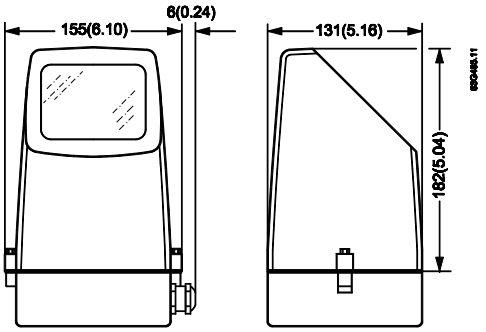

Weight: MAG 5000/6000: 0.75 kg (1.65 lbs)

Transmitter IP67/NEMA 4X/6 wall-mounted polyamide

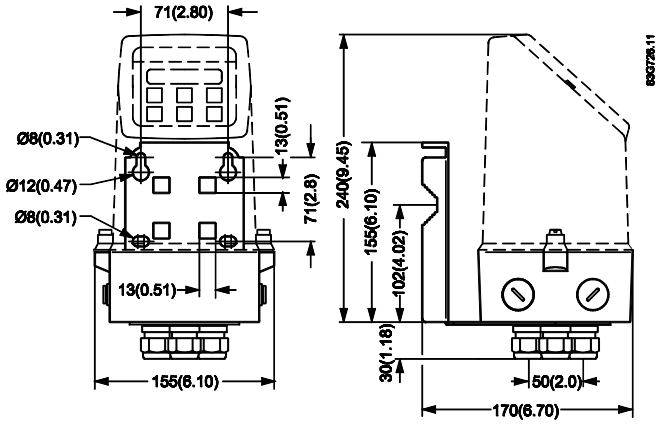

Weight(transmitter and wall mounting bracket): 1.65 kg (3.64 lbs)

11.2 Accuracy

For accuracy reference conditions, please see below.

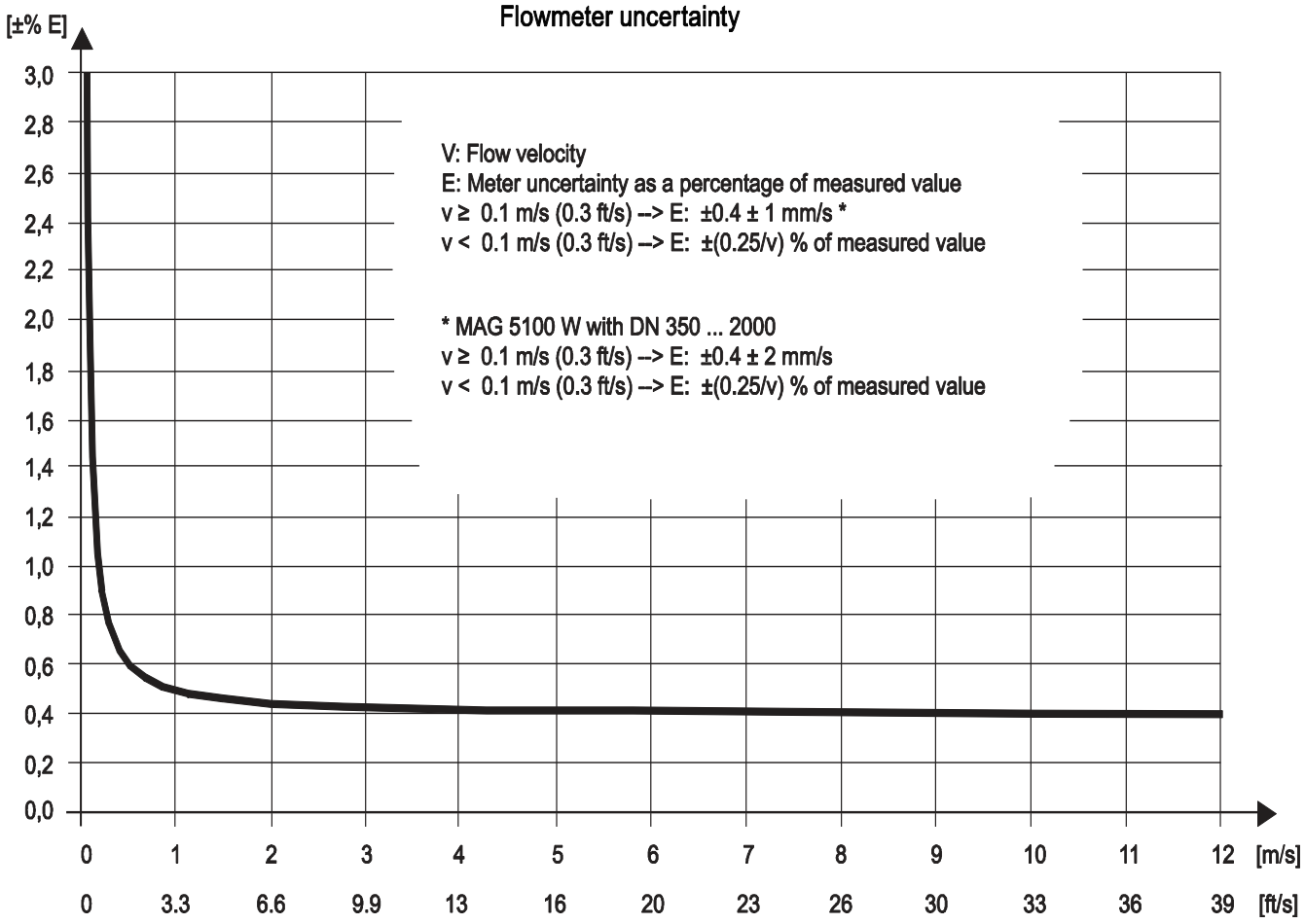

Figure 11-1 MAG 5000 with MAG 1100, MAG 1100 F, MAG 5100 W, MAG 3100 and MAG 3100 P and MAG 6000 with MAG 1100 (PFA), MAG 1100 F (PFA)

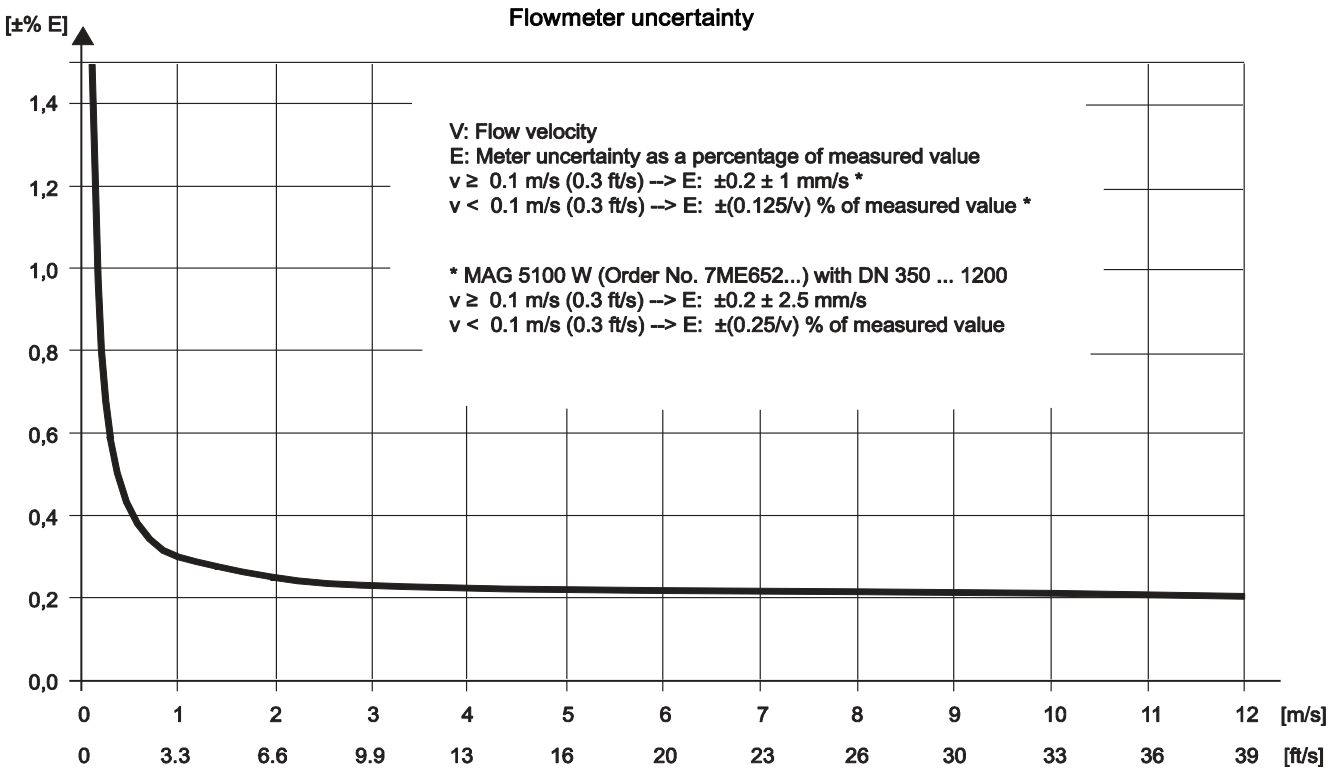

Figure 11-2 MAG 6000 with MAG 1100 (not PFA), MAG 1100 F (not PFA), MAG 5100 W, MAG 3100 and MAG 3100 P

Reference conditions

(ISO 9104 and DIN/EN 29104)

A calibration certificate is shipped with every sensor and calibration data are stored in SENSORPROM memory unit.

Medium temperature	20°C ± 5°C (68°F ± 9°C)
Ambient temperature	20°C ± 5°C (68°F ± 9°C)
Supply voltage	U_n ± 1%
Warming-up time	30 minutes
Incorporation in conductive pipe section Inlet section Outlet section	 10 x DN (DN ≤ 1200/48") 5 x DN (DN > 1200/48") 5 x DN (DN ≤ 1200/48") 3 x DN (DN > 1200/48")
Flow conditions	Developed flow profile

Reference conditions for sensor calibration

Current output	As pulse output ± (0.1% of actual flow + 0.05% FSO)
Effect of ambient temperature Display/frequency/pulse output Current output	 < ± 0.003% / °C act. < ± 0.005% / °C act.
Effect of supply voltage	< 0.005% of measuring value on 1% change
Repeatability	± 0.1% of actual flow for V ≥ 0.5 m/s (1.5 ft/s) and conductivity ≥ 10 µS/cm

Additions in the event of deviations from reference conditions

11.3 Output characteristics

Current output

Output characteristics	Bidirectional mode	Unidirectional mode
0...20 mA	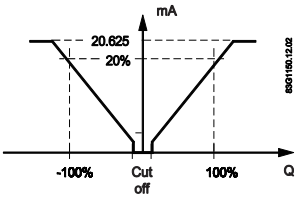	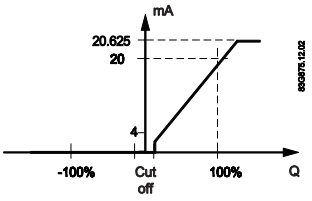
4...20 mA	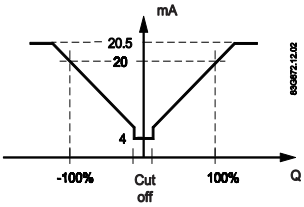	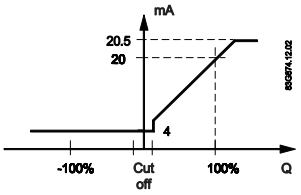

Frequency output

Bidirectional mode	Unidirectional mode
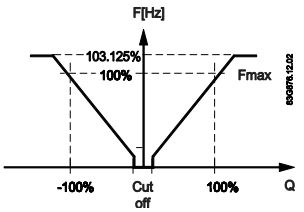	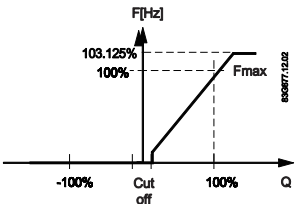

Pulse output

Bidirectional mode	Unidirectional mode
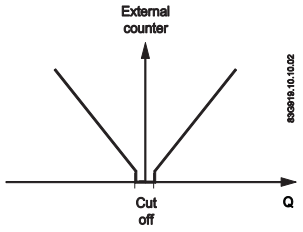	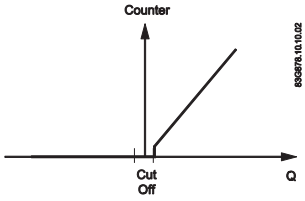

Relay output

Bidirectional mode		Unidirectional mode	
Power down	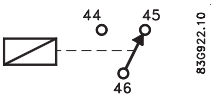	Active	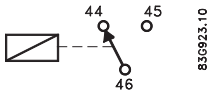

Error relay output

Bidirectional mode		Unidirectional mode	
No error	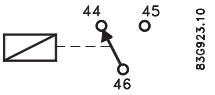	Error	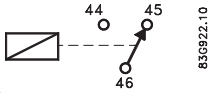

Limit switch (can be used as direction switch)

1 set point	2 set points
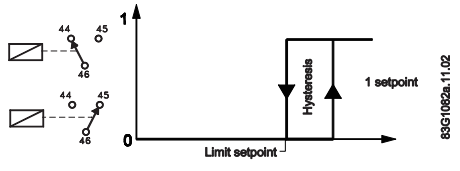	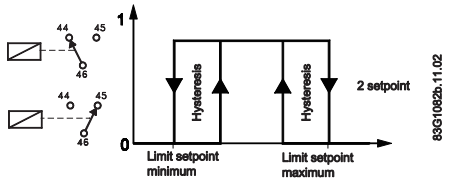
Passive Digital output	Passive Digital output

1 set point	2 set points
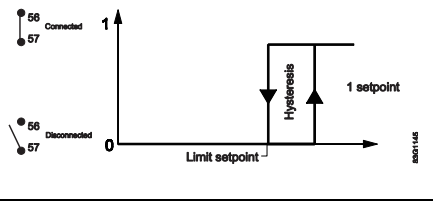	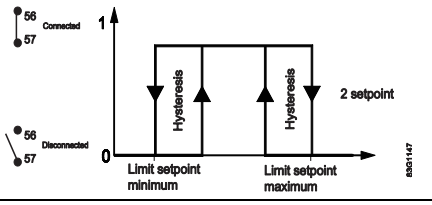
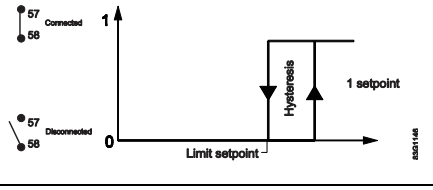	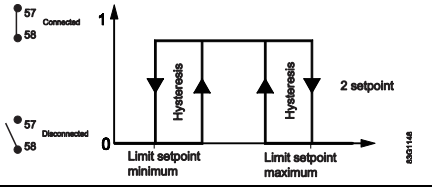

Note

Active digital output is not avaiable with MAG 6000 I.

Batch on digital output

Unidirectional mode (forward flow only)
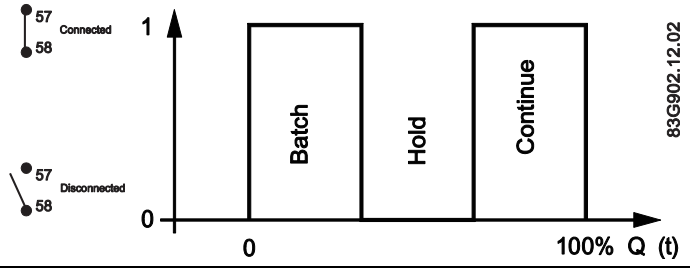

Totalizer lap

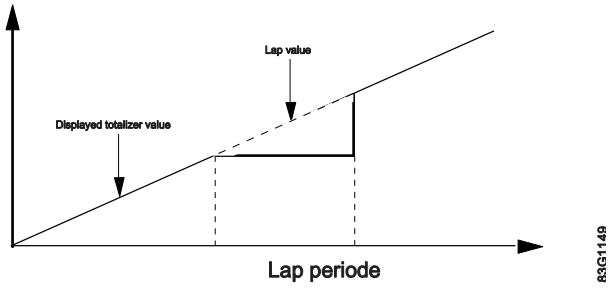

Batch on relay output

Unidirectional mode (forward flow only)			
Hold	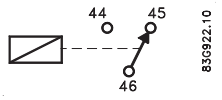	Batch	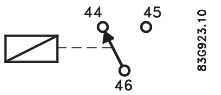

11.4 Cable data

Description

Cable for standard electrode or coil	
Electrode cable, double shielded	
Cable kit with standard coil cable and electrode cable double shielded (also available as low noise cable for MAG 1100 sensor)	

Technical data

		Standard electrode cable (electrode/coil)	Special cable (electrode)
Basic data	No. of conductors	3	3
	Sqr. area	1.5 mm^2	0.25 mm^2
	Screen	Yes	Double
	Color code	Brown, blue, black	Brown, blue, black
	Outside color	Grey	Grey
	Ext. diameter	7.8 mm	8.1 mm
	Conductor	Flexible CU	Flexible CU
	Isolation material	PVC	PVC
Ambient temperature	Flexible installation	-5 ... +70°C (23 ... 158°F)	-5 ... +70°C (23 ... 158°F)
	Non-flexible installtaion	-30 ... +70°C (-22 ... 158°F)	-30 ... +70°C (-22 ... 158°F)
Cable parameter	Capacity	161.50 pF/m	N/A
	Inductance	0.583 µH/m	N/A
	L/R	43.83 þH/Ω	N/A

11.5 Cable requirements

		Coil cable	Electrode cable
Basic data	No. of conductors	2	3
	Min. sqr. area	0.5 mm^2	0.2 mm^2
	Screen	Yes	Yes
	Max. capacitance	N/A	350 pF/m
Max. cable loop resistance	Media temperature:		
	< 100 °C	40 Ω	N/A
	> 200 °C	6 Ω	N/A
Cable glands on sensor	M20x1.5 gland - Cable ø 5 ... 13 mm (0.20 ... 0.51 inches)		
	½ NPT gland - cable ø 5 ... 9 mm (0.20 ... 0.35 inches)		

WARNING

Cable glands

For Ex zone 1 installations only certified cable glands with protection type "e" can be used for the power supply and the coil cable. The cable glands must be approved for the actual temperature and cable dimension.

Spare parts/Accessories

12

12.1 Ordering

In order to ensure that the ordering data you are using is not outdated, the latest ordering data is always available on the Internet:

Catalog process instrumentation (http://www.siemens.com/processinstrumentation/catalogs)

12.2 Accessories

Description	
Wall mounting unit	
Display protection lid	
Communication modules for MAG 6000	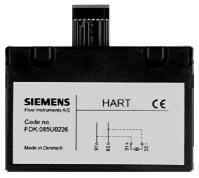

12.3 Spare parts

Description	
Connection plate	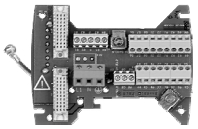
SENSORPROM® memory unit	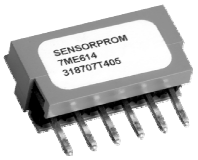
Display unit	
Communication modules for MAG 6000	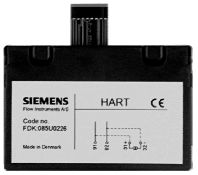

12.4 Sun shield

Description	
Sun shield	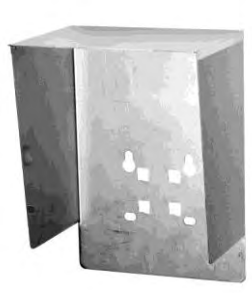

Menu diagrams

A

A.1 Transmitter menu overview

The menu diagrams shown on the following pages apply to MAG 5000/6000 as well as MAG 6000 I.

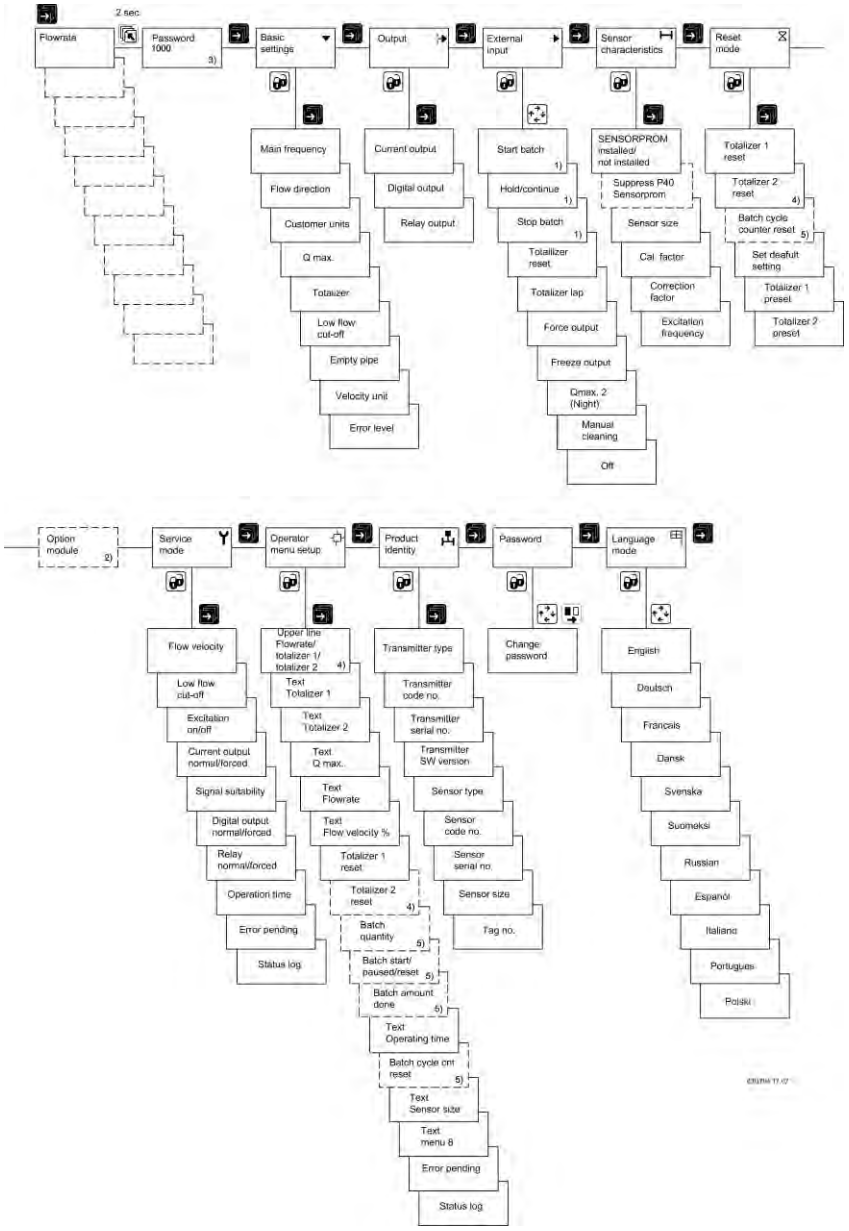

1) Not available in MAG 5000
2) Add-on module
3) Factory-set password: 1000
4) Not available when batch
5) Only available when batch

A.2 Basic settings

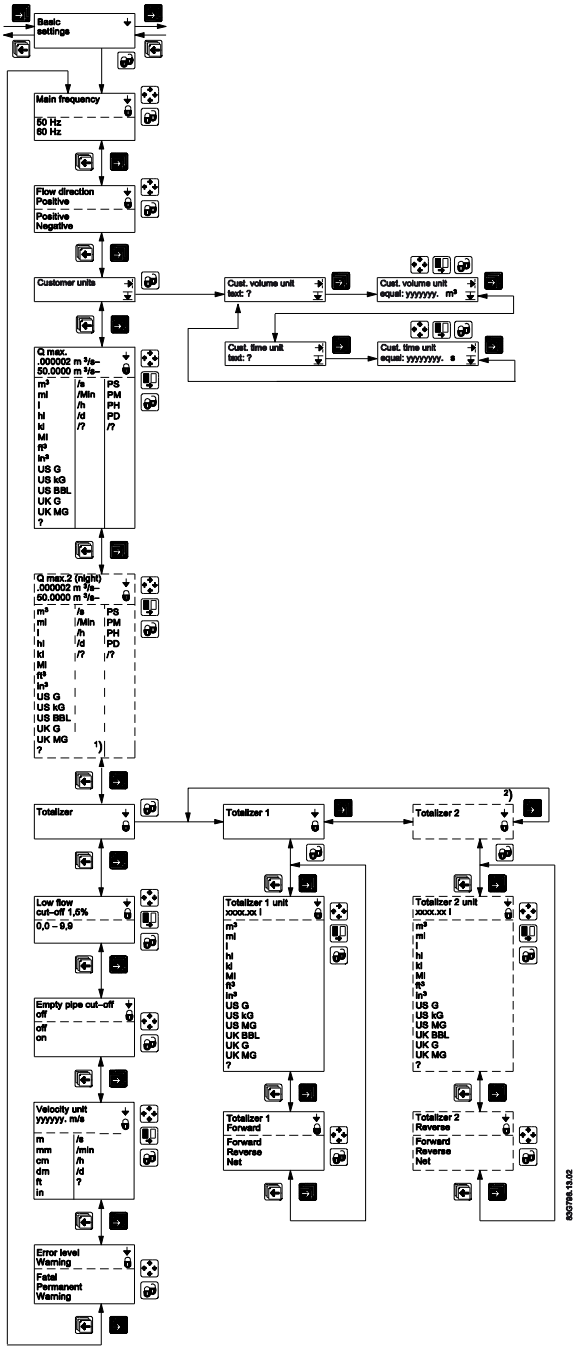

1) The question mark at unit selections stand for customer units. The unit is shown as a question mark on display if not overwritten with customer's own unit text setup using PDM or ordered specially using Y20 in ordering system.

   The flow rate unit can be "?/?" or show customer unit texts as for example "AcrFt/y" (Acre feet/year).

2) When batch is selected on digital output or relay, Totalizer 2 is not shown because it is controlled by the batch function.

A.3 Current output

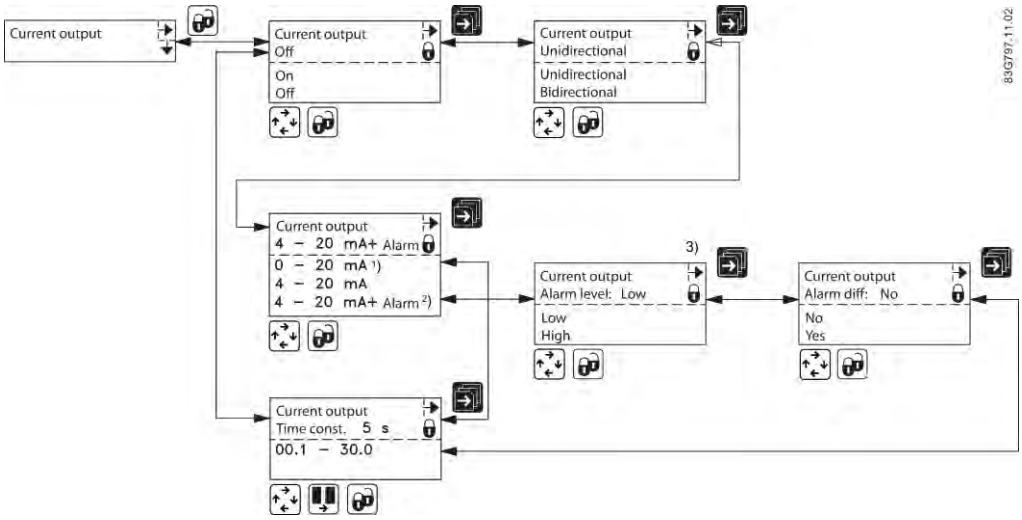

1) If HART communication is installed, it is not possible to set the output for 0-20 mA (even though the option is visible in the display). This is due to the fact that HART does not work if the output falls below 2-3 mA.

2) 4-20 mA + Alarm is the default setting for MAG 6000 I. For all other variants, the default setting is 4-20 mA.

3) The controlling of alarm levels does not recognize if the jumper is mounted for passive output. Do not combine differentiation and low alarm level together with passive output. The output will try to pull down the level to 1.3 mA at fatal errors which is not possible for passive output.

A.4 Digital output - pulse

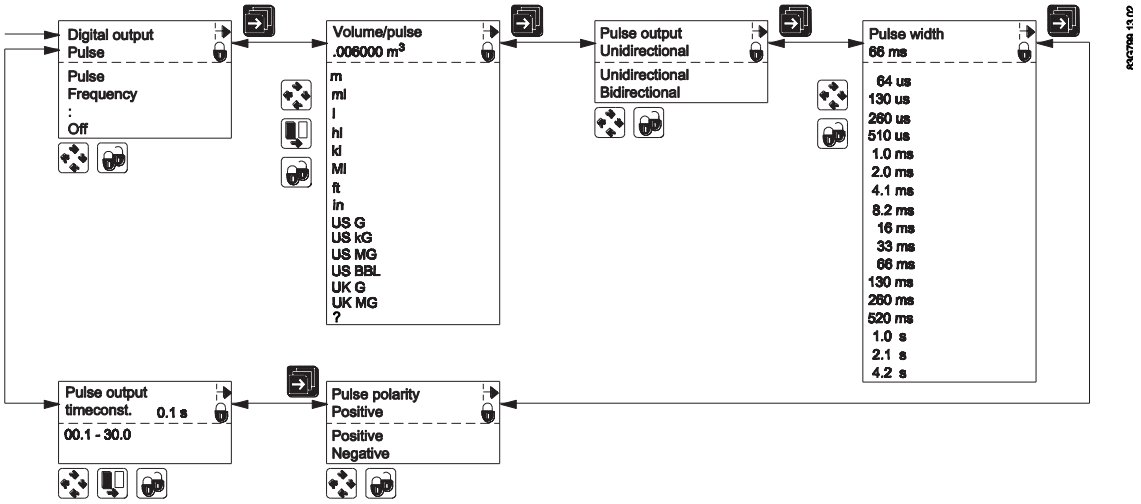

A.5 Digital output - frequency

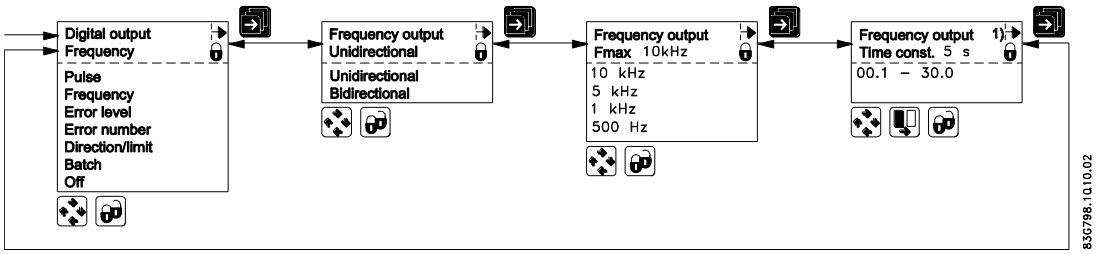

A.6 Error level

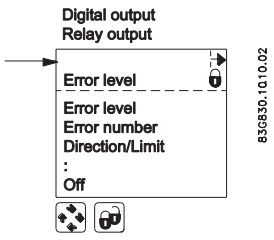

A.7 Error number

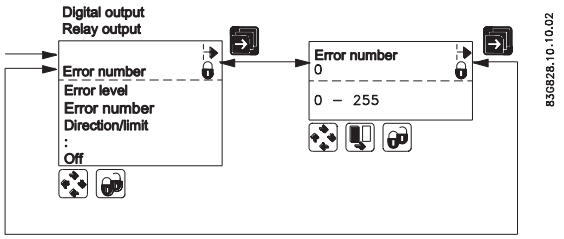

A.8 Direction/limit

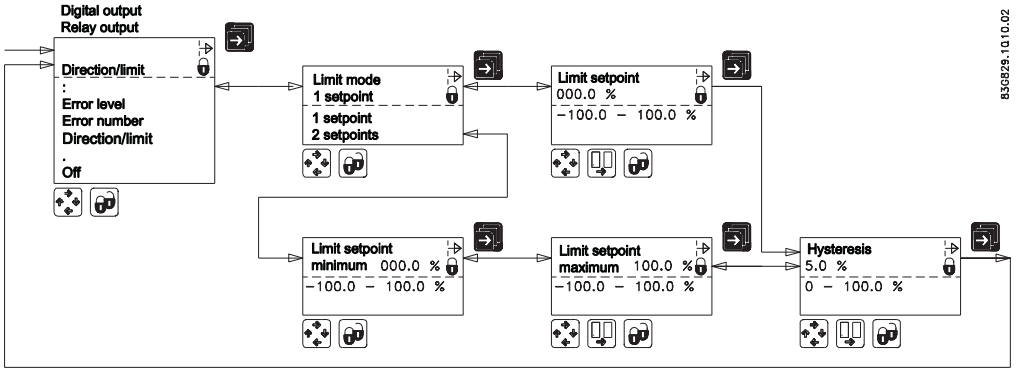

A.9 Batch

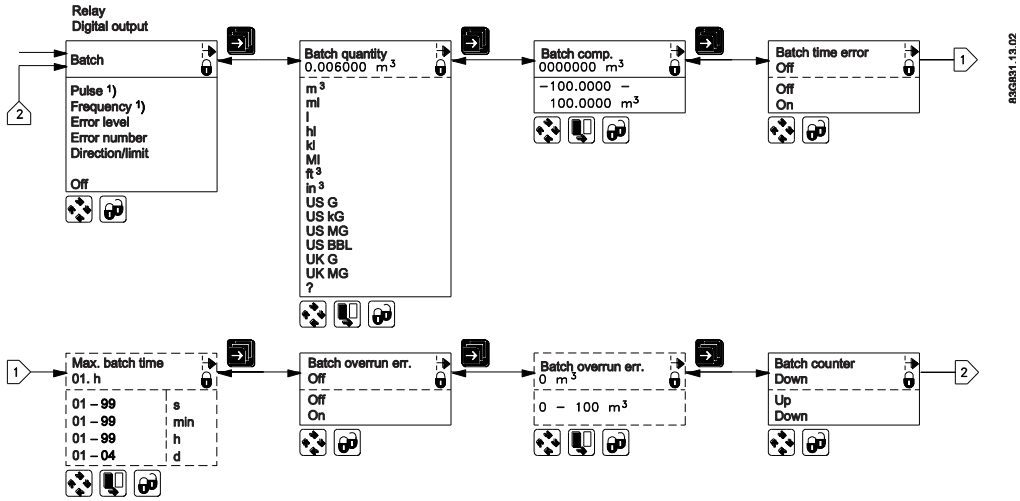

1) Visible only on Digital output.

Note

If batch function is chosen on the relay output, the digital output will be turned off if it has been set up for pulse, frequency or batch.

If digital output is set up for pulse, frequency or batch, then the relay output will be turned off if it has been set up for batch.

A.10 External input

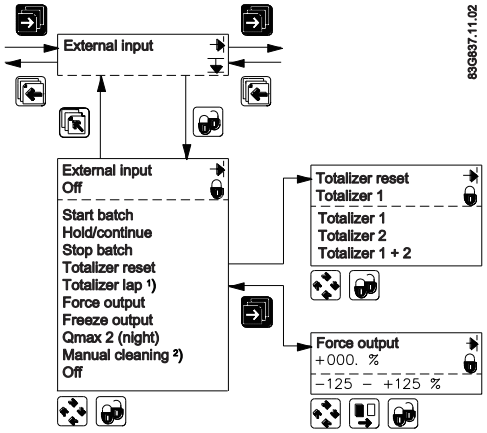

1) The value showing totalizer 1 on the display is frozen for as long as the digital output is activated. However, totalizer 1 continues counting, and when the digital input is released, the value on the display again follows totalizer 1.

2) MAG 6000 I cannot be equipped with cleaning unit. The cleaning option for relay output is however possible. When selecting function for MAG 6000 I relay output, the relay output has the same behavior as if cleaning unit was installed.

   The relay output of the transmitter determines when the relay is on by applying voltage for approximately 60 seconds. The metering is resumed after another 60 seconds when the cycle is complete. (The display is locked during this time). The time cycle can be set at 1 to 240 hours. If the cycle is set at for example three hours, the transmitter will be active every three hours.

A.11 Sensor characteristics

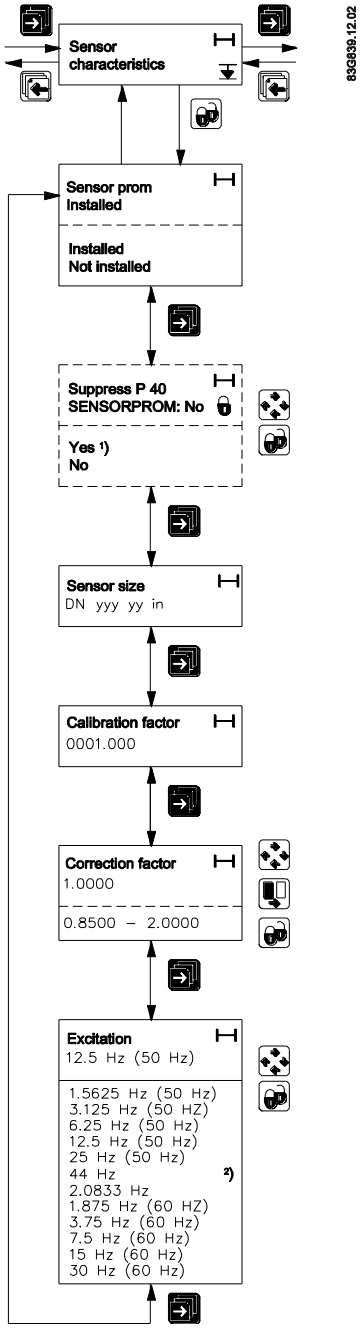

1) Error status (level or number) on an output is updated only at the time the error status changes (occurs or disappears). If P40 is suppressed after it has been detected (at power up), the output does not change state. In this case the power must be switched off/on to suppress the P40 error on the output.

2) The frequency can be set to 44 Hz in the MAG 6000 SV transmitter only.

A.12 Reset mode

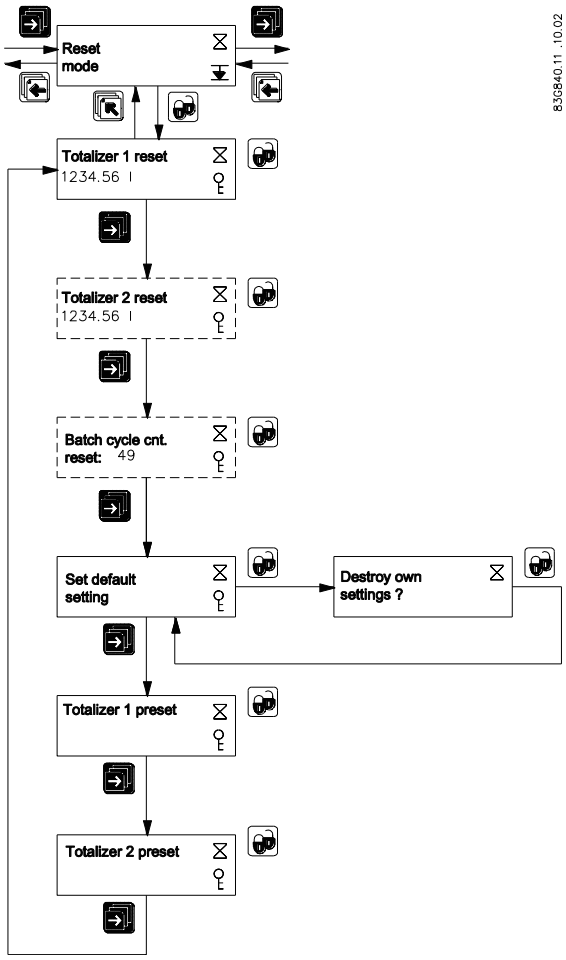

A.13 Reset mode - MAG 6000 SV

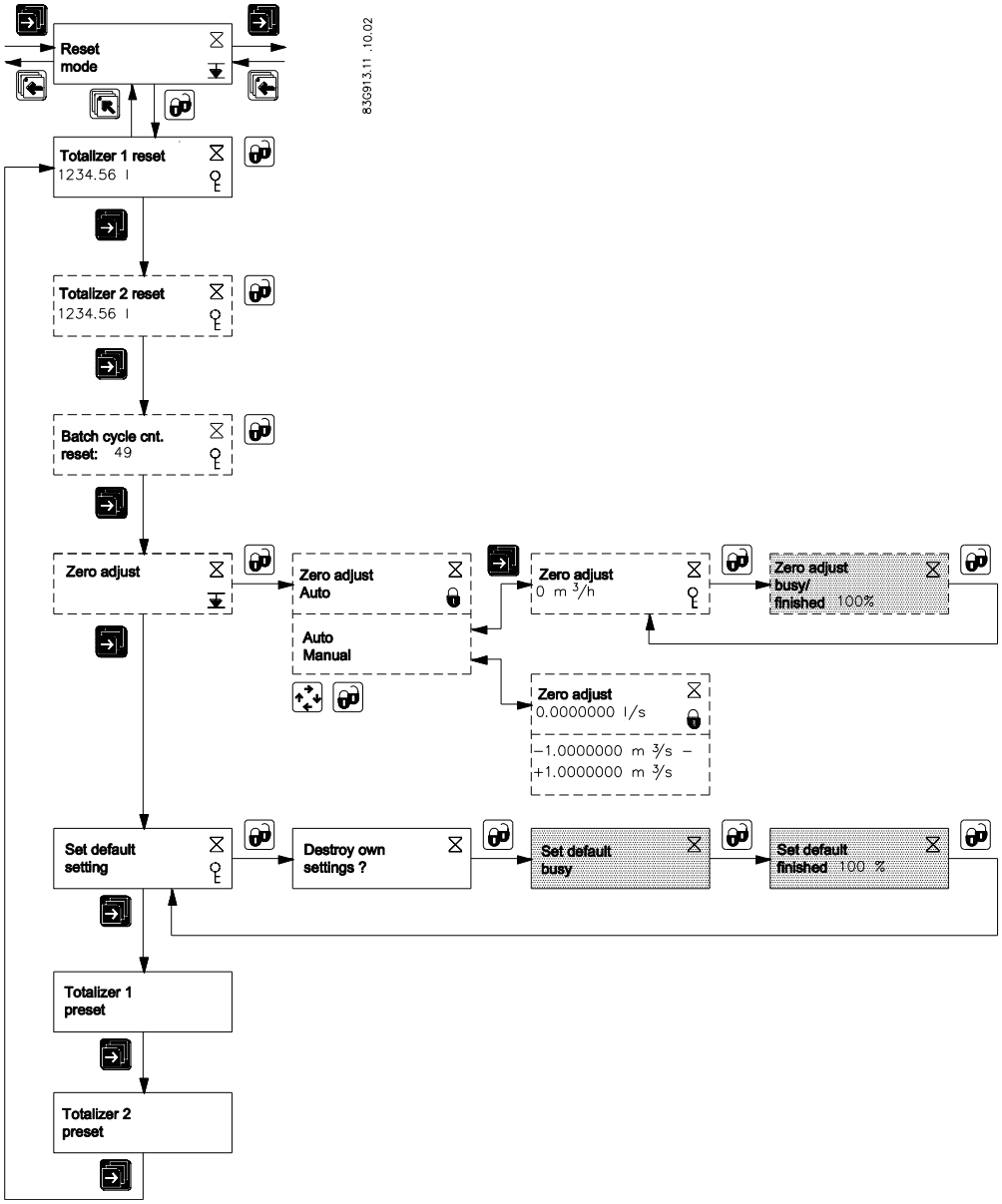

A.14 Service mode

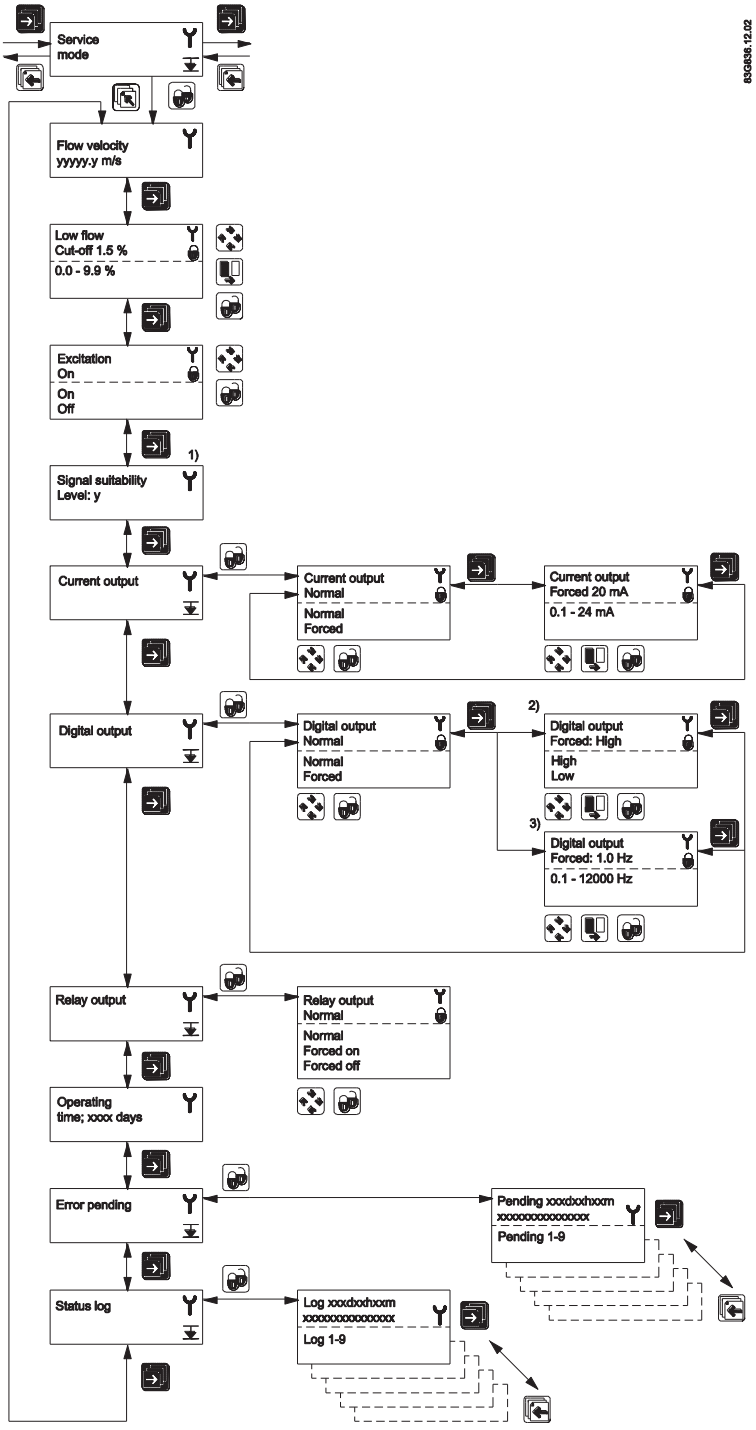

1) Signal suitability is a level from 0 to 9 of the electrode measured voltage. Level 0 is equal to the limit value that is set for empty pipe error detection, and level 9 is the best signal measured.

2) If digital output is set to pulse (standard).

3) If digital output is set to frequency.

A.15 Operator menu setup

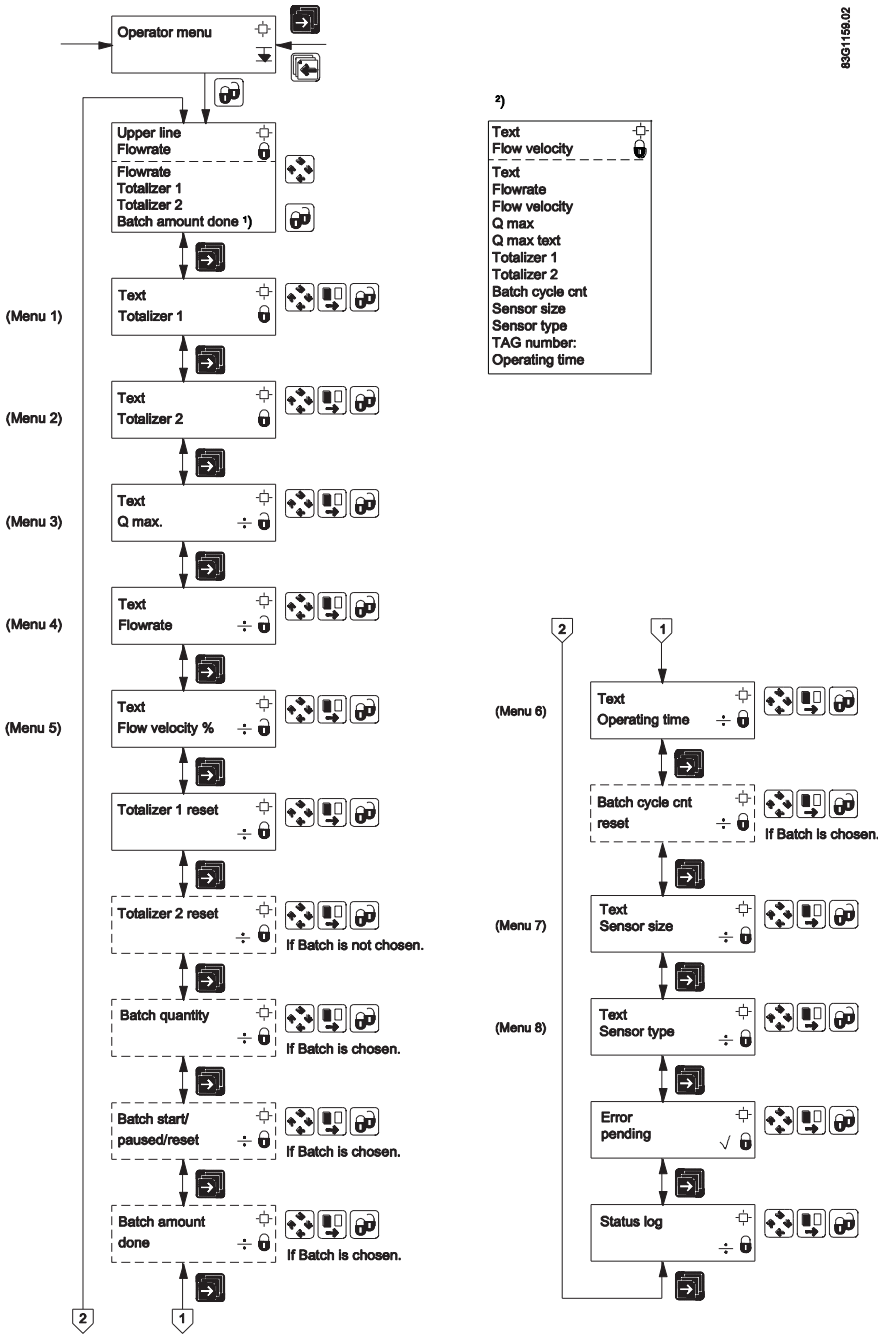

1) When selecting Batch amount for upper line, the upper line is initially blank. The amount done may not appear until the batch is started.

2) 'Text' means that the text for the chosen measured value is shown. For example, if textis chosen in line 2 and flow velocity is chosen in line 3, the text "Flow velocity " is shown in line2 and the measured flow velocity is shown in line 3.

A.16 Product identity

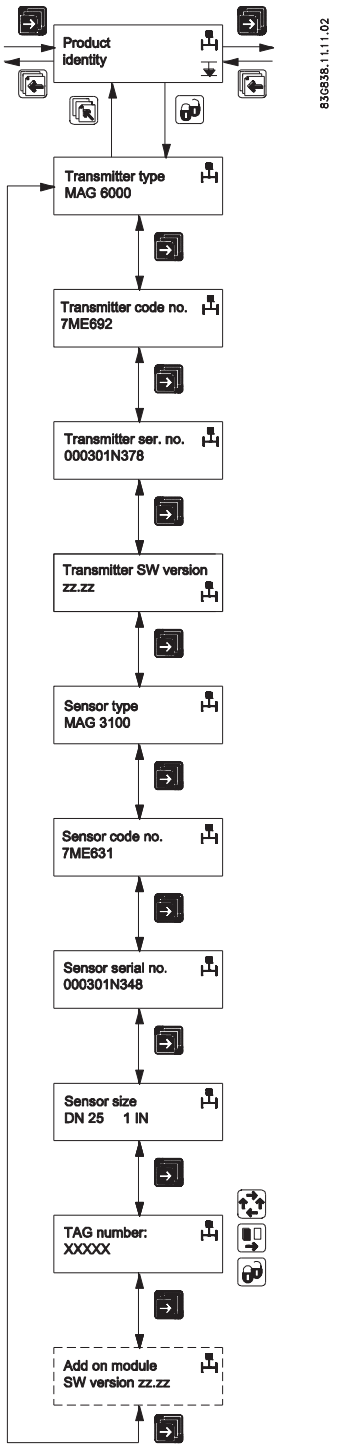

A.17 Add-on communication module

Example: HART

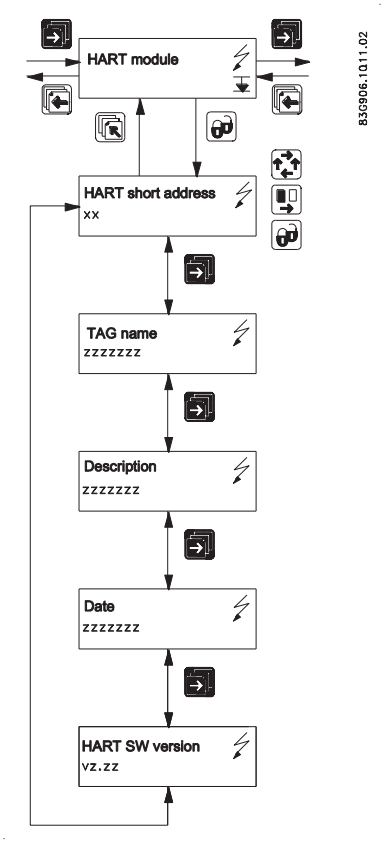

Note

Burst mode is not available with HART communication

A.18 Cleaning

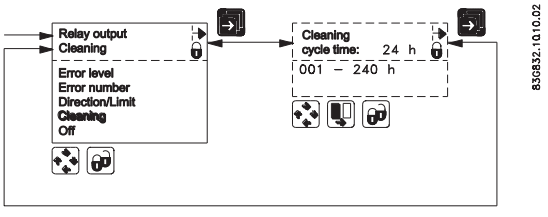

Note

Relay outputs

If cleaning unit is installed, relay outputs must always be used to operate cleaning.

Relay outputs cannot be used for other purposes

A.19 MAG 5000/6000 CT menu overview

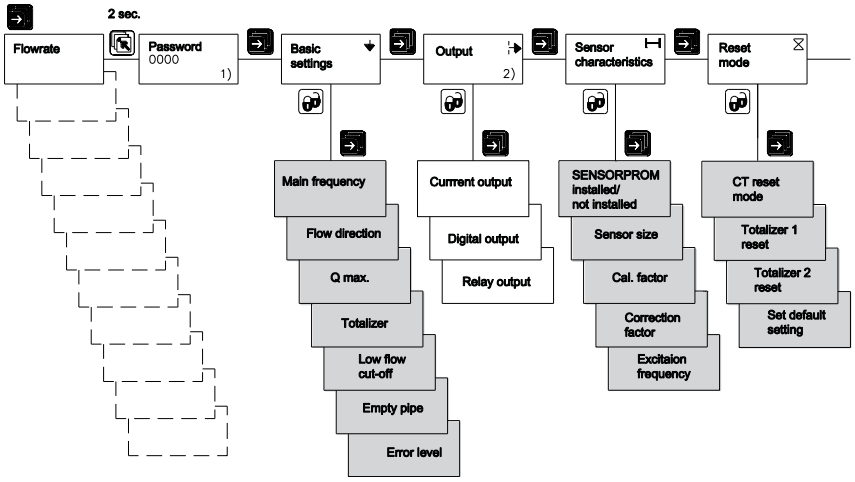

Figure A-1 Overview MAG 5000 CT and MAG 6000 CT (part 1)

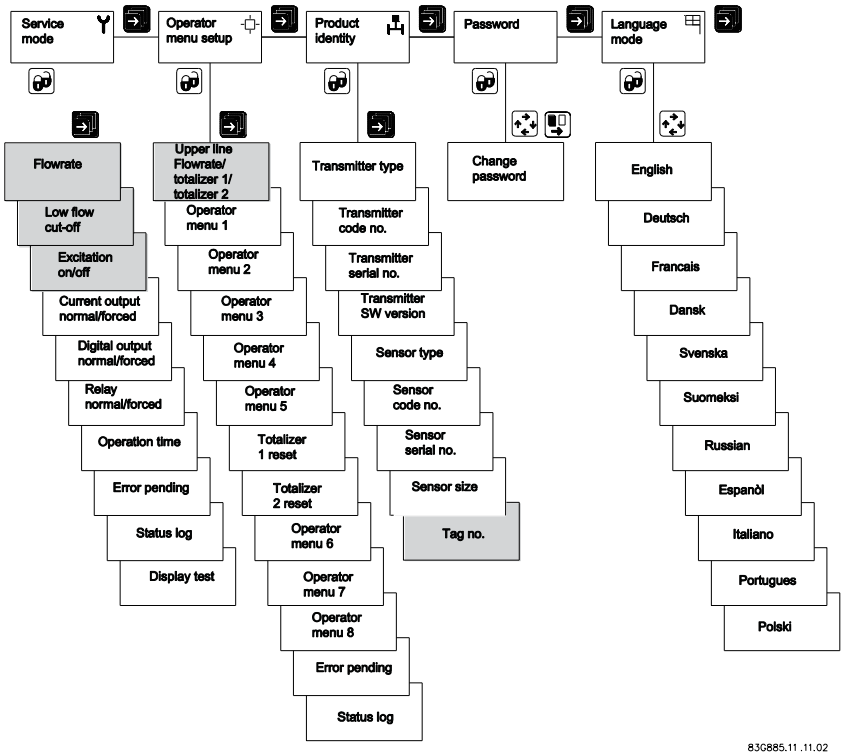

1) Factory-set password: 1000

2) Not visible when CT mode is "Hot water"

Figure A-2 Overview MAG 5000 CT and MAG 6000 CT (part 2)

Note
Sealing

Menus marked with gray are locked when transmitter is sealed.

A.20 Change password

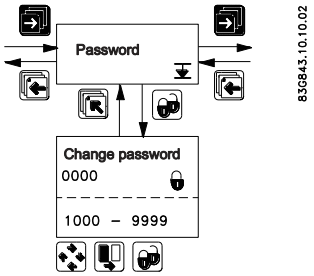

Factory settings

B

B.1 Transmitter factory settings

The factory settings shown on the following pages apply to MAG 5000/6000 as well as MAG 6000 I.

Menu item	Parameter	Factory settings	Options	More info
Password	Password	1000	1000 ... 9999	Changing password (Page 42) and Change password (Page 89)
Basic settings	Flow direction	Positive	Positive, negative	Changing basic settings (Page 43)
	Q_{max}	Sensor size dependent	Sensor size dependent	
	• *volume unit*	*Sensor size dependent*	*m^3, ml, l , hl, kl, Ml, ft^3, in^3, US G, US kG, US MG, US BBL, UK G, UK kG, UK MG, ? (customer unit)*	
	• *time unit*	*Sensor size dependent*	*Sec., min., hour, day, ? (customer unit)*	
	Totalizer 1	Forward	Forward, reverse, net	
	• *Totalizer 1 unit*	*Sensor size dependent*	*m^3, ml, l , hl, kl, Ml, ft^3, in^3, US G, US kG, US MG, US BBL, UK G, UK kG, UK MG, ? (customer unit)*	
	Totalizer 2	Reverse	Forward, reverse, net	
	• *Totalizer 2 unit*	*Sensor size dependent*	*m^3, ml, l , hl, kl, Ml, ft^3, in^3, US G, US kG, US MG, US BBL, UK G, UK kG, UK MG, ? (customer unit)*	
	Low flow cut-off	1.5%	0 ... 9.9%	
	Empty pipe	Off	On, Off	
	Velocity unit	m/s	m, mm, cm, dm, ft , in per s, min, h, d, ? (customer unit)	
	Error level	Warning	Fatal, permanent, warning	
Output	Current output	Off for MAG5000/ 6000 On for MAG6000I Namur	On/off, Unidirectional/bidirectional, 0...20 mA/4...20 mA/4...20 mA + Alarm	Output settings (Page 47)
	• *Alarm level*	*Low*	*High/Low*	
	• *Alarm diff.*	*No*	*Yes/No*	
	• *Time constant*	*5 s*	*0.1...30 s*	

Menu item	Parameter	Factory settings	Options	More info
	Digital output	Pulse	Error, direction/limit, batch, frequency, pulse, error number, off	Digital output - pulse (Page 78)
	Relay output	Error level	Error, direction/limit, cleaning, error number, off	Error level (Page 78)
	Direction/limit switch	Off	1 setpoint, 2 setpoints	Direction/limit (Page 79)
	• *Setpoints*	*0%*	*-100 ... +100%*	
	• *Hysteresis*	*5%*	*0.0 ... 100%*	
	Batch	Off		Batch (Page 79)
	• *Batch quantity*	*0*	*Sensor size dependent*	
	• *Batch compensation*	*0*	*-100 ... +100 m³*	
	• *Batch counter*	*Down*	*Up, down*	
	Frequency	Off	500 Hz, 1 kHz, 5 kHz, 10 kHz	Digital output - frequency (Page 78)
	• *Time constant*	*5 s*	*0.1 ... 30 s*	
	Pulse	On		Digital output - pulse (Page 78)
	• *Pulse polarity*	*Positive*	*Positive, negative*	
	• *Pulse width*	*66 ms*	*64 µs 130 µs, 260 µs, 510 µs, 1.0 ms, 2.0 ms, 4.1 ms, 8.2 ms, 16 ms, 33, ms, 66 ms, 130 ms, 260 ms, 520 ms, 1.0 s, 2.1 s, 4.2 s*	
	• *Volume/pulse*	*Sensor size dependent*	*Dimension-dependent*	
	• *Time constant*	*0.1 s*	*0.1 ... 30 s*	
External input	External input	Off	Batch, reset totalizer, freeze output, forced output, off	External input (Page 80)
	• *Batch*	*Start*	*Start, hold/continue, stop, Qmax 2*	

Menu item	Parameter	Factory settings	Options	More info
Sensor characteristics	Correction factor	1	0.85 ... 2.00	Sensor characteristics (Page 81)
Language	Language	English	English, German, French, Danish, Swedish, Finnish, Spanish, Russian, Italian, Portuguese, Polish	Changing language (Page 46)
Operator menu	Primary field	Flow rate	Flow rate, Totalizer 1, Totalizer 2	Changing operator menu setup (Page 45)
	Title/subtitle lines	Flow rate	Flow rate, Flow velocity, Qmax, Totalizer 1, Totalizer 2, Totalizer 1 reset, Totalizer 2 reset, Batch start/paused/stop, Batch cycle counter, Batch cycle counter reset, Sensor size, Sensor type, Error pending, Status log, Tag No.	

B.2 50 Hz Dimension dependent

50 Hz Dimension dependent factory settings MAG 1100, MAG1100F, MAG 3100, MAG 3100 P and MAG 5100W with M20 cable glands

DN	Q_{max}*					
	Factory settting	MAG 5100 W (Order no. 7ME6520)		MAG 1100, MAG 1100 F, 5100 W (Order no. 7ME6580) MAG 3100, 3100 P		unit
mm (inch)		min.	max.	min.	max.	
2 ($^1/_{12}$)	30	-	-	3.903623	156.1448	l/h
3 ($^1/_8$)	70	-	-	6.361726	254.469	l/h
6 ($^1/_4$)	300	-	-	25.44691	1017.876	l/h
10 ($^3/_8$)	900	-	-	70.68584	2827.433	l/h
15 (½)	2000	-	-	159.0432	6361.725	l/h
25 (1)	5000	441.7865	17671.45	441.7865	17671.45	l/h
40 (1½)	12	1.130974	45.23893	1.130974	45.23893	m^3/h
50 (2)	20	1.574527	62.98107	1.767146	70.68583	m^3/h
65 (2½)	30	2.499681	99.98723	2.986477	119.459	m^3/h
80 (3)	50	4.003646	160.1458	4.523894	180.9557	m^3/h
100(4)	120	6.252163	250.0864	7.068584	282.7433	m^3/h
125 (5)	180	10.00647	400.2585	11.04467	441.7864	m^3/h
150 (6)	250	15.74527	629.8107	15.90432	636.1725	m^3/h
200(8)	400	24.93797	997.5184	28.27434	1130.973	m^3/h
250(10)	700	40.00377	1600.15	44.17865	1767.145	m^3/h
300 (12)	1000	62.50395	2500.157	63.61726	254469	m^3/h
350 (14)	1200	86.59015	3463.605	86.59015	3463.605	m^3/h

DN	Q_{max}*					
	Factory settting	MAG 5100 W (Order no. 7ME6520)		MAG 1100, MAG 1100 F, 5100 W (Order no. 7ME6580) MAG 3100, 3100 P		unit
mm (inch)		min.	max.	min.	max.	
400 (16)	1800	113.0974	4523.893	113.0974	4523.893	m^3/h
450 (18)	2000	143.1389	5725.552	143.1389	5725.552	m^3/h
500 (20)	3000	176.7146	7068.583	176.7146	7068.583	m^3/h
600 (24)	4000	254.4691	10178.76	254.4691	10178.76	m^3/h
700 (28)	4500	346.3606	13854,42	346.3606	13854.42	m^3/h
750 (30)	5000	397.6079	15904.31	397.6079	15904.31	m^3/h
800 (32)	7000	452.3894	18095,57	452.3894	18095.57	m^3/h
900 (36)	9000	572.5553	22902,21	572.5553	22902.21	m^3/h
1000 (40)	12000	706.8584	28274.33	706.8584	28274.33	m^3/h
1050 (42)	12000	706.8584	28274.33	706.8584	28274.33	m^3/h
1100 (44)	14000	855.986	34211.94	855.2986	3421194	m^3/h
1200 (48)	15000	1017.877	40715.04	1017.877	40715.04	m^3/h
1400 (54)	25000	-	-	1385.443	55417.69	m^3/h
1500 (60)	30000	-	-	1590.432	63617.25	m^3/h
1600 (66)	35000	-	-	1809.558	72382.29	m^3/h
1800 (72)	40000	-	-	2290.222	91608.84	m^3/h
2000 (78)	45000	-	-	2827.434	113097.3	m^3/h
2200 (90)	50000	-	-	3421,195	136847.7	m^3/h
2400 (96)	55000	-	-	4071.505	162860.1	m3/h
2600 (102)	60000	-	-	4778.363	191134.4	m3/h
280 (114)	65000	-	-	5541.77	221670.7	m3/h
3000 (120)	70000	-	-	6361.726	254469	m3/h

* The min. and max. amount values show mathematical values and do not indicate measurement accuracy

B.3 60 Hz Dimension dependent

60 Hz Dimension dependent factory settings MAG 1100, MAG1100F, MAG 3100, MAG 3100 P and MAG 5100W with ½" NPT cable glands

DN	$Q_{max.}$					
	Factory setting*	MAG 5100 W (Order no. 7ME6520)		MAG 1100, MAG 1100 F, 5100 W (Order no. 7ME6580) MAG 3100, 3100 P		unit
mm (inch)		min.	max.	min.	max.	
2 ($^1/_{12}$)	0.14	-	-	0.01718714	0.6874852	US GPM
3 ($^1/_8$)	0.31	-	-	0.02800984	1.120393	US GPM
6 ($^1/_4$)	1.4	-	-	0.1120394	4.481573	US GPM
10 ($^3/_8$)	4	-	-	0.3112204	12.44881	US GPM
15 (½)	9	-	-	0.7002459	28.0	US GPM
25 (1)	23	1.945128	77.80509	1.945128	77.80509	US GPM
40 (1½)	53	4.979526	199.181	4.979526	199.181	US GPM
50 (2)	89	6.932434	277.2973	7.78051	311.2203	US GPM
65 (2½)	133	11.00577	440.2305	13.14907	525.9624	US GPM
80 (3)	221	17.62753	705.1008	19.91811	796.7241	US GPM
100(4)	529	27.52745	1101.097	31.12204	1244.881	US GPM
125 (5)	793	44.05714	1762.285	48.62819	1945.127	US GPM
150 (6)	1101	69.32434	2772.973	70.02459		
200 (8)	1762	109.7986	4391.941		4979.525	
250 (10)	3083	176.1313	7045.251	194.5128		
300 (12)	4403	275.1967	11007.86	280.0984	11203.93	US GPM
350 (14)	5284	381.245	15249.79	381.245	15249.79	US GPM
400 (16)	7926	497.9526	19918.1	497.9526	19918.1	US GPM
450 (18)	8806	630.2213	25208.84	630.2213	25208.84	US GPM
500 (20)	13209	778.051	31122.03	778.051	31122.03	US GPM
600 (24)	17612	1120.394	44815.73	1120.394	44815.73	US GPM
700 (28)	19813	1524.98	60999.19	1524.98	60999.19	US GPM
750 (30)	22015	1750.615	70024.58	1750.615	70024.58	US GPM
800 (32)	3082	1991.811	79672.4	1991.811	79672.41	US GPM
900 (36)	39626	2520.885	100835.3	2520.885	100835.3	US GPM
1000 (40)	52835	3112.204	124488.1	3112.204	124488.1	US GPM
1050 (42)	52835	3112.204	137248.1	3112.204	124488.1	US GPM
1100 (44)	61641	3765.767	150630.6	3765.767	150630.6	US GPM
1200 (48)	66044	4481.574	179262.9	4481.574	179262.9	US GPM
1400 (54)	110072	-	-	6099.92	243996.7	US GPM
1500 (60)	1320867	-	-	7002.459	280098.3	US GPM
1600 (66)	154101	-	-	7967.242	318689.6	US GPM

DN	$Q_{max.}$					
	Factory setting*	MAG 5100 W (Order no. 7ME6520)		MAG 1100, MAG 1100 F, 5100 W (Order no. 7ME6580) MAG 3100, 3100 P		unit
mm (inch)		min.	max.	min.	max.	
1800 (72)	176115	-	-	10083.54	403341.5	US GPM
2000 (78)	198130	-	-	12448.82	497952.5	US GPM
2200 (90)	220144	-	-	15063.07	602522.6	
	242158	-		17926.3	717051.7	
2600 (102)	264173	-	-	21038.5	841539.8	
2800 (114)	286187	-	-	24399.68	975987	
3000 (120)	308201	-	-	28009.84	1120393	

* Factory setting sets Qmax to a metric unit (see previous table). The values here are converted to rounded off US GPM.

B.4 50 Hz Dimension dependent batch and pulse output settings

50 Hz Dimension dependent factory settings MAG 1100, MAG1100F, MAG 3100, MAG 3100 P and MAG 5100W with ½" NPT cable glands

6DN	Volume/pulse or batch quantity*				Factory setting		
	MAG 5100 W (Order no. 7ME6520)		MAG 1100, MAG 1100 F, 5100 W (Order no. 7ME6580) MAG 3100, 3100 P		Volume/ pulse & batch amount	Pulse & batch unit	Totalizer unit
mm (inch)	min.	max.	min.	max.			
2 ($^1/_{12}$)	-	-	3.61466 µl	94.75103 l	0.1	ml	ml
3 ($^1/_8$)	-	-	5.890487 µl	154.4155 l	0.1	ml	ml
6 ($^1/_4$)	-	-	23.56195 µl	617.6622 l	1	l	l
10 ($^3/_8$)	-	-	65.44985 µl	1.715728 m^3	1	l	l
15 (½)	-	-	147.2622 µl	3.860389 m^3	1	l	l
25 (1)	409.0616 µl	10.7233 m^3	409.0616 µl	10.7233 m^3	10	l	l**
40 (1½)	1.047198 ml	27.45165 m^3	1.047198 ml	27.45165 m^3	10	l	l**
50 (2)	1.457896 ml	38.21785 m^3	1.636247 ml	42.89321 m^3	10	l	l**
65 (2½)	2.31452 ml	60.67373 m^3	2.765257 ml	72.48952 m^3	100	l	l**
80 (3)	3.70708 ml	97.17886 m^3	4.188791 ml	109.8066 m^3	100	l	l**
100(4)	5.789039 ml	151.7561 m^3	6.544985 ml	171.5728 m^3	100	l	l**
125 (5)	9.265244 ml	242.8828 m^3	10.22654 ml	268.0825 m^3	100	l	m^3
150 (6)	14.57896 ml	382.1785 m^3	14.72622 ml	386.0389 m^3	100	l	m^3
200 (8)	23.09071 ml	605.309 m^3	26.17994 ml	686.2913 m^3	1	m^3	m^3

6DN	Volume/pulse or batch quantity*				Factory setting		
	MAG 5100 W (Order no. 7ME6520)		MAG 1100, MAG 1100 F, 5100 W (Order no. 7ME6580) MAG 3100, 3100 P		Volume/ pulse & batch amount	Pulse & batch unit	Totalizer unit
mm (inch)	min.	max.	min.	max.			
250 (10)	37.04053 ml	970.995 m^3	40.90616 ml	1072.33 m^3	1	m^3	m^3
300 (12)	57.87403 ml	1517.132 m^3	58.90487 ml	1544.155 m^3	1	m^3	m^3
350 (14)	80.17607 ml	2101.767 m^3	80.17607 ml	210.7671 m^3	1	m^3	m^3
400 (16)	104.7198 ml	2745.165 m^3	104.7198 ml	2745.165 m^3	1	m^3	m^3
450 (18)	132.536 ml	3474.35 m^3	132.536 ml	3474.35 m^3	1	m^3	m^3
500 (20)	163.6247 ml	4289.321 m^3	163.6247 ml	4289.321 m^3	10	m^3	m^3
600 (24)	235.6195 ml	6176.622 m^3	235.6195 ml	6176.622 m^3	10	m^3	m^3
700 (28)	320.7043 ml	8407.069 m^3	320.7143 ml	8407.069 m^3	10	m^3	m^3
750 (30)	368.1554 ml	9650.972 m^3	368.1554 ml	9650.972 m^3	10	m^3	m^3
800 (32)	418.8791 ml	10980.66 m^3	418.8791 ml	10980.66 m^3	10	m^3	m^3
900 (36)	530.1438 ml	13897.4 m^3	530.1438 ml	13897.4 m^3	10	m^3	m^3
1000 (40)	654.4985 ml	17157.28 m^3	654.4985 ml	17157.28 m^3	10	m^3	m^3
1050 (42)	654.4985 ml	17157.28 m^3	654.4985 ml	17157.28 m^3	10	m^3	m^3
1100 (44)	79.94321 ml	20760.31 m^3	791.9432 ml	20760.31 m^3	10	m^3	m^3
1200 (48)	942.4778 ml	24706.48 m^3	942.4778 ml	24706.48 m^3	10	m^3	m^3
1400 (54)	-	-	1.282817 l	33628.27 m^3	10	m^3	m^3
1500 (60)	-	-	1.472622 l	38603.89 m^3	10	m^3	m^3
1600 (66)	-	-	1.675517 l	43922.64 m^3	10	m^3	m^3
1800 (72)	-	-	2.120576 l	55589.6 m^3	10	m^3	m^3
2000 (78)	-	-	2.617994 l	68629.13 m^3	10	m^3	m^3
2200 (90)	-	-	3.167773 l	83041.25 m^3	10	m^3	m^3
2400 (96)	-	-	3.769912 l	98825.9 m^3	10	m^3	m^3
2600 (102)	-	-	4.4241 l	115983. m^3	10	m^3	m^3
2800 (114)	-	-	5.131268 l	134513.1 m^3	10	m^3	m^3
3000 (120)	-	-	5.890487 l	154415.5 m^3	10	m^3	m^3

* The min. and max. amount values show mathematical values and do not indicate measurement accuracy.

** For CT devices the totalizer 1 unit is in m^3

B.5 60 Hz Dimension dependent batch and pulse output settings

60 Hz Dimension dependent factory settings MAG 1100, MAG1100F, MAG 3100, MAG 3100 P and MAG 5100W with ½" NPT cable glands

DN	Volume/pulse or batch quantity			
	MAG 5100 W (Order no. 7ME6520)		MAG 1100, MAG 1100 F, 5100 W (Order no. 7ME6580) MAG 3100, 3100 P	
mm (inch)	US G min.	US G max.	US G min.	US G max.
2 ($^1/_{12}$)	-	-	0.00000095484069	25.03057
3 ($^1/_8$)	-	-	0.000001556102	40.79227
6 ($^1/_4$)	-	-	0.000006224408	163.1691
10 ($^3/_8$)	-	-	0.00001729003	453.2475
15 (½)	-	-	0.00003890255	1019.806
25 (1)	0.0001080627	2832.796	0.0001080627	2832.796
40 (1½)	0.0002766404	7251.96	0.0002766404	7251.96
50 (2)	0.0003851353	10096.08	0.0004322506	11331.18
65 (2½)	0.0006114314	16028.3	0.0007305034	19149.7
80 (3)	0.0009793068	25671.93	0.001106562	29007.84
100(4)	0.001529303	40089.74	0.001729003	45324.75
125 (5)	0.002447619	64162.85	0.002701566	70819.92
150 (6)	0.003851353	100960.8	0.003890255	101980.6
200 (8)	0.00609992	159905.7	0.006916009	181299
250 (10)	0.009785071	256509.7	0.01080627	283279.6
300 (12)	0.01528871	400784.1	0.01556102	407922.7
350 (14)	0.02118028	555228.2	0.02118028	555228.2
400 (16)	0.02766404	725196	0.02766404	725196
450 (18)	0.0350123	917826.2	0.0350123	917826.2
500 (20)	0.04322506	1133118	0.04322506	1133118
600 (24)	0.06224408	1631691	0.06224408	1631691
700 (28)	0.0847211	2220912	0.0847211	2220912
750 (30)	0.09725637	2549517	0.09725637	2549517
800 (32)	0.1106562	2900784	0.1106562	2900784
900 (36)	0.1400492	3671304	0.1400492	3671304
1000 (40)	0.1729003	4532475	0.1729003	4532475
1050 (42)	0.1729003	4532475	0.1729003	4532475
1100 (44)	0.2092093	5484294	0.2092093	5484294
1200 (48)	0.2489763	6526764	0.2489763	6526764
1400 (54)	-	-	0.3388844	8883651
1500 (60)	-	-	0.3890255	10198060
1600 (66)	-	-	0.4426246	11603130
1800 (72)	-	-	0.5601967	14685210

DN	Volume/pulse or batch quantity			
	MAG 5100 W (Order no. 7ME6520)		MAG 1100, MAG 1100 F, 5100 W (Order no. 7ME6580) MAG 3100, 3100 P	
mm (inch)	US G min.	US G max.	US G min.	US G max.
2000 (78)	-	-	0.6916009	18129900
2200 (90)			0.836837	21937170
2400 (96)			0.995906	26107050
2600 (102)			1.168806	30639530
2800 (114)			1.355538	35534600
3000 (120)			1.556102	40792270

Approvals/Certificates

C

All certificates are posted on the Internet. Additionally, the CE Declaration of Conformity as well as ATEX approvals are available on the SITRANS F literature CD-ROM.

Certificates (http://support.automation.siemens.com/WW/view/en/10806951/134200)

Index

A

Add-on module, 15
Add-on modules
    Electrical connection:Add-on modules, 38
Alarm differentiation, 47
Alarm level, 47

C

Communication module, (See Add-on module)
Compliance, 11
Contact person, 9
Customer Support Hotline, 58

D

Decontamination, 59
Device
    Identification, 8
    Inspection, 7
Diagnostic functions, 53

E

Electrical connection, 38
Error handling, 53

H

Hotline, 58

I

Installation
    Indoor/outdoor, 19
Internet
    Contact person, 9, 59
    Flow documentation, 9
    Support, 59
Introduction, 7

L

Laws and directives, 11

M

Mains supply, 35
Maintenance, 57

P

Protective conductor terminal, 35
Protective earth, 35

R

Recalibration, 60
Repair, 58
Return procedures, 59

S

Safety
    Instrument safety standards, 11
Safety notes, 11
Service, 58, 59
Support, 59
System components, 15

W

Wire insulation, 35

For more information

www.siemens.com/flow

Siemens A/S
Flow Instruments
Nordborgvej 81
DK-6430 Nordborg

Subject to change without prior notice
Order No.: A5E02338368
Lit. No.: A5E02338368-002
© Siemens AG 12.2013

A5E02338368

www.siemens.com/processautomation

Pressure transmitter

SITRANS P, DS III Series with HART

Operating Instructions· 09/2012

SITRANS

Answers for industry.

SIEMENS

AC & DC Motor Installation & Maintenance

Safety Notice: Be sure to read and understand all of the Safety Notice statements in MN408 or Product Specific manual for your motor. A copy is available at: http://www.baldor.com/support/product_manuals.asp

ACCEPTANCE
Thoroughly inspect this equipment before accepting shipment from the transportation company. If any damage or shortage is discovered do not accept until noted on the freight bill. Report all damage to the freight carrier.

SAFETY
Eye bolts, lifting lugs or lifting openings, if provided, are intended only for lifting the motor and motor mounted standard accessories not exceeding, in total 30% of the motor weight. These lifting provisions should never be used when lifting or handling the motor and driven equipment. Eye bolt lifting capacity rating is based on a lifting alignment coincident with eye bolt center line. Eye bolt capacity reduces as deviation from this alignment is increased. Be sure eye bolts are tight and prevented from turning before lifting.

INSTALLATION OUTSIDE THE USA:
Refer to MN408 and MN1383 for Compliance with European Directives. Copies are available at:
http://www.baldor.com/support/product_manuals.asp

MOTOR ENCLOSURE
ODP, Open drip proof motors are intended for use in clean, dry locations with adequate supply of cooling air. These motors should not be used in the presence of flammable or combustible materials. Open motors can emit flame and/or molten metal in the event of insulation failure. TEFC, totally enclosed motors are intended for use where moisture, dirt and/or corrosive materials are present in indoor and outdoor locations.
Explosion protected motors, as indicated by a Nationally Recognized Testing Laboratory Certification mark and marking with Class, Division and Temperature Code are intended for installation in hazardous locations as described in Article 500 of the NEC. Refer to MN408 for more details.

MOUNTING
Foot mounted machines should be mounted to a rigid foundation to prevent excessive vibration. Shims may be used if location is uneven.

Flange mounted machines should be properly seated and aligned. Note: If improper rotation direction is detrimental to the load, check rotation direction prior to coupling the load to the motor shaft.
For V-belt drive, mount the sheave pulley close to the motor housing. Allow clearance for end to end movement of the motor shaft. Do not overtighten belts as this may cause premature bearing failure or shaft breakage.
Direct coupled machines should be carefully aligned and the shaft should rotate freely without binding.

GENERAL
The user must select a motor starter and overcurrent protection suitable for this motor and its application. Consult motor starter application data as well as the National Electric Code and/or applicable local codes. Special motors for use by United States Government including special specifications, master plans, etc. refer to the applicable master plans and specifications involved. On motors received from the factory with the shaft blocked, remove blocking before operating the motor. If motor is to be reshipped alone or installed to another piece of equipment, the shaft block must be installed to prevent axial movement and prevent brinelling of the bearings during shipment.

TESTING
If the motor has been in storage for an extensive period or has been subjected to adverse moisture conditions, check the motor insulation resistance with a meg ohm meter. Depending on storage conditions it may be necessary to regrease or change rusted bearings. Contact Baldor District Office if resistance is less than 5 meg ohms.

WARNING: Do not touch electrical connections before you first ensure that power has been disconnected. Electrical shock can cause serious or fatal injury.

WARNING: Be sure the system is properly grounded before applying power. Electrical shock can cause serious or fatal injury.

INSTALLATION
This motor must be installed in accordance with National Electric Code, NEMA MG-2, IEC standards or local codes.

WIRING
Connect the motor as shown in the connection diagrams. If this motor is installed as part of a motor control drive system, connect and protect the motor according to the control manufacturers diagrams. Refer to MN408 for additional details on lead marking. The wiring, fusing and grounding must comply with the National Electrical Code or IEC and local codes. When the motor is connected to the load for proper direction of rotation and started, it should start quickly and run smoothly. If not, stop the motor immediately and determine the cause. Possible causes are: low voltage at the motor, motor connections are not correct or the load is too heavy. Check the motor current after a few minutes of operation and compare the measured current with the nameplate rating.

GROUNDING
Ground the motor according to NEC and local codes. In the USA consult the National Electrical Code, Article 430 for information on grounding of motors and generators, and Article 250 for general information on grounding. In making the ground connection, the installer should make certain that there is a solid and permanent metallic connection between the ground point, the motor or generator terminal housing, and the motor or generator frame. In non-USA locations consult the appropriate national or local code applicable.

ADJUSTMENT
The neutral is adjustable on some DC motors. AC motors have no adjustable parts.

Noise
For specific sound power or pressure level information, contact your local Baldor representative.

VIBRATION
This motor is balanced to NEMA MG1, Part 7 standard.

BRUSHES (DC Motors)
Periodically, the brushes should be inspected and all brush dust blown out of the motor. If a brush is worn 1/2, (length specified in renewal parts data), replace the brushes.

WARNING: Guards must be installed for rotating parts such as couplings, pulleys, external fans, and unused shaft extensions, should be permanently guarded to prevent accidental contact by personnel. Accidental contact with body parts or clothing can cause serious or fatal injury.

Reassemble and seat the new brushes using a brush seating stone. Be sure the rocker arm is set on the neutral mark.

INSPECTION

Before connecting the motor to an electrical supply, inspect for any damage resulting from shipment. Turn the shaft by hand to ensure free rotation. Motor leads must be isolated before the shaft will turn freely on permanent magnet motors.

DRAIN PLUGS

One or more condensation drain plugs are provided on each endplate for various motor mounting configurations. For Washdown and totally enclosed, fan cooled or non-ventilated motors, the plugs in the lowest portion of the ends shields should be removed for operation (unless the motor has special stainless steel drains). All drains are located in the lowest portion of the ends shields.

MOUNTING

Mount the motor on a foundation sufficiently rigid to prevent excessive vibration. Grease lubricated ball bearing motors may be mounted with the feet at any angle. After careful alignment, bolt motor securely in place. Use shim to fill any unevenness in the foundation. Motor feet should sit solidly on the foundation before mounting bolts are tightened.

IP (Ingress Protection)

IP designations include two numerals, the first characteristic numeral is for ingress solid bodies and from dust. The second for ingress protection from liquid - water. Motors marked less than IP23 require additional protection from water.

GUARDING

After motor installation is complete, a guard of suitable dimensions must be constructed and installed around the motor/gearmotor. This guard must prevent personnel from coming in contact with any moving parts of the motor or drive assembly but must allow sufficient cooling air to pass over the motor. If a motor mounted brake is installed, provide proper safeguards for personnel in case of brake failure. Brush inspection plates and electrical connection cover plates or lids, must be installed before operating the motor.

STARTING

Before starting motor remove all unused shaft keys and loose rotating parts to prevent them from flying off. Check direction of rotation before coupling motor to load. The motor should start quickly and run smoothly and with little noise. If the motor should fail to start the load may be too great for the motor, the voltage is low or the motor has been miswired. In any case immediately shut motor off and investigate the cause.

ROTATION

To reverse the direction of rotation, disconnect and lockout power and interchange any two of the three AC power leads for three phase motors. For two-phase four wire, disconnect and lockout power and interchange the AC line leads on any one phase. For two phase three wire, disconnect and lockout power and interchange phase one and phase two AC line leads.

Maintenance Procedures

WARNING: Do not touch electrical connections before you first ensure that power has been disconnected. Electrical shock can cause serious or fatal injury.

WARNING: Surface temperatures of motor enclosures may reach temperatures which can cause discomfort or injury to personnel accidentally coming into contact with hot surfaces. Protection should be provided by the user to protect against accidental contact with hot surfaces. Failure to observe this precaution could result in bodily injury.

Lubrication Information

Refer to motor nameplate for recommended lubricant. If none is shown, the recommended lubricant for anti-friction bearings (-15°F to 120°) is POLYREX EM. For Min Start Temp -100°F use AEROSHELL #7. For roller bearings is ExxonMobil SHC-220.

Relubrication Intervals
(For motors with regrease capability)

New motors that have been stored for a year or more should be relubricated. Lubrication is also recommended at Table 1 intervals.

LUBRICATION INSTRUCTIONS

Cleanliness is important in lubrication. Any grease used to lubricate anti friction bearings should be fresh and free from contamination. Properly clean the grease inlet area of the motor to prevent grease contamination.

1. Select service conditions from Table 2.
2. Select lubrication interval (Table 1).
3. Adjust lubrication interval with multiplier from Table 3.
4. Select volume of grease from Table 4.

LUBRICATION PROCEDURE

Bearings should be lubricated while stationary and the motor is warm.

1. Locate the grease inlet, clean the area, and replace the pipe plug with a grease fitting.
2. Locate and remove the grease drain plug, if provided.
3. Add the recommended volume of the recommended grease.
4. Replace the grease inlet plug and run the motor for 15 minutes.
5. Replace the grease drain plug.

SPECIAL APPLICATIONS

For special temperature applications, consult your Baldor District Office.

Relubrication Intervals

Recommended relubrication intervals are shown in Table 1. It is important to realize that the recommended intervals of Table 2 are based on average use. Refer to additional information contained in Tables 2, 3 and 4.

Table1 Relubrication Interval

NEMA (IEC) Frame Size	Rated Speed (RPM)			
	3600	1800	1200	900
Up to 210 incl. (132)	5500Hrs.	12000Hrs.	18000Hrs.	22000Hrs.
Over 210 to 280 incl. (180)	3600Hrs.	9500Hrs.	15000Hrs.	18000Hrs.
Over 280 to 360 incl. (225)	2200Hrs.	7400Hrs.	12000Hrs.	15000Hrs.
Over 360 to 5800 incl. (400)	2200Hrs.	3500Hrs.	7400Hrs.	10500Hrs.

* Relubrication intervals are for ball bearings.
For vertically mounted motors and roller bearings, divide the relubrication interval by 2.

** For motors operating at speeds greater than 3600 RPM, contact Baldor for relubrication recommendations.

Table2 Service Conditions

Severity of Service	Hours per day of Operation	Ambient Temperature Maximum	Atmospheric Contamination
Standard	8	40° C	Clean, Little Corrosion
Severe	16 Plus	50° C	Moderate dirt, Corrosion
Extreme	16 Plus	>50° C* or Class H Insulation	Severe dirt, Abrasive dust, Corrosion, Heavy Shock or Vibration
Low Temperature		<-29 ° C **	

* Special high temperature grease is recommended (Dow Corning DC44).

** Special low temperature grease is recommended (Aeroshell 7).

Note: Different grease types are generally incompatible and should not be mixed. Mixing different types can cause lubricant and bearing failure. Thoroughly clean bearing and cavity before changing grease type.

Table3 Lubrication Interval Multiplier

Severity of Service	Multiplier
Standard	1.0
Severe	0.5
Extreme	0.1
Low Temperature	1.0

Some motor designs use different bearings on each motor end. This is normally indicated on the motor nameplate. In this case, the larger bearing is installed on the motor Drive endplate. For best relubrication results, only use the appropriate amount of grease for each bearing size (not the same for both).

Table4 Amount of Grease to Add

Frame Size NEMA (IEC)	Bearing Description (These are the "Large" bearings (Shaft End) in each frame size)			
	Bearing	Weight of Grease to add * oz (Grams)	Volume of grease to be added	
			in^3	teaspoon
56 to 140 (90)	6203	0.08 (2.4)	0.15	0.5
140 (90)	6205	0.15 (3.9)	0.2	0.8
180 (100–112)	6206	0.19 (5.0)	0.3	1.0
210 (132)	6307	0.30 (8.4)	0.6	2.0
250 (160)	6309	0.47 (12.5)	0.7	2.5
280 (180)	6311	0.61 (17)	1.2	3.9
320 (200)	6312	0.76 (20.1)	1.2	4.0
360 (225)	6313	0.81 (23)	1.5	5.2
400 (250)	6316	1.25 (33)	2.0	6.6
440 (280)	6318	1.52(40)	2.5	8.2
440 (280)	6319	2.12 (60)	4.1	13.4
5000 to 5800 (315–400)	6328	4.70 (130)	9.2	30.0
5000 to 5800 (315–400)	NU328	4.70 (130)	9.2	30.0
360 to 449 (225–280)	NU319	2.12 (60)	4.1	13.4
AC Induction Servo				
76 Frame 180 (112)	6207	0.22 (6.1)	0.44	1.4
77 Frame 210 (132)	6210	0.32 (9.0)	0.64	2.1
80 Frame 250(160)	6213	0.49 (14.0)	0.99	3.3

Typical IEC vs NEMA Lead Marking

Single Phase Non-Reversible
Refer to the connection diagram provided on the Baldor motor.

Single Phase Reversible

Dual Voltage Reversible

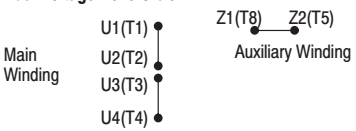

DC Motors
Lead markings can be translated between IEC and NEMA designations as follows:

	NEMA	IEC
Armature	A1, A2	A1, A2
Series Field	S1, S2	D1, D2
Shunt Field	F1, F2	E1, E2

Refer to the connection diagram provided on the Baldor motor.

Three Phase
For single winding 3 phase motors, lead markings can be directly translated between IEC and NEMA designations. For these motors, the lead markings are:

U1=T1	U2=T4	U3=T7	U4=T10
V1=T2	V2=T5	V3=T8	V4=T11
W1=T3	W2=T6	W3=T9	W4=T12

Refer to the connection diagram provided on the Baldor motor. Some examples are as follows:

Three Leads

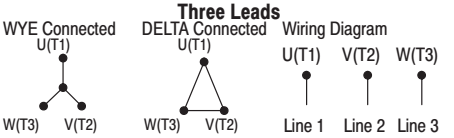

Six Leads

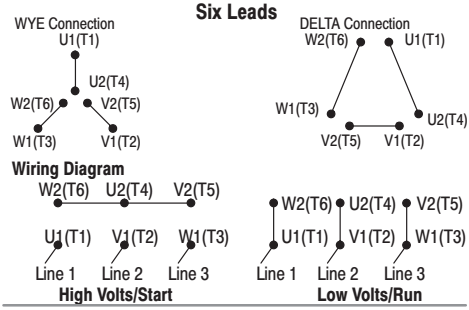

MN416A01-1114

BALDOR®
A MEMBER OF THE ABB GROUP
P.O. Box 2400 Fort Smith, AR 72902-2400 USA Ph: (1) 479.646.4711, Fax: (1) 479.648.5792
www.baldor.com

© Baldor Electric Company
All rights reserved. Printed in USA
MN416A01
11/14

User Manual

Allen-Bradley

PowerFlex 520-Series Adjustable Frequency AC Drive

PowerFlex 523 Catalog Number 25A, Series B
PowerFlex 525 Catalog Number 25B

Original Instructions

Allen-Bradley • Rockwell Software

Rockwell Automation

Important User Information

Solid-state equipment has operational characteristics differing from those of electromechanical equipment. Safety Guidelines for the Application, Installation and Maintenance of Solid State Controls (publication SGI-1.1 available from your local Rockwell Automation® sales office or online at http://www.rockwellautomation.com/literature/) describes some important differences between solid-state equipment and hard-wired electromechanical devices. Because of this difference, and also because of the wide variety of uses for solid-state equipment, all persons responsible for applying this equipment must satisfy themselves that each intended application of this equipment is acceptable.

In no event will Rockwell Automation, Inc. be responsible or liable for indirect or consequential damages resulting from the use or application of this equipment.

The examples and diagrams in this manual are included solely for illustrative purposes. Because of the many variables and requirements associated with any particular installation, Rockwell Automation, Inc. cannot assume responsibility or liability for actual use based on the examples and diagrams.

No patent liability is assumed by Rockwell Automation, Inc. with respect to use of information, circuits, equipment, or software described in this manual.

Reproduction of the contents of this manual, in whole or in part, without written permission of Rockwell Automation, Inc., is prohibited.

Throughout this manual, when necessary, we use notes to make you aware of safety considerations.

	WARNING: Identifies information about practices or circumstances that can cause an explosion in a hazardous environment, which may lead to personal injury or death, property damage, or economic loss.
	ATTENTION: Identifies information about practices or circumstances that can lead to personal injury or death, property damage, or economic loss. Attentions help you identify a hazard, avoid a hazard, and recognize the consequence.
	SHOCK HAZARD: Labels may be on or inside the equipment, for example, a drive or motor, to alert people that dangerous voltage may be present.
	BURN HAZARD: Labels may be on or inside the equipment, for example, a drive or motor, to alert people that surfaces may reach dangerous temperatures.
	ARC FLASH HAZARD: Labels may be on or inside the equipment, for example, a motor control center, to alert people to potential Arc Flash. Arc Flash will cause severe injury or death. Wear proper Personal Protective Equipment (PPE). Follow ALL Regulatory requirements for safe work practices and for Personal Protective Equipment (PPE).
IMPORTANT	Identifies information that is critical for successful application and understanding of the product.

Allen-Bradley, Rockwell Automation, Rockwell Software, PowerFlex, Connected Components Workbench, Studio 5000, Studio 5000 Logix Designer, DriveTools SP, AppView, CustomView, QuickView, MainsFree Programming, PointStop, and TechConnect are trademarks of Rockwell Automation, Inc.

Trademarks not belonging to Rockwell Automation are property of their respective companies.

Important User Information 2

Summary of Changes

New and Updated Information. 7

Preface

Overview

Who Should Use this Manual 9
Recommended Documentation 9
Manual Conventions 10
Drive Frame Sizes 11
General Precautions 12
Catalog Number Explanation 13

Chapter 1

Installation/Wiring

Mounting Considerations. 15
AC Supply Source Considerations 19
General Grounding Requirements 20
Fuses and Circuit Breakers 23
Power and Control Module 28
Control Module Cover 31
Power Module Terminal Guard 31
Power Wiring. 32
Power Terminal Block 35
Common Bus/Precharge Notes 36
I/O Wiring 36
Control I/O Terminal Block 37
Start and Speed Reference Control 49
CE Conformity 52

Chapter 2

Start Up

Prepare for Drive Start-Up 59
Display and Control Keys 62
Viewing and Editing Parameters 63
Drive Programming Tools 64
Language Support 64
Smart Start-Up with Basic Program Group Parameters 65
LCD Display with QuickView Technology. 67
Using the USB Port 67

Chapter 3

Programming and Parameters

About Parameters ... 71
Parameter Groups ... 73
Basic Display Group ... 78
Basic Program Group ... 83
Terminal Block Group ... 89
Communications Group ... 101
Logic Group ... 107
Advanced Display Group ... 110
Advanced Program Group ... 115
Network Parameter Group ... 141
Modified Parameter Group ... 142
Fault and Diagnostic Group ... 142
AppView Parameter Groups ... 150
CustomView Parameter Group ... 151
Parameter Cross Reference by Name ... 152

Chapter 4

Troubleshooting

Drive Status ... 157
Faults ... 157
Fault Descriptions ... 159
Common Symptoms and Corrective Actions ... 162

Appendix A

Supplemental Drive Information

Certifications ... 167
Environmental Specifications ... 168
Technical Specifications ... 169
Power Specifications ... 172

Appendix B

Accessories and Dimensions

Product Selection ... 175
Product Dimensions ... 185
Optional Accessories and Kits ... 198

Appendix C

RS485 (DSI) Protocol

Network Wiring ... 201
Parameter Configuration ... 202
Supported Modbus Function Codes ... 203
Writing (06) Logic Command Data ... 203
Writing (06) Comm Frequency Command ... 205
Reading (03) Logic Status Data ... 205
Reading (03) Drive Error Codes ... 207
Reading (03) Drive Operational Values ... 208
Reading (03) and Writing (06) Drive Parameters ... 208
Additional Information ... 208

Appendix D

Velocity StepLogic, Basic Logic and Timer/Counter Functions

Velocity StepLogic Using Timed Steps 210
Velocity StepLogic Using Basic Logic Functions 210
Timer Function 211
Counter Function 212
Velocity StepLogic Parameters 213

Appendix E

Encoder/Pulse Train Usage and Position StepLogic Application

Encoder and Pulse Train Usage 215
Wiring Notes 216
Determine Encoder Pulse Per Revolution (PPR) Specification Based on Speed Resolution 217
Positioning Overview 218
Common Guidelines for All Applications 218
Positioning Operation 220
Homing Routine 223
Encoder and Position Feedback 224
Use Over Communications 225
Setup Notes 226

Appendix F

PID Set Up

PID Loop 227
PID Reference and Feedback 229
Analog PID Reference Signals 230

Appendix G

Safe-Torque-Off Function

PowerFlex 525 Safe-Torque-Off Overview 235
EC Type Examination Certification 236
EMC Instructions 236
Using PowerFlex 525 Safe-Torque-Off 236
Safety Concept 237
Enabling PowerFlex 525 Safe-Torque-Off 239
Wiring 239
PowerFlex 525 Safe-Torque-Off Operation 239
Verify Operation 240
Connection Examples 241
PowerFlex 525 Certification for Safe-Torque-Off 245

Appendix H

EtherNet/IP

Establishing A Connection With EtherNet/IP 247
Ground Connections for EtherNet/IP Networks 248

Appendix I

Control Diagrams

Induction Motor Tuning Diagrams 249
Adjusting Speed Control Parameters 250

Appendix J

PowerFlex 525 PM Motor Configuration

Download Files 252
Automatic Configuration Using Drive Startup Wizard 254
Manual Configuration Using Drive Keypad 261
Additional PM Motor Configuration 262
Optional Parameter Adjustments for Optimum Performance 266

Index

This manual contains new and updated information.

New and Updated Information

This table contains the changes made to this revision.

Topic	Page
Added footnote to indicate that circuit breaker selection is not available for certain drive ratings.	24...27
Added PowerFlex 523 series B to Control I/O Wiring Block Diagram.	38
Added PowerFlex 523 series B to Control I/O Terminal Designations.	40
Added PowerFlex 523 series B I/O wiring examples for analog input and analog output.	45
Added note to PowerFlex 525 I/O wiring example for pulse train input.	46
Added footnote to enum "4" for P053 [Reset to Defalts] under Smart Start-Up with Basic Program Group Parameters.	67
Added new sub topic for 32-bit parameters.	72
Added footnotes to parameters that are available in PowerFlex 523 FRN 3.xxx and later.	Chapter 3
Updated descriptions for parameters that are available in PowerFlex 523 FRN 3.xxx and later.	
Added formula for calculating scaled process value to parameter b010 [Process Display].	79
Added recommendation to perform rotate tune when using VVC mode to parameter P040 [Autotune].	85
Added footnote to indicate which settings are PowerFlex 525 only for parameter d394 [Dig Out Status].	114
Updated descriptions for parameters A465 [PID 1 Deadband] and A477 [PID 2 Deadband].	123
Added corrective action to fault F114 (uC Failure).	162
Added analog output to PowerFlex 523 drives.	171
Added new topic "Determine Encoder Pulse Per Revolution (PPR) Specification Based on Speed Resolution" to Appendix E.	217
Updated information to verify operation of the safety inputs in Appendix G.	240
General maintenance updates.	Throughout manual

Notes:

Overview

The purpose of this manual is to provide you with the basic information needed to install, start-up and troubleshoot the PowerFlex® 520-Series Adjustable Frequency AC Drive.

For information on…	See page…
Who Should Use this Manual	9
Recommended Documentation	9
Manual Conventions	10
Drive Frame Sizes	11
General Precautions	12
Catalog Number Explanation	13

Who Should Use this Manual

This manual is intended for qualified personnel. You must be able to program and operate Adjustable Frequency AC Drive devices. In addition, you must have an understanding of the parameter settings and functions.

Recommended Documentation

All the recommended documentation listed in this section is available online at http://www.rockwellautomation.com/literature/.

The following publications provide general drive information:

Title	Publication
Wiring and Grounding Guidelines for Pulse Width Modulated (PWM) AC Drives	DRIVES-IN001
Preventive Maintenance of Industrial Control and Drive System Equipment	DRIVES-TD001
Safety Guidelines for the Application, Installation and Maintenance of Solid State Control	SGI-1.1
A Global Reference Guide for Reading Schematic Diagrams	100-2.10
Guarding Against Electrostatic Damage	8000-4.5.2

The following publications provide specific PowerFlex 520-Series information on drive installation, features, specifications, and service:

Title	Publication
PowerFlex 520-Series AC Drive Specifications	520-TD001
PowerFlex Dynamic Braking Resistor Calculator	PFLEX-AT001
PowerFlex AC Drives in Common Bus Configurations	DRIVES-AT002

The following publications provide specific Network Communications information:

Title	Publication
PowerFlex 525 Embedded EtherNet/IP Adapter	520COM-UM001
PowerFlex 25-COMM-D DeviceNet Adapter	520COM-UM002
PowerFlex 25-COMM-E2P Dual-Port EtherNet/IP Adapter	520COM-UM003
PowerFlex 25-COMM-P PROFIBUS DPV1 Adapter	520COM-UM004

Manual Conventions

- In this manual we refer to PowerFlex 520-Series Adjustable Frequency AC Drive as; drive, PowerFlex 520-series, PowerFlex 520-series drive or PowerFlex 520-series AC drive.
- Specific drives within the PowerFlex 520-series may be referred to as:
  – PowerFlex 523, PowerFlex 523 drive or PowerFlex 523 AC drive.
  – PowerFlex 525, PowerFlex 525 drive or PowerFlex 525 AC drive.
- Parameter numbers and names are shown in this format:

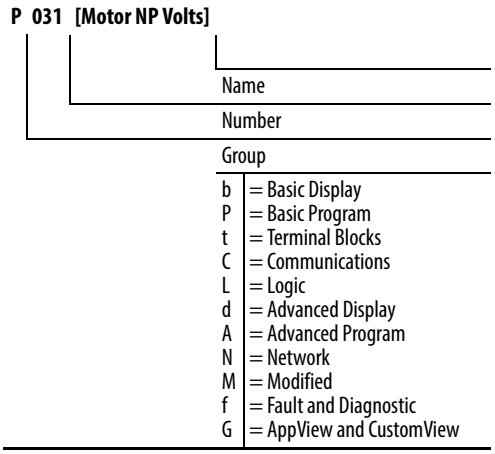

- The following words are used throughout the manual to describe an action:

Words	Meaning
Can	Possible, able to do something
Cannot	Not possible, not able to do something
May	Permitted, allowed
Must	Unavoidable, you must do this
Shall	Required and necessary
Should	Recommended
Should Not	Not Recommended

- The Studio 5000® Engineering and Design Environment combines engineering and design elements into a common environment. The first element in the Studio 5000 environment is the Logix Designer application. The Studio 5000 Logix Designer™ application is the rebranding of RSLogix™ 5000 software and will continue to be the product to program Logix 5000 controllers for discrete, process, batch, motion, safety, and drive-based solutions. The Studio 5000 environment is the foundation for the future of Rockwell Automation engineering design tools and capabilities. It is the one place for design engineers to develop all the elements of their control system.

Drive Frame Sizes

Similar PowerFlex 520-series drive sizes are grouped into frame sizes to simplify spare parts ordering, dimensioning, etc. A cross reference of drive catalog numbers and their respective frame sizes is provided in Appendix B.

General Precautions

ATTENTION: The drive contains high voltage capacitors which take time to discharge after removal of mains supply. After power has been removed from the drive, wait three minutes to make sure DC bus capacitors are discharged. After three minutes, verify AC voltage L1, L2, L3 (Line to Line and Line to Ground) to ensure mains power has been disconnected. Measure DC voltage across DC- and DC+ bus terminals to verify DC Bus has discharged to zero volts. Measure DC voltage from L1, L2, L3, T1, T2, T3 DC – and DC+ terminals to ground and keep the meter on the terminals until the voltage discharges to zero volts. The discharge process may take several minutes to reach zero volts. Darkened display LEDs is not an indication that capacitors have discharged to safe voltage levels.

ATTENTION: Only qualified personnel familiar with adjustable frequency AC drives and associated machinery should plan or implement the installation, start-up and subsequent maintenance of the system. Failure to comply may result in personal injury and/or equipment damage.

ATTENTION: This drive contains ESD (Electrostatic Discharge) sensitive parts and assemblies. Static control precautions are required when installing, testing, servicing or repairing this assembly. Component damage may result if ESD control procedures are not followed. If you are not familiar with static control procedures, reference A-B publication 8000-4.5.2, "Guarding Against Electrostatic Damage" or any other applicable ESD protection handbook.

ATTENTION: An incorrectly applied or installed drive can result in component damage or a reduction in product life. Wiring or application errors, such as undersizing the motor, incorrect or inadequate AC supply, or excessive ambient temperatures may result in malfunction of the system.

ATTENTION: The bus regulator function is extremely useful for preventing nuisance overvoltage faults resulting from aggressive decelerations, overhauling loads, and eccentric loads. However, it can also cause either of the following two conditions to occur.
1. Fast positive changes in input voltage or imbalanced input voltages can cause uncommanded positive speed changes;
2. Actual deceleration times can be longer than commanded deceleration times However, a "Stall Fault" is generated if the drive remains in this state for 1 minute. If this condition is unacceptable, the bus regulator must be disabled (see parameter A550 [Bus Reg Enable]). In addition, installing a properly sized dynamic brake resistor will provide proper stopping requirements based on braking resistor sizing.

ATTENTION: Risk of injury or equipment damage exists. Drive does not contain user-serviceable components. Do not disassemble drive chassis.

Catalog Number Explanation

1-3	4	5	6-8	9	10	11	12	13	14
25B	**–**	**B**	**2P3**	**N**	**1**	**1**	**4**	**–**	**–**
Drive	Dash	Voltage Rating	Rating	Enclosure	Reserved	Emission Class	Reserved	Dash	Dash

Code	Type
25A	PowerFlex 523
25B	PowerFlex 525

Code	Voltage	Phase
V	120V AC	1
A	240V AC	1
B	240V AC	3
D	480V AC	3
E	600V AC	3

Code	Enclosure
N	IP20 NEMA / Open

Code	Interface Module
1	Standard

Code	EMC Filter
0	No Filter
1	Filter

Code	Braking
4	Standard

Output Current @ 1 Phase, 100...120V Input						
Code	Amps	Frame	ND		HD	
			HP	kW	HP	kW
1P6[1]	1.6	A	0.25	0.2	0.25	0.2
2P5	2.5	A	0.5	0.4	0.5	0.4
4P8	4.8	B	1.0	0.75	1.0	0.75
6P0	6.0	B	1.5	1.1	1.5	1.1

Output Current @ 1 Phase, 200...240V Input						
Code	Amps	Frame	ND		HD	
			HP	kW	HP	kW
1P6[1]	1.6	A	0.25	0.2	0.25	0.2
2P5	2.5	A	0.5	0.4	0.5	0.4
4P8	4.8	A	1.0	0.75	1.0	0.75
8P0	8.0	B	2.0	1.5	2.0	1.5
011	11.0	B	3.0	2.2	3.0	2.2

Output Current @ 3Phase, 200...240V Input						
Code	Amps	Frame	ND		HD	
			HP	kW	HP	kW
1P6[1]	1.6	A	0.25	0.2	0.25	0.2
2P5	2.5	A	0.5	0.4	0.5	0.4
5P0	5.0	A	1.0	0.75	1.0	0.75
8P0	8.0	A	2.0	1.5	2.0	1.5
011	11.0	A	3.0	2.2	3.0	2.2
017	17.5	B	5.0	4.0	5.0	4.0
024	24.0	C	7.5	5.5	7.5	5.5
032	32.2	D	10.0	7.5	10.0	7.5
048[2]	48.3	E	15.0	11.0	10.0	7.5
062[2]	62.1	E	20.0	15.0	15.0	11.0

Output Current @ 3 Phase, 380...480V Input						
Code	Amps	Frame	ND		HD	
			HP	kW	HP	kW
1P4	1.4	A	0.5	0.4	0.5	0.4
2P3	2.3	A	1.0	0.75	1.0	0.75
4P0	4.0	A	2.0	1.5	2.0	1.5
6P0	6.0	A	3.0	2.2	3.0	2.2
010	10.5	B	5.0	4.0	5.0	4.0
013	13.0	C	7.5	5.5	7.5	5.5
017	17.0	C	10.0	7.5	10.0	7.5
024	24.0	D	15.0	11.0	15.0	11.0
030[2]	30.0	D	20.0	15.0	15.0	11.0
037[2]	37.0	E	25.0	18.5	20.0	15.0
043[2]	43.0	E	30.0	22.0	25.0	18.5

Output Current @ 3 Phase, 525...600V Input						
Code	Amps	Frame	ND		HD	
			HP	kW	HP	kW
0P9	0.9	A	0.5	0.4	0.5	0.4
1P7	1.7	A	1.0	0.75	1.0	0.75
3P0	3.0	A	2.0	1.5	2.0	1.5
4P2	4.2	A	3.0	2.2	3.0	2.2
6P6	6.6	B	5.0	4.0	5.0	4.0
9P9	9.9	C	7.5	5.5	7.5	5.5
012	12.0	C	10.0	7.5	10.0	7.5
019	19.0	D	15.0	11.0	15.0	11.0
022[2]	22.0	D	20.0	15.0	15.0	11.0
027[2]	27.0	E	25.0	18.5	20.0	15.0
032[2]	32.0	E	30.0	22.0	25.0	18.5

(1) This rating is only available for PowerFlex 523 drives.

(2) Normal and Heavy Duty ratings are available for this drive.

Notes:

Installation/Wiring

This chapter provides information on mounting and wiring the PowerFlex 520-series drives.

For information on...	See page...
Mounting Considerations	15
AC Supply Source Considerations	19
General Grounding Requirements	20
Fuses and Circuit Breakers	23
Power and Control Module	28
Control Module Cover	31
Power Module Terminal Guard	31
Power Wiring	32
Power Terminal Block	35
Common Bus/Precharge Notes	36
I/O Wiring	36
Control I/O Terminal Block	37
Start and Speed Reference Control	49
CE Conformity	52

Most start-up difficulties are the result of incorrect wiring. Every precaution must be taken to assure that the wiring is done as instructed. All items must be read and understood before the actual installation begins.

ATTENTION: The following information is merely a guide for proper installation. Rockwell Automation cannot assume responsibility for the compliance or the noncompliance to any code, national, local or otherwise for the proper installation of this drive or associated equipment. A hazard of personal injury and/or equipment damage exists if codes are ignored during installation.

Mounting Considerations

- Mount the drive upright on a flat, vertical and level surface.

Frame	Screw Size	Screw Torque
A	M5 (#10...24)	1.56...1.96 Nm (14...17 lb-in.)
B	M5 (#10...24)	1.56...1.96 Nm (14...17 lb-in.)
C	M5 (#10...24)	1.56...1.96 Nm (14...17 lb-in.)
D	M5 (#10...24)	2.45...2.94 Nm (22...26 lb-in.)
E	M8 (5/16 in.)	6.0...7.4 Nm (53...65 lb-in.)

- Protect the cooling fan by avoiding dust or metallic particles.

- Do not expose to a corrosive atmosphere.
- Protect from moisture and direct sunlight.

Minimum Mounting Clearances

See Appendix B for mounting dimensions.

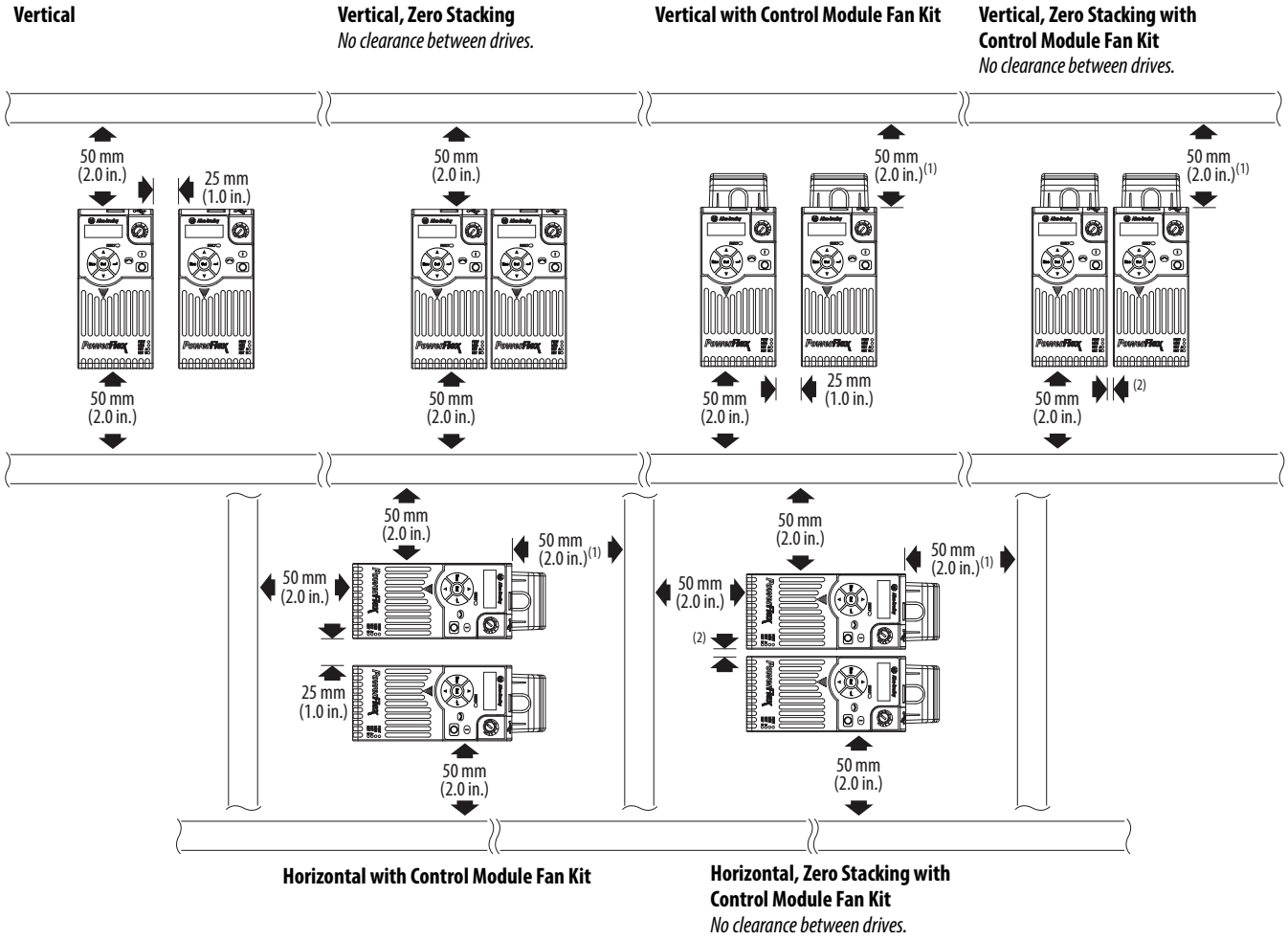

(1) For Frame E with Control Module Fan Kit only, clearance of 95 mm (3.7 in.) is required.
(2) For Frame E with Control Module Fan Kit only, clearance of 12 mm (0.5 in.) is required.

Ambient Operating Temperatures

See Appendix B for option kits.

Mounting	Enclosure Rating[1]	Ambient Temperature			
		Minimum	Maximum (No Derate)	Maximum (Derate)[2]	Maximum with Control Module Fan Kit (Derate)[3][5]
Vertical	IP 20/Open Type	-20 °C (-4 °F)	50 °C (122 °F)	60 °C (140 °F)	70 °C (158 °F)
	IP 30/NEMA 1/UL Type 1		45 °C (113 °F)	55 °C (131 °F)	–
Vertical, Zero Stacking	IP 20/Open Type		45 °C (113 °F)	55 °C (131 °F)	65 °C (149 °F)
	IP 30/NEMA 1/UL Type 1		40 °C (104 °F)	50 °C (122 °F)	–
Horizontal with Control Module Fan Kit[4][5]	IP 20/Open Type		50 °C (122 °F)	–	70 °C (158 °F)
Horizontal, Zero Stacking with Control Module Fan Kit[4][5]	IP 20/Open Type		45 °C (113 °F)	–	65 °C (149 °F)

(1) IP 30/NEMA 1/UL Type 1 rating requires installation of the PowerFlex 520-Series IP 30/NEMA 1/UL Type 1 option kit, catalog number 25-JBAx.
(2) For catalogs 25x-D1P4N104 and 25x-E0P9N104, the temperature listed under the Maximum (Derate) column is reduced by 5 °C (9 °F) for all mounting methods.
(3) For catalogs 25x-D1P4N104 and 25x-E0P9N104, the temperature listed under the Maximum with Control Module Fan Kit (Derate) column is reduced by 10 °C (18 °F) for vertical and vertical with zero stacking mounting methods only.
(4) Catalogs 25x-D1P4N104 and 25x-E0P9N104 cannot be mounted using either of the horizontal mounting methods.
(5) Requires installation of the PowerFlex 520-Series Control Module Fan Kit, catalog number 25-FANx-70C.

Current Derating Curves

Vertical Mounting

Single Drive

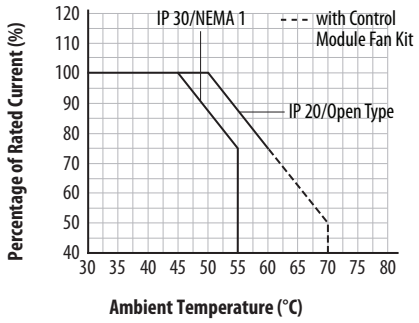

Zero Stacking

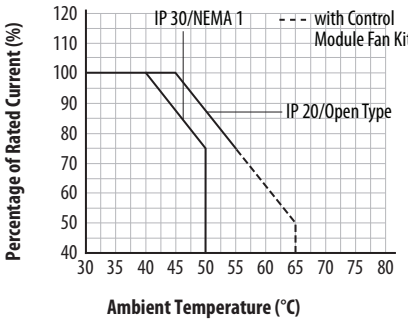

Horizontal/Floor Mounting

Single Drive

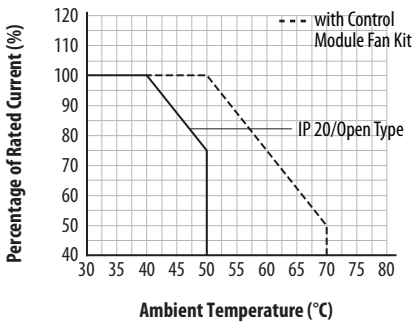

Zero Stacking

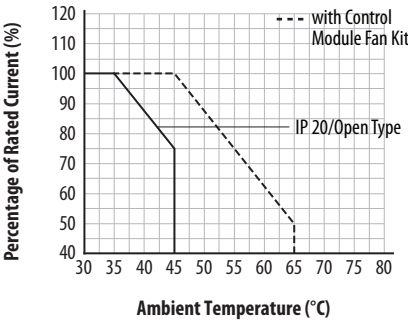

Derating Guidelines for High Altitude

The drive can be used without derating at a maximum altitude of 1000 m (3300 ft). If the drive is used above 1000 m (3300 ft):

- Derate the maximum ambient temperature by 5 °C (9 °F) for every additional 1000 m (3300 ft), subject to limits listed in the Altitude Limit (Based on Voltage) table below.
  Or
- Derate the output current by 10% for every additional 1000 m (3300 ft), up to 3000 m (9900 ft), subject to limits listed in the Altitude Limit (Based on Voltage) table below.

Altitude Limit (Based on Voltage)

Drive Rating	Center Ground (Wye Neutral)	Corner Ground, Impedance Ground, or Ungrounded
100...120V 1-Phase	6000 m	6000 m
200...240V 1-Phase	2000 m	2000 m
200...240V 3-Phase	6000 m	2000 m
380...480V 3-Phase	4000 m	2000 m
525...600V 3-Phase	2000 m	2000 m

High Altitude

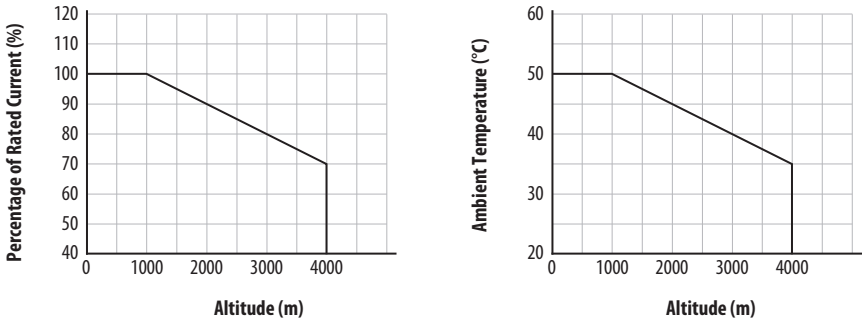

Debris Protection

Take precautions to prevent debris from falling through the vents of the drive housing during installation.

Storage

- Store within an ambient temperature range of -40...85°C(1).
- Store within a relative humidity range of 0...95%, noncondensing.
- Do not expose to a corrosive atmosphere.

(1) The maximum ambient temperature for storing a Frame E drive is 70 °C.

AC Supply Source Considerations

Ungrounded Distribution Systems

ATTENTION: PowerFlex 520-series drives contain protective MOVs that are referenced to ground. These devices must be disconnected if the drive is installed on an ungrounded or resistive grounded distribution system.

ATTENTION: Removing MOVs in drives with an embedded filter will also disconnect the filter capacitor from earth ground.

Disconnecting MOVs

To prevent drive damage, the MOVs connected to ground shall be disconnected if the drive is installed on an ungrounded distribution system (IT mains) where the line-to-ground voltages on any phase could exceed 125% of the nominal line-to-line voltage. To disconnect these devices, remove the jumper shown in the diagrams below.

1. Turn the screw counterclockwise to loosen.
2. Pull the jumper completely out of the drive chassis.
3. Tighten the screw to keep it in place.

Jumper Location (Typical)

Power Module

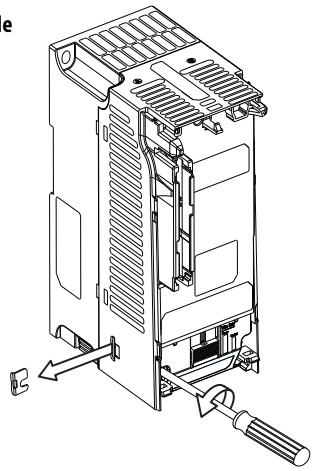

IMPORTANT Tighten screw after jumper removal.

Phase to Ground MOV Removal

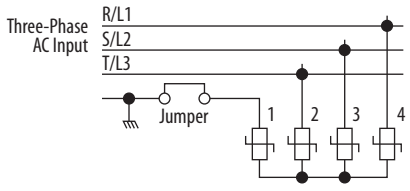

Input Power Conditioning

The drive is suitable for direct connection to input power within the rated voltage of the drive (see page 169). Listed in the Input Power Conditions table below are certain input power conditions which may cause component damage or reduction in product life. If any of these conditions exist, install one of the devices listed under the heading Corrective Action on the line side of the drive.

IMPORTANT Only one device per branch circuit is required. It should be mounted closest to the branch and sized to handle the total current of the branch circuit.

Input Power Conditions

Input Power Condition	Corrective Action
Low Line Impedance (less than 1% line reactance)	• Install Line Reactor(2) • or Isolation Transformer
Greater than 120 kVA supply transformer	
Line has power factor correction capacitors	• Install Line Reactor(2) • or Isolation Transformer
Line has frequent power interruptions	
Line has intermittent noise spikes in excess of 6000V (lightning)	
Phase to ground voltage exceeds 125% of normal line to line voltage	• Remove MOV jumper to ground. • or Install Isolation Transformer with grounded secondary if necessary.
Ungrounded distribution system	
B-phase grounded distribution system	
240V open delta configuration (stinger leg)(1)	• Install Line Reactor(2)

(1) For drives applied on an open delta with a middle phase grounded neutral system, the phase opposite the phase that is tapped in the middle to the neutral or earth is referred to as the "stinger leg," "high leg," "red leg," etc. This leg should be identified throughout the system with red or orange tape on the wire at each connection point. The stinger leg should be connected to the center Phase B on the reactor. See Bulletin 1321-3R Series Line Reactors on page 183 for specific line reactor part numbers.

(2) See Appendix B for accessory ordering information.

General Grounding Requirements

The drive Safety Ground - ⏚ (PE) must be connected to system ground. Ground impedance must conform to the requirements of national and local industrial safety regulations and/or electrical codes. The integrity of all ground connections should be periodically checked.

Typical Grounding

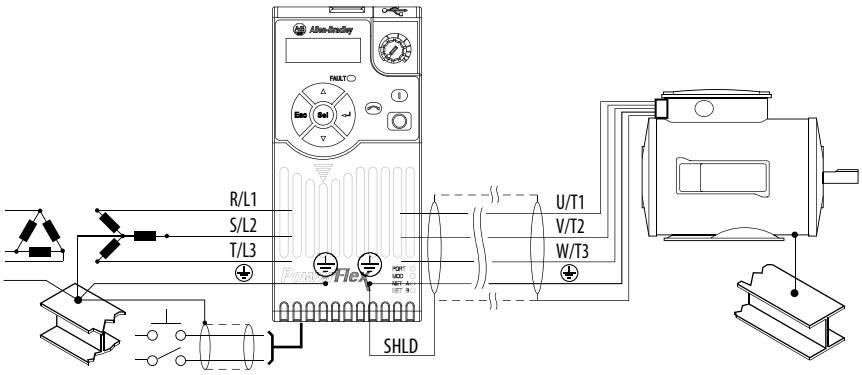

Ground Fault Monitoring

If a system ground fault monitor (RCD) is to be used, only Type B (adjustable) devices should be used to avoid nuisance tripping.

Safety Ground - ⏚ (PE)

This is the safety ground for the drive that is required by code. One of these points must be connected to adjacent building steel (girder, joist), a floor ground rod or bus bar. Grounding points must comply with national and local industrial safety regulations and/or electrical codes.

Network Ground

Connect terminal C1 to a clean earth ground when using a network with a star topology (EtherNet/IP) or daisy-chain (RS485). It is acceptable to ground both C1 and C2 terminals.

Connect terminal CS1 or CS2 to a clean ground when using a network with a ring topology (EtherNet/IP).

For more information on EtherNet/IP networks, see Ground Connections for EtherNet/IP Networks on page 248.

For more information on RS485 networks, see Network Wiring on page 201.

Motor Ground

The motor ground must be connected to one of the ground terminals on the drive.

Shield Termination - SHLD

Either of the safety ground terminals located on the power terminal block provides a grounding point for the motor cable shield. The **motor cable** shield connected to one of these terminals (drive end) should also be connected to the motor frame (motor end). Use a shield terminating or EMI clamp to connect the shield to the safety ground terminal. The earthing plate or conduit box option may be used with a cable clamp for a grounding point for the cable shield.

When shielded cable is used for **control and signal wiring**, the shield should be grounded at the source end only, not at the drive end.

RFI Filter Grounding

Using a drive with filter may result in relatively high ground leakage currents. Therefore, the **filter must only be used in installations with grounded AC supply systems and be permanently installed and solidly grounded** (bonded) to the building power distribution ground. Ensure that the incoming supply neutral is solidly connected (bonded) to the same building power distribution ground. Grounding must not rely on flexible cables and should not include any form of plug or socket that would permit inadvertent disconnection. Some local codes may require redundant ground connections. The integrity of all connections should be periodically checked.

Fuses and Circuit Breakers

The PowerFlex 520-series drive does not provide branch short circuit protection. This product should be installed with either input fuses or an input circuit breaker. National and local industrial safety regulations and/or electrical codes may determine additional requirements for these installations.

The tables found on pages 24...27 provide recommended AC line input fuse and circuit breaker information. See Fusing and Circuit Breakers below for UL and IEC requirements. Sizes listed are the recommended sizes based on 40 °C (104 °F) and the U.S. N.E.C. Other country, state or local codes may require different ratings.

Fusing

The recommended fuse types are listed in the tables found on pages 24...27. If available current ratings do not match those listed in the tables provided, choose the next higher fuse rating.

- IEC – BS88 (British Standard) Parts 1 & 2(1), EN60269-1, Parts 1 & 2, type GG or equivalent should be used.
- UL – UL Class CC, T, RK1, or J should be used.

Circuit Breakers

The "non-fuse" listings in the tables found on pages 24...27 include inverse time circuit breakers, instantaneous trip circuit breakers (motor circuit protectors) and 140M self-protected combination motor controllers. If one of these is chosen as the desired protection method, the following requirements apply:

- IEC – Both types of circuit breakers and 140M self-protected combination motor controllers are acceptable for IEC installations.
- UL – Only inverse time circuit breakers and the specified 140M self-protected combination motor controllers are acceptable for UL installations.

Bulletin 140M (Self-Protected Combination Controller)/UL489 Circuit Breakers

When using Bulletin 140M or UL489 rated circuit breakers, the guidelines listed below must be followed in order to meet the NEC requirements for branch circuit protection.

- Bulletin 140M can be used in single motor applications.
- Bulletin 140M can be used up stream from the drive **without** the need for fuses.

(1) Typical designations include, but may not be limited to the following; Parts 1 & 2: AC, AD, BC, BD, CD, DD, ED, EFS, EF, FF, FG, GF, GG, GH.

Fuses and Circuit Breakers for PowerFlex 520-Series Drives

100...120V 1-Phase Input Protection Devices – Frames A...B

Catalog No.		Output Ratings					Input Ratings		Frame Size	Contactor Catalog No.	IEC Applications (Non-UL)				UL Applications			
PF 523	PF 525	ND		HD		Amps	kVA	Max Amps[1]			Fuses (Rating)		Circuit Breakers		Fuses (Max. Rating)	Circuit Breakers		Min. Enclosure Vol. (in.^{3})
		HP	kW	HP	kW						Min.	Max.	140U/140G	140M	Class / Catalog No.	140U/140G	140M[2][3][4]	
25A-V1P6N104	–	0.25	0.2	0.25	0.2	1.6	0.8	6.4	A	100-C09	10	16	140U-D6D2-B80	140M-C2E-B63	CLASS RK5, CC, J, or T / DLS-R-15	140U-D6D2-B80	140M-C2E-B63	–
25A-V2P5N104	25B-V2P5N104	0.5	0.4	0.5	0.4	2.5	1.3	9.6	A	100-C12	16	20	140U-D6D2-C12	140M-C2E-C10	CLASS RK5, CC, J, or T / DLS-R-20	140U-D6C2-C12	140M-C2E-C10	–
25A-V4P8N104	25B-V4P8N104	1.0	0.75	1.0	0.75	4.8	2.5	19.2	B	100-C23	25	40	140U-D6D2-C25	140M-D8E-C20	CLASS RK5, CC, J, or T / DLS-R-40	140U-D6D2-C25	140M-D8E-C20	–
25A-V6P0N104	25B-V6P0N104	1.5	1.1	1.5	1.1	6.0	3.2	24.0	B	100-C23	32	50	140U-D6D2-C30	140M-F8E-C25	CLASS RK5, CC, J, or T / DLS-R-50	140U-D6D2-C30	140M-F8E-C25	–

200...240V 1-Phase Input Protection Devices – Frames A...B

Catalog No.		Output Ratings					Input Ratings		Frame Size	Contactor Catalog No.	IEC Applications (Non-UL)				UL Applications			
PF 523	PF 525	ND		HD		Amps	kVA	Max Amps[1]			Fuses (Rating)		Circuit Breakers		Fuses (Max. Rating)	Circuit Breakers		Min. Enclosure Vol. (in.^{3})
		HP	kW	HP	kW						Min.	Max.	140U/140G	140M	Class / Catalog No.	140U/140G	140M[2][3][4]	
25A-A1P6N104	–	0.25	0.2	0.25	0.2	1.6	1.4	5.3	A	100-C09	6	10	140U-D6D2-C10	140M-C2E-B63	CLASS RK5, CC, J, or T / DLS-R-15	140U-D6D2-C10	140M-C2E-B63	–
25A-A1P6N114	–	0.25	0.2	0.25	0.2	1.6	1.4	5.3	A	100-C09	6	10	140U-D6D2-C10	140M-C2E-B63	CLASS RK5, CC, J, or T / DLS-R-15	140U-D6D2-C10	140M-C2E-B63	–
25A-A2P5N104	25B-A2P5N104	0.5	0.4	0.5	0.4	2.5	1.7	6.5	A	100-C09	10	16	140U-D6D2-C10	140M-C2E-C10	CLASS RK5, CC, J, or T / DLS-R-15	140U-D6D2-C10	140M-C2E-C10	–
25A-A2P5N114	25B-A2P5N114	0.5	0.4	0.5	0.4	2.5	1.7	6.5	A	100-C09	10	16	140U-D6D2-C10	140M-C2E-C10	CLASS RK5, CC, J, or T / DLS-R-15	140U-D6D2-C10	140M-C2E-C10	–
25A-A4P8N104	25B-A4P8N104	1.0	0.75	1.0	0.75	4.8	2.8	10.7	A	100-C12	16	25	140U-D6D2-C15	140M-C2E-C16	CLASS RK5, CC, J, or T / DLS-R-25	140U-D6D2-C15	140M-C2E-C16	–
25A-A4P8N114	25B-A4P8N114	1.0	0.75	1.0	0.75	4.8	2.8	10.7	A	100-C12	16	25	140U-D6D2-C15	140M-C2E-C16	CLASS RK5, CC, J, or T / DLS-R-25	140U-D6D2-C15	140M-C2E-C16	–
25A-A8P0N104	25B-A8P0N104	2.0	1.5	2.0	1.5	8.0	4.8	18.0	B	100-C23	25	40	140U-D6D2-C25	140M-F8E-C25	CLASS CC, J, or T / 40	140U-D6D2-C25	140M-F8E-C25	–
25A-A8P0N114	25B-A8P0N114	2.0	1.5	2.0	1.5	8.0	4.8	18.0	B	100-C23	25	40	140U-D6D2-C25	140M-F8E-C25	CLASS CC, J, or T / 40	140U-D6D2-C25	140M-F8E-C25	–
25A-A011N104	25B-A011N104	3.0	2.2	3.0	2.2	11.0	6.0	22.9	B	100-C37	32	50	140G-G6C3-C35	140M-F8E-C25	CLASS CC, J, or T / 50	–[5]	140M-F8E-C25	–
25A-A011N114	25B-A011N114	3.0	2.2	3.0	2.2	11.0	6.0	22.9	B	100-C37	32	50	140G-G6C3-C35	140M-F8E-C25	CLASS CC, J, or T / 50	–[5]	140M-F8E-C25	–

(1) When the drive is controlling motors with lower amp ratings, refer to the drive nameplate for drive input current rating.

(2) The AIC ratings of the Bulletin 140M Motor Protector Circuit Breakers may vary. See Bulletin 140M Motor Protection Circuit Breakers Application Ratings.

(3) Bulletin 140M with adjustable current range should have the current trip set to the minimum range that the device will not trip.

(4) Manual Self-Protected (Type E) Combination Motor Controller, UL listed for 480Y/277 and 600Y/347 AC input. Not UL listed for use on 480V or 600V Delta/Delta, corner ground, or high-resistance ground systems.

(5) Circuit breaker selection is not available for this drive rating.

Fuses and Circuit Breakers for PowerFlex 520-Series Drives *(continued)*

200...240V 3-Phase Input Protection Devices – Frames A...E

Catalog No.[1]		Output Ratings					Input Ratings		Frame Size	Contactor Catalog No.	IEC Applications (Non-UL)				UL Applications			
PF 523	PF 525	ND		HD		Amps	kVA	Max Amps[2]			Fuses (Rating)		Circuit Breakers		Fuses (Max. Rating)	Circuit Breakers		Min. Enclosure Vol. (in.^{3})
		HP	kW	HP	kW						Min.	Max.	140U/140G	140M	Class / Catalog No.	140U/140G	140M[3][4][5]	
25A-B1P6N104	–	0.25	0.2	0.25	0.2	1.6	0.9	1.9	A	100-C09	3	6	140U-D6D3-B30	140M-C2E-B25	CLASS RK5, CC, J, or T / DLS-R-15	140U-D6D3-B30	140M-C2E-B25	–
25A-B2P5N104	25B-B2P5N104	0.5	0.4	0.5	0.4	2.5	1.2	2.7	A	100-C09	6	6	140U-D6D3-B40	140M-C2E-B40	CLASS RK5, CC, J, or T / DLS-R-6	140U-D6D3-B40	140M-C2E-B40	–
25A-B5P0N104	25B-B5P0N104	1.0	0.75	1.0	0.75	5.0	2.7	5.8	A	100-C09	10	16	140U-D6D3-B80	140M-C2E-B63	CLASS RK5, CC, J, or T / DLS-R-15	140U-D6D3-B80	140M-C2E-B63	–
25A-B8P0N104	25B-B8P0N104	2.0	1.5	2.0	1.5	8.0	4.3	9.5	A	100-C12	16	20	140U-D6D3-C10	140M-C2E-C10	CLASS RK5, CC, J, or T / DLS-R-20	140U-D6D3-C10	140M-C2E-C10	–
25A-B011N104	25B-B011N104	3.0	2.2	3.0	2.2	11.0	6.3	13.8	A	100-C23	20	32	140U-D6D3-C15	140M-C2E-C16	CLASS RK5, CC, J, or T / DLS-R-30	140U-D6D3-C15	140M-C2E-C16	–
25A-B017N104	25B-B017N104	5.0	4.0	5.0	4.0	17.5	9.6	21.1	B	100-C23	32	45	140U-D6D3-C25	140M-F8E-C25	CLASS CC, J, or T / 45	140U-D6D3-C25	140M-F8E-C25	–
25A-B024N104	25B-B024N104	7.5	5.5	7.5	5.5	24.0	12.2	26.6	C	100-C37	35	63	140G-G6C3-C35	140M-F8E-C32	CLASS CC, J, or T / 60	–[7]	140M-F8E-C32	–
25A-B032N104	25B-B032N104	10.0	7.5	10.0	7.5	32.2	15.9	34.8	D	100-C43	45	70	140G-G6C3-C60	140M-F8E-C45	CLASS RK5, CC, J, or T / DLS-R-70	–[7]	140M-F8E-C45	–
25A-B048N104	25B-B048N104	15.0	11.0	10.0	7.5	48.3	20.1	44.0	E	100-C60	63	90	140G-G6C3-C70	140M-F8E-C45	CLASS CC, J, or T / 90	–[7]	140M-F8E-C45	1416.0[6]
25A-B062N104	25B-B062N104	20.0	15.0	15.0	11.0	62.1	25.6	56.0	E	100-C72	70	125	140G-G6C3-C90	–[7]	CLASS CC, J, or T / 125	–[7]	–[7]	–

(1) Normal Duty (ND) and Heavy Duty (HD) ratings are available for this drive.

(2) When the drive is controlling motors with lower amp ratings, refer to the drive nameplate for drive input current rating.

(3) The AIC ratings of the Bulletin 140M Motor Protector Circuit Breakers may vary. See Bulletin 140M Motor Protection Circuit Breakers Application Ratings.

(4) Bulletin 140M with adjustable current range should have the current trip set to the minimum range that the device will not trip.

(5) Manual Self-Protected (Type E) Combination Motor Controller, UL listed for 480Y/277 and 600Y/347 AC input. Not UL listed for use on 480V or 600V Delta/Delta, corner ground, or high-resistance ground systems.

(6) When using a Manual Self-Protected (Type E) Combination Motor Controller with this drive power rating, the drive must be installed in a ventilated or non-ventilated enclosure with the minimum volume specified in this column. Application specific thermal considerations may require a larger enclosure.

(7) Circuit breaker selection is not available for this drive rating.

Fuses and Circuit Breakers for PowerFlex 520-Series Drives *(continued)*

380...480V 3-Phase Input Protection Devices – Frames A...E

Catalog No.[1]		Output Ratings					Input Ratings		Frame Size	Contactor Catalog No.	IEC Applications (Non-UL)				UL Applications			
PF 523	PF 525	ND		HD		Amps	kVA	Max Amps[2]			Fuses (Rating)		Circuit Breakers		Fuses (Max. Rating)	Circuit Breakers		Min. Enclosure Vol. (in.^{3})
		HP	kW	HP	kW						Min.	Max.	140U/140G	140M	Class / Catalog No.	140U/140G	140M[3][4][5]	
25A-D1P4N104	25B-D1P4N104	0.5	0.4	0.5	0.4	1.4	1.7	1.9	A	100-C09	3	6	140U-D6D3-B30	140M-C2E-B25	CLASS RK5, CC, J, or T / DLS-R-6	–[7]	140M-C2E-B25	–
25A-D1P4N114	25B-D1P4N114	0.5	0.4	0.5	0.4	1.4	1.7	1.9	A	100-C09	3	6	140U-D6D3-B30	140M-C2E-B25	CLASS RK5, CC, J, or T / DLS-R-6	–[7]	140M-C2E-B25	–
25A-D2P3N104	25B-D2P3N104	1.0	0.75	1.0	0.75	2.3	2.9	3.2	A	100-C09	6	10	140U-D6D3-B60	140M-C2E-B40	CLASS RK5, CC, J, or T / DLS-R-10	–[7]	140M-C2E-B40	–
25A-D2P3N114	25B-D2P3N114	1.0	0.75	1.0	0.75	2.3	2.9	3.2	A	100-C09	6	10	140U-D6D3-B60	140M-C2E-B40	CLASS RK5, CC, J, or T / DLS-R-10	–[7]	140M-C2E-B40	–
25A-D4P0N104	25B-D4P0N104	2.0	1.5	2.0	1.5	4.0	5.2	5.7	A	100-C09	10	16	140U-D6D3-B60	140M-C2E-B63	CLASS RK5, CC, J, or T / DLS-R-15	–[7]	140M-C2E-B63	–
25A-D4P0N114	25B-D4P0N114	2.0	1.5	2.0	1.5	4.0	5.2	5.7	A	100-C09	10	16	140U-D6D3-B60	140M-C2E-B63	CLASS RK5, CC, J, or T / DLS-R-15	–[7]	140M-C2E-B63	–
25A-D6P0N104	25B-D6P0N104	3.0	2.2	3.0	2.2	6.0	6.9	7.5	A	100-C09	10	16	140U-D6D3-C10	140M-C2E-C10	CLASS RK5, CC, J, or T / DLS-R-15	–[7]	140M-C2E-C10	–
25A-D6P0N114	25B-D6P0N114	3.0	2.2	3.0	2.2	6.0	6.9	7.5	A	100-C09	10	16	140U-D6D3-C10	140M-C2E-C10	CLASS RK5, CC, J, or T / DLS-R-15	–[7]	140M-C2E-C10	–
25A-D010N104	25B-D010N104	5.0	4.0	5.0	4.0	10.5	12.6	13.8	B	100-C23	20	32	140U-D6D3-C15	140M-C2E-C16	CLASS RK5, CC, J, or T / DLS-R-30	–[7]	140M-C2E-C16	–
25A-D010N114	25B-D010N114	5.0	4.0	5.0	4.0	10.5	12.6	13.8	B	100-C23	20	32	140U-D6D3-C15	140M-C2E-C16	CLASS RK5, CC, J, or T / DLS-R-30	–[7]	140M-C2E-C16	–
25A-D013N104	25B-D013N104	7.5	5.5	7.5	5.5	13.0	14.1	15.4	C	100-C23	20	35	140U-D6D3-C25	140M-D8E-C20	CLASS CC, J, or T / 35	–[7]	140M-D8E-C20	–
25A-D013N114	25B-D013N114	7.5	5.5	7.5	5.5	13.0	14.1	15.4	C	100-C23	20	35	140U-D6D3-C25	140M-D8E-C20	CLASS CC, J, or T / 35	–[7]	140M-D8E-C20	–
25A-D017N104	25B-D017N104	10.0	7.5	10.0	7.5	17.0	16.8	18.4	C	100-C23	25	40	140U-D6D3-C25	140M-D8E-C20	CLASS CC, J, or T / 40	–[7]	140M-D8E-C20	–
25A-D017N114	25B-D017N114	10.0	7.5	10.0	7.5	17.0	16.8	18.4	C	100-C23	25	40	140U-D6D3-C25	140M-D8E-C20	CLASS CC, J, or T / 40	–[7]	140M-D8E-C20	–
25A-D024N104	25B-D024N104	15.0	11.0	15.0	11.0	24.0	24.1	26.4	D	100-C37	35	63	140G-G6C3-C40	140M-F8E-C32	CLASS CC, J, or T / 60	–[7]	140M-F8E-C32	656.7[6]
25A-D024N114	25B-D024N114	15.0	11.0	15.0	11.0	24.0	24.1	26.4	D	100-C37	35	63	140G-G6C3-C40	140M-F8E-C32	CLASS CC, J, or T / 60	–[7]	140M-F8E-C32	656.7[6]
25A-D030N104	25B-D030N104	20.0	15.0	15.0	11.0	30.0	30.2	33.0	D	100-C43	45	70	140G-G6C3-C50	140M-F8E-C45	CLASS CC, J, or T / 70	–[7]	140M-F8E-C45	656.7[6]
25A-D030N114	25B-D030N114	20.0	15.0	15.0	11.0	30.0	30.2	33.0	D	100-C43	45	70	140G-G6C3-C50	140M-F8E-C45	CLASS CC, J, or T / 70	–[7]	140M-F8E-C45	656.7[6]
25A-D037N114	25B-D037N114	25.0	18.5	20.0	15.0	37.0	30.8	33.7	E	100-C43	45	70	140G-G6C3-C50	140M-F8E-C45	CLASS CC, J, or T / 70	–[7]	140M-F8E-C45	–
25A-D043N114	25B-D043N114	30.0	22.0	25.0	18.5	43.0	35.6	38.9	E	100-C60	50	80	140G-G6C3-C60	140M-F8E-C45	CLASS CC, J, or T / 80	–[7]	140M-F8E-C45	–

(1) Normal Duty (ND) and Heavy Duty (HD) ratings are available for this drive.

(2) When the drive is controlling motors with lower amp ratings, refer to the drive nameplate for drive input current rating.

(3) The AIC ratings of the Bulletin 140M Motor Protector Circuit Breakers may vary. See Bulletin 140M Motor Protection Circuit Breakers Application Ratings.

(4) Bulletin 140M with adjustable current range should have the current trip set to the minimum range that the device will not trip.

(5) Manual Self-Protected (Type E) Combination Motor Controller, UL listed for 480Y/277 and 600Y/347 AC input. Not UL listed for use on 480V or 600V Delta/Delta, corner ground, or high-resistance ground systems.

(6) When using a Manual Self-Protected (Type E) Combination Motor Controller with this drive power rating, the drive must be installed in a ventilated or non-ventilated enclosure with the minimum volume specified in this column. Application specific thermal considerations may require a larger enclosure.

(7) Circuit breaker selection is not available for this drive rating.

Fuses and Circuit Breakers for PowerFlex 520-Series Drives *(continued)*

525...600V 3-Phase Input Protection Devices – Frames A...E

Catalog No.[1]		Output Ratings					Input Ratings		Frame Size	Contactor Catalog No.	IEC Applications (Non-UL)				UL Applications			
PF 523	PF 525	ND		HD		Amps	kVA	Max Amps[2]			Fuses (Rating)		Circuit Breakers		Fuses (Max. Rating)	Circuit Breakers		Min. Enclosure Vol. (in.^{3})
		HP	kW	HP	kW						Min.	Max.	140U/140G	140M	Class / Catalog No.	140U/140G	140M[3][4][5]	
25A-E0P9N104	25B-E0P9N104	0.5	0.4	0.5	0.4	0.9	1.4	1.2	A	100-C09	3	6	140U-D6D3-B20	140M-C2E-B25	CLASS RK5, CC, J, or T / DLS-R-6	–[8]	140M-C2E-B25	–
25A-E1P7N104	25B-E1P7N104	1.0	0.75	1.0	0.75	1.7	2.6	2.3	A	100-C09	3	6	140U-D6D3-B30	140M-C2E-B25	CLASS RK5, CC, J, or T / DLS-R-6	–[8]	140M-C2E-B25	–
25A-E3P0N104	25B-E3P0N104	2.0	1.5	2.0	1.5	3.0	4.3	3.8	A	100-C09	6	10	140U-D6D3-B50	140M-C2E-B40	CLASS RK5, CC, J, or T / DLS-R-10	–[8]	140M-C2E-B40	–
25A-E4P2N104	25B-E4P2N104	3.0	2.2	3.0	2.2	4.2	6.1	5.3	A	100-C09	10	16	140U-D6D3-B80	140M-C2E-B63	CLASS RK5, CC, J, or T / DLS-R-15	–[8]	140M-D8E-B63	–
25A-E6P6N104	25B-E6P6N104	5.0	4.0	5.0	4.0	6.6	9.1	8.0	B	100-C09	10	20	140U-D6D3-C10	140M-C2E-C10	CLASS RK5, CC, J, or T / DLS-R-20	–[8]	140M-D8E-C10	–
25A-E9P9N104	25B-E9P9N104	7.5	5.5	7.5	5.5	9.9	12.8	11.2	C	100-C16	16	25	140U-D6D3-C15	140M-C2E-C16	CLASS RK5, CC, J, or T / DLS-R-25	–[8]	140M-D8E-C16[6]	–
25A-E012N104	25B-E012N104	10.0	7.5	10.0	7.5	12.0	15.4	13.5	C	100-C23	20	32	140U-D6D3-C20	140M-C2E-C16	CLASS RK5, CC, J, or T / DLS-R-30	–[8]	140M-D8E-C16	–
25A-E019N104	25B-E019N104	15.0	11.0	15.0	11.0	19.0	27.4	24.0	D	100-C30	32	50	140G-G6C3-C30	140M-F8E-C25	CLASS CC, J, or T / 50	–[8]	140M-F8E-C25	656.7[7]
25A-E022N104	25B-E022N104	20.0	15.0	15.0	11.0	22.0	31.2	27.3	D	100-C30	35	63	140G-G6C3-C35	140M-F8E-C32	CLASS CC, J, or T / 60	–[8]	140M-F8E-C32	656.7[7]
25A-E027N104	25B-E027N104	25.0	18.5	20.0	15.0	27.0	28.2	24.7	E	100-C30	35	50	140G-G6C3-C35	140M-F8E-C32	CLASS CC, J, or T / 50	–[8]	140M-F8E-C32	1416.0[7]
25A-E032N104	25B-E032N104	30.0	22.0	25.0	18.5	32.0	33.4	29.2	E	100-C37	40	63	140G-G6C3-C50	140M-F8E-C32	CLASS CC, J, or T / 60	–[8]	140M-F8E-C32	1416.0[7]

(1) Normal Duty (ND) and Heavy Duty (HD) ratings are available for this drive.
(2) When the drive is controlling motors with lower amp ratings, refer to the drive nameplate for drive input current rating.
(3) The AIC ratings of the Bulletin 140M Motor Protector Circuit Breakers may vary. See Bulletin 140M Motor Protection Circuit Breakers Application Ratings.
(4) Bulletin 140M with adjustable current range should have the current trip set to the minimum range that the device will not trip.
(5) Manual Self-Protected (Type E) Combination Motor Controller, UL listed for 480Y/277 and 600Y/347 AC input. Not UL listed for use on 480V or 600V Delta/Delta, corner ground, or high-resistance ground systems.
(6) When used with the 140M circuit breaker, the 25A-E9P9104 must be installed in a ventilated or non-ventilated enclosure with the minimum size of 457.2 x 457.2 x 269.8 mm (18 x 18 x 10.62 in.).
(7) When using a Manual Self-Protected (Type E) Combination Motor Controller with this drive power rating, the drive must be installed in a ventilated or non-ventilated enclosure with the minimum volume specified in this column. Application specific thermal considerations may require a larger enclosure.
(8) Circuit breaker selection is not available for this drive rating.

Power and Control Module

PowerFlex 520-series drives consist of a Power Module and Control Module.

Separating the Power and Control Module

ATTENTION: Perform this action only when drive is NOT powered.

1. Press and hold down the catch on both sides of the frame cover, then pull out and swing upwards to remove (Frames B...E only).

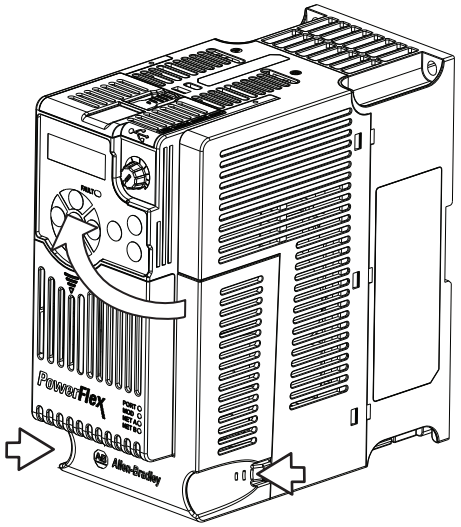

2. Press down and slide out the top cover of the Control Module to unlock it from the Power Module.

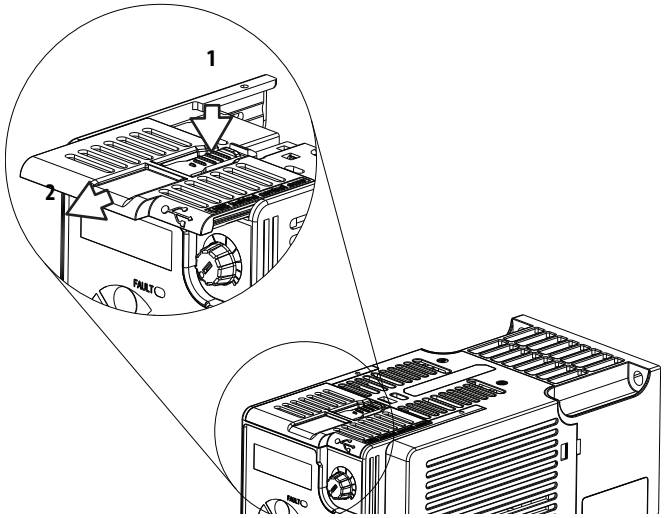

3. Hold the sides and top of the Control Module firmly, then pull out to separate it from the Power Module.

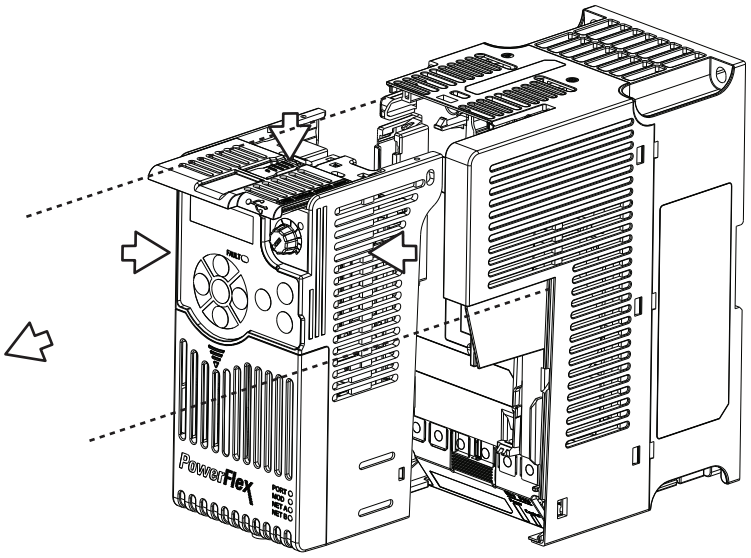

Connecting the Power and Control Module

1. Align the connectors on the Power Module and Control Module, then push the Control Module firmly onto the Power Module.

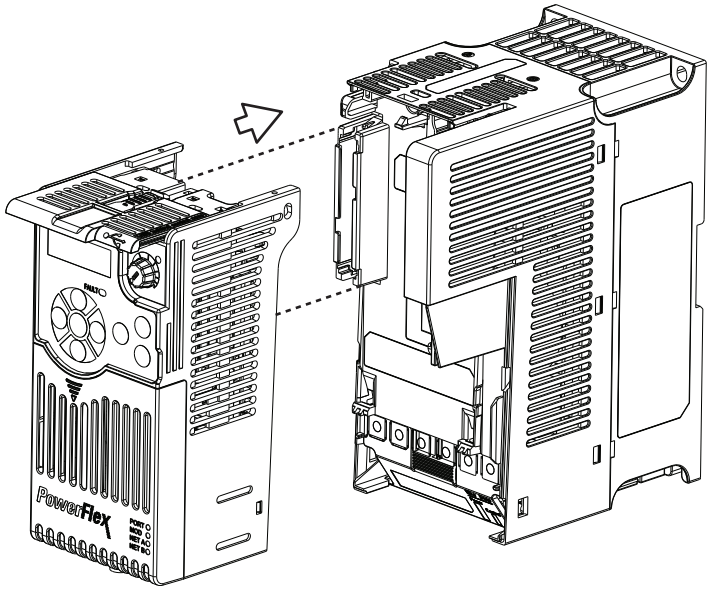

2. Push the top cover of the Control Module towards the Power Module to lock it.

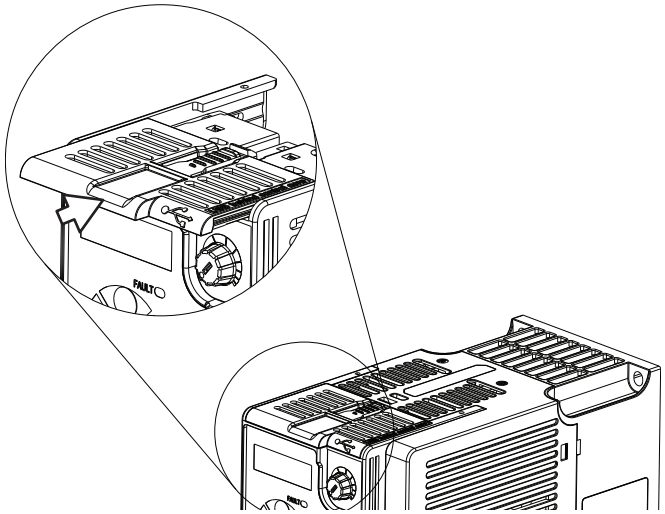

3. Insert the catch at the top of the frame cover into the Power Module, then swing the frame cover to snap the side catches onto the Power Module (Frames B...E only).

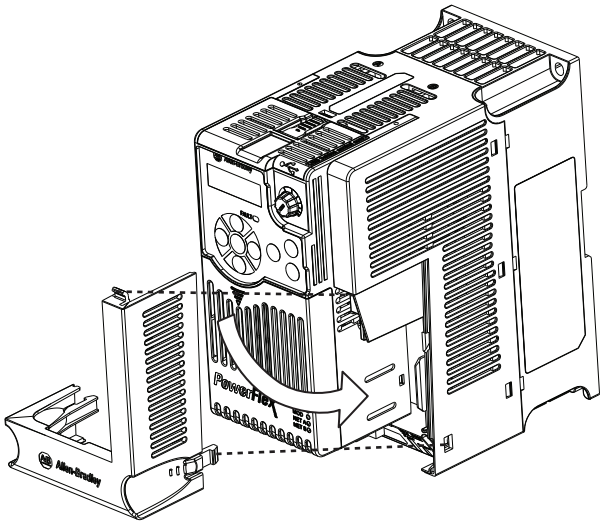

Control Module Cover

To access the control terminals, DSI port, and Ethernet port, the front cover must be removed. To remove:

1. Press and hold down the arrow on the front of the cover.
2. Slide the front cover down to remove from the Control Module.

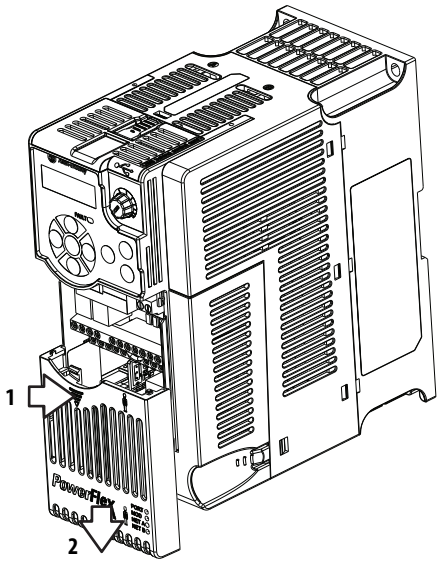

Re-attach the front cover when wiring is complete.

Power Module Terminal Guard

To access the power terminals, the terminal guard must be removed. To remove:

1. Press and hold down the catch on both sides of the frame cover, then pull out and swing upwards to remove (Frames B...E only).

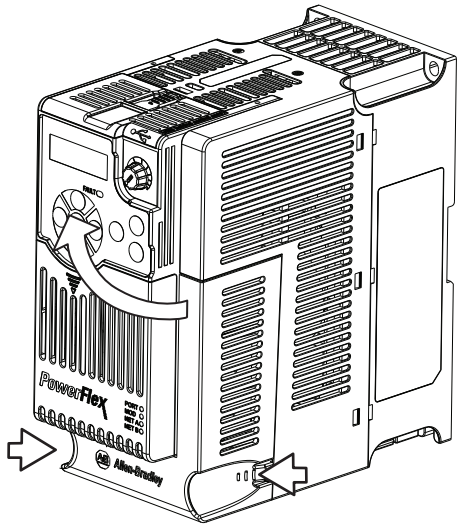

2. Press and hold down the locking tab on the terminal guard.
3. Slide the terminal guard down to remove from the Power Module.

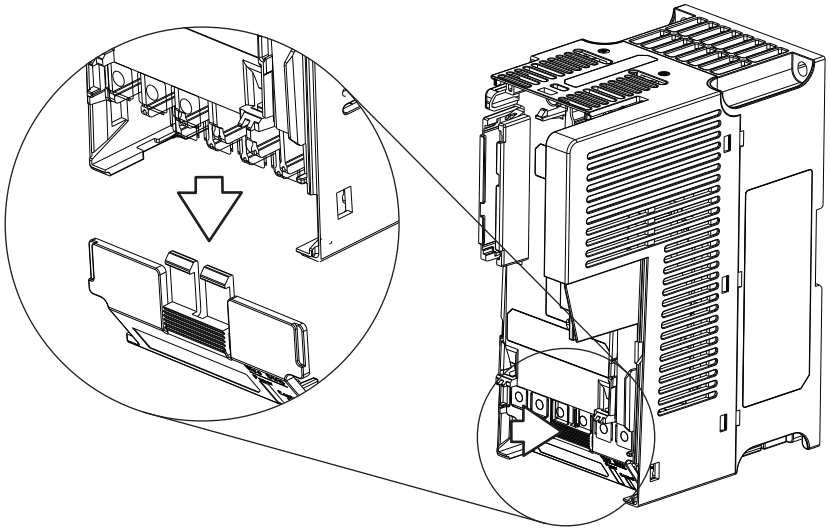

Re-attach the terminal guard when wiring is complete.

To access the power terminals for Frame A, you need to separate the Power and Control Modules. See Separating the Power and Control Module on page 28 for instructions.

Power Wiring

ATTENTION: National Codes and standards (NEC, VDE, BSI, etc.) and local codes outline provisions for safely installing electrical equipment. Installation must comply with specifications regarding wire types, conductor sizes, branch circuit protection and disconnect devices. Failure to do so may result in personal injury and/or equipment damage.

ATTENTION: To avoid a possible shock hazard caused by induced voltages, unused wires in the conduit must be grounded at both ends. For the same reason, if a drive sharing a conduit is being serviced or installed, all drives using this conduit should be disabled. This will help minimize the possible shock hazard from "cross coupled" power leads.

Motor Cable Types Acceptable for 100...600 Volt Installations

A variety of cable types are acceptable for drive installations. For many installations, unshielded cable is adequate, provided it can be separated from sensitive circuits. As an approximate guide, allow a spacing of 0.3 m (1 ft) for every 10 m (32.8 ft) of length. In all cases, long parallel runs must be avoided. Do not use cable with an insulation thickness less than 15 mils (0.4 mm/0.015 in.). Do not route more than three sets of motor leads in a single conduit to minimize "cross talk". If more than three drive/motor connections per conduit are required, shielded cable must be used.

UL installations above 50 °C ambient must use 600V, 90 °C wire.
UL installations in 50 °C ambient must use 600V, 75 °C or 90 °C wire.
UL installations in 40 °C ambient should use 600V, 75 °C or 90 °C wire.
Use copper wire only. Wire gauge requirements and recommendations are based on 75 °C. Do not reduce wire gauge when using higher temperature wire.

WARNING: The distance between the drive and motor must not exceed the maximum cable length stated in the Motor Cable Length Restrictions Tables in "Wiring and Grounding Guide, (PWM) AC Drives," publication DRIVES-IN001.

Unshielded

THHN, THWN or similar wire is acceptable for drive installation in dry environments provided adequate free air space and/or conduit fill rates limits are provided. Any wire chosen must have a minimum insulation thickness of 15 mils and should not have large variations in insulation concentricity.

ATTENTION: Do not use THHN or similarly coated wire in wet areas.

Shielded/Armored Cable

Shielded cable contains all of the general benefits of multi-conductor cable with the added benefit of a copper braided shield that can contain much of the noise generated by a typical AC Drive. Strong consideration for shielded cable should be given in installations with sensitive equipment such as weigh scales, capacitive proximity switches and other devices that may be affected by electrical noise in the distribution system. Applications with large numbers of drives in a similar location, imposed EMC regulations or a high degree of communications / networking are also good candidates for shielded cable.

Shielded cable may also help reduce shaft voltage and induced bearing currents for some applications. In addition, the increased impedance of shielded cable may help extend the distance that the motor can be located from the drive without the addition of motor protective devices such as terminator networks. Refer to Reflected Wave in "Wiring and Grounding Guide, (PWM) AC Drives," publication DRIVES-IN001.

Consideration should be given to all of the general specifications dictated by the environment of the installation, including temperature, flexibility, moisture characteristics and chemical resistance. In addition, a braided shield should be included and be specified by the cable manufacturer as having coverage of at least 75%. An additional foil shield can greatly improve noise containment.

A good example of recommended cable is Belden® 295xx (xx determines gauge). This cable has four (4) XLPE insulated conductors with a 100% coverage foil and an 85% coverage copper braided shield (with drain wire) surrounded by a PVC jacket.

Other types of shielded cable are available, but the selection of these types may limit the allowable cable length. Particularly, some of the newer cables twist 4 conductors of THHN wire and wrap them tightly with a foil shield. This construction can greatly increase the cable charging current required and reduce the overall drive performance. Unless specified in the individual distance tables as tested with the drive, these cables are not recommended and their performance against the lead length limits supplied is not known.

Recommended Shielded Wire

Location	Rating/Type	Description
Standard (Option 1)	600V, 90 °C (194 °F) XHHW2/RHW-2 Anixter B209500-B209507, Belden 29501-29507, or equivalent	• Four tinned copper conductors with XLPE insulation. • Copper braid/aluminum foil combination shield and tinned copper drain wire. • PVC jacket.
Standard (Option 2)	Tray rated 600V, 90 °C (194 °F) RHH/RHW-2 Anixter OLF-7xxxxx or equivalent	• Three tinned copper conductors with XLPE insulation. • 5 mil single helical copper tape (25% overlap min.) with three bare copper grounds in contact with shield. • PVC jacket.
Class I & II; Division I & II	Tray rated 600V, 90 °C (194 °F) RHH/RHW-2 Anixter 7V-7xxxx-3G or equivalent	• Three bare copper conductors with XLPE insulation and impervious corrugated continuously welded aluminum armor. • Black sunlight resistant PVC jacket overall. • Three copper grounds on #10 AWG and smaller.

Reflected Wave Protection

The drive should be installed as close to the motor as possible. Installations with long motor cables may require the addition of external devices to limit voltage reflections at the motor (reflected wave phenomena). Refer to Reflected Wave in "Wiring and Grounding Guide, (PWM) AC Drives," publication DRIVES-IN001.

The reflected wave data applies to all carrier frequencies 2...16 kHz.

For 240V ratings and lower, reflected wave effects do not need to be considered.

Output Disconnect

The drive is intended to be commanded by control input signals that will start and stop the motor. A device that routinely disconnects then reapplies output power to the motor for the purpose of starting and stopping the motor should not be used. If it is necessary to disconnect power to the motor with the drive outputting power, an auxiliary contact should be used to simultaneously disable drive (Aux Fault or Coast to Stop).

Power Terminal Block

Power Terminal Block

Frame A, B, C & D

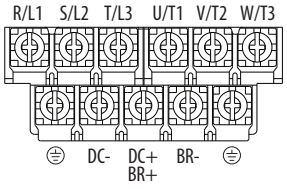

Frame E

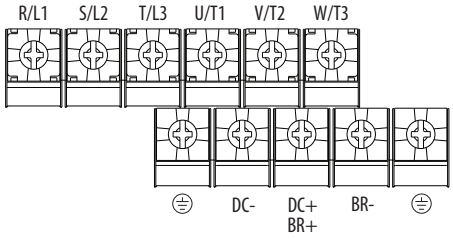

Terminal	Description
R/L1, S/L2	1-Phase Input Line Voltage Connection
R/L1, S/L2, T/L3	3-Phase Input Line Voltage Connection
U/T1, V/T2, W/T3	Motor Phase Connection = 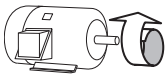 Switch any two motor leads to change forward direction.
DC+, DC-	DC Bus Connection (except for 110V 1-Phase)
BR+, BR-	Dynamic Brake Resistor Connection
⏚	Safety Ground - PE

IMPORTANT Terminal screws may become loose during shipment. Ensure that all terminal screws are tightened to the recommended torque before applying power to the drive.

Power Terminal Block Wire Specifications

Frame	Maximum Wire Size(1)	Minimum Wire Size(1)	Torque
A	5.3 mm^2 (10 AWG)	0.8 mm^2 (18 AWG)	1.76...2.16 Nm (15.6...19.1 lb-in.)
B	8.4 mm^2 (8 AWG)	2.1 mm^2 (14 AWG)	1.76...2.16 Nm (15.6...19.1 lb-in.)
C	8.4 mm^2 (8 AWG)	2.1 mm^2 (14 AWG)	1.76...2.16 Nm (15.6...19.1 lb-in.)
D	13.3 mm^2 (6 AWG)	5.3 mm^2 (10 AWG)	1.76...2.16 Nm (15.6...19.1 lb-in.)
E	26.7 mm^2 (3 AWG)	8.4 mm^2 (8 AWG)	3.09...3.77 Nm (27.3...33.4 lb-in.)

(1) Maximum/minimum sizes that the terminal block will accept – these are not recommendations.

Common Bus/Precharge Notes

If drives are used with a disconnect switch to the common DC bus, then an auxiliary contact on the disconnect must be connected to a digital input of the drive. The corresponding input (parameter t062, t063, t065...t068 [DigIn TermBlk xx]) must be set to 30, "Precharge En" This provides the proper precharge interlock, guarding against possible damage to the drive when connected to a common DC bus. For more information, see Drives in Common Bus Configurations, publication DRIVES-AT002.

I/O Wiring

Motor Start/Stop Precautions

ATTENTION: A contactor or other device that routinely disconnects and reapplies the AC line to the drive to start and stop the motor can cause drive hardware damage. The drive is designed to use control input signals that will start and stop the motor. If used, the input device must not exceed one operation per minute or drive damage can occur.

ATTENTION: The drive start/stop control circuitry includes solid-state components. If hazards due to accidental contact with moving machinery or unintentional flow of liquid, gas or solids exist, an additional hardwired stop circuit may be required to remove the AC line to the drive. When the AC line is removed, there will be a loss of any inherent regenerative braking effect that might be present - the motor will coast to a stop. An auxiliary braking method may be required. Alternatively, use the drive's safety input function.

Important points to remember about I/O wiring:

- Always use copper wire.
- Wire with an insulation rating of 600V or greater is recommended.
- Control and signal wires should be separated from power wires by at least 0.3 m (1 ft).

IMPORTANT I/O terminals labeled "Common" are not referenced to the safety ground (PE) terminal and are designed to greatly reduce common mode interference.

ATTENTION: Driving the 4-20 mA analog input from a voltage source could cause component damage. Verify proper configuration prior to applying input signals.

Signal and Control Wire Types

Recommendations are for 50 °C ambient temperature.
75 °C wire must be used for 60 °C ambient temperature.
90 °C wire must be used for 70 °C ambient temperature.

Recommended Signal Wire

Signal Type/ Where Used	Belden Wire Type(s)[1] *(or equivalent)*	Description	Min. Insulation Rating
Analog I/O & PTC	8760/9460	0.750 mm^2 (18 AWG), twisted pair, 100% shield with drain[2]	300V, 60 °C (140 °F)
Remote Pot	8770	0.750 mm^2 (18 AWG), 3 conductor, shielded	
Encoder/Pulse I/O	9728/9730	0.196 mm^2 (24 AWG), individually shielded pairs	

(1) Stranded or solid wire.

(2) If the wires are short and contained within a cabinet which has no sensitive circuits, the use of shielded wire may not be necessary, but is always recommended.

Recommended Control Wire for Digital I/O

Type	Wire Type(s)	Description	Min. Insulation Rating
Unshielded	Per US NEC or applicable national or local code	–	300V, 60 °C (140 °F)
Shielded	Multi-conductor shielded cable such as Belden 8770 (or equivalent)	0.750 mm^2 (18 AWG), 3 conductor, shielded.	

Maximum Control Wire Recommendations

Do not exceed control wiring length of 30 m (100 ft). Control signal cable length is highly dependent on electrical environment and installation practices. To improve noise immunity, the I/O terminal block Common may be connected to ground terminal/protective earth.

Control I/O Terminal Block

Control I/O Terminal Block Wire Specifications

Frame	Maximum Wire Size[1]	Minimum Wire Size[1]	Torque
A...E	1.3 mm^2 (16 AWG)	0.13 mm^2 (26 AWG)	0.71...0.86 Nm (6.2...7.6 lb-in.)

(1) Maximum/minimum sizes that the terminal block will accept – these are not recommendations.

PowerFlex 523 Control I/O Terminal Block

PowerFlex 523 Control I/O Wiring Block Diagram

Series A

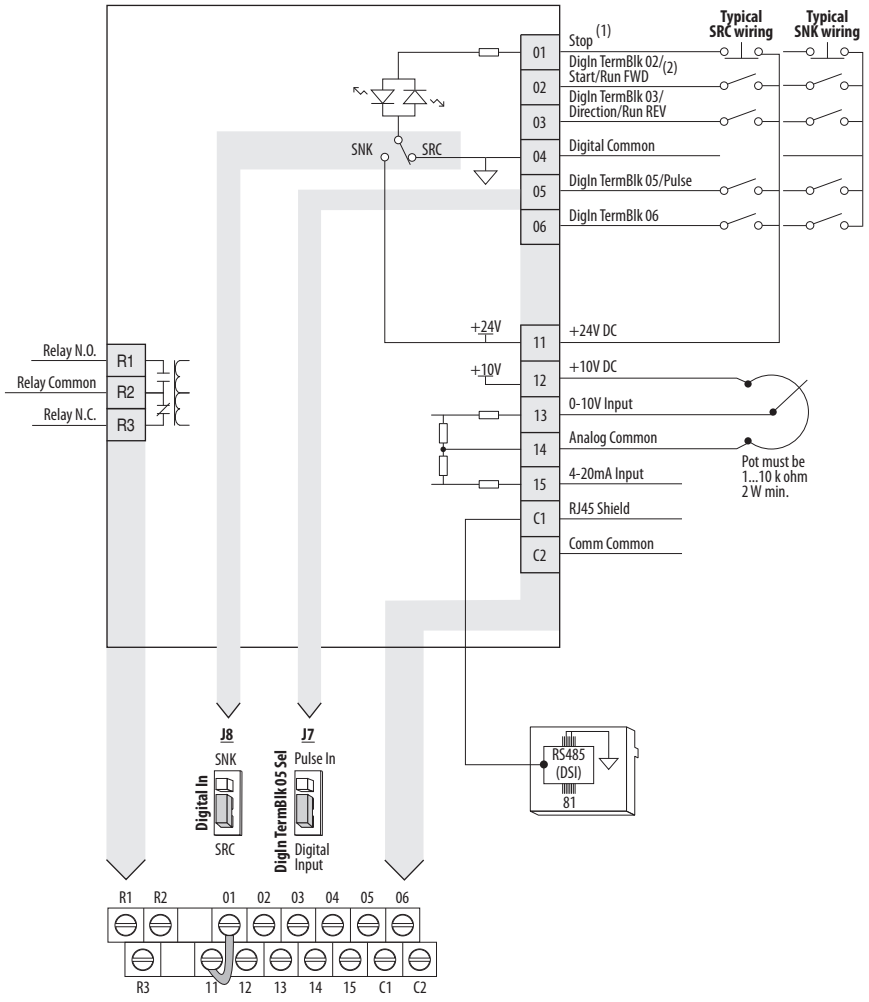

Series B

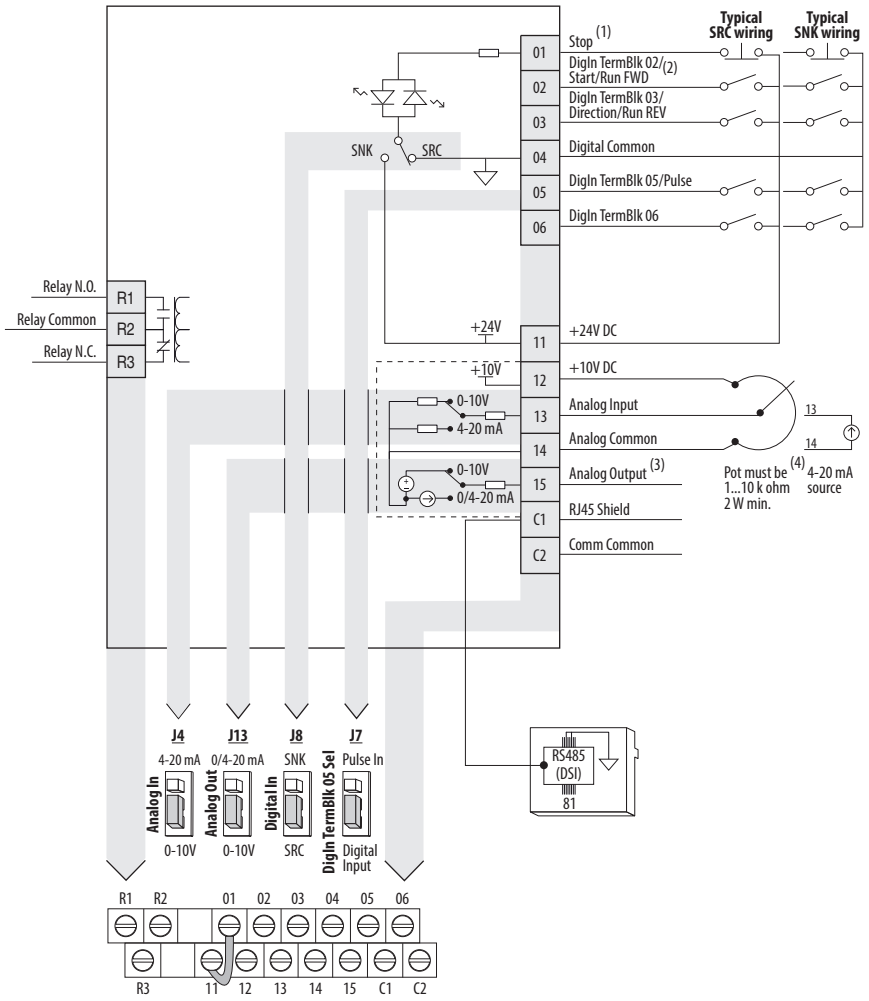

Control I/O Wiring Block Diagram Notes

(1) See Digital Input Selection for Start Source on page 50 for more information on configuring the digital inputs.

IMPORTANT I/O Terminal 01 is always a stop input. The stopping mode is determined by the drive setting. See the tables below for more information.

Start Method	Stop Method	
P046, P048, P050 [Start Source x]	**I/O Terminal 01 Stop**	**Normal Stop**
1 "Keypad"	Coast	Per P045 [Stop Mode]
2 "DigIn TrmBlk"	See t062, t063 [DigIn TermBlk xx] below	
3 "Serial/DSI"	Coast	
4 "Network Opt"	Coast	
5 "Ethernet/IP" (1)	Coast	

(1) Setting is specific to PowerFlex 525 drives only.

Start Method	Stop Method	
t062, t063 [DigIn TermBlk xx]	**I/O Terminal 01 Stop**	**Normal Stop**
48 "2-Wire FWD"	t064 [2-Wire Mode] is set to: • 0, 1, or 2 = Coast • 3 = per P045 [Stop Mode]	Per P045 [Stop Mode]
49 "3-Wire Start"	Per P045 [Stop Mode]	
50 "2-Wire REV"	t064 [2-Wire Mode] is set to: • 0, 1, or 2 = Coast • 3 = per P045 [Stop Mode]	
51 "3-Wire Dir"	Per P045 [Stop Mode]	

IMPORTANT The drive is shipped with a jumper installed between I/O Terminals 01 and 11. Remove this jumper when using I/O Terminal 01 as a stop or enable input.

(2) Two wire control shown. For three wire control use a momentary input on I/O Terminal 02 to command a start. Use a maintained input for I/O Terminal 03 to change direction.

(3) Analog output (terminal 15) is only available on PowerFlex 523 series B drive, and requires firmware 3.001 and later to configure the analog output parameters (t088, t089, and t090).

(4) Potentiometer connection is only applicable when the 0-10V setting (default) is selected for jumper J4.

(5) Only one analog frequency source may be connected at a time. If more than one reference is connected at the same time, an undetermined frequency reference will result.

Control I/O Terminal Designations

No.	Signal	Default	Description	Parameter
R1	Relay N.O.	Fault	Normally open contact for output relay.	t076
R2	Relay Common	Fault	Common for output relay.	
R3	Relay N.C.	Motor Running	Normally closed contact for output relay.	t081
01	Stop	Coast	Three wire stop. However, it functions as a stop under all input modes and cannot be disabled.	P045(2)
02	DigIn TermBlk 02/ Start/Run FWD	Run FWD	Used to initiate motion and also can be used as a programmable digital input. It can be programmed with t062 [DigIn TermBlk 02] as three wire (Start/Dir with Stop) or two wire (Run FWD/ Run REV) control. Current consumption is 6 mA.	P045, P046, P048, P050, A544, t062
03	DigIn TermBlk 03/ Dir/Run REV	Run REV	Used to initiate motion and also can be used as a programmable digital input. It can be programmed with t063 [DigIn TermBlk 03] as three wire (Start/Dir with Stop) or two wire (Run FWD/ Run REV) control. Current consumption is 6 mA.	t063
04	Digital Common	–	Return for digital I/O. Electrically isolated (along with the digital I/O) from the rest of the drive.	–
05	DigIn TermBlk 05/ Pulse In	Preset Freq	Program with t065 [DigIn TermBlk 05]. Also functions as a Pulse Train input for reference or speed feedback. Requires an NPN pulse input. The maximum frequency is 100 kHz. Current consumption is 6 mA.	t065
06	DigIn TermBlk 06	Preset Freq	Program with t066 [DigIn TermBlk 06]. Current consumption is 6 mA.	t066
11	+24V DC	–	Referenced to Digital Common. Drive supplied power for digital inputs. Maximum output current is 100 mA.	–
12	+10V DC	–	Referenced to Analog Common. Drive supplied power for 0...10V external potentiometer. Maximum output current is 15 mA.	P047, P049

Control I/O Terminal Designations

No.	Signal	Default	Description	Parameter
13	**For Series A** 0-10V In(1)	Not Active	For external 0-10V (unipolar) input supply or potentiometer wiper. Input impedance: Voltage source = 100 kΩ Allowable potentiometer resistance range = 1...10 kΩ	P047, P049, t062, t063, t065, t066, t093, A459, A471
	For Series B Analog Input	Not Active	External analog input supply, selectable by Analog Input jumper. Default is 0-10V (unipolar) input supply or potentiometer wiper. Input impedance: Voltage source = 100 kΩ Allowable potentiometer resistance range = 1...10 kΩ Change Analog Input jumper to 4-20 mA for external 4-20 mA input supply. Input impedance = 250 Ω	P047, P049, t062, t063, t065, t066, t093, A459, A471
14	Analog Common	–	Return for the analog I/O. Electrically isolated (along with the analog I/O) from the rest of the drive.	–
15	**For Series A** 4-20mA In(1)	Not Active	For external 4-20 mA input supply. Input impedance = 250 Ω	P047, P049, t062, t063, t065, t066, A459, A471
	For Series B Analog Output	OutFreq 0-10	The default analog output is 0-10V. To convert a current value, change the Analog Output jumper to 0-20 mA. Program with t088 [Analog Out Sel]. Maximum analog value can be scaled with t089 [Analog Out High]. Maximum Load: 4-20 mA = 525 Ω (10.5V) 0-10V = 1 kΩ (10 mA)	t088, t089
C1	C1	–	This terminal is tied to the RJ-45 port shield. Tie this terminal to a clean ground in order to improve noise immunity when using external communication peripherals.	–
C2	C2	–	This is the signal common for the communication signals.	–

(1) Only one analog frequency source may be connected at a time. If more than one reference is connected at the same time, an undetermined frequency reference will result.

(2) See Footnote (1) on page 39.

PowerFlex 525 Control I/O Terminal Block

PowerFlex 525 Control I/O Wiring Block Diagram

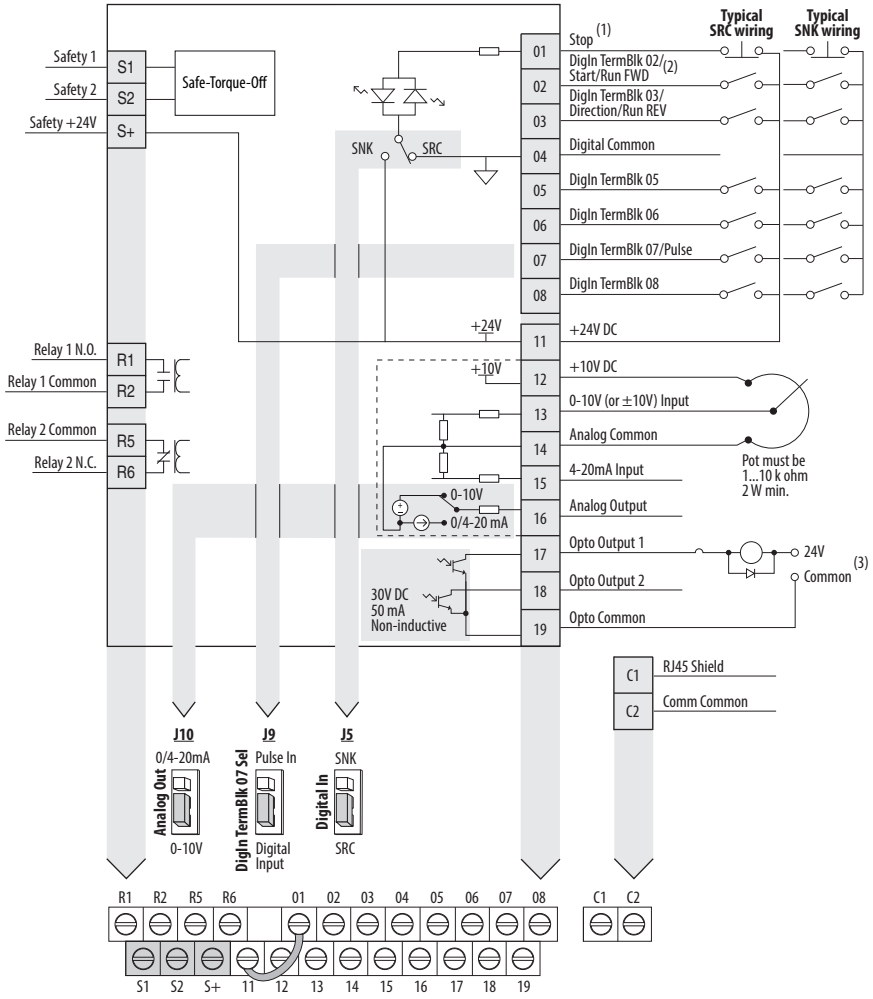

Control I/O Wiring Block Diagram Notes

(1) See Digital Input Selection for Start Source on page 50 for more information on configuring the digital inputs.

IMPORTANT I/O Terminal 01 is always a stop input. The stopping mode is determined by the drive setting. See the tables below for more information.

Start Method	Stop Method	
P046, P048, P050 [Start Source x]	**I/O Terminal 01 Stop**	**Normal Stop**
1 "Keypad"	Coast	Per P045 [Stop Mode]
2 "DigIn TrmBlk"	See t062, t063 [DigIn TermBlk xx] below	
3 "Serial/DSI"	Coast	
4 "Network Opt"	Coast	
5 "EtherNet/IP"	Coast	

Start Method	Stop Method	
t062, t063 [DigIn TermBlk xx]	**I/O Terminal 01 Stop**	**Normal Stop**
48 "2-Wire FWD"	t064 [2-Wire Mode] is set to: • 0, 1, or 2 = Coast • 3 = per P045 [Stop Mode]	Per P045 [Stop Mode]
49 "3-Wire Start"	Per P045 [Stop Mode]	
50 "2-Wire REV"	t064 [2-Wire Mode] is set to: • 0, 1, or 2 = Coast • 3 = per P045 [Stop Mode]	
51 "3-Wire Dir"	Per P045 [Stop Mode]	

IMPORTANT The drive is shipped with a jumper installed between I/O Terminals 01 and 11. Remove this jumper when using I/O Terminal 01 as a stop or enable input.

(2) Two wire control shown. For three wire control use a momentary input on I/O Terminal 02 to command a start. Use a maintained input for I/O Terminal 03 to change direction.

(3) When using an opto output with an inductive load such as a relay, install a recovery diode parallel to the relay as shown, to prevent damage to the output.

Control I/O Terminal Designations

No.	Signal	Default	Description	Parameter
R1	Relay 1 N.O.	Fault	Normally open contact for output relay.	t076
R2	Relay 1 Common	Fault	Common for output relay.	
R5	Relay 2 Common	Motor Running	Common for output relay.	t081
R6	Relay 2 N.C.	Motor Running	Normally closed contact for output relay.	
01	Stop	Coast	Three wire stop. However, it functions as a stop under all input modes and cannot be disabled.	P045(1)
02	DigIn TermBlk 02/ Start/Run FWD	Run FWD	Used to initiate motion and also can be used as a programmable digital input. It can be programmed with t062 [DigIn TermBlk 02] as three wire (Start/Dir with Stop) or two wire (Run FWD/ Run REV) control. Current consumption is 6 mA.	P045, P046, P048, P050, A544, t062
03	DigIn TermBlk 03/ Dir/Run REV	Run REV	Used to initiate motion and also can be used as a programmable digital input. It can be programmed with t063 [DigIn TermBlk 03] as three wire (Start/Dir with Stop) or two wire (Run FWD/ Run REV) control. Current consumption is 6 mA.	t063
04	Digital Common	–	Return for digital I/O. Electrically isolated (along with the digital I/O) from the rest of the drive.	–
05	DigIn TermBlk 05	Preset Freq	Program with t065 [DigIn TermBlk 05]. Current consumption is 6 mA.	t065
06	DigIn TermBlk 06	Preset Freq	Program with t066 [DigIn TermBlk 06]. Current consumption is 6 mA.	t066
07	DigIn TermBlk 07/ Pulse In	Start Source 2 + Speed Reference2	Program with t067 [DigIn TermBlk 07]. Also functions as a Pulse Train input for reference or speed feedback. Requires an NPN pulse input. Maximum frequency is 100 kHz. Current consumption is 6 mA.	t067
08	DigIn TermBlk 08	Jog Forward	Program with t068 [DigIn TermBlk 08]. Current consumption is 6 mA.	t068
C1	C1	–	This terminal is tied to the RJ-45 port shield. Tie this terminal to a clean ground in order to improve noise immunity when using external communication peripherals.	–
C2	C2	–	This is the signal common for the communication signals.	–
S1	Safety 1	–	Safety input 1. Current consumption is 6 mA.	–
S2	Safety 2	–	Safety input 2. Current consumption is 6 mA.	–
S+	Safety +24V	–	+24V supply for safety circuit. Internally tied to the +24V DC source (Pin 11).	–
11	+24V DC	–	Referenced to Digital Common. Drive supplied power for digital inputs. Maximum output current is 100 mA.	–

Control I/O Terminal Designations

No.	Signal	Default	Description	Parameter
12	+10V DC	–	Referenced to Analog Common. Drive supplied power for 0...10V external potentiometer. Maximum output current is 15 mA.	P047, P049
13	±10V In	Not Active	For external 0-10V (unipolar) or ±10V (bipolar) input supply or potentiometer wiper. Input impedance: Voltage source = 100 kΩ Allowable potentiometer resistance range = 1...10 kΩ	P047, P049, t062, t063, t065, t066, t093, A459, A471
14	Analog Common	–	Return for the analog I/O. Electrically isolated (along with the analog I/O) from the rest of the drive.	–
15	4-20mA In	Not Active	For external 4-20 mA input supply. Input impedance = 250 Ω	P047, P049, t062, t063, t065, t066, A459, A471
16	Analog Output	OutFreq 0-10	The default analog output is 0-10V. To convert a current value, change the Analog Output jumper to 0-20 mA. Program with t088 [Analog Out Sel]. Maximum analog value can be scaled with t089 [Analog Out High]. Maximum Load: 4-20 mA = 525 Ω (10.5V) 0-10V = 1 kΩ (10 mA)	t088, t089
17	Opto Output 1	Motor Running	Program with t069 [Opto Out1 Sel]. Each Opto-Output is rated 30V DC 50 mA (Non-inductive).	t069, t070, t075
18	Opto Output 2	At Frequency	Program with t072 [Opto Out1 Sel]. Each Opto-Output is rated 30V DC 50 mA (Non-inductive).	t072, t073, t075
19	Opto Common	–	The emitters of the Optocoupler Outputs (1 and 2) are tied together at Optocoupler Common. Electrically isolated from the rest of the drive.	–

(1) See Footnote (1) on page 39.

I/O Wiring Examples

<table>
<tr><th>I/O</th><th>Connection Example</th></tr>
<tr><td rowspan="2">Potentiometer
1...10k Ω Pot.
Recommended
(2 W minimum)</td><td>P047 [Speed Reference1] = 5 “0-10V Input”</td></tr>
<tr><td> 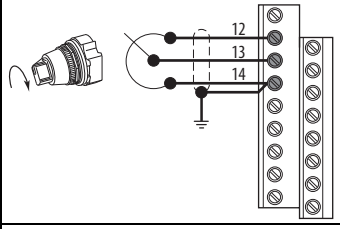
</td></tr>
<tr><td rowspan="4">Analog Input
0-10V, 100k Ω impedance
4-20 mA, 250 Ω impedance</td><td>Bipolar
P047 [Speed Reference1] = 5 “0-10V Input” and t093 [10V Bipolar Enbl] = 1 “Bi-Polar In”</td><td>Unipolar (Voltage)
P047 [Speed Reference1] = 5 “0-10V Input”</td></tr>
<tr><td> 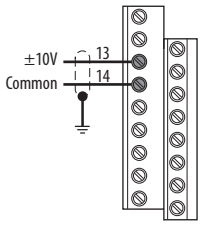
</td><td> 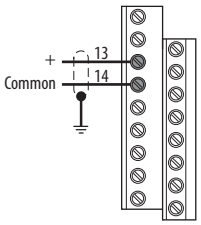
</td></tr>
<tr><td colspan="2">Unipolar (Current)
P047 [Speed Reference1] = 6 “4-20mA Input”</td></tr>
<tr><td colspan="2">PowerFlex 523 Series A, PowerFlex 525 PowerFlex 523 Series B
 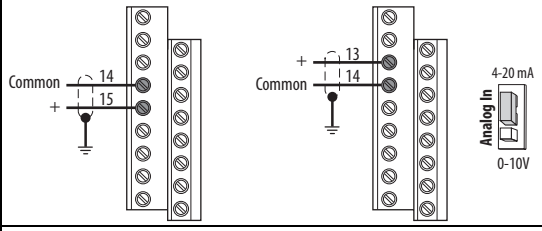
</td></tr>
<tr><td>Analog Input, PTC
For Drive Fault</td><td colspan="2">Wire the PTC and External Resistor (typically matched to the PTC Hot Resistance) to I/O Terminals 12, 13, 14.
Wire R2/R3 Relay Output (SRC) to I/O Terminals 5 & 11.
t065 [DigIn TermBlk 05] = 12 “Aux Fault”
t081 [Relay Out 2 Sel] = 10 “Above AnIg V”
t082 [Relay Out 2 Level] = % Voltage Trip</td></tr>
<tr><td colspan="2"> 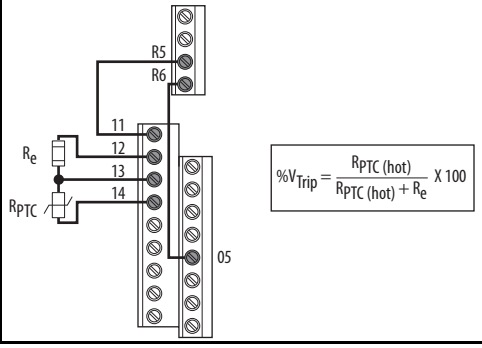
</td></tr>
</table>

I/O	Connection Example	
Pulse Train Input PowerFlex 523 t065 [DigIn TermBlk 05] = 52 PowerFlex 525 t067 [DigIn TermBlk 07] = 52 Use P047, P049 and P051 [Speed Referencex] to select pulse input. Jumper for DigIn TermBlk 05 or 07 Sel must be moved to Pulse In.	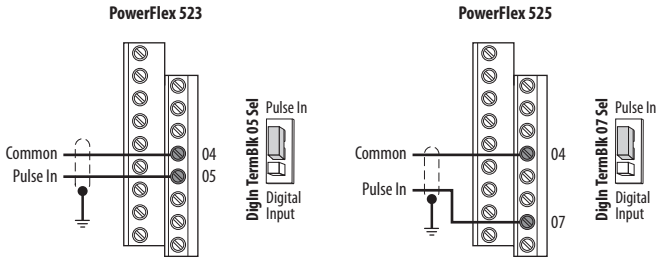 The device connected to terminal 5 (for PowerFlex 523) or terminal 7 (for PowerFlex 525) needs to be NPN or push-pull output driver.	
2 Wire SRC Control - Non-Reversing P046 [Start Source 1] = 2 and t062 [DigIn TermBlk 02] = 48 Input must be active for the drive to run. When input is opened, the drive will stop as specified by P045 [Stop Mode]. If desired, a User Supplied 24V DC power source can be used. Refer to the "External Supply (SRC)" example.	Internal Supply (SRC) 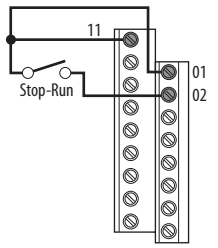	External Supply (SRC) 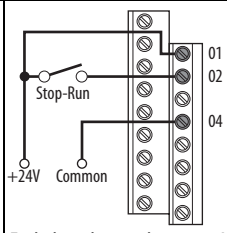 Each digital input draws 6 mA.
2 Wire SNK Control - Non-Reversing	Internal Supply (SNK) 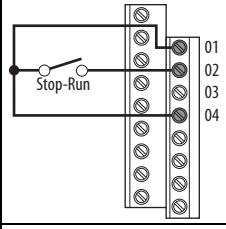	
2 Wire SRC Control - Run FWD/Run REV P046 [Start Source 1] = 2, t062 [DigIn TermBlk 02] = 48 and t063 [DigIn TermBlk 03] = 50 Input must be active for the drive to run. When input is opened, the drive will stop as specified by P045 [Stop Mode]. If both Run Forward and Run Reverse inputs are closed at the same time, an undetermined state could occur.	Internal Supply (SRC) 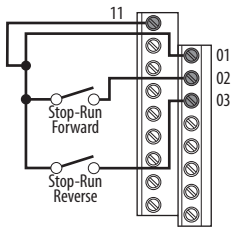	External Supply (SRC) 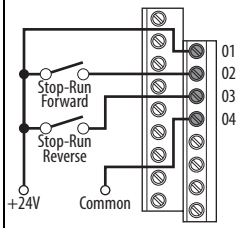 Each digital input draws 6 mA.
2 Wire SNK Control - Run FWD/Run REV	Internal Supply (SNK) 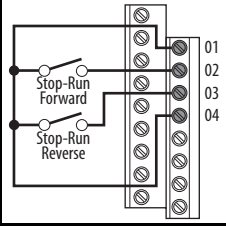	

<table>
<tr><th>I/O</th><th colspan="2">Connection Example</th></tr>
<tr><td rowspan="2">3 Wire SRC Control - Non-Reversing
P046 [Start Source 1] = 2, t062 [DigIn TermBlk 02] = 49 and t063 [DigIn TermBlk 03] = 51
A momentary input will start the drive. A stop input to I/O Terminal 01 will stop the drive as specified by P045 [Stop Mode].</td><td>Internal Supply (SRC)
 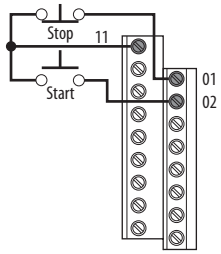
</td><td>External Supply (SRC)
 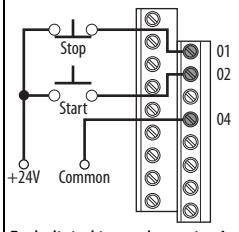

Each digital input draws 6 mA.</td></tr>
<tr><td>3 Wire SNK Control - Non-Reversing</td><td colspan="2">Internal Supply (SNK)
 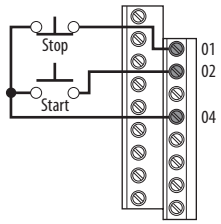
</td></tr>
<tr><td>3 Wire SRC Control - Reversing
P046 [Start Source 1] = 2, t062 [DigIn TermBlk 02] = 49 and t063 [DigIn TermBlk 03] = 51
A momentary input will start the drive. A stop input to I/O Terminal 01 will stop the drive as specified by P045 [Stop Mode]. I/O Terminal 03 determines direction.</td><td>Internal Supply (SRC)
 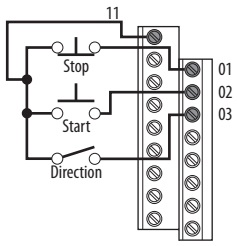
</td><td>External Supply (SRC)
 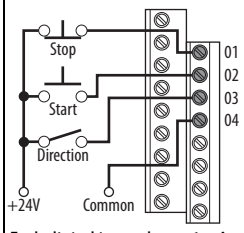

Each digital input draws 6 mA.</td></tr>
<tr><td>3 Wire SNK Control - Reversing</td><td colspan="2">Internal Supply (SNK)
 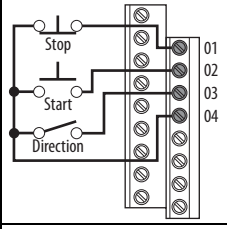
</td></tr>
<tr><td>Opto Output (1 & 2)[1]
t069 [Opto Out1 Sel] determines Opto-Output 1 (I/O Terminal 17) operation.
t072 [Opto Out2 Sel] determines Opto-Output 2 (I/O Terminal 18) operation.
When using Opto-Output with an inductive load such as a relay, install a recovery diode parallel to the relay as shown, to prevent damage to the output.</td><td colspan="2">Opto-Output 1
 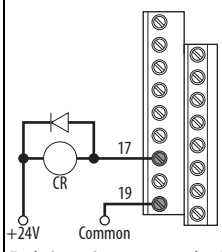

Each Opto-Output is rated 30V DC 50 mA (Non-inductive).</td></tr>
</table>

I/O	Connection Example
Analog Output[2] t088 [Analog Out Sel] determines analog output type and drive conditions. 0-10V, 1k Ω minimum 0-20 mA/4-20 mA, 525 Ω maximum	t088 [Analog Out Sel] = 0 through 23 The Analog Output Select jumper must be set to match the analog output signal mode set in t088 [Analog Out Sel]. **PowerFlex 523 Series B** **PowerFlex 525** 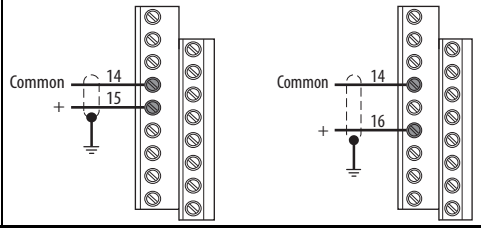

(1) Feature is specific to PowerFlex 525 drives only

(2) Feature is not applicable to PowerFlex 523 series A drives.

Typical Multiple Drive Connection Examples

Input/Output	Connection Example
Multiple Digital Input Connections Customer Inputs can be wired per External Supply (SRC).	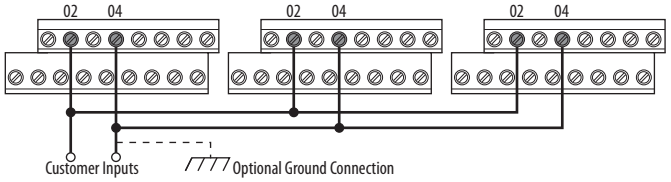 When connecting a single input such as Run, Stop, Reverse or Preset Speeds to multiple drives, it is important to connect I/O Terminal 04 common together for all drives. If they are to be tied into another common (such as earth ground or separate apparatus ground) only one point of the daisy chain of I/O Terminal 04 should be connected. **ATTENTION:** I/O Common terminals should **not** be tied together when using SNK (Internal Supply) mode. In SNK mode, if power is removed from one drive, inadvertent operation of other drives that share the same I/O Common connection may occur.
Multiple Analog Connections	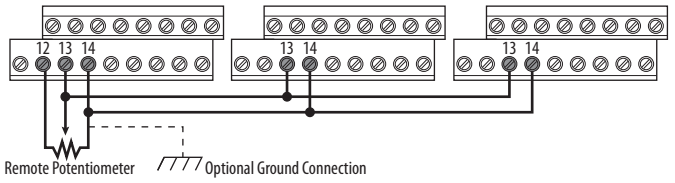 When connecting a single potentiometer to multiple drives it is important to connect I/O Terminal 14 common together for all drives. I/O Terminal 14 common and I/O Terminal 13 (potentiometer wiper) should be daisy-chained to each drive. All drives must be powered up for the analog signal to be read correctly.

Start and Speed Reference Control

Start Source and Speed Reference Selection

The start and drive speed command can be obtained from a number of different sources. By default, start source is determined by P046 [Start Source 1] and drive speed source is determined by P047 [Speed Reference1]. However, various inputs can override this selection, See below for the override priority.

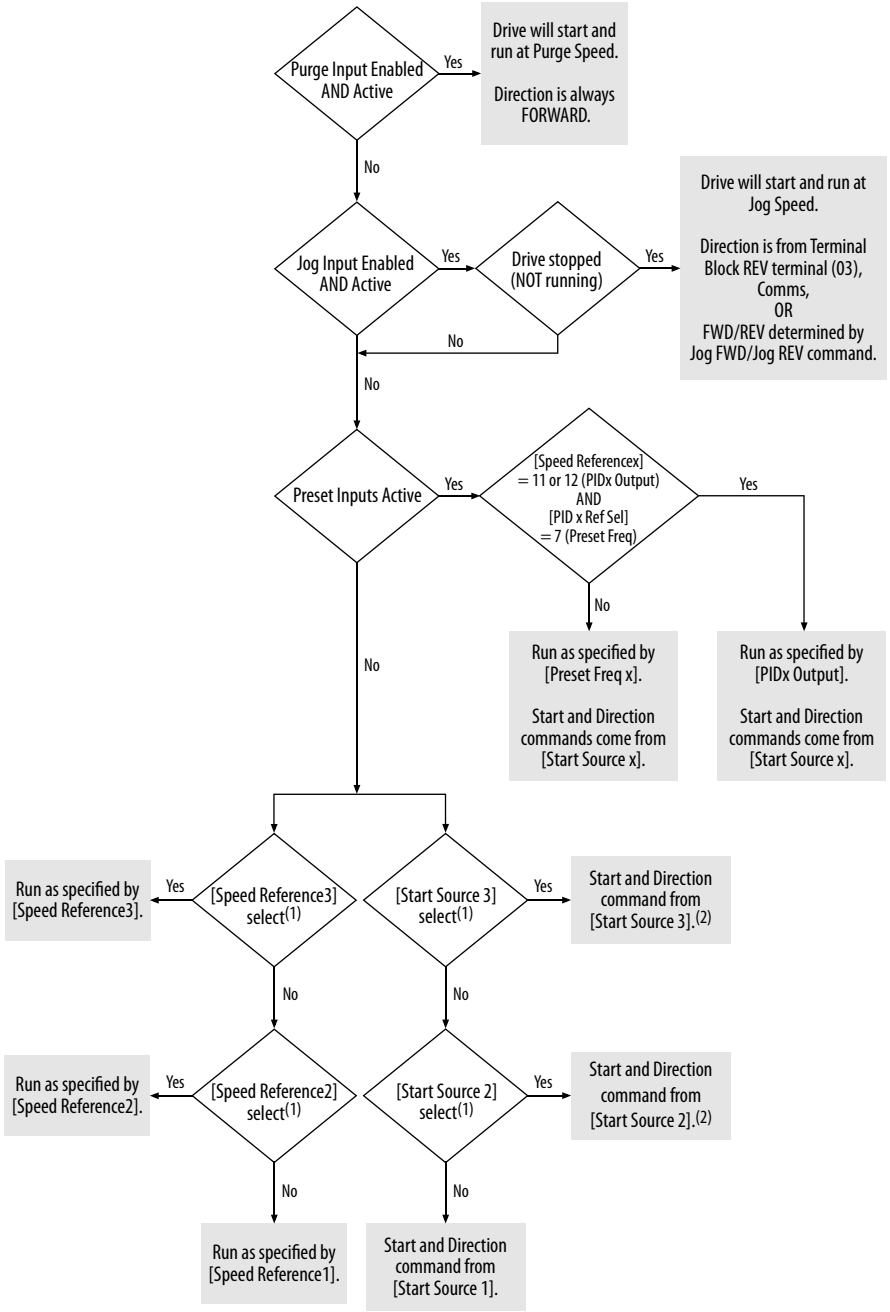

(1) [Start Source 2/3] and [Speed Reference2/3] can be selected by the control terminal block or communication commands.

(2) See Digital Input Selection for Start Source on page 50 for information on selecting the correct digital input.

Digital Input Selection for Start Source

If P046, P048 or P050 [Start Source x] has been set to 2, "DigIn TermBlk", then t062 and t063 [DigIn TermBlk xx] must be configured for 2-Wire or 3-Wire control for the drive to function properly.

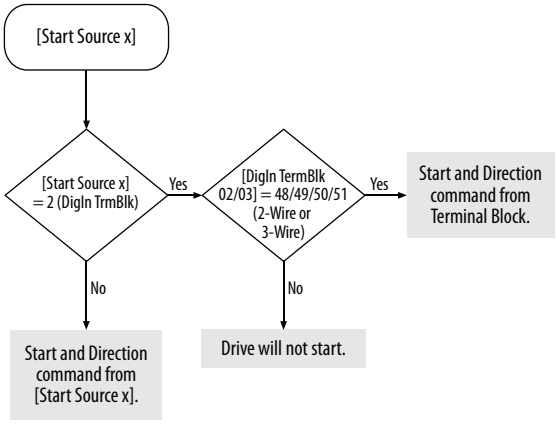

Accel/Decel Selection

The Accel/Decel rate can be obtained by a variety of methods. The default rate is determined by P041 [Accel Time 1] and P042 [Decel Time 1]. Alternative Accel/Decel rates can be made through digital inputs, communications and/or parameters. See below for the override priority.

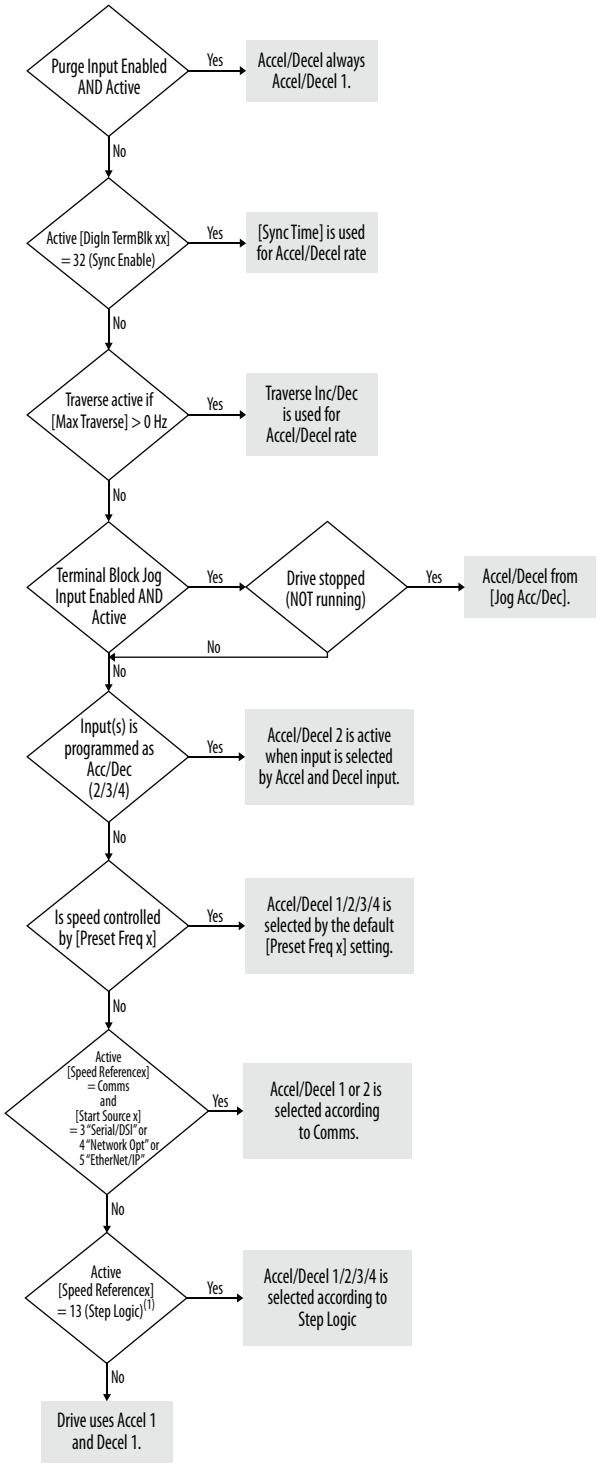

(1) Setting is specific to PowerFlex 525 drives only.

CE Conformity

Compliance with the Low Voltage Directive and Electromagnetic Compatibility Directive has been demonstrated using harmonized European Norm (EN) standards published in the Official Journal of the European Communities. PowerFlex 520-series drives comply with the EN standards listed below when installed according to the installation instructions in this manual.

CE Declarations of Conformity are available online at: http://www.rockwellautomation.com/products/certification/.

Low Voltage Directive (2006/95/EC and 2014/35/EU)

- EN 61800-5-1 Adjustable speed electrical power drive systems – Part 5-1: Safety requirements – Electrical, thermal and energy.

Pollution Degree Ratings According to EN 61800-5-1

Pollution Degree	Description
1	No pollution or only dry, non-conductive pollution occurs. The pollution has no influence.
2	Normally, only non-conductive pollution occurs. Occasionally, however, a temporary conductivity caused by condensation is to be expected, when the drive is out of operation.

EMC Directive (2004/108/EC and 2014/30/EU)

- EN 61800-3 – Adjustable speed electrical power drive systems - Part 3: EMC requirements and specific test methods

Machinery Directive (2006/42/EC)

- EN ISO 13849-1 – Safety of machinery – Safety related parts of control systems -Part 1: General principles for design
- EN 62061 – Safety of machinery – Functional safety of safety-related electrical, electronic and programmable electronic control systems
- EN 60204-1 – Safety of machinery – Electrical equipment of machines - Part 1: General requirements
- EN 61800-5-2 – Adjustable speed electrical power drive systems - Part 5-2: Safety requirement – Functional

Refer to Appendix G for installation consideration related to Machinery Directive.

ATEX Directive (94/9/EC and 2014/34/EU)

- EN 50495 – Safety devices required for the safe functioning of equipment with respect to explosion risks.

General Considerations

- For CE compliance, drives must satisfy installation requirements related to both EN 61800-5-1 and EN 61800-3 provided in this document.
- PowerFlex 520-series drives must be installed in a pollution degree 1 or 2 environment to be compliant with the CE LV Directive. See Pollution Degree Ratings According to EN 61800-5-1 on page 52 for descriptions of each pollution degree rating.
- PowerFlex 520-series drives comply with the EMC requirements of EN 61800-3 when installed according to good EMC practices and the instructions provided in this document. However, many factors can influence the EMC compliance of an entire machine or installation, and compliance of the drive itself does not ensure compliance of all applications.
- PowerFlex 520-series drives are not intended to be used on public low-voltage networks which supply domestic premises. Without additional mitigation, radio frequency interference is expected if used on such a network. The installer is responsible for taking measures such as a supplementary line filter and enclosure (see Connections and Grounding on page 55) to prevent interference, in addition to the installation requirements of this document.

ATTENTION: NEMA/UL Open Type drives must either be installed in a supplementary enclosure or equipped with a "NEMA Type 1 Kit" to be CE compliant with respect to protection against electrical shock.

- PowerFlex 520-series drives generate harmonic current emissions on the AC supply system. When operated on a public low-voltage network it is the responsibility of the installer or user to ensure that applicable requirements of the distribution network operator have been met. Consultation with the network operator and Rockwell Automation may be necessary.
- If the optional NEMA 1 kit is not installed, the drive must be installed in an enclosure with side openings less than 12.5 mm (0.5 in.) and top openings less than 1.0 mm (0.04 in.) to maintain compliance with the LV Directive.
- The motor cable should be kept as short as possible in order to avoid electromagnetic emission as well as capacitive currents.
- Use of line filters in ungrounded systems is not recommended.
- In CE installations, input power must be a Balanced Wye with Center Ground configuration for EMC compliance.

Installation Requirements Related to EN 61800-5-1 and the Low Voltage Directive

- 600V PowerFlex 520-series drives can only be used on a "center grounded" supply system for altitudes up to and including 2000 m (6562 ft).

- When used at altitudes above 2000 m (6562 ft) up to a maximum of 4800 m (15,748 ft), PowerFlex 520-series drives of voltage classes up to 480V may not be powered from a "corner-earthed" supply system in order to maintain compliance with the CE LV Directive. See Derating Guidelines for High Altitude on page 18.
- PowerFlex 520-series drives produce leakage current in the protective earthing conductor which exceeds 3.5 mA AC and/or 10 mA DC. The minimum size of the protective earthing (grounding) conductor used in the application must comply with local safety regulations for high protective earthing conductor current equipment.

ATTENTION: PowerFlex 520-series drives produce DC current in the protective earthing conductor which may reduce the ability of RCD's (residual current-operated protective devices) or RCM's (residual current-operated monitoring devices) of type A or AC to provide protection for other equipment in the installation. Where an RCD or RCM is used for protection in case of direct or indirect contact, only an RCD or RCM of Type B is allowed on the supply side of this product.

Installation Requirements Related to EN 61800-3 and the EMC Directive

- The drive must be earthed (grounded) as described in Connections and Grounding on page 55. See General Grounding Requirements on page 20 for additional grounding recommendations.
- Output power wiring to the motor must employ cables with a braided shield providing 75% or greater coverage, or the cables must be housed in metal conduit, or equivalent shield must be provided. Continuous shielding must be provided from the drive enclosure to the motor enclosure. Both ends of the motor cable shield (or conduit) must terminate with a low-impedance connection to earth.
  Drive Frames A...E: At the drive end of the motor, either
  a. The cable shield must be clamped to a properly installed "EMC Plate" for the drive. Kit number 25-EMC1-Fx.
     or
  b. The cable shield or conduit must terminate in a shielded connector installed in an EMC plate, conduit box, or similar.
- At the motor end, the motor cable shield or conduit must terminate in a shielded connector which must be properly installed in an earthed motor wiring box attached to the motor. The motor wiring box cover must be installed and earthed.
- All control (I/O) and signal wiring to the drive must use cable with a braided shield providing 75% or greater coverage, or the cables must be housed in metal conduit, or equivalent shielding must be provided. When shielded cable is used, the cable shield should be terminated with a low impedance connection to earth at only one end of the cable, preferably the end where the receiver is located. When the cable shield is terminated at the drive end, it may be terminated either by using a shielded connector in conjunction with a conduit plate or conduit box, or the shield may be clamped to an "EMC plate."

- Motor cabling must be separated from control and signal wiring wherever possible.
- Maximum motor cable length must not exceed the maximum length indicated in PowerFlex 520-Series RF Emission Compliance and Installation Requirements on page 55 for compliance with radio frequency emission limits for the specific standard and installation environment.

Connections and Grounding

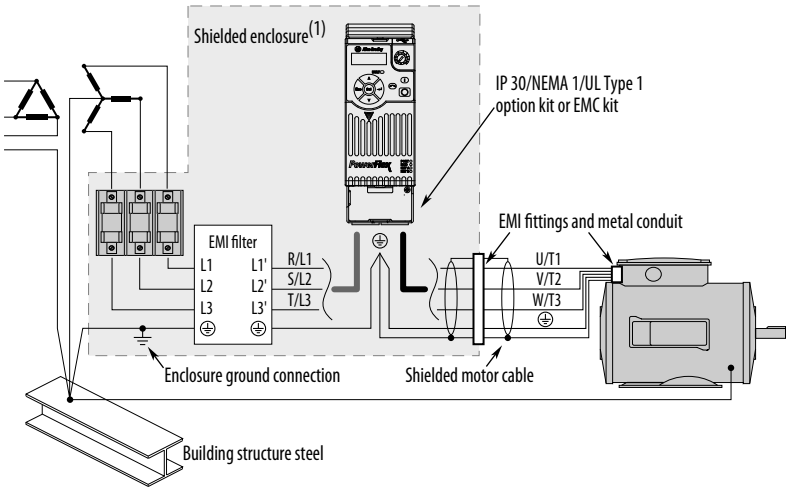

(1) Some installations require a shielded enclosure. Keep wire length as short as possible between the enclosure entry point and the EMI filter.

PowerFlex 520-Series RF Emission Compliance and Installation Requirements

Filter Type	Standard/Limits		
	EN61800-3 Category C1 EN61000-6-3 CISPR11 Group 1 Class B	**EN61800-3 Category C2 EN61000-6-4 CISPR11 Group 1 Class A (Input power ≤ 20 kVA)**	**EN61800-3 Category C3 (I ≤ 100 A) CISPR11 Group 1 Class A (Input power > 20 kVA)**
Internal	–	10 m (33 ft)	20 m (66 ft)
External(1)	30 m (16 ft)	100 m (328 ft)	100 m (328 ft)

(1) See Appendix B for more information on optional external filters.

Additional Installation Requirements

This section provides information on additional requirements for category C1 and C2 installation, such as enclosures and EMC cores.

IMPORTANT EMC cores are included with:

- drives that have an internal EMC filter (25x-xxxxN114)
- external EMC filter accessory kit (25-RFxxx)

IMPORTANT An enclosure, shielded input cable, and EMC cores are not required to meet category C3 requirements.

Additional Installation Requirements

Frame Size	Category C1			Category C2		
	Enclosure	Conduit or Shielded Cable @ Input	EMC Cores Required (Included with product)	Enclosure	Conduit or Shielded Cable @ Input	EMC Cores Required (Included with product)
100...120V AC (-15%, +10%) – 1-Phase Input with External EMC Filter, 0...120V 1-Phase Output						
A	No	No	No	No	No	No
B	No	No	No	No	No	No
200...240V AC (-15%, +10%) – 1-Phase Input with External EMC Filter, 0...230V 3-Phase Output						
A	Yes	Yes	No	No	No	Input/Output
B	Yes	Yes	Output only	No	No	Input/Output
200...240V AC (-15%, +10%) – 1-Phase Input with Internal EMC Filter, 0...230V 3-Phase Output(1)						
A	*	*	*	Yes	No	No
B	*	*	*	Yes	No	No
200...240V AC (-15%, +10%) – 3-Phase Input with External EMC Filter, 0...230V 3-Phase Output						
A	Yes	Yes	Output only	No	No	Input/Output
B	Yes	Yes	Output only	No	No	Input/Output
C	Yes	Yes	Output only	No	No	Input/Output
D	Yes	Yes	No	No	No	Input only
E	Yes	Yes	Output only	No	No	Input only
380...480V AC (-15%, +10%) – 3-Phase Input with External EMC Filter, 0...460V 3-Phase Output						
A	Yes	Yes	No	No	No	Input/Output
B	Yes	Yes	No	No	No	Input/Output
C	Yes	Yes	No	No	No	Input only
D	Yes	Yes	Output only	No	No	Input/Output
E	Yes	Yes	No	Yes	No	Input/Output
380...480V AC (-15%, +10%) – 3-Phase Input with Internal EMC Filter, 0...460V 3-Phase Output(1)						
A	*	*	*	No	No	Input/Output
B	*	*	*	No	No	Input/Output
C	*	*	*	No	No	Input/Output
D	*	*	*	No	No	Input/Output
E	*	*	*	No	No	Input/Output
525...600V AC (-15%, +10%) – 3-Phase Input with External EMC Filter, 0...575V 3-Phase Output						
A	Yes	Yes	No	No	No	Input/Output
B	Yes	Yes	No	No	No	Input/Output
C	Yes	Yes	No	No	No	Input/Output
D	Yes	Yes	No	No	No	Input/Output
E	Yes	Yes	No	Yes	No	No

(1) An (*) indicates that EMC requirements are not met.

Recommended Placement of EMC Cores

Frame A	Frame B	Frame C	Frame D	Frame E
With optional EMC plate (25-EMC-Fx)				
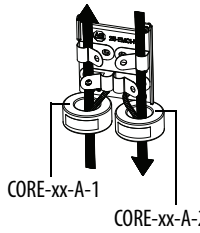	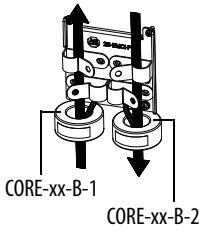	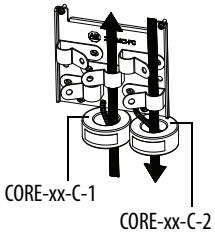	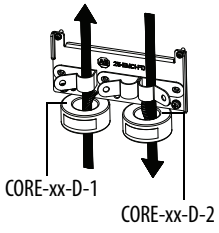	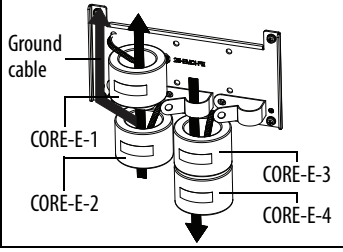
Without EMC plate				
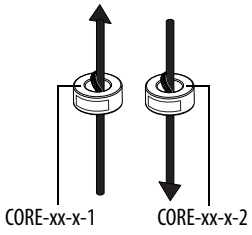				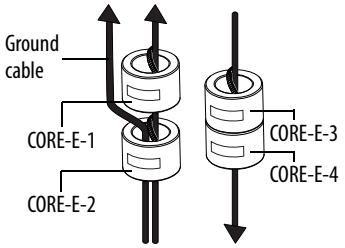

Input cable to drive (Shielded or Unshielded) Output cable from drive (Shielded)

Shows contact to shielded layer

Secure EMC core by using cable/zip ties

IMPORTANT The ground cable/shield for both input and output must pass through the EMC core(s), except for the following:

- Frame E drives with internal filters where the grounded input cable must not pass through EMC CORE-E-1.
- 600V drives with external filters where the grounded output cable must not pass through the EMC core(s).

Recommended Placement of EMC Cores Relative to External Filter

All Frame sizes

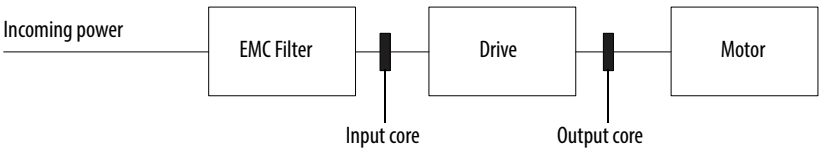

Notes:

Start Up

This chapter describes how to start up the PowerFlex 520-series drive. To simplify drive setup, the most commonly programmed parameters are organized in a single Basic Program Group.

For information on...	See page...
Prepare for Drive Start-Up	59
Display and Control Keys	62
Viewing and Editing Parameters	63
Drive Programming Tools	64
Smart Start-Up with Basic Program Group Parameters	65
LCD Display with QuickView Technology	67
Using the USB Port	67

IMPORTANT Read the *General Precautions* section before proceeding.

ATTENTION: Power must be applied to the drive to perform the following start-up procedures. Some of the voltages present are at incoming line potential. To avoid electric shock hazard or damage to equipment, only qualified service personnel should perform the following procedure. Thoroughly read and understand the procedure before beginning. If an event does not occur while performing this procedure, **Do Not Proceed. Remove All Power** including user supplied control voltages. User supplied voltages may exist even when main AC power is not applied to the drive. Correct the malfunction before continuing.

Prepare for Drive Start-Up

Drive Startup Task List

1. Disconnect and lock out power to the machine.
2. Verify that AC line power at the disconnect device is within the rated value of the drive.
3. If replacing a drive, verify the current drive's catalog number. Verify all options installed on the drive.
4. Verify that any digital control power is 24 volts.
5. Inspect grounding, wiring, connections, and environmental compatibility.

6. Verify that the Sink (SNK)/Source (SRC) jumper is set to match your control wiring scheme. See the PowerFlex 523 Control I/O Wiring Block Diagram on page 38 and PowerFlex 525 Control I/O Wiring Block Diagram on page 42 for location.

IMPORTANT The default control scheme is Source (SRC). The Stop terminal is jumpered to allow starting from the keypad or comms. If the control scheme is changed to Sink (SNK), the jumper must be removed from I/O Terminals 01 and 11 and installed between I/O Terminals 01 and 04.

7. Wire I/O as required for the application.
8. Wire the power input and output terminals.
9. Confirm that all inputs are connected to the correct terminals and are secure.
10. Collect and record motor nameplate and encoder or feedback device information. Verify motor connections.
    - Is the motor uncoupled?
    - What direction will the motor need to turn for the application?
11. Verify the input voltage to the drive. Verify if the drive is on a grounded system. Ensure the MOV jumpers are in the correct position. See AC Supply Source Considerations on page 19 for more information.
12. Apply power and reset the drive and communication adapters to factory default settings. To reset the drive, see parameter P053 [Reset to Defalts]. To reset the communication adapters, see the user manual of the adapter for more information.
13. Configure the basic program parameters related to the motor. See Smart Start-Up with Basic Program Group Parameters on page 65.
14. Complete the autotune procedure for the drive. See parameter P040 [Autotune] for more information.
15. If you are replacing a drive and have a backup of the parameter settings obtained using the USB utility application, use the USB utility application to apply the backup to the new drive. See Using the USB Port on page 67 for more information.

    Otherwise, set the necessary parameters for your application using the LCD keypad interface, Connected Components Workbench, or RSLogix or Logix Designer if using an Add-on Profile through EtherNet/IP.
    - Configure the communication parameters needed for the application (node number, IP address, Datalinks in and out, communication rate, speed reference, start source, and so on). Record these settings for your reference.
    - Configure the other drive parameters needed for the drive analog and digital I/O to work correctly. Verify the operation. Record these settings for your reference.

16. Verify the drive and motor perform as specified.
    - Verify that the Stop input is present or the drive will not start.

    IMPORTANT If I/O Terminal 01 is used as a stop input, the jumper between I/O Terminals 01 and 11 must be removed.

    - Verify the drive is receiving the speed reference from the correct place and that the reference is scaled correctly.
    - Verify the drive is receiving start and stop commands correctly.
    - Verify input currents are balanced.
    - Verify motor currents are balanced.
17. Save a backup of the drive settings using the USB utility application. See Using the USB Port on page 67 for more information.

Start, Stop, Direction and Speed Control

Factory default parameter values allow the drive to be controlled from the keypad. No programming is required to start, stop, change direction and control speed directly from the keypad.

IMPORTANT To disable reverse operation, see A544 [Reverse Disable].

If a fault appears on power up, see Fault Descriptions on page 159 for an explanation of the fault code.

Variable Torque Fan/Pump Applications

For improved motor and drive performance, tune the motor in SVC mode using parameter P040 [Autotune]. If V/Hz mode is selected, use parameter A530 [Boost Select] to adjust the boost.

Display and Control Keys

PowerFlex 523

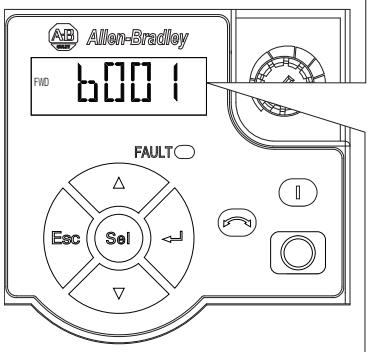

PowerFlex 525

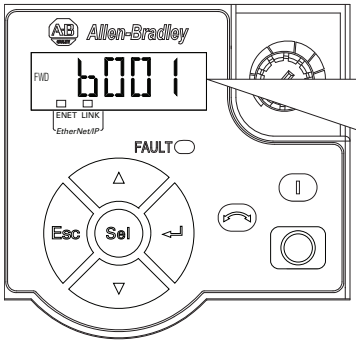

Menu	Parameter Group and Description
b	**Basic Display** Commonly viewed drive operating conditions.
P	**Basic Program** Commonly used programmable functions.
t	**Terminal Blocks** Programmable terminal functions.
C	**Communications** Programmable communication functions.
L	**Logic (PowerFlex 525 only)** Programmable logic functions.
d	**Advanced Display** Advanced drive operating conditions.
A	**Advanced Program** Remaining programmable functions.
N	**Network** Network functions that are shown only when a comm card is used.
M	**Modified** Functions from the other groups with values changed from default.
F	**Fault and Diagnostic** Consists of list of codes for specific fault conditions.
G	**AppView and CustomView** Functions from the other groups organized for specific applications.

Control and Navigation Keys

Display	Display State	Description
ENET (PowerFlex 525 only)	Off	Adapter is not connected to the network.
	Steady	Adapter is connected to the network and drive is controlled through Ethernet.
	Flashing	Adapter is connected to the network but drive is not controlled through Ethernet.
LINK (PowerFlex 525 only)	Off	Adapter is not connected to the network.
	Steady	Adapter is connected to the network but not transmitting data.
	Flashing	Adapter is connected to the network and transmitting data.

LED	LED State	Description
FAULT	Flashing Red	Indicates drive is faulted.

Key	Name	Description
	Up Arrow Down Arrow	Scroll through user-selectable display parameters or groups. Increment values.
	Escape	Back one step in programming menu. Cancel a change to a parameter value and exit Program Mode.
	Select	Advance one step in programming menu. Select a digit when viewing parameter value.
	Enter	Advance one step in programming menu. Save a change to a parameter value.

Key	Name	Description
	Reverse	Used to reverse direction of the drive. Default is active. Controlled by parameters P046, P048 and P050 [Start Source x] and A544 [Reverse Disable].
	Start	Used to start the drive. Default is active. Controlled by parameters P046, P048 and P050 [Start Source x].
	Stop	Used to stop the drive or clear a fault. This key is always active. Controlled by parameter P045 [Stop Mode].
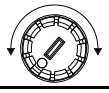	Potentiometer	Used to control speed of drive. Default is active. Controlled by parameters P047, P049 and P051 [Speed Referencex].

Viewing and Editing Parameters

The following is an example of basic integral keypad and display functions. This example provides basic navigation instructions and illustrates how to program a parameter.

Step	Key(s)	Example Display
1. When power is applied, the last user-selected Basic Display Group parameter number is briefly displayed with flashing characters. The display then defaults to that parameter's current value. (Example shows the value of b001 [Output Freq] with the drive stopped.)		
2. Press Esc to display the Basic Display Group parameter number shown on power-up. The parameter number will flash.		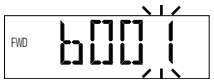
3. Press Esc to enter the parameter group list. The parameter group letter will flash.		
4. Press the Up Arrow or Down Arrow to scroll through the group list (b, P, t, C, L, d, A, f and Gx).	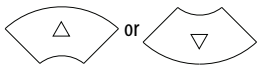	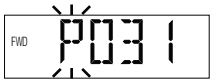
5. Press Enter or Sel to enter a group. The right digit of the last viewed parameter in that group will flash.	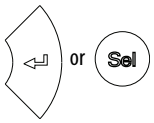	
6. Press the Up Arrow or Down Arrow to scroll through the parameter list.	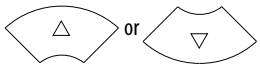	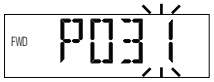
7. Press Enter to view the value of the parameter. Or Press Esc to return to the parameter list.	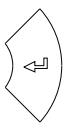	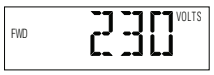
8. Press Enter or Sel to enter Program Mode and edit the value. The right digit will flash and the word Program on the LCD display will light up.	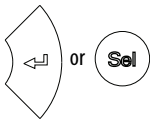	
9. Press the Up Arrow or Down Arrow to change the parameter value.	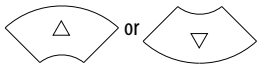	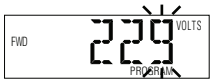

Step	Key(s)	Example Display
10. If desired, press Sel to move from digit to digit or bit to bit. The digit or bit that you can change will flash. 11. Press Esc to cancel a change and exit Program Mode. Or Press Enter to save a change and exit Program Mode. The digit will stop flashing and the word Program on the LCD display will turn off. 12. Press Esc to return to the parameter list. Continue to press Esc to back out of the programming menu. If pressing Esc does not change the display, then b001 [Output Freq] is displayed. Press Enter or Sel to enter the group list again.	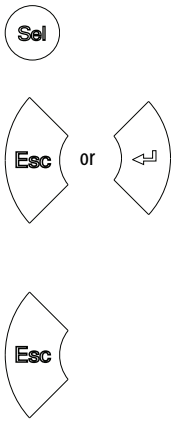	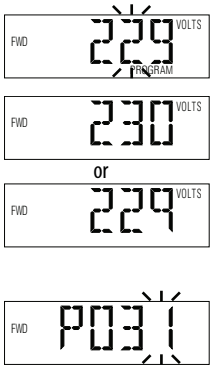

Drive Programming Tools

Some features in the PowerFlex 520-series drive are not supported by older configuration software tools. It is strongly recommended that customers using such tools migrate to RSLogix 5000 (version 17.0 or greater) or Logix Designer (version 21.0 or greater) with Add-On-Profile (AOP), or Connected Components Workbench (version 5.0 or greater) to enjoy a richer, full-featured configuration experience. For Automatic Device Configuration (ADC) support, RSLogix 5000 version 20.0 or greater is required.

Description	Catalog Number/Release Version
Connected Components Workbench(1)	Version 5.0 or greater
Logix Designer	Version 21.0 or greater
RSLogix 5000	Version 17.0 or greater
Built-in USB software tool	–
Serial Converter Module(2)	22-SCM-232
USB Converter Module(2)	1203-USB
Remote Panel Mount, LCD Display(2)	22-HIM-C2S
Remote Handheld, LCD Display(2)	22-HIM-A3

(1) Available as a free download at http://ab.rockwellautomation.com/programmable-controllers/connected-components-workbench-software.

(2) Does not support the new dynamic parameter groups (AppView, CustomView), and CopyCat functionality is limited to the linear parameter list.

Language Support

Language	Keypad/LCD Display	RSLogix 5000/ Logix Designer	Connected Components Workbench
English	Y	Y	Y
French	Y	Y	Y
Spanish	Y	Y	Y
Italian	Y	Y	Y
German	Y	Y	Y
Japanese	–	Y	–
Portuguese	Y	Y	–
Chinese Simplified	–	Y	Y
Korean	–	Y	–

Language	Keypad/LCD Display	RSLogix 5000/ Logix Designer	Connected Components Workbench
Polish(1)	Y	–	–
Turkish(1)	Y	–	–
Czech(1)	Y	–	–

(1) Due to a limitation of the LCD Display, some of the characters for Polish, Turkish, and Czech will be modified.

Smart Start-Up with Basic Program Group Parameters

The PowerFlex 520-series drive is designed so that start up is simple and efficient. The Basic Program Group contains the most commonly used parameters. See Programming and Parameters on page 71 for detailed descriptions of the parameters listed here, as well as the full list of available parameters.

= Stop drive before changing this parameter.
PF 525 = Parameter is specific to PowerFlex 525 drives only.

No.	Parameter	Min/Max	Display/Options	Default
P030	[Language]	1/15	1 = English 2 = Français 3 = Español 4 = Italiano 5 = Deutsch 6 = Reserved 7 = Português 8 = Reserved 9 = Reserved 10 = Reserved 11 = Reserved 12 = Polish 13 = Reserved 14 = Turkish 15 = Czech	1
	Selects the language displayed. **Important:** The setting takes effect after the drive is power cycled.			
P031	[Motor NP Volts]	10V (for 200V Drives), 20V (for 400V Drives), 25V (for 600V Drives)/Drive Rated Volts	1V	Based on Drive Rating
	Sets the motor nameplate rated volts.			
P032	[Motor NP Hertz]	15/500 Hz	1 Hz	60 Hz
	Sets the motor nameplate rated frequency.			
P033	[Motor OL Current]	0.0/(Drive Rated Amps x 2)	0.1 A	Based on Drive Rating
	Sets the motor nameplate overload current.			
P034	[Motor NP FLA]	0.0/(Drive Rated Amps x 2)	0.1 A	Drive Rated Amps
	Sets the motor nameplate FLA.			
P035	[Motor NP Poles]	2/40	1	4
	Sets the number of poles in the motor.			
P036	[Motor NP RPM]	0/24000 rpm	1 rpm	1750 rpm
	Sets the rated nameplate rpm of motor.			
P037 PF 525	[Motor NP Power]	0.00/Drive Rated Power	0.01 kW	Drive Rated Power
	Sets the motor nameplate power. Used in PM regulator.			
P038	[Voltage Class]	2/3	2 = “480V” 3 = “600V”	3
	Sets the voltage class of 600V drives. Only applicable to 600V drives.			

= Stop drive before changing this parameter.
PF 525 = Parameter is specific to PowerFlex 525 drives only.

No.	Parameter	Min/Max	Display/Options	Default
P039	[Torque Perf Mode]	0/4	0 = "V/Hz" 1 = "SVC" 2 = "Economize" 3 = "Vector"(1) 4 = "PM Control"(1)(2)(3)	1
	Selects the motor control mode. (1) Setting is specific to PowerFlex 525 drives only. (2) Setting is available in PowerFlex 525 FRN 5.xxx and later. (3) When P039 [Torque Perf Mode] is set to 4 and A535 [Motor Fdbk Type] is set to 0, 1, 2 or 3, the drive is in open loop PM motor control mode. When P039 [Torque Perf Mode] is set to 4 and A535 [Motor Fdbk Type] is set to 4 or 5, the drive is in closed loop PM motor control mode.			
P040	[Autotune]	0/2	0 = "Ready/Idle" 1 = "Static Tune" 2 = "Rotate Tune"	0
	Enables a static (not spinning) or dynamic (motor spinning) autotune.			
P041	[Accel Time 1]	0.00/600.00 s	0.01 s	10.00 s
	Sets the time for the drive to accel from 0 Hz to [Maximum Freq].			
P042	[Decel Time 1]	0.00/600.00 s	0.01 s	10.00 s
	Sets the time for the drive to decel from [Maximum Freq] to 0 Hz.			
P043	[Minimum Freq]	0.00/500.00 Hz	0.01 Hz	0.00 Hz
	Sets the lowest frequency the drive outputs.			
P044	[Maximum Freq]	0.00/500.00 Hz	0.01 Hz	60.00 Hz
	Sets the highest frequency the drive outputs.			
P045	[Stop Mode]	0/11	0 = "Ramp, CF"(1) 1 = "Coast, CF"(1) 2 = "DC Brake, CF"(1) 3 = "DCBrkAuto,CF"(1) 4 = "Ramp" 5 = "Coast" 6 = "DC Brake" 7 = "DC BrakeAuto" 8 = "Ramp+EM B,CF"(1) 9 = "Ramp+EM Brk" 10 = "PointStp,CF"(1) 11 = "PointStop"	0
	Stop command for normal stop. **Important:** I/O Terminal 01 is always a stop input. The stopping mode is determined by the drive setting. **Important:** The drive is shipped with a jumper installed between I/O Terminals 01 and 11. Remove this jumper when using I/O Terminal 01 as a stop or enable input. (1) Stop input also clears active fault.			
P046, P048, P050	[Start Source 1]	1/5	1 = "Keypad"(1) 2 = "DigIn TrmBlk"(2) 3 = "Serial/DSI" 4 = "Network Opt" 5 = "Ethernet/IP"(3)	P046 = 1 P048 = 2 P050 = 3 (PowerFlex 523) 5 (PowerFlex 525)
	Sets the default control scheme used to start the drive unless overriden by P048 [Start Source 2] or P050 [Start Source 3]. (1) When active, the Reverse key is also active unless disabled by A544 [Reverse Disable]. (2) If "DigIn TrmBlk" is selected, ensure that the digital inputs are properly configured. (3) Setting is specific to PowerFlex 525 drives only.			

= Stop drive before changing this parameter.
PF 525 = Parameter is specific to PowerFlex 525 drives only.

No.	Parameter	Min/Max	Display/Options	Default
P047, P049, P051	[Speed Reference1] Sets the default speed command of the drive unless overridden by P049 [Speed Reference2] or P051 [Speed Reference3]. (1) Setting is specific to PowerFlex 525 drives only.	1/16	1 = "Drive Pot" 2 = "Keypad Freq" 3 = "Serial/DSI" 4 = "Network Opt" 5 = "0-10V Input" 6 = "4-20mA Input" 7 = "Preset Freq" 8 = "Anlg In Mult"(1) 9 = "MOP" 10 = "Pulse Input" 11 = "PID1 Output" 12 = "PID2 Output"(1) 13 = "Step Logic"(1) 14 = "Encoder"(1) 15 = "Ethernet/IP"(1) 16 = "Positioning"(1)	P047 = 1 P049 = 5 P051 = 3 (PowerFlex 523) 15 (PowerFlex 525)
P052	[Average kWh Cost] Sets the average cost per kWh.	0.00/655.35	0.01	0.00
P053	[Reset To Defalts] Resets parameters to their factory defaults values. After a Reset command, the value of this parameter returns to zero. (1) Power cycle of the drive, **NO** parameters are reset. (2) Setting is available in PowerFlex 525 FRN 5.xxx and later. (3) Setting is available in PowerFlex 523 FRN 3.xxx and later.	0/4	0 = "Ready/Idle" 1 = "Param Reset" 2 = "Factory Rset" 3 = "Power Reset" 4 = "Module Reset"(1)(2)(3)	0

LCD Display with QuickView Technology

QuickView™ technology enables text to scroll across the LCD display of the PowerFlex 520-series drive. This allows you to easily configure parameters, troubleshoot faults and view diagnostic items without using a separate device.

Use parameter A556 [Text Scroll] to set the speed at which the text scrolls across the display. Select 0 "Off" to turn off text scrolling. See Language Support on page 64 for the languages supported by the PowerFlex 520-series drive.

Using the USB Port

The PowerFlex 520-series drive has a USB port that connects to a PC for the purpose of upgrading drive firmware or uploading/downloading a parameter configuration.

IMPORTANT To use the USB feature of the PowerFlex 520-series drive, Microsoft .Net Framework 2.0 and Windows XP or later is required.

MainsFree Programming

The MainsFree™ programming feature allows you to quickly configure your PowerFlex 520-series drive without having to power up the control module or install additional software. Simply connect the control module to your PC with a USB Type B cable and you can download a parameter configuration to your drive. You can also easily upgrade your drive with the latest firmware.

Connecting a PowerFlex 520-series drive to a PC

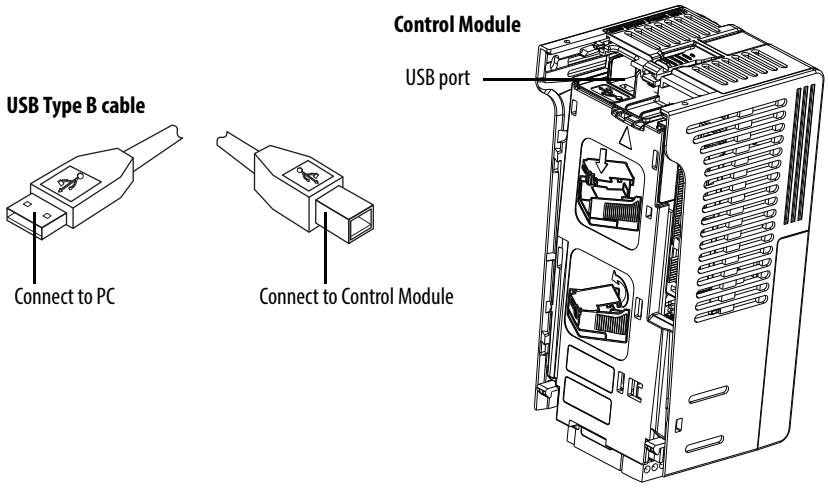

When connected, the drive appears on the PC and contains two files:

- GUIDE.PDF
  This file contains links to relevant product documentation and software downloads.
- PF52XUSB.EXE
  This file is an application to flash upgrade firmware or upload/download a parameter configuration.

  It is not possible to delete these files or add more to the drive.

Double-click on the PF52XUSB.EXE file to launch the USB utility application. The main menu is displayed. Follow the program instructions to upgrade the firmware or upload/download configuration data.

IMPORTANT Make sure your PC is powered by an AC power outlet or has a fully charged battery before starting any operation. This prevents the operation from terminating before completion due to insufficient power.

Limitation in Downloading .pf5 Configuration Files with the USB Utility Application

Before downloading a .pf5 configuration file using the USB utility application, parameter C169 [MultiDrv Sel] in the destination drive must match the incoming configuration file. If it does not, set the parameter manually to match and then cycle drive power. Also, the drive type of the .pf5 file must match the drive.

This means you cannot apply a multi-drive configuration using the USB utility application to a drive in single mode (parameter C169 [MultiDrv Sel] set to 0 “Disabled”), or apply a single mode configuration to a drive in multi-drive mode.

Notes:

Programming and Parameters

This chapter provides a complete listing and description of the PowerFlex 520-series drive parameters. Parameters are programmed (viewed/edited) using either the drive's built-in keypad, RSLogix 5000 version 17.0 or greater, Logix Designer version 21.0 or greater, o r Connected Components Workbench version 5.0 or greater software. The Connected Components Workbench software can be used offline (through USB) to upload parameter configurations to the drive or online (through Ethernet connection).

Limited functionality is also available when using the Connected Components Workbench software online (through DSI and serial converter module), a legacy external HIM, or legacy software online (DriveTools SP™). When using these methods, the parameter list can only be displayed linearly, and there is no access to communications option card programming.

For information on...	See page...
About Parameters	71
Parameter Groups	73
Basic Display Group	78
Basic Program Group	83
Terminal Block Group	89
Communications Group	101
Logic Group	107
Advanced Display Group	110
Advanced Program Group	115
Network Parameter Group	141
Modified Parameter Group	142
Fault and Diagnostic Group	142
AppView Parameter Groups	150
CustomView Parameter Group	151
Parameter Cross Reference by Name	152

About Parameters

To configure a drive to operate in a specific way, drive parameters may have to be set. Three types of parameters exist:

- **ENUM**
  ENUM parameters allow a selection from 2 or more items. Each item is represented by a number.
- **Numeric Parameters**
  These parameters have a single numerical value (0.1V).

- **Bit Parameters**
  Bit parameters have five individual digits associated with features or conditions. If the digit is 0, the feature is off or the condition is false. If the digit is 1, the feature is on or the condition is true.

Some parameters are marked as follows.

= Stop drive before changing this parameter.

= 32 bit parameter.

= Parameter is specific to PowerFlex 525 drives only.

32-bit Parameters

Parameters marked 32-bit will have two parameter numbers when using RS485 communications and programming software. For example, parameters b010 [Process Display] and b011 [Process Fract] are scaled and displayed as follows.

- P043 [Minimum Freq] = 0 Hz
- P044 [Maximum Freq] = 60 Hz
- A481 [Process Display Lo] = 0
- A482 [Process Display Hi] = 10

Using the forumla,

$$\text{Scaled Process Value (PV)} = \frac{([\text{Process Disp Hi}] - [\text{Process Disp Lo}]) \times ([\text{Output Freq}] - [\text{Minimum Freqp}])}{[\text{Maximum Freq}] - [\text{Minimum Freq}]}$$

when the drive is running at 10 Hz, the Process Value will be 1.66.

On the drive LCD display, only parameter b010 [Process Display] is shown.

In Connected Components Workbench software, parameter b010 [Process Display] and b011 [Process Fract] are shown separately.

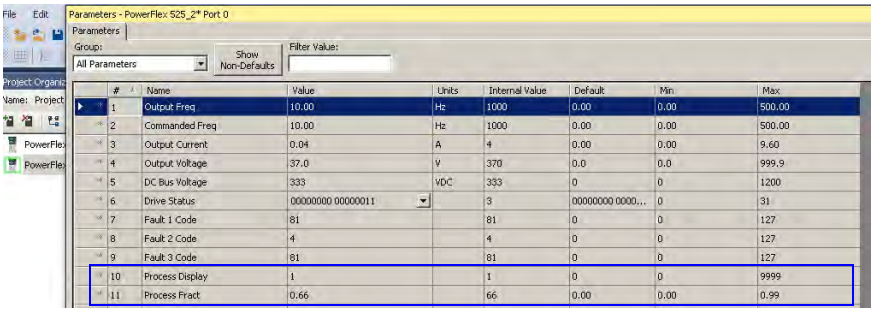

Parameter Groups

For an alphabetical listing of parameters, see Parameter Cross Reference by Name on page 152.

Basic Display		Output Voltage	b004	Control Source	b012	Elapsed Run Time	b019	Accum CO2 Sav	b026
		DC Bus Voltage	b005	Contrl In Status	b013	Average Power	b020	Drive Temp	b027
		Drive Status	b006	Dig In Status	b014	Elapsed kWh	b021	Control Temp	b028
		Fault 1 Code	b007	Output RPM	b015	Elapsed MWh	b022	Control SW Ver	b029
Output Freq	b001	Fault 2 Code	b008	Output Speed	b016	Energy Saved	b023		
Commanded Freq	b002	Fault 3 Code	b009	Output Power	b017	Accum kWh Sav	b024		
Output Current	b003	Process Display	b010	Power Saved	b018	Accum Cost Sav	b025		
Basic Program		Motor NP Hertz	P032	Voltage Class	P038	Maximum Freq	P044	Start Source 3	P050
		Motor OL Current	P033	Torque Perf Mode	P039	Stop Mode	P045	Speed Reference3	P051
		Motor NP FLA	P034	Autotune	P040	Start Source 1	P046	Average kWh Cost	P052
		Motor NP Poles	P035	Accel Time 1	P041	Speed Reference1	P047	Reset To Defalts	P053
Language	P030	Motor NP RPM	P036	Decel Time 1	P042	Start Source 2	P048		
Motor NP Volts	P031	Motor NP Power[1]	P037	Minimum Freq	P043	Speed Reference2	P049		
Terminal Blocks		DigIn TermBlk 07[1]	t067	Relay 1 On Time	t079	Analog Out High[2]	t089	Anlg Loss Delay	t098
		DigIn TermBlk 08[1]	t068	Relay 1 Off Time	t080	Anlg Out Setpt[2]	t090	Analog In Filter	t099
		Opto Out1 Sel[1]	t069	Relay Out2 Sel[1]	t081	Anlg In 0-10V Lo	t091	Sleep-Wake Sel	t100
		Opto Out1 Level[1]	t070	Relay Out2 Level[1]	t082	Anlg In 0-10V Hi	t092	Sleep Level	t101
DigIn TermBlk 02	t062	Opto Out2 Sel[1]	t072	Relay 2 On Time[1]	t084	10V Bipolar Enbl[1]	t093	Sleep Time	t102
DigIn TermBlk 03	t063	Opto Out2 Level[1]	t073	Relay 2 Off Time[1]	t085	Anlg In V Loss	t094	Wake Level	t103
2-Wire Mode	t064	Opto Out Logic[1]	t075	EM Brk Off Delay	t086	Anlg In4-20mA Lo	t095	Wake Time	t104
DigIn TermBlk 05	t065	Relay Out1 Sel	t076	EM Brk On Delay	t087	Anlg In4-20mA Hi	t096	Safety Open En[1]	t105
DigIn TermBlk 06	t066	Relay Out1 Level	t077	Analog Out Sel[2]	t088	Anlg In mA Loss	t097	SafetyFlt RstCfg[1][3]	t106
Communications		EN Addr Sel[1]	C128	EN Gateway Cfg 3[1]	C139	EN Data In 1[1]	C153	Opt Data In 4	C164
		EN IP Addr Cfg 1[1]	C129	EN Gateway Cfg 4[1]	C140	EN Data In 2[1]	C154	Opt Data Out 1	C165
		EN IP Addr Cfg 2[1]	C130	EN Rate Cfg[1]	C141	EN Data In 3[1]	C155	Opt Data Out 2	C166
		EN IP Addr Cfg 3[1]	C131	EN Comm Flt Actn[1]	C143	EN Data In 4[1]	C156	Opt Data Out 3	C167
Comm Write Mode	C121	EN IP Addr Cfg 4[1]	C132	EN Idle Flt Actn[1]	C144	EN Data Out 1[1]	C157	Opt Data Out 4	C168
Cmd Stat Select[1]	C122	EN Subnet Cfg 1[1]	C133	EN Flt Cfg Logic[1]	C145	EN Data Out 2[1]	C158	MultiDrv Sel	C169
RS485 Data Rate	C123	EN Subnet Cfg 2[1]	C134	EN Flt Cfg Ref[1]	C146	EN Data Out 3[1]	C159	Drv 1 Addr	C171
RS485 Node Addr	C124	EN Subnet Cfg 3[1]	C135	EN Flt Cfg DL 1[1]	C147	EN Data Out 4[1]	C160	Drv 2 Addr	C172
Comm Loss Action	C125	EN Subnet Cfg 4[1]	C136	EN Flt Cfg DL 2[1]	C148	Opt Data In 1	C161	Drv 3 Addr	C173
Comm Loss Time	C126	EN Gateway Cfg 1[1]	C137	EN Flt Cfg DL 3[1]	C149	Opt Data In 2	C162	Drv 4 Addr	C174
RS485 Format	C127	EN Gateway Cfg 2[1]	C138	EN Flt Cfg DL 4[1]	C150	Opt Data In 3	C163	DSI I/O Cfg	C175
Logic[1]		Stp Logic 2	L182	Stp Logic Time 0	L190	Stp Logic Time 6	L196	Step Units 4	L208
		Stp Logic 3	L183	Stp Logic Time 1	L191	Stp Logic Time 7	L197	Step Units 5	L210
		Stp Logic 4	L184	Stp Logic Time 2	L192	Step Units 0	L200	Step Units 6	L212
		Stp Logic 5	L185	Stp Logic Time 3	L193	Step Units 1	L202	Step Units 7	L214
Stp Logic 0	L180	Stp Logic 6	L186	Stp Logic Time 4	L194	Step Units 2	L204		
Stp Logic 1	L181	Stp Logic 7	L187	Stp Logic Time 5	L195	Step Units 3	L206		
Advanced Display		Elapsed Time-min	d363	Speed Feedback	d376	PID2 Fdbk Displ[1]	d385	RdyBit Mode Act[2][4]	d392
		Counter Status	d364	Encoder Speed[2]	d378	PID2 Setpnt Disp[1]	d386	Drive Status 2[2][3]	d393
		Timer Status	d365	DC Bus Ripple	d380	Position Status[1]	d387	Dig Out Status[2][3]	d394
		Drive Type	d367	Output Powr Fctr	d381	Units Traveled H[1]	d388		
Analog In 0-10V	d360	Testpoint Data	d368	Torque Current	d382	Units Traveled L[1]	d389		
Analog In 4-20mA	d361	Motor OL Level	d369	PID1 Fdbk Displ	d383	Fiber Status	d390		
Elapsed Time-hr	d362	Slip Hz Meter	d375	PID1 Setpnt Disp	d384	Stp Logic Status[1]	d391		

Advanced Program		Accel Time 2	A442	PID 2 Preload[1]	A478	PM HIFI NS Cur[1][3]	A519	Reset Meters	A555
		Decel Time 2	A443	PID 2 Invert Err[1]	A479	PM Bus Reg Kd[1][3]	A520	Text Scroll	A556
		Accel Time 3	A444	Process Disp Lo	A481	Freq 1 Kp[1]	A521	Out Phas Loss En	A557
		Decel Time 3	A445	Process Disp Hi	A482	Freq 1 Ki[1]	A522	Positioning Mode[1]	A558
Preset Freq 0	A410	Accel Time 4	A446	Testpoint Sel	A483	Freq 2 Kp[1]	A523	Counts Per Unit[1]	A559
Preset Freq 1	A411	Decel Time 4	A447	Current Limit 1	A484	Freq 2 Ki[1]	A524	Enh Control Word[1]	A560
Preset Freq 2	A412	Skip Frequency 1	A448	Current Limit 2[1]	A485	Freq 3 Kp[1]	A525	Home Save[1]	A561
Preset Freq 3	A413	Skip Freq Band 1	A449	Shear Pin1 Level	A486	Freq 3 Ki[1]	A526	Find Home Freq[1]	A562
Preset Freq 4	A414	Skip Frequency 2	A450	Shear Pin 1 Time	A487	PM FWKn 1 Kp[1][3]	A527	Find Home Dir[1]	A563
Preset Freq 5	A415	Skip Freq Band 2	A451	Shear Pin2 Level[1]	A488	PM FWKn 2 Kp[1][3]	A528	Encoder Pos Tol[1]	A564
Preset Freq 6	A416	Skip Frequency 3[1]	A452	Shear Pin 2 Time[1]	A489	PM Control Cfg[1][3]	A529	Pos Reg Filter[1]	A565
Preset Freq 7	A417	Skip Freq Band 3[1]	A453	Load Loss Level[1]	A490	Boost Select	A530	Pos Reg Gain[1]	A566
Preset Freq 8[1]	A418	Skip Frequency 4[1]	A454	Load Loss Time[1]	A491	Start Boost	A531	Max Traverse	A567
Preset Freq 9[1]	A419	Skip Freq Band 4[1]	A455	Stall Fault Time	A492	Break Voltage	A532	Traverse Inc	A568
Preset Freq 10[1]	A420	PID 1 Trim Hi	A456	Motor OL Select	A493	Break Frequency	A533	Traverse Dec	A569
Preset Freq 11[1]	A421	PID 1 Trim Lo	A457	Motor OL Ret	A494	Maximum Voltage	A534	P Jump	A570
Preset Freq 12[1]	A422	PID 1 Trim Sel	A458	Drive OL Mode	A495	Motor Fdbk Type[2]	A535	Sync Time	A571
Preset Freq 13[1]	A423	PID 1 Ref Sel	A459	IR Voltage Drop	A496	Encoder PPR[1]	A536	Speed Ratio	A572
Preset Freq 14[1]	A424	PID 1 Fdback Sel	A460	Flux Current Ref	A497	Pulse In Scale	A537	Mtr Options Cfg[2][5]	A573
Preset Freq 15[1]	A425	PID 1 Prop Gain	A461	Motor Rr[1]	A498	Ki Speed Loop[2]	A538	RdyBit Mode Cfg[2][4]	A574
Keypad Freq	A426	PID 1 Integ Time	A462	Motor Lm[1]	A499	Kp Speed Loop[2]	A539	Flux Braking En[2][3]	A575
MOP Freq	A427	PID 1 Diff Rate	A463	Motor Lx[1]	A500	Var PWM Disable	A540	Phase Loss Level[2][3]	A576
MOP Reset Sel	A428	PID 1 Setpoint	A464	PM IR Voltage[1][3]	A501	Auto Rstrt Tries	A541	Current Loop BW[1][3]	A580
MOP Preload	A429	PID 1 Deadband	A465	PM IXd Voltage[1][3]	A502	Auto Rstrt Delay	A542	PM Stable 1 Freq[1][3]	A581
MOP Time	A430	PID 1 Preload	A466	PM IXq Voltage[1][3]	A503	Start At PowerUp	A543	PM Stable 2 Freq[1][3]	A582
Jog Frequency	A431	PID 1 Invert Err	A467	PM BEMF Voltage[1][3]	A504	Reverse Disable	A544	PM Stable 1 Kp[1][3]	A583
Jog Accel/Decel	A432	PID 2 Trim Hi[1]	A468	Speed Reg Sel[1]	A509	Flying Start En	A545	PM Stable 2 Kp[1][3]	A584
Purge Frequency	A433	PID 2 Trim Lo[1]	A469	Freq 1[1]	A510	FlyStrt CurLimit	A546	PM Stable Brk Pt[1][3]	A585
DC Brake Time	A434	PID 2 Trim Sel[1]	A470	Freq 1 BW[1]	A511	Compensation	A547	PM Stepload Kp[1][3]	A586
DC Brake Level	A435	PID 2 Ref Sel[1]	A471	Freq 2[1]	A512	Power Loss Mode	A548	PM 1 Efficiency[1][3]	A587
DC Brk Time@Strt	A436	PID 2 Fdback Sel[1]	A472	Freq 2 BW[1]	A513	Half Bus Enable	A549	PM 2 Efficiency[1][3]	A588
DB Resistor Sel	A437	PID 2 Prop Gain[1]	A473	Freq 3[1]	A514	Bus Reg Enable	A550	PM Algor Sel[1][3]	A589
DB Threshold	A438	PID 2 Integ Time[1]	A474	Freq 3 BW[1]	A515	Fault Clear	A551		
S Curve %	A439	PID 2 Diff Rate[1]	A475	PM Initial Sel[1][3]	A516	Program Lock	A552		
PWM Frequency	A440	PID 2 Setpoint[1]	A476	PM DC Inject Cur[1][3]	A517	Program Lock Mod	A553		
Droop Hertz@ FLA[1]	A441	PID 2 Deadband[1]	A477	PM Align Time[1][3]	A518	Drv Ambient Sel	A554		

Network	This group contains parameters for the network option card that is installed. See the network option card's user manual for more information on the available parameters.
Modified	This group contains parameters that have their values changed from the factory default. When a parameter has its default value changed, it is automatically added to this group. When a parameter has its value changed back to the factory default, it is automatically removed from this group.

Fault and Diagnostic	
Fault 4 Code	F604
Fault 5 Code	F605
Fault 6 Code	F606
Fault 7 Code	F607
Fault 8 Code	F608
Fault 9 Code	F609
Fault10 Code	F610
Fault 1 Time-hr	F611
Fault 2 Time-hr	F612
Fault 3 Time-hr	F613
Fault 4 Time-hr	F614
Fault 5 Time-hr	F615
Fault 6 Time-hr(1)	F616
Fault 7 Time-hr(1)	F617
Fault 8 Time-hr(1)	F618
Fault 9 Time-hr(1)	F619
Fault10 Time-hr(1)	F620
Fault 1 Time-min	F621
Fault 2 Time-min	F622
Fault 3 Time-min	F623
Fault 4 Time-min	F624
Fault 5 Time-min	F625
Fault 6 Time-min(1)	F626
Fault 7 Time-min(1)	F627
Fault 8 Time-min(1)	F628
Fault 9 Time-min(1)	F629
Fault10 Time-min(1)	F630
Fault 1 Freq	F631
Fault 2 Freq	F632
Fault 3 Freq	F633
Fault 4 Freq	F634
Fault 5 Freq	F635
Fault 6 Freq(1)	F636
Fault 7 Freq(1)	F637
Fault 8 Freq(1)	F638
Fault 9 Freq(1)	F639
Fault10 Freq(1)	F640
Fault 1 Current	F641
Fault 2 Current	F642
Fault 3 Current	F643
Fault 4 Current	F644
Fault 5 Current	F645
Fault 6 Current(1)	F646
Fault 7 Current(1)	F647
Fault 8 Current(1)	F648
Fault 9 Current(1)	F649
Fault10 Current(1)	F650
Fault 1 BusVolts	F651
Fault 2 BusVolts	F652
Fault 3 BusVolts	F653
Fault 4 BusVolts	F654
Fault 5 BusVolts	F655
Fault 6 BusVolts(1)	F656
Fault 7 BusVolts(1)	F657
Fault 8 BusVolts(1)	F658
Fault 9 BusVolts(1)	F659
Fault10 BusVolts(1)	F660
Status @ Fault 1	F661
Status @ Fault 2	F662
Status @ Fault 3	F663
Status @ Fault 4	F664
Status @ Fault 5	F665
Status @ Fault 6(1)	F666
Status @ Fault 7(1)	F667
Status @ Fault 8(1)	F668
Status @ Fault 9(1)	F669
Status @ Fault10(1)	F670
Comm Sts - DSI	F681
Comm Sts - Opt	F682
Com Sts-Emb Enet(1)	F683
EN Addr Src(1)	F684
EN Rate Act(1)	F685
DSI I/O Act	F686
HW Addr 1(1)	F687
HW Addr 2(1)	F688
HW Addr 3(1)	F689
HW Addr 4(1)	F690
HW Addr 5(1)	F691
HW Addr 6(1)	F692
EN IP Addr Act 1(1)	F693
EN IP Addr Act 2(1)	F694
EN IP Addr Act 3(1)	F695
EN IP Addr Act 4(1)	F696
EN Subnet Act 1(1)	F697
EN Subnet Act 2(1)	F698
EN Subnet Act 3(1)	F699
EN Subnet Act 4(1)	F700
EN Gateway Act 1(1)	F701
EN Gateway Act 2(1)	F702
EN Gateway Act 3(1)	F703
EN Gateway Act 4(1)	F704
Drv 0 Logic Cmd	F705
Drv 0 Reference	F706
Drv 0 Logic Sts	F707
Drv 0 Feedback	F708
Drv 1 Logic Cmd	F709
Drv 1 Reference	F710
Drv 1 Logic Sts	F711
Drv 1 Feedback	F712
Drv 2 Logic Cmd	F713
Drv 2 Reference	F714
Drv 2 Logic Sts	F715
Drv 2 Feedback	F716
Drv 3 Logic Cmd	F717
Drv 3 Reference	F718
Drv 3 Logic Sts	F719
Drv 3 Feedback	F720
Drv 4 Logic Cmd	F721
Drv 4 Reference	F722
Drv 4 Logic Sts	F723
Drv 4 Feedback	F724
EN Rx Overruns(1)	F725
EN Rx Packets(1)	F726
EN Rx Errors(1)	F727
EN Tx Packets(1)	F728
EN Tx Errors(1)	F729
EN Missed IO Pkt(1)	F730
DSI Errors	F731

(1) Parameter is specific to PowerFlex 525 drives only.
(2) Parameter is also available in PowerFlex 523 FRN 3.xxx and later.
(3) Parameter is available in PowerFlex 525 FRN 5.xxx and later.
(4) Parameter is available in PowerFlex 525 FRN 3.xxx and later.
(5) Parameter is available in PowerFlex 525 FRN 2.xxx and later.

AppView Parameter Groups

PowerFlex 520-series drives include various AppView™ parameter groups that groups certain parameters together for quick and easy access based on different types of applications. See AppView Parameter Groups on page 150 for more information.

Conveyor		Motor NP Volts	P031	Decel Time 1	P042	DigIn TermBlk 03	t063	Anlg In mA Loss	t097
		Motor NP Hertz	P032	Minimum Freq	P043	Opto Out1 Sel	t069	Slip Hz Meter	d375
		Motor OL Current	P033	Maximum Freq	P044	Relay Out1 Sel	t076	Preset Freq 0	A410
		Motor NP FLA	P034	Stop Mode	P045	Anlg In 0-10V Lo	t091	Jog Frequency	A431
Language	P030	Motor NP Poles	P035	Start Source 1	P046	Anlg In 0-10V Hi	t092	Jog Accel/Decel	A432
Output Freq	b001	Autotune	P040	Speed Reference1	P047	Anlg In4-20mA Lo	t095	S Curve %	A439
Commanded Freq	b002	Accel Time 1	P041	DigIn TermBlk 02	t062	Anlg In4-20mA Hi	t096	Reverse Disable	A544
Mixer		Commanded Freq	b002	Motor NP Poles	P035	Stop Mode	P045	Anlg In4-20mA Lo	t095
		Output Current	b003	Autotune	P040	Start Source 1	P046	Anlg In4-20mA Hi	t096
		Motor NP Volts	P031	Accel Time 1	P041	Speed Reference1	P047	Anlg In mA Loss	t097
		Motor NP Hertz	P032	Decel Time 1	P042	Relay Out1 Sel	t076	Preset Freq 0	A410
Language	P030	Motor OL Current	P033	Minimum Freq	P043	Anlg In 0-10V Lo	t091	Stall Fault Time	A492
Output Freq	b001	Motor NP FLA	P034	Maximum Freq	P044	Anlg In 0-10V Hi	t092		
Compressor		Motor NP Hertz	P032	Maximum Freq	P044	Anlg In 0-10V Lo	t091	Start At PowerUp	A543
		Motor OL Current	P033	Stop Mode	P045	Anlg In 0-10V Hi	t092	Reverse Disable	A544
		Motor NP FLA	P034	Start Source 1	P046	Anlg In4-20mA Lo	t095	Power Loss Mode	A548
		Motor NP Poles	P035	Speed Reference1	P047	Anlg In4-20mA Hi	t096	Half Bus Enable	A549
Language	P030	Autotune	P040	Relay Out1 Sel	t076	Anlg In mA Loss	t097		
Output Freq	b001	Accel Time 1	P041	Analog Out Sel	t088	Preset Freq 0	A410		
Commanded Freq	b002	Decel Time 1	P042	Analog Out High	t089	Auto Rstrt Tries	A541		
Motor NP Volts	P031	Minimum Freq	P043	Anlg Out Setpt	t090	Auto Rstrt Delay	A542		
Centrifugal Pump		Motor OL Current	P033	Start Source 1	P046	Anlg In4-20mA Hi	t096	PID 1 Diff Rate	A463
		Motor NP FLA	P034	Speed Reference1	P047	Anlg In mA Loss	t097	PID 1 Setpoint	A464
		Motor NP Poles	P035	Relay Out1 Sel	t076	Preset Freq 0	A410	PID 1 Deadband	A465
		Autotune	P040	Analog Out Sel	t088	PID 1 Trim Hi	A456	PID 1 Preload	A466
Language	P030	Accel Time 1	P041	Analog Out High	t089	PID 1 Trim Lo	A457	Auto Rstrt Tries	A541
Output Freq	b001	Decel Time 1	P042	Anlg Out Setpt	t090	PID 1 Ref Sel	A459	Auto Rstrt Delay	A542
Commanded Freq	b002	Minimum Freq	P043	Anlg In 0-10V Lo	t091	PID 1 Fdback Sel	A460	Start At PowerUp	A543
Motor NP Volts	P031	Maximum Freq	P044	Anlg In 0-10V Hi	t092	PID 1 Prop Gain	A461	Reverse Disable	A544
Motor NP Hertz	P032	Stop Mode	P045	Anlg In4-20mA Lo	t095	PID 1 Integ Time	A462		
Blower/Fan		Motor OL Current	P033	Start Source 1	P046	Anlg In4-20mA Hi	t096	PID 1 Diff Rate	A463
		Motor NP FLA	P034	Speed Reference1	P047	Anlg In mA Loss	t097	PID 1 Setpoint	A464
		Motor NP Poles	P035	Relay Out1 Sel	t076	Preset Freq 0	A410	PID 1 Deadband	A465
		Autotune	P040	Analog Out Sel	t088	PID 1 Trim Hi	A456	PID 1 Preload	A466
Language	P030	Accel Time 1	P041	Analog Out High	t089	PID 1 Trim Lo	A457	Auto Rstrt Tries	A541
Output Freq	b001	Decel Time 1	P042	Anlg Out Setpt	t090	PID 1 Ref Sel	A459	Auto Rstrt Delay	A542
Commanded Freq	b002	Minimum Freq	P043	Anlg In 0-10V Lo	t091	PID 1 Fdback Sel	A460	Start At PowerUp	A543
Motor NP Volts	P031	Maximum Freq	P044	Anlg In 0-10V Hi	t092	PID 1 Prop Gain	A461	Reverse Disable	A544
Motor NP Hertz	P032	Stop Mode	P045	Anlg In4-20mA Lo	t095	PID 1 Integ Time	A462	Flying Start En	A545

Extruder		Motor NP Hertz	P032	Stop Mode	P045	Anlg In4-20mA Lo	t095	Encoder PPR	A536
		Motor OL Current	P033	Start Source 1	P046	Anlg In4-20mA Hi	t096	Pulse In Scale	A537
		Motor NP FLA	P034	Speed Reference1	P047	Anlg In mA Loss	t097	Ki Speed Loop	A538
		Motor NP Poles	P035	Relay Out1 Sel	t076	Slip Hz Meter	d375	Kp Speed Loop	A539
Language	P030	Autotune	P040	Analog Out Sel	t088	Speed Feedback	d376	Power Loss Mode	A548
Output Freq	b001	Accel Time 1	P041	Analog Out High	t089	Encoder Speed	d378	Half Bus Enable	A549
Commanded Freq	b002	Decel Time 1	P042	Anlg Out Setpt	t090	Preset Freq 0	A410		
Output Current	b003	Minimum Freq	P043	Anlg In 0-10V Lo	t091	Stall Fault Time	A492		
Motor NP Volts	P031	Maximum Freq	P044	Anlg In 0-10V Hi	t092	Motor Fdbk Type	A535		
Positioning(1)		Stop Mode	P045	Stp Logic 5	L185	Step Units 6	L212	Jog Accel/Decel	A432
		Start Source 1	P046	Stp Logic 6	L186	Step Units 7	L214	DB Threshold	A438
		Speed Reference1	P047	Stp Logic 7	L187	Slip Hz Meter	d375	S Curve %	A439
		DigIn TermBlk 02	t062	Stp Logic Time 0	L190	Speed Feedback	d376	Motor Fdbk Type	A535
Language	P030	DigIn TermBlk 03	t063	Stp Logic Time 1	L191	Encoder Speed	d378	Encoder PPR	A536
Output Freq	b001	DigIn TermBlk 05	t065	Stp Logic Time 2	L192	Units Traveled H	d388	Pulse In Scale	A537
Commanded Freq	b002	DigIn TermBlk 06	t066	Stp Logic Time 3	L193	Units Traveled L	d389	Ki Speed Loop	A538
Motor NP Volts	P031	Opto Out1 Sel	t069	Stp Logic Time 4	L194	Preset Freq 0	A410	Kp Speed Loop	A539
Motor NP Hertz	P032	Opto Out2 Sel	t072	Stp Logic Time 5	L195	Preset Freq 1	A411	Bus Reg Enable	A550
Motor OL Current	P033	Relay Out1 Sel	t076	Stp Logic Time 6	L196	Preset Freq 2	A412	Positioning Mode	A558
Motor NP FLA	P034	EM Brk Off Delay	t086	Stp Logic Time 7	L197	Preset Freq 3	A413	Counts Per Unit	A559
Motor NP Poles	P035	EM Brk On Delay	t087	Step Units 0	L200	Preset Freq 4	A414	Enh Control Word	A560
Autotune	P040	Stp Logic 0	L180	Step Units 1	L202	Preset Freq 5	A415	Find Home Freq	A562
Accel Time 1	P041	Stp Logic 1	L181	Step Units 2	L204	Preset Freq 6	A416	Find Home Dir	A563
Decel Time 1	P042	Stp Logic 2	L182	Step Units 3	L206	Preset Freq 7	A417	Encoder Pos Tol	A564
Minimum Freq	P043	Stp Logic 3	L183	Step Units 4	L208	Preset Freq 8	A418	Pos Reg Filter	A565
Maximum Freq	P044	Stp Logic 4	L184	Step Units 5	L210	Jog Frequency	A431	Pos Reg Gain	A566
Textile/Fiber		Motor NP FLA	P034	DigIn TermBlk 02	t062	Slip Hz Meter	d375	Max Traverse	A567
		Motor NP Poles	P035	DigIn TermBlk 03	t063	Fiber Status	d390	Traverse Inc	A568
		Autotune	P040	Opto Out1 Sel	t069	Preset Freq 0	A410	Traverse Dec	A569
		Accel Time 1	P041	Opto Out2 Sel	t072	Jog Frequency	A431	P Jump	A570
Language	P030	Decel Time 1	P042	Relay Out1 Sel	t076	Jog Accel/Decel	A432	Sync Time	A571
Output Freq	b001	Minimum Freq	P043	Anlg In 0-10V Lo	t091	S Curve %	A439	Speed Ratio	A572
Commanded Freq	b002	Maximum Freq	P044	Anlg In 0-10V Hi	t092	Reverse Disable	A544		
Motor NP Volts	P031	Stop Mode	P045	Anlg In4-20mA Lo	t095	Power Loss Mode	A548		
Motor NP Hertz	P032	Start Source 1	P046	Anlg In4-20mA Hi	t096	Half Bus Enable	A549		
Motor OL Current	P033	Speed Reference1	P047	Anlg In mA Loss	t097	Bus Reg Enable	A550		

(1) This AppView parameter group is specific to PowerFlex 525 drives only.

CustomView Parameter Group

PowerFlex 520-series drives include a CustomView™ parameter group for you to store frequently used parameters for your application. See CustomView Parameter Group on page 151 for more information.

Custom Group	
	This group can store up to 100 parameters.

Basic Display Group

b001 [Output Freq] Related Parameter(s): b002, b010, P043, P044, P048, P050, P052

Output frequency present at T1, T2 & T3 (U, V & W). Does not include slip frequency.

Values	Default:	Read Only
	Min/Max:	0.00/[Maximum Freq]
	Display:	0.01 Hz

b002 [Commanded Freq] Related Parameter(s): b001, b013, P043, P044, P048, P050, P052

Value of the active frequency command even if the drive is not running.

IMPORTANT The frequency command can come from a number of sources. See Start and Speed Reference Control on page 49 for more information.

Values	Default:	Read Only
	Min/Max:	0.00/[Maximum Freq]
	Display:	0.01 Hz

b003 [Output Current]

Output current present at T1, T2 & T3 (U, V & W).

Values	Default:	Read Only
	Min/Max:	0.00/(Drive Rated Amps x 2)
	Display:	0.01 A

b004 [Output Voltage] Related Parameter(s): P031, A530, A534

Output voltage present at T1, T2 & T3 (U, V & W).

Values	Default:	Read Only
	Min/Max:	0.0/Drive Rated Volts
	Display:	0.1V

b005 [DC Bus Voltage]

Filtered DC bus voltage level of the drive.

Values	Default:	Read Only
	Min/Max:	0/1200VDC
	Display:	1VDC

b006 [Drive Status] Related Parameter(s): A544

Present operating condition of the drive.

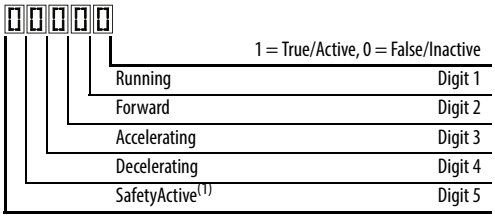

(1) Setting is specific to PowerFlex 525 drives only.

Values	Default:	Read Only
	Min/Max:	00000/11111
	Display:	00000

Basic Display Group *(continued)*

b007 [Fault 1 Code]
b008 [Fault 2 Code]
b009 [Fault 3 Code]

Related Parameter(s): F604-F610

A code that represents a drive fault. Codes appear in these parameters in the order they occur (b007 [Fault 1 Code] = the most recent fault). Repetitive faults are only recorded once. See Fault and Diagnostic Group for more information.

Values	Default:	Read Only
	Min/Max:	F0/F127
	Display:	F0

b010 [Process Display]

Related Parameter(s): b001, A481, A482

32 bit parameter.

Output frequency scaled by A481[Process Disp Lo] and A482 [Process Disp Hi].
Scaled Process Value (PV) = ((([Process Disp Hi] - [Process Disp Lo]) x ([Output Freq] - [Minimum Freq])) / ([Maximum Freq] - [Minimum Freq])

Values	Default:	Read Only
	Min/Max:	0.00/9999.00
	Display:	0.01

b012 [Control Source]

Related Parameter(s): P046, P047, P048, P049, P050, P051, t062, t063, t065-t068, L180-L187, A410-A425

Active source of the Start Command and Frequency Command. Normally defined by the settings of P046, P048, P050 [Start Source x] and P047, P049, P051 [Speed Referencex]. See Start and Speed Reference Control on page 49 for more information.

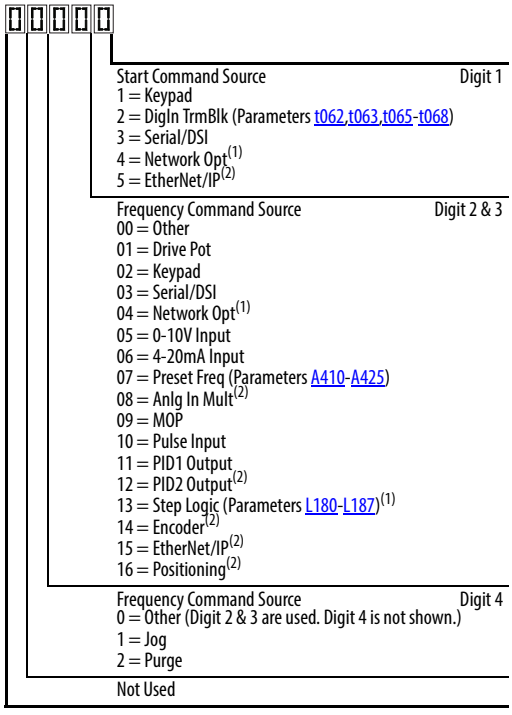

Example

Display reads...	Description
2004	Start source comes from Network Opt and Frequency source is Purge.
113	Start source comes from Serial/DSI and Frequency source comes from PID1 Output.
155	Start source and Frequency source comes from EtherNet/IP.
052	Start source comes from DigIn TrmBlk and Frequency source from 0-10V Input.
011	Start source comes from Keypad and Frequency source comes from Drive Pot.

(1) Select this setting if using the optional PowerFlex 25-COMM-E2P, 25-COMM-D, or 25-COMM-P adapters as the Start source and/or Frequency source.
(2) Setting is specific to PowerFlex 525 drives only.

Values	Default:	Read Only
	Min/Max:	0000/2165
	Display:	0000

Basic Display Group *(continued)*

b013 [Contrl In Status] Related Parameter(s): b002, P044, P045

State of the digital terminal blocks 1...3 and DB transistor.

IMPORTANT Actual control commands may come from a source other than the control terminal block.

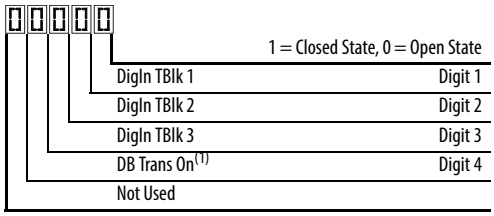

(1) The DB Transistor "on" indication must have a 0.5 s hysteresis. It will turn on and stay on for at least 0.5 s every time the DB transistor is turned on.

Values	Default:	Read Only
	Min/Max:	0000/1111
	Display:	0000

b014 [Dig In Status] Related Parameter(s): t065-t068

State of the programmable digital inputs.

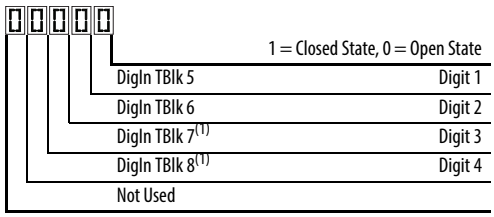

(1) Setting is specific to PowerFlex 525 drives only.

Values	Default:	Read Only
	Min/Max:	0000/1111
	Display:	0000

b015 [Output RPM] Related Parameter(s): P035

Current output frequency in rpm. Scale is based on P035 [Motor NP Poles].

Values	Default:	Read Only
	Min/Max:	0/24000 rpm
	Display:	1 rpm

b016 [Output Speed] Related Parameter(s): P044

Current output frequency in %. Scale is 0% at 0.00 Hz to 100% at P044 [Maximum Freq].

Values	Default:	Read Only
	Min/Max:	0.0/100.0%
	Display:	0.1%

b017 [Output Power] Related Parameter(s): b018

Output power present at T1, T2 & T3 (U, V & W).

Values	Default:	Read Only
	Min/Max:	0.00/(Drive Rated Power x 2)
	Display:	0.01 kW

Basic Display Group *(continued)*

b018 [Power Saved] Related Parameter(s): b017

Instantaneous power savings of using this drive compared to an across the line starter.

Values	Default:	Read Only
	Min/Max:	0.00/655.35 kW
	Display:	0.01 kW

b019 [Elapsed Run time] Related Parameter(s): A555

Accumulated time drive is outputting power. Time is displayed in 10 hour increments.

Values	Default:	Read Only
	Min/Max:	0/65535 x 10 hr
	Display:	1 = 10 hr

b020 [Average Power] Related Parameter(s): A555

Average power used by the motor since the last reset of the meters.

Values	Default:	Read Only
	Min/Max:	0.00/(Drive Rated Power x 2)
	Display:	0.01 kW

b021 [Elapsed kWh] Related Parameter(s): b022

Accumulated output energy of the drive. When the maximum value of this parameter is reached, it resets to zero and b022 [Elapsed MWh] is incremented.

Values	Default:	Read Only
	Min/Max:	0.0/100.0 kWh
	Display:	0.1 kWh

b022 [Elapsed MWh] Related Parameter(s): b021

Accumulated output energy of the drive.

Values	Default:	Read Only
	Min/Max:	0.0/6553.5 MWh
	Display:	0.1 MWh

b023 [Energy Saved] Related Parameter(s): A555

Total energy savings of using this drive compared to an across the line starter since the last reset of the meters.

Values	Default:	Read Only
	Min/Max:	0.0/6553.5 kWh
	Display:	0.1 kWh

b024 [Accum kWh Sav] Related Parameter(s): b025

Total approximate accumulated energy savings of the drive compared to using an across the line starter.

Values	Default:	Read Only
	Min/Max:	0.0/6553.5 kWh
	Display:	0.1 = 10 kWh

Basic Display Group *(continued)*

b025 [Accum Cost Sav] Related Parameter(s): b024, P052, A555

Total approximate accumulated cost savings of the drive compared to using an across the line starter.
[Accum Cost Sav] = [Average kWh cost] x [Accum kWh Sav]

Values	Default:	Read Only
	Min/Max:	0.0/6553.5
	Display:	0.1

b026 [Accum CO2 Sav] Related Parameter(s): A555

Total approximate accumulated CO2 savings of the drive compared to using an across the line starter.

Values	Default:	Read Only
	Min/Max:	0.0/6553.5 kg
	Display:	0.1 kg

b027 [Drive Temp]

Present operating temperature of the drive heatsink (inside module).

Values	Default:	Read Only
	Min/Max:	0/120 °C
	Display:	1 °C

b028 [Control Temp]

Present operating temperature of the drive control.

Values	Default:	Read Only
	Min/Max:	0/120 °C
	Display:	1 °C

b029 [Control SW Ver]

Current drive firmware version.

Values	Default:	Read Only
	Min/Max:	0.000/65.535
	Display:	0.001

Basic Program Group

P030 [Language]

Selects the language displayed. A reset or power cycle is required after selection is made.

			Language Support		
			Keypad/ LCD Display	RSLogix 5000/ Logix Designer	Connected Components Workbench
Options	1 English (Default)		Y	Y	Y
	2 Français		Y	Y	Y
	3 Español		Y	Y	Y
	4 Italiano		Y	Y	Y
	5 Deutsch		Y	Y	Y
	6 Japanese		–	Y	–
	7 Português		Y	Y	–
	8 Chinese	Chinese Simplified	–	Y	Y
	9 Reserved				
	10 Reserved				
	11 Korean		–	Y	–
	12 Polish(1)		Y	–	–
	13 Reserved				
	14 Turkish(1)		Y	–	–
	15 Czech(1)		Y	–	–

(1) Due to a limitation of the LCD Display, some of the characters for Polish, Turkish, and Czech will be modified.

P031 [Motor NP Volts] Related Parameter(s): b004, A530, A531, A532, A533

Stop drive before changing this parameter.

Sets the motor nameplate rated volts.

Values	Default:	Drive Rated Volts
	Min/Max:	10V (for 230V Drives), 20V (for 460V Drives), 25V (for 600V Drives)/Drive Rated Volts
	Display:	1V

P032 [Motor NP Hertz] Related Parameter(s): A493, A530, A531, A532, A533

Stop drive before changing this parameter.

Sets the motor nameplate rated frequency.

Values	Default:	60 Hz
	Min/Max:	15/500 Hz
	Display:	1 Hz

P033 [Motor OL Current] Related Parameter(s): t069, t072, t076, t081, A484, A485, A493

Sets the motor nameplate overload current. Used to determine motor overload conditions and can be set from 0.1 A to 200% of drive rated current.

IMPORTANT The drive will fault on an F007 "Motor Overload" if the value of this parameter is exceeded based on class 10 motor overload protection according to NEC article 430 and motor over-temperature protection according to NEC article 430.126 (A) (2). UL 508C File 29572

Values	Default:	Drive Rated Amps
	Min/Max:	0.0/(Drive Rated Amps x 2)
	Display:	0.1 A

Basic Program Group *(continued)*

P034 [Motor NP FLA] Related Parameter(s): P040

Sets the motor nameplate FLA. Used to assist the Autotune routine and motor control.

Values	Default:	Based on Drive Rating
	Min/Max:	0.1/(Drive Rated Amps x 2)
	Display:	0.1 A

P035 [Motor NP Poles] Related Parameter(s): b015

Sets the number of poles in the motor.

Values	Default:	4
	Min/Max:	2/40
	Display:	1

P036 [Motor NP RPM]

Stop drive before changing this parameter.

Sets the rated nameplate rpm of the motor. Used to calculate the rated slip of the motor. To reduce the slip frequency, set this parameter closer to the motor synchronous speed.

Values	Default:	1750 rpm
	Min/Max:	0/24000 rpm
	Display:	1 rpm

P037 [Motor NP Power]

PF 525 PowerFlex 525 only.

Sets the motor nameplate power. Used in PM regulator.

Values	Default:	Drive Rated Power
	Min/Max:	0.00/Drive Rated Power
	Display:	0.01 kW

P038 [Voltage Class]

Stop drive before changing this parameter.

Sets the voltage class of 600V drives. Only applicable to 600V drives.

Options	2	"480V"
	3	"600V" (Default)

P039 [Torque Perf Mode] Related Parameter(s): P040, A530, A531, A532, A533, A535

Stop drive before changing this parameter.

Selects the motor control mode.

The PowerFlex 523 and PowerFlex 525 drives are capable of performing with the following motor control modes.

Options	0	"V/Hz"	
	1	"SVC" (Default)	
	2	"Economize"	
	3	"Vector"(1)	
	4	"PM Control"(1) (2)	When P039 [Torque Perf Mode] is set to 4 and A535 [Motor Fdbk Type] is set to 0, 1, 2 or 3, the drive is in open loop PM motor control mode. When P039 [Torque Perf Mode] is set to 4 and A535 [Motor Fdbk Type] is set to 4 or 5, the drive is in closed loop PM motor control mode.

(1) Setting is specific to PowerFlex 525 drives only.

(2) Setting is available in PowerFlex 525 FRN 5.xxx and later.

Basic Program Group *(continued)*

P040 [Autotune] Related Parameter(s): P034, P039, A496, A497

Stop drive before changing this parameter.

Enables a static (not spinning) or dynamic (motor spinning) autotune to automatically set the motor parameters. Set the parameter value to a one or two, then issue a valid "Start" command to begin the routine. After the routine is complete the parameter resets to a zero. A failure (such as if a motor is not connected) results in an Autotune Fault.
It is recommended to perform a full rotate tune when using VVC mode.

IMPORTANT All motor parameters in the Basic Program group must be set before running the routine. If a start command is not given (or a stop command is given) within 30 s, the parameter automatically returns to a zero and an Autotune Fault occurs.

ATTENTION: Rotation of the motor in an undesired direction can occur during this procedure. To guard against possible injury and/or equipment damage, it is recommended that the motor be disconnected from the load before proceeding.

Options	0	"Ready/Idle" (Default)	
	1	"Static Tune"	A temporary command that initiates a non-rotational motor stator resistance test for the best possible automatic setting of A496 [IR Voltage Drop]. A start command is required following initiation of this setting. The parameter returns to 0 "Ready/Idle" following the test, at which time another start transition is required operate the drive in normal mode. Used when motor cannot be uncoupled from the load.
	2	"Rotate Tune"	A temporary command that initiates a "Static Tune" followed by a rotational test for the best possible automatic setting of A497 [Flux Current Ref]. A start command is required following initiation of this setting. The parameter returns to 0 "Ready/Idle" following the test, at which time another start transition is required to operate the drive in normal mode. Important: Used when motor is uncoupled from the load. Results may not be valid if a load is coupled to the motor during this procedure.

P041 [Accel Time 1] Related Parameter(s): P044, A439

Sets the time for the drive to accelerate from 0 Hz to P044 [Maximum Freq].
Accel Rate = [Maximum Freq] / [Accel Time x]

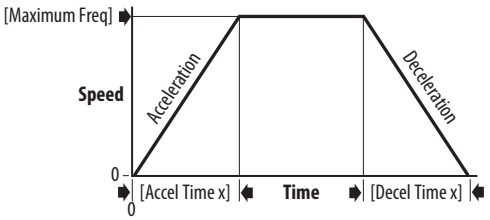

Values	Default:	10.00 s
	Min/Max:	0.00/600.00 s
	Display:	0.01 s

P042 [Decel Time 1] Related Parameter(s): P044, A439

Sets the time for the drive to decelerate from P044 [Maximum Freq] to 0 Hz.
Decel Rate = [Maximum Freq] / Decel Time x]

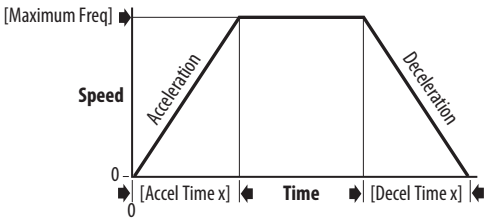

Values	Default:	10.00 s
	Min/Max:	0.00/600.00 s
	Display:	0.01 s

Basic Program Group *(continued)*

P043 [Minimum Freq] Related Parameter(s): b001, b002, b013, P044, A530, A531

Stop drive before changing this parameter.

Sets the lowest frequency the drive outputs.

Values	Default:	0.00 Hz
	Min/Max:	0.00/500.00 Hz
	Display:	0.01 Hz

P044 [Maximum Freq] Related Parameter(s): b001, b002, b013, b016, P043, A530, A531

Stop drive before changing this parameter.

Sets the highest frequency the drive outputs.

IMPORTANT This value must be greater than the value set in P043 [Minimum Freq].

Values	Default:	60.00 Hz
	Min/Max:	0.00/500.00 Hz
	Display:	0.01 Hz

P045 [Stop Mode] Related Parameter(s): t086, t087, A434, A435, A550

Determines the stopping mode used by the drive when a stop is initiated.

Options	0	"Ramp, CF" (Default)	Ramp to Stop. Stop command clears active fault.
	1	"Coast, CF"	Coast to Stop. Stop command clears active fault.
	2	"DC Brake, CF"	DC Injection Braking Stop. Stop command clears active fault.
	3	"DC BrkAuto,CF"	DC Injection Braking Stop with Auto Shutoff. • Standard DC Injection Braking for value set in A434 [DC Brake Time]. OR • Drive shuts off if the drive detects that the motor is stopped. Stop command clears active fault.
	4	"Ramp"	Ramp to Stop.
	5	"Coast"	Coast to Stop.
	6	"DC Brake"	DC Injection Braking Stop.
	7	"DC BrakeAuto"	DC Injection Braking Stop with Auto Shutoff. • Standard DC Injection Braking for value set in A434 [DC Brake Time]. OR • Drive shuts off if the drive detects that the motor is stopped.
	8	"Ramp+EM B,CF"	Ramp to Stop with EM Brake Control. Stop command clears active fault.
	9	"Ramp+EM Brk"	Ramp to Stop with EM Brake Control.
	10	"PointStp,CF"	PointStop. Stop command clears active fault.
	11	"PointStop"	PointStop.

Provides a method to stop at a constant distance instead of a fixed rate.

When a Stop command is given, the distance required for the machine to travel to standstill based on the programmed maximum speed and deceleration time is calculated. If the drive is running slower than the maximum speed, the function will apply a calculated deceleration time that allows the machine to travel to standstill in the same distance based on the current speed.

It is recommended to use braking resistors or set A550 [Bus Reg Enable] to 0 "Disabled" for better performance.

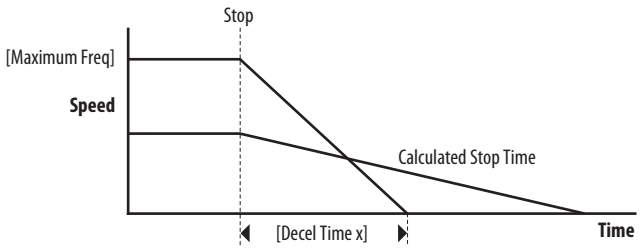

Basic Program Group *(continued)*

P046 [Start Source 1]
P048 [Start Source 2]
P050 [Start Source 3]

Related Parameter(s): b012, t064, C125

Stop drive before changing this parameter.

Configures the start source of the drive. Changes to these inputs take effect as soon as they are entered. P046 [Start Source 1] is the factory default start source unless overridden.
See Start and Speed Reference Control on page 49 for more information.

IMPORTANT For all settings except when t064 [2-Wire Mode] is set to 1 "Level Sense", the drive must receive a leading edge from the start input for the drive to start after a stop input, loss of power, or fault condition.

Options	1	"Keypad"	[Start Source 1] default
	2	"DigIn TrmBlk"	[Start Source 2] default
	3	"Serial/DSI"	[Start Source 3] default for PowerFlex 523
	4	"Network Opt"(1)	
	5	"EtherNet/IP"(2)	[Start Source 3] default for PowerFlex 525

(1) Select this setting if using the optional PowerFlex 25-COMM-E2P, 25-COMM-D, or 25-COMM-P adapters as the start source.
(2) Setting is specific to PowerFlex 525 drives only.

P047 [Speed Reference1]
P049 [Speed Reference2]
P051 [Speed Reference3]

Related Parameter(s): C125

Selects the source of speed command for the drive. Changes to these inputs take effect as soon as they are entered. P047 [Speed Reference1] is the factory default speed reference unless overridden.
See Start and Speed Reference Control on page 49 for more information.

Options	1	"Drive Pot"	[Speed Reference1] default
	2	"Keypad Freq"	
	3	"Serial/DSI"	[Speed Reference3] default for PowerFlex 523
	4	"Network Opt"(1)	
	5	"0-10V Input"	[Speed Reference2] default
	6	"4-20mA Input"	
	7	"Preset Freq"	
	8	"Anlg In Mult"(2)	
	9	"MOP"	
	10	"Pulse Input"	
	11	"PID1 Output"	
	12	"PID2 Output"(2)	
	13	"Step Logic"(2)	
	14	"Encoder"(2)	
	15	"EtherNet/IP"(2)	[Speed Reference3] default for PowerFlex 525
	16	"Positioning"(2)	Referencing from A558 [Positioning Mode]

(1) Select this setting if using the optional PowerFlex 25-COMM-E2P, 25-COMM-D, or 25-COMM-P adapters as the speed reference.
(2) Setting is specific to PowerFlex 525 drives only.

P052 [Average kWh Cost]

Related Parameter(s): b025

Sets the average cost per kWh.

Values	Default:	0.00
	Min/Max:	0.00/655.35
	Display:	0.01

Basic Program Group *(continued)*

P053 [Reset To Defalts]

Stop drive before changing this parameter.

Resets all parameters to their factory default values. After a Reset command, the value of this parameter returns to zero.

Parameters that are NOT Reset when P053 = 1

Parameter	Parameter	Parameter
P030 [Language]	C138 [EN Gateway Cfg 2]	C159 [EN Data Out 3]
C121 [Comm Write Mode]	C139 [EN Gateway Cfg 3]	C160 [EN Data Out 4]
C122 [Cmd Stat Select]	C140 [EN Gateway Cfg 4]	C161 [Opt Data In 1]
C123 [RS485 Data Rate]	C141 [EN Rate Cfg]	C162 [Opt Data In 2]
C124 [RS485 Node Addr]	C143 [EN Comm Flt Actn]	C163 [Opt Data In 3]
C124 [Comm Loss Action]	C144 [EN Idle Flt Actn]	C164 [Opt Data In 4]
C126 [Comm Loss Time]	C145 [EN Flt Cfg Logic]	C165 [Opt Data Out 1]
C127 [RS485 Format]	C146 [EN Flt Cfg Ref]	C166 [Opt Data Out 2]
C128 [EN Addr Sel]	C147 [EN Flt Cfg DL 1]	C167 [Opt Data Out 3]
C129 [EN IP Addr Cfg 1]	C148 [EN Flt Cfg DL 2]	C168 [Opt Data Out 4]
C130 [EN IP Addr Cfg 2]	C149 [EN Flt Cfg DL 3]	C169 [MultiDrv Sel]
C131 [EN IP Addr Cfg 3]	C150 [EN Flt Cfg DL 4]	C171 [Drv 1 Addr]
C132 [EN IP Addr Cfg 4]	C153 [EN Data In 1]	C172 [Drv 2 Addr]
C133 [EN Subnet Cfg 1]	C154 [EN Data In 2]	C173 [Drv 3 Addr]
C134 [EN Subnet Cfg 2]	C155 [EN Data In 3]	C174 [Drv 4 Addr]
C135 [EN Subnet Cfg 3]	C156 [EN Data In 4]	C175 [DSI I/O Cfg]
C136 [EN Subnet Cfg 4]	C157 [EN Data Out 1]	GC [Parameters in Custom Group]
C137 [EN Gateway Cfg 1]	C158 [EN Data Out 2]	

Parameters that are Reset when P053 = 3

Parameter Name
P031 [Motor NP Volts]
P033 [Motor OL] Current
P034 [Motor NP FLA]
P035 [Motor NP Poles]
P038 [Voltage Class]
A435 [DC Brake Level]
A484 [Current Limit 1]
A485 [Current Limit 2]
A486 [Shear Pin1 Level]
A488 [Shear Pin2 Level]
A490 [Load Loss Level]
A496 [IR Voltage Drop]
A497 [Flux Current Ref]
A530 [Boost Select]
A531 [Start Boost]
A532 [Break Voltage]
A533 [Break Frequency]
A534 [Maximum] Voltage

Options			
	0	"Ready/Idle" (Default)	
	1	"Param Reset"	Does not reset custom groups, parameter P030 [Language], and communication parameters.
	2	"Factory Rset"	Restore drive to factory condition.
	3	"Power Reset"	Resets only power parameters. Can be used when swapping power modules.
	4	"Module Reset"(1) (2)	Power cycle of the drive, **NO** parameters are reset.

(1) Setting is available in PowerFlex 525 FRN 5.xxx and later.

(2) Setting is available in PowerFlex 523 FRN 3.xxx and later.

Terminal Block Group

t062	**[DigIn TermBlk 02]**	**t063**	**[DigIn TermBlk 03]**
t065	**[DigIn TermBlk 05]**	**t066**	**[DigIn TermBlk 06]**
t067	**[DigIn TermBlk 07]**	**t068**	**[DigIn TermBlk 08]**

PF 525 PowerFlex 525 only.

Related Parameter(s): b012, b013, b014, P045, P046, P048, P049, P050, P051, t064, t086, A410-A425, A427, A431, A432, A433, A434, A435, A442, A443, A488, A535, A560, A562, A563, A567, A571

Stop drive before changing this parameter.

Programmable digital input. Changes to these inputs takes effect as soon as they are entered. If a digital input is set for a selection that is only usable on one input, no other input can be set for the same selection.

Options	0 "Not Used"	Terminal has no function but can be read over network communications with b013 [Contrl In Status] and b014 [Dig In Status].
	1 "Speed Ref 2"	Selects P049 [Speed Reference2] as drive's speed command.
	2 "Speed Ref 3"	Selects P051 [Speed Reference3] as drive's speed command.
	3 "Start Src 2"	Selects P048 [Start Source 2] as control source to start the drive.
	4 "Start Src 3"	Selects P050 [Start Source 3] as control source to start the drive.
	5 "Spd + Strt 2"	[DigIn TermBlk 07] default. Selects combination of P049 [Speed Reference2] and P048 [Start Source 2] as speed command with control source to start the drive.
	6 "Spd + Strt 3"	Selects combination of P051 [Speed Reference3] and P050 [Start Source 3] as speed command with control source to start the drive.
	7 "Preset Freq" (PF523: only for DigIn TermBlk 03, 05, and 06) (PF525: only for DigIn TermBlk 05...08)	[DigIn TermBlk 05] and [DigIn TermBlk 06] default. • Selects a preset frequency in Velocity mode (P047, P049, P051 [Speed Referencex] = 1...15). See A410...A425 [Preset Freq x]. • Selects a preset frequency and position in Positioning mode (P047, P049, P051 [Speed Referencex] = 16). See L200...L214 [Step Units x] (only for PowerFlex 525 drives). **IMPORTANT** Digital Inputs have priority for frequency control when programmed as Preset Speed and are active. See Start Source and Speed Reference Selection on page 49 for more information.
	8 "Jog"	• When input is present, drive accelerates according to the value set in A432 [Jog Accel/Decel] and ramps to the value set in A431 [Jog Frequency]. • When input is removed, drive ramps to a stop according to the value set in A432 [Jog Accel/Decel]. • A valid Start command will override this input.
	9 "Jog Forward"	[DigIn TermBlk 08] default. Drive accelerates to A431 [Jog Frequency] according to A432 [Jog Accel/Decel] and ramps to a stop when input becomes inactive. A valid Start command will override this input.
	10 "Jog Reverse"	Drive accelerates to A431 [Jog Frequency] according to A432 [Jog Accel/Decel] and ramps to a stop when input becomes inactive. A valid Start command will override this input.
	11 "Acc/Dec Sel2"(1)	If active, determines which Accel/Decel time will be used for all ramp rates except jog. Can be used with option 29 "Acc/Dec Sel3" for additional Accel/Decel times. See A442 [Accel Time 2] for more information.
	12 "Aux Fault"	When enabled, an F002 "Auxiliary Input" fault will occur when the input is removed.
	13 "Clear Fault"	When active, clears an active fault.
	14 "RampStop,CF"	Causes drive to immediately ramp to a stop regardless of how P045 [Stop Mode] is set.
	15 "CoastStop,CF"	Causes drive to immediately coast to a stop regardless of how P045 [Stop Mode] is set.
	16 "DCInjStop,CF"	Causes drive to immediately begin a DC Injection stop regardless of how P045 [Stop Mode] is set.
	17 "MOP Up"	Increases the value of A427 [MOP Freq] at the rate set in A430 [MOP Time].
	18 "MOP Down"	Decreases the value of A427 [MOP Freq] at the rate set in A430 [MOP Time].
	19 "Timer Start"(1)	Clears and starts the timer function. May be used to control the relay or opto outputs.
	20 "Counter In"(1)	Starts the counter function. May be used to control the relay or opto outputs.
	21 "Reset Timer"	Resets the internal active timer, d365 [Timer Status]. For more information, see Timer Function on page 211.
	22 "Reset Countr"	Resets the count in the accumulated internal active counter, d364 [Counter Status]. For more information, see Counter Function on page 212.
	23 "Rset Tim&Cnt"	Resets both the internal active timer and accumulated internal active counter.
	24 "Logic In 1"(1)(2)	Logic function input number 1. May be used to control the relay or opto outputs (t076, t081 [Relay Outx Sel] and t069, t072 [Opto Outx Sel], options 11...14). May be used in conjunction with StepLogic parameters L180...L187 [Stp Logic x].
	25 "Logic In 2"(1)(2)	Logic function input number 2. May be used to control the relay or opto outputs (t076, t081 [Relay Outx Sel] and t069, t072 [Opto Outx Sel], options 11...14). May be used in conjunction with StepLogic parameters L180...L187 [Stp Logic x].

Options

26	"Current Lmt2"[2]	When active, A485 [Current Limit 2] determines the drive current limit level.
27	"Anlg Invert"	Inverts the scaling of the analog input levels set in t091 [Anlg In 0-10V Lo] and t092 [Anlg In 0-10V Hi] or t095 [Anlg In4-20mA Lo] and t096 [Anlg In4-20mA Hi].
28	"EM Brk Rlse"	If EM brake function is enabled, this input releases the brake. See t086 [EM Brk Off Delay] for more information. **ATTENTION:** If a hazard of injury due to movement of equipment or material exists, an auxiliary mechanical braking device must be used.
29	"Acc/Dec Sel3"[1]	If active, determines which Accel/Decel time is used for all ramp rates except jog. Used with option 11 "Acc/Dec Sel2" for the Accel/Decel times listed in this table.
30	"Precharge En"	Forces drive into precharge state. Typically controlled by auxiliary contact on the disconnect at the DC input to the drive. If this input is assigned, it must be energized for the pre-charge relay to close and for the drive to run. If it is de-energized, the pre-charge relay opens and the drive coasts to a stop.
31	"Inertia Dcel"	Forces drive into Inertia Ride-Through state. The drive attempts to regulate the DC bus at the current level.
32	"Sync Enable"	Must be used in order to hold the existing frequency when Sync Time is set to enable speed synchronization. When this input is released the drive accelerates to the commanded frequency in A571 [Sync Time].
33	"Traverse Dis"	When an input is programmed the traverse function is disabled while this input is active. See A567 [Max Traverse].
34	"Home Limit"[2]	In Positioning mode, indicates the drive is at the home position. See Appendix E for more information on Positioning.
35	"Find Home"[2]	In Positioning mode, causes the drive to return to the Home position when a Start command is issued. Uses A562 [Find Home Freq] and A563 [Find Home Dir] until the "Home Limit" input is activated. If it passes this point, it then runs in the reverse direction at 1/10th the frequency of [Find Home Freq] until the "Home Limit" is activated again. As long as this input is active, any start command causes the drive to enter the homing routine. Only functions if in Positioning mode. Once the Find Home routine has finished, the drive stops. See Appendix E for more information on Positioning.
36	"Hold Step"[2]	In Positioning mode, overrides other inputs and causes the drive to remain at its current step (running at zero speed once it reaches its position) until released. While in "Hold", the drive ignores any input command which would normally result in a move to a new step. Timers continue to run. Therefore, when the Hold is removed, the drive must see any required digital inputs transition (even if they already transitioned during the hold), but it does not reset any timer. See Appendix E for more information on Positioning.
37	"Pos Redefine"[2]	In Positioning mode, resets the home position to the current position of the machine. See Appendix E for more information on Positioning.
38	"Force DC"	If the drive is not running, causes the drive to apply a DC Holding current (A435 [DC Brake Level], ignoring A434 [DC Brake Time]) while the input is applied.
39	"Damper Input"	When active, drive is allowed to run normally. When inactive, drive is forced into sleep mode and is prevented from accelerating to command speed.
40	"Purge"[1]	Starts the drive at A433 [Purge Frequency] regardless of the selected control source. Supersedes the keypad Control function as well as any other control command to take control of the drive. Purge can occur, and is operational, at any time whether the drive is running or stopped regardless of the selected logic source selection. If a valid stop (other than from comms or SW enable) is present, the drive will not start on the purge input transition. **ATTENTION:** If a hazard of injury due to movement of equipment or material exists, an auxiliary mechanical braking device must be used.
41	"Freeze-Fire"	When inactive, will cause an immediate F094 "Function Loss" fault. Use to safely bypass the drive with an external switching device.
42	"SW Enable"	Works like an interlock that has to be active for the drive to run.
43	"SherPin1 Dis"	Disables shear pin 1 but leaves shear pin 2 active. If A488 [Shear Pin 2 Level] is greater than 0.0 A, shear pin 2 is enabled.
44	Reserved	
45	Reserved	
46	Reserved	
47	Reserved	

Option		Description
29	11	
0	0	Acc/Dec 1
0	1	Acc/Dec 2
1	0	Acc/Dec 3
1	1	Acc/Dec 4

Options	48 "2-Wire FWD" (only for DigIn TermBlk 02)	[DigIn TermBlk 02] default. Select 2-Wire FWD for this input. Select this option and set P046, P048 or P050 [Start Source x] to 2 "DigIn TrmBlk" to configure [Start Source x] to a 2-wire run forward mode. Also see t064 [2-Wire Mode] for level trigger settings.	
	49 "3-Wire Start" (only for DigIn TermBlk 02)	Select 3-Wire Start for this input. Select this option and set P046, P048 or P050 [Start Source x] to 2 "DigIn TrmBlk" to configure [Start Source x] to a 3-wire start mode.	
	50 "2-Wire REV" (only for DigIn TermBlk 03)	[DigIn TermBlk 03] default. Select 2-Wire REV for this input. Select this option and set P046, P048 or P050 [Start Source x] to 2 "DigIn TrmBlk" to configure [Start Source x] to a 2-wire run reverse mode. Also see t064 [2-Wire Mode] for level trigger settings. For PowerFlex 523 drives, this setting will be disabled If [DigIn TermBlk 03] is set to 7 "Preset Freq".	
	51 "3-Wire Dir" (only for DigIn TermBlk 03)	Select 3-Wire Dir for this input. Select this option and set P046, P048 or P050 [Start Source x] to 2 "DigIn TrmBlk" to change the direction of [Start Source x]. For PowerFlex 523 drives, this setting will be disabled If [DigIn TermBlk 03] is set to 7 "Preset Freq".	
	52 "Pulse Train" (PF523: only for DigIn TermBlk 05) (PF525: only for DigIn TermBlk 07)	Select pulse train for this input. Use P047, P049 and P051 [Speed Referencex] to select pulse input. Jumper for DigIn TermBlk 05 or 07 Sel must be moved to Pulse In.	

Drive Start Condition Matrix for t062 and t063

	t062 Setting	
t063 Setting	**3-Wire Start**	**2-Wire FWD**
2-Wire REV	Drive will not start	OK
3-Wire Dir	OK	Drive will not start

(1) This function may be tied to one input only.
(2) Setting is specific to PowerFlex 525 drives only.

t064 [2-Wire Mode]

Related Parameter(s): P045, P046, P048, P050, t062, t063

Stop drive before changing this parameter.

Programs the mode of trigger only for t062 [DigIn TermBlk 02] and t063 [DigIn TermBlk 03] when 2-wire option is being selected as P046, P048 or P050 [Start Source x].

Options

0 "Edge Trigger" (Default)

Standard 2-Wire operation.

1 "Level Sense"

- I/O Terminal 01 "Stop" = Coast to stop. Drive will restart after a Stop command when:
  - Stop is removed
    and
  - Start is held active
- I/O Terminal 03 "Run REV"

ATTENTION: Hazard of injury exists due to unintended operation. When t064 [2-Wire Mode] is set to option 1, and the Run input is maintained, the Run inputs do not need to be toggled after a Stop input for the drive to run again. A Stop function is provided only when the Stop input is active (open).

ATTENTION: When operating in 2-Wire Level Sense (Run Level), the PowerFlex 523 and PowerFlex 525 drive should only be controlled from the Digital Input Terminal Blocks. This should NOT be used with any other DSI or Network device.

2 "Hi-Spd Edge"

IMPORTANT There is greater potential voltage on the output terminals when using this option.

- Outputs are kept in a ready-to-run state. The drive will respond to a Start command within 10 ms.
- I/O Terminal 01 "Stop" = Coast to stop.
- I/O Terminal 03 "Run REV"

3 "Momentary"

- Drive will start after a momentary input from either the Run FWD input (I/O Terminal 02) or the Run REV input (I/O Terminal 03).
- I/O Terminal 01 "Stop" = Stop according to the value set in P045 [Stop Mode].

t069 [Opto Out1 Sel]
t072 [Opto Out2 Sel]

Related Parameter(s): P046, P048, P050, t070, t073, t077, t082, t086, t087, t093, t094, t097, A541, A564

PF 525 PowerFlex 525 only.

Determines the operation of the programmable digital outputs.

Options	Setting Output Changes State When...	Hysteresis
0 "Ready/Fault"	Opto outputs are active when power is applied. Indicates that the drive is ready for operation. Opto outputs are inactive when power is removed or a fault occurs.	None
1 "At Frequency"	Drive reaches commanded frequency.	0.5 Hz above; 1.0 Hz below
2 "MotorRunning"	Motor is receiving power from the drive.	None
3 "Reverse"	Drive is commanded to run in reverse direction.	None
4 "Motor Overld"	Motor overload condition exists.	100 ms time delay on or off
5 "Ramp Reg"	Ramp regulator is modifying the programmed accel/decel times to avoid an overcurrent or overvoltage fault from occurring.	100 ms time delay on or off
6 "Above Freq"	Drive exceeds the frequency (Hz) value set in t070 or t073 [Opto Outx Level].	100 ms time delay on or off
7 "Above Cur"	Drive exceeds the current (% Amps) value set in t070 or t073 [Opto Outx Level]. **IMPORTANT** Value for t070 or t073 [Opto Outx Level] must be entered in percent of drive rated output current.	100 ms time delay on or off
8 "Above DCVolt"	Drive exceeds the DC bus voltage value set in t070 or t073 [Opto Outx Level].	100 ms time delay on or off
9 "Retries Exst"	Value set in A541 [Auto Rstrt Tries] is exceeded.	None
10 "Above Anlg V"	Analog input voltage (0-10V input) exceeds the value set in t070 or t073 [Opto Outx Level]. **IMPORTANT** Do not use if t093 [10V Bipolar Enbl] is set to 1 "Bi-Polar In".	100 ms time delay on or off
11 "Above PF Ang"	Power Factor angle exceeds the value set in t070 or t073 [Opto Outx Level].	100 ms time delay on or off
12 "Anlg In Loss"	Analog input loss has occurred. Program t094 [Anlg In V Loss] or t097 [Anlg In mA Loss] for desired action when input loss occurs.	On, 2 mA / ±1V Off, 3 mA / ±1.5V
13 "ParamControl"	Output is directly controlled by the state of the t070 or t073 [Opto Outx Level]. A value of 0 causes the output to turn off. A value of 1 or greater in this parameter causes the output to turn on.	None
14 "NonRec Fault"	• Value set in A541 [Auto Rstrt Tries] is exceeded or • A541 [Auto Rstrt Tries] is not enabled or • A non-resettable fault has occurred.	None
15 "EM Brk Cntrl"	EM Brake is energized. Program t087 [EM Brk On Delay] and t086 [EM Brk Off Delay] for desired action.	None
16 "Thermal OL"	Relay energizes when thermal Motor overload counter is above the value set in t077 or t082 [Relay Outx Level]. It also energizes if the drive is within 5 °C of the drive overheat trip point.	None
17 "Amb OverTemp"	Relay energizes when control module over temperature occurs.	None
18 "Local Active"	Active when drive P046, P048 or P050 [Start Source x] is in local keypad control.	None
19 "Comm Loss"	Active when communication is lost from any comm source with reference or control.	None
20 "Logic In 1"	An input is programmed as "Logic Input 1" and is active.	None
21 "Logic In 2"	An input is programmed as "Logic Input 2" and is active.	None
22 "Logic 1 & 2"	Both Logic inputs are programmed and active.	None
23 "Logic 1 or 2"	One or both Logic inputs are programmed and one or both is active.	None
24 "StpLogic Out"	Drive enters StepLogic step with Command Word set to enable Logic output.	None
25 "Timer Out"	Timer has reached the value set in t070 or t073 [Opto Outx Level] or not timing.	None
26 "Counter Out"	Counter has reached the value set in t070 or t073 [Opto Outx Level] or not counting.	None
27 "At Position"	Drive is in Positioning mode and has reached the commanded position. Tolerance is adjusted with A564 [Encoder Pos Tol].	–
28 "At Home"	Drive is in Positioning mode and has reached the home position. Tolerance is adjusted with A564 [Encoder Pos Tol].	–
29 "Safe-Off"	Both safe-off inputs are active.	–
30 "SafeTqPermit"(1)	Both safe-off inputs are inactive (closed).	–
31 "AutoRst Ctdn"(1)	Drive is counting down to an automatic restart.	–

Values		
	Default: Opto Out1 Sel: Opto Out2 Sel:	 2 1
	Min/Max:	0/31
	Display:	1

(1) Setting is available in FRN 5.xxx and later.

Terminal Block Group *(continued)*

t070 [Opto Out1 Level]
t073 [Opto Out2 Level]

Related Parameter(s): t069, t072

32 32 bit parameter.

PF 525 PowerFlex 525 only.

Determines the on/off point for the digital outputs when t069 or t072 [Opto Outx Sel] is set to the values shown below.

Min/Max Value Range Based On [Opto Outx Sel] Setting							
6:	0...500 Hz	10:	0...100%	16:	0.1...9999 s	20:	0/1
7:	0...180%	11	0/1	17:	1...9999 counts	26:	0...150%
8:	0...815V	13	0...800	18:	0...180°	–	

Values	Default:	0.0
	Min/Max:	0.0/9999.0
	Display:	0.1

t075 [Opto Out Logic]

PF 525 PowerFlex 525 only.

Determines the logic (Normally Open/NO or Normally Closed/NC) of the digital outputs only.

Setting	Digital Out 1 Logic	Digital Out 2 Logic
0	NO	NO
1	NC	NO
2	NO	NC
3	NC	NC

Values	Default:	0
	Min/Max:	0/3
	Display:	1

t076 [Relay Out1 Sel] Related Parameter(s): P046, P048, P050, t070, t073, t077, t082, t086, t087, t093, t094, t097, A541, A564

t081 [Relay Out2 Sel]

PF 525 PowerFlex 525 only.

Determines the operation of the programmable output relay.

Options	Output Relay Changes State When...	Hysteresis
0 "Ready/Fault"	Relay changes state when power is applied. Indicates that the drive is ready for operation. Relay returns drive to shelf state when power is removed or a fault occurs.	None
1 "At Frequency"	Drive reaches commanded frequency.	0.5 Hz above; 1.0 Hz below
2 "MotorRunning"	Motor is receiving power from the drive.	None
3 "Reverse"	Drive is commanded to run in reverse direction.	None
4 "Motor OverId"	Motor overload condition exists.	100 ms time delay on or off
5 "Ramp Reg"	Ramp regulator is modifying the programmed accel/ decel times to avoid an overcurrent or overvoltage fault from occurring.	100 ms time delay on or off
6 "Above Freq"	Drive exceeds the frequency (Hz) value set in t077 or t082 [Relay Outx Level].	100 ms time delay on or off
7 "Above Cur"	Drive exceeds the current (% Amps) value set in t077 or t082 [Relay Outx Level]. **IMPORTANT** Value for t077 or t082 [Relay Outx Level] must be entered in percent of drive rated output current.	100 ms time delay on or off
8 "Above DCVolt"	Drive exceeds the DC bus voltage value set in t077 or t082 [Relay Outx Level].	100 ms time delay on or off
9 "Retries Exst"	Value set in A541 [Auto Rstrt Tries] is exceeded.	None
10 "Above Anlg V"	Analog input voltage (0-10V input) exceeds the value set in t077 or t082 [Relay Outx Level]. **IMPORTANT** Do not use if t093 [10V Bipolar Enbl] is set to 1 "Bi-Polar In".	100 ms time delay on or off
11 "Above PF Ang"	Power Factor angle exceeds the value set in t077 or t082 [Relay Outx Level].	100 ms time delay on or off
12 "Anlg In Loss"	Analog input loss has occurred. Program t094 [Anlg In V Loss] or t097 [Anlg In mA Loss] for desired action when input loss occurs.	On, 2 mA / ±1V Off, 3 mA / ±1.5V
13 "ParamControl"	Output will be directly controlled by the state of the t077 or t082 [Relay Outx Level]. A value of 0 causes the output to turn off. A value of 1 or greater in this parameter causes the output to turn on.	None
14 "NonRec Fault"	• Value set in A541 [Auto Rstrt Tries] is exceeded or • A541 [Auto Rstrt Tries] is not enabled or • A non-resettable fault has occurred.	None
15 "EM Brk Cntrl"	EM Brake is energized. Program t087 [EM Brk On Delay] and t086 [EM Brk Off Delay] for desired action.	None
16 "Thermal OL"	Relay energizes when thermal Motor overload counter is above the value set in t077 or t082 [Relay Outx Level]. It also energizes if the drive is within 5°C of the drive overheat trip point.	None
17 "Amb OverTemp"	Relay energizes when control module over temperature occurs.	None
18 "Local Active	Active when drive P046, P048 or P050 [Start Source x] is in local keypad control.	None
19 "Comm Loss"	Active when communication is lost from any comm source with reference or control.	None
20 "Logic In 1"(1)	An input is programmed as "Logic Input 1" and is active.	None
21 "Logic In 2"(1)	An input is programmed as "Logic Input 2" and is active.	None
22 "Logic 1 & 2"(1)	Both Logic inputs are programmed and active.	None
23 "Logic 1 or 2"(1)	One or both Logic inputs are programmed and one or both is active.	None
24 "StpLogic Out"(1)	Drive enters StepLogic step with Command Word set to enable Logic output.	None
25 "Timer Out"	Timer has reached the value set in t077 or t082 [Relay Outx Level] or not timing.	None
26 "Counter Out"	Counter has reached the value set in t077 or t082 [Relay Outx Level] or not counting.	None
27 "At Position"(1)	Drive is in Positioning mode and has reached the commanded position. Tolerance is adjusted with A564 [Encoder Pos Tol].	–
28 "At Home"(1)	Drive is in Positioning mode and has reached the home position. Tolerance is adjusted with A564 [Encoder Pos Tol].	–
29 "Safe-Off"(1)	Both safe-off inputs are active.	–
30 "SafeTqPermit"(1)(2)	Both safe-off inputs are inactive (closed).	–
31 "AutoRst Ctdn"(1)(2)	Drive is counting down to an automatic restart.	–

Values		
	Default: Relay Out1 Sel: Relay Out2 Sel:	 0 2
	Min/Max:	0/31
	Display:	1

(1) Setting is specific to PowerFlex 525 drives only.

(2) Setting is available in FRN 5.xxx and later.

t077 [Relay Out1 Level]

Related Parameter(s): t076, t081

t082 [Relay Out2 Level]

PF 525 PowerFlex 525 only.

32 32 bit parameter.

Determines the on/off point for the output relay when t076 or t081 [Relay Outx Sel] is set to the values shown below.

Min/Max Value Range Based On [Relay Outx Sel] Setting							
6:	0...500 Hz	10:	0...100%	16:	0.1...9999 s	20:	0/1
7:	0...180%	11:	0/1	17:	1...9999 counts	26:	0...150%
8:	0...815V	13:	0...800	18:	0...180°	–	

Values	Default:	0.0
	Min/Max:	0.0/9999.0
	Display:	0.1

t079 [Relay 1 On Time]

t084 [Relay 2 On Time]

PF 525 PowerFlex 525 only.

Sets the delay time before Relay energizes after required condition is met.

Values	Default:	0.0 s
	Min/Max:	0.0/600.0 s
	Display:	0.1 s

t080 [Relay 1 Off Time]

t085 [Relay 2 Off Time]

PF 525 PowerFlex 525 only.

Sets the delay time before Relay de-energizes after required condition ceases.

Values	Default:	0.0 s
	Min/Max:	0.0/600.0 s
	Display:	0.1 s

t086 [EM Brk Off Delay]

Related Parameter(s): P045

Sets the time the drive remains at minimum frequency before ramping up to the commanded frequency (and engaging the brake coil relay) if Electromechanical (EM) Brake Control Mode is enabled with P045 [Stop Mode].

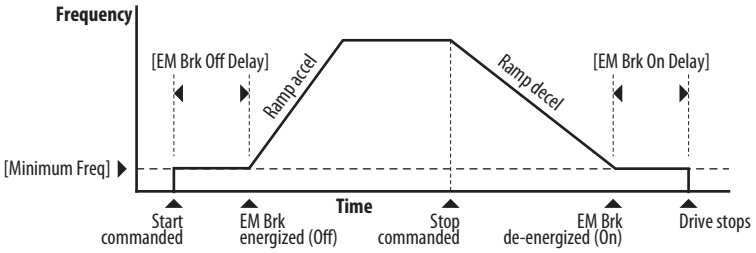

Values	Default:	2.00 s
	Min/Max:	0.00/10.00 s
	Display:	0.01 s

Terminal Block Group *(continued)*

t087 [EM Brk On Delay] Related Parameter(s): P045

Sets the time the drive remains at minimum frequency (after releasing the brake coil relay) before stopping if EM Brake Control Mode is enabled with P045 [Stop Mode].

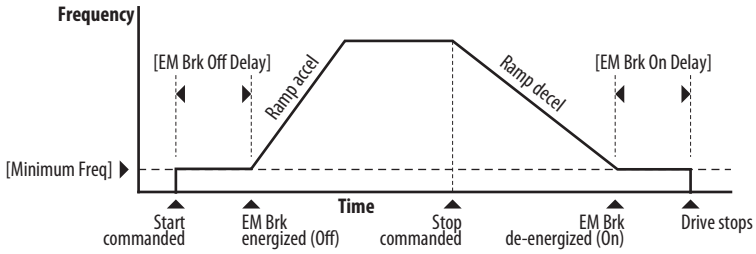

Values	Default:	2.00 s
	Min/Max:	0.00/10.00 s
	Display:	0.01 s

t088 [Analog Out Sel] Related Parameter(s): t090

The 0-10V, 0-20 mA or 4-2 0 mA analog output can be used to provide a signal proportional to several drive conditions. This parameter also selects which analog calibration parameters to use.(1)

Options	Output Range	Minimum Output Value	Maximum Output Value = t089 [Analog Out High]	Filter(1)	Related Parameter
0 "OutFreq 0-10"	0-10V	0V = 0 Hz	[Maximum Freq]	None	b001
1 "OutCurr 0-10"	0-10V	0V = 0 A	200% Drive Rated Current	Filter A	b003
2 "OutVolt 0-10"	0-10V	0V = 0V	120% Drive Rated Output Volts	None	b004
3 "OutPowr 0-10"	0-10V	0V = 0 kW	200% Drive Rated Power	Filter A	b017
4 "OutTorq 0-10"	0-10V	0V = 0 A	200% Drive Rated Current	Filter A	d382
5 "TstData 0-10"	0-10V	0V = 0000	65535 (Hex FFFF)	None	–
6 "Setpnt 0-10"	0-10V	0V = 0%	100.0% Setpoint setting	None	t090
7 "DCVolt 0-10"	0-10V	0V = 0V	100.0% of trip value	None	b005
8 "OutFreq 0-20"	0-20 mA	0 mA = 0 Hz	[Maximum Freq]	None	b001
9 "OutCurr 0-20"	0-20 mA	0 mA = 0 A	200% Drive Rated Current	Filter A	b003
10 "OutVolt 0-20"	0-20 mA	0 mA = 0V	120% Drive Rated Output Volts	None	b004
11 "OutPowr 0-20"	0-20 mA	0 mA = 0 kW	200% Drive Rated Power	Filter A	b017
12 "OutTorq 0-20"	0-20 mA	0 mA = 0 A	200% Drive Rated Current	Filter A	d382
13 "TstData 0-20"	0-20 mA	0 mA = 0000	65535 (Hex FFFF)	None	–
14 "Setpnt 0-20"	0-20 mA	0 mA = 0%	100.0% Setpoint setting	None	t090
15 "DCVolt 0-20"	0-20 mA	0 mA = 0V	100.0% of trip value	None	b005
16 "OutFreq 4-20"	4-20 mA	4 mA = 0 Hz	[Maximum Freq]	None	b001
17 "OutCurr 4-20"	4-20 mA	4 mA = 0 A	200% Drive Rated Current	Filter A	b003
18 "OutVolt 4-20"	4-20 mA	4 mA = 0V	120% Drive Rated Output Volts	None	b004
19 "OutPowr 4-20"	4-20 mA	4 mA = 0 kW	200% Drive Rated Power	Filter A	b017
20 "OutTorq 4-20"	4-20 mA	4 mA = 0 A	200% Drive Rated Current	Filter A	d382
21 "TstData 4-20"	4-20 mA	4 mA = 0000	65535 (Hex FFFF)	None	–
22 "Setpnt 4-20"	4-20 mA	4 mA = 0%	100.0% Setpoint setting	None	t090
23 "DCVolt 4-20"	4-20 mA	4 mA = 0V	100.0% of trip value	None	b005

(1) Filter A is a single pole digital filter with a 162 ms time constant. Given a 0...100% step input from a steady state, the output of Filter A takes 500 ms to get to 95% of maximum, 810 ms to get to 99%, and 910 ms to get to 100%.

Values	Default:	0
	Min/Max:	0/23
	Display:	1

(1) Parameter is also available in PowerFlex 523 FRN 3.xxx and later. PowerFlex 523 series B drive is required.

Terminal Block Group *(continued)*

t089 [Analog Out High]

Scales the maximum output value (V or mA) when the source setting is at maximum.(1)

Values	Default:	100%
	Min/Max:	0/800%
	Display:	1%

(1) Parameter is also available in PowerFlex 523 FRN 3.xxx and later. PowerFlex 523 series B drive is required.

t090 [Anlg Out Setpt] Related Parameter(s): t088

Sets the percentage of output desired when t088 [Analog Out Sel] is set to 6, 14 or 22 "Analog Setpoint".(1)

Values	Default:	0.0%
	Min/Max:	0.0/100.0%
	Display:	0.1%

(1) Parameter is also available in PowerFlex 523 FRN 3.xxx and later. PowerFlex 523 series B drive is required.

t091 [Anlg In 0-10V Lo] Related Parameter(s): P043, t092, t093

Stop drive before changing this parameter.

Sets the percentage (based on 10V) of input voltage applied to the 0-10V analog input used to represent P043 [Minimum Freq].
Analog inversion can be accomplished by setting this value larger than t092 [Anlg In 0-10V Hi].
If t093 [10V Bipolar Enbl] is set to 1 "Bi-Polar In", this parameter is ignored.

Values	Default:	0.0%
	Min/Max:	0.0/200.0%
	Display:	0.1%

t092 [Anlg In 0-10V Hi] Related Parameter(s): P044, t091, t093

Stop drive before changing this parameter.

Sets the percentage (based on 10V) of input voltage applied to the 0-10V analog input used to represent P044 [Maximum Freq].
Analog inversion can be accomplished by setting this value smaller than t091 [Anlg In 0-10V Lo].
If t093 [10V Bipolar Enbl] is set to 1 "Bi-Polar In", the same value applies to positive and negative voltage.

Values	Default:	100.0%
	Min/Max:	0.0/200.0%
	Display:	0.1%

t093 [10V Bipolar Enbl] Related Parameter(s): t091, t092

PF 525 PowerFlex 525 only.

Enables/disables bi-polar control. In bi-polar mode direction is commanded by the polarity of the voltage.
If bi-polar control is enabled, P043 [Minimum Freq] and t091 [Anlg In 0-10V Lo] are ignored.

Options	0	"Uni-Polar In" (Default)	0-10V only
	1	"Bi-Polar In"	±10V

Terminal Block Group *(continued)*

t094 [Anlg In V Loss] Related Parameter(s): P043, P044, A426, A427

Sets the response to a loss of input. When the 0-10V input (or –10 to +10V) is used for any reference, any input less than 1V is reported as a signal loss. Input must exceed 1.5V for the signal loss condition to end.
If enabled, this function affects any input that is being used as a speed reference, PID reference or PID setpoint in the drive.

Options	0	"Disabled" (Default)
	1	"Fault (F29)"
	2	"Stop"
	3	"Zero Ref"
	4	"Min Freq Ref"
	5	"Max Freq Ref"
	6	"Key Freq Ref"
	7	"MOP Freq Ref"
	8	"Continu Last"

t095 [Anlg In4-20mA Lo] Related Parameter(s): P043, t096

Stop drive before changing this parameter.

Sets the percentage (based on 4-20 mA) of input current applied to the 4-20 mA analog input used to represent P043 [Minimum Freq].
Analog inversion can be accomplished by setting this value larger than t096 [Anlg In4-20mA Hi].

Values	Default:	0.0%
	Min/Max:	0.0/100.0%
	Display:	0.1%

t096 [Anlg In4-20mA Hi] Related Parameter(s): P044, t095

Stop drive before changing this parameter.

Sets the percentage (based on 4-20 mA) of input current applied to the 4-20 mA analog input used to represent P044 [Maximum Freq].
Analog inversion can be accomplished by setting this value smaller than t095 [Anlg In4-20mA Lo].

Values	Default:	100.0%
	Min/Max:	0.0/200.0%
	Display:	0.1%

t097 [Anlg In mA Loss] Related Parameter(s): P043, P044, A426, A427

Sets the response to a loss of input. When the 4-20mA input is used for any reference, any input less than 2 mA is reported as a signal loss. Input must exceed 3 mA for the signal loss condition to end.
If enabled, this function affects any input that is being used as a speed reference or PID reference or PID setpoint in the drive.

Options	0	"Disabled" (Default)
	1	"Fault (F29)"
	2	"Stop"
	3	"Zero Ref"
	4	"Min Freq Ref"
	5	"Max Freq Ref"
	6	"Key Freq Ref"
	7	"MOP Freq Ref"
	8	"Continu Last"

Terminal Block Group *(continued)*

t098 [Anlg Loss Delay] Related Parameter(s): t094, t097

Sets the length of time after power-up during which the drive detects no analog signal loss.
Response to an analog signal loss is set in t094 or t097 [Analog In x Loss].

Values	Default:	0.0 s
	Min/Max:	0.0 /20.0 s
	Display:	0.1 s

t099 [Analog In Filter]

Sets the level of additional filtering of the analog input signals. A higher number increases filtering and decreases bandwidth. Each setting doubles the applied filtering (1 = 2x filter, 2 = 4x filter, and so on).

Values	Default:	0
	Min/Max:	0/14
	Display:	1

t100 [Sleep-Wake Sel] Related Parameter(s): t101, t102, t103

Drive "sleeps" if the appropriate analog input drops below the set t101 [Sleep Level] for the time set in t102 [Sleep Time] and the drive is running. When entering sleep mode the drive ramps to zero and the run indicator on the keypad display flashes to indicate the drive is in "sleep" mode.
When the appropriate analog input rises above the set [Wake Level], the drive "wakes" and ramps to the commanded frequency.
Inversion can be accomplished by setting [Sleep Level] to a higher setting than t103 [Wake Level].

ATTENTION: Enabling the Sleep-Wake function can cause unexpected machine operation during the Wake mode. Equipment damage and/or personal injury can result if this parameter is used in an inappropriate application. In addition, all applicable local, national and international codes, standards, regulations or industry guidelines must be considered.

Options	0	"Disabled" (Default)	
	1	"0-10V Input"	Sleep enabled from 0-10V Analog Input 1
	2	"4-20mA Input"	Sleep enabled from 4-20 mA Analog Input 2
	3	"Command Freq"	Sleep enabled based on drive commanded frequency

t101 [Sleep Level]

Sets the analog input level the drive must reach to enter sleep mode.

Values	Default:	10.0%
	Min/Max:	0.0/100.0%
	Display:	0.1%

t102 [Sleep Time]

Sets the analog input time the drive must stay below to enter sleep mode.

Values	Default:	0.0 s
	Min/Max:	0.0/600.0 s
	Display:	0.1 s

t103 [Wake Level]

Sets the analog input level the drive must reach to wake from sleep mode.

Values	Default:	15.0%
	Min/Max:	0.0/100.0%
	Display:	0.1%

Terminal Block Group *(continued)*

t104 [Wake Time]

Sets the analog input time the drive must stay above to wake from sleep mode.

Values	Default:	0.0 s
	Min/Max:	0.0/600.0 s
	Display:	0.1 s

t105 [Safety Open En]

PF 525 PowerFlex 525 only.

Sets the action when both safety inputs (Safety 1 and Safety 2) are disabled (de-energized – no power is applied).

Options	0	"FaultEnable" (Default)
	1	"FaultDisable"

t106 [SafetyFlt RstCfg]

PF 525 PowerFlex 525 only.

(With FRN 5.xxx and later.)

Sets the method of resetting fault F111 "Safety Hardware" either by means of a power cycle or fault clear operation.

Options	0	"PwrCycleRset" (Default)	Reset fault F111 using power cycle.
	1	"FltClr Reset"	Reset fault F111 using fault clear mechanism without power cycle.

Communications Group

C121 [Comm Write Mode]

Saves parameter values in active drive memory (RAM) or in drive non-volatile memory (EEPROM).

ATTENTION: If Automatic Drive Configuration (ADC) is used, this parameter must remain at its default value of 0 “Save”.

IMPORTANT Parameter values set prior to setting 1 “RAM only” are saved in RAM.

Options	0	“Save” (Default)
	1	“RAM only”

C122 [Cmd Stat Select]

PF 525 PowerFlex 525 only.

Selects velocity-specific or position/fibers-specific Command and Status Word bit definitions for use over a communication network. See Writing (06) Logic Command Data on page 203 for more information. This parameter cannot be changed when an I/O connection is established through the communication adapter or the drive’s embedded EtherNet/IP port.

Options	0	“Velocity” (Default)
	1	“Position”

C123 [RS485 Data Rate]

Sets the communications baud rate (bits/second) for the RS485 port. A reset or power cycle is required after selection is made.

Options	0	“1200”
	1	“2400”
	2	“4800”
	3	“9600” (Default)
	4	“19,200”
	5	“38,400”

C124 [RS485 Node Addr]

Sets the Modbus drive node number (address) for the RS485 port if using a network connection. A reset or power cycle is required after selection is made.

Values	Default:	100
	Min/Max:	1/247
	Display:	1

C125 [Comm Loss Action] Related Parameter(s): P045

Sets the drive's response to a loss of connection or excessive communication errors on the RS485 port.

Options	0	“Fault” (Default)	
	1	“Coast Stop”	Stops drive using “Coast to stop”.
	2	“Stop”	Stops drive using P045 [Stop Mode] setting.
	3	“Continu Last”	Drive continues operating at communication commanded speed saved in RAM.

C126 [Comm Loss Time] Related Parameter(s): C125

Sets the time that the drive remains in communication loss with the RS485 port before taking the action specified in C125 [Comm Loss Action]. See Appendix C for more information.

IMPORTANT This setting is effective only if I/O that controls the drive is transmitted through the RS485 port.

Values	Default:	5.0 s
	Min/Max:	0.1/60.0 s
	Display:	0.1 s

Communications Group *(continued)*

C127 [RS485 Format]

Determines the details related to the specific Modbus protocol used by the drive. A reset or power cycle is required after selection is made.

Options	0	"RTU 8-N-1" (Default)
	1	"RTU 8-E-1"
	2	"RTU 8-O-1"
	3	"RTU 8-N-2"
	4	"RTU 8-E-2"
	5	"RTU 8-O-2"

C128 [EN Addr Sel]

Related Parameter(s): C129-C132, C133-C136, C137-C140

PF 525 PowerFlex 525 only.

Enables the IP address, subnet mask and gateway address to be set with a BOOTP server. Identifies the connections that would be attempted on a reset or power cycle. A reset or power cycle is required after selection is made.

Options	1	"Parameters"
	2	"BOOTP" (Default)

C129 [EN IP Addr Cfg 1]
C130 [EN IP Addr Cfg 2]
C131 [EN IP Addr Cfg 3]
C132 [EN IP Addr Cfg 4]

Related Parameter(s): C128

PF 525 PowerFlex 525 only.

Sets the bytes in the IP address. A reset or power cycle is required after selection is made.

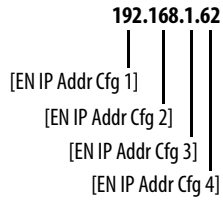

IMPORTANT C128 [EN Addr Sel] must be set to 1 "Parameters".

Values	Default:	0
	Min/Max:	0/255
	Display:	1

Communications Group *(continued)*

C133 [EN Subnet Cfg 1]
C134 [EN Subnet Cfg 2]
C135 [EN Subnet Cfg 3]
C136 [EN Subnet Cfg 4]

Related Parameter(s): C128

PF 525 PowerFlex 525 only.

Sets the bytes of the subnet mask. A reset or power cycle is required after selection is made.

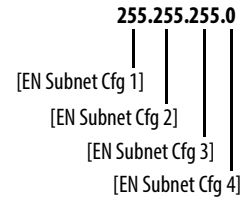

IMPORTANT C128 [EN Addr Sel] must be set to 1 "Parameters".

Values	Default:	0
	Min/Max:	0/255
	Display:	1

C137 [EN Gateway Cfg 1]
C138 [EN Gateway Cfg 2]
C139 [EN Gateway Cfg 3]
C140 [EN Gateway Cfg 4]

Related Parameter(s): C128

PF 525 PowerFlex 525 only.

Sets the bytes of the gateway address. A reset or power cycle is required after selection is made.

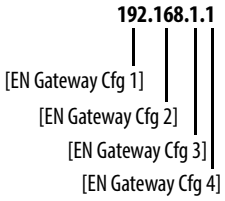

IMPORTANT C128 [EN Addr Sel] must be set to 1 "Parameters".

Values	Default:	0
	Min/Max:	0/255
	Display:	1

C141 [EN Rate Cfg]

PF 525 PowerFlex 525 only.

Sets the network data rate at which EtherNet/IP communicates. A reset or power cycle is required after selection is made.

Options	0	"Auto detect" (Default)
	1	"10Mbps Full"
	2	"10Mbps Half"
	3	"100Mbps Full"
	4	"100Mbps Half"

Communications Group *(continued)*

C143 [EN Comm Flt Actn]

Related Parameter(s): P045, C145, C146, C147-C150

PF 525 PowerFlex 525 only.

Sets the action that the EtherNet/IP interface and drive takes if the EtherNet/IP interface detects that Ethernet communications have been disrupted.

IMPORTANT This setting is effective only if I/O that controls the drive is transmitted through the EtherNet/IP interface.

ATTENTION: Risk of injury or equipment damage exists. Parameter C143 [EN Comm Flt Actn] lets you determine the action of the EtherNet/IP interface and connected drive if communications are disrupted. By default, this parameter faults the drive. You can set this parameter so that the drive continues to run. Precautions should be taken to ensure that the setting of this parameter does not create a risk of injury or equipment damage. When commissioning the drive, verify that your system responds correctly to various situations (for example, a disconnected drive).

Options	0	"Fault" (Default)	
	1	"Stop"	Drive stops per P045 [Stop Mode] setting.
	2	"Zero Data"	Note: The Reference and Datalink values transmitted to the drive will be set to "0".
	3	"Hold Last"	Note: The Logic Command, Reference, and Datalink values transmitted to the drive will be held at their last value.
	4	"Send Flt Cfg"	Note: The Logic Command, Reference, and Datalink values will be transmitted to the drive as configured in C145, C146, and C147...C150.

C144 [EN Idle Flt Actn]

Related Parameter(s): P045, C145, C146, C147-C150

PF 525 PowerFlex 525 only.

Sets the action that the EtherNet/IP interface and drive takes if the EtherNet/IP interface detects that the scanner is idle because the controller was switched to program mode.

ATTENTION: Risk of injury or equipment damage exists. Parameter C144 [EN Idle Flt Actn] lets you determine the action of the EtherNet/IP interface and connected drive if the scanner is idle. By default, this parameter faults the drive. you can set this parameter so that the drive continues to run. Precautions should be taken to ensure that the setting of this parameter does not create a risk of injury or equipment damage. When commissioning the drive, verify that your system responds correctly to various situations (for example, a disconnected drive).

Options	0	"Fault" (Default)	
	1	"Stop"	Drive stops per P045 [Stop Mode] setting.
	2	"Zero Data"	Note: The Reference and Datalink values transmitted to the drive will be set to "0".
	3	"Hold Last"	Note: The Logic Command, Reference, and Datalink values transmitted to the drive will be held at their last value.
	4	"Send Flt Cfg"	Note: The Logic Command, Reference, and Datalink values will be transmitted to the drive as configured in C145, C146, and C147...C150.

C145 [EN Flt Cfg Logic]

Related Parameter(s): C143, C144

32 32 bit parameter.

PF 525 PowerFlex 525 only.

Sets the Logic Command data that is sent to the drive if any of the following is true:

– C143 [EN Comm Flt Actn] is set to 4 "Send Flt Cfg" and communications are disrupted.

– C144 [EN Idle Flt Actn] is set to 4 "Send Flt Cfg" and the scanner is put into Program or Test mode.

See Writing (06) Logic Command Data on page 203 for more information.

Values	Default:	0000
	Min/Max:	0000/FFFF
	Display:	0000

Communications Group *(continued)*

C146 [EN Flt Cfg Ref]

Related Parameter(s): C143, C144

32 32 bit parameter.

PF 525 PowerFlex 525 only.

Sets the Reference data that is sent to the drive if any of the following is true:
– C143 [EN Comm Flt Actn] is set to 4 "Send Flt Cfg" and communications are disrupted.
– C144 [EN Idle Flt Actn] is set to 4 "Send Flt Cfg" and the scanner is put into Program or Test mode.

Values	Default:	0
	Min/Max:	0/50000
	Display:	1

C147 [EN Flt Cfg DL 1]
C148 [EN Flt Cfg DL 2]
C149 [EN Flt Cfg DL 3]
C150 [EN Flt Cfg DL 4]

PF 525 PowerFlex 525 only.

Sets the Ethernet Datalink Input data that is sent to the drive if any of the following is true:
– C143 [EN Comm Flt Actn] is set to 4 "Send Flt Cfg" and communications are disrupted.
– C144 [EN Idle Flt Actn] is set to 4 "Send Flt Cfg" and the scanner is put into Program or Test mode.

Values	Default:	0
	Min/Max:	0/65535
	Display:	1

C153 [EN Data In 1]
C154 [EN Data In 2]
C155 [EN Data In 3]
C156 [EN Data In 4]

PF 525 PowerFlex 525 only.

Datalink parameter number whose value is written from the embedded EtherNet/IP data table. This parameter cannot be changed when an I/O connection is established through the drive's embedded EtherNet/IP port.

Values	Default:	0
	Min/Max:	0/800
	Display:	1

C157 [EN Data Out 1]
C158 [EN Data Out 2]
C159 [EN Data Out 3]
C160 [EN Data Out 4]

PF 525 PowerFlex 525 only.

Datalink parameter number whose value is read from the embedded EtherNet/IP data table. This parameter cannot be changed when an I/O connection is established through the drive's embedded EtherNet/IP port.

Values	Default:	0
	Min/Max:	0/800
	Display:	1

Communications Group *(continued)*

C161 [Opt Data In 1]
C162 [Opt Data In 2]
C163 [Opt Data In 3]
C164 [Opt Data In 4]

Datalink parameter number whose value is written from the High Speed Drive Serial Interface (HSDSI) data table. This parameter cannot be changed when an I/O connection is established through the communication adapter.

Values	Default:	0
	Min/Max:	0/800
	Display:	1

C165 [Opt Data Out 1]
C166 [Opt Data Out 2]
C167 [Opt Data Out 3]
C168 [Opt Data Out 4]

Datalink parameter number whose value is read from the HSDSI data table. This parameter cannot be changed when an I/O connection is established through the communication adapter.

Values	Default:	0
	Min/Max:	0/800
	Display:	1

C169 [MultiDrv Sel]

Sets the configuration of the drive that is in multi-drive mode. A reset or power cycle is required after selection is made.

Options	0 "Disabled" (Default)	No multi-drive master from the internal network option module or embedded Ethernet port. The drive can still function as a multi-drive slave or as a single drive (no multi-drive used).
	1 "Network Opt"	Multi-drive is enabled with the internal network option as a multi-drive master. The host drive is "Drive 0" and up to four slave drives can be daisy-chained from its RS485 port.
	2 "EtherNet/IP"(1)	Multi-drive is enabled with the embedded Ethernet port as the multi-drive master. The host drive is "Drive 0" and up to four slave drives can be daisy-chained from its RS485 port.

(1) Setting is specific to PowerFlex 525 drives only.

C171 [Drv 1 Addr]
C172 [Drv 2 Addr]
C173 [Drv 3 Addr]
C174 [Drv 4 Addr]

Related Parameter(s): C169

Sets the corresponding node addresses of the daisy-chained drives when C169 [MultiDrv Sel] is set to 1 "Network Opt" or 2 "EtherNet/IP". A reset or power cycle is required after selection is made.

Values	Default: Drv 1 Addr: Drv 2 Addr: Drv 3 Addr: Drv 4 Addr:	 2 3 4 5
	Min/Max:	1/247
	Display:	1

C175 [DSI I/O Cfg]

Sets the configuration of the Drives that are active in the multi-drive mode. Identifies the connections that would be attempted on a reset or power cycle. A reset or power cycle is required after selection is made.

Options	0 "Drive 0" (Default)	
	1 "Drive 0-1"	
	2 "Drive 0-2"	
	3 "Drive 0-3"	
	4 "Drive 0-4"	

Logic Group

L180 [Stp Logic 0] **L181 [Stp Logic 1]**
L182 [Stp Logic 2] **L183 [Stp Logic 3]**
L184 [Stp Logic 4] **L185 [Stp Logic 5]**
L186 [Stp Logic 6] **L187 [Stp Logic 7]**

Related Parameter(s):

Stop drive before changing this parameter.

PF 525 PowerFlex 525 only.

Values	Default:	00F1
	Min/Max:	0000/FAFF
	Display	0001

See Appendix D and Appendix E for more information on applying Step Logic and Position StepLogic.

Parameters L180...L187 are only active if P047, P049, or P051 [Speed Referencex] is set to 13 "Step Logic" or 16 "Positioning". These parameters can be used to create a custom profile of frequency commands. Each "step" can be based on time, status of a Logic input or a combination of time and the status of a Logic input.

Digits 1...4 for each [Stp Logic x] parameter must be programmed according to the desired profile. A Logic input is established by setting a digital input, parameters t062, t063, t065...t068 [DigIn TermBlk xx] to 24 "Logic In 1" and/or 25 "Logic In 2" or by using Bits 6 and 7 of A560 [Enh Control Word].

A time interval between steps can be programmed using parameters L190...L197 [Stp Logic Time x]. See the table below for related parameters.

The speed for any step is programmed using parameters A410...A417 [Preset Freq x].

Step	StepLogic Parameter	Related Preset Frequency Parameter (Can be activated independent of StepLogic Parameters)	Related StepLogic Time Parameter (Active when L180...L187 Digit 1 or 2 are set to 1, b, C, d or E)
0	L180 [Stp Logic 0]	A410 [Preset Freq 0]	L190 [Stp Logic Time 0]
1	L181 [Stp Logic 1]	A411 [Preset Freq 1]	L191 [Stp Logic Time 1]
2	L182 [Stp Logic 2]	A412 [Preset Freq 2]	L192 [Stp Logic Time 2]
3	L183 [Stp Logic 3]	A413 [Preset Freq 3]	L193 [Stp Logic Time 3]
4	L184 [Stp Logic 4]	A414 [Preset Freq 4]	L194 [Stp Logic Time 4]
5	L185 [Stp Logic 5]	A415 [Preset Freq 5]	L195 [Stp Logic Time 5]
6	L186 [Stp Logic 6]	A416 [Preset Freq 6]	L196 [Stp Logic Time 6]
7	L187 [Stp Logic 7]	A417 [Preset Freq 7]	L197 [Stp Logic Time 7]

The position for any step is programmed using parameters L200...L214 [Step Units x].

Step	StepLogic Position Parameter
0	L200 [Step Units 0] & L201 [Step Units F 0]
1	L202 [Step Units 1] & L203 [Step Units F 1]
2	L204 [Step Units 2] & L205 [Step Units F 2]
3	L206 [Step Units 3] & L207 [Step Units F 3]
4	L208 [Step Units 4] & L209 [Step Units F 4]
5	L210 [Step Units 5] & L211 [Step Units F 5]
6	L212 [Step Units 6] & L213 [Step Units F 6]
7	L214 [Step Units 7] & L215 [Step Units F 7]

How StepLogic Works

The StepLogic sequence begins with a valid start command. A normal sequence always begins with L180 [Stp Logic 0].

Digit 1: Logic for next step

This digit defines the logic for the next step. When the condition is met the program advances to the next step. Step 0 follows Step 7. Example: Digit 1 is set to 3. When "Logic In 2" becomes active, the program advances to the next step.

Digit 2: Logic to jump to a different step

For all settings other than F, when the condition is met, the program overrides Digit 0 and jumps to the step defined by Digit 3.

Digit 3: Different step to jump

When the condition for Digit 2 is met, this digit setting determines the next step or to end the program.

Digit 4: Step settings

This digit defines additional characteristics of each step.

Any StepLogic parameter can be programmed to control a relay or opto output, but you can not control different outputs based on the condition of different StepLogic commands.

StepLogic Settings

The logic for each function is determined by the four digits for each StepLogic parameter. The following is a listing of the available settings for each digit. See Appendix D for more information.

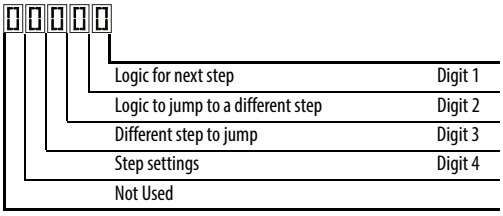

Velocity Control Settings (Digit 4)

Required Setting	Accel/Decel Param. Used	StepLogic Output State	Commanded Direction
0	Accel/Decel 1	Off	FWD
1	Accel/Decel 1	Off	REV
2	Accel/Decel 1	Off	No Output
3	Accel/Decel 1	On	FWD
4	Accel/Decel 1	On	REV
5	Accel/Decel 1	On	No Output
6	Accel/Decel 2	Off	FWD
7	Accel/Decel 2	Off	REV
8	Accel/Decel 2	Off	No Output
9	Accel/Decel 2	On	FWD
A	Accel/Decel 2	On	REV
b	Accel/Decel 2	On	No Output

Positioning Settings (Digit 4)

Required Setting	Accel/Decel Param. Used	StepLogic Output State	Direction From Home	Type of Command
0	Accel/Decel 1	Off	FWD	Absolute
1	Accel/Decel 1	Off	FWD	Incremental
2	Accel/Decel 1	Off	REV	Absolute
3	Accel/Decel 1	Off	REV	Incremental
4	Accel/Decel 1	On	FWD	Absolute
5	Accel/Decel 1	On	FWD	Incremental
6	Accel/Decel 1	On	REV	Absolute
7	Accel/Decel 1	On	REV	Incremental
8	Accel/Decel 2	Off	FWD	Absolute
9	Accel/Decel 2	Off	FWD	Incremental
A	Accel/Decel 2	Off	REV	Absolute
b	Accel/Decel 2	Off	REV	Incremental
C	Accel/Decel 2	On	FWD	Absolute
d	Accel/Decel 2	On	FWD	Incremental
E	Accel/Decel 2	On	REV	Absolute
F	Accel/Decel 2	On	REV	Incremental

Settings (Digit 3)

Setting	Description
0	Jump to Step 0
1	Jump to Step 1
2	Jump to Step 2
3	Jump to Step 3
4	Jump to Step 4
5	Jump to Step 5
6	Jump to Step 6
7	Jump to Step 7
8	End Program (Normal Stop)
9	End Program (Coast to Stop)
A	End Program and Fault (F2)

Settings (Digit 2 and 1)

Setting	Description
0	Skip Step (Jump Immediately)
1	Step Based on [Stp Logic Time x]
2	Step if “Logic In 1” is Active
3	Step if “Logic In 2” is Active
4	Step if “Logic In 1” is Not Active
5	Step if “Logic In 2” is Not Active
6	Step if either “Logic In 1” or “Logic In 2” is Active
7	Step if both “Logic In 1” and “Logic In 2” are Active
8	Step if neither “Logic In 1” nor “Logic In 2” is Active
9	Step if “Logic In 1” is Active and “Logic In 2” is Not Active
A	Step if “Logic In 2” is Active and “Logic In 1” is Not Active
b	Step after [Stp Logic Time x] and “Logic In 1” is Active
C	Step after [Stp Logic Time x] and “Logic In 2” is Active
d	Step after [Stp Logic Time x] and “Logic In 1” is Not Active
E	Step after [Stp Logic Time x] and “Logic In 2” is Not Active
F	Do Not Step/Ignore Digit 2 Settings

Logic Group *(continued)*

L190 [Stp Logic Time 0] **L191 [Stp Logic Time 1]**
L192 [Stp Logic Time 2] **L193 [Stp Logic Time 3]**
L194 [Stp Logic Time 4] **L195 [Stp Logic Time 5]**
L196 [Stp Logic Time 6] **L197 [Stp Logic Time 7]**

PF 525 PowerFlex 525 only.

Sets the time to remain in each step if the corresponding command word is set to "Step based on time".

Values	Default:	30.0 s
	Min/Max:	0.0/999.9 s
	Display:	0.1 s

L200 [Step Units 0] **L202 [Step Units 1]**
L204 [Step Units 2] **L206 [Step Units 3]**
L208 [Step Units 4] **L210 [Step Units 5]**
L212 [Step Units 6] **L214 [Step Units 7]**

32 32 bit parameter.

PF 525 PowerFlex 525 only.

Sets the position in user-defined units the drive must reach at each step.

Values	Default:	0.00
	Min/Max:	0.00/6400.00
	Display:	0.01

Advanced Display Group

d360 [Analog In 0-10V] Related Parameter(s): t091, t092

Displays the 0-10V analog input as a percent of full scale.

Values	Default:	Read Only
	Min/Max:	0.0/100.0%
	Display:	0.1%

d361 [Analog In 4-20mA] Related Parameter(s): t095, t096

Displays the 4-20 mA analog input as a percent of full scale.

Values	Default:	Read Only
	Min/Max:	0.0/100.0%
	Display:	0.1%

d362 [Elapsed Time-hr] Related Parameter(s): A555

Displays the total elapsed powered-up time (in hours) since timer reset. The timer stops when it reaches the maximum value.

Values	Default:	Read Only
	Min/Max:	0/32767 hr
	Display:	1 hr

d363 [Elapsed Time-min] Related Parameter(s): d362, A555

Displays the total elapsed powered-up time (in minutes) since timer reset. Resets to zero when maximum value is reached and increments d362 [Elapsed Time-hr] by one.

Values	Default:	Read Only
	Min/Max:	0.0/60.0 min
	Display:	0.1 min

d364 [Counter Status]

Displays the current value of the counter if enabled.

Values	Default:	Read Only
	Min/Max:	0/65535
	Display:	1

d365 [Timer Status]

32 32 bit parameter.

Displays the current value of the timer if enabled.

Values	Default:	Read Only
	Min/Max:	0.0/9999.0 s
	Display:	0.1 s

d367 [Drive Type]

Displays the Drive type setting. Used by Rockwell Automation field service personnel (not write accessible by non Rockwell Automation technical personnel).

Values	Default:	Read Only
	Min/Max:	0/65535
	Display:	1

Advanced Display Group *(continued)*

d368 [Testpoint Data] Related Parameter(s): A483

Displays the present value of the function selected in A483 [Testpoint Sel].

Values	Default:	Read Only
	Min/Max:	0/FFFF
	Display:	1

d369 [Motor OL Level]

Displays the motor overload counter.

Values	Default:	Read Only
	Min/Max:	0.0/150.0%
	Display:	0.1%

d375 [Slip Hz Meter] Related Parameter(s): P032

Displays the current amount of slip or droop (absolute value) being applied to the motor frequency. Drives applies slip based on the setting for P032 [Motor NP Hertz].

Values	Default:	Read Only
	Min/Max:	0.0/25.0 Hz
	Display:	0.1 Hz

d376 [Speed Feedback]

32 bit parameter.

Displays the value of the actual motor speed whether measured by encoder/pulse train feedback or estimated.

Values	Default:	Read Only
	Min/Max:	0.0/64000.0 rpm
	Display:	0.1 rpm

d378 [Encoder Speed]

32 bit parameter.

Provides a monitoring point that reflects the speed measured from the feedback device. This shows the encoder or pulse train speed even if not used directly to control motor speed.(1)

Values	Default:	Read Only
	Min/Max:	0.0/64000.0 rpm
	Display:	0.1 rpm

(1) Parameter is also available in PowerFlex 523 FRN 3.xxx and later.

d380 [DC Bus Ripple]

Displays the real-time value of the DC bus ripple voltage.

Values	Default:	Read Only
	Min/Max:	0/410VDC for 230V AC drives; 820VDC for 460VAC drives; 1025VDC for 600VAC drives
	Display:	1V DC

d381 [Output Powr Fctr]

Displays the angle in electrical degrees between motor voltage and motor current.

Values	Default:	Read Only
	Min/Max:	0.0/180.0 deg
	Display:	0.1 deg

Advanced Display Group *(continued)*

d382 [Torque Current]

Displays the current value of the motor torque current measured by the drive.

Values	Default:	Read Only
	Min/Max:	0.00/(Drive Rated Amps x 2)
	Display:	0.01 A

d383 [PID1 Fdbk Displ]

d385 [PID2 Fdbk Displ]

PF 525 PowerFlex 525 only.

Displays the active PID Feedback value.

Values	Default:	Read Only
	Min/Max:	0.0/100.0%
	Display:	0.1%

d384 [PID1 Setpnt Disp]

d386 [PID2 Setpnt Disp]

PF 525 PowerFlex 525 only.

Displays the active PID Setpoint value.

Values	Default:	Read Only
	Min/Max:	0.0/100.0%
	Display:	0.1%

d387 [Position Status]

PF 525 PowerFlex 525 only.

Displays the present operating condition of the drive. When in Positioning mode, Bit 1 indicates positive or negative position in relation to Home.

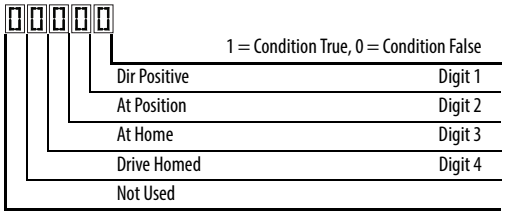

Values	Default:	Read Only
	Min/Max:	0000/1111
	Display:	0000

d388 [Units Traveled H]

Related Parameter(s): d387

Stop drive before changing this parameter.

32 bit parameter.

PF 525 PowerFlex 525 only.

Displays the number of user-defined units traveled from the home position. See d387 [Position Status] for direction of travel.

Values	Default:	Read Only
	Min/Max:	0/64000
	Display:	1

Advanced Display Group *(continued)*

d389 [Units Traveled L] Related Parameter(s): d387

Stop drive before changing this parameter.

PF 525 PowerFlex 525 only.

Displays the number of user-defined units traveled from the home position. See d387 [Position Status] for direction of travel.

Values	Default:	Read Only
	Min/Max:	0.00/0.99
	Display:	0.01

d390 [Fiber Status]

Present status of the Fibers features.

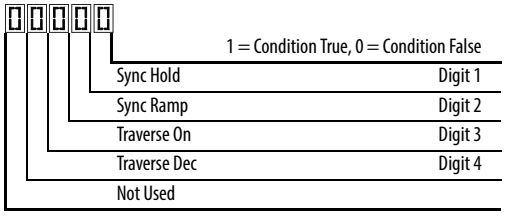

Values	Default:	Read Only
	Min/Max:	0000/1111
	Display:	0000

d391 [Stp Logic Status] Related Parameter(s): P047, L180-L187

PF 525 PowerFlex 525 only.

Displays the current step of the Step Logic profile as defined by parameters L180...L187 [Step Logic x] when P047 [Speed Reference1] is set to 13 “Step Logic” or 16 “Positioning”.

Values	Default:	Read Only
	Min/Max:	0/8
	Display:	1

d392 [RdyBit Mode Act] Related Parameter(s): A574

(With PowerFlex 525 FRN 3.xxx and later.)
(With PowerFlex 523 FRN 3.xxx and later.)

Displays the value of A574 [RdyBit Mode Cfg].

Values	Default:	Read Only
	Min/Max:	0/1
	Display:	1

Advanced Display Group *(continued)*

d393 [Drive Status 2]

(With PowerFlex 525 FRN 5.xxx and later.)
(With PowerFlex 523 FRN 3.xxx and later.)

Displays the present operating condition of the drive.

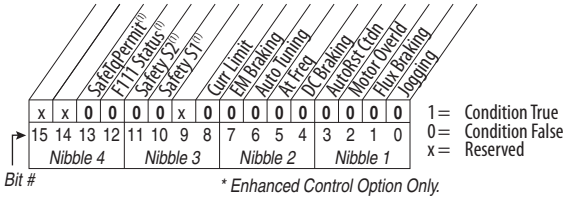

(1) Bit status is specific to PowerFlex 525 drives only.

Values		
	Default:	Read Only
	Min/Max:	0/65535
	Display:	1

d394 [Dig Out Status]

(With PowerFlex 525 FRN 5.xxx and later.)
(With PowerFlex 523 FRN 3.xxx and later.)

Displays relay output and opto output status.

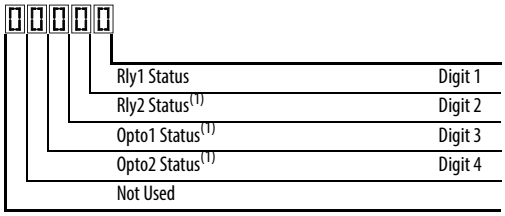

Status	Bit Value = 0	Bit Value = 1
Relay 1 status (Normally Open)	Not activated (Relay 1 open)	Activated (Relay 1 closed)
Relay 2 status (Normally Closed)	Not activated (Relay 2 closed)	Activated (Relay 2 open)
Opto 1 status	Not activated	Activated
Opto 2 status	Not activated	Activated

(1) Setting is specific to PowerFlex 525 drives only.

Values		
	Default:	Read Only
	Min/Max:	0/15
	Display:	1

Advanced Program Group

A410 [Preset Freq 0] **A411 [Preset Freq 1]**
A412 [Preset Freq 2] **A413 [Preset Freq 3]**
A414 [Preset Freq 4] **A415 [Preset Freq 5]**
A416 [Preset Freq 6] **A417 [Preset Freq 7]**

A418 [Preset Freq 8] **A419 [Preset Freq 9]**
A420 [Preset Freq 10] **A421 [Preset Freq 11]**
A422 [Preset Freq 12] **A423 [Preset Freq 13]**
A424 [Preset Freq 14] **A425 [Preset Freq 15]**

PF 525 PowerFlex 525 only.

Sets the frequency of the drive outputs to the programmed value when selected.

For PowerFlex 525

	Default Accel/Decel Used	Preset Input 1 (DigIn TermBlk 05)	Preset Input 2 (DigIn TermBlk 06)	Preset Input 3 (DigIn TermBlk 07)	Preset Input 4 (DigIn TermBlk 08)
Preset Setting 0[1]	1	0	0	0	0
Preset Setting 1	1	1	0	0	0
Preset Setting 2	2	0	1	0	0
Preset Setting 3	2	1	1	0	0
Preset Setting 4	1	0	0	1	0
Preset Setting 5	1	1	0	1	0
Preset Setting 6	2	0	1	1	0
Preset Setting 7	2	1	1	1	0
Preset Setting 8	1	0	0	0	1
Preset Setting 9	1	1	0	0	1
Preset Setting 10	2	0	1	0	1
Preset Setting 11	2	1	1	0	1
Preset Setting 12	1	0	0	1	1
Preset Setting 13	1	1	0	1	1
Preset Setting 14	2	0	1	1	1
Preset Setting 15	2	1	1	1	1

For PowerFlex 523

	Default Accel/Decel Used	Preset Input 1 (DigIn TermBlk 05)	Preset Input 2 (DigIn TermBlk 06)	Preset Input 3 (DigIn TermBlk 03)	–
Preset Setting 0[1]	1	0	0	0	–
Preset Setting 1	1	1	0	0	
Preset Setting 2	2	0	1	0	
Preset Setting 3	2	1	1	0	
Preset Setting 4	1	0	0	1	
Preset Setting 5	1	1	0	1	
Preset Setting 6	2	0	1	1	
Preset Setting 7	2	1	1	1	

(1) Preset Setting 0 is only available if P047, P049 or P051 [Speed Referencex] is set to 7 “Preset Freq”.

Values	Defaults:	
	Preset Freq 0:	0.00 Hz
	Preset Freq 1:	5.00 Hz
	Preset Freq 2:	10.00 HZ
	Preset Freq 3:	20.00 Hz
	Preset Freq 4:	30.00 Hz
	Preset Freq 5:	40.00 Hz
	Preset Freq 6:	50.00 Hz
	Preset Freq 7...15:	60.00 Hz
	Min/Max:	0.00/500.00 Hz
	Display:	0.01 Hz

Advanced Program Group *(continued)*

A426 [Keypad Freq] Related Parameter(s): P047, P049, P051

Provides the drive frequency command using the built-in keypad navigation. When P047, P049 or P051 [Speed Referencex] selects 2 "Keypad Freq", the value set in this parameter controls the frequency of the drive. The value of this parameter can also be changed when navigating with the keypad by pressing the Up or Down arrow keys.

Values	Default:	60.00 Hz
	Min/Max:	0.00/500.00 Hz
	Display:	0.01 Hz

A427 [MOP Freq]

Provides the drive frequency command using the built-in Motor Operated Potentiometer (MOP).

IMPORTANT Frequency is not written to non-volatile storage until drive is powered-down. If both MOP Up and MOP Down are applied at the same time, the inputs are ignored and the frequency is unchanged.

Values	Default:	60.00 Hz
	Min/Max:	0.00/500.00 Hz
	Display:	0.01 Hz

A428 [MOP Reset Sel]

Determines if the current MOP reference command is saved on power down.

Options	0 "Zero MOP Ref"	Resets the MOP frequency to zero on power down and stop.
	1 "Save MOP Ref" (Default)	

A429 [MOP Preload]

Determines the operation of the MOP function.

Options	0 "No preload" (Default)	
	1 "Preload"	Bumpless Transfer: whenever MOP mode is selected, the current output value of the speed is loaded.

A430 [MOP Time]

Sets the rate of change of the MOP reference.

Values	Default:	10.0 s
	Min/Max:	0.1/600.0 s
	Display:	0.1 s

A431 [Jog Frequency] Related Parameter(s): P044

Sets the output frequency when a jog command is issued.

Values	Default:	10.00 Hz
	Min/Max:	0.00/[Maximum Freq]
	Display:	0.01 Hz

A432 [Jog Accel/Decel]

Sets the acceleration and deceleration time used when in jog mode.

Values	Default:	10.00 s
	Min/Max:	0.01/600.00 s
	Display:	0.01 s

Advanced Program Group *(continued)*

A433 [Purge Frequency] Related Parameter(s): t062, t063, t065-t068

Provides a fixed frequency command value when t062, t063, t065-t068 [DigIn TermBlk xx] is set to 40 "Purge".

Values	Default:	5.00 Hz
	Min/Max:	0.00/500.00 Hz
	Display:	0.01 Hz

A434 [DC Brake Time] Related Parameter(s): P045, A435

Sets the length of time that DC brake current is "injected" into the motor.

Values	Default:	0.0 s
	Min/Max:	0.0/99.9 s
	Display:	0.1 s

A435 [DC Brake Level] Related Parameter(s): P045

Defines the maximum DC brake current, in amps, applied to the motor when P045 [Stop Mode] is set to either 4 "Ramp" or 6 "DC Brake".

Ramp-to-Stop Mode

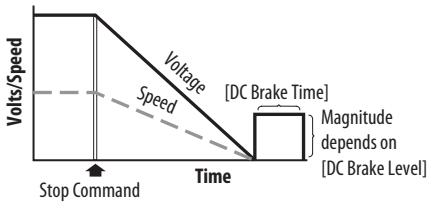

DC Injection Stop Mode

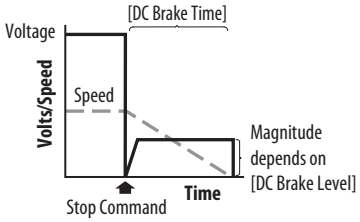

ATTENTION: If a hazard of injury due to movement of equipment or material exists, an auxiliary mechanical braking device must be used. This feature should not be used with synchronous motors. Motors may be demagnetized during braking.

Values	Default:	Drive Rated Amps x 0.05
	Min/Max:	0.00/(Drive Rated Amps x 1.80)
	Display:	0.01 A

A436 [DC Brk Time@Strt] Related Parameter(s): P045, A435

Sets the length of time that DC brake current is "injected" into the motor after a valid start command is received.

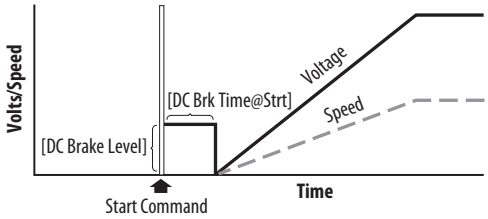

Values	Default:	0.0 s
	Min/Max:	0.0/99.9 s
	Display:	0.1 s

Advanced Program Group *(continued)*

A437 [DB Resistor Sel] Related Parameter(s): A438, A550

Stop drive before changing this parameter.

Enables/disables external dynamic braking and selects the level of resistor protection.

IMPORTANT When A437 [DB Resistor Sel] is set to a value greater than "0", the value set in parameter A550 [Bus Reg Enable] will not take effect.

Options	0	"Disabled" (Default)	
	1	"Norml RA Res"	5%
	2	"NoProtection"	100%
	3...99	"3...99% DutyCycle"	

A438 [DB Threshold] Related Parameter(s): A437

Sets the DC bus voltage threshold for Dynamic Brake operation. If DC bus voltage rises above this level, Dynamic Brake turns on. Lower values makes the dynamic braking function more responsive but may result in nuisance Dynamic Brake activation (IGBT can modulate continuously).

ATTENTION: Equipment damage may result if this parameter is set to a value that causes the dynamic braking resistor to dissipate excessive power. Parameter settings less than 100% should be carefully evaluated to ensure that the Dynamic Brake resistor's wattage rating is not exceeded. In general, values less than 90% are not needed. This parameter's setting is especially important if parameter A437 [DB Resistor Sel] is set to 2 "NoProtection".

Values	Default:	100.0%
	Min/Max:	10.0/110.0%
	Display:	0.1%

A439 [S Curve %]

Enables a fixed shape S-Curve that is applied to the acceleration and deceleration ramps (including jog).
S-Curve Time = (Accel or Decel Time) x (S-Curve Setting in percentage)

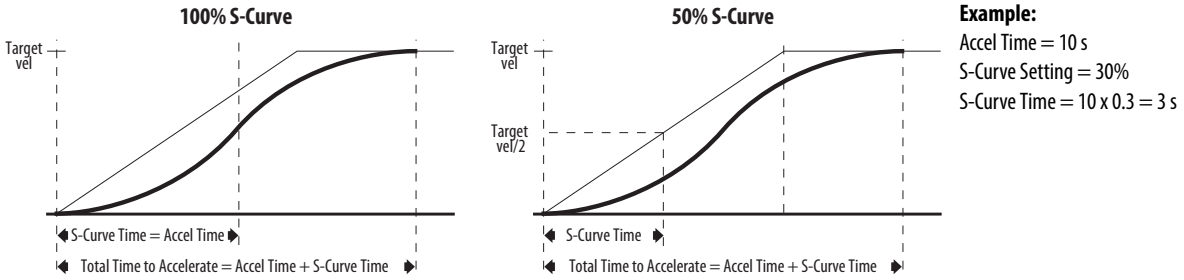

Example:
Accel Time = 10 s
S-Curve Setting = 30%
S-Curve Time = 10 x 0.3 = 3 s

Values	Default:	0%
	Min/Max:	0/100%
	Display:	1%

Advanced Program Group *(continued)*

A440 [PWM Frequency] Related Parameter(s): A540

Sets the carrier frequency for the PWM output waveform. The chart below provides derating guidelines based on the PWM frequency setting.

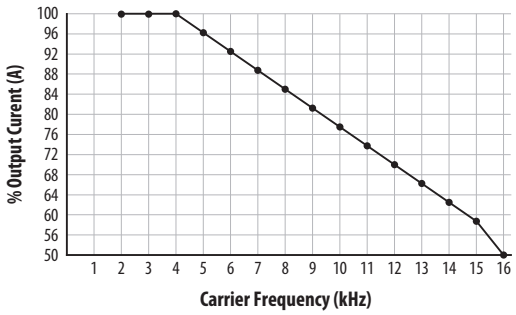

Note: If Vector mode (open loop) is selected and 16 kHz is selected, the drive will forcibly reduce the carrier frequency to 8 kHz.

IMPORTANT Ignoring derating guidelines can cause reduced drive performance. The drive may automatically reduce the PWM carrier frequency at low output speeds, unless prevented from doing so by A540 [Var PWM Disable].

Values	Default:	4.0 kHz
	Min/Max:	2.0/16.0 kHz
	Display:	0.1 kHz

A441 [Droop Hertz@ FLA]

PF 525 PowerFlex 525 only.

Reduces the frequency based on current. This frequency is subtracted from the commanded output frequency. Generally Slip and Droop would not both be used, but if both are enabled they simply subtract from each other. Typically used in load sharing schemes.

Values	Default:	0.0 Hz
	Min/Max:	0.0/10.0 Hz
	Display:	0.1 Hz

A442 [Accel Time 2] Related Parameter(s): P044

Time for the drive to ramp from 0.0 Hz to P044 [Maximum Freq] if Accel Time 2 is selected.
Accel Rate = [Maximum Freq] / [Accel Time]

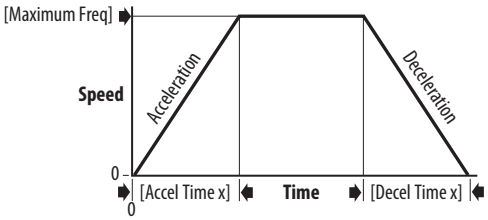

Values	Default:	10.00 s
	Min/Max:	0.00/600.00 s
	Display:	0.01 s

A443 [Decel Time 2] Related Parameter(s): P044

Time for the drive to ramp from P044 [Maximum Freq] to 0.0 Hz if Decel Time 2 is selected.
Decel Rate = [Maximum Freq] / [Decel Time]

Values	Default:	10.00 s
	Min/Max:	0.00/600.00 s
	Display:	0.01 s

Advanced Program Group *(continued)*

A444 [Accel Time 3]
A446 [Accel Time 4]

Sets the rate of acceleration for all speed increases when selected by digital inputs.

Values	Default:	10.00 s
	Min/Max:	0.00/600.00 s
	Display:	0.01 s

A445 [Decel Time 3]
A447 [Decel Time 4]

Sets the rate of deceleration for all speed decreases when selected by digital inputs.

Values	Default:	10.00 s
	Min/Max:	0.00/600.00 s
	Display:	0.01 s

A448 [Skip Frequency 1]
A450 [Skip Frequency 2]
A452 [Skip Frequency 3]
A454 [Skip Frequency 4]

PF 525 PowerFlex 525 only.

Related Parameter(s): A449, A451, A453, A455

Works in conjunction with A449, A451, A453 and A455 [Skip Freq Band x] creating a range of frequencies at which the drive does not operate continuously.

Values	Default:	0.0 Hz (Disabled)
	Min/Max:	0.0/500.0 Hz
	Display:	0.1 Hz

A449 [Skip Freq Band 1]
A451 [Skip Freq Band 2]
A453 [Skip Freq Band 3]
A455 [Skip Freq Band 4]

PF 525 PowerFlex 525 only.

Related Parameter(s): A448, A450, A452, A454

Determines the band around A448, A450, A452 and A454 [Skip Frequency x].

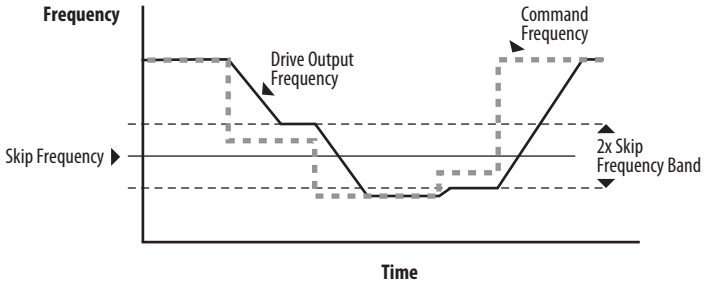

Values	Default:	0.0 Hz
	Min/Max:	0.0/30.0 Hz
	Display:	0.1 Hz

Advanced Program Group *(continued)*

A456 [PID 1 Trim Hi]

A468 [PID 2 Trim Hi]

PF 525 PowerFlex 525 only.

Scales the upper value of the trim frequency when trim is active.

Values	Default:	60.0 Hz
	Min/Max:	0.0/500.0 Hz
	Display:	0.1 Hz

A457 [PID 1 Trim Lo]

A469 [PID 2 Trim Lo]

PF 525 PowerFlex 525 only.

Scales the lower value of the trim frequency when trim is active.

Values	Default:	0.0 Hz
	Min/Max:	0.0/500.0 Hz
	Display:	0.1 Hz

A458 [PID 1 Trim Sel]

A470 [PID 2 Trim Sel]

PF 525 PowerFlex 525 only.

Stop drive before changing this parameter.

Sets the PID output as trim to the source reference.

Options	0	"Disabled" (Default)	PID Trim is disabled.
	1	"TrimOn Pot"	
	2	"TrimOn Keypd"	
	3	"TrimOn DSI"	
	4	"TrimOn NetOp"	
	5	"TrimOn 0-10V"	
	6	"TrimOn 4-20"	
	7	"TrimOn Prset"	
	8	"TrimOn AnMlt"(1)	
	9	"TrimOn MOP"	
	10	"TrimOn Pulse"	
	11	"TrimOn SIgic"(1)	
	12	"TrimOn Encdr"(1)	
	13	"TrimOn ENet"(1)	

(1) Setting is specific to PowerFlex 525 drives only.

Advanced Program Group *(continued)*

A459 [PID 1 Ref Sel]

A471 [PID 2 Ref Sel]

PF 525 PowerFlex 525 only.

Stop drive before changing this parameter.

Selects the source of the PID reference.

Options	0	"PID Setpoint" (Default)
	1	"Drive Pot"
	2	"Keypad Freq"
	3	"Serial/DSI"
	4	"Network Opt"
	5	"0-10V Input"
	6	"4-20mA Input"
	7	"Preset Freq"
	8	"AnIgIn Multi"(1)
	9	"MOP Freq"
	10	"Pulse Input"
	11	"Step Logic"(1)
	12	"Encoder"(1)
	13	"EtherNet/IP"(1)

(1) Setting is specific to PowerFlex 525 drives only.

A460 [PID 1 Fdback Sel]

A472 [PID 2 Fdback Sel]

PF 525 PowerFlex 525 only.

Selects the source of the PID feedback.

Options	0	"0-10V Input" (Default)	Note: PID does not function with bipolar input. Negative voltages are ignored and treated as zero.
	1	"4-20mA Input"	
	2	"Serial/DSI"	
	3	"Network Opt"	
	4	"Pulse Input"	
	5	"Encoder"(1)	
	6	"EtherNet/IP"(1)	

(1) Setting is specific to PowerFlex 525 drives only.

A461 [PID 1 Prop Gain]

Related Parameter(s): A459, A471

A473 [PID 2 Prop Gain]

PF 525 PowerFlex 525 only.

Sets the value for the PID proportional component when the PID mode is enabled.

Values	Default:	0.01
	Min/Max:	0.00/99.99
	Display:	0.01

Advanced Program Group *(continued)*

A462 [PID 1 Integ Time] Related Parameter(s): A459, A471

A474 [PID 2 Integ Time]
PF 525 PowerFlex 525 only.

Sets the value for the PID integral component when PID mode is enabled.

Values	Default:	2.0 s
	Min/Max:	0.0/999.9 s
	Display:	0.1 s

A463 [PID 1 Diff Rate] Related Parameter(s): A459, A471

A475 [PID 2 Diff Rate]
PF 525 PowerFlex 525 only.

Sets the value (in 1/second) for the PID differential component when PID mode is enabled.

Values	Default:	0.00
	Min/Max:	0.00/99.99
	Display:	0.01

A464 [PID 1 Setpoint] Related Parameter(s): A459, A471

A476 [PID 2 Setpoint]
PF 525 PowerFlex 525 only.

Provides an internal fixed value for process setpoint when PID mode is enabled.

Values	Default:	0.0%
	Min/Max:	0.0/100.0%
	Display:	0.1%

A465 [PID 1 Deadband]

A477 [PID 2 Deadband]
PF 525 PowerFlex 525 only.

Sets a range, in percent above and below the PID Reference, that the PID output will ignore.

Values	Default:	0.0%
	Min/Max:	0.0/10.0%
	Display:	0.1%

A466 [PID 1 Preload]

A478 [PID 2 Preload]
PF 525 PowerFlex 525 only.

Sets the value used to preload the integral component on start or enable.

Values	Default:	0.0 Hz
	Min/Max:	0.0/500.0 Hz
	Display:	0.1 Hz

A467 [PID 1 Invert Err]

A479 [PID 2 Invert Err]
PF 525 PowerFlex 525 only.

Changes the sign of the PID error.

Options	0	"Normal" (Default)
	1	"Inverted"

Advanced Program Group *(continued)*

A481 [Process Disp Lo] Related Parameter(s): b010, P043

Sets the value displayed in b010 [Process Display] when the drive is running at P043 [Minimum Freq].

Values	Default:	0.00
	Min/Max:	0.00/99.99
	Display:	0.01

A482 [Process Disp Hi] Related Parameter(s): b010, P044

Sets the value displayed in b010 [Process Display] when the drive is running at P044 [Maximum Freq].

Values	Default:	0.00
	Min/Max:	0.00/99.99
	Display:	0.01

A483 [Testpoint Sel]

Used by Rockwell Automation field service personnel.

Values	Default:	400
	Min/Max:	0/FFFF
	Display:	1

A484 [Current Limit 1] Related Parameter(s): P033

Maximum output current allowed before current limiting occurs.

Values	Default:	Drive Rated Amps x 1.1 (Normal Duty); Drive Rated Amps x 1.5 (Heavy Duty)
	Min/Max:	0.0/Drive Rated Amps x 1.5 (Normal Duty); Drive Rated Amps x 1.8 (Heavy Duty)
	Display:	0.1 A

A485 [Current Limit 2] Related Parameter(s): P033

PF 525 PowerFlex 525 only.

Maximum output current allowed before current limiting occurs.

Values	Default:	Drive Rated Amps x 1.1
	Min/Max:	0.0/Drive Rated Amps x 1.5 (Normal Duty); Drive Rated Amps x 1.8 (Heavy Duty)
	Display:	0.1 A

A486 [Shear Pin1 Level] Related Parameter(s): A487, A489

A488 [Shear Pin2 Level]

PF 525 PowerFlex 525 only.

Sets the value of current at which the shear pin fault occurs after the time set in A487, A489 [Shear Pin x Time]. Setting the value at 0.0 A disables this function.

Values	Default:	0.0 A (Disabled)
	Min/Max:	0.0/(Drive Rated Amps x 2)
	Display:	0.1 A

A487 [Shear Pin 1 Time] Related Parameter(s): A486, A488

A489 [Shear Pin 2 Time]

PF 525 PowerFlex 525 only.

Sets the continuous time the drive must be at or above the value set in A486, A488 [Shear Pinx Level] before a shear pin fault occurs.

Values	Default:	0.00 s
	Min/Max:	0.00/30.00 s
	Display:	0.01 s

Advanced Program Group *(continued)*

A490 [Load Loss Level] Related Parameter(s): A491

PF 525 PowerFlex 525 only.

Provides a software trip (Load Loss fault) when the current drops below this level for the time specified in A491 [Load Loss Time].

Values	Default:	0.0 A
	Min/Max:	0.0/Drive Rated Amps
	Display:	0.1 A

A491 [Load Loss Time] Related Parameter(s): A490

PF 525 PowerFlex 525 only.

Sets the required time for the current to be below A490 [Load Loss Level] before a Load Loss fault occurs.

Values	Default:	0 s
	Min/Max:	0/9999 s
	Display:	1 s

A492 [Stall Fault Time]

Sets the time that the drive remains in stall mode before a fault is issued.

Options	0	"60 Seconds" (Default)
	1	"120 Seconds"
	2	"240 Seconds"
	3	"360 Seconds"
	4	"480 Seconds"
	5	"Flt Disabled"

A493 [Motor OL Select] Related Parameter(s): P032, P033

Drive provides Class 10 overload protection. Settings 0...2 select the derating factor for the I^2t overload function.

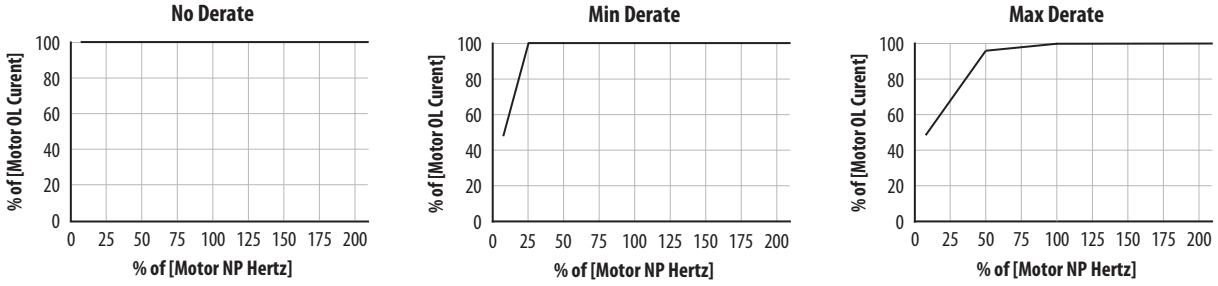

Options	0	"No Derate" (Default)
	1	"Min. Derate"
	2	"Max. Derate"

A494 [Motor OL Ret]

Selects whether the motor overload counter is saved on power-down or reset on power-up.

Options	0	"Reset" (Default)
	1	"Save"

Advanced Program Group *(continued)*

A495 [Drive OL Mode]

Determines how the drive handles overload conditions that would otherwise cause the drive to fault.

Options	0	"Disabled"
	1	"Reduce CLim"
	2	"Reduce PWM"
	3	"Both-PWM 1st" (Default)

A496 [IR Voltage Drop] Related Parameter(s): P040

Value of volts dropped across the resistance of the motor stator (autotune) for induction motor.

Values	Default:	Based on Drive Rating
	Min/Max:	0.0/600.0VAC
	Display:	0.1VAC

A497 [Flux Current Ref] Related Parameter(s): P040

This is the current necessary for full motor flux. The value should be set to the full speed no-load current of the motor.

Values	Default:	Based on Drive Rating
	Min/Max:	0.00/(Drive Rated Amps x 1.4)
	Display:	0.01 A

A498 [Motor Rr]

PF 525 PowerFlex 525 only.

Rotor resistance of induction motor. The value of this parameter will populate when a full rotate tune is performed.

Values	Default:	Based on Drive Rating
	Min/Max:	0.00/655.35 ohm
	Display:	0.01 ohm

A499 [Motor Lm]

PF 525 PowerFlex 525 only.

Mutual Inductance of induction motor. The value of this parameter will populate when a full rotate tune is performed.

Values	Default:	Based on Drive Rating
	Min/Max:	0.0/6553.5 mH
	Display:	0.1 mH

A500 [Motor Lx]

PF 525 PowerFlex 525 only.

Leakage Inductance of induction motor. The value of this parameter will populate when a full rotate tune is performed.

Values	Default:	Based on Drive Rating
	Min/Max:	0.0/6553.5 mH
	Display:	0.1 mH

A501 [PM IR Voltage]

PF 525 PowerFlex 525 only.

(With FRN 5.xxx and later.)

Voltage across the stator resistance of the PM motor at the rated motor current displayed in line-to-line rms value.

Values	Default:	11.50V
	Min/Max:	0.00/655.35V
	Display:	0.01V

Advanced Program Group *(continued)*

A502 [PM IXd Voltage]

PF 525 PowerFlex 525 only.

(With FRN 5.xxx and later.)
Voltage across the d-axis stator inductance of the PM motor at the rated motor current and the rated motor frequency displayed in line-to-line rms value.

Values	Default:	17.91V
	Min/Max:	0.00/655.35V
	Display:	0.01V

A503 [PM IXq Voltage]

PF 525 PowerFlex 525 only.

(With FRN 5.xxx and later.)
Voltage across the q-axis stator inductance of the PM motor at the rated motor current and the rated motor frequency displayed in line-to-line rms value.

Values	Default:	53.21V
	Min/Max:	0.00/655.35V
	Display:	0.01V

A504 [PM BEMF Voltage]

PF 525 PowerFlex 525 only.

(With FRN 5.xxx and later.)
Back electromotive force (EMF) voltage.

Values	Default:	1640.0 Drive Rated Volts
	Min/Max:	0.0/6000.0 Drive Rated Volts
	Display:	0.1V

A509 [Speed Reg Sel] Related Parameter(s): A521, A522, A523, A524, A525, A526

PF 525 PowerFlex 525 only.

Determines if PI gain of the "Vector" control mode speed regulator is set automatically or manually. Parameters A521...A526 are set automatically by this parameter.

Options	0	"Automatic" (Default)
	1	"Manual"

A510 [Freq 1]
A512 [Freq 2]
A514 [Freq 3]

PF 525 PowerFlex 525 only.

Sets the "Vector" control mode frequency.

Values	Default:	
	Freq 1:	8.33%
	Freq 2:	15.00%
	Freq 3:	20.00%
	Min/Max:	0.00/200.00%
	Display:	0.01%

Advanced Program Group *(continued)*

A511 [Freq 1 BW]
A513 [Freq 2 BW]
A515 [Freq 3 BW]

PF 525 PowerFlex 525 only.

Speed control loop bandwidth for "Vector" control mode.

Values	Default:	10 Hz
	Min/Max:	0/40 Hz
	Display:	1 Hz

A516 [PM Initial Sel]

PF 525 PowerFlex 525 only.

(With FRN 5.xxx and later.)
PM initial angle detect.

Options	0 "Align" (Default)	
	1 "HFI"	High Frequency Injection to detect initial angle.
	2 "Six Pulse"	

A517 [PM DC Inject Cur]

PF 525 PowerFlex 525 only.

(With FRN 5.xxx and later.)
Maximum DC current in amps applied to the motor in order to reset the rotor position of a PM motor.

Values	Default:	30%
	Min/Max:	0/300%
	Display:	1%

A518 [PM Align Time]

PF 525 PowerFlex 525 only.

(With FRN 5.xxx and later.)
Magnetic pole reorientation time.

Values	Default:	0.7 s
	Min/Max:	0.0/60.0 s
	Display:	0.1 s

A519 [PM HFI NS Cur]

PF 525 PowerFlex 525 only.

(With FRN 5.xxx and later.)
High Frequency Injection (HFI) North South Current to detect N/S Magnet.

Values	Default:	100%
	Min/Max:	0/300%
	Display:	1%

A520 [PM Bus Reg Kd]

PF 525 PowerFlex 525 only.

(With FRN 5.xxx and later.)
Derivative gain for bus regulator.

Values	Default:	2
	Min/Max:	0/500
	Display:	1

Advanced Program Group *(continued)*

A521 [Freq 1 Kp]
A523 [Freq 2 Kp]
A525 [Freq 3 Kp]

Related Parameter(s): A509, A510

PF 525 PowerFlex 525 only.

Sets P-gain of "Vector" control mode when in frequency region 1, 2 or 3 for faster speed response during dynamic-state where motor is still accelerating. If A509 [Speed Reg Sel] is set to 1 "Manual", these parameters can be changed.

Values	Default:	100.0%
	Min/Max:	0.0/500.0%
	Display:	0.1%

A522 [Freq 1 Ki]
A524 [Freq 2 Ki]
A526 [Freq 3 Ki]

Related Parameter(s): A509, A510

PF 525 PowerFlex 525 only.

Sets I-gain of "Vector" control mode when in frequency region 1, 2 or 3 for faster speed response during steady-state where motor is at its rated speed. If A509 [Speed Reg Sel] is set to 1 "Manual", these parameters can be changed.

Values	Default:	0.100 s
	Min/Max:	0.000/10.000 s
	Display:	0.001 s

A527 [PM FWKn 1 Kp]

PF 525 PowerFlex 525 only.

(With FRN 5.xxx and later.)
The gain to ensure good performance in field weakening region.

Values	Default:	250%
	Min/Max:	0/2000%
	Display:	1%

A528 [PM FWKn 2 Kp]

PF 525 PowerFlex 525 only.

(With FRN 5.xxx and later.)
The gain to ensure robustness under step load in weakening region.

Values	Default:	100%
	Min/Max:	100/8000%
	Display:	1%

Advanced Program Group *(continued)*

A529 [PM Control Cfg]

PF 525 PowerFlex 525 only.

(With FRN 5.xxx and later.)
Control configuration for Feed Forward Decouple (FFD), Maximum Torque Per Amp (MTPA), and Load Disturbance Observer (LDOB).

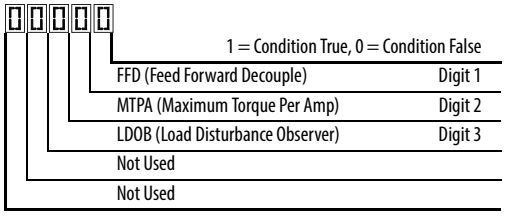

Values	Default:	00111
	Min/Max:	00000/00111
	Display:	00000

A530 [Boost Select]

Related Parameter(s): b004, P031, P032, P039

Sets the boost voltage (% of P031 [Motor NP Volts]) and redefines the V/Hz curve. Only used for V/Hz control modes.

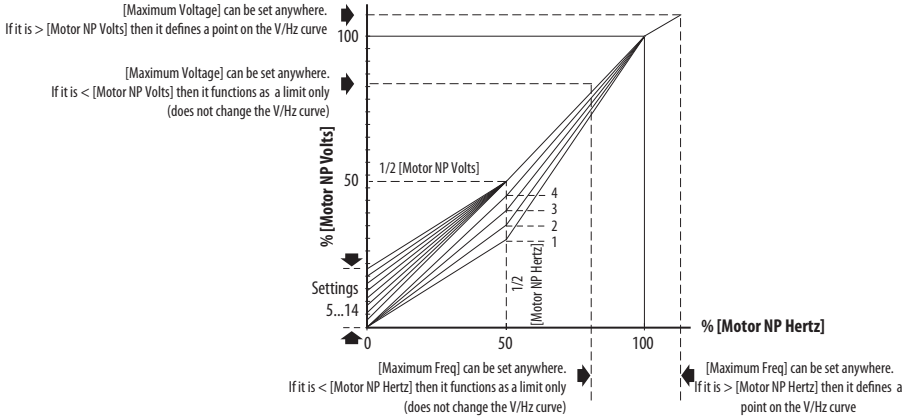

Options	0	"Custom V/Hz"	
	1	"30.0, VT"	Fan/Pump Curves (Variable Torque)
	2	"35.0, VT"	
	3	"40.0, VT"	
	4	"45.0, VT"	
	5	"0.0, no IR"	Boost Voltage (% of Base) (Constant Torque)
	6	"0.0" (Default for 400V and 600V drives, 5 HP and above)	
	7	"2.5, CT" (Default for 200V drives, 5 HP and above)	
	8	"5.0, CT" (Default for drives below 5 HP)	
	9	"7.5, CT"	
	10	"10.0, CT"	
	11	"12.5, CT"	
	12	"15.0, CT"	
	13	"17.5, CT"	
	14	"20.0, CT"	

Advanced Program Group *(continued)*

A531 [Start Boost] Related Parameter(s): P031, P032, P039, A530

Sets the boost voltage (% of P031 [Motor NP Volts]) and redefines the V/Hz curve when A530 [Boost Select] = 0 "Custom V/Hz" and P039 [Torque Perf Mode] = 0 "V/Hz".

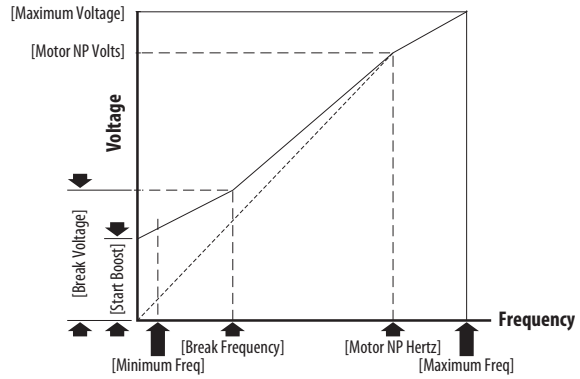

Values	Default:	2.5%
	Min/Max:	0.0/25.0%
	Display:	0.1%

A532 [Break Voltage] Related Parameter(s): P031, P032, P039, A530, A533

Sets the voltage (in percent of [Base Frequency]) at the A533 [Break Frequency] if A530 [Boost Select] is set to 0 "Custom V/Hz".

Values	Default:	25.0%
	Min/Max:	0.0/100.0%
	Display:	0.1%

A533 [Break Frequency] Related Parameter(s): P031, P032, P039, A530, A532

Sets the frequency where A532 [Break Voltage] is applied if A530 [Boost Select] is set to 0 "Custom V/Hz".

Values	Default:	15.0 Hz
	Min/Max:	0.0/500.0 Hz
	Display:	0.1 Hz

A534 [Maximum Voltage] Related Parameter(s): b004

Sets the highest voltage the drive outputs.

Values	Default:	Drive Rated Volts
	Min:	10V AC (on 230V AC Drives); 20V AC (on 460V AC Drives); 25V AC (on 600V AC Drives)
	Max:	255V AC (on 230V AC Drives); 510V AC (on 460V AC Drives); 637.5V AC (on 600V AC Drives)
	Display:	1V AC

Advanced Program Group *(continued)*

A535 [Motor Fdbk Type]

Related Parameter(s):P039, A537

Stop drive before changing this parameter.

Selects the encoder type.(1)

ATTENTION: The loss of analog input, encoder or other feedback may cause unintended speed or motion. Take appropriate precautions to guard against possible unintended speed or motion.

			Allowable Control Modes (See P039 [Torque Perf Mode])	Hardware Inputs
Options	0	"None" (Default)	V/Hz, SVC, Economize, Vector, PM Control	–
	1	"Pulse Train"	V/Hz, SVC, Economize, PM Control	[DigIn TermBlk 05] for PowerFlex 523 [DigIn TermBlk 07] for PowerFlex 525
	2	"Single Chan"(2)	V/Hz, SVC, Economize, PM Control	Optional incremental encoder card (catalog number 25-ENC-1)
	3	"Single Check"(2)	V/Hz, SVC, Economize, PM Control	
	4	"Quadrature"(2)	V/Hz, SVC, Economize, Vector, PM Control	
	5	"Quad Check"(2)	V/Hz, SVC, Economize, Vector, PM Control	

(1) Parameter is also available in PowerFlex 523 FRN 3.xxx and later.

(2) Setting is specific to PowerFlex 525 drives only.

A536 [Encoder PPR]

PF 525 PowerFlex 525 only.

Specifies the encoder Pulses Per Revolution (PPR) when an encoder is used.

To achieve speed range/accuracy for SVC and VVC closed loop control, a minimum of 1024 PPR encoder is recommended. The maximum encoder pulse is 250 kHz.

For more information, see Determine Encoder Pulse Per Revolution (PPR) Specification Based on Speed Resolution on page 217.

Values	Default:	1024 PPR
	Min/Max:	1/20000 PPR
	Display:	1 PPR

A537 [Pulse In Scale]

Related Parameter(s): t065, t067, A535

Sets the scale factor/gain for the Pulse Input when t065 [DigIn TermBlk 05] or t067 [DigIn TermBlk 07] is set to 52 "Pulse Train", or A535 [Motor Fdbk Type] is set to 1 "Pulse Train".

Input frequency (Hz) / Pulse in Scale = Output frequency (Hz)

Values	Default:	64
	Min/Max:	0/20000
	Display:	1

A538 [Ki Speed Loop]

Sets the I-gain used in the PI calculation of the speed loop when feedback is used. Applicable to V/Hz and SVC modes in closed loop control only.(1)

Values	Default:	2.0
	Min/Max:	0.0/400.0
	Display:	0.1

(1) Parameter is also available in PowerFlex 523 FRN 3.xxx and later.

A539 [Kp Speed Loop]

Sets the P-gain used in the PI calculation of the speed loop when feedback is used. Applicable to V/Hz and SVC modes in closed loop control only.(1)

Values	Default:	5.0
	Min/Max:	0.0/200.0
	Display:	0.1

(1) Parameter is also available in PowerFlex 523 FRN 3.xxx and later.

Advanced Program Group *(continued)*

A540 [Var PWM Disable] Related Parameter(s): A440

Stop drive before changing this parameter.

Enables/disables a feature that varies the carrier frequency for the PWM output waveform defined by A440 [PWM Frequency].

Options	0	"Enabled" (Default)
	1	"Disabled"

A541 [Auto Rstrt Tries] Related Parameter(s): A542

Sets the maximum number of times the drive attempts to reset a fault and restart. See Chapter 4 for more information on faults and fault codes.

Clear a Type 1 fault and restart the drive.
1. Set A541 [Auto Rstrt Tries] to a value other than "0".
2. Set A542 [Auto Rstrt Delay] to a value other than "0".

Clear an OverVoltage, UnderVoltage or Heatsink OvrTmp fault without restarting the drive.
1. Set A541 [Auto Rstrt Tries] to a value other than "0".
2. Set A542 [Auto Rstrt Delay] to "0".

ATTENTION: Equipment damage and/or personal injury may result if this parameter is used in an inappropriate application. Do not use this function without considering applicable local, national and international codes, standards, regulations or industry guidelines.

Values	Default:	0
	Min/Max:	0/9
	Display:	1

A542 [Auto Rstrt Delay] Related Parameter(s): A541

Sets the time between restart attempts if A541 [Auto Rstrt Tries] is not zero.

Values	Default:	1.0 s
	Min/Max:	0.0/120.0 s
	Display:	0.1 s

A543 [Start At PowerUp]

Stop drive before changing this parameter.

Enables/disables drive start on power up without a Run command being cycled. Requires a digital input configured for Run and a valid run signal.

ATTENTION: Equipment damage and/or personal injury may result if this parameter is used in an inappropriate application. Do not use this function without considering applicable local, national and international codes, standards, regulations or industry guidelines.

Options	0	"Disabled" (Default)
	1	"Enabled"

A544 [Reverse Disable] Related Parameter(s): b006

Stop drive before changing this parameter.

Enables/disables the function that allows the direction of motor rotation to be changed.

Options	0	"Rev Enabled" (Default)
	1	"Rev Disabled"

A545 [Flying Start En]

Sets the condition that allows the drive to reconnect to a spinning motor at actual RPM.

Options	0	"Disabled" (Default)
	1	"Enabled" Catch and ramp to commanded speed at every drive start.

Advanced Program Group *(continued)*

A546 [FlyStrt CurLimit]

Used to determine when the drive has matched the motor frequency if flying start is enabled.

Values	Default:	150%
	Min/Max:	30/200%
	Display:	1%

A547 [Compensation]

Enables/disables correction options that may improve problems with motor instability.

Options	0	"Disabled"	No compensation.
	1	"Electrical" (Default)	Some drive/motor combinations have inherent instabilities which are exhibited as non-sinusodial motor currents. This setting attempts to correct this condition
	2	"Mechanical"	Some motor/load combinations have mechanical resonances which can be excited by the drive current regulator. This setting slows down the current regulator response and attempts to correct this condition.
	3	"Both"	

A548 [Power Loss Mode]

Sets the reaction to a loss of input power.

Options	0	"Coast" (Default)	Drive faults and motor coasts to a stop.
	1	"Decel"	Drive decelerates and attempts to keep the DC bus voltage above the undervoltage level.

A549 [Half Bus Enable]

Enables/disables the power ride through function which allows the drive to maintain power to the motor at 50% drive input voltage during short-term power sag conditions.

ATTENTION: To guard against drive damage, a minimum line impedance must be provided to limit inrush current when the power line recovers. The input impedance should be equal or greater than the equivalent of a 5% transformer with a VA rating 6 times the drive's input VA rating if Half Bus is enabled.

Options	0	"Disabled" (Default)
	1	"Enabled"

A550 [Bus Reg Enable] Related Parameter(s): A437

Enables/disables the bus regulator.

Options	0	"Disabled"
	1	"Enabled" (Default)

A551 [Fault Clear]

Stop drive before changing this parameter.

Resets a fault and clears the fault queue.

Options	0	"Ready/Idle" (Default)	
	1	"Reset Fault"	Resets the active fault but does not clear any fault buffer.
	2	"Clear Buffer"	Resets the active fault and clears all fault buffers to "0".

A552 [Program Lock] Related Parameter(s): A553

Protects parameters against change by unauthorized personnel with a 4-digit password.

Values	Default:	0000
	Min/Max:	0000/9999
	Display:	1111

Advanced Program Group *(continued)*

A553 [Program Lock Mod] Related Parameter(s): A552

Determines the lock mode used in parameter A552 [Program Lock]. When set to 2 or 3, A552 [Program Lock] is added to the custom group to allow unlocking of parameters.

Options	0	"Full Lock" (Default)	All parameters are locked except [Program Lock].
	1	"Keypad Lock"	All parameters are locked except [Program Lock] from keypad access but can still be accessed over communications.
	2	"Custom Only"	All parameters are locked and hidden except custom group and [Program Lock].
	3	"KeyPd Custom"	All parameters are locked and hidden except custom group and [Program Lock] from keypad access but can still be accessed over communications.

A554 [Drv Ambient Sel]

Sets the maximum expected ambient of the drive when used above 50 °C. When ambient temperature is above 50 °C, the drive will apply necessary current derating.

Options	0	"Normal" (Default)	
	1	"55C"	
	2	"60C"	
	3	"65C +Fan Kit"	Fan kit required.
	4	"70C +Fan Kit"	

A555 [Reset Meters] Related Parameter(s): b019, b021, b022, b023, b024, b025, b026, d362, d363

Resets the values stored in the parameters that track fault times and energy usage.

Options	0	"Ready/Idle" (Default)	
	1	"Reset Meters"	Resets kWh, MWh, Accum kWh, Cost, and CO2 Sav parameter values.
	2	"Reset Time"	Resets min, hr, and x10 hr.

A556 [Text Scroll]

Sets the scrolling speed of the text in the LCD display.

Options	0	"Off"	No scroll.
	1	"Low Speed"	
	2	"Mid Speed" (Default)	
	3	"High Speed"	

A557 [Out Phas Loss En]

Enable/disable output phase loss detection.

ATTENTION: Equipment damage and/or personal injury may result if this parameter is used in an inappropriate application. Do not use this function without considering applicable local, national and international codes, standards, regulations or industry guidelines.

Options	0	"Disable" (Default)
	1	"Enable"

A558 [Positioning Mode]

Stop drive before changing this parameter.

PF 525 PowerFlex 525 only.

Defines the positioning transition mode used for the position steps.

Options	0	"Time Steps" (Default)	Steps based on time.
	1	"Preset Input"	Preset inputs directly commands a given step.
	2	"Step Logic"	Use Step Logic Commands. Always start from Step 0.
	3	"Preset StpL"	Use Preset Inputs to determine starting step then Step Logic commands.
	4	"StpLogic-Lst"	Use Step Logic commands from last Step Logic step at last drive stop.

Advanced Program Group *(continued)*

A559 [Counts Per Unit]

PF 525 PowerFlex 525 only.

Sets the number of encoder counts equal to one user-defined unit.

Values	Default:	4096
	Min/Max:	1/32000
	Display:	1

A560 [Enh Control Word]

Related Parameter(s): t062, t063, t065 - t068, A571

PF 525 PowerFlex 525 only.

Allows control of positioning and other functions through parameter control for use over comms. The functions replicate the digital input options and function in the same way.

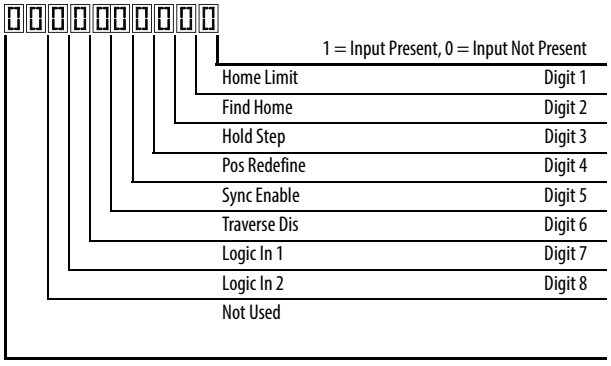

Values	Default:		0000 0000
	Min/Max:		0000 0000/1111 1111
	Display:		0000 0000
Digits	0	"Home Limit"	In Positioning mode, this indicates the drive is at the home position
	1	"Find Home"	When set, the next start command causes the drive to find home. Set this bit to 0 after completing the homing routine.
	2	"Hold Step"	In Positioning mode, this input over-rides other inputs and causes the drive to remain at its current step (running at zero speed once it reaches its position) until released.
	3	"Pos Redefine"	In Positioning mode, this input resets the home position to the current position of the machine. Set this bit to 0 after completing the homing routine.
	4	"Sync Enable"	Must be used in order to hold the existing frequency when Sync Time is set to enable speed synchronization. When this bit is reset to zero the drive accelerates to the new commanded frequency based on A571 [Sync Time] setting.
	5	"Traverse Dis"	When set the traverse function is disabled.
	6	"Logic In 1"	This provides an identical function as the "Logic In1" Digital Input option. This bit is logically ORed with a digital input t062, t063, t065-t068 [DigIn TermBlk xx] set to 24 "Logic In1". It can be used to move through the Step-Logic functions (speed or position) using comms control without requiring actual digital input transitions.
	7	"Logic In 2"	This provides and identical function as the "Logic In2" Digital Input option. This bit is logically ORed with a digital input t062, t063, t065-t068 [DigIn TermBlk xx] set to 25 "Logic In2". It can be used to move through the Step-Logic functions (speed or position) using comms control without requiring actual digital input transitions.

A561 [Home Save]

PF 525 PowerFlex 525 only.

Determines whether the current position is saved on power down.

Options	0	"Home Reset" (Default)	Position resets to zero on power up.
	1	"Home Saved"	

Advanced Program Group *(continued)*

A562 [Find Home Freq]

PF 525 PowerFlex 525 only.

Sets the maximum frequency the drive uses when "Find Home" is issued.

Values	Default:	10.0 Hz
	Min/Max:	0.1/500.0 Hz
	Display:	0.1 Hz

A563 [Find Home Dir]

Stop drive before changing this parameter.

PF 525 PowerFlex 525 only.

Sets the direction the drive commands when "Find Home" is issued.

Options	0	"Forward" (Default)
	1	"Reverse"

A564 [Encoder Pos Tol]

PF 525 PowerFlex 525 only.

Sets the "At Position" and the "At Home' tolerance around the encoder count. The value is added to and subtracted from the target encoder unit value to create the tolerance range.

Values	Default:	100
	Min/Max:	1/50000
	Display:	1

A565 [Pos Reg Filter]

PF 525 PowerFlex 525 only.

Sets the error signal filter in the position regulator.

Values	Default:	8
	Min/Max:	0/15
	Display:	1

A566 [Pos Reg Gain]

PF 525 PowerFlex 525 only.

Sets the gain adjustment for the position regulator.

Values	Default:	3.0
	Min/Max:	0.0/200.0
	Display:	0.1

Advanced Program Group *(continued)*

A567 [Max Traverse]

Sets the amplitude of triangle wave speed modulation.

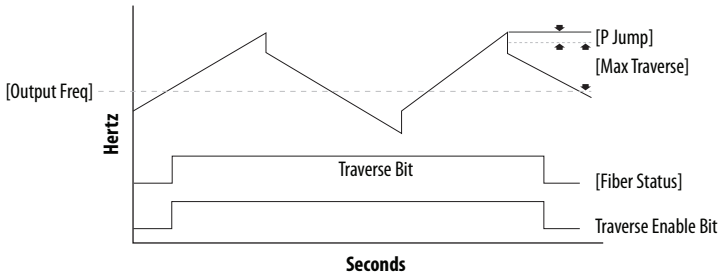

Values	Default:	0.00 Hz
	Min/Max:	0.00/300.00 Hz
	Display:	0.01 Hz

A568 [Traverse Inc] Related Parameter(s): A567

Sets the time required for the Traverse function to accelerate from the minimum to the maximum traverse frequency. See the diagram at A567 [Max Traverse].

Values	Default:	0.00 s
	Min/Max:	0.00/300.00 s
	Display:	0.01 s

A569 [Traverse Dec] Related Parameter(s): A567

Sets the time required for the Traverse function to decelerate from the maximum to the minimum traverse frequency. See the diagram at A567 [Max Traverse].

Values	Default:	0.00 s
	Min/Max:	0.00/300.00 s
	Display:	0.01 s

A570 [P Jump] Related Parameter(s): A567

Sets the frequency amplitude that is added to or subtracted from the commanded frequency. See the diagram at A567 [Max Traverse].

Values	Default:	0.00 Hz
	Min/Max:	0.00/300.00 Hz
	Display:	0.01 Hz

A571 [Sync Time] Related Parameter(s): t062, t063, t065 - t068, A560

Enables the function that holds the drive at the current frequency even if the commanded frequency changes. Used with t062, t063, t065-t068 [DigIn TermBlk xx] 32 “Sync Enable”.

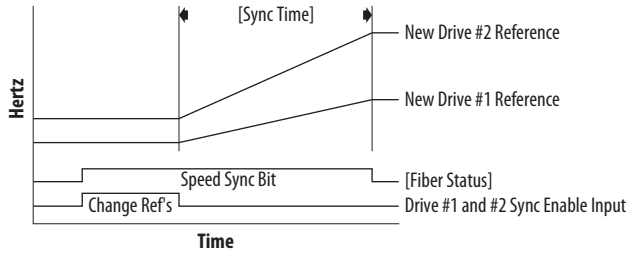

Values	Default:	0.0 s
	Min/Max:	0.0/3200.0 s
	Display:	0.1 s

Advanced Program Group *(continued)*

A572 [Speed Ratio]

Stop drive before changing this parameter.

Scales the drive speed command.

Values	Default:	1.00
	Min/Max:	0.01/99.99
	Display:	0.01

A573 [Mtr Options Cfg]

(With PowerFlex 525 FRN 2.xxx and later.)
(With PowerFlex 523 FRN 3.xxx and later.)

Sets the configuration of the motor option.

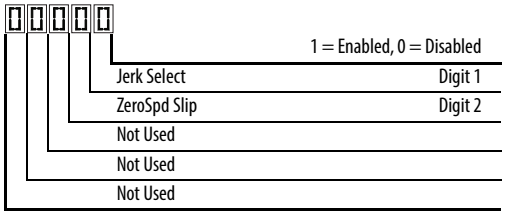

Options	Description
Jerk Select	Limits the rate of change to the velocity reference for improved current limiting. Set to 0 "Disabled" for positioning type applications with fast Accel or Decel times.
ZeroSpd Slip	Sets slip compensation to 0.0 Hz when the following conditions are met: • Commanded speed = 0.00 Hz • Status of drive = "At speed" • ZeroSpd Slip = 1 "Enabled"

Values	Default:	11
	Min/Max:	00/11
	Display:	00

A574 [RdyBit Mode Cfg]

Related Parameter(s): d392

Stop drive before changing this parameter.

(With PowerFlex 525 FRN 3.xxx and later.)
(With PowerFlex 523 FRN 3.xxx and later.)

Determines which Stop conditions causes the drive's Ready bit (Network Logic Status bit 1) to go low (0). A reset or power cycle is required after selection is made.

	Ready Bit Status(2)	
Stop Conditions	**Standard**	**Enhanced**
Drive fault	0	0
Stop digital input terminal 01/11 open	1	0
Holding down the drive's keypad or the Remote DSI HIM Stop button	1	0
Stop commanded through Comms (Stop bit = 1)	1	0
Software (SW) Enable digital input terminal open	1	0
Safe-Torque-Off (STO) condition with value of t105 [Safety Open En] set to 1 "FaultDisabled"(1)	0	0

(1) Condition is specific to PowerFlex 525 drives only.
(2) 1 = Active, 0 = Inactive

Options	0	"Standard" (Default)
	1	"Enhanced"

A575 [Flux Braking En]

Related Parameter(s): A550

(With PowerFlex 525 FRN 5.xxx and later.)
(With PowerFlex 523 FRN 3.xxx and later.)

Enables/disables flux braking.

Options	0	"Disable" (Default)
	1	"Enable"

Advanced Program Group *(continued)*

A576 [Phase Loss Level]

(With PowerFlex 525 FRN 5.xxx and later.)
(With PowerFlex 523 FRN 3.xxx and later.)
Output Phase Loss Level. Sets the threshold level which is used to determine an output phase loss condition.
Each motor phase must exceed this value. Decreasing this parameter's value lowers sensitivity.

Values	Default:	25.0% for Induction motor; 4.0% for PM motor
	Min/Max:	0.0/100.0%
	Display:	0.1%

A580 [Current Loop BW]

PF 525 PowerFlex 525 only.

(With FRN 5.xxx and later.)
Current loop bandwidth (0 = Automatically calculate the control gain of current loop).

Values	Default:	0 Hz
	Min/Max:	0/65535 Hz
	Display:	1 Hz

A581 [PM Stable 1 Freq]

PF 525 PowerFlex 525 only.

(With FRN 5.xxx and later.)
The start frequency for stabilization loop (P032 [Motor NP Hertz] x A581 [PM Stable 1 Freq]).

Values	Default:	0%
	Min/Max:	0/100%
	Display:	1%

A582 [PM Stable 2 Freq]

PF 525 PowerFlex 525 only.

(With FRN 5.xxx and later.)
Stabilization function will return to normal output after this frequency (P032 [Motor NP Hertz] x A582 [PM Stable 2 Freq]).

Values	Default:	45%
	Min/Max:	0/100%
	Display:	1%

A583 [PM Stable 1 Kp]

PF 525 PowerFlex 525 only.

(With FRN 5.xxx and later.)
Percentage of the gain for stabilization loop. The gain is set in A584 [PM Stable 2 Kp].

Values	Default:	40%
	Min/Max:	0/100%
	Display:	1%

A584 [PM Stable 2 Kp]

PF 525 PowerFlex 525 only.

(With FRN 5.xxx and later.)
The gain for stabilization loop.

Values	Default:	250%
	Min/Max:	0/2000%
	Display:	1%

Advanced Program Group *(continued)*

A585 [PM Stable Brk Pt]

PF 525 PowerFlex 525 only.

(With FRN 5.xxx and later.)
Percentage of rated power P037 [Motor NP Power] for the gain of (A584 [PM Stable 2 Kp] x A583 [PM Stable 1 Kp]).

Values	Default:	40%
	Min/Max:	0/100%
	Display:	1%

A586 [PM Stepload Kp]

PF 525 PowerFlex 525 only.

(With FRN 5.xxx and later.)
The gain to ensure robustness under step load in low speed region.

Values	Default:	0%
	Min/Max:	0/1000%
	Display:	1%

A587 [PM 1 Efficiency]

PF 525 PowerFlex 525 only.

(With FRN 5.xxx and later.)
Reduce full load current.

Values	Default:	120%
	Min/Max:	0/2000%
	Display:	1%

A588 [PM 2 Efficiency]

PF 525 PowerFlex 525 only.

(With FRN 5.xxx and later.)
Reduce no load current.

Values	Default:	500%
	Min/Max:	0/2000%
	Display:	1%

A589 [PM Algor Sel] Related Parameter(s): A550

Stop drive before changing this parameter.

PF 525 PowerFlex 525 only.

(With FRN 5.xxx and later.)
Selects the algorithm to use with your motor. Check with the manufacturer of your motor to determine whether it is an iPM or sPM motor.

Options	0	"Algorithm 1" (Default)	Suggested for most motors.
	1	"Algorithm 2"	Enable an embedded algorithm to reduce oscillation in output waveform (use with sPM motor only, do not enable for iPM motor).

Network Parameter Group

This group contains parameters for the network option card that is installed.

Refer to the network option card's user manual for more information on the available parameters.

Modified Parameter Group

This group contains parameters that have their values changed from the factory default.

When a parameter has its default value changed, it is automatically added to this group. When a parameter has its value changed back to the factory default, it is automatically removed from this group.

Fault and Diagnostic Group

F604 [Fault 4 Code]
F605 [Fault 5 Code]
F606 [Fault 6 Code]
F607 [Fault 7 Code]
F608 [Fault 8 Code]
F609 [Fault 9 Code]
F610 [Fault10 Code]

Related Parameter(s): b007-b009

A code that represents a drive fault. The codes appear in these parameters in the order they occur (b007 [Fault 1 Code] = the most recent fault). Repetitive faults are only recorded once.

Values	Default:	Read Only
	Min/Max:	F0/F127
	Display:	F0

F611 [Fault 1 Time-hr] **F612 [Fault 2 Time-hr]**
F613 [Fault 3 Time-hr] **F614 [Fault 4 Time-hr]**
F615 [Fault 5 Time-hr]
F616 [Fault 6 Time-hr] **F617 [Fault 7 Time-hr]**
F618 [Fault 8 Time-hr] **F619 [Fault 9 Time-hr]**
F620 [Fault10 Time-hr]

PF 525 PowerFlex 525 only.

Related Parameter(s): d362

Displays the value of d362 [Elapsed Time-hr] when the fault occurs.

Values	Default:	Read Only
	Min/Max:	0/32767 hr
	Display:	1 hr

F621 [Fault 1 Time-min] **F622 [Fault 2 Time-min]**
F623 [Fault 3 Time-min] **F624 [Fault 4 Time-min]**
F625 [Fault 5 Time-min]
F626 [Fault 6 Time-min] **F627 [Fault 7 Time-min]**
F628 [Fault 8 Time-min] **F629 [Fault 9 Time-min]**
F630 [Fault10 Time-min]

PF 525 PowerFlex 525 only.

Related Parameter(s): d363

Displays the value of d363 [Elapsed Time-min] when the fault occurs.

Values	Default:	Read Only
	Min/Max:	0.0/320.0 min
	Display:	0.1 min

Fault and Diagnostic Group *(continued)*

F631 [Fault 1 Freq] **F632 [Fault 2 Freq]**
F633 [Fault 3 Freq] **F634 [Fault 4 Freq]**
F635 [Fault 5 Freq]

F636 [Fault 6 Freq] **F637 [Fault 7 Freq]**
F638 [Fault 8 Freq] **F639 [Fault 9 Freq]**
F640 [Fault10 Freq]

PF 525 PowerFlex 525 only.

Related Parameter(s): b001

Displays and stores the value of b001 [Output Freq] with the most recent 10 faults occurred.
[Fault 1 Freq] stores the most recent fault, [Fault 2 Freq] stores the second most recent fault and [Fault 3 Freq] stores the third most recent fault.

Values	Default:	Read Only
	Min/Max:	0.00/500.00 Hz
	Display:	0.01 Hz

F641 [Fault 1 Current] **F642 [Fault 2 Current]**
F643 [Fault 3 Current] **F644 [Fault 4 Current]**
F645 [Fault 5 Current]

F646 [Fault 6 Current] **F647 [Fault 7 Current]**
F648 [Fault 8 Current] **F649 [Fault 9 Current]**
F650 [Fault10 Current]

PF 525 PowerFlex 525 only.

Related Parameter(s): b003

Displays and stores the value of b003 [Output Current] with the most recent 10 faults occurred.
[Fault 1 Current] stores the most recent fault, [Fault 2 Current] stores the second most recent fault and [Fault 3 Current] stores the third most recent fault.

Values	Default:	Read Only
	Min/Max:	0.00/(Drive Rated Amps x 2)
	Display:	0.01 A

F651 [Fault 1 BusVolts] **F652 [Fault 2 BusVolts]**
F653 [Fault 3 BusVolts] **F654 [Fault 4 BusVolts]**
F655 [Fault 5 BusVolts]

F656 [Fault 6 BusVolts] **F657 [Fault 7 BusVolts]**
F658 [Fault 8 BusVolts] **F659 [Fault 9 BusVolts]**
F660 [Fault10 BusVolts]

PF 525 PowerFlex 525 only.

Related Parameter(s): b005

Displays and stores the value of b005 [DC Bus Voltage] with the most recent 10 faults occurred.
[Fault 1 BusVolts] stores the most recent fault, [Fault2 BusVolts] stores the second most recent fault and [Fault 3 BusVolts] stores the third most recent fault.

Values	Default:	Read Only
	Min/Max:	0/1200VDC
	Display:	1VDC

Fault and Diagnostic Group *(continued)*

F661 [Status @ Fault 1] **F662 [Status @ Fault 2]**
F663 [Status @ Fault 3] **F664 [Status @ Fault 4]**
F665 [Status @ Fault 5]

Related Parameter(s): b006

F666 [Status @ Fault 6] **F667 [Status @ Fault 7]**
F668 [Status @ Fault 8] **F669 [Status @ Fault 9]**
F670 [Status @ Fault10]

PF 525 PowerFlex 525 only.

Displays the value of b006 [Drive Status] with the most recent 10 faults occurred.
[Status@ Fault 1] stores the most recent fault, [Status@ Fault 2] stores the second most recent fault and [Status@ Fault 3] stores the third most recent fault.

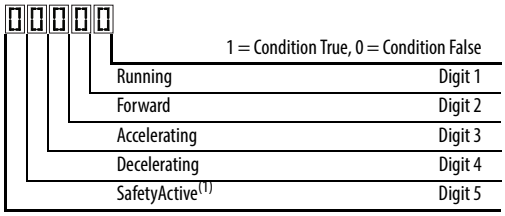

(1) Setting is specific to PowerFlex 525 drives only.

Values	Default:	Read Only
	Min/Max:	0/0x1F
	Display:	1

F681 [Comm Sts - DSI]

Displays the status of the RS485 serial (DSI) port to the drive.

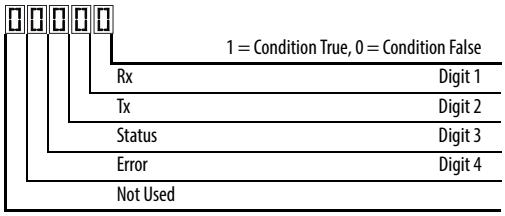

Digit 3 (Connection Status)	
0	"Not Active"
1	"Modbus slave network (external Modbus master)"
2	"Modbus multi-drive w/ internal com option master"
3	"Modbus multi-drive w/ embedded com master"(1)
4	"DSI peripheral connected"
5...8	"Reserved"
9	"RS-485 network faulted"

(1) Setting is specific to PowerFlex 525 drives only.

Values	Default:	Read Only
	Min/Max:	0000/1911
	Display:	0000

F682 [Comm Sts - Opt]

Displays the status of the internal communication to the drive.

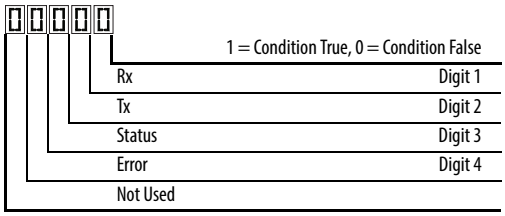

Digit 3 = "Internal Com option"	
0	"Not Active (no connection)"
1	"Internal option connected/active"
2...8	"Reserved"
9	"Internal com option faulted"

Values	Default:	Read Only
	Min/Max:	0000/1911
	Display:	0000

Fault and Diagnostic Group *(continued)*

F683 [Com Sts-Emb Enet]

PF 525 PowerFlex 525 only.

Displays the status of the embedded EtherNet/IP interface to the drive.

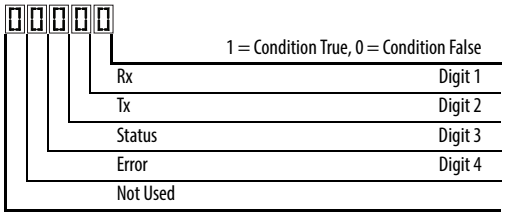

Digit 3 = "Embedded EtherNet/IP"	
0	"Not Active (no connection)"
1	"Embedded EtherNet/IP active"
2-8	"Reserved"
9	"Embedded EtherNet/IP faulted"

Values	Default:	Read Only
	Min/Max:	0000/1911
	Display:	0000

F684 [EN Addr Src]

PF 525 PowerFlex 525 only.

Displays the actual source of the Ethernet configuration (IP address, subnet mask, and gateway address).

Options	1	"Parameters"	Read Only
	2	"BOOTP"	

F685 [EN Rate Act]

PF 525 PowerFlex 525 only.

Displays the network data rate currently used by the embedded EtherNet/IP interface.

Options	0	"No Link"	Read Only
	1	"10Mbps Full"	
	2	"10Mbps Half"	
	3	"100Mbps Full"	
	4	"100Mbps Half"	
	5	"Dup IP Addr"	
	6	"Disabled"	

F686 [DSI I/O Act]

Displays the Drives that are active in Multi-Drive mode.

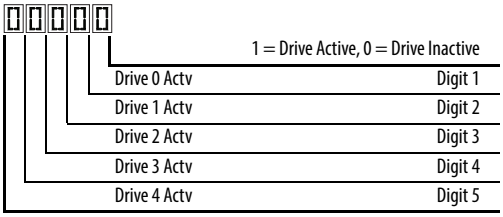

Value	Default:	Read Only
	Min/Max:	00000/11111
	Display:	00000

Fault and Diagnostic Group *(continued)*

F687 [HW Addr 1]
F688 [HW Addr 2]
F689 [HW Addr 3]
F690 [HW Addr 4]
F691 [HW Addr 5]
F692 [HW Addr 6]

PF 525 PowerFlex 525 only.

Shows the MAC address for the embedded EtherNet/IP interface.

Values	Default:	Read Only
	Min/Max:	0/255
	Display:	1

F693 [EN IP Addr Act 1]
F694 [EN IP Addr Act 2]
F695 [EN IP Addr Act 3]
F696 [EN IP Addr Act 4]

PF 525 PowerFlex 525 only.

Shows the actual IP address used by the embedded EtherNet/IP interface at the time. This indicates 0 if no address is set.

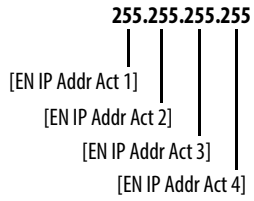

Values	Default:	Read Only
	Min/Max:	0/255
	Display:	1

F697 [EN Subnet Act 1]
F698 [EN Subnet Act 2]
F699 [EN Subnet Act 3]
F700 [EN Subnet Act 4]

PF 525 PowerFlex 525 only.

Shows the actual subnet mask used by the embedded EtherNet/IP interface at the time. This will indicate 0 if no address is set.

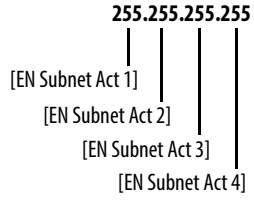

Values	Default:	Read Only
	Min/Max:	0/255
	Display:	1

Fault and Diagnostic Group *(continued)*

F701 [EN Gateway Act 1]
F702 [EN Gateway Act 2]
F703 [EN Gateway Act 3]
F704 [EN Gateway Act 4]

PF 525 PowerFlex 525 only.

Shows the actual gateway address used by the embedded EtherNet/IP interface at the time. This will indicate 0 if no address is set.

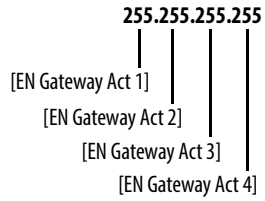

Values	Default:	Read Only
	Min/Max:	0/255
	Display:	1

F705 [Drv 0 Logic Cmd]
F709 [Drv 1 Logic Cmd]
F713 [Drv 2 Logic Cmd]
F717 [Drv 3 Logic Cmd]
F721 [Drv 4 Logic Cmd]

In multi-drive mode, this is the logic command being transmitted to drive 0/1/2/3/4/.
In single-drive mode, this is the logic command being used by the drive (whether HS-DSI, EtherNet/IP, or DSI) at the time. If comms control is NOT being used, and the drive is in single-drive mode, then this parameter will show 0.

Values	Default:	Read Only
	Min/Max:	0/FFFF
	Display:	1

F706 [Drv 0 Reference]
F710 [Drv 1 Reference]
F714 [Drv 2 Reference]
F718 [Drv 3 Reference]
F722 [Drv 4 Reference]

In multi-drive mode, this is the reference being transmitted to drive 0/1/2/3/4.
In single-drive mode, this is the reference being used by the drive (whether HS-DSI, EtherNet/IP, or DSI) at the time. If comms control is NOT being used, and the drive is in single-drive mode, then this parameter will show 0.

Values	Default:	Read Only
	Min/Max:	0.00/500.00 Hz
	Display:	0.01 Hz

F707 [Drv 0 Logic Sts]
F711 [Drv 1 Logic Sts]
F715 [Drv 2 Logic Sts]
F719 [Drv 3 Logic Sts]
F723 [Drv 4 Logic Sts]

In multi-drive mode, this is the logic status being received from drive 0/1/2/3/4.
In single-drive mode, this is the logic status of the drive at the time.

Values	Default:	Read Only
	Min/Max:	0/FFFF
	Display:	1

Fault and Diagnostic Group *(continued)*

F708 [Drv 0 Feedback]
F712 [Drv 1 Feedback]
F716 [Drv 2 Feedback]
F720 [Drv 3 Feedback]
F724 [Drv 4 Feedback]

In multi-drive mode, this is the feedback being received from drive 0/1/2/3/4.
In single-drive mode, this is the feedback of the drive at the time.

Values	Default:	Read Only
	Min/Max:	0.00/500.00 Hz
	Display:	0.01 Hz

F725 [EN Rx Overruns]

PF 525 PowerFlex 525 only.

A count of the number of receive overrun errors reported by the embedded EtherNet/IP interface.

Values	Default:	Read Only
	Min/Max:	0/65535
	Display:	1

F726 [EN Rx Packets]

PF 525 PowerFlex 525 only.

A count of the number of receive packets reported by the embedded EtherNet/IP interface.

Values	Default:	Read Only
	Min/Max:	0/65535
	Display:	1

F727 [EN Rx Errors]

PF 525 PowerFlex 525 only.

A count of the number of receive errors reported by the embedded EtherNet/IP interface.

Values	Default:	Read Only
	Min/Max:	0/65535
	Display:	1

F728 [EN Tx Packets]

PF 525 PowerFlex 525 only.

A count of the number of transmitted packets reported by the embedded EtherNet/IP interface.

Values	Default:	Read Only
	Min/Max:	0/65535
	Display:	1

F729 [EN Tx Errors]

PF 525 PowerFlex 525 only.

A count of the number of transmit errors reported by the embedded EtherNet/IP interface.

Values	Default:	Read Only
	Min/Max:	0/65535
	Display:	1

Fault and Diagnostic Group *(continued)*

F730 [EN Missed IO Pkt]

PF 525 PowerFlex 525 only.

The number of I/O packets missed.

Values	Default:	Read Only
	Min/Max:	0/65535
	Display:	1

F731 [DSI Errors]

The number of total DSI errors.

Values	Default:	Read Only
	Min/Max:	0/65535
	Display:	1

AppView Parameter Groups

AppView parameter groups provide a simple starting point for using the PowerFlex 520-series drives by grouping certain commonly used parameters based on different types of applications. Use these parameter groups to quickly and easily setup the PowerFlex 520-series drive for your application.

AppView parameter groups are available for the following applications:

- Conveyor
- Mixer
- Compressor
- Centrifugal Pump
- Blower/Fan
- Extruder
- Positioning (PowerFlex 525 only)
- Textile/Fiber

You cannot add or remove parameters to or from the AppView parameter groups. If you require quick access to additional parameters to what is already included in the different AppView parameter groups, use the CustomView parameter group instead.

The parameters in the AppView parameter groups can be quickly added to the CustomView parameter group by doing the following:

Step		Key(s)	Example Displays
1.	Press the Up Arrow or Down Arrow to scroll to an AppView group (G1...G8).	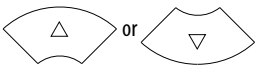	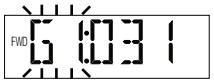
2.	Press Enter or Sel to enter a group. The right most digit of the last viewed parameter in that group will flash.	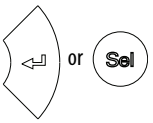	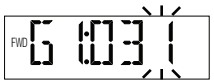
3.	Press the Up Arrow or Down Arrow to scroll to the command G1->GC.	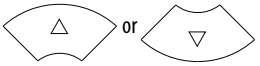	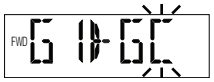
4.	Press Enter or Sel to add all the parameters in this AppView group to the CustomView group. The LCD display will show a confirmation.	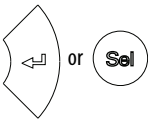	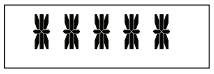

CustomView Parameter Group

CustomView allows you to quickly access only the parameters needed for your application by storing them in a custom parameter group. Add your frequently used parameters to this group, then hide all other parameters with A552 [Program Lock] to simplify your drive configuration process.

Up to 100 parameters can be stored in the CustomView parameter group. You can copy one entire AppView parameter group to the CustomView parameter group as shown on page 150 or add individual parameters as show below.

Step		Key(s)	Example Displays
1.	Press the Up Arrow or Down Arrow to scroll to the CustomView group (GC).	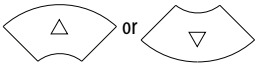	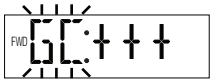
2.	Press Enter to view the parameters that can be added to the CustomView group.		
3.	Press the Up Arrow or Down Arrow to scroll through the list of parameters.	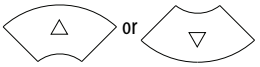	
4.	Press Enter to add the parameter to the CustomView group. The LCD display will show a confirmation.	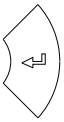	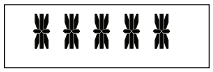

To delete parameters from the CustomView parameter group:

Step		Key(s)	Example Displays
1.	Press the Up Arrow or Down Arrow to scroll to the CustomView group (GC).	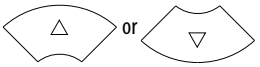	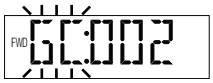
2.	Press Enter to view the parameters that are in the CustomView group.	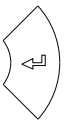	
3.	Press the Up Arrow or Down Arrow to scroll to the command GC---.	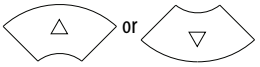	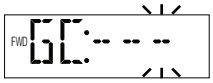
4.	Press Enter or Sel to view the parameters that are stored in the CustomView group.	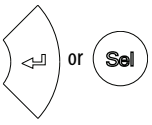	
5.	Press the Up Arrow or Down Arrow to scroll through the list of parameters.	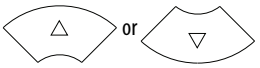	
6.	Press Enter to delete the parameter from the CustomView group. The LCD display will show a confirmation.		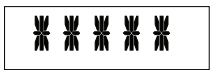

TIP The Connected Components Workbench software can be used to speed up this process with drag and drop functionality.

Parameter Cross Reference by Name

Parameter Name	No.
10V Bipolar Enbl[1]	093
2-Wire Mode	064
Accel Time 1	041
Accel Time 2	442
Accel Time 3	444
Accel Time 4	446
Accum CO2 Sav	026
Accum Cost Sav	025
Accum kWh Sav	024
Analog In 0-10V	360
Analog In 4-20mA	361
Analog In Filter	099
Analog Out High[2]	089
Analog Out Sel[2]	088
Anlg In 0-10V Hi	092
Anlg In 0-10V Lo	091
Anlg In mA Loss	097
Anlg In V Loss	094
Anlg In4-20mA Hi	096
Anlg In4-20mA Lo	095
Anlg Loss Delay	098
Anlg Out Setpt[2]	090
Auto Rstrt Delay	542
Auto Rstrt Tries	541
Autotune	040
Average kWh Cost	052
Average Power	020
Boost Select	530
Break Frequency	533
Break Voltage	532
Bus Reg Enable	550
Cmd Stat Select[1]	122
Com Sts-Emb Enet[1]	683
Comm Loss Action	125
Comm Loss Time	126
Comm Sts - DSI	681
Comm Sts - Opt	682
Comm Write Mode	121
Commanded Freq	002
Compensation	547
Contrl In Status	013
Control Source	012
Control SW Ver	029
Control Temp	028
Counter Status	364
Counts Per Unit[1]	559
Current Limit 1	484
Current Limit 2[1]	485
Current Loop BW[1][3]	580
DB Resistor Sel	437
DB Threshold	438
DC Brake Level	435
DC Brake Time	434
DC Brk Time@Strt	436
DC Bus Ripple	380
DC Bus Voltage	005
Decel Time 1	042
Decel Time 2	443
Decel Time 3	445
Decel Time 4	447
Dig In Status	014
Dig Out Status[2][3]	394
DigIn TermBlk 02	062
DigIn TermBlk 03	063
DigIn TermBlk 05	065
DigIn TermBlk 06	066
DigIn TermBlk 07[1]	067
DigIn TermBlk 08[1]	068
Drive OL Mode	495
Drive Status	006
Drive Status 2[2][3]	393
Drive Temp	027
Drive Type	367
Droop Hertz@ FLA[1]	441
Drv 0 Feedback	708
Drv 0 Logic Cmd	705
Drv 0 Logic Sts	707
Drv 0 Reference	706
Drv 1 Addr	171
Drv 1 Feedback	712
Drv 1 Logic Cmd	709
Drv 1 Logic Sts	711
Drv 1 Reference	710
Drv 2 Addr	172
Drv 2 Feedback	716
Drv 2 Logic Cmd	713
Drv 2 Logic Sts	715
Drv 2 Reference	714
Drv 3 Addr	173
Drv 3 Feedback	720
Drv 3 Logic Cmd	717
Drv 3 Logic Sts	719
Drv 3 Reference	718
Drv 4 Addr	174
Drv 4 Feedback	724
Drv 4 Logic Cmd	721
Drv 4 Logic Sts	723
Drv 4 Reference	722
Drv Ambient Sel	554
DSI Errors	731
DSI I/O Act	686
DSI I/O Cfg	175
Elapsed kWh	021
Elapsed MWh	022
Elapsed Run Time	019
Elapsed Time-hr	362
Elapsed Time-min	363
EM Brk Off Delay	086
EM Brk On Delay	087
EN Addr Sel[1]	128
EN Addr Src[1]	684
EN Comm Flt Actn[1]	143
EN Data In 1[1]	153
EN Data In 2[1]	154
EN Data In 3[1]	155
EN Data In 4[1]	156
EN Data Out 1[1]	157
EN Data Out 2[1]	158
EN Data Out 3[1]	159
EN Data Out 4[1]	160
EN Flt Cfg DL 1[1]	147
EN Flt Cfg DL 2[1]	148
EN Flt Cfg DL 3[1]	149
EN Flt Cfg DL 4[1]	150
EN Flt Cfg Logic[1]	145
EN Flt Cfg Ref[1]	146
EN Gateway Act 1[1]	701
EN Gateway Act 2[1]	702
EN Gateway Act 3[1]	703
EN Gateway Act 4[1]	704
EN Gateway Cfg 1[1]	137
EN Gateway Cfg 2[1]	138
EN Gateway Cfg 3[1]	139
EN Gateway Cfg 4[1]	140
EN Idle Flt Actn[1]	144
EN IP Addr Act 1[1]	693
EN IP Addr Act 2[1]	694
EN IP Addr Act 3[1]	695
EN IP Addr Act 4[1]	696
EN IP Addr Cfg 1[1]	129
EN IP Addr Cfg 2[1]	130
EN IP Addr Cfg 3[1]	131
EN IP Addr Cfg 4[1]	132
EN Missed IO Pkt[1]	730

Parameter Name	No.
EN Rate Act[1]	685
EN Rate Cfg[1]	141
EN Rx Errors[1]	727
EN Rx Overruns[1]	725
EN Rx Packets[1]	726
EN Subnet Act 1[1]	697
EN Subnet Act 2[1]	698
EN Subnet Act 3[1]	699
EN Subnet Act 4[1]	700
EN Subnet Cfg 1[1]	133
EN Subnet Cfg 2[1]	134
EN Subnet Cfg 3[1]	135
EN Subnet Cfg 4[1]	136
EN Tx Errors[1]	729
EN Tx Packets[1]	728
Encoder Pos Tol[1]	564
Encoder PPR[1]	536
Encoder Speed[2]	378
Energy Saved	023
Enh Control Word[1]	560
Fault 1 BusVolts	651
Fault 1 Code	007
Fault 1 Current	641
Fault 1 Freq	631
Fault 1 Time-hr	611
Fault 1 Time-min	621
Fault 2 BusVolts	652
Fault 2 Code	008
Fault 2 Current	642
Fault 2 Freq	632
Fault 2 Time-hr	612
Fault 2 Time-min	622
Fault 3 BusVolts	653
Fault 3 Code	009
Fault 3 Current	643
Fault 3 Freq	633
Fault 3 Time-hr	613
Fault 3 Time-min	623
Fault 4 BusVolts	654
Fault 4 Code	604
Fault 4 Current	644
Fault 4 Freq	634
Fault 4 Time-hr	614
Fault 4 Time-min	624
Fault 5 BusVolts	655
Fault 5 Code	605
Fault 5 Current	645
Fault 5 Freq	635
Fault 5 Time-hr	615
Fault 5 Time-min	625

Parameter Name	No.
Fault 6 BusVolts[1]	656
Fault 6 Code[1]	606
Fault 6 Current[1]	646
Fault 6 Freq[1]	636
Fault 6 Time-hr[1]	616
Fault 6 Time-min[1]	626
Fault 7 BusVolts[1]	657
Fault 7 Code[1]	607
Fault 7 Current[1]	647
Fault 7 Freq[1]	637
Fault 7 Time-hr[1]	617
Fault 7 Time-min[1]	627
Fault 8 BusVolts[1]	658
Fault 8 Code[1]	608
Fault 8 Current[1]	648
Fault 8 Freq[1]	638
Fault 8 Time-hr[1]	618
Fault 8 Time-min[1]	628
Fault 9 BusVolts[1]	659
Fault 9 Code[1]	609
Fault 9 Current[1]	649
Fault 9 Freq[1]	639
Fault 9 Time-hr[1]	619
Fault 9 Time-min[1]	629
Fault Clear	551
Fault10 BusVolts[1]	660
Fault10 Code[1]	610
Fault10 Current[1]	650
Fault10 Freq[1]	640
Fault10 Time-hr[1]	620
Fault10 Time-min[1]	630
Fiber Status	390
Find Home Dir[1]	563
Find Home Freq[1]	562
Flux Braking En[2][3]	575
Flux Current Ref	497
Flying Start En	545
FlyStrt CurLimit	546
Freq 1[1]	510
Freq 1 BW[1]	511
Freq 1 Ki[1]	522
Freq 1 Kp[1]	521
Freq 2[1]	512
Freq 2 BW[1]	513
Freq 2 Ki[1]	524
Freq 2 Kp[1]	523
Freq 3[1]	514
Freq 3 BW[1]	515
Freq 3 Ki[1]	526
Freq 3 Kp[1]	525

Parameter Name	No.
Half Bus Enable	549
Home Save[1]	561
HW Addr 1[1]	687
HW Addr 2[1]	688
HW Addr 3[1]	689
HW Addr 4[1]	690
HW Addr 5[1]	691
HW Addr 6[1]	692
IR Voltage Drop	496
Jog Accel/Decel	432
Jog Frequency	431
Keypad Freq	426
Ki Speed Loop[2]	538
Kp Speed Loop[2]	539
Language	30
Load Loss Level[1]	490
Load Loss Time[1]	491
Max Traverse	567
Maximum Freq	044
Maximum Voltage	534
Minimum Freq	043
MOP Freq	427
MOP Preload	429
MOP Reset Sel	428
MOP Time	430
Motor Fdbk Type[2]	535
Motor Lm[1]	499
Motor Lx[1]	500
Motor NP FLA	034
Motor NP Hertz	032
Motor NP Poles	035
Motor NP Power[1]	037
Motor NP RPM	036
Motor NP Volts	031
Motor OL Current	033
Motor OL Level	369
Motor OL Ret	494
Motor OL Select	493
Motor Rr[1]	498
Mtr Options Cfg[2][5]	573
MultiDrv Sel	169
Opt Data In 1	161
Opt Data In 2	162
Opt Data In 3	163
Opt Data In 4	164
Opt Data Out 1	165
Opt Data Out 2	166
Opt Data Out 3	167
Opt Data Out 4	168
Opto Out Logic[1]	075

Parameter Name	No.
Opto Out1 Level[1]	070
Opto Out1 Sel[1]	069
Opto Out2 Level[1]	073
Opto Out2 Sel[1]	072
Out Phas Loss En	557
Output Current	003
Output Freq	001
Output Power	017
Output Powr Fctr	381
Output RPM	015
Output Speed	016
Output Voltage	004
P Jump	570
Phase Loss Level[2][3]	576
PID 1 Deadband	465
PID 1 Diff Rate	463
PID 1 Fdback Sel	460
PID 1 Integ Time	462
PID 1 Invert Err	467
PID 1 Preload	466
PID 1 Prop Gain	461
PID 1 Ref Sel	459
PID 1 Setpoint	464
PID 1 Trim Hi	456
PID 1 Trim Lo	457
PID 1 Trim Sel	458
PID1 Fdbk Displ	383
PID1 Setpnt Disp	384
PID 2 Deadband[1]	477
PID 2 Diff Rate[1]	475
PID 2 Fdback Sel[1]	472
PID 2 Integ Time[1]	474
PID 2 Invert Err[1]	479
PID 2 Preload[1]	478
PID 2 Prop Gain[1]	473
PID 2 Ref Sel[1]	471
PID 2 Setpoint[1]	476
PID 2 Trim Hi[1]	468
PID 2 Trim Lo[1]	469
PID 2 Trim Sel[1]	470
PID2 Fdbk Displ[1]	385
PID2 Setpnt Disp[1]	386
PM 1 Efficiency[1][3]	587
PM 2 Efficiency[1][3]	588
PM Algor Sel[1][3]	589
PM Align Time[1][3]	518
PM BEMF Voltage[1][3]	504
PM Bus Reg Kd[1][3]	520
PM Control Cfg[1][3]	529
PM DC Inject Cur[1][3]	517
PM FWKn 1 Kp[1][3]	527
PM FWKn 2 Kp[1][3]	528
PM HIFI NS Cur[1][3]	519
PM Initial Sel[1][3]	516
PM IR Voltage[1][3]	501
PM IXd Voltage[1][3]	502
PM IXq Voltage[1][3]	503
PM Stable 1 Freq[1][3]	581
PM Stable 1 Kp[1][3]	583
PM Stable 2 Freq[1][3]	582
PM Stable 2 Kp[1][3]	584
PM Stable Brk Pt[1][3]	585
PM Steploat Kp[1][3]	586
Pos Reg Filter[1]	565
Pos Reg Gain[1]	566
Position Status[1]	387
Positioning Mode[1]	558
Power Loss Mode	548
Power Saved	018
Preset Freq 0	410
Preset Freq 1	411
Preset Freq 2	412
Preset Freq 3	413
Preset Freq 4	414
Preset Freq 5	415
Preset Freq 6	416
Preset Freq 7	417
Preset Freq 8[1]	418
Preset Freq 9[1]	419
Preset Freq 10[1]	420
Preset Freq 11[1]	421
Preset Freq 12[1]	422
Preset Freq 13[1]	423
Preset Freq 14[1]	424
Preset Freq 15[1]	425
Process Disp Hi	482
Process Disp Lo	481
Process Display	010
Program Lock	552
Program Lock Mod	553
Pulse In Scale	537
Purge Frequency	433
PWM Frequency	440
RdyBit Mode Act[2][4]	392
RdyBit Mode Cfg[2][4]	574
Relay 1 Off Time	080
Relay 1 On Time	079
Relay Out1 Level	077
Relay Out1 Sel	076
Relay 2 Off Time[1]	085
Relay 2 On Time[1]	084
Relay Out2 Level[1]	082
Relay Out2 Sel[1]	081
Reset Meters	555
Reset to Defalts	053
Reverse Disable	544
RS485 Data Rate	123
RS485 Format	127
RS485 Node Addr	124
S Curve %	439
Safety Open En[1]	105
SafetyFlt RstCfg[1][3]	106
Shear Pin 1 Time	487
Shear Pin1 Level	486
Shear Pin 2 Time[1]	489
Shear Pin2 Level[1]	488
Skip Freq Band 1	449
Skip Freq Band 2	451
Skip Freq Band 3[1]	453
Skip Freq Band 4[1]	455
Skip Frequency 1	448
Skip Frequency 2	450
Skip Frequency 3[1]	452
Skip Frequency 4[1]	454
Sleep Level	101
Sleep Time	102
Sleep-Wake Sel	100
Slip Hz Meter	375
Speed Feedback	376
Speed Ratio	572
Speed Reference1	047
Speed Reference2	049
Speed Reference3	051
Speed Reg Sel[1]	509
Stall Fault Time	492
Start At PowerUp	543
Start Boost	531
Start Source 1	046
Start Source 2	048
Start Source 3	050
Status @ Fault 1	661
Status @ Fault 2	662
Status @ Fault 3	663
Status @ Fault 4	664
Status @ Fault 5	665
Status @ Fault 6[1]	666
Status @ Fault 7[1]	667
Status @ Fault 8[1]	668
Status @ Fault 9[1]	669
Status @ Fault10[1]	670

Parameter Name	No.
Step Units 0[1]	200
Step Units 1[1]	202
Step Units 2[1]	204
Step Units 3[1]	206
Step Units 4[1]	208
Step Units 5[1]	210
Step Units 6[1]	212
Step Units 7[1]	214
Stop Mode	045
Stp Logic 0[1]	180
Stp Logic 1[1]	181
Stp Logic 2[1]	182
Stp Logic 3[1]	183
Stp Logic 4[1]	184

Parameter Name	No.
Stp Logic 5[1]	185
Stp Logic 6[1]	186
Stp Logic 7[1]	187
Stp Logic Status[1]	391
Stp Logic Time 0[1]	190
Stp Logic Time 1[1]	191
Stp Logic Time 2[1]	192
Stp Logic Time 3[1]	193
Stp Logic Time 4[1]	194
Stp Logic Time 5[1]	195
Stp Logic Time 6[1]	196
Stp Logic Time 7[1]	197
Sync Time	571
Testpoint Data	368

Parameter Name	No.
Testpoint Sel	483
Text Scroll	556
Timer Status	365
Torque Current	382
Torque Perf Mode	039
Traverse Dec	569
Traverse Inc	568
Units Traveled H[1]	388
Units Traveled L[1]	389
Var PWM Disable	540
Voltage Class	038
Wake Level	103
Wake Time	104

(1) Parameter is specific to PowerFlex 525 drives only.
(2) Parameter is also available in PowerFlex 523 FRN 3.xxx and later.
(3) Parameter is available in PowerFlex 525 FRN 5.xxx and later.
(4) Parameter is available in PowerFlex 525 FRN 3.xxx and later.
(5) Parameter is available in PowerFlex 525 FRN 2.xxx and later.

Notes:

Troubleshooting

This chapter provides information to guide you in troubleshooting the PowerFlex 520-series drive. Included is a listing and description of drive faults with possible solutions, when applicable.

For information on...	See page...
Drive Status	157
Faults	157
Fault Descriptions	159
Common Symptoms and Corrective Actions	162

ATTENTION: Risk of injury or equipment damage exists. Drive does not contain user-serviceable components. Do not disassemble drive chassis.

Drive Status

The condition or state of your drive is constantly monitored. Any changes will be indicated through the integral LCD display.

See Display and Control Keys on page 62 for information on drive status indicators and controls.

Faults

A fault is a condition that stops the drive. There are two fault types.

Fault Types

Type	Fault Description	
1	Auto-Reset/Run	When this type of fault occurs, and A541 [Auto Rstrt Tries] is set to a value greater than "0," a user-configurable timer, A542 [Auto Rstrt Delay], begins. When the timer reaches zero, the drive attempts to automatically reset the fault. If the condition that caused the fault is no longer present, the fault will be reset and the drive will be restarted.
2	Non-Resettable	This type of fault may require drive or motor repair, or is caused by wiring or programming errors. The cause of the fault must be corrected before the fault can be cleared.

Fault Indication

Condition	Display
Drive is indicating a fault. The integral LCD display provides visual notification of a fault condition by displaying the following. • Flashing fault number • Flashing fault indicator (LED) Press the Esc key to regain control of the display.	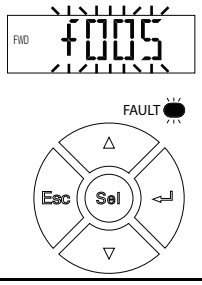

Manually Clearing Faults

Step	Key(s)
1. Press Esc to acknowledge the fault. The fault information will be removed so that you can use the integral keypad. Access b007 [Fault 1 Code] to view the most recent fault information. 2. Address the condition that caused the fault. The cause must be corrected before the fault can be cleared. See Fault Types, Descriptions and Actions on page 159. 3. After corrective action has been taken, clear the fault by one of these methods. • Press Stop if P045 [Stop Mode] is set to a value between "0" and "3". • Cycle drive power. • Set A551 [Fault Clear] to 1 "Reset Fault" or 2 "Clear Buffer". • Cycle digital input if t062, t063, t065...t068 [DigIn TermBlk xx] is set to 13 "Clear Fault".	

Automatically Clearing Faults

Option/Step	
Clear a Type 1 fault and restart the drive. 1. Set A541 [Auto Rstrt Tries] to a value other than "0". 2. Set A542 [Auto Rstrt Delay] to a value other than "0". **Clear an OverVoltage, UnderVoltage or Heatsink OvrTmp fault without restarting the drive.** 1. Set A541 [Auto Rstrt Tries] to a value other than "0". 2. Set A542 [Auto Rstrt Delay] to "0".	

ATTENTION: Equipment damage and/or personal injury may result if these parameters are used in an inappropriate application. Do not use this function without considering applicable local, national and international codes, standards, regulations or industry guidelines.

Auto Restart (Reset/Run)

The Auto Restart feature provides the ability for the drive to automatically perform a fault reset followed by a start attempt without user or application intervention. This allows remote or "unattended" operation. Only certain faults are allowed to be reset. Certain faults (Type 2) that indicate possible drive component malfunction are not resettable. Fault types are listed in the table Fault Types on page 157. See Fault Descriptions on page 159 for more information.

Use caution when enabling this feature, since the drive will attempt to issue its own start command based on user selected programming.

Fault Descriptions

Fault Types, Descriptions and Actions

No.	Fault	Type[2]	Description	Action
F000	No Fault	–	No fault present.	–
F002	Auxiliary Input	1	External trip (Auxiliary) input.	• Check remote wiring. • Verify communications programming for intentional fault.
F003	Power Loss	2	Single phase operation detected with excessive load.	• Monitor the incoming AC line for low voltage or line power interruption. • Check input fuses. • Reduce load.
F004	UnderVoltage	1	DC bus voltage fell below the minimum value.	Monitor the incoming AC line for low voltage or line power interruption.
F005	OverVoltage	1	DC bus voltage exceeded maximum value.	Monitor the AC line for high line voltage or transient conditions. Bus overvoltage can also be caused by motor regeneration. Extend the decel time or install dynamic brake option.
F006	Motor Stalled	1	Drive is unable to accelerate or decelerate motor.	• Increase P041, A442, A444, A446 [Accel Time x] or reduce load so drive output current does not exceed the current set by parameter A484, A485 [Current Limit x] for too long. • Check for overhauling load.
F007	Motor Overload	1	Internal electronic overload trip.	• An excessive motor load exists. Reduce load so drive output current does not exceed the current set by parameter P033 [Motor OL Current]. • Verify A530 [Boost Select] setting.
F008	Heatsink OvrTmp	1	Heatsink/Power Module temperature exceeds a predefined value.	• Check for blocked or dirty heat sink fins. Verify that ambient temperature has not exceeded the rated ambient temperature. • Check fan.
F009	CC OvrTmp	1	Control module temperature exceeds a predefined value.	• Check product ambient temperature. • Check for airflow obstruction. • Check for dirt or debris. • Check fan.
F012	HW OverCurrent	2	The drive output current has exceeded the hardware current limit.	Check programming. Check for excess load, improper A530 [Boost Select] setting, DC brake volts set too high or other causes of excess current.
F013	Ground Fault	1[3]	A current path to earth ground has been detected at one or more of the drive output terminals.	Check the motor and external wiring to the drive output terminals for a grounded condition.

Fault Types, Descriptions and Actions

No.	Fault	Type[2]	Description	Action
F015[1]	Load Loss	2	The output torque current is below the value programmed in A490 [Load Loss Level] for a time period greater than the time programmed in A491 [Load Loss Time].	• Verify connections between motor and load. • Verify level and time requirements
F021	Output Ph Loss	1	Output Phase Loss (if enabled). Configure with A557 [Out Phas Loss En].	• Verify motor wiring. • Verify motor.
F029	Analog In Loss	1	An analog input is configured to fault on signal loss. A signal loss has occurred. Configure with t094 [Anlg In V Loss] or t097 [Anlg In mA Loss].	• Check for broken/loose connections at inputs. • Check parameters.
F033	Auto Rstrt Tries	2	Drive unsuccessfully attempted to reset a fault and resume running for the programmed number of A541 [Auto Rstrt Tries].	Correct the cause of the fault and manually clear.
F038	Phase U to Gnd	2	A phase to ground fault has been detected between the drive and motor in this phase.	• Check the wiring between the drive and motor. • Check motor for grounded phase. • Replace drive if fault cannot be cleared.
F039	Phase V to Gnd			
F040	Phase W to Gnd			
F041	Phase UV Short	2	Excessive current has been detected between these two output terminals.	• Check the motor and drive output terminal wiring for a shorted condition. • Replace drive if fault cannot be cleared.
F042	Phase UW Short			
F043	Phase VW Short			
F048	Params Defaulted	1	The drive was commanded to write default values to EEPROM.	• Clear the fault or cycle power to the drive. • Program the drive parameters as needed.
F059[1]	Safety Open	1	Both of the safety inputs (Safety 1, Safety 2) are not enabled. Configure with t105 [Safety Open En].	• Check safety input signals. If not using safety, verify and tighten jumper for I/O terminals S1, S2 and S+.
F063	SW OverCurrent	1	Programmed A486, A488 [Shear Pinx Level] has been exceeded for a time period greater than the time programmed in A487, A489 [Shear Pin x Time].	• Verify connections between motor and load. • Verify level and time requirements.
F064	Drive Overload	2	Drive overload rating has been exceeded.	Reduce load or extend Accel Time.
F070	Power Unit	2	Failure has been detected in the drive power section.	• Check maximum ambient temperature has not been exceeded. • Cycle power. • Replace drive if fault cannot be cleared.
F071	DSI Net Loss	2	Control over the Modbus or DSI communication link has been interrupted.	• Cycle power. • Check communications cabling. • Check Modbus or DSI setting. • Check Modbus or DSI status.
F072	Opt Net Loss	2	Control over the network option card's remote network has been interrupted.	• Cycle power. • Check communications cabling. • Check network adapter setting. • Check external network status.
F073[1]	EN Net Loss	2	Control through the embedded EtherNet/IP adapter has been interrupted.	• Cycle power. • Check communications cabling. • Check EtherNet/IP setting. • Check external network status.
F080	Autotune Failure	2	The autotune function was either cancelled by the user or failed.	Restart procedure.

Fault Types, Descriptions and Actions

No.	Fault	Type[2]	Description	Action
F081	DSI Comm Loss	2	Communications between the drive and the Modbus or DSI master device have been interrupted.	• Cycle power. • Check communications cabling. • Check Modbus or DSI setting. • Check Modbus or DSI status. • Modify using C125 [Comm Loss Action]. • Connecting I/O terminals C1 and C2 to ground may improve noise immunity. • Replace wiring, Modbus master device, or control module.
F082	Opt Comm Loss	2	Communications between the drive and the network option card have been interrupted.	• Cycle power. • Reinstall option card in drive. • Modify using C125 [Comm Loss Action]. • Replace wiring, port expander, option card, or control module.
F083[1]	EN Comm Loss	2	Internal communications between the drive and the embedded EtherNet/IP adapter have been interrupted.	• Cycle power. • Check EtherNet/IP setting. • Check drive's Ethernet settings and diagnostic parameters. • Modify using C125 [Comm Loss Action]. • Replace wiring, Ethernet switch, or control module.
F091[1]	Encoder Loss	2	Requires differential encoder. One of the 2 encoder channel signals is missing.	• Check Wiring. • If P047, P049, P051 [Speed Referencex] = 16 "Positioning" and A535 [Motor Fdbk Type] = 5 "Quad Check", swap the Encoder channel inputs or swap any two motor leads. • Replace encoder.
F094	Function Loss	2	"Freeze-Fire" (Function Loss) input is inactive, input to the programmed terminal is open.	Close input to the terminal and cycle power.
F100	Parameter Chksum	2	Drive parameter non-volatile storage is corrupted.	Set P053 [Reset To Defalts] to 2 "Factory Rset".
F101	External Storage	2	External non-volatile storage has failed.	Set P053 [Reset To Defalts] to 2 "Factory Rset".
F105	C Connect Err	2	Control module was disconnected while drive was powered.	Clear fault and verify all parameter settings. Do not remove or install the control module while power is applied.
F106	Incompat C-P	2	The PowerFlex 525 control module does not support power modules with 0.25 HP power rating.	• Change to a different power module. • Change to a PowerFlex 523 control module.
F107	Replaced C-P	2	The control module could not recognize the power module. Hardware failure.	• Change to a different power module. • Replace control module if changing power module does not work.
F109	Mismatch C-P	2	The control module was mounted to a different drive type power module.	Set P053 [Reset To Defalts] to 3 "Power Reset".
F110	Keypad Membrane	2	Keypad membrane failure / disconnected.	• Cycle power. • Replace control module if fault cannot be cleared.
F111[1]	Safety Hardware	2	Safety input enable hardware malfunction. One of the safety inputs is not enabled.	• Check safety input signals. If not using safety, verify and tighten jumper for I/O terminals S1, S2 and S+. • Replace control module if fault cannot be cleared.

Fault Types, Descriptions and Actions

No.	Fault	Type[2]	Description	Action
F114	uC Failure	2	Microprocessor failure.	• Cycle power. • Verify grounding requirements. See General Grounding Requirements on page 20 for more information. • Replace control module if fault cannot be cleared.
F122	I/O Board Fail	2	Failure has been detected in the drive control and I/O section.	• Cycle power. • Replace drive or control module if fault cannot be cleared.
F125	Flash Update Req	2	The firmware in the drive is corrupt, mismatched, or incompatible with the hardware.	Perform a firmware flash update operation to attempt to load a valid set of firmware.
F126	NonRecoverablErr	2	A non-recoverable firmware or hardware error was detected. The drive was automatically stopped and reset.	• Clear fault or cycle power to the drive. • Replace drive or control module if fault cannot be cleared.
F127	DSIFlashUpdatReq	2	A critical problem with the firmware was detected and the drive is running using backup firmware that only supports DSI communications.	Perform a firmware flash update operation using DSI communications to attempt to load a valid set of firmware.

(1) This fault is not applicable to PowerFlex 523 drives.
(2) See Fault Types for more information.
(3) This fault may be cleared by the auto-restart routine and will be attempted only once. It ignores the value set in parameter A541 [Auto Rstrt Tries].

Common Symptoms and Corrective Actions

The drive is designed to start from the keypad when shipped. For a basic test of drive operation:

1. Remove all user I/O wire.
2. Verify safety terminals (S1, S2 and S+) jumper is in place and tightened.
3. Verify wire jumper is in place between I/O terminals 01 and 11.
4. Verify that the three jumpers are in their proper default positions on the control board. See PowerFlex 525 Control I/O Wiring Block Diagram on page 42 for more information.
5. Reset default parameter values by setting P053 [Reset Defalts] to 2 “Factory Rset”.
6. If safe to do so for your application, press Start on drive keypad. Drive will run according to the speed potentiometer.

Motor does not Start.

Cause(s)	Indication	Corrective Action
No output voltage to the motor.	None	Check the power circuit. • Check the supply voltage. • Check all fuses and disconnects. Check the motor. • Verify that the motor is connected properly. Check the control input signals. • Verify that a Start signal is present. If 2-Wire control is used, verify that either the Run Forward or Run Reverse signal is active, but not both. • Verify that I/O Terminal 01 is active. • Verify that P046, P048, P050 [Start Source x] matches your configuration. • Verify that A544 [Reverse Disable] is not prohibiting movement. • Verify that safety inputs (Safety 1 and Safety 2) are active.
Improper boost setting at initial start-up.	None	Set A530 [Boost Select] to 2 "35.0, VT".
Drive is Faulted	Flashing red status light	Clear fault. • Press Stop if P045 [Stop Mode] is set to a value between "0" and "3". • Cycle drive power. • Set A551 [Fault Clear] to 1 "Reset Fault" or 2 "Clear Buffer". • Cycle digital input if t062, t063, t065...t068 [DigIn TermBlk xx] is set to 13 "Clear Fault".
Incorrect programming. • P046, P048, P050 [Start Source x] is set incorrectly.	None	Check setting for b012 [Control Source].
Incorrect input wiring. See page 45 for wiring examples. • 2 wire control requires Run Forward, Run Reverse or Jog input. • 3 wire control requires Start and Stop inputs • Stop input is always required.	None	• Wire inputs correctly and/or install jumper. • If the PowerFlex 525 Safe-Torque-Off function is used, verify that inputs are active. • If 2-wire or 3-wire mode is used, verify that t062 [DigIn TermBlk 02] and t063 [DigIn TermBlk 03] are set properly.
Incorrect Sink/Source jumper setting.	None	Set switch to match wiring scheme.

Drive does not Start from Start or Run Inputs wired to the terminal block.

Cause(s)	Indication	Corrective Action
Drive is Faulted	Flashing red status light	Clear fault. • Press Stop if P045 [Stop Mode] is set to a value between "0" and "3". • Cycle drive power. • Set A551 [Fault Clear] to 1 "Reset Fault" or 2 "Clear Buffer". • Cycle digital input if t062, t063, t065...t068 [DigIn TermBlk xx] is set to 13 "Clear Fault".
Incorrect programming. • P046, P048, P050 [Start Source x] is set incorrectly. • t062, t063 [DigIn TermBlk 02/03] is set incorrectly.	None	Check parameter settings.
Incorrect input wiring. See page 45 for wiring examples. • 2 wire control requires Run Forward, Run Reverse or Jog input. • 3 wire control requires Start and Stop inputs • Stop input is always required.	None	• Wire inputs correctly and/or install jumper. • If the PowerFlex 525 Safe-Torque-Off function is used, verify that inputs are active.
Incorrect Sink/Source jumper setting.	None	Set switch to match wiring scheme.

Drive does not respond to changes in speed command.

Cause(s)	Indication	Corrective Action
No value is coming from the source of the command.	The drive "Run" indicator is lit and output is 0 Hz.	• Check b012 [Control Source] for correct source. • If the source is an analog input, check wiring and use a meter to check for presence of signal. • Check b002 [Commanded Freq] to verify correct command.
Incorrect reference source is being selected by remote device or digital inputs.	None	• Check b012 [Control Source] for correct source. • Check b014 [Dig In Status] to see if inputs are selecting an alternate source. Verify settings for t062, t063, t065-t068 [DigIn TermBlk xx]. • Check P047, P049, P051 [Speed Referencex] for the source of the speed reference. Reprogram as necessary. • Review the Speed Reference Control chart on page 49. • Verify communications if used.

Motor and/or drive will not accelerate to commanded speed.

Cause(s)	Indication	Corrective Action
Acceleration time is excessive.	None	Reprogram P041, A442, A444, A446 [Accel Time x].
Excess load or short acceleration times force the drive into current limit, slowing or stopping acceleration.	None	• Compare b003 [Output Current] with A484, A485 [Current Limit x]. • Remove excess load or reprogram P041, A442, A444, A446 [Accel Time x]. • Check for improper A530 [Boost Select] setting.
Speed command source or value is not as expected.	None	• Verify b002 [Commanded Freq]. • Check b012 [Control Source] for the proper Speed Command.
Programming is preventing the drive output from exceeding limiting values.	None	• Check P044 [Maximum Freq] to ensure that speed is not limited by programming. • Verify programming of A572 [Speed Ratio].
Torque performance does not match motor characteristics.	None	• Set motor nameplate full load amps in parameter P034 [Motor NP FLA]. • Perform P040 [Autotune] "Static Tune" or "Rotate Tune" procedure. • Set P039 [Torque Perf Mode] to 0 "V/Hz".

Motor operation is unstable.

Cause(s)	Indication	Corrective Action
Motor data was incorrectly entered.	None	1. Correctly enter motor nameplate data into P031, P032 and P033. 2. Enable A547 [Compensation]. 3. Use A530 [Boost Select] to reduce boost level.

Drive will not reverse motor direction.

Cause(s)	Indication	Corrective Action
Reverse is disabled.	None	Check A544 [Reverse Disable].
Digital input is not selected for reversing control.	None	Check [DigIn TermBlk xx] (See page 89). Choose correct input and program for reversing mode.
Digital input is incorrectly wired.	None	Check input wiring (See page 45).
Motor wiring is improperly phased for reverse.	None	Switch two motor leads.

Drive does not power up.

Cause(s)	Indication	Corrective Action
No input power to drive.	None	• Check the power circuit. • Check the supply voltage. • Check all fuses and disconnects.
Control module is not connected properly to power module.	None	1. Remove power. 2. Verify that the control module is properly and fully installed on the power module. 3. Reapply power.

Motor is rotating at zero Hz or slip frequency is not correct.

Cause(s)	Indication	Corrective Action
Incorrect speed calculation.	Improper speed.	• Verify P032 [Motor NP Hertz]. • Reduce boost with A530 [Boost Select]. • Set P036 [Motor NP RPM] to motor synchronous speed.

Notes:

Supplemental Drive Information

For information on...	See page...
Certifications	167
Environmental Specifications	168
Technical Specifications	169
Power Specifications	172

Certifications

Certifications	PowerFlex 523	PowerFlex 525
c-UL-us	Listed to UL508C and CAN/CSA-C22.2 No. 14-05.	
RCM	Australian Communications and Media Authority In conformity with the following: Radiocommunications Act: 1992 Radiocommunications Standard: 2008 Radiocommunications Labelling Notice: 2008 Standards applied: EN 61800-3	
CE	In conformity with the following European Directives: 2014/35/EU Low Voltage Directive (LVD) 2014/30/EU EMC Directive (EMC) 2014/34/EU ATEX Directive (ATEX) 2006/42/EC Machinery Directive (MD) Standards applied: EN 61800-3 EN 61800-5-1	
TUV	(Applicable to PowerFlex 525 drives only) TÜV Rheinland Standards applied: EN ISO 13849-1 EN 61800-5-2 EN 61508 PARTS 1-7 EN 62061 EN 60204-1 Certified to ISO 13849-1 SIL2/PLd with embedded Safe-Torque-Off function Meets Functional Safety (FS) when used with embedded Safe-Torque-Off function	
ATEX **II (2) G D** **TUV 12 ATEX 7199 X**	(Applicable to PowerFlex 525 drives only) Certified to ATEX Directive 2014/34/EU Group II Category (2) GD Applications with ATEX Approved Motors	
KCC	Korean Registration of Broadcasting and Communications Equipment Compliant with the following standards: Article 58-2 of Radio Waves Act, Clause 3	
EAC	Standards applied: Low Voltage TP TC 004/2011 EMC TP TC 020/2011	

Certifications	PowerFlex 523	PowerFlex 525
AC 156	Tested by Trentec to be compliant with AC156 Acceptance Criteria for Seismic Qualification Testing of Nonstructural Components and 2003 International Building Code for worst-case seismic level for USA excluding site class F	
SEMI F47	Electric Power Research Institute Certified compliant with the following standards: SEMI F47 IEC 61000-4-11 IEC 61000-4-34	
Lloyds Register	(Applicable to PowerFlex 525 drives only) Lloyd's Register Type Approval Certificate 12/10068(E1)	
RoHS	Compliant with the European "Restriction of Hazardous Substances" Directive	
The drive is also designed to meet the appropriate portions of the following specifications: NFPA 70 - US National Electrical Code NEMA ICS 7.1 - Safety standards for Construction and Guide for Selection, Installation and Operation of Adjustable Speed Drive Systems.		

Environmental Specifications

Specifications	PowerFlex 523	PowerFlex 525
Altitude: Without derating: With derating:	See Current Derating Curves on page 17 for derating guidelines. 1000 m (3300 ft) max. Up to 4000 m (13,200 ft) max., with the exception of 600V drives at 2000 m (6600 ft) max.	
Max. Surrounding Air Temperature Without derating: With derating:	See Current Derating Curves on page 17 for derating guidelines. -20...50 °C (-4...122 °F) -20...60 °C (-4...140 °F) or -20...70 °C (-4...158 °F) with optional Control Module Fan kit.	
Storage Temperature: Frame A...D: Frame E:	 -40...85 °C (-40...185 °F) -40...70 °C (-40...158 °F)	
Atmosphere:		

IMPORTANT Drive **must not** be installed in an area where the ambient atmosphere contains volatile or corrosive gas, vapors or dust. If the drive is not going to be installed for a period of time, it must be stored in an area where it will not be exposed to a corrosive atmosphere.

Relative Humidity:	0...95% noncondensing
Shock: Vibration:	Complies with IEC 60068-2-27 Complies with IEC 60068-2-6:1995

	Operating and Nonoperating		Nonoperating (Transportation)	
Frame Size	Force (Shock/Vibration)	Mounting Type	Force (Shock/Vibration)	Mounting Type
A	15 g / 2 g	DIN rail or screw	30 g/ 2.5 g	Screw only
B	15 g / 2 g	DIN rail or screw	30 g/ 2.5 g	Screw only
C	15 g / 2 g	DIN rail or screw	30 g/ 2.5 g	Screw only
D	15 g / 2 g	Screw only	30 g/ 2.5 g	Screw only
E	15 g / 1.5 g	Screw only	30 g/ 2.5 g	Screw only

Specifications	PowerFlex 523	PowerFlex 525
Conformal Coating:	Complies with: IEC 60721-3-3 to level 3C2 (chemical and gases only)	
Surrounding Environment Pollution Degree Pollution Degree 1 & 2:	See Pollution Degree Ratings According to EN 61800-5-1 on page 52 for descriptions. All enclosures acceptable.	
Sound Pressure Level (A-weighted) Frame A & B: Frame C: Frame D: Frame E:	Measurements are taken 1 m from the drive. Maximum 53 dBA Maximum 57 dBA Maximum 64 dBA Maximum 68 dBA	

Technical Specifications

Protection

Specifications	PowerFlex 523	PowerFlex 525
Bus Overvoltage Trip 100...120V AC Input: 200...240V AC Input: 380...480V AC Input: 525...600V AC Input:	 405V DC bus (equivalent to 150V AC incoming line) 405V DC bus (equivalent to 290V AC incoming line) 810V DC bus (equivalent to 575V AC incoming line) 1005V DC bus (equivalent to 711V AC incoming line)	
Bus Undervoltage Trip 100...120V AC Input: 200...240V AC Input: 380...480V AC Input: 525...600V AC Input P038 = 3 "600V": P038 = 2 "480V":	 190V DC bus (equivalent to 75V AC incoming line) 190V DC bus (equivalent to 150V AC incoming line) 390V DC bus (equivalent to 275V AC incoming line) 487V DC bus (equivalent to 344V AC incoming line) 390V DC bus (equivalent to 275V AC incoming line)	
Power Ride-Thru:	100 ms	
Logic Control Ride-Thru:	0.5 s minimum, 2 s typical	
Electronic Motor Overload Protection:	Provides class 10 motor overload protection according to NEC article 430 and motor over-temperature protection according to NEC article 430.126 (A) (2). UL 508C File 29572.	
Overcurrent:	200% hardware limit, 300% instantaneous fault	
Ground Fault Trip:	Phase-to-ground on drive output	
Short Circuit Trip:	Phase-to-phase on drive output	

Electrical

Specifications	PowerFlex 523	PowerFlex 525
Voltage Tolerance:	-15% / +10%	
Frequency Tolerance:	47...63 Hz	
Input Phases:	Three-phase input provides full rating. Single-phase input provides 35% rating on three-phase drives.	
Displacement Power Factor:	0.98 across entire speed range	
Maximum Short Circuit Rating:	100,000 Amps Symmetrical	
Actual Short Circuit Rating:	Determined by AIC Rating of installed fuse/circuit breaker	
Transistor Type:	Isolated Gate Bipolar Transistor (IGBT)	
Internal DC Bus Choke 200...240V AC Input: 380...480V AC Input: 525...600V AC Input:	Only for Frame E drive ratings 11 kW (15 HP) 15...18.5 kW (20...25 HP) – Heavy Duty 15...18.5 kW (20...25 HP) – Heavy Duty	

Control

Specifications	PowerFlex 523	PowerFlex 525
Method	Sinusoidal PWM, Volts/Hertz, Sensorless Vector Control, Economizer SVC motor control, Closed Loop Velocity Vector Control, Surface Mount and Interior Permanent Magnet Motor (without encoder), Interior Permanent Magnet Motor (with encoder) (Closed Loop Velocity Vector Control and PM motor control are not applicable to PowerFlex 523 drives)	
Carrier Frequency	2...16 kHz, Drive rating based on 4 kHz	
Frequency Accuracy		
Digital Input:	Within ±0.05% of set output frequency	
Analog Input:	Within 0.5% of maximum output frequency, 10-Bit resolution	
Analog Output:	±2% of full scale, 10-Bit resolution	
Performance		
V/Hz (Volts per Hertz):	±1% of base speed across a 60:1 speed range	
SVC (Sensorless Vector):	±0.5% of base speed across a 100:1 speed range	
SVC Economizer:	±0.5% of base speed across a 100:1 speed range	
	(Applicable to PowerFlex 525 drives only)	
VVC (Velocity Vector Control):	±0.5% of base speed across a 60:1 speed range	
PM Motor (1):	±0.5% of base speed, up to a 20:1 speed range	
Performance with Encoder	(Applicable to PowerFlex 525 drives only)	
SVC (Sensorless Vector):	±0.1% of base speed across a 100:1 speed range(2)	
SVC Economizer:	±0.1% of base speed across a 100:1 speed range(2)	
VVC (Velocity Vector Control):	±0.1% of base speed across a 1000:1 speed range(2)	
PM Motor (iPM motor, 10 HP rating and below) (1):	±0.1% of base speed, up to a 60:1 speed range	
Output Voltage Range:	0V to rated motor voltage	
Output Frequency Range:	0...500 Hz (programmable)	
Efficiency:	97.5% (typical)	
Stop Modes:	Multiple programmable stop modes including – Ramp, Coast, DC-Brake, and Ramp-to-Stop	
Accel/Decel:	Four independently programmable accel and decel times. Each time may be programmed from 0...600 s in 0.01 s increments.	
Intermittent Overload		
Normal Duty:	110% Overload capability for up to 60 s, 150% for up to 3 s Applies for power rating above 15 kW (20 HP) only. Based on 480V drive rating.	
Heavy Duty:	150% Overload capability for up to 60 s, 180% for up to 3 s (200% programmable)	

(1) For details on specific motor performance, see Knowledge Base article "PowerFlex 525 PM Motor Performance Testing Summary".
(2) For more information, see Determine Encoder Pulse Per Revolution (PPR) Specification Based on Speed Resolution on page 217.

Control Inputs

Specifications		PowerFlex 523	PowerFlex 525
Digital	Bandwidth:	10 Rad/s for open and closed loop	
	Quantity:	(1) Dedicated for stop (4) Programmable	(1) Dedicated for stop (6) Programmable
	Current:	6 mA	
	Type Source Mode (SRC): Sink Mode (SNK):	 18...24V = ON, 0...6V = OFF 0...6V = ON, 18...24V = OFF	
	Pulse Train Quantity: Input Signal: Input Frequency: Current Consumption:	 (1) Shared with one of the programmable digital input terminals. Transistor contact (open collector) 0...100 kHz 7 mA @ 24V DC maximum	
Analog:	Quantity:	(1) Isolated, 0-10V and 4-20mA	(2) Isolated, -10-10V and 4-20mA
	Specification Resolution: 0-10V DC Analog: 4-20mA Analog: External Pot:	 10-bit 100k ohm input impedance 250 ohm input impedance 1...10k ohm, 2 W minimum	

Control Outputs

Specifications		PowerFlex 523	PowerFlex 525
Relay:	Quantity:	(1) Programmable Form C	(2) 1 Programmable Form A and 1 Programmable Form B
	Specification Resistive Rating: Inductive Rating:	 3.0 A @ 30V DC, 3.0 A @ 125V, 3.0 A @ 240V AC 0.5 A @ 30V DC, 0.5 A @ 125V, 0.5 A @ 240V AC	
Opto:	Quantity:	–	(2) Programmable
	Specification:		30V DC, 50 mA Non-inductive
Analog	Quantity:	(1) Non-Isolated 0-10V or 4-20 mA(1)	
	Specification Resolution: 0-10V DC Analog: 4-20 mA Analog:	 10-bit 1 k ohm minimum 525 ohm maximum	

(1) Feature is not applicable to PowerFlex 523 series A drives.

Encoder

Specifications	PowerFlex 523	PowerFlex 525
Type:	–	Incremental, dual channel
Supply:		12V, 250 mA
Quadrature:		90 °, ±27 ° @ 25 °C
Duty Cycle:		50%, +10%
Requirements:		Encoders must be line driver type, quadrature (dual channel) or pulse (single channel), 3.5...26V DC output, single-ended or differential and capable of supplying a minimum of 10 mA per channel. Allowable input is DC up to a maximum frequency of 250 kHz. The encoder I/O automatically scales to allow 5V, 12V and 24V DC nominal voltages.

Power Specifications

Watts Loss

PowerFlex 520-Series Estimated Watts Loss (Rated Load, Speed & PWM)

Voltage	Output Current (A)	Total Watts Loss
100...120V, 50/60 Hz 1-Phase	1.6	20.0
	2.5	27.0
	4.8	53.0
	6.0	67.0
200...240V, 50/60 Hz 1-Phase	1.6	20.0
	2.5	29.0
	4.8	50.0
	8.0	81.0
	11.0	111.0
200...240V, 50/60 Hz 1-Phase w/ EMC Filter	1.6	20.0
	2.5	29.0
	4.8	53.0
	8.0	84.0
	11.0	116.0
200...240V, 50/60 Hz 3-Phase	1.6	20.0
	2.5	29.0
	5.0	50.0
	8.0	79.0
	11.0	107.0
	17.5	148.0
	24.0	259.0
	32.2	323.0
	48.3	584.0
	62.1	708.0
380...480V, 50/60 Hz 3-Phase	1.4	27.0
	2.3	37.0
	4.0	62.0
	6.0	86.0
	10.5	129.0
	13.0	170.0
	17.0	221.0
	24.0	303.0
	30.0	387.0
380...480V, 50/60 Hz 3-Phase w/ EMC Filter	1.4	27.0
	2.3	37.0
	4.0	63.0
	6.0	88.0
	10.5	133.0
	13.0	175.0
	17.0	230.0
	24.0	313.0
	30.0	402.0
	37.0	602.0
	43.0	697.0

PowerFlex 520-Series Estimated Watts Loss (Rated Load, Speed & PWM)

Voltage	Output Current (A)	Total Watts Loss
525...600V, 50/60 Hz 3-Phase	0.9	22.0
	1.7	32.0
	3.0	50.0
	4.2	65.0
	6.6	95.0
	9.9	138.0
	12.0	164.0
	19.0	290.0
	22.0	336.0
	27.0	466.0
	32.0	562.0

Input Current Scaling (Optional)

You can use a higher drive rating by scaling the input current based on the output current required for your application. You can use a lower input current rating based upon the motor FLA rating. For example, if the motor has an FLA rating of 1.6, the input rating will be 3.2 amps. See the PowerFlex 520-Series Input Current Rating Scaled by the Motor FLA on page 173 table for more information.

PowerFlex 520-Series Input Current Rating Scaled by the Motor FLA

PowerFlex 523	PowerFlex 525	Output Current: Motor FLA				Input Drive Current Rating			
Catalog Number	Catalog Number	1	2	3	4	5	6	7	8
100...120V AC (-15%, +10%) – 1-Phase Input, 0...230V 3-Phase Output									
25A-V1P6N104	–	1.6	1.3	1.0	0.8	6.4	5.2	4.0	3.2
25A-V2P5N104	25B-V2P5N104	2.5	2.0	1.6	1.3	9.6	7.7	6.2	4.8
25A-V4P8N104	25B-V4P8N104	4.8	3.8	3.1	2.4	19.2	15.4	12.5	9.6
25A-V6P0N104	25B-V6P0N104	6.0	4.8	3.9	3.0	24.0	19.2	15.6	12.0
200...240V AC (-15%, +10%) – 1-Phase Input, 0...230V 3-Phase Output									
25A-A1P6N104	–	1.6	1.3	1.0	0.8	5.3	4.3	3.4	2.7
25A-A2P5N104	25B-A2P5N104	2.5	2.0	1.6	1.3	6.5	5.2	4.2	3.3
25A-A4P8N104	25B-A4P8N104	4.8	3.8	3.1	2.4	10.7	8.6	7.0	5.4
25A-A8P0N104	25B-A8P0N104	8.0	6.4	5.2	4.0	18.0	14.4	11.7	9.0
25A-A011N104	25B-A011N104	11.0	8.8	7.2	5.5	22.9	18.3	14.9	11.5
200...240V AC (-15%, +10%) – 1-Phase Input with EMC Filter, 0...230V 3-Phase Output									
25A-A1P6N114	–	1.6	1.3	1.0	0.8	5.3	4.3	3.4	2.7
25A-A2P5N114	25B-A2P5N114	2.5	2.0	1.6	1.3	6.5	5.2	4.2	3.3
25A-A4P8N114	25B-A4P8N114	4.8	3.8	3.1	2.4	10.7	8.6	7.0	5.4
25A-A8P0N114	25B-A8P0N114	8.0	6.4	5.2	4.0	18.0	14.4	11.7	9.0
25A-A011N114	25B-A011N114	11.0	8.8	7.2	5.5	22.9	18.3	14.9	11.5
200...240V AC (-15%, +10%) – 3-Phase Input, 0...230V 3-Phase Output									
25A-B1P6N104	–	1.6	1.3	1.0	0.8	1.9	1.5	1.2	1.0
25A-B2P5N104	25B-B2P5N104	2.5	2.0	1.6	1.3	2.7	2.2	1.8	1.4
25A-B5P0N104	25B-B5P0N104	5.0	4.0	3.2	2.5	5.8	4.6	3.8	2.9
25A-B8P0N104	25B-B8P0N104	8.0	6.4	5.2	4.0	9.5	7.6	6.2	4.8
25A-B011N104	25B-B011N104	11.0	8.8	7.2	5.5	13.8	11.0	9.0	6.9
25A-B017N104	25B-B017N104	17.5	14.0	11.4	8.8	21.1	16.9	13.7	10.6

PowerFlex 520-Series Input Current Rating Scaled by the Motor FLA

PowerFlex 523	PowerFlex 525	Output Current: Motor FLA				Input Drive Current Rating			
Catalog Number	**Catalog Number**	**1**	**2**	**3**	**4**	**5**	**6**	**7**	**8**
25A-B024N104	25B-B024N104	24.0	19.2	15.6	12.0	26.6	21.3	17.3	13.3
25A-B032N104	25B-B032N104	32.2	25.8	20.9	16.1	34.8	27.8	22.6	17.4
25A-B048N104	25B-B048N104	48.3	38.6	31.4	24.2	44.0	35.2	28.6	22.0
25A-B062N104	25B-B062N104	62.1	49.7	40.4	31.1	56.0	44.8	36.4	28.0
380...480V AC (-15%, +10%) – 3-Phase Input, 0...460V 3-Phase Output									
25A-D1P4N104	25B-D1P4N104	1.4	1.1	0.9	0.7	1.9	1.5	1.2	1.0
25A-D2P3N104	25B-D2P3N104	2.3	1.8	1.5	1.2	3.2	2.6	2.1	1.6
25A-D4P0N104	25B-D4P0N104	4.0	3.2	2.6	2.0	5.7	4.6	3.7	2.9
25A-D6P0N104	25B-D6P0N104	6.0	4.8	3.9	3.0	7.5	6.0	4.9	3.8
25A-D010N104	25B-D010N104	10.5	8.4	6.8	5.3	13.8	11.0	9.0	6.9
25A-D013N104	25B-D013N104	13.0	10.4	8.5	6.5	15.4	12.3	10.0	7.7
25A-D017N104	25B-D017N104	17.0	13.6	11.1	8.5	18.4	14.7	12.0	9.2
25A-D024N104	25B-D024N104	24.0	19.2	15.6	12.0	26.4	21.1	17.2	13.2
25A-D030N104	25B-D030N104	30.0	24.0	19.5	15.0	33.0	26.4	21.5	16.5
380...480V AC (-15%, +10%) – 3-Phase Input with EMC Filter, 0...460V 3-Phase Output									
25A-D1P4N114	25B-D1P4N114	1.4	1.1	0.9	0.7	1.9	1.5	1.2	1.0
25A-D2P3N114	25B-D2P3N114	2.3	1.8	1.5	1.2	3.2	2.6	2.1	1.6
25A-D4P0N114	25B-D4P0N114	4.0	3.2	2.6	2.0	5.7	4.6	3.7	2.9
25A-D6P0N114	25B-D6P0N114	6.0	4.8	3.9	3.0	7.5	6.0	4.9	3.8
25A-D010N114	25B-D010N114	10.5	8.4	6.8	5.3	13.8	11.0	9.0	6.9
25A-D013N114	25B-D013N114	13.0	10.4	8.5	6.5	15.4	12.3	10.0	7.7
25A-D017N114	25B-D017N114	17.0	13.6	11.1	8.5	18.4	14.7	12.0	9.2
25A-D024N114	25B-D024N114	24.0	19.2	15.6	12.0	26.4	21.1	17.2	3.2
25A-D030N114	25B-D030N114	30.0	24.0	19.5	15.0	33.0	26.4	21.5	16.5
25A-D037N114	25B-D037N114	37.0	29.6	24.1	18.5	33.7	27.0	21.9	16.9
25A-D043N114	25B-D043N114	43.0	34.4	28.0	21.5	38.9	31.1	25.3	19.5
525...600V AC (-15%, +10%) – 3-Phase Input, 0...575V 3-Phase Output									
25A-E0P9N104	25B-E0P9N104	0.9	0.7	0.6	0.5	1.2	1.0	0.8	0.6
25A-E1P7N104	25B-E1P7N104	1.7	1.4	1.1	0.9	2.3	1.8	1.5	1.2
25A-E3P0N104	25B-E3P0N104	3.0	2.4	2.0	1.5	3.8	3.0	2.5	1.9
25A-E4P2N104	25B-E4P2N104	4.2	3.4	2.7	2.1	5.3	4.2	3.4	2.7
25A-E6P6N104	25B-E6P6N104	6.6	5.3	4.3	3.3	8.0	6.4	5.2	4.0
25A-E9P9N104	25B-E9P9N104	9.9	7.9	6.4	5.0	11.2	9.0	7.3	5.6
25A-E012N104	25B-E012N104	12.0	9.6	7.8	6.0	13.5	10.8	8.8	6.8
25A-E019N104	25B-E019N104	19.0	15.2	12.4	9.5	24.0	19.2	15.6	12.0
25A-E022N104	25B-E022N104	22.0	17.6	14.3	11.0	27.3	21.8	17.7	13.7
25A-E027N104	25B-E027N104	27.0	21.6	17.6	13.5	24.7	19.8	16.1	12.4
25A-E032N104	25B-E032N104	32.0	25.6	20.8	16.0	29.2	23.4	19.0	14.6

Accessories and Dimensions

Product Selection

Catalog Number Description

25B	-	V	2P5	N	1	0	4
Drive		Voltage Rating	Rating	Enclosure	HIM	Emission Class	Version

PowerFlex 520-Series Drive Ratings

Output Ratings					Input Voltage Range	Frame Size	PowerFlex 523	PowerFlex 525
Normal Duty		Heavy Duty		Output Current (A)				
HP	kW	HP	kW				Catalog No.	Catalog No.
100...120V AC (-15%, +10%) – 1-Phase Input, 0...230V 3-Phase Output								
0.25	0.2	0.25	0.2	1.6	85...132	A	25A-V1P6N104[2]	–
0.5	0.4	0.5	0.4	2.5	85...132	A	25A-V2P5N104	25B-V2P5N104
1.0	0.75	1.0	0.75	4.8	85...132	B	25A-V4P8N104	25B-V4P8N104
1.5	1.1	1.5	1.1	6.0	85...132	B	25A-V6P0N104	25B-V6P0N104
200...240V AC (-15%, +10%) – 1-Phase Input, 0...230V 3-Phase Output								
0.25	0.2	0.25	0.2	1.6	170...264	A	25A-A1P6N104[2]	–
0.5	0.4	0.5	0.4	2.5	170...264	A	25A-A2P5N104	25B-A2P5N104
1.0	0.75	1.0	0.75	4.8	170...264	A	25A-A4P8N104	25B-A4P8N104
2.0	1.5	2.0	1.5	8.0	170...264	B	25A-A8P0N104	25B-A8P0N104
3.0	2.2	3.0	2.2	11.0	170...264	B	25A-A011N104	25B-A011N104
200...240V AC (-15%, +10%) – 1-Phase Input with EMC Filter, 0...230V 3-Phase Output								
0.25	0.2	0.25	0.2	1.6	170...264	A	25A-A1P6N114	–
0.5	0.4	0.5	0.4	2.5	170...264	A	25A-A2P5N114	25B-A2P5N114
1.0	0.75	1.0	0.75	4.8	170...264	A	25A-A4P8N114	25B-A4P8N114
2.0	1.5	2.0	1.5	8.0	170...264	B	25A-A8P0N114	25B-A8P0N114
3.0	2.2	3.0	2.2	11.0	170...264	B	25A-A011N114	25B-A011N114
200...240V AC (-15%, +10%) – 3-Phase Input, 0...230V 3-Phase Output								
0.25	0.2	0.25	0.2	1.6	170...264	A	25A-B1P6N104[2]	–
0.5	0.4	0.5	0.4	2.5	170...264	A	25A-B2P5N104	25B-B2P5N104
1.0	0.75	1.0	0.75	5.0	170...264	A	25A-B5P0N104	25B-B5P0N104
2.0	1.5	2.0	1.5	8.0	170...264	A	25A-B8P0N104	25B-B8P0N104
3.0	2.2	3.0	2.2	11.0	170...264	A	25A-B011N104	25B-B011N104
5.0	4.0	5.0	4.0	17.5	170...264	B	25A-B017N104	25B-B017N104
7.5	5.5	7.5	5.5	24.0	170...264	C	25A-B024N104	25B-B024N104
10.0	7.5	10.0	7.5	32.2	170...264	D	25A-B032N104	25B-B032N104
15.0	11.0	10.0	7.5	48.3	170...264	E	25A-B048N104	25B-B048N104
20.0	15.0	15.0	11.0	62.1	170...264	E	25A-B062N104	25B-B062N104
380...480V AC (-15%, +10%) – 3-Phase Input, 0...460V 3-Phase Output[1]								
0.5	0.4	0.5	0.4	1.4	323...528	A	25A-D1P4N104[2]	25B-D1P4N104[2]
1.0	0.75	1.0	0.75	2.3	323...528	A	25A-D2P3N104	25B-D2P3N104
2.0	1.5	2.0	1.5	4.0	323...528	A	25A-D4P0N104	25B-D4P0N104
3.0	2.2	3.0	2.2	6.0	323...528	A	25A-D6P0N104	25B-D6P0N104
5.0	4.0	5.0	4.0	10.5	323...528	B	25A-D010N104	25B-D010N104

PowerFlex 520-Series Drive Ratings

Output Ratings					Input Voltage Range	Frame Size	PowerFlex 523	PowerFlex 525
Normal Duty		Heavy Duty		Output Current (A)				
HP	kW	HP	kW				Catalog No.	Catalog No.
7.5	5.5	7.5	5.5	13.0	323...528	C	25A-D013N104	25B-D013N104
10.0	7.5	10.0	7.5	17.0	323...528	C	25A-D017N104	25B-D017N104
15.0	11.0	15.0	11.0	24.0	323...528	D	25A-D024N104	25B-D024N104
20.0	15.0	15.0	11.0	30.0	323...528	D	25A-D030N104	25B-D030N104
380...480V AC (-15%, +10%) – 3-Phase Input with EMC Filter, 0...460V 3-Phase Output								
0.5	0.4	0.5	0.4	1.4	323...528	A	25A-D1P4N114	25B-D1P4N114
1.0	0.75	1.0	0.75	2.3	323...528	A	25A-D2P3N114	25B-D2P3N114
2.0	1.5	2.0	1.5	4.0	323...528	A	25A-D4P0N114	25B-D4P0N114
3.0	2.2	3.0	2.2	6.0	323...528	A	25A-D6P0N114	25B-D6P0N114
5.0	4.0	5.0	4.0	10.5	323...528	B	25A-D010N114	25B-D010N114
7.5	5.5	7.5	5.5	13.0	323...528	C	25A-D013N114	25B-D013N114
10.0	7.5	10.0	7.5	17.0	323...528	C	25A-D017N114	25B-D017N114
15.0	11.0	15.0	11.0	24.0	323...528	D	25A-D024N114	25B-D024N114
20.0	15.0	15.0	11.0	30.0	323...528	D	25A-D030N114	25B-D030N114
25.0	18.5	20.0	15.0	37.0	323...528	E	25A-D037N114	25B-D037N114
30.0	22.0	25.0	18.5	43.0	323...528	E	25A-D043N114	25B-D043N114
525...600V AC (-15%, +10%) – 3-Phase Input, 0...575V 3-Phase Output								
0.5	0.4	0.5	0.4	0.9	446...660	A	25A-E0P9N104(2)	25B-E0P9N104(2)
1.0	0.75	1.0	0.75	1.7	446...660	A	25A-E1P7N104	25B-E1P7N104
2.0	1.5	2.0	1.5	3.0	446...660	A	25A-E3P0N104	25B-E3P0N104
3.0	2.2	3.0	2.2	4.2	446...660	A	25A-E4P2N104	25B-E4P2N104
5.0	4.0	5.0	4.0	6.6	446...660	B	25A-E6P6N104	25B-E6P6N104
7.5	5.5	7.5	5.5	9.9	446...660	C	25A-E9P9N104	25B-E9P9N104
10.0	7.5	10.0	7.5	12.0	446...660	C	25A-E012N104	25B-E012N104
15.0	11.0	15.0	11.0	19.0	446...660	D	25A-E019N104	25B-E019N104
20.0	15.0	15.0	11.0	22.0	446...660	D	25A-E022N104	25B-E022N104
25.0	18.5	20.0	15.0	27.0	446...660	E	25A-E027N104	25B-E027N104
30.0	22.0	25.0	18.5	32.0	446...660	E	25A-E032N104	25B-E032N104

(1) A non-filtered drive is not available for 380...480V AC 25 HP (18.5 kW) and 30 HP (22.0 kW) ratings. Filtered drives are available, however you must verify that the application will support a filtered drive.

(2) These drive ratings do not come with a heatsink cooling fan and are in accordance with design specifications.

Dynamic Brake Resistors

Drive Ratings			Minimum Resistance Ω ±10%	Resistance Ω ±5%	Catalog No.(1)(2)
Input Voltage	HP	kW			
100...120V 50/60 Hz 1-Phase	0.25	0.2	56	91	AK-R2-091P500
	0.5	0.4	56	91	AK-R2-091P500
	1.0	0.75	56	91	AK-R2-091P500
	1.5	1.1	41	91	AK-R2-091P500
200...240V 50/60 Hz 1-Phase	0.25	0.2	56	91	AK-R2-091P500
	0.5	0.4	56	91	AK-R2-091P500
	1.0	0.75	56	91	AK-R2-091P500
	2.0	1.5	41	91	AK-R2-091P500
	3.0	2.2	32	47	AK-R2-047P500

Dynamic Brake Resistors

Drive Ratings			Minimum Resistance Ω ±10%	Resistance Ω ±5%	Catalog No.(1)(2)
Input Voltage	**HP**	**kW**			
200...240V 50/60 Hz 3-Phase	0.25	0.2	56	91	AK-R2-091P500
	0.5	0.4	56	91	AK-R2-091P500
	1.0	0.75	56	91	AK-R2-091P500
	2.0	1.5	41	91	AK-R2-091P500
	3.0	2.2	32	47	AK-R2-047P500
	5.0	4.0	18	47	AK-R2-047P500
	7.5	5.5	16	30	AK-R2-030P1K2
	10.0	7.5	14	30	AK-R2-030P1K2
	15.0	11.0	14	15	AK-R2-030P1K2(3)
	20.0	15.0	10	15	AK-R2-030P1K2(3)
380...480V 50/60 Hz 3-Phase	0.5	0.4	89	360	AK-R2-360P500
	1.0	0.75	89	360	AK-R2-360P500
	2.0	1.5	89	360	AK-R2-360P500
	3.0	2.2	89	120	AK-R2-120P1K2
	5.0	4.0	47	120	AK-R2-120P1K2
	7.5	5.5	47	120	AK-R2-120P1K2
	10.0	7.5	47	120	AK-R2-120P1K2
	15.0	11.0	43	60	AK-R2-120P1K2(3)
	20.0	15.0	43	60	AK-R2-120P1K2(3)
	25.0	18.5	27	40	AK-R2-120P1K2(4)
	30.0	22.0	27	40	AK-R2-120P1K2(4)
525...600V 50/60 Hz 3-Phase	0.5	0.4	112	360	AK-R2-360P500
	1.0	0.75	112	360	AK-R2-360P500
	2.0	1.5	112	360	AK-R2-360P500
	3.0	2.2	112	120	AK-R2-120P1K2
	5.0	4.0	86	120	AK-R2-120P1K2
	7.5	5.5	59	120	AK-R2-120P1K2
	10.0	7.5	59	120	AK-R2-120P1K2
	15.0	11.0	59	60	AK-R2-120P1K2(3)
	20.0	15.0	59	60	AK-R2-120P1K2(3)
	25.0	18.5	53	60	AK-R2-120P1K2(3)
	30.0	22.0	34	40	AK-R2-120P1K2(4)

(1) The resistors listed in this tables are rated for 5% duty cycle.

(2) Use of Rockwell Automation resistors is always recommended. The resistors listed have been carefully selected for optimizing performance in a variety of applications. Alternative resistors may be used, however, care must be taken when making a selection. See the PowerFlex Dynamic Braking Resistor Calculator, publication PFLEX-AT001.

(3) Requires two resistors wired in parallel.

(4) Requires three resistors wired in parallel.

EMC Line Filters

Short Circuit Current Rating = 100 kA					
Drive Ratings					
Input Voltage	**HP**	**kW**	**Current (A)**	**Frame Size**	**Catalog No.**
100...120V 50/60 Hz 1-Phase	0.25	0.2	1.6	A	25-RF011-AL
	0.5	0.4	2.5	A	25-RF011-AL
	1.0	0.75	4.8	B	25-RF023-BL
	1.5	1.1	6.0	B	25-RF023-BL

EMC Line Filters

Short Circuit Current Rating = 100 kA					
Drive Ratings					
Input Voltage	**HP**	**kW**	**Current (A)**	**Frame Size**	**Catalog No.**
200...240V 50/60 Hz 1-Phase	0.25	0.2	1.6	A	25-RF011-AL
	0.5	0.4	2.5	A	25-RF011-AL
	1.0	0.75	4.8	A	25-RF011-AL
	2.0	1.5	8.0	B	25-RF023-BL
	3.0	2.2	11.0	B	25-RF023-BL
200...240V 50/60 Hz 3-Phase	0.25	0.2	1.6	A	25-RF014-AL
	0.5	0.4	2.5	A	25-RF014-AL
	1.0	0.75	5.0	A	25-RF014-AL
	2.0	1.5	8.0	A	25-RF014-AL
	3.0	2.2	11.0	A	25-RF014-AL
	5.0	4.0	17.5	B	25-RF021-BL
	7.5	5.5	24.0	C	25-RF027-CL
	10.0	7.5	32.2	D	25-RF035-DL
	15.0	11.0	48.3	E	25-RF056-EL
	20.0	15.0	62.1	E	25-RF056-EL
380...480V 50/60 Hz 3-Phase	0.5	0.4	1.4	A	25-RF7P5-AL
	1.0	0.75	2.3	A	25-RF7P5-AL
	2.0	1.5	4.0	A	25-RF7P5-AL
	3.0	2.2	6.0	A	25-RF7P5-AL
	5.0	4.0	10.5	B	25-RF014-BL
	7.5	5.5	13.0	C	25-RF018-CL
	10.0	7.5	17.0	C	25-RF018-CL
	15.0	11.0	24.0	D	25-RF033-DL
	20.0	15.0	30.0	D	25-RF033-DL
	25.0	18.5	37.0	E	25-RF039-EL
	30.0	22.0	43.0	E	25-RF039-EL(1)
525...600V 50/60 Hz 3-Phase	0.5	0.4	0.9	A	25-RF8P0-BL(2)
	1.0	0.75	1.7	A	25-RF8P0-BL(2)
	2.0	1.5	3.0	A	25-RF8P0-BL(2)
	3.0	2.2	4.2	A	25-RF8P0-BL(2)
	5.0	4.0	6.6	B	25-RF8P0-BL
	7.5	5.5	9.9	C	25-RF014-CL
	10.0	7.5	12.0	C	25-RF014-CL
	15.0	11.0	19.0	D	25-RF027-DL
	20.0	15.0	22.0	D	25-RF027-DL
	25.0	18.5	27.0	E	25-RF029-EL
	30.0	22.0	32.0	E	25-RF029-EL(1)

(1) EMC Line Filter size is based on the input current of the drive. See the tables on page 26 and page 27 for more information.

(2) This 600V drive rating needs to be matched with a frame B EMC Line Filter.

EMC Plates

Item	Description	Frame Size	Catalog No.
EMC Plate	Optional grounding plate for shielded cables.	A	25-EMC1-FA
		B	25-EMC1-FB
		C	25-EMC1-FC
		D	25-EMC1-FD
		E	25-EMC1-FE

Human Interface Module (HIM) Option Kits and Accessories

Item	Description	Catalog No.
LCD Display, Remote Panel Mount	Digital speed control CopyCat capable IP66 (NEMA Type 4X/12) indoor use only Includes 2.0 meter cable	22-HIM-C2S
LCD Display, Remote Handheld	Digital speed control Full numeric keyboard CopyCat capable IP 30 (NEMA Type 1) Includes 1.0 meter cable Panel mount with optional Bezel Kit	22-HIM-A3
Bezel Kit	Panel mount for LCD Display, Remote Handheld unit, IP 30 (NEMA Type 1) Includes 2.0 m DSI cable	22-HIM-B1
DSI HIM Cable (DSI HIM to RJ45 cable)	1.0 m (3.3 ft)	22-HIM-H10
	2.9 m (9.51 ft)	22-HIM-H30

IP 30/NEMA 1/UL Type 1 Kit

Item	Description	Frame Size	Catalog No.
IP 30/NEMA 1/UL Type 1 Kit	Field installed kit. Converts drive to IP 30/NEMA 1/UL Type 1 enclosure. Includes conduit box with mounting screws and plastic top panel.	A	25-JBAA
		B	25-JBAB
		C	25-JBAC
		D	25-JBAD
		E	25-JBAE

Control Module Fan Kit

Item	Description	Frame Size	Catalog No.
Control Module Fan Kit	For use with drive in environments with ambient temperatures up to 70 °C or horizontal mounting.	A...D	25-FAN1-70C
		E	25-FAN2-70C

Incremental Encoder Input Option

Item	Description	Catalog No.
Incremental Encoder	Incremental encoder input option board.	25-ENC-1

WARNING: Only the 25-ENC-1 Encoder will work properly in the PowerFlex 525 drive. Installing an incorrect encoder card, such as the PowerFlex 527 25-ENC-2 will cause damage to the PowerFlex 525 drive.

Bulletin 160 to PowerFlex 520-Series Mounting Adapter Plate

Item	Description	B160 Frame Size	Catalog No.
Mounting Adapter Plate	For use with drive when replacing Bulletin 160 drives in existing installations to a PowerFlex 520-Series drive. Select the catalog number based on the frame size of your Bulletin 160 drive.	A	25-MAP-FA
		B	25-MAP-FB

Replacement Parts

PowerFlex 520-Series Power Module

Item	Description
PowerFlex 520-Series Power Module	Replacement power module for use with PowerFlex 520-Series drives. Includes: • Power Module • Power Module Front Cover • Power Terminal Guard • Heatsink Fan

Output Ratings					Input Voltage Range	Frame Size	Catalog No.
Normal Duty		Heavy Duty		Output Current (A)			
HP	kW	HP	kW				
100...120V AC (-15%, +10%) – 1-Phase Input, 0...230V 3-Phase Output							
0.25	0.2	0.25	0.2	1.6	85...132	A	25-PM1-V1P6
0.5	0.4	0.5	0.4	2.5	85...132	A	25-PM1-V2P5
1.0	0.75	1.0	0.75	4.8	85...132	B	25-PM1-V4P8
1.5	1.1	1.5	1.1	6.0	85...132	B	25-PM1-V6P0
200...240V AC (-15%, +10%) – 1-Phase Input, 0...230V 3-Phase Output							
0.25	0.2	0.25	0.2	1.6	170...264	A	25-PM1-A1P6
0.5	0.4	0.5	0.4	2.5	170...264	A	25-PM1-A2P5
1.0	0.75	1.0	0.75	4.8	170...264	A	25-PM1-A4P8
2.0	1.5	2.0	1.5	8.0	170...264	B	25-PM1-A8P0
3.0	2.2	3.0	2.2	11.0	170...264	B	25-PM1-A011
200...240V AC (-15%, +10%) – 1-Phase Input with EMC Filter, 0...230V 3-Phase Output							
0.25	0.2	0.25	0.2	1.6	170...264	A	25-PM2-A1P6
0.5	0.4	0.5	0.4	2.5	170...264	A	25-PM2-A2P5
1.0	0.75	1.0	0.75	4.8	170...264	A	25-PM2-A4P8
2.0	1.5	2.0	1.5	8.0	170...264	B	25-PM2-A8P0
3.0	2.2	3.0	2.2	11.0	170...264	B	25-PM2-A011
200...240V AC (-15%, +10%) – 3-Phase Input, 0...230V 3-Phase Output							
0.25	0.2	0.25	0.2	1.6	170...264	A	25-PM1-B1P6
0.5	0.4	0.5	0.4	2.5	170...264	A	25-PM1-B2P5
1.0	0.75	1.0	0.75	5.0	170...264	A	25-PM1-B5P0
2.0	1.5	2.0	1.5	8.0	170...264	A	25-PM1-B8P0
3.0	2.2	3.0	2.2	11.0	170...264	A	25-PM1-B011
5.0	4.0	5.0	4.0	17.5	170...264	B	25-PM1-B017
7.5	5.5	7.5	5.5	24.0	170...264	C	25-PM1-B024
10.0	7.5	10.0	7.5	32.2	170...264	D	25-PM1-B032
15.0	11.0	10.0	7.5	48.3	170...264	E	25-PM1-B048
20.0	15.0	15.0	11.0	62.1	170...264	E	25-PM1-B062
380...480V AC (-15%, +10%) – 3-Phase Input, 0...460V 3-Phase Output							
0.5	0.4	0.5	0.4	1.4	323...528	A	25-PM1-D1P4

Output Ratings							
Normal Duty		Heavy Duty		Output Current (A)	Input Voltage Range	Frame Size	Catalog No.
HP	kW	HP	kW				
1.0	0.75	1.0	0.75	2.3	323...528	A	25-PM1-D2P3
2.0	1.5	2.0	1.5	4.0	323...528	A	25-PM1-D4P0
3.0	2.2	3.0	2.2	6.0	323...528	A	25-PM1-D6P0
5.0	4.0	5.0	4.0	10.5	323...528	B	25-PM1-D010
7.5	5.5	7.5	5.5	13.0	323...528	C	25-PM1-D013
10.0	7.5	10.0	7.5	17.0	323...528	C	25-PM1-D017
15.0	11.0	15.0	11.0	24.0	323...528	D	25-PM1-D024
20.0	15.0	15.0	11.0	30.0	323...528	D	25-PM1-D030
380...480V AC (-15%, +10%) – 3-Phase Input with EMC Filter, 0...460V 3-Phase Output							
0.5	0.4	0.5	0.4	1.4	323...528	A	25-PM2-D1P4
1.0	0.75	1.0	0.75	2.3	323...528	A	25-PM2-D2P3
2.0	1.5	2.0	1.5	4.0	323...528	A	25-PM2-D4P0
3.0	2.2	3.0	2.2	6.0	323...528	A	25-PM2-D6P0
5.0	4.0	5.0	4.0	10.5	323...528	B	25-PM2-D010
7.5	5.5	7.5	5.5	13.0	323...528	C	25-PM2-D013
10.0	7.5	10.0	7.5	17.0	323...528	C	25-PM2-D017
15.0	11.0	15.0	11.0	24.0	323...528	D	25-PM2-D024
20.0	15.0	15.0	11.0	30.0	323...528	D	25-PM2-D030
25.0	18.5	20.0	15.0	37.0	323...528	E	25-PM2-D037
30.0	22.0	25.0	18.5	43.0	323...528	E	25-PM2-D043
525...600V AC (-15%, +10%) – 3-Phase Input, 0...575V 3-Phase Output							
0.5	0.4	0.5	0.4	0.9	446...660	A	25-PM1-E0P9
1.0	0.75	1.0	0.75	1.7	446...660	A	25-PM1-E1P7
2.0	1.5	2.0	1.5	3.0	446...660	A	25-PM1-E3P0
3.0	2.2	3.0	2.2	4.2	446...660	A	25-PM1-E4P2
5.0	4.0	5.0	4.0	6.6	446...660	B	25-PM1-E6P6
7.5	5.5	7.5	5.5	9.9	446...660	C	25-PM1-E9P9
10.0	7.5	10.0	7.5	12.0	446...660	C	25-PM1-E012
15.0	11.0	15.0	11.0	19.0	446...660	D	25-PM1-E019
20.0	15.0	15.0	11.0	22.0	446...660	D	25-PM1-E022
25.0	18.5	20.0	15.0	27.0	446...660	E	25-PM1-E027
30.0	22.0	25.0	18.5	32.0	446...660	E	25-PM1-E032

PowerFlex 520-Series Control Module

Item	Description	Frame Size	Catalog No.
PowerFlex 523 Control Module	Replacement control module for use with PowerFlex 520-Series drives. Includes: • Control Module • Control Module Front Cover	A...E	25A-CTM1
PowerFlex 525 Control Module			25B-CTM1

Other Parts

Item	Description	Frame Size	Catalog No.
PowerFlex 523 Control Module Front Cover	Replacement cover for the control module I/O terminals, EtherNet/IP and DSI ports.	A...E	25A-CTMFC1
PowerFlex 525 Control Module Front Cover			25B-CTMFC1

Other Parts

Item	Description	Frame Size	Catalog No.
PowerFlex 520-Series Power Module Front Cover	Replacement cover for the PowerFlex 520-Series power module.	B	25-PMFC-FB
		C	25-PMFC-FC
		D	25-PMFC-FD
		E	25-PMFC-FE
PowerFlex 520-Series Power Terminal Guard	Replacement finger guard for power terminals.	A	25-PTG1-FA
		B	25-PTG1-FB
		C	25-PTG1-FC
		D	25-PTG1-FD
		E	25-PTG1-FE
PowerFlex 520-Series Heatsink Fan Kit	Replacement fan for drive power module.	A	25-FAN1-FA
		B	25-FAN1-FB
		C	25-FAN1-FC
		D	25-FAN1-FD
		E	25-FAN1-FE
PowerFlex 520-Series EMC Cores	Replacement EMC cores	A	25-CORE-A
			25-CORE-RF-A
		B	25-CORE-B
			25-CORE-RF-B
		C	25-CORE-C
			25-CORE-RF-C
		D	25-CORE-D
			25-CORE-RF-D
		E	25-CORE-E
			25-CORE-RF-E

Communication Option Kits and Accessories

Item	Description	Catalog No.
Communication Adapters	Embedded communication options for use with the PowerFlex 520-Series drives: • DeviceNet™ • Dual Port EtherNet/IP™ • PROFIBUS™ DP-V1	 25-COMM-D 25-COMM-E2P 25-COMM-P
Compact I/O Module	Three channel	1769-SM2
Universal Serial Bus™ (USB) Converter Module	Provides serial communication with DF1 protocol for use with Connected Components Workbench software. Includes: • 2 m USB cable (1) • 20-HIM-H10 cable (1) • 22-HIM-H10 cable (1)	1203-USB
Serial Converter Module (RS485 to RS232)	Provides serial communication with DF1 protocol for use with Connected Components Workbench software. Includes: • DSI to RS232 serial converter (1) • 1203-SFC serial cable (1) • 22-RJ45CBL-C20 cable (1)	22-SCM-232
DSI Cable	2.0 m RJ45 to RJ45 cable, male to male connectors.	22-RJ45CBL-C20
Serial Cable	2.0 m serial cable with a locking low profile connector to connect to the serial converter and a 9-pin sub-miniature D female connector to connect to a computer.	1203-SFC
Splitter Cable	RJ45 one to two port splitter cable (Modbus only)	AK-U0-RJ45-SC1

Communication Option Kits and Accessories

Item	Description	Catalog No.
Terminating Resistors	RJ45 120 Ohm resistors (2 pieces)	AK-U0-RJ45-TR1
Terminal Block	RJ45 Two position terminal block (5 pieces)	AK-U0-RJ45-TB2P
Connected Components Workbench Software (Download or DVD-ROM)	Windows-based software packages for programming and configuring Allen-Bradley drives and other Rockwell Automation products. Compatibility: Windows XP, Windows Vista and Windows 7	http://ab.rockwellautomation.com/programmable-controllers/connected-components-workbench-software

Bulletin 1321-3R Series Line Reactors

Output Ratings[1]				Input Line Reactor[3][4]		Output Line Reactor[3][4]	
Normal Duty		Heavy Duty		IP00 (Open Style)	IP11 (NEMA/UL Type 1)	IP00 (Open Style)	IP11 (NEMA/UL Type 1)
HP	kW	HP	kW	Catalog No.	Catalog No.	Catalog No.	Catalog No.
200...240V 50/60 Hz 1-Phase[2]							
0.25	0.2	0.25	0.2	1321-3R4-A	1321-3RA4-A	1321-3R2-D	1321-3RA2-D
0.5	0.4	0.5	0.4	1321-3R8-A	1321-3RA8-A	1321-3R2-D	1321-3RA2-D
1.0	0.75	1.0	0.75	1321-3R8-A	1321-3RA8-A	1321-3R4-A	1321-3RA4-A
2.0	1.5	2.0	1.5	1321-3R18-A	1321-3RA18-A	1321-3R8-A	1321-3RA8-A
3.0	2.2	3.0	2.2	1321-3R18-A	1321-3RA18-A	1321-3R12-A	1321-3RA12-A
200...240V 50/60 Hz 3-Phase							
0.25	0.2	0.25	0.2	1321-3R2-D	1321-3RA2-D	1321-3R2-D	1321-3RA2-D
0.5	0.4	0.5	0.4	1321-3R2-D	1321-3RA2-D	1321-3R2-D	1321-3RA2-D
1.0	0.75	1.0	0.75	1321-3R4-A	1321-3RA4-A	1321-3R4-A	1321-3RA4-A
2.0	1.5	2.0	1.5	1321-3R8-A	1321-3RA8-A	1321-3R8-A	1321-3RA8-A
3.0	2.2	3.0	2.2	1321-3R12-A	1321-3RA12-A	1321-3R12-A	1321-3RA12-A
5.0	4.0	5.0	4.0	1321-3R18-A	1321-3RA18-A	1321-3R18-A	1321-3RA18-A
7.5	5.5	7.5	5.5	1321-3R25-A	1321-3RA25-A	1321-3R25-A	1321-3RA25-A
10.0	7.5	10.0	7.5	1321-3R35-A	1321-3RA35-A	1321-3R35-A	1321-3RA35-A
15.0	11.0	10.0	7.5	1321-3R45-A	1321-3RA45-A	1321-3R45-A	1321-3RA45-A
20.0	15.0	15.0	11.0	1321-3R55-A (ND) 1321-3R45-A (HD)	1321-3RA55-A (ND) 1321-3RA45-A (HD)	1321-3R55-A (ND) 1321-3R45-A (HD)	1321-3RA55-A (ND) 1321-3RA45-A (HD)
380...480V 50/60 Hz 3-Phase							
0.5	0.4	0.5	0.4	1321-3R2-B	1321-3RA2-B	1321-3R2-B	1321-3RA2-B
1.0	0.75	1.0	0.75	1321-3R4-C	1321-3RA4-C	1321-3R4-C	1321-3RA4-C
2.0	1.5	2.0	1.5	1321-3R4-B	1321-3RA4-B	1321-3R4-B	1321-3RA4-B
3.0	2.2	3.0	2.2	1321-3R8-C	1321-3RA8-C	1321-3R8-C	1321-3RA8-C
5.0	4.0	5.0	4.0	1321-3R12-B	1321-3RA12-B	1321-3R12-B	1321-3RA12-B
7.5	5.5	7.5	5.5	1321-3R12-B	1321-3RA12-B	1321-3R12-B	1321-3RA12-B
10.0	7.5	10.0	7.5	1321-3R18-B	1321-3RA18-B	1321-3R18-B	1321-3RA18-B
15.0	11.0	15.0	11.0	1321-3R25-B	1321-3RA25-B	1321-3R25-B	1321-3RA25-B
20.0	15.0	15.0	11.0	1321-3R35-B (ND) 1321-3R25-B (HD)	1321-3RA35-B (ND) 1321-3RA25-B (HD)	1321-3R35-B (ND) 1321-3R25-B (HD)	1321-3RA35-B (ND) 1321-3RA25-B (HD)
25.0	18.5	20.0	15.0	1321-3R35-B	1321-3RA35-B	1321-3R35-B	1321-3RA35-B
30.0	22.0	25.0	18.5	1321-3R45-B (ND) 1321-3R35-B (HD)	1321-3RA45-B (ND) 1321-3RA35-B (HD)	1321-3R45-B (ND) 1321-3R35-B (HD)	1321-3RA45-B (ND) 1321-3RA35-B (HD)
525...600V 50/60 Hz 3-Phase							
0.5	0.4	0.5	0.4	1321-3R1-C	1321-3RA1-C	1321-3R1-C	1321-3RA1-C
1.0	0.75	1.0	0.75	1321-3R2-B	1321-3RA2-B	1321-3R2-B	1321-3RA2-B
2.0	1.5	2.0	1.5	1321-3R4-C	1321-3RA4-C	1321-3R4-C	1321-3RA4-C

Bulletin 1321-3R Series Line Reactors

Output Ratings[1]				Input Line Reactor[3][4]		Output Line Reactor[3][4]	
Normal Duty		Heavy Duty		IP00 (Open Style)	IP11 (NEMA/UL Type 1)	IP00 (Open Style)	IP11 (NEMA/UL Type 1)
HP	kW	HP	kW	Catalog No.	Catalog No.	Catalog No.	Catalog No.
3.0	2.2	3.0	2.2	1321-3R4-B	1321-3RA4-B	1321-3R4-B	1321-3RA4-B
5.0	4.0	5.0	4.0	1321-3R8-C	1321-3RA8-C	1321-3R8-C	1321-3RA8-C
7.5	5.5	7.5	5.5	1321-3R12-B	1321-3RA12-B	1321-3R12-B	1321-3RA12-B
10.0	7.5	10.0	7.5	1321-3R12-B	1321-3RA12-B	1321-3R12-B	1321-3RA12-B
15.0	11.0	15.0	11.0	1321-3R18-B	1321-3RA18-B	1321-3R18-B	1321-3RA18-B
20.0	15.0	15.0	11.0	1321-3R25-B (ND) 1321-3R18-B (HD)	1321-3RA25-B (ND) 1321-3RA18-B (HD)	1321-3R25-B (ND) 1321-3R18-B (HD)	1321-3RA25-B (ND) 1321-3RA18-B (HD)
25.0	18.5	20.0	15.0	1321-3R35-C (ND) 1321-3R25-C (HD)	1321-3RA35-C (ND) 1321-3RA25-C (HD)	1321-3R35-C (ND) 1321-3R25-C (HD)	1321-3RA35-C (ND) 1321-3RA25-C (HD)
30.0	22.0	25.0	18.5	1321-3R35-C (ND) 1321-3R25-B (HD)	1321-3RA35-C (ND) 1321-3RA25-B (HD)	1321-3R35-C (ND) 1321-3R25-B (HD)	1321-3RA35-C (ND) 1321-3RA25-B (HD)

(1) Normal Duty and Heavy Duty ratings for 15 HP (11 kW) and below are identical except for 200...240V 3-Phase 15 HP (11 kW) drive.

(2) Standard 3-phase reactors can be used for 1-phase applications by routing each of the two supply conductors through an outside coil and leaving the center open.

(3) Catalog numbers listed are for 3% impedance at 60 Hz. 5% impedance reactor types are also available. See publication 1321-TD001.

(4) Input line reactors were sized based on the NEC fundamental motor amps. Output line reactors were sized based on the VFD rated output currents.

Product Dimensions

The PowerFlex 520-series drive is available in five frame sizes. See the PowerFlex 520-Series Drive Ratings on page 175 for information on power ratings.

PowerFlex 520-Series Drive Weight

Frame Size	Weight (kg/lb)
A	1.1 / 2.4
B	1.6 / 3.5
C	2.3 / 5.0
D	3.9 / 8.6
E	12.9 / 28.4

IP 20/Open Type – Frame A

Dimensions are in millimeters and (inches)

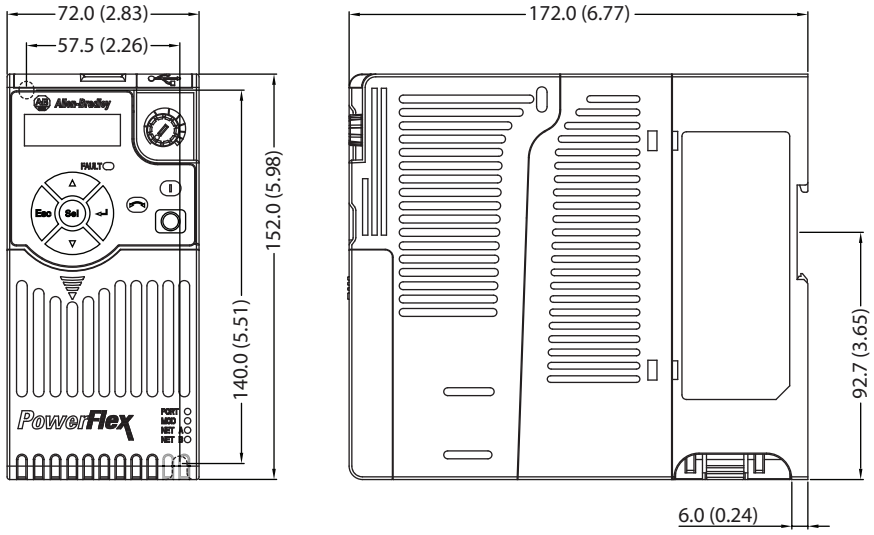

IP 20/Open Type – Frame B

Dimensions are in millimeters and (inches)

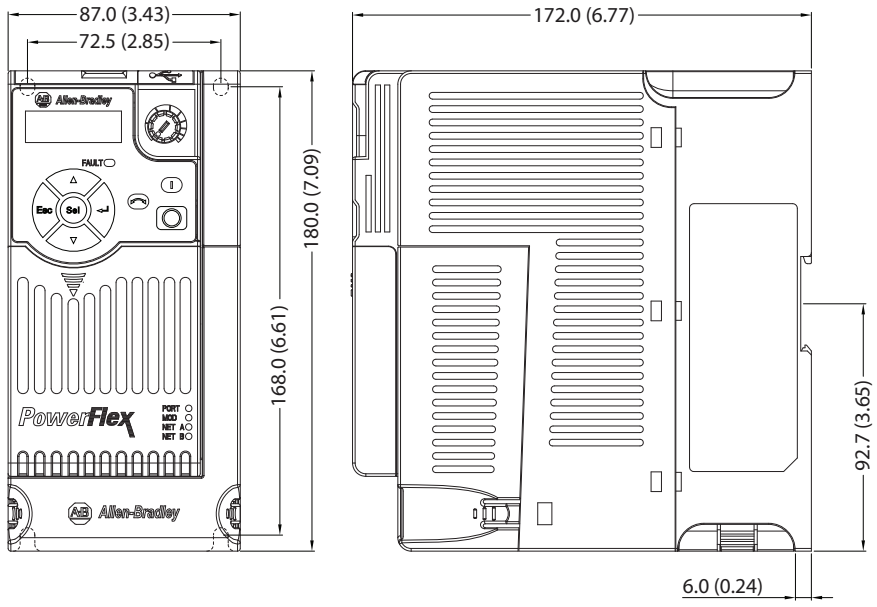

IP 20/Open Type – Frame C

Dimensions are in millimeters and (inches)

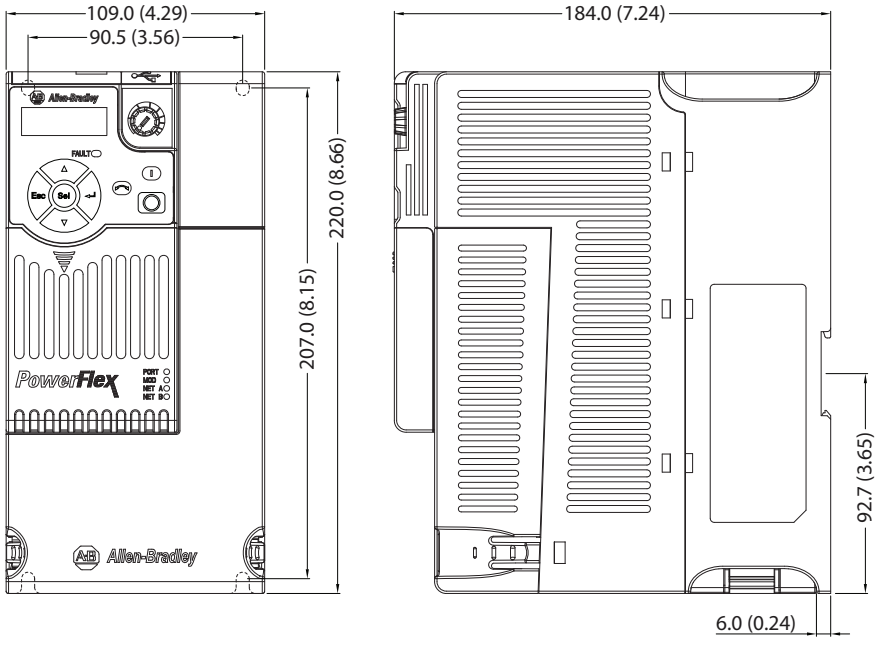

IP 20/Open Type – Frame D

Dimensions are in millimeters and (inches)

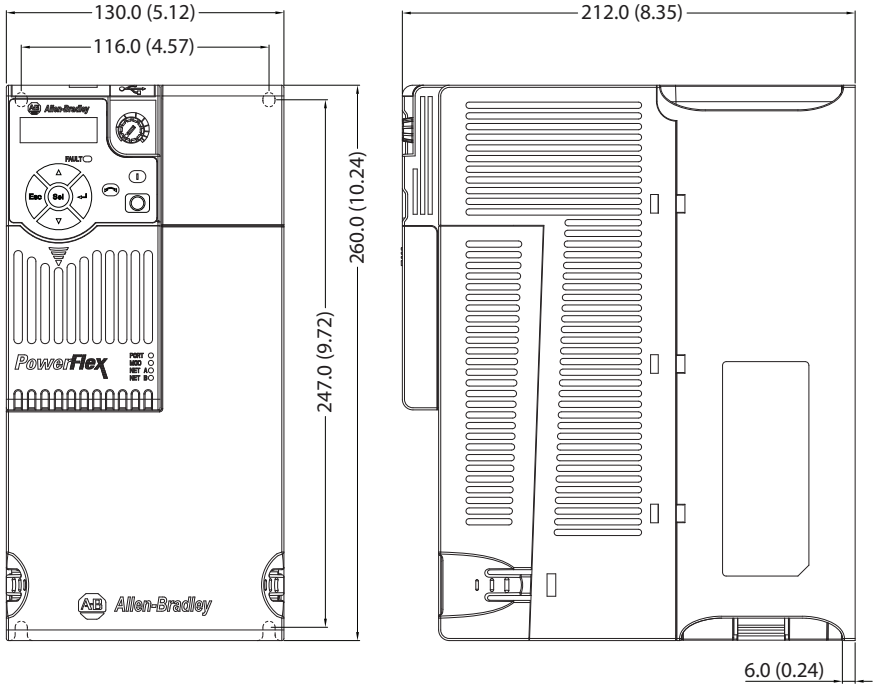

IP 20/Open Type – Frame E

Dimensions are in millimeters and (inches)

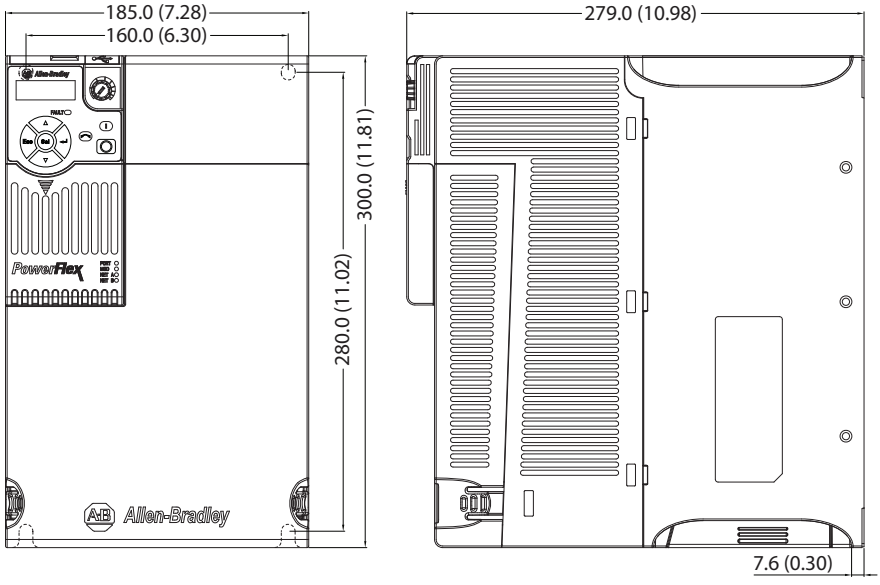

Control Module Fan Kit

25-FAN1-70C

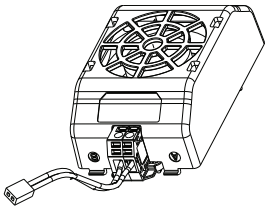

25-FAN2-70C

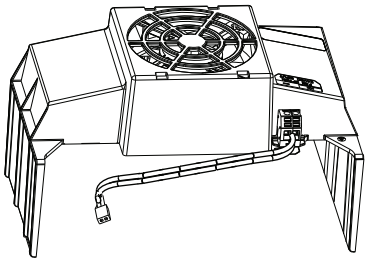

Specifications	25-FAN1-70C	25-FAN2-70C
Rated Voltage	24V DC	
Operation Voltage	14...27.6V DC	
Input Current	0.1 A	0.15 A
Speed (Reference)	7000 rpm	4500 ± 10% rpm
Maximum Air Flow (At zero static pressure)	0.575 m^3/min	1.574 m^3/min
Maximum Air Pressure (At zero air flow)	7.70 mmH_2O	9.598 mmH_2O
Acoustical Noise	40.5 dB-A	46.0 dB-A
Insulation Type	UL Class A	
Frame Size	Frame A...D	Frame E
Wire Size	0.32 mm^2 (22 AWG)	
Torque	0.29...0.39 Nm (2.6...3.47 lb-in.)	

IP 20/Open Type with Control Module Fan Kit – Frame A...C

Dimensions are in millimeters and (inches)

Frame A

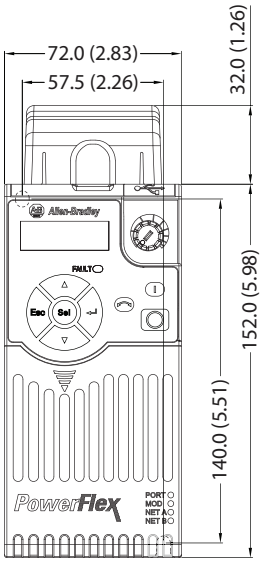

Frame B

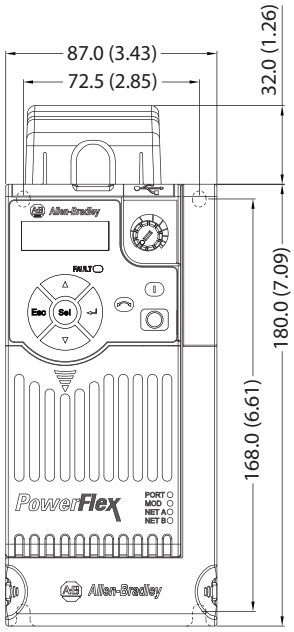

Frame C

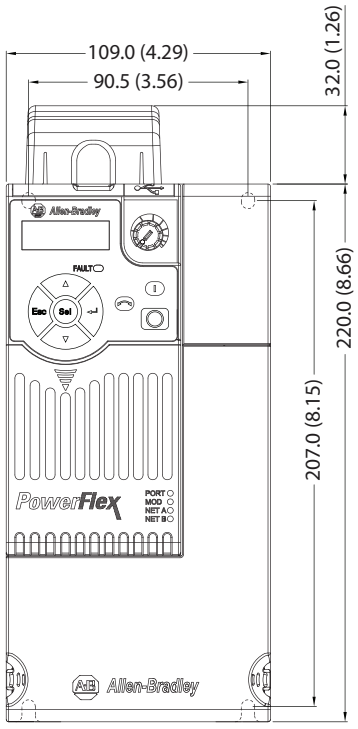

IMPORTANT An external 24V DC power source is required when using the Control Module Fan Kit with drive frames A, B, and C.

IP 20/Open Type with Control Module Fan Kit – Frame D...E

Dimensions are in millimeters and (inches)

Frame D

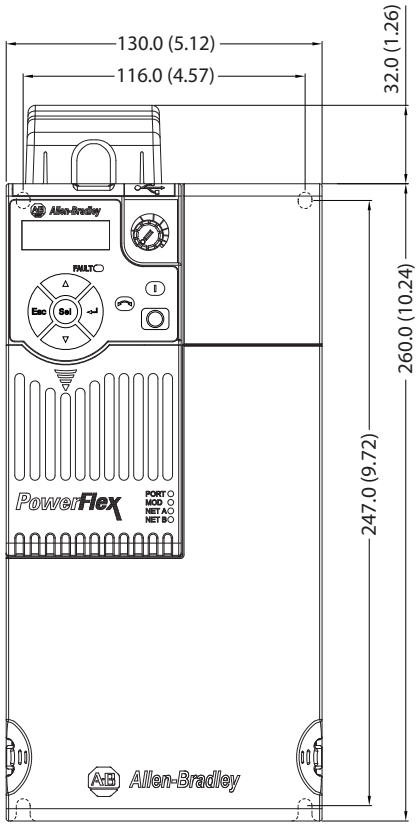

Frame E

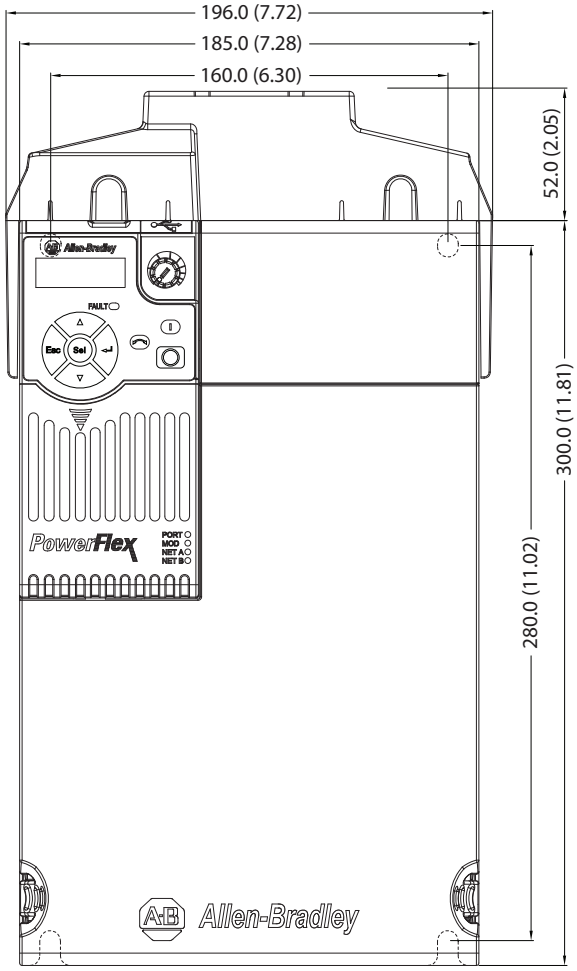

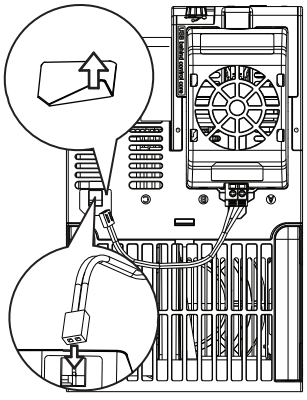

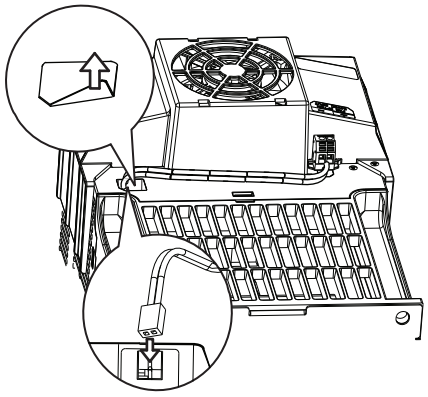

IMPORTANT Remove the label to access the built-in 24V supply on drive frames D and E for use with the Control Module Fan Kit.

IP 30/NEMA 1/UL Type 1 – Frame A

Dimensions are in millimeters and (inches)

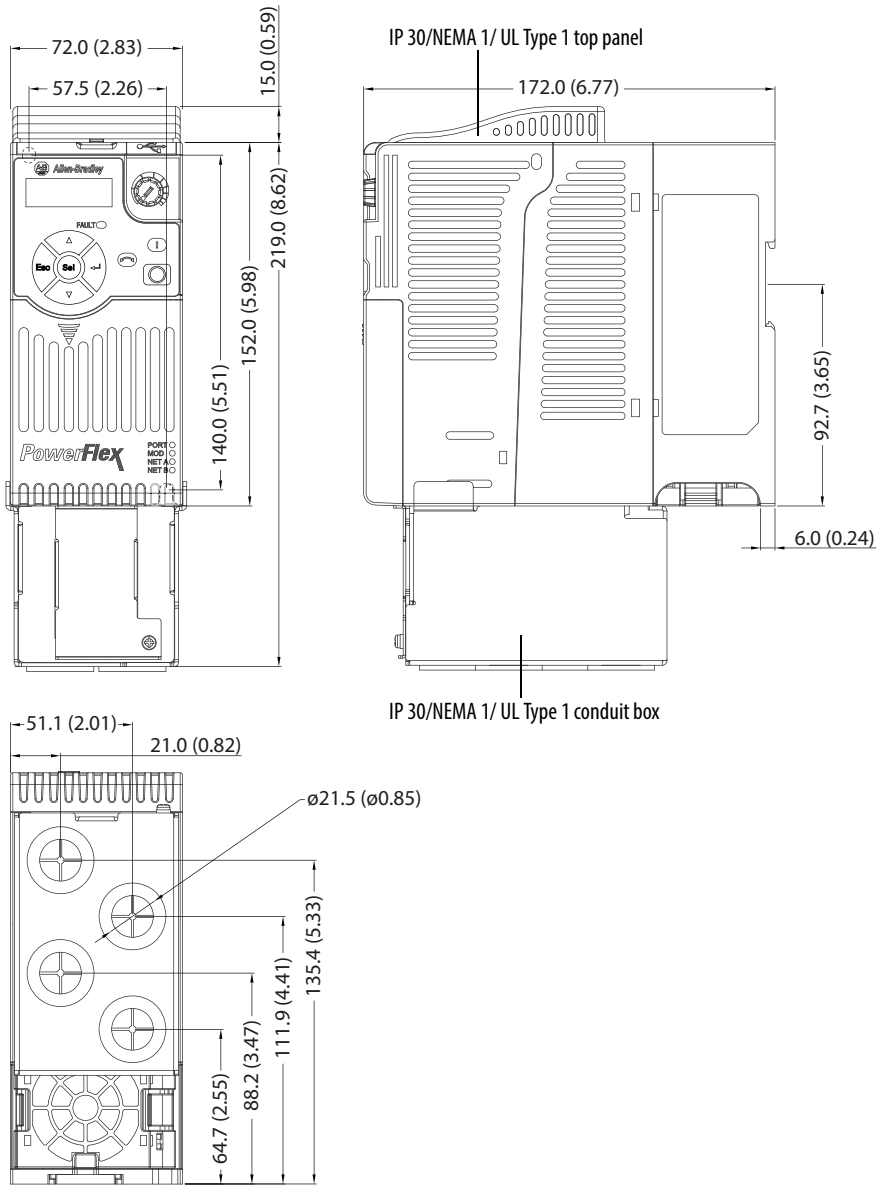

IP 30/NEMA 1/UL Type 1 – Frame B

Dimensions are in millimeters and (inches)

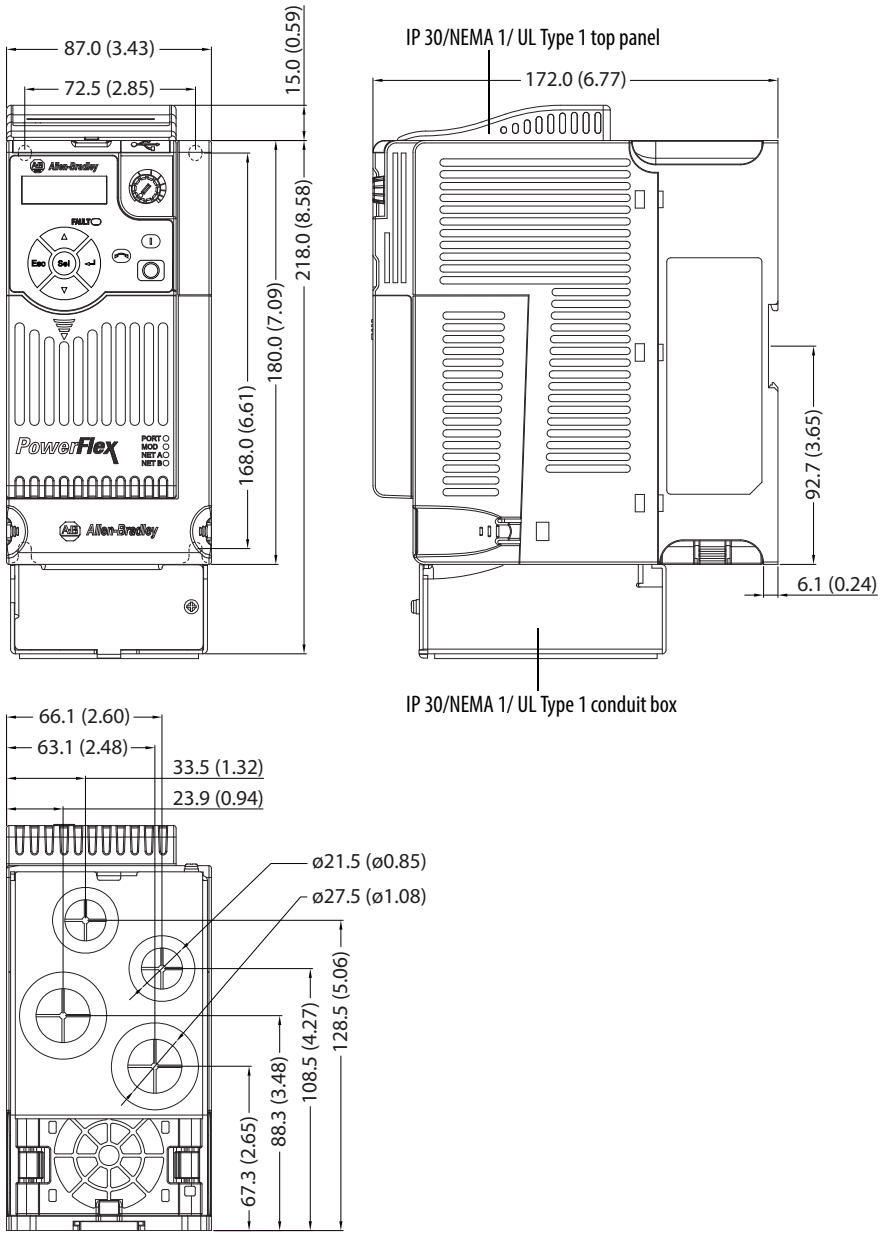

IP 30/NEMA 1/UL Type 1 – Frame C

Dimensions are in millimeters and (inches)

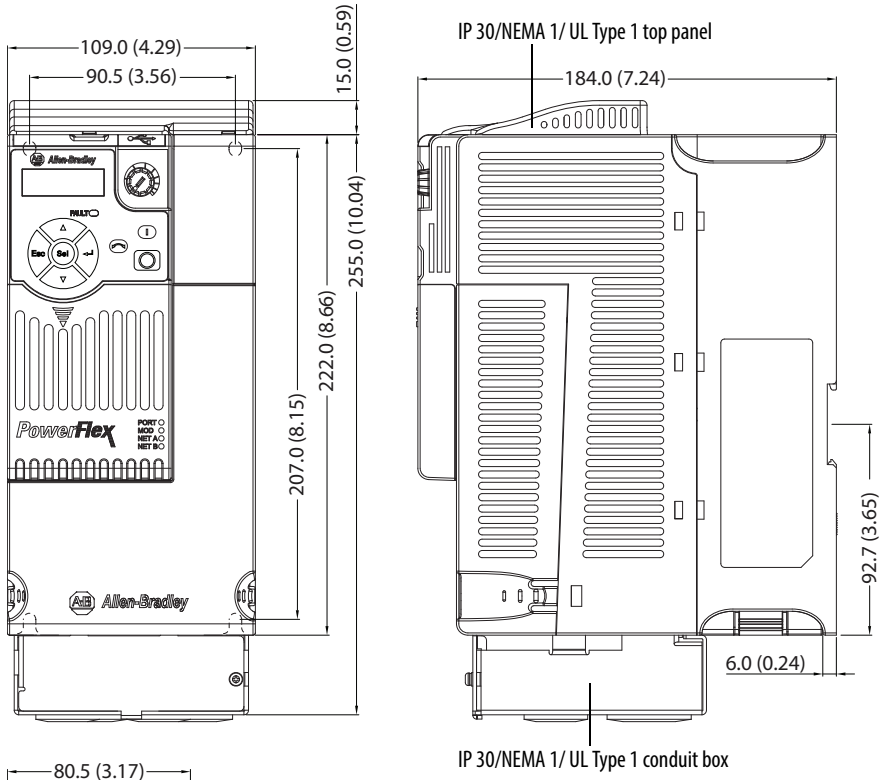

IP 30/NEMA 1/UL Type 1 – Frame D

Dimensions are in millimeters and (inches)

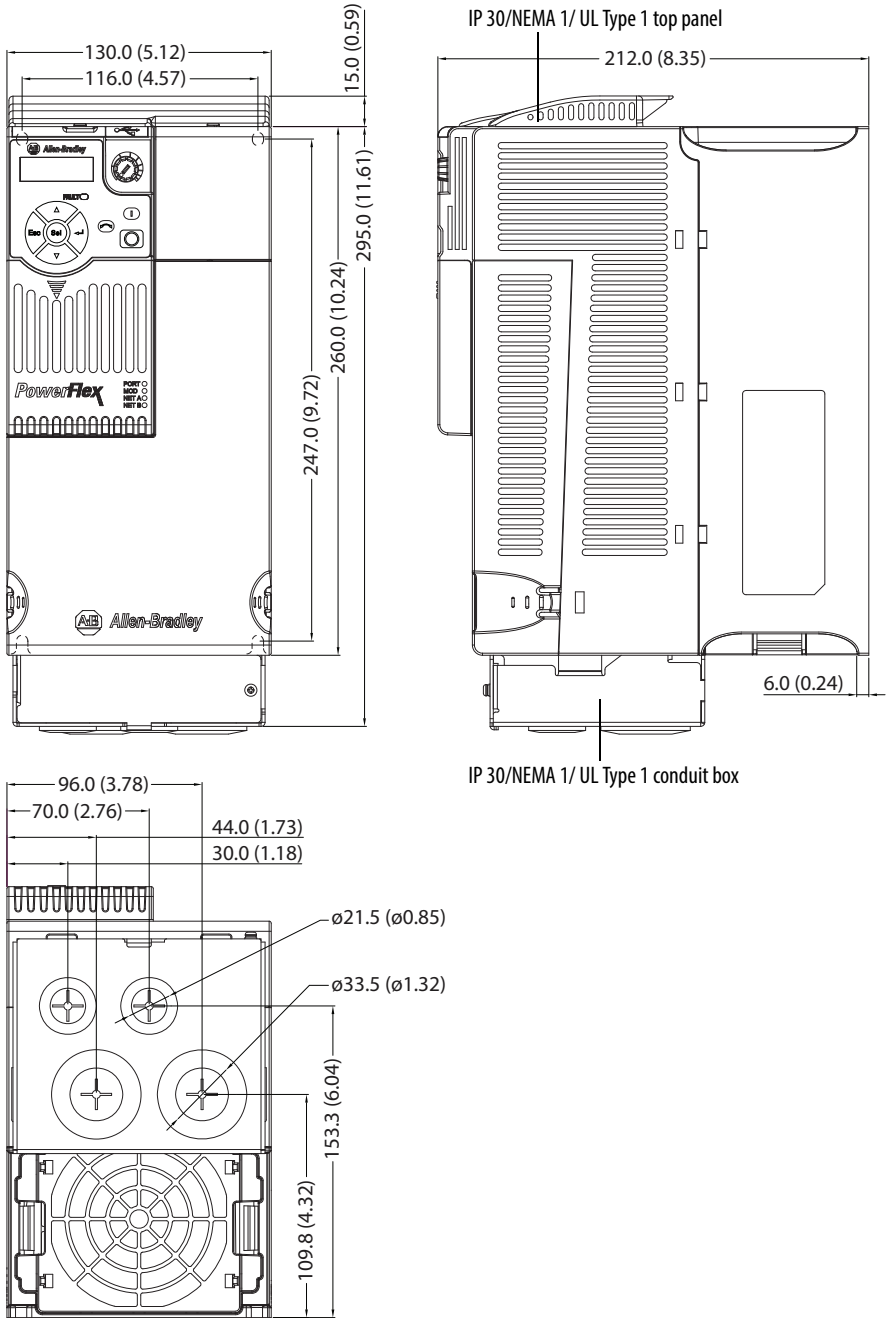

IP 30/NEMA 1/UL Type 1 – Frame E

Dimensions are in millimeters and (inches)

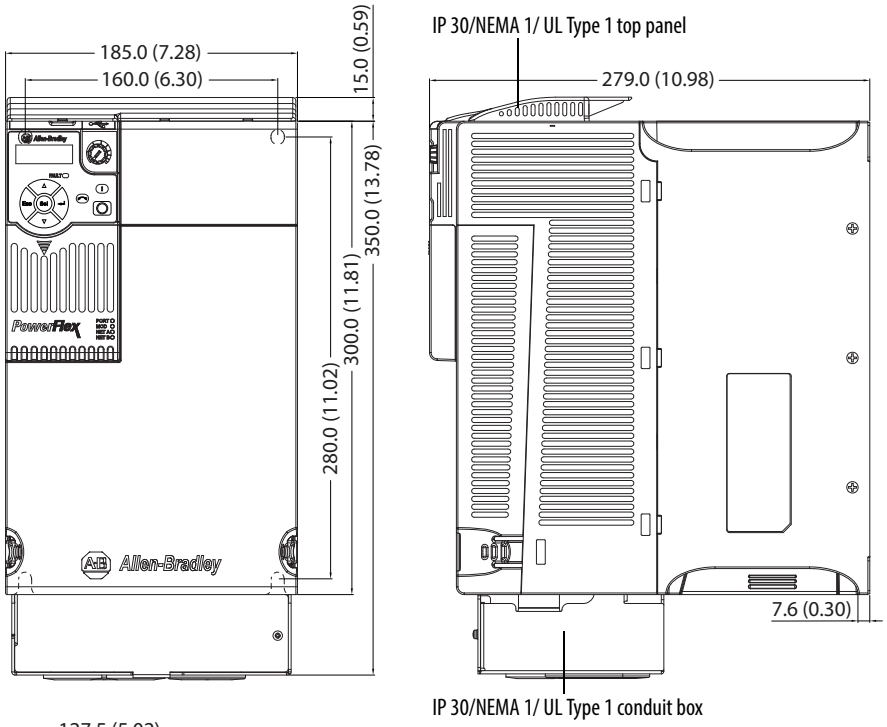

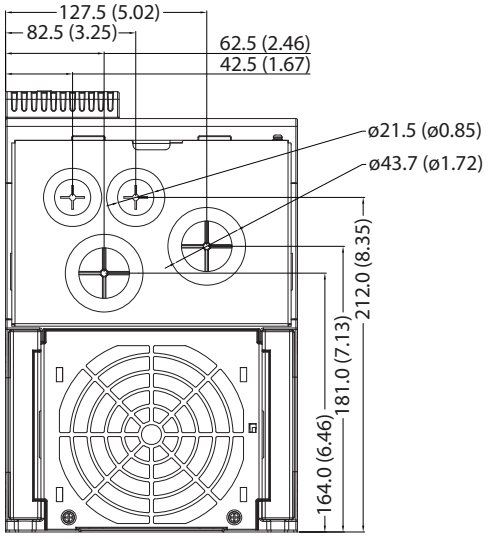

EMC Line Filter – Frame A

Dimensions are in millimeters and (inches)

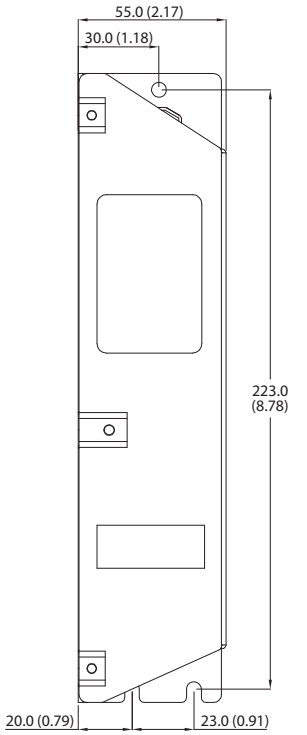

Filter can be mounted onto the back of the drive.

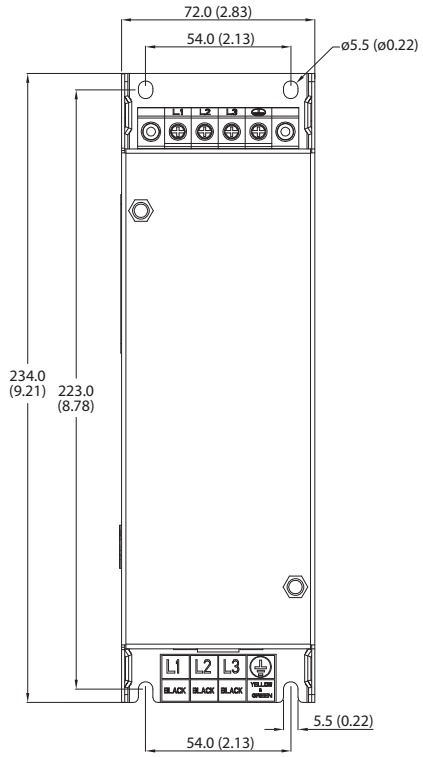

EMC Line Filter – Frame B

Dimensions are in millimeters and (inches)

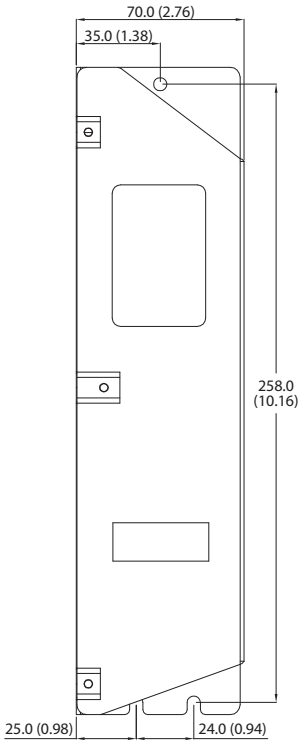

Filter can be mounted onto the back of the drive.

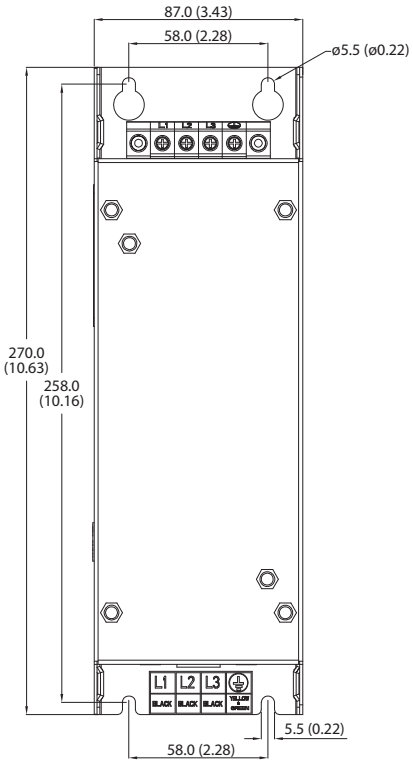

EMC Line Filter – Frame C

Dimensions are in millimeters and (inches)

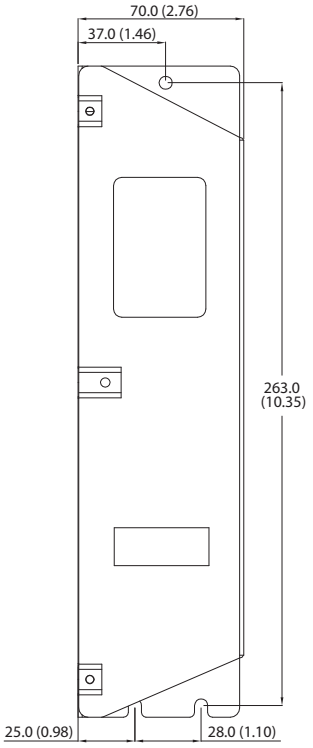

Filter can be mounted onto the back of the drive.

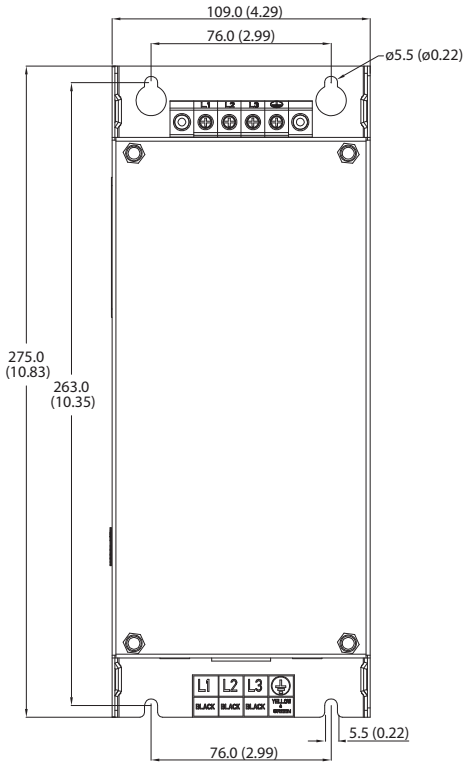

EMC Line Filter – Frame D

Dimensions are in millimeters and (inches)

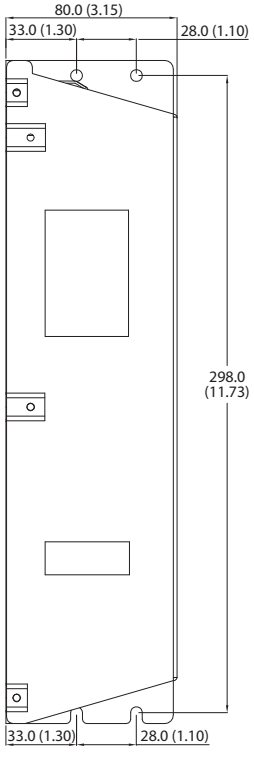

Filter can be mounted onto the back of the drive.

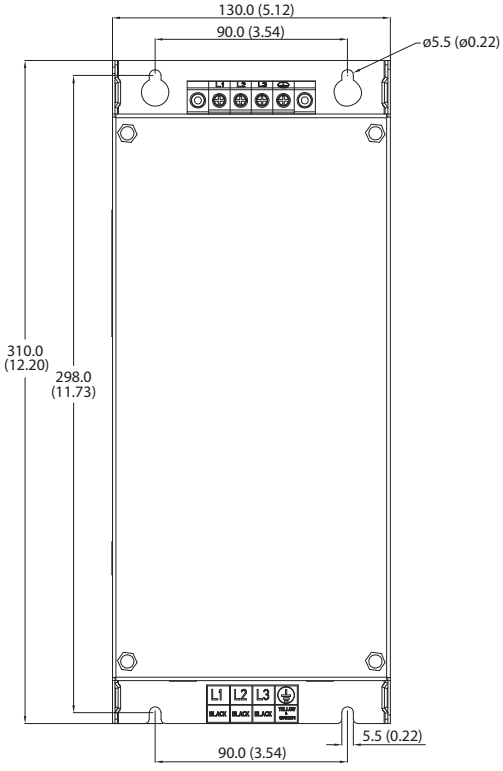

EMC Line Filter – Frame E

Dimensions are in millimeters and (inches)

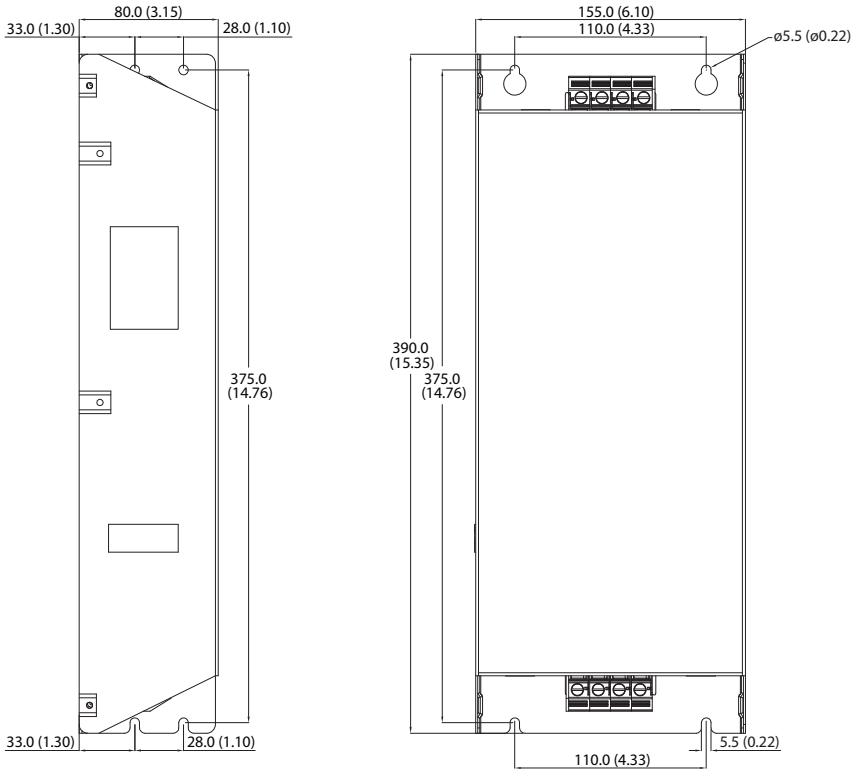

Optional Accessories and Kits Installing a Communication Adapter

1. Insert the communication adapter interface connector into the Control Module. Make sure the indicator line on the connector is aligned with the surface of the Control Module.

For PowerFlex 523

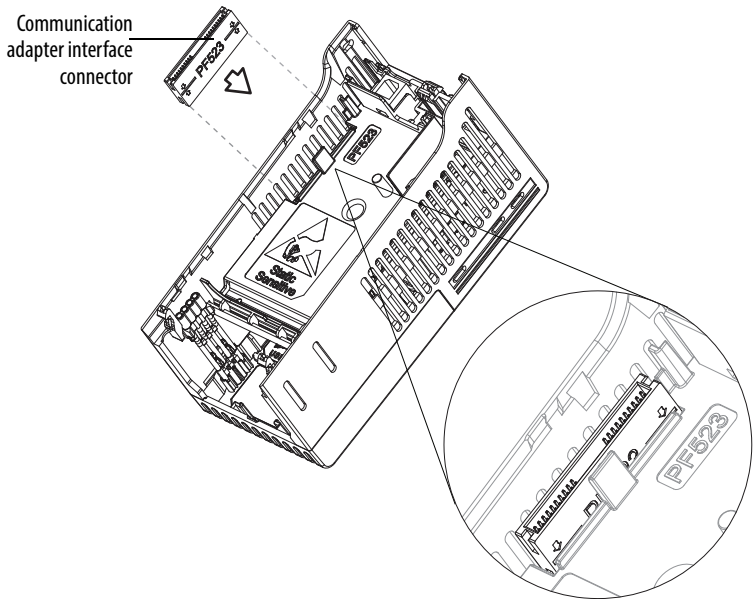

For PowerFlex 525

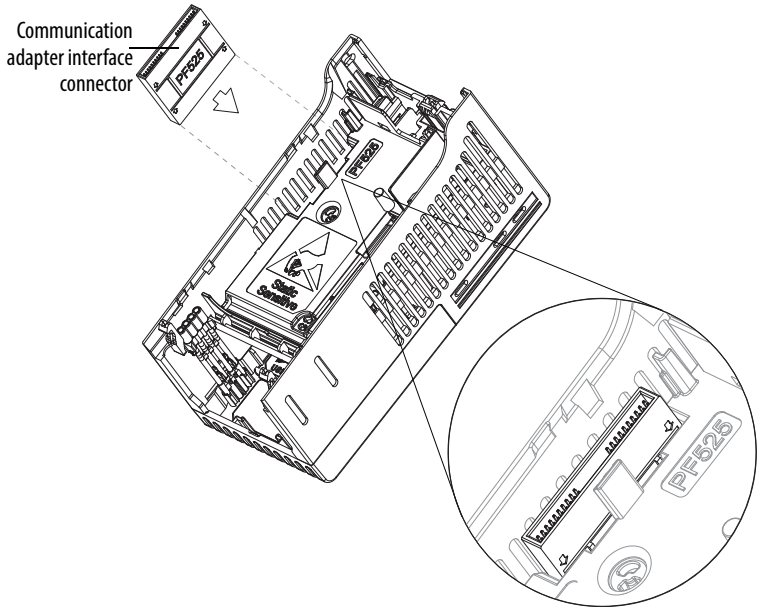

2. Align the connectors on the communication adapter to the communication adapter interface connector, then push the back cover down.

3. Press along the edges of the back cover until it snaps firmly into place.

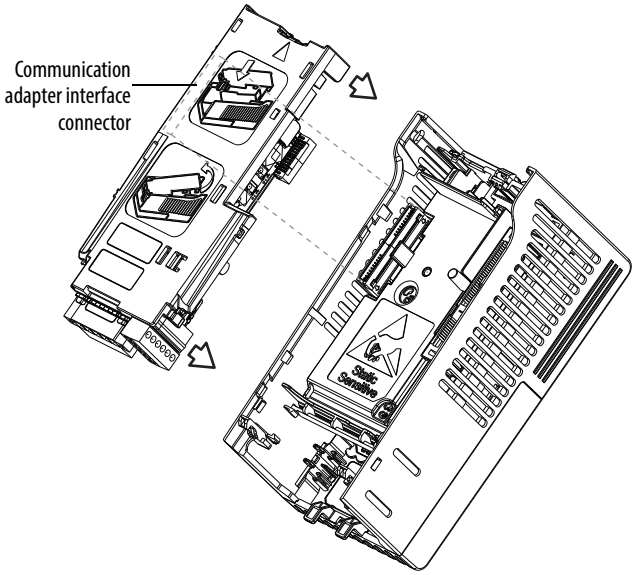

Removing a Communication Adapter

1. Insert a finger into the slot at the top of the back cover. Lift to separate the back cover from the Control Module.

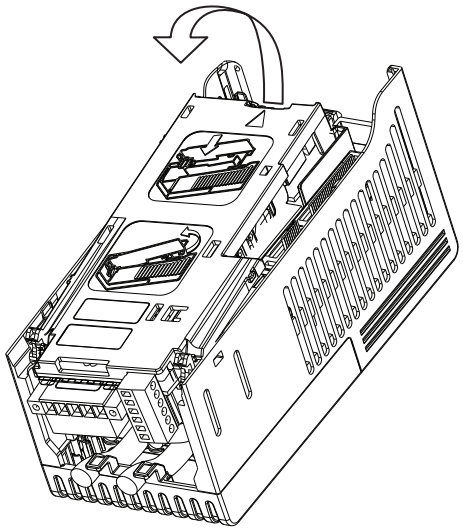

Notes:

RS485 (DSI) Protocol

PowerFlex 520-series drives support the RS485 (DSI) protocol to allow efficient operation with Rockwell Automation peripherals. In addition, some Modbus functions are supported to allow simple networking. PowerFlex 520-series drives can be multi-dropped on an RS485 network using Modbus protocol in RTU mode.

PowerFlex 520-Series Drive Network

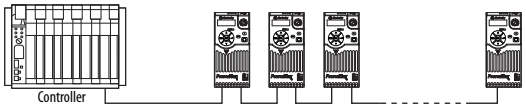

For information regarding EtherNet/IP or other communication protocols, refer to the appropriate user manual.

Network Wiring

Network wiring consists of a shielded 2-conductor cable that is daisy-chained from node to node.

ATTENTION: Never attempt to connect a Power over Ethernet (PoE) cable to the RS485 port. Doing so may damage the circuitry.

Network Wiring Diagram Example

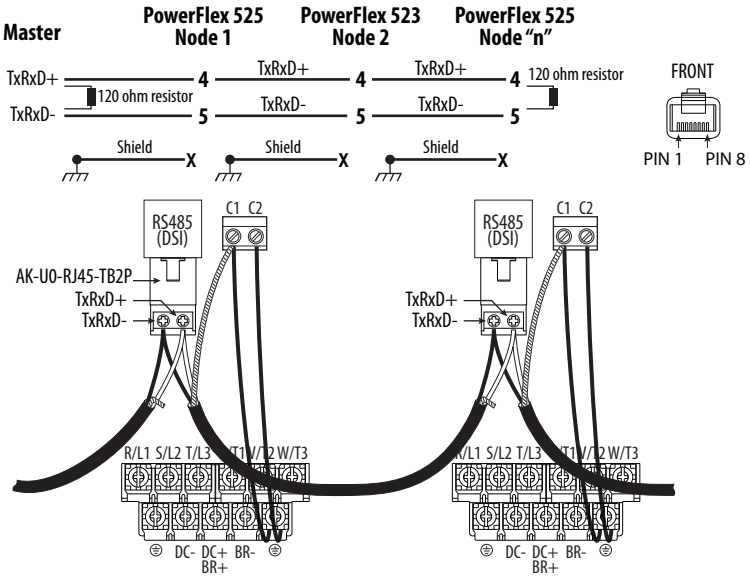

IMPORTANT The shield is connected at ONLY ONE end of each cable segment.

Only pins 4 and 5 on the RJ45 plug should be wired. The other pins on the PowerFlex 520-series drive's RJ45 socket must not be connected because they contain power, etc. for other Rockwell Automation peripheral devices.

Wiring terminations on the master controller will vary depending on the master controller used and "TxRxD+" and "TxRxD-" are shown for illustration purposes only. Refer to the master controller's user manual for network terminations. Note that there is no standard for the "+" and "-" wires, and consequently Modbus device manufacturers interpret them differently. If you have problems with initially establishing communications, try swapping the two network wires at the master controller.

Standard RS485 wiring practices apply.

- Termination resistors need to be applied at each end of the network cable.
- RS485 repeaters may need to be used for long cable runs, or if greater than 32 nodes are needed on the network.
- Network wiring should be separated from power wires by at least 0.3 meters (1 foot).
- Network wiring should only cross power wires at a right angle.

I/O Terminal C1 (RJ45 Shield) for the Ethernet and DSI network cables on the PowerFlex 520-series drive must also be connected to PE ground (there are two PE terminals on the drive). The shield for the network cables should be connected to PE ground at one end only.

I/O Terminal C2 (Comm Common) is internally tied to Network Common for the network signals, and NOT to RJ45 Shield. Tying I/O Terminal C2 to PE ground may improve noise immunity in some applications.

See I/O Control Terminal Designations on page 40 and page 43 for more information.

Parameter Configuration

The following PowerFlex 520-series drive parameters are used to configure the drive to operate on a DSI network.

Configuring Parameters for DSI Network

Parameter	Details	Reference
P046 [Start Source 1]	Set to 3 "Serial/DSI" if Start is controlled from the network.	page 87
P047 [Speed Reference1]	Set to 3 "Serial/DSI" if the Speed Reference is controlled from the network.	page 87
C123 [RS485 Data Rate]	Sets the data rate for the RS485 (DSI) Port. All nodes on the network must be set to the same data rate.	page 101
C124 [RS485 Node Addr]	Sets the node address for the drive on the network. Each device on the network requires a unique node address.	page 101
C125 [Comm Loss Action]	Selects the drive's response to communication problems.	page 101
C126 [Comm Loss Time]	Sets the time that the drive will remain in communication loss before the drive implements C125 [Comm Loss Action].	page 101
C127 [Comm Format]	Sets the transmission mode, data bits, parity and stop bits for the RS485 (DSI) Port. All nodes on the network must be set to the same setting.	page 102
C121 [Comm Write Mode]	Set to 0 "Save" when programming drive. Set to 1 "RAM only" to only write to volatile memory.	page 101

Supported Modbus Function Codes

The peripheral interface (DSI) used on PowerFlex 520-series drives supports some of the Modbus function codes.

Supported Modbus Function Codes

Modbus Function Code (Decimal)	Command
03	Read Holding Registers
06	Preset (Write) Single Register
16 (10 Hexadecimal)	Preset (Write) Multiple Registers

IMPORTANT Modbus devices can be 0-based (registers are numbered starting at 0) or 1-based (registers are numbered starting at 1). Depending on the Modbus Master used, the register addresses listed on the following pages may need to be offset by +1. For example, Logic Command may be register address 8192 for some master devices (e.g. ProSoft 3150-MCM SLC Modbus scanner) and 8193 for others (e.g. PanelViews).

Writing (06) Logic Command Data

The PowerFlex 520-series drive can be controlled through the network by sending Function Code 06 writes to register address 2000H (Logic Command). P046 [Start Source 1] must be set to 3 "Serial/DSI" in order to accept the commands. PowerFlex 523 drives support only Velocity bit definitions. PowerFlex 525 drives can use Parameter C122 [Cmd Stat Select] to select either Velocity or Position bit definitions.

TIP Powerup/Reset the drive after selecting an option for C122 [Cmd Stat Select] for the change to take effect.

Velocity Bit Definitions

Comm Logic Command – C122 = 0 "Velocity"		
Address (Decimal)	**Bit(s)**	**Description**
2000H (8192)	0	1 = Stop, 0 = Not Stop
	1	1 = Start, 0 = Not Start
	2	1 = Jog, 0 = No Jog
	3	1 = Clear Faults, 0 = Not Clear Faults
	5, 4	00 = No Command
		01 = Forward Command
		10 = Reverse Command
		11 = No Command
	6	1 = Force Keypad Control, 0 = Not Force Keypad Control
	7	1 = MOP Increment, 0 = Not Increment
	9, 8	00 = No Command
		01 = Accel Rate 1 Enable
		10 = Accel Rate 2 Enable
		11 = Hold Accel Rate Selected
	11, 10	00 = No Command
		01 = Decel Rate 1 Enable
		10 = Decel Rate 2 Enable
		11 = Hold Decel Rate Selected
	14, 13, 12	000 = No Command
		001 = Freq. Source = P047 [Speed Reference1]
		010 = Freq. Source = P049 [Speed Reference2]
		011 = Freq. Source = P051 [Speed Reference3]
		100 = A410 [Preset Freq 0]
		101 = A411 [Preset Freq 1]
		110 = A412 [Preset Freq 2]
		111 = A413 [Preset Freq 3]
	15	1 = MOP Decrement, 0 = Not Decrement

Position Bit Definitions

Comm Logic Command – C122 = 1 "Position"		
Address (Decimal)	**Bit(s)**	**Description**
2000H (8192)	0	1 = Stop, 0 = Not Stop
	1	1 = Start, 0 = Not Start
	2	1 = Jog, 0 = No Jog
	3	1 = Clear Faults, 0 = Not Clear Faults
	5, 4	00 = No Command
		01 = Forward Command
		10 = Reverse Command
		11 = No Command
	6	1 = Logic In 1
	7	1 = Logic In 2
	10, 9, 8	000 = Freq. and Position Step 0
		001 = Freq. and Position Step 1
		010 = Freq. and Position Step 2
		011 = Freq. and Position Step 3
		100 = Freq. and Position Step 4
		101 = Freq. and Position Step 5
		110 = Freq. and Position Step 6
		111 = Freq. and Position Step 7
	11	1 = Find Home
	12	1 = Hold Step
	13	1 = Pos Redefine
	14	1 = Sync Enable
	15	1 = Traverse Disable

Writing (06) Comm Frequency Command

The PowerFlex 520-series drive Comm Frequency Command can be controlled through the network by sending Function Code 06 writes to register address 2001H (Comm Frequency Command).

Comm Frequency Command

Reference	
Address (Decimal)	**Description**
2001H (8193)	Used by internal comm modules to control the reference of the drive. In units of 0.01 Hz.

Reading (03) Logic Status Data

The PowerFlex 520-series drive Logic Status data can be read through the network by sending Function Code 03 reads to register address 2100H (Logic Status). PowerFlex 523 drives support only Velocity bit definitions. PowerFlex 525 drives can use Parameter C122 [Cmd Stat Select] to select either Velocity or Position bit definitions.

Velocity Bit Definitions

Comm Logic Status – C122 = 0 "Velocity"		
Address (Decimal)	**Bit(s)**	**Description**
2100H (8448)	0	1 = Ready, 0 = Not Ready
	1	1 = Active (Running), 0 = Not Active
	2	1 = Cmd Forward, 0 = Cmd Reverse
	3	1 = Rotating Forward, 0 = Rotating Reverse
	4	1 = Accelerating, 0 = Not Accelerating
	5	1 = Decelerating, 0 = Not Decelerating
	6	Not Used
	7	1 = Faulted, 0 = Not Faulted
	8	1 = At Reference, 0 = Not At Reference
	9	1 = Main Freq Controlled by Active Comm
	10	1 = Operation Cmd Controlled by Active Comm
	11	1 = Parameters have been locked
	12	Digital Input 1 Status (DigIn TermBlk 05)
	13	Digital Input 2 Status (DigIn TermBlk 06)
	14	Digital Input 3 Status (DigIn TermBlk 07)
	15	Digital Input 4 Status (DigIn TermBlk 08)

Position Bit Definitions

Comm Logic Status – C122 = 1 "Position"		
Address (Decimal)	**Bit(s)**	**Description**
2100H (8448)	0	1 = Ready, 0 = Not Ready
	1	1 = Active (Running), 0 = Not Active
	2	1 = Cmd Forward, 0 = Cmd Reverse
	3	1 = Rotating Forward, 0 = Rotating Reverse
	4	1 = Accelerating, 0 = Not Accelerating
	5	1 = Decelerating, 0 = Not Decelerating
	6	1 = Forward Travel Position, 0 = Reverse Travel Position
	7	1 = Faulted, 0 = Not Faulted
	8	1 = At Reference, 0 = Not At Reference
	9	1 = At Position, 0 = Not At Position
	10	1 = At Home, 0 = Not At Home
	11	1 = Drive Homed, 0 = Not Drive Homed
	12	1 = Sync Hold, 0 = Not Sync Hold
	13	1 = Sync Ramp, 0 = Not Sync Ramp
	14	1 =Traverse On, 0 = Traverse Off
	15	1 = Traverse Decel, 0 = Not Traverse Decel

Reading (03) Drive Error Codes

The PowerFlex 520-series Error Code data can be read through the network by sending Function Code 03 reads to register address 2101H (Drive Error Codes).

Drive Error Codes

Logic Status		
Address (Decimal)	**Value (Decimal)**	**Description**
2101H (8449)	0	No Fault
	2	Auxiliary Input
	3	Power Loss
	4	Undervoltage
	5	Overvoltage
	6	Motor Stalled
	7	Motor Overload
	8	Heatsink Overtemperature
	9	Control Module Overtemperature
	12	HW Overcurrent (300%)
	13	Ground Fault
	15	Load Loss
	21	Output Phase Loss
	29	Analog Input Loss
	33	Auto Restart Tries
	38	Phase U to Ground Short
	39	Phase V to Ground Short
	40	Phase W to Ground Short
	41	Phase UV Short
	42	Phase UW Short
	43	Phase VW Short
	48	Parameters Defaulted
	59	Safety Open
	63	Software Overcurrent
	64	Drive Overload
	70	Power Unit Fail
	71	DSI Network Loss
	72	Option Card Network Loss
	73	Embedded EtherNet/IP Adapter Network Loss
	80	AutoTune Fail
	81	DSI Communication Loss
	82	Option Card Communication Loss
	83	Embedded EtherNet/IP Adapter Communication Loss
	91	Encoder Loss
	94	Function Loss
	100	Parameter Checksum Error
	101	External Storage
	105	Control Module Connect Error
	106	Incompatible Control-Power Module
	107	Unrecognized Control-Power Module
	109	Mismatched Control-Power Module
	110	Keypad Membrane
	111	Safety Hardware
	114	Microprocessor Failure
	122	I/O Board Fail

Drive Error Codes

Logic Status		
Address (Decimal)	**Value (Decimal)**	**Description**
2101H (8449)	125	Flash Update Required
	126	Non Recoverable Error
	127	DSI Flash Update Required

Reading (03) Drive Operational Values

The PowerFlex 520-series Drive Operational Values can be read through the network by sending Function Code 03 reads to register addresses 2102H...210AH.

Drive Operational Values

Reference	
Address (Decimal)	**Description**
2102H (8450)	Frequency Command (xxx.xx Hz)
2103H (8451)	Output Frequency (xxx.xx Hz)
2104H (8452)	Output Current (xxx.xx A)
2105H (8453)	DC-BUS Voltage (xxxV)
2106H (8454)	Output Voltage (xxx.xV)

Reading (03) and Writing (06) Drive Parameters

To access drive parameters, the Modbus register address equals the parameter number. For example, a decimal “1” is used to address Parameter b001 [Output Freq] and decimal “41” is used to address Parameter P041 [Accel Time 1].

Additional Information

See http://www.ab.com/drives/ for additional information.

Velocity StepLogic, Basic Logic and Timer/ Counter Functions

Four PowerFlex 520-series logic functions provide the capability to program simple logic functions without a separate controller.

- Velocity StepLogic™ Function (specific to PowerFlex 525 drives only)

  Steps through up to eight preset speeds based on programmed logic. Programmed logic can include conditions that need to be met from digital inputs programmed as "Logic In 1" and "Logic In 2" before stepping from one preset speed to the next. A timer is available for each of the eight steps and is used to program a time delay before stepping from one preset speed to the next. The status of a digital output can also be controlled based on the step being executed.
- Basic Logic Function (specific to PowerFlex 525 drives only)

  Up to two digital inputs can be programmed as "Logic In 1" and/or "Logic In 2". A digital output can be programmed to change state based on the condition of one or both inputs based on basic logic functions such as AND, OR, NOR. The basic logic functions can be used with or without StepLogic.
- Timer Function

  A digital input can be programmed for "Timer Start". A digital output can be programmed as a "Timer Out" with an output level programmed to the desired time. When the timer reaches the time programmed into the output level the output will change state. The timer can be reset with a digital input programmed as "Reset Timer".
- Counter Function

  A digital input can be programmed for "Counter In". A digital output can be programmed as "Counter Out" with an output level programmed to the desired number of counts. When the counter reaches the count programmed into the output level the output will change state. The counter can be reset with a digital input programmed as "Reset Counter".

TIP Use the Wizard in Connected Components Workbench to simplify setup instead of manually configuring the parameters.

Velocity StepLogic Using Timed Steps

IMPORTANT This function is specific to PowerFlex 525 drives only.

To activate this function, set one of the three speed reference sources, parameter P047, P049 or P051[Speed Referencex] to 13 "Step Logic" and activate that speed reference source. Three parameters are used to configure the logic, speed reference and time for each step.

- Logic is defined using parameters L180...L187 [Stp Logic x].
- Preset Speeds are set with parameters A410...A417 [Preset Freq 0...7].
- Time of operation for each step is set with parameters L190...L197 [Stp Logic Time x].

The direction of motor rotation can be forward or reverse.

Using Timed Steps

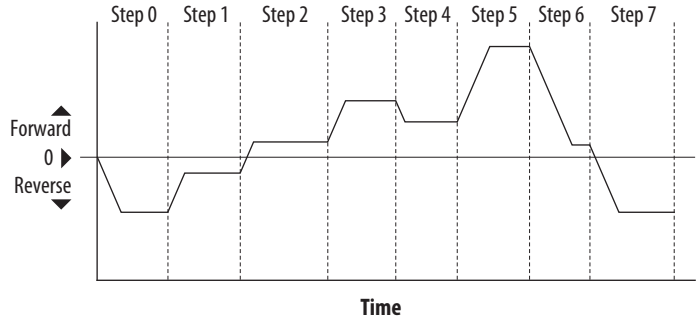

Velocity StepLogic Sequence

- Sequence begins with a valid start command.
- A normal sequence begins with Step 0 and transition to the next step when the corresponding StepLogic time has expired.
- Step 7 is followed by Step 0
- Sequence repeats until a stop is issued or a fault condition occurs.

Velocity StepLogic Using Basic Logic Functions

IMPORTANT This function is specific to PowerFlex 525 drives only.

Digital input and digital output parameters can be configured to use logic to transition to the next step. Logic In 1 and Logic In 2 are defined by programming parameters t062...t063, t065...t068 [DigIn TermBlk xx] to 24 "Logic In 1" or 25 "Logic In 2".

Example

- Run at Step 0.
- Transition to Step 1 when Logic In 1 is true.
  Logic senses the edge of Logic In 1 when it transitions from off to on. Logic In 1 is not required to remain "on".

- Transition to Step 2 when both Logic In 1 and Logic In 2 are true. The drive senses the level of both Logic In 1 and Logic In 2 and transitions to Step 2 when both are on.
- Transition to Step 3 when Logic In 2 returns to a false or off state. Inputs are not required to remain in the "on" condition except under the logic conditions used for the transition from Step 2 to Step 3.

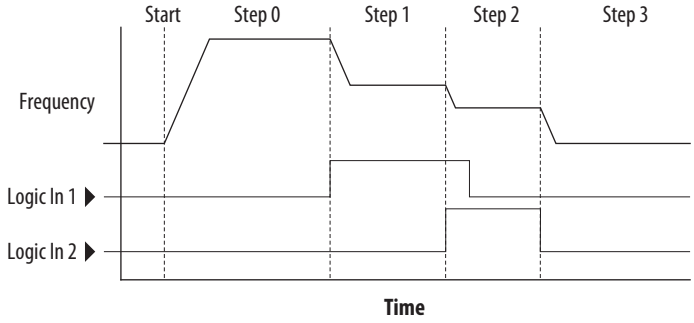

The step time value and the basic logic may be used together to satisfy machine conditions. For instance, the step may need to run for a minimum time period and then use the basic logic to trigger a transition to the next step.

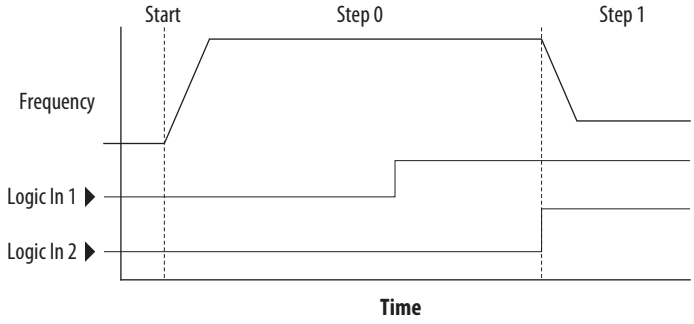

Timer Function

Digital inputs and outputs control the timer function and are configured with parameters t062...t063, t065...t068 [DigIn TermBlk xx] set to 19 "Timer Start" and 21 "Reset Timer".

Digital outputs (relay and opto type) define a preset level and indicate when the level is reached. Level parameters t077 [Relay Out1 Level], t082[Relay Out2 Level], t070 [Opto Out1 Level] and t073 [Opto Out2 Level] are used to set the desired time in seconds.

Parameters t076 [Relay Out1 Sel], t081 [Relay Out2 Sel], t069 [Opto Out1 Sel] and t072 [Opto Out2 Sel] are set to 25 "Timer Out" and causes the output to change state when the preset level is reached.

Example

- Drive starts up and accelerates to 30 Hz.
- After 30 Hz has been maintained for 20 seconds, a 4-20 mA analog input becomes the reference signal for speed control.

- The timer function is used to select a preset speed with a 20 second run time that overrides the speed reference while the digital input is active.
- Parameters are set to the following options:
  - P047 [Speed Reference1] = 6 “4-20mA Input”
  - P049 [Speed Reference2] = 7 “Preset Freq”
  - t062 [DigIn TermBlk 02] = 1 “Speed Ref 2”
  - t063 [DigIn TermBlk 03] = 19 “Timer Start”
  - t076 [Relay Out1 Sel] = 25 “Timer Out”
  - t077 [Relay Out1 Level] = 20.0 Secs
  - A411 [Preset Freq 1] = 30.0 Hz
- The control terminal block is wired such that a start command will also trigger the timer start.
- The relay output is wired to I/O Terminal 02 (DigIn TermBlk 02) so that it forces the input on when the timer starts.
- After the timer is complete, the output is turned off releasing the preset speed command. The drive defaults to following the analog input reference as programmed.

Note that a “Reset Timer” input is not required for this example since the “Timer Start” input both clears and starts the timer.

Counter Function

Digital inputs and outputs control the counter function and are configured with parameters t062...t063, t065...t068 [DigIn TermBlk xx] set to 20 “Counter In” and 22 “Reset Countr”.

Digital outputs (relay and opto type) define a preset level and indicate when the level is reached. Level parameters t077 [Relay Out1 Level], t082[Relay Out2 Level], t070 [Opto Out1 Level] and t073 [Opto Out2 Level] are used to set the desired count value.

Parameters t076 [Relay Out1 Sel], t081 [Relay Out2 Sel], t069 [Opto Out1 Sel] and t072 [Opto Out2 Sel] are set to 26 “Counter Out” which causes the output to change state when the level is reached.

Example

- A photo eye is used to count packages on a conveyor line.
- An accumulator holds the packages until 5 are collected.
- A diverter arm redirects the group of 5 packages to a bundling area.
- The diverter arm returns to its original position and triggers a limit switch that resets the counter.
- Parameters are set to the following options:
  - t065 [DigIn TermBlk 05] = 20 “Counter In”
  - t066 [DigIn TermBlk 06] = 22 “Reset Countr”
  - t076 [Relay Out1 Sel] = 26 “Counter Out”
  - t077 [Relay Out1 Level] = 5.0 Counts

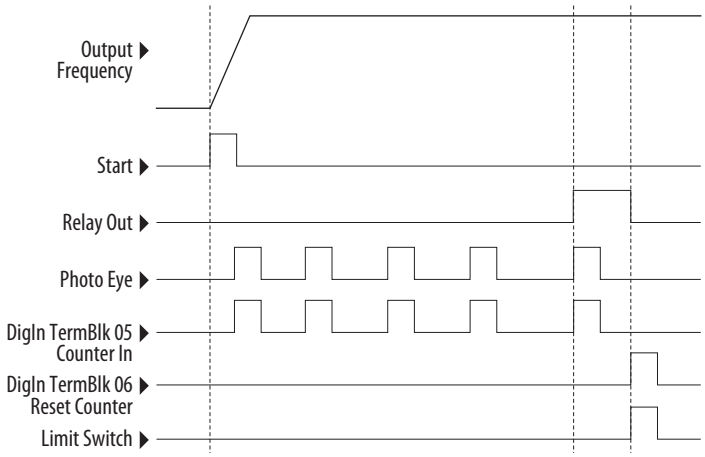

Velocity StepLogic Parameters

Code Descriptions for Parameters L180...L187

Digit 4	Digit 3	Digit 2	Digit 1
0	0	F	1

Digit 4 – Defines the action during the step currently executing

Setting	Accel/Decel Parameter Used	StepLogic Output State	Commanded Direction
0	1	Off	FWD
1	1	Off	REV
2	1	Off	No Output
3	1	On	FWD
4	1	On	REV
5	1	On	No Output
6	2	Off	FWD
7	2	Off	REV
8	2	Off	No Output
9	2	On	FWD
A	2	On	REV
b	2	On	No Output

Digit 3 – Defines what step to jump to or how to end program when the logic conditions specified in Digit 2 are met.

Setting	Logic
0	Jump to Step 0
1	Jump to Step 1
2	Jump to Step 2
3	Jump to Step 3
4	Jump to Step 4
5	Jump to Step 5
6	Jump to Step 6
7	Jump to Step 7
8	End Program (Normal Stop)
9	End Program (Coast to Stop)
A	End Program and Fault (F002)

Digit 2 – Defines what logic must be met to jump to a step other than the very next step.

Setting	Description	Logic
0	Skip Step (jump immediately)	SKIP
1	Step based on the time programmed in the respective [Stp Logic Time x] parameter.	TIMED
2	Step if "Logic In 1" is active (logically true)	TRUE
3	Step if "Logic In 2" is active (logically true)	TRUE
4	Step if "Logic In 1" is not active (logically false)	FALSE
5	Step if "Logic In 2" is not active (logically false)	FALSE
6	Step if either "Logic In 1" or "Logic In 2" is active (logically true)	OR
7	Step if both "Logic In 1" and "Logic In 2" is active (logically true)	AND
8	Step if neither "Logic In 1" or "Logic In 2" is active (logically true)	NOR
9	Step if "Logic In 1" is active (logically true) and "Logic In 2" is not active (logically false)	XOR
A	Step if "Logic In2" is active (logically true) and "Logic In 1" is not active (logically false)	XOR
b	Step after [Stp Logic Time x] and "Logic In 1" is active (logically true)	TIMED AND
C	Step after [Stp Logic Time x] and "Logic In 2" is active (logically true)	TIMED AND
d	Step after [Stp Logic Time x] and "Logic In 1" is not active (logically false)	TIMED OR
E	Step after [Stp Logic Time x] and "Logic In 2" is not active (logically false)	TIMED OR
F	Do not step OR no "jump to", so use Digit 0 logic	IGNORE

Digit 1 – Defines what logic must be met to jump to the very next step.

Setting	Description	Logic
0	Skip Step (jump immediately)	SKIP
1	Step based on the time programmed in the respective [Stp Logic Time x] parameter.	TIMED
2	Step if "Logic In 1" is active (logically true)	TRUE
3	Step if "Logic In 2" is active (logically true)	TRUE
4	Step if "Logic In 1" is not active (logically false)	FALSE
5	Step if "Logic In 2" is not active (logically false)	FALSE
6	Step if either "Logic In 1" or "Logic In 2" is active (logically true)	OR
7	Step if both "Logic In 1" and "Logic In 2" is active (logically true)	AND
8	Step if neither "Logic In 1" or "Logic In 2" is active (logically true)	NOR
9	Step if "Logic In 1" is active (logically true) and "Logic In 2" is not active (logically false)	XOR
A	Step if "Logic In 2" is active (logically true) and "Logic In 1" is not active (logically false)	XOR
b	Step after [Stp Logic Time x] and "Logic In 1" is active (logically true)	TIMED AND
C	Step after [Stp Logic Time x] and "Logic In 2" is active (logically true)	TIMED AND
d	Step after [Stp Logic Time x] and "Logic In 1" is not active (logically false)	TIMED OR
E	Step after [Stp Logic Time x] and "Logic In 2" is not active (logically false)	TIMED OR
F	Use logic programmed in Digit 1	IGNORE

Encoder/Pulse Train Usage and Position StepLogic Application

Encoder and Pulse Train Usage

The PowerFlex 520-series drives include a pulse train input built into the terminal block. PowerFlex 525 drives also support an optional encoder card. The pulse train and encoder can be used for many of the same functions, but the pulse train supports up to 100 kHz at 24V, and uses the drive built-in terminal block. The encoder supports up to 250 kHz dual channel at 5, 12 or 24V and requires the optional encoder board to be installed. When A535 [Motor Fdbk Type] is set to a value other than zero, the drive is set to use an encoder or pulse train. The drive will use the encoder or pulse train in several ways depending on the settings of other parameters. The drive will use the encoder or pulse train as shown below (listed in order of priority):

1. If enabled by P047, P049, or P051 [Speed Referencex], the encoder or pulse train will be used directly as a commanded speed (normally used with a pulse train) or as a position reference (normally used with a quadrature encoder).
2. If not enabled by the Speed Reference parameters, the encoder or pulse train can be used with the PID function if enabled by A459 or A471 [PID x Ref Sel], or A460 or A472 [PID x Fdback Sel].
3. If not enabled by the Speed Reference or PID function parameters, the encoder or pulse train can be used with A535 [Motor Fdbk Type] for direct feedback and trim of the speed command. The normal slip compensation is not used in this case. Instead the drive will use the encoder or pulse train to determine actual output frequency and adjust the output frequency to match the command. Parameters A538 [Ki Speed Loop] and A539 [Kp Speed Loop] are used in this control loop. The primary benefit of this mode is increased speed accuracy when compared to open-loop slip compensation. It does not provide speed bandwidth improvement.

IMPORTANT The encoder usage, and position StepLogic application covered in this chapter is specific to PowerFlex 525 drives only.

Encoder Interface

The incremental encoder option card can source 5 or 12 volt power and accept 5, 12 or 24 volt single ended or differential inputs. See Appendix B for ordering information.

IMPORTANT Only the 25-ENC-1 Encoder will work properly in the PowerFlex 525 drive. Installing an incorrect encoder card, such as the PowerFlex 527 25-ENC-2 will cause damage to the PowerFlex 525 drive.

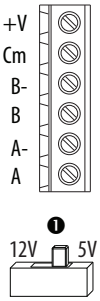

No.	Signal	Description
+V	5...12V Power(1)(2)	Internal power source 250 mA (isolated).
Cm	Power Return	
B-	Encoder B (NOT)	Quadrature B input.
B	Encoder B	
A-	Encoder A (NOT)	Single channel, pulse train or quadrature A input.
A	Encoder A	
❶	Output	DIP switch selects 12 or 5 volt power supplied at terminals "+V" and "Cm" for the encoder.

(1) When using 12V Encoder power, 24V I/O power, maximum output current at I/O Terminal 11 is 50 mA.
(2) If Encoder requires 24V power, it must be supplied by an external power source.

Encoder Wiring Examples

I/O	Connection Example
Encoder Power – Internal Drive Power Internal (drive) 12V DC, 250mA	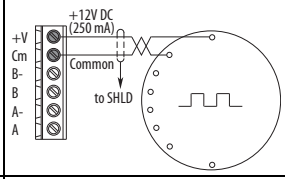
Encoder Signal – Single-Ended, Dual Channel	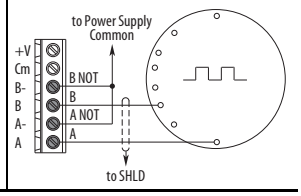

I/O	Connection Example
Encoder Power – External Power Source	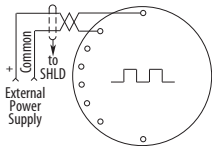
Encoder Signal – Differential, Dual Channel	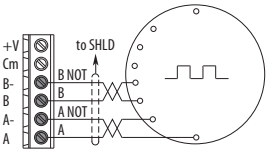

Wiring Notes

The encoder option card can supply 5V or 12V power (250 mA maximum) for an encoder. Be sure the DIP switch is set properly for the encoder. In general, 12V will provide higher noise immunity.

The encoder can handle 5V, 12V, or 24V inputs, but the pulse train can handle only 24V inputs. The inputs will automatically adjust to the voltage applied and no additional drive adjustment is necessary. If a single-channel input is used, it must be wired between the A (signal) and A- (signal common) channels.

IMPORTANT A quadrature encoder provides rotor speed and direction. Therefore, the encoder must be wired such that the forward direction matches the motor forward direction. If the drive is reading encoder speed but the position regulator or other encoder function is not working properly, remove power to the drive, then do one of the following:

- Swap the A and A (NOT) encoder channels.
- Swap the B and B (NOT) encoder channels.
- Swap any two motor leads.

Drives will fault when an encoder is incorrectly wired and A535 [Motor Fdbk Type] is set to 5 "Quad Check".

Determine Encoder Pulse Per Revolution (PPR) Specification Based on Speed Resolution

Use the following formula to determine the encoder pulse per revolution (PPR) specification based on the speed resolution.

$$\text{Speed resolution (Hz)} = \frac{\left(\frac{1}{\text{encoder pulse number x 4}}\right) \text{x pole pairs}}{10^{-3}\ \text{sec}}$$

TIP The operating speed range will depend on the motor control mode selected (SVC or VVC). For more information, see Performance with Encoder on page 170.

Example 1

To determine the PPR for quadrature encoder, to achieve 0.06 Hz of speed resolution on a 4-pole motor (2-pole pair) with a base speed of 60 Hz:

$$0.06\ \text{Hz} = \frac{\left(\frac{1}{\text{encoder pulse number x 4}}\right) \text{x2}}{10^{-3}\ \text{sec}}$$

$$= \sim 8333\ \text{pulse}$$

Therefore, select 8333 PPR or higher for the quadrature encoder to achieve the desired speed resolution of 0.06 Hz.

Example 2

To determine the speed resolution, using a 1024 PPR quadrature incremental encoder on a 4-pole (2-pole pair) motor:

$$\text{Speed resolution (Hz)} = \frac{\left(\frac{1}{1024 \text{ x } 4}\right) \text{x2}}{10^{-3}\ \text{sec}}$$

$$= 0.49\ \text{Hz}$$

Therefore, using a 1024 PPR quadrature encoder will give a speed resolution of 0.49 Hz.

Positioning Overview

The PowerFlex 525 drive includes a simple position regulator which can be used in a variety of position applications without the need for multiple limit switches or photo-eyes. This can be used as a stand-alone controller for simple applications (up to 8 positions) or in conjunction with a controller for more flexibility.

Please note that this is not intended to replace high end servo controllers or any application that needs high bandwidth or very high torque at low speeds.

Common Guidelines for All Applications

The position regulator can be configured for operation appropriate for a variety of applications. Certain parameters will need to be adjusted in all cases.

P047 [Speed Reference1] must be set to 16 "Positioning".

A535 [Motor Fdbk Type] must be set to the match the feedback device. Positioning mode must use A535 [Motor Fdbk Type] option 4.

A535 [Motor Fdbk Type] Options

0 "None" indicates no encoder is used. This can not be used for positioning.

1 "Pulse Train" is a single channel input, no direction, speed feedback only. This should not be used for positioning. The Single Channel selection is similar to a Pulse Train, but uses the standard encoder scaling parameters.

2 "Single Chan" is a single channel input, no direction, speed feedback only. This should not be used for positioning. Single channel uses the standard encoder scaling parameters.

3 "Single Check" is a single channel input with encoder signal loss detection. The drive will fault if it detects that the input pulses do not match the expected motor speed. This should not be used for positioning.

4 "Quadrature" is a dual channel encoder input with direction and speed from the encoder. This may be used for positioning control.

5 "Quad Check" is a dual channel encoder with encoder signal loss detection. The drive will fault if it detects that the encoder speed does not match the expected motor speed.

A544 [Reverse Disable] should be set to 0 "Rev Enabled" to allow bidirectional movement necessary for position control.

P039 [Torque Perf Mode] default setting is 1 "SVC". However, any mode can be used to improve the low speed torque for positioning applications. For best results, tune the application first. The autotune routine can be completed to further improve the drive-motor performance.

A550 [Bus Reg Enable] default setting is 1 “Enabled”. If the deceleration time is too short, the drive may overshoot the desired position. For best results, a longer deceleration time may be necessary. A550 [Bus Reg Enable] can be disabled to provide precise stopping movements, but the deceleration time will need to be manually tuned so that it is long enough to avoid F005 “OverVoltage” faults.

A437 [DB Resistor Sel] default setting is 0 “Disabled”. If improved deceleration performance is required a Dynamic Brake resistor can be used. If used, this parameter should be set to the appropriate setting for the resistor selected.

P035 [Motor NP Poles] must be set to match the number of motor poles on the motor driven by the PowerFlex 520-series drive.

A536 [Encoder PPR] must be set to match the number of pulses per revolution of the encoder used (i.e., 1024 PPR Encoder).

A559 [Counts Per Unit] sets the number of encoder counts that will be used to define one position unit. This allows the encoder positions to be defined in terms of units important to the application. For example, if 1cm of travel on a conveyor belt requires 0.75 turns of the motor, the motor encoder is 1024 PPR, and the Motor Feedback type is set to Quadrature, then this parameter would need to be set to (4 x 1024 x 0.75) = 3072 counts for one cm of travel. Then all other positions could be setup in units of “cm”.

A564 [Encoder Pos Tol] indicates the desired position tolerance for the system. This will determine how close the drive must be to the commanded position before the drive will indicate “At Home” or “At Position” in units of raw encoder pulses. This has no effect on the actual positioning control of the motor.

Positioning Operation

Parameter A558 [Positioning Mode] must be set to properly match the desired operation of the positioning function.

A558 [Positioning Mode] Options

0 "Time Steps" uses Step Logic times. This mode ignores the Step Logic settings and moves through the steps (Step 0 to Step 7 and back to Step 0) based on the times programmed into L190...L197 [Stp Logic Time x]. This can be used when the desired position is based only on time. In addition, this mode only accepts absolute positions in a positive direction from "home". This option provides an easy way to implement a simple positioning program or to test the basic positioning setup. For additional flexibility one of the other settings should be used.

1 "Preset Input" directly commands movement to any step based on the status of the digital inputs programmed for "Preset Freq". This setting ignores the Step Logic Commands settings and instead the drive will move directly to whatever step is currently commanded by A410...A425 [Preset Freq x] and L200...L214 [Step Units x]. This is useful when an application needs direct access to any position step based on discrete inputs. This mode moves in the forward direction from Home and is an absolute move.

IMPORTANT Advanced Step Logic options such as incremental move are not available in this mode.

2 "Step Logic" provides a highly flexible mode of operation. This can be used to move through the steps (Step 0 to Step 7 and back to Step 0) or can jump to a different step at any time based on time or the status of digital inputs or communication commands. In this mode the drive always starts at Step 0 of the Step Logic profile.

3 "Preset StpL" is identical to 2 "Step Logic" except the drive will use the current status of the Preset Inputs to determine which Step Logic step to begin. This only affects the initial step. After start, the drive will move through the steps in the same manner as if setting 2 was selected.

4 "StpLogic-Lst" is identical to 2 "Step Logic" except the drive will use the step prior to its last stop command to determine which Step Logic step to begin. This only affects the initial step. After start, the drive will move through the steps in the same manner as if setting 2 was selected. This allows a process to be stopped and then restarted at the position where it stopped.

In all position modes, the following parameters will control the characteristics at each step:

L200, L202, L204, L206, L208, L210, L212 and L214 [Step Units x] are the number value to the left of the decimal (whole number) of the 8 positions desired for an application, beginning with Step 0 (L200) and continuing with each step until Step 7 (L214). For example, enter 2 into this parameter if you would like a commanded position of 2.77.

L201, L203, L205, L207, L209, L211, L213 and L215 [Step Units F x] are the number value to the right of the decimal (the portion less than 1) of the 8 positions desired for an application, beginning with Step 0 (L201) and continuing with each step until Step 7 (L215). For example, enter 0.77 into this parameter if you would like a commanded position of 2.77.

A410...A417 [Preset Freq x] are the parameters that define the maximum frequency the drive will run at during the corresponding step. For example, if [Preset Freq 2] is set to 40 Hz, the drive will accelerate to 40 Hz maximum when moving to Position 2.

Frequency Source	Step Source	Position Source
A410 [Preset Freq 0]	L180 [Stp Logic 0]	L200 [Step Units 0]
A411 [Preset Freq 1]	L181 [Stp Logic 1]	L202 [Step Units 1]
A412 [Preset Freq 2]	L182 [Stp Logic 2]	L204 [Step Units 2]
A413 [Preset Freq 3]	L183 [Stp Logic 3]	L206 [Step Units 3]
A414 [Preset Freq 4]	L184 [Stp Logic 4]	L208 [Step Units 4]
A415 [Preset Freq 5]	L185 [Stp Logic 5]	L210 [Step Units 5]
A416 [Preset Freq 6]	L186 [Stp Logic 6]	L212 [Step Units 6]
A417 [Preset Freq 7]	L187 [Stp Logic 7]	L214 [Step Units 7]

IMPORTANT The default value for A410 [Preset Freq 0] is 0.00 Hz. This value needs to be changed or the drive will not be able to move during Step 0.

L190...L197 [Stp Logic Time x] are the parameters that define the time the drive will remain in each corresponding step if that step is time-based. For example, if L192 [Stp Logic Time 2] is set to 5.0 seconds and that step is time-based, the drive will remain in Step 2 for 5.0 seconds. Note that this is the total time in that step, not the time at that position. Therefore, it will include the time needed to accelerate, run, and decelerate to that position.

L180...L187 [Stp Logic x] are the parameters that allow additional flexibility and control various aspects of each step when a positioning mode is selected that utilizes the Step Logic functions. Note that in Positioning mode these parameters have a different function than when used for normal velocity Step Logic. Each of the 4 digits controls one aspect of the each position step. The following is a listing of the available settings for each digit:

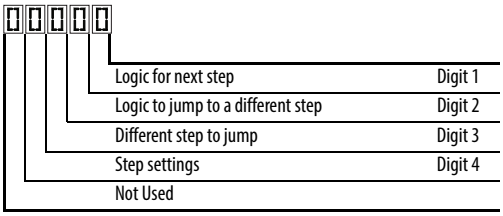

Velocity Control Settings (Digit 4)

Required Setting	Accel/Decel Param. Used	StepLogic Output State	Commanded Direction
0	Accel/Decel 1	Off	FWD
1	Accel/Decel 1	Off	REV
2	Accel/Decel 1	Off	No Output
3	Accel/Decel 1	On	FWD
4	Accel/Decel 1	On	REV
5	Accel/Decel 1	On	No Output
6	Accel/Decel 2	Off	FWD
7	Accel/Decel 2	Off	REV
8	Accel/Decel 2	Off	No Output
9	Accel/Decel 2	On	FWD
A	Accel/Decel 2	On	REV
b	Accel/Decel 2	On	No Output

Positioning Settings (Digit 4)

Required Setting	Accel/Decel Param. Used	StepLogic Output State	Direction From Home	Type of Command
0	Accel/Decel 1	Off	FWD	Absolute
1	Accel/Decel 1	Off	FWD	Incremental
2	Accel/Decel 1	Off	REV	Absolute
3	Accel/Decel 1	Off	REV	Incremental
4	Accel/Decel 1	On	FWD	Absolute
5	Accel/Decel 1	On	FWD	Incremental
6	Accel/Decel 1	On	REV	Absolute
7	Accel/Decel 1	On	REV	Incremental
8	Accel/Decel 2	Off	FWD	Absolute
9	Accel/Decel 2	Off	FWD	Incremental
A	Accel/Decel 2	Off	REV	Absolute
b	Accel/Decel 2	Off	REV	Incremental
C	Accel/Decel 2	On	FWD	Absolute
d	Accel/Decel 2	On	FWD	Incremental
E	Accel/Decel 2	On	REV	Absolute
F	Accel/Decel 2	On	REV	Incremental

Settings (Digit 3)

Setting	Description
0	Jump to Step 0
1	Jump to Step 1
2	Jump to Step 2
3	Jump to Step 3
4	Jump to Step 4
5	Jump to Step 5
6	Jump to Step 6
7	Jump to Step 7
8	End Program (Normal Stop)
9	End Program (Coast to Stop)
A	End Program and Fault (F2)

Settings (Digit 2 and 1)

Setting	Description
0	Skip Step (Jump Immediately)
1	Step Based on [Stp Logic Time x]
2	Step if “Logic In 1” is Active
3	Step if “Logic In 2” is Active
4	Step if “Logic In 1” is Not Active
5	Step if “Logic In 2” is Not Active
6	Step if either “Logic In 1” or “Logic In 2” is Active
7	Step if both “Logic In 1” and “Logic In 2” are Active
8	Step if neither “Logic In 1” nor “Logic In 2” is Active
9	Step if “Logic In 1” is Active and “Logic In 2” is Not Active
A	Step if “Logic In 2” is Active and “Logic In 1” is Not Active
b	Step after [Stp Logic Time x] and “Logic In 1” is Active
C	Step after [Stp Logic Time x] and “Logic In 2” is Active
d	Step after [Stp Logic Time x] and “Logic In 1” is Not Active
E	Step after [Stp Logic Time x] and “Logic In 2” is Not Active
F	Do Not Step/Ignore Digit 2 Settings

TIP Use the Wizard in Connected Components Workbench to simplify setup instead of manually configuring the parameters.

Note: Incremental move commands will cause the drive to move the amount specified based on the current position. Absolute commands are always with reference to “Home”.

A565 [Pos Reg Filter] provides a low pass filter at the input of the position regulator.

A566 [Pos Reg Gain] is a single adjustment for increasing or decreasing the responsiveness of the position regulator. For faster response, the filter should be reduced and/or the gain should be increased. For smoother response with less overshoot, the filter should be increased and/or the gain should be reduced. In general, the gain will have a larger effect on most systems than the filter.

Homing Routine

This drive supports incremental encoders only. Therefore, when the drive powers up it will reset the current position to zero. If this is known to be correct the position routine can be started without further adjustment. However, in most applications the drive will need to be "homed" after each power-up and prior to starting the position routine.

This can be accomplished in one of the following two ways:

1. Manual Homing–Program the following drive parameters:

   t062, t063, t065...t068 [DigIn TermBlk xx] = 37 "Pos Redefine"

   Program one of the digital inputs to 37 "Pos Redefine". Then, move the system into the home position with a run command, a jog command, or by manually moving the system into the home position. Then, toggle the "Pos Redefine" input. This will set the drive to "Home" at its current position and d388 [Units Traveled H] and d389 [Units Traveled L] are set to zero. Alternately, the "Pos Redefine" bit in A560 [Enh Control Word] can be toggled instead of utilizing a digital input.

   IMPORTANT The "Pos Redefine" input or bit must be returned to inactive before starting the position routine. Otherwise the drive will continuously read a position of "0" (home) and the position routine will not function correctly.

2. Automatic Homing to Limit Switch–Program the following drive parameters:

   t062, t063, t065...t068 [DigIn TermBlk xx] = 35 "Find Home"
   Program one of the digital inputs to 35 "Find Home".

   t062, t063, t065...t068 [DigIn TermBlk xx] = 34 "Home Limit"
   Program one of the digital inputs to 34 "Home Limit". Normally, the "Home Limit" input would be wired to a proximity switch or photo-eye and will indicate the system is in the home position.

   A562 [Find Home Freq] sets the frequency the drive will use while it is moving to the home position during the automatic homing routine.

   A563 [Find Home Dir] sets the direction the drive will use while it is moving to the home position during the automatic homing routine.

To begin the automatic homing routine, activate the "Find Home" input and then initiate a valid start command. The drive will then ramp to the speed set in A562 [Find Home Freq] and in the direction set in A563 [Find Home Dir] until the digital input defined as "Home Limit" is activated. If the drive passes this point too quickly it will then reverse direction at 1/10th A562 [Find Home Freq] to the point where the Home Limit switch reactivates. Approximately one second after the routine finds home the drive will stop. Alternately, the "Find Home Freq" and/or "Home Limit" bits in A560 [Enh Control Word] can be activated instead of utilizing a digital input. The inputs or bits should be returned to inactive after the routine is complete.

IMPORTANT After the position is reached the drive will stop. If the Find Home is removed before the homing is complete, the drive will begin running the position routine without the proper home. In this case Home will not be reset and the position will be in relation to the power up position.

Encoder and Position Feedback

d376 [Speed Feedback] indicates the measured speed feedback or the calculated speed feedback when no feedback device is selected. Parameter d376 [Speed Feedback] is the number value to the left of the decimal (whole number) and d377 [Speed Feedback F] is the value to the right of the decimal (the portion less than 1).

d378 [Encoder Speed] indicates the measured speed of the feedback device. This is useful if the encoder is not used for motor speed control. However, the encoder must be used for some purpose in order for d378 [Encoder Speed] to indicate a value. Parameter d378 [Encoder Speed] is the number value to the left of the decimal (whole number) and d379 [Encoder Speed F] is the number to the right of the decimal (the portion less than 1).

d388, d389 [Units Traveled x] indicate the current position of the system in terms of units away from Home. Parameter d388 [Units Traveled H] is the number value to the left of the decimal (whole number) and d389 [Units Traveled L] is the number to the right of the decimal (the portion less than 1).

d387 [Position Status] indicates the status of the positioning functions. The indication bits are:

Bit 0 "Dir Positive" indicates the current direction the drive has moved from Home.

Bit 1 "At Position" indicates whether the drive is at its commanded position. If the drive is within A564 [Encoder Pos Tol] of the commanded position, this bit will be active.

Bit 2 "At Home" indicates whether the drive is at Home. If the drive is within A564 [Encoder Pos Tol] of "Home", this bit will be active.

Bit 3 "Drive Homed" indicates whether the drive has been homed since power-up. This bit will be active once the drive has been homed either manually or automatically. It will remain active until the next power down.

Use Over Communications

If 8 steps are not adequate for the application or if dynamic program changes are required, many of the positioning functions can be controlled through an active communication network. The following parameters will allow this control.

C121 [Comm Write Mode]
Repeated writes to parameters over a communication network can cause damage to the drive EEPROM. This parameter allows the drive to accept parameter changes without writing to the EEPROM.

IMPORTANT Parameter values set prior to setting 1 "RAM only" are saved in RAM.

C122 [Cmd Stat Select]
Selects velocity-specific or position/fibers-specific Command and Status Word bit definitions for use over a communication network.

A560 [Enh Control Word]
This parameter allows many of the positioning functions to be completed through parameter control using an explicit message. This allows the operation over communications instead of with hardware inputs. The bits have the same functions as the digital input options of the same name. Options relating to positioning are:

Bit 0 "Home Limit" indicates the drive is at the home position.

Bit 1 "Find Home" causes the drive to find home at the next start command. Deactivate this bit after completing the homing routine.

Bit 2 "Hold Step" overrides other inputs and causes the drive to remain at its current step (running at zero speed once it reaches its position) until released.

Bit 3 "Pos Redefine" resets the home position to the current position of the machine. Deactivate this bit after completing the homing routine.

Bit 4 "Sync Enable" holds the existing frequency when A571 [Sync Time] is set to enable speed synchronization. When this bit is deactivated the drive will accelerate to the new commanded frequency based on A571 [Sync Time].

Bit 5 "Traverse Dis" disables the traverse function when this bit is active.

Bit 6 "Logic In 1" provides an identical function and is logically ORed with setting 24 "Logic In 1" for t062, t063, t065...t068 [DigIn TermBlk xx]. It can be used to move through the Step Logic functions (speed or position) using comms control without requiring actual digital input transitions.

Bit 7 "Logic In 2" provides an identical function and is logically ORed with setting 25 "Logic In 2" for t062, t063, t065...t068 [DigIn TermBlk xx]. It can be used to move through the Step Logic functions (speed or position) using comms control without requiring actual digital input transitions.

L200...L214 [Step Units x]
All of the position steps can be written to while the drive is running. The changes will take place at the next move. For example, if step 0 is over-written while the drive is moving to step 0, the drive will move to the previous commanded position at step 0. The next time the drive is commanded to return to step 0 it will proceed to the new position. One possible use of this capability is when an application requires full control of the movement by a controller external to the drive. The Step Logic program might be written to jump from step 0 back to step 0 when Input 1 is active. The controller could write any desired position to step 0 and then toggle the input 1 bit of A560 [Enh Control Word] to cause the drive to move to the new position. This allows almost unlimited flexibility and can be used with absolute or incremental moves.

Setup Notes

The RA computer tool (Connected Components Workbench) can make setup of the positioning functions much easier. Refer to the latest versions for additional tools or wizards which can aid in the setup.

PID Set Up

PID Loop

The PowerFlex 520-series drive features built-in PID (proportional, integral, derivative) control loops. The PID loop is used to maintain a process feedback (such as pressure, flow or tension) at a desired set point. The PID loop works by subtracting the PID feedback from a reference and generating an error value. The PID loop reacts to the error, based on the PID Gains, and outputs a frequency to try to reduce the error value to 0.

To enable the PID loop, P047, P049 or P051 [Speed Referencex] must be set to 11 "PID1 Output" or 12 "PID2 Output", and the corresponding speed reference activated.

IMPORTANT PowerFlex 523 has one PID control loop.

PowerFlex 525 has two PID control loops, of which only one can be in use at any time.

Exclusive Control and Trim Control are two basic configurations where the PID loop may be used.

Exclusive Control

In Exclusive Control, the Speed Reference becomes 0, and the PID Output becomes the entire Freq Command. Exclusive Control is used when A458 or A470 [PID x Trim Sel] is set to option 0. This configuration does not require a master reference, only a desired set point, such as a flow rate for a pump.

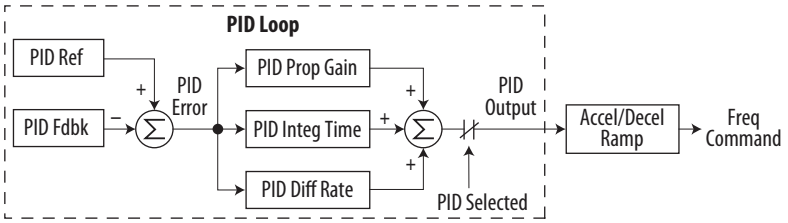

Example

- In a pumping application, the PID Reference equals the Desired System Pressure set point.
- The Pressure Transducer signal provides PID Feedback to the drive. Fluctuations in actual system pressure, due to changes in flow, result in a PID Error value.
- The drive output frequency increases or decreases to vary motor shaft speed to correct for the PID Error value.

- The Desired System Pressure set point is maintained as valves in the system are opened and closed causing changes in flow.
- When the PID Control Loop is disabled, the Commanded Speed is the Ramped Speed Reference.

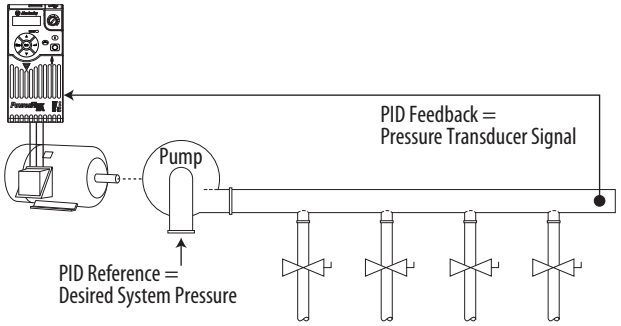

Trim Control

In Trim Control, the PID Output is added to the Speed Reference. In Trim mode, the output of the PID loop bypasses the accel/decel ramp as shown. Trim Control is used when A458 or A470 [PID x Trim Sel] is set to any option other than 0.

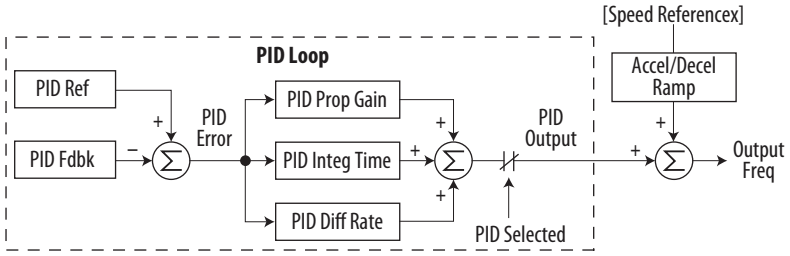

Example

- In a winder application, the PID Reference equals the Equilibrium set point.
- The Dancer Pot signal provides PID Feedback to the drive. Fluctuations in tension result in a PID Error value.
- The Master Speed Reference sets the wind/unwind speed.

- As tension increases or decreases during winding, the Speed Reference is trimmed to compensate. Tension is maintained near the Equilibrium set point.

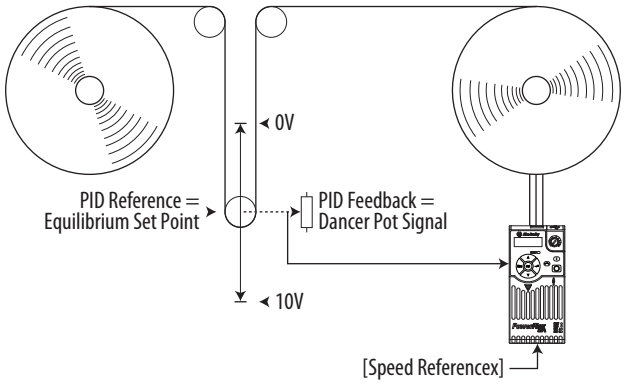

PID Reference and Feedback

PID mode is enabled by setting P047, P049 or P051 [Speed Referencex] to 11 "PID1 Output" or 12 "PID2 Output", and activating the corresponding speed reference.

IMPORTANT PowerFlex 523 has one PID control loop.

PowerFlex 525 has two PID control loops, of which only one can be in use at any time.

If A459 or A471 [PID x Ref Sel] is not set to 0 "PID Setpoint", PID can still be disabled by select programmable digital input options (parameters t062, t063, t065...t068 [DigIn TermBlk xx]) such as "Purge".

A459, A471 [PID x Ref Sel] Options

Options	Description
0 "PID Setpoint"	A464 or A476 [PID x Setpoint] will be used to set the value of the PID Reference.
1 "Drive Pot"	The drive potentiometer will be used to set the value of the PID Reference.
2 "Keypad Freq"	The drive keypad will be used to set the value of the PID Reference.
2 "Serial/DSI"	The reference word from the Serial/DSI communication network becomes the PID Reference.
4 "Network Opt"	The reference word from a communication network option becomes the PID Reference.
5 "0-10V Input"	Selects the 0-10V Input. Note that the PID will not function with a bipolar analog input. It will ignore any negative voltages and treat them like a zero.
6 "4-20mA Input"	Selects the 4-20 mA Input.
7 "Preset Freq"	A410...A425 [Preset Freq x] will be used as an input for the PID Reference.
8 "AnIgIn Multi"(1)	The product of the 0-10V and 4-20mA Inputs will be used as an input for the PID Reference.
9 "MOP Freq"	A427 [MOP Freq] will be used as an input for the PID Reference.
10 "Pulse Input"	Pulse train will be used as an input for the PID Reference.
11 "Step Logic"(1)	Step Logic will be used as an input for the PID Reference.
12 "Encoder"(1)	Encoder will be used as an input for the PID Reference.
13 "Ethernet/IP"(1)	The reference word from the Ethernet/IP communication network becomes the PID Reference.

(1) Setting is specific to PowerFlex 525 drives only.

A460 and A472 [PID x Fdback Sel] are used to select the source of the PID feedback.

A460, A472 [PID x Fdback Sel] Options

Options	Description
0 "0-10V Input"	Selects the 0-10V Input (default setting). Note that the PID will not function with a bipolar analog input. It will ignore any negative voltages and treat them like a zero.
1 "4-20mA Input"	Selects the 4-20 mA Input.
2 "Serial/DSI"	Serial/DSI will be used as an input for the PID Feedback.
3 "Network Opt"	The reference word from a communication network option becomes the PID Reference.
4 "Pulse Input"	Pulse train will be used as an input for the PID Feedback.
5 "Encoder"(1)	Encoder will be used as an input for the PID Feedback.
6 "Ethernet/IP"(1)	Ethernet/IP will be used as an input for the PID Feedback.

(1) Setting is specific to PowerFlex 525 drives only.

Analog PID Reference Signals

Parameters t091 [Anlg In 0-10V Lo] and t092 [Anlg In 0-10V Hi] are used to scale or invert an analog PID Reference or PID Feedback.

Scale Function

For a 0...5V signal, the following parameter settings are used so that a 0V signal = 0% PID Reference and a 5V signal = 100% PID Reference.

- t091 [Anlg In 0-10V Lo] = 0.0%
- t092 [Anlg In 0-10V Hi] = 50.0%
- A459 [PID 1 Ref Sel] = 5 "0-10V Input"

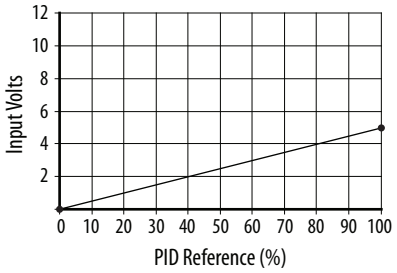

Invert Function

For a 4-20 mA signal, the following parameter settings are used so that a 20 mA signal = 0% PID Reference and a 4 mA signal = 100% PID Reference.

- t095 [Anlg In4-20mA Lo] = 100.0%
- t096 [Anlg In4-20mA Hi] = 0.0%

- A459 [PID 1 Ref Sel] = 6 “4-20mA Input”

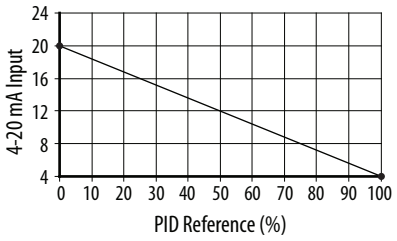

PID Deadband

Parameters A465 and A477 [PID x Deadband] are used to set a range, in percent, of the PID Reference that the drive will ignore.

Example

- A465 [PID 1 Deadband] = 5.0%
- The PID Reference is 25.0%
- The PID Regulator will not act on a PID Error that falls between 20.0 and 30.0%

PID Preload

The value set in A466 or A478 [PID x Preload], in Hz, will be pre-loaded into the integral component of the PID at any start or enable. This will cause the drive’s frequency command to initially jump to that preload frequency, and the PID loop starts regulating from there.

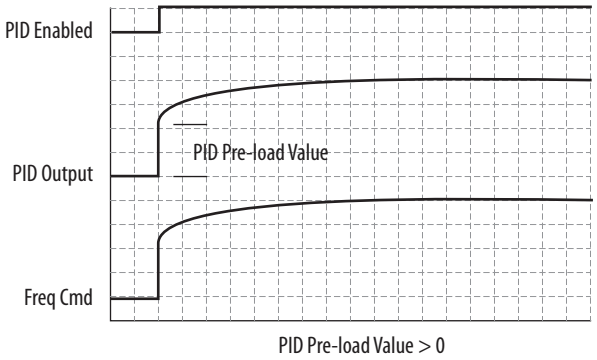

PID Limits

A456 and A468 [PID x Trim Hi] and A457 and A469 [PID x Trim Lo] are used to limit the PID output and are only used in trim mode. [PID x Trim Hi] sets the maximum frequency for the PID output in trim mode. [PID x Trim Lo] sets the reverse frequency limit for the PID output in trim mode. Note that when the

PID reaches the Hi or Lo limit, the PID regulator stops integrating so that windup does not occur.

PID Gains

The proportional, integral, and differential gains make up the PID regulator.

- A461 and A473 [PID x Prop Gain]
  The proportional gain (unitless) affects how the regulator reacts to the magnitude of the error. The proportional component of the PID regulator outputs a speed command proportional to the PID error. For example, a proportional gain of 1 would output 100% of max frequency when the PID error is 100% of the analog input range. A larger value for [PID x Prop Gain] makes the proportional component more responsive, and a smaller value makes it less responsive. Setting [PID x Prop Gain] to 0.00 disables the proportional component of the PID loop.
- A462 and A474 [PID x Integ Time]
  The integral gain (units of seconds) affects how the regulator reacts to error over time and is used to get rid of steady state error. For example, with an integral gain of 2 seconds, the output of the integral gain component would integrate up to 100% of max frequency when the PID error is 100% for 2 seconds. A larger value for [PID x Integ Time] makes the integral component less responsive, and a smaller value makes it more responsive. Setting [PID x Integ Time] to 0.0 disables the integral component of the PID loop.
- A463 and A475 [PID x Diff Rate]
  The Differential gain (units of 1/seconds) affects the rate of change of the PID output. The differential gain is multiplied by the difference between the previous error and current error. Thus, with a large error the D has a large effect and with a small error the D has less of an effect. This parameter is scaled so that when it is set to 1.00, the process response is 0.1% of P044 [Maximum Freq] when the process error is changing at 1% / second. A larger value for [PID x Diff Rate] makes the differential term have more of an effect and a small value makes it have less of an effect. In many applications, the D gain is not needed. Setting [PID x Diff Rate] to 0.00 (factory default) disables the differential component of the PID loop.

Guidelines for Adjusting the PID Gains

1. Adjust the proportional gain. During this step it may be desirable to disable the integral gain and differential gain by setting them to 0. After a step change in the PID Feedback:
   - If the response is too slow increase A461 or A473 [PID x Prop Gain].
   - If the response is too quick and/or unstable (see Unstable Response on page 233), decrease A461 or A473 [PID x Prop Gain].
   - Typically, A461 or A473 [PID x Prop Gain] is set to some value below the point where the PID begins to go unstable.

2. Adjust the integral gain (leave the proportional gain set as in Step 1). After a step change in the PID Feedback:
   - If the response is too slow (see Slow Response – Over Damped on page 233), or the PID Feedback does not become equal to the PID Reference, decrease A462 or A474 [PID x Integ Time].
   - If there is a lot of oscillation in the PID Feedback before settling out (see Oscillation – Under Damped on page 233), increase A462 or A474 [PID x Integ Time].
3. At this point, the differential gain may not be needed. However, if after determining the values for A461 or A473 [PID x Prop Gain] and A462 or A474 [PID x Integ Time]:
   - Response is still slow after a step change, increase A463 or A475 [PID x Diff Rate].
   - Response is still unstable, decrease A463 or A475 [PID x Diff Rate].

The following figures show some typical responses of the PID loop at different points during adjustment of the PID Gains.

Unstable Response

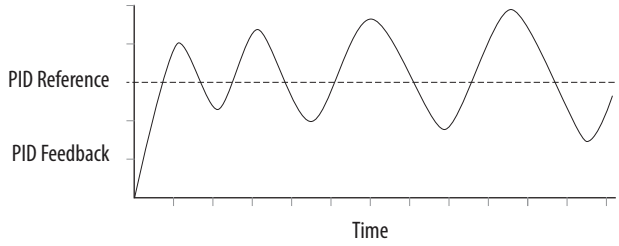

Slow Response – Over Damped

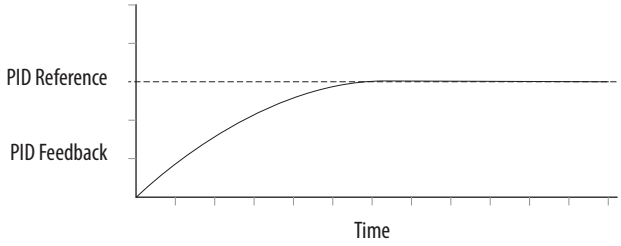

Oscillation – Under Damped

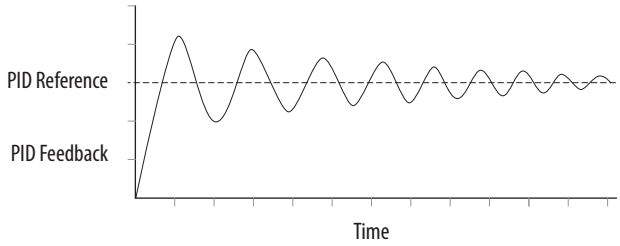

Good Response – Critically Damped

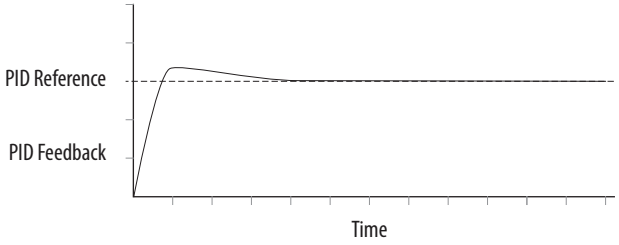

Safe-Torque-Off Function

The PowerFlex 525 Safe-Torque-Off function, when used with other safety components, helps provide protection according to EN ISO 13849 and EN62061 for safe-off and protection against restart. The PowerFlex 525 Safe-Torque-Off function is just one component in a safety control system. Components in the system must be chosen and applied appropriately to achieve the desired level of operator safeguarding.

For information on...	See page...
PowerFlex 525 Safe-Torque-Off Overview	235
EC Type Examination Certification	236
EMC Instructions	236
Using PowerFlex 525 Safe-Torque-Off	236
Enabling PowerFlex 525 Safe-Torque-Off	239
Wiring	239
Verify Operation	240
PowerFlex 525 Safe-Torque-Off Operation	239
Connection Examples	241
PowerFlex 525 Certification for Safe-Torque-Off	245

IMPORTANT The Safe-Torque-Off function covered in this chapter is specific to PowerFlex 525 drives only.

PowerFlex 525 Safe-Torque-Off Overview

The PowerFlex 525 Safe-Torque-Off function:

- Provides the Safe-Torque-Off (STO) function defined in EN 61800-5-2.
- Blocks gate-firing signals from reaching the Insulated Gate Bipolar Transistor (IGBT) output devices of the drive. This prevents the IGBTs from switching in the sequence necessary to generate torque in the motor.
- Can be used in combination with other safety devices to fulfill the requirements of a system “safe torque off” function which satisfies Category 3 / PL (d) according to EN ISO 13849-1 and SIL CL2 according to EN 62061, IEC 61508, and EN 61800-5-2.

IMPORTANT The function is suitable for performing mechanical work on the drive system or affected area of a machine only. It does not provide electrical safety.

ATTENTION: Electric Shock Hazard. Verify that all sources of AC and DC power are de-energized and locked out or tagged out in accordance with the requirements of ANSI/NFPA 70E, Part II.

To avoid an electric shock hazard, verify that the voltage on the bus capacitors has discharged before performing any work on the drive. Measure the DC bus voltage at the +DC and -DC terminals or test points (refer to your drive's User Manual for locations). The voltage must be zero.

In safe-off mode, hazardous voltages may still be present at the motor. To avoid an electric shock hazard, disconnect power to the motor and verify that the voltage is zero before performing any work on the motor.

EC Type Examination Certification

TÜV Rheinland has certified the PowerFlex 525 Safe-Torque-Off function compliant with the requirements for machines defined in Annex I of the EC Directive 2006/42/EC, and that it complies with the requirements of the relevant standards listed below:

- EN ISO 13849-1 Safety of machinery – Safety related parts of control systems – Part 1: General principles for design.
  (PowerFlex 525 STO achieves Category 3 / PL(d))
- EN 61800-5-2 Adjustable speed electrical power drive systems – Part 5-2 Safety requirements – Functional.
  (PowerFlex 525 STO achieves SIL CL 2)
- EN 62061 Safety of machinery – Functional safety of safety-related electrical, electronic and programmable electronic control systems.
- IEC 61508 Part 1-7 Functional safety of electrical/electronic/programmable electronic safety-related systems – Parts 1-7.

TÜV also certifies that the PowerFlex 525 STO may be used in applications up to Category 3/ PL(d) according to EN ISO 13849-1 and SIL 2 according to EN 62061 / EN 61800-5-2 / IEC 61508.

The TÜV Rheinland certificate may be found at:
www.rockwellautomation.com/products/certification/.

EMC Instructions

PowerFlex 525 Safe-Torque-Off function requires CE Conformity as described on page 52.

Using PowerFlex 525 Safe-Torque-Off

The PowerFlex 525 Safe-Torque-Off function is intended to be part of the safety related control system of a machine. Before use, a risk assessment should be performed that compares the PowerFlex 525 Safe-Torque-Off function specifications and all foreseeable operational and environmental characteristics of the machine to which it is to be fitted.

A safety analysis of the machine section controlled by the drive is required to determine how often the safety function should be tested for proper operation during the life of the machine.

ATTENTION: The following information is merely a guide for proper installation. Rockwell Automation cannot assume responsibility for the compliance or the noncompliance to any code, national, local or otherwise for the proper installation of this equipment. A hazard of personal injury and/or equipment damage exists if codes are ignored during installation.

ATTENTION: In safe-off mode, hazardous voltages may still be present at the motor. To avoid an electric shock hazard, disconnect power to the motor and verify that the voltage is zero before performing any work on the motor.

ATTENTION: In the event of the failure of two output IGBTs in the drive, when the PowerFlex 525 Safe-Torque-Off has controlled the drive outputs to the off state, the drive may provide energy for up to 180° of rotation in a 2-pole motor before torque production in the motor ceases.

Safety Concept

The PowerFlex 525 Safe-Torque-Off function is suitable for use in safety applications up to and including Category 3 / PL(d) according to EN ISO 13849-1 and SIL 2 according to EN 62061 / EN 61800-5-2 / IEC 61508.

In addition, the PowerFlex 525 STO may be used together with other components in a safety application to achieve an overall Category 3 / PL(e) according to EN ISO 13849-1 and SIL 3 according to EN 62061 and IEC 61508. This is illustrated in Example 3 in this appendix.

Safety requirements are based on the standards current at the time of certification.

The PowerFlex 525 Safe-Torque-Off function is intended for use in safety-related applications where the de-energized state is considered to be the safe state. All of the examples in this manual are based on achieving de-energization as the safe state for typical Machine Safety and Emergency Shutdown (ESD) systems.

Important Safety Considerations

The system user is responsible for:

- the set-up, safety rating, and validation of any sensors or actuators connected to the system.
- completing a system-level risk assessment and reassessing the system any time a change is made.
- certification of the system to the desired safety performance level.
- project management and proof testing.
- programming the application software and the safety option configurations in accordance with the information in this manual.

- access control to the system, including password handling.
- analyzing all configuration settings and choosing the proper setting to achieve the required safety rating.

IMPORTANT When applying Functional Safety, restrict access to qualified, authorized personnel who are trained and experienced.

ATTENTION: When designing your system, consider how personnel will exit the machine if the door locks while they are in the machine. Additional safeguarding devices may be required for your specific application.

Functional Proof Test

The PFD and PFH values provided in the table below are contingent upon the Proof Test Interval (PTI). Before the end of the PTI specified in the table below, a proof test of the STO safety function must be performed in order for the specified PFD and PFH values to remain valid.

PFD and PFH Data

PFD and PFH calculations are based on the equations from Part 6 of EN 61508.

This table provides data for a 20-year proof test interval and demonstrates the worst-case effect of various configuration changes on the data.

PFD and PFH for 20-year Proof Test Interval

Attribute	Value
PFD	6.62E-05 (MTTF = 3593 years)
PFH_D	8.13E-10
SFF	83%
DC	62.5%
CAT	3
HFT	1 (1oo2)
PTI	20 YEARS
Hardware Type	Type A

Safety Reaction Time

The safety reaction time is the amount of time from a safety-related event as input to the system until the system is in the Safe State.

The safety reaction time from an input signal condition that triggers a safe stop, to the initiation of safe-torque-off, is 100 ms (maximum).

Enabling PowerFlex 525 Safe-Torque-Off

1. Remove all power to the drive.

> **ATTENTION:** To avoid an electric shock hazard, verify that the voltage on the bus capacitors has discharged before performing any work on the drive. Measure the DC bus voltage at the +DC and -DC terminals or test points (refer to your drive's user manual for the location of the terminals). The voltage must be zero.

2. Loosen the screw of terminals Safety 1, Safety 2 and Safety +24V (S1, S2, S+) on the control I/O terminal block.
3. Remove the protective jumper.

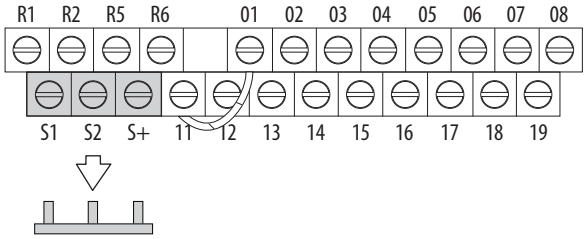

4. Safe-Torque-Off function is now enabled and the terminals are ready to function as safety inputs.

Wiring

Important points to remember about wiring:

- Always use copper wire.
- Wire with an insulation rating of 600V or greater is recommended.
- Control wires should be separated from power wires by at least 0.3 m (1 ft).

Recommended Wire

Type	Wire Type(1)	Description	Min. Insulation Rating
Shielded	Multi-conductor shielded cable such as Belden 8770 (or equiv.)	0.750 mm^2 (18 AWG), 3 conductor, shielded.	300V, 60 °C (140 °F)

(1) Recommendations are for 50 °C ambient temperature.
75 °C wire must be used for 60 °C ambient temperature.
90 °C wire must be used for 70 °C ambient temperature.

See I/O Wiring on page 36 for wiring recommendations and Control I/O Terminal Designations on page 43 for terminal descriptions.

If Safety Inputs S1 and S2 are powered by an external +24V source, apply it only in SELV system, PELV system or low voltage Class 2 circuit.

PowerFlex 525 Safe-Torque-Off Operation

The PowerFlex 525 Safe-Torque-Off function disables the drive's output IGBT's by breaking the link with the drive microcontroller. When used in combination with a safety input device, the system satisfies the requirements of EN ISO 13849 and EN62061 for safe-torque-off and helps protect against restart.

Under normal drive operation, both safety inputs (Safety 1 and Safety 2) are energized, and the drive is able to run. If either input is de-energized, the gate control circuit becomes disabled. To meet EN ISO 13849 operation, both safety channels must be de-energized. Refer to the following examples for more information.

IMPORTANT By itself, the Safe-Torque-Off function initiates a coast to stop action. Additional protective measures will need to be applied when an application requires a change to the stop action.

Verify Operation

Test the safety function for proper operation after the initial setup of the PowerFlex 525 Safe-Torque-Off function. Retest the safety function at the intervals determined by the safety analysis described on page 236.

Verify that both safety channels are functioning according to the table below.

Channel Operation and Verification

Safety Function Status	**Drive In Safe State**	**Drive In Safe State**	**Drive In Safe State**	**Drive Able To Run**
Drive Status	**Configured by t105 [Safety Open En]**	**Fault F111 (Safety Hardware)**	**Fault F111 (Safety Hardware)**	**Ready/Run**
		Safety Channel Operation		
Safety Input S1	No Power Applied	Power Applied	No Power Applied	Power Applied
Safety Input S2	No Power Applied	No Power Applied	Power Applied	Power Applied

IMPORTANT If an external fault is present on the wiring or circuitry controlling the Safety 1 or Safety 2 inputs for a period of time, the Safe-Torque-Off function may not detect this condition. When the external fault condition is removed the Safe-Torque-Off function will allow an enable condition. Fault in the external wiring shall either be detected by external logic, or excluded (wiring must be protected by cable ducting or armoring), according to EN ISO 13849-2.

Discrepancy Time of the Safety Inputs

For example, if S1 is disabled and S2 did not follow after the discrepancy time, fault F111 “Safety Hardware” will occur. However, if S1 is disable and S2 follows before the discrepancy time, fault F059 “Safety Open” will occur.

The discrepancy time is one second for PowerFlex 525 FRN 5.xxx and later. The discrepancy time is 10 milliseconds for PowerFlex 525 FRN 4.xxx and earlier.

Connection Examples

Example 1 – Safe-Torque-Off Connection with Coast-to-Stop Action, SIL 2/PL d

Stop Category 0 – Coast

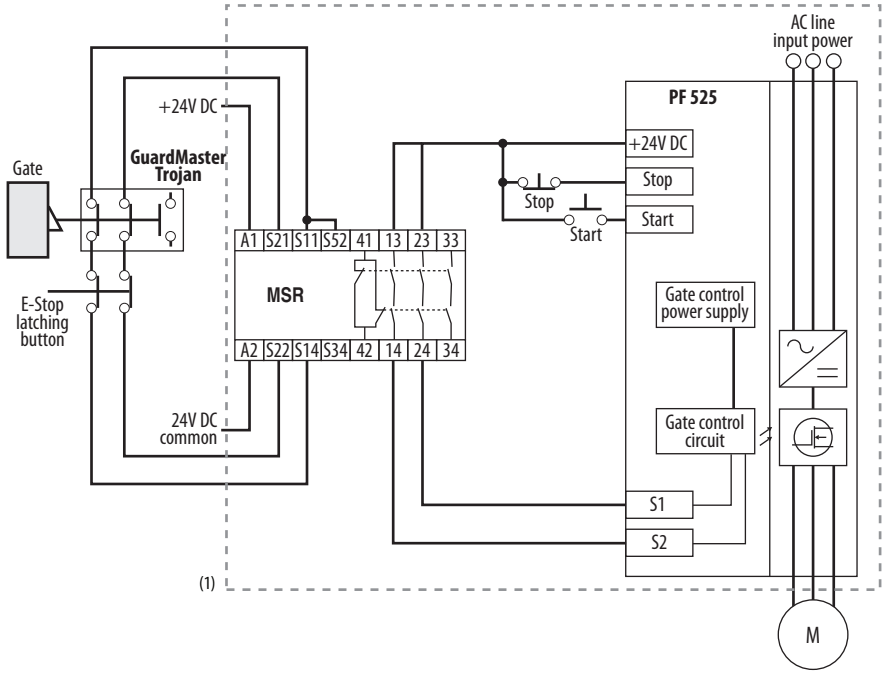

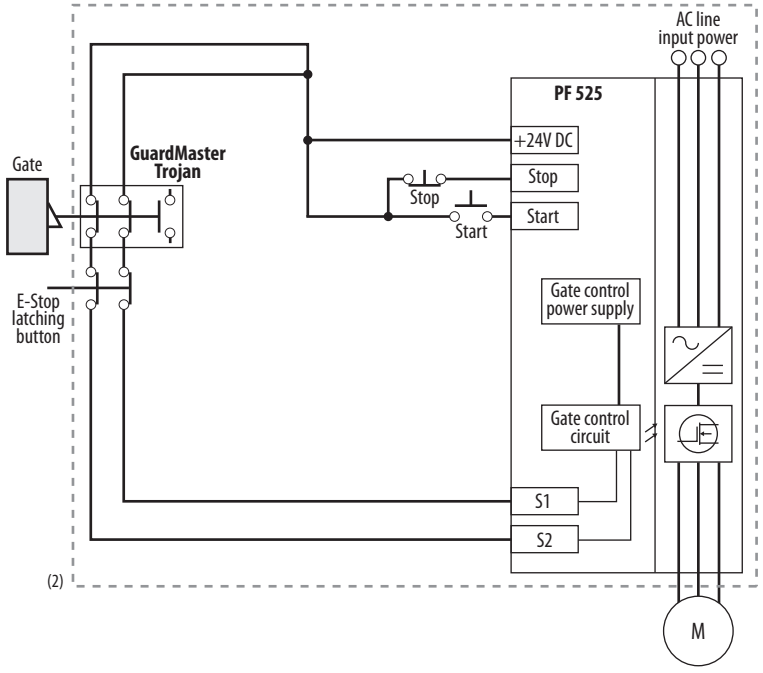

(1) Enclosure Recommended. Note: External wiring failure modes must be considered as described in EN ISO 13849-2. Enclosure or other measure to exclude these failure modes should be used.

(2) In some situations, a safety relay is not required if both the switch and PowerFlex 525 are installed in the same enclosure.

Stop Category 0 – Coast with Two PowerFlex 525 Drives

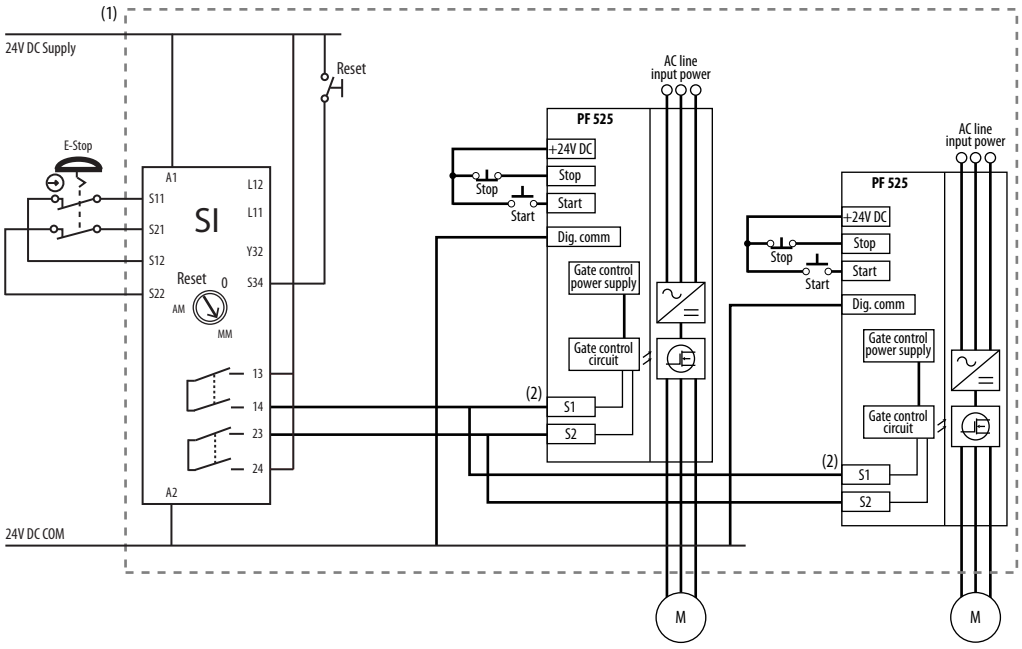

(1) Enclosure Recommended. Note: External wiring failure modes must be considered as described in EN ISO 13849-2. Enclosure or other measure to exclude these failure modes should be used.
(2) Each safety input draws 6 mA from the supply.

Circuit Status

Circuit shown with guard door closed and system ready for normal drive operation.

Operating Principle

This is a dual channel system with monitoring of the Safe-Torque-Off circuit and drive. Opening the guard door will switch the input circuits (S13-S14 & S21-S22) to the Minotaur monitoring safety relay unit. The output circuits (13-14 & 23-24) will cause the Safe-Torque-Off Enable circuit to trip and the motor will coast to stop. To restart the drive, the Minotaur safety relay must first be reset followed by a valid start command to the drive.

Fault Detection

A single fault detected on the Minotaur safety input circuits will result in the lock-out of the system at the next operation and will not cause loss of the safety function.

A single fault detected on the PowerFlex 525 safety enable redundant inputs will result in the lock-out of the drive and will not cause loss of the safety function.

Example 2 – Safe-Torque-Off Connection with Controlled Stop Action, SIL 2/PL d

Stop Category 1 – Controlled

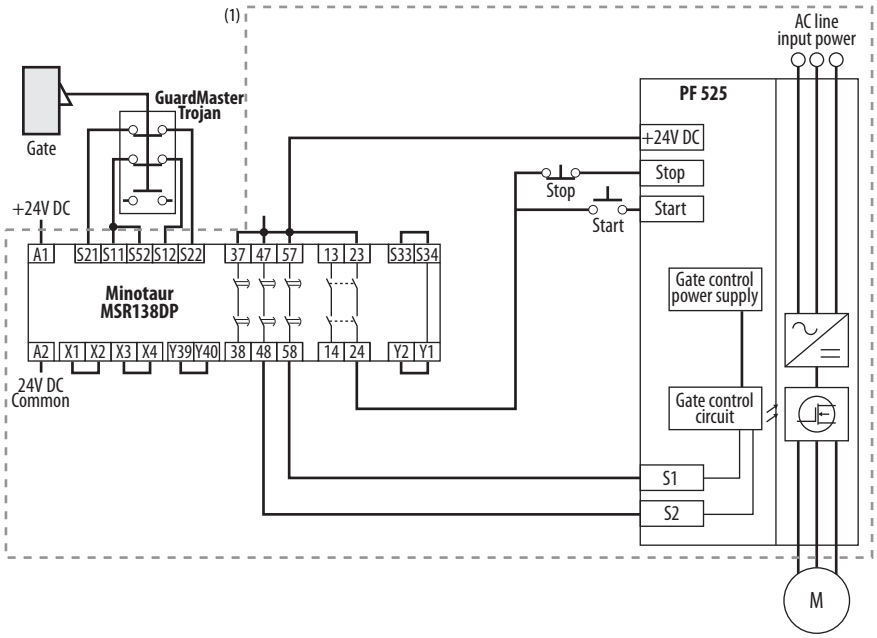

(1) Enclosure Recommended. External wiring failure modes must be considered as described in EN ISO 13849-2. Enclosure or other measure to exclude these failure modes should be used.

Circuit Status

Circuit shown with guard door closed and system ready for normal drive operation.

Operating Principle

This is a dual channel system with monitoring of the Safe-Torque-Off circuit and drive. Opening the guard door will switch the input circuits (S11-S12 & S21-S22) to the Minotaur monitoring safety relay unit. The output circuits (13-14) will issue a Stop command to the drive and cause a controlled deceleration. After the programmed delay, the timed output circuits (47-48 & 57-58) will cause the Safe-Torque-Off Enable circuit to trip. If the motor is rotating when the trip occurs, it will coast to stop. To restart the drive, the Minotaur safety relay must first be reset followed by a valid start command to the drive.

Fault Detection

A single fault detected on the Minotaur safety input circuits will result in the lock-out of the system at the next operation and will not cause loss of the safety function.

A single fault detected on the PowerFlex 525 safety enable redundant inputs will result in the lock-out of the drive and will not cause the loss of the safety function.

Example 3 – Safe-Torque-Off Connection with Coast-to-Stop Action Using External +24V supply, SIL 3/PL e

Stop Category 0 – Coast

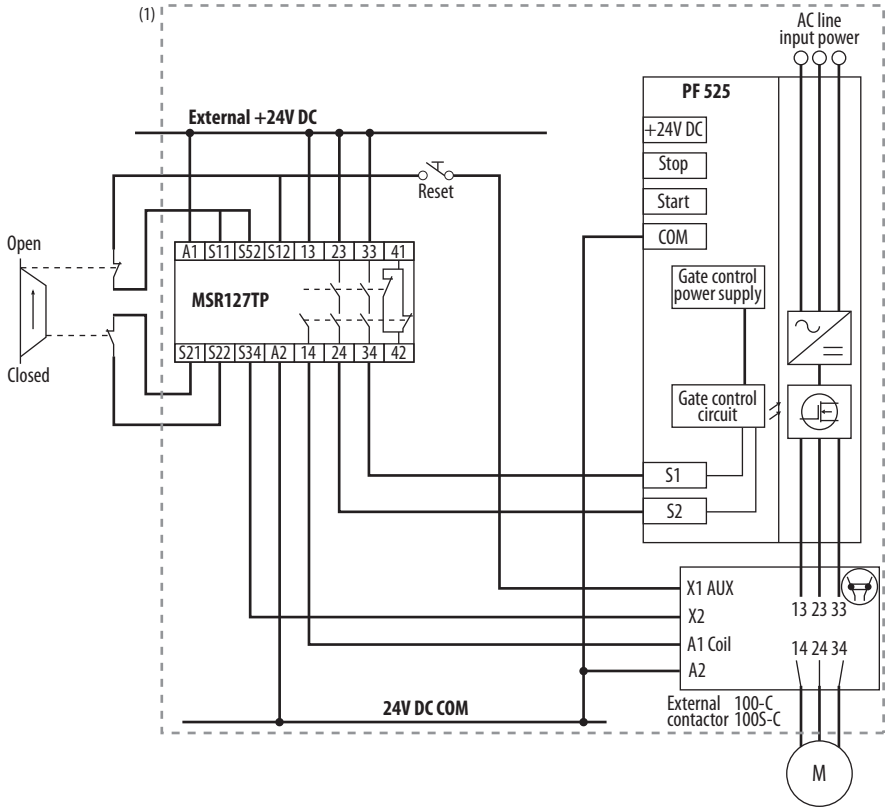

(1) Enclosure Recommended. External wiring failure modes must be considered as described in EN ISO 13849-2. Enclosure or other measure to exclude these failure modes should be used.

Circuit Status

Circuit shown with guard door closed and system ready for normal drive operation.

Operating Principle

This is a dual channel system with monitoring of the Safe-Torque-Off circuit and drive. Opening the guard door will switch the input circuits (S11-S12 & S21-S22) to the Minotaur monitoring safety relay unit. The output circuits (13-14 & 23-24 & 33-34) will cause the output contact and Safe-Torque-Off Enable circuit to trip and the motor will coast to stop. To restart the drive, the Minotaur safety relay must first be reset followed by a valid start command to the drive.

Fault Detection

A single fault detected on the Minotaur safety input circuits will result in the lock-out of the system at the next operation and will not cause loss of the safety function.

PowerFlex 525 Certification for Safe-Torque-Off

Certification information can be viewed at http://www.rockwellautomation.com/global/certification/

Notes:

EtherNet/IP

This section contains only basic information to setup an EtherNet/IP connection with your PowerFlex 520-series drive. For comprehensive information about EtherNet/IP (single and dual-port) and how to use it, see the following publications:

- PowerFlex 525 Embedded EtherNet/IP Adapter User Manual, publication 520COM-UM001.
- PowerFlex 25-COMM-E2P Dual-Port EtherNet/IP Adapter User Manual, publication 520COM-UM003.

ATTENTION: PowerFlex 523 drives support only the 25-COMM-E2P dual-port EtherNet/IP adapter. PowerFlex 525 drives support both the embedded EtherNet/IP adapter and the 25-COMM-E2P dual-port EtherNet/IP adapter.

It is recommended to use Allen-Bradley Ethernet RJ45 cables, shielded or unshielded (catalog number 1585J-M8xBJM-x), for connecting your PowerFlex 520-series drive to an EtherNet/IP network.

Establishing A Connection With EtherNet/IP

There are three methods for configuring the Ethernet IP address:

- **BootP Server** – Use BootP if you prefer to control the IP addresses of devices using a server. The IP address, subnet mask, and gateway addresses will then be provided by the BootP server.
- **Adapter Parameters** – Use adapter parameters when you want more flexibility in setting up the IP address, or need to communicate outside the control network using a gateway. The IP address, subnet mask, and gateway addresses will then come from the adapter parameters you set.
- **DHCP** (**Dynamic Host Configuration Protocol**) (only with PowerFlex 25-COMM-E2P adapter) – Use DHCP when you want additional flexibility and ease-of-use compared to BOOTP in configuring the IP address, subnet mask, and gateway address for the adapter using a DHCP server.

IMPORTANT If you are setting your network addresses manually using parameters, you must set the appropriate drive or 25-COMM-E2P adapter parameter value to 1 "Parameters". See the respective EtherNet/IP adapter user manual for more information.

IMPORTANT Regardless of the method used to set the adapter IP address, each node on the EtherNet/IP network must have a unique IP address. To change an IP address, you must set the new value and then remove and reapply power to (or reset) the adapter.

Ground Connections for EtherNet/IP Networks

Connect terminal C1 to a clean ground when using a network with a star topology. It is acceptable to ground both C1 and C2 terminals.

PowerFlex 525 Embedded Ethernet/IP Adapter

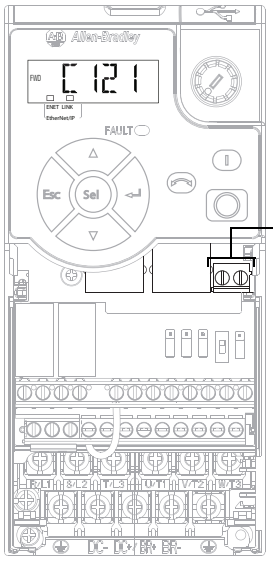

Terminal	Description
C1	This terminal is tied to the RJ-45 port shield. Tie this terminal to a clean ground in order to improve noise immunity when using external communication peripherals.
C2	This is the signal common for the communication signals.

Connect terminal CS1 or CS2 to a clean ground when using a network with a ring topology.

PowerFlex 25-COMM-E2P Dual-Port EtherNet/IP Adapter

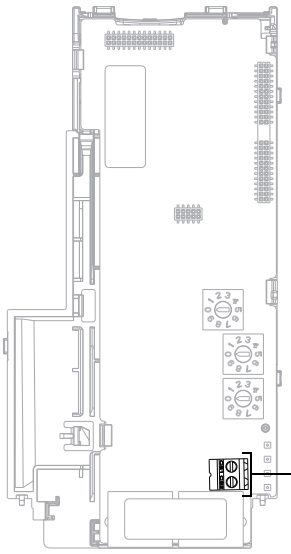

Terminal	Description
CS1/CS2	Provides a clean ground for the communication bus cable shields. CS1 or CS2 should be connected to a clean ground or PE ground on the drive.

Control Diagrams

This chapter contains various diagrams on the PowerFlex 520-series drive functions and behaviors.

Induction Motor Tuning Diagrams

[Speed Reg Sel] Diagrams For Motor Tuning

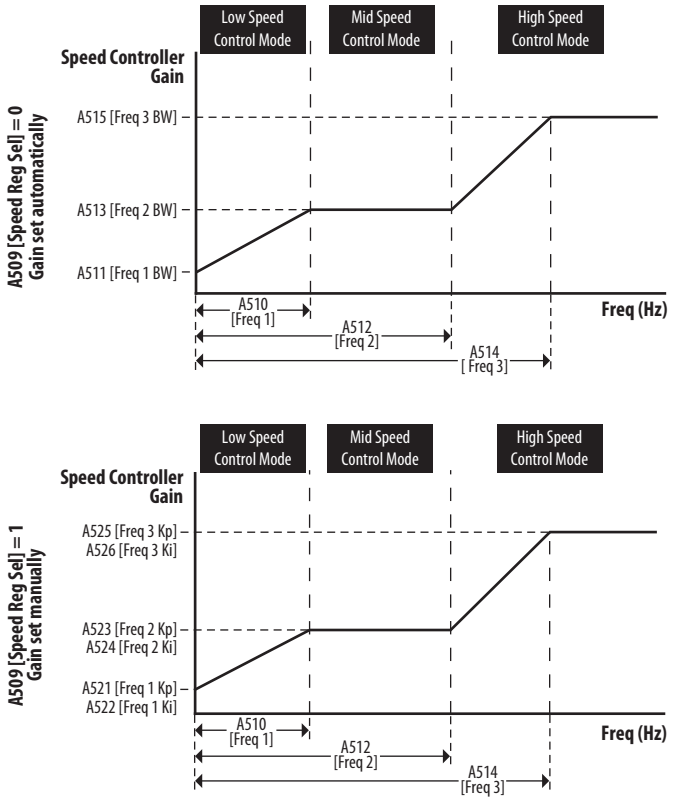

Adjusting Speed Control Parameters

These settings show how to adjust the speed control for motor tuning.

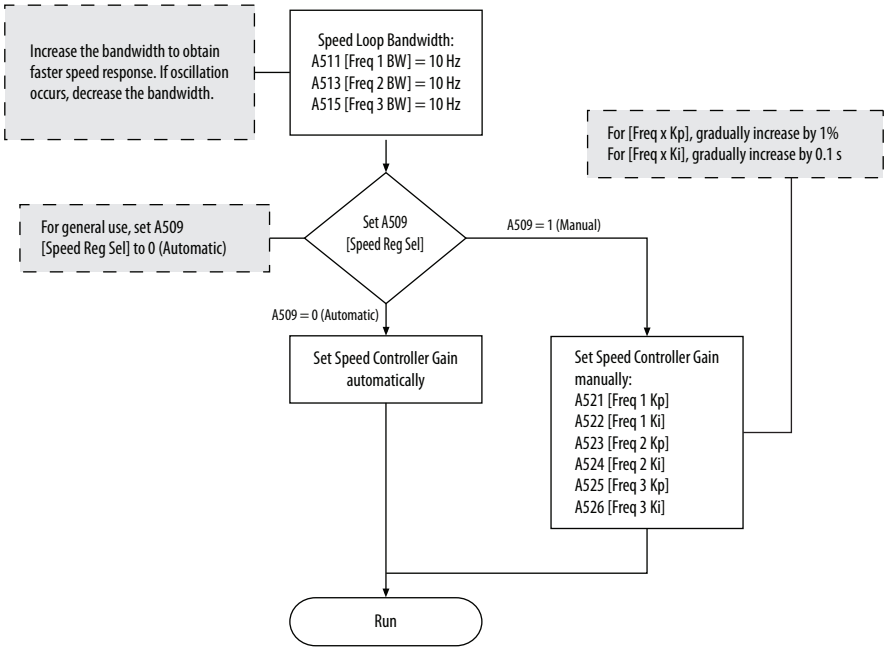

PowerFlex 525 PM Motor Configuration

This chapter contains instructions and diagrams on configuring the PowerFlex 525 drive for use with a PM motor.

For information on...	See page...
Download Files	252
Automatic Configuration Using Drive Startup Wizard	254
Manual Configuration Using Drive Keypad	261
Additional PM Motor Configuration	262
Optional Parameter Adjustments for Optimum Performance	266

ATTENTION: It is the responsibility of the startup engineer / end user to use proper safety precautions with any equipment used during this startup.

In no event will Rockwell Automation, Inc. be responsible or liable for indirect or consequential damages resulting from the use or application of this equipment. The examples and diagrams in this document are included solely for illustrative purposes. Because of the many variables and requirements associated with any particular installation, Rockwell Automation cannot assume responsibility or liability of actual use based on the examples and diagrams.

No patent liability is assumed by Rockwell Automation, Inc. with respect to the information, circuits, equipment. Or software described in this document. Rockwell Automation reserves the right to make changes to this document without prior notice. When using examples in this document the user recognizes that Rockwell Automation cannot be made liable for any damage or claims. Because there are many application-specific variables, users MUST ensure that products are correctly used and the appropriate architecture is deployed. Reproduction of the contents of this document, in whole or in part, without written permission of Rockwell Automation, Inc. is prohibited.

To use PM motor control, you need to install the PowerFlex 525 drive firmware revision 5.001 or later. If you wish to perform PM motor tuning by using the PowerFlex 525 Startup Wizard in Connected Components Workbench, you also need to install version 1.05 or later Add-on profile (AOP) and update to the latest drive database for Connected Components Workbench.

These files are available for download at the Rockwell Automation Product Compatibility and Download Center. For instructions, see Download Files on page 252.

Download Files

Follow these steps to download the files for your PowerFlex 525 drive.

1. Go to the Rockwell Automation Product Compatibility and Download Center at http://www.rockwellautomation.com/rockwellautomation/support/pcdc.page

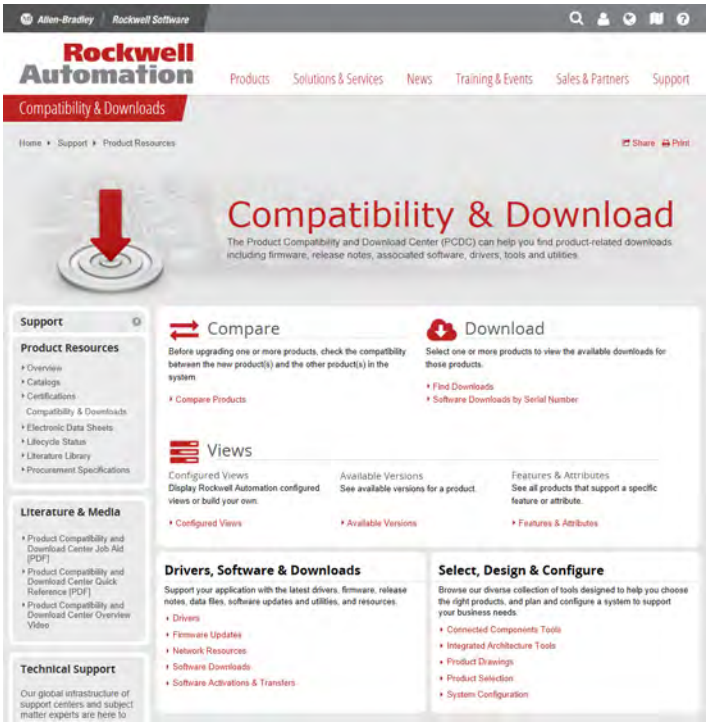

IMPORTANT You must sign in to the Rockwell Automation website before downloading a firmware revision.

2. Click the Find Downloads link.

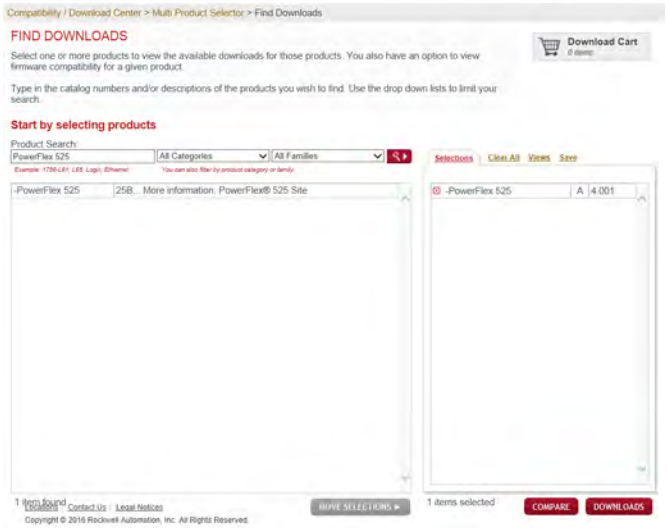

3. Enter “PowerFlex 525” into the Product Search field.
   The results appears in the box below.
4. Select the entry and the firmware revision, then click **Downloads**.

5. Click the Show Downloads icon, then click the links to download the firmware revision and AOP files to your computer.
6. Go back to step 2 and enter “AB Drives” into the Product Search field.
   The results appear in the box below.

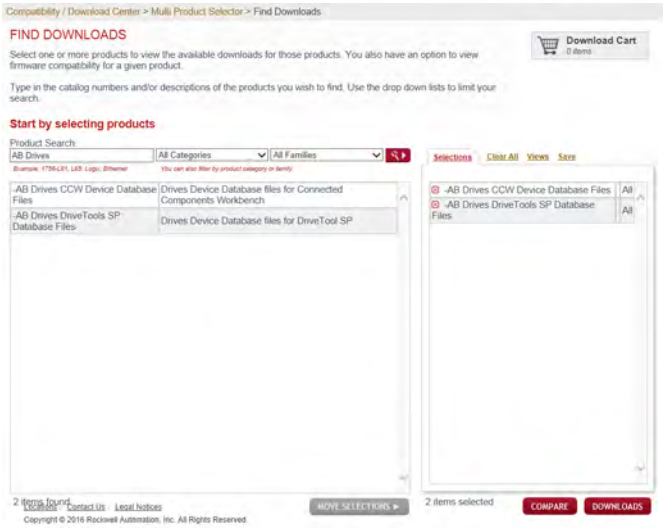

7. Select both entries, then click **Downloads**.

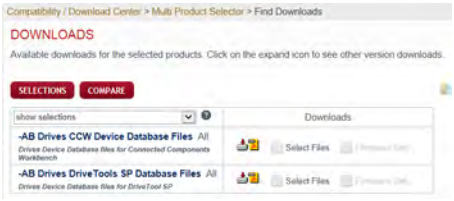

8. Click the Show Downloads icon, then click the links to download the database files to your computer.

Automatic Configuration Using Drive Startup Wizard

To use the PowerFlex 525 Startup Wizard in Connected Components Workbench to automatically configure the parameters, make sure you have installed the following:

- PowerFlex 525 drive firmware revision 5.001 or later.
- PowerFlex 525 drive Add-on Profile 1.05 or later.
- Latest drive database for Connected Components Workbench.

For instructions, see Download Files on page 252.

Alternatively, you can manually configure the parameters by using the drive keypad. For instructions, see Manual Configuration Using Drive Keypad on page 261.

1. From Connected Components Workbench software, click the Wizard Browser icon.

2. In the Available Wizards dialog box, click on PowerFlex 525 Startup Wizard, then click Select.

3. Before tuning the drive, it is recommended to reset all parameters to their default values. Select the option shown below.

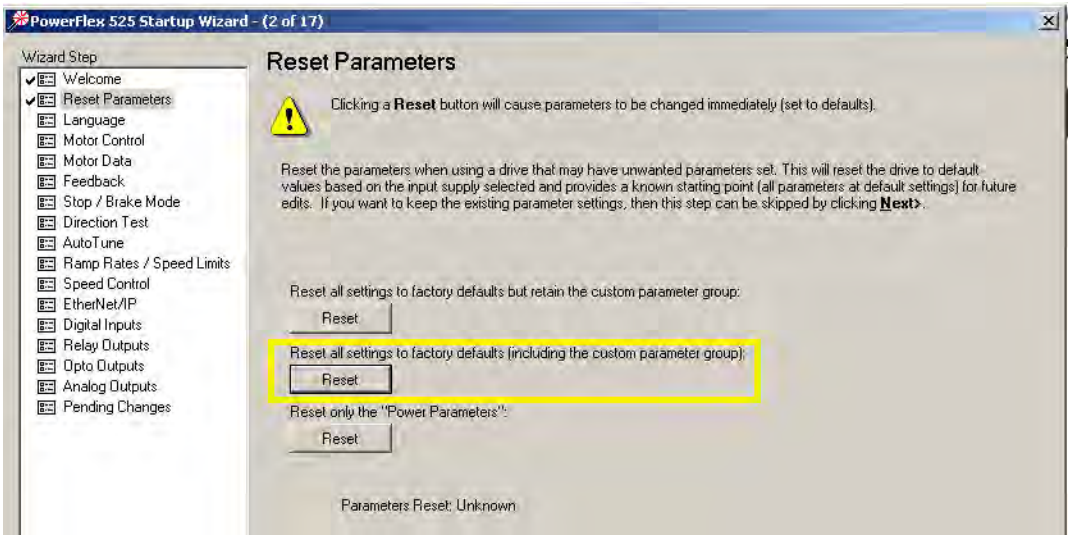

4. Complete each step in the Startup Wizard to configure the drive.

IMPORTANT Follow the Startup Wizard steps exactly. If not, unexpected results can occur.

Motor Control

From the Torq Perf Mode drop-down list, select “PM Motor”.

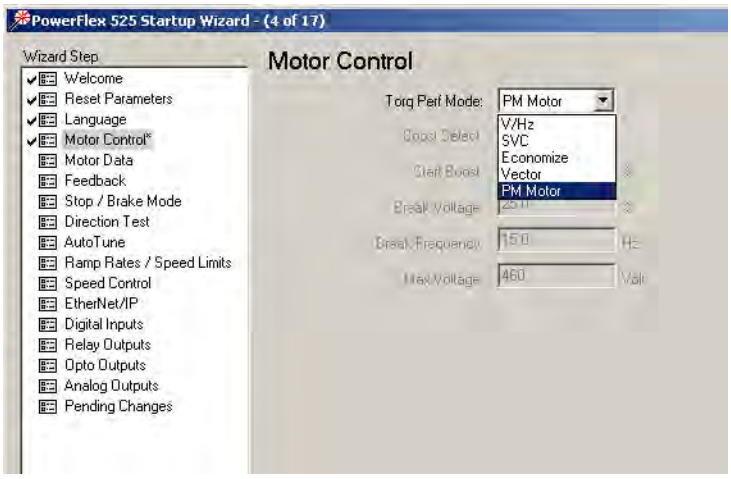

This configuration can also be done by setting parameter P039 [Torq Perf Mode] to 4 “PM Motor”.

Motor Data

Key in the details of your Motor Nameplate.

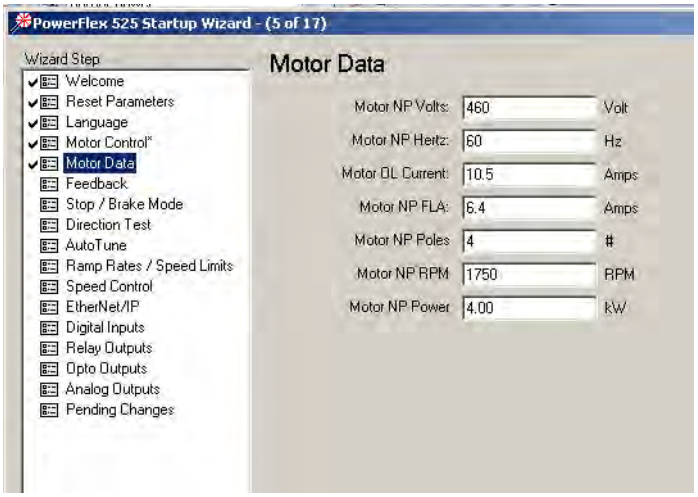

Feedback

If you are configuring a closed loop PM motor control, key in the details of your incremental encoder.

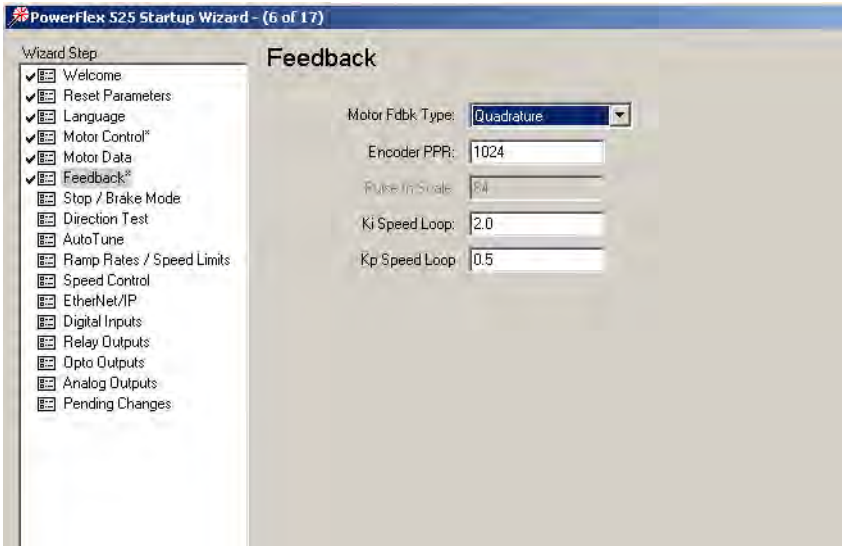

IMPORTANT Note the following:

- PowerFlex 525 drive only supports incremental AB encoder (25-ENC-1).
- Motor Feedback Type can be “Quadrature” or “Quad Check”.
- Only Interior Permanent magnet motor (iPM) is supported for closed loop control.

Stop Mode/Brake Type

Key in the details of your configuration.

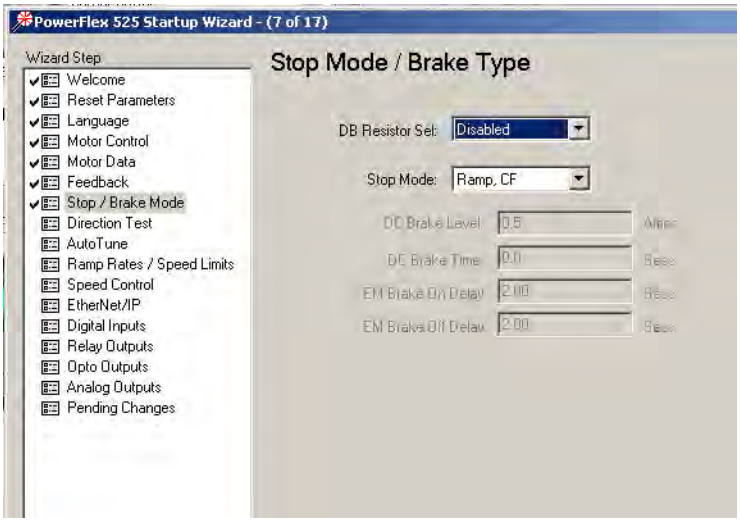

Direction Test

IMPORTANT When configuring a PM motor, it is required to perform a Direction Test before proceeding to the next step (Auto Tune).

Perform a Direction Test. The direction test can be performed with or without the load attached. Consider your application requirements when deciding to have the load attached or removed from the motor. This test runs in V/Hz mode to verify the motor polarity relative to the feedback polarity. The test confirms motor rotation and feedback polarity. After the test is completed, a change can be made, if required.

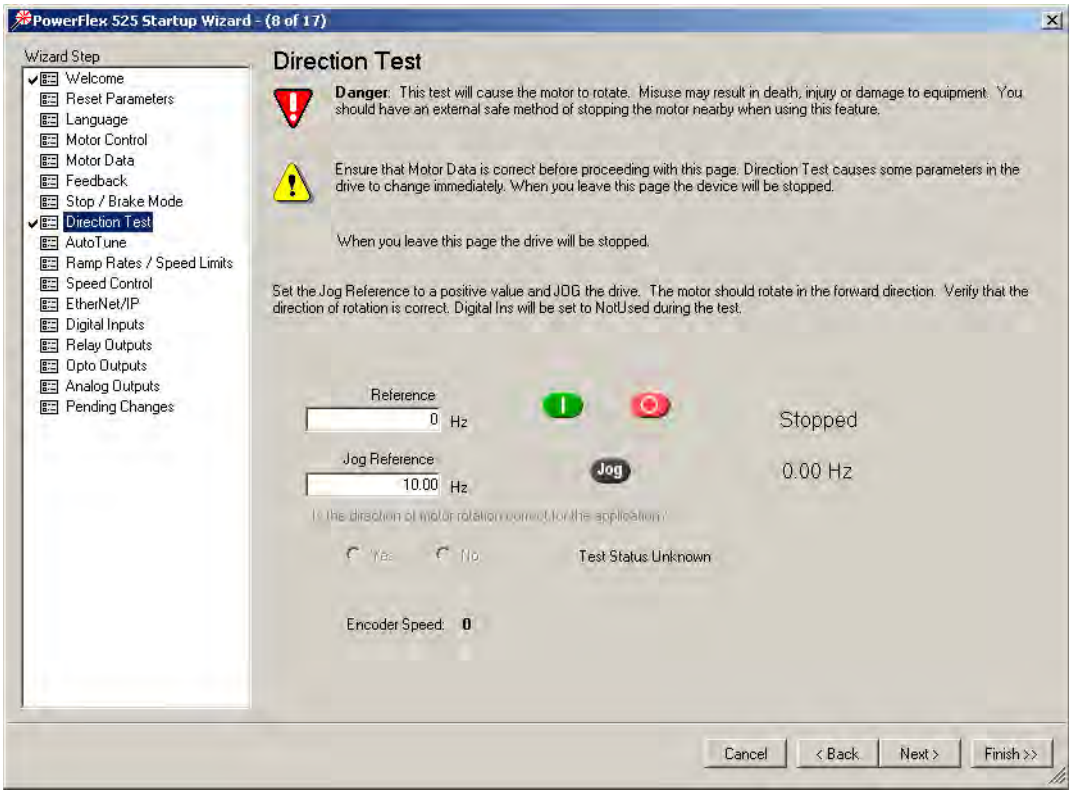

IMPORTANT If the drive was never operated before (new installation), verify that safeguards are in place to remove power safely from the drive during an unstable situation where the drive can produce undesired motion.

Auto Tune

Ensure the load is uncoupled and perform a Rotate Tune test.

The Auto Tune is used to identify the correct motor flux and stator electrical properties, including the following:

- IR volt drop, which is voltage drop over resistance.
- IXd volt drop, which is voltage drop over inductance.
- Flux current (estimated in Static Tune and measured in Rotate Tune test).
- Slip RPM, which is calculated from motor nameplate data. If an encoder is used, the Slip RPM becomes a measured value using the encoder.

Auto Tune Window

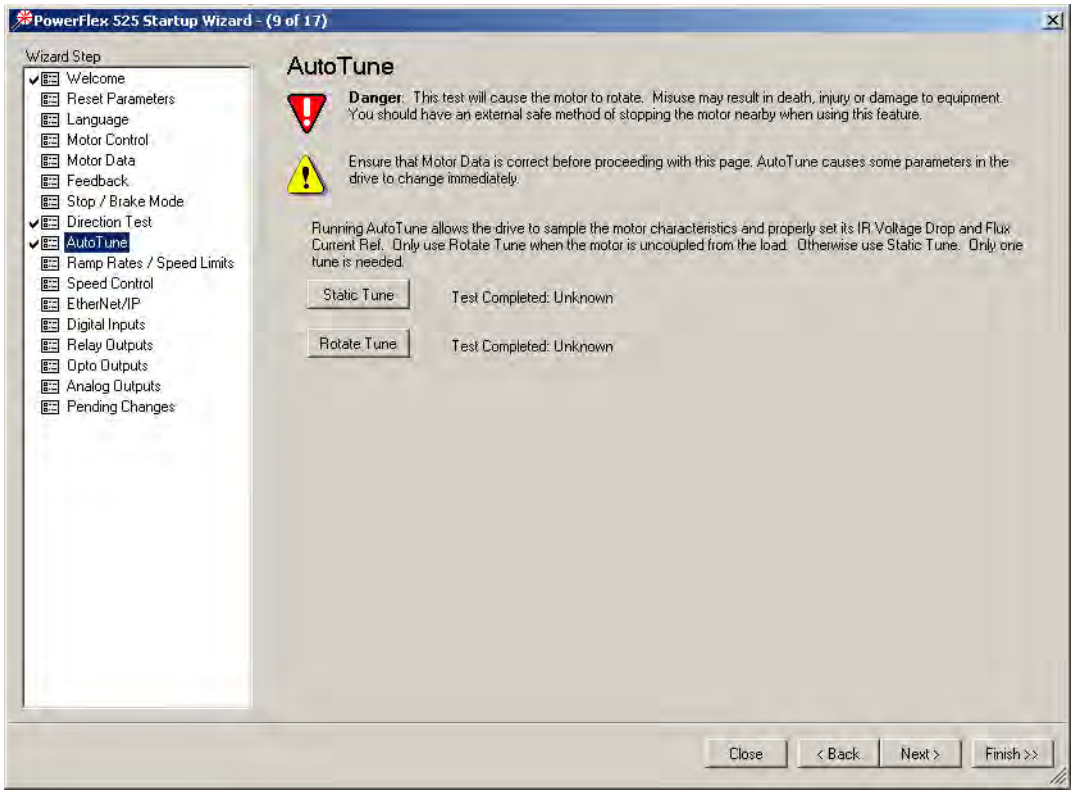

A properly tested motor and drive helps ensure higher starting torque and better performance at low speeds. Conversely, an improperly performed Auto Tune can cause the motor to exhibit instability at low speeds, uneven performances when running through the motor speed range, and can generate unnecessary faults such as overcurrent and overvoltage faults.

Static Tune

This test is used when the motor is connected to a high friction load and cannot easily be uncoupled from the motor, or when the load cannot be rotated due to mechanical constraints or a limited range of movement. The Static Tune test does not generate any motor movement. The Static tune test results may not be as accurate as the Rotate Tune test.

Rotate Tune (preferred for PM motor tuning)

This test is used when the motor is not coupled to the load or the load is low friction. Rotate tune is generally used to better identify motor flux and stator electrical properties, which are used to automatically tune the torque current loop. The Rotate Tune test causes motor rotation at different speeds while it is executing.

ATTENTION: If the drive was never operated before (new installation), verify that safeguards are in place to remove power safely from the drive during an unstable situation where the drive can produce undesired motion.

After completing the configuration and running the Auto Tune test, you may need to perform additional configuration depending on whether you have an open loop or closed loop system.

For an open loop system (A535 [Motor Fdbk Type] = 0 “None”), you may need to adjust two parameters if you encounter momentary reverse startup after a Start command is issued.

For a closed loop system (A535 [Motor Fdbk Type] = 4 “Quadrature” or 5 “Quad Check”, you must perform an angle alignment after the Auto Tune test before running the motor normally.

See Additional PM Motor Configuration on page 262 for instructions.

Manual Configuration Using Drive Keypad

Besides using the PowerFlex 525 Startup Wizard in Connected Components Workbench, you can also manually configure the parameters by using the drive keypad. Make sure you have installed the PowerFlex 525 drive firmware revision 5.001 or later. For instructions, see Download Files on page 252.

To configure the parameters, do the following:

1. Reset all parameters to their default values.
   Set P053 [Reset to Defalts] = 2 “Factory Rset”
2. Select the Control Mode
   Set P039 [Torque Perf Mode] = 4 “PM Control”
3. Enter Motor nameplate data
   - Set P031 [Motor NP Volts]
   - Set P032 [Motor NP Hertz]
   - Set P033 [Motor OL Current]
   - Set P034 [Motor NP FLA]
   - Set P035 [Motor NP Poles]
   - Set P036 [Motor NP RMP]
   - Set P037 [Motor NP Power]
   - Set P043 [Minimum Freq]
   - Set P044 [Maximum Freq]
4. Set A440 [PWM Frequency] = 4.0 kHz (default)
5. Set A535 [Motor Fdbk Type]
   - = 4 “Quadrature” or 5 “Quad Check” (for Closed Loop PM)
     or
   - = 0 “None” (for Open Loop PM)
   - A536 [Encoder PPR]
6. Enter Stop mode and dynamic brake data, if any.
   - P045 [Stop Mode]
   - A437 [DB Resistor Sel]
7. Ensure the load is uncoupled and perform a Rotate Tune test
   Set P040 [Autotune] = 2 “Rotate Tune”
   Press the Start button (Take note of your Start Source settings P046, P048, and P050. Default setting of P046 = 1 “Keypad”)

ATTENTION: If the drive was never operated before (new installation), verify that safeguards are in place to remove power safely from the drive during an unstable situation where the drive can produce undesired motion.

After completing the configuration and running the Auto Tune test, you may need to perform additional configuration depending on whether you have an open loop or closed loop system.

For an open loop system (A535 [Motor Fdbk Type] = 0 “None”), you may need to adjust two parameters if you encounter momentary reverse startup after a Start command is issued.

For a closed loop system (A535 [Motor Fdbk Type] = 4 “Quadrature” or 5 “Quad Check”, you must perform an angle alignment after the Auto Tune test before running the motor normally.

See Additional PM Motor Configuration on page 262 for instructions.

Additional PM Motor Configuration

After completing the initial configuration, there are additional steps that need to be performed to complete the whole PM motor setup.

For an open loop PM motor (iPM and sPM) control, some parameters need to be adjusted to prevent reverse startup. For a closed loop PM motor (iPM), an angle alignment procedure needs to be performed before the motor is run normally.

Additional Setup for Open Loop PM Motor

After performing an autotune on an open loop PM motor, a momentary “reverse startup” may occur. To prevent this from occurring, perform the following steps:

1. Set A516 [PM Initial Sel] = 1 “HFI”.
2. Increase the value of A519 [PM HFI NS Cur] by 10%.
3. Perform a test run at a reference speed and check if the motor reverses.
4. If the motor reverses, repeat steps 2 and 3.
5. If A519 [PM HFI NS Cur] has reached its maximum value (200%):
   - reset the value to the default (100%)
   - set A516 [PM Initial Sel] = 2 “Six Pulse”
6. Perform a test run at a reference speed and check if the motor reverses.
7. If the motor reverses, repeat steps 2 and 3.
8. If A519 [PM HFI NS Cur] has reached its maximum value again and a reverse motor startup still occurs, the motor setup has failed.

Flowchart for Open Loop PM Motor (iPM and sPM) Setup

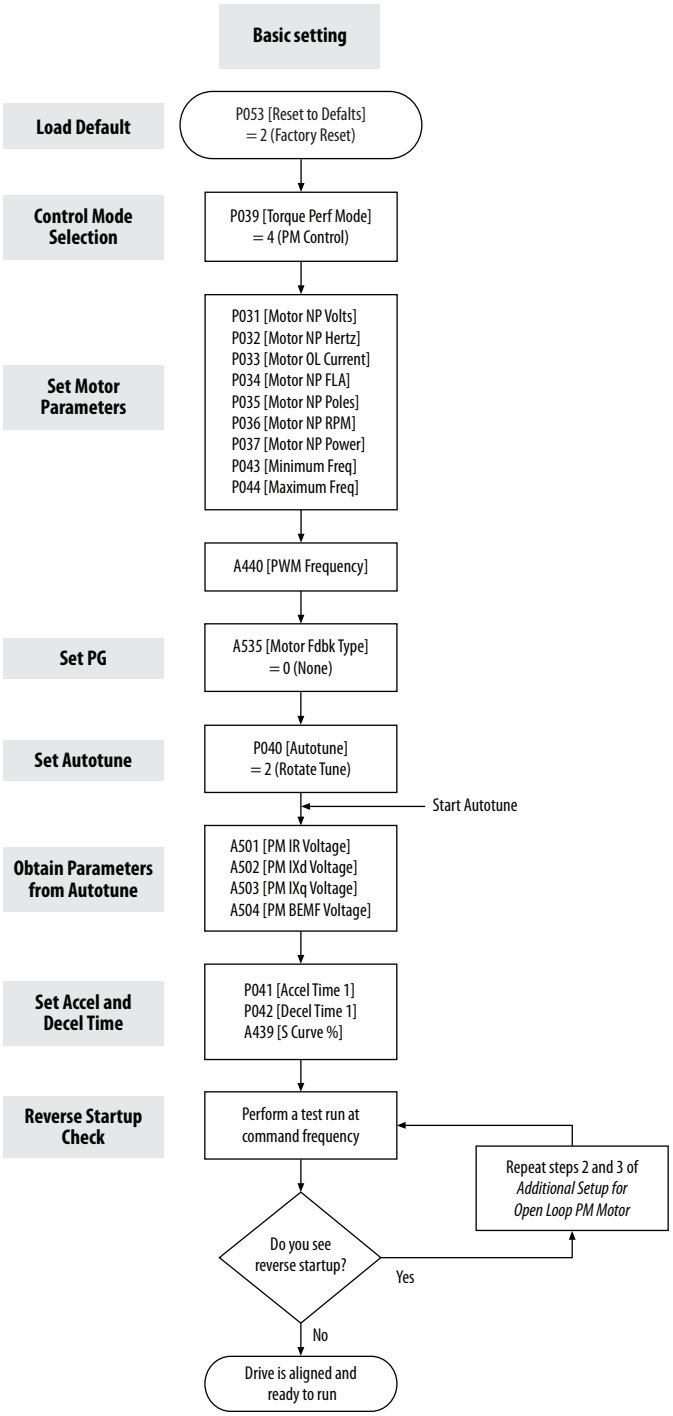

Additional Setup for Closed Loop PM Motor

After performing an autotune on an closed loop PM motor, a PM angle alignment needs to be performed to complete the setup.

Align the PM Angle

To align the PM angle, do the following:

1. Uncouple the load.
2. Set these parameters to the recommended value:
   - A517 [PM DC Inject Cur] = 60% (default is 30%)
   - A518 [PM Align Time] = 5.8 s (default is 0.7 s)
   - A580 [Current Loop BW] = 300 Hz (default is 0 Hz)
3. Set the desired speed (10...40 Hz recommended).
   Check the setting for P047 [Speed Reference 1]. Speed reference can be from POT, control panel of Connected Components Workbench, and so on.
4. Set the Start Source.
   Check the setting for P046 [Start Source 1]. Start source can be from POT, control panel of Connected Components Workbench, and so on.
5. Start the drive to run at the desired speed.
6. Drive will begin to align itself (move forward and reverse) and run to the desired speed.
7. Stop the drive. The drive is now aligned.

TIP The PM angle alignment only needs to be performed once unless the drive is power cycled or re-tuned.

IMPORTANT The PM angle alignment has failed when fault F012 (HW Overcurrent) or F013 (Ground Fault) is observed during acceleration and deceleration.

Adjustments if PM Angle Alignment has Failed

If the PM angle alignment has failed, do the following:

1. Cycle drive power or set A535 [Motor Fdbk Type] = 0 “None”, then set back to 4 “Quadrature” or 5 “Quad Check”.
2. Increase A517 [PM DC Inject Cur] by 50%.
3. Increase A518 [PM Align Time] by 0.2 s.
4. Repeat the Align the PM Angle instructions again, beginning from step 3.

Flowchart for Closed Loop PM Motor (iPM) Setup

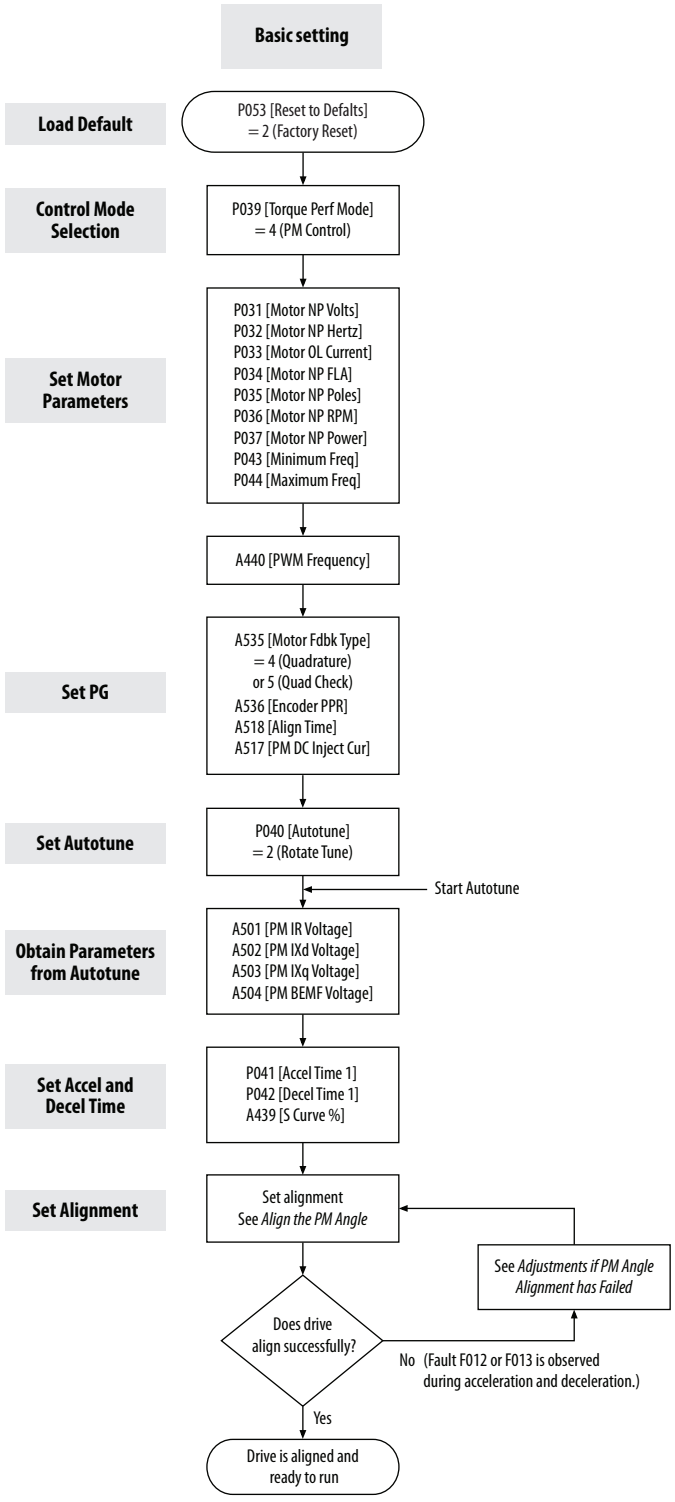

Optional Parameter Adjustments for Optimum Performance

There are a few parameters that you can use to obtain optimum performance during the test run. Usually, the default value of these parameters work well, but you may need to adjust them under different conditions.

1. A517 [PM DC Inject Cur]

   Maximum DC current in amps applied to the motor in order to reset the rotor position of a PM motor.

   Alignment has failed when fault F012 (HW Overcurrent) or F013 (Ground Fault) is observed during acceleration and deceleration.

   Default = 30%
   Increase 50 of A517 [PM DC Inject Cur] for each trial when PM speed response is slow after adding load.

2. A518 [PM Align Time]

   Magnetic pole reorientation time.

   Alignment failed when fault F012 (HW Overcurrent) or F013 (Ground Fault) is observed during acceleration and deceleration.

   Default = 0.7 s
   Increase A518 [PM Align Time] to > 4.7 s.

3. A527 [PM FWKn 1 Kp]

   The gain to ensure good performance in field weakening region.

   Default = 450%
   Increase 100 of A527 [PM FWKn 1Kp] for each trial when PM speed response is slow after adding load.
   Decrease 100 of A527 [PM FWKn 1Kp] for each trial when speed vibration is observed after adding load.

4. A580 [Current loop BW]

   Current loop bandwidth (0 = Auto calculate the control gain of current loop)

   Default = 0 Hz
   Increase 50 of A580 [Current Loop BW] for each trial when PM speed response is slow after adding load.
   Decrease 50 of A580 [Current Loop BW] for each trial when speed instability is observed after adding load.

5. A584 [PM Stable 2 Kp]

The gain for stabilization loop.

Default = 250%
Increase 100 of A584 [PM Stable 2 Kp] for each trial if fault F064 (Drive overload) is experienced at high load.
Applicable to open loop tuning especially for sPM motor. In most cases, the default value will work.

Notes:

Numerics

2-wire
  inputs, **50**
3-wire
  inputs, **50**

A

accel
  override priority, **51**
  selecting, **51**
accessing
  control terminals, **31**
  power terminals, **31**
applications
  safety, **237**
auxiliary contact
  drive, **34**, **36**

B

basic operation, **65**
  drive, **60**, **65**, **162**
  programming, **65**
  safety, **240**

C

circuit breakers
  inputs, **23**
  ratings, **23**
common bus
  drive, **36**
communications
  positioning, **225**
configuring
  RS485(DSI), **202**
control terminals
  accessing, **31**
counter
  programming, **209**, **212**

D

decel
  override priority, **51**
  selecting, **51**
derating
  factor, **125**
  temperature, **17**
digital inputs
  selecting, **50**
  start source, **50**
dimensions
  mounting, **16**, **185**
disconnect
  output, **34**
drive
  auxiliary contact, **34**, **36**
  basic operation, **60**, **65**, **162**
  common bus, **36**
  mount, **15**
  programming, **61**, **64**
  safety, **239**
drive damage
  preventing, **19**
  ungrounded distribution systems, **19**

E

encoder
  programming, **215**
  wiring, **216**
environment
  storage, **18**
Ethernet
  programming, **247**

F

fault monitoring
  ground, **21**
fuses
  rating, **23**

G

ground
  fault monitoring, **21**
  motor, **21**
  RFI filter, **22**
  safety, **21**
  shielding, **21**

H

homing
  automatic, **223**
  manual, **223**
  programming, **223**

I

inputs
  2-wire, **50**
  3-wire, **50**
  circuit breakers, **23**
  power, **20**

L

logic
  basic, **209**, **210**
  timed steps, **209**, **210**

M

Modbus
reading, **205**, **207**, **208**
writing, **203**, **205**, **208**
motor
ground, **21**
start, **34**
stop, **34**
mount
drive, **15**
mounting
dimensions, **16**, **185**

N

noise immunity
wiring, **37**, **202**

O

output
disconnect, **34**
override priority
accel, **51**
decel, **51**
speed reference, **49**
start source, **49**

P

parameters
AppView, **76**, **150**
CustomView, **151**
programming, **63**, **67**
PID
programming, **229**
positioning
communications, **225**
programming, **218**, **220**
power
inputs, **20**
power and control module
separating, **28**
power terminals
accessing, **31**
preventing
drive damage, **19**
programming, **65**
basic logic, **209**, **210**
counter, **209**, **212**
drive, **61**, **64**
encoder, **215**
Ethernet, **247**
homing, **223**
parameters, **63**, **67**
PID, **229**
positioning, **218**, **220**
pulse train, **215**
timed steps, **209**, **210**
timer, **209**, **211**
tools, **64**
pulse train
programming, **215**

R

rating
fuses, **23**
ratings
circuit breakers, **23**
reading
Modbus, **205**, **207**, **208**
recommended
wiring, **36**, **239**
reflected
wave protection, **34**
RFI filter
ground, **22**
RS485(DSI)
configuring, **202**

S

safety
applications, **237**
basic operation, **240**
drive, **239**
ground, **21**
testing, **238**
wiring, **239**
selecting
accel, **51**
decel, **51**
digital inputs, **50**
speed reference, **49**
start source, **49**
separating
power and control module, **28**
shielded
wiring, **33**
shielding
ground, **21**
speed reference
override priority, **49**
selecting, **49**
start
motor, **34**
start source
digital inputs, **50**
override priority, **49**
selecting, **49**
stop
motor, **34**
storage
environment, **18**

T

temperature
derating, **17**
wiring, **33**
testing
safety, **238**
timer
programming, **209**, **211**
tools
programming, **64**

U

unshielded
wiring, **33**

V

voltage reflections
wiring, **34**

W

wave protection
reflected, **34**
wiring
encoder, **216**
noise immunity, **37**, **202**
recommended, **36**, **239**
RS485 (DSI), **201**
safety, **239**
shielded, **33**
temperature, **33**
unshielded, **33**
voltage reflections, **34**
writing
Modbus, **203**, **205**, **208**

Notes:

Rockwell Automation Support

Rockwell Automation provides technical information on the Web to assist you in using its products. At http://www.rockwellautomation.com/support/, you can find technical manuals, a knowledge base of FAQs, technical and application notes, sample code and links to software service packs, and a MySupport feature that you can customize to make the best use of these tools.

Rockwell Automation provides compliance certification support at productcertification@ra.rockwell.com.
Rockwell Automation provides environmental compliance support at ProductStewardship@ra.rockwell.com.
Rockwell Automation provides country of origin certificates at RAEXMClassification@ra.rockwell.com.

For an additional level of technical phone support for installation, configuration, and troubleshooting, we offer TechConnect support programs. For more information, contact your local distributor or Rockwell Automation representative, or visit http://www.rockwellautomation.com/support/.

Installation Assistance

If you experience a problem within the first 24 hours of installation, review the information that is contained in this manual. You can contact Customer Support for initial help in getting your product up and running.

United States or Canada	1.440.646.3434
Outside United States or Canada	Use the Worldwide Locator at http://www.rockwellautomation.com/support/americas/phone_en.html, or contact your local Rockwell Automation representative.

New Product Satisfaction Return

Rockwell Automation tests all of its products to ensure that they are fully operational when shipped from the manufacturing facility. However, if your product is not functioning and needs to be returned, follow these procedures.

United States	Contact your distributor. You must provide a Customer Support case number (call the phone number above to obtain one) to your distributor to complete the return process.
Outside United States	Please contact your local Rockwell Automation representative for the return procedure.

Documentation Feedback

Your comments will help us serve your documentation needs better. If you have any suggestions on how to improve this document, complete this form, publication RA-DU002, available at http://www.rockwellautomation.com/literature/.

Rockwell Automation maintains current product environmental information on its website at http://www.rockwellautomation.com/rockwellautomation/about-us/sustainability-ethics/product-environmental-compliance.page.

www.rockwellautomation.com

Power, Control and Information Solutions Headquarters

Americas: Rockwell Automation, 1201 South Second Street, Milwaukee, WI 53204-2496 USA, Tel: (1) 414.382.2000, Fax: (1) 414.382.4444
Europe/Middle East/Africa: Rockwell Automation NV, Pegasus Park, De Kleetlaan 12a, 1831 Diegem, Belgium, Tel: (32) 2 663 0600, Fax: (32) 2 663 0640
Asia Pacific: Rockwell Automation, Level 14, Core F, Cyberport 3, 100 Cyberport Road, Hong Kong, Tel: (852) 2887 4788, Fax: (852) 2508 1846

PN-386600

Publication 520-UM001I-EN-E – July 2016

PN-386600

Supersedes Publication 520-UM001H-EN-E – April 2016

Copyright © 2016 Rockwell Automation, Inc. All rights reserved.

Technical Data

Allen-Bradley

PowerFlex Digital DC Drive

Table of Contents

Topic	Page
Additional Resources	2
Product Description	2
Standard Drives Program	3
Catalog Number Explanation	5
Standard Drives Product Selection	6
Factory Installed Options	8
User Installed Options	9
Installation Considerations	19
Circuit Protection	50
Mounting	66
Approximate Dimensions	67
PowerFlex DC Configured Drives	73
Specifications	79
Watts Loss and Fan Attributes	81

LISTEN. THINK. SOLVE.®

Additional Resources

These documents contain additional information concerning related products from Rockwell Automation.

Resource	Description
PowerFlex Digital DC Drive User Manual, publication 20P-UM001	Provides basic information needed to install, start-up, and troubleshoot the PowerFlex DC drive.
A Global Reference Guide for Reading Schematic Diagrams, publication 100-2.10	Provides a simple cross-reference of common schematic/wiring diagram symbols used throughout various parts of the world.
Guarding Against Electrostatic Damage, publication 8000-4.5.2	Explains the causes of ESD and how to guard against its effects.
Preventive Maintenance of Industrial Control and Drive System Equipment, publication DRIVES-TD001	Provides a checklist to use as a guide in performing preventive maintenance.
Safety Guidelines for the Application, Installation and Maintenance of Solid State Control, publication SGI-1.1	Provides general guidelines for the application, installation, and maintenance of solid state control in the form of individual devices or packaged assemblies incorporating solid state components.
Industrial Automation Wiring and Grounding Guidelines, publication 1770-4.1	Provides general guidelines for installing a Rockwell Automation industrial system.
Product Certifications website, http://www.ab.com	Provides declarations of conformity, certificates, and other certification details.

You can view or download publications at http://www.rockwellautomation.com/literature/. To order paper copies of technical documentation, contact your local Allen-Bradley distributor or Rockwell Automation sales representative.

For other information, contact Allen-Bradley Drives Technical Support:

Title	Online at . . .
Allen-Bradley Drives Technical Support	www.ab.com/support/abdrives

Product Description

The PowerFlex Digital DC drive provides digital control for precise speed and current regulation, easy programmability, extensive diagnostics, non-regenerative and regenerative operation, and is easily interfaced for integration into larger drive systems. PowerFlex DC drives are well suited to a variety of applications including extruding operations, finishing, drawing, and coating processes, applications exhibiting shock loads, high inertia, rapid accel/decel or continuous regeneration, and is an excellent choice for existing DC machinery upgrades. The compact design of this drive includes a fully contained power module and a common control structure for the entire range of horsepower. And, to make connectivity even easier, the PowerFlex DC drive provides a standard DPI interface that is compatible with all PowerFlex DPI communication products.

The standard hardware offering consists of an open type enclosure, armature converter, regulated field converter for field weakening or economy applications, an advanced regulator with integrated DPI functionality, DC tachometer and encoder capability.

Standard Drives Program

Packaging and Mounting

- **IP20, NEMA/UL Type Open** - For conventional mounting inside or outside a control cabinet.

Easy to Use Communication Tools

The PowerFlex Digital DC drive provides common communication tools that are familiar and easy to use, including the LCD Human Interface Module (HIM) and PC-based configuration tools.

- The LCD HIM provides:
  - Large and easy to read 7 line x 21 character, backlit display
  - Alternate function keys for shortcuts to common tasks
  - "Calculator-like" number pad for fast and easy data entry (Full Numeric version only)
  - Control keys for local start, stop, speed, and direction
  - Remote versions for panel mount applications
- PC-based Configuration tools include:
  - DriveExplorer™ and DriveExplorer Lite (v5.02 or higher). A simple and flexible "On-line" tool for monitoring and configuring while connected to a drive.
  - DriveTools™ SP (v4.01 or higher is required with a PowerFlex DC drive specific software patch. The patch can be downloaded from http://www.ab.com/support/abdrives/webupdate/). A suite of software tools which provide an intuitive means for programming, troubleshooting and maintaining Allen-Bradley drives, including the PowerFlex DC Drive Start-Up Wizard.
- Internal Communications allow you to integrate the drive into the manufacturing process. Status indicators for all internal communication options are visible on the cover for easy setup and monitoring of drive communications. You can easily manage information from "shop floor to top floor" and seamless integrate a complete system as you control, configure and collect data.

Drive Features

- Fast-acting **Current Limit** and **Voltage Regulation** result in maximum accel/decel without tripping.
- **High speed analog inputs** improve drive response to torque or speed commands.
- **Programming flexibility** allows parameters to be linked within the drive.
- **Field flashable firmware** through DPI interface.
- **Flying Start** delivers smooth and instantaneous connection into rotating loads, regardless of commanded direction, without the need for any speed feedback.
- **Single Phase Regulated Field supply** (10, 14, & 20A) standard on all frames.
- **Integral Process PI Control** can eliminate the need for a separate process loop controller.
- **Speed Regulation** - Open Loop or Closed Loop
  - Armature Feedback provides a 2000:1 rpm speed range
  - DC Tachometer Feedback provides up to 0.1% speed regulation
  - Encoder Feedback provides up to 0.1% speed regulation for the tightest application requirements.
- **Torque Regulation** - Open Loop or Closed Loop
  - Open Loop torque regulation provides ±5% regulation.
  - Encoder Feedback provides ±2% regulation and the ability to hold full load at zero speed.

Unsurpassed Capability in Network Communications

PowerFlex drives are fully compatible with the wide variety of Allen-Bradley DPI™ communication adapters, offering the following benefits:

ControlNet™	DeviceNet™	EtherNet/IP™	Interbus™	PROFIBUS™	Remote I/O	RS485 DF1	Description
✔	✔	✔					**(Unconnected Messaging)** permits other network devices (e.g. PanelView™) to communicate directly to a drive without routing the communication through the network scanner.
✔	✔	✔				✔	**Adapter Routing** - Plug PC into one drive and talk to all other Allen-Bradley drives on same network, without being routed through network scanner.
✔	✔	✔	✔	✔	✔	✔	Access to 100% of all parameters over the network.
	✔	✔		✔			**AutoBaud** capability makes initial connections less problematic.
	✔						**Change of State** significantly reduces network traffic by configuring control messages to be sent only upon customer defined states. Very flexible configuration for each node (Example: "reference must change by more than 5%").
	✔	✔					**Peer Control** provides master-slave type control between drives, where one or more slave drives (consumers) can run based on the status of a master drive (producer), which can also significantly reduce network traffic.
	✔						**ADR (Automatic Device Replacement)** saves significant time and effort when replacing a drive, by allowing the scanner to be configured to automatically detect a new drive and download the required parameter settings.
✔	✔	✔	✔	✔	✔	✔	**Flexible Fault Configuration** - Adapters can be programmed to take fault based actions as ramp to stop, coast-to-stop and hold last state, as well as send user configurable logic control and speed reference values. In addition, different actions can be taken based on whether the network experienced a serious problem (broken cable etc.) versus network idle condition (PLC set to "Program").

Catalog Number Explanation

Position

1-3	4	5	6	7	8-10	11	12	13	14	15	16
20P	4	1	A	D	4P1	R	A	0	N	N	N
a	*b*	*c*	*d*	*e*	*f*	*g*	*h*	*i*	*j*	*k*	*l*

a

Drive	
Code	Type
20P	PowerFlex DC

b

Motor Operation	
Code	Type
2	Two Quadrant Operation ∗
4	Four Quadrant Operation

∗ Not available for 230V AC input drives.

c

Input Type	
Code	Type
1	6 Pulse

d

Enclosure		
Code	Enclosure Rating	Conform. Coat
A	IP20, NEMA/UL Type Open	No

e

Input Voltage	
Code	Voltage
B	230V AC
D	460V AC ∗
E	600V AC
F	690V AC

∗ Use this code for 400V AC input applications.

f1

230V, 60 Hz Input				
Code	Hp	Armature Amps	Frame	Field Amps
7P0	1.5	7	A	10
9P0	2	9	A	10
012	3	12	A	10
020	5	20	A	10
029	7.5	29	A	10
038	10	38	A	10
055	15	55	A	10
073	20	73	A	14
093	25	93	A	14
110	30	110	A	14
146	40	146	B	20
180	50	180	B	20
218	60	218	B	20
265	75	265	B	20
360	100	360	B	20
434	125	434	B	20
521	150	521	C	20
700	200	700	C	20
875	250	875	D	40
1K0	300	1050	D	40

f2

460V, 60 Hz Input				
Code	Hp	Armature Amps	Frame	Field Amps
4P1	2	4.1	A	10
6P0	3	6	A	10
010	5	10	A	10
014	7.5	14	A	10
019	10	19	A	10
027	15	27	A	10
035	20	35	A	10
045	25	45	A	10
052	30	52	A	10
073	40	73	A	14
086	50	86	A	14
100	60	100	A	14
129	75	129	A	14
167	100	167	B	20
207	125	207	B	20
250	150	250	B	20
330	200	330	B	20
412	250	412	B	20
495	300	495	C	20
667	400	667	C	20
830	500	830	D	40
996	600	996	D	40
1K1	700	1162	D	70
1K3	800	1328	D	70
1K4	900	1494	D	70

f3 ∗

575V, 60 Hz Input				
Code	Hp	Armature Amps	Frame	Field Amps
067	50	67.5	B	20
101	75	101.3	B	20
135	100	135	B	20
270	200	270	B	20
405	300	405	B	20
540	400	504	C	20
675	500	675	C	20
810	600	810	D	40
1K0	800	1080	D	40
1K2	900	1215	D	40
1K3	1000	1350	D	40
1K6	1250	1668	D	40

f4 ∗

690V, 60 Hz Input				
Code	Hp	Armature Amps	Frame	Field Amps
452	400	452	C	20
565	500	565	C	20
678	600	678	D	40
791	700	791	D	40
904	800	904	D	40
1K0	900	1017	D	40
1K1	1000	1130	D	70
1K2	1100	1243	D	70
1K4	1250	1413	D	70
1K5	1400	1582	D	70

Catalog Number Explanation, continued

Position	1-3	4	5	6	7	8-10	11	12	13	14	15	16
	20P	4	1	A	D	4P1	R	A	0	N	N	N
	a	*b*	*c*	*d*	*e*	*f*	*g*	*h*	*i*	*j*	*k*	*l*

g

Field Supply	
Code	Type
R	Single-Phase Regulated

h

Packaging/Documentation		
Code	Shipping Carton	User Manual
A	Yes	Yes

i

HIM	
Code	Operator Interface
0	Blank Cover ∗

∗ Standard - for user installed options, see Human Interface and Wireless Interface Modules on page 9.

j

I/O Options∗	
Code	Control
N	None (8 - 24V DC Digital Inputs & Outputs, 3 Analog Outputs and 2 Analog Inputs are Standard)

∗ All I/O Options are purchased separately and are user installed. See I/O Options on page 9.

k

Communication Options	
Code	Description
N	None ∗

∗ Standard - for user installed options, see Communication Option Kits on page 10.

l

Cabinet Options	
Code	Type
N	None

Standard Drives Product Selection

IP20, NEMA/UL Type Open (Position d = A)

All drives are rated 150% overload for 60 seconds, 200% for three seconds.

230V AC, Three-Phase

Drive Output Rating			Non-Regenerative Drives[1]	Regenerative Drives	Frame Size
Normal Duty kW	Normal Duty HP	Amps	Cat. No.	Cat. No.	
1.2	1.5	7	20P21AB7P0RA0NNN	20P41AB7P0RA0NNN	A
1.5	2	9	20P21AB9P0RA0NNN	20P41AB9P0RA0NNN	A
2.2	3	12	20P21AB012RA0NNN	20P41AB012RA0NNN	A
3.7	5	20	20P21AB020RA0NNN	20P41AB020RA0NNN	A
5.5	7.5	29	20P21AB029RA0NNN	20P41AB029RA0NNN	A
7.5	10	38	20P21AB038RA0NNN	20P41AB038RA0NNN	A
11	15	55	20P21AB055RA0NNN	20P41AB055RA0NNN	A
15	20	73	20P21AB073RA0NNN	20P41AB073RA0NNN	A
18.5	25	93	20P21AB093RA0NNN	20P41AB093RA0NNN	A
22	30	110	20P21AB110RA0NNN	20P41AB110RA0NNN	A
30	40	146	20P21AB146RA0NNN	20P41AB146RA0NNN	B
37	50	180	20P21AB180RA0NNN	20P41AB180RA0NNN	B
45	60	218	20P21AB218RA0NNN	20P41AB218RA0NNN	B
56	75	265	20P21AB265RA0NNN	20P41AB265RA0NNN	B
75	100	360	20P21AB360RA0NNN	20P41AB360RA0NNN	B

Drive Output Rating			Non-Regenerative Drives[1]	Regenerative Drives	Frame Size
Normal Duty kW	Normal Duty HP	Amps	Cat. No.	Cat. No.	
93	125	434	20P21AB434RA0NNN	20P41AB434RA0NNN	B
112	150	521	20P21AB521RA0NNN	20P41AB521RA0NNN	C
149	200	700	20P21AB700RA0NNN	20P41AB700RA0NNN	C
186	250	875	20P21AB875RA0NNN	20P41AB875RA0NNN	D
224	300	1050	20P21AB1K0RA0NNN	20P41AB1K0RA0NNN	D

(1) Currently not available for sale.

460V AC, Three-Phase

Drive Output Rating			Non-Regenerative Drives	Regenerative Drives	Frame Size
Normal Duty kW	Normal Duty HP	Amps	Cat. No.	Cat. No.	
1.5	2	4.1	20P21AD4P1RA0NNN	20P41AD4P1RA0NNN	A
2.2	3	6	20P21AD6P0RA0NNN	20P41AD6P0RA0NNN	A
3.7	5	10	20P21AD010RA0NNN	20P41AD010RA0NNN	A
5.5	7.5	14	20P21AD014RA0NNN	20P41AD014RA0NNN	A
7.5	10	19	20P21AD019RA0NNN	20P41AD019RA0NNN	A
11	15	27	20P21AD027RA0NNN	20P41AD027RA0NNN	A
15	20	35	20P21AD035RA0NNN	20P41AD035RA0NNN	A
18.5	25	45	20P21AD045RA0NNN	20P41AD045RA0NNN	A
22	30	52	20P21AD052RA0NNN	20P41AD052RA0NNN	A
30	40	73	20P21AD073RA0NNN	20P41AD073RA0NNN	A
37	50	86	20P21AD086RA0NNN	20P41AD086RA0NNN	A
45	60	100	20P21AD100RA0NNN	20P41AD100RA0NNN	A
56	75	129	20P21AD129RA0NNN	20P41AD129RA0NNN	A
75	100	167	20P21AD167RA0NNN	20P41AD167RA0NNN	B
93	125	207	20P21AD207RA0NNN	20P41AD207RA0NNN	B
112	150	250	20P21AD250RA0NNN	20P41AD250RA0NNN	B
149	200	330	20P21AD330RA0NNN	20P41AD330RA0NNN	B
187	250	412	20P21AD412RA0NNN	20P41AD412RA0NNN	B
224	300	495	20P21AD495RA0NNN	20P41AD495RA0NNN	C
298	400	667	20P21AD667RA0NNN	20P41AD667RA0NNN	C
373	500	830	20P21AD830RA0NNN	20P41AD830RA0NNN	D
447	600	996	20P21AD996RA0NNN	20P41AD996RA0NNN	D
552	700	1162	20P21AD1K1RA0NNN	20P41AD1K1RA0NNN	D
597	800	1328	20P21AD1K3RA0NNN	20P41AD1K3RA0NNN	D
671	900	1494	20P21AD1K4RA0NNN	20P41AD1K4RA0NNN	D

575V AC, Three-Phase

Drive Output Rating			Non-Regenerative Drives	Regenerative Drives	Frame Size
Normal Duty kW	Normal Duty HP	Amps	Cat. No.	Cat. No.	
37	50	67.5	20P21AE067RA0NNN	20P41AE067RA0NNN	B
56	75	101.3	20P21AE101RA0NNN	20P41AE101RA0NNN	B
75	100	135	20P21AE135RA0NNN	20P41AE135RA0NNN	B
149	200	270	20P21AE270RA0NNN	20P41AE270RA0NNN	B
224	300	405	20P21AE405RA0NNN	20P41AE405RA0NNN	B
298	400	540	20P21AE540RA0NNN	20P41AE540RA0NNN	C
373	500	675	20P21AE675RA0NNN	20P41AE675RA0NNN	C
447	600	810	20P21AE810RA0NNN	20P41AE810RA0NNN	D
597	800	1080	20P21AE1K0RA0NNN	20P41AE1K0RA0NNN	D
671	900	1215	20P21AE1K2RA0NNN	20P41AE1K2RA0NNN	D
746	1000	1350	20P21AE1K3RA0NNN	20P41AE1K3RA0NNN	D
932	1250	1688	20P21AE1K6RA0NNN	20P41AE1K6RA0NNN	D

690V AC, Three-Phase

Drive Output Rating			Non-Regenerative Drives	Regenerative Drives	Frame Size
Normal Duty kW	Normal Duty HP	Amps	Cat. No.	Cat. No.	
298	400	452	20P21AF452RA0NNN	20P41AF452RA0NNN	C
373	500	565	20P21AF565RA0NNN	20P41AF565RA0NNN	C
447	600	678	20P21AF678RA0NNN	20P41AF678RA0NNN	D
552	700	791	20P21AF791RA0NNN	20P41AF791RA0NNN	D
597	800	904	20P21AF904RA0NNN	20P41AF904RA0NNN	D
671	900	1017	20P21AF1K0RA0NNN	20P41AF1K0RA0NNN	D
746	1000	1130	20P21AF1K1RA0NNN	20P41AF1K1RA0NNN	D
820	1100	1243	20P21AF1K2RA0NNN	20P41AF1K2RA0NNN	D
932	1250	1413	20P21AF1K4RA0NNN	20P41AF1K4RA0NNN	D
1044	1400	1582	20P21AF1K5RA0NNN	20P41AF1K5RA0NNN	D

Factory Installed Options

Each PowerFlex DC drive includes one encoder and DC analog tachometer input. No other factory installed options are available at this time.

User Installed Options

Human Interface and Wireless Interface Modules

20-HIM-A0

20-HIM-A3

20-HIM-A5

20-HIM-A6

20-HIM-C3S

20-HIM-C5S

Description	Handheld/Local (Drive Mount) Cat. No.	Remote (Panel Mount) IP66, NEMA/UL Type 4x/12 ∗ Cat. No.
No HIM (Blank Plate)	20-HIM-A0	–
LCD Display, Full Numeric Keypad	20-HIM-A3	20-HIM-C3S ‡
LCD Display, Programmer Only	20-HIM-A5	20-HIM-C5S ‡
Enhanced, LCD, Full Numeric	20-HIM-A6	

∗ For indoor use only.
‡ Includes a 1202-C30 interface cable (3 meters) for connection to drive.

Human Interface Module Accessories

Description	Cat. No.
Bezel Kit for LCD HIMs, NEMA/UL Type 1 ‡	20-HIM-B1
PowerFlex HIM Interface Cable, 1 m (39 in) ∗	20-HIM-H10
Cable Kit (Male-Female) ➢	
0.33 Meters (1.1 Feet)	1202-H03
1 Meter (3.3 Feet)	1202-H10
3 Meter (9.8 Feet)	1202-H30
9 Meter (29.5 Feet)	1202-H90
DPI/SCANport™ One to Two Port Splitter Cable	1203-S03

‡ Includes a 1202-C30 interface cable (3 meters) for connection to drive.
∗ Required only when HIM is used as handheld or remote.
➢ Required in addition to 20-HIM-H10 for distances up to a total maximum of 10 Meters (32.8 Feet).

I/O Option Kit

Description	Cat. No.
I/O Expansion board	20P-S5V62
115V AC to 24V DC 8 Channel I/O Converter Board	20P-S520L

Feedback Option Kit

Description	Cat. No.
Resolver Feedback Option Module	20P-RES-A0

User Installed Options, continued

Communication Option Kits

Description	Cat. No.
BACnet® MS/TP RS485 Communication Adapter	20-COMM-B
ControlNet™ Communication Adapter (Coax)	20-COMM-C
DeviceNet™ Communication Adapter	20-COMM-D
EtherNet/IP™ Communication Adapter	20-COMM-E
HVAC Communication Adapter ❖	20-COMM-H
Interbus™ Communication Adapter	20-COMM-I
PROFIBUS™ DP Communication Adapter	20-COMM-P
ControlNet™ Communication Adapter (Fiber)	20-COMM-Q
Remote I/O Communication Adapter	20-COMM-R
RS485 DF1 Communication Adapter	20-COMM-S
External Communications Kit Power Supply	20-XCOMM-AC-PS1
DPI External Communications Kit	20-XCOMM-DC-BASE
External DPI I/O Option Board ✦	20-XCOMM-IO-OPT1
Compact I/O to DPI/SCANport Module	1769-SM1
Serial Null Modem Adapter	1203-SNM
Smart Self-powered Serial Converter (RS232) includes 1203-SFC and 1202-C10 Cables	1203-SSS
Universal Serial Bus™ (USB) Converter includes 2m USB, 20-HIM-H10 & 22-HIM-H10 Cables	1203-USB

✦ For use only with External DPI Communications Kits 20-XCOMM-DC-BASE.

PC Programming Software

Description	
DriveTools™ SP Software ✦	See publication 9303-PL002… for ordering/pricing information.
DriveExplorer™ Software (Lite/Full) ✦ ❖	
Pocket DriveExplorer™ Software	

✦ Set-up wizards are available for use with DriveTools SP and DriveExplorer (Lite/Full) only.

❖ DriveExplorer Lite is available for free download at: http://www.ab.com/drives/driveexplorer/free_download.html

Isolation Transformers

Isolation Transformers are available for installations that have specific types of AC supply configurations or require drive protection due to AC line disturbances.

Three Phase Primary Voltage			Three Phase Secondary Voltage		
kVA	**kW (HP)**	**Voltage**	**230V AC Catalog Number**	**460V AC Catalog Number**	**575V AC Catalog Number**
5	1.2 - 2.2 (1.5 - 3)	230	1321-3TW005-AA	1321-3TW005-AB	N/A
		460	1321-3TW005-BA	1321-3TW005-BB	N/A
		575	1321-3TW005-CA	1321-3TW005-CB	N/A
7.5	3.7 (5)	230	1321-3TW007-AA	1321-3TW007-AB	N/A
		460	1321-3TW007-BA	1321-3TW007-BB	N/A
		575	1321-3TW007-CA	1321-3TW007-CB	N/A
11	5.5 (7.5)	230	1321-3TW011-AA	1321-3TW011-AB	N/A
		460	1321-3TW011-BA	1321-3TW011-BB	N/A
		575	1321-3TW011-CA	1321-3TW011-CB	N/A
14	7.5 (10)	230	1321-3TW014-AA	1321-3TW014-AB	N/A
		460	1321-3TW014-BA	1321-3TW014-BB	N/A
		575	1321-3TW014-CA	1321-3TW014-CB	N/A
20	11 (15)	230	1321-3TW020-AA	1321-3TW020-AB	N/A
		460	1321-3TW020-BA	1321-3TW020-BB	N/A
		575	1321-3TW020-CA	1321-3TW020-CB	N/A
27	15 (20)	230	1321-3TW027-AA	1321-3TW027-AB	N/A
		460	1321-3TW027-BA	1321-3TW027-BB	N/A
		575	1321-3TW027-CA	1321-3TW027-CB	N/A

Three Phase Primary Voltage			Three Phase Secondary Voltage		
kVA	kW (HP)	Voltage	230V AC Catalog Number	460V AC Catalog Number	575V AC Catalog Number
34	18.5 (25)	230	1321-3TW034-AA	1321-3TW034-AB	N/A
		460	1321-3TW034-BA	1321-3TW034-BB	N/A
		575	1321-3TW034-CA	1321-3TW034-CB	N/A
40	22 (30)	230	1321-3TW040-AA	1321-3TW040-AB	N/A
		460	1321-3TW040-BA	1321-3TW040-BB	N/A
		575	1321-3TW040-CA	1321-3TW040-CB	N/A
51	30 (40)	230	1321-3TW051-AA	1321-3TW051-AB	N/A
		460	1321-3TW051-BA	1321-3TW051-BB	N/A
		575	1321-3TW051-CA	1321-3TW051-CB	N/A
63	37 (50)	230	1321-3TH063-AA	1321-3TH063-AB	1321-3TH063-AC
		460	1321-3TH063-BA	1321-3TH063-BB	1321-3TH063-BC
		575	1321-3TH063-CA	1321-3TH063-CB	1321-3TH063-CC
75	45 (60)	230	1321-3TH075-AA	1321-3TH075-AB	1321-3TH075-AC
		460	1321-3TH075-BA	1321-3TH075-BB	1321-3TH075-BC
		575	1321-3TH075-CA	1321-3TH075-CB	1321-3TH075-CC
93	56 (75)	230	1321-3TH093-AA	1321-3TH093-AB	1321-3TH093-AC
		460	1321-3TH093-BA	1321-3TH093-BB	1321-3TH093-BC
		575	1321-3TH093-CA	1321-3TH093-CB	1321-3TH093-CC
118	75 (100)	230	1321-3TH118-AA	1321-3TH118-AB	1321-3TH118-AC
		460	1321-3TH118-BA	1321-3TH118-BB	1321-3TH118-BC
		575	1321-3TH118-CA	1321-3TH118-CB	1321-3TH118-CC
145	93 (125)	230	1321-3TH145-AA	1321-3TH145-AB	1321-3TH145-AC
		460	1321-3TH145-BA	1321-3TH145-BB	1321-3TH145-BC
		575	1321-3TH145-CA	1321-3TH145-CB	1321-3TH145-CC
175	112 (150)	230	1321-3TH175-AA	1321-3TH175-AB	1321-3TH175-AC
		460	1321-3TH175-BA	1321-3TH175-BB	1321-3TH175-BC
		575	1321-3TH175-CA	1321-3TH175-CB	1321-3TH175-CC
220	145 (200)	230	1321-3TH220-AA	1321-3TH220-AB	1321-3TH220-AC
		460	1321-3TH220-BA	1321-3TH220-BB	1321-3TH220-BC
		575	1321-3TH220-CA	1321-3TH220-CB	1321-3TH220-CC
275	187 (250)	230	1321-3TH275-AA	1321-3TH275-AB	1321-3TH275-AC
		460	1321-3TH275-BA	1321-3TH275-BB	1321-3TH275-BC
		575	1321-3TH275-CA	1321-3TH275-CB	1321-3TH275-CC
330	224 (300)	230	1321-3TH330-AA	1321-3TH330-AB	1321-3TH330-AC
		460	1321-3TH330-BA	1321-3TH330-BB	1321-3TH330-BC
		575	1321-3TH330-CA	1321-3TH330-CB	1321-3TH330-CC
440	298 (400)	230	N/A	1321-3TH440-AB	1321-3TH440-AC
		460	N/A	1321-3TH440-BB	1321-3TH440-BC
		575	N/A	1321-3TH440-CB	1321-3TH440-CC
550	373 (500)	230	N/A	1321-3TH550-AB	1321-3TH550-AC
		460	N/A	1321-3TH550-BB	1321-3TH550-BC
		575	N/A	1321-3TH550-CB	1321-3TH550-CC
660	448 (600)	230	N/A	1321-3TH660-AB	1321-3TH660-AC
		460	N/A	1321-3TH660-BB	1321-3TH660-BC
		575	N/A	1321-3TH660-CB	1321-3TH660-CC
770	522 (700)	230	N/A	1321-3TH770-AB	1321-3TH770-AC
		460	N/A	1321-3TH770-BB	1321-3TH770-BC
		575	N/A	1321-3TH770-CB	1321-3TH770-CC
880	597 (800)	230	N/A	1321-3TH880-AB	1321-3TH880-AC
		460	N/A	1321-3TH880-BB	1321-3TH880-BC
		575	N/A	1321-3TH880-CB	1321-3TH880-CC

AC Input Line Reactors and Contactors

If a DC Contactor is used, an AC Input contactor is not needed.

230V AC Input Drives

Non-Regenerative Drive Cat. No.	Regenerative Drive Cat. No.	DC Amps	AC Line Amps	HP	IP00 (Open Style) Line Reactor Cat No.	Line Reactor kW (HP)	AC Input Contactor Cat. No.
20P21AB7P0	20P41AB7P0	7	5.7	1.5	1321-3R8-A	.75 (1)	100-C12D10
20P21AB9P0	20P41AB9P0	9	7.4	2	1321-3R12-A	1.49 (2)	100-C12D10
20P21AB012	20P41AB012	12	9.8	3	1321-3R18-A	0.75-3.7 (1-5)	100-C12D10
20P21AB020	20P41AB020	20	16	5	1321-3R18-A	0.75-3.7 (1-5)	100-C23D10
20P21AB029	20P41AB029	29	24	7.5	1321-3R55-A	5.5-11 (7.5-15)	100-C30D10
20P21AB038	20P41AB038	38	31	10	1321-3R55-A	5.5-11 (7.5-15)	100-C37D10
20P21AB055	20P41AB055	55	45	15	1321-3R55-A	5.5-11 (7.5-15)	100-C60D10
20P21AB073	20P41AB073	73	60	20	1321-3R80-A	15 (20)	100-C60D10
20P21AB093	20P41AB093	93	76	25	1321-3R100-A	18.5-22 (25-30)	100-C85D10
20P21AB110	20P41AB110	110	90	30	1321-3R100-A	18.5-22 (25-30)	100-D110D11
20P21AB146	20P41AB146	146	119	40	1321-3R160-A	30-37 (40-50)	100-D140D11
20P21AB180	20P41AB180	180	147	50	1321-3R160-A	30-37 (40-50)	100-D180D11
20P21AB218	20P41AB218	218	178	60	1321-3RB250-A	45-56 (60-75)	100-D180D11
20P21AB265	20P41AB265	265	217	75	1321-3RB250-A	45-56 (60-75)	100-D250ED11
20P21AB360	20P41AB360	360	294	100	1321-3RB320-A	75 (100)	100-D300ED11
20P21AB434	20P41AB434	434	355	125	1321-3RB400-A	93 (125)	100-D420ED11
20P21AB521	20P41AB521	521	426	150	1321-3R500-A	112 (150)	100-D630ED11
20P21AB700	20P41AB700	700	572	200	1321-3R600-A	149 (200)	100-D630ED11
20P21AB875	20P41AB875	875	715	250	1321-3R750-A	186 (250)	100-D860ED11
20P21AB1K0	20P41AB1K0	1050	858	300	1321-3R850-A	224 (300)	100-D860ED11

460V AC Input Drives

Non-Regenerative Drive Cat. No.	Regenerative Drive Cat. No.	DC Amps	AC Line Amps	HP	IP00 (Open Style) Line Reactor Cat No.	Line Reactor kW (HP)	AC Input Contactor Cat. No.
20P21AD4P1	20P41AD4P1	4.1	3.3	2	1321-3R4-A	.55 (.75)	100-C12D10
20P21AD6P0	20P41AD6P0	6	4.9	3	1321-3R8-A	.75 (1)	100-C12D10
20P21AD010	20P41AD010	10	8.2	5	1321-3R18-B	1.5-7.5 (2-10)	100-C12D10
20P21AD014	20P41AD014	14	11.4	7.5	1321-3R18-B	1.5-7.5 (2-10)	100-C12D10
20P21AD019	20P41AD019	19	15.5	10	1321-3R18-B	1.5-7.5 (2-10)	100-C23D10
20P21AD027	20P41AD027	27	22.1	15	1321-3R55-B	11-22 (15-30)	100-C23D10
20P21AD035	20P41AD035	35	28.6	20	1321-3R55-B	11-22 (15-30)	100-C30D10
20P21AD045	20P41AD045	45	36.8	25	1321-3R55-B	11-22 (15-30)	100-C37D10
20P21AD052	20P41AD052	52	42.5	30	1321-3R55-B	11-22 (15-30)	100-C43D10
20P21AD073	20P41AD073	73	59.6	40	1321-3R80-B	30 (40)	100-C60D10
20P21AD086	20P41AD086	86	70.3	50	1321-3R100-B	37-45 (50-60)	100-C85D10
20P21AD100	20P41AD100	100	81.7	60	1321-3R100-B	37-45 (50-60)	100-C85D10
20P21AD129	20P41AD129	129	105.4	75	1321-3R160-B	56-75 (75-100)	100-D110D11
20P21AD167	20P41AD167	167	136.4	100	1321-3R160-B	56-75 (75-100)	100-D140D11
20P21AD207	20P41AD207	207	169.1	125	1321-3RB250-B	93-112 (125-150)	100-D180D11
20P21AD250	20P41AD250	250	204.3	150	1321-3RB250-B	93-112 (125-150)	100-D210ED11
20P21AD330	20P41AD330	330	269.6	200	1321-3RB320-B	149 (200)	100-D300ED11
20P21AD412	20P41AD412	412	336.6	250	1321-3RB400-B	186.4 (250)	100-D420ED11
20P21AD495	20P41AD495	495	404.4	300	1321-3R500-B	223.7 (300)	100-D420ED11
20P21AD667	20P41AD667	667	544.9	400	1321-3R600-B	298.3 (400)	100-D630ED11
20P21AD830	20P41AD830	830	678.1	500	1321-3R750-B	372.8 (500)	100-D860ED11

Non-Regenerative Drive Cat. No.	Regenerative Drive Cat. No.	DC Amps	AC Line Amps	HP	IP00 (Open Style) Line Reactor Cat No.	Line Reactor kW (HP)	AC Input Contactor Cat. No.
20P21AD996	20P41AD996	996	813.7	600	1321-3R850-B	447,4 (600)	100-D860ED11
20P21AD1K1	20P41AD1K1	1162	949.4	700	1321-3R1000-B	552 (700)	100-G860KD22
20P21AD1K3	20P41AD1K3	1328	1085.0	800	(1)	–	100-G860KD22
20P21AD1K4	20P41AD1K4	1494	1220.6	900	(2)	–	100-G1200KD12

(1) No Line Reactor available for this drive rating. Use the recommended Isolation Transformer: 1321-3TH880-BB.

(2) No Line Reactor or Isolation Transformer available for this drive rating - must be sourced locally.

575V AC Input Drives

Non-Regenerative Drive Cat. No.	Regenerative Drive Cat. No.	DC Amps	AC Line Amps	HP	IP00 (Open Style) Line Reactor Cat No.	Line Reactor kW (HP)	AC Input Contactor Cat. No.
20P21AE067	20P41AE067	67.5	55.1	50	1321-3R55-B	37 (50)	100-C60D10
20P21AE101	20P41AE101	101.25	82.7	75	1321-3R100-B	56 (75)	100-C85D10
20P21AE135	20P41AE135	135	110.3	100	1321-3R130-B	75 (100)	100-D110D11
20P21AE270	20P41AE270	270	220.6	200	1321-3RB250-B	149 (200)	100-D250ED11
20P21AE405	20P41AE405	405	330.9	300	1321-3RB320-B	224 (300)	100-D420ED11
20P21AE540	20P41AE540	540	441.2	400	1321-3RB500-B	298 (400)	100-D630ED11
20P21AE675	20P41AE675	675	551.5	500	1321-3R600-B	373 (500)	100-D630ED11
20P21AE810	20P41AE810	810	661.8	600	1321-3R600-B	447 (600)	100-D860ED11
20P21AE1K0	20P41AE1K0	1080	882.4	800	1321-3R750-B	597 (800)	100-G700KD22
20P21AE1K2	20P41AE1K2	1215	992.7	900	1321-3R850-B	671 (900)	100-G860KD22
20P21AE1K3	20P41AE1K3	1350	1103.0	1000	1321-3R1000-B	746 (1000)	100-G1000KD12
20P21AE1K6	20P41AE1K6	1687.5	1378.7	1250	(1)	–	(2)

(1) No Line Reactor or Isolation Transformer available for this drive rating - must be sourced locally.

(2) No AC Input Contactor available for this drive rating - must be sourced locally.

690V AC Input Drives

Non-Regenerative Drive Cat. No.	Regenerative Drive Cat. No.	DC Amps	AC Line Amps	HP	IP00 (Open Style) Line Reactor Cat No.	Line Reactor kW (HP)	AC Input Contactor Cat. No.
20P21AF452	20P41AF452	452	369	400	1321-3RB500-C	–	100-D420ED11
20P21AF565	20P41AF565	565	462	500	1321-3RB600-C	–	100-D630ED11
20P21AF678	20P41AF678	678	554	600	Line Reactors or Isolation Transformers for 690V AC input voltage drives must be sourced locally.	–	100-D630ED11
20P21AF791	20P41AF791	791	646	700		–	100-D860ED11
20P21AF904	20P41AF904	904	739	800		–	100-D860ED11
20P21AF1K0	20P41AF1K0	1017	831	900		–	100-D860ED11
20P21AF1K1	20P41AF1K1	1130	923	1000		–	100-G700KD22
20P21AF1K2	20P41AF1K2	1243	1016	1100		–	100-G860KD22
20P21AF1K4	20P41AF1K4	1412.5	1154	1250		–	100-G1200KD12
20P21AF1K5	20P41AF1K5	1582	1292	1400		–	100-G1200KD12

Dynamic Brake Resistor Kits and DC Output Contactors

See Alternate Dynamic Brake Resistor Kits and DC Output Contactors on page 16 for recommended alternate DC Output Contactors for 575V and 690V AC input drives, respectively.

230V AC Input Drives

Frame	Drive Current Rating Code	DC Amps	AC Line Amps	HP	Dynamic Brake Resistor Kit Cat. No.	Armature Voltage (Volts)	DB Resistor Size (ohms)	DB Resistor Size (Watts)	Brake Amps Required	DC Loop Contactor Cat. No.(3)	DC Contactor Crimp Lugs Cat. No.(4)
A	7P0	7	5.7	1.5	1370-DBL62	240	20	420	12.00	1370-DC56	1370-LG40
	9P0	9	7.4	2	1370-DBL63	240	20	420	12.00	1370-DC56	1370-LG40
	012	12	9.8	3	1370-DBL64	240	15	420	16.00	1370-DC56	1370-LG40
	020	20	16	5	1370-DBL65	240	8.6	420	27.91	1370-DC56	1370-LG40
	029	29	24	7.5	1370-DBL66	240	6	345	40.00	1370-DC56	1370-LG40
	038	38	31	10	1370-DBL67	240	5	330	48.00	1370-DC56	1370-LG40
	055	55	45	15	1370-DBL68	240	3.5	385	68.57	1370-DC56	1370-LG56
	073	73	60	20	1370-DBL69	240	2.6	385	92.31	1370-DC110	1370-LG92
	093	93	76	25	1370-DBL70	240	2	330	120.00	1370-DC110	1370-LG92
	110	110	90	30	1370-DBL71	240	2	330	120.00	1370-DC110	1370-LG110
B	146	146	119	40	1370-DBL72	240	0.7	280	342.86	1370-DC180	1370-LG160
	180	180	147	50	1370-DBL73	240	0.5	365	480.00	1370-DC180	1370-LG180
	218	218	178	60	1370-DBL74	240	0.5	365	480.00	1370-DC280	1370-LG228
	265	265	217	75	1370-DBL75	240	2	330	120.00	1370-DC280	1370-LG268
	360	360	294	100	1370-DBL76	240	1.4	290	171.43	(1)	(5)
	434	434	355	125	(1)	240	0.5	1458	651	(1)	(5)
C	521	521	426	150	(1)	240	0.322	6221	781	(1)	(5)
	700	700	572	200	(2)	240	–	–	–	(1)	(5)
D	875	875	715	250	(2)	240	–	–	–	(1)	(5)
	1K0	1050	858	300	(2)	240	–	–	–	(1)	(5)

(1) See Alternate Dynamic Brake Resistor Kits and DC Output Contactors Amp on page 16.
(2) No Dynamic Brake Resistor kit available for this drive rating - must be sourced locally.
(3) Coil voltage = 115V AC, 50/60Hz.
(4) See DC Contactor Crimp Lug Kit Specifications Amp on page 15 for more information.
(5) Wire and Lug size dependant on enclosure dimensions and local codes.

460V AC Input Drives

Frame	Drive Current Rating Code	DC Amps	AC Line Amps	HP	Dynamic Brake Resistor Kit Cat. No.	Armature Voltage (Volts)	DB Resistor Size (ohms)	DB Resistor Size (Watts)	Brake Amps Required	DC Loop Contactor Cat. No.(3)	DC Contactor Crimp Lugs Cat. No.(4)
A	4P1	4.1	3.3	2	1370-DBH63	500	81	255	6.17	1370-DC56	1370-LG40
	6P0	6	4.9	3	1370-DBH64	500	62	245	8.06	1370-DC56	1370-LG40
	010	10	8.2	5	1370-DBH65	500	45	245	11.11	1370-DC56	1370-LG40
	014	14	11.4	7.5	1370-DBH66	500	27	350	18.52	1370-DC56	1370-LG40
	019	19	15.5	10	1370-DBH67	500	20	420	25.00	1370-DC56	1370-LG40
	027	27	22.1	15	1370-DBH68	500	12	405	41.67	1370-DC56	1370-LG40
	035	35	28.6	20	1370-DBH69	500	5	330	100.00	1370-DC56	1370-LG40
	045	45	36.8	25	1370-DBH70	500	4.5	330	111.11	1370-DC56	1370-LG52
	052	52	42.5	30	1370-DBH71	500	3.5	385	142.86	1370-DC56	1370-LG52
	073	73	59.6	40	1370-DBH72	500	2.6	345	192.31	1370-DC110	1370-LG92
	086	86	70.3	50	1370-DBH73	500	2	345	250.00	1370-DC110	1370-LG92
	100	100	81.7	60	1370-DBH74	500	2	345	250.00	1370-DC110	1370-LG110
	129	129	105.4	75	1370-DBH75	500	1	270	500.00	1370-DC180	1370-LG140

Frame	Drive Current Rating Code	DC Amps	AC Line Amps	HP	Dynamic Brake Resistor Kit Cat. No.	Armature Voltage (Volts)	DB Resistor Size (ohms)	DB Resistor Size (Watts)	Brake Amps Required	DC Loop Contactor Cat. No.(3)	DC Contactor Crimp Lugs Cat. No.(4)
B	167	167	136.4	100	1370-DBH76	500	0.7	280	714.29	1370-DC180	1370-LG180
	207	207	169.1	125	1370-DBH77	500	0.7	280	714.29	1370-DC280	1370-LG228
	250	250	204.3	150	1370-DBH78	500	0.5	365	1000.00	1370-DC280	1370-LG268
	330	330	269.6	200	1370-DBH79	500	0.7	280	714.29	(1)	(5)
	412	412	336.6	250	(1)	500	0.808	7292	–	(1)	(5)
C	495	495	404.4	300	(1)	500	0.595	6069	–	(1)	(5)
	667	667	544.9	400	(1)	500	0.542	6439	–	(1)	(5)
D	800	830	678.1	500	(2)	500	0.463	6338	–	(1)	(5)
	960	996	813.7	600	(2)	500	0.322	6221	–	(1)	(5)
	1K1	1162	949.4	700	(2)	500	0.322	6221	–	(1)	(5)
	1K3	1328	1085.0	800	(2)	500	0.255	5718	–	(1)	(5)
	1K4	1494	1220.6	900	(2)	500	0.255	5718	–	(1)	(5)

(1) See Alternate Dynamic Brake Resistor Kits and DC Output Contactors Amp on page 16.
(2) No Dynamic Brake Resistor kit available for this drive rating - must be sourced locally.
(3) Coil voltage = 115V AC, 50/60Hz.
(4) See DC Contactor Crimp Lug Kit Specifications Amp on page 15for more information.
(5) Wire and Lug size dependant on enclosure dimensions and local codes.

DC Contactor Crimp Lug Kit Specifications

Use the information provided in the table below to assist you in ordering the correct Lug kit for your application.

Rated Motor Armature Current (1) *A DC*	DC Contactor Rating *A DC*	Armature Conductor Size (2) *AWG*	DB Conductor Size (3) *AWG*	Armature Conductor Crimp Lug Hole Size	DB Conductor Crimp Lug Hole Size	Lug Kit Catalog Number
4.1…35	56	8	8	#10	#10	1370-LG40
45…52	56	6	8	#10	#10	1370-LG52
55	56	4	8	#10	#10	1370-LG56
60…86	110	2	6	0.25 in.	0.25 in.	1370-LG92
100…110	110	1/0	4	0.25 in.	0.25 in.	1370-LG110
129	180	2/0	2	0.3125 in.	0.3125 in.	1370-LG140
146	180	3/0	2	0.3125 in.	0.3125 in.	1370-LG160
147…167	180	4/0	2	0.3125 in.	0.3125 in.	1370-LG180
207…218	280	300MCM	1/0	0.5 in.	0.375 in.	1370-LG228
250…265	280	400MCM	2/0	0.5 in.	0.375 in.	1370-LG268
266…280	280	500MCM	3/0	0.5 in.	0.375 in.	1370-LG280

(1) The Rated Motor Armature Current is taken directly from the motor nameplate or motor data. The current listed in this column is the maximum current allowed for the Armature Conductor Size (column 3) and the DC Contactor Rating (column 2).
(2) The armature conductors are sized by multiplying the Rated Motor Armature Current by 1.25 as provided for in NEC 420-22 (1987). The DC lug ratings are determined from NEC Table 310-16 (1987) for copper conductors, insulation temperature rated at 75° C (167° F) at an ambient temperature of 30° C (86° F). If conditions are other than shown in NEC Table 310-16, then refer to application codes.
(3) The dynamic braking (DB) conductors are sized as in footnote 2 above, but at half ampacity due to the short time duration of current flow in these conductors, and has been sized to satisfy NEMA Standard ICS 3-302.62 - Dynamic Braking. If the load inertia is larger than that of the motor, calculations must be made to determine correct conductor sizing and DB resistor wattage per NEMA Standard ICS 3-302.62.

Alternate Dynamic Brake Resistor Kits and DC Output Contactors

The following alternate dynamic brake resistor kits and/or DC output contactors may be used with the corresponding PowerFlex DC drives but must be sourced separately from the drive.

230V AC Input Drives

Frame	Drive Current Rating Code	DC Amps	AC Line Amps	HP	Dynamic Brake Resistor Kit Cat. No.	Armature Voltage (Volts)	DB Resistor Size (ohms)	DB Resistor Size (Watts)	Brake Amps Required	DC Loop Contactor Cat. No.(2)		DC Contactor Crimp Lugs Cat. No.(3)
										Drive w/No Dynamic Brake	Drive w Dynamic Brake	
B	360	360	294	100	1370-DBL76	240	1.4	290	171.43	ABB_EHDB360C2P-1L2S	ABB_EHDB360C-1L22SS	(4)
	434	434	355	125	CUTLER-HAMMER_G3AP50 (Qty 4 - two in series, two in parallel)	240	0.5	1458	651	ABB_EHDB520C2P-1L2S	ABB_EHDB520C-1L22SS	
C	521	521	426	150	HUBBELL_Y139W322GB	240	0.322	6221	781			
	700	700	572	200	(1)	240	–	–	–	ABB_EHDB800C2P-1L2S	ABB_EHDB800C-1L22SS	
D	875	875	715	250		240	–	–	–	ABB_EHDB960C2P-1L2S	ABB_EHDB960C-1L22SS	
	1K0	1050	858	300		240	–	–	–	SIEMENS-MFG_14-193-101-58-2 (Qty 2)	SIEMENS-MFG_14-193-101-58-2 (Qty 1)	

(1) No Dynamic Brake Resistor kit available for this drive rating - must be sourced locally.
(2) Coil voltage = 115V AC, 50/60Hz.
(3) See DC Contactor Crimp Lug Kit Specifications Amp on page 15 for more information.
(4) Wire and Lug size dependant on enclosure dimensions and local codes.

460V AC Input Drives

Frame	Drive Current Rating Code	DC Amps	AC Line Amps	HP	Dynamic Brake Resistor Kit Cat. No.	Armature Voltage (Volts)	DB Resistor Size (ohms)	DB Resistor Size (Watts)	Brake Amps Required	DC Loop Contactor Cat. No.(2)		DC Contactor Crimp Lugs Cat. No.(3)
										Drive w/No Dynamic Brake	Drive w Dynamic Brake	
B	330	330	269.6	200	1370-DBH79	500	0.7	280	714.29	ABB_EHDB360C2P-1L2S	ABB_EHDB360C-1L22SS	(4)
	412	412	336.6	250	HUBBELL_Y95W808GB	500	0.808	7292	–	ABB_EHDB520C2P-1L2S	ABB_EHDB520C-1L22SS	
C	495	495	404.4	300	HUBBELL_Y101W595GB	500	0.595	6069	–	ABB_EHDB520C2P-1L2S	ABB_EHDB520C-1L22SS	
	667	667	544.9	400	HUBBELL_Y109W542GB	500	0.542	6439	–	ABB_EHDB800C2P-1L2S	ABB_EHDB800C-1L22SS	
D	800	830	678.1	500	(1)	500	0.463	6338	–	ABB_EHDB960C2P-1L2S	ABB_EHDB960C-1L22SS	
	960	996	813.7	600		500	0.322	6221	–	SIEMENS-MFG_14-193-101-58-2 (Qty 2)	SIEMENS-MFG_14-193-101-58-2 (Qty 1)	
	1K1	1162	949.4	700		500	0.322	6221	–	SIEMENS-MFG_14-193-101-58-2 (Qty 2)	SIEMENS-MFG_14-193-101-58-2 (Qty 1)	
	1K3	1328	1085.0	800		500	0.255	5718	–	CUTLER-HAMMER_6702ED636-2 (Qty 2)	CUTLER-HAMMER_6702ED636-2 (Qty 1)	
	1K4	1494	1220.6	900		500	0.255	5718	–	CUTLER-HAMMER_6702ED636-2 (Qty 2)	CUTLER-HAMMER_6702ED636-2 (Qty 1)	

(1) No Dynamic Brake Resistor kit available for this drive rating - must be sourced locally.
(2) Coil voltage = 115V AC, 50/60Hz.
(3) See DC Contactor Crimp Lug Kit Specifications Amp on page 15 for more information.
(4) Wire and Lug size dependant on enclosure dimensions and local codes.

575V AC Input Drives

Frame	Drive Current Rating Code	DC Amps	AC Line Amps	Hp	Dynamic Brake Resistor Kit Cat. No.	Armature Voltage (Volts)	DB Resistor Size (ohms)	DB Resistor Size (Watts)	Brake Amps Required	DC Loop Contactor Cat. No.(2)		DC Contactor Crimp Lugs Cat. No.(3)
										Drive w/No Dynamic Brake	Drive w Dynamic Brake	
B	067	67.5	55.1	50	(1)	600	5.93	–	–	ABB_EHDB220C2P-1L2S	ABB_EHDB220C-1L22SS	(4)
	101	101	83	75		600	3.95	–	–	ABB_EHDB220C2P-1L2S	ABB_EHDB220C-1L22SS	
	135	135	110	100		600	2.96	–	–	ABB_EHDB220C2P-1L2S	ABB_EHDB220C-1L22SS	
	270	270	221	200		600	1.48	–	–	ABB_EHDB360C2P-1L2S	ABB_EHDB360C-1L22SS	
	405	405	331	300		600	0.988	–	–	ABB_EHDB520C2P-1L2S	ABB_EHDB520C-1L22SS	
C	540	540	441	400		600	0.741	–	–	ABB_EHDB650C2P-1L2S	ABB_EHDB650C-1L22SS	
	675	675	551	500		600	0.593	–	–	ABB_EHDB800C2P-1L2S	ABB_EHDB800C-1L22SS	
D	810	810	662	600		600	0.494	–	–	ABB_EHDB960C2P-1L2S	ABB_EHDB960C-1L22SS	
	1K0	1080	882	800		600	0.370	–	–	SIEMENS-MFG_14-193-101-58-2 (Qty 2)	SIEMENS-MFG_14-193-101-58-2 (Qty 1)	
	1K2	1215	993	900		600	0.329	–	–	SIEMENS-MFG_14-193-101-58-2 (Qty 2)	SIEMENS-MFG_14-193-101-58-2 (Qty 1)	
	1K3	1350	1103	1000		600	0.296	–	–	CUTLER-HAMMER_6702ED636-2 (Qty 2)	CUTLER-HAMMER_6702ED636-2 (Qty 1)	
	1K6	1688	1379	1250		600	0.237	–	–	CUTLER-HAMMER_6702ED636-2 (Qty 2)	CUTLER-HAMMER_6702ED636-2 (Qty 1)	

(1) No Dynamic Brake Resistor kit available for this drive rating - must be sourced locally.

(2) Coil voltage = 115V AC, 50/60Hz.

(3) See DC Contactor Crimp Lug Kit Specifications Amp on page 15 for more information.

(4) Wire and Lug size dependant on enclosure dimensions and local codes.

690V AC Input Drives

Frame	Drive Current Rating Code	DC Amps	AC Line Amps	Hp	Dynamic Brake Resistor Kit Cat. No.	Armature Voltage (Volts)	DB Resistor Size (ohms)	DB Resistor Size (Watts)	Brake Amps Required	DC Loop Contactor Cat. No.(2)		DC Contactor Crimp Lugs Cat. No.(3)
										Drive w/No Dynamic Brake	Drive w Dynamic Brake	
C	452	452	369	400	(1)	700	1.03	–	–	SIEMENS-MFG_14-193-101-58-2 (Qty 2)	SIEMENS-MFG_14-193-101-58-2 (Qty 1)	(4)
	565	565	462	500		700	0.826	–	–	SIEMENS-MFG_14-193-101-58-2 (Qty 2)	SIEMENS-MFG_14-193-101-58-2 (Qty 1)	
D	678	678	554	600		700	0.688	–	–	SIEMENS-MFG_14-193-101-58-2 (Qty 2)	SIEMENS-MFG_14-193-101-58-2 (Qty 1)	
	791	791	646	700		700	0.590	–	–	SIEMENS-MFG_14-193-101-58-2 (Qty 2)	SIEMENS-MFG_14-193-101-58-2 (Qty 1)	
	904	904	739	800		700	0.516	–	–	SIEMENS-MFG_14-193-101-58-2 (Qty 2)	SIEMENS-MFG_14-193-101-58-2 (Qty 1)	
	1K0	1017	831	900		700	0.459	–	–	SIEMENS-MFG_14-193-101-58-2 (Qty 2)	SIEMENS-MFG_14-193-101-58-2 (Qty 1)	
	1K1	1130	923	1000		700	0.413	–	–	SIEMENS-MFG_14-193-101-58-2 (Qty 2)	SIEMENS-MFG_14-193-101-58-2 (Qty 1)	
	1K2	1243	1016	1100		700	0.375	–	–	SIEMENS-MFG_14-193-101-58-2 (Qty 2)	SIEMENS-MFG_14-193-101-58-2 (Qty 1)	
	1K4	1413	1154	1250		700	0.330	–	–	CUTLER-HAMMER_6702ED636-2 (Qty 2)	CUTLER-HAMMER_6702ED636-2 (Qty 1)	
	1K5	1582	1292	1400		700	0.295	–	–	CUTLER-HAMMER_6702ED636-2 (Qty 2)	CUTLER-HAMMER_6702ED636-2 (Qty 1)	

(1) No Dynamic Brake Resistor kit available for this drive rating - must be sourced locally.

(2) Coil voltage = 115V AC, 50/60Hz.

(3) See DC Contactor Crimp Lug Kit Specifications Amp on page 15 for more information.

(4) Wire and Lug size dependant on enclosure dimensions and local codes.

Frame D Terminal Adapter Kits

The following frame D drives require the listed terminal adapter kits in order to meet UL installation requirements.

Voltage Class	Drive Current Rating Code	U, V, W Terminal Adapter Kit Number	C, D Terminal Adapter Kit Number
230	1K0	SK-20P-S726171	–
460	1K1		–
	1K3		–
	1K4		–
575	1K0		–
	1K2		–
	1K3		–
	1K6		SK-20P-S726173
690	1K0		–
	1K1		–
	1K2		–
	1K4		–
	1K5		–

Installation Considerations

The PowerFlex Digital DC drive has the following built in protective features to help simplify installation:

- Ground fault protection during start up and running ensures reliable operation
- Electronic motor overload protection increases motor life

There are many other factors that must be considered for optimal performance in any given application. The block diagram below highlights the primary installation considerations.

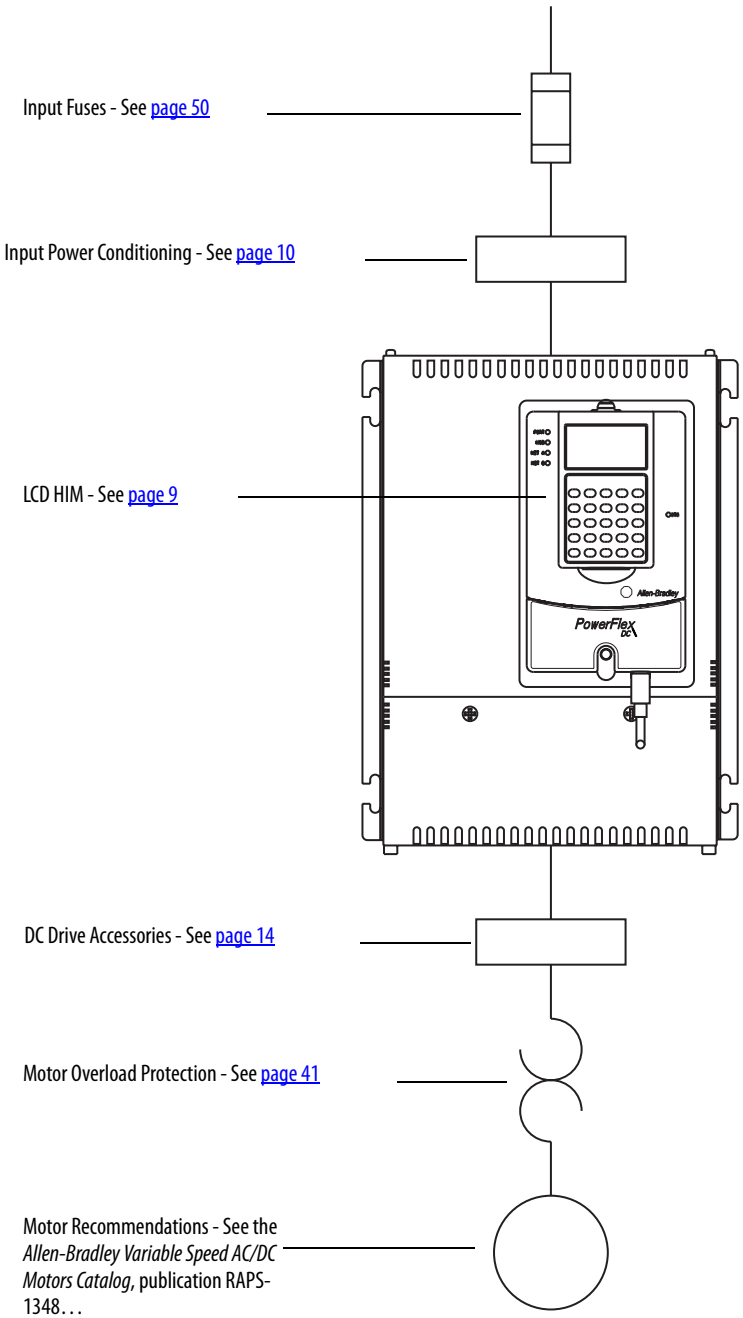

Power Wiring

AC Input Voltages

PowerFlex DC drives are rated for the following AC input voltages @ 50/60 Hz ±5%:

Mains Circuit (Terminals U, V, W)

- 230V ±10%, 3Ph
- 400V ±10%, 3Ph
- 440V ±10%, 3Ph
- 460V ±10%, 3Ph
- 480V ±10%, 3Ph
- 575V ±10%, 3Ph
- 690V ±10%, 3Ph

Field Circuit (Terminals U1, V1)

- 230V ±10%, 1Ph
- 400V ±10%, 1Ph
- 460V ±10%, 1Ph

Control Circuit (Terminals U2, V2)

- 115V ±15% or 230V ±15%, 1Ph

Note: For frame B and C drives only, a jumper must be placed between terminals SA-SB on the Switching Power Supply circuit board for the control circuits to work with 115V AC input. Refer to Frame B drives SA-SB Terminal Block Location on page 36 and Frame C Drives SA-SB Terminal Block Location on page 37 for terminal block locations.

DC Output Voltages

The output voltages below take into account an AC input undervoltage within the stated tolerance limits and a voltage drop of 4% due to an AC input line reactor. It is the same as the rated armature voltage suggested for the connected motor.

Armature Circuit

AC Input Voltage	DC Output Armature Voltage (Terminals C & D)	
(Terminals U, V, W)	Two Quadrant Drive	Four Quadrant Drive
230V ±10 %, 3Ph	260V	240V
400V ±10 %, 3Ph	470V	420V
440V ±10 %, 3Ph	530V	460V
460V ±10 %, 3Ph	560V	480V
480V ±10 %, 3Ph	580V	500V
575V ±10 %, 3Ph	680V	600V
690V ±10 %, 3Ph	810V	720V

Field Circuit

AC Input Voltage	DC Output Field Voltage(1) (Terminals C1 & D1)	
(Terminals U1 & V1)	Fixed Field	Adjustable Field
230V ±10 %, 1Ph	200V	200V
400V ±10 %, 1Ph	310V	310V
460V ±10%, 1Ph	360V	360V

(1) The max field voltage is equal to 0.85 x AC input line voltage

Typical Power Wiring Diagrams

The following diagram represents recommended power wiring configurations:

Power Wiring with AC Input Contactor

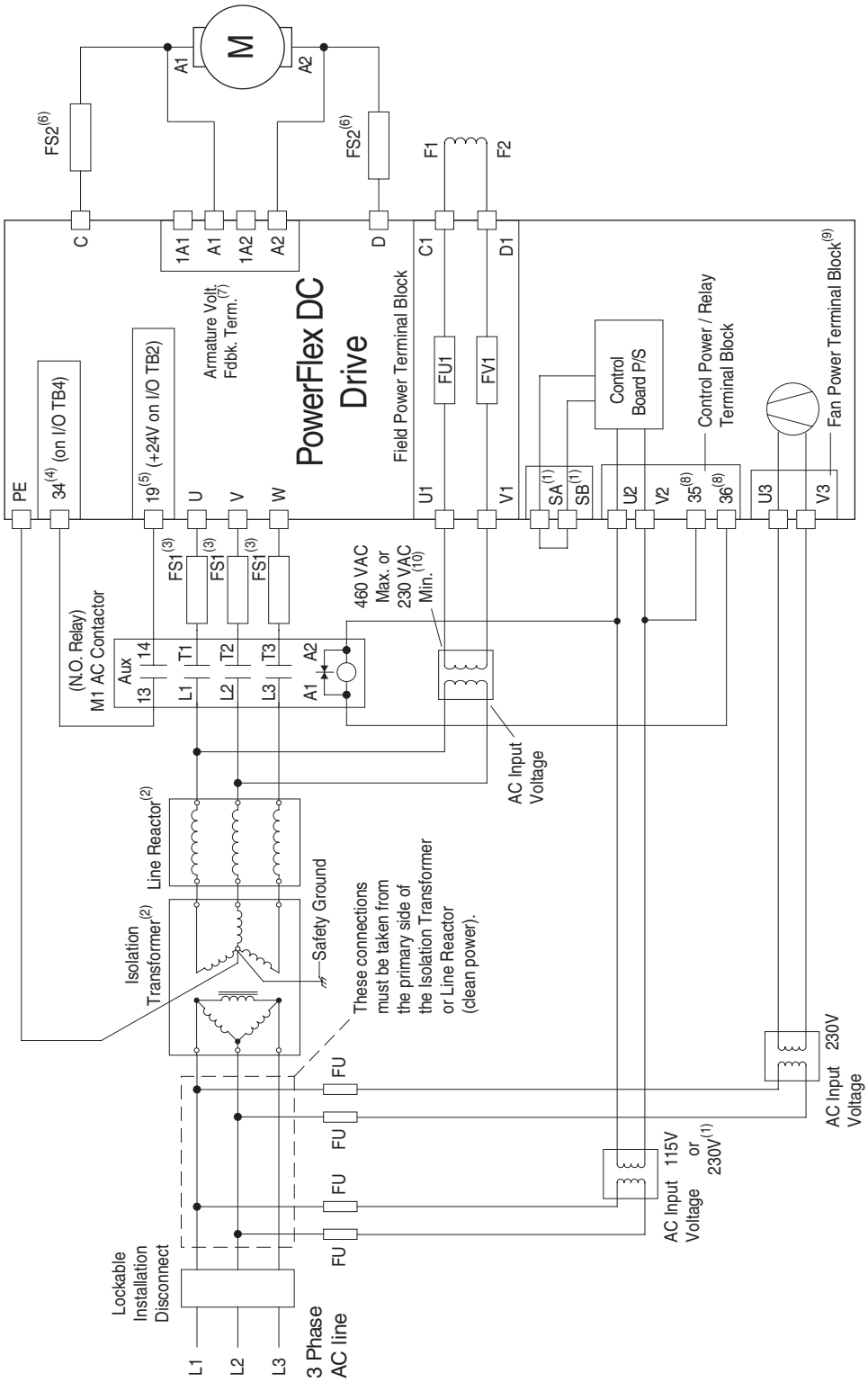

(1) For frame B and C drives only, a jumper is required between terminals SA and SB for 115V AC control input power. See Control Circuit Input Power on page 33 for more information.
(2) An Isolation Transformer and/or 3...5% impedance Line Reactor is required. If the Isolation Transformer provides the required 3...5% impedance, a Line Reactor is not required. See AC Input Line Reactors and Contactors on page 12 and Isolation Transformers on page 10 for recommendations.
(3) AC input fuses for the armature converter are customer supplied for frame A and B drives and are internally mounted on frame C and D drives. See Circuit Protection on page 50 for fuse recommendations.
(4) Par 140 [Digital In8 Sel] set to 31 "Contactor"
(5) If using the +24V internal power supply, terminal 18 (24V common) must be jumpered to terminal 35 (digital input common).
(6) Customer supplied armature output fuses are required on four quadrant and are recommended on two quadrant Frame A and B drives. See Circuit Protection on page 50 for fuse recommendations.
(7) Optional armature voltage feedback sensing not required with AC contactor.
(8) Par 1391 [ContactorControl] = 1 "AC Cntctr" and Par 1392 [Relay Out 1 Sel] = 25 "Contactor". **Important:** Terminal 35 and 36 are on the Control Power / Relay Terminal block, NOT the I/O terminal blocks. See Relay Outputs on page 41 for locations.
(9) Frame C & D drives only require an external power supply for the heatsink cooling fan. See Frame C Heatsink Cooling Fans Power Supply Terminals on page 38 and Frame D Heatsink Cooling Fan Power Supply Terminals on page 39 for more information.
(10) See Field Converter Connections on page 30.

Power Wiring with DC Output Contactor

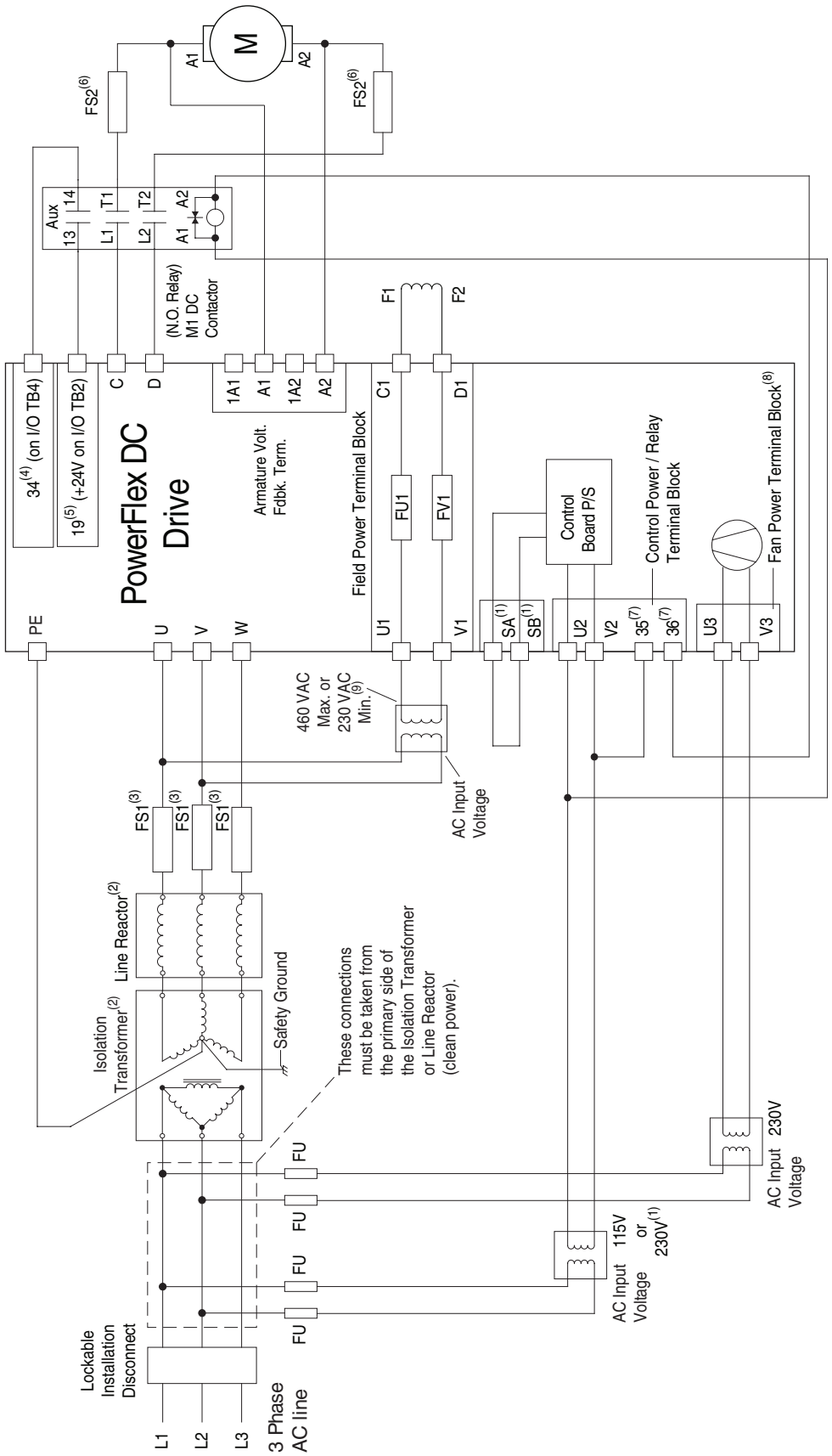

(1) For frame B and C drives only, a jumper is required between terminals SA and SB for 115V AC control input power. See Control Circuit Input Power on page 33 for more information.
(2) An Isolation Transformer and/or 3…5% impedance Line Reactor is required. If the Isolation Transformer provides the required 3…5% impedance, a Line Reactor is not required. See AC Input Line Reactors and Contactors on page 12 and Isolation Transformers on page 10 for recommendations.
(3) AC input fuses for the armature converter are customer supplied for frame A and B drives and are internally mounted on frame C and D drives. See Circuit Protection on page 50 for fuse recommendations.
(4) Par 140 [Digital In8 Sel] set to 31 "Contactor"
(5) If using the +24V internal power supply, terminal 18 (24V common) must be jumpered to terminal 35 (digital input common).
(6) Customer supplied armature output fuses are required on four quadrant and are recommended on two quadrant Frame A and B drives. See Circuit Protection on page 50 for fuse recommendations.
(7) Par 1391 [ContactorControl] = 3 "DC Cntctr" and Par 1392 [Relay Out 1 Sel] = 25 "Contactor". **Important:** Terminal 35 and 36 are on the Control Power / Relay Terminal block, NOT the I/O terminal blocks. See Relay Outputs on page 41 for locations.
(8) Frame C & D drives only require an external power supply for the heatsink cooling fan. See Frame C Heatsink Cooling Fans Power Supply Terminals on page 38 and Frame D Heatsink Cooling Fan Power Supply Terminals on page 39 for more information.
(9) See Field Converter Connections on page 30.

Power Wiring with DC Output/Dynamic Braking Contactor and a Dynamic Brake

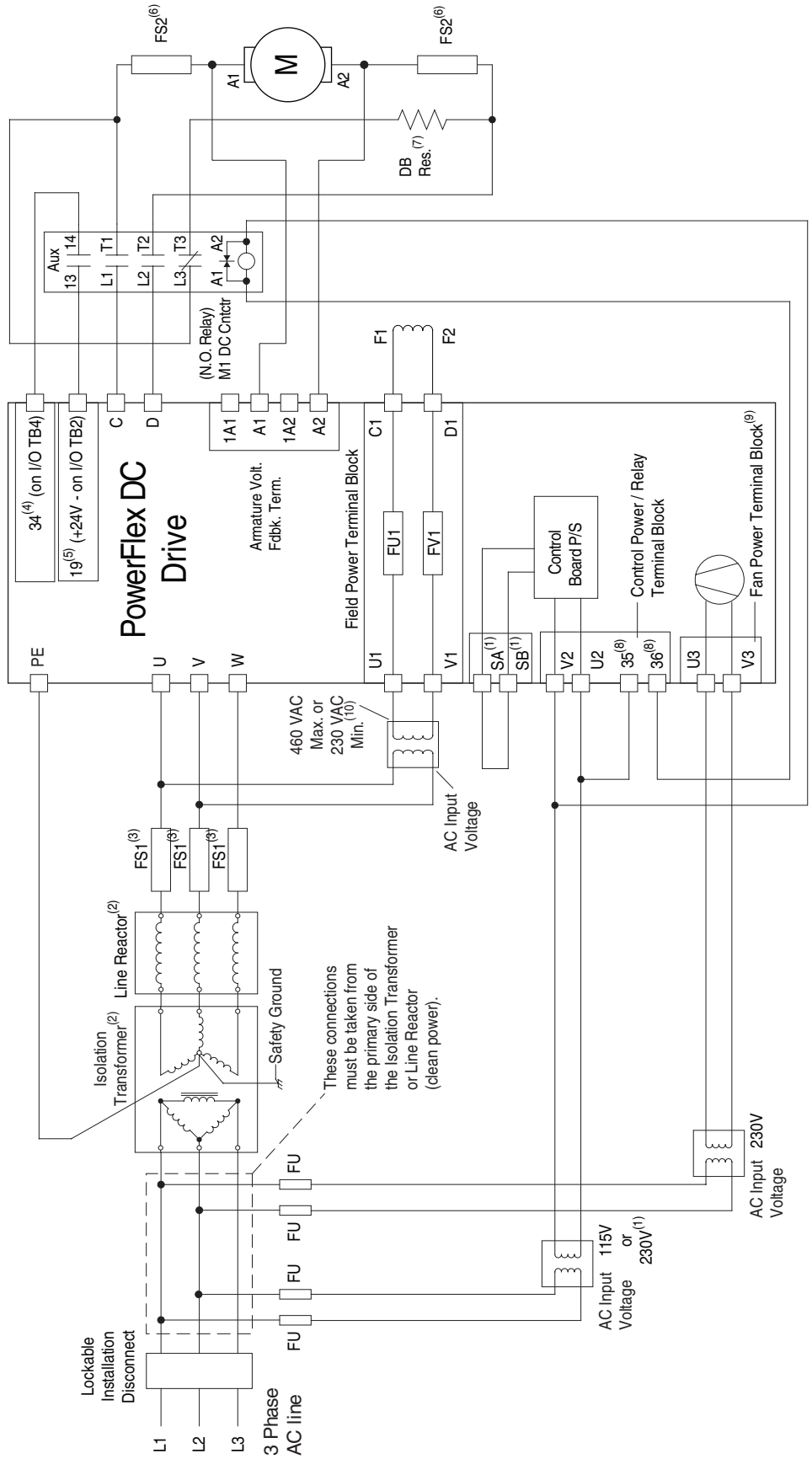

(1) For frame B and C drives only, a jumper is required between terminals SA and SB for 115V AC control input power. See Control Circuit Input Power on page 33 for more information.
(2) An Isolation Transformer and/or 3...5% impedance Line Reactor is required. If the Isolation Transformer provides the required 3...5% impedance, a Line Reactor is not required. See AC Input Line Reactors and Contactors on page 12 and Isolation Transformers on page 10 for recommendations.
(3) AC input fuses for the armature converter are customer supplied for frame A and B drives and are internally mounted on frame C and D drives. See Circuit Protection on page 50 for fuse recommendations.
(4) Par 140 [Digital In8 Sel] set to 31 "Contactor"
(5) If using the +24V internal power supply, terminal 18 (24V common) must be jumpered to terminal 35 (digital input common).
(6) Customer supplied armature output fuses are required on four quadrant and are recommended on two quadrant Frame A and B drives. See Circuit Protection on page 50 for fuse recommendations.
(7) The "Enable" input must be removed in order to perform a dynamic braking stop.
(8) Par 1391 [ContactorControl] = 3 "DC Cntctr" and Par 1392 [Relay Out 1 Sel] = 24 "ContactorDB". **Important:** Terminal 35 and 36 are on the Control Power / Relay Terminal block, NOT the I/O terminal blocks. See Relay Outputs on page 41 for locations.
(9) Frame C & D drives only require an external power supply for the heatsink cooling fan. See Frame C Heatsink Cooling Fans Power Supply Terminals on page 38 and Frame D Heatsink Cooling Fan Power Supply Terminals on page 39 for more information.
(10) See Field Converter Connections on page 30.

Armature Power Terminal Connections

Terminals	Description
U, V, W	Three phase AC input to the armature converter
C, D	DC output to the motor armature
PE	Safety ground

Frame A Armature Terminal Block Locations

Bottom View

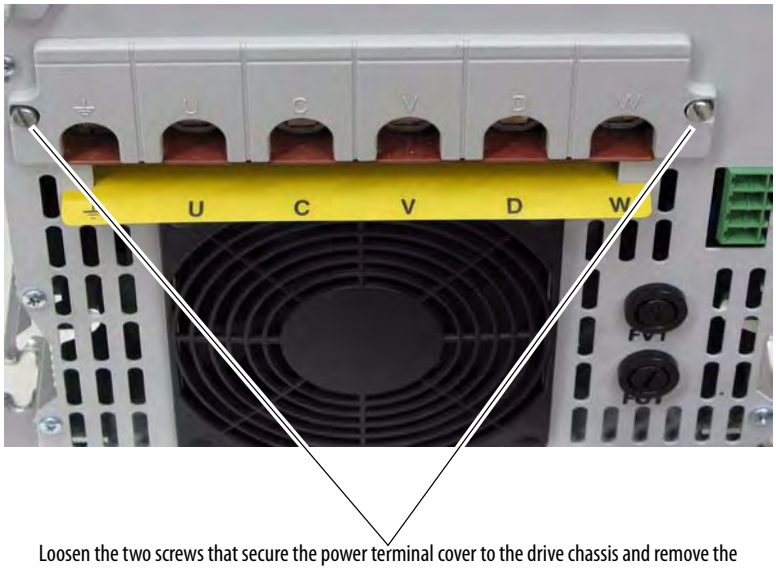

Loosen the two screws that secure the power terminal cover to the drive chassis and remove the terminal cover in order to connect the armature power wiring.

Front View

Note: Front view of drive shown with bottom protective and power terminal covers removed.

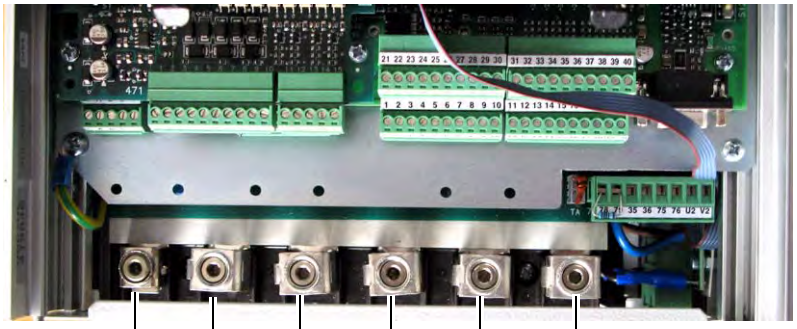

ATTENTION: Do not operate the drive with the power terminal cover removed. Operating the drive with the power terminal cover removed may result in a hazardous condition that could cause personal injury and/or equipment damage.

Frame B Armature Terminal Block Locations

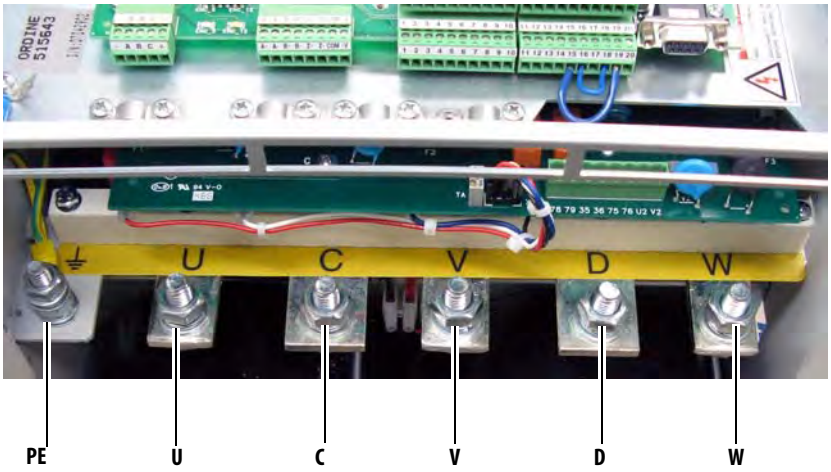

Frame C Armature Terminal Block Locations

Front View

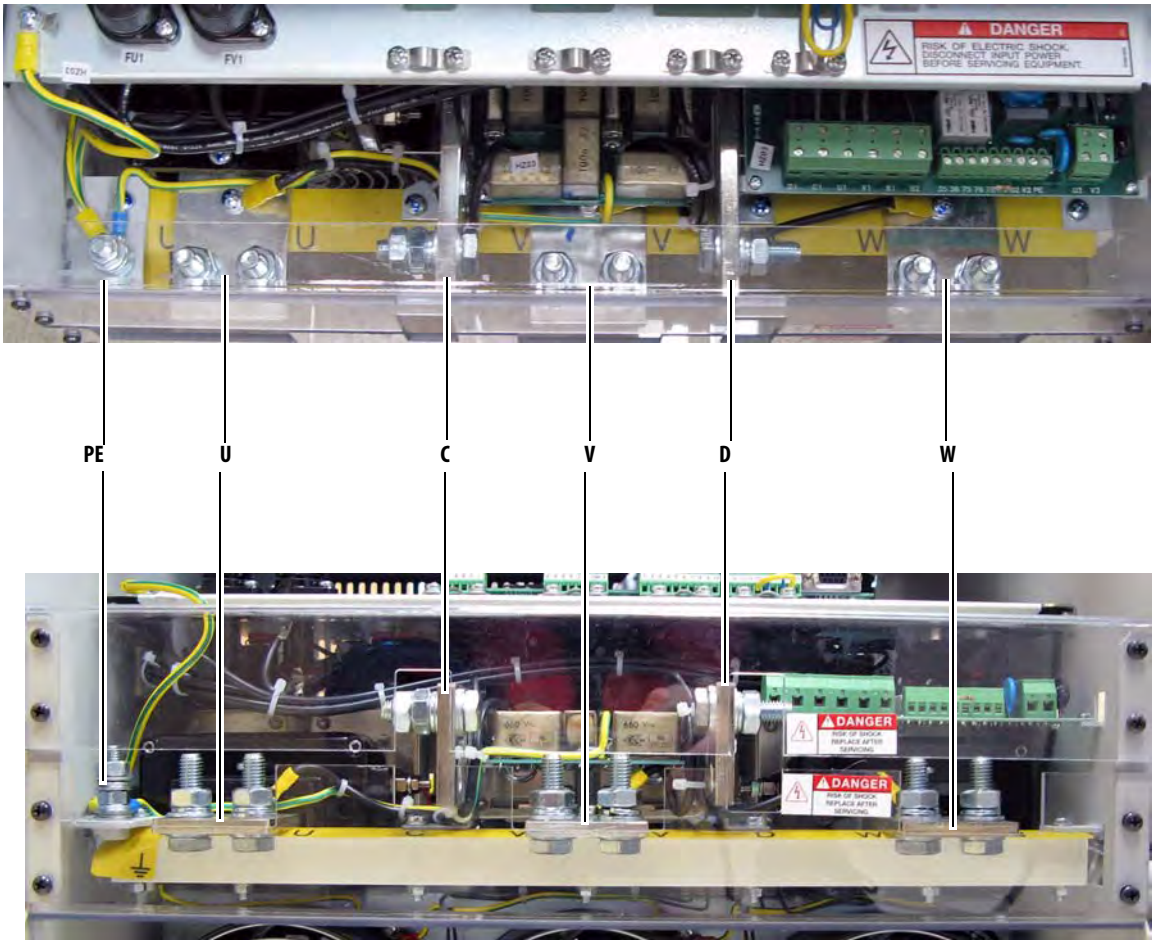

Bottom View

Frame D Armature Terminal Block Locations

Important: Certain frame D drives require the use of a terminal adapter kit(s) for terminals U, V, W, C and D.
Refer to Frame D Terminal Adapter Kits on page 18 for details.

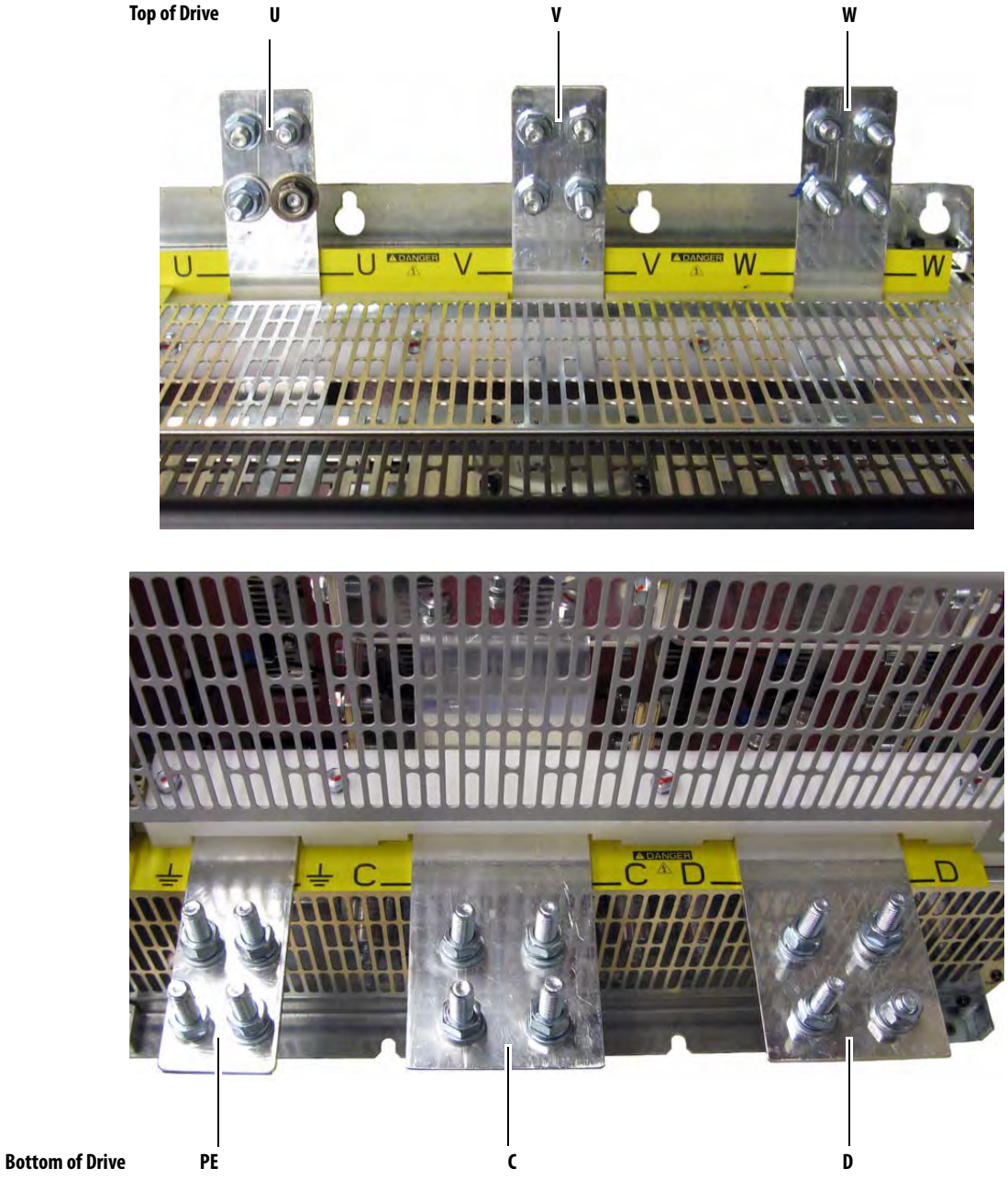

Armature Power Terminal and Ground (PE) Wire Sizes

Frame	Drive Current Rating Code[1]				Terminals	Wire Size and Type	Terminal Bolt Size (mm)	Tightening Torque N•m (lb•in)
	230V	460V	575	690				
A	7P0…055	4P1…052	–	–	U, V, W, C, D, PE	See "Cable and Wiring Recommendations" in the PowerFlex Digital DC Drive User Manual, publication 20P-UM001.	5	6 (53)
	073…110	073…129	–	–			Terminal Block	12 (106)
B	All	All	–	–	U, V, W, C, D		10	25 (221)
					PE		8	15 (132.75)
C	All	All	–	–	U, V, W, C, D		10	25 (221)
					PE		8	15 (132.75)
D	All	All	All	All	U, V, W, C, D, PE		12	45 (398.2)

(1) See Catalog Number Explanation on page 5, positions 8, 9 and 10 for corresponding drive HP rating, armature amp rating and field amp rating.

IMPORTANT Certain frame D drives require the use of a terminal adapter kit(s) for terminals U, V, W, C, and D. Refer to Frame D Terminal Adapter Kits on page 18 for details.

Armature Voltage Feedback Connections

When a DC output contactor or inverting fault breaker/fuse is used with the drive, and a speed feedback device (tachometer or encoder) is not used, the Armature Voltage Feedback terminals can be used to monitor the armature voltage at the motor regardless of the state of the contactor or inverting fault device. When this terminal block is not connected to the motor armature terminals, the terminals must be jumpered (as described in the table below) and the armature voltage feedback is monitored internally within the drive. In this case, when a DC contactor is used with the drive, a speed feedback device is not used, and the contactor opens, the drive will no longer receive the armature voltage feedback signal.

IMPORTANT By default, these terminals are jumpered - 1A1 to A1 and 1A2 to A2. If these terminals are not wired to the motor terminals, the jumpers must be installed.

Note that this terminal block is not present on drives shipped from the factory prior to those with v3.001 firmware installed. However, new Pulse Transformer boards shipped as replacement parts from the factory will contain this terminal block and can be used with any version of firmware.

Terminal	Description
1A1	Jumpered to A1 when internal armature voltage feedback is used. Not used when A1 is connected to motor terminal A1.
A1	Voltage feedback from motor terminal A1.
1A2	Jumpered to A2 when internal armature voltage feedback is used. Not used when A2 is connected to motor terminal A2.
A2	Voltage feedback from motor terminal A2.

Armature Voltage Feedback Circuit Wire Sizes and Terminal Specifications

Frame	Terminals	Wire Size and Type[1]	Tightening Torque N•m (lb•in)
A, B & C	1A1, A1, 1A2, A2	24…10 AWG/kcmils	0.5…0.6 (4.4…5.3)
D		22…8 AWG/kcmils	0.8…1.6 (7.1…14.2)

(1) Wire with an insulation rating of 600V or greater is recommended. See "Cable and Wiring Recommendations" in the PowerFlex Digital DC Drive User Manual, publication 20P-UM001, for cable spacing information.

Frame A Armature Voltage Feedback Circuit Terminal Block Location

Bottom of View of Drives

Drive with no fan

Drive with fan

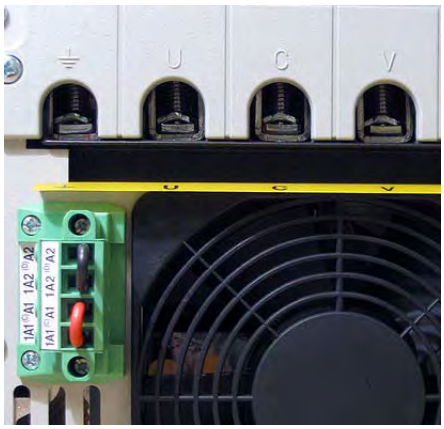

Shown with terminals jumpered for internal armature voltage feedback.

Frame B Armature Voltage Feedback Circuit Terminal Block Location

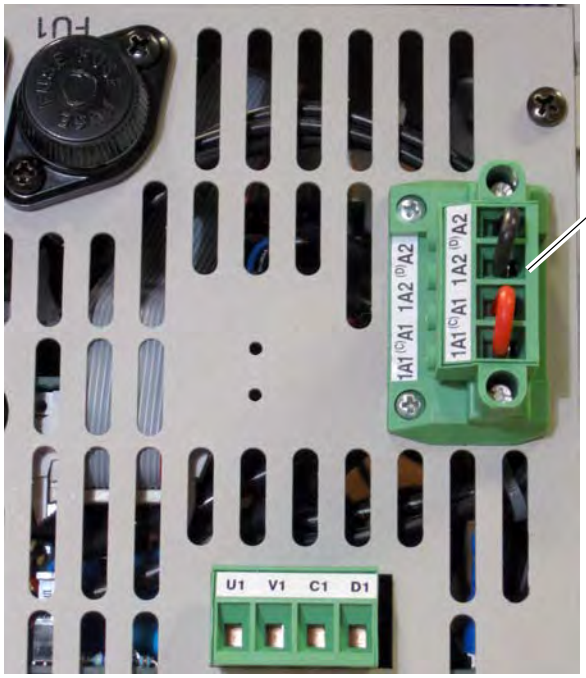

Top of Drive

Shown with terminals jumpered for internal armature voltage feedback.

Frame C Armature Voltage Feedback Circuit Terminal Block Location

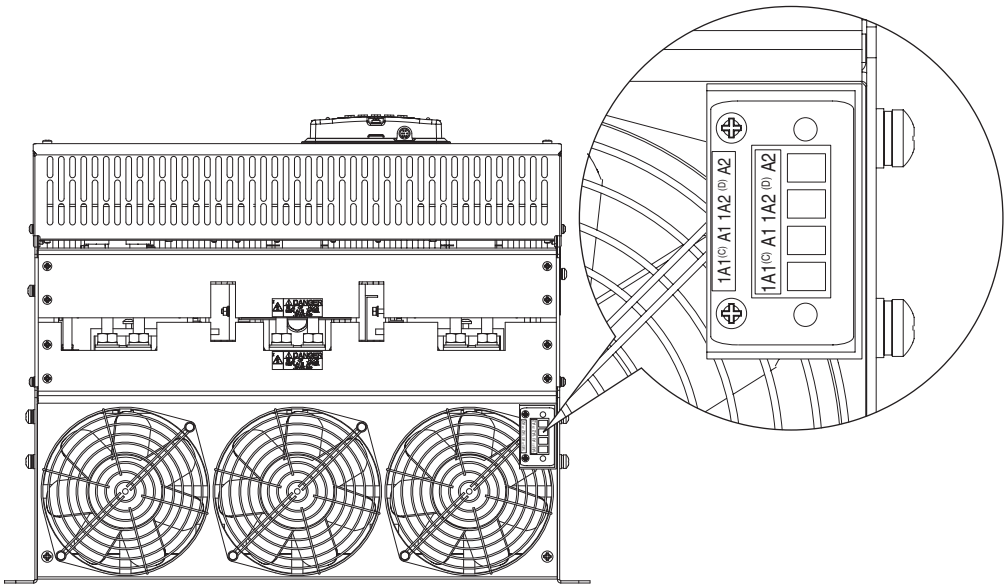

Bottom of Drive

Frame D Armature Voltage Feedback Circuit Terminal Block Location

Shown with terminals jumpered for internal armature voltage feedback.

Bottom of Drive, Left Side

Field Converter Connections

For 575V or 690V AC input drives only, a step down transformer with either a 230 VAC secondary, for a 150V motor field, or 460 VAC, for a 300V motor field, is required before the input to the field control circuit (terminals U1, V1).

Also, If the rated voltage of the DC motor field is not compatible with the field DC output voltage of the drive, an external field control transformer must be used. Refer to the following example for transformer selection information.

Example: 10 Hp, 240V Armature, 17.2A, 240V Field, 2.0 A motor

a. The field control transformer must have a 230V primary, a 460V secondary, and be single-phase, 60 Hz
b. kVA = 2 A x 460VAC x 1.5 = 1.38 kVA (1.5 kVA is closest)

In addition, the following configuration must to completed in the PowerFlex DC drive:

c. Control board DIP switch S14 must be set to select a value of 2 A.
d. Parameter 374 [Drv Fld Brdg Cur] must be programmed to match DIP switch S14 = "2."
e. Parameter 280 [Nom Mtr Fld Amps] must be programmed to the rated motor nameplate field current "2."

Field Converter Terminal Designations

Terminal	Description
U1, V1	Single-phase AC line input power to the field circuit.
C1, D1	DC output power to the motor field.

Frame A Field Circuit Terminal Block Location

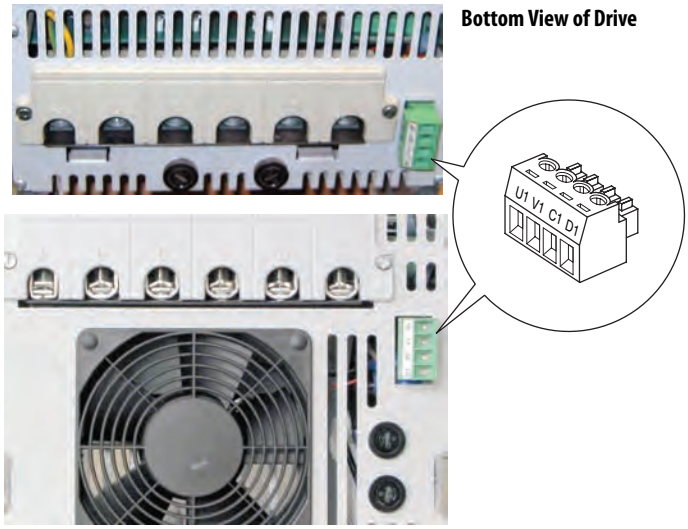

Frame B Field Circuit Terminal Block Location

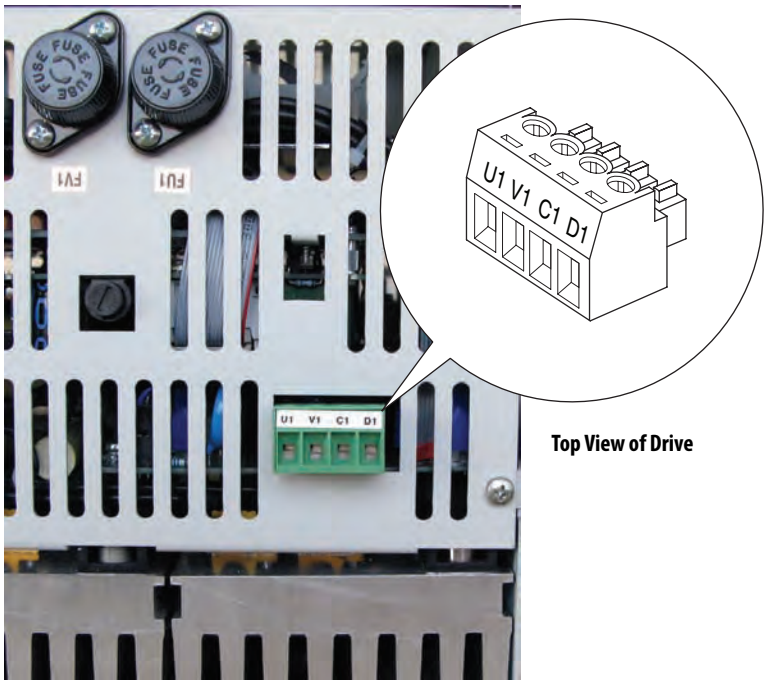

Top View of Drive

Frame C Field Circuit Terminal Block Location

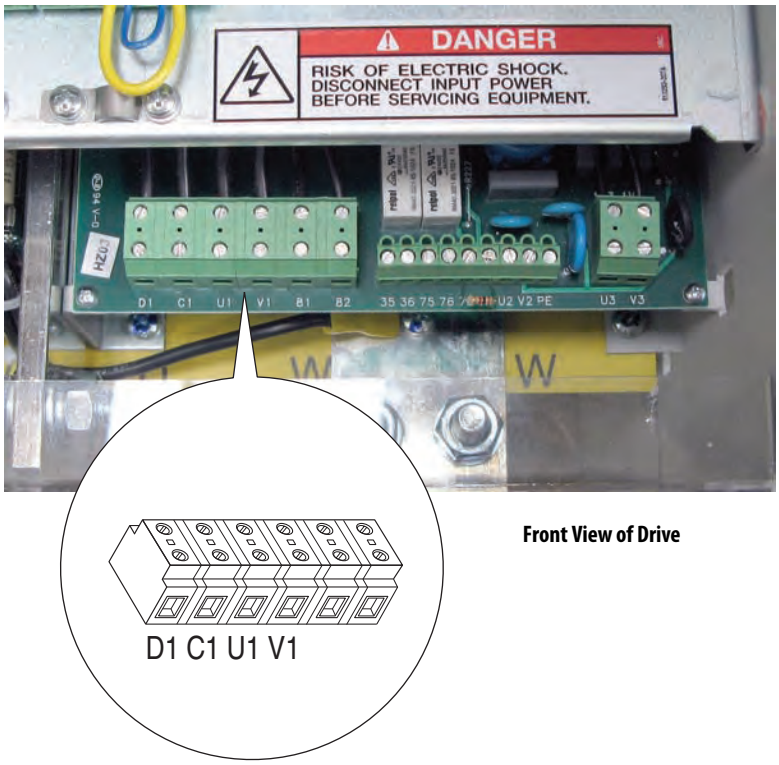

Front View of Drive

Frames A…C Field Circuit Wire Sizes and Terminal Specifications

Terminals	Wire Size and Type(1)	Tightening Torque N•m (lb•in)
U1, V1, C1, D1	24…10 AWG/kcmils	0.5…0.8 (4.4…7.1)

(1) See "Cable and Wiring Recommendations" in the PowerFlex Digital DC Drive User Manual, publication 20P-UM001, for cable spacing information.

Frame D Field Circuit Terminal Block Location

Frame D Field Circuit Wire Sizes and Terminal Specifications

Drive Current Rating Code[1]				Terminals	Wire Size[2]	Tightening Torque
230V	460V	575V	690V			N•m (lb•in)
875	830	810	678	U1, V1, C1, D1	6 AWG	4.0 (35.4)
1K0	996	1K0	791			
–	–	1K2	904			
–	–	1K3	1K0			
–	–	1K6	–			
–	1K1	–	1K1		2 AWG	
–	1K3	–	1K2			
–	1K4	–	1K4			
–	–	–	1K5			

(1) See Catalog Number Explanation on page 5, positions 8, 9 and 10 for corresponding drive HP rating, armature amp rating and field amp rating.

(2) See "Cable and Wiring Recommendations" in the PowerFlex Digital DC Drive User Manual, publication 20P-UM001, for cable spacing information.

Control Circuit Input Power

The control circuit must be powered by an external 230V AC or 115V AC single phase power supply. For frame B and C drives only, a jumper is required between terminals SA and SB for 115V AC control input power. Refer to Frame B drives SA-SB Terminal Block Location on page 36 and Frame C Drives SA-SB Terminal Block Location on page 37 for terminal block locations.

Control Circuit Terminal Designations

Terminal	Description
U2	Single-phase AC power for the control circuits.
V2	

Frame A Control Circuit Terminal Block Location

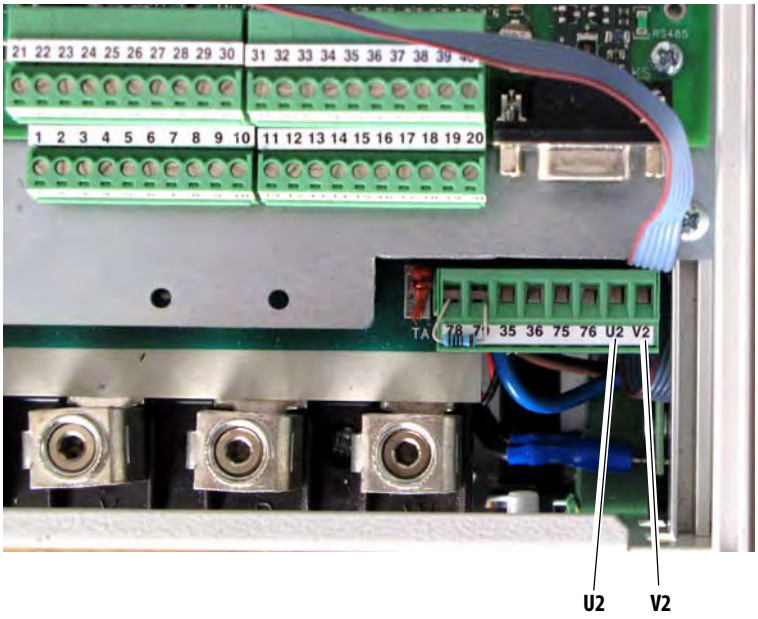

Frame B Control Circuit Terminal Block Location

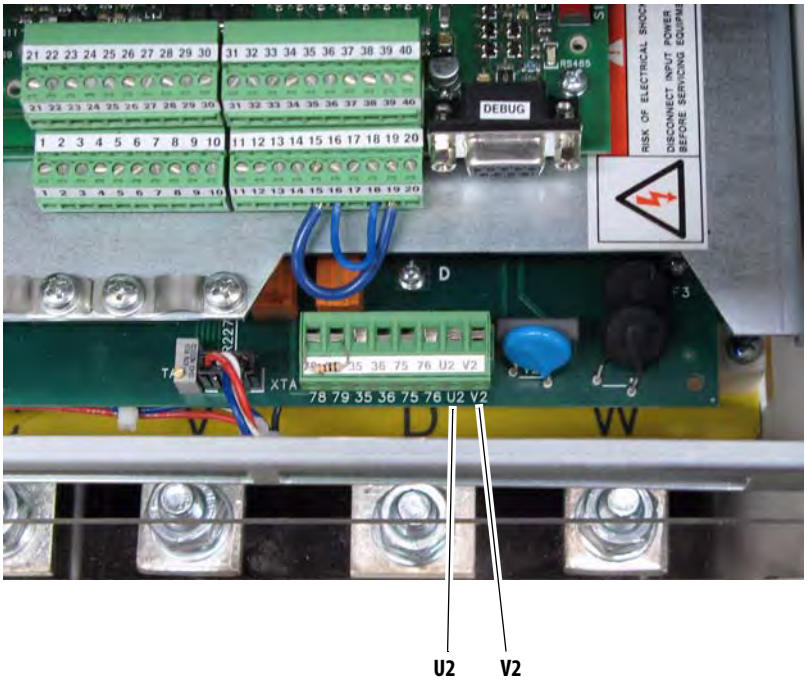

Frame C Control Circuit Terminal Block Location

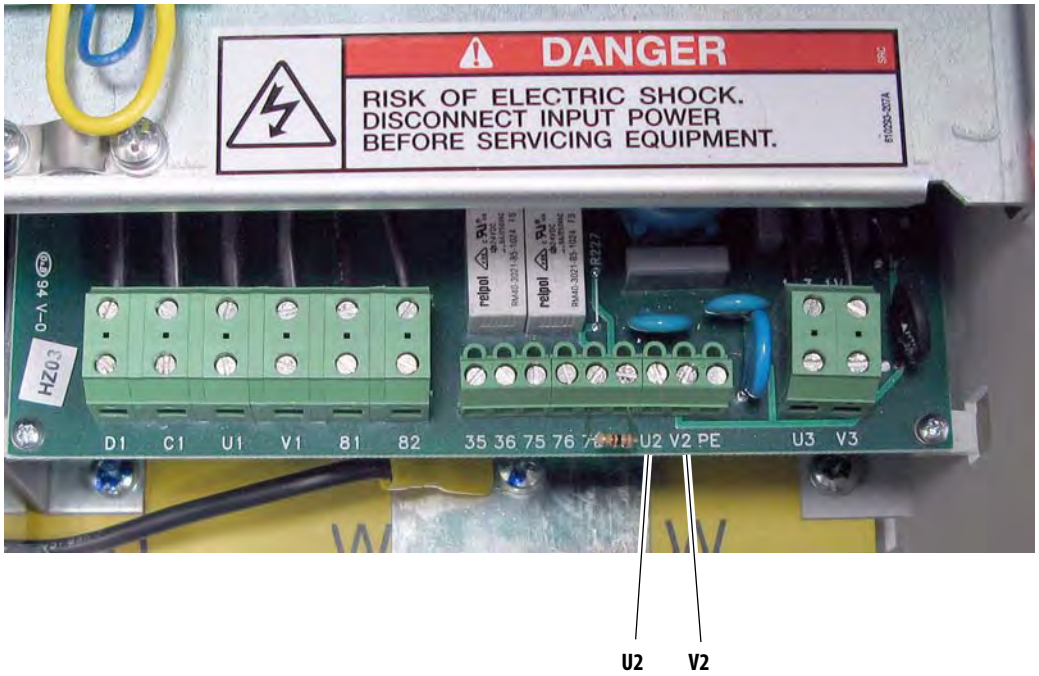

Frame D Control Circuit Terminal Block Location

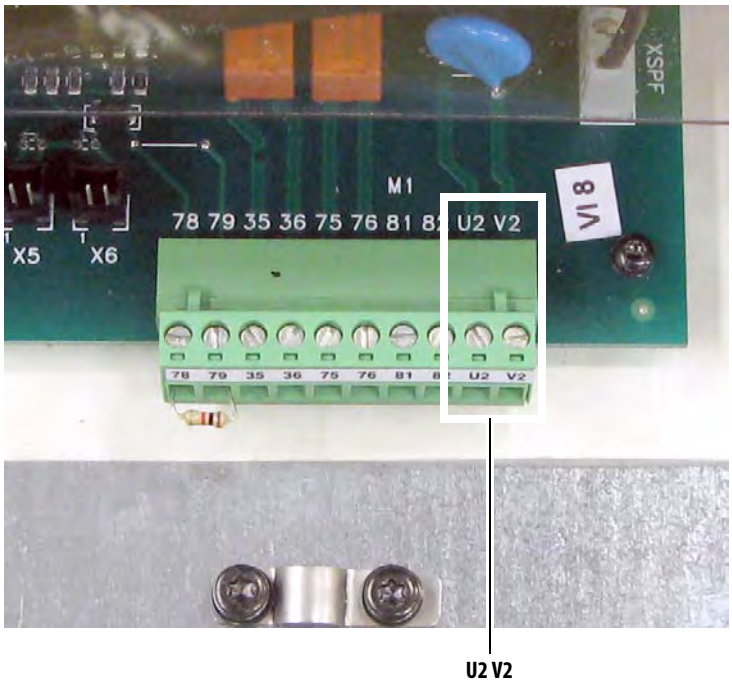

Control Circuit Wire Sizes

Terminals	Wire Size and Type[1]			Tightening Torque
	Flexible (mm^2)	Multi-core (mm^2)	AWG	N•m (lb•in)
U2, V2	0.14…1.5	0.14…2.5	26…14	0.5 (4.4)
PE	2.5…10	2.5…10	12…8	2.0 (18.0)

(1) See "Cable and Wiring Recommendations" in the PowerFlex Digital DC Drive User Manual, publication 20P-UM001, for cable spacing information.

Frame B drives SA-SB Terminal Block Location

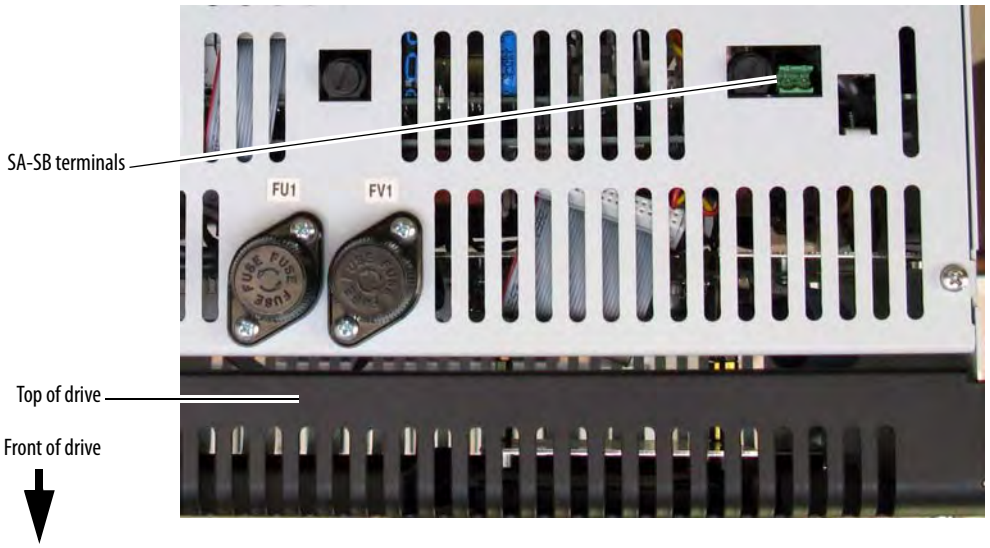

Frame C Drives SA-SB Terminal Block Location

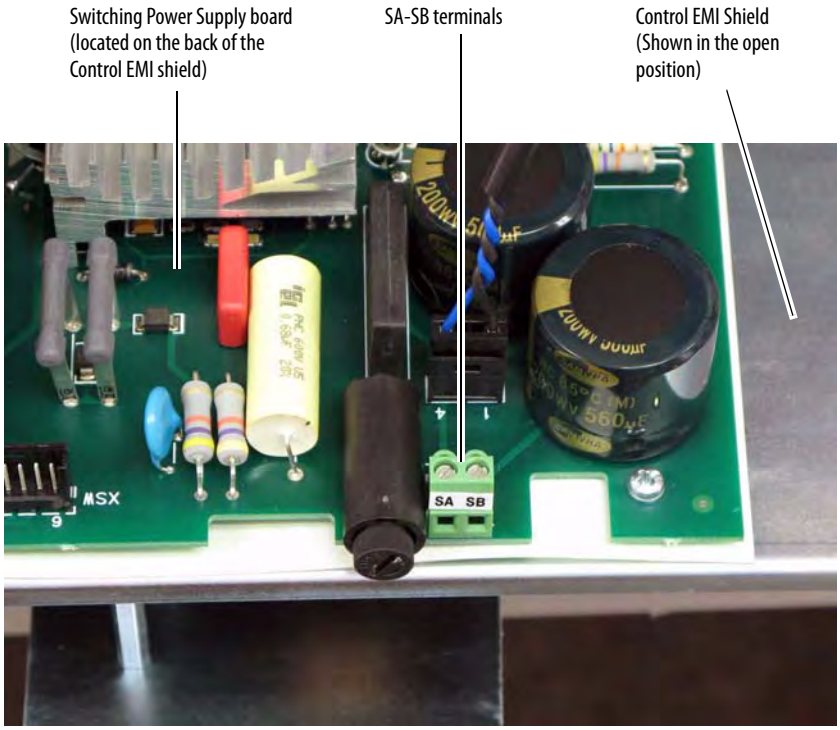

Front of drive shown with top protective cover removed.

Frame C Heatsink Cooling Fans Power Supply Terminals

Frame C drives require an external 230V AC power supply for the heatsink cooling fans. The power supply connections must be taken from the primary side of the installed Isolation Transformer or Line Reactor (clean power). Refer to Typical Power Wiring Diagrams on page 21.

In addition, the fan power input terminals U3 and V3 are required to be short circuit protected. This protection can be provided by using a circuit breaker. The circuit breaker must be selected to survive the short circuit available current of the feeder source for this circuit and the inrush current of the fan.

The rating of the circuit breaker should be sized mainly to protect the wiring from the circuit breaker connections to terminals U3 and V3, and not nuisance trip or blow from the inrush current.

Frame C Heatsink Cooling Fans Terminal Designations

Terminal	Description	Maximum Voltage	Maximum Current
U3	Single-phase AC input power for cooling fans.	230V AC	1 A
V3			

Frame C Heatsink Cooling Fans Wire Sizes and Terminal Specifications

Terminals	Wire Size and Type(1)			Tightening Torque
	Flexible (mm^2)	Multi-core (mm^2)	AWG	N•m (lb•in)
U3, V3	0.14…1.5	0.14…2.5	26…16	0.4 (3.5)

(1) See "Cable and Wiring Recommendations" in the PowerFlex Digital DC Drive User Manual, publication 20P-UM001, for cable spacing information.

Frame C Heatsink Cooling Fan Terminal Block Location

Frame D Heatsink Cooling Fan Power Supply Terminals

Frame D drives require an external 230V AC power supply for the heatsink cooling fan. The power supply connections must be taken from the primary side of the installed Isolation Transformer or Line Reactor (clean power). Refer to Typical Power Wiring Diagrams on page 21.

The fan power input terminals U3 and V3 are required to be short circuit protected. This protection can be provided by using a circuit breaker. The circuit breaker must be selected to survive the short circuit available current of the feeder source for this circuit and the inrush current of the fan.

The rating of the circuit breaker should be sized mainly to protect the wiring from the circuit breaker connections to terminals U3 and V3, and not nuisance trip or blow from the inrush current.

In addition, a N.C. contact (at terminals 31 and 32) can be connected to an external device to provide indication of a fan supply failure or can be wired to drive digital input terminals configured for 14 "Aux Fault" (via Pars133...144).

Frame D Heatsink Cooling Fan Terminal Designations

Terminal	Description	Maximum Voltage	Maximum Current
U3	Single-phase AC input power for cooling fans.	230V AC	2.4…3.3 A
V3			(50/60 Hz)
31	Normally closed contact.	250V AC	1 A
32			
PE	Safety ground		

Frame D Heatsink Cooling Fan Signal Wire Sizes and Terminal Specifications

Terminals	Wire Size and Type(1)			Tightening Torque
	Flexible (mm^2)	Multi-core (mm^2)	AWG	N•m (lb•in)
U3, V3, 31, 32, PE	0.14…1.5	0.14…2.5	28…12	0.5…0.6 (4.4…5.3)

(1) See "Cable and Wiring Recommendations" in the PowerFlex Digital DC Drive User Manual, publication 20P-UM001, for cable spacing information.

Frame D Heatsink Cooling Fan Terminal Block Location

Top of Drive, Left Side

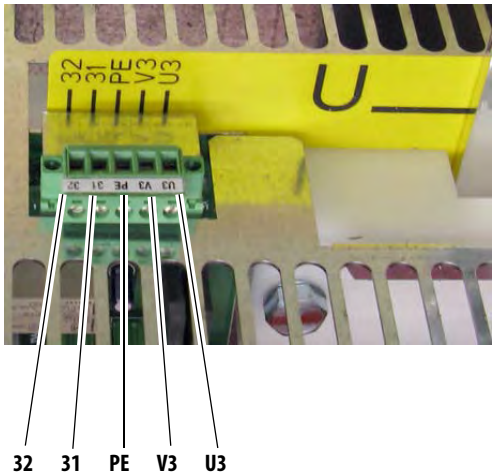

Frame C and D Armature Fuse Signal Terminals

Terminals 81 and 82 on frame C and D drives are connected to the internal armature circuit protection fuses and can be connected to an external device to provide indication that the fuses have opened. Alternatively, terminals 81 and 82 can be wired to drive digital input terminals configured for 64 "Invert Flt" (via Pars 133...144).

Armature Fuse Signal Terminal Designations

Terminal	Description	Maximum Voltage	Maximum Current
81	Internal armature fuse intervention signal.	250V AC	1 A
82			

Armature Fuse Signal Wire Size and Terminal Specifications

Terminals	Wire Size and Type(1)			Tightening Torque
	Flexible (mm^2)	Multi-core (mm^2)	AWG	N•m (lb•in)
81, 82	0.14…1.5	0.14…2.5	26…16	0.4 (3.5)

(1) See "Cable and Wiring Recommendations" in the PowerFlex Digital DC Drive User Manual, publication 20P-UM001, for cable spacing information.

Frame C Internal Armature Fuse Signal Terminal Block Location

Frame D Internal Armature Fuse Signal Terminal Block Location

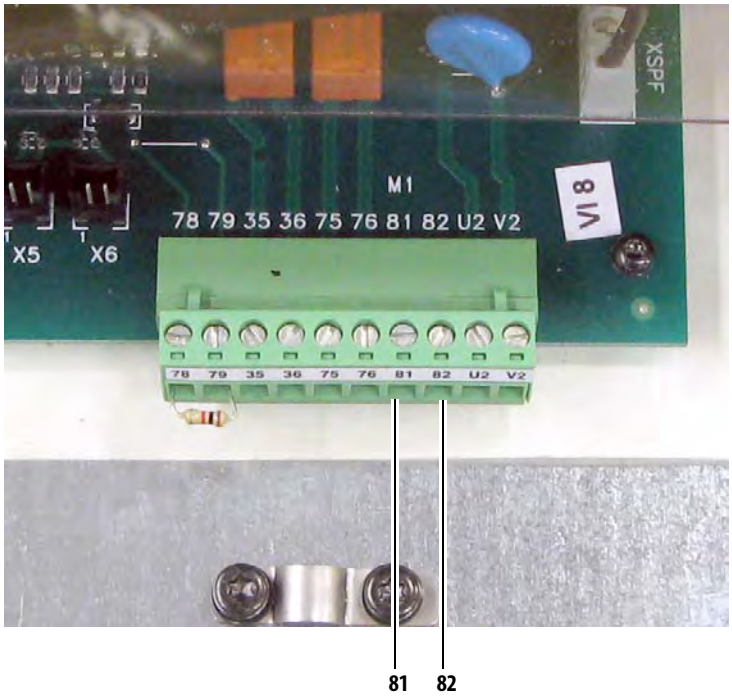

Relay Outputs

Terminals 35 and 36 and 75 and 76 are N.O. relay outputs. The relay output between terminals 35 and 36 is configured with parameter 1392 [Relay Out 1 Sel]. The relay output between terminals 75 and 76 is configured with parameter 629 [Relay Out 2 Sel]. Refer to "Using Contactors" in the PowerFlex Digital DC Drive User Manual, publication 20P-UM001, for more information.

Thermistors and Thermal Switches

To detect motor overheating and protect the motor from overloading, an external, user-supplied thermistor (PTC) or thermal switch must be connected to terminals 78 and 79. The drive's response to a motor over temperature fault is configured in parameter 365 [OverTemp Flt Cfg]. If a temperature sensor is not used, a 1k ohm resistor must be connected between terminals 78 and 79 (installed at the factory). The instructions for installing a thermal sensor are detailed below.

Thermistors (PTC)

PTC thermistors fitted in the motor can be connected directly to the drive via terminals 78 and 79. In this case the 1k ohm resistor is not required between terminals 78 and 79.

Thermal Switches (Klixon®) in the Motor Windings

"Klixon" type temperature-dependent contacts can disconnect the drive from the motor via an external control or can be configured as an external fault using a digital input on drive. They can also be connected to terminals 78 and 79 in order to indicate a drive "Motor Over Temp" fault (F16), though this is not recommended due to the noise sensitivity of the current threshold circuitry. If a thermal switch is used a 1k ohm resistor must be placed in series between the switch and one of the terminals.

Contact Relay and Thermistor Terminal Designations

Terminal	Description
35	Normally open contact. Configured with parameter 1392 [Relay Out 1 Sel] - set to 25 “Contactor” by default.
36	
75	Normally open contact. Configured with parameter 629 [Relay Out 2 Sel] - set to 5 “Ready” by default.
76	
78	Motor thermistor connections (PTC)
79	

Frame A Contact Relay and Thermistor Terminal Block Locations

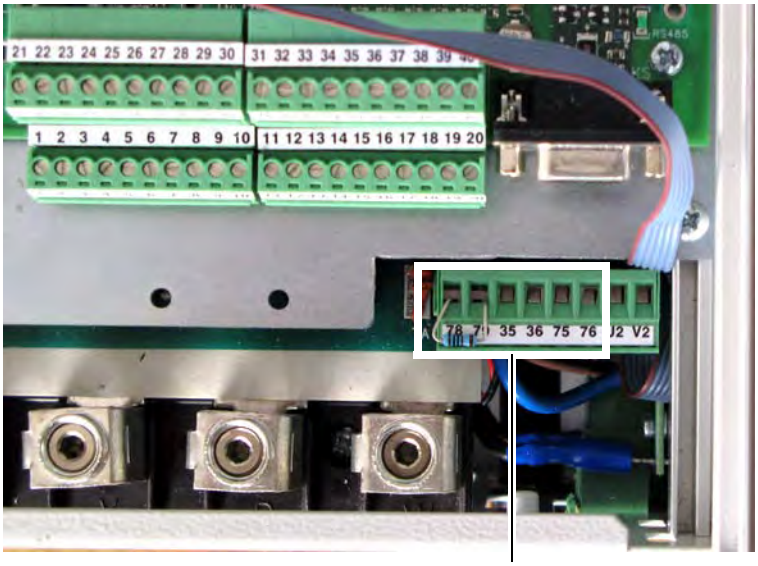

78 79 35 36 75 76

Note: Terminals 78 and 79 shown with 1k ohm resistor in place of temperature sensor.

Frame B Contact Relay and Thermistor Terminal Block Locations

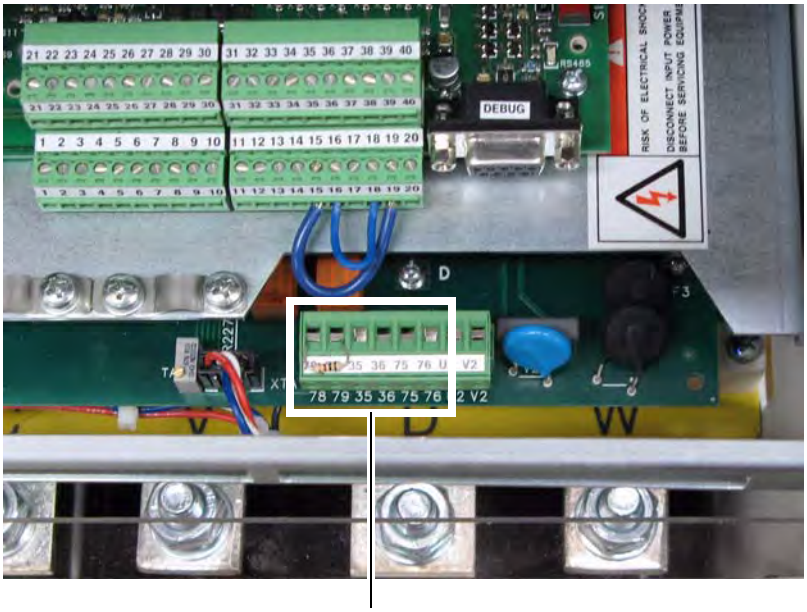

78 79 35 36 75 76

Frame C Contact Relay and Thermistor Terminal Block Locations

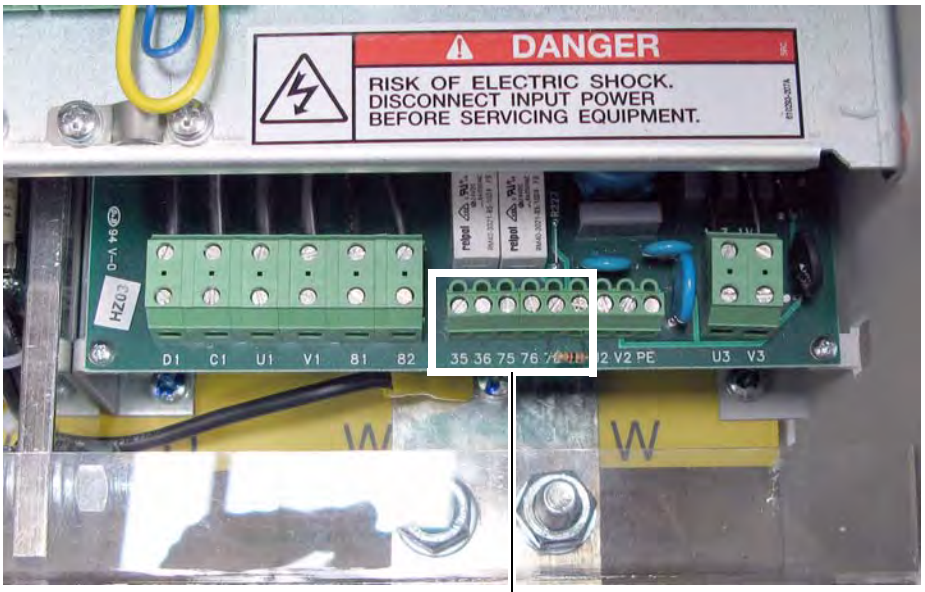

35 36 75 76 78 79

Frame D Contact Relay and Thermistor Terminal Block Locations

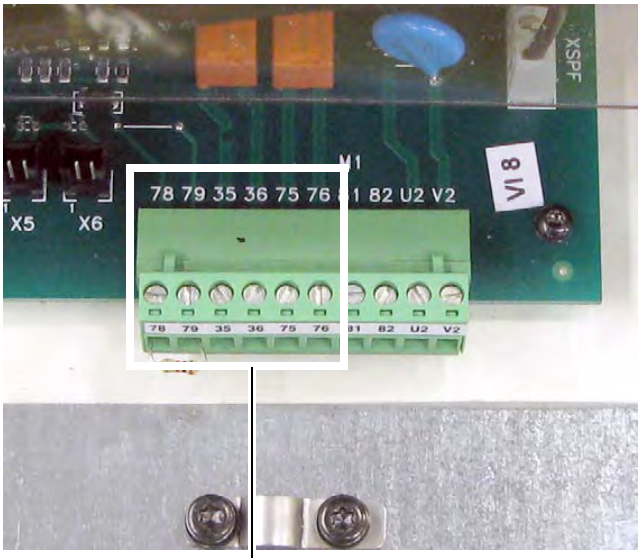

78 79 35 36 75 76

Located on control pan to the left of the HIM cradle.

Recommended Signal Wire Size for Relay Outputs and Thermistor/Thermal Switch Terminals

Signal Type	Terminals	Wire Size and Type[1]			Tightening Torque N•m (lb•in)
		Flexible (mm^2)	Multi-core (mm^2)	AWG	
Relay Outputs	35 & 36, 75 & 76	0.140…1.500	0.140…1.500	26…14	0.5 (4.4)
Thermistor and Thermal Switches	78 & 79				

(1) See "Cable and Wiring Recommendations" in the PowerFlex Digital DC Drive User Manual, publication 20P-UM001, for cable spacing information.

I/O Signal and Control Wiring

Eight (8) digital inputs, four (4) digital outputs, three (3) analog inputs, and two (2) analog outputs are available on the standard I/O terminal blocks provided with the drive. One digital input (1-8) must be configured for "Enable".

Additional digital and analog I/O is available when using the optional I/O Expansion circuit board. Refer to Appendix F - "Optional Analog and Digital I/O Expansion Circuit Board", in the PowerFlex Digital DC Drive User Manual, publication 20P-UM001, for more information. Also, you can use the optional 115V AC Converter circuit board to convert 115V AC digital input signals to 24V DC digital inputs signals to interface with the digital inputs on the standard I/O terminal blocks. Refer to Appendix G - "Optional 115V AC to 24V DC I/O Converter Circuit Board" in the PowerFlex Digital DC Drive User Manual, publication 20P-UM001, for more information. All I/O terminal blocks are located on the control board.

I/O Terminal Block Locations

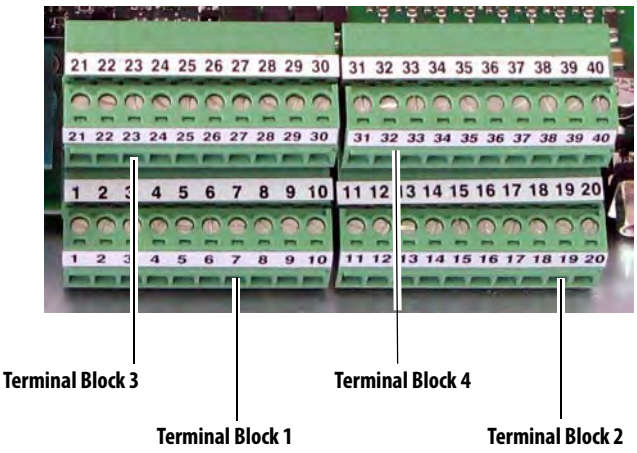

I/O Terminal Block 1 Designations

	No.	Signal	Description	Factory Default	Related Parameter
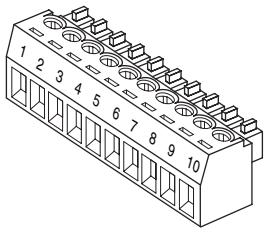	1	Analog Input 1 (+)	Isolated (1), bipolar, differential, ±10V / 0-20mA, or 4-20mA.	1 "Speed Ref A"	70 [Anlg In1 Sel]
	2	Analog Input 1 (–)			
	3	Analog Input 2 (+)	**Important:** 0-20mA or 4-20mA operation requires that switch S9, S10, and S11 on the Control board be in the "Off" position. Drive damage may occur if the switch is not in the correct position based on the type of input signal. Refer to "DIP Switch and Jumper Settings" in the PowerFlex Digital DC Drive User Manual, publication 20P-UM001.	0 "Off"	75 [Anlg In2 Sel]
	4	Analog Input 2 (–)			
	5	Analog Input 3 (+)		0 "Off"	80 [Anlg In3 Sel]
	6	Analog Input 3 (–)	Max ±10V, Max 0.25mA.		
	7	+10V Pot Reference	2-5k ohm load. Max ±10V, Max 10mA.	–	–
	8	–10V Pot Reference			
	9	Pot Common	For (+) and (–) 10V pot references.	–	–
	10	PE ground	PE ground to drive chassis.	–	–

(1) Differential Isolation - External source must be maintained at less than 160V with respect to PE. Input provides high common mode immunity.

I/O Terminal Block 2 Designations

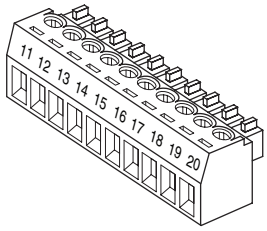

No.	Signal	Description	Factory Default	Related Parameter
11	Internal 0V		–	–
12	Digital Input 1	Max Volt. +30V, Max Cur. 15V/3.2mA, 24V/5mA, and 30V/6.4mA.	2 "Stop/CF"	133 [Digital In1 Sel]
13	Digital Input 2		3 "Start"	134 [Digital In2 Sel]
14	Digital Input 3		11 "Jog"	135 [Digital In3 Sel]
15	Digital Input 4		1 "Enable"(3)	136 [Digital In4 Sel]
16	Digital Input Common(1)		–	–
17	Not Used		–	–
18	24V Supply Common	Common for the internal power supply.	–	–
19	+24V DC Supply	Drive supplied control input power. Max. +20-30V, 200mA(2)	–	–
20	PE ground	PE ground to drive chassis.	–	–

(1) When using the internal +24V DC supply (terminal 19) for digital inputs 1-4, you must connect the digital input common (terminal 16) to the +24V supply common (terminal 18).
(2) The total current draw is the sum of encoder power, digital outputs and any other loads connected to terminal 19.
(3) A digital input (1-8) must be configured for "Enable".

I/O Terminal Block 3 Designations

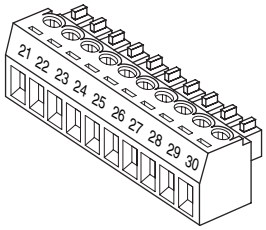

No.	Signal	Description	Factory Default	Related Parameter
21	Analog Output 1 (+)	Max. ±10V, Max. 5 mA.	12 "Motor Speed"	66 [Anlg Out1 Sel]
22	Analog Output 1 (–)			
23	Analog Output 2 (+)		13 "Motor Curr"	67 [Anlg Out2 Sel]
24	Analog Output 2 (–)			
25	Digital Output Common		–	–
26	Digital Output 1	Max. +30V, Max 50mA	5 "Ready"	145 [Digital Out1 Sel]
27	Digital Output 2		9 "Fault"	146 [Digital Out2 Sel]
28	Digital Output 3		2 "Spd Thresh"	147 [Digital Out3 Sel]
29	Digital Output 4		4 "CurrentLimit"	148 [Digital Out4 Sel]
30	+24V DC	Drive supplied power for Digital Outputs. Max. 30V, Max. 80mA.	–	–

I/O Terminal Block 4 Designations

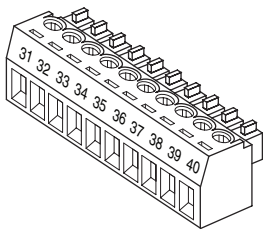

No.	Signal	Description	Factory Default	Related Parameter
31	Digital Input 5	Max Volt. +30V, Max Cur. 15V/3.2mA, 24V/5mA, and 30V/6.4mA.	17 "Speed Sel 1"	137 [Digital In5 Sel]
32	Digital Input 6		18 "Speed Sel 2"	138 [Digital In6 Sel]
33	Digital Input 7		19 "Speed Sel 3"	139 [Digital In7 Sel]
34	Digital Input 8		31 "Contactor"	140 [Digital In8 Sel]
35	Digital Input Common	**Important:** When using the internal +24V DC supply (terminal 19) for digital inputs 5-8, you must connect the digital input common (terminal 35) to the +24V supply common (terminal 18).	–	–
36-40	Not Used		–	–

Recommended Signal Wire Size for Analog I/O and Digital I/O

Signal Type	Terminal Block (Terminals)	Wire Size and Type(1)			Tightening Torque N•m (lb•in)
		Flexible (mm^2)	Multi-core (mm^2)	AWG	
Analog and Digital I/O	TB1…4 (1…40)	0.140…1.500	0.140…1.500	26…16	0.4 (3.5)

(1) See "Cable and Wiring Recommendations" in the PowerFlex Digital DC Drive User Manual, publication 20P-UM001, for cable spacing information.

Digital Encoder Terminal Block

The encoder connection cables should always be connected directly to the terminals on the encoder terminal block. The encoder cable must be made up of twisted pairs with the shield connected to the shield ground on the drive side. Do not connect the shield to ground on the motor side. In some cases (i.e., cable lengths that exceed 100 meters), it may be necessary to ground the shield of each twisted pair on the power supply. Refer to Appendix A of the PowerFlex Digital DC Drive User Manual, publication 20P-UM001, for Digital Encoder specifications.

Digital Encoder Terminal Designations

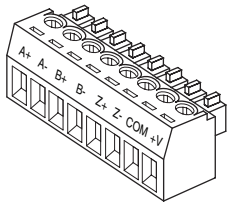

No.	Description	
A+	Encoder A	Single channel or quadrature A input
A-	Encoder A (NOT)	
B+	Encoder B	Dual channel quadrature B input
B-	Encoder B (NOT)	
Z+	Encoder Z	Pulse, marker or registration input (2)
Z-	Encoder Z (NOT)	
COM	+5/12-15V (1) DC Return	Internal power common
+V	+5/12-15V (1) DC Power	Internal power source 200 mA

(1) Selectable via switch S21 on the Control board. Refer to "DIP Switch and Jumper Settings" in the PowerFlex Digital DC Drive User Manual, publication 20P-UM001, for more information.

(2) Selectable via switch S20 on the Control board. Refer to "DIP Switch and Jumper Settings" in the PowerFlex Digital DC Drive User Manual, publication 20P-UM001, for more information.

Digital Encoder Terminal Block Location

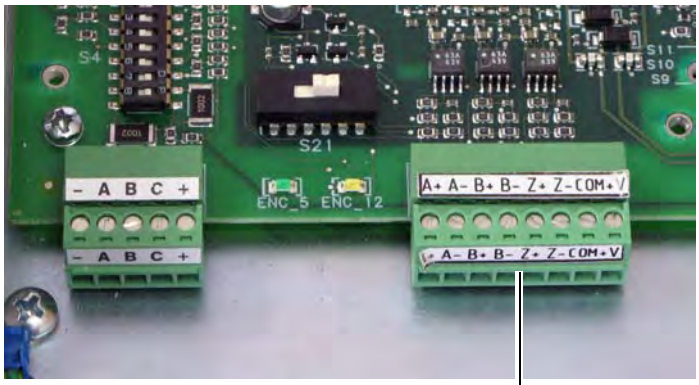

Digital Encoder terminal block

Sample Encoder Wiring

I/O	Connection Example
Encoder Power – (1) **Internal Drive Power** Internal (drive) +5/12-15V DC, 200mA	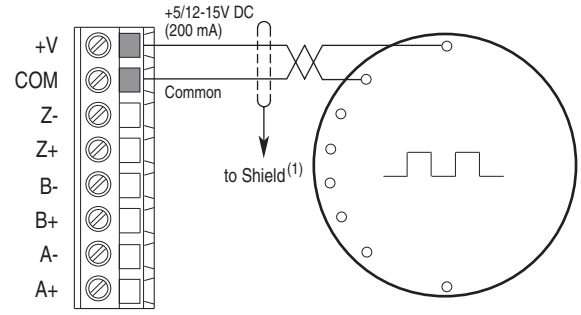
Encoder Power –External Power Source	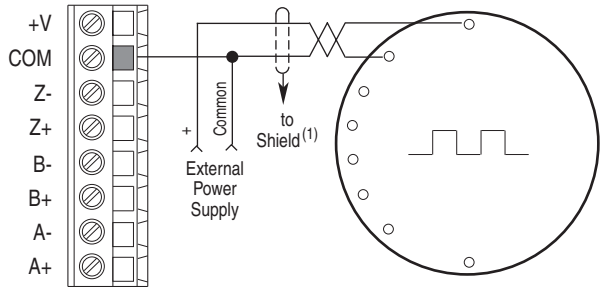
Encoder Signal –Single-Ended, Dual Channel	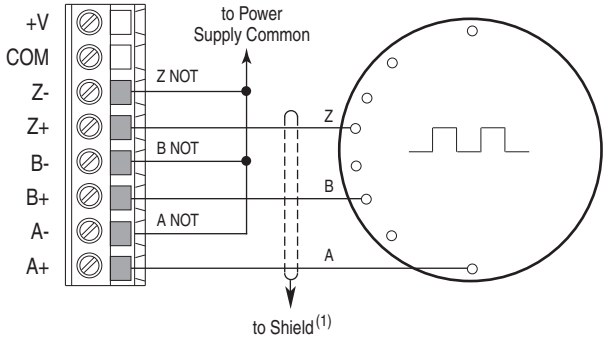
Encoder Signal –Differential, Dual Channel	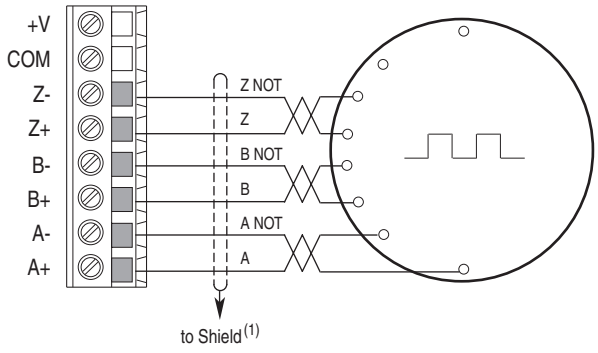

(1) Shield connection is on the drive Control EMI Shield. Refer to Digital Encoder Terminal Block Location on page 47.

DC Analog Tachometer Terminal Block

ATTENTION: The Drive can overspeed if DIP switch S4 is set incorrectly, or the tachometer is wired incorrectly. Failure to observe this precaution could result in damage to, or destruction of, the equipment.

DC Analog Tachometer Terminal Designations

	No.	Signal	Description
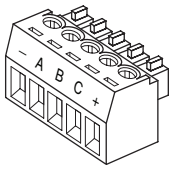	–	Negative input	–
	A	(Not Used)	
	B		
	C		
	+	Positive input Feedback polarity is determined during the start up routine.	22.7 / 45.4 / 90.7 / 181.6 / 302.9V(1) max voltage 8 mA max. current

(1) Maximum voltage depends on the configuration of DIP switch S4. Refer to the PowerFlex® Digital DC Drive User Manual, publication 20P-UM001 for information on jumper settings.

Analog Tachometer Terminal Block Location

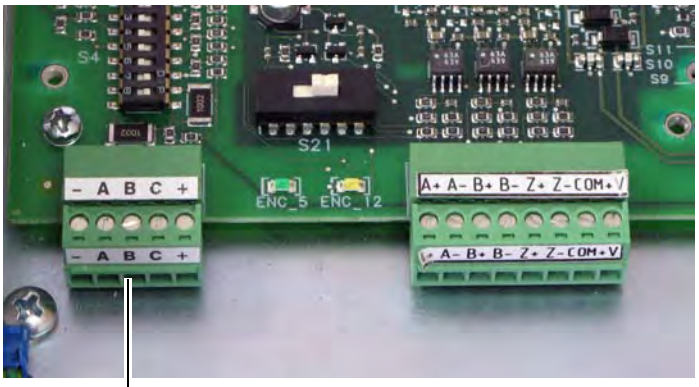

Analog Tachometer terminal block

Recommended Signal Wire Size for DC Analog Tachometer

Signal Type	Terminal Block (Terminals)	Wire Type and Size(1)			Tightening Torque N•m (lb•in)
		Flexible (mm^2)	multi-core (mm^2)	AWG	
DC Analog Tach	M3 (+ and –)	0.140…1.500	0.140…1.500	26…16	0.4 (3.5)

(1) See "Cable and Wiring Recommendations in the PowerFlex Digital DC Drive User Manual, publication 20P-UM001.

Resolver Feedback Module

The resolver feedback module (catalog number 20P-RES-A0), which provides a drive interface to a selection of compatible resolvers, must be ordered and purchased separately from the drive. The resolver option module includes the PowerFlex DC Drive Resolver Feedback Module Installation Instructions, publication 20P-IN071, which provides installation and wiring information. See "Resolver Type Selection" in the PowerFlex Digital DC Drive User Manual, publication 20P-UM001, for more information on compatible resolvers.

Circuit Protection

The tables on the following pages provide drive ratings and the recommended fuses for protecting the armature and field circuits. Externally mounted fuses (as indicated in the figures below) must be sourced separately when installing the drive. Internally mounted fuses are provided with the drive. See page 56 for frames C and D fuse information.

Frame A and B Fuse Designations

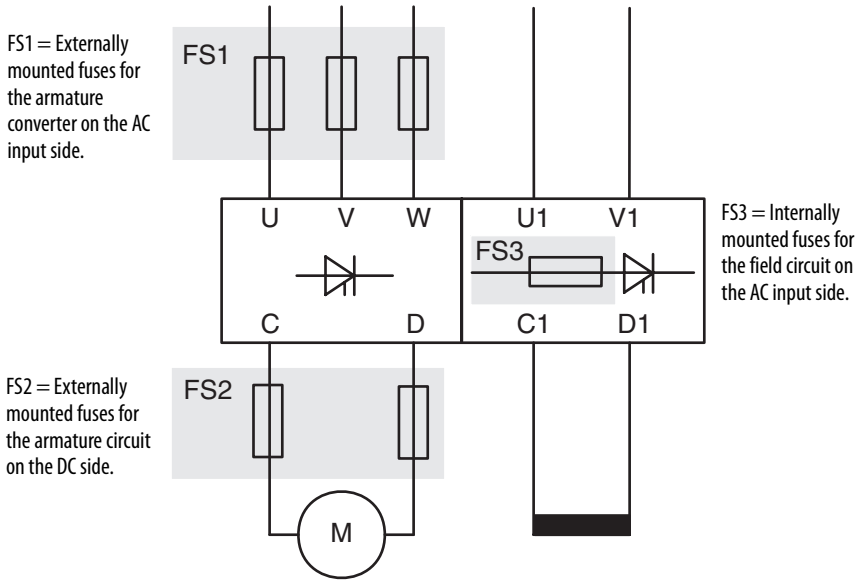

Frame A and B Recommended AC Input Line Fuses

AC input line fuses are externally mounted for frame A and B drives and must be sourced separately. See Fuse Code FS1 in Frame A and B Fuse Designations on page 50.

230V AC Input Drives

Frame	Drive Current Rating Code	DC Amps	AC Line Amps	Bussmann				Ferraz Shawmut (Gould Shawmut)	
				Ferrule FWP Type	Ferrule Fuse Block	North American FWP Type	North American Fuse Block	Ferrule A70QS Type	North American A70P / A70QS Type
A	7P0	7	5.7	FWP-10A14F	CH143D	FWP-10B	–	A70QS10-14F	A70P10-4
	9P0	9	7.4	FWP-15A14F		FWP-15B	–	A70QS16-14F	A70P15-4
	012	12	9.8	FWP-20A14F		FWP-20B	–	A70QS20-14F	A70P20-4
	020	20	16	FWP-25A14F		FWP-25B	–	A70QS25-14F	A70QS25-4
	029	29	24	FWP-40A22F	CH223D	FWP-40B	–	A70QS40-22F	A70QS40-4
	038	38	31	FWP-63A22F		FWP-60B	–	A70QS63-22F	A70QS60-4
	055	55	45	FWP-80A22F		FWP-80B	–	A70QS80-22F	A70QS80-4
	073	73	60	–	–	FWP-100A	–	–	A70QS100-4K
	093	93	76	–	–	FWP-150A	BH-1133	–	A70QS150-4K
	110	110	90	–	–	FWP-175A		–	A70QS175-4K
B	146	146	119	–	–	FWP-250A		–	A70QS250-4
	180	180	147	–	–	FWP-300A		–	A70QS300-4
	218	218	178	–	–	FWP-350A		–	A70QS350-4
	265	265	217	–	–	FWP-400	BH-3144	–	A70QS400-4
	360	360	294	–	–	FWP-600A		–	A70QS600-4K
	434	434	355	–	–	FWP-600A		–	A70QS600-4

460V AC Input Drives

Frame	Drive Current Rating Code	DC Amps	AC Line Amps	Bussmann				Ferraz Shawmut (Gould Shawmut)	
				Ferrule FWP Type	Ferrule Fuse Block	North American FWP Type	North American Fuse Block	Ferrule A70QS Type	North American A70P / A70QS Type
A	4P1	4.1	3.3	FWP-10A14F	CH143D	FWP-10B	–	A70QS10-14F	A70P10-4
	6P0	6	4.9	FWP-10A14F		FWP-10B	–	A70QS10-14F	A70P10-4
	010	10	8.2	FWP-20A14F		FWP-20B	–	A70QS20-14F	A70P25-4
	014	14	11.4	FWP-25A14F		FWP-25B	–	A70QS25-14F	A70P25-4
	019	19	15.5	FWP-25A14F		FWP-25B	–	A70QS25-14F	A70P25-4
	027	27	22.1	FWP-40A22F	CH223D	FWP-40B	–	A70QS40-22F	A70QS40-4
	035	35	28.6	FWP-63A22F		FWP-60B	–	A70QS63-22F	A70QS60-4
	045	45	36.8	FWP-80A22F		FWP-80B	–	A70QS80-22F	A70QS80-4
	052	52	42.5	FWP-80A22F		FWP-80B	–	A70QS80-22F	A70QS80-4
	073	73	59.6	–	–	FWP-100A	–	–	A70QS100-4K
	086	86	70.3	–	–	FWP-150A	BH-1133	–	A70QS150-4K
	100	100	81.7	–	–	FWP-175A		–	A70QS175-4K
	129	129	105.4	–	–	FWP-175A		–	A70QS175-4K
B	167	167	136.4	–	–	FWP-300A		–	A70QS300-4
	207	207	169.1	–	–	FWP-350A		–	A70QS350-4
	250	250	204.3	–	–	FWP-400A	BH-3144	–	A70QS400-4
	330	330	269.6	–	–	FWP-600A		–	A70QS600-4K
	412	412	336.6	–	–	FWP-600A		–	A70QS600-4

575V AC Input Drives

Frame	Drive Current Rating Code	DC Amps	AC Line Amps	Bussmann		Ferraz Shawmut (Gould Shawmut)
				North American FWP Type	North American FWP Fuse Block	North American A70QS Type
B	067	67.5	55.1	FWP-100A	–	A70QS100-4
	101	101.3	82.7	FWP-175A	BH-1133	A70QS175-4K
	135	135	110.3	FWP-225A		A70QS225-4
	270	270	220.6	FWP-450A	BH-3144	A70QS450-4
	405	405	330.9	FWP-600A		A70QS600-4K

Frame A and B Recommended Armature DC Output Fuses

Armature DC output fuses are externally mounted for frame A and B drives and must be sourced separately. These fuses are required on four quadrant drives only, but highly recommended on two quadrant drives. See Fuse Code FS2 in Frame A and B Fuse Designations on page 50.

230V AC Input Drives

Frame	Drive Current Rating Code	DC Amps	AC Line Amps	Bussmann				Ferraz Shawmut (Gould Shawmut)	
				Ferrule FWP Type	Ferrule Fuse Block	North American FWP Type	North American Fuse Block	Ferrule A70QS Type	North American A70P / A70QS Type
A	7P0	7	5.7	FWP-15A14F	CH142D	FWP-15B	–	A70QS16-14F	A70P15-4
	9P0	9	7.4	FWP-20A14F		FWP-20B	–	A70QS20-14F	A70P20-4
	012	12	9.8	FWP-25A14F		FWP-25B	–	A70QS25-14F	A70P25-4
	020	20	16	FWP-40A14F		FWP-40B	–	A70QS40-14F	A70QS40-4
	029	29	24	FWP-63A22F	CH222D	FWP-60B	–	A70QS63-22F	A70QS60-4
	038	38	31	FWP-80A22F		FWP-80B	–	A70QS80-22F	A70QS80-4
	055	55	45	–	–	FWP-125A	BH-1133	–	A70QS125-4K
	073	73	60	–	–	FWP-150A		–	A70QS150-4K
	093	93	76	–	–	FWP-200A		–	A70QS200-4K
	110	110	90	–	–	FWP-225A		–	A70QS250-4
B	146	146	119	–	–	FWP-300A		–	A70QS300-4
	180	180	147	–	–	FWP-350A		–	A70QS350-4
	218	218	178	–	–	FWP-450A	BH-3144	–	A70QS450-4
	265	265	217	–	–	FWP-600A		–	A70QS600-4K
	360	360	294	–	–	FWP-700A		–	A70QS700-4
	434	434	355	–	–	FWP-900A		–	A70P900-4

460V AC Input Drives

Frame	Drive Current Rating Code	DC Amps	AC Line Amps	Bussmann				Ferraz Shawmut (Gould Shawmut)	
				Ferrule FWP Type	Ferrule Fuse Block	North American FWP Type	North American Fuse Block	Ferrule A70QS Type	North American A70P / A70QS Type
A	4P1	4.1	3.3	FWP-10A14F	CH142D	FWP-10B	–	A70QS10-14F	A70P10-4
	6P0	6	4.9	FWP-15A14F		FWP-15B	–	A70QS16-14F	A70P15-4
	010	10	8.2	FWP-20A14F		FWP-20B	–	A70QS20-14F	A70P20-4
	014	14	11.4	FWP-30A14F		FWP-30B	–	A70QS32-14F	A70P30-4
	019	19	15.5	FWP-40A14F		FWP-40B	–	A70QS40-14F	A70QS40-4
	027	27	22.1	FWP-63A22F	CH222D	FWP-60B	–	A70QS63-22F	A70QS60-4
	035	35	28.6	FWP-80A22F		FWP-70B	–	A70QS80-22F	A70QS70-4
	045	45	36.8	FWP-100A22F		FWP-90B	–	–	A70QS90-4
	052	52	42.5	FWP-100A22F		FWP-100B	–	–	A70QS100-4
	073	73	59.6	–	–	FWP-150A	BH-1133	–	A70QS150-4K
	086	86	70.3	–	–	FWP-175A		–	A70QS175-4K
	100	100	81.7	–	–	FWP-200A		–	A70QS200-4K
	129	129	105.4	–	–	FWP-250A		–	A70QS250-4
B	167	167	136.4	–	–	FWP-350A		–	A70QS350-4
	207	207	169.1	–	–	FWP-400A	BH-3144	–	A70QS400-4
	250	250	204.3	–	–	FWP-500A		–	A70QS500-4K
	330	330	269.6	–	–	FWP-700A		–	A70QS700-4
	412	412	336.6	–	–	FWP-800A		–	A70QS800-4

575V AC Input Drives

Frame	Drive Current Rating Code	DC Amps	AC Line Amps	Bussmann		Ferraz Shawmut (Gould Shawmut)
				North American FWP Type	North American FWP Fuse Block	North American A70P / A70QS Type
B	067	67.5	55.1	FWP-125A	BH-1133	A70QS125-4K
	101	101.3	82.7	FWP-200A		A70QS200-4K
	135	135	110.3	FWP-250A		A70QS250-4
	270	270	220.6	FWP-600A	BH-3144	A70QS600-4K
	405	405	330.9	FWP-800A		A70QS800-4

Frame A and B Recommended Field Circuit Fuses

Field circuit fuses are internally mounted and provided with the drive. See Fuse Code FS3 in Frame A and B Fuse Designations on page 50. Also, see Frame A Field AC Input Line Fuses Location on page 55 and Frame B Field AC Input Line Fuses Location on page 56 for fuse locations.

230V AC Input Drives

Frame	Drive Current Rating Code	Field Amps	Type	Quantity	Bussmann	Ferraz Shawmut (Gould Shawmut)	SIBA
A	7P0	10	6 x 32 mm	2	FWH-016A6F	E085449	70 125 40.16
	9P0						
	012						
	020						
	029						
	038						
	055						
	073	14					
	093						
	110						
B	146	20	10 x 38 mm	2	FWC-25A10F	A60Q25-2	60 033 05.25
	180						
	218						
	265						
	360						
	434						

460V AC Input Drives

Frame	Drive Current Rating Code	Field Amps	Type	Quantity	Bussmann	Ferraz Shawmut (Gould Shawmut)	SIBA
A	4P1	10	6 x 32 mm	2	FWH-016A6F	E085449	70 125 40.16
	6P0						
	010						
	014						
	019						
	027						
	035						
	045						
	052						
	073	14					
	086						
	100						
	129						
B	167	20	10 x 38 mm	2	FWC-25A10F	A60Q25-2	60 033 05.25
	207						
	250						
	330						
	412						

575V AC Input Drives

Frame	Drive Current Rating Code	Field Amps	Quantity	Type	Bussmann	Ferraz Shawmut (Gould Shawmut)	SIBA
B	067	20	2	10 x 38 mm	FWC-25A10F	A60Q25-2	60 033 05.25
	101						
	135						
	270						
	405						

Frame A Field AC Input Line Fuses Location

Bottom View of Drive with Fan

Bottom View of Drive without Fan

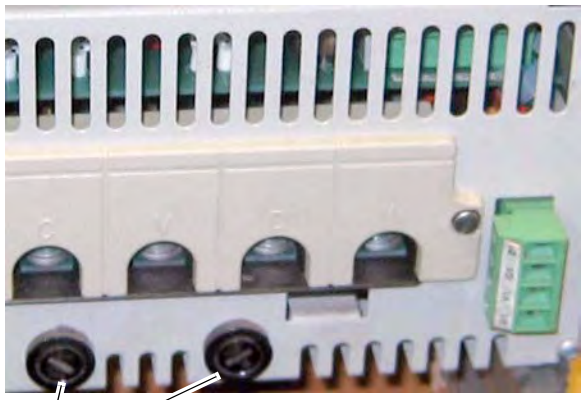

Field circuit fuses

Frame B Field AC Input Line Fuses Location

Top View of Drive

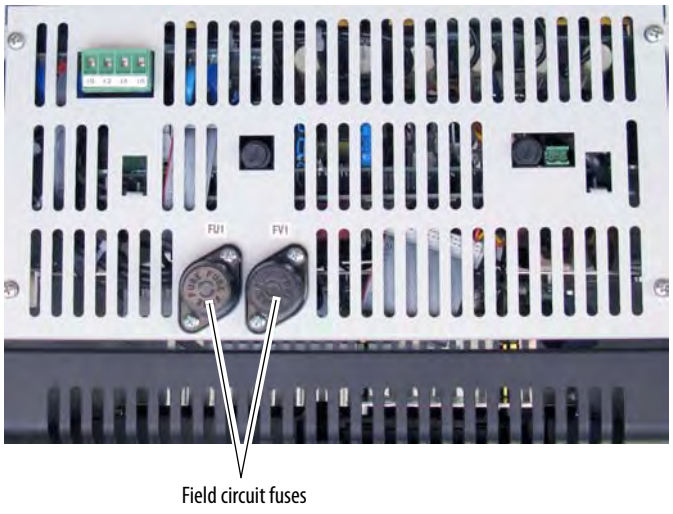

Frame C and D Fuse Designations

All fuses for armature and field circuit protection are internally mounted and provided with frame C and D drives.

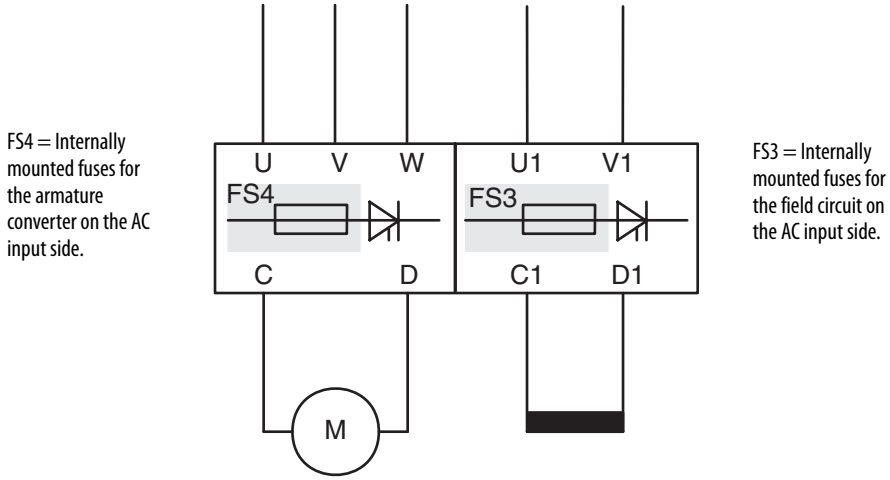

Frame C and D Recommended Field Circuit Fuses

Field circuit fuses for frames C and D drives are internally mounted (labeled FU1 and FV1) and provided with the drive. See Fuse Code FS3 in Frame C and D Fuse Designations on page 56. Also, see Frame C Field Circuit Fuse Location on page 58 and Frame D Field Circuit Fuse Location on page 58 for locations.

230V AC Input Drives

Frame	Drive Current Rating Code	Field Amps	Type	Qty	Bussmann	Ferraz Shawmut (Gould Shawmut)	SIBA
C	521	20	10 x 38 mm	2	FWC-25A10F	A60Q25-2	6003305.25
D	875	40	22 x 58 mm		FWP-50A22F	A70QS50-22F	5014006.50
	1K0						

460V AC Input Drives

Frame	Drive Current Rating Code	Field Amps	Type	Qty	Bussmann	Ferraz Shawmut (Gould Shawmut)	SIBA
C	495	20	10 x 38 mm	2	FWC-25A10F	A60Q25-2	6003305.25
	667					A60Q25-8	
D	830	40	22 x 58 mm		FWP-50A22F	A70QS50-22F	5014006.50
	996						
	1K1	70			FWP-100A22F	A70QS100-22F	5014006.100
	1K3						
	1K4						

575V AC Input Drives

Frame	Drive Current Rating Code	Field Amps	Type	Qty	Bussmann	Ferraz Shawmut (Gould Shawmut)	SIBA
C	540	20	10 x 38 mm	2	FWC-25A10F	A60Q25-2	6003305.25
	675					A60Q25-8	
D	810	40	22 x 58 mm		FWP-50A22F	A70QS50-22F	5014006.50
	1K0						
	1K2						
	1K3						
	1K6						

690V AC Input Drives

Frame	Drive Current Rating Code	Field Amps	Type	Qty	Bussmann	Ferraz Shawmut (Gould Shawmut)	SIBA
C	452	20	10 x 38 mm	2	FWC-25A10F	A60Q25-2	6003305.25
	565					A60Q25-8	
D	678	40	22 x 58 mm		FWP-50A22F	A70QS50-22F	5014006.50
	791						
	904						
	1K0						
	1K1	70			FWP-100A22F	A70QS100-22F	5014006.100
	1K2						
	1K4						
	1K5						

Frame C Field Circuit Fuse Location

Field AC input fuses are located on the Control EMI shield, which holds the Control board.

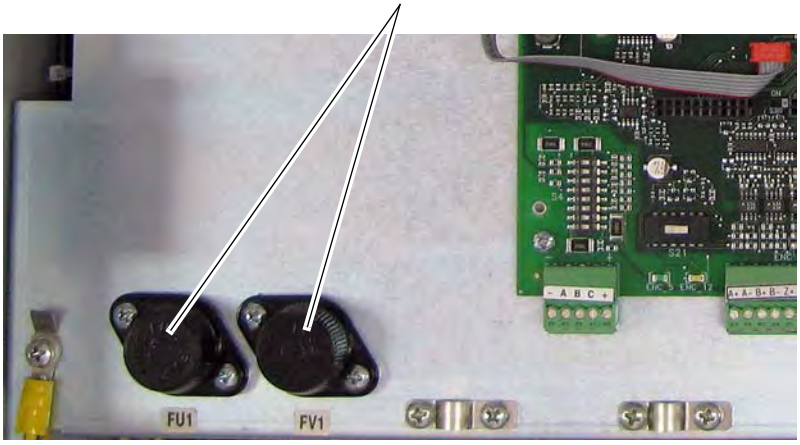

Frame D Field Circuit Fuse Location

Top, left side of drive control panel.

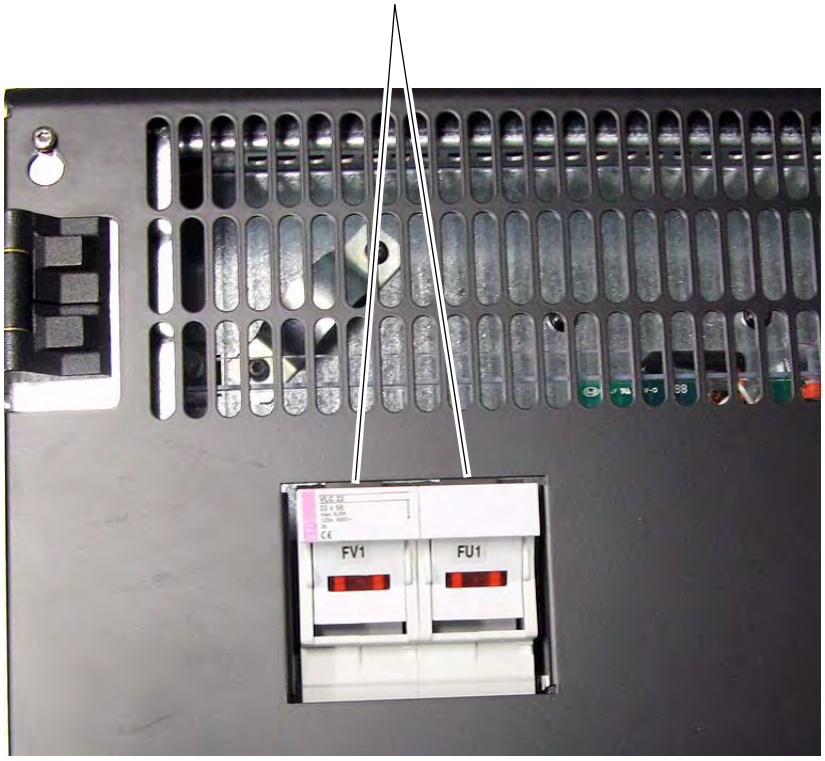

Fuses for Regenerative Frame C and D Drives

Leg fuses are internally mounted and provided with frames C and D drives. See Fuse Code FS4 in Frame C and D Fuse Designations on page 56. Also, see Frame C Regenerative Drive - Leg Fuse Location on page 60 and Frame D Regenerative Drive - Leg Fuse Location on page 61.

Recommended Leg Fuses - 230V AC Input Frame C Drives

Frame	Drive Current Rating Code	DC Amps	AC Line Amps	Qty	Bussmann	Ferraz Shawmut (Gould Shawmut)	SIBA
					Square Body - Flush End Contact		
C	521	521	426	6	170M5464 + switch 170H0069	6,9 URD 32 TTF 800 + switch MS 3-V1-5 BS	20 671 32.800 + switch 28 001 04
	700	700	571	6	170M5464 + switch 170H0069	6,9 URD 32 TTF 800 + switch MS 3V 1-5 BS	20 671 32.800 + switch 28 001 04

Recommended Leg Fuses - 230V AC Input Frame D Drives

Frame	Drive Current Rating Code	DC Amps	AC Line Amps	Qty	Bussmann	Ferraz Shawmut (Gould Shawmut)	SIBA
					Square Body - DIN 43653 Stud-Mount		
D	875	875	715	6	170M6263 + switch 170H0069	Y300263 + switch MS 3V 1-5 UR	20 635 32.900 + switch 28 001 04
	1K0	1050	858	6	170M6264 + switch 170H0069	Z300264 + switch MS 3V 1-5 UR	20 635 32.1000 + switch 28 001 04

Recommended Leg Fuses - 460V AC Input Frame C Drives

Frame	Drive Current Rating Code	DC Amps	AC Line Amps	Qty	Bussmann	Ferraz Shawmut (Gould Shawmut)	SIBA
					Square Body - Flush End Contact		
C	495	495	404.4	6	170M5462 + switch 170H0069	6,9 URD 32 TTF 630 + switch MS 3-V1-5 BS	20 671 32.630 + switch 28 001 04
	667	667	544.9	6	170M5464 + switch 170H0069	6,9 URD 32 TTF 800 + switch MS 3-V1-5 BS	20 671 32.800 + switch 28 001 04

Recommended Leg Fuses - 460V AC Input Frame D Drives

Frame	Drive Current Rating Code	DC Amps	AC Line Amps	Qty	Bussmann	Ferraz Shawmut (Gould Shawmut)	SIBA
					Square Body - DIN 43653 Stud-Mount		
D	830	830	678.1	6	170M6262 + switch 170H0069	X300262 + switch MS 3V 1-5 UR	20 635 32.800 + switch 28 001 04
	996	996	813.7	6	170M6264 + switch 170H0069	Z300264 + switch MS 3V 1-5 UR	20 635 32.1000 + switch 28 001 04
	1K1	1162	949.4	6	170M6265 + switch 170H0069	A300262 + switch MS 3V 1-5 UR	20 635 32.1100 + switch 28 001 04
	1K3	1328	1085.0	6	170M6266 + switch 170H0069	B300266 + switch MS 3V 1-5 UR	20 635 32.1250 + switch 28 001 04
	1K4	1494	1220.6	6	170M6267 + switch 170H0069	C300267 + switch MS 3V 1-5 UR	20 635 32.1400 + switch 28 001 04

Recommended Leg Fuses - 575V AC Input Frame C Drives

Frame	Drive Current Rating Code	DC Amps	AC Line Amps	Qty	Bussmann	Ferraz Shawmut (Gould Shawmut)	SIBA
					Square Body - Flush End Contact		
C	540	540	441	6	–	11 URD 72 TTF 0800 + switch MS 3V 1-5 BS	20 771 32.800 + switch 28 001 04
	675	675	551	6	–	11 URD 72 TTF 0800 + switch MS 3V 1-5 BS	20 771 32.800 + switch 28 001 04

Recommended Leg Fuses - 575V AC Input Frame D Drives

Frame	Drive Current Rating Code	DC Amps	AC Line Amps	Qty	Bussmann	Ferraz Shawmut (Gould Shawmut)	SIBA
					Square Body - DIN 43653 Stud-Mount		
D	810	810	661	6	170M6246 + switch 170H0069	J300572 + switch MS 3V 1-5 UR	20 735 32.800 + switch 28 001 04
	1K0	1080	881	6	170M6248 + switch 170H0069	L300574 + switch MS 3V 1-5 UR	20 735 32.1000 + switch 28 001 04
	1K2	1215	991	12	170M6244 + switch 170H0069	G300570 + switch MS 3V 1-5 UR	20 735 32.630 + switch 28 001 04
	1K3	1350	1102	12	170M6245 + switch 170H0069	H300571 + switch MS 3V 1-5 UR	20 735 32.700 + switch 28 001 04
	1K6	1688	1377	12	170M6246 + switch 170H0069	J300572 + switch MS 3V 1-5 UR	20 735 32.800 + switch 28 001 04

Recommended Leg Fuses - 690V AC Input Frame C Drives

Frame	Drive Current Rating Code	DC Amps	AC Line Amps	Qty	Bussmann	Ferraz Shawmut (Gould Shawmut)	SIBA
					Square Body - Flush End Contact		
C	452	452	369	6	170M5394 + switch 170H0069	12,5 URD 72 TTF 0500 + switch MS 3V 1-5 BS	20 771 32.500 + switch 28 001 04
	565	565	461	6	–	12,5 URD 72 TTF 0630 + switch MS 3V 1-5 BS	20 771 32.630 + switch 28 001 04

Recommended Leg Fuses - 690V AC Input Frame D Drives

Frame	Drive Current Rating Code	DC Amps	AC Line Amps	Qty	Bussmann	Ferraz Shawmut (Gould Shawmut)	SIBA
					Square Body - DIN 43653 Stud-Mount		
D	678	678	553	6	170M6244 + switch 170H0069	G300570 + switch MS 3V 1-5 UR	20 735 32.630 + switch 28 001 04
	791	791	645	6	170M6246 + switch 170H0069	J300572 + switch MS 3V 1-5 UR	20 735 32.800 + switch 28 001 04
	904	904	738	6	170M6247 + switch 170H0069	K300573 + switch MS 3V 1-5 UR	20 735 32.900 + switch 28 001 04
	1K0	1017	830	6	170M6248 + switch 170H0069	L300574 + switch MS 3V 1-5 UR	20 735 32.1000 + switch 28 001 04
	1K1	1130	922	12	170M6244 + switch 170H0069	G300570 + switch MS 3V 1-5 UR	20 735 32.630 + switch 28 001 04
	1K2	1243	1014	12	170M6244 + switch 170H0069	G300570 + switch MS 3V 1-5 UR	20 735 32.630 + switch 28 001 04
	1K4	1413	1153	12	170M6245 + switch 170H0069	H300571 + switch MS 3V 1-5 UR	20 735 32.700 + switch 28 001 04
	1K5	1582	1291	12	170M6246 + switch 170H0069	J300572 + switch MS 3V 1-5 UR	20 735 32.800 + switch 28 001 04

Frame C Regenerative Drive - Leg Fuse Location

Note: Drive shown with front covers removed and Control EMI shield lowered.

Leg fuses and switches are located on the bus bars behind the Control EMI shield, which holds the Control board.

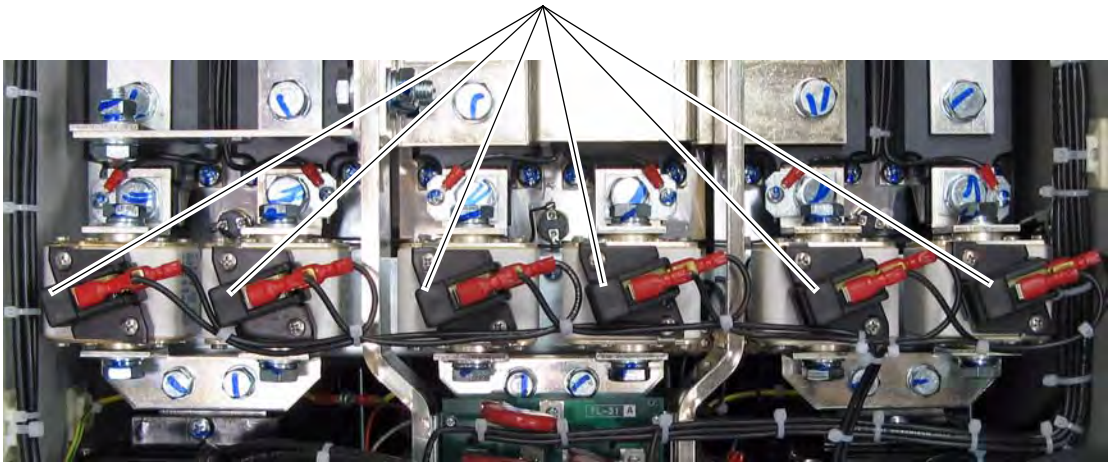

Frame D Regenerative Drive - Leg Fuse Location

Note: Drive shown with Control EMI shield in open position.

Leg fuses and switches are located on the bus bars behind the Control EMI shield, which holds the Control board.

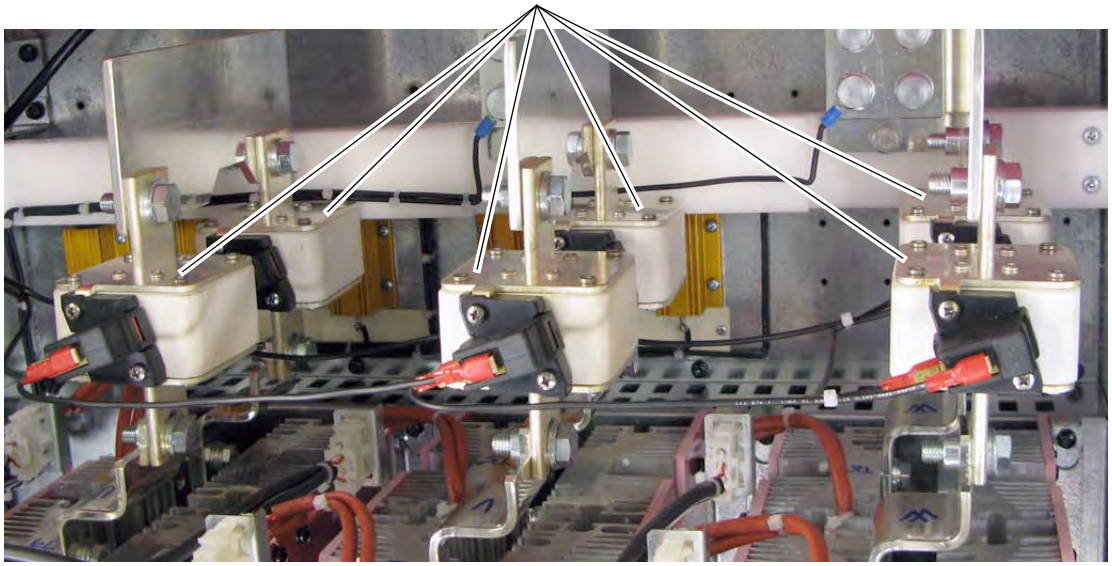

Fuses for Non-Regenerative Frame C and D Drives

AC input line and/or leg fuses are internally mounted and provided with frames C and D drives. See Fuse Code FS4 in Frame C and D Fuse Designations on page 56. Also, see Frame C Non-Regenerative Drive - AC Input Line Fuse Location on page 63.

Recommended AC Input Line Fuses - 230V AC Input Frame C

Frame	Drive Current Rating Code	DC Amps	AC Line Amps	Qty	Bussmann	Ferraz Shawmut (Gould Shawmut)	SIBA
					Square Body - Flush End Contact		
C	521	521	426	3	170M5466 + switch 170H0069	6,9 URD 32 TTF 1000 + switch MS 3-V1-5 BS	20 671 32.1000 + switch 28 001 04
	700	700	571	3	170M5466 + switch 170H0069	6,9 URD 32 TTF 1000 + switch MS 3V 1-5 BS	20 671 32.1000 + switch 28 001 04

Recommended Leg Fuses - 230V AC Input Frame D Drives

Frame	Drive Current Rating Code	DC Amps	AC Line Amps	Qty	Bussmann	Ferraz Shawmut (Gould Shawmut)	SIBA
					Square Body - DIN 43653 Stud-Mount		
D	875	875	715	6	170M6263 + switch 170H0069	Y300263 + switch MS 3V 1-5 UR	20 635 32.900 + switch 28 001 04
	1K0	1050	858	6	170M6264 + switch 170H0069	Z300264 + switch MS 3V 1-5 UR	20 635 32.1000 + switch 28 001 04

Recommended AC Input Line Fuses - 460V AC Input Frame C

Frame	Drive Current Rating Code	DC Amps	AC Line Amps	Qty	Bussmann	Ferraz Shawmut (Gould Shawmut)	SIBA
					Square Body - Flush End Contact		
C	495	495	404.4	3	170M5464 + switch 170H0069	6,9 URD 32 TTF 800 + switch MS 3-V1-5 BS	20 671 32.800 + switch 28 001 04
	667	667	544.9	3	170M5466 + switch 170H0069	6,9 URD 32 TTF 1000 + switch MS 3-V1-5 BS	20 671 32.1000 + switch 28 001 04

Recommended Leg Fuses - 460V AC Input Frame D Drives

Frame	Drive Current Rating Code	DC Amps	AC Line Amps	Qty	Bussmann	Ferraz Shawmut (Gould Shawmut)	SIBA
					Square Body - DIN 43653 Stud-Mount		
D	830	830	678.1	6	170M6262 + switch 170H0069	X300262 + switch MS 3V 1-5 UR	20 635 32.800 + switch 28 001 04
	996	996	813.7	6	170M6264 + switch 170H0069	Z300264 + switch MS 3V 1-5 UR	20 635 32.1000 + switch 28 001 04
	1K1	1162	949.4	6	170M6265 + switch 170H0069	A300262 + switch MS 3V 1-5 UR	20 635 32.1100 + switch 28 001 04
	1K3	1328	1085.0	6	170M6266 + switch 170H0069	B300266 + switch MS 3V 1-5 UR	20 635 32.1250 + switch 28 001 04
	1K4	1494	1220.6	6	170M6267 + switch 170H0069	C300267 + switch MS 3V 1-5 UR	20 635 32.1400 + switch 28 001 04

Recommended AC Input Line Fuses - 575V AC Input Frame C Drives

Frame	Drive Current Rating Code	DC Amps	AC Line Amps	Qty	Bussmann	Ferraz Shawmut (Gould Shawmut)	SIBA
					Square Body - Flush End Contact		
C	540	540	441	3	170M5466 + switch 170H0069	6,9 URD 32 TTF 1000 + switch MS 3V 1-5 BS	20 671 32.1000 + switch 28 001 04
	675	675	551	3	170M5466 + switch 170H0069	6,9 URD 32 TTF 1000 + switch MS 3V 1-5 BS	20 671 32.1000 + switch 28 001 04

Recommended Leg Fuses - 575V AC Input Frame D Drives

Frame	Drive Current Rating Code	DC Amps	AC Line Amps	Qty	Bussmann	Ferraz Shawmut (Gould Shawmut)	SIBA
					Square Body - DIN 43653 Stud-Mount		
D	810	810	661	6	170M6262 + switch 170H0069	X300262 + switch MS 3V 1-5 UR	20 635 32.800 + switch 28 001 04
	1K0	1080	881	6	170M6264 + switch 170H0069	Z300264 + switch MS 3V 1-5 UR	20 635 32.1000 + switch 28 001 04
	1K2	1215	991	6	170M6265 + switch 170H0069	A300262 + switch MS 3V 1-5 UR	20 635 32.1100 + switch 28 001 04
	1K3	1350	1102	6	170M6266 + switch 170H0069	B300266 + switch MS 3V 1-5 UR	20 635 32.1250 + switch 28 001 04
	1K6	1688	1377	12	170M6262 + switch 170H0069	X300262 + switch MS 3V 1-5 UR	20 635 32.800 + switch 28 001 04

Recommended AC Input Line Fuses - 690V AC Input Frame C Drives

Frame	Drive Current Rating Code	DC Amps	AC Line Amps	Qty	Bussmann	Ferraz Shawmut (Gould Shawmut)	SIBA
					Square Body - Flush End Contact		
C	452	452	369	6	170M5463 + switch 170H0069	6,9 URD 32 TTF 0700 + switch MS 3V 1-5 BS	20 671 32.700 + switch 28 001 04
	565	565	461	6	170M5465 + switch 170H0069	6,9 URD 32 TTF 0900 + switch MS 3V 1-5 BS	20 671 32.900 + switch 28 001 04

Recommended Leg Fuses - 690V AC Input Frame D Drives

Frame	Drive Current Rating Code	DC Amps	AC Line Amps	Qty	Bussmann	Ferraz Shawmut (Gould Shawmut)	SIBA
					Square Body - DIN 43653 Stud-Mount		
D	678	678	553	6	170M6260 + switch 170H0069	V300260 + switch MS 3V 1-5 UR	20 635 32.630 + switch 28 001 04
	791	791	645	6	170M6262 + switch 170H0069	X300262 + switch MS 3V 1-5 UR	20 635 32.800 + switch 28 001 04
	904	904	738	6	170M6263 + switch 170H0069	Y300263 + switch MS 3V 1-5 UR	20 635 32.900 + switch 28 001 04
	1K0	1017	830	6	170M6264 + switch 170H0069	Z300264 + switch MS 3V 1-5 UR	20 635 32.1000 + switch 28 001 04
	1K1	1130	922	6	170M6265 + switch 170H0069	A300262 + switch MS 3V 1-5 UR	20 635 32.1100 + switch 28 001 04
	1K2	1243	1014	6	170M6266 + switch 170H0069	B300266 + switch MS 3V 1-5 UR	20 635 32.1250 + switch 28 001 04
	1K4	1413	1153	6	170M6267 + switch 170H0069	C300267 + switch MS 3V 1-5 UR	20 635 32.1400 + switch 28 001 04
	1K5	1582	1291	12	170M6262 + switch 170H0069	X300262 + switch MS 3V 1-5 UR	20 635 32.800 + switch 28 001 04

Frame C Non-Regenerative Drive - AC Input Line Fuse Location

AC Input fuses and switches are located on the bus bars behind the Control EMI shield, which holds the Control board.

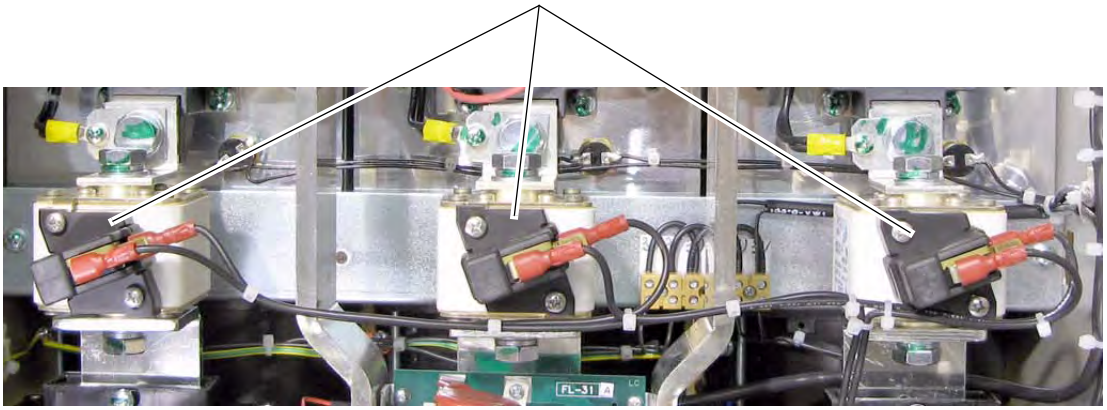

Note: Drive shown with front covers removed and Control EMI shield lowered.

Control Power Circuit Protection Fuses

The following fuses are used to protect the Switching Power Supply circuit.

IMPORTANT Verify the circuit board revision prior to ordering and installing fuses.

Frame	Circuit Board ID / Revision	Designation	Fuse (5 x 20 mm)
A	SW1-31 / H & below	F1	1 A, 250V, slow
	SW1-31 / I & above	F1	2.5 A, 250V, slow
B	SW2-32 / H & below	F1	3.15 A, 250V fast
		F2	2.5 A, 250V slow
	SW2-32 / I & above	F1	2.5 A, 250V slow
		F2	
C	SW3-32 / H & below	F1	3.15 A, 250V fast
		F2	2.5 A, 250V slow
	SW3-32 / I & above	F1	2.5 A, 250V slow
		F2	
D	SW1-31 / I & above	F1	2.5 A, 250V, slow

Frame A Switching Power Supply Fuse Location

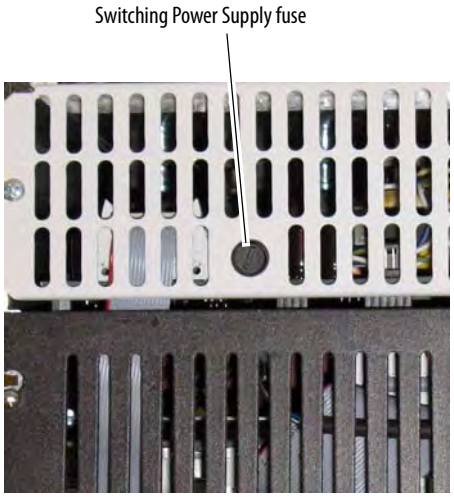

Frame B Switching Power Supply Fuse Location

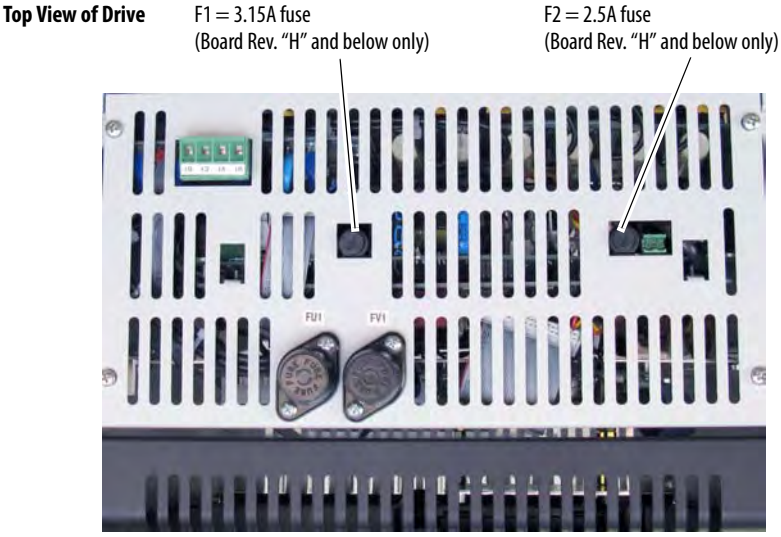

Frame C Switching Power Supply Fuse Location

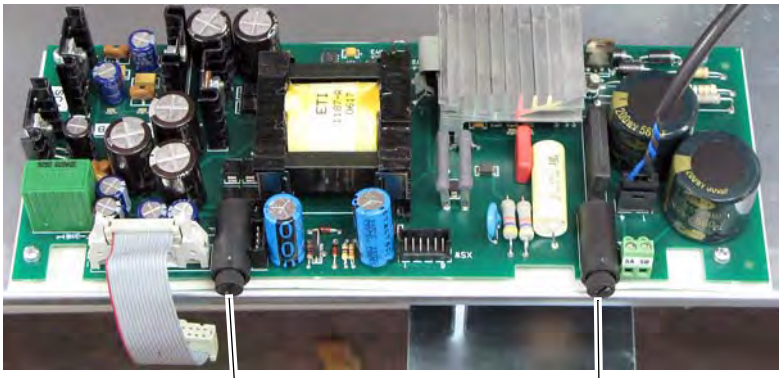

F1 = 3.15A fuse
(Board Rev. "H" and below only)

F2 = 2.5A fuse
(Board Rev. "H" and below only)

Fuses are located on the Switching Power Supply circuit board (SW-2) on the back of the Control EMI shield, which holds the Control board.

Frame D Switching Power Supply Circuit Board Fuse Location

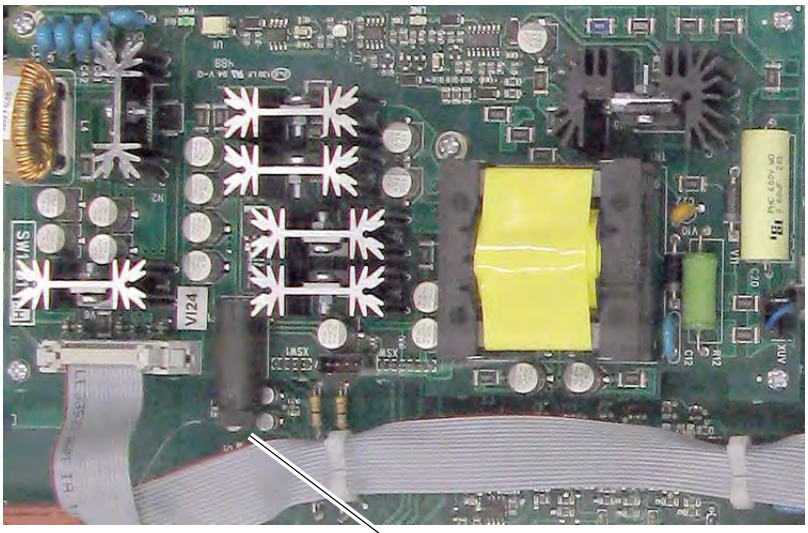

Switching Power Supply fuse holder

The Switching Power Supply circuit board is located on the Control EMI shield.

Mounting

Operating Conditions and Temperatures

PowerFlex DC drives are designed to operate at 0°...50° C (32°... 122° F) surrounding air temperature without derating. The drive must be mounted in a clean, dry location. Contaminants such as oils, corrosive vapors and abrasive debris must be kept out of the enclosure. NEMA/UL Type Open, IP20 enclosures are intended for indoor use primarily to provide a degree of protection against contact with enclosed equipment. These enclosures offer no protection against airborne contaminants.

Minimum Mounting Clearances

Minimum clearance requirements are intended to be from drive to drive. Other objects can occupy this space; however, reduced airflow may cause protection circuits to fault the drive. See Drive Enclosure Minimum Mounting Clearances below. The drive must be mounted in a vertical orientation as shown below and must not be mounted at an angle greater than 30° from vertical. In addition, inlet air temperature must not exceed the product specification.

Drive Enclosure Minimum Mounting Clearances

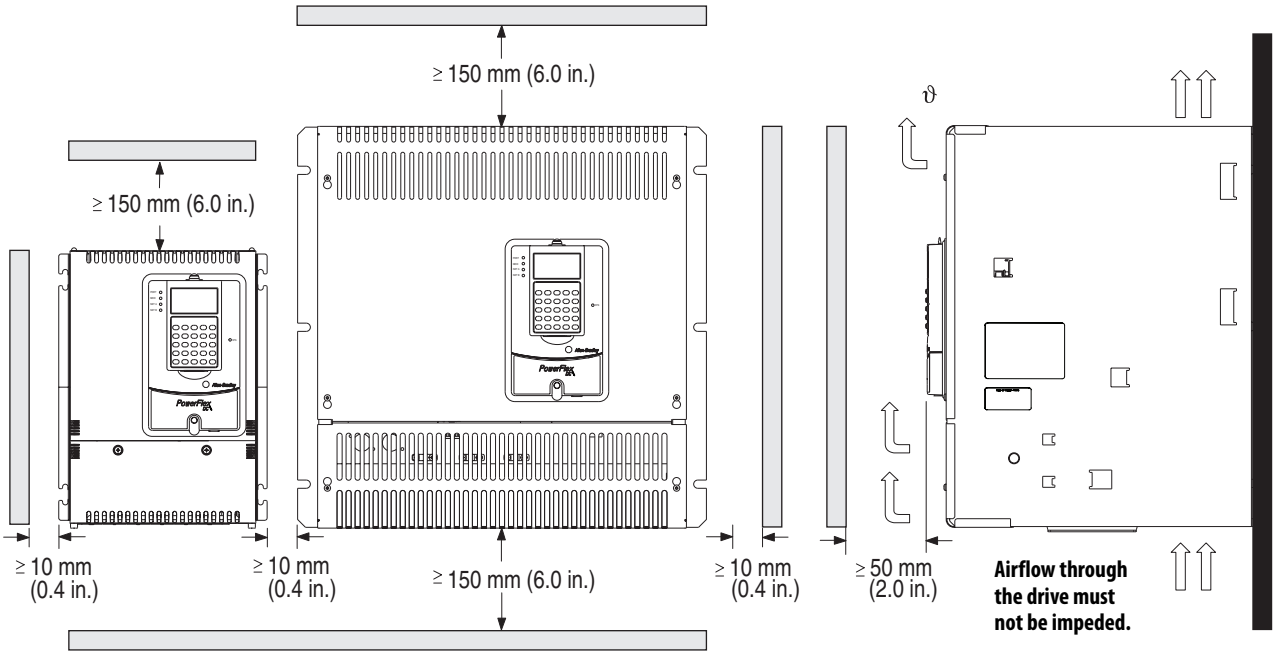

IMPORTANT Verify that all mounting screws are properly tightened before and after operation.

Approximate Dimensions

Frame A Dimensions

A	B	C	A1	A2	B1
mm (in.)	mm (in.)	mm (in.)	mm (in.)	mm (in.)	mm (in.)
267 (10.5)	359 (14.0)	287 (11.3)	7 (0.3)	250 (9.8)	275 (10.8)

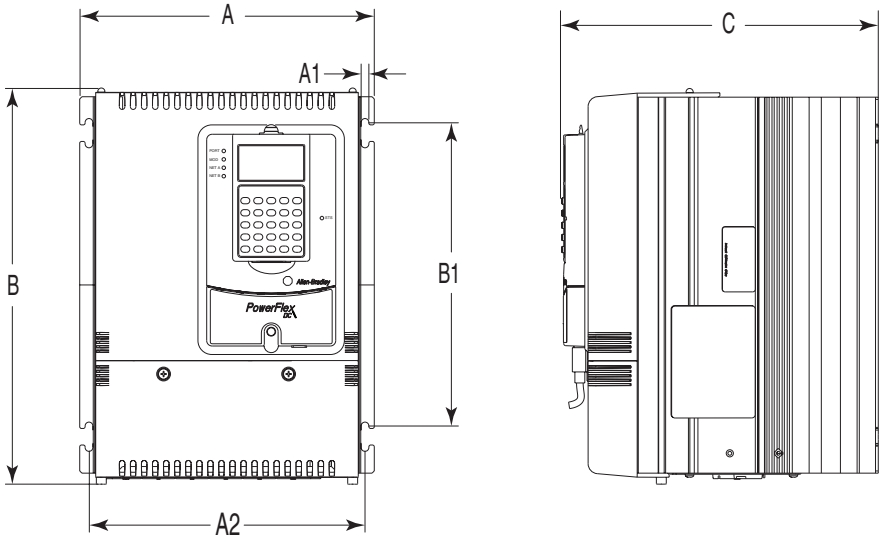

Frame A Weights

Drive w/ND Rating Code		Weight	
		Drive	Drive & Packaging
230V	460V	kg (lb)	kg (lb)
7P0	4P1	8.4 (19.5)	10.5 (23.1)
9P0	6P0		
012	010		
020	014		
–	019		
029	027		
038	035	8.8 (19.4)	11 (24.3)
055	045		
–	052		
073	073	10.8 (23.8)	13 (28.7)
093	086		
110	–		
–	100		
–	129		

Frame B Dimensions

A	A1	A2	A3	B	B1	C
mm (in.)	mm (in.)	mm (in.)	mm (in.)	mm (in.)	mm (in.)	mm (in.)
311 (12.2)	275 (10.8)	16.5 (0.65)	7 (0.3)	388 (15.3)	375 (14.8)	350 (13.8)

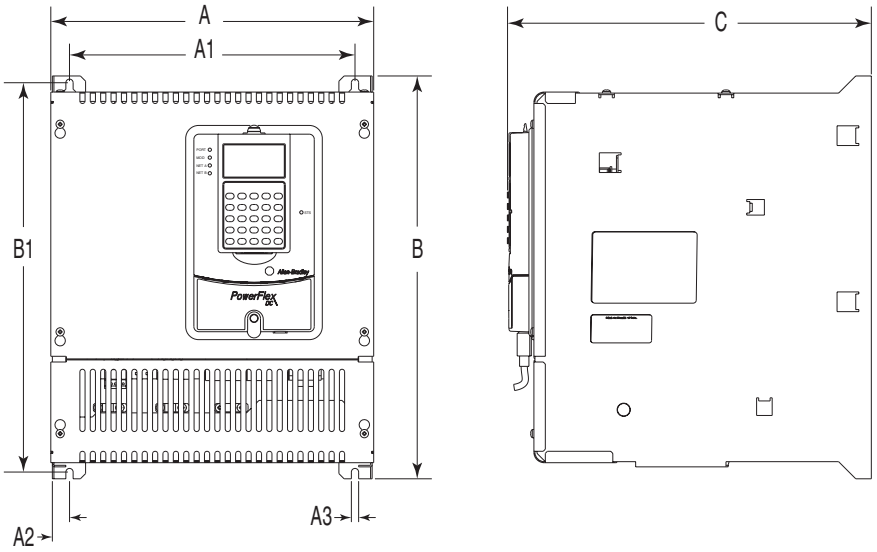

Terminal Details Dimensions in mm (in.)

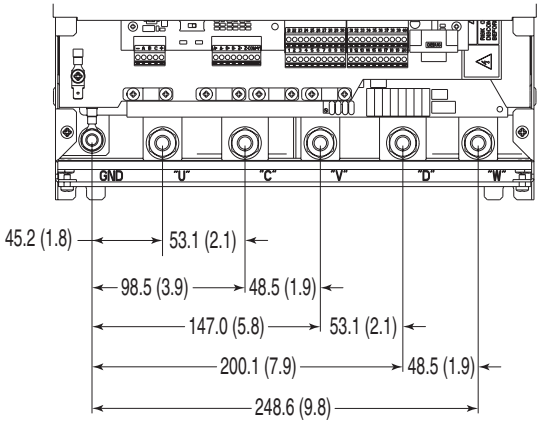

Frame B Weights

Drive w/ND Rating Code			Weight	
			Drive	Drive & Packaging
230V	460V	575V	kg (lb)	kg (lb)
146	167	067	25.5 (56.2)	27.5 (60.6)
180	207	101		
218	–	135		
265	250	270	29.5 (65.0)	31.5 (69.5)
360	330	405	32 (70.5)	34 (75)
434	412	–		

Frame C Dimensions

A	A1	B	B1	B2	B3	B4	B5	C
mm (in.)	mm (in.)	mm (in.)	mm (in.)	mm (in.)	mm (in.)	mm (in.)	mm (in.)	mm (in.)
521 (20.5)	499 (19.7)	511 (20.1)	400 (15.7)	200 (7.9)	55 (2.2)	56 (2.2)	10.5 (0.4)	416 (16.4)

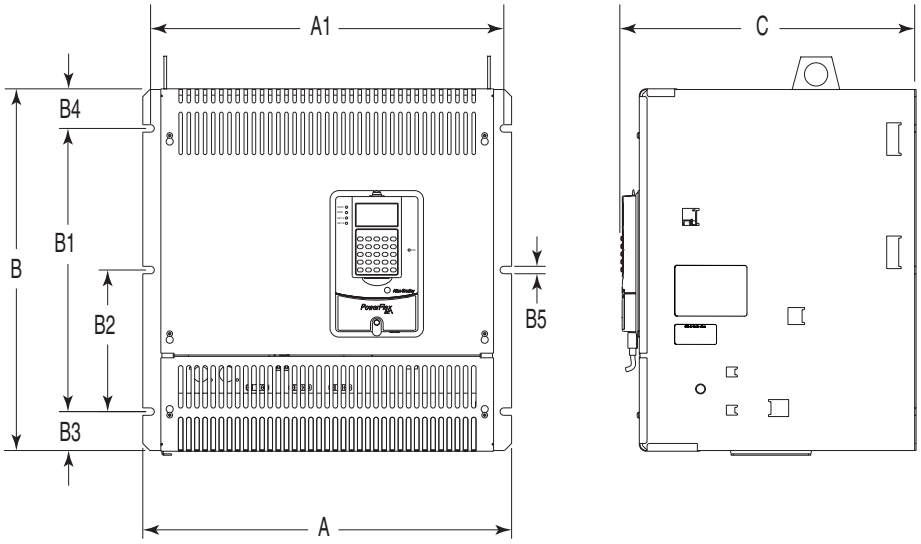

Terminal Details Dimensions in mm (in.)

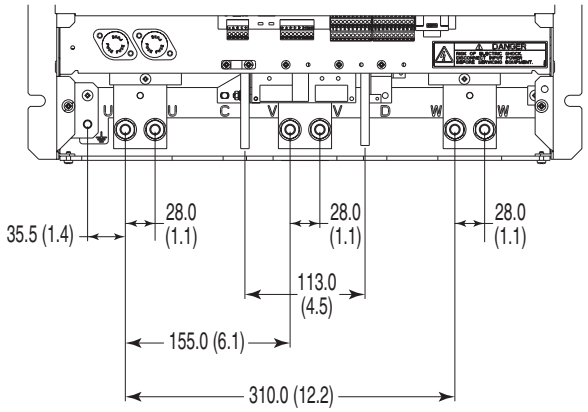

Frame C Weights

Drive w/ND Rating Code				Weight - Regenerative Drives		Weight - Non-regenerative Drives	
				Drive	Drive & Packaging	Drive	Drive & Packaging
230V	460V	575V	690V	kg (lb)	kg (lb)	kg (lb)	kg (lb)
–	495		–	61 (134.5)	83 (183.0)	57 (125.7)	79 (174.2)
521	667		–	65 (143.3)	87 (191.8)	62 (136.7)	84 (185.2)
700	–		–				
–	–	540	452	72 (158.7)	94 (207.2)	68 (150.0)	90 (198.4)
–	–	675	565				

Frame D Dimensions - Right Side and Front Views

Dimensions are shown in mm and (in.)

Dimensions of terminals U, V and W are the same.

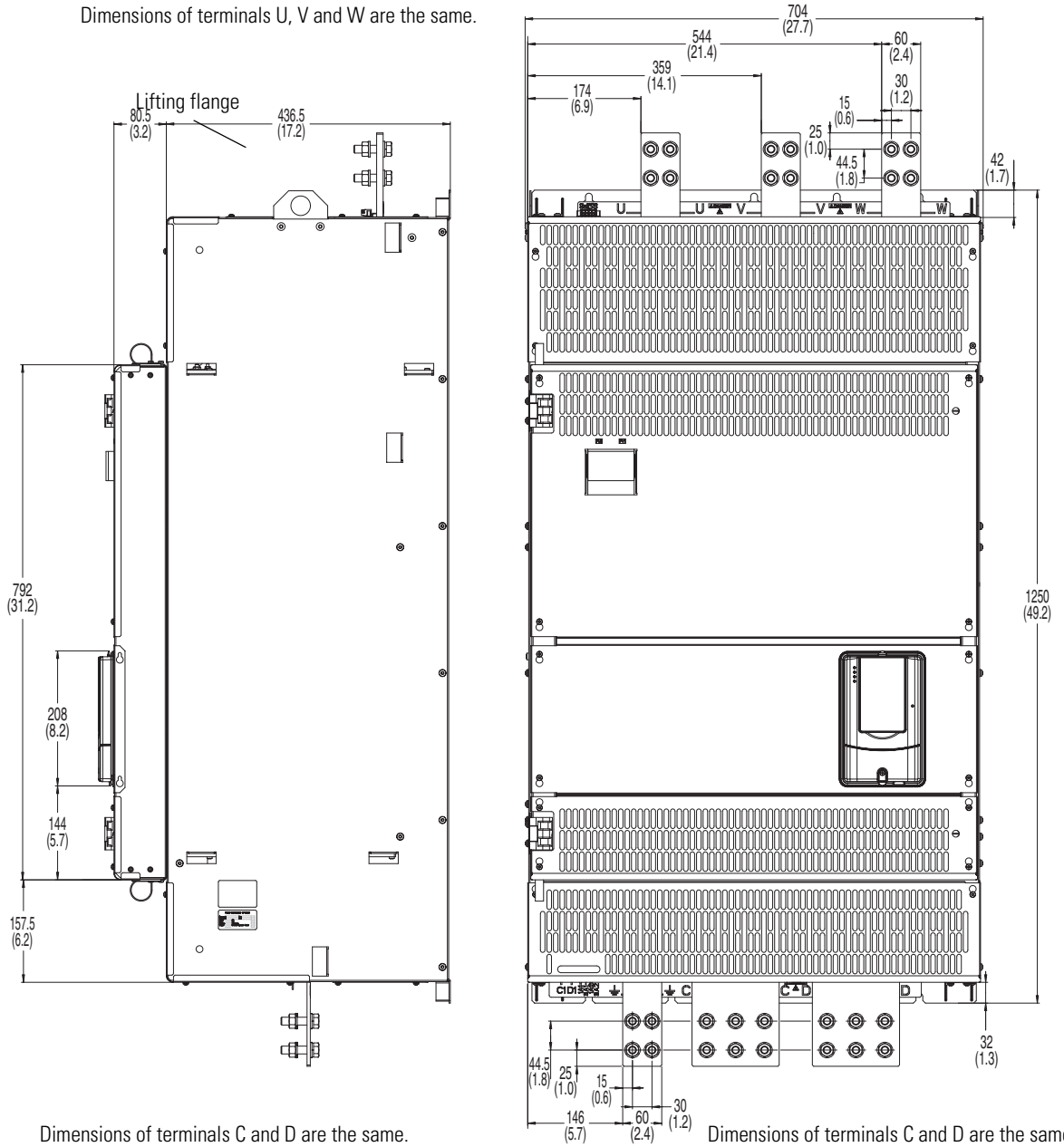

Dimensions of terminals C and D are the same.

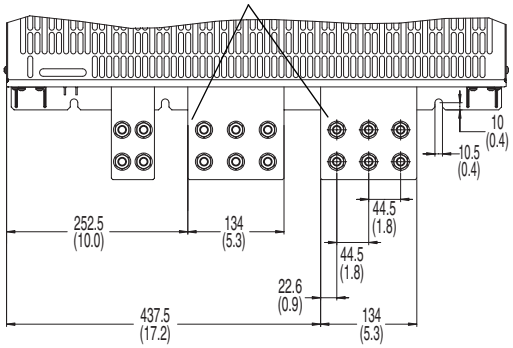

Dimensions of terminals C and D are the same.

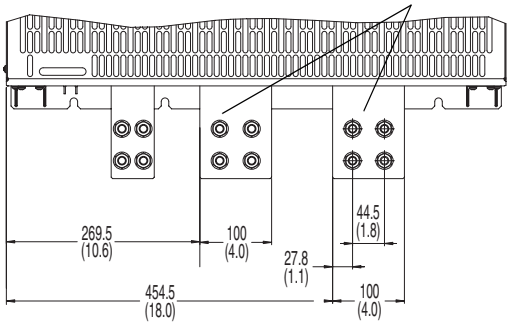

Frame D Dimensions - Left Side and Back Views

Dimensions are shown in mm and (in.)

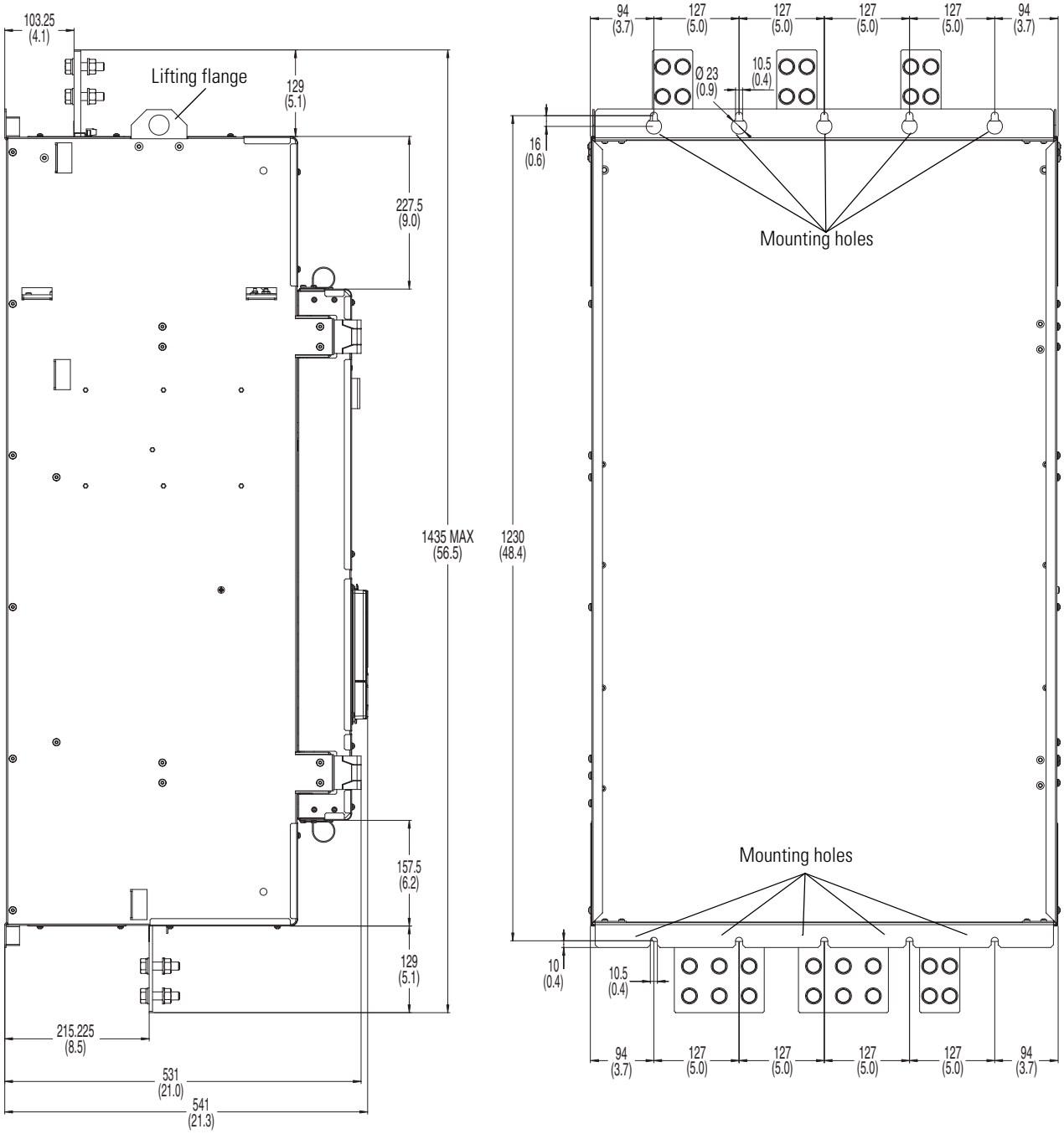

Frame D - 230V AC Input Drive Weights

Drive w/ND Rating Code	Weight - Regenerative Drives		Weight - Non-regenerative Drives	
	Drive	Drive & Packaging	Drive	Drive & Packaging
	kg (lb)	kg (lb)	kg (lb)	kg (lb)
875 1K0	203 (447.5)	281 (619.5)	152 (335.1)	230 (507.1)

Frame D - 460V AC Input Drive Weights

Drive w/ND Rating Code	Weight - Regenerative Drives		Weight - Non-regenerative Drives	
	Drive	Drive & Packaging	Drive	Drive & Packaging
	kg (lb)	kg (lb)	kg (lb)	kg (lb)
830	202 (445.3)	280 (617.3)	152 (335.1)	230 (507.1)
996				
1K1	215 (474.0)	293 (646.0)	165 (363.8)	243 (535.7)
1K3				
1K4				

Frame D - 575V AC Input Drive Weights

Drive w/ND Rating Code	Weight - Regenerative Drives		Weight - Non-regenerative Drives	
	Drive	Drive & Packaging	Drive	Drive & Packaging
	kg (lb)	kg (lb)	kg (lb)	kg (lb)
810	198 (436.5)	276 (608.5)	148 (326.3)	226 (498.2)
1K0				
1K2	215 (474.0)	293 (646.0)	165 (363.8)	243 (535.7)
1K3	222 (489.4)	300 (661.4)	172 (379.2)	250 (551.2)
1K6	241 (531.3)	319 (703.3)	191 (421.1)	269 (593.0)

Frame D - 690V AC Input Drive Weights

Drive w/ND Rating Code	Weight - Regenerative Drives		Weight - Non-regenerative Drives	
	Drive	Drive & Packaging	Drive	Drive & Packaging
	kg (lb)	kg (lb)	kg (lb)	kg (lb)
678	198 (436.5)	276 (608.5)	148 (326.3)	226 (498.2)
791				
904	200 (440.9)	278 (612.9)	150 (330.7)	228 (502.7)
1K0	202 (445.3)	280 (617.3)	152 (335.1)	230 (507.1)
1K1	215 (474.0)	293 (646.0)		
1K2			165 (363.8)	243 (535.7)
1K4	241 (531.3)	319 (703.3)	172 (379.2)	250 (551.2)
1K5			191 (421.1)	269 (593.0)

PowerFlex DC Configured Drives

Overview

The PowerFlex DC Configured Drives allow users to create drive packages based on their specific needs. This program enhances stand-alone drive functionality through additional control, power and packaging options, which are ideal for Original Equipment Manufacturers (OEM) and end users with special installation needs. This program consists of:

•Standard Configured Drives

•Engineer To Order Configured Drives

Standard Configured Drives

The Standard Configured Drives Program allows users to create drive packages based on their specific needs. A complete drive package may be specified by assembling a single catalog number string that includes a base drive and all required options. Packaging is available for 230 and 460V AC requirements in IP20, NEMA/UL Type 1 MCC style enclosures or rigid-panel mounted for installation in an existing enclosure. The program consists of a fully defined catalog string identified within this publication. Focused on higher volume, repeat business, the standard designs provide consistent manufacturing and minimizes customer resources by reducing engineering, manufacturing and installation time. Typical delivery is 6...8 weeks from order entry and can be ordered through the order entry system.

Engineer To Order Configured Drives (ETO)

The Engineer To Order Configured Drives Program offers users the ability to create drive packages beyond the Standard Configured Drives offering. Options may or may not be defined within this publication. Products can be ordered by contacting your Global Drives Systems representative at the central office location or one of the Local Drive Solution Centers. Our engineering experts will assist in defining the specific requirements of your application.

The Standard Configured Drive designs may be modified to meet the design criteria or a complete custom package can be designed for any application. The typical lead time of an ETO order is 8...12 weeks based on the lead time and availability of unique components of the design.

Benefits

- Simplified installation and start-up by use of common options assembled at the factory.
- Drive functionality exceeds options offered with a standard drive.
- Multiple packaging options specific to customer needs.
- Pre-engineered options for easy order entry, consistent manufacturing, high quality and reduced delivery time.
- Selectable configurations to meet application requirements.

Features

- Standard PowerFlex DC Digital drives and drive-related options.
- 6 pulse and 12 pulse.
- Enclosure options: IP20 MCC, IP42 Filter, IP00 (mounted on a panel), either conformal coated circuit boards or without.
- Pre-engineered options.
- Custom/engineered solutions.
- UL panel recognition from the factory for pre-engineered options.

Factory Installed Options

Enclosure Options

The PowerFlex Configured DC drives can be ordered in a IP20, NEMA/UL Type 1 MCC style enclosure or a IP43, NEMA/UL Type 1 with Fan & Filter MCC style enclosure. For both of these enclosures the drive, incoming disconnect and any specified operator devices will be mounted and wired in the cabinet or on the door as required. If a cabinet mounted input line reactor is specified, it will be mounted in the cabinet for drives ratings of 200 Hp or less. The drive may also be ordered on a rigid panel for installation in a users existing cabinet. For these designs the drive and all panel mounted parts will be mounted and wired. The incoming disconnect, operator devices and input line reactor will be shipped loose for customer mounting and wiring per local codes.

All MCC cabinets are 2286 mm H x 635 mm D (90 in. H x 25 in. D) with the width determined by the size of the drive and the options requested. The standard width enclosures are 508, 635, 889 mm (20, 25 and 35 in.) wide. The rigid panel mount designs are shipped on a 1981 mm H x 508 mm W or 813 mm W (78 in. H x 20 in. W or 32 in. W) panel to fit a standard 610 mm W X 914 mm W (24 in. W or 36 in. W) enclosure.

Human Interface Module (HIM) Options

The PowerFlex Configured DC drives can be ordered with a variety of HIM modules to meet the needs of each drive. The HIM's are installed on the door of the enclosures or shipped loose on the Open Panel designs. All designs have the door mounted bezel and interconnect cable to the drive. HIM's can be installed or updated in the field.

No HIM (Blank Plate)
Catalog Code: 0

LCD Display, Full
Numeric Keypad
Catalog Code: C

LCD Display,
Programmer Only
Catalog Code: E

I/O Options

The PowerFlex Configured DC drive has built-in configurable digital and analog I/O. The digital I/O is 24V DC and the analog I/O can be configured for voltage or current operation. Additional 24V DC and analog I/O can be added or an I/O conversion card can be added to accommodate 115V AC digital I/O.

I/O Options	
Control	Code
I/O Expansion Card (4 Additional 24V dc Digital Inputs & Outputs, 2 Analog Outputs)	A
115V ac Conversion Card (8 Digital Inputs & Outputs)	B
8 - 24V - dc Digital Inputs & Outputs, 3 Analog Outputs and 2 Analog Inputs	N

Communication Options

The PowerFlex Configured DC drives are fully compatible with Allen-Bradley drive's wide variety of DPI communication adapters, offering the following options.

Description	Catalog No.
ControlNet™ Communication Adapter (Coax)	C
DeviceNet™ Communication Adapter	D
EtherNet/IP™ Communication Adapter	E
Interbus™ Communication Adapter	I
LonWorks™ Communication Adapter	L
PROFIBUS™ DP Communication Adapter	P
ControlNet™ Communication Adapter (Fiber)	Q
Remote I/O Communication Adapter	R
None	N

Cabinet Options

The Configured Drive enclosure can be equipped with a variety of standard user option. These options are predefined as described below. Other options can be ordered through the ETO program.

Description	Catalog No.
None	N
Start and Stop PB's	1
Local/Remote SS	2
E-Stop PB	3
Jog	4
Blower Motor Starter	5
Options 1 & 2	A
Options 1 & 3	B
Options 1 & 4	C
Options 1 - 3	D
Options 1 - 4	E
Options 1 - 5	F
Options A & 4	G
Options A & 5	H
Options B & 4	J
Options B & 5	K

Certifications

The PowerFlex DC Drive is a UL/cUL certified product. The Configured Drive enclosure can also be built to UL/cUL certification and to CSA certification.

Description	Code
None (Drive unit is UL/cUL	N
UL/cUL	1
CSA Inspection & certification	2

Please contact your local distributor or sales office for product availability. Configured Drives offers Quick Ship and Pre-Engineered Programs.

Configured Drive Enclosure Dimensions

Frame 1

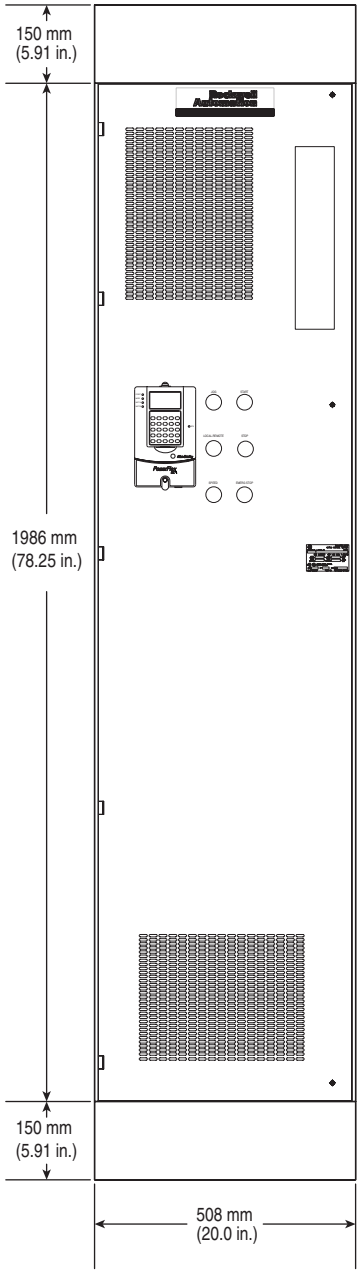

Frame 2

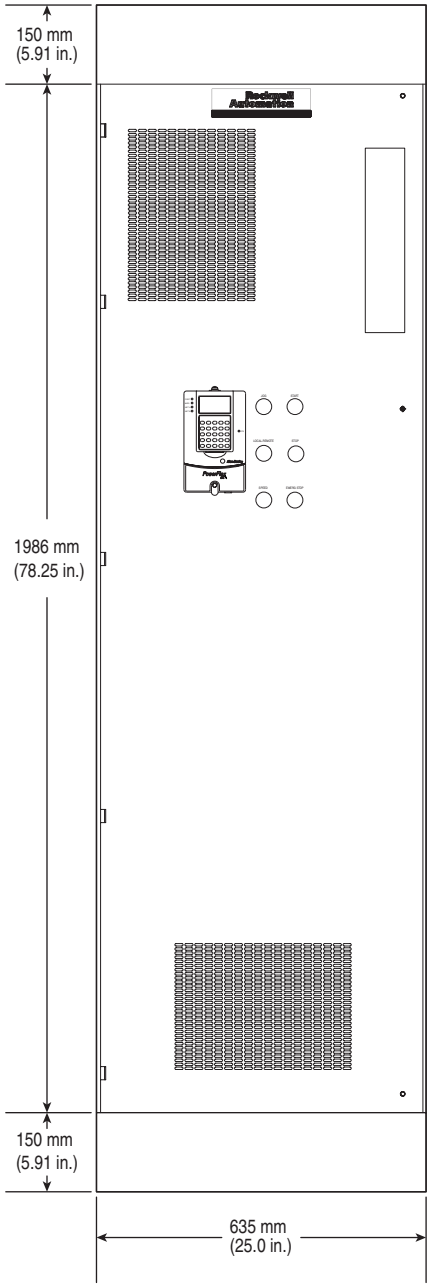

Configured Drive Enclosure Dimensions, continued

Frame 3

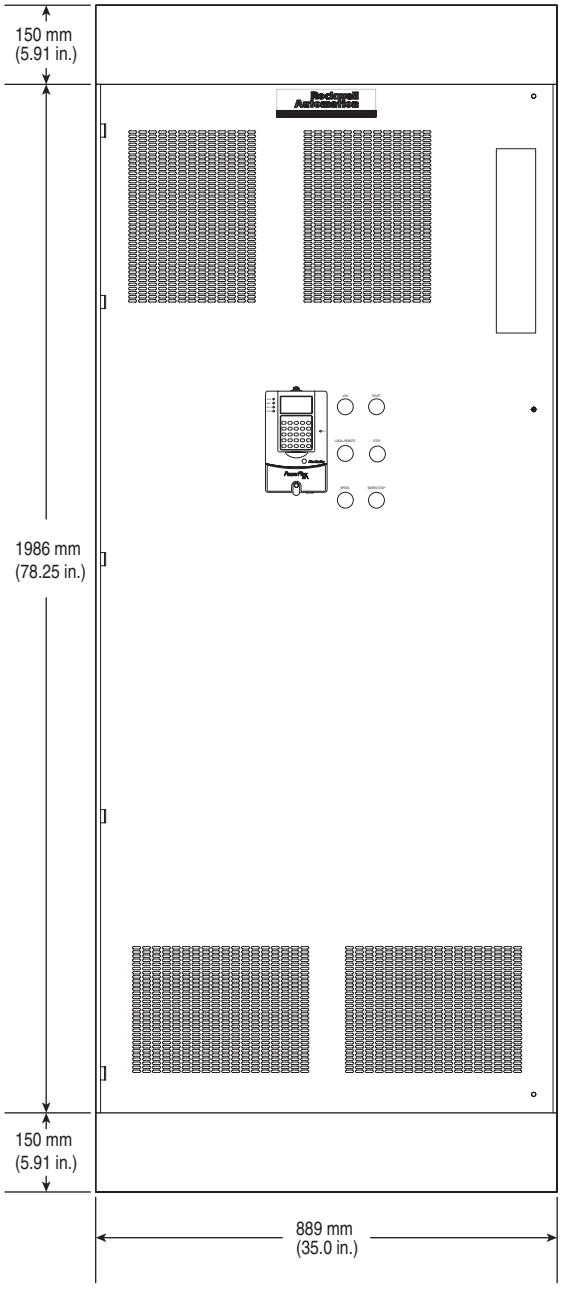

Specifications

Category	Specification	
Agency Certification	c UL us	According to file E59272 for the series of the approved devices.
	CE	In conformity with the following European Directives: EMC Directive (2004/108/EC) Low Voltage Directive (2006/95/EC) Standards applied: EN 50178: 1997 EN 61800-3: 2004
		Australian Communications and Media Authority In conformity with the following: Radio communications Act: 1992 Radio communications Standard: 2008 Radio communications Labelling Notice: 2008 Standards applied: EN 61800-3:2004
	The drive is also designed to meet the following specifications: NFPA 70 - US National Electrical Code	

Category	Specification	
Drive Type	Full Wave Regen, 6 Pulse, Regulated Field Supply	
Protection	Heat Sink Thermistor:	Monitored by microprocessor overtemp trip
	Drive Overcurrent Trip Software Overcurrent Trip: Hardware Overcurrent Trip:	 200% of rated current (typical) 220-300% of rated current (dependent on drive rating)
	Line transients:	Up to 2000 volts peak per IEC 6100-4-5
	Control Logic Noise Immunity:	Showering arc transients up to 1500V peak
	Power Ride-Thru:	15 milliseconds at full load
	Logic Control Ride-Thru:	0.5 seconds minimum, 2 seconds typical
	Ground Fault Trip:	Phase-to-ground on drive output
	Short Circuit Trip:	Phase-to-phase on drive output
Environment(1)	Altitude:	1000 m (3300 ft) max. without derating. De-rate output power by 1.2% for every 100 meters (328ft) above 1000 meters (3300ft).
	Maximum Surrounding Air Temperature IP20, NEMA Type Open:	0…50° C (32…122° F), typical. De-rate 1.25% for every 1° C over 50° C (122° F), to 55° C (131° F). Additional cooling is required for temps. above 55° C.
	Storage Temp. (all const.):	–25 to 55 degrees C (–13 to 131 degrees F)
	Atmosphere:	**Important:** Drive **must not** be installed in an area where the ambient atmosphere contains volatile or corrosive gas, vapors or dust. If the drive is not going to be installed for a period of time, it must be stored in an area where it will not be exposed to a corrosive atmosphere.
	Relative Humidity:	Operating: 5 to 85% non-condensing Storage: 5 - 95% non-condensing
	Shock:	15G peak for 11ms duration (±1.0 ms)
	Vibration:	0.152 mm (0.006 in.) displacement, 1G peak

(1) PowerFlex DC drives must be installed in a Pollution Degree 2 environment.

Category	Specification		
Drive Type	Full Wave Regen, 6 Pulse, Regulated Field Supply		
Electrical	Input Voltages:	230 to 690V AC +/- 10%, 3 Phase (See AC Input Voltages on page 20 for details.)	
	Input Frequency:	50/60 Hz +/- 5%	
	Max. Rate of Change of Input Frequency:	2 Hz/Sec.	
	Armature Output Voltage:	Two Quadrant Drives	Four Quadrant Drives
		260V DC @ 230V AC	240V DC @ 230V AC
		470V DC @ 400V AC	420V DC @ 400V AC
		530V DC @ 440V AC	460V DC @ 440V AC
		560V DC @ 460V AC	480V DC @ 460V AC
		580V DC @ 480V AC	500V DC @ 480V AC
		680V DC @ 575V AC	600V DC @ 575V AC
		810V DC @ 690V AC	720V DC @ 690V AC
	Output Horsepower (Cont.)	1.5…300 HP @ 230V AC 2…900 HP @ 460V AC 600…1250 HP @ 575V AC 600…1400 HP @ 690V AC	
	Output Current:	4.1…1688A	
	Overload Capability:	100% rated continuous current 150% rated current for one minute then fault 200% rated current for three seconds then fault	
	Field Output Voltage	200V DC @ 230V AC 310V DC @ 400V AC 360V DC @ 460V AC Maximum field output voltage is 0.85 x AC input line voltage.	
	Controller Current Overload:	150% rated current for one minute 200% rated current for three seconds	
	Max. Short Circuit Rating:	100,000 A	
Control	Speed Regulation:*	All operating modes: Max. speed: 8000 rpm Digital reference resolution: 0.25 rpm Analog reference resolution: ≥ 0.25 rpm	
		with Digital Incremental Encoder/Resolver Speed feedback resolution better than 0.5 rpm (based on encoder PPR or resolver resolution) Operating range better than 1000:1 rpm, bi-directional Performance Accuracy ±0.02% typical 170 rad/sec bandwidth	
		with DC Analog Tachometer Speed feedback resolution better than 2000:1 rpm Operating range better than 1000:1 rpm, bi-directional Performance accuracy ±0.1% 170 rad/sec bandwidth	
		with Armature Voltage Feedback Voltage feedback resolution better than 2000:1 rpm Operating range better than 100:1 rpm, bi-directional Performance accuracy: ±2.0% typical 80 rad/sec bandwidth	
		*Subject to motor specs. and current loop tuning.	
	Torque Regulation	Current feedback resolution better than 2000:1	
		Performance accuracy: 1.0% typical	
		500 rad/sec bandwidth	

Category	Specification	
Feedback Devices	Encoder	Type: Incremental, dual channel, two channel optional (with jumper), differential (recommended) or single-ended
		Input Voltage: Configurable for +2.5V - 5.2V (switch S21 in ENC_5 position) or +5.4V - 15.2V (switch S21 in ENC_12 position)
		Input Current: 4.5 mA / 6.8 - 10.9 mA each channel
		Quadrature: 90° ± 27° @ 25° C
		Duty cycle: 50% ± 10% Source/Sink capable
		Pulses Per Revolution: 100 to 32770
		Maximum Frequency: 150 kHz
		Maximum Cable Length: Shielded, 150m (0.75 mm^2), 125m (0.5 mm^2), 55m (0.22 mm^2)
	DC Analog Tachometer	Input Voltage: 22.7, 45.4, 90.7, 181.6, & 302.9V max.
		Input Current: 8 mA full scale
		Maximum Cable Length: Shielded, depends on the installation, typical 150m.
Inputs	Analog Inputs	Three configurable, isolated, differential
		±10V, 0-10V, 0-20mA or 4-20mA.
		Resolution: 11 Bit + sign
	Digital Inputs	Eight standard configurable, four additional configurable with the I/O Expansion circuit board.
		Max Voltage +30V DC input, 200mA (total current draw is the sum of encoder power, digital outputs and any other loads connected to terminal 19)
Outputs	Analog Outputs	Two standard configurable, two additional configurable with the I/O Expansion circuit board. Sampling rate 2 ms.
		± 10V, 5mA, bipolar (current is not bipolar)
		Resolution: 11 Bit + sign
	Digital Outputs	Four standard configurable, four additional configurable with the I/O Expansion circuit board.
		+ 30V, 50mA
	Relay Outputs	Two configurable, N.O. contacts
		Max. 250V AC, 1A AC1

Watts Loss and Fan Attributes

Watts loss and fan attributes data shown below is based on the rated current of the drive.

Frame A Drives

Drive Current Rating Code(1)		Total Watts Loss	Total Value for Fan (none or 1)		
@ 230 VAC	@ 460 VAC		AC Input Voltage	Rated Current (A)	Max. Air Flow Noise Level
7P0	4P1	131	(no fan)		
9P0	6P0				
012	010				
020	014				
–	019				
029	027	186			
038	035	254	(Internal power supply)		80 m^3/h 37 dB(A)
055	045				
–	052				
073	073	408			160 m^3/h 45 dB(A)
093	086	476			
110	–				
–	100	553			
–	129				

(1) Refer to Catalog Number Explanation on page 5, positions 8…10 for corresponding drive Hp rating, armature amp rating and field amp rating.

Frame B Drives

Drive			Total Value for All Fans (2)		
Current Rating Code(1)	AC Input Voltage	Total Watts Loss	AC Input Voltage	Rated Current	Max. Air Flow Noise Level
146	230	781	(Internal power supply)		320 m^3/h 48 dB(A)
180					
218		939			
265		1038			
360		1693			680 m^3/h 53 dB(A)
434					
167	460	781			320 m^3/h 48 dB(A)
207		939			
250		1038			
330		1248			
412		1693			680 m^3/h 53 dB(A)
067	575	400			320 m^3/h 48 dB(A)
101		553			
135		700			
270		1038			
405		1693			680 m^3/h 53 dB(A)

(1) Refer to Catalog Number Explanation on page 5, positions 8…10 for corresponding drive Hp rating, armature amp rating and field amp rating.

Frame C Drives

Drive			Total Value for All Fans (3) (2)		
Current Rating Code(1)	AC Input Voltage	Total Watts Loss	AC Input Voltage	Rated Current	Max. Air Flow Noise Level
521	230	2143	230 VAC	0.75 Amps	1050 m^3/h 62.5 dB(A)
700		2700			
495	460	2143			
667		2590			
540	575	2300			
675		2620			
452	690	1700			
565		2300			

(1) Refer to Catalog Number Explanation on page 5, positions 8…10 for corresponding drive Hp rating, armature amp rating and field amp rating.

(2) Fans on frames C drives must be powered by an external 230 V AC, 50/60 Hz power supply, connected to terminals U3 and V3.

Frame D Drives

Drive			Total Value for Fan (1) (2)		
Current Rating Code(1)	AC Input Voltage	Total Watts Loss	AC Input Voltage	Rated Current	Max. Air Flow Noise Level
875	230	2694	230 VAC	2.4A@50Hz and 3.3A@60Hz	2400 m^3/h 80 dB(A)
1K0		3284			
830	480	3200			
996		3568			
1K1		4189			
1K3		5229			
1K4		5117			
810	575	3122			
1K0		3819			
1K2		4679			
1K3		4879			
1K6		5720			
678	690	3174			
791		3582			
904		4028			
1K0		4064			
1K1		4509			
1K2		5368			
1K4		5543			
1K5		5886			

(1) Refer to Catalog Number Explanation on page 5, positions 8…10 for corresponding drive Hp rating, armature amp rating and field amp rating.

(2) Fans on frames D drives must be powered by an external 230 V AC, 50/60 Hz power supply, connected to terminals U3 and V3.

PowerFlex DC Stand-Alone Regulator

Catalog Number (1)	Total Watts Loss [W]	Total Value for Fans (2)		
		AC Input Voltage	Rated Current	Max. Air Flow Noise Level
23PMD4	303	(Internal power supply)		160 m^3/h 40 dB(A)
23PMD7	357			
23PMF4	374			
23PMF7	428			

(1) Refer to Stand-Alone Regulator "Catalog Numbers" in the PowerFlex DC Stand-Alone Regulator and Gate Amplifier User Manual, publication 23P-UM001, for a description of ratings.

Important User Information

Solid-state equipment has operational characteristics differing from those of electromechanical equipment. Safety Guidelines for the Application, Installation and Maintenance of Solid State Controls (publication SGI-1.1 available from your local Rockwell Automation sales office or online at http://www.rockwellautomation.com/literature/) describes some important differences between solid-state equipment and hard-wired electromechanical devices. Because of this difference, and also because of the wide variety of uses for solid-state equipment, all persons responsible for applying this equipment must satisfy themselves that each intended application of this equipment is acceptable.

In no event will Rockwell Automation, Inc. be responsible or liable for indirect or consequential damages resulting from the use or application of this equipment.

The examples and diagrams in this publication are included solely for illustrative purposes. Because of the many variables and requirements associated with any particular installation, Rockwell Automation, Inc. cannot assume responsibility or liability for actual use based on the examples and diagrams.

No patent liability is assumed by Rockwell Automation, Inc. with respect to use of information, circuits, equipment, or software described in this manual.

Reproduction of the contents of this manual, in whole or in part, without written permission of Rockwell Automation, Inc., is prohibited.

Documentation Feedback

Your comments will help us serve your documentation needs better. If you have any suggestions on how to improve this document, complete this form, publication RA-DU002, available at http://www.rockwellautomation.com/literature/.

Allen-Bradley, Rockwell Software, Rockwell Automation, and TechConnect are trademarks of Rockwell Automation, Inc.

Trademarks not belonging to Rockwell Automation are property of their respective companies.

www.rockwellautomation.com

Power, Control and Information Solutions Headquarters

Americas: Rockwell Automation, 1201 South Second Street, Milwaukee, WI 53204-2496 USA, Tel: (1) 414.382.2000, Fax: (1) 414.382.4444
Europe/Middle East/Africa: Rockwell Automation NV, Pegasus Park, De Kleetlaan 12a, 1831 Diegem, Belgium, Tel: (32) 2 663 0600, Fax: (32) 2 663 0640
Asia Pacific: Rockwell Automation, Level 14, Core F, Cyberport 3, 100 Cyberport Road, Hong Kong, Tel: (852) 2887 4788, Fax: (852) 2508 1846

Publication 20P-TD001E-EN-P - January 2012
Supersedes Publication Supersedes Publication 20P-TD001D-EN-P - January 2010

Copyright © 2012 Rockwell Automation, Inc. All rights reserved. Printed in the U.S.A.

GOULDS PUMPS

Installation, Operation, and Maintenance Manual

Model 3196 i-FRAME

ITT

ENGINEERED FOR LIFE

Table of Contents

Introduction and Safety 4
Introduction 4
Safety 4
Safety terminology and symbols 5
Environmental safety 6
User safety 6
Ex-approved products 8
Product approval standards 8
Product warranty 9

Transportation and Storage 11
Inspect the delivery 11
Inspect the package 11
Inspect the unit 11
Transportation guidelines 11
Pump handling 11
Lifting methods 11
Storage guidelines 14
Pump storage requirements 14
Frostproofing 15

Product Description 16
General description 3196 16
Part description 3196 17
General description i-*ALERT*® Condition Monitor 18
Nameplate information 19

Installation 22
Preinstallation 22
Pump location guidelines 22
Foundation requirements 22
Baseplate-mounting procedures 23
Prepare the baseplate for mounting 23
Install the baseplate using shims or wedges 24
Install the baseplate using jackscrews 24
Install the baseplate using spring mounting 27
Install the baseplate using stilt mounting 28
Baseplate-leveling worksheet 30
Install the pump, driver, and coupling 31
Pump-to-driver alignment 31
Alignment checks 31
Permitted indicator values for alignment checks 32
Alignment measurement guidelines 32
Attach the dial indicators for alignment 33
Pump-to-driver alignment instructions 33
C-face adapter 36
Grout the baseplate 36
Piping checklists 38
General piping checklist 38
Suction-piping checklist 39
Discharge piping checklist 42

Commissioning, Startup, Operation, and Shutdown 43
Preparation for startup 43
Remove the coupling guard 44
Check the rotation - Frame Mounted 46
Impeller-clearance check 46
Impeller clearances (3196 and HT 3196) 47
Impeller-clearance setting 47
Set the impeller clearance - dial indicator method (all except CV 3196) 48
Set the impeller clearance - feeler gauge method (all except CV 3196) 49
Couple the pump and driver 49
Install the coupling guard 50
Bearing lubrication 54
Shaft-sealing options 56
Mechanical seal options 56
Connection of sealing liquid for mechanical seals 57
Packed stuffing box option 57
Connection of sealing liquid for a packed stuffing box 57
Dynamic-seal option 58
Set an elastomeric face seal 58
Pump priming 58
Prime the pump with the suction supply above the pump 58
Prime the pump with the suction supply below the pump 59
Other methods of priming the pump 61
Start the pump 61
Activate the i-*ALERT*® Condition Monitor 62
i-*ALERT*® Condition Monitor routine operation 63
Pump operation precautions 64
Shut down the pump 65
Deactivate the i-*ALERT*® Condition Monitor 65
Reset the i-*ALERT*® Condition Monitor 65
Make the final alignment of the pump and driver 66

Maintenance 67
Maintenance schedule 67
Bearing maintenance 68
Lubricating-oil requirements 68
Regrease the grease-lubricated bearings 69
Lubricate the bearings after a shutdown period 71
Shaft seal maintenance 71
Mechanical-seal maintenance 71
Packed stuffing-box maintenance 72
Dynamic-seal maintenance 72
Disassembly 73
Disassembly precautions 73
Tools required 73
Drain the pump 74
Remove the coupling 74
Remove the back pull-out assembly 74
Remove the coupling hub 76
Impeller removal 77
Seal-chamber cover removal 79
Remove the seal-chamber cover (3196, CV 3196, HT 3196, LF 3196, 3796) 79
Remove the stuffing-box cover (3196, CV 3196, HT 3196, LF 3196, 3796) 80
Remove the dynamic seal 82
Remove the frame adapter (MTi, LTi, XLT-i, i17) 82
Remove the inboard labyrinth oil seal 83
Power-end disassembly 83

Disassemble the bearing frame 92
Guidelines for i-*ALERT*® Condition Monitor disposal 93
Disassemble the C-face adapter 93
Pre-assembly inspections 94
Replacement guidelines 94
Shaft and sleeve replacement guidelines 96
Bearing-frame inspection 96
C-face adapter inspection 97
Seal chamber and stuffing box cover inspection 98
Bearings inspection 99
Bearing-housing inspection 99
Bearing fits and tolerances 101
Reassembly 101
Assemble the rotating element and the bearing frame (STi and MTi) 101
Assemble the rotating element and the bearing frame (STi and MTi with duplex bearings) 104
Assemble the rotating element and the bearing frame (LTi) 107
Assemble the rotating element and the bearing frame (XLT-i and i17) 110
Assemble the rotating element and the bearing frame (XLT-i and i17 with duplex bearings) 113
Assemble the frame 117
INPRO labyrinth oil seal description 121
Assemble the INPRO labyrinth oil seal 122
Assemble the C-face adapter 122
Shaft sealing 122
Install the impeller 129
Attach the i-*ALERT*® Condition Monitor to the pump 131
Post-assembly checks 132
Install the back pull-out assembly (except HT 3196) 132
Assembly references 134
Spare parts 135
Interchangeability drawings 136
3196 interchangeability 136
Lubrication conversion 137
Frame lubrication conversion 137
Convert from greased-for-life or regreaseable to oil-lubricated bearings 137
Conversion from flood-oil to pure-oil mist 138
Convert from flood oil to regreaseable 138

Troubleshooting 139
Operation troubleshooting 139
Alignment troubleshooting 140
Assembly troubleshooting 140
i-*ALERT*® Condition Monitor troubleshooting 140

Parts Listings and Cross-Sectionals 141
Parts list 141

Certification: CE or CE ATEX 150
Certificates of conformance 150

Other Relevant Documentation or Manuals 156

Local ITT Contacts 157
Regional offices 157

Introduction and Safety

Introduction

Purpose of this manual

The purpose of this manual is to provide necessary information for:

- Installation
- Operation
- Maintenance

CAUTION:
Read this manual carefully before installing and using the product. Improper use of the product can cause personal injury and damage to property, and may void the warranty.

NOTICE:
Save this manual for future reference, and keep it readily available at the location of the unit.

Requesting other information

Special versions can be supplied with supplementary instruction leaflets. See the sales contract for any modifications or special version characteristics. For instructions, situations, or events that are not considered in this manual or in the sales documents, please contact the nearest ITT representative.

Always specify the exact product type and identification code when requesting technical information or spare parts.

Safety

WARNING:

- The operator must be aware of safety precautions to prevent physical injury.
- Any pressure-containing device can explode, rupture, or discharge its contents if it is over-pressurized. Take all necessary measures to avoid over-pressurization.
- Operating, installing, or maintaining the unit in any way that is not covered in this manual could cause death, serious personal injury, or damage to the equipment. This includes any modification to the equipment or use of parts not provided by ITT. If there is a question regarding the intended use of the equipment, please contact an ITT representative before proceeding.
- ⟨Ex⟩ This manual clearly identifies accepted methods for disassembling units. These methods must be adhered to. Trapped liquid can rapidly expand and result in a violent explosion and injury. Never apply heat to impellers, propellers, or their retaining devices to aid in their removal unless explicitly stated in this manual.
- If the pump/motor is damaged or leaking, do not operate as it may cause an electric shock, fire, explosion, liberation of toxic fumes, physical harm, or environmental damage. Correct/repair the problem prior to putting back in service.
- Do not change the service application without the approval of an authorized ITT representative.

CAUTION:
You must observe the instructions contained in this manual. Failure to do so could result in physical injury, damage, or delays.

Safety terminology and symbols

About safety messages

It is extremely important that you read, understand, and follow the safety messages and regulations carefully before handling the product. They are published to help prevent these hazards:

- Personal accidents and health problems
- Damage to the product
- Product malfunction

Hazard levels

Hazard level	Indication
DANGER:	A hazardous situation which, if not avoided, will result in death or serious injury
WARNING:	A hazardous situation which, if not avoided, could result in death or serious injury
CAUTION:	A hazardous situation which, if not avoided, could result in minor or moderate injury
NOTICE:	• A potential situation which, if not avoided, could result in undesirable conditions • A practice not related to personal injury

Hazard categories

Hazard categories can either fall under hazard levels or let specific symbols replace the ordinary hazard level symbols.
Electrical hazards are indicated by the following specific symbol:

Electrical Hazard:

These are examples of other categories that can occur. They fall under the ordinary hazard levels and may use complementing symbols:

- Crush hazard
- Cutting hazard
- Arc flash hazard

The Ex symbol

The Ex symbol indicates safety regulations for Ex-approved products when used in atmospheres that are potentially explosive or flammable.

Environmental safety

The work area

Always keep the station clean to avoid and/or discover emissions.

Waste and emissions regulations

Observe these safety regulations regarding waste and emissions:

- Appropriately dispose of all waste.
- Handle and dispose of the processed liquid in compliance with applicable environmental regulations.
- Clean up all spills in accordance with safety and environmental procedures.
- Report all environmental emissions to the appropriate authorities.

WARNING:
Do NOT send the product to the manufacturer if it has been contaminated by any nuclear radiation. Inform ITT so that accurate actions can take place.

Electrical installation

For electrical installation recycling requirements, consult your local electric utility.

Recycling guidelines

Always follow local laws and regulations regarding recycling.

User safety

General safety rules

These safety rules apply:

- Always keep the work area clean.
- Pay attention to the risks presented by gas and vapors in the work area.
- Avoid all electrical dangers. Pay attention to the risks of electric shock or arc flash hazards.
- Always bear in mind the risk of drowning, electrical accidents, and burn injuries.

Safety equipment

Use safety equipment according to the company regulations. Use this safety equipment within the work area:

- Helmet
- Safety goggles, preferably with side shields
- Protective shoes
- Protective gloves
- Gas mask
- Hearing protection
- First-aid kit
- Safety devices

NOTICE:
Never operate a unit unless safety devices are installed. Also see specific information about safety devices in other sections of this manual.

Electrical connections

Electrical connections must be made by certified electricians in compliance with all international, national, state, and local regulations. For more information about requirements, see sections dealing specifically with electrical connections.

Precautions before work

Observe these safety precautions before you work with the product or are in connection with the product:

- Provide a suitable barrier around the work area, for example, a guard rail.
- Make sure that all safety guards are in place and secure.
- Make sure that you have a clear path of retreat.
- Make sure that the product cannot roll or fall over and injure people or damage property.
- Make sure that the lifting equipment is in good condition.
- Use a lifting harness, a safety line, and a breathing device as required.
- Allow all system and pump components to cool before you handle them.
- Make sure that the product has been thoroughly cleaned.
- Disconnect and lock out power before you service the pump.
- Check the explosion risk before you weld or use electric hand tools.

Precautions during work

Observe these safety precautions when you work with the product or are in connection with the product:

CAUTION:
Read this manual carefully before installing and using the product. Improper use of the product can cause personal injury and damage to property, and may void the warranty.

- Never work alone.
- Always wear protective clothing and hand protection.
- Stay clear of suspended loads.
- Always lift the product by its lifting device.
- Beware of the risk of a sudden start if the product is used with an automatic level control.
- Beware of the starting jerk, which can be powerful.
- Rinse the components in water after you disassemble the pump.
- Do not exceed the maximum working pressure of the pump.
- Do not open any vent or drain valve or remove any plugs while the system is pressurized. Make sure that the pump is isolated from the system and that pressure is relieved before you disassemble the pump, remove plugs, or disconnect piping.
- Never operate a pump without a properly installed coupling guard.
- The coupling guard used in an ATEX classified environment must be constructed from a non-sparking material.

Hazardous liquids

The product is designed for use in liquids that can be hazardous to your health. Observe these rules when you work with the product:

- Make sure that all personnel who work with biologically hazardous liquids are vaccinated against diseases to which they may be exposed.
- Observe strict personal cleanliness.
- A small amount of liquid will be present in certain areas like the seal chamber.

Wash the skin and eyes

1. Follow these procedures for chemicals or hazardous fluids that have come into contact with your eyes or your skin:

Condition	Action
Chemicals or hazardous fluids in eyes	1. Hold your eyelids apart forcibly with your fingers. 2. Rinse the eyes with eyewash or running water for at least 15 minutes. 3. Seek medical attention.
Chemicals or hazardous fluids on skin	1. Remove contaminated clothing. 2. Wash the skin with soap and water for at least 1 minute. 3. Seek medical attention, if necessary.

Ex-approved products

Follow these special handling instructions if you have an Ex-approved unit.

Personnel requirements

These are the personnel requirements for Ex-approved products in potentially explosive atmospheres:

- All work on the product must be carried out by certified electricians and ITT-authorized mechanics. Special rules apply to installations in explosive atmospheres.
- All users must know about the risks of electric current and the chemical and physical characteristics of the gas, the vapor, or both present in hazardous areas.
- Any maintenance for Ex-approved products must conform to international and national standards (for example, IEC/EN 60079-17).

ITT disclaims all responsibility for work done by untrained and unauthorized personnel.

Product and product handling requirements

These are the product and product handling requirements for Ex-approved products in potentially explosive atmospheres:

- Only use the product in accordance with the approved motor data.
- The Ex-approved product must never run dry during normal operation. Dry running during service and inspection is only permitted outside the classified area.
- Before you start work on the product, make sure that the product and the control panel are isolated from the power supply and the control circuit, so they cannot be energized.
- Do not open the product while it is energized or in an explosive gas atmosphere.
- Make sure that thermal contacts are connected to a protection circuit according to the approval classification of the product, and that they are in use.
- Intrinsically safe circuits are normally required for the automatic level-control system by the level regulator if mounted in zone 0.
- The yield stress of fasteners must be in accordance with the approval drawing and the product specification.
- Do not modify the equipment without approval from an authorized ITT representative.
- Only use parts that are provided by an authorized ITT representative.

Product approval standards

Regular standards

All standard products are approved according to CSA standards in Canada and UL standards in USA. The drive unit degree of protection follows IP68. See the nameplate for maximum submersion, according to standard IEC 60529.

All electrical ratings and performance of the motors comply with IEC 600341.

Explosion-proofing standards

All explosion-proof products for use in explosive atmospheres are designed in compliance with one or more of the following approvals:

- EN, ATEX Directive 94/9/EC
- FM According to NEC
  - Class 1 Div 1 Groups “C”, and “D”
  - Class 2 Div 1 Groups “E”, “F”, and “G”
  - Class 3 Div 1 Hazardous Locations

ATEX/IECEx:

- Group: IIC
- Category: Ex ia
- Temperature Class: T4 (for ambients up to 100ºC)
- ATEX Marking: Ex II 1 G

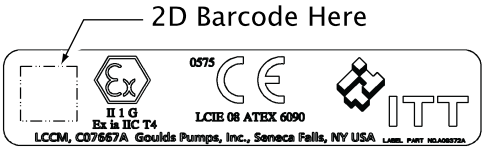

CSA certification

Intrinsically safe for:

- Class I, Div. 1, Groups A, B, C, D
- Class II, Div. 1, Groups E, F, G
- Class III
- Certified to Canadian and US requirements

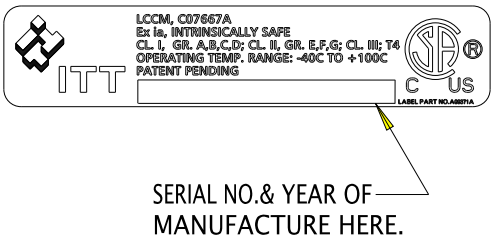

Product warranty

Coverage

ITT undertakes to remedy faults in products from ITT under these conditions:

- The faults are due to defects in design, materials, or workmanship.
- The faults are reported to an ITT representative within the warranty period.
- The product is used only under the conditions described in this manual.
- The monitoring equipment incorporated in the product is correctly connected and in use.
- All service and repair work is done by ITT-authorized personnel.
- Genuine ITT parts are used.
- Only Ex-approved spare parts and accessories authorized by ITT are used in Ex-approved products.

Limitations

The warranty does not cover faults caused by these situations:

- Deficient maintenance
- Improper installation
- Modifications or changes to the product and installation made without consulting ITT
- Incorrectly executed repair work
- Normal wear and tear

ITT assumes no liability for these situations:

- Bodily injuries
- Material damages
- Economic losses

Warranty claim

ITT products are high-quality products with expected reliable operation and long life. However, should the need arise for a warranty claim, then contact your ITT representative.

Transportation and Storage

Inspect the delivery

Inspect the package

1. Inspect the package for damaged or missing items upon delivery.
2. Note any damaged or missing items on the receipt and freight bill.
3. File a claim with the shipping company if anything is out of order.
   If the product has been picked up at a distributor, make a claim directly to the distributor.

Inspect the unit

1. Remove packing materials from the product.
   Dispose of all packing materials in accordance with local regulations.
2. Inspect the product to determine if any parts have been damaged or are missing.
3. If applicable, unfasten the product by removing any screws, bolts, or straps.
   For your personal safety, be careful when you handle nails and straps.
4. Contact your sales representative if anything is out of order.

Transportation guidelines

Pump handling

WARNING:

- Make sure that the unit cannot roll or fall over and injure people or damage property.
- These pumps might use carbon or ceramic silicon carbide components. Do not drop the pump or subject it to shock loads as this can damage the internal ceramic components.

NOTICE:

Use a forklift truck or an overhead crane with sufficient capacity to move the pallet with the pump unit on top. Failure to do so can result in equipment damage.

Lifting methods

WARNING:

- All lifting must be done in compliance with all applicable regulations/standards.
- Assembled units and their components are heavy. Failure to properly lift and support this equipment can result in serious physical injury and/or equipment damage. Lift equipment only at the specifically identified lifting points. Lifting devices such as hoist rings, shackles, slings and spreaders must be rated, selected, and used for the entire load being lifted.
- Crush hazard. The unit and the components can be heavy. Use proper lifting methods and wear steel-toed shoes at all times.
- Do not attach sling ropes to shaft ends.

Table 1: Methods

Pump type	Lifting method
A bare pump without lifting handles	Use a suitable sling attached properly to solid points like the casing, the flanges, or the frames.
A bare pump with lifting handles	Lift the pump by the handles.
A base-mounted pump	Use slings under the pump casing and the drive unit, or under the base rails.
Mounted on top of a Polyshield ANSI Combo	See separate information regarding the Polyshield ANSI Combo.

Examples

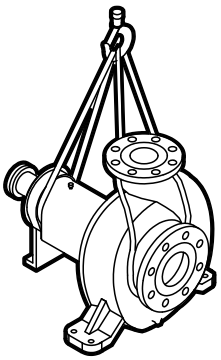

Figure 1: Example of a proper lifting method

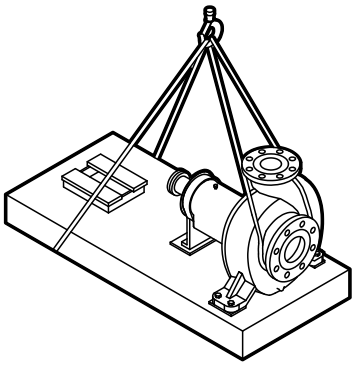

NOTICE:
Do not use this lifting method to lift a Polyshield ANSI Combo with the pump and motor mounted. Doing so may result in equipment damage.

Figure 2: Example of a proper lifting method

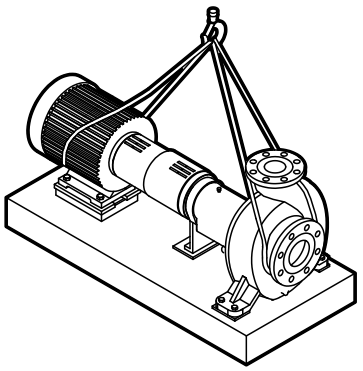

NOTICE:
Do not use this lifting method to lift a Polyshield ANSI Combo with the pump and motor mounted. Doing so may result in equipment damage.

Figure 3: Example of a proper lifting method

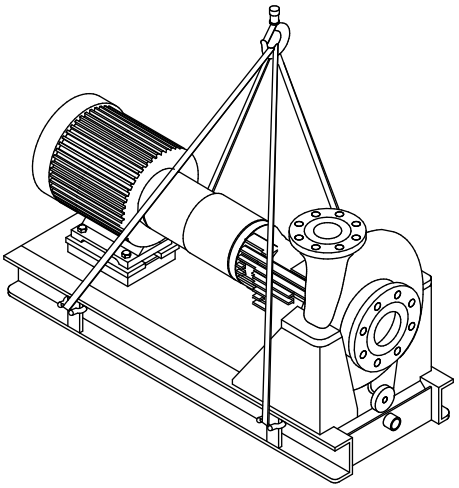

Figure 4: Example of a proper lifting method

NOTICE:
When lifting a unit that does not have a way to secure the strap on the suction flange, you must secure the strap around the frame adapter. Failure to do so may result in equipment damage.

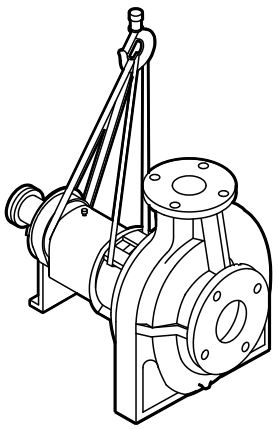

Figure 5: Example of a proper lifting method with a strap secured around the frame adapter

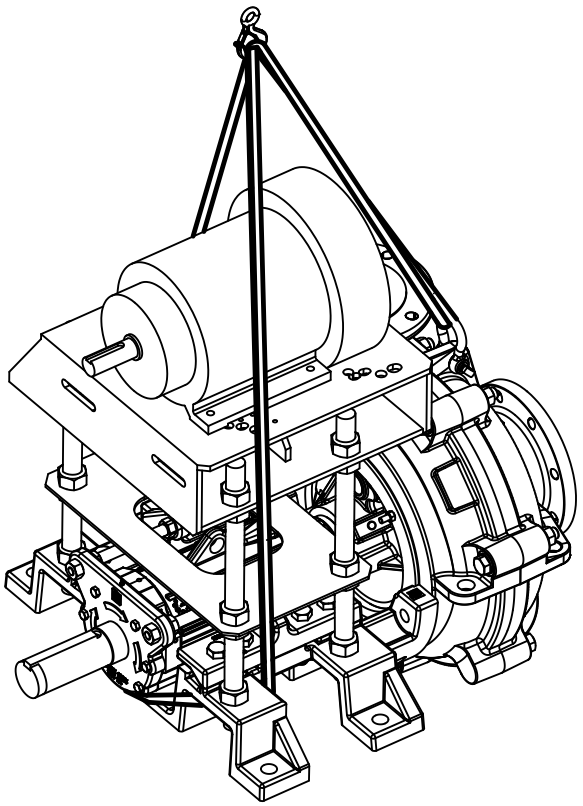

Figure 6: Example of offset overhead motor mount pump proper lifting method

Storage guidelines

Pump storage requirements

Storage requirements depend on the amount of time that you store the unit. The normal packaging is designed only to protect the unit during shipping.

Length of time in storage	Storage requirements
Upon receipt/short-term (less than six months)	• Store in a covered and dry location. • Store the unit free from dirt and vibrations.
Long-term (more than six months)	• Store in a covered and dry location. • Store the unit free from heat, dirt, and vibrations. • Rotate the shaft by hand several times at least every three months.

NOTICE:
Risk of damage to the mechanical seal or shaft sleeve on units supplied with cartridge mechanical seals. Make sure to install and tighten the centering clips and loosen the set screws in the seal locking ring.

Treat bearing and machined surfaces so that they are well preserved. Refer to drive unit and coupling manufacturers for their long-term storage procedures.

You can purchase long-term storage treatment with the initial unit order or you can purchase it and apply it after the units are already in the field. Contact your local ITT sales representative.

Frostproofing

Table 2: Situations when the pump is or is not frostproof

Situation	Condition
Operating	The pump is frostproof.
Immersed in a liquid	The pump is frostproof.
Lifted out of a liquid into a temperature below freezing	The impeller might freeze.

Product Description

General description 3196

The 3196 is a horizontal overhung, open impeller, centrifugal pump. This pump is ANSI B73.1 compliant.
The model is based on 5 power ends and 29 hydraulic sizes.

Figure 7: 3196 pump

This table shows the number of hydraulic sizes available for each drive-unit size group.

Drive-unit size group	Number of hydraulic sizes
STi	5
MTi	15
LTi	15
XLT-i	5
i-17	4

Part description 3196

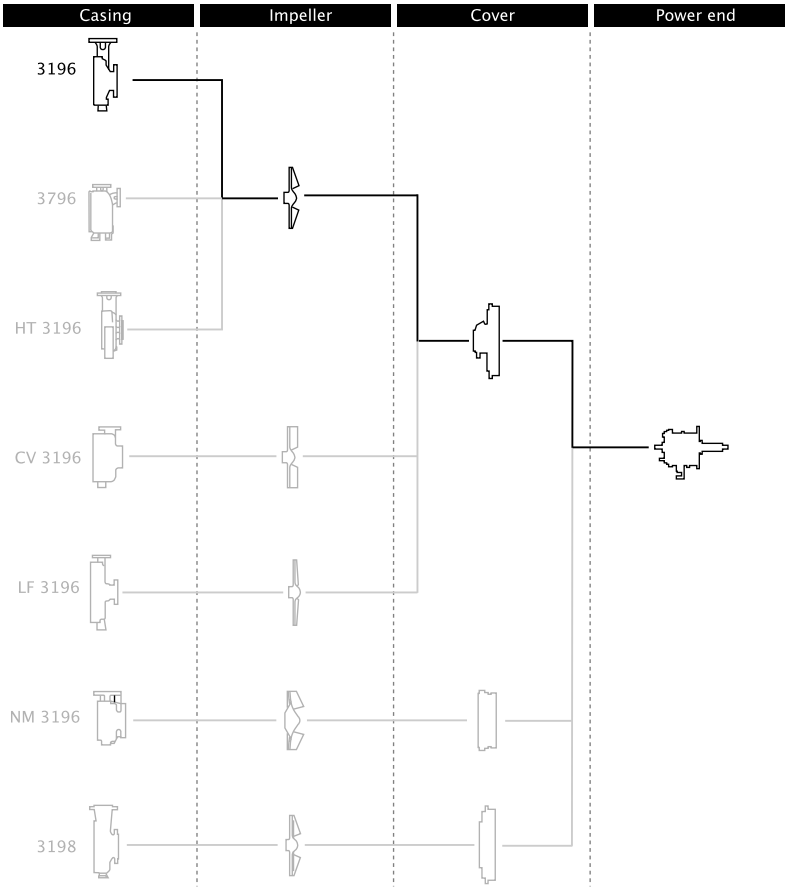

Figure 8: 3196 part description

Table 3: Casing

This table describes the pump casing parts.

Part	Description
Discharge	Top-centerline
Casing ventilation	Self venting
Gasket	Fully confined
Mounting method	Integral foot support for maximum resistance to misalignment due to piping loads.
Standard flange	ANSI flat-faced serrated flange
Optional flanges	One of the following flanges can be used: • ANSI class 150 raised-face serrated flange • ANSI class 300 flat-face serrated flange • ANSI class 300 raised-face serrated flange

Impeller

The impeller is

- fully open
- screwed onto the shaft

The threads are sealed from the pumped liquid by a Teflon O-ring for the 3196.

Cover

Standard seal

- The 3196 is available with a stuffing-box cover designed for a packing and a BigBore or a TaperBore PLUS seal chamber.

Optional seal

- a dynamic seal is available which uses a repeller to pump liquid out of the stuffing box while the pump operates. A static seal prevents leakage when the pump is shut down.

Table 4: Power end

This table describes the main parts of the power end.

Part	Description
Frame adapter	The ductile iron frame adapter has • a machined rabbet fitted to the seal chamber/ stuffing box cover • a precision dowel pin fitted to the bearing frame.

Power end	• Flood-oil lubrication is standard.
	• No machining is required to convert from oil to grease or oil-mist lubrication. Regreasable bearings and oil-mist lubrication are optional.
	• The oil level is checked through a sight glass.
	• The power end is sealed with labyrinth seals.
	• The power end is made in the following sizes:
	  • STi
	  • MTi
	  • LTi
	  • XLT-i
	  • i-17

Shaft	The shaft is available with or without a sleeve.
Bearings	The inboard bearing • carries only radial loads. • is free to float axially in the frame. • is a single-row deep-groove ball bearing The outboard bearing • is shouldered and locked to the shaft and housing to enable it to carry radial and thrust loads. • is a double-row angular-contact bearing, except for the LTi which uses a pair of single-row angular-contact ball bearings mounted back-to-back.

General description i-*ALERT*® Condition Monitor

Description

The i-*ALERT*® Condition Monitor is a compact, battery-operated monitoring device that continuously measures the vibration and temperature of the pump power end. The condition monitor uses blinking red LEDs to alert the pump operator when the pump exceeds pre-set vibration and temperature limits. This allows the pump operator to make changes to the process or the pump before a catastrophic failure occurs. The condition monitor is also equipped with a single green LED to indicate when it is operational and has sufficient battery life. (i-*ALERT*®*2* Bluetooth Equipment Health Monitor option available. The i-*ALERT*®*2* monitor allows customers to identify potential problems before they become costly failures. It tracks vibration, temperature and run-time hours and wirelessly syncs the data with a smart phone or tablet the i-*ALERT*®*2* mobile app. More information available on *http://www.ittproservices.com/aftermarket-products/monitoring/i-alert2/* (page)i-ALERT2.com).

Software License Agreement

BY USING THE i-*ALERT*® CONDITION MONITOR, YOU AGREE TO BE BOUND BY THE TERMS AND CONDITIONS OF THE FOLLOWING LICENSE AGREEMENT. PLEASE READ THIS AGREEMENT CAREFULLY.

ITT Corporation and its subsidiaries, affiliates, either directly, or through its authorized sublicensees ("ITT") grants you a limited, non-exclusive license to use the software embedded in this device ("Software") in binary executable form in the normal operation of the i-*ALERT*® condition monitor for monitoring the condition of an Goulds Pump Inc. model. Title, ownership rights, and intellectual property rights in and to the Software remain in ITT or its third-party providers. You agree that this license agreement does not need to be signed for it to take effect.

You acknowledge that this Software is the property of ITT and is protected under United States of America copyright laws and international copyright treaties. You further acknowledge that the structure, organization, and code of the Software are valuable trade secrets of ITT and/or its third-party providers and that the Software in source code form remains a valuable trade secret of ITT. You agree not to decompile, disassemble, modify, reverse assemble, reverse engineer, or reduce to human readable form the Software or any part thereof or create any derivative works based on the Software. You agree not to export or re-export the Software to any country in violation of the export control laws of the United States of America.

Alarm mode

The condition monitor enters alarm mode when either vibration or temperature limits are exceeded over two consecutive readings within a ten minute period. Alarm mode is indicated with two red flashing LEDs within two second intervals.

Temperature and vibration limits

Variable	Limit
Temperature	91°C | 195°F
Vibration	100% increase over the baseline level

Battery life

The i-*ALERT*® Condition Monitor battery is not replaceable. You must replace the entire unit once the battery runs out of power.

The battery life is not covered as part of the standard pump warranty.

This table shows the average condition monitor battery life under normal and alarm-mode operating conditions.

Condition monitor operational state	Battery life
Normal operating and environmental conditions	Three to five years
Alarm mode	One year

Nameplate information

Important information for ordering

Every pump has nameplates that provide information about the pump. The nameplates are located on the casing and the bearing frame.

When you order spare parts, identify this pump information:

- Model
- Size
- Serial number
- Item numbers of the required parts

Refer to the nameplate on the pump casing for most of the information. See Parts List for item numbers.

Nameplate types

Nameplate	Description
Pump casing Pump	Provides information about the hydraulic characteristics of the pump. The formula for the pump size is: Discharge x Suction - Nominal Maximum Impeller Diameter in inches. (Example: 2x3-8)
Bearing frame	Provides information about the lubrication system used.
ATEX	If applicable, your pump unit might have an ATEX nameplate affixed to the pump, the baseplate, or the discharge head. The nameplate provides information about the ATEX specifications of this pump.
IECEx	If applicable, your pump unit might have the following IECEx nameplate affixed to the pump and/or baseplate. The nameplate provides information about the IECEx specifications of this pump.

Nameplate on the pump casing using English units

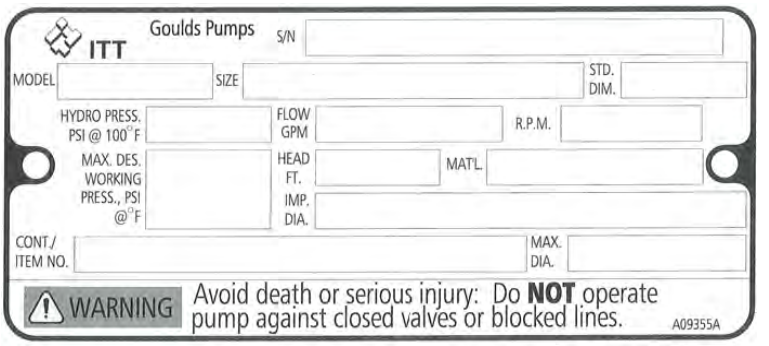

Figure 9: Nameplate on the pump casing using English units

Table 5: Explanation of nameplate on the pump casing

Nameplate field	Explanation
IMPLR. DIA.	Impeller diameter, in inches
MAX. DIA.	Maximum impeller diameter, in inches
GPM	Rated pump flow, in gallons per minute
FT HD	Rated pump head, in feet
RPM	Rated pump speed, revolutions per minute
MOD.	Pump model
SIZE	Size of the pump
STD. NO.	ANSI standard designation
MAT L. CONST.	Material of which the pump is constructed
SER. NO.	Serial number of the pump
MAX DSGN PSI @ 100ºF	Maximum pressure at 100ºF according to the pump design

Nameplate on the pump casing using metric units

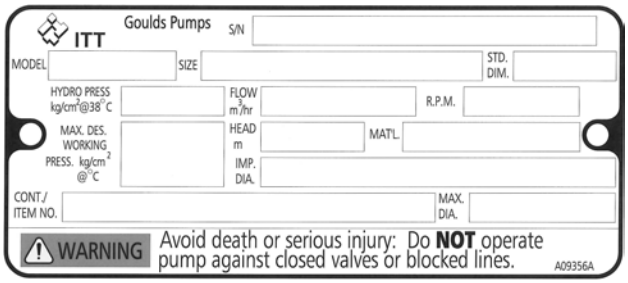

Figure 10: Metric units - nameplate on pump casing

Table 6: Explanation of the nameplate on the pump casing

Nameplate field	Explanation
IMPLR. DIA.	Impeller diameter
MAX. DIA.	Maximum impeller diameter
M^3/HR	Rated pump flow, in cubic meters per hour
M HD	Rated pump head, in meters
RPM	Rated pump speed, in revolutions per minute
MOD.	Pump model
SIZE	Size of the pump
STD. NO.	ANSI standard designation
MAT L. CONST	Material of which the pump is constructed
SER. NO.	Serial number of the pump
MAX. DSGN KG/CM^3 @ 20°C	Kilograms per cubic centimeter at 20°C

Nameplate on the bearing frame

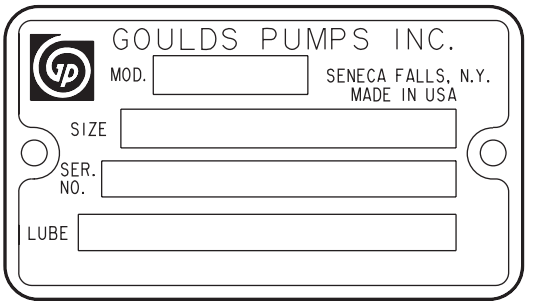

Figure 11: Nameplate on the bearing frame

Table 7: Explanation of the nameplate on the bearing frame

Nameplate field	Explanation
BRG. O. B.	Outboard bearing designation
BRG. I. B.	Inboard bearing designation
S/N	Serial number of the pump
LUBE	Lubricant, oil or grease

ATEX nameplate

Figure 12: ATEX nameplate

Nameplate field	Explanation
II	Group 2
2	Category 2
G/D	Pump can be used when gas and dust are present
T4	Temperature class

NOTICE:
Make sure that the code classifications on the pump are compatible with the specific environment in which you plan to install the equipment. If they are not compatible, do not operate the equipment and contact your ITT representative before you proceed.

Installation

Preinstallation

Precautions

WARNING:

- ⟨Ex⟩ When installing in a potentially explosive environment, make sure that the motor is properly certified.
- ⟨Ex⟩ You must earth (ground) all electrical equipment. This applies to the pump equipment, the driver, and any monitoring equipment. Test the earth (ground) lead to verify that it is connected correctly.
- Electrical connections must be made by certified electricians in compliance with all international, national, state, and local rules.

NOTICE:
Supervision by an authorized ITT representative is recommended to ensure proper installation. Failure to do so may result in equipment damage or decreased performance.

Pump location guidelines

WARNING:
Assembled units and their components are heavy. Failure to properly lift and support this equipment can result in serious physical injury and/or equipment damage. Lift equipment only at the specifically identified lifting points. Lifting devices such as hoist rings, shackles, slings and spreaders must be rated, selected, and used for the entire load being lifted.

Guideline	Explanation/comment
Keep the pump as close to the liquid source as practically possible.	This minimizes the friction loss and keeps the suction piping as short as possible.
Make sure that the space around the pump is sufficient.	This facilitates ventilation, inspection, maintenance, and service.
If you require lifting equipment such as a hoist or tackle, make sure that there is enough space above the pump.	This makes it easier to properly use the lifting equipment and safely remove and relocate the components to a safe location.
Protect the unit from weather and water damage due to rain, flooding, and freezing temperatures.	This is applicable if nothing else is specified.
Do not install and operate the equipment in closed systems unless the system is constructed with properly-sized safety devices and control devices.	Acceptable devices: • Pressure relief valves • Compression tanks • Pressure controls • Temperature controls • Flow controls If the system does not include these devices, consult the engineer or architect in charge before you operate the pump.
Take into consideration the occurrence of unwanted noise and vibration.	The best pump location for noise and vibration absorption is on a concrete floor with subsoil underneath.
If the pump location is overhead, undertake special precautions to reduce possible noise transmission.	Consider a consultation with a noise specialist.

Foundation requirements

Requirements

- The foundation must be able to absorb any type of vibration and form a permanent, rigid support for the unit.

- The location and size of the foundation bolt holes must match those shown on the assembly drawing provided with the pump data package.
- The foundation must weigh between two and three times the weight of the pump.
- Provide a flat, substantial concrete foundation in order to prevent strain and distortion when you tighten the foundation bolts.

Sleeve-type bolts

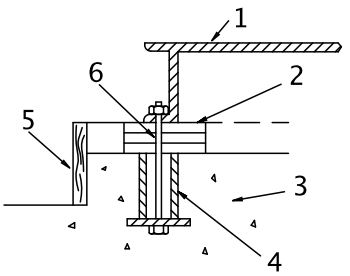

Figure 13: Sleeve type bolts

1. Baseplate
2. Shims or wedges
3. Foundation
4. Sleeve
5. Dam
6. Bolt

J-type bolts

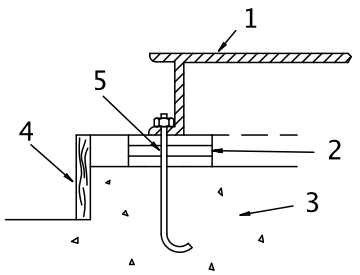

Figure 14: J-type bolts

1. Baseplate
2. Shims or wedges
3. Foundation
4. Dam
5. Bolt

Baseplate-mounting procedures

Prepare the baseplate for mounting

1. Remove all the attached equipment from the baseplate.
2. Clean the underside of the baseplate completely.
3. If applicable, coat the underside of the baseplate with an epoxy primer.
   Use an epoxy primer only if you used an epoxy-based grout.
4. Remove the rust-proofing coat from the machined mounting pads using an appropriate solvent.
5. Remove water and debris from the foundation-bolt holes.

Install the baseplate using shims or wedges

Required tools:

- Two sets of shims or wedges for each foundation bolt
- Two machinist's levels
- Baseplate-leveling worksheet

This procedure is applicable to cast iron and fabricated steel baseplates.

1. If you use sleeve-type bolts, fill the bolt sleeves with packing material or rags to prevent grout from entering the bolt holes.
2. Put the sets of wedges or shims on each side of each foundation bolt.
   The sets of wedges should have a height of between 19 mm | 0.75 in. and 38 mm | 1.50 in.

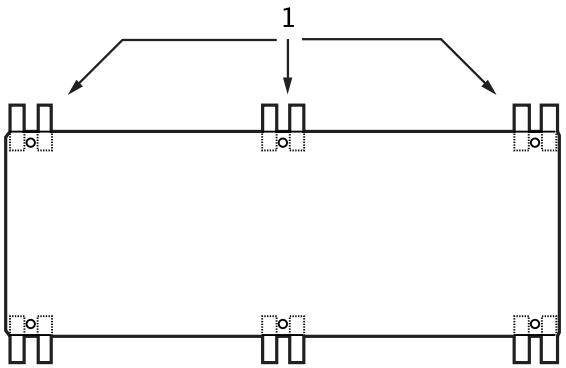

1. Shims or wedges

Figure 15: Top view

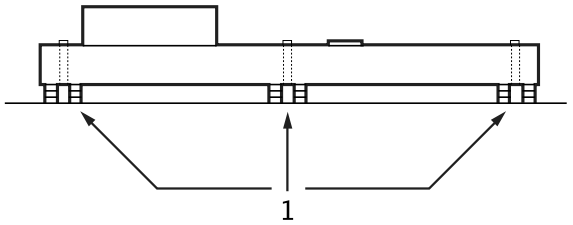

1. Shims or wedges

Figure 16: Side view

3. Lower the baseplate carefully onto the foundation bolts.
4. Put the machinist's levels across the mounting pads of the driver and the mounting pads of the pump.

NOTICE:
Remove all dirt from the mounting pads in order to make sure that you achieve the correct leveling. Failure to do so can result in equipment damage or decreased performance.

5. Level the baseplate both lengthwise and across by adding or removing shims or moving the wedges.
   These are the leveling tolerances:
   - A maximum difference of 3.2 mm | 0.125 in. lengthwise
   - A maximum difference of 1.5 mm | 0.059 in. across

   You can use the baseplate-leveling worksheet when you take the readings.
6. Hand-tighten the nuts for the foundation.

Install the baseplate using jackscrews

Tools required:

- Anti-seize compound

- Jackscrews
- Bar stock
- Two machinist's levels
- Baseplate-leveling worksheet

This procedure is applicable to the feature-fabricated steel baseplate and the advantage base baseplate.

1. Apply an anti-seize compound on the jackscrews.
   The compound makes it easier to remove the screws after you grout.
2. Lower the baseplate carefully onto the foundation bolts and perform these steps:
   a) Cut the plates from the bar stock and chamfer the edges of the plates in order to reduce stress concentrations.
   b) Put the plates between the jackscrews and the foundation surface.
   c) Use the four jackscrews in the corners in order to raise the baseplate above the foundation.
      Make sure that the distance between the baseplate and the foundation surface is between 19 mm | 0.75 in. and 38 mm | 1.50 in.
   d) Make sure that the center jackscrews do not touch the foundation surface yet.

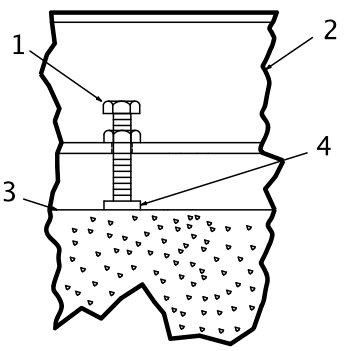

1. Jackscrew
2. Baseplate
3. Foundation
4. Plate

Figure 17: Jackscrews

3. Level the driver mounting pads:

NOTICE:
Remove all dirt from the mounting pads in order to make sure that you achieve the correct leveling. Failure to do so can result in equipment damage or decreased performance.

   a) Put one machinist's level lengthwise on one of the two pads.
   b) Put the other machinist's level across the ends of the two pads.

c) Level the pads by adjusting the four jackscrews in the corners.
Make sure that the machinist's level readings are as close to zero as possible, both lengthwise and across.
Use the baseplate-leveling worksheet when you take the readings.

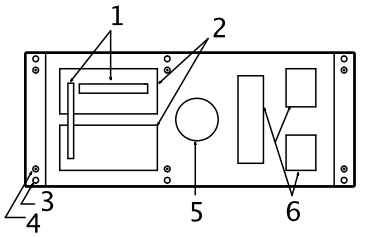

1. Machinist's levels
2. Driver's mounting pads
3. Foundation bolts
4. Jackscrews
5. Grout hole
6. Pump's mounting pads

Figure 18: Level driver mounting pads

4. Turn the center jackscrews down so that they rest on their plates on the foundation surface.
5. Level the pump mounting pads:

NOTICE:
Remove all dirt from the mounting pads in order to make sure that you achieve the correct leveling. Failure to do so can result in equipment damage or decreased performance.

---

a) Put one machinist's level lengthwise on one of the two pads.
b) Put the other level across the center of the two pads.
c) Level the pads by adjusting the four jackscrews in the corners.
Make sure that the machinist's level readings are as close to zero as possible, both lengthwise and across.

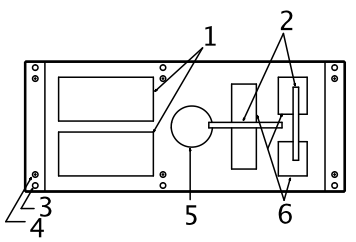

1. Driver's mounting pads
2. Machinist's levels
3. Foundation bolts
4. Jackscrews
5. Grout hole
6. Pump's mounting pads

Figure 19: Level pump mounting pads

6. Hand-tighten the nuts for the foundation bolts.
7. Check that the driver's mounting pads are level and adjust the jackscrews and the foundation bolts if necessary.
The correct level measurement is a maximum of 0.0167 mm/m | 0.002 in./ft .

Install the baseplate using spring mounting

NOTICE:
The spring-mounted baseplate is designed only to support piping loads from thermal expansion. You must support the suction and discharge piping individually. Failure to do so may result in equipment damage.

The foundation pads are not provided with the baseplate. Make sure that the foundation pads are 316 stainless-steel plates, which have a 16-20 micro-inch surface finish.

Before you start this procedure, make sure that the foundation pads are correctly installed on the foundation/floor (see the manufacturer's instructions).

1. Put the baseplate on a support above the foundation/floor.
   Make sure that there is enough space between the baseplate and the foundation/floor in order to install the spring assemblies.
2. Install the lower part of the spring assembly:
   a) Screw the lower jam nut onto the spring stud.
   b) Screw the lower adjusting nut onto the spring-stud, on top of the jam nut.
   c) Set the lower adjusting nut to the correct height.
      The correct height depends on the required distance between the foundation/floor and the baseplate.
   d) Put a washer, a follower, a spring, and one more follower onto the lower adjusting nut.
3. Install the spring assembly on the baseplate:
   a) Insert the spring assembly into the baseplate's anchorage hole from below.
   b) Put a follower, a spring, another follower, and a washer onto the spring stud.
   c) Fasten the spring assembly with the upper adjusting nut by hand.
4. Thread the upper jam nut onto the spring stud by hand.
5. Repeat steps 2 through 4 for all the spring assemblies.
6. Lower the baseplate so that the spring assemblies fit into the foundation pads.
7. Level the baseplate and make the final height adjustments:
   a) Loosen the upper jam nuts and adjusting nuts.
   b) Adjust the height and level the baseplate by moving the lower adjusting nuts.
   c) When the baseplate is level, tighten the top adjusting nuts so that the top springs are not loose in their followers.
8. Fasten the lower and upper jam nuts on each spring assembly.

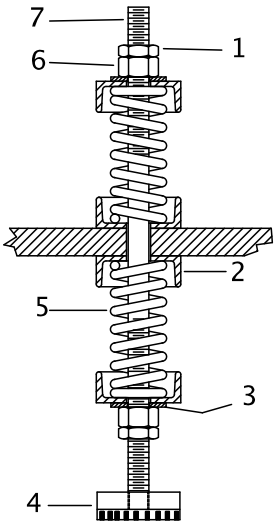

1. Upper jam nut
2. Follower
3. Washer
4. Foundation pads
5. Spring
6. Upper adjusting nut
7. Spring stud

Figure 20: Example of an installed spring assembly

Install the baseplate using stilt mounting

NOTICE:
The stilt-mounted baseplate is not designed to support static piping loads. Make sure to individually support the suction and discharge piping. Failure to do so may result in equipment damage.

1. Put the baseplate on a support above the foundation/floor.
   Make sure that there is enough space between the baseplate and the foundation/floor to install the stilts.
2. Install the lower part of the stilt assembly:
   a) Screw the lower jam nut and adjusting nut onto the stilt.
   b) Set the lower adjusting nut to the correct height.
      The correct height depends on the required distance between the foundation/floor and the baseplate.
   c) Put a washer onto the lower adjusting- nut.
3. Install the stilt assembly on the baseplate:
   a) Insert the stilt assembly into the baseplate's anchorage hole from below.
   b) Put a washer onto the stilt.
   c) Fasten the stilt assembly with the upper adjusting nut by hand.
4. Screw the upper jam nut onto the stilt by hand.
5. Repeat steps 2 through 4 for all the stilt assemblies.
6. Lower the baseplate so that the stilts fit into the foundation cups.
7. Level the baseplate and make the final height adjustments:
   a) Loosen the upper jam nuts and adjusting nuts.
   b) Adjust the height and level the baseplate by moving the lower adjusting nuts.
   c) When the baseplate is level, tighten the top adjusting nuts.
8. Fasten the lower and upper jam nuts on each stilt.

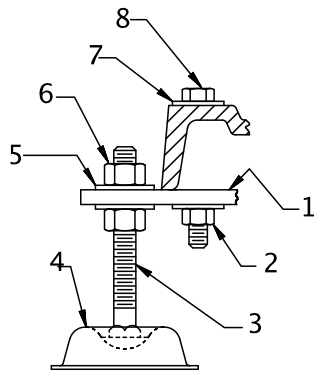

1. Mounting plate
2. Mounting nut
3. Stilt bolt
4. Foundation cups
5. Washer
6. Upper adjustment nut
7. Mounting washer
8. Mounting bolt

Figure 21: Example of an installed stilt assembly

Baseplate-leveling worksheet

Level measurements

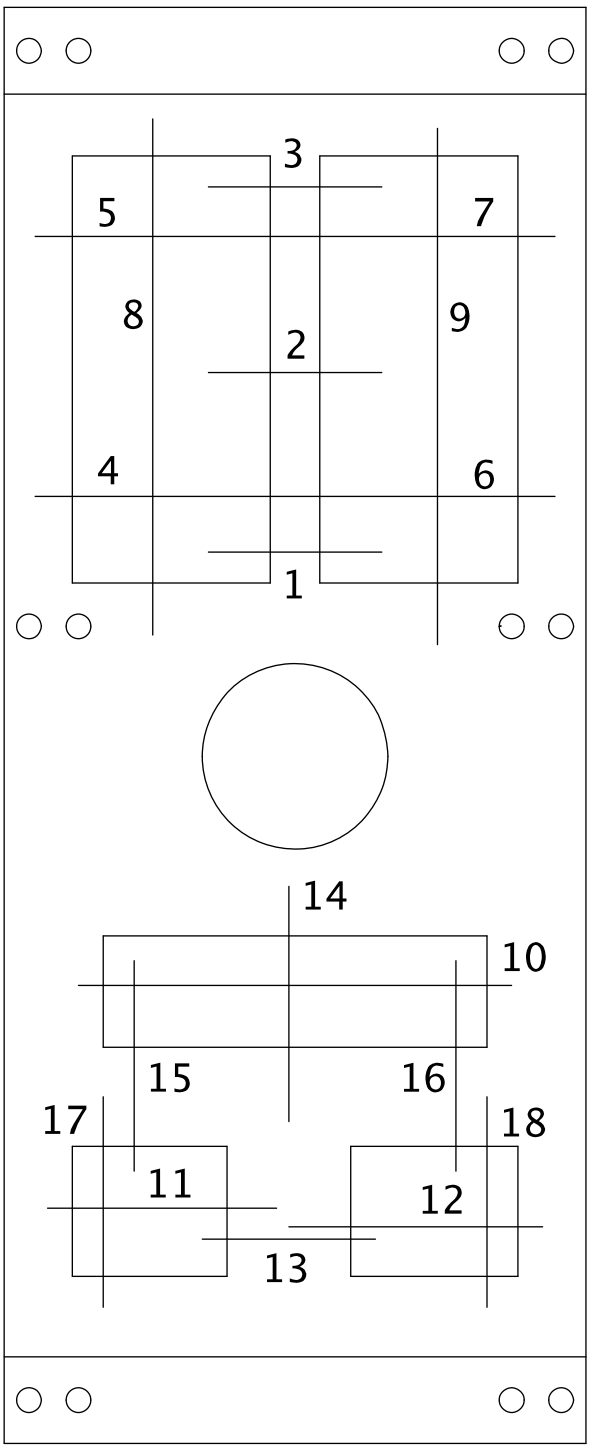

1)_____

2)_____

3)_____

4)_____

5)_____

6)_____

7)_____

8)_____

9)_____

10)_____

11)_____

12)_____

13)_____

14)_____

15)_____

16)_____

17)_____

18)_____

Install the pump, driver, and coupling

1. Mount and fasten the pump on the baseplate. Use applicable bolts.
2. Mount the driver on the . Use applicable bolts and hand tighten.
3. Install the coupling.
   See the installation instructions from the coupling manufacturer.

Pump-to-driver alignment

Precautions

WARNING:

- Follow shaft alignment procedures in order to prevent catastrophic failure of drive components or unintended contact of rotating parts. Follow the coupling installation and operation procedures from the coupling manufacturer.
- Ⓔx Always disconnect and lock out power to the driver before you perform any installation or maintenance tasks. Failure to disconnect and lock out driver power will result in serious physical injury.
  - Electrical connections must be made by certified electricians in compliance with all international, national, state, and local rules.
  - Refer to driver/coupling/gear manufacturers installation and operation manuals (IOM) for specific instructions and recommendations.

NOTICE:

Proper alignment is the responsibility of the installer and the user of the unit. Check the alignment of frame-mounted units before you operate the unit. Failure to do so can result in equipment damage or decreased performance.

Alignment checks

When to perform alignment checks

You must perform alignment checks under these circumstances:

- The process temperature changes.
- The piping changes.
- The pump has been serviced.

Types of alignment checks

Type of check	When it is used
Initial alignment (cold alignment) check	Prior to operation when the pump and the driver are at ambient temperature.
Final alignment (hot alignment) check	After operation when the pump and the driver are at operating temperature.

Initial alignment (cold alignment) checks

When	Why
Before you grout the baseplate	This ensures that alignment can be accomplished.
After you grout the baseplate	This ensures that no changes have occurred during the grouting process.
After you connect the piping	This ensures that pipe strains have not altered the alignment. If changes have occurred, you must alter the piping to remove pipe strains on the pump flanges.

Final alignment (hot alignment) checks

When	Why
After the first run	This ensures correct alignment when both the pump and the driver are at operating temperature.
Periodically	This follows the plant operating procedures.

Permitted indicator values for alignment checks

NOTICE:
The specified permitted reading values are valid only at operating temperature. For cold settings, other values are permitted. You must use the correct tolerances. Failure to do so can result in misalignment and reduced pump reliability.

When dial indicators are used to check the final alignment, the pump and drive unit are correctly aligned when these conditions are true:

- The Total Indicated Reading (T.I.R.) is at 0.05 mm | 0.002 in. or less at operating temperature.
- The tolerance of the indicator is 0.0127 mm per mm | 0.0005 in. per in. of indicator separation for the reverse dial indicator or laser method when the pump and driver are at operating temperature.

Cold settings for parallel vertical alignment

Introduction

This section shows the recommended preliminary (cold) settings for electric motor-driven pumps based on different temperatures of pumped fluid. Consult driver manufacturers for recommended cold settings for other types of drivers such as steam turbines and engines.

Recommended settings for models 3196, CV 3196, and LF 3196

Pumpage temperature	Recommended setting
10°C | 50°F	0.05 mm | 0.002 in., low
65°C | 150°F	0.03 mm | 0.001 in., high
120°C | 250°F	0.12 mm | 0.005 in., high
175°C | 350°F	0.23 mm | 0.009 in., high
218°C | 450°F	0.33 mm | 0.013 in., high
228°C | 550°F	0.43 mm | 0.017 in., high
343°C | 650°F	0.53 mm | 0.021 in., high
371°C | 700°F	0.58 mm | 0.023 in., high

Alignment measurement guidelines

Guideline	Explanation
Rotate the pump coupling half and the driver coupling half together so that the indicator rods have contact with the same points on the driver coupling half.	This prevents incorrect measurement.
Move or shim only the driver in order to make adjustments.	This prevents strain on the piping installations.
Make sure that the hold-down bolts for the driver feet are tight when you take indicator measurements.	This keeps the driver stationary since movement causes incorrect measurement.
Make sure that the hold-down bolts for the driver feet are loose before you make alignment corrections.	This makes it possible to move the driver when you make alignment corrections.
Check the alignment again after any mechanical adjustments.	This corrects any misalignments that an adjustment may have caused.

Attach the dial indicators for alignment

You must have two dial indicators in order to complete this procedure.

1. Attach two dial indicators on the pump coupling half (X):
   a) Attach one indicator (P) so that the indicator rod comes into contact with the perimeter of the driver coupling half (Y).
   This indicator is used to measure parallel misalignment.
   b) Attach the other indicator (A) so that the indicator rod comes into contact with the inner end of the driver coupling half.
   This indicator is used to measure angular misalignment.

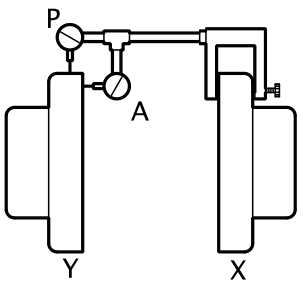

Figure 22: Dial indicator attachment

2. Rotate the pump coupling half (X) in order to check that the indicators are in contact with the driver coupling half (Y) but do not bottom out.
3. Adjust the indicators if necessary.

Pump-to-driver alignment instructions

Perform angular alignment for a vertical correction

1. Set the angular alignment indicator to zero at the top-center position (12 o'clock) of the driver coupling half (Y).
2. Rotate the indicator to the bottom-center position (6 o'clock).
3. Record the indicator reading.

When the reading value is...	Then...
Negative	The coupling halves are farther apart at the bottom than at the top. Perform one of these steps: • Add shims in order to raise the feet of the driver at the shaft end. • Remove shims in order to lower the feet of the driver at the other end.
Positive	The coupling halves are closer at the bottom than at the top. Perform one of these steps: • Remove shims in order to lower the feet of the driver at the shaft end. • Add shims in order to raise the feet of the driver at the other end.

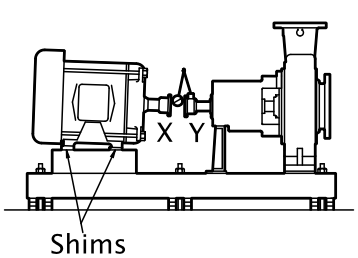

Figure 23: Side view of an incorrect vertical alignment

4. Repeat the previous steps until the permitted reading value is achieved.

Perform angular alignment for a horizontal correction

1. Set the angular alignment indicator (A) to zero on left side of the driver coupling half (Y), 90° from the top-center position (9 o'clock).
2. Rotate the indicator through the top-center position to the right side, 180° from the start position (3 o'clock).
3. Record the indicator reading.

When the reading value is...	Then...
Negative	The coupling halves are farther apart on the right side than the left. Perform one of these steps: • Slide the shaft end of the driver to the left. • Slide the opposite end to the right.
Positive	The coupling halves are closer together on the right side than the left. Perform one of these steps: • Slide the shaft end of the driver to the right. • Slide the opposite end to the left.

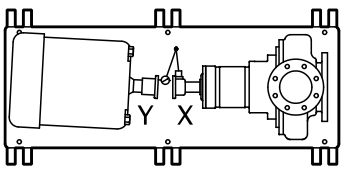

Figure 24: Top view of an incorrect horizontal alignment

4. Repeat the previous steps until the permitted reading value is achieved.

Perform parallel alignment for a vertical correction

Refer to the alignment table in "Permitted indicator values for alignment checks" (see Table of Contents for location of table) for the proper cold alignment value based on the motor temperature rise and the pump operating temperature.

Before you start this procedure, make sure that the dial indicators are correctly set up.

A unit is in parallel alignment when the parallel indicator (P) does not vary by more than 0.002 in. (0.05 mm) as measured at four points 90° apart at the operating temperature.

1. Set the parallel alignment indicator (P) to zero at the top-center position (12 o'clock) of the driver coupling half (Y).
2. Rotate the indicator to the bottom-center position (6 o'clock).
3. Record the indicator reading.

When the reading value is...	Then...
Negative	The pump coupling half (X) is lower than the driver coupling half (Y). Remove shims of a thickness equal to half of the indicator reading value under each driver foot.
Positive	The pump coupling half (X) is higher than the driver coupling half (Y). Add shims of a thickness equal to half of the indicator reading value to each driver foot.

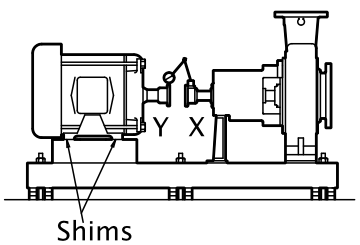

Figure 25: Side view of an incorrect vertical alignment

4. Repeat the previous steps until the permitted reading value is achieved.

NOTICE:
The specified permitted reading values are valid only at operating temperature. For cold settings, other values are permitted. You must use the correct tolerances. Failure to do so can result in misalignment and reduced pump reliability.

Perform parallel alignment for a horizontal correction

A unit is in parallel alignment when the parallel indicator (P) does not vary by more than 0.002 in. (0.05 mm) as measured at four points 90° apart at the operating temperature.

1. Set the parallel alignment indicator (P) to zero on the left side of the driver coupling half (Y), 90° from the top-center position (9 o'clock).
2. Rotate the indicator through the top-center position to the right side, 180° from the start position (3 o'clock).
3. Record the indicator reading.

When the reading value is...	Then...
Negative	The driver coupling half (Y) is to the left of the pump coupling half (X).
Positive	The driver coupling half (Y) is to the right of the pump coupling half (X).

4. Slide the driver carefully in the appropriate direction.

NOTICE: Make sure to slide the driver evenly. Failure to do so can negatively affect horizontal angular correction.

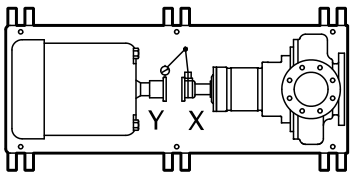

Figure 26: Top view of an incorrect horizontal alignment

5. Repeat the previous steps until the permitted reading value is achieved.

NOTICE:
The specified permitted reading values are valid only at operating temperature. For cold settings, other values are permitted. You must use the correct tolerances. Failure to do so can result in misalignment and reduced pump reliability.

Perform complete alignment for a vertical correction

A unit is in complete alignment when both the angular indicator (A) and the parallel indicator (P) do not vary by more than 0.05 mm | 0.002 in. as measured at four points 90° apart.

1. Set the angular and parallel dial indicators to zero at the top-center position (12 o'clock) of the driver coupling half (Y).
2. Rotate the indicators to the bottom-center position (6 o'clock).
3. Record the indicator readings.
4. Make corrections according to the separate instructions for angular and parallel alignment until you obtain the permitted reading values.

Perform complete alignment for a horizontal correction

A unit is in complete alignment when both the angular indicator (A) and the parallel indicator (P) do not vary by more than 0.05 mm | 0.002 in. as measured at four points 90° apart.

1. Set the angular and parallel dial indicators to zero at the left side of the driver coupling half (Y), 90° from the top-center position (9 o'clock).

2. Rotate the indicators through the top-center position to the right side, 180° from the start position (3 o'clock).
3. Record the indicator readings.
4. Make corrections according to the separate instructions for angular and parallel alignment until you obtain the permitted reading values.

C-face adapter

Intended use

The C-face adapter is a device that attaches the pump to the drive unit to minimize the axial and radial play between the two coupling halves.

Illustration

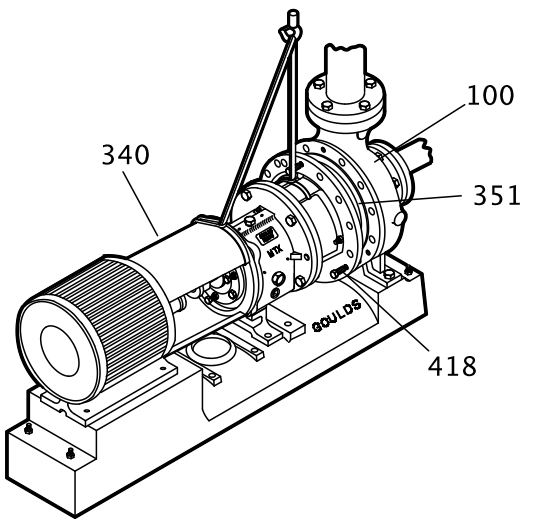

Figure 27: Example of the C-face adapter (340)

Alignment requirements

When you use a C-face adapter, you do not have to align the shaft. The rabbeted fittings of the drive unit to the adapter and the adapter to the bearing frame automatically align the shaft to within the specified limits.

Specified limits

A C-face adapter can attain a nominal alignment of 0.18mm | 0.007 in. Total Indicated Runout (T.I.R.). However, because of the stack-up of the machining tolerances of the various parts, the alignment can be as high as 0.38mm | 0.015 inches TIR.

If high reliability (with shaft alignments of less than 0.05mm | 0.002 in.) is required for the pump, use a foot-mounted drive unit on a precision-machined baseplate and perform a conventional alignment.

Grout the baseplate

Required equipment:

- Cleaners: Do not use an oil-based cleaner because the grout will not bond to it. See the instructions provided by the grout manufacturer.
- Grout: Non-shrink grout is recommended.

1. Clean all the areas of the baseplate that will come into contact with the grout.
2. Build a dam around the foundation.
3. Thoroughly wet the foundation that will come into contact with the grout.
4. Pour grout through the grout hole into the baseplate up to the level of the dam.

When you pour the grout, remove air bubbles from it by using one of these methods:

- Puddle with a vibrator.
- Pump the grout into place.

5. Allow the grout to set.

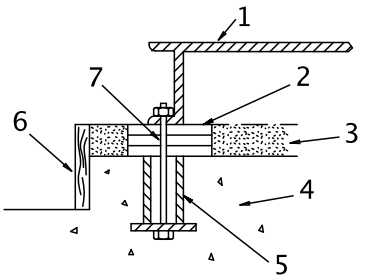

1. Baseplate
2. Shims or wedges
3. Grout
4. Foundation
5. Sleeve
6. Dam
7. Bolt

Figure 28: Pour grout into baseplate

6. Fill the remainder of the baseplate with grout, and allow the grout to set for at least 48 hours.

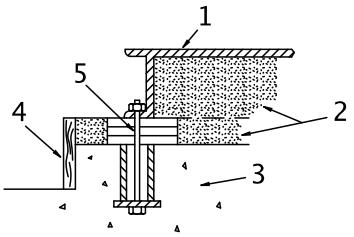

1. Baseplate
2. Grout
3. Foundation
4. Dam
5. Bolt

Figure 29: Fill remainder of baseplate with grout

7. Tighten the foundation bolts.

Piping checklists

General piping checklist

Precautions

CAUTION:

- Never draw piping into place by using force at the flanged connections of the pump. This can impose dangerous strains on the unit and cause misalignment between the pump and driver. Pipe strain adversely affects the operation of the pump, which results in physical injury and damage to the equipment.
- Vary the capacity with the regulating valve in the discharge line. Never throttle the flow from the suction side. This action can result in decreased performance, unexpected heat generation, and equipment damage.

Piping guidelines

Guidelines for piping are given in the Hydraulic Institute Standards available from the Hydraulic Institute at 9 Sylvan Way, Parsippany, NJ 07054-3802. You must review this document before you install the pump.

Checklist

Check	Explanation/comment	Checked
Check that all piping is supported independently of, and lined up naturally with, the pump flange.	This helps to prevent: • Strain on the pump • Misalignment between the pump and the drive unit • Wear on the pump bearings and the coupling • Wear on the pump bearings, seal, and shafting	
Keep the piping as short as possible.	This helps to minimize friction losses.	
Check that only necessary fittings are used.	This helps to minimize friction losses.	
Do not connect the piping to the pump until: • The grout for the baseplate or sub-base becomes hard. • The hold-down bolts for the pump and the driver are tightened.	—	
Make sure that all the piping joints and fittings are airtight.	This prevents air from entering the piping system or leaks that occur during operation.	
If the pump handles corrosive fluids, make sure that the piping allows you to flush out the liquid before you remove the pump.		
If the pump handles liquids at elevated temperatures, make sure that the expansion loops and joints are properly installed.	This helps to prevent misalignment due to linear expansion of the piping.	

Example: Installation for expansion

Correct	Incorrect
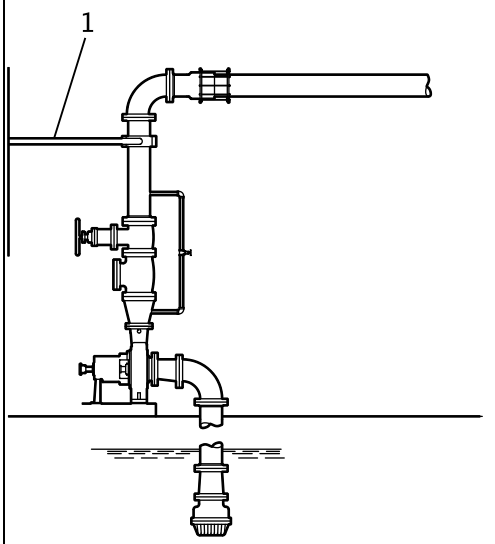 1. Expansion loop/joint	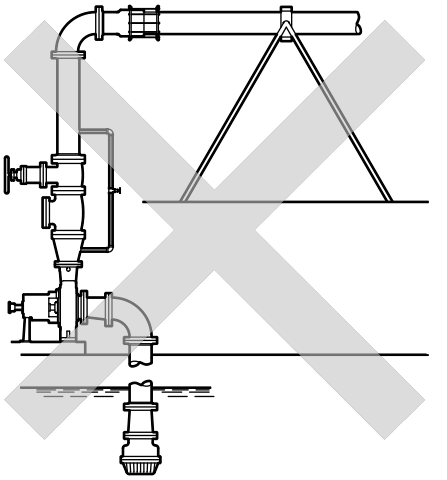

Fastening

WARNING:

- Only use fasteners of the proper size and material.
- Replace all corroded fasteners.
- Make sure that all fasteners are properly tightened and that there are no missing fasteners.

Suction-piping checklist

Performance curve reference

Net positive suction head available ($NPSH_A$) must always exceed NPSH required ($NPSH_R$) as shown on the published performance curve of the pump.

Suction-piping checks

Check	Explanation/comment	Checked
Check that the distance between the inlet flange of the pump and the closest elbow is at least five pipe diameters.	This minimizes the risk of cavitation in the suction inlet of the pump due to turbulence. See the Example sections for illustrations.	
Check that elbows in general do not have sharp bends.	See the Example sections for illustrations.	
Check that the suction piping is one or two sizes larger than the suction inlet of the pump. Install an eccentric reducer between the pump inlet and the suction piping.	The suction piping must never have a smaller diameter than the suction inlet of the pump. See the Example sections for illustrations.	
Check that the eccentric reducer at the suction flange of the pump has the following properties: • Sloping side down • Horizontal side at the top	See the example illustrations.	

Check	Explanation/comment	Checked
Suggested suction strainers are used. Check that they are at least three times the area of the suction piping. Monitor the pressure drop across the suction strainer. An increased pressure drop across the strainer of 5 psi (34.5 kPa) indicates that the strainer should be removed and cleaned. After a period of time (24 hours minimum) system flushing should be complete and the suction strainer can be removed.	Suction strainers help to prevent debris from entering the pump. Mesh holes with a minimum diameter of 1/16 in. (1.6 mm) are recommended. Liquids with specific gravity less than 0.60 a pressure drop across the suction strainer may be due to ice buildup. Ice buildup can cause turbulence, low pressure areas and pumpage vaporization.	
If more than one pump operates from the same liquid source, check that separate suction-piping lines are used for each pump.	This recommendation helps you to achieve a higher pump performance and prevent vapor locking especially with specific gravity of liquid less than 0.60.	
If necessary, make sure that the suction piping includes a drain valve and that it is correctly installed.	—	
Assure adequate insulation is applied for liquids with specific gravity less than 0.60.	To assure sufficient NPSHa.	

Liquid source below the pump

Check	Explanation/comment	Checked
Make sure that the suction piping is free from air pockets.	This helps to prevent the occurrence of air and cavitation in the pump inlet.	
Check that the suction piping slopes upwards from the liquid source to the pump inlet.	—	
If the pump is not self-priming, check that a device for priming the pump is installed.	Use a foot valve with a diameter that is at least equivalent to the diameter of the suction piping.	

Liquid source above the pump

Check	Explanation/comment	Checked
Check that an isolation valve is installed in the suction piping at a distance of at least two times the pipe diameter from the suction inlet.	This permits you to close the line during pump inspection and maintenance. Do not use the isolation valve to throttle the pump. Throttling can cause these problems: • Loss of priming • Excessive temperatures • Damage to the pump • Voiding the warranty	
Make sure that the suction piping is free from air pockets.	This helps to prevent the occurrence of air and cavitation in the pump inlet.	
Check that the piping is level or slopes downward from the liquid source.	—	
Make sure that no part of the suction piping extends below the suction flange of the pump.	—	
Make sure that the suction piping is adequately submerged below the surface of the liquid source.	This prevents air from entering the pump through a suction vortex.	

Example: Elbow close to the pump suction inlet

Correct	Incorrect
The correct distance between the inlet flange of the pump and the closest elbow must be at least five pipe diameters. 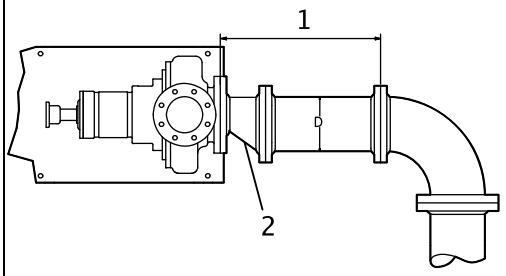 1. Enough distance to prevent cavitation 2. Eccentric reducer with a level top	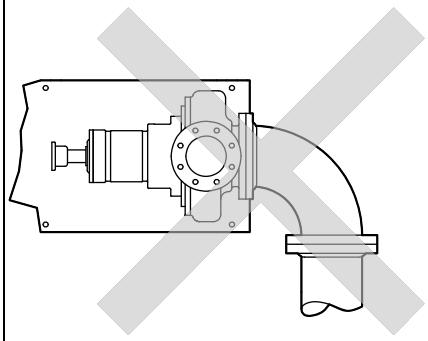

Example: Suction piping equipment

Correct	Incorrect
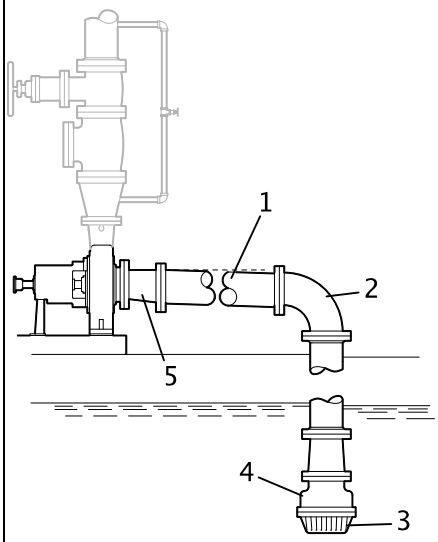 1. Suction pipe sloping upwards from liquid source 2. Long-radius elbow 3. Strainer 4. Foot valve 5. Eccentric reducer with a level top	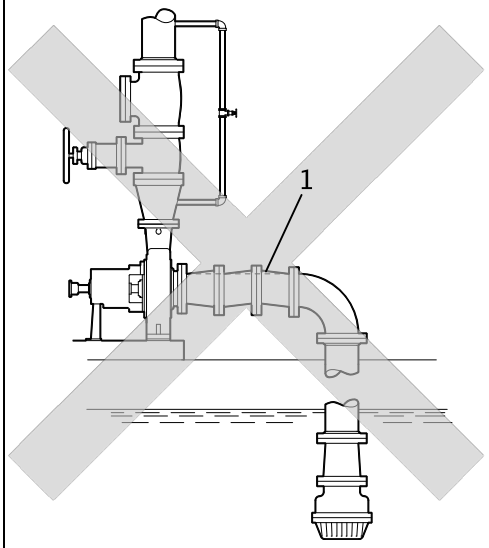 1. Air pocket, because the eccentric reducer is not used and because the suction piping does not slope gradually upward from the liquid source

Discharge piping checklist

Checklist

Check	Explanation/comment	Checked
Check that an isolation valve is installed in the discharge line. For specific gravity less than 0.60, minimize distance from pump discharge.	The isolation valve is required for: • Priming • Regulation of flow • Inspection and maintenance of the pump • Reduce risk of pumpage vaporization and vapor locking at low flow rates for low specific gravity liquids. See Example: Discharge piping equipment for illustrations.	
Check that a check valve is installed in the discharge line, between the isolation valve and the pump discharge outlet.	The location between the isolation valve and the pump allows inspection of the check valve. The check valve prevents damage to the pump and seal due to the back flow through the pump, when the drive unit is shut off. It is also used to restrain the liquid flow. See Example: Discharge piping equipment for illustrations.	
If increasers are used, check that they are installed between the pump and the check valve.	See Example: Discharge piping equipment for illustrations.	
If quick-closing valves are installed in the system, check that cushioning devices are used.	This protects the pump from surges and water hammer.	

Example: Discharge piping equipment

Correct	Incorrect
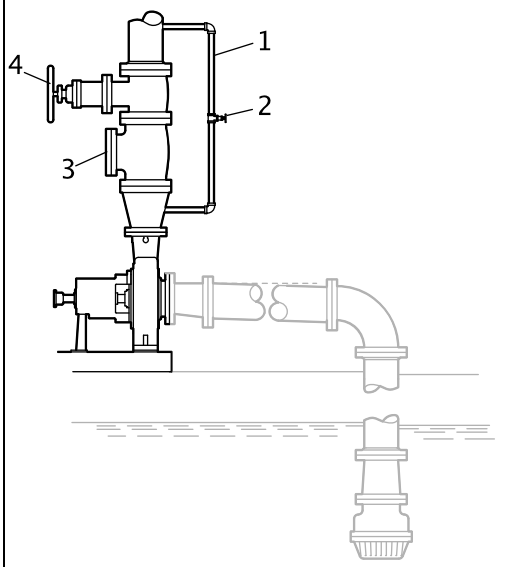	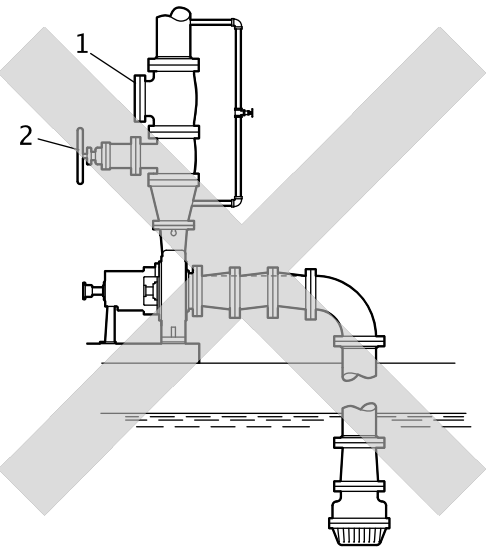
1. Bypass line 2. Shut-off valve 3. Check valve 4. Discharge isolation valve	1. Check valve (incorrect position) 2. The isolation valve should not be positioned between the check valve and the pump.

Commissioning, Startup, Operation, and Shutdown

Preparation for startup

DANGER:
Avoid death or serious injury. Explosion and/or seizure of pump can cause fire and/or burns. Never operate pump past the pressure and temperature limits shown on the nameplate on the pump.

WARNING:

- Failure to follow these precautions before you start the unit will lead to serious personal injury and equipment failure.
- Do not operate the pump below the minimum rated flows or with the suction or discharge valves closed. These conditions can create an explosive hazard due to vaporization of pumped fluid and can quickly lead to pump failure and physical injury.
- Avoid death or serious injury. Leaking fluid can cause fire and/or burns. Operating the pump above maximum rated flow shown on the pump curve leading to an increase in horsepower and vibration along with an increase in NPSHr resulting in mechanical seal and/or shaft failure and/or loss of prime.
- Avoid death or serious injury. Leaking fluid can cause fire and/or burns. Speed of pump must reach 2000 rpm for 2 pole motors and 1000 rpm for 4 pole motors within 10 seconds or an increase in vibration and rotor deflection and decrease in rotor stability leading to mechanical seal and/or shaft failure and/or pump seizure can occur.
- Never operate the pump without the coupling guard correctly installed.
- ⟨Ex⟩ Always disconnect and lock out power to the driver before you perform any installation or maintenance tasks. Failure to disconnect and lock out driver power will result in serious physical injury.
  - Electrical connections must be made by certified electricians in compliance with all international, national, state, and local rules.
  - Refer to driver/coupling/gear manufacturers installation and operation manuals (IOM) for specific instructions and recommendations.
- Operating the pump in reverse rotation can result in the contact of metal parts, heat generation, and breach of containment.
- Avoid death or serious injury. Explosion and/or seizure of pump can cause fire and/or burns. Assure balance line is installed and either piped to the pump suction or back to the suction vessel to avoid vaporization of pumped fluid.

DANGER:
Avoid death or serious injury. Leaking fluid can cause fire and/or burns. Assure all openings are sealed off prior to filling pump.

Precautions

NOTICE:

- Verify the driver settings before you start any pump.
- Make sure that the warm-up rate does not exceed 1.4°C | 2.5°F per minute.
- Risk of damage to the mechanical seal or shaft sleeve on units supplied with cartridge mechanical seals. Prior to startup, make sure to tighten the set screws in the seal locking ring and remove the centering clips.

You must follow these precautions before you start the pump:

- Flush and clean the system thoroughly to remove dirt or debris in the pipe system in order to prevent premature failure at initial startup.
- Bring variable-speed drivers to the rated speed as quickly as possible.
- Run a new or rebuilt pump at a speed that provides enough flow to flush and cool the close-running surfaces of the stuffing-box bushing.
- If temperatures of the pumped fluid will exceed 93°C | 200°F, then warm up the pump prior to operation. Circulate a small amount of fluid through the pump until the casing temperature is within 38°C | 100°F of the fluid temperature. Accomplish this by flowing fluid from pump inlet to discharge drain (optionally, the casing vent can be included in warm-up circuit but not required). Soak for (2) hours at process fluid temperature.

At initial startup, do not adjust the variable-speed drivers or check for speed governor or over-speed trip settings while the variable-speed driver is coupled to the pump. If the settings have not been verified, then uncouple the unit and refer to instructions supplied by the driver manufacturer.

Remove the coupling guard

1. Remove the nut, bolt, and washers from the slotted hole in the center of the coupling guard.
2. Slide the driver half of the coupling guard toward the pump.

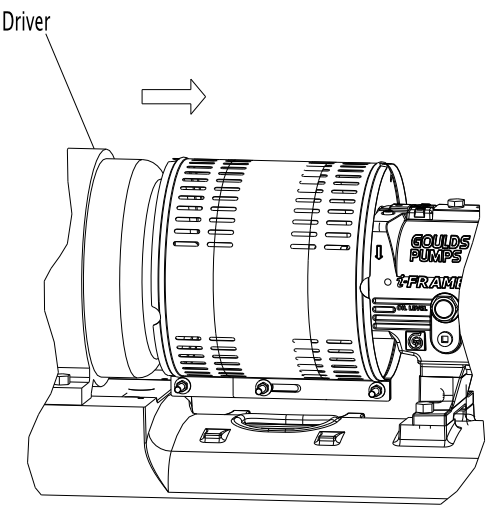

3. Remove the nut, bolt, and washers from the driver half of the coupling guard.

4. Remove the driver-side end plate.

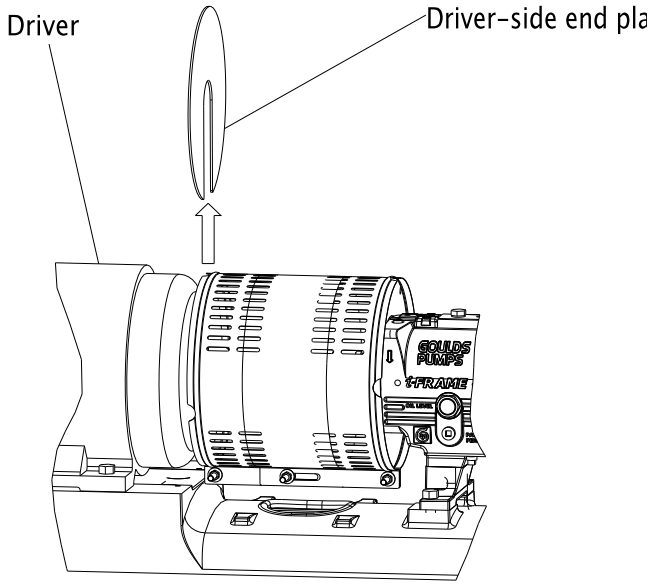

5. Remove the driver half of the coupling guard:
   a) Slightly spread the bottom apart.
   b) Lift upwards.

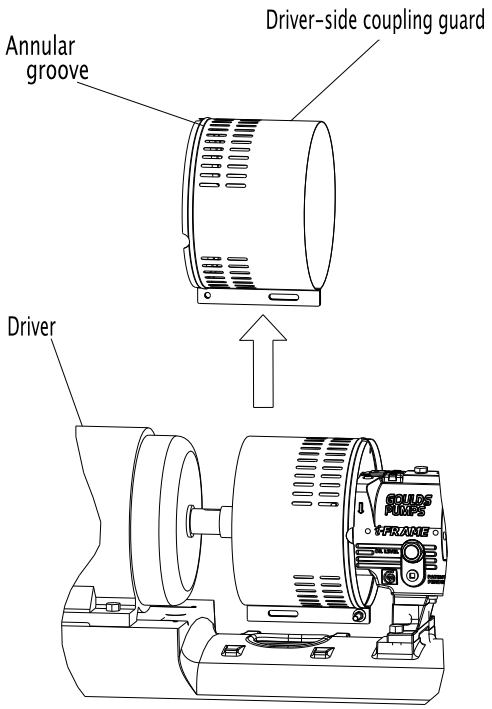

6. Remove the remaining nut, bolt, and washers from the pump half of the coupling guard.
   It is not necessary to remove the end plate from the pump side of the bearing housing. You can access the bearing-housing tap bolts without removing this end plate if maintenance of internal pump parts is necessary.
7. Remove the pump half of the coupling guard:
   a) Slightly spread the bottom apart.

b) Lift upwards.

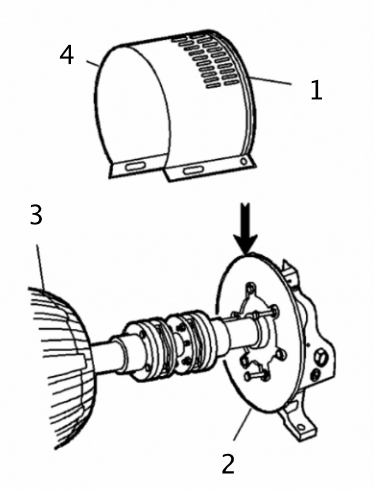

1. Annular groove
2. Pump-side end plate
3. Driver
4. Pump half of the coupling guard

Check the rotation - Frame Mounted

WARNING:

- Operating the pump in reverse rotation can result in the contact of metal parts, heat generation, and breach of containment.
- Ⓔx Always disconnect and lock out power to the driver before you perform any installation or maintenance tasks. Failure to disconnect and lock out driver power will result in serious physical injury.
  - Electrical connections must be made by certified electricians in compliance with all international, national, state, and local rules.
  - Refer to driver/coupling/gear manufacturers installation and operation manuals (IOM) for specific instructions and recommendations.

1. Lock out power to the driver.
2. Make sure that the coupling hubs are fastened securely to the shafts.
3. Make sure that the coupling spacer is removed.
   The pump ships with the coupling spacer removed.
4. Unlock power to the driver.
5. Make sure that everyone is clear, and then jog the driver long enough to determine that the direction of rotation corresponds to the arrow on the bearing housing or close-coupled frame.
6. Lock out power to the driver.

Impeller-clearance check

The impeller-clearance check ensures the following:

- The pump turns freely.
- The pump operates at optimal efficiency for long equipment life and low energy consumption.

Impeller clearances (3196 and HT 3196)

WARNING:
For pumpage temperatures greater than 93°C | 200°F, you must increase the cold (ambient) setting according to this table. Doing so prevents the impeller from contacting the casing due to differential expansion from the higher operating temperatures. Failure to do so may result in sparks, unexpected heat generation, and equipment damage.

NOTICE:
Do not set the maximum impeller setting to more than 0.13 mm | 0.005 in. greater than the values in this table. Doing so may result in a significant decrease in performance.

Table 8: Impeller clearances
This pump requires the impeller clearances in the following table.

Service temperature	STi	MTi/LTi	XLT-i/i17
	mm | in.	mm | in.	mm | in.
-29 to 93°C | -20 to 200°F	0.13 | 0.005	0.20 | 0.008	0.38 | 0.015
Up to 121°C | 250°F	0.15 | 0.006	0.22 | 0.009	0.41 | 0.016
Up to 149°C | 300°F	0.18 | 0.007	0.25 | 0.010	0.43 | 0.017
Up to 177°C| 350°F	0.22 | 0.009	0.30 | 0.012	0.48 | 0.019
Up to 204°C | 400°F	0.25 | 0.010	0.33 | 0.013	0.50 | 0.020
Up to 232°C | 450°F	0.28 | 0.011	0.35 | 0.014	0.53 | 0.021
Up to 260°C| 500°F	0.30 | 0.012	0.38 | 0.015	0.56 | 0.022
Up to 288°C | 550°F	0.33 | 0.013	0.41 | 0.016	0.58 | 0.023
Up to 316°C | 600°F	0.36 | 0.014	0.43 | 0.017	0.61 | 0.024
Up to 343°C | 650°F	0.40 | 0.016	0.48 | 0.019	0.66 | 0.026
Up to 371°C | 700°F	0.43 | 0.017	0.50 | 0.020	0.69 | 0.027

Impeller-clearance setting

Importance of a proper impeller clearance

A proper impeller clearance ensures that the pump runs at high performance.

WARNING:

- Ⓔx The impeller clearance setting procedure must be followed. Improperly setting the clearance or not following any of the proper procedures can result in sparks, unexpected heat generation, and equipment damage.
- If you use a cartridge mechanical seal, you must install the centering clips and loosen the set screws before you set the impeller clearance. Failure to do so could result in sparks, heat generation, and mechanical seal damage.

Impeller clearance methods

You can set the impeller clearance with either of these methods:

- Dial indicator method
- Feeler gauge method

Set the impeller clearance - dial indicator method (all except CV 3196)

WARNING:

Ⓔx Always disconnect and lock out power to the driver before you perform any installation or maintenance tasks. Failure to disconnect and lock out driver power will result in serious physical injury.

- Electrical connections must be made by certified electricians in compliance with all international, national, state, and local rules.
- Refer to driver/coupling/gear manufacturers installation and operation manuals (IOM) for specific instructions and recommendations.

1. Remove the coupling guard.
2. Set the indicator so that the button contacts either the shaft end or the face of the coupling.

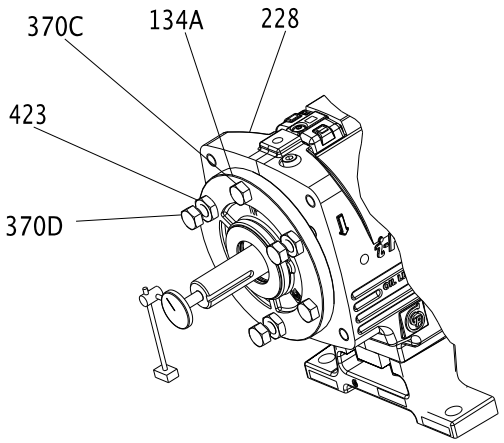

Figure 30: Dial indicator setting

3. Loosen the jam nuts (423) on the jack bolts (370D) , and then back the bolts out about two turns.
4. Tighten the locking bolts evenly (370C), bringing the bearing housing (134A) towards the frame (228) until the impeller contacts the casing.
5. Turn the shaft to ensure that there is contact between the impeller and the casing.
6. Set the indicator to zero and loosen the locking bolt (370C) about one turn.
7. Thread in the jack bolts (370D) until the jack bolts evenly contact the bearing frame.
8. Tighten the jack bolts evenly about one flat at a time, moving the bearing housing (134A) away from the bearing frame until the indicator shows the correct clearance.
   Refer to the impeller clearance table to determine the correct clearance.
9. Tighten the bolts evenly in this order:
   a) Tighten the locking bolts (370C).
   b) Tighten the jack bolts (370D).
   Make sure to keep the indicator reading at the proper setting.
10. Make sure the shaft turns freely.

Set the impeller clearance - feeler gauge method (all except CV 3196)

WARNING:

Ⓔx Always disconnect and lock out power to the driver before you perform any installation or maintenance tasks. Failure to disconnect and lock out driver power will result in serious physical injury.

- Electrical connections must be made by certified electricians in compliance with all international, national, state, and local rules.
- Refer to driver/coupling/gear manufacturers installation and operation manuals (IOM) for specific instructions and recommendations.

1. Lock out the driver power and remove the coupling guard.
2. Loosen the jam nuts (423B) on the jack bolts (371A), and then back the bolts out about two turns.

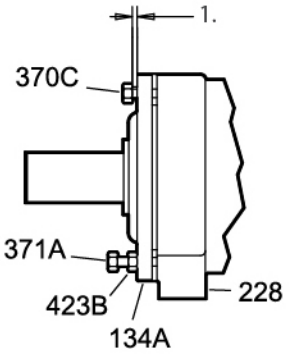

Figure 31: Loosen jam nuts

1. See impeller clearance table for distance

3. Evenly tighten the locking bolts (370C), bringing the bearing housing (134A) towards the frame (228) until the impeller contacts the casing.
4. Turn the shaft to ensure that there is contact between the impeller and the casing.
5. Use a feeler gauge to set the gap between the three locking bolts (370C) and the bearing housing (134A) to the correct impeller clearance.
   Refer to the impeller clearance table to determine the correct clearance.
6. Use the three jack bolts (370D) to evenly loosen the bearing housing (134A) until it contacts the locking bolts (370C).
7. Evenly tighten the jam nuts (423B).
8. Make sure the shaft turns freely.

Couple the pump and driver

WARNING:

Ⓔx Always disconnect and lock out power to the driver before you perform any installation or maintenance tasks. Failure to disconnect and lock out driver power will result in serious physical injury.

- Electrical connections must be made by certified electricians in compliance with all international, national, state, and local rules.
- Refer to driver/coupling/gear manufacturers installation and operation manuals (IOM) for specific instructions and recommendations.

Couplings must have proper certification to be used in an ATEX classified environment. Use the instructions from the coupling manufacturer in order to lubricate and install the coupling. Refer to driver/coupling/gear manufacturers IOM for specific instructions and recommendations.

Install the coupling guard

WARNING:

- Never operate a pump without a properly installed coupling guard. Personal injury will occur if you run the pump without a coupling guard.
- Electrical Connections must be made by certified electricians in compliance with all international, national, state, and local rules.
- Refer to driver/coupling/gear manufacturers IOM for specific instructions and recommendations.
- Ⓔx Always disconnect and lock out power to the driver before you perform any installation or maintenance tasks. Failure to disconnect and lock out driver power will result in serious physical injury.
  - Electrical connections must be made by certified electricians in compliance with all international, national, state, and local rules.
  - Refer to driver/coupling/gear manufacturers installation and operation manuals (IOM) for specific instructions and recommendations.
- The coupling used in an Ex-classified environment must be properly certified and must be constructed from a non-sparking material.
-

Required parts:

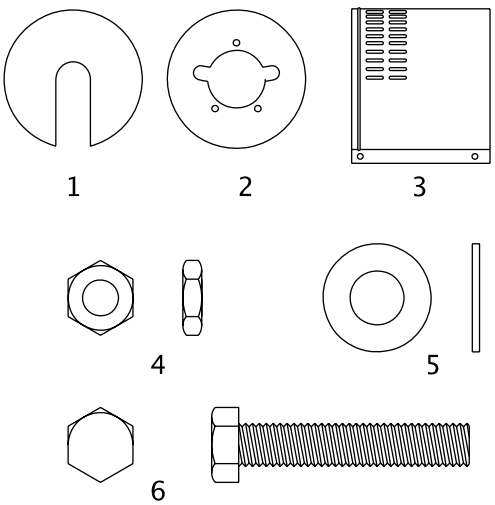

1. End plate, drive end
2. End plate, pump end
3. Guard half, 2 required
4. 3/8-16 nut, 3 required
5. 3/8 in. washer
6. 3/8-16 x 2 in. hex head bolt, 3 required

Figure 32: Required parts

1. De-energize the motor, place the motor in a locked-out position, and place a caution tag at the starter that indicates the disconnect.
2. Put the pump-side end plate in place.
   If the pump-side end plate is already in place, make any necessary coupling adjustments and then proceed to the next step.

If the pump size is...	Then...
STi, MTi, LTi	Align the pump-side end plate to the bearing frame. You do not need to adjust the impeller.

If the pump size is...	Then...
XLT-i	1. Align the end plate on the pump side to the bearing housing so that you meet these conditions: 1. The large slots on the end plate do not touch the bearing housing tap bolts. 2. The small slots align with the impeller adjusting bolts. 2. Fasten the end plate to the bearing housing using the jam nuts on the impeller adjusting bolts. 3. Check the impeller clearance. Refer to the impeller clearance table for the correct impeller clearance.

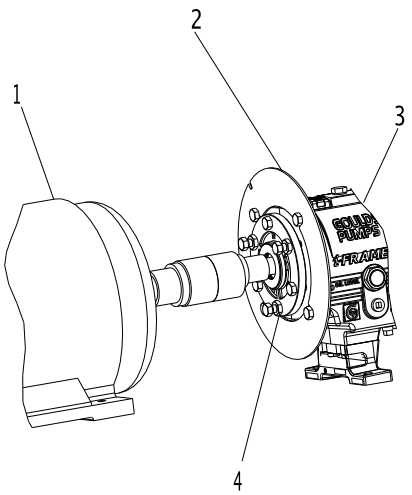

1. Driver
2. Pump end plate
3. Bearing housing
4. Jam nut

Figure 33: Pump-side end plate placement

3. Put the pump-half of the coupling guard in place:
   a) Slightly spread the bottom apart.
   b) Place the coupling guard half over the pump-side end plate.

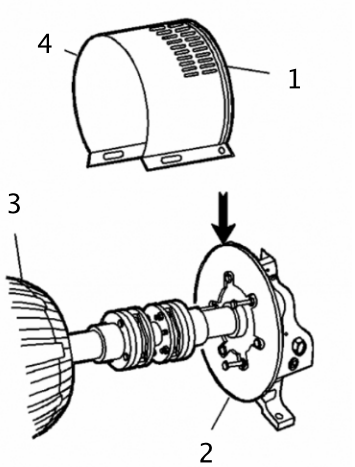

1. Annular groove
2. Pump-side end plate
3. Driver
4. Pump half of the coupling guard

Figure 34: Guard half installation

The annular groove in the coupling guard half must fit around the end plate.

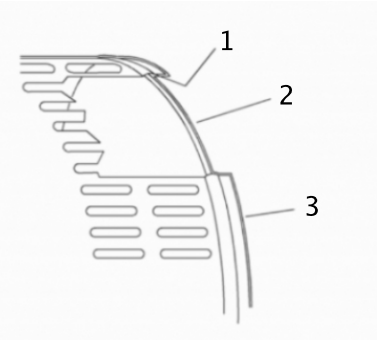

1. Annular groove
2. End plate (pump end)
3. Guard half

Figure 35: Annular groove in coupling guard

4. Use a bolt, a nut, and two washers to secure the coupling guard half to the end plate. Tighten securely.

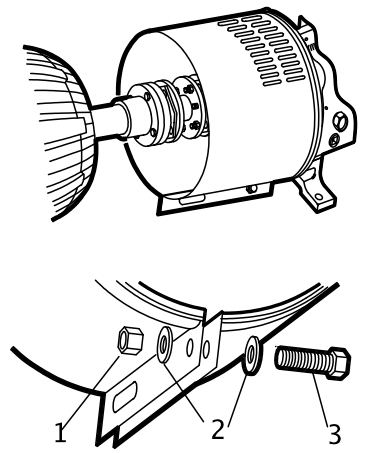

1. Nut
2. Washer
3. Bolt

Figure 36: Secure coupling guard half to end plate

5. Put the driver half of the coupling guard in place:
   a) Slightly spread the bottom apart.

b) Place the driver half of the coupling guard over the pump half of the coupling guard. The annular groove in the coupling guard half must face the motor.

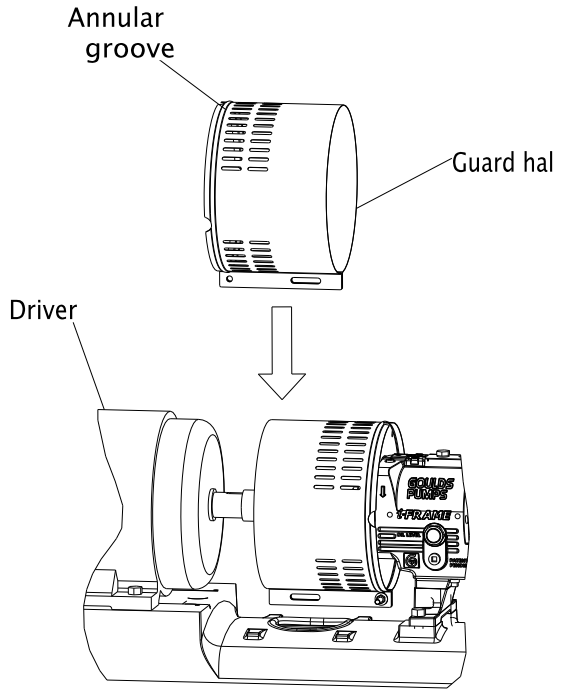

Figure 37: Placement of driver half of coupling guard

6. Place the driver-side end plate over the motor shaft.

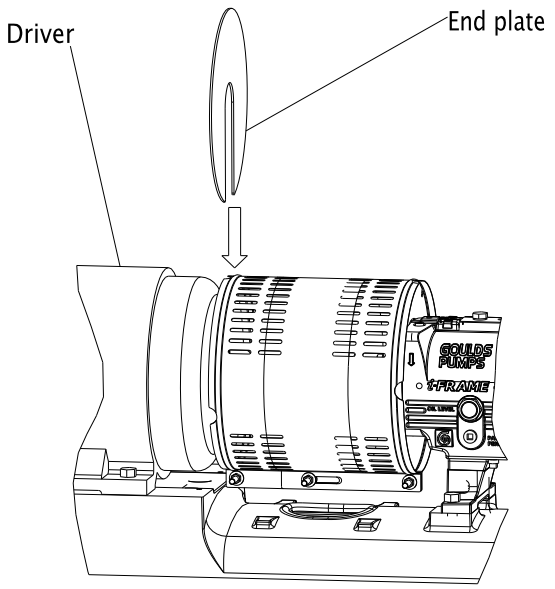

Figure 38: Placement of driver half of coupling guard

7. Place the driver-side end plate in the annular groove of the driver-half of the coupling guard.
8. Use a bolt, a nut, and two washers to secure the coupling guard half to the end plate. Hand-tighten only.
   The hole is located on the driver-side of the coupling guard half.

9. Slide the driver-half of the coupling guard towards the motor so that the coupling guard completely covers the shafts and coupling.

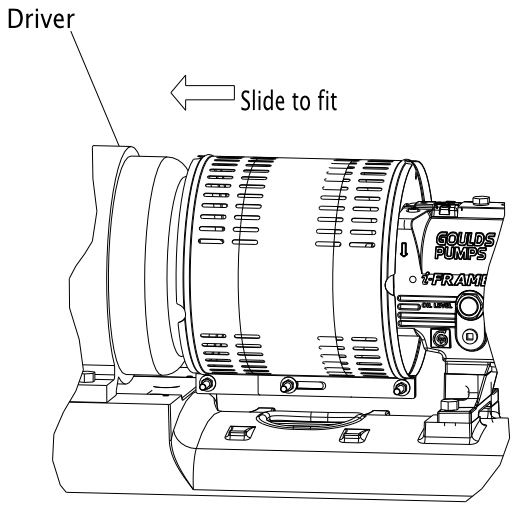

Figure 39: Slide driver-half of coupling guard towards motor

10. Use a nut, a bolt, and two washers to secure the coupling guard halves together.
11. Tighten all nuts on the guard assembly.

WARNING:
Never operate the pump without the coupling guard correctly installed.

Bearing lubrication

WARNING:
Ⓔx Make sure to properly lubricate the bearings. Failure to do so can result in excess heat generation, sparks, and premature failure.

NOTICE: Be certain to check the greasing on a pump that has been out of service for a long period of time and re-grease if necessary.

Pumps are shipped without oil. You must lubricate oil-lubricated bearings at the job site.

Grease-lubricated bearings are lubricated at the factory.

The bearing manufacturer fills greased-for-life bearings with grease and seals them at the factory. You do not need to lubricate or seal these bearings.

Oil volumes

Oil volume requirements

This table shows the required amount of oil for oil-lubricated bearings.

Frame	ml	Qts.	Oz.
STi	400	0.5	16
MTi	1400	1.5	47
LTi	1400	1.5	48
XLT-i and i17	3000	3	96

Lubricating-oil requirements

Oil requirements based on temperature

For the majority of operating conditions, bearing temperatures run between 49°C | 120°F and 82°C | 180°F, and you can use an oil of ISO viscosity grade 68 at 38°C | 100°F. If temperatures exceed 82°C | 180°F, refer to the table for temperature requirements.

Temperature	Oil requirement
Bearing temperatures exceed 82°C | 180°F	Use ISO viscosity grade 100 with bearing-frame cooling or finned-tube oil cooler. The finned-tube oil cooler is standard with the HT 3196 model and optional for all other models.
Pumped-fluid temperatures exceed 177°C | 350°F	Use synthetic lubrication.

Acceptable oil for lubricating bearings

Acceptable lubricants

Examples of acceptable high quality turbine oils with rust and oxidation inhibitors.

Brand	Lubricant type
Chevron	GTS Oil 68
Exxon	Teresstic EP 68
Mobil	DTE 26 300 SSU @ 38°C | 100°F
Philips	Mangus Oil 315
Shell	Tellus Oil 68
Sunoco	Sunvis 968
Royal Purple	SYNFILM ISO VG 68 Synthetic Lube

Examples of acceptable synthetic lubricants.

Brand	Lubricant type
Castrol	Hyspin R&O 220
Chevron	GST 220
Exxon	Teresstic 220
Mobil	DTE Oil BB SHC 630
Shell	Marlina 220 Tellus 220
Sunoco	Sunvis 9220
Texaco	Regal R&O 220 Rando HD 220
Royal Purple	Synfilm GT 220 Synergy 220

Lubricate the bearings with oil

Use a high-quality turbine oil with rust and oxidation inhibitors.

1. Remove the fill plug.
2. Fill the bearing frame with oil through the filler connection, which is located on top of the bearing frame.

Fill the bearing frame with oil until the oil level reaches the middle of the sight glass (319). The correct volume of oil required for each size of bearing frame can be found in the ‘Oil Volume Requirements’ section in the ‘Bearing Maintenance’ / ‘Maintenance’ portion of the IOM.

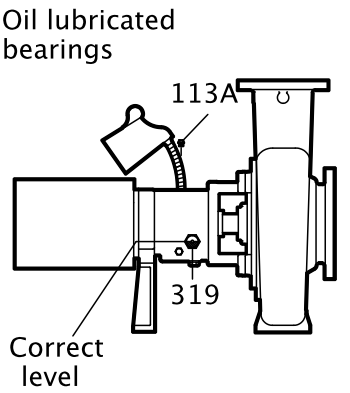

Figure 40: Oil filler connection

3. Replace the fill plug.

Lubricate the bearings with pure oil mist

Oil mist is an optional feature for this pump.
To lubricate bearings with pure oil mist, follow the instructions provided by the manufacturer of the oil-mist generator.
The inlet connections are on the top of the bearing frame.

Greased-for-life bearing lubrication

The bearing manufacturer fills greased-for-life bearings with grease and seals them at the factory. You do not need to lubricate or seal these bearings. Refer to the Maintenance chapter for re-greasing and maintenance procedures for these bearings.

Shaft-sealing options

In most cases, the manufacturer seals the shaft before shipping the pump. If your pump does not have a sealed shaft, see the Shaft-seal maintenance section in the Maintenance chapter.
This model uses these types of shaft seals:

- Cartridge mechanical seal
- Conventional inside-component mechanical seal
- Conventional outside-component mechanical seal
- Dynamic seal
- Packed-stuffing-box option

Mechanical seal options

Pumps are usually shipped with mechanical seals installed. If they are not, then refer to the mechanical seal manufacturer's installation instructions.
These are the mechanical seal options for this pump:

- Cartridge mechanical seal
- Conventional inside component mechanical seal
- Conventional outside component mechanical seal

Connection of sealing liquid for mechanical seals

Seal lubrication is required

Seal faces must have liquid film between them for proper lubrication. Locate the taps using the illustrations shipped with the seal.

Seal flushing methods

You can use these methods in order to flush or cool the seal:

Method	Description
Product flush	Run the piping so that the pump pushes the pumped fluid from the casing and injects it into the seal gland. If necessary, an external heat exchanger cools the pumped fluid before it enters the seal gland.
External flush	Run the piping so that the pump injects a clean, cool, compatible liquid directly into the seal gland. The pressure of the flushing liquid must be 0.35 to 1.01 kg/cm^2 | 5 to 15 psi greater than the seal chamber pressure. The injection rate must be 2 to 8 lpm | 0.5 to 2 gpm.
Other	You can use other methods that employ multiple gland or seal chamber connections. Refer to the mechanical seal reference drawing and piping diagrams.

Packed stuffing box option

WARNING:
Ⓔx Packed stuffing boxes are not allowed in an ATEX-classified environment.

The factory does not install the packing, lantern ring, or split gland.
These parts are included with the pump in the box of fittings. Before you start the pump, you must install the packing, lantern ring, and split gland according to the Packed stuffing box maintenance section in the Maintenance chapter.

Connection of sealing liquid for a packed stuffing box

WARNING:
Ⓔx Packed stuffing boxes are not allowed in an ATEX-classified environment.

NOTICE:
Make sure to lubricate the packing. Failure to do so may result in shortening the life of the packing and the pump.

You must use an external sealing liquid under these conditions:

- The pumped fluid includes abrasive particles.
- The stuffing-box pressure is below atmospheric pressure when the pump is running with a suction lift or when the suction source is in a vacuum. Under these conditions, packing is not cooled and lubricated and air is drawn into pump.

Conditions for application of an external liquid

Condition	Action
The stuffing box pressure is above atmospheric pressure and the pumped fluid is clean.	Normal gland leaks of 40 to 60 drops per minute is usually sufficient to lubricate and cool the packing. You do not need sealing liquid.
The stuffing box pressure is below atmospheric pressure or the pumped fluid is not clean.	An outside source of clean compatible liquid is required.
An outside source of clean compatible liquid is required.	You must connect the piping to the lantern ring connection with a 40 to 60 drops-per-minute leak rate. The pressure must be 1.01 kg/cm^2 | 15 psi above the stuffing box pressure.

Dynamic-seal option

WARNING:
Ⓔx Dynamic seals are not allowed in an ATEX-classified environment.

The dynamic seal consists of two parts:

- Repeller seal
- Secondary seal (one of the following):
  - Graphite packing
  - Elastomenic face seal

Table 9: Dynamic seal part function

Part	Function
Repeller seal	A repeller seal prevents liquid from entering the stuffing box during operation. The repeller normally does not require a flush. However, for services that allow a build-up of solids on the repeller, you must install a flush connection. If a danger of freezing exists, then you must install a drain connection to drain the repeller chamber.

Secondary seal (graphite packing)	This secondary seal prevents leaks during pump shutdown and is comprised of the following:
	• Graphite packing – Graphite packing provides adequate life running dry but can provide longer performance if lubricated with clean water or grease.
	  • If you lubricate with clean water, then the repeller reduces both the quantity and pressure of seal water that is necessary. If the suction head is less than the repeller capability, then the stuffing box pressure is the same as the atmospheric pressure. Water pressure for the seal must be high enough to overcome static head when the pump is not operating to keep pumped fluid out of the packing. There must be enough flow to cool the packing.
	  • If you lubricate with grease, then you must use spring-loaded grease lubricators to maintain a constant supply.
	• Elastomeric face seal – The elastomeric face seal consists of an elastomer rotary fitted to the shaft and a ceramic stationary seat fitted in the gland. To set an elastomeric face seal, refer to Set an elastomeric face seal. This seal is designed to run dry, so no flush is necessary.

Set an elastomeric face seal

This procedure ensures that the elastomeric seal attains proper contact. No other adjustments are necessary.

1. Remove the gland nuts.
2. Slide the gland back on the sleeve.
3. Pull the rotary back on the sleeve until the rotary is about 25 mm | 1 in. beyond the stuffing box face.
4. Push the gland back onto the studs, pushing the rotary back along the sleeve.
5. Tighten the gland nuts.

Pump priming

Prime the pump with the suction supply above the pump

1. Slowly open the suction isolation valve.
2. Open the air vents on the suction and discharge piping until the pumped fluid flows out.
3. Close the air vents.

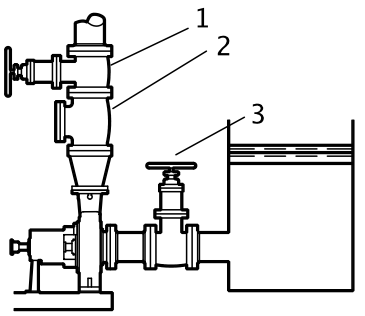

1. Discharge isolation valve
2. Check valve
3. Suction isolation valve

Figure 41: Suction supply above pump

Prime the pump with the suction supply below the pump

Use a foot valve and an outside source of liquid in order to prime the pump. The liquid can come from one of these sources:

- A priming pump
- A pressurized discharge line
- Another outside supply

1. Close the discharge isolation valve.
2. Open the air vent valves in the casing.
3. Open the valve in the outside supply line until only liquid escapes from the vent valves.
4. Close the vent valves.
5. Close the outside supply line.

This illustration is an example of priming the pump with a foot valve and an outside supply:

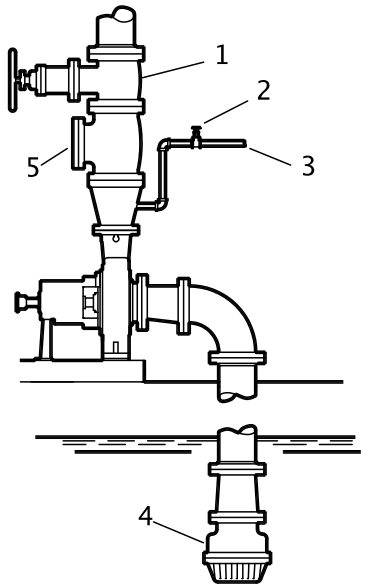

1. Discharge isolation valve
2. Shutoff valve
3. From outside supply
4. Foot valve
5. Check valve

Figure 42: Pump priming with suction supply below pump

This illustration is an example of priming the pump with a foot valve using a bypass around the check valve:

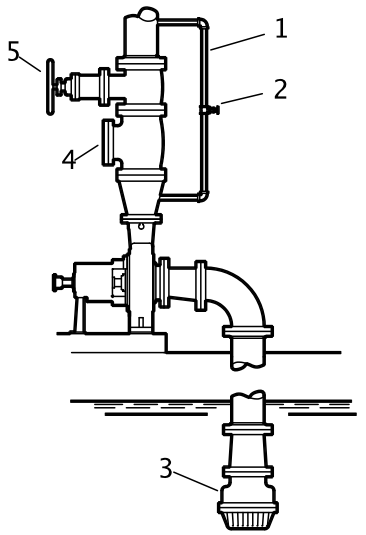

1. By-pass line
2. Shutoff valve
3. Foot valve
4. Check valve
5. Discharge isolation valve

Figure 43: Pump priming with suction supply below pump with foot valve using bypass around check valve

Other methods of priming the pump

You can also use these methods in order to prime the pump:

- Prime by ejector
- Prime by automatic priming pump

Start the pump

WARNING: Immediately observe the pressure gauges. If discharge pressure is not quickly attained, stop the driver immediately, reprime, and attempt to restart the pump.

CAUTION:

- Immediately observe the pressure gauges. If discharge pressure is not quickly attained, stop the driver, reprime, and attempt to restart the pump.
- Observe the pump for vibration levels, bearing temperature, and excessive noise. If normal levels are exceeded, shut down the pump and resolve the issue.
- On pure or purge-oil mist-lubricated units, remove the viewing port plugs to verify that oil mist flowing properly. Replace the plugs.
- On frame mounted units, ensure that the oil level is correct prior to starting pump. Close coupled pumps do not have oil lubricated bearings.
- Ensure all flush and cooling systems are operating correctly prior to starting pump.

Before you start the pump, you must perform these tasks:

- Open the suction valve.
- Open any recirculation or cooling lines.

1. Fully close or partially open the discharge valve, depending on system conditions.
2. Start the driver.
3. Slowly open the discharge valve until the pump reaches the desired flow.
4. Immediately check the pressure gauge to ensure that the pump quickly reaches the correct discharge pressure.
5. If the pump fails to reach the correct pressure, perform these steps:
   a) Stop the driver.
   b) Prime the pump again.
   c) Restart the driver.
6. Monitor the pump while it is operating:
   a) Check the pump for bearing temperature, excessive vibration, and noise.
   b) If the pump exceeds normal levels, then shut down the pump immediately and correct the problem.
   A pump can exceed normal levels for several reasons. See Troubleshooting for information about possible solutions to this problem.
7. Repeat steps 5 and 6 until the pump runs properly.

Activate the i-*ALERT*® Condition Monitor

WARNING:
Never heat the condition monitor to temperatures in excess of 100°C | 212°F. Heating to these temperatures could result in death or serious injury.

CAUTION:
Always wear protective gloves. The pump and condition monitor can be hot.

By using the i-*ALERT*® Condition monitor or the i-*ALERT*®*2* Bluetooth Equipment Health Monitor, you agree to be bound by the Terms and Conditions of the *Software License Agreement* (page 18)

The condition monitor is ready for activation when the pump is running and has reached a steady flow, pressure, and temperature. This process only takes a few minutes.

1. Place a small magnet on the condition monitor over the ITT logo and then remove it, as this example shows.

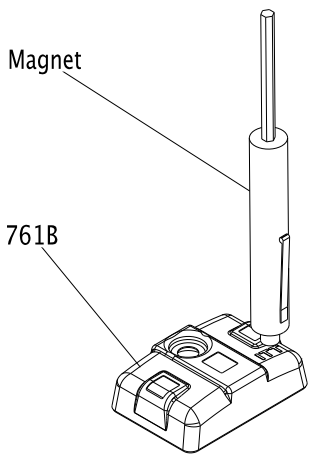

Figure 44: i-*ALERT*® condition monitor

When the condition monitor is activated it:

1. Displays a series of red LEDs followed by a solid green LED.
2. Collects eight samples that are spaced one second apart.
3. Averages these readings to establish the baseline vibration level.
4. Flashes a green LED after approximately twelve seconds.

For the first ten minutes, the green LED flashes every second for five consecutive flashes and then pauses to take a vibration reading. More frequent measurements (every six seconds) are taken in this startup period so that an alarm can be immediately detected.

i-*ALERT*® Condition Monitor routine operation

To install and/or activate the i-*ALERT*®*2* monitor, please refer to the i-*ALERT*®*2* IOM or *http://www.ittproservices.com/aftermarket-products/monitoring/i-alert2/* (page) (i-ALERT2.com). Routine operation instructions are also included in the i-*ALERT*®*2* IOM.

Measurement interval

This table shows the measurement intervals for the condition monitor during normal operation and when the monitor is in alarm mode.

Mode	Measurement interval
Normal operating mode	Five minutes
Alarm mode	Two minutes

When the condition monitor measures a reading beyond the specified temperature and vibration limits, the appropriate red LED flashes. After the process or pump condition that causes the alarm is corrected, the condition monitor returns to normal mode after one normal-level measurement.

Alarm mode

When the condition monitor is in alarm mode, you should investigate the cause of the condition and make necessary corrections in a timely manner.

Magnetic device considerations

Be careful when you use magnetic devices in close proximity of the condition monitor, such as magnetic vibration-monitoring probes or dial indicators. These magnetic devices can accidentally activate or deactivate the condition monitor resulting in improper alarm levels or loss of monitoring.

Pump operation precautions

General considerations

CAUTION:

- Vary the capacity with the regulating valve in the discharge line. Never throttle the flow from the suction side since this can result in decreased performance, unexpected heat generation, and equipment damage.
  Do not overload the driver. Driver overload can result in unexpected heat generation and equipment damage. The driver can overload in these circumstances:
  - The specific gravity of the pumped fluid is greater than expected.
  - The pumped fluid exceeds the rated flow rate.
- Do not operate pump past the maximum flow. For maximum flow refer to the pump performance curve.
- Do not overload the driver. Driver overload can result in unexpected heat generation and equipment damage. The driver can overload in these circumstances:
  - The specific gravity of the pumped fluid is greater than expected.
  - The pumped fluid exceeds the rated flow rate.
- Do not operate pump below hydraulic or thermal minimum flow. For hydraulic minimum flows refer to technical manual and pump performance curve. To calculate thermal minimum flow, refer to HI Centrifugal Pumps for Design and Application ANSI/HI 1.3-2000.
- Make sure to operate the pump at or near the rated conditions. Failure to do so can result in pump damage from cavitation or recirculation.

Operation at reduced capacity

WARNING:
Never operate any pumping system with a blocked suction and discharge. Operation, even for a brief period under these conditions, can cause confined pumped fluid to overheat, which results in a violent explosion. You must take all necessary measures to avoid this condition. If pump becomes plugged shut down and unplug prior to restarting pump.

CAUTION:

- The pump and system must be free of foreign objects. If pump becomes plugged, shut down and unplug prior to restarting pump.
- Avoid excessive vibration levels. Excessive vibration levels can damage the bearings, stuffing box or seal chamber, and the mechanical seal, which can result in decreased performance.
- Avoid increased radial load. Failure to do so can cause stress on the shaft and bearings.
- Avoid heat build-up. Failure to do so can cause rotating parts to score or seize.
- Avoid cavitation. Failure to do so can cause damage to the internal surfaces of the pump.

Operation under freezing conditions

NOTICE:
Do not expose an idle pump to freezing conditions. Drain all liquid that is inside the pump and the cooling coils. Failure to do so can cause liquid to freeze and damage the pump.

Shut down the pump

WARNING:
The pump can handle hazardous and toxic fluids. Identify the contents of the pump and observe proper decontamination procedures in order to eliminate the possible exposure to any hazardous or toxic fluids. Wear the proper personal protective equipment. Potential hazards include, but are not limited to, high temperature, flammable, acidic, caustic, explosive, and other risks. You must handle and dispose of pumped fluid in compliance with the applicable environmental regulations.

1. Slowly close the discharge valve.
2. Shut down and lock out the driver to prevent accidental rotation.

Deactivate the i-*ALERT*® Condition Monitor

NOTICE:
Always deactivate the condition monitor when the pump is going to be shut down for an extended period of time. Failure to do so will result in reduced battery life.

1. Touch and hold a small magnet to the condition monitor over the ITT logo until the red LEDs blink three times.
   This should take 10-15 seconds if the condition monitor is in normal operating mode and approximately five seconds if the condition monitor is in alarm mode.
2. Remove the magnet.

If the deactivation is successful, solid red LEDs will be displayed.

Reset the i-*ALERT*® Condition Monitor

To deactivate or reset the i-*ALERT*®*2* monitor, please refer to the i-*ALERT*®*2* IOM or i-ALERT2.com, *http://www.ittproservices.com/aftermarket-products/monitoring/i-alert2/* (page)

NOTICE:
Always reset the condition monitor when the pump is started after maintenance, system change, or down-time. Failure to do so may result in false baseline levels that could cause the condition monitor to alert in error.

1. Touch a magnet to the condition monitor over the ITT logo to turn the power on.The condition monitor begins to establish a new baseline vibration level.

Make the final alignment of the pump and driver

WARNING:

- ⟨Ex⟩ Always disconnect and lock out power to the driver before you perform any installation or maintenance tasks. Failure to disconnect and lock out driver power will result in serious physical injury.
  - Electrical connections must be made by certified electricians in compliance with all international, national, state, and local rules.
  - Refer to driver/coupling/gear manufacturers installation and operation manuals (IOM) for specific instructions and recommendations.
- Follow shaft alignment procedures in order to prevent catastrophic failure of drive components or unintended contact of rotating parts. Follow the coupling installation and operation procedures from the coupling manufacturer.
- ⟨Ex⟩ Alignment procedures must be followed to prevent unintended contact of rotating parts. Follow coupling manufacturer's installation and operation procedures.

You must check the final alignment after the pump and driver are at operating temperature. For initial alignment instructions, see the Installation chapter.

1. Run the unit under actual operating conditions for enough time to bring the pump, driver, and associated system to operating temperature.
2. Shut down the pump and the driver.
3. Remove the coupling guard.
   See Remove the coupling guard in the Maintenance chapter.
4. Check the alignment while the unit is still hot.
   See Pump-to-driver alignment in the Installation chapter.
5. Reinstall the coupling guard.
6. Restart the pump and driver.

Maintenance

Maintenance schedule

Maintenance inspections

A maintenance schedule includes these types of inspections:

- Routine maintenance
- Routine inspections
- Three-month inspections
- Annual inspections

Shorten the inspection intervals appropriately if the pumped fluid is abrasive or corrosive or if the environment is classified as potentially explosive.

Routine maintenance

Perform these tasks whenever you perform routine maintenance:

- Lubricate the bearings.
- Inspect the seal.

Routine inspections

Perform these tasks whenever you check the pump during routine inspections:

- Check the level and condition of the oil through the sight glass on the bearing frame.
- Check for unusual noise, vibration, and bearing temperatures.
- Check the pump and piping for leaks.
- Analyze the vibration.
- Inspect the discharge pressure.
- Inspect the temperature.
- Check the seal chamber and stuffing box for leaks.
  - Ensure that there are no leaks from the mechanical seal.
  - Adjust or replace the packing in the stuffing box if you notice excessive leaking.

Three-month inspections

Perform these tasks every three months:

- Check that the foundation and the hold-down bolts are tight.
- Check the packing if the pump has been left idle, and replace as required.
- Change the oil every three months (2000 operating hours) at minimum.
  - Change the oil more often if there are adverse atmospheric or other conditions that might contaminate or break down the oil.
- Check the shaft alignment, and realign as required.

Annual inspections

Perform these inspections one time each year:

- Check the pump capacity.
- Check the pump pressure.
- Check the pump power.

If the pump performance does not satisfy your process requirements, and the process requirements have not changed, then perform these steps:

1. Disassemble the pump.
2. Inspect it.

3. Replace worn parts.

Bearing maintenance

These bearing lubrication sections list different temperatures of the pumped fluid. If the pump is ATEX-certified and the temperature of the pumped fluid exceeds the permitted temperature values, then consult your ITT representative.

Bearing lubrication schedule

Type of bearing	First lubrication	Lubrication intervals
Oil-lubricated bearings	Add oil before you install and start the pump. Change the oil after 200 hours for new bearings.	After the first 200 hours, change the oil every 2000 operating hours or every three months.
Grease-lubricated bearings	Grease-lubricated bearings are initially lubricated at the factory.	Regrease bearings every 2000 operating hours or every three months.

Lubricating-oil requirements

Oil requirements based on temperature

For the majority of operating conditions, bearing temperatures run between 49°C | 120°F and 82°C | 180°F, and you can use an oil of ISO viscosity grade 68 at 38°C | 100°F. If temperatures exceed 82°C | 180°F, refer to the table for temperature requirements.

Temperature	Oil requirement
Bearing temperatures exceed 82°C	180°F	Use ISO viscosity grade 100 with bearing-frame cooling or finned-tube oil cooler. The finned-tube oil cooler is standard with the HT 3196 model and optional for all other models.
Pumped-fluid temperatures exceed 177°C	350°F	Use synthetic lubrication.

Oil volumes

Oil volume requirements

This table shows the required amount of oil for oil-lubricated bearings.

Frame	ml	Qts.	Oz.
STi	400	0.5	16
MTi	1400	1.5	47
LTi	1400	1.5	48
XLT-i and i17	3000	3	96

Acceptable oil for lubricating bearings

Acceptable lubricants

Examples of acceptable high quality turbine oils with rust and oxidation inhibitors.

Brand	Lubricant type
Chevron	GTS Oil 68
Exxon	Teresstic EP 68
Mobil	DTE 26 300 SSU @ 38°C | 100°F
Philips	Mangus Oil 315
Shell	Tellus Oil 68
Sunoco	Sunvis 968
Royal Purple	SYNFILM ISO VG 68 Synthetic Lube

Examples of acceptable synthetic lubricants.

Brand	Lubricant type
Castrol	Hyspin R&O 220
Chevron	GST 220
Exxon	Teresstic 220
Mobil	DTE Oil BB SHC 630
Shell	Marlina 220 Tellus 220
Sunoco	Sunvis 9220
Texaco	Regal R&O 220 Rando HD 220
Royal Purple	Synfilm GT 220 Synergy 220

Regrease the grease-lubricated bearings

NOTICE:
Make sure that the grease container, the greasing device, and the fittings are clean. Failure to do this can result in impurities entering the bearing housing when you regrease the bearings.

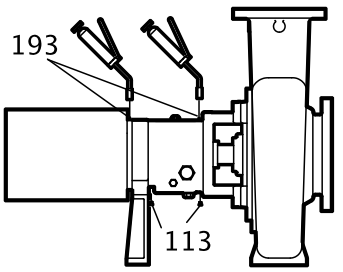

Figure 45: Bearing lubrication

1. Wipe dirt from the grease fittings.
2. Remove the two grease-relief plugs from the bottom of the frame.
3. Fill both of the grease cavities through the fittings with a recommended grease until the fresh grease comes out of the relief holes.
4. Make sure that the frame seals are seated in the bearing housing.
   If they are not, press them in place with the drains located at the bottom.
5. Reinstall the grease-relief plugs.
6. Wipe off any excess grease.
7. Recheck the alignment.

The bearing temperature usually rises after you regrease due to an excess supply of grease. Temperatures return to normal in about two to four operating hours as the pump runs and purges the excess grease from the bearings.

Lubricating-grease requirements

Precautions

NOTICE:

- Never mix greases of different consistencies (NLGI 1 or 3 with NLGI 2) or with different thickeners. For example, never mix a lithium-based grease with a polyurea-based grease. Doing so may result in decreased performance.
- Remove the bearings and old grease if you need to change the grease type or consistency. Failure to do so may result in equipment damage or decreased performance.

Bearing temperature

Bearing temperatures are generally about 18°C | 20°F greater than bearing-housing outer surface temperatures.
This table shows the type of grease required for the operating temperature of the pump.

Bearing temperature	Type of grease
-15°C to 110°C | 5°F to 230°F	Use a lithium-based mineral-oil grease with a consistency of NLGI 2.
Exceed 177°C | 350°F	Use a high-temperature grease. Mineral-oil greases should have oxidation stabilizers and a consistency of NGLI 3.

Grease recommendations based on temperature

Most pumps use Sunoco 2EP grease. High temperature units that can pump fluids with a temperature greater than 177°C | 350°F use Mobil SCH32.
This table shows which brand of grease to use when lubricating the pump.

Brand	When temperature of pumped fluid is less than 177°C | 350°F NLGI consistency 2	When temperature of pumped fluid is greater than177°C | 350°F NLGI consistency 3
Mobil	Mobilux EP2	SCH32
Exxon	Unirex N2	Unirex N3
Sunoco	Mutipurpose 2EP	N/A
SKF	LGMT 2	LGMT 3

Lubricate the bearings after a shutdown period

1. Flush out the bearings and bearing frame with a light oil to remove contaminants. During flushing, make sure to rotate the shaft slowly by hand.
2. Flush the bearing housing with the proper lubricating oil to ensure oil quality after cleaning.
3. Refer to "Reassembly" section for proper bearing greasing procedure.

Shaft seal maintenance

Mechanical-seal maintenance

WARNING:
⟨Ex⟩ The mechanical seal used in an Ex-classified environment must be properly certified. Prior to startup, make sure that all areas that could leak pumped fluid to the work environment are closed.

CAUTION:
Never operate the pump without liquid supplied to mechanical seal. If you run a mechanical seal dry, even for a few seconds, this can cause seal damage. Physical injury can occur if a mechanical seal fails.

Cartridge-type mechanical seals

Cartridge-type mechanical seals are commonly used. Cartridge seals are preset by the seal manufacturer and require no field settings. Cartridge seals installed by the user require disengagement of the holding clips prior to operation, allowing the seal to slide into place. If the seal has been installed in the pump by ITT, these clips have already been disengaged.

Other mechanical seal types

For other types of mechanical seals, refer to the instructions provided by the seal manufacturer for installation and setting.

Reference drawing

The manufacturer supplies a reference drawing with the data package. Keep this drawing for future use when you perform maintenance and seal adjustments. The seal drawing specifies the required flush fluid and attachment points.

Before you start the pump

Check the seal and all flush piping.

Mechanical seal life

The life of a mechanical seal depends on the cleanliness of the pumped fluid. Due to the diversity of operating conditions, it is not possible to give definite indications as to the life of a mechanical seal.

Packed stuffing-box maintenance

WARNING:

- Packed stuffing boxes are not allowed in an ATEX-classified environment.
- Never attempt to replace the packing until the driver is properly locked out and the coupling spacer is removed.

Accepted leakage rate

It is not necessary to shut down or disassemble the pump to inspect the packing operation. During normal operation, the packing should leak approximately one drop per second.

Adjustment of gland

Adjust the gland if the leakage rate is greater than or less than the specified rate.

Evenly adjust each of the two gland bolts with a one-quarter (1/4) turn until the desired leakage rate is obtained. Tighten the bolts to decrease the rate. Loosen the bolts to increase the rate.

Tightening of packing

NOTICE: Never over-tighten packing to the point where less than one drop per second is observed. Over-tightening can cause excessive wear and power consumption during operation.

If you cannot tighten the packing to obtain less than the specified leakage rate, then replace the packing.

Dynamic-seal maintenance

WARNING:

Dynamic seals are not allowed in an ATEX-classified environment.

About the dynamic seal

Dynamic seal parts do not wear substantially to affect operation and do not require maintenance unless the service is particularly abrasive or corrosive.

Repeller

The dynamic repeller prevents pumpage leaks through the stuffing box when the pump operates under published acceptable conditions.

Static seal

A static seal prevents leakage when the pump is shut down. A static seal is either of the following:

- a lip seal
- an elastomeric-face seal
- graphite packing

The only maintenance that the lip seal and the elastomeric-face seal require is replacement when leakage becomes excessive.

The graphite packing should be installed as stuffing-box packing and is designed to run dry.

Disassembly

Disassembly precautions

WARNING:

- (Ex) This manual clearly identifies accepted methods for disassembling units. These methods must be adhered to. Trapped liquid can rapidly expand and result in a violent explosion and injury. Never apply heat to impellers, propellers, or their retaining devices to aid in their removal unless explicitly stated in this manual.
- (Ex) Always disconnect and lock out power to the driver before you perform any installation or maintenance tasks. Failure to disconnect and lock out driver power will result in serious physical injury.
  - Electrical connections must be made by certified electricians in compliance with all international, national, state, and local rules.
  - Refer to driver/coupling/gear manufacturers installation and operation manuals (IOM) for specific instructions and recommendations.
- Crush hazard. The unit and the components can be heavy. Use proper lifting methods and wear steel-toed shoes at all times.
- The pump can handle hazardous and toxic fluids. Identify the contents of the pump and observe proper decontamination procedures in order to eliminate the possible exposure to any hazardous or toxic fluids. Wear the proper personal protective equipment. Potential hazards include, but are not limited to, high temperature, flammable, acidic, caustic, explosive, and other risks. You must handle and dispose of pumped fluid in compliance with the applicable environmental regulations.
- A small amount of liquid will be present in certain areas like the seal chamber.

NOTICE:

- Avoid injury. Worn pump components can have sharp edges. Wear appropriate gloves while handling these parts.
- Make sure that all replacement parts are available before you disassemble the pump for overhaul.

Tools required

In order to disassemble the pump, you need these tools:

- Bearing puller
- Brass drift punch
- Cleaning agents and solvents
- Dial indicators
- Feeler gauges
- Hex wrenches
- Hydraulic press
- Induction heater
- Leveling blocks and shims
- Lifting sling
- Micrometer
- Rubber mallet
- Screwdriver
- Snap-ring pliers
- Torque wrench with sockets
- Wrenches
- Lifting eyebolt (dependent on pump size)

Drain the pump

CAUTION:
- Allow all system and pump components to cool before you handle them to prevent physical injury.
- If your pump is a Model NM3171, NM3196, 3198, 3298, V3298, SP3298, 4150, 4550, or 3107 there is a possible risk of static electric discharge from plastic parts that are not properly grounded. If the pumped fluid is non-conductive, drain and flush the pump with a conductive fluid under conditions that will not allow for a spark to be released to the atmosphere.

1. Close the isolation valves on the suction and discharge sides of the pump.
   You must drain the system if no valves are installed.
2. Open the drain valve.
   Do not proceed until liquid stops coming out of the drain valve. If liquid continues to flow from the drain valve, the isolation valves are not sealing properly and you must repair them before you proceed.
3. Leave the drain valve open and remove the drain plug located on the bottom of the pump housing.
   Do not reinstall the plug or close the drain valve until the reassembly is complete.
4. Drain the liquid from the piping and flush the pump if it is necessary.
5. Disconnect all auxiliary piping and tubing.
6. Remove the coupling guard.

Remove the coupling

1. Disconnect the coupling.
2. Remove the C-face adapter.
3. Remove the coupling-guard pump end-plate.

Remove the back pull-out assembly

CAUTION:
Never remove the back pull-out assembly without assistance.

1. Is your bearing frame oil lubricated?
   - If No: Proceed to step 2.
   - If Yes:
     1. Remove the bearing-frame drain plug (408A) in order to drain oil from the bearing frame.
     2. Replace the plug after the oil is drained.

3. Remove the oil reservoir, if equipped.

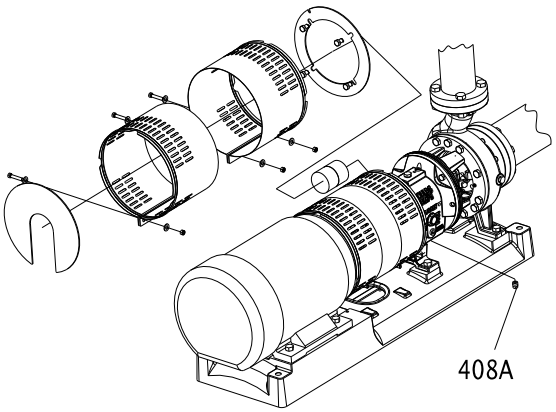

Figure 46: Back pull-out assembly removal (oil lubricated bearing frame)

NOTICE:
Oil analysis should be part of a preventive maintenance program that determines the cause of a failure. Save the oil in a clean container for inspection.

2. Does your pump use a C-face adapter?
   - If Yes: Place one sling from the hoist through the frame adapter (108) or frame (228A) for the STi and a second sling from the hoist through the C-face adapter.
   - If No: Place a sling from the hoist through the frame adapter (108) or the frame (228A) for the STi.

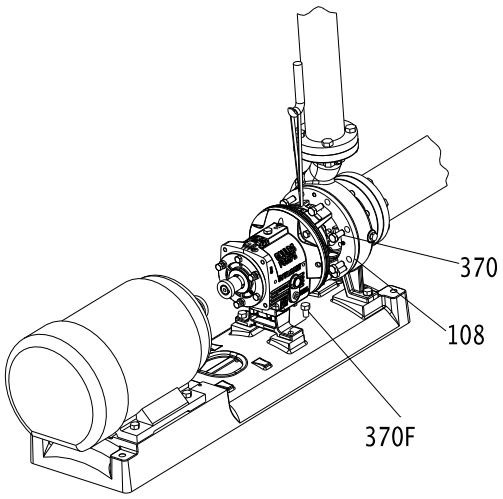

Figure 47: Back pull-out assembly removal (with C-face adapter)

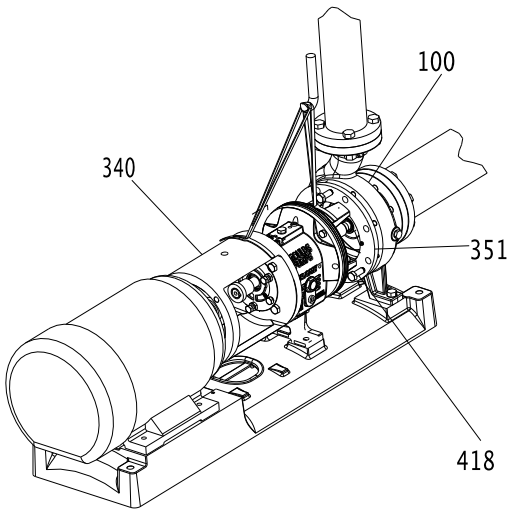

Figure 48: Back pull-out assembly removal (without C-face adapter)

3. Remove the hold-down bolts of the bearing frame foot.
4. Remove the casing bolts.

WARNING:
- Never use heat to disassemble the pump due to the risk of an explosion from trapped liquid.

5. Tighten the jackscrews evenly, using an alternating pattern, in order to remove the back pull-out assembly.
   You can use penetrating oil if the adapter to the casing joint is corroded.
6. Remove the back pull-out assembly from the casing (100).
7. Mark and remove the shims from under the frame foot and save them for reassembly.
8. Remove and discard the casing gasket.
   You will insert a new casing gasket during reassembly.
9. Remove the jackscrews.
10. Clean all gasket surfaces.
    Clean surfaces prevent the casing gasket from partially adhering to the casing due to binders and adhesives in the gasket material.

Remove the coupling hub

1. Clamp the frame adapter securely to the workbench.
2. Remove the coupling hub.

Mark the shaft for relocation of the coupling hub during reassembly.

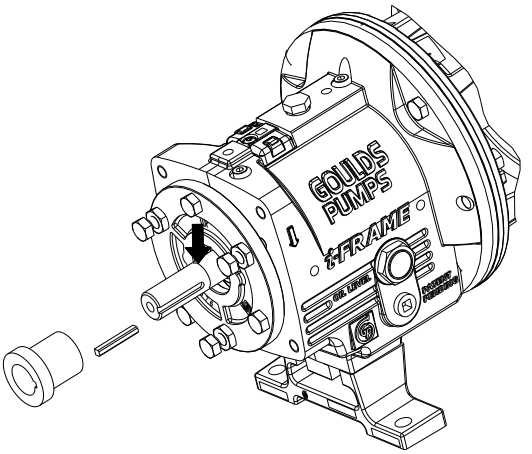

Figure 49: Coupling hub removal

Impeller removal

Remove the impeller (STi, MTi, and LTi)

WARNING:
Never apply heat to remove an impeller. The use of heat may cause an explosion due to trapped liquid, resulting in severe physical injury and property damage.

CAUTION:
Wear heavy work gloves when you handle impellers. The sharp edges can cause physical injury.

1. Slide the shaft wrench (A05107A or A01676A) over the shaft (122) and key.
2. Rotate the impeller (101) clockwise (viewed from the impeller end of the shaft) and raise the wrench off of the work surface.
3. To loosen the impeller, quickly turn it counter-clockwise (viewed from the impeller end of the shaft) while impacting the wrench handle on the workbench or a solid block.

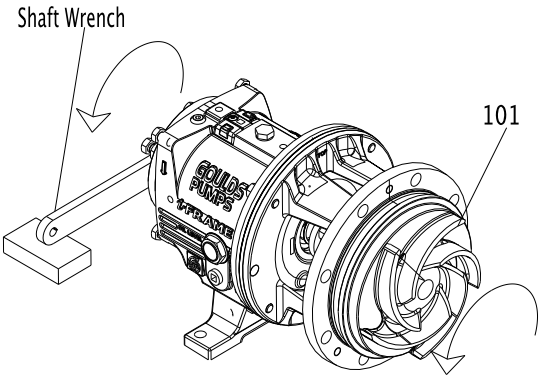

Figure 50: Loosen impeller

4. Repeat step 3 until the impeller becomes loose.
5. Remove and discard the impeller O-ring (412A).

You will insert a new O-ring during reassembly.

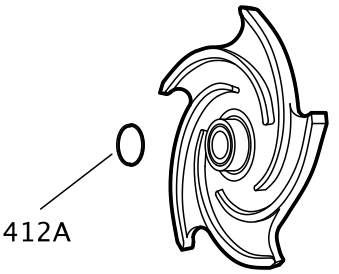

Figure 51: O-ring for models 3196, HT 3196, NM 3196, 3198, and 3796

If the impeller cannot be removed by the previous methods, cut the shaft between the gland and the frame, remove the impeller, stuffing-box cover, gland, sleeve, and shaft end as a unit. Do not apply heat.

Remove the impeller (XLT-i, and i17)

WARNING:
Never apply heat to remove an impeller. The use of heat may cause an explosion due to trapped liquid, resulting in severe physical injury and property damage.

CAUTION:
Wear heavy work gloves when you handle impellers. The sharp edges can cause physical injury.

Clamp the frame foot (241) to the workbench when you use this method to remove the impeller.

1. Remove the impeller plug (458Y) from the front of the impeller (101) and discard the Teflon gasket (428D).

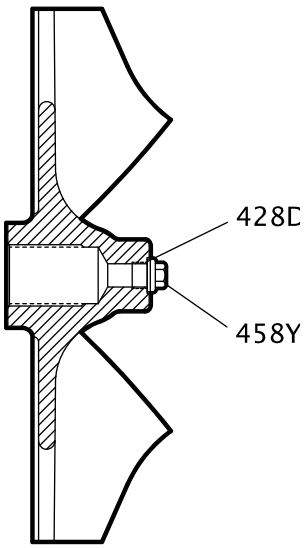

2. Spray penetrating oil through the plug hole into the cavity at the end of the shaft and let it penetrate for 15 minutes.
3. While waiting, rotate the shaft several times to distribute the oil.
4. Slide the shaft wrench (A05107A) over the shaft (122) and key.
5. Rotate the impeller clockwise (viewed from the impeller end of the shaft) and raise the wrench off of the work surface.

6. To loosen the impeller, quickly turn the impeller counter-clockwise (viewed from the impeller end of the shaft) while impacting the wrench handle on the workbench or a solid block.
7. Repeat step 6 until the impeller becomes loose.
8. If step 6 and 7 do not work then do this:
   a) Place a socket wrench over the cast nut on the impeller hub.
   b) Turn the impeller counter-clockwise (viewed from the impeller end of the shaft).

   Be sure that the impeller wrench rests on the workbench or a solid block and that the power end is secure on the work surface.
9. Remove and discard the impeller O-ring (412A).
   You will insert a new O-ring during reassembly.

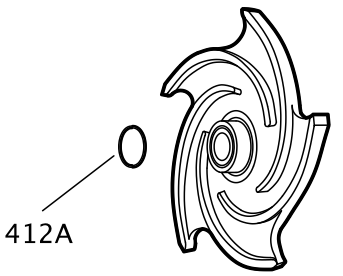

Figure 52: O-ring for models 3196 and HT 3196

If the impeller cannot be removed by the previous methods, cut the shaft between the gland and the frame, remove the impeller, stuffing-box cover, gland, sleeve, and shaft end as a unit. Do not apply heat.

Seal-chamber cover removal

Seal-chamber removal procedures

Choose from one of these procedures to remove the seal-chamber cover.

Table 10: Procedures for seal-chamber cover removal by model

Model	Procedure
3196, CV 3196, HT 3196, LF 3196, 3796	Remove the seal-chamber cover.
NM 3196, 3198	Remove the seal-chamber cover and/or backplate.

Remove the seal-chamber cover (3196, CV 3196, HT 3196, LF 3196, 3796)

1. Remove the gland stud nuts (355).
2. Remove the seal-chamber stud nuts (370H).

3. Remove the seal chamber (184).

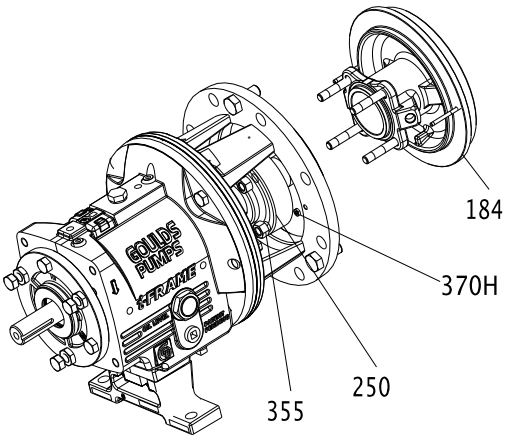

Figure 53: Seal chamber cover removal

4. Remove the shaft sleeve (126) if it is used.
   The mechanical seal is attached to the sleeve.

NOTICE:
Be careful with the stationary portion of the mechanical seal that is either clamped between the backplate and the gland or seated in the seal-chamber bore. Failure to do so may result in equipment damage.

5. Remove the rotary portion of the seal from the sleeve by loosening the setscrews and sliding it off the sleeve.
   Refer to the mechanical-seal instructions for more information.
6. Remove the gland (250), the stationary portion of the seal, and the O-ring (360Q).

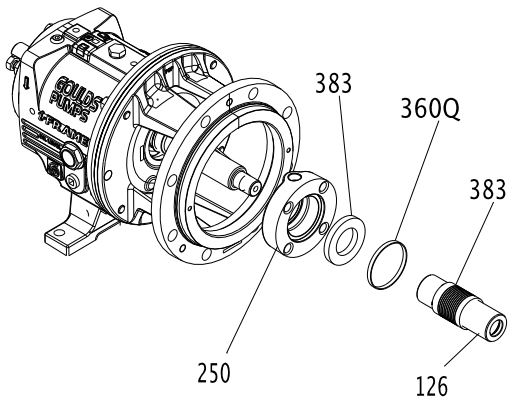

Figure 54: Gland removal

Remove the stuffing-box cover (3196, CV 3196, HT 3196, LF 3196, 3796)

1. Remove the gland nuts (355) and the gland (107).
2. Remove the stuffing-box-cover nuts (370H).

3. Remove the stuffing-box cover (184).

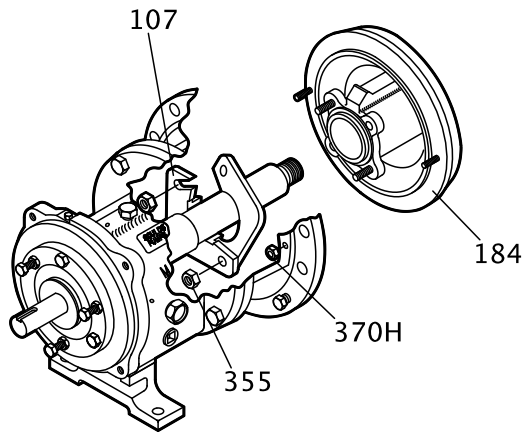

Figure 55: Stuffing box cover removal

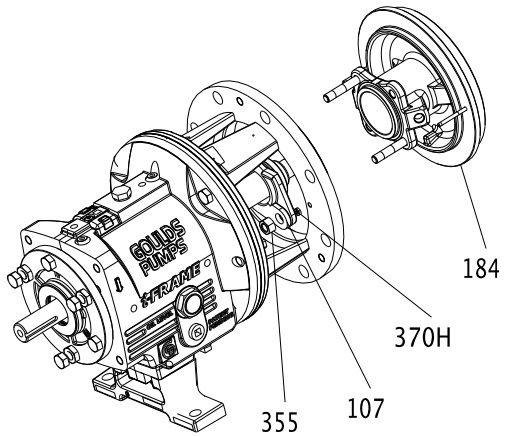

Figure 56: Stuffing box cover removal

4. Remove the shaft sleeve (126).

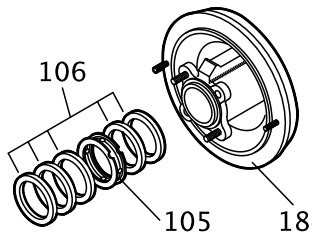

Figure 57: Remove the shaft sleeve

5. Remove the packing (106) and lantern ring (105) from the stuffing-box cover (184).

A lantern ring does not come with self-lubricating graphite packing.

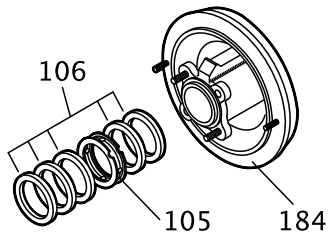

Figure 58: Packing and lantern ring removal

Remove the dynamic seal

1. Remove the stud nuts (370H).
2. Remove the dynamic-seal assembly.

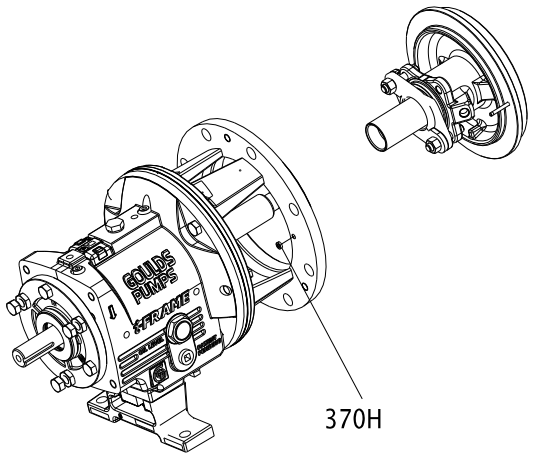

Figure 59: Dynamic seal removal

3. Remove the socket head cap screws (265).
4. Remove the packed stuffing box cover (184) and gasket (264).
5. Remove the repeller (262) from the backplate (444).

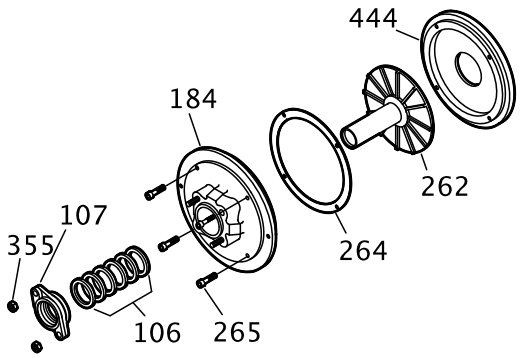

Figure 60: Repeller removal

Remove the frame adapter (MTi, LTi, XLT-i, i17)

The 3198 frame adapter is not interchangeable with the adapter of any other model.

1. Remove the dowel pins (469B) and the bolts (370B).
2. Remove the frame adapter (108).
3. Remove and discard the gasket (360D).

You will install a new gasket during reassembly.

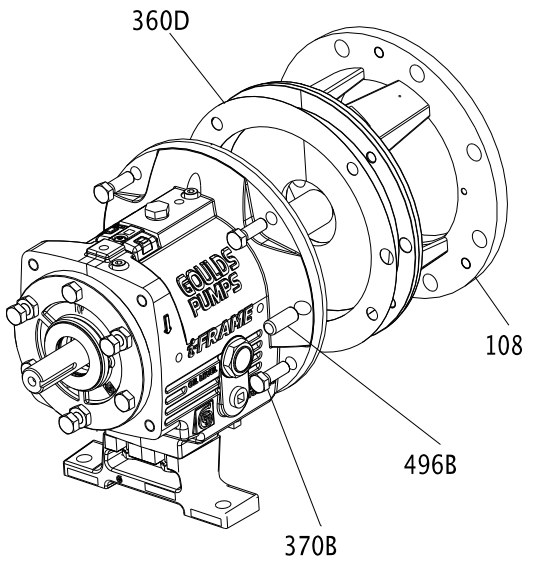

Remove the inboard labyrinth oil seal

Labyrinth oil-seal O-rings are part of the 3196 maintenance kits, and they are sold separately.

1. Determine the fit of your labyrinth oil seal.

Table 11: Labyrinth oil-seal fit

Model	Type of fit
STi	O-ring fit into the bearing-frame adapter (228A)
MTi, LTi, XLT-i and i17	O-ring fit into the frame adapter

2. Remove the O-rings (497H and 497J) and the seal (333A).

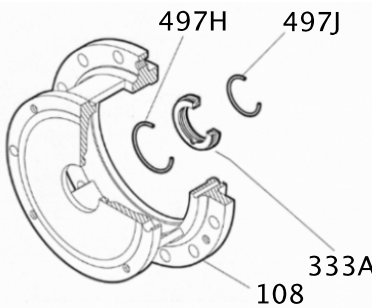

Figure 61: O-ring removal

Power-end disassembly

Disassemble the power end (STi, MTi)

1. Remove the clamp screws (370C) and back off the jam nuts (423).
2. Tighten the jack screws (370D) evenly to move the bearing housing (134) out of the bearing frame (228A).

3. Remove the shaft assembly from the bearing frame (228A).

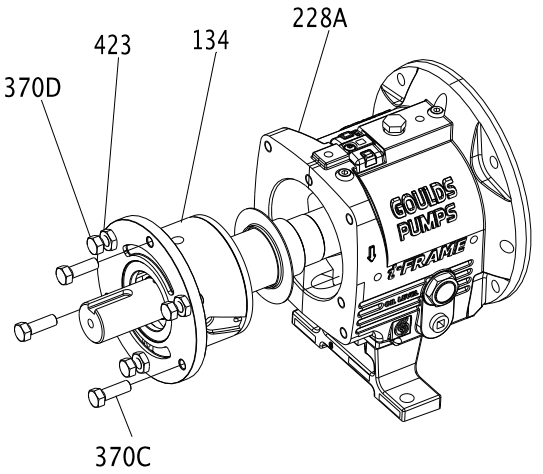

Figure 62: Shaft assembly removal

4. Remove the jack screws (370D) with nuts (423).
5. Remove the bearing housing O-ring (496) and the bearings.
6. Remove the outboard bearing retaining snap ring (361A).

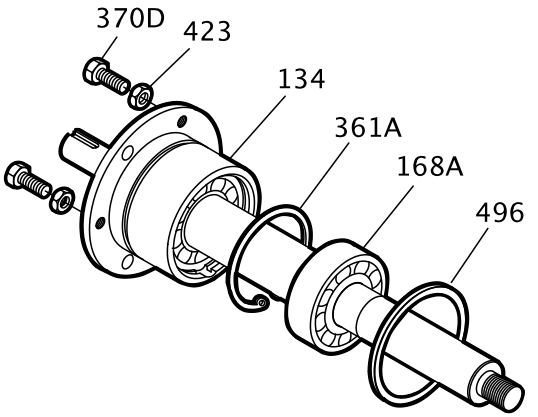

Figure 63: Outboard bearing retaining snap ring removal

7. Remove the bearing housing (134) and bearings (112A and 168A) from the shaft (122).

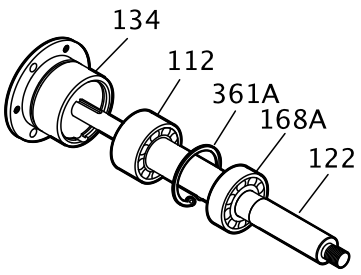

Figure 64: Bearing housing and bearings removal

8. Remove the bearing locknut (136) and bearing lock washer (382).
9. Remove the inboard bearing (168A).
10. Remove the outboard bearing (112A).

NOTICE:
Use force only on the inner race when you press bearings off the shaft. Do not use force in situations in which you might break a part. Doing so may result in equipment damage.

NOTICE:
Save the bearings for inspection. Do not reuse the bearings. Doing so may result in decreased performance.

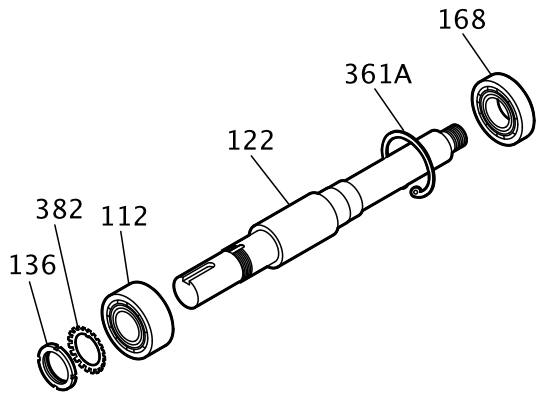

Figure 65: Outboard bearing removal

Disassemble the power end (STi and MTi with duplex bearings)

1. Remove the clamp screws (370C) and back off the jam nuts (423).
2. Tighten the jack screws (370D) evenly to move the bearing housing (134) out of the bearing frame (228A).
3. Remove the shaft assembly from the bearing frame (228A).

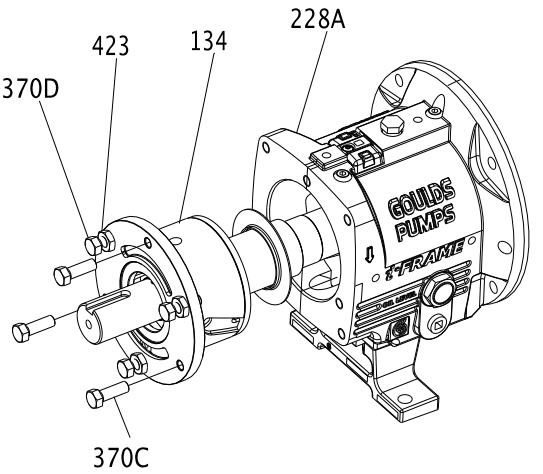

Figure 66: Shaft assembly removal

4. Remove the jack screws (370D) with the nuts (423).

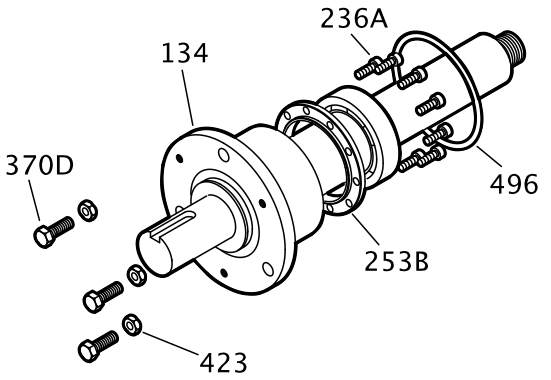

Figure 67: Jack screw removal

5. Remove the bearing housing O-ring (496).
6. Remove the clamp ring screws (236A) and separate the clamp ring (253B) from the bearing housing (134).
   You must remove the bearings before you can remove the clamp ring from the shaft.
7. Remove the bearing housing (134) and the bearings (112A and 168A) from the shaft (122).

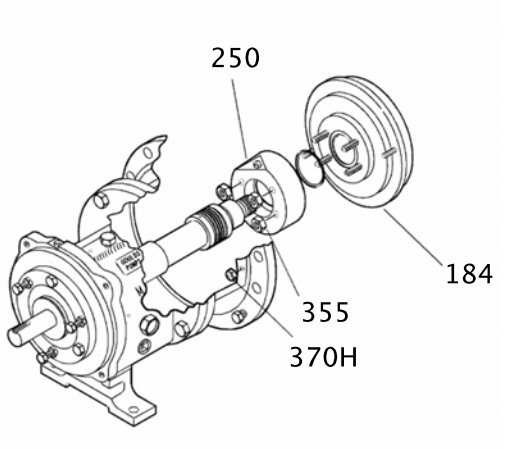

Figure 68: Bearing housing and bearing removal

8. Remove the inboard bearing (168A).

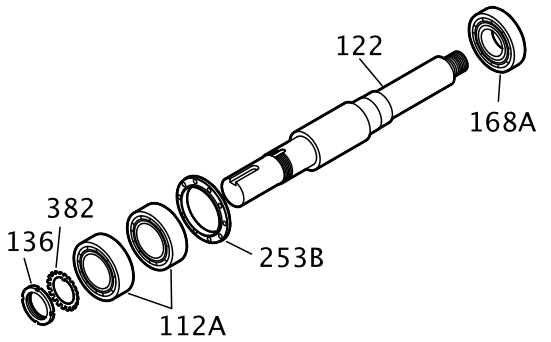

Figure 69: Inboard bearing removal

9. Remove the bearing locknut (136) and bearing lockwasher (382).
10. Remove the outboard bearings (112A).

NOTICE:
Use force only on the inner race when you press bearings off the shaft. Do not use force in situations in which you might break a part. Doing so may result in equipment damage.

NOTICE:
Save the bearings for inspection. Do not reuse the bearings. Doing so may result in decreased performance.

11. Remove the outboard labyrinth oil seal (332A) from the bearing housing (134). Remove the O-rings (497F and 497G) if it is necessary. Labyrinth oil seal O-rings are part of the 3196 maintenance kits and they are sold separately.

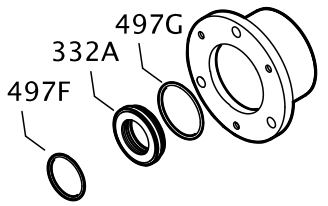

Figure 70: Outboard labyrinth oil seal removal

Disassemble the power end (LTi)

1. Remove the clamp screws (370C) and back off the jam nuts (423).
2. Evenly tighten the jack screws (370D) to move the bearing housing (134) out of the bearing frame (228A).
3. Remove the shaft assembly from the bearing frame (228A).

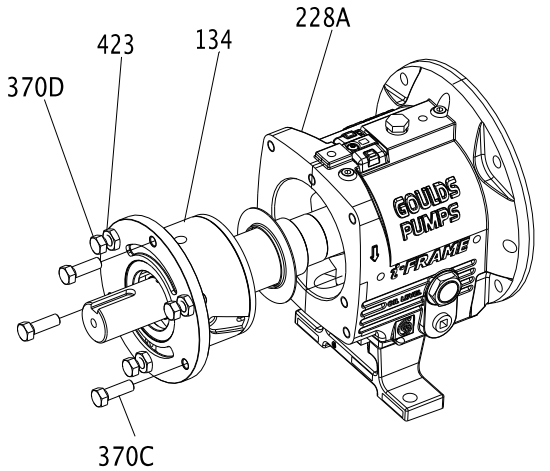

Figure 71: Shaft assembly removal

4. Remove the jack screws (370D) with the nuts (423).
5. Remove the clamp-ring screws (236A) and separate the clamp ring (253B) from the bearing housing (134).

You must remove the bearings before you can remove the clamp ring from the shaft.

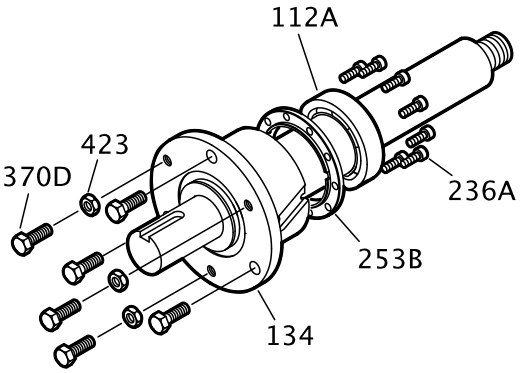

Figure 72: Clamp ring removal

6. Remove the bearing housing (134) and the bearings (112A and 168A) from the shaft (122).

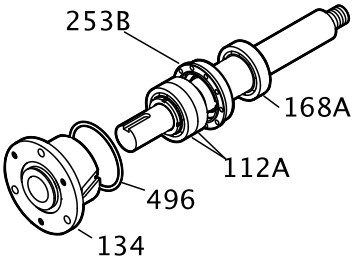

Figure 73: Bearing housing and bearing removal

7. Remove the bearing housing O-ring (496) and the inboard bearing (168A).

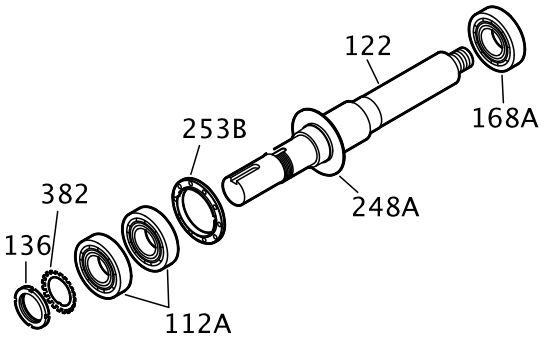

Figure 74: O-ring removal

8. Remove the bearing locknut (136) and the bearing lockwasher (382).
9. Remove the outboard bearings (112A) and the clamp ring (253B).

NOTICE:
Do not remove the oil flinger unless it is damaged. Doing so may result in unnecessary shutdown time or equipment damage.

NOTICE:
Use force only on the inner race when you press bearings off the shaft. Do not use force in situations in which you might break a part. Doing so may result in equipment damage.

NOTICE:
Save the bearings for inspection. Do not reuse the bearings. Doing so may result in decreased performance.

10. Remove the outboard labyrinth oil seal (332A) from the bearing housing (134).
11. Remove the O-rings (497F and 497G) if it is necessary.
    Labyrinth oil-seal O-rings are part of the 3196 maintenance kits, and they are sold separately.

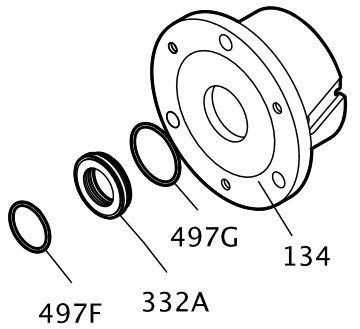

Figure 75: O-ring removal

Disassemble the power end (XLT-i and i17)

1. Remove the bearing frame from the frame foot (241) using the frame-foot bolts (370F).

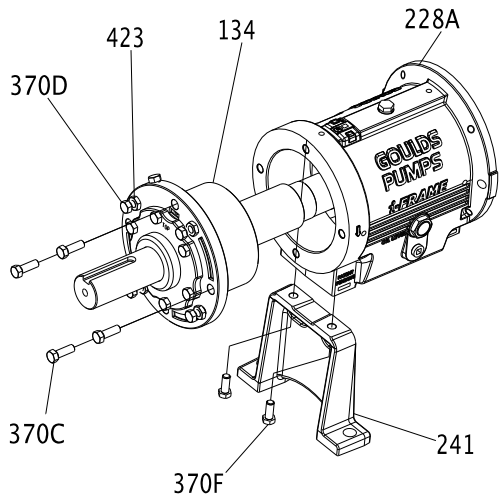

2. Remove the clamp screws (370C) and back off the jam nuts (423).
3. Tighten the jack screws (370D) evenly to move the bearing housing (134) out of the bearing frame (228A).
4. Remove the shaft assembly from the bearing frame (228A).
5. Remove the jack screws (370D), the nuts (423), and the bearing housing O-ring.

6. Remove the inboard bearing (168A).

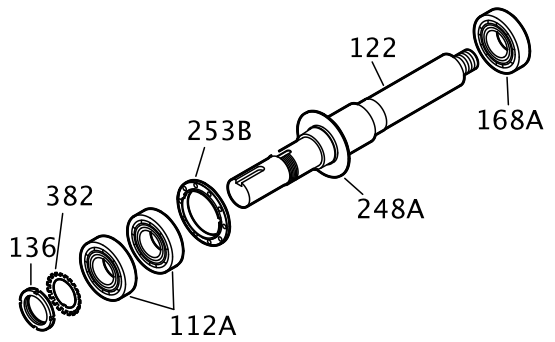

7. Remove the bolts (371C), the bearing end cover (109A), and the gasket (360C).
8. Remove the outboard labyrinth oil seal (332A) from the end cover (109A).
9. Remove the O-rings (497F and 497G) if it is necessary.
   Labyrinth oil-seal O-rings are part of the 3196 maintenance kits, and they are sold separately.

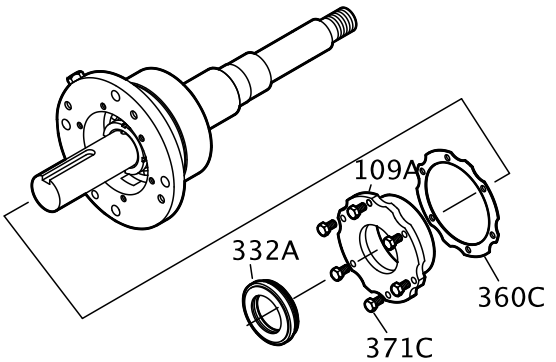

10. Remove the bearing housing (134) and the bearing (112A) from the shaft (122).

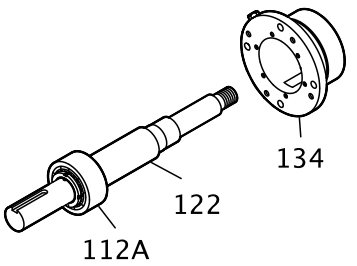

11. Remove the bearing locknut (136), the bearing lockwasher (382), and the outboard bearing (112A).

NOTICE:
Use force only on the inner race when you press bearings off the shaft. Do not use force in situations in which you might break a part. Doing so may result in equipment damage.

NOTICE:
Save the bearings for inspection. Do not reuse the bearings. Doing so may result in decreased performance.

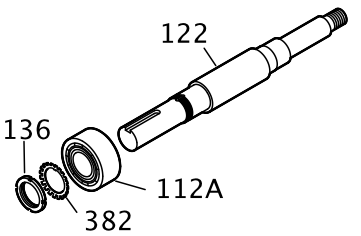

Disassemble the power end (XLT-i and i17 with duplex bearings)

1. Remove the bearing frame to frame foot (241) using the frame-foot bolts (370F).

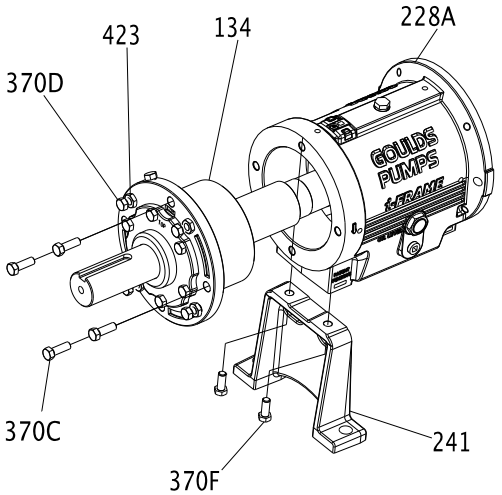

2. Remove the clamp screws (370C) and back off the jam nuts (423).
3. Tighten the jack screws (370D) evenly to move the bearing housing (134) out of the bearing frame (228A).
4. Remove the shaft assembly from the bearing frame (228A).
5. Remove the jack screws (370D) and the nuts (423).
6. Remove the bearing housing O-ring (496) and the inboard bearing (168A).

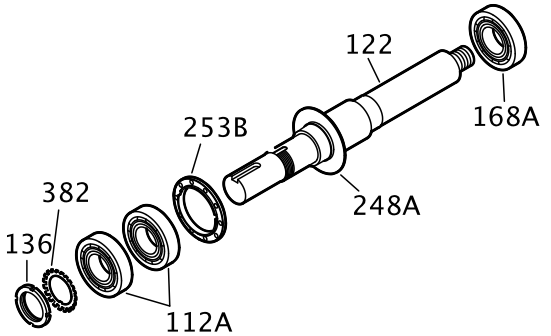

7. Remove the bolts (371C), the end cover (109A), and the gasket (360C).

8. If necessary, remove the outboard labyrinth oil seal (332A) from the end cover (109A) and remove the O-rings (497F and 497G).
   Labyrinth oil-seal O-rings are part of the 3196 maintenance kits, or they are sold separately.

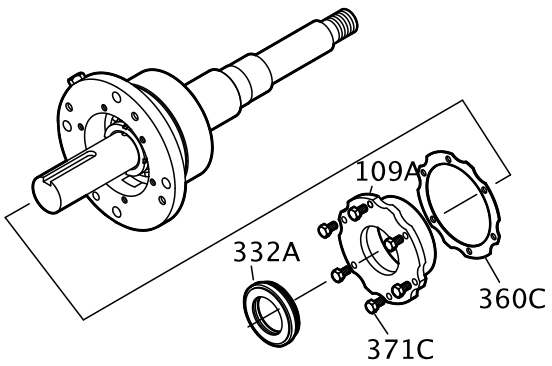

9. Remove the bearing housing (134) and bearings (112A) from the shaft (122) .

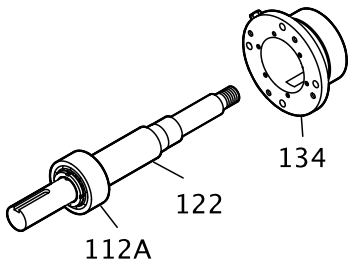

10. Remove the bearing locknut (136), the bearing lockwasher (382), and the outboard bearing (112A).

NOTICE:
Use force only on the inner race when you press bearings off the shaft. Do not use force in situations in which you might break a part. Doing so may result in equipment damage.

NOTICE:
Save the bearings for inspection. Do not reuse the bearings. Doing so may result in decreased performance.

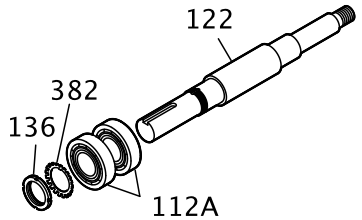

Disassemble the bearing frame

1. Remove these plugs from the bearing frame (228A).
   - oil-fill plug (113A)
   - oil-drain plug (408A)
   - sight-oiler plug (408J)
   - four oil mist/grease connection plugs (408H)

- oil-cooler inlet and outlet plugs (408L and 408M) or oil cooler

2. For the MTi and LTi models, remove the bearing frame foot-to-frame bolts (370F) and the frame foot (241).

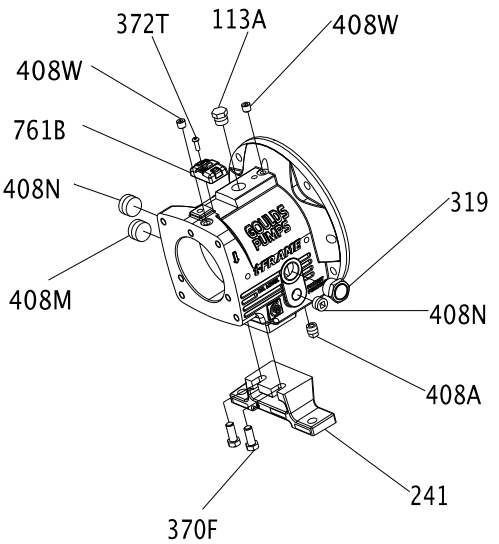

Figure 76: Plug removal

Guidelines for i-*ALERT*® Condition Monitor disposal

Precautions

WARNING:

- Never heat the condition monitor to temperatures in excess of 100°C | 212°F. Heating to these temperatures could result in death or serious injury.
- Never dispose of the condition monitor in a fire. This could result in death or serious injury.

Guidelines

The battery contained in the condition monitor does not contain enough lithium to qualify as reactive hazardous waste. Use these guidelines when disposing of the condition monitor.

- The condition monitor is safe for disposal in the normal municipal waste stream.
- Adhere to local laws when you dispose of the condition monitor.

Disassemble the C-face adapter

NOTICE:
You must properly support the motor with a clean, uncorroded eye bolt or a strap under both end bells. Failure to do so may result in equipment damage.

1. Loosen the motor-mounting bolts and remove the motor.

Table 12: Required number of motor-mounting bolts
This table shows the number of motor-mounting bolts.

Pump frame	Motor frame	Number of bolts
STi	All	4
MTi and LTi	143-286	4
	324-365	8

2. Loosen the bolts attached to the bearing-frame flange and remove the C-face adapter from the bearing frame.

Pre-assembly inspections

Guidelines

Before you assemble the pump parts, make sure you follow these guidelines:

- Inspect the pump parts according to the information in these pre-assembly topics before you reassemble your pump. Replace any part that does not meet the required criteria.
- Make sure that the parts are clean. Clean the pump parts in solvent in order to remove oil, grease, and dirt.

NOTICE:
Protect machined surfaces while you clean the parts. Failure to do so may result in equipment damage.

Replacement guidelines

Casing check and replacement

WARNING:
Avoid death or serious injury. Leaking fluid can cause fire and/or burns. Inspect and assure gasket sealing surfaces are not damaged and repair or replace as necessary.

Inspect the casing for cracks and excessive wear or pitting. Thoroughly clean gasket surfaces and alignment fits in order to remove rust and debris.

Repair or replace the casing if you notice any of these conditions:

- Localized wear or grooving that is greater than 3.2 mm | 1/8 in. deep
- Pitting that is greater than 3.2 mm | 1/8 in. deep
- Irregularities in the casing-gasket seat surface

Casing areas to inspect

The arrows point to the areas to inspect for wear on the casing:

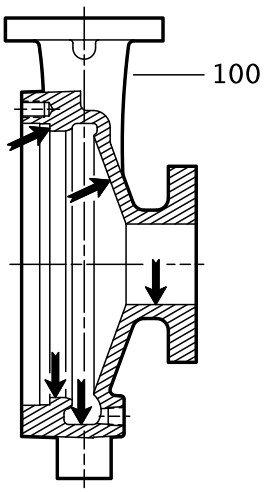

Figure 77: 3196, HT 3196, LF 3196, NM 3196, and 3198 casing

Impeller replacement

This table shows the criteria for replacing the impeller:

Impeller parts	When to replace
Impeller vanes	• When grooved deeper than 1.6 mm | 1/16 in., or • When worn evenly more than 0.8 mm | 1/32 in.
Pumpout vanes	When worn or bent more than 0.8 mm | 1/32 in.
Vane edges	When you see cracks, pitting, or corrosion damage

Impeller areas to inspect

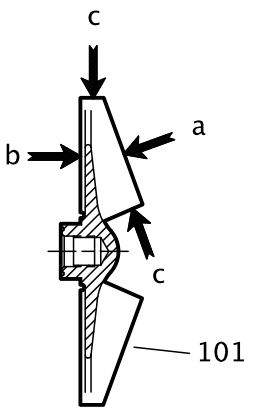

Figure 78: Areas to inspect for wear on the 3196 impeller.

Frame adapter check and replacement

- Replace the frame adapter if it has cracks or excessive corrosion damage.
- Make sure the gasket surface is clean.

Dynamic-seal repeller replacement

This table shows the criteria for replacing dynamic-seal repeller parts for the 3196, CV 3196, and LF 3196 pump models.

Dynamic seal part	When to replace
Dynamic-seal repeller vane	The grooves are deeper than 1.6 mm | 1/16 in. or are worn evenly more than 0.8 mm | 1/32 in..
Sleeve surface	The surface has grooves, pitting, or other damage.

Labyrinth seal replacement

Replace the labyrinth-seal O-ring if it has cuts and cracks.

Gaskets, O-rings, and seats replacement

WARNING:
Avoid death or serious injury. Leaking fluid can cause fire and/or burns. Replace any damaged or worn gaskets/o-rings.

- Replace all gaskets and O-rings at each overhaul and disassembly.
- Inspect the seats. They must be smooth and free of physical defects.
  In order to repair worn seats, skin cut them in a lathe while you maintain dimensional relationships with other surfaces.
- Replace parts if the seats are defective.

Shaft and sleeve replacement guidelines

Two types of sleeves

The 3198 is offered with either a metallic sleeve that uses the standard 3196 shaft or a Teflon sleeve. The Teflon sleeve requires a special shaft and a different inboard labyrinth oil seal.

Shaft measurements check

Replace the shaft (122) if any measurements exceed acceptable values. See Bearing fits and tolerances.

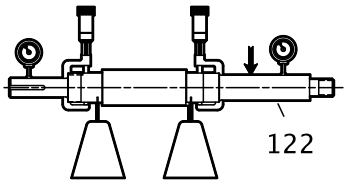

Figure 79: Shaft measurements check

Straightness check

Replace the shaft (122) if runout exceeds the values in this table:

Table 13: Shaft runout tolerances for sleeve fit and coupling fit

	Sleeve fit in millimeters | inches	Coupling fit in millimeters | inches
With sleeve	0.025 | 0.001	0.025 | 0.001
Without sleeve	0.051 | 0.002	0.025 | 0.001

Shaft and sleeve check

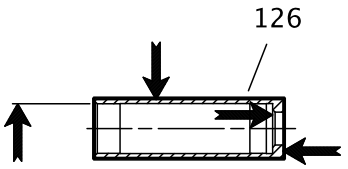

Figure 80: Shaft and sleeve check

- Check the shaft and sleeve (126) surface for grooves and pitting.
- Replace the shaft and sleeve if any grooves or pits are found.

Bearing-frame inspection

Checklist

Check the bearing frame for these conditions:

- Visually inspect the bearing frame and frame foot for cracks.
- Check the inside surfaces of the frame for rust, scale, or debris. Remove all loose and foreign material.
- Make sure that all lubrication passages are clear.
- If the frame has been exposed to pumped fluid, inspect the frame for corrosion or pitting.
- Inspect the inboard-bearing bores.
  If any bores are outside the measurements in the Bearing fits and tolerances table, replace the bearing frame.

Surface inspection locations

This figure shows the areas to inspect for wear on the bearing frame outside surface.

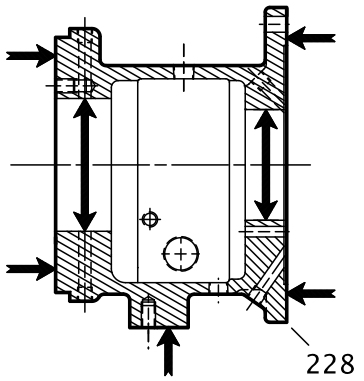

Figure 81: Outside surface inspection locations

This figure shows the areas to inspect for wear on the bearing frame inside surface.

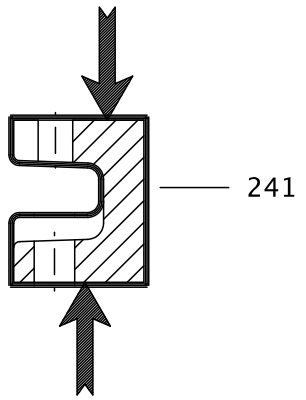

Figure 82: Inside surface inspection locations

C-face adapter inspection

Checklist

- Visually inspect the C-face adapter (340) for cracks.
- Check all surfaces for rust, scale, or debris and remove all loose and foreign material.
- Check for corrosion or pitting.

This figure shows the areas to inspect for cracks on the C-face adapter.

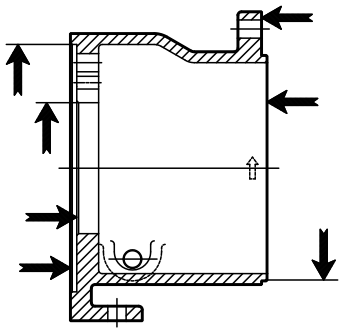

Figure 83: C-face adapter inspection locations

Seal chamber and stuffing box cover inspection

Checklist

Perform these checks when you inspect the seal chamber and stuffing box cover:

- Make sure that these surfaces are clean:
  - Seal chamber and stuffing box cover
  - Dynamic-seal backplate gasket
  - Mounting
- Make sure there is no pitting or wear greater than 3.2 mm | 1/8 in. deep. Replace the seal chamber and stuffing box cover if pitting or wear exceeds this measurement.
- Inspect the machined surfaces and mating faces noted in the figures.

These images point to the areas to inspect:

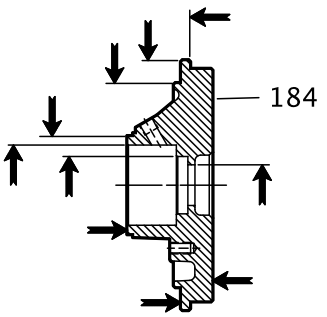

Figure 84: BigBore™ chamber

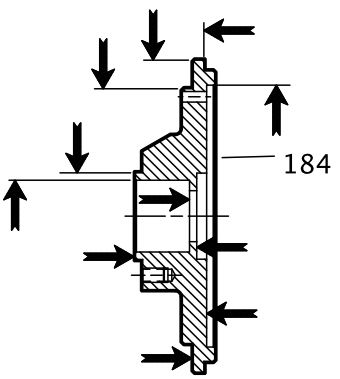

Figure 85: Stuffing box cover

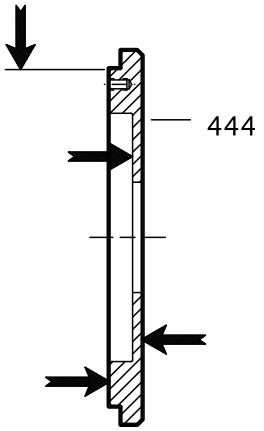

Figure 86: Dynamic-seal backplate

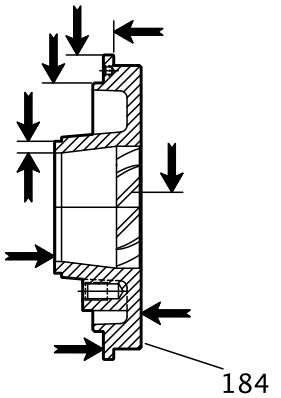

Figure 87: TaperBore™ Plus

Bearings inspection

Condition of bearings

Do not reuse bearings. The condition of the bearings provides useful information on operating conditions in the bearing frame.

Checklist

Perform these checks when you inspect the bearings:

- Inspect the bearings for contamination and damage.
- Note any lubricant condition and residue.
- Inspect the ball bearings to see if they are loose, rough, or noisy when you rotate them.
- Investigate any bearing damage to determine the cause. If the cause is not normal wear, correct the issue before you return the pump to service.

Bearing-housing inspection

Checklist

- Inspect the bearing-housing (134) bore according to the bearing fits and tolerances table.

- Replace the bearing housing if the dimensions exceed acceptable values. Reference: see Bearings fits and tolerances.
- Visually inspect the bearing housing for cracks and pits.

Checklist for specific models

This table shows bearing-housing checks that are required for specific models of pump.

Frame	Bearing-housing check
STi and MTi	Ensure that the snap-ring groove is not cracked.
LTi	Clear all grooves and holes.
XLT-i and i17	Clean the gasket surface.

Inspection locations

The following images point to the areas to inspect on the bearing housing.

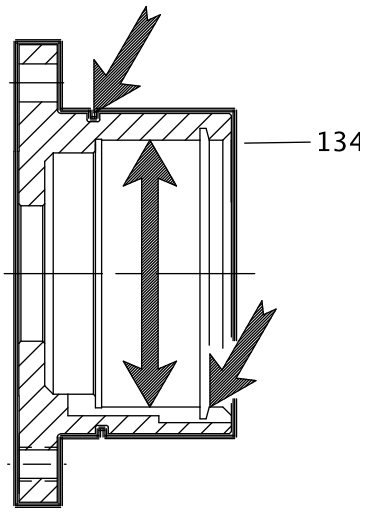

Figure 88: STi and MTi bearing housing

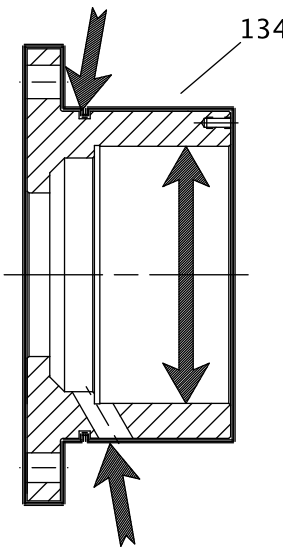

Figure 89: LTi bearing housing

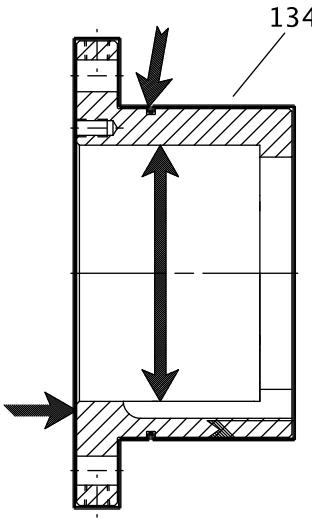

Figure 90: XLT-i and i17 bearing housing

Bearing fits and tolerances

Table 14: Bearing fits and tolerances table

This table references the bearing fits and tolerances according to the ABEC I standard.

	STi millimeters | inches	MTi millimeters | inches	LTi millimeters | inches	XLT-i, i-17 millimeters | inches
Shaft OD Inboard	35.014 | 1.3785 35.004 | 1.3781	45.014 | 1.7722 45.004 | 1.7718	55.016 | 2.1660 55.004 | 2.1655	65.016 | 2.5597 65.004 | 2.5592
Clearance	0.025 | 0.0010 tight 0.003 | 0.0001 tight	0.025 | 0.0010 tight 0.003 | 0.0001 tight	0.030 | 0.0012 tight 0.003 | 0.0001 tight	0.030 | 0.0012 tight 0.003 | 0.0001 tight
Bearing ID Inboard	35.001 | 1.3780 34.989 | 1.3775	45.001 | 1.7717 44.988 | 1.7712	55.001 | 2.1654 54.986 | 2.1648	65.001 | 2.5591 64.986 | 2.5585
Frame ID Inboard	72.000 | 2.8346 72.017 | 2.8353	100.000 | 3.9370 100.023 | 3.9379	120.000 | 4.7244 120.023 | 4.7253	140.000 | 5.5118 140.025 | 5.5128
Clearance	0.031 | 0.0012 loose 0.000 | 0.0000 loose	0.038 | 0.0015 loose 0.000 | 0.0000 loose	0.038 | 0.0015 loose 0.000 | 0.0000 loose	0.043 | 0.0017 loose 0.000 | 0.0000 loose
Bearing OD Inboard	72.000 | 2.8346 71.986 | 2.8341	100.000 | 3.9370 99.985 | 3.9364	120.000 | 4.7244 119.985 | 4.7238	140.000 | 5.5118 139.982 | 5.5111
Shaft OD Outboard	30.010 | 1.1815 30.002 | 1.1812	45.014 | 1.7722 45.004 | 1.7718	50.013 | 1.9690 50.003 | 1.9686	65.016 | 2.5597 65.004 | 2.5592
Clearance	0.020 | 0.0008 tight 0.003 | 0.0001 tight	0.025 | 0.0010 tight 0.003 | 0.0001 tight	0.025 | 0.0010 tight 0.003 | 0.0001 tight	0.030 | 0.0012 tight 0.003 | 0.0001 tight
Bearing OD Outboard	30.000 | 1.1811 29.990 | 1.1807	45.001 | 1.7717 44.988 | 1.7712	50.000 | 1.9685 49.987 | 1.9680	65.001 | 2.5591 64.986 | 2.5585
Housing OD Outboard	72.000 | 2.8346 72.017 | 2.8353	100.000 | 3.9370 100.022 | 3.9379	110.000 | 4.3307 110.023 | 4.3316	140.000 | 5.5118 140.025 | 5.5128
Clearance	0.031 | 0.0012 loose 0.000 | 0.0000 loose	0.038 | 0.0015 loose 0.000 | 0.0000 loose	0.038 | 0.0015 loose 0.000 | 0.0000 loose	0.043 | 0.0017 loose 0.000 | 0.0000 loose
Bearing OD Outboard	72.000 | 2.8346 71.986 | 2.8341	100.000 | 3.9370 99.985 | 3.9364	110.000 | 4.3307 109.985 | 4.3301	140.000 | 5.5118 139.982 | 5.5111

Reassembly

Assemble the rotating element and the bearing frame (STi and MTi)

CAUTION:
Wear insulated gloves when you use a bearing heater. Bearings get hot and can cause physical injury.

NOTICE:
Make sure that the pipe threads are clean, and that you apply thread sealant to the plugs and fittings. Failure to do so may result in equipment damage or decreased performance.

NOTICE:
Use an induction heater that heats as well as demagnetizes the bearings when you install bearings. Failure to do so may result in decreased performance.

1. Prepare the bearing frame (228) as follows (see the illustration):
   a) Install the oil-fill plug (113A).
   b) Install the oil-drain plug (408A).
   c) Install the sight glass (319).
   d) Install the sight oiler plug (408J).
   e) Install the plug for the oil-cooler inlet (408L).
   f) Install the plug for the oil-cooler outlet (408M).
   g) Install four oil-mist connection plugs (408H).
      Or: Install two grease fittings (193) and two grease-relief plugs (113).
   h) Attach the bearing-frame foot (241) and fasten the bolts (370F) by hand.

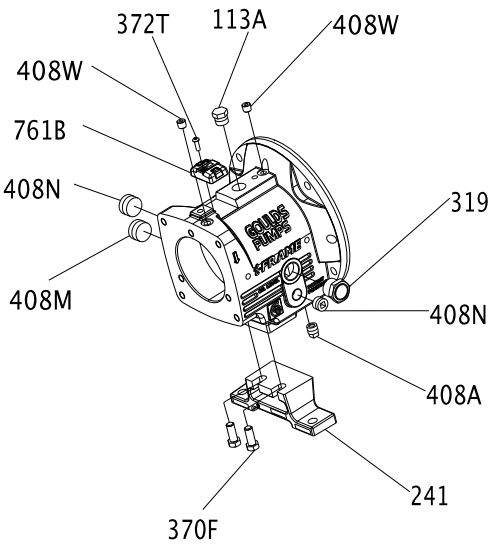

Figure 91: Oil mist connection plugs

2. Install the outboard bearing (112A) on the shaft (122).
   The regreaseable bearing has a single shield. The outboard bearing is installed with the shield toward the impeller.
   a) Inspect the shaft (122) to ensure that it is clean, dimensionally correct, and is free of nicks and burrs.
   b) Lightly coat the bearing seating with a thin film of oil.
   c) Remove the bearing (112) from its packaging.
   d) Wipe the preservative from the bearing (112) bore and outer diameter.
   e) Use an induction heater with a demagnetizing cycle to heat the bearing (112) to an inner ring temperature of 110 °C | 230 °F.
   f) Position the bearing (112) on the shaft (122) against the shoulder and snug the locknut (136) against the bearing until it is cool.
      The locknut prevents the bearing from moving away from the shaft shoulder as it cools.
   g) Remove the bearing locknut (136) after the bearing (112) cools.
3. Put the lockwasher (382) onto the shaft (122).

4. Thread the locknut (136) onto the shaft (122) and tighten it until it is snug.
5. Bend the tangs of the lockwasher into the slots of the locknut.
6. Put the bearing-retaining ring (361A) onto the shaft (122).
   Make sure that the flat side of the ring is towards the bearing.
7. Coat the inner surfaces of the bearings with lubricant.
8. Put the inboard bearing (168) onto the shaft (122).
   The regreasable bearing has a single shield. Make sure that the bearing is installed with the shield away from the impeller.

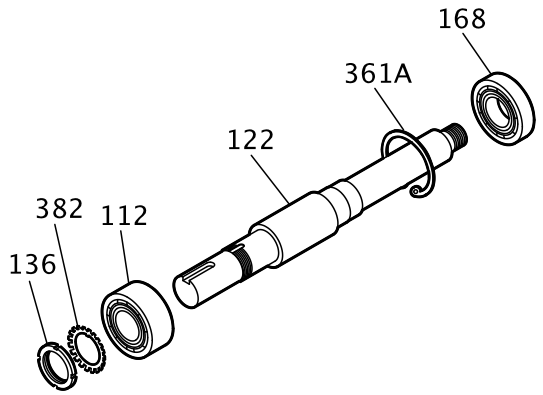

Figure 92: Inboard bearing reassembly

9. Prepare the shaft for assembly as follows (see the illustration):
   a) Install a new O-ring (496).
   b) Coat the outside of the outboard bearing (112A) with oil.
   c) Coat the bore of the bearing housing (134) with oil.
   d) Put the bearing housing (134) onto the shaft.
      Do not use force.
   e) Insert the bearing-retaining ring (361A) into the bore groove of the bearing housing (134).

   NOTICE:
   Ensure that the space between the ends of the retaining ring are located in the oil-return groove. Failure to do so may result in oil-flow obstruction.

   Make sure that the shaft rotates freely.
   f) Install the outboard labyrinth oil-seal (332A) into the bearing housing (134).
      Place the drain slots of the oil seal at the bottom position (6 o'clock).
      Make sure that the edges of the keyway are free from burrs. To protect the O-ring, cover the keyway lengthwise with a piece of electrical tape before you install the oil seal.

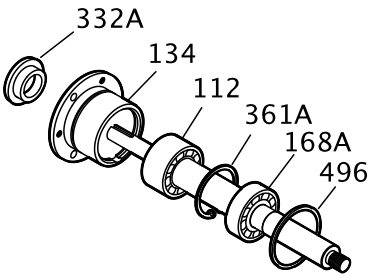

Figure 93: Outboard labyrinth oil-seal reassembly

10. Install the shaft assembly into the bearing frame as follows (see the illustration):
    a) Coat the outside of the bearing housing (134) with oil.

b) Coat all the internal surfaces of the bearing frame (228) with oil.
c) Install the shaft assembly into the bearing frame (228).
Make sure that the shaft rotates freely.
d) Install the clamp bolts (370C) in the bearing housing (134) and tighten by hand.
e) Install the jack bolts (370D) with the locknuts (423) in the bearing housing (134) and tighten by hand.

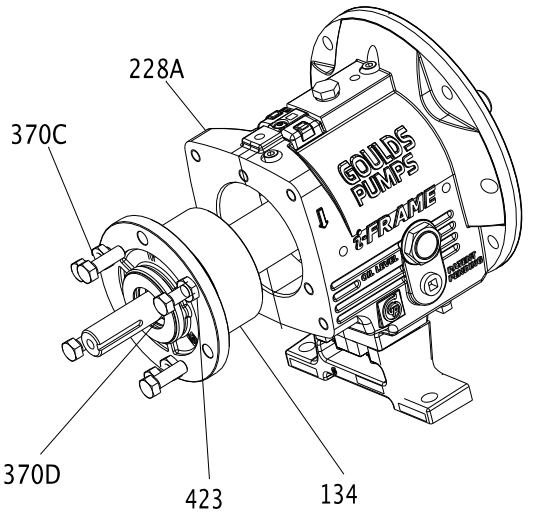

Figure 94: Jack bolt and locknut reassembly

Assemble the rotating element and the bearing frame (STi and MTi with duplex bearings)

CAUTION:
- Wear insulated gloves when you use a bearing heater. Bearings get hot and can cause physical injury.
- Use care when you handle the shaft because it can be heavy. Failure to do so could result in personal injury.

NOTICE:
Make sure that the pipe threads are clean, and that you apply thread sealant to the plugs and fittings. Failure to do so may result in equipment damage or decreased performance.

NOTICE:
Use an induction heater that heats as well as demagnetizes the bearings when you install bearings. Failure to do so may result in decreased performance.

1. Prepare the bearing frame (228) as follows (see the illustration):
   a) Install the oil-fill plug (113A).
   b) Install the oil-drain plug (408A).
   c) Install the sight glass (319).
   d) Install the sight oiler plug (408J).
   e) Install the plug for the oil-cooler inlet (408L).
   f) Install the plug for the oil-cooler outlet (408M).
   g) Install four oil-mist connection plugs (408H).
   Or: Install two grease fittings (193) and two grease-relief plugs (113).

h) Attach the bearing-frame foot (241) and fasten the bolts (370F) by hand.

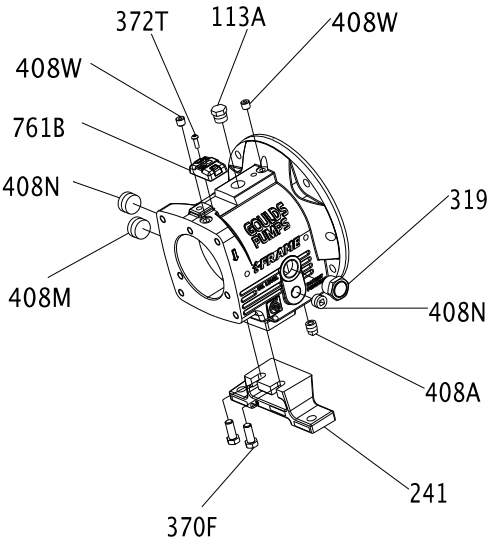

Figure 95: Bearing frame foot reassembly

2. Install the outboard bearings (112A) on the shaft (122).
   The regreasable bearing has a single shield. Make sure that the bearing is installed with the shield away from the impeller.
   The duplex bearings are mounted back-to-back. Make sure that the orientation of the bearings are correct.
   a) Inspect the shaft (122) to ensure that it is clean, dimensionally correct, and is free of nicks and burrs.

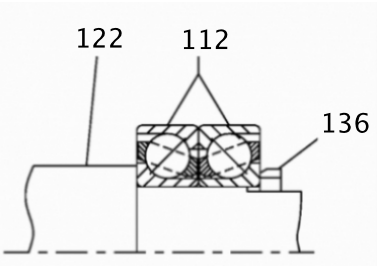

Figure 96: Shaft inspection

   b) Lightly coat the bearing seating with a thin film of oil.
   c) Remove the bearings (112) from their packaging.
   d) Wipe the preservative from the bearing (112) bore and outer diameter.
   e) Use an induction heater with a demagnetizing cycle to heat both bearings (112) to an inner ring temperature of 110 °C | 230 °F.
   f) Place both bearings (112) on the shaft (122) with the large outer races together (back-to-back).
   g) Position the bearings (112) on the shaft (122) against the shoulder and snug the locknut (136) against the bearings until they are cool.
      The locknut prevents the bearings from moving away from the shaft shoulder as they cool. Rotate the outer bearing rings relative to each other as they are placed on the shaft to assure good alignment.
   h) Remove the bearing locknut (136) after the bearings (112) are cool.
3. Put the lockwasher (382) onto the shaft (122).
4. Thread the locknut (136) onto the shaft (122) and tighten it until it is snug.
5. Bend the tangs of the lockwasher into the slots of the locknut.
6. Place the bearing-clamp ring (253B) onto the shaft (122).

Make sure that the orientation of the bearing-clamp ring is correct.

7. Coat the inner surfaces of the bearings with lubricant.
8. Put the inboard bearing (168) onto the shaft (122).

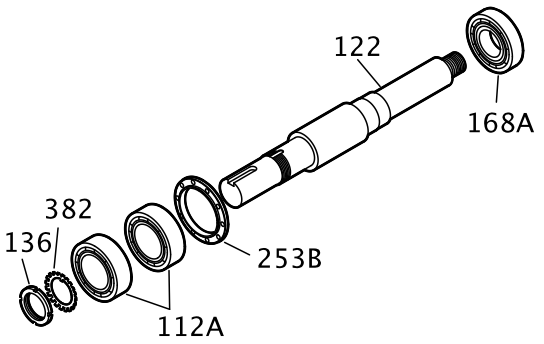

Figure 97: Inboard bearing reassemby

9. Install the bearing housing as follows (see the illustration):
   a) Coat the outside of the outboard bearing (112A) with oil.
   b) Coat the bore of the bearing housing (134) with oil.
   c) Put the bearing housing (134) onto the shaft.
      Do not use force.

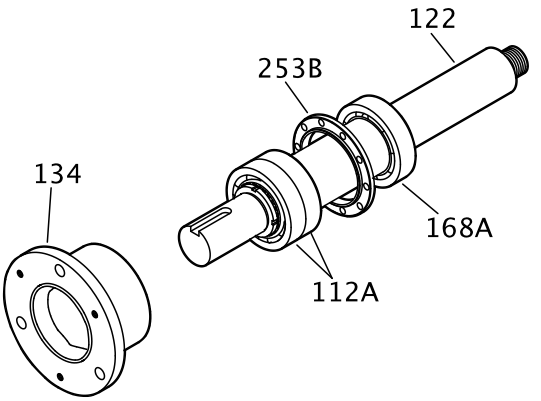

Figure 98: Bearing housing reassembly

10. Prepare the shaft for assembly as follows (see the illustration):
    a) Place the bearing-clamp ring (253B) onto the shaft (122).
    b) Fasten the clamp-ring bolts (236A) crosswise.
       See the specified torque values.
       Make sure that the shaft rotates freely.
    c) Install a new O-ring (496).

d) Install the outboard labyrinth oil-seal (332A) into the bearing housing (134).
Place the drain slots of the oil seal at the bottom position (6 o'clock).
Make sure that the edges of the keyway are free from burrs. To protect the O-ring, cover the keyway lengthwise with a piece of electrical tape before you install the oil seal.

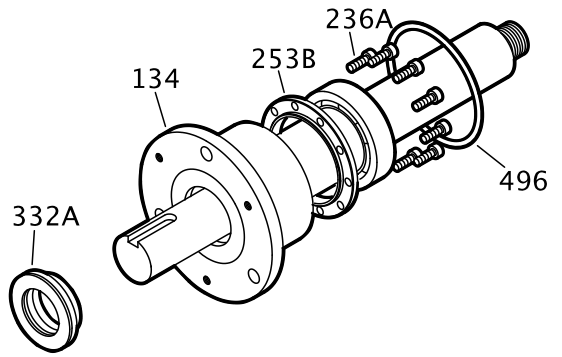

Figure 99: Outboard labyrinth oil seal reassembly

11. Install the shaft assembly into the bearing frame as follows (see the illustration):
    a) Coat the outside of the bearing housing (134) with oil.
    b) Coat all the internal surfaces of the bearing frame (228) with oil.
    c) Install the shaft assembly into the bearing frame (228).
    Make sure that the shaft rotates freely.
    d) Install the clamp bolts (370C) in the bearing housing (134) and tighten by hand.
    e) Install the jack bolts (370D) with the locknuts (423) in the bearing housing (134) and tighten by hand.

Assemble the rotating element and the bearing frame (LTi)

CAUTION:
Wear insulated gloves when you use a bearing heater. Bearings get hot and can cause physical injury.

NOTICE:
Make sure that the pipe threads are clean, and that you apply thread sealant to the plugs and fittings. Failure to do so may result in equipment damage or decreased performance.

NOTICE:
Use an induction heater that heats as well as demagnetizes the bearings when you install bearings. Failure to do so may result in decreased performance.

1. Prepare the bearing frame (228) as follows (see the illustration):
    a) Install the oil-fill plug (113A).
    b) Install the oil-drain plug (408A).
    c) Install the sight glass (319).
    d) Install the sight oiler plug (408J).
    e) Install the plug for the oil-cooler inlet (408L).
    f) Install the plug for the oil-cooler outlet (408M).
    g) Install four oil-mist connection plugs (408H).
    Or: Install two grease fittings (193) and two grease-relief plugs (113).

h) Attach the bearing-frame foot (241) and fasten the bolts (370F) by hand.

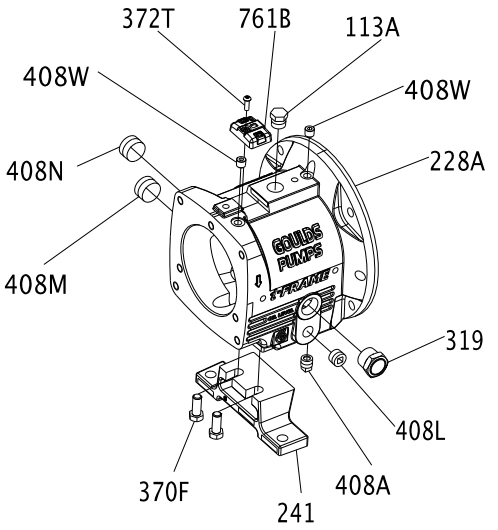

Figure 100: Attach the bearing-frame foot

2. Install the oil flinger (248A) onto the shaft (122).

NOTICE:
The oil flinger is press fitted onto the shaft. Use a properly sized driver. Failure to do so may result in damage to the oil flinger.

3. Place the bearing-clamp ring (253B) onto the shaft (122).
   Make sure that the orientation of the bearing-clamp ring is correct.
4. Install outboard bearings (112A) on shaft (122).
   The regreasable bearing has a single shield. Make sure that the bearing is installed with the shield away from the impeller.
   The duplex bearings are mounted back-to-back. Make sure that the orientation of the bearings are correct.
   a) Inspect the shaft (122) to ensure that it is clean, dimensionally correct, and is free of nicks and burrs.

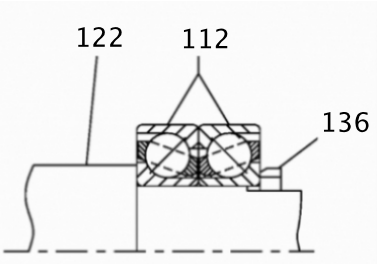

Figure 101: Shaft inspection

   b) Lightly coat the bearing seating with a thin film of oil.
   c) Remove the bearings (112) from their packaging.
   d) Wipe the preservative from the bearing (112) bore and outer diameter.
   e) Use an induction heater with a demagnetizing cycle to heat both bearings (112) to an inner ring temperature of 110 °C | 230 °F.
   f) Place both bearings (112) on the shaft (122) with the large outer races together (back-to-back).

g) Position the bearings (112) on the shaft (122) against the shoulder and snug the locknut (136) against the bearings until they are cool.
The locknut prevents the bearings from moving away from the shaft shoulder as they cool. Rotate the outer bearing rings relative to each other as they are placed on the shaft to assure good alignment.

h) Remove the bearing locknut (136) after the bearings (112) are cool.

5. Put the lockwasher (382) onto the shaft (122).
6. Thread the locknut (136) onto the shaft (122) and tighten it until it is snug.
7. Bend the tangs of the lockwasher into the slots of the locknut.
8. Coat the inner surfaces of the bearings with lubricant.
9. Put the inboard bearing (168) onto the shaft (122).

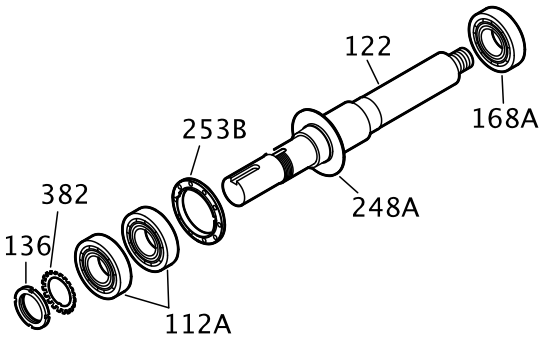

Figure 102: Inboard bearing reassembly

10. Install the bearing housing as follows (see the illustration):
    a) Coat the outside of the outboard bearing (112A) with oil.
    b) Coat the bore of the bearing housing (134) with oil.
    c) Put the bearing housing (134) onto the shaft.
    Do not use force.

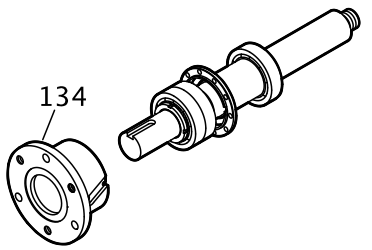

Figure 103: Bearing housing reassembly

11. Prepare the shaft for assembly as follows (see the illustration):
    a) Fasten the clamp-ring bolts (236A) crosswise.
    See the specified torque values.
    Make sure that the shaft rotates freely.
    b) Install a new O-ring (496).

c) Install the outboard labyrinth oil-seal (332A) into the bearing housing (134).
Place the drain slots of the oil seal at the bottom position (6 o'clock).
Make sure that the edges of the keyway are free from burrs. To protect the O-ring, cover the keyway lengthwise with a piece of electrical tape before you install the oil seal.

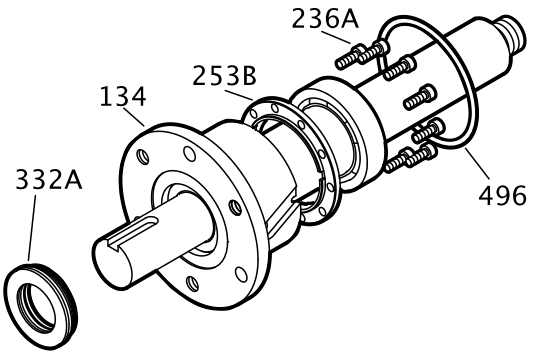

Figure 104: Outboard labyrinth oil-seal reassembly

12. Install the shaft assembly into the bearing frame as follows (see the illustration):
    a) Coat the outside of the bearing housing (134) with oil.
    b) Coat all the internal surfaces of the bearing frame (228) with oil.
    c) Install the shaft assembly into the bearing frame (228).
    Make sure that the shaft rotates freely.
    d) Install the clamp bolts (370C) in the bearing housing (134) and tighten by hand.
    e) Install the jack bolts (370D) with the locknuts (423) in the bearing housing (134) and tighten by hand.

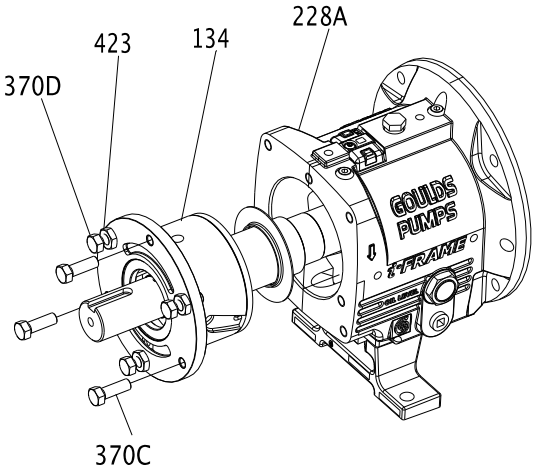

Figure 105: Jack bolt and locknut installation

Assemble the rotating element and the bearing frame (XLT-i and i17)

CAUTION:
- Wear insulated gloves when you use a bearing heater. Bearings get hot and can cause physical injury.
- Use care when you handle the shaft because it can be heavy. Failure to do so could result in personal injury.

NOTICE:
Make sure that the pipe threads are clean, and that you apply thread sealant to the plugs and fittings. Failure to do so may result in equipment damage or decreased performance.

NOTICE:
Use an induction heater that heats as well as demagnetizes the bearings when you install bearings. Failure to do so may result in decreased performance.

1. Prepare the bearing frame (228) as follows (see the illustration):
   a) Install the oil-fill plug (113A).
   b) Install the oil-drain plug (408A).
   c) Install the sight glass (319).
   d) Install the sight oiler plug (408J).
   e) Install the plug for the oil-cooler inlet (408L).
   f) Install the plug for the oil-cooler outlet (408M).
   g) Install four oil-mist connection plugs (408H).
      Or: Install two grease fittings (193) and two grease-relief plugs (113).

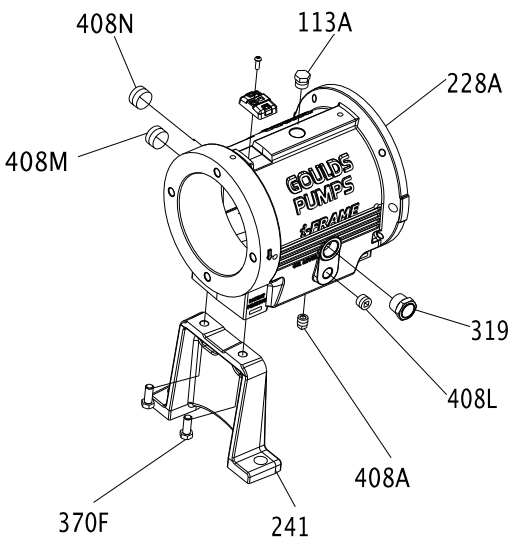

2. Install the outboard bearings (112A) on the shaft (122).
   The regreaseable bearing has a single shield. The outboard bearing is installed with the shield toward the impeller.
   a) Inspect the shaft (122) to ensure that it is clean, dimensionally correct, and is free of nicks and burrs.
   b) Lightly coat the bearing seating with a thin film of oil.
   c) Remove the bearing (112) from its packaging.
   d) Wipe the preservative from the bearing (112) bore and outer diameter.
   e) Use an induction heater with a demagnetizing cycle to heat the bearing (112) to an inner ring temperature of 110 °C | 230 °F.
   f) Position the bearing (112) on the shaft (122) against the shoulder and snug the locknut (136) against the bearing until it is cool.
      The locknut prevents the bearing from moving away from the shaft shoulder as it cools.
   g) Remove the bearing locknut (136) after the bearing (112) cools.
3. Put the lockwasher (382) onto the shaft (122).
4. Thread the locknut (136) onto the shaft (122) and tighten it until it is snug.

5. Bend the tangs of the lockwasher into the slots of the locknut.

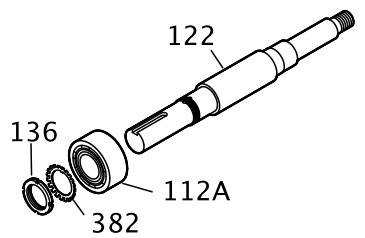

6. Install the bearing housing as follows (see the illustration):
   a) Coat the outside of the outboard bearing (112A) with oil.
   b) Coat the bore of the bearing housing (134) with oil.
   c) Put the bearing housing (134) onto the shaft.
   Do not use force.

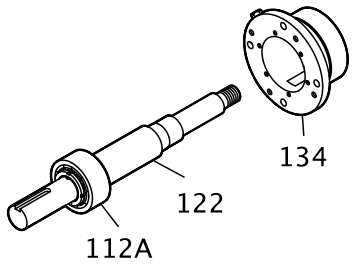

7. Fasten the gasket (360C) and the end cover (109A) with the bolts (371C).
   See the specified torque values.
   Make sure that the shaft rotates freely.

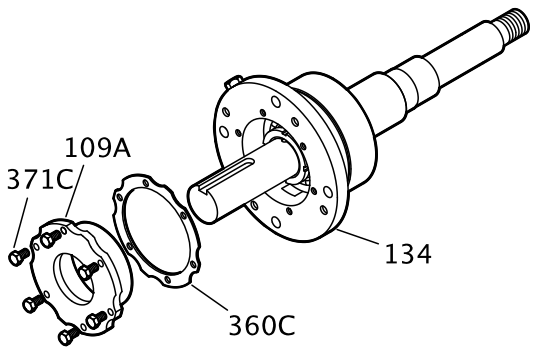

8. Install the inboard bearing as follows (see the illustration):
   a) Coat the inner surfaces of the bearings with lubricant.
   b) Put the inboard bearing (168) onto the shaft (122).
   The regreasable bearing has a single shield. Make sure that the bearing is installed with the shield away from the impeller.

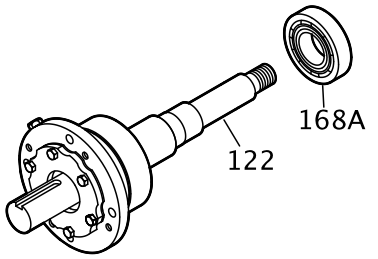

9. Install the remaining parts onto the bearing shaft as follows (see the illustration):
   a) Install a new O-ring (496).
   b) Install the outboard labyrinth oil-seal (332A) into the end cover (109A).
      Place the drain slots of the oil seal at the bottom position (6 o'clock).
      Make sure that the edges of the keyway are free from burrs. To protect the O-ring, cover the keyway lengthwise with a piece of electrical tape before you install the oil seal.

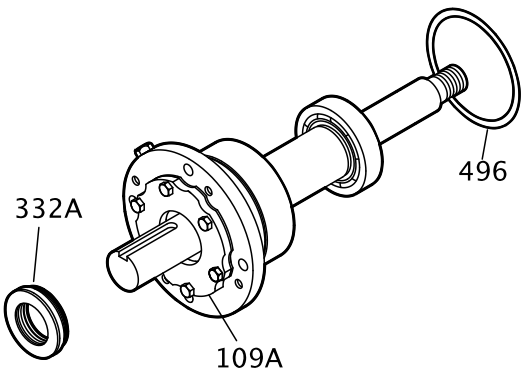

10. Install the shaft assembly into the bearing frame as follows (see the illustration):
    a) Coat the outside of the bearing housing (134) with oil.
    b) Coat all the internal surfaces of the bearing frame (228) with oil.
    c) Install the shaft assembly into the bearing frame (228).
       Make sure that the shaft rotates freely.
    d) Install the clamp bolts (370C) in the bearing housing (134) and tighten by hand.
    e) Install the jack bolts (370D) with the locknuts (423) in the bearing housing (134) and tighten by hand.
    f) Attach the bearing-frame foot (241) and fasten the bolts (370F) by hand.

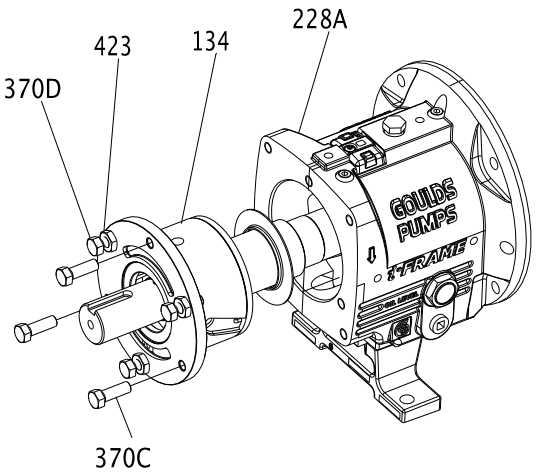

Assemble the rotating element and the bearing frame (XLT-i and i17 with duplex bearings)

CAUTION:

- Wear insulated gloves when you use a bearing heater. Bearings get hot and can cause physical injury.
- Use care when you handle the shaft because it can be heavy. Failure to do so could result in personal injury.

NOTICE:
Make sure that the pipe threads are clean, and that you apply thread sealant to the plugs and fittings. Failure to do so may result in equipment damage or decreased performance.

NOTICE:
Use an induction heater that heats as well as demagnetizes the bearings when you install bearings. Failure to do so may result in decreased performance.

1. Prepare the bearing frame (228) as follows (see the illustration):
   a) Install the oil-fill plug (113A).
   b) Install the oil-drain plug (408A).
   c) Install the sight glass (319).
   d) Install the sight oiler plug (408J).
   e) Install the plug for the oil-cooler inlet (408L).
   f) Install the plug for the oil-cooler outlet (408M).
   g) Install four oil-mist connection plugs (408H).
      Or: Install two grease fittings (193) and two grease-relief plugs (113).

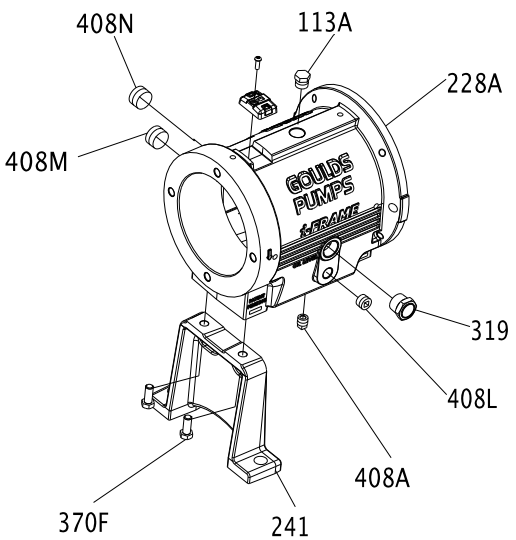

2. Install the outboard bearings (112A) on the shaft (122).
   The regreasable bearing has a single shield. Make sure that the bearing is installed with the shield away from the impeller.
   The duplex bearings are mounted back-to-back. Make sure that the orientation of the bearings are correct.
   a) Inspect the shaft (122) to ensure that it is clean, dimensionally correct, and is free of nicks and burrs.

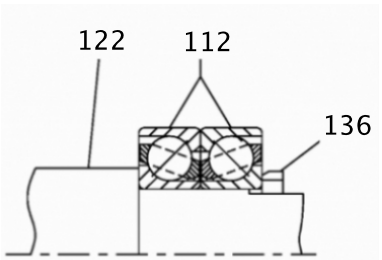

Figure 106: Shaft inspection

b) Lightly coat the bearing seating with a thin film of oil.
c) Remove the bearings (112) from their packaging.
d) Wipe the preservative from the bearing (112) bore and outer diameter.
e) Use an induction heater with a demagnetizing cycle to heat both bearings (112) to an inner ring temperature of 110 °C | 230 °F.
f) Place both bearings (112) on the shaft (122) with the large outer races together (back-to-back).
g) Position the bearings (112) on the shaft (122) against the shoulder and snug the locknut (136) against the bearings until they are cool.
The locknut prevents the bearings from moving away from the shaft shoulder as they cool. Rotate the outer bearing rings relative to each other as they are placed on the shaft to assure good alignment.
h) Remove the bearing locknut (136) after the bearings (112) are cool.

3. Put the lockwasher (382) onto the shaft (122).
4. Thread the locknut (136) onto the shaft (122) and tighten it until it is snug.
5. Bend the tangs of the lockwasher into the slots of the locknut.

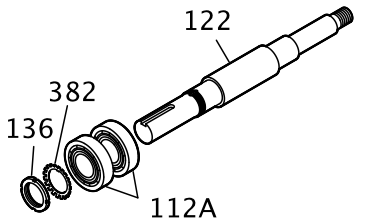

6. Install the bearing housing as follows (see the illustration):
a) Coat the outside of the outboard bearing (112A) with oil.
b) Coat the bore of the bearing housing (134) with oil.
c) Put the bearing housing (134) onto the shaft.
Do not use force.

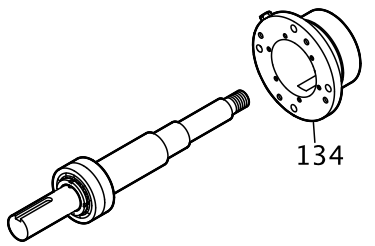

7. Fasten the gasket (360C) and the end cover (109A) with the bolts (371C).
See the specified torque values.
Make sure that the shaft rotates freely.

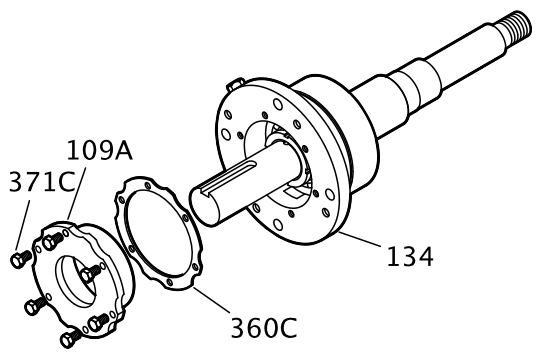

8. Install the inboard bearing as follows (see the illustration):
   a) Coat the inner surfaces of the bearings with lubricant.
   b) Put the inboard bearing (168) onto the shaft (122).
      The regreasable bearing has a single shield. Make sure that the bearing is installed with the shield away from the impeller.

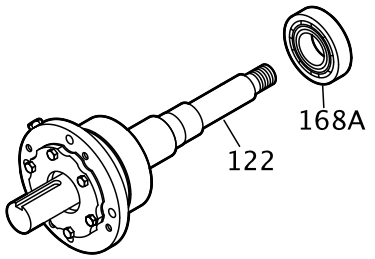

9. Install the remaining parts onto the bearing shaft as follows (see the illustration):
   a) Install a new O-ring (496).
   b) Install the outboard labyrinth oil-seal (332A) into the end cover (109A).
      Place the drain slots of the oil seal at the bottom position (6 o'clock).
      Make sure that the edges of the keyway are free from burrs. To protect the O-ring, cover the keyway lengthwise with a piece of electrical tape before you install the oil seal.

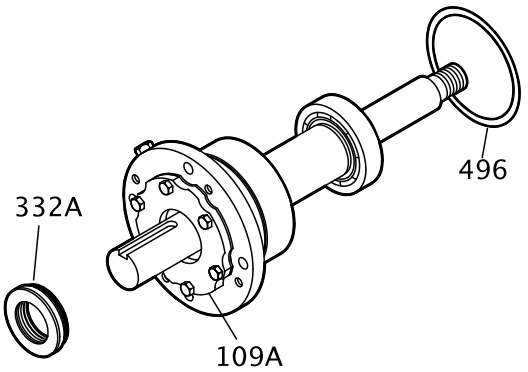

10. Install the shaft assembly into the bearing frame as follows (see the illustration):
    a) Coat the outside of the bearing housing (134) with oil.
    b) Coat all the internal surfaces of the bearing frame (228) with oil.
    c) Install the shaft assembly into the bearing frame (228).
       Make sure that the shaft rotates freely.
    d) Install the clamp bolts (370C) in the bearing housing (134) and tighten by hand.
    e) Install the jack bolts (370D) with the locknuts (423) in the bearing housing (134) and tighten by hand.

f) Attach the bearing-frame foot (241) and fasten the bolts (370F) by hand.

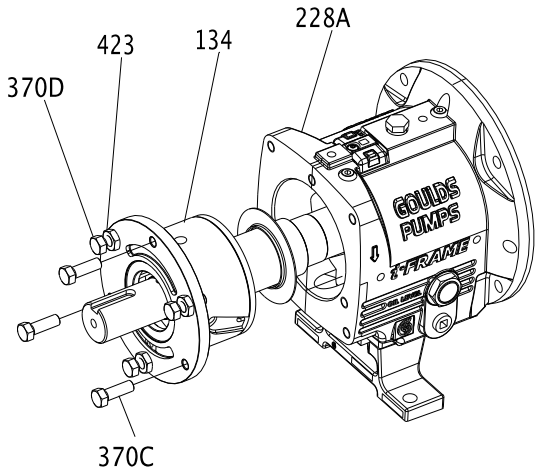

Assemble the frame

1. Support the frame assembly in a horizontal position.
2. Check the shaft-end play by moving the shaft forward and backward by hand, and note any indicator movement.
   If the total indicator reading is greater than the values in this table, then disassemble the shaft and determine the cause.

Table 15: Shaft-end play

Use this table as a reference for shaft-end play values.

Frame	Double row bearing	Duplex bearing
STi millimeters | inches	0.028 | 0.0011 0.048 | 0.0019	0.018 | 0.0007 0.025 | 0.0010
MTi millimeters | inches	0.033 | 0.0013 0.053 | 0.0021	0.023 | 0.0009 0.030 | 0.0012
LTi millimeters | inches	Not applicable	0.025 | 0.0010 0.038 | 0.0015
XLT-i millimeters | inches	0.036 | 0.0014 0.058 | 0.0023	0.025 | 0.0010 0.038 | 0.0015

Frame	Double row bearing	Duplex bearing

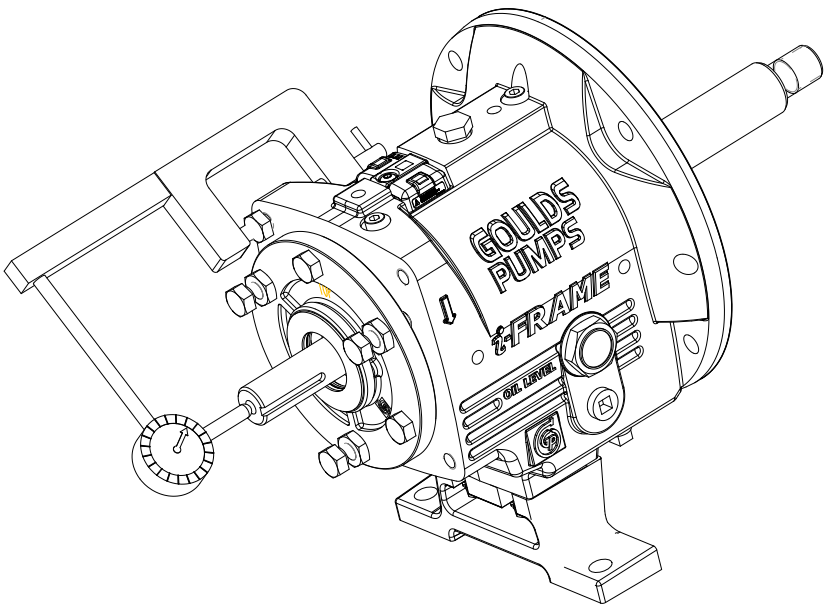

Figure 107: Check shaft end play

3. Check the shaft-sleeve (126) runout.
   a) Install the shaft sleeve.
   b) Thread the impeller on the shaft until hand tight.
   c) Rotate the shaft 360º.
   d) If the total indicator reading is greater than 0.051 mm | 0.002 in., then disassemble the shaft sleeve and determine the cause.

e) Remove the impeller and shaft sleeve.

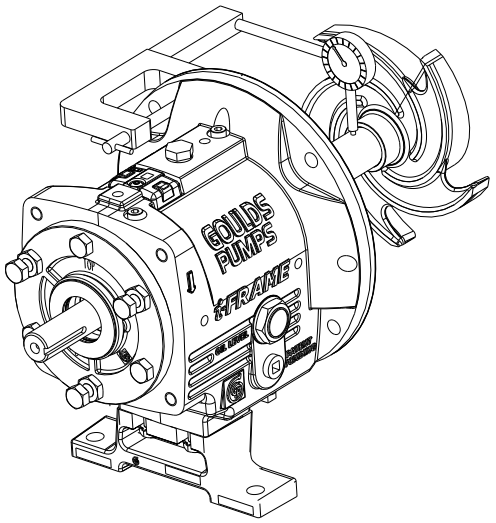

Figure 108: Remove impeller and shaft sleeve

4. Check the frame-face run-out by rotating the shaft so that the indicator measures the fit for 360º.
   If the total indicator reading is greater than 0.025 mm | 0.001 in., then disassemble and determine the cause.

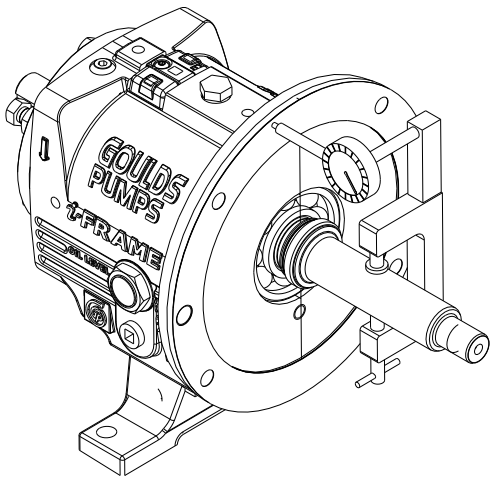

Figure 109: Check frame-face run-out

5. Place the manila gasket (360D) on the frame (228), and hold the gasket in place by inserting the dowel pins (469B) in their holes.
   The gasket is designed to fit only one way.
6. Install the frame adapter.
   a) Place the frame adapter (108) onto the frame assembly.

b) Align the bolt holes and dowel locations on the frame adapter with the bolt holes and dowel locations on the frame.

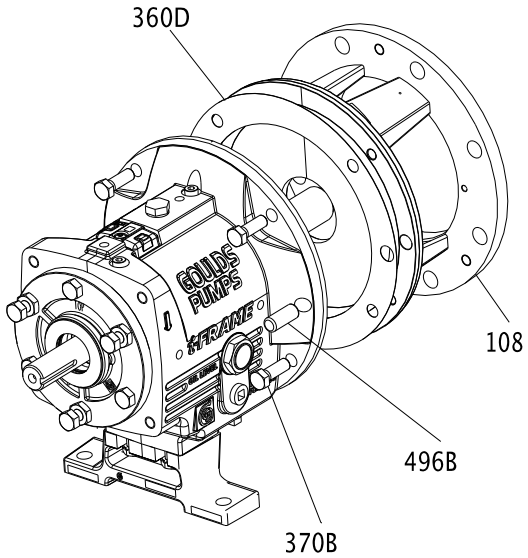

Figure 110: Align bolt holes and dowel locations

c) Install the dowel pins (469B) and bolts (370B). Tighten the bolts in a criss-cross pattern according to the specifications in the bolt torque values table.

d) Rotate the shaft 360º to check the adapter fit.
If the total indicator reading is greater than 0.13 mm | 0.005 in., then determine the cause and correct it before you proceed.

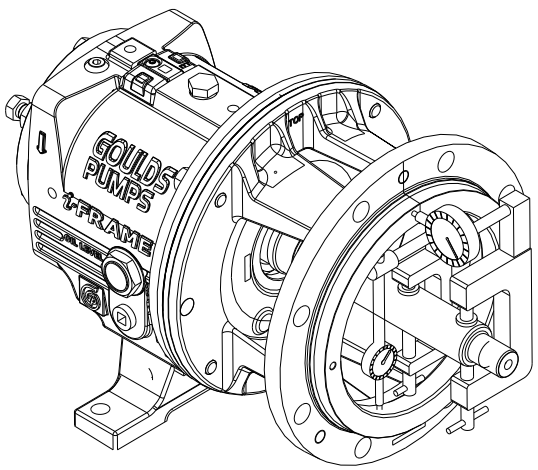

Figure 111: Check adapter fit

7. Install the labyrinth oil-seal (333A) into the adapter (108) and the bearing frame (228). The labyrinth oil seal is an O-ring fit.
8. Position the labyrinth oil-seal drain slots at the bottom (6 o'clock) position.

Refer to Assemble the INPRO labyrinth oil-seal for more information on the labyrinth oil-seal installation.

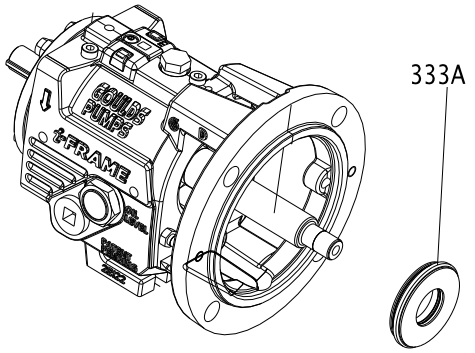

Figure 112: Position labyrinth oil-seal drain slots

INPRO labyrinth oil seal description

Description

The INPRO VBXX-D Labyrinth Oil Seal consists of the rotor (1), the stator (2), and the VBX Ring (3). The rotor (1) fits over the shaft and is held in place by an elastomeric drive ring (4). The drive ring causes the rotor to turn with the shaft and provides a positive, static seal against the shaft. Since there is no metal-to-metal contact, there are no friction or wear concerns.

NOTICE:
The INPRO VBX is a one-piece design. Do not attempt to separate the rotor from the stator before or during installation. Doing so may result in equipment damage.

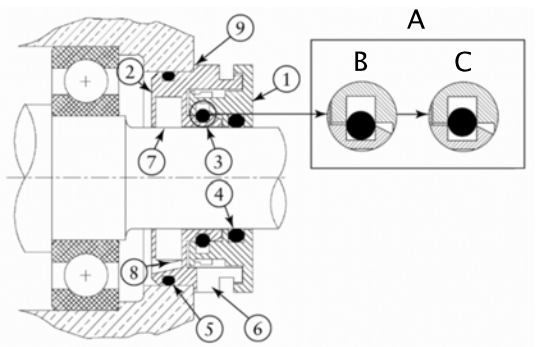

A	"VBX" O-ring action
B	Static
C	Dynamic
1	Rotor
2	Stator
3	"VBX" ring
4	Rotor drive ring
5	Stator gasket
6	Expulsion port
7	D groove
8	Lube return
9	Location shoulder

Figure 113: INPRO labyrinth oil seal

Assemble the INPRO labyrinth oil seal

1. Wrap electrical tape around the coupling end of the shaft to cover the keyway.

NOTICE:
The edges of the keyway can be sharp. Make sure to cover the keyway with tape. Failure to do so may result in cutting the O-ring and damaging the seal.

2. Lightly lube the shaft and the drive ring (4) with lubricant.
   Lubricant helps in the installation process. Be sure that the lubricant is compatible with the O-ring material and the pump-system standards.
3. Use an arbor press to install the outboard INPRO VBXX-D into the bearing cover with the expulsion port (6) at the 6 o'clock position.
   Press the outboard INPRO VBXX-D down to where the stator location ramp (9) starts to avoid angular misalignment. There is a nominal 0.051 mm | 0.002 in. interference fit.
4. Discard any residual material from the stator gasket (5).
5. Complete the applicable step in this table depending on the model of your pump.

Pump model	Action
STi	Press the inboard seal along the shaft into the bearing frame.
All other models	After you install the frame adapter on the bearing frame, press the inboard seal over the shaft and into the adapter.

Assemble the C-face adapter

1. Mount the pump and the motor-coupling hubs if they are not already mounted.
2. Slide the C-face adapter over the pump shaft and mount it against the bearing-frame flange using four bolts.
3. Mount the motor to the C-face adapter using either four or eight motor bolts.

Table 16: Motor-bolt torque values for C-face adapter to frame
This table contains the motor-bolt torque values for assembling the C-face adapter to a frame.

Frame	Lubricated threads	Dry threads
STi	27 Nm | 20 ft-lb	41 Nm | 30 ft-lb
MTi	27 Nm | 20 ft-lb	41 Nm | 30 ft-lb
LTi	27 Nm | 20 ft-lb	41 Nm | 30 ft-lb

Table 17: Motor-bolt torque values for C-face adapter to motor
This table contains the motor-bolt torque values for assembling the C-face adapter to a motor.

Frame	Lubricated threads	Dry threads
143TC-145TC	11 Nm | 8 ft-lb	16 Nm | 12 ft-lb
182TC-286TC	20 ft-lb (27 Nm)	41 Nm | 30 ft-lb
324TC-365TC	39 ft-lb (53 Nm)	80 Nm | 59 ft-lb

Shaft sealing

WARNING:
Ⓔx The mechanical seal used in an Ex-classified environment must be properly certified. Prior to startup, make sure that all areas that could leak pumped fluid to the work environment are closed.

NOTICE:
Ⓔx The mechanical seal must have an appropriate seal-flush system. Failure to do so will result in excess heat generation and seal failure.

Methods for sealing the shaft

These sections discuss the methods that you can use to seal the shaft.

- Seal the shaft with a dynamic seal.
- Seal the shaft with a cartridge-mechanical seal.
- Seal the shaft with a conventional inside-component mechanical seal.
- Seal the shaft with a conventional outside-component mechanical seal.
- Seal the shaft with a packed stuffing box.

Seal the shaft with a dynamic seal

1. Place the backplate (444) with the flat side down on the bench.

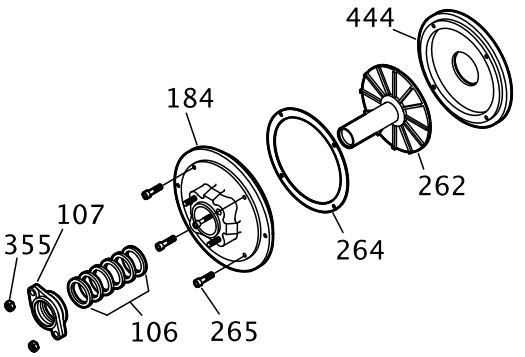

Figure 114: Backplate placement

2. Place the repeller (262) in the backplate (444) with the sleeve side up.
3. Place a Teflon gasket (264) on the backplate (444) and align the holes in the gasket with the holes in the backplate.
4. Place a stuffing-box cover (184) on the backplate (444) and align the holes in the gasket with the holes in the backplate.
5. Install four socket-head capscrews (265) and tighten them securely.
6. Install a new sealing element into the gland.
7. Install a gasket (360Q) and gland (107) on the stuffing-box cover (184).
8. Install the nuts (355).
9. Install a dynamic-seal assembly and nuts (370H).

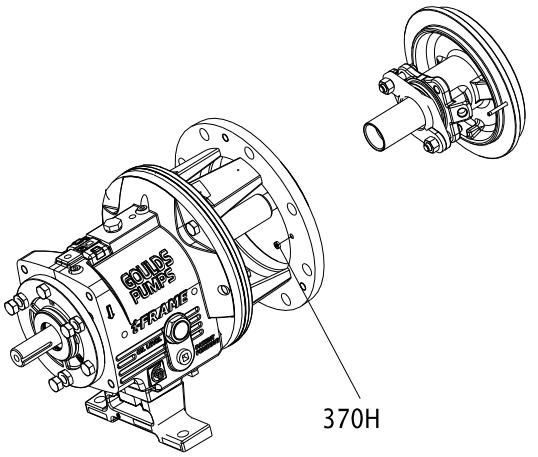

Figure 115: Dynamic seal installation

10. Check the stuffing-box-cover runout and rotate the indicator through 360 degrees.

An indicator reading that is greater than 0.013 mm | 0.005 in. indicates a problem.

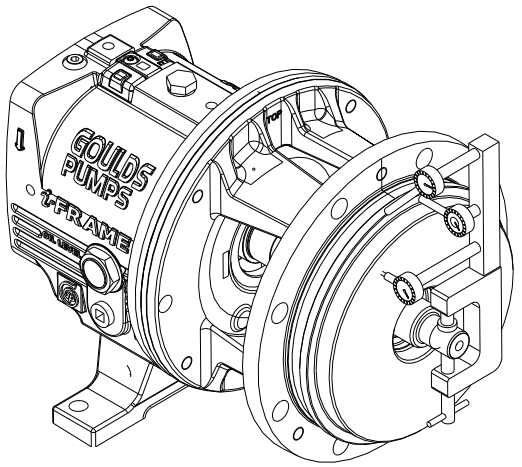

Figure 116: Checking for stuffing-box-cover runout

Seal the shaft with a packed stuffing box

WARNING:
Ex Packed stuffing boxes are not allowed in an ATEX-classified environment.

Pumps are shipped without the packing, lantern ring, or split gland installed. These parts are included with the box of fittings shipped with each pump and must be installed before startup.

1. Carefully clean the stuffing-box bore.
2. Twist the packing enough to get it around the shaft.

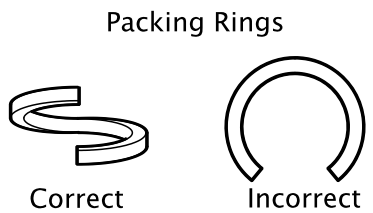

Figure 117: Packing rings

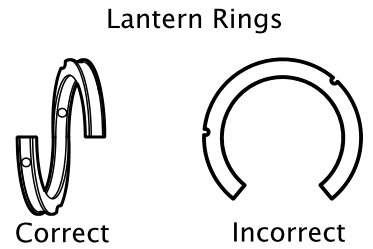

Figure 118: Lantern rings

Figure 119: Stuffing box water connections

3. Insert the packing and stagger the joints in each ring by 90°.
   Install the stuffing-box parts in this order:
   a) Two packing rings
   b) One lantern ring (two-piece)
   c) Three packing rings

NOTICE:
Make sure that the lantern ring is located at the flushing connection to ensure that flush is obtained. Failure to do so may result in decreased performance.

4. Install the gland halves and evenly hand-tighten the nuts.

Seal the shaft with a cartridge mechanical seal

WARNING:
Ⓔx The mechanical seal used in an Ex-classified environment must be properly certified. Prior to startup, make sure that all areas that could leak pumped fluid to the work environment are closed.

NOTICE:
Ⓔx The mechanical seal must have an appropriate seal-flush system. Failure to do so will result in excess heat generation and seal failure.

1. Slide the cartridge seal onto the shaft or sleeve until it contacts the inboard labyrinth oil seal.
2. Assemble the seal chamber.
3. Slide the cartridge seal into the seal chamber and secure using the four studs and nuts.
4. Continue with the pump reassembly.
5. Set the impeller clearance.
   Refer to the Impeller clearance setting topic for more information.
6. Tighten the setscrews in the seal locking ring in order to secure the seal to the shaft.
7. Remove the centering clips from the seal.

Seal the shaft with a conventional inside-component mechanical seal

WARNING:
Ⓔx The mechanical seal used in an Ex-classified environment must be properly certified. Prior to startup, make sure that all areas that could leak pumped fluid to the work environment are closed.

NOTICE:
Ⓔx The mechanical seal must have an appropriate seal-flush system. Failure to do so will result in excess heat generation and seal failure.

1. Assemble the seal chamber:

a) Install a seal-chamber cover or a backplate (184) and fasten with nuts (370H) with .

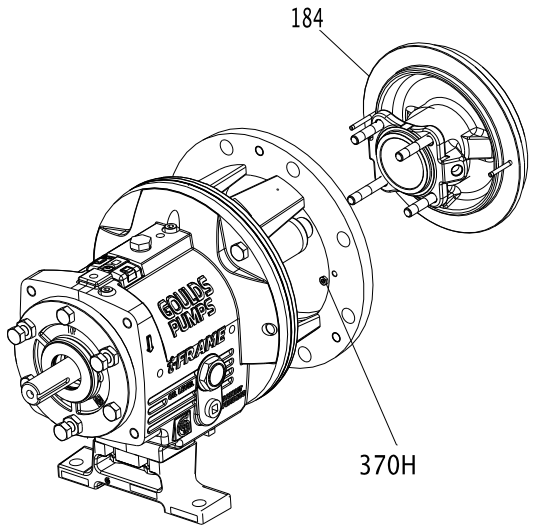

Figure 120: Assemble seal-chamber

b) Check the seal-chamber cover runout.

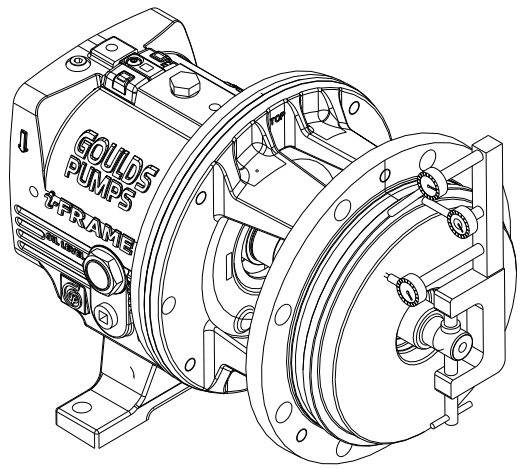

Figure 121: Check seal-chamber cover runout

Rotate the indicator through 360º. If the total indicator reading is greater than 0.13 mm | 0.005 inches, determine the cause and correct the issue before you proceed.

c) Install the shaft sleeve (126).

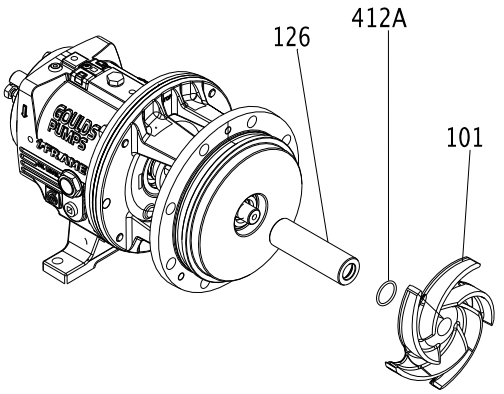

Figure 122: Install shaft sleeve

2. Mark the shaft and sleeve at the face of the seal chamber.
3. Continue the complete reassembly of the pump, except for the mechanical seal.
4. Set the impeller clearance.
   Refer to the Impeller Clearance Setting section for more information.
5. Scribe a line on the marked shaft and sleeve at the face of the seal chamber.
6. Remove the casing, the impeller, and the seal chamber.
7. If applicable, slide the gland, with the stationary seat and gland gasket installed, onto the shaft until it contacts the inboard labyrinth oil seal.
8. Install the mechanical-seal rotary unit according to the manufacturer's instructions.
   Use the scribed line and the seal-reference dimension.
9. Reinstall the seal chamber.
10. Slide the gland on the seal-chamber studs and secure them with the gland nuts.
    Tighten the nuts evenly so that the gland is seated on the seal-chamber pilot and is perpendicular to the shaft.
11. Complete the reassembly of the pump.

Seal the shaft with a conventional outside-component mechanical seal

WARNING:
⟨Ex⟩ The mechanical seal used in an Ex-classified environment must be properly certified. Prior to startup, make sure that all areas that could leak pumped fluid to the work environment are closed.

NOTICE:
⟨Ex⟩ The mechanical seal must have an appropriate seal-flush system. Failure to do so will result in excess heat generation and seal failure.

1. Assemble the seal chamber.

a) Install the seal-chamber cover or backplate (184) and fasten with nuts (370H).

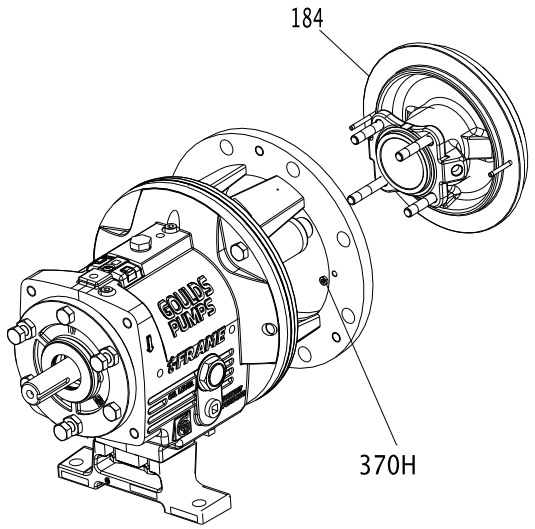

Figure 123: Seal-chamber cover or backplate installation

b) Check the seal-chamber cover runout.

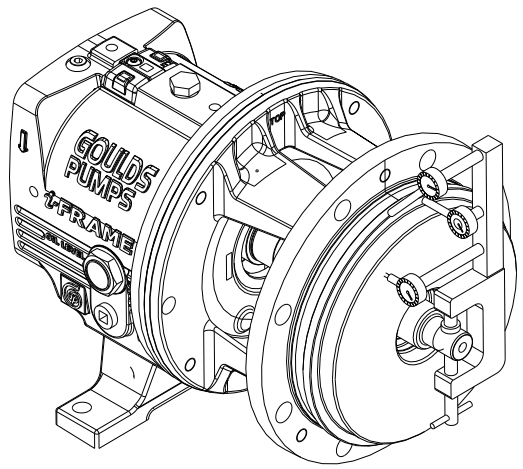

Figure 124: Check seal-chamber cover runout

Rotate the indicator through 360 degrees. If the total indicator reading is greater than 0.13 mm | 0.005 in., determine the cause and correct the issue before you proceed.

c) Install the shaft sleeve (126).

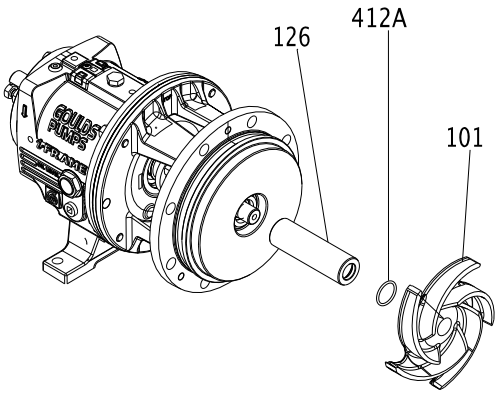

Figure 125: Install shaft sleeve

2. Mark the shaft and sleeve at the face of the seal chamber.
3. Continue the complete reassembly of the pump, except for the mechanical seal.
4. Set the impeller clearance.
   Refer to the Impeller clearance setting section for more information.
5. Scribe a line on the marked shaft and sleeve at the face of the seal chamber.
6. Remove the casing, the impeller, and the seal chamber.
7. Install the mechanical-seal rotary unit per the manufacturer's instructions.
   Use the scribed line as the seal-reference dimension. Be sure to secure the rotary unit in place using the set screws in the locking ring.
8. Install the gland, with the stationary seat and gland gaskets installed, on the seal chamber.
9. Reinstall the seal chamber.
10. Complete the reassembly of the pump.

Install the impeller

CAUTION:
Wear heavy work gloves when you handle impellers. The sharp edges can cause physical injury.

1. Install the impeller.

Pump size	Action
STi, MTi, and LTi	Install the impeller (101). Use a new impeller O-ring (412A).
XLT-i and i17	Install the impeller (101) and a Teflon washer (428D) on the plug (458Y). Use a new impeller O-ring (412A).

2. Attach a shaft wrench and a coupling key on the shaft.
   a) When the impeller (101) makes firm contact with the sleeve (126), raise the shaft wrench (counterclockwise, viewed from the impeller end of the shaft) off of the bench and slam it down (clockwise, viewed from the impeller end of shaft).

b) Apply a few sharp raps to tighten the impeller (101).

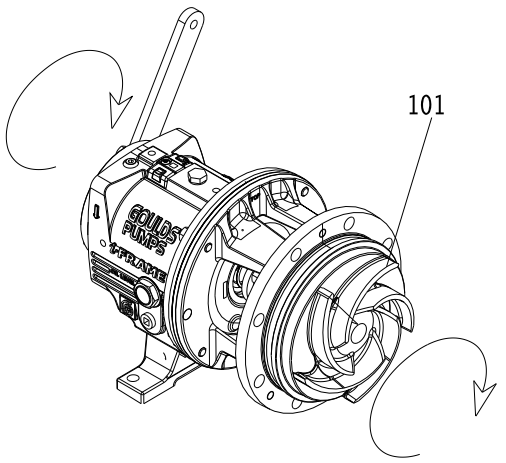

Figure 126: Tighten the impeller

3. Loosen the clamp bolts (370C) and the jack bolts (370D).
4. Measure the gap between the impeller (101) and the seal chamber and stuffing-box cover (184) with a feeler gauge.

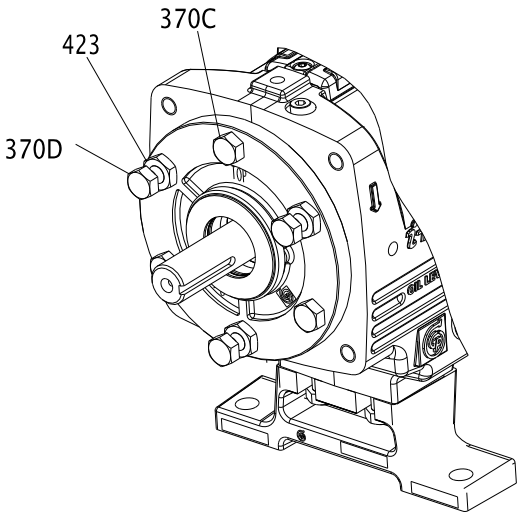

Figure 127: Loosen clamp bolts

5. When you reach a 0.030 in. (0.76 mm) clearance, tighten the clamp bolts (370C), jack bolts (370D), and lock nuts (423).
   This approximates the impeller position when it is set to 0.38 mm | 0.015 in. from the casing. Perform a final impeller adjustment after you install the impeller into the casing.
6. Check the impeller (101) runout.

Check vane tip to vane tip. If the total indicator reading is greater than 0.13 mm | 0.005 in., determine the cause and correct the issue before you proceed.

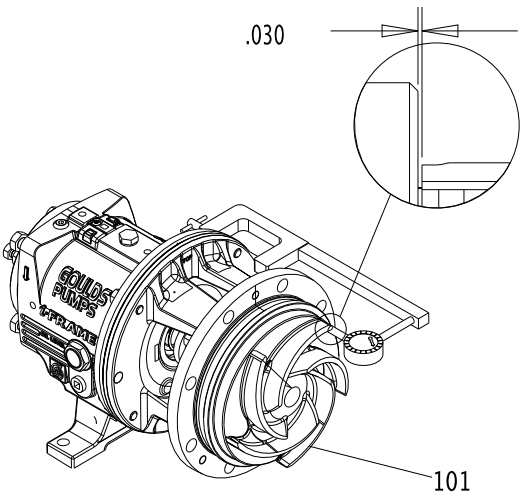

Figure 128: Check impeller run out

For more information on how to set the impeller clearances, refer to the Impeller-clearance checks and Impeller-clearance setting sections in Commissioning, Startup, Operation, and Shutdown.

Attach the i-*ALERT*® Condition Monitor to the pump

CAUTION:
Always wear protective gloves. The pump and condition monitor can be hot.

Tools required:

- 5/32 inch hex wrench

1. Attach the condition monitor (761B) to the bearing frame (228A) using the hex-head screw (372T) provided.

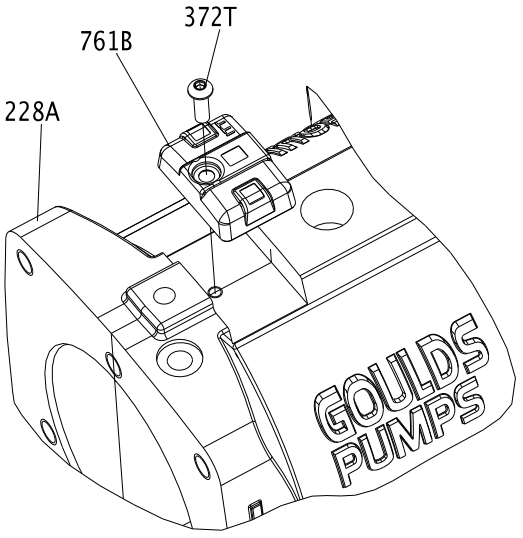

Figure 129: Attach condition monitor to bearing frame

2. Tighten the hex-head screw with a 5/32 inch hex wrench to 8 Nm | 6 ft-lbs.

Post-assembly checks

Perform these checks after you assemble the pump, then continue with pump startup:

- Rotate the shaft by hand in order to make sure that it rotates easily and smoothly and that there is no rubbing.
- Open the isolation valves and check the pump for leaks.

Install the back pull-out assembly (except HT 3196)

CAUTION:
Never remove the back pull-out assembly without assistance.

1. Clean the casing fit and install the casing gasket (351) on the seal chamber and stuffing-box cover.
2. Loosen the clamping bolts (370C) and jack bolts (370D) on the bearing housing.

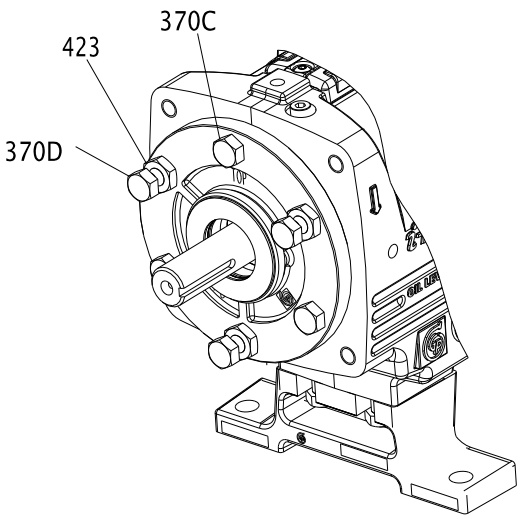

Figure 130: Loosen clamp bolts and jack bolts on bearing housing

3. Install the back pull-out assembly in the casing.

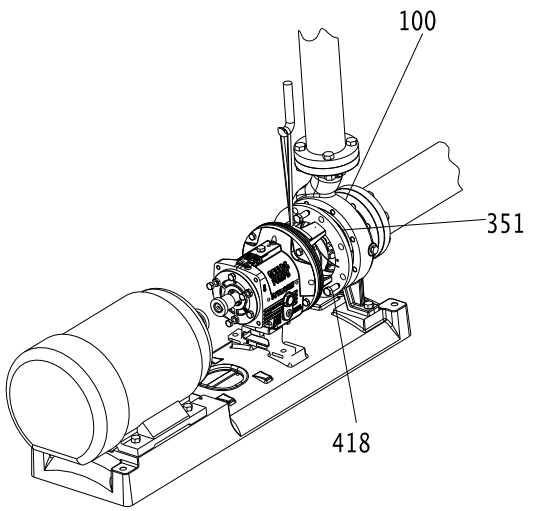

Figure 131: Install back pull-out assembly

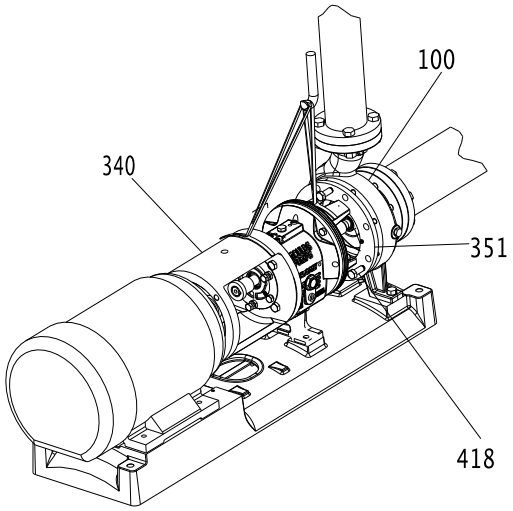

Figure 132: Install back pull-out assembly

4. Install and then hand-tighten the casing bolts (370).
   Refer to the bolt torque values for information on how to tighten the casing bolts.
5. Install and tighten the casing jackscrews (418).

NOTICE:
Do not overtighten the casing jackscrews. Doing so may result in equipment damage.

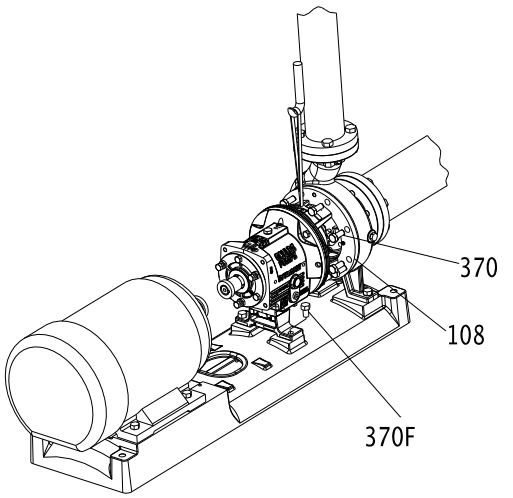

Figure 133: Install and tighten casing jackscrews

6. Reinstall the shims under the frame foot and tighten the frame foot to the baseplate.
   Make sure that you use the proper shim. Mount a dial indicator in order to measure the distance between the top of the frame and the baseplate. Make sure that the distance does not change as you tighten the frame-foot bolts.
7. Check the total clearance of the impeller in the casing.
   With new parts, an acceptable range is 0.76 mm | 0.030 in. to 1.65 mm | 0.065 in. If the impeller clearance is outside of this range, you either have the incorrect parts, an improper installation, or too much pipe strain. Determine the cause and correct the problem before you proceed.
8. Adjust the impeller clearance.
   Refer to the Impeller clearance setting section for more information.
9. Replace the auxiliary piping.

10. Fill the pump with the proper lubricant. See Lubricating-oil requirements.
11. Reinstall the coupling guard.
    See Install the coupling guard for more information.

NOTICE:
Risk of damage to the mechanical seal or shaft sleeve on units supplied with cartridge mechanical seals. Prior to startup, make sure to tighten the set screws in the seal locking ring and remove the centering clips.

Assembly references

Bolt torque values

Table 18: Bolt torque, Nm | lb-ft
This table provides the bolt torque values.

Location	Frame	3196, CV 3196, LF 3196, 3796		NM 3196		3198	
		Lube	Dry	Lube	Dry	Lube	Dry
Casing bolts (370) or casing nuts (425)	6-in. STi	Refer to the maximum torque values in Nm | lb-ft for casing bolts table.		36 | 27	53 | 40	N/A	N/A
	8-in. STi			27 | 20	40 | 30	47 | 35	71 | 53
	MTi, LTi			36 | 27	53 | 40	47 | 35	71 | 53
	XLT-i, i17			N/A	N/A	N/A	N/A
Frame-to-adapter bolts	All	27 | 20	40 | 30	27 | 20	40 | 30	27 | 20	40 | 30
Bearing-clamp ring bolts (236A) - duplex bearing only	STi, MTi	1.1* | 10	1.9* | 17	1.1* | 10	1.9* | 17	1.1* | 10	1.9* | 17
	LTi	6.2* | 55	9.4* | 83	6.2* | 55	9.4* | 83	6.2* | 55	9.4* | 83
Bearing end cover bolts (371C)	XLT-i, i17	12 | 9	16 | 12	N/A	N/A	N/A	N/A
Dynamic seal cap-screws (265)	STi, MTi, LTi	6.2* | 55	9.4 * | 83	N/A	N/A	N/A	N/A
	XLT-i, i17	12 | 9	16 | 12	N/A	N/A	N/A	N/A
* Values are in Nm | lb-in.							

Table 19: Maximum torque values in Nm | lb-ft for casing bolts
This table provides the maximum torque values for casing bolts.

		Models 3196, CV 3196 LF 3196, 3796 with 68 kg | 150 lb casing flanges				Model HT 3196 and all models with 136 kg | 300 lb casing flanges	
		Material specification					
		Ductile iron casing with A307 Grade B casing bolts		Alloy casing with (304SS) F593 Grade 1 or (316SS F593) Grade 2 casing bolts		Ductile iron and alloy casings with A193 grade B7 casing bolts	
Frame	Casing bolt diameter (in.)	Lube	Dry	Lube	Dry	Lube	Dry
8 in. STi	0.50	27 | 20	41 | 30	47 | 35	73 | 54	79 | 58	118 | 87
6 in. STi	0.625	53 | 39	80 | 59	96 | 71	145 | 107	156 | 115	235 | 173
MTi	0.625	53 | 39	80 | 59	96 | 71	145 | 107	156 | 115	235 | 173
LTi	0.625	53 | 39	80 | 59	96 | 71	145 | 107	156 | 115	235 | 173
XLT-i	0.625	53 | 39	80 | 59	96 | 71	145 | 107	156 | 115	235 | 173
i17	7/8	153 | 113	230 | 170	191 | 141	287 | 212	447 | 330	671 | 495

Shaft-end play

Table 20: Shaft-end play
Use this table as a reference for shaft-end play values.

Frame	Double row bearing	Duplex bearing
STi millimeters | inches	0.028 | 0.0011 0.048 | 0.0019	0.018 | 0.0007 0.025 | 0.0010

Frame	Double row bearing	Duplex bearing
MTi millimeters | inches	0.033 | 0.0013 0.053 | 0.0021	0.023 | 0.0009 0.030 | 0.0012
LTi millimeters | inches	Not applicable	0.025 | 0.0010 0.038 | 0.0015
XLT-i millimeters | inches	0.036 | 0.0014 0.058 | 0.0023	0.025 | 0.0010 0.038 | 0.0015

Bearing types

Table 21: Bearing types

Frame	Inboard bearing	Outboard bearing	
		Double row	Duplex
STi	6207	3306	7306
MTi	6309	3309	7309
LTi	6311	Not applicable	7310
XLT-i, i17	6313	3313	7313

Spare parts

Always state the serial number and indicate the part name and item number from the relevant sectional drawing when you order spare parts. It is imperative for service reliability to have a sufficient stock of readily available spare parts.

- Impeller (101)
- Shaft (122A)
- Shaft sleeve (126)
- Outboard bearing (112A)
- Inboard bearing (168A)
- Casing gasket (351)
- Frame-to-adapter gasket (360D)
- Bearing-housing retaining ring (361A)
- Bearing lockwasher (382)
- Bearing locknut (136)
- Impeller O-ring (412A)
- Bearing-housing O-ring (496)
- Outboard labyrinth-seal rotary O-ring (497F)
- Outboard labyrinth-seal stationary O-ring (497G)
- Inboard labyrinth-seal rotary O-ring (497H)
- Inboard labyrinth-seal stationary O-ring (497J)
- Lantern ring half (105) (packed stuffing box)
- Stuffing box packing (106) (packed stuffing box)
- Packing gland (107) (packed stuffing box)
- Impeller gasket (428D) (XLT-i and i17 only)

Interchangeability drawings

3196 interchangeability

Table 22: 3196 interchangeability drawing

Description	Shaft and Bearing Frame Assembly	Adapter	Seal Chamber	Impeller	Casing	Size
Model 3196 STi 1–3/8 in. Shaft Dia. Max BHP-40 HP	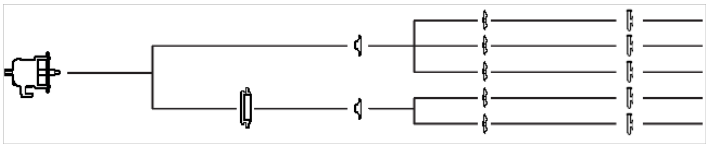					1x1.5-6 A 1.5x3-6 A 2x3-6 AC 1X1.5-8 A 1.5X3-8 A
Model 3196 MTi 1–3/4 in. Shaft Dia. Max BHP-122 HP	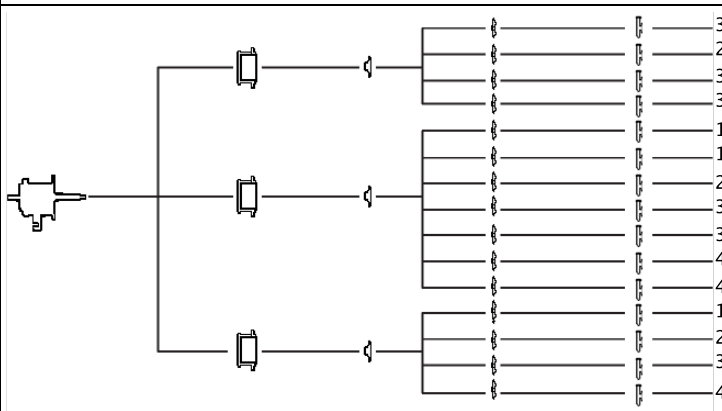					3X4-7 A70 2X3-8 A60 3X4-8 A70 3X4-8G A70 1X2-10 A05 1.5X3-10 A5 2X3-10 A60 3X4-10 A70 3X4-10H A4 4X6-10 A80 4X6-10H A8 1.5X3-13 A2 2X3-13 A30 3X4-13 A40 4X6-13 A80
Model 3196 LTi 2–1/8 in. Shaft Dia. Max BHP-200 HP	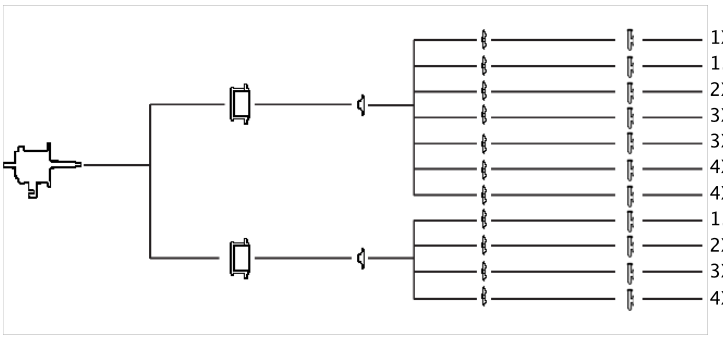					1X2-10 A05 1.5X3-10 A5 2X3-10 A60 3X4-10 A70 3X4-10H A4 4X6-10G A8 4X6-10H A8 1.5X3-13 A2 2X3-13 A30 3X4-13 A40 4X6-13 A80
Model 3196 XLT-i 2–1/2 in. Shaft Dia. Max BHP-250 HP 17 in. XLT-i has 2–3/4 in. Shaft Dia. Max BHP-350 HP	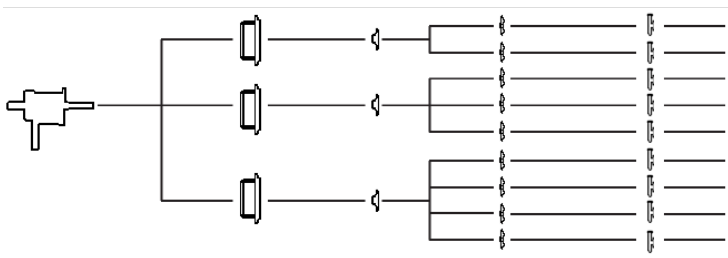					6X8-13 A90 8X10-13 A100 6X8-15 A110 8X10-15 A120 8X10-15G A12 8X10-15H A12 4X6-17 A105 6X8-17 A110 8X10-17 A120

Lubrication conversion

Frame lubrication conversion

NOTICE:

- Never mix greases of different consistencies (NLGI 1 or 3 with NLGI 2) or with different thickeners. For example, never mix a lithium-based grease with a polyurea-based grease. Doing so may result in decreased performance.
- Remove the bearings and old grease if you need to change the grease type or consistency. Failure to do so may result in equipment damage or decreased performance.

Use a grease that is suitable for high temperatures when you have frame pumpage temperatures greater than 177°C | 350°F. Ensure that mineral-oil greases have oxidation stabilizers and a consistency of NLGI 3.

Table 23: Lubricating-grease requirements

Most pumps use Sunoco 2EP grease. High temperature units with a pumpage temperature greater than 177°C | 350° F use Mobil SCH32.
This table shows which brand of grease to use when lubricating the pump.

	Pumpage temperature less than 177°C | 350°F	Pumpage temperature greater than 177°C | 350°F
NGLI consistency	2	3
Mobil	Mobilux EP2	SCH32
Exxon	Unirex N2	Unirex N3
Sunoco	Mutipurpose 2EP	N/A
SKF	LGMT 2	LGMT 3

Convert from greased-for-life or regreaseable to oil-lubricated bearings

1. Remove the plug from the oil-return slot in the frame located under the radial bearing. Use this table as a guide.

Pump model	Action
STi	Remove the epoxy from the return slot.
MTi, LTi, XLT-i, and i-17	Remove the set screw installed in the oil-return hole.

2. Remove the plug from the oil-return hole in the bearing housing (134).
3. Replace both bearings with unshielded, oil-lubricated bearings.

Table 24: Bearing types

Frame	Inboard bearing	Outboard bearing	
		Double row	Duplex
STi	6207	3306	7306
MTi	6309	3309	7309
LTi	6311	Not applicable	7310
XLT-i, i17	6313	3313	7313

4. Remove the grease fittings (193) to prevent accidental greasing.
   Two plugs (408H) are required to replace the two grease fittings.

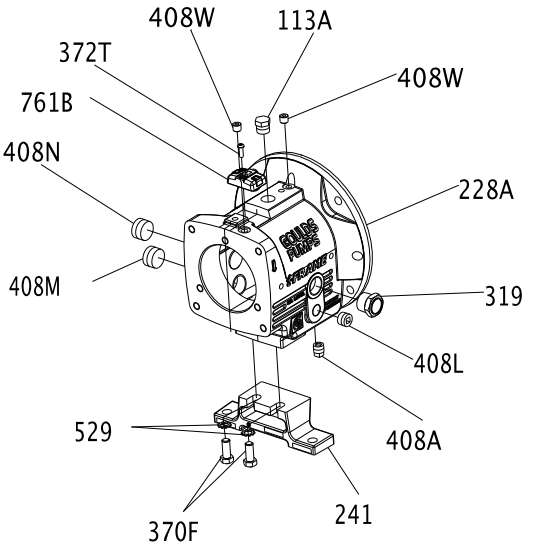

Figure 134: Replace two grease fittings with two plugs

Item Number	Size	Description	Quantity
113	1/4"-18 NPT	External hex/square head pipe plug	2
113A	1/2"-14 NPT	External hex/square head pipe plug	1
193	1/4"-18 NPT	Grease fitting	2
228	- - - -	Bearing frame	1
241	- - - -	Frame foot	1
370F	1/2"	Hex cap screw	2
408A	3/8"-18 NPT	External square head pipe plug (magnetic)	1
408J	1/4"-18 NPT	External hex/square head pipe plug	1
408L	1/2"-14 NPT	Square countersunk headless pipe plug	1
408M	1" 11-1/2" NPT	Square countersunk headless pipe plug	1
529	1/2"	Light helical spring lock washer	2

Conversion from flood-oil to pure-oil mist

Consult your local ITT representative for further information on this topic.

Convert from flood oil to regreaseable

Consult your local ITT representative for further information on this topic.

Troubleshooting

Operation troubleshooting

Symptom	Cause	Remedy
The pump is not delivering liquid.	The pump is not primed.	Re-prime the pump and check that the pump and suction line are full of liquid.
	The suction line is clogged.	Remove the obstructions.
	The impeller is clogged.	Back-flush the pump in order to clean the impeller.
	The shaft is rotating in the wrong direction.	Change the rotation. The rotation must match the arrow on the bearing housing or pump casing.
	The foot valve or suction pipe opening is not submerged enough.	Consult an ITT representative for the proper submersion depth. Use a baffle in order to eliminate vortices.
	The suction lift is too high.	Shorten the suction pipe.
The pump is not producing the rated flow or head.	The gasket or O-ring has an air leak.	Replace the gasket or O-ring.
	The stuffing box has an air leak.	Replace or readjust the mechanical seal.
	The impeller is partly clogged.	Back-flush the pump in order to clean the impeller.
	The clearance between the impeller and the pump casing is excessive.	Adjust the impeller clearance.
	The suction head is not sufficient.	Make sure that the suction-line shutoff valve is fully open and that the line is unobstructed.
	The impeller is worn or broken.	Inspect and replace the impeller if necessary.
The pump starts and then stops pumping.	The pump is not primed.	Re-prime the pump and check that the pump and suction line are full of liquid.
	The suction line has air or vapor pockets.	Rearrange the piping in order to eliminate air pockets.
	The suction line has an air leak.	Repair the leak.
The bearings are running hot.	The pump and driver are not aligned properly.	Realign the pump and driver.
	There is not sufficient lubrication.	Check the lubricant for suitability and level.
	The lubrication was not cooled properly.	Check the cooling system.
The pump is noisy or vibrates.	The pump and driver are not aligned properly.	Realign the pump and driver.
	The impeller is partly clogged.	Back-flush the pump in order to clean the impeller.
	The impeller or shaft is broken or bent.	Replace the impeller or shaft as necessary.
	The foundation is not rigid.	Tighten the hold-down bolts of the pump and motor. Make sure the baseplate is properly grouted without voids or air pockets.
	The bearings are worn.	Replace the bearings.
	The suction or discharge piping is not anchored or properly supported.	Anchor the suction or discharge piping as necessary according to recommendations in the Hydraulic Institute Standards Manual.
	The pump is cavitating.	Locate and correct the system problem.
The mechanical seal is leaking excessively.	The packing gland is not adjusted properly.	Tighten the gland nuts.
	The stuffing box is not packed properly.	Check the packing and repack the box.
	The mechanical seal parts are worn.	Replace the worn parts.
	The mechanical seal is overheating.	Check the lubrication and cooling lines.
	The shaft sleeve is scored.	Machine or replace the shaft sleeve as necessary.
The motor requires excessive power.	The discharge head has dropped below the rated point and is pumping too much liquid.	Install a throttle valve. If this does not help, then trim the impeller diameter. If this does not help, then contact your ITT representative.
	The liquid is heavier than expected.	Check the specific gravity and viscosity.
	The stuffing-box packing is too tight.	Readjust the packing. If the packing is worn, then replace the packing.
	Rotating parts are rubbing against each other.	Check the parts that are wearing for proper clearances.
	The impeller clearance is too tight.	Adjust the impeller clearance.

Alignment troubleshooting

Symptom	Cause	Remedy
Horizontal (side-to-side) alignment cannot be obtained (angular or parallel).	The driver feet are bolt-bound.	Loosen the pump's hold-down bolts, and slide the pump and driver until you achieve horizontal alignment.
	The baseplate is not leveled properly and is probably twisted.	1. Determine which corners of the baseplate are high or low. 2. Remove or add shims at the appropriate corners. 3. Realign the pump and driver.

Assembly troubleshooting

Symptom	Cause	Remedy
There is excessive shaft end play.	The internal clearance of the bearings exceeds the recommended amount.	Replace the bearings with a bearing of the correct type.
	The snap ring is loose in the bearing-housing groove.	Re-seat the snap ring.
There is excessive shaft and sleeve runout.	The sleeve is worn.	Replace the sleeve.
	The shaft is bent.	Replace the shaft.
There is excessive bearing-frame flange runout.	The shaft is bent.	Replace the shaft.
	The flange of the bearing frame is distorted.	Replace the bearing-frame flange.
There is excessive frame-adapter runout.	There is corrosion on the frame adapter.	Replace the frame adapter.
	The adapter-to-frame gasket is not seated properly.	Re-seat the frame adapter and make sure that the adapter-to-frame gasket is seated properly.
There is excessive seal chamber or stuffing-box cover runout.	The seal chamber or the stuffing-box cover is not properly seated in the frame adapter.	Re-seat the seal chamber or stuffing-box cover.
	There is corrosion or wear on the seal chamber or stuffing-box cover.	Replace the seal chamber or stuffing-box cover.
There is excessive vane-tip runout of the impeller.	The vane is bent.	Replace the impeller.

i-*ALERT*® Condition Monitor troubleshooting

To troubleshoot t the i-*ALERT*®*2* monitor, please refer to the i-*ALERT*®*2* IOM or i-ALERT2.com.

Symptom	Cause	Remedy
There are no green or red flashing LEDs.	The battery is dead.	Replace the condition monitor.
	The unit is deactivated.	Activate the condition monitor.
	The unit is malfunctioning.	Consult your ITT representative for a warranty replacement.
The red LEDs are flashing, but the temperature and vibration are at acceptable levels.	The baseline is bad.	Check the temperature and vibration levels and reset the condition monitor.
	The unit is malfunctioning.	Consult your ITT representative for a warranty replacement.

Parts Listings and Cross-Sectionals

Parts list

Table 25: Construction material and quantity

Item	Quantity	Part name	Pump Material				
			All D.I.	D.I. With 316 SS impeller	All 316SS	All CD4MCu	All Alloy 20
100	1	Casing	1012	1012	1203	1216	1204
101	1	Impeller	1013	1203	1203	1216	1204
105	1	Lantern Ring	Teflon				
106	1 set	Stuffing Box Packing	Non-asbestos braid				
107	1	Gland—Packed Box	1203			1204	
108	1	Frame Adapter	1013				
109C	1***	Outboard Bearing End Cover	1001				
112A	1	Outboard Bearing	Double row angular contact (duplex pair for LTi)				
113	2	Plug—Grease Relief	2210				
113B	1	Plug—Oil Fill	2210				
122	1	Shaft—Without Sleeve	2229			2230	
122	1	Shaft—With Sleeve	2238				
126	1	Shaft Sleeve	2229				2230
134	1	Bearing Housing	1001				
136	1	Bearing Locknut	Steel				
168A	1	Radial Bearing	Single row ball				
184	1	Seal Chamber/Stuffing Box Cover	1012	1012	1203	1216	1204
193	2	Grease Fitting	Steel				
228	1	Bearing Frame	STi 1013, All others - 1001				
236A	10	Cap Screw—Bearing Clamp Ring	2210				
239	1	Support, Casing	–	–	2201*	2201*	2201*
241	1	Frame Foot	1001				
248	1	Oil Thrower	2210				
250	1	Gland—Mechanical Seal	Material varies				
253B	1	Bearing Clamp Ring	2210				
319	1	Sight Glass	Glass/steel				
332A	1	Outboard Labyrinth Seal w/O-rings	Brass ASTM B505-96				
333A	1	Inboard Labyrinth Seal w/O-rings	Brass ASTM B505-96				
351	1	Casing Gasket	Aramid fiber w/EPDM				
353	4	Gland Stud	2228				
355	4	Gland Stud Nut	2228				
358	1	Plug—Casing Drain	2210		2229	2230	
358Y	1 ***	Plug, Impeller	2229			2230	
360C	1 ***	Gasket—Thrust End Cover	Buna				
360D	1	Gasket—Frame-to-Adapter	Buna				
360Q	1	Gasket—Gland-to-Stuffing Box Cover	Material varies				
361A	1	Retaining Ring	Steel				
370	****	Bolt—Adapter to Case	2210		2228		
370B	4	Bolt—Frame-to-Adapter	2210				
370C	**	Clamp Bolt —Bearing Housing	2210				
370D	**	Jack Bolt—Bearing Housing	2210				
370F	2	Bolt—Frame Foot to Frame	2210				
370H	2	Stud—Stuffing Box Cover-to-Adapter	2228				
370Y	2	Bolt—Cap Casing to Support	–	–	2210*		
371C	6 ***	Cap Screw-End Cover to Bearing Housing	2210				
382	1	Bearing Lockwasher	Steel				
383	1	Mechanical Seal	Material varies				
400	1	Coupling Key	2210				

Item	Quantity	Part name	Pump Material				
			All D.I.	D.I. With 316 SS impeller	All 316SS	All CD4MCu	All Alloy 20
408A	1	Plug—Oil Drane	2210				
408H	4	Plug—Oil Mist Connection	2210				
408J	1	Plug—Oiler	2210				
408L	1	Plug—Oil Cooler Inlet	2210				
408M	1	Plug—Oil Cooler Outlet	2210				
408N	1	Plug—Sight Glass	2210				
412A	1	O-Ring, Graphoil Impeller	–	–	*		
418	3	Jack Bolt—Adapter-to-Case	2228				
423	3	Jam Nut—Bearing Housing Jack Bolt	2210				
423B	2	Hex Nut—Stuffing Box Cover to Adapter	2228				
428	1	Gasket, Plug	Teflon				
437	1	Lockwasher, Casing to Support	–	–	2210*		
458Y	1 ***	Plug, Impeller	2229			2230	
469B	2	Dowel Pin—Frame-to-Adapter	Steel				
494	1	Tube Element, Finned Cooled	304SS / Copper				
496	1	O-Ring Bearing Housing	Buna N				
412A	1	O-Ring—Impeller	Viton				
497F	1	O-Ring—Outboard Labyrinth Rotor	Viton				
497G	1	O-Ring—Outboard Labyrinth Stator	Viton				
497H	1	O-Ring—Inboard Labyrinth Rotor	Viton				
497J	1	O-Ring—Inboard Labyrinth Stator	Viton				
497L	1	O-Ring Internal (inboard)	Viton				
497N	1	O-Ring Internal (outboard)	Viton				
503	1	Adapter Ring	1013				
529	1	Lockwasher—Frame Foot-to-Bearing Frame	Steel				
555	1	Tube, Finned Cooling Assembly	304AA / Copper				
555A	1	Tube, Ftg Male (Frame Cooling)	Brass				
555B	2	Connector, Thermocouple (Frame Cooling)	Brass				
555C	2	Elbow, Female (Frame Cooling)	Brass				
555D	1	Conn TC Sealed PWR	Cast iron				
761B	1	i-*ALERT*® Condition Monitor	Stainless steel/epoxy				

Table 26: Construction material and quantity (continued)

Item	Quantity	Part name	Pump Material				
			All 317SS	All Monel	All Nickel	All Hastelloy C	All Hastelloy B
100	1	Casing	1209	1119	1601	1215	1217
101	1	Impeller	1209	1119	1601	1215	1217
105	1	Lantern Ring	Teflon				
106	1 set	Stuffing Box Packing	Non-asbestos braid				
107	1	Gland—Packed Box	1209	1119	1601	1215	1217
108	1	Frame Adapter	1013				
109C	1***	Outboard Bearing End Cover	1001				
112A	1	Outboard Bearing	Double row angular contact (duplex pair for LTi)				
113	2	Plug—Grease Relief	2210				
113B	1	Plug—Oil Fill	2210				
122	1	Shaft—Less Sleeve	2232	2150	2155	2248	2247
122	1	Shaft—With Sleeve	2229				
126	1	Shaft Sleeve	2232	2150	2155	2248	2247
134	1	Bearing Housing	1001				
136	1	Bearing Locknut	Steel				
168A	1	Radial Bearing	Single row ball				
184	1	Seal Chamber/Stuffing Box Cover	1209	1119	1601	1215	1217
193	2	Grease Fitting	Steel				

Item	Quantity	Part name	Pump Material				
			All 317SS	All Monel	All Nickel	All Hastelloy C	All Hastelloy B
228	1	Bearing Frame	STi-1013, All others - 1001				
236A	10	Cap Screw—Bearing Clamp Ring	2210				
239	1	Support, Casing	–	–	–	2201*	–
241	1	Frame Foot	1001				
248	1	Oil Thrower	2210				
250	1	Gland—Mechanical Seal	Material varies				
253B	1	Bearing Clamp Ring	2210				
319	1	Sight Glass	Glass/steel				
332A	1	Outboard Labyrinth Seal w/O-rings	Brass ASTM B505-96				
333A	1	Inboard Labyrinth Seal w/O-rings	Brass ASTM B505-96				
351	1	Casing Gasket	Aramid fiber w/EPDM				
353	4	Gland Stud	2232	2150	2155	2248	2247
355	4	Gland Stud Nut	2232	2150	2155	2248	2247
358	1	Plug—Casing Drain	2232	2150	2156	2248	2247
358Y	1 ***	Plug, Impeller	2232	2150	2156	2248	2156
360C	1 ***	Gasket—Thrust End Cover	Buna				
360D	1	Gasket—Frame-to-Adapter	Buna				
360Q	1	Gasket—Gland-to-Stuffing Box Cover	Material varies				
361A	1	Retaining Ring	Steel				
370	****	Bolt—Adapter to Case	2228				
370B	4	Bolt—Frame-to-Adapter	2210				
370C	**	Clamp Bolt —Bearing Housing	2210				
370D	**	Jack Bolt—Bearing Housing	2210				
370F	2	Bolt—Frame Foot to Frame	2210				
370H	2	Stud—Stuffing Box Cover-to-Adapter	2228				
370H	2	Bolt—Cap Casing to Support	–	–	–	2210*	–
371C	6 ***	Cap Screw-End Cover to Bearing Housing	2210				
382	1	Bearing Lockwasher	Steel				
383	1	Mechanical Seal	Material varies				
400	1	Coupling Key	2210				
408A	1	Plug—Oil Drane	2210				
408H	4	Plug—Oil Mist Connection	2210				
408J	1	Plug—Oiler	2210				
408L	1	Plug—Oil Cooler Inlet	2210				
408M	1	Plug—Oil Cooler Outlet	2210				
408N	1	Plug—Sight Glass	2210				
412A	1	O-Ring, Graphoil Impeller	–	–	–	*	–
418	3	Jack Bolt—Adapter-to-Case	2228				
423	3	Jam Nut—Bearing Housing Jack Bolt	2210				
423B	2	Hex Nut—Stuffing Box Cover to Adapter	2228				
428	1	Gasket, Plug	Teflon				
437	1	Lockwasher, Casing to Support	–	–	–	2210*	–
458Y	1***	Plug, Impeller	2232	2150	2155	2248	2247
469B	2	Dowel Pin—Frame-to-Adapter	Steel				
494	1	Tube Element, Finned Cooled	304SS / Copper				
496	1	O-Ring Bearing Housing	Buna N				
412A	1	O-Ring—Impeller	Viton				
497F	1	O-Ring—Outboard Labyrinth Rotor	Viton				
497G	1	O-Ring—Outboard Labyrinth Stator	Viton				
497H	1	O-Ring—Inboard Labyrinth Rotor	Viton				
497J	1	O-Ring—Inboard Labyrinth Stator	Viton				
497L	1	O-Ring Internal (inboard)	Viton				
497N	1	O-Ring Internal (outboard)	Viton				
503	1	Adapter Ring	1013				

Item	Quantity	Part name	Pump Material				
			All 317SS	All Monel	All Nickel	All Hastelloy C	All Hastelloy B
529	1	Lockwasher—Frame Foot-to-Bearing Frame	Steel				
555	1	Tube, Finned Cooling Assembly	304AA / Copper				
555A	1	Tube, Ftg Male (Frame Cooling)	Brass				
555B	2	Connector, Thermocouple (Frame Cooling)	Brass				
555C	2	Elbow, Female (Frame Cooling)	Brass				
555D	1	Conn TC Sealed PWR	Cast iron				
761B	1	i-*ALERT*® Condition Monitor	Stainless steel/epoxy				

Table 27: Construction material and quantity (continued)

Item	Quantity	Part name	Pump Material (3196, HT 3196, CV 3196, 3796)	Pump Material (NM 3196)	Pump Material (3198)
			All Titanium	Vinylester	D.I./Teflon
100	1	Casing	1220	6929	9639
101	1	Impeller	1220	6929	6944
105	1	Lantern Ring	Teflon	–	–
106	1 set	Stuffing Box Packing	Non-asbestos braid	–	–
107	1	Gland—Packed Box	1220	–	–
108	1	Frame Adapter	1013		
109C	1***	Outboard Bearing End Cover	1001		
112A	1	Outboard Bearing	Double row angluar contact (duplex pair for LTi)		
113	2	Plug—Grease Relief	2210		
113B	1	Plug—Oil Fill	2210		
122	1	Shaft—Less Sleeve	2156	2229	–
122	1	Shaft—With Sleeve	2229		6947
126	1	Shaft Sleeve	2156	2229	–
134	1	Bearing Housing	1001		
136	1	Bearing Locknut	Steel		
168A	1	Radial Bearing	Single row ball		
184	1	Seal Chamber/Stuffing Box Cover	1220	6929	9639
193	2	Grease Fitting	Steel		
228	1	Bearing Frame	STi - 1013, All others - 1001		
236A	10	Cap Screw—Bearing Clamp Ring	2210		
239	1	Support, Casing	–	–	–
241	1	Frame Foot	1001		
248	1	Oil Thrower	2210		
250	1	Gland—Mechanical Seal	Material varies		
253B	1	Bearing Clamp Ring	2210		
319	1	Sight Glass	Glass/steel		
332A	1	Outboard Labyrinth Seal w/O-rings	Brass ASTM B505-96		
333A	1	Inboard Labyrinth Seal w/O-rings	Brass ASTM B505-96		
351	1	Casing Gasket	Aramid fiber w/EPDM		
353	4	Gland Stud	2156	2229	2229
355	4	Gland Stud Nut	2156	2229	2229
358	1	Plug—Casing Drain	2156	–	–
358Y	1 ***	Plug, Impeller	2156	–	–
360C	1 ***	Gasket—Thrust End Cover	Buna		
360D	1	Gasket—Frame-to-Adapter	Buna		
360Q	1	Gasket—Gland-to-Stuffing Box Cover	Material varies		
361A	1	Retaining Ring	Steel		
370	****	Bolt—Adapter to Case	2228		
370B	4	Bolt—Frame-to-Adapter	2210		
370C	**	Clamp Bolt —Bearing Housing	2210		
370D	**l	Jack Bolt—Bearing Housing	2210		
370F	2	Bolt—Frame Foot to Frame	2210		

Item	Quantity	Part name	Pump Material (3196, HT 3196, CV 3196, 3796)	Pump Material (NM 3196)	Pump Material (3198)
			All Titanium	Vinylester	D.I./Teflon
370H	2	Stud—Stuffing Box Cover-to-Adapter	2228		
370Y	2	Bolt—Cap Casing to Support	–	–	–
371C	6 ***	Cap Screw-End Cover to Bearing Housing	2210		
382	1	Bearing Lockwasher	Steel		
383	1	Mechanical Seal	Material varies		
400	1	Coupling Key	2210		
408A	1	Plug—Oil Drane	2210		
408H	4	Plug—Oil Mist Connection	2210		
408J	1	Plug—Oiler	2210		
408L	1	Plug—Oil Cooler Inlet	2210		
408M	1	Plug—Oil Cooler Outlet	2210		
408N	1	Plug—Sight Glass	2210		
412A	1	O-Ring, Graphoil Impeller	–	–	–
418	3	Jack Bolt—Adapter-to-Case	2228		
423	3	Jam Nut—Bearing Housing Jack Bolt	2210		
423B	2	Hex Nut—Stuffing Box Cover to Adapter	2228		
428	1	Gasket, Plug	Teflon		
437	1	Lockwasher, Casing to Support	–	–	–
458Y	1 ***	Plug, Impeller	2156	–	–
469B	2	Dowel Pin—Frame-to-Adapter	Steel		
494	1	Tube Element, Finned Cooled	304SS / Copper		
496	1	O-Ring Bearing Housing	Buna N		
412A	1	O-Ring—Impeller	Viton		
497F	1	O-Ring—Outboard Labyrinth Rotor	Viton		
497G	1	O-Ring—Outboard Labyrinth Stator	Viton		
497H	1	O-Ring—Inboard Labyrinth Rotor	Viton		
497J	1	O-Ring—Inboard Laybrinth Stator	Viton		
497L	1	O-Ring Internal (inboard)	Viton		
497N	1	O-Ring Internal (outboard)	Viton		
503	1	Adapter Ring	1013		
529	1	Lockwasher—Frame Foot-to-Bearing Frame	Steel		
555	1	Tube, Finned Cooling Assembly	304AA / Copper		
555A	1	Tube, Ftg Male (Frame Cooling)	Brass		
555B	2	Connector, Thermocouple (Frame Cooling)	Brass		
555C	2	Elbow, Female (Frame Cooling)	Brass		
555D	1	Conn TC Sealed PWR	Cast iron		
761B	1	i-*ALERT*® Condition Monitor	Stainless steel/epoxy		

Table 28: Key to table symbols

–	Not applicable
*	Only applicable for HT 3196
**	3 for STi, MTi, LTi 4 for XLT-i, i17
***	XLT-I and i17 only
****	4 for 6 in. STi 8 for 8 in. STi and MTi 16 for 13 in. MTi, LTi , XLT-I 24 for 15 in. XLT-I 12 for 10 in. MTi, LTi , i17

Table 29: Material-code reference

Material	Goulds material code	ASTM	Din	ISO	JIS
Cast Iron	1001	A48 CLASS 20			
Ductile Iron	1012	A395 Gr60-40-18			
Ductile Iron	1013	A536 Gr60-42-10			
CD4MCu	1041	A744 CD4MCU			
Monel	1119	A494 GrM-35-1			
316SS	1203	A744 CF-8M	1.4408		G5121 (SC514)
Alloy 20	1204	A744CN-7M	1.4500		
317SS	1209	A744CG-8M	1.4448		
Hastelloy C	1215	A494 CW-6M			
CD4MCu	1216	A744CD4MCU	9.4460		
Hastelloy B	1217	A494 N-7M			
Titanium	1220	B367 GrC-3			
Nickel	1601	A494 GrCZ100			
Monel	2150	B164 UNS N04400			
Nickel	2155	B160 UNS N02200			
Titanium	2156	B348 Gr2			
Carbon Steel	2201	A576 Gr. 1018 and 1020			
Carbon Steel	2210	A108Gr1211			
304SS	2228	A276 Type 304			
316SS	2229	A276 Type 316			
Alloy 20	2230	B473 (N08020)			
317SS	2232	A276			
4150 Steel	2237	A322Gr4150			
4140 Steel	2238	A434Gr4140			
4140 Steel	2239	A193 Gr. B7			
Alloy B-2	2247	B335 (N10665)			
Alloy C-276	2248	B574 (N10276)			
GMP-2000	6929	N/A			
PFA Lined Steel	6944	N/A			
PFA Lined 316SS	6947	N/A			
PFA Lined Ductile Iron	9639	N/A			

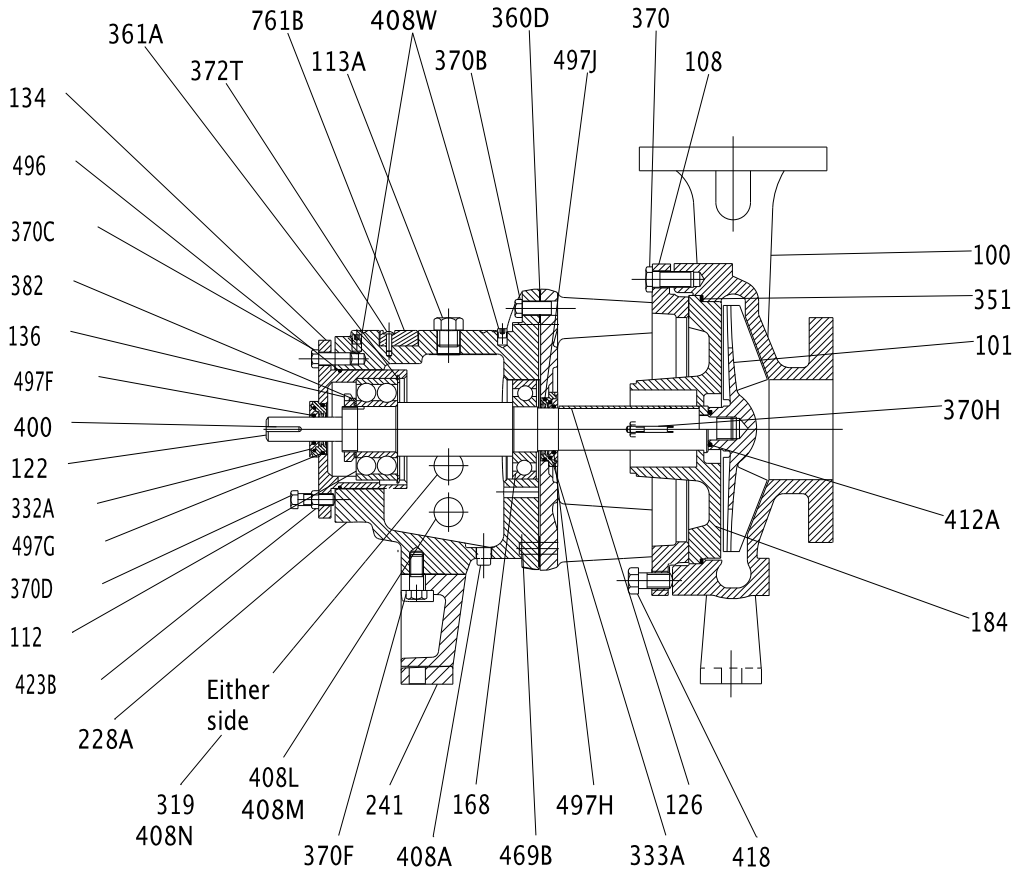

Figure 135: 3196 cross-sectional drawing

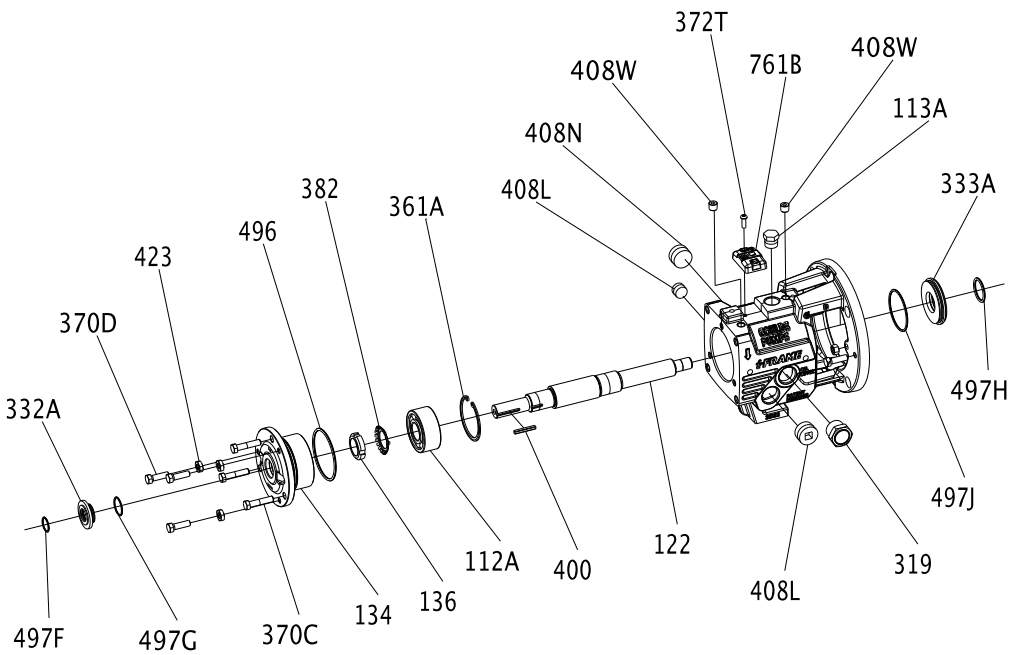

Figure 136: STi bearing-frame exploded view

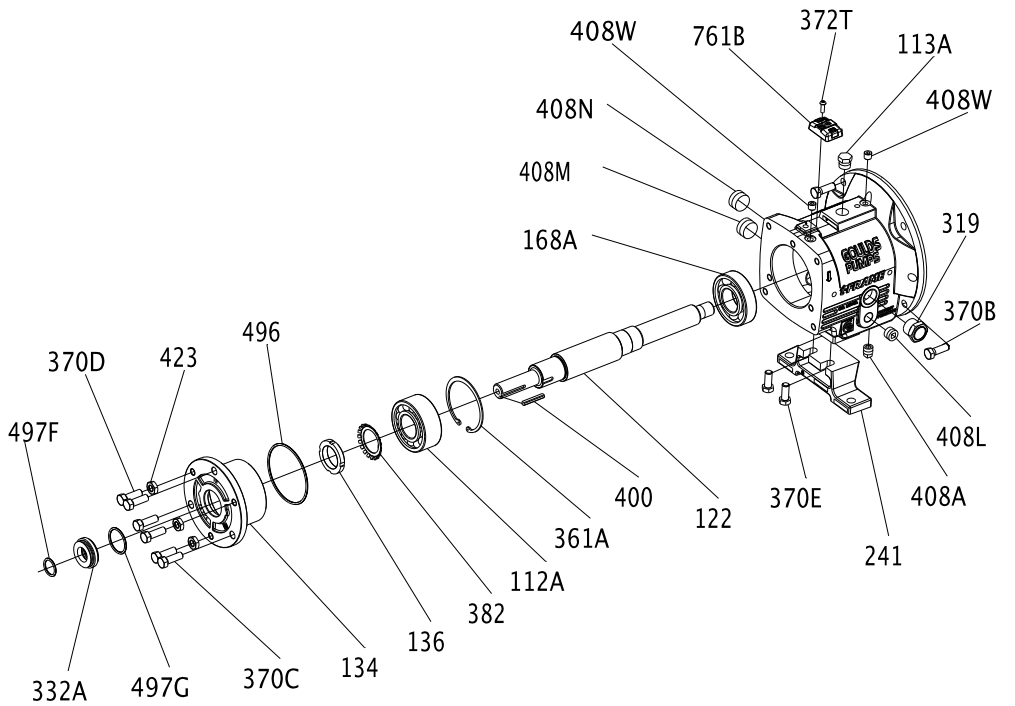

Figure 137: MTi bearing-frame exploded view

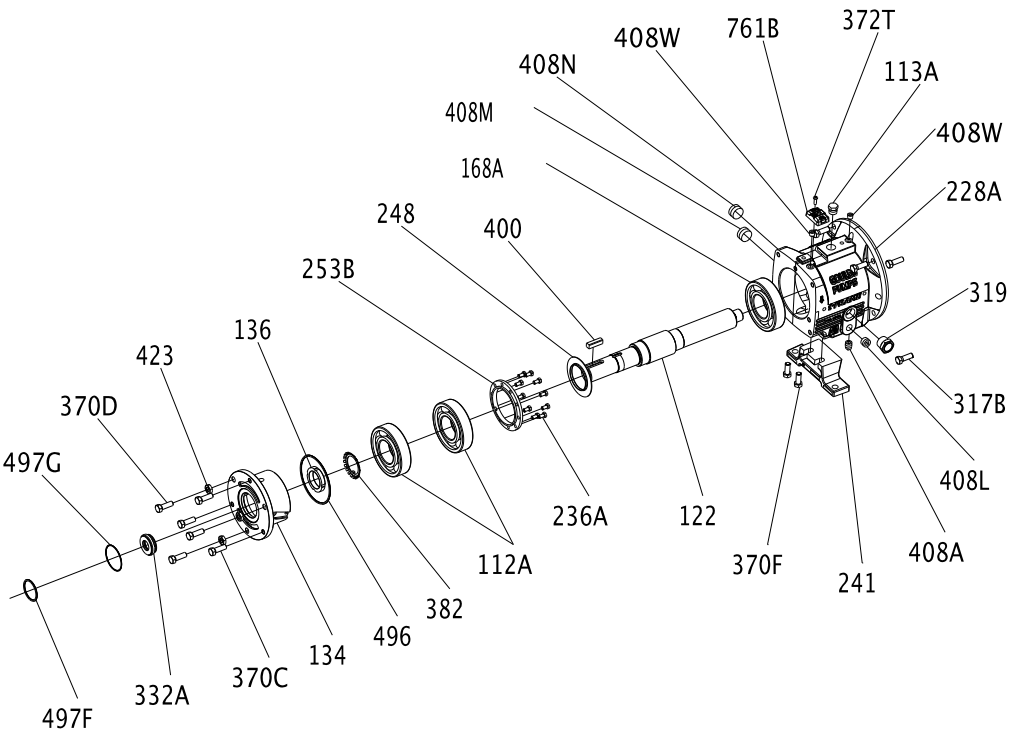

Figure 138: LTi bearing-frame exploded view

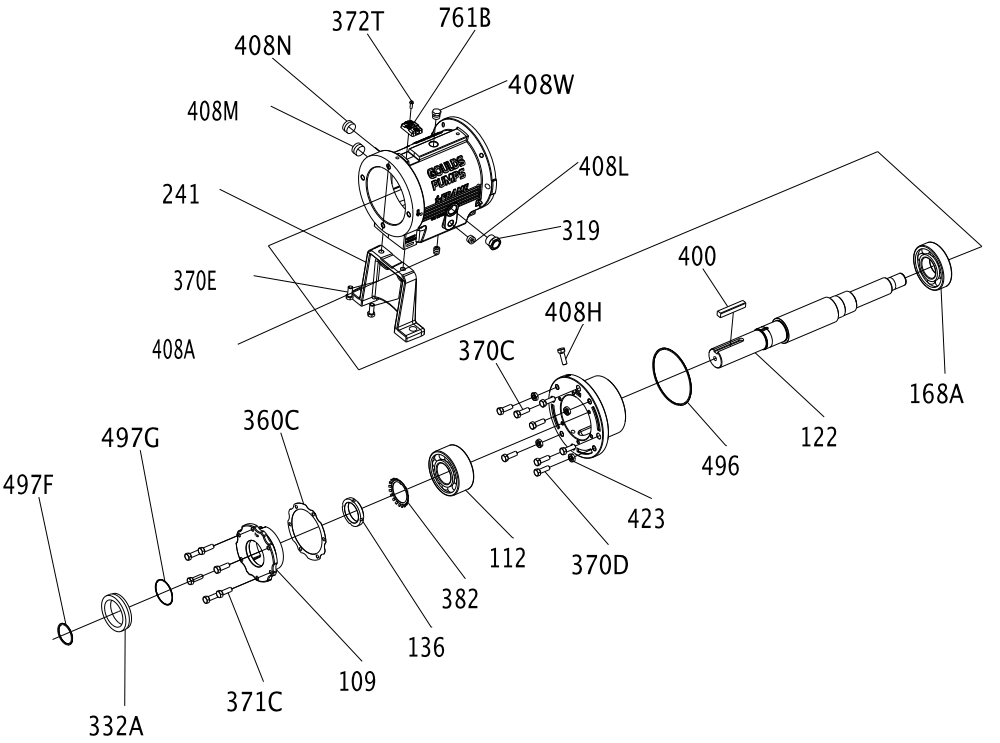

Figure 139: XLT-i bearing-frame exploded view

The finned-tube oil cooler is standard on HT 3196 and optional on all other models.

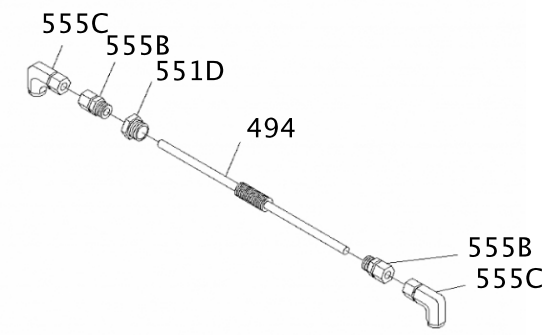

Figure 140: Finned-tube oil cooler exploded view

Certification: CE or CE ATEX

Certificates of conformance

CSA Certificate

CSA INTERNATIONAL

Certificate of Compliance

Certificate: 1992883 Master Contract: 236924

Project: 2254252 Date Issued: 2009/12/16

Issued to: ITT Corporation
240 Fall St
Seneca Falls, NY 13148
USA
Attention: Anthony Stavale

The products listed below are eligible to bear the CSA Mark shown with adjacent indicators 'C' and 'US' for Canada and US or with adjacent indicator 'US' for US only or without either indicator for Canada only.

C SP US

D. Simpson, Certifier

Issued by: D. Simpson, Certifier

PRODUCTS

CLASS 2258 03 - PROCESS CONTROL EQUIPMENT - Intrinsically Safe and Non-Incendive Systems - For Hazardous Locations

CLASS 2258 83 - PROCESS CONTROL EQUIPMENT-Intrinsically Safe and Non-Incendive - Systems-For Hazardous Locations-Certified to U.S. Standards

Class I, Division 1, Group A, B, C and D, Class II, Group E, F and G; Class III

- Condition Monitor, Model LCCM, p/n C07657A, battery operated (non-replaceable, non-rechargeable), intrinsically safe, temperature code T4 (at max ambient of 100C).

APPLICABLE REQUIREMENTS

CAN/CSA-C22.2 No. 0-M91 - General Requirements – Canadian Electrical Code, Part II

CAN/CSA-C22.2 No.157-92 - Intrinsically Safe and Non-Incendive Equipment for Use in Hazardous Locations

UL Std No.913, Ed. 7 - Intrinsically Safe Apparatus and Associated Apparatus for Use in Class I, II and III, Division 1, Hazardous Locations

CSA INTERNATIONAL

Certificate: 1992883 **Master Contract:** 236924

Project: 2254251 **Date Issued:** 2009/12/16

UL Std No. 969, 4th Edition - UL standard for safety marking and labeling systems

MARKINGS

- submittor s identification
- model designation
- date code or serial number
- Hazardous Location designations
- temperature code rating
- maximum ambient temperature
- the CSA Mark, with the C/US indicator
- the warning, WARNING- NOT FOR USE IN ATMOSPHERES CONTAINING ACETIC ACID
- the words "Ex ia" and "Intrinsically safe"

ATEX notification

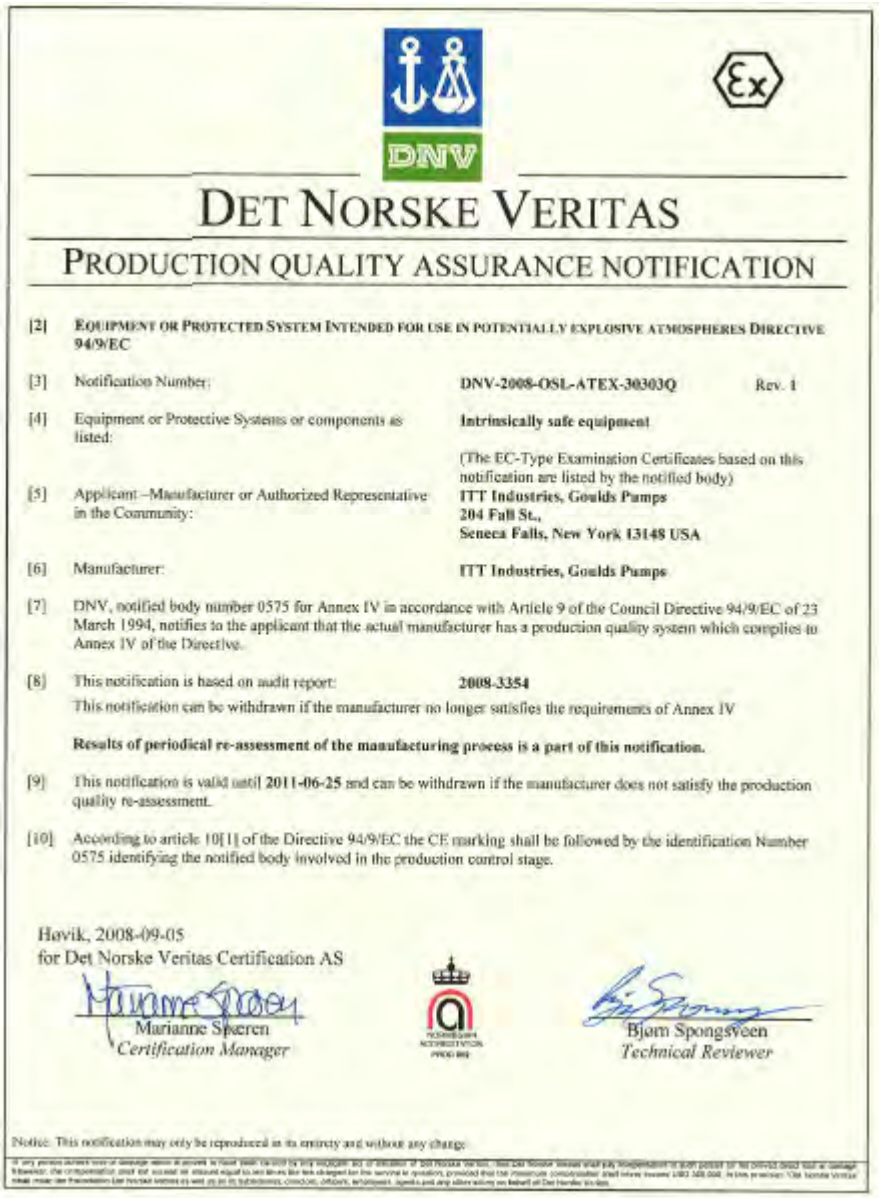

DET NORSKE VERITAS

PRODUCTION QUALITY ASSURANCE NOTIFICATION

[2] EQUIPMENT OR PROTECTED SYSTEM INTENDED FOR USE IN POTENTIALLY EXPLOSIVE ATMOSPHERES DIRECTIVE 94/9/EC

[3] Notification Number: **DNV-2008-OSL-ATEX-30303Q** Rev. 1

[4] Equipment or Protective Systems or components as listed: **Intrinsically safe equipment**

(The EC-Type Examination Certificates based on this notification are listed by the notified body)

[5] Applicant –Manufacturer or Authorized Representative in the Community: **ITT Industries, Goulds Pumps**
204 Fall St.,
Seneca Falls, New York 13148 USA

[6] Manufacturer: **ITT Industries, Goulds Pumps**

[7] DNV, notified body number 0575 for Annex IV in accordance with Article 9 of the Council Directive 94/9/EC of 23 March 1994, notifies to the applicant that the actual manufacturer has a production quality system which complies to Annex IV of the Directive.

[8] This notification is based on audit report: **2008-3354**
This notification can be withdrawn if the manufacturer no longer satisfies the requirements of Annex IV

Results of periodical re-assessment of the manufacturing process is a part of this notification.

[9] This notification is valid until **2011-06-25** and can be withdrawn if the manufacturer does not satisfy the production quality re-assessment.

[10] According to article 10[1] of the Directive 94/9/EC the CE marking shall be followed by the identification Number 0575 identifying the notified body involved in the production control stage.

Høvik, 2008-09-05
for Det Norske Veritas Certification AS

Marianne Speren
Certification Manager

Bjørn Spongsveen
Technical Reviewer

Notice: This notification may only be reproduced in its entirety and without any change.

IECEx Certificate of Conformity

IECEx Certificate of Conformity

INTERNATIONAL ELECTROTECHNICAL COMMISSION
IEC Certification Scheme for Explosive Atmospheres

for rules and details of the IECEx Scheme visit www.iecex.com

Certificate No.: IECEx LCI 08.0038 Issue No.: 0 Certificate history:

Status: Current

Date of Issue: 2008-09-16 Page 1 of 3

Applicant: **ITT Corp.**
Goulds pumps
240 Fall Street
Seneca Falls, NY 13148
United States of America

Electrical Apparatus: **Condition Monitor**
Optional accessory:

Type of Protection: **ia**

Marking: **ITT Corp.**
Goulds pumps
240 Fall Street
Seneca Falls, NY 13148
U.S.A.
Condition Monitor
Type : LCCM, p/n C07667A
Ex ia IIC T4
Tamb : -40°C à 100°C

Approved for issue on behalf of the IECEx Certification Body: Marc Gilleux

Position: Ex Certification Manager

Signature: (for printed version)

Date: le 16 Septembre 2008

1. This certificate and schedule may only be reproduced in full.
2. This certificate is not transferable and remains the property of the issuing body.
3. The Status and authenticity of this certificate may be verified by visiting the Official IECEx Website.

Certificate issued by:

Laboratoire Central des Industries Electriques (LCIE)
33 Avenue du General Leclerc
FR-92260 Fontenay-aux-Roses
France

IECEx Certificate of Conformity

Certificate No.: IECEx LCI 08.0038

Date of Issue: 2008-09-16 Issue No.: 0

Page 2 of 3

Manufacturer: **ITT Corp.**
Goulds pumps
240 Fall Street
Seneca Falls, NY 13148
United States of America

Manufacturing location(s):

This certificate is issued as verification that a sample(s), representative of production, was assessed and tested and found to comply with the IEC Standard list below and that the manufacturer's quality system, relating to the Ex products covered by this certificate, was assessed and found to comply with the IECEx Quality system requirements. This certificate is granted subject to the conditions as set out in IECEx Scheme Rules, IECEx 02 and Operational Documents as amended

STANDARDS:
The electrical apparatus and any acceptable variations to it specified in the schedule of this certificate and the identified documents, was found to comply with the following standards

IEC 60079-0 : 2004 Electrical apparatus for explosive gas atmospheres - Part 0: General requirements
Edition: 4.0
IEC 60079-11 : 2006 Explosive atmospheres - Part 11: Equipment protection by intrinsic safety "i"
Edition: 5

This Certificate does not indicate compliance with electrical safety and performance requirements other than those expressly included in the Standards listed above.

TEST & ASSESSMENT REPORTS:
A sample(s) of the equipment listed has successfully met the examination and test requirements as recorded in

Test Report:

FR/LCIEx/TR08.0043/00

Quality Assessment Report:
NO/DNV/QAR08.0006/00

Chinese Certificate of Conformity

CONFORMITY CERTIFICATE OF EXPLOSION-PROOF

PCEC

Certificate No.: CE082171

Name of Product:	Condition Monitor
Type of Product:	LCCM, p/n C07667A
Marking:	Exia II CT4
Technical Documents:	/
Drawing No.:	C07667A
Note (s):	1.The power is supplied by PANASONIC battery. The battery type is BR2477A 3V. 2.The manufacturer address: Goulds pumps, 240 Fall Street, Seneca Falls, NY 13148, U.S.A.

By verifying the drawings and technical documents and checking samples, the product complies with the following standards currently valid in P.R.China:

GB3836.1-2000 GB3836.4-2000

Issued to: ITT Corp.

Date of Expire: 2013-12-22

Date of Issue: 2008-12-22

Center seal

Director

Xu Gang

PCEC has been approved by

Supervision & Test Center of Ex- products of China Petroleum & Chemical Industry

注: 本证仅对与送检样品一致的产品有效.
Note: This certificate is only valid for the products that are in accord with sample(s) tested and verified.
中心地址:中国天津市卫丁字沽三号路85号 邮政编码:300131 电话/传真:022-26651066/26689116
Center Add: No.85 No.3 Road DingZiGu Tianjin China Post code: 300131 Tel/ Fax: 022-26651066/26689116
E-mail:csc@pcec.com.cn http://www.pcec.com.cn

Other Relevant Documentation or Manuals

For additional documentation

For any other relevant documentation or manuals, contact your ITT representative.

Local ITT Contacts

Regional offices

Region	Address	Telephone	Fax
North America (Headquarters)	ITT - Goulds Pumps 240 Fall Street Seneca Falls, NY 13148 USA	+1 315-568-2811	+1 315-568-2418
Asia Pacific	ITT Industrial Process 10 Jalan Kilang #06-01 Singapore 159410	+65 627-63693	+65 627-63685
Europe	ITT - Goulds Pumps Millwey Rise Industrial Estate Axminster, Devon, England EX13 5HU	+44 1297-630250	+44 1297-630256
Latin America	ITT - Goulds Pumps Camino La Colina # 1448 Condominio Industrial El Rosal Huechuraba Santiago 8580000 Chile	+562 544-7000	+562 544-7001
Middle East and Africa	ITT - Goulds Pumps Achileos Kyrou 4 Neo Psychiko 115 25 Athens Greece	+30 210-677-0770	+30 210-677-5642

Visit our website for the latest version of this document and more information:
http://www.gouldspumps.com

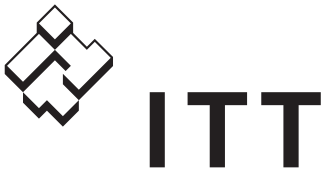

ENGINEERED FOR LIFE

240 Fall Street
Seneca Falls, NY 13148
USA
Tel. 1-800-446-8537
Fax (315) 568-2418

© 2016 ITT Corporation
The original instruction is in English. All non-English instructions are translations of the original instruction.

Form IOM.3196.i-FRAME.en-US.2016-04

PRO services

Installation, Operation, and Maintenance Manual

i-*ALERT®2* Equipment Health Monitor

ITT

ENGINEERED FOR LIFE

Table of Contents

Introduction and Safety 2
Introduction 2
Inspect the package 2
Limited warranty 2
Safety 3
Safety terminology and symbols 3
Safety regulations for Ex-approved products in potentially explosive atmosphere 3
Product approval standards 4

Product Description 7
General description i-*ALERT®2* Condition Monitor 7

Installation 8
Attach the i-*ALERT®2* Equipment Health Monitor to the pump 8

Commissioning, Startup, Operation, and Shutdown 11
Activate the i-*ALERT®2* Equipment Health Monitor 11
Reset the i-*ALERT®2* Equipment Health Monitor 12
i-*ALERT®2* Equipment Health Monitor routine operation 13

Maintenance 14
Guidelines for i-*ALERT®2* Equipment Health Monitor disposal 14

Troubleshooting 15
i-*ALERT®2* Equipment Health Monitor troubleshooting 15

Introduction and Safety

Introduction

Purpose of this manual

The purpose of this manual is to provide necessary information for:

- Installation
- Operation
- Maintenance

CAUTION:
Read this manual carefully before installing and using the product. Improper use of the product can cause personal injury and damage to property, and may void the warranty.

NOTICE:
Save this manual for future reference, and keep it readily available at the location of the unit.

Requesting other information

For instructions, situations, or events that are not considered in this manual or in the sales documents, please contact your ITT representative. Always specify the exact product type and identification code when requesting technical information or spare parts.

Inspect the package

1. Inspect the package for damaged or missing items upon delivery.
2. Note any damaged or missing items on the receipt and freight bill.
3. File a claim with the shipping company if anything is out of order.
   If the product has been picked up at a distributor, make a claim directly to the distributor.

Limited warranty

Goulds Pumps, Inc. ("Goulds") warrants to the original purchaser that your i-*ALERT®2* Equipment Health Monitor (the "Product") shall be free from defects in materials and workmanship under normal use for a period of one (1) year from the date of shipment. This Limited Warranty does not cover software embedded in the Product and the services provided by Goulds to owners of the Product.

Due to the varied ways that Product(s) can be accessed and/or configured during use, battery life is excluded from warranty. It is your responsibility to backup any data, software, or other materials you may have stored or preserved on the Product. It is likely that such data, software, or other materials will be lost or reformatted during service, and Goulds will not be responsible for any such damage or loss. Recovery and reinstallation of software programs and user data are not covered under this Limited Warranty. The Limited Warranty does not apply to any software, even if packaged or sold with the Product or embedded in the Product. We are not liable for any damage a mobile app may inflict on companion product

To view the full details of the Limited Product Warranty please go to: www.i-alert.com/warranty

Safety

WARNING:

- The operator must be aware of safety precautions to prevent physical injury.
- Operating, installing, or maintaining the unit in any way that is not covered in this manual could cause death, serious personal injury, or damage to the equipment. This includes any modification to the equipment or use of parts not provided by ITT. If there is a question regarding the intended use of the equipment, please contact an ITT representative before proceeding.
- Installation, Operation and Maintenance manuals clearly identify accepted methods for disassembling units. These methods must be adhered to.

Observe all safety messages highlighted in other sections of this manual.

Safety terminology and symbols

About safety messages

It is extremely important that you read, understand, and follow the safety messages and regulations carefully before handling the product. They are published to help prevent these hazards:

- Personal accidents and health problems
- Damage to the product
- Product malfunction

Hazard levels

Hazard level	Indication
DANGER:	A hazardous situation which, if not avoided, will result in death or serious injury
WARNING:	A hazardous situation which, if not avoided, could result in death or serious injury
CAUTION:	A hazardous situation which, if not avoided, could result in minor or moderate injury
NOTICE:	• A potential situation which, if not avoided, could result in undesirable conditions • A practice not related to personal injury

Safety regulations for Ex-approved products in potentially explosive atmosphere

Description of ATEX

The ATEX directives are a specification enforced in EU for electrical and non-electrical equipment. ATEX deals with the control of potentially explosive atmospheres and the standards of equipment and protective systems used within these atmospheres. The relevance of the ATEX requirements is not limited to Europe. You can apply these guidelines to equipment installed in any potentially explosive atmosphere.

Description of ETL

The ETL Mark is proof of product compliance to North American safety standards. Authorities Having Jurisdiction(AHJs) and code officials across the US and Canada accept the ETL Listed Mark as proof of product compliance to published industry standards.

Description of IECEx

The IECEx certificates of conformity attest that a sample of the Ex product, have been independently tested and found to comply with the International Standards. It also attests that the manufacturing site has been audited to verify that the manufacturer's quality system meets IECEx requirements.

Safety regulations regarding the Battery

Do not charge, short circuit, crush, dissemble, heat above 100°C (212°F), incinerate or expose contents to water.

Personal requirements

ITT disclaims all responsibility for work done by untrained and unauthorized personnel.
These are the personnel requirements for Ex-approved products in potentially explosive atmospheres:

- All users must know about the risks of electric current and the chemical and physical characteristics of the gas and/or vapor present in hazardous areas.
- The installation for Ex-approved products must be made in conformity to the international or national standards (IEC/EN 60079-17).

Product approval standards

Intrinsic safe standards

North America USA and Canada certifications

Standards tested to:

UL 913
UL 60079-0
UL 60079-11
CSA-C22.2 No. 157-92
CSA-C22.2 No. 60079-0:11
CSA-C22.2 No. 60079-11:14
Markings USA:
Class I, II, III; Division 1; Groups C, D, E, F, G
Class I; Zone 0, AEx ia IIB Ga (Groups C & D)
Markings Canada:
Class I, II, III; Division 1; Groups C, D, E, F, G
Ex ia IIB Ga (Groups C & D)
Ambient temperature: -40°C to 60°C | -40°F to 140°F

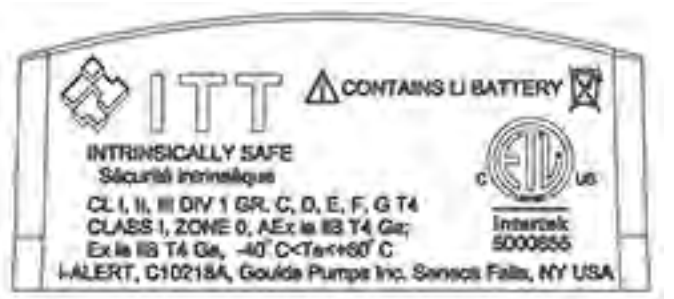

Europe and Worldwide certifications

Standards tested to:

ATEX

EN 60079-0:2012
EN 60079-11:2012
EN 60079-26:2007+COR1:2011
EN 50303:2000

IECEx

IEC 60079-0:2011
IEC 60079-11:2011
IEC 60079-26:2006

ATEX & IECEx Markings

I M1 Ex ia I Ma
II 1G Ex ia IIB T4 Ga
II 1D Ex ia IIIC Da T200°C Da
Ambient Temperature: -40°C to +60°C | -40°F to +140°F

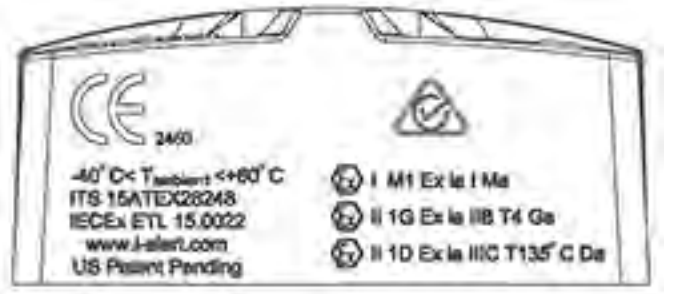

Electromagnetic compatibility certifications

Standards for testing i-*ALERT2* Equipment Health Monitor

Radiated Emissions
FCC 47CFR 15 Subpart B:2014
EN 61000-6-4:2007
Electro-Static Discharge Immunity Test
(EN 61000-4-2:1995 per EN 61000-6-2:2007 +AMD 1 Cor 12)
(EN 61000-4-2:2009 per ETSI EN 301 489-1 V1.9.2
Radiated, Radio-Frequency, Electromagnetic Immunity
(EN 61000-4-3:2002 per EN 61000-6-2:2007 +AMD 1 Cor 12)
(EN 61000-4-3:2006+A1:2008+A2:2010 per ETSI EN 301 489-1 V1.9.2
Power Frequency Magnetic Field Immunity Test
(EN 61000-4-8 1993 per EN 61000-6-2:2007 +AMD 1 Cor 12)

Standards for testing Bluetooth radio

Industry Canada, Interference-Causing Equipment Standard for Information Technology Equipment (ITE)
ICES-003 Issue 5 August 2012
Electromagnetic compatibility (EMC). Generic standards. Immunity for industrial environments
CENELEC EN 61000-6-2:2007 +AMD 1 Cor 12
Electromagnetic compatibility (EMC) Generic standards - Emission standard for industrial environments
CENELEC EN 61000-6-4:2007
Electromagnetic Compatibility (EMC) standard for radio equipment and services;
Part 1: Common technical requirements
ETSI EN 301 489-1 V1.9.2 (2011-09)
ElectroMagnetic Compatibility (EMC) standard for radio equipment;

Part 17: Specific conditions for Broadband Data Transmission Systems
ETSI EN 301 489-17 V2.2.1 (2012-09)

FCC Regulatory Information

The FCC identifier for the radio module contained in the i-*ALERT®2* device is **FCC ID: T7VPAN17**.

The radio module in the i-*ALERT®2* device meets the requirements for modular transmitter approval as detailed in FCC public Notice DA00-1407. Transmitter Operation is subject to the following two conditions:

1. Operation is subject to the following two conditions: (1) This device may not cause harmful interference, and
2. This device must accept any interference received, including interference that may cause undesired operation.

The FCC requires the user to be notified that any changes or modifications made to this device that are not expressly approved by ITT may void the user's authority to operate the equipment. This equipment has been tested and found to comply with the limits for a Class B digital device, pursuant to Part 15 of the FCC Rules. These limits are designed to provide reasonable protection against harmful interference in a residential installation. This equipment generates, uses and can radiate radio frequency energy and, if not installed and used in accordance with the instructions, may cause harmful interference to radio communications. However, there is no guarantee that interference will not occur in a particular installation. If this equipment does cause harmful interference to radio or television reception, which can be determined by turning the equipment off and on, the user is encouraged to try to correct the interference by one or more of the following measures:

- Reorient or relocate the receiving antenna.
- Increase the separation between the equipment and receiver.
- Connect the equipment into an outlet on a circuit different from that to which the receiver is connected.
- Consult the dealer or an experienced radio/TV technician for help

RF Exposure

To comply with FCC RF Exposure requirements, do not modify, remove or change the antenna on the radio module contained within the i-*ALERT®2* device.

The radiated output power of the radio with mounted ceramic antenna **(FCC ID: T7VPAN17)** is far below the FCC radio frequency exposure limits. Nevertheless, the radio shall be used in such a manner that the potential for human contact during normal operation is minimized.

Industry Canada Certification

The radio module contained in the i-*ALERT®2* device is licensed to meet the regulatory requirements of Industry Canada (IC), license**: IC: 216Q-PAN17.**

IC Notice

The radio module within the i-*ALERT®2* device complies with Canada RSS-GEN Rules. The device meets the requirements for modular transmitter approval as detailed in RSS-GEN.

Operation is subject to the following two conditions:

1. This device may not cause harmful interference, and
2. This device must accept any interference received, including interference that may cause undesired operation.

European R&TTE declaration of conformity

The Bluetooth module contained within the i-*ALERT®2* device is in compliance with the essential requirements and other relevant provisions of Directive 1999/5/EC. As a result of the conformity assessment procedure described in Annex III of the Directive 1999/5/EC.

The i-*ALERT®2* device can be used in the following countries: Austria, Belgium, Cyprus, Czech Republic, Denmark, Estonia, Finland, France, Germany, Greece, Hungary, Ireland, Italy, Latvia, Lithuania, Luxembourg, Malta, Poland, Portugal, Slovakia, Slovenia, Spain, Sweden, The Netherlands, the United Kingdom, Switzerland, and Norway.

Product Description

General description i-*ALERT®2* Condition Monitor

Description

The i-*ALERT®2* Equipment Health Monitor is a compact, battery-operated monitoring device that continuously measures the vibration and temperature of the pump. The i-*ALERT®2* Equipment Health Monitor uses blinking red LED and wireless notification to alert the pump operator when the pump exceeds vibration and temperature limits. This allows the pump operator to make changes to the process or the pump before catastrophic failure occurs. The Equipment Health Monitor is also equipped with a single green LED to indicate when it is operational and has sufficient battery life.

The i-*ALERT®2* Equipment Health Monitor also contains a Bluetooth radio that communicates to certain Bluetooth 4.0 equipped devices through a mobile application.

Data is shared between the i-*ALERT®2* Equipment Health Monitor, the mobile application, phone, and the data servers.

The i-*ALERT®2* Equipment Health Monitor will communicate sensor related data (such as vibration, temperature, runtime information, and device statistics) stored in the device to the mobile application. The mobile application will send commands to the device.

The Mobile application will back up device data as well as app usage information on the data servers.

The data servers will send the mobile application equipment technical data.

For full details about data storage and rights please review the Privacy Policy.

Alarm mode

The i-*ALERT®2* Equipment Health Monitor enters alarm mode when either vibration or temperature limits are exceeded over two consecutive readings within a 10 minute period. Alarm mode is indicated with 1 (one) red flashing LED within 2 (two) second intervals.

Warning and alarm values

Variable	Limit
Temperature (default)	80°C | 176°F
Vibration Alarm (0.1-1.5 ips)	100% increase over the baseline level
Vibration Warning (0.1-1.5 ips)	75% increase over the baseline level

Battery life

The i-*ALERT®2* Equipment Health Monitor battery is not replaceable. You must replace the entire unit once the battery runs out of power. The battery life is not covered as part of the standard 5-year pump warranty.

The following determines the “normal operating conditions” in which the 3-year battery life is determined:

- Temperature: 18°C | 65°F
- Dashboard connections (including trend download): Once per day
- FFT and Time Waveform usage: One tri-axial request per 14 days
- Operation time in Alarm: 25% of time

Installation

Attach the i-*ALERT*®*2* Equipment Health Monitor to the pump

CAUTION:
Always wear protective gloves. The equipment and the i-*ALERT*®*2* device can be hot.

Mounting options

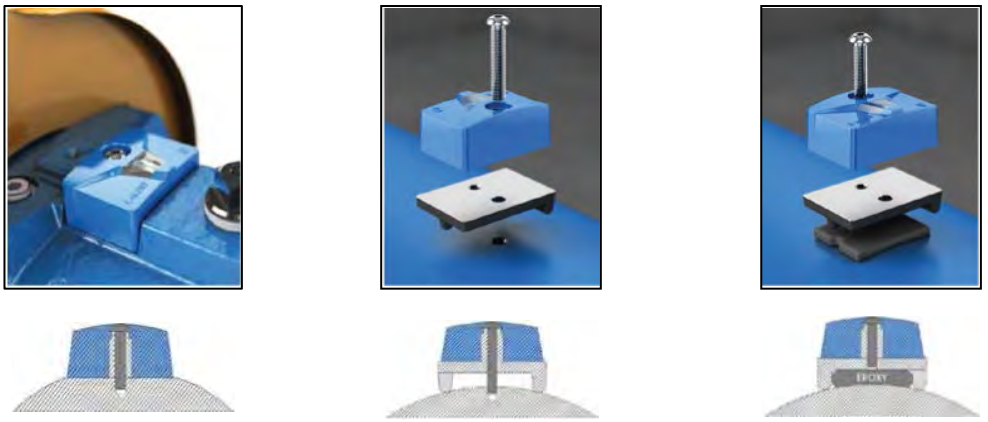

Figure 1: Mounting options

Mill a Slot	Drill and Tap	Epoxy[1]
Screw: ¼-28 x 1.125in	Screw: ¼-28 x 1.5in	Screw: ¼-28 x 1.125in
Slot: 2.25in L x 1.6in W	Tap: ¼-28 UNF x ¼in deep	Epoxy: application specific
Temperature: ****	Temperature: ***	Temperature: **
Vibration: ****	Vibration: ***	Vibration: ***
Prep Time: **	Prep Time: ***	Prep Time: ****

Epoxy[1] Not included

Epoxy recommendation

The epoxy used should be a two-part putty in stick form (not liquid) type, which contains metallic particles in order to enhance heat transfer. Epoxy of this type is commonly found at hardware and home improvement stores. The temperature range required and specific application determine the epoxy choice. Mount i-*ALERT*®*2* device to base using provided ¼-28 cap screw. Torque screw to 6 lb-ft. using a 5/32" size Allen Head wrench prior to the application of the epoxy.

Location selection

The i-*ALERT*®*2* device should be mounted on pumps or other rotating equipment as shown in the first image under “Mounting Options" (above) with the LED’s aligned with the shaft in order to maintain the preferred axis orientation shown below. Care should be taken to locate the device over the bearings, and to avoid placement on compliant surfaces such as coupling guards, and other light sheet metal. It is preferable to have one device over each bearing, but if that is not possible, monitoring the drive end is essential.

Figure 2: Location selection

App installation and registration

For installation guidance, video links can be found at the following site:
http://www.ittproservices.com/aftermarket-products/monitoring/i-alert2-condition-monitor/ (page)
To download the latest App, search for" i-ALERT2 condition monitor" in the Apple App Store.

Available on the App Store

To access the App it is necessary to create an account using a valid email in the registration tab on the login page.

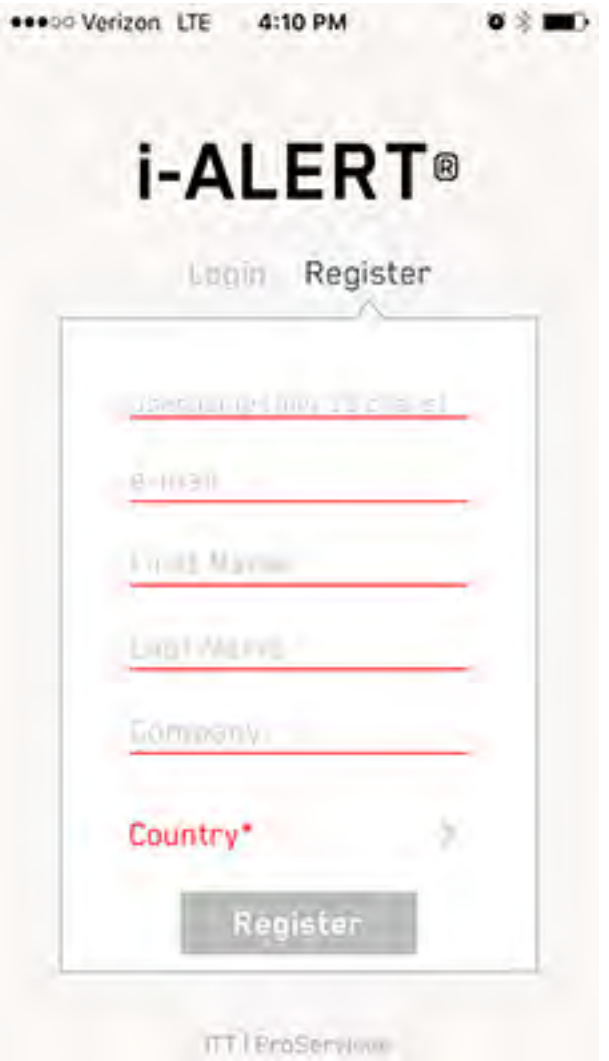

Figure 3: i-*ALERT®2* registration

Commissioning, Startup, Operation, and Shutdown

Activate the i-*ALERT*®*2* Equipment Health Monitor

Figure 4: i-*ALERT*®*2* Equipment Health Monitor activation

Steps to activate the i-*ALERT*®*2* Equipment Health Monitor

1. Remove the sticker.
2. The i-*ALERT*®*2* will look for light.

NOTICE: If in a dark environment use light source to activate.

3. When activated a sequence of flashing LEDs will start to indicate that the unit is powered on.
4. When sequence is completed the green LED will flash every 5 sec under normal operating conditions.

WARNING:
Never heat the condition monitor to temperatures in excess of 100°C | 212°F. Heating to these temperatures could result in death or serious injury.

CAUTION:
Always wear protective gloves. The pump and condition monitor can be hot.

Reset the i-*ALERT*®*2* Equipment Health Monitor

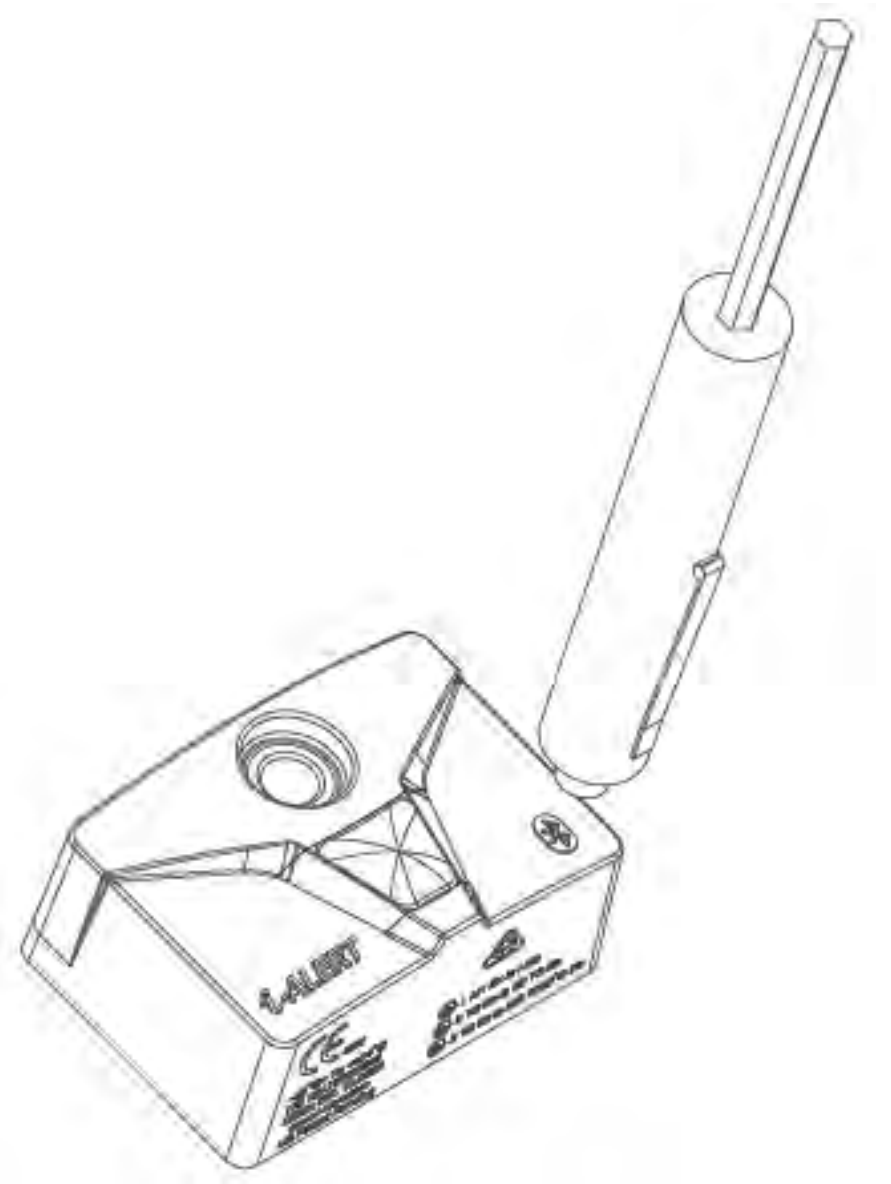

Figure 5: i-*ALERT*®*2* Equipment Health Monitor reset

The LEDs correspond to an i-*ALERT*®*2* Equipment Health monitor function.
When using the magnet over the BlueTooth icon you can change an i-*ALERT*®*2* Equipment Health monitor function. Lifting a magnet off on an LED will

Sequence	LED	When you lift the magnet off
1	Red	Nothing
2	Blue	Bluetooth is turned OFF/ON
3	Green	Unit is shut down
4	After flashing all colors stops	Unit is reset

i-*ALERT*®*2* Equipment Health Monitor routine operation

Measurement interval

The measurement interval for the condition monitor during normal and alarm operation is 5 minutes.

When the monitor measures a reading beyond the specified temperature and vibration limits, the appropriate red LED flashes (after 2 consecutive readings). After the process or pump condition that causes the alarm is corrected, the condition monitor returns to normal mode after one normal-level measurement.

Alarm mode

The condition monitor's alarm mode is activated after two consecutive readings. When the alarm mode is on, you should investigate the cause of the condition and make necessary corrections in a timely manner.

Magnetic device considerations

Be careful when you use magnetic devices in close proximity of the condition monitor, such as magnetic vibration-monitoring probes or dial indicators. These magnetic devices can accidentally activate or deactivate the condition monitor resulting in improper alarm levels or loss of monitoring.

Wireless integration

A Bluetooth Low Energy Radio is utilized to communicate condition monitoring information to a mobile Smart device that the operator can easily view and react to.

Maintenance

Guidelines for i-*ALERT*®*2* Equipment Health Monitor disposal

Precautions

WARNING:

- Never heat the condition monitor to temperatures in excess of 100°C | 212°F. Heating to these temperatures could result in death or serious injury.
- Never dispose of the condition monitor in a fire. This could result in death or serious injury.

Guidelines

This Product Contains Lithium Thionyl Chloride therefore the local Waste management companies can provide assistance in the disposal of the device that contain this type of battery.

Troubleshooting

i-*ALERT*®*2* Equipment Health Monitor troubleshooting

Symptom	Cause	Remedy
There are no red, green, or blue flashing LED.	The battery is dead.	Replace the equipment health monitor.
	The unit is in sleep mode.	Activate the condition monitor using magnet.
	The unit is malfunctioning.	Consult your ITT representative for a warranty replacement.
The red LED is flashing, but the temperature and vibration are at acceptable levels.	The baseline is set below normal operating limits.	Check the temperature and vibration levels and request new baseline. Or manually change alarm limits.
	The unit is malfunctioning.	Consult your ITT representative for a warranty replacement.

For connection issues with smart devices, please visit *www.i-ALERT.com* (page)

For ITT's privacy Policy, click here: *http://itt.com/privacy/* (page)

For User SW License Agreement, click here: *http://www.ittproservices.com/AppPrivacyPolicy* (page)

Visit our website for the latest version of this document and more information:
http://www.i-ALERT2.ittproservices.com

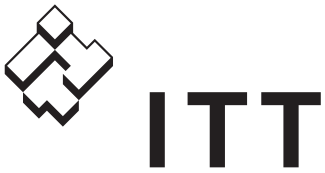

ENGINEERED FOR LIFE

Goulds Pumps Inc.
240 Fall Street
Seneca Falls, NY 13148
USA
Tel. 1-800-446-8537
Fax 1-315-568-2418

© 2016 ITT Corporation
The original instruction is in English. All non-English instructions are translations of the original instruction.

Form IOM.i-ALERT2.en-US.2016-03

SIEMENS

SITRANS

Pressure transmitter SITRANS P, DS III series with HART

Operating Instructions

7MF4.33..

Introduction 1

Safety instructions 2

Description 3

Installing/mounting 4

Connecting 5

Operation 6

Operating functions through HART 7

Functional safety 8

Commissioning 9

Service and maintenance 10

Technical data 11

Dimension drawings 12

Spare parts/accessories 13

Appendix A

List of abbreviations B

09/2012
A5E00047092-08

Legal information

Warning notice system

This manual contains notices you have to observe in order to ensure your personal safety, as well as to prevent damage to property. The notices referring to your personal safety are highlighted in the manual by a safety alert symbol, notices referring only to property damage have no safety alert symbol. These notices shown below are graded according to the degree of danger.

⚠ DANGER

indicates that death or severe personal injury **will** result if proper precautions are not taken.

⚠ WARNING

indicates that death or severe personal injury **may** result if proper precautions are not taken.

⚠ CAUTION

indicates that minor personal injury can result if proper precautions are not taken.

NOTICE

indicates that property damage can result if proper precautions are not taken.

If more than one degree of danger is present, the warning notice representing the highest degree of danger will be used. A notice warning of injury to persons with a safety alert symbol may also include a warning relating to property damage.

Qualified Personnel

The product/system described in this documentation may be operated only by **personnel qualified** for the specific task in accordance with the relevant documentation, in particular its warning notices and safety instructions. Qualified personnel are those who, based on their training and experience, are capable of identifying risks and avoiding potential hazards when working with these products/systems.

Proper use of Siemens products

Note the following:

⚠ WARNING

Siemens products may only be used for the applications described in the catalog and in the relevant technical documentation. If products and components from other manufacturers are used, these must be recommended or approved by Siemens. Proper transport, storage, installation, assembly, commissioning, operation and maintenance are required to ensure that the products operate safely and without any problems. The permissible ambient conditions must be complied with. The information in the relevant documentation must be observed.

Trademarks

All names identified by ® are registered trademarks of Siemens AG. The remaining trademarks in this publication may be trademarks whose use by third parties for their own purposes could violate the rights of the owner.

Disclaimer of Liability

We have reviewed the contents of this publication to ensure consistency with the hardware and software described. Since variance cannot be precluded entirely, we cannot guarantee full consistency. However, the information in this publication is reviewed regularly and any necessary corrections are included in subsequent editions.

Siemens AG
Industry Sector
Postfach 48 48
90026 NÜRNBERG
GERMANY

Order number: A5E00047092
℗ 10/2012 Technical data subject to change

Copyright © Siemens AG 2012.
All rights reserved

Table of contents

1 Introduction....9

1.1 Purpose of this documentation....9

1.2 Product information....9

1.3 History....9

1.4 Scope of the instructions....10

1.5 Checking the consignment....10

1.6 Transportation and storage....11

1.7 Notes on warranty....11

2 Safety instructions....13

2.1 Precondition for use....13
2.1.1 Laws and directives....13
2.1.2 Conformity with European directives....13

2.2 Use in hazardous areas....14

3 Description....17

3.1 System configuration....17

3.2 Application range....18

3.3 Structure....19

3.4 Nameplate layout....21

3.5 Measuring point label layout....22

3.6 Functional principle....23
3.6.1 Overview of mode of operation....23
3.6.2 Operation of the electronics....23
3.6.3 Measuring cell operation....24
3.6.3.1 Measuring cell for gauge pressure....25
3.6.3.2 Measuring cell for differential pressure and flow rate....26
3.6.3.3 Measuring cell for level....27
3.6.3.4 Measuring cell for absolute pressure from the differential pressure series....28
3.6.3.5 Measuring cell for absolute pressure from the gauge pressure series....29
3.6.3.6 Measuring cell for gauge pressure, front-flush membrane....29
3.6.3.7 Measuring cell for absolute pressure, front-flush membrane....30

3.7 Remote seal....31

3.8 SIMATIC PDM....31

4 Installing/mounting....33

4.1 Basic safety instructions....33
4.1.1 Installation location requirements....37
4.1.2 Proper mounting....38

4.1.2.1 Incorrect mounting....38
4.2 Disassembly....39
4.3 Installation (except level)....39
4.3.1 Instructions for installation (except level)....39
4.3.2 Installation (except level)....40
4.3.3 Fastening....41
4.4 "Level" installation....43
4.4.1 Instructions for level installation....43
4.4.2 Installation for level....44
4.4.3 Connection of the negative pressure line....45
4.5 "Remote seal" installation....47
4.5.1 Remote seal installation....47
4.5.2 Installation of the remote seal with the capillary line....49
4.6 Turing the measuring cell against housing....54
4.7 Rotating the display....55
5 Connecting....57
5.1 Basic safety instructions....57
5.1.1 Unsuitable cables and/or cable glands....57
5.2 Connecting the device....60
5.3 Connecting the Han plug....62
5.4 Connecting the M12 connector....63
6 Operation....65
6.1 Overview of operation....65
6.2 Basic safety instructions....66
6.3 Instructions for operation....66
6.4 Display....67
6.4.1 Display elements....67
6.4.2 Units display....68
6.4.3 Error display....69
6.4.4 Mode display....70
6.4.5 Status display....70
6.4.6 Overflow range....71
6.5 Local operation....72
6.5.1 Local control elements....72
6.5.2 Operation using buttons....74
6.5.3 Start of scale value/full scale value....75
6.5.3.1 Difference between setting and adjusting....75
6.5.3.2 Setting/adjusting the start of scale value....79
6.5.3.3 Setting/adjusting the full scale value....80
6.5.4 Setting/adjusting electrical damping....82
6.5.5 Blind start of scale value/full scale value....83
6.5.5.1 Difference between setting/adjusting and blind setting/adjusting....83
6.5.5.2 Blind setting of start of scale value....84
6.5.5.3 Blind setting of full scale value....85

6.5.5.4 Blind adjusting of the start of scale value....86
6.5.5.5 Blind adjustment of the full scale value....86
6.5.6 Trimming the zero point....87
6.5.7 Current transmitter....88
6.5.8 Output current in case of fault....89
6.5.9 buttons and function lock....90
6.5.10 Releasing key lock or function lock....91
6.5.11 Flow rate measurement (only differential pressure)....91
6.5.12 Measured value display....94
6.5.13 Unit....95

7 Operating functions through HART....99

7.1 Operating functions through HART communication....99
7.2 Process tag data....100
7.3 Selecting the measuring modes....100
7.3.1 Overview of measuring modes....100
7.3.2 Measuring mode selector....101
7.3.3 Variable mapper....101
7.3.4 Measuring mode "Pressure"....101
7.3.5 Customized characteristic curve....102
7.3.6 Measuring mode "Level"....103
7.3.7 Measuring mode "Flow rate"....106
7.3.8 Measuring mode "User"....108
7.3.9 Measured value status....110
7.3.10 Analog output....114
7.3.11 Scaling the display value....115
7.4 Setting zero point and limit point....116
7.5 Blind setting of zero point and limit point....117
7.6 Zero point calibration (position correction)....117
7.7 Electrical damping....118
7.8 Fast response mode....118
7.9 Current sensor....118
7.10 Fault current....118
7.11 Setting the current limits....119
7.12 Key lock and write protection....120
7.13 Measured value display....121
7.14 Selection of the physical unit....122
7.15 Bar graph....123
7.16 Sensor calibration....123
7.16.1 Sensor trim....123
7.16.2 Trimming the sensor....124
7.17 Current sensor trim....124
7.18 Factory calibration....125

7.19 Static configuration data....126
7.20 Flow rate measurement (only differential pressure)....127
7.21 Diagnostic functions....128
7.21.1 Overview....128
7.21.2 Operating hours counter....129
7.21.3 Calibration timer and service timer....129
7.21.4 Min/max indicator....130
7.21.5 Limit modules....131
7.22 Simulation....133
7.22.1 Overview of simulation....133
7.22.2 Simulation as fixed value....134
7.22.3 Simulation with a ramp function....134
7.23 Limit monitor....134
8 Functional safety....137
8.1 General safety instructions....137
8.1.1 Safety-instrumented system....137
8.1.2 Safety Integrity Level (SIL)....138
8.2 Device-specific safety information for single-channel operation (SIL 2)....140
8.2.1 Safety function....140
8.2.2 Settings....140
8.2.3 Requirements....141
8.2.4 Behavior in case of faults....142
8.2.5 Maintenance/Checking....142
8.2.6 Safety characteristics....142
8.3 Device-specific safety information for redundant operation (SIL 3)....143
8.3.1 Safety function....143
8.3.2 Requirements....144
8.3.3 Settings....145
8.3.4 Behavior in case of faults....146
8.3.5 Maintenance/Checking....146
8.3.6 Safety characteristics....147
8.4 Add-on parts....147
8.4.1 Checking a device with add-on pneumatic block....148
8.4.2 Checking a device with add-on remote seal....148
9 Commissioning....149
9.1 Basic safety instructions....149
9.2 Introduction to commissioning....150
9.3 gauge pressure, absolute pressure from the differential pressure series and absolute pressure from the gauge pressure series....151
9.3.1 Commissioning for gases....151
9.3.2 Commissioning with steam or liquid....152
9.4 Differential pressure and flow rate....153
9.4.1 Safety notes for commissioning with differential pressure and flow rate....153
9.4.2 Commissioning in gaseous environments....154
9.4.3 Commissioning for liquids....155

9.4.4 Commissioning with vapor....157
10 Service and maintenance....159
10.1 Basic safety instructions....159
10.2 Maintenance and repair work....162
10.2.1 Defining the maintenance interval....162
10.2.2 Checking the gaskets....163
10.2.3 Display in case of a fault....163
10.2.4 Changing the measuring cell and application electronics....164
10.3 Cleaning....164
10.3.1 Servicing the remote seal measuring system....165
10.4 Return procedure....166
10.5 Disposal....166
11 Technical data....169
11.1 Overview of technical data....169
11.2 Input point....170
11.3 Output....177
11.4 Measuring accuracy....177
11.5 Operating conditions....183
11.6 Construction....187
11.7 Display, keyboard and auxiliary power....191
11.8 Certificates and approvals....192
11.9 HART communication....194
12 Dimension drawings....195
12.1 SITRANS P, DS III series for gauge pressure and absolute pressure from the gauge pressure series....195
12.2 SITRANS P, DS III series for differential pressure, flow rate and absolute pressure from the differential pressure series....197
12.3 SITRANS P, DS III series for level....200
12.4 SITRANS P, DS III series (flush mounted)....202
12.4.1 Note 3A and EHDG....203
12.4.2 Connections as per EN and ASME....203
12.4.3 F&B and pharma flange....204
12.4.4 PMC Style....208
12.4.5 Special connections....209
13 Spare parts/accessories....211
13.1 Order data....211
13.2 Order data for SIMATIC PDM....213
A Appendix....215
A.1 Certificate....215

A.2 Literature and standards....215
A.3 Literature and catalogs....215
A.4 Overview of HART operating structure....217
A.5 Technical support....220
B List of abbreviations....221
B.1 Functional safety....221
Glossary....223
Index....227

Introduction 1

1.1 Purpose of this documentation

These instructions contain all information required to commission and use the device. It is your responsibility to read the instructions carefully prior to installation and commissioning. In order to use the device correctly, first review its principle of operation.

The instructions are aimed at persons mechanically installing the device, connecting it electronically, configuring the parameters and commissioning it, as well as service and maintenance engineers.

1.2 Product information

The programming manual is an integral part of the CD, which is either supplied or can be ordered. The programming manual is also available on the Siemens homepage.

On the CD, you will also find the catalog extract with the ordering data, the Software Device Install for SIMATIC PDM for additional installation, and the required software.

See also

Product information on SITRANS P in the Internet (http://www.siemens.com/sitransp)

Catalog process instrumentation (http://www.siemens.com/processinstrumentation/catalogs)

1.3 History

This history establishes the correlation between the current documentation and the valid firmware of the device.

The documentation of this edition applies to the following firmware:

Edition	Firmware identifier nameplate	System integration	Installation path for PDM
09/2012	FW: 11.03.03, FW: 11.03.04, FW: 11.03.05, FW: 11.03.06	PDM 6.0[1)]; Dev. Rev.3 DD Rev.2	SITRANS P DSIII.2
	[1)] up to SP05 Hotfix 5		

The most important changes in the documentation when compared with the respective previous edition are given in the following table.

Edition	Remark
09/2012	The following chapters have been changed: • "General safety notices" chapter • "Mounting" chapter • "Functional safety" chapter • "Technical data" chapter

1.4 Scope of the instructions

Table 1-1 "7MF4.33" stands for:

Order number	SITRANS P, DS III series for
7MF4033	Gauge pressure
7MF4133	Gauge pressure, flush mounted diaphragm
7MF4233	Absolute pressure from the gauge pressure series
7MF4333	Absolute pressure from the differential pressure series
7MF4433	Differential pressure and flow rate, PN 32/160 (MAWP 464/2320 psi)
7MF4533	Differential pressure and flow rate, PN 420 (MAWP 6092 psi)
7MF4633	Level

1.5 Checking the consignment

1. Check the packaging and the device for visible damage caused by inappropriate handling during shipping.
2. Report any claims for damages immediately to the shipping company.
3. Retain damaged parts for clarification.
4. Check the scope of delivery by comparing the shipping documents with your order for correctness and completeness.

⚠ WARNING

Using a damaged or incomplete device

Danger of explosion in hazardous areas.

- Do not use any damaged or incomplete devices.

See also

Return procedure (Page 166)

1.6 Transportation and storage

To guarantee sufficient protection during transport and storage, observe the following:

- Keep the original packaging for subsequent transportation.
- Devices/replacement parts should be returned in their original packaging.
- If the original packaging is no longer available, ensure that all shipments are properly packaged to provide sufficient protection during transport. Siemens cannot assume liability for any costs associated with transportation damages.

⚠ CAUTION

Insufficient protection during storage

The packaging only provides limited protection against moisture and infiltration.

- Provide additional packaging as necessary.

Special conditions for storage and transportation of the device are listed in "Technical data" (Page 169).

1.7 Notes on warranty

The contents of this manual shall not become part of or modify any prior or existing agreement, commitment or legal relationship. The sales contract contains all obligations on the part of Siemens as well as the complete and solely applicable warranty conditions. Any statements regarding device versions described in the manual do not create new warranties or modify the existing warranty.

The content reflects the technical status at the time of publishing. Siemens reserves the right to make technical changes in the course of further development.

Safety instructions 2

2.1 Precondition for use

This device left the factory in good working condition. In order to maintain this status and to ensure safe operation of the device, observe these instructions and all the specifications relevant to safety.

Observe the information and symbols on the device. Do not remove any information or symbols from the device. Always keep the information and symbols in a completely legible state.

Symbol	Explanation
	Consult operating instructions

2.1.1 Laws and directives

Observe the test certification, provisions and laws applicable in your country during connection, assembly and operation. These include, for example:

- National Electrical Code (NEC - NFPA 70) (USA)
- Canadian Electrical Code (CEC) (Canada)

Further provisions for hazardous area applications are for example:

- IEC 60079-14 (international)
- EN 60079-14 (EC)

2.1.2 Conformity with European directives

The CE mark on the device is a sign of conformity with the following European directives:

Electromagnetic Compatibility EMC 2004/108/EC	Directive of the European Parliament and of the Council on the approximation of the laws of the Member States relating to electromagnetic compatibility and repealing Directive 89/336/EEC.
Atmosphère explosible ATEX 94/9/EC	Directive of the European Parliament and the Council on the approximation of the laws of the Member States concerning equipment and protective systems intended for use in potentially explosive atmospheres.
Pressure Equipment Directive PED 97/23/EC	Directive of the European Parliament and of the Council on the approximation of the laws of the Member States concerning pressure equipment.

The standards applied can be found in the EC declaration of conformity for the device.

⚠ WARNING

Improper device modifications

Danger to personnel, system and environment can result from modifications to the device, particularly in hazardous areas.

- Only carry out modifications that are described in the instructions for the device. Failure to observe this requirement cancels the manufacturer's warranty and the product approvals.

Due to the large number of possible applications, each detail of the described device versions for each possible scenario during commissioning, operation, maintenance or operation in systems cannot be considered in the instructions. If you need additional information not covered by these instructions, contact your local Siemens office or company representative.

Note

Operation under special ambient conditions

We highly recommend that you contact your Siemens representative or our application department before you operate the device under special ambient conditions as can be encountered in nuclear power plants or when the device is used for research and development purposes.

2.2 Use in hazardous areas

Qualified personnel for hazardous area applications

Persons who install, assemble, commission, operate and service the device in a hazardous area must have the following specific qualifications:

- They are authorized, trained or instructed in operating and maintaining devices and systems according to the safety regulations for electrical circuits, high pressures, aggressive and hazardous media.
- They are authorized, trained, or instructed in carrying out work on electrical circuits for hazardous systems.
- They are trained or instructed in maintenance and use of appropriate safety equipment according to the pertinent safety regulations.

⚠ WARNING

Unsuitable device for the hazardous area

Danger of explosion.

- Only use equipment that is approved for use in the intended hazardous area and labelled accordingly.

See also

Technical data (Page 169)

⚠ WARNING

Loss of safety of device with type of protection "Intrinsic safety Ex i"

If the device has already been operated in non-intrinsically safe circuits or the electrical specifications have not been observed, the safety of the device is no longer ensured for use in hazardous areas. There is a danger of explosion.

- Connect the device with type of protection "Intrinsic safety" solely to an intrinsically safe circuit.
- Observe the specifications for the electrical data on the certificate and in Chapter "Technical data (Page 169)".

⚠ WARNING

Use of incorrect device parts in potentially explosive environments

Devices and their associated device parts are either approved for different types of protection or they do not have explosion protection. There is a danger of explosion if device parts (such as covers) are used for devices with explosion protection that are not expressly suited for this type of protection. If you do not adhere to these guidelines, the test certificates and the manufacturer warranty will become null and void.

- Use only device parts that have been approved for the respective type of protection in the potentially explosive environment. Covers that are not suited for the "explosion-proof" type of protection are identified as such by a notice label attached to the inside of the cover with "Not Ex d Not SIL".
- Do not swap device parts unless the manufacturer specifically ensures compatibility of these parts.

⚠ WARNING

Risk of explosion due to electrostatic charge

To prevent the build-up of an electrostatic charge in a hazardous area, the key cover must be closed during operation and the screws tightened.

The key cover may be opened temporarily at any time for the purposes of operating the transmitter, even during plant operation; the screws should then be tightened again.

NOTICE

Electrostatic-sensitive devices

The device contains electrostatic-sensitive devices (ESD). ESD can be destroyed by voltages far too low to be detected by humans. These voltages can occur if you simply touch a component part or the electrical connections of a module without being electrostatically discharged. The damage to a module caused by overvoltage cannot normally be detected immediately; it only becomes apparent after a longer period of operating time has elapsed.

Protective measures against the discharge of static electricity:

- Make sure that no power is applied.
- Before working with modules, make sure that you discharge static from your body, for example by touching a grounded object.
- Devices and tools used must be free of static charge.
- Hold modules only by their edges.
- Do not touch connector pins or conductor tracks on a module with the ESD notice.

Description

3

3.1 System configuration

Overview

The pressure transmitter can be used in a number of system configurations:

- as a stand-alone version, supplied with the necessary auxiliary power
- as part of a complex system environment, e.g. SIMATIC S7

System communication

Communication is via the HART protocol, using:

- HART Communicator (load 230 ... 1100 Ω)
- PC with HART modem, on which appropriate software is installed, e.g. SIMATIC PDM (load 230 ... 500 Ω)
- Control system which can communicate via the HART protocol, e.g. SIMATIC PCS7

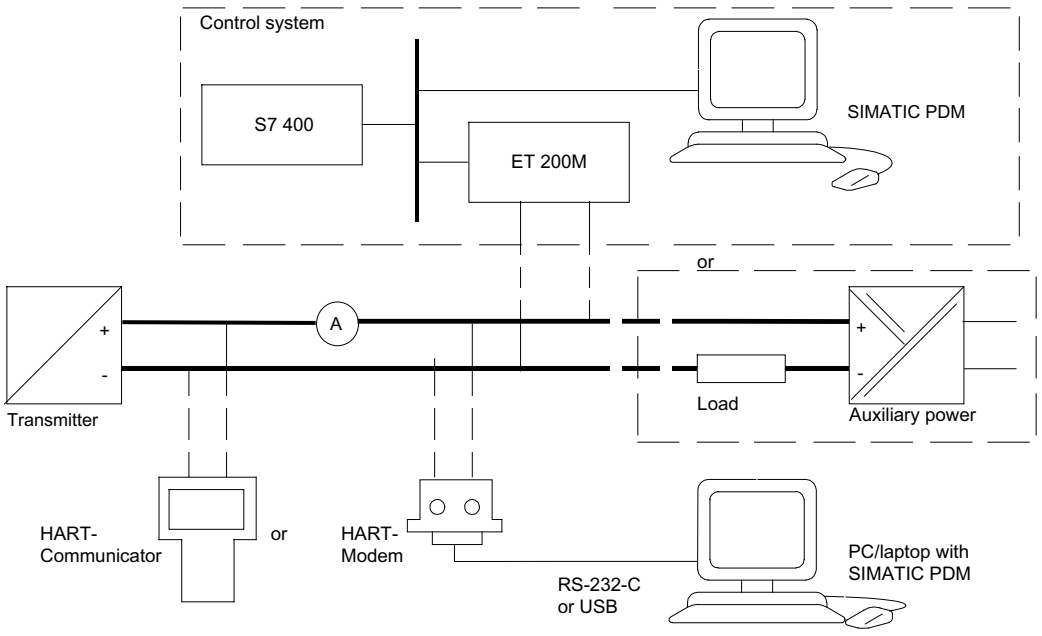

Figure 3-1 Possible system configurations

3.2 Application range

Overview

Depending on the version, a transmitter measures corrosive, non-corrosive and hazardous gases, vapors and liquids.

You can use the transmitter for the following types of measurement:

- Gauge pressure
- Absolute pressure
- Differential pressure

With appropriate parameter settings and the necessary add-on parts (e.g. flow orifices and remote seals), the pressure transmitter can also be used for the following measurements:

- Level
- Volume
- Mass
- Volumetric flow
- Mass flow rate

The output signal is always a load-independent direct current between 4 and 20 mA.

You can install the "intrinsically-safe" or "explosion-proof" version of the transmitter in hazardous areas. The devices have an EC type examination certificate and comply with the appropriate harmonized European CENELEC directives.

Transmitters with remote seals of different shapes can be delivered for special applications. For example, measuring high-viscosity substances is a special application.

Gauge pressure

This version measures aggressive, non-aggressive and hazardous gases, vapors and liquids.

The smallest span is 0.01 bar g (0.145 psi g), and the largest 700 bar g (10153 psi g).

Differential pressure and flow rate

This version measures corrosive, non-corrosive and hazardous gases, vapors and liquids. You can use this version for the following measurement types:

- differential pressure, e.g. effective differential pressure
- Gauge pressure, suitable for small positive or negative pressure value
- in combination with a restrictor device: flow rate q ~ $\sqrt{\Delta p}$

The smallest measuring span is 1 mbar (0.0145 psi), the largest 30 bar (435 psi).

Level

This version with mounting flange measures the level of non-corrosive, corrosive and hazardous liquids in open and closed containers. The smallest measuring span is 25 mbar (0.363 psi), the largest 5 bar (72.5 psi). The nominal diameter of the mounting flange is DN 80 or DN 100 or 3" or 4".

The negative connection of the measuring cell is kept open when measuring the level of open containers. This measurement is referred to as "measurement against atmosphere". The negative connection is normally connected with the container when measuring the level of closed containers. This balances the static pressure.

Wetted parts are made of various materials, depending on corrosion resistance requirements.

Absolute pressure

This version measures the absolute pressure of aggressive, non-aggressive and hazardous gases, vapors and liquids.

There are two series: a "differential pressure" series and a "gauge pressure" series. The "differential pressure" series is distinguished by a high overload capability.

The smallest measuring span of the "differential pressure" series is 8.3 mbar a (0.12 psi a), and the largest is 100 bar a (1450 psi a).

The smallest measuring span of the "gauge pressure" series is 8.3 mbar a (0.12 psi a), and the largest is 30 bar a (435 psi a).

3.3 Structure

Depending on a customer-specific order, the device comprises different parts.

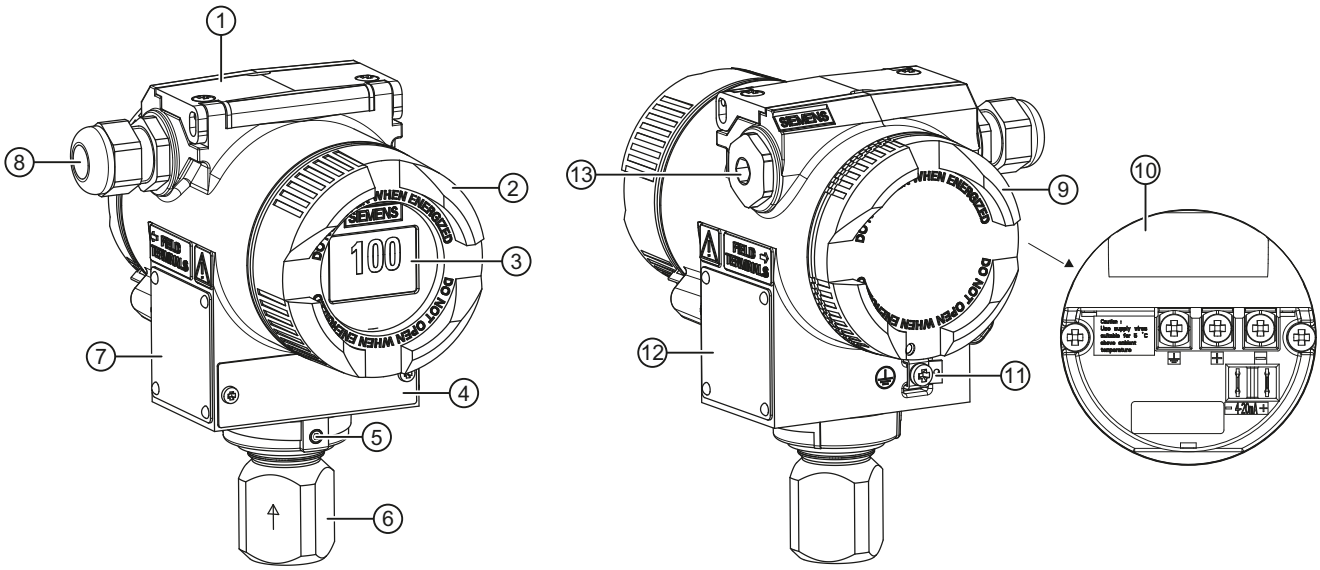

①	Key cover	⑧	Cable inlet, optionally with cable gland
②	Cover (front), optionally with inspection window	⑨	Cover (rear) for electrical terminal compartment
③	Display (optional)	⑩	Electrical terminal compartment
④	Measuring point label	⑪	Protective conductor connector/equipotential bonding terminal
⑤	Retaining screw; twist proofing of the measuring cell in relation to the electronics enclosure	⑫	Nameplate (approval information)
⑥	Process connection	⑬	Blanking plug
⑦	Nameplate (general information)		

Figure 3-2 View of the transmitter: Left: Front right: Rear view

- The electronics enclosure is made of die cast aluminum or precision cast stainless steel.
- The housing has a removable circular cover at the front and the back.
- Depending on the device version, the front cover ② may be designed as an inspection window. You can read the measured values straight off the digital display through this inspection window.
- The cable inlet ⑧ to the electrical terminal compartment is at the side; either the left or right-hand one can be used. The unused opening is closed with a blanking plug ⑬.
- The protective conductor terminal/equipotential bonding terminal ⑪ is located at the back of the enclosure.
- The electrical terminal compartment ⑩ for the auxiliary power and shield is accessible when you remove the back cover ⑨.
- The measuring cell with a process connection ⑥ is located in the lower section of the enclosure. This measuring cell is secured against twisting by a retaining screw ⑤. Thanks to the modular structure of the transmitter, the measuring cell, the electronic unit or the network card can be replaced if required.
- On the upper face of the enclosure you can see crosshead screws which secure the key cover ①, under which there are 3 keys for local operation.

3.4 Nameplate layout

Nameplate with general information

The nameplate bearing the Order No. and other important information, such as design details and technical data, is on the side of the enclosure.

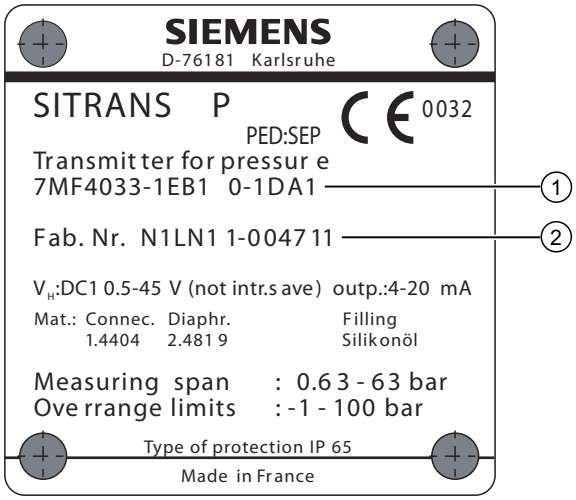

① Order number (machine-readable product code) ② Serial number

Figure 3-3 Example of a nameplate

Nameplate with approval information

On the opposite side is the nameplate with approval information. This nameplate shows e.g. the hardware and firmware versions. Certificate information is also listed if the transmitter is an ex-version.

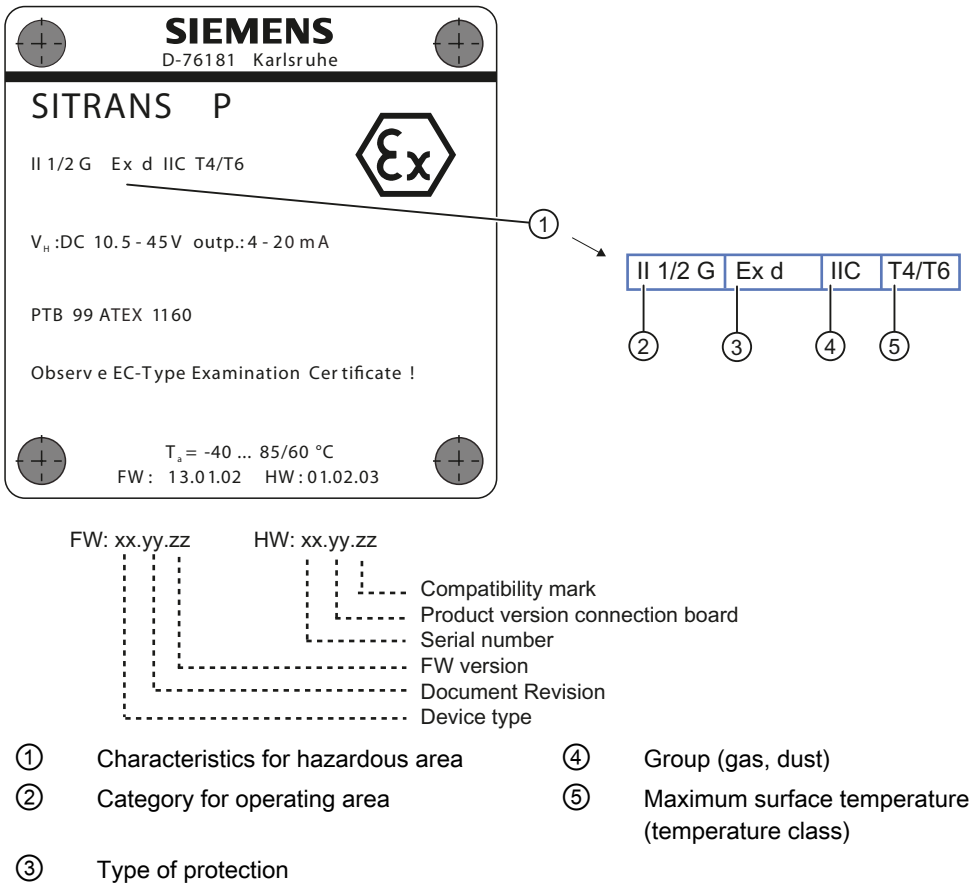

① Characteristics for hazardous area
② Category for operating area
③ Type of protection
④ Group (gas, dust)
⑤ Maximum surface temperature (temperature class)

Figure 3-4 Example of a nameplate

3.5 Measuring point label layout

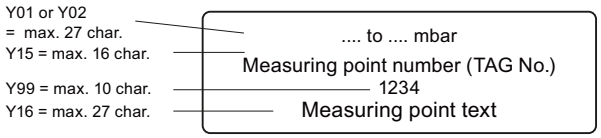

Figure 3-5 Example of measuring point label

3.6 Functional principle

3.6.1 Overview of mode of operation

This chapter describes how the transmitter works.

First the electronics are described, and then the physical principle of the sensors which are used with the various device versions for the individual measurement types.

3.6.2 Operation of the electronics

Description

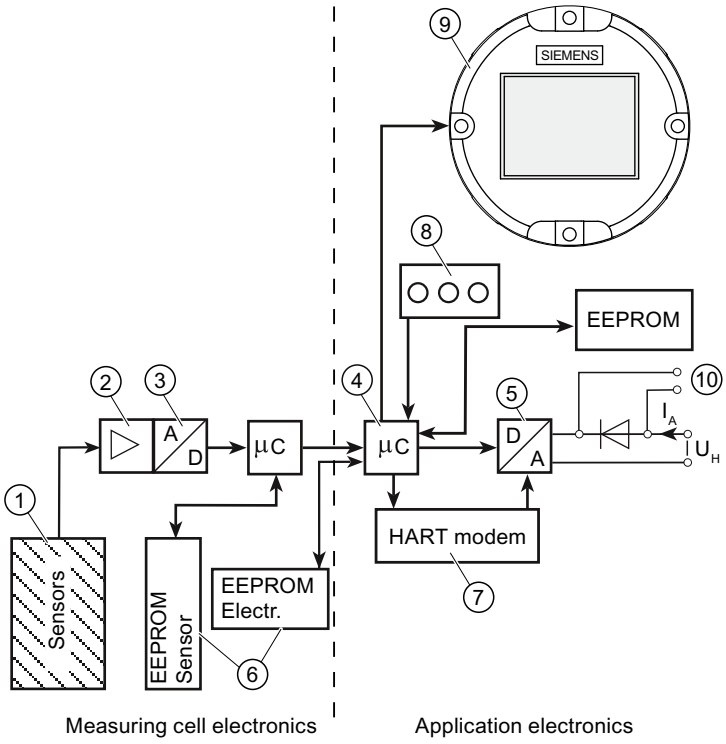

①	Measuring cell sensor	⑦	HART modem
②	Measuring amplifier	⑧	Buttons (local operation)
③	Analog-to-digital converter	⑨	Display
④	Microcontroller	⑩	Connection for external ammeter
⑤	Digital-to-analog converter	I_A	Output current
⑥	Each with an EEPROM in the measuring cell and in the electronics	U_H	Auxiliary power

Figure 3-6 Operation of the electronics with HART communication

Function

- The input pressure is converted into an electrical signal by the sensor ①.
- This signal is amplified by the measuring amplifier ② and digitized in an analog-to-digital converter ③.
- The digital signal is analyzed in a microcontroller ④ and corrected with regard to linearity and thermal characteristics.
- The digital signal is then converted in a digital-to-analog converter ⑤ into the output current of 4 to 20 mA. A diode circuit provides reverse voltage protection.
- You can make an uninterrupted current measurement with a low resistance ammeter at the connection ⑩.
- The measuring cell-specific data, electronics data and parameter assignment data are saved in two EEPROMs ⑥. The first memory is linked to the measuring cell, the second to the electronics.

Operation

- The buttons ⑧ can be used to call up individual functions, so-called modes.
- If you have a device with a display ⑨, you can use it to track the mode settings and other device messages.
- The basic mode settings can be changed with a computer and HART modem ⑦ via PDM.

3.6.3 Measuring cell operation

⚠ CAUTION

If the measurement signal fails because of sensor breakage, the seal diaphragm may also be destroyed. In the worst case scenario, the process medium leaks from the reference pressure opening in the devices used for gauge pressure with a measuring span of ≤ 63 bar.

In the following sections, the process variable to be measured is called general inlet pressure.

Overview

The following modes of operation are described:

- Gauge pressure
- Absolute pressure
- Differential pressure and flow rate
- Level

The following process connections are available, for example:

- G1/2 B, 1/2-14 NPT
- Male thread: M20

- Flange connection in accordance with EN 61518
- Flush-mounted process connections

3.6.3.1 Measuring cell for gauge pressure

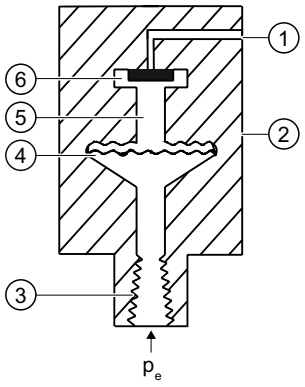

①	Reference pressure opening	⑤	Filling liquid
②	Measuring cell	⑥	Gauge pressure sensor
③	Process connection	p_e	Inlet pressure
④	Seal diaphragm		

Figure 3-7 Function chart of measuring cell for gauge pressure

The inlet pressure (p_e) is transferred to the gauge pressure sensor ⑥ via the seal diaphragm ④ and the fill fluid ⑤, displacing its measuring diaphragm. The displacement changes the resistance of the four piezoresistors (bridge circuit) of the gauge pressure sensor. The change in the resistance causes a bridge output voltage proportional to the inlet pressure.

Transmitters with measuring span ≤ 63 bar measure the inlet pressure against atmosphere, those with measuring spans ≥ 160 bar against vacuum.

3.6.3.2 Measuring cell for differential pressure and flow rate

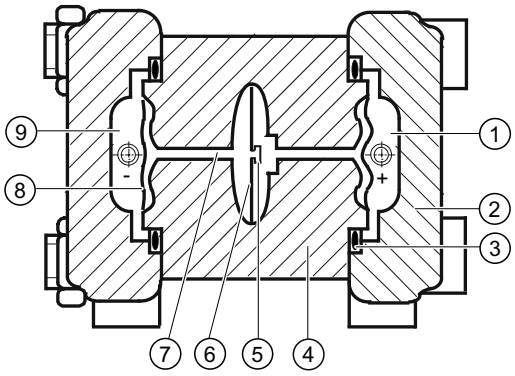

①	Inlet pressure P_+	⑥	Overload diaphragm
②	Pressure cap	⑦	Filling liquid
③	O-ring	⑧	Seal diaphragm
④	Measuring cell body	⑨	Inlet pressure P_-
⑤	Differential pressure sensor		

Figure 3-8 Function chart of the measuring cell for differential pressure and flow rate

- Differential pressure is transmitted to the differential pressure sensor ⑤ through the seal diaphragms ⑧ and the filling liquid ⑦.
- When measuring limits are exceeded, the seal diaphragm ⑧ is displaced until the seal diaphragm ② rests on the measuring cell body ④. The differential pressure sensor ⑤ is thus protected against overloading since no further deflection of the overload diaphragm ⑥ is possible.
- The seal diaphragm ⑧ is displaced by the differential pressure. The displacement changes the resistance of the four piezoresistors (bridge circuit) of the differential pressure sensor.
- The change in the resistance causes a bridge output voltage proportional to the differential pressure.

3.6.3.3 Measuring cell for level

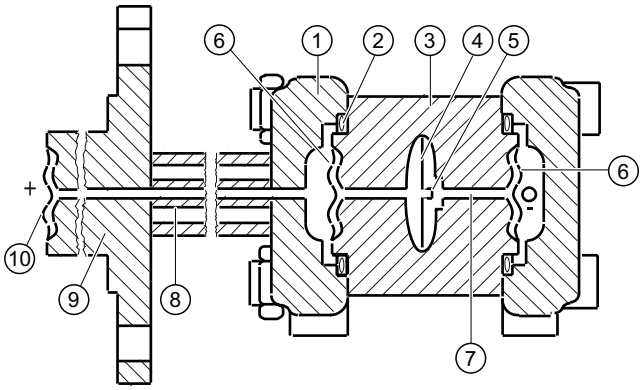

①	Pressure cap	⑥	Seal diaphragm on the measuring cell
②	O-ring	⑦	Filling liquid of the measuring cell
③	Measuring cell body	⑧	Capillary tube with the fill fluid of the mounting flange
④	Overload diaphragm	⑨	Flange with a tube
⑤	Differential pressure sensor	⑩	Seal diaphragm on the mounting flange

Figure 3-9 Function chart of the measuring cell for level

- The inlet pressure (hydrostatic pressure) works hydraulically on the measuring cell through the seal diaphragm ⑩ on the mounting flange ⑩.
- Differential pressure at the measuring cell is transmitted to the differential pressure sensor ⑤ through the seal diaphragms ⑥ and the filling liquid ⑦.
- When measuring limits are exceeded, the overload diaphragm ④ is displaced until one of the seal diaphragms ⑥ or ⑩ rests on the measuring cell body ③. The seal diaphragms ⑥ thus protect the differential pressure sensor ⑤ from overload.
- The seal diaphragm ⑥ is displaced by the differential pressure. The displacement changes the resistance of the four doped piezoresistors in the bridge circuit.
- The change in the resistance causes a bridge output voltage proportional to the differential pressure.

3.6.3.4 Measuring cell for absolute pressure from the differential pressure series

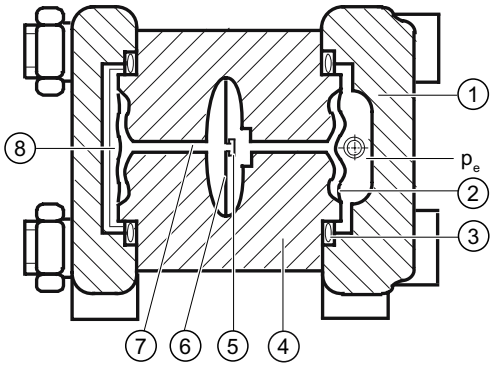

①	Pressure cap	⑥	Overload diaphragm
②	Seal diaphragm on the measuring cell	⑦	Measuring cell filling liquid
③	O-ring	⑧	Reference pressure
④	Measuring cell body	p_e	Pressure input variable
⑤	Absolute pressure sensor		

Figure 3-10 Function chart of measuring cell for absolute pressure

- Absolute pressure is transmitted to the absolute pressure sensor ⑤ through the seal diaphragm ② and the filling liquid ⑦.
- When measuring limits are exceeded, the overload diaphragm ⑥ is displaced until the seal diaphragm ② rests on the measuring cell body ④. The seal diaphragm thus protects the absolute pressure sensor ⑤ from overload.
- The difference between the inlet pressure (p_e) and the reference pressure ⑧ on the negative side of the measuring cell displaces the seal diaphragm ②. The displacement changes the resistance of the four piezoresistors (bridge circuit) of the absolute pressure sensor.

- The change in the resistance causes a bridge output voltage proportional to the absolute pressure.

3.6.3.5 Measuring cell for absolute pressure from the gauge pressure series

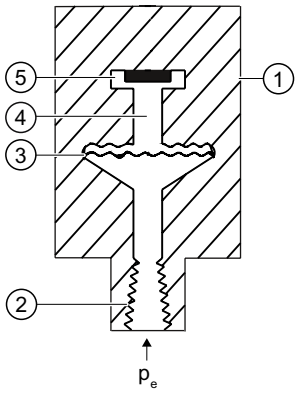

①	Measuring cell	④	Filling liquid
②	Process connection	⑤	Absolute pressure sensor
③	Seal diaphragm	⑥	Inlet pressure

Figure 3-11 Function chart of measuring cell for absolute pressure

The inlet pressure (p_e) is transferred to the absolute pressure sensor ⑤ via the seal diaphragm ③ and the fill fluid ④, displacing its measuring diaphragm. The displacement changes the resistance of the four piezoresistors (bridge circuit) of the absolute pressure sensor. The change in the resistance causes a bridge output voltage proportional to the inlet pressure.

3.6.3.6 Measuring cell for gauge pressure, front-flush membrane

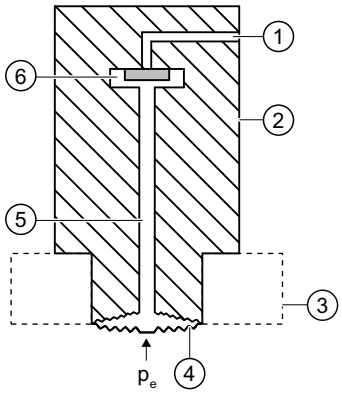

①	Reference pressure opening	⑤	Filling liquid
②	Measuring cell	⑥	Gauge pressure sensor
③	Process connection	p_e	Inlet pressure
④	Seal diaphragm		

Figure 3-12 Function chart of the measuring cell for gauge pressure, flush mounted diaphragm

The inlet pressure (p_e) is transferred to the gauge pressure sensor ⑥ via the seal diaphragm ④ and the filling liquid ⑤, displacing its measuring diaphragm. The displacement changes the resistance of the four piezoresistors (bridge circuit) of the gauge pressure sensor. The change in the resistance causes a bridge output voltage proportional to the inlet pressure.

Transmitters with measuring span ≤ 63 bar measure the inlet pressure against atmosphere, those with measuring spans ≥ 160 bar against vacuum.

3.6.3.7 Measuring cell for absolute pressure, front-flush membrane

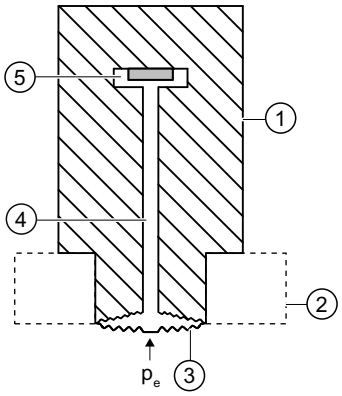

①	Measuring cell	④	Filling liquid
②	Process connection	⑤	Absolute pressure sensor
③	Seal diaphragm	p_e	Inlet pressure

Figure 3-13 Function chart of the measuring cell for absolute pressure, flush mounted diaphragm

The inlet pressure (p_e) is transferred to the absolute pressure sensor ⑤ via the seal diaphragm ③ and the filling liquid ④, and displaces its measuring diaphragm. The displacement changes the resistance of the four piezoresistors (bridge circuit) of the absolute pressure sensor. The change in the resistance causes a bridge output voltage proportional to the inlet pressure.

3.7 Remote seal

Product description

- A remote seal measuring system comprises the following elements:
  - Remote seal
  - Transmission line, e.g. capillary line
  - Measuring device

  Note
  Malfunction of the remote seal measuring system

  If you separate the components of the remote seal measuring system, this results in malfunctioning of the system.

  Do not separate the components under any circumstances.

- The measuring system based on a hydraulic principle is used to transfer pressure.
- The capillary line and the remote seal diaphragm are the most sensitive components in the remote seal measuring system. The material thickness of the remote seal diaphragm is only ~ 0.1 mm.
- The smallest of leakages in the transmission system leads to the loss of transmission fluid.
- The loss of transmission fluid results in inaccuracies in the measurement and failure of the measuring system.
- In order to avoid leaks and measuring errors, please observe the installation and maintenance instructions in addition to the safety notes.

3.8 SIMATIC PDM

SIMATIC PDM is a software package for configuring, parameter assignment, commissioning, diagnostics and maintenance of this device and other process devices.

SIMATIC PDM offers simple monitoring of process values, alarms, and device status information of the transmitter.

SIMATIC PDM allows the process device data to be:

- displayed
- set
- modified
- saved
- diagnosed
- checked for plausibility
- managed
- simulated

Installing/mounting

4

4.1 Basic safety instructions

⚠ WARNING

Wetted parts unsuitable for the process media

Danger of injury or damage to device.

Hot, toxic and corrosive media could be released if the process medium is unsuitable for the wetted parts.

- Ensure that the material of the device parts wetted by the process medium is suitable for the medium. Refer to the information in "Technical data" (Page 169).

⚠ WARNING

Incorrect material for the diaphragm in Zone 0

Danger of explosion in the hazardous area. In the case of operation with intrinsically safe supply units of category "ib" or devices of the flameproof enclosure version "Ex d" and simultaneous use in Zone 0, transmitter explosion protection depends on the tightness of the diaphragm.

- Ensure that the material used for the diaphragm is suitable for the process medium. Refer to the information in the section "Technical data (Page 169)".

⚠ WARNING

Unsuitable connecting parts

Danger of injury or poisoning.

In case of improper mounting hot, toxic and corrosive process media could be released at the connections.

- Ensure that connecting parts (such as flange gaskets and bolts) are suitable for connection and process media.

Note

Material compatibility

Siemens can provide you with support concerning selection of sensor components wetted by process media. However, you are responsible for the selection of components. Siemens accepts no liability for faults or failures resulting from incompatible materials.

⚠ WARNING

Exceeded maximum permissible operating pressure

Danger of injury or poisoning.

The maximum permissible operating pressure depends on the device version. The device can be damaged if the operating pressure is exceeded. Hot, toxic and corrosive process media could be released.

- Make sure that the device is suitable for the maximum permissible operating pressure of your system. Refer to the information on the nameplate and/or in "Technical data (Page 169)".

⚠ WARNING

Exceeded maximum ambient or process media temperature

Danger of explosion in hazardous areas.

Device damage.

- Make sure that the maximum permissible ambient and process media temperatures of the device are not exceeded. Refer to the information in Chapter "Technical data (Page 169)".

⚠ WARNING

Open cable inlet or incorrect cable gland

Danger of explosion in hazardous areas.

- Close the cable inlets for the electrical connections. Only use cable glands or plugs which are approved for the relevant type of protection.

⚠ WARNING

Incorrect conduit system

Danger of explosion in hazardous areas as result of open cable inlet or incorrect conduit system.

- In the case of a conduit system, mount a spark barrier at a defined distance from the device input. Observe national regulations and the requirements stated in the relevant approvals.

See also

Technical data (Page 169)

⚠ WARNING

Incorrect mounting at Zone 0

Danger of explosion in hazardous areas.

- Ensure sufficient tightness at the process connection.
- Observe the standard IEC/EN 60079-14.

⚠ WARNING

Danger with "flameproof enclosure" protection

Danger of explosion in hazardous areas. An explosion may be caused by hot gas escaping from the flameproof enclosure if there is too little space between it and the fixed parts.

- Ensure that there is a space of at least 40 mm between the flameproof joint and the fixed parts.

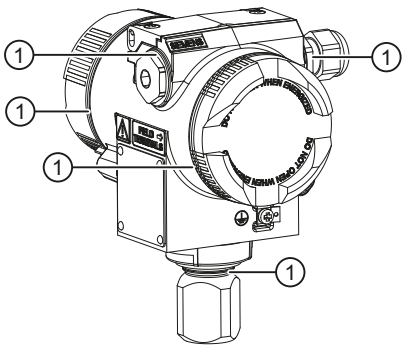

① Flameproof joint

⚠ WARNING

Loss of explosion protection

Danger of explosion in hazardous areas if the device is open or not properly closed.

- Close the device as described in Chapter "Connecting the device (Page 60)".

⚠ WARNING

Use of incorrect device parts in potentially explosive environments

Devices and their associated device parts are either approved for different types of protection or they do not have explosion protection. There is a danger of explosion if device parts (such as covers) are used for devices with explosion protection that are not expressly suited for this type of protection. If you do not adhere to these guidelines, the test certificates and the manufacturer warranty will become null and void.

- Use only device parts that have been approved for the respective type of protection in the potentially explosive environment. Covers that are not suited for the "explosion-proof" type of protection are identified as such by a notice label attached to the inside of the cover with "Not Ex d Not SIL".
- Do not swap device parts unless the manufacturer specifically ensures compatibility of these parts.

⚠ CAUTION

Hot surfaces resulting from hot process media

Danger of burns resulting from surface temperatures above 70 °C (155 °F).

- Take appropriate protective measures, for example contact protection.
- Make sure that protective measures do not cause the maximum permissible ambient temperature to be exceeded. Refer to the information in Chapter "Technical data (Page 169)".

⚠ CAUTION

External stresses and loads

Damage to device by severe external stresses and loads (e.g. thermal expansion or pipe tension). Process media can be released.

- Prevent severe external stresses and loads from acting on the device.

4.1.1 Installation location requirements

⚠ WARNING

Insufficient air supply

The device may overheat if there is an insufficient supply of air.

- Install the device so that there is sufficient air supply in the room.
- Observe the maximum permissible ambient temperature. Refer to the information in the section "Technical data (Page 169)".

⚠ CAUTION

Aggressive atmospheres

Damage to device through penetration of aggressive vapors.

- Ensure that the device is suitable for the application.

NOTICE

Direct sunlight

Increased measuring errors.

- Protect the device from direct sunlight.

Make sure that the maximum ambient temperature is not exceeded. Refer to the information in the section Technical data (Page 169).

4.1.2 Proper mounting

4.1.2.1 Incorrect mounting

NOTICE

Incorrect mounting

The device can be damaged, destroyed, or its functionality impaired through improper mounting.

- Before installing ensure there is no visible damage to the device.
- Make sure that process connectors are clean, and suitable gaskets and glands are used.
- Mount the device using suitable tools. Refer to the information in Chapter "Technical data (Page 169)", for example installation torques requirements.

⚠ CAUTION

Loss of degree of protection

Damage to device if the enclosure is open or not properly closed. The degree of protection specified on the nameplate or in Chapter "Technical data (Page 169)" is no longer guaranteed.

- Make sure that the device is securely closed.

See also

Connecting the device (Page 60)

4.2 Disassembly

⚠ WARNING

Incorrect disassembly

The following dangers may result through incorrect disassembly:

- Injury through electric shock
- Danger through emerging media when connected to the process
- Danger of explosion in hazardous area

In order to disassemble correctly, observe the following:

- Before starting work, make sure that you have switched off all physical variables such as pressure, temperature, electricity etc. or that they have a harmless value.
- If the device contains dangerous media, it must be emptied prior to disassembly. Make sure that no environmentally hazardous media are released.
- Secure the remaining connections so that no damage can result if the process is started unintentionally.

4.3 Installation (except level)

4.3.1 Instructions for installation (except level)

Conditions

Note

Compare the desired operating data with the data on the nameplate.

Please also refer to the information on the remote seal if this is fitted.

Note

Protect the transmitter against:

- Direct heat radiation
- Rapid temperature fluctuations
- Heavy contamination
- Mechanical damage
- Direct sunlight

The installation location is to be as follows:

- Easily accessible
- As close as possible to the measuring point
- Vibration-free
- Within the permitted ambient temperature values

Installation configuration

The transmitter may in principle be configured above or below the pressure tapping point. The recommended configuration depends on the aggregate state of the medium.

Installation configuration for gases

Install the transmitter above the pressure tapping point.

Lay the pressure tubing with a constant gradient to the pressure tapping point, so that any condensation produced can drain in the main line and thereby avoid corruption of the measured values.

Installation configuration for vapor and liquid

Install the transmitter below the pressure tapping point.

Lay the pressure tubing with a constant gradient to the pressure tapping point so that any gas pockets can escape in the main line.

4.3.2 Installation (except level)

Note

Damage to measuring cell

When installing the process connection of the pressure transmitter, do not rotate the housing. Rotating the housing may damage the measuring cell.

To avoid damage to the device, tighten the threaded nuts of the measuring cell using a wrench.

Procedure

Attach the transmitter to the process connection with an appropriate tool.

See also

Introduction to commissioning (Page 150)

4.3.3 Fastening

Fastening without the mounting bracket

You can fasten the transmitter directly on the process connection.

Fastening with the mounting bracket

You can fasten the mounting bracket as follows:

- On a wall or a mounting frame using two screws
- On a vertical or horizontal mounting tube (Ø 50 to 60 mm) using a tube bracket

Fasten the transmitter mounting bracket using the two screws provided.

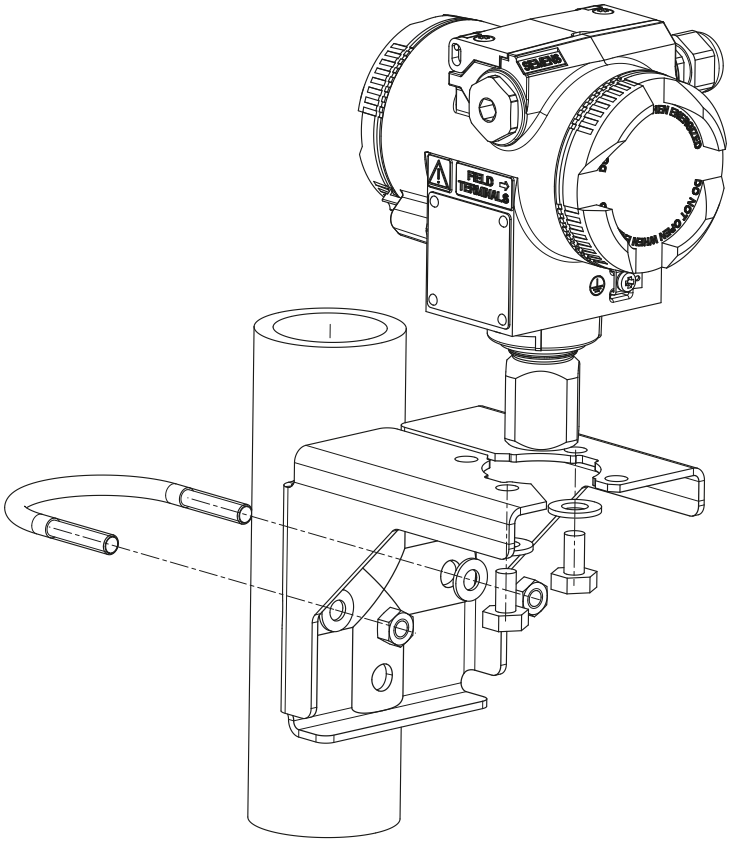

Figure 4-1 Fastening the transmitter on the mounting bracket

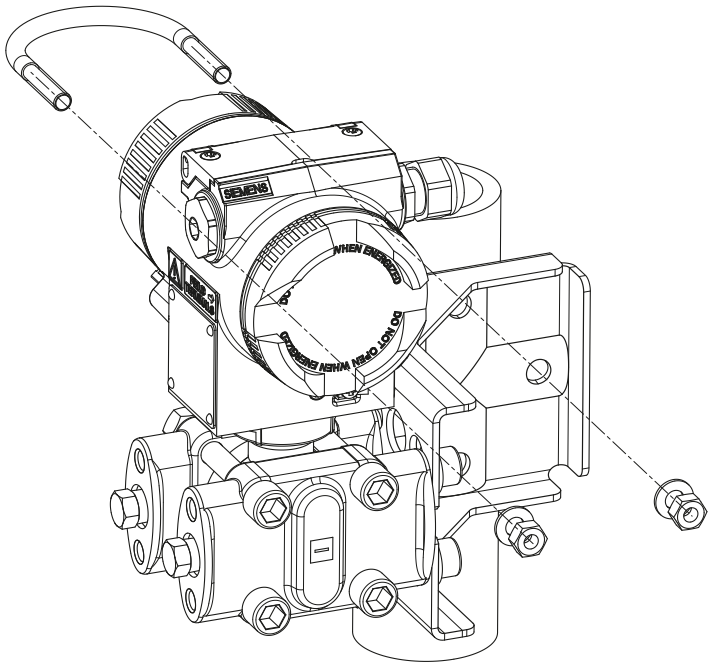

Figure 4-2 An example of fastening the transmitter on the mounting bracket in the case of differential pressure and horizontal differential pressure lines

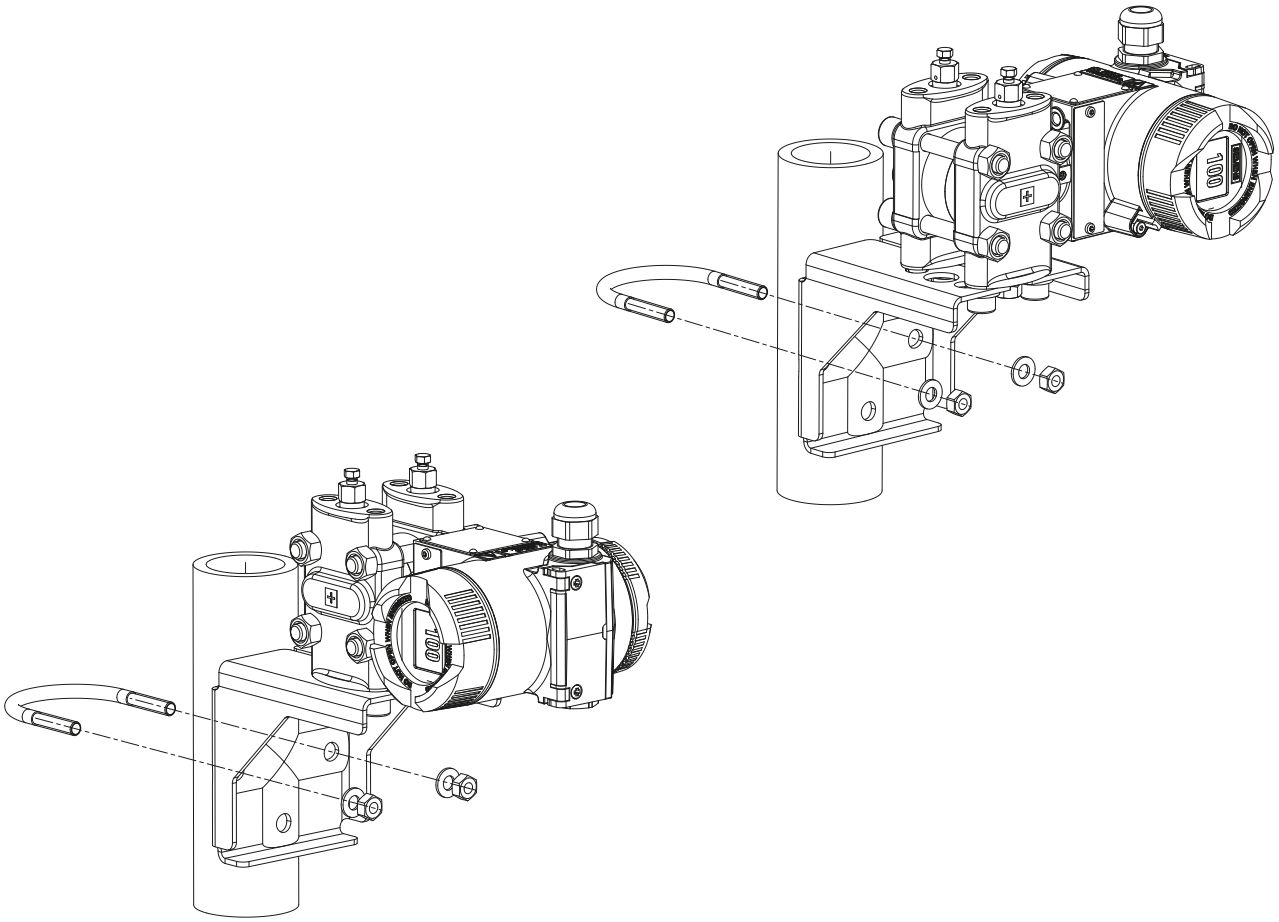

Figure 4-3 An example of fastening on the mounting bracket in the case of differential pressure and vertical differential pressure lines

4.4 "Level" installation

4.4.1 Instructions for level installation

Requirements

Note

Compare the desired operating data with the data on the nameplate.

Please also refer to the information on the remote seal if this is fitted.

Note

Protect the transmitter from:

- Direct heat
- Rapid temperature changes
- Severe soiling
- Mechanical damage
- Direct sunlight

Note

Select the height of the mounting flange such that the pressure transmitter is always mounted below the lowest fill height to be measured.

The installation location is to be as follows:

- Easily accessible
- The measuring point must be as close as possible
- Vibration-free
- Within the permitted ambient temperature values

4.4.2 Installation for level

Note

Seals are required for the installation. The seals must be compatible with the medium to be measured.

Seals are not included in the delivery.

Procedure

To install the transmitter for level, proceed as follows:

1. Attach the seal to the container's mating flange.
   Ensure that the seal is centrically positioned and that it does not restrict the movement of the flange's seal diaphragm in any way as otherwise the tightness of the process connection is not guaranteed.
2. Screw on the transmitter's flange.
3. Observe the installation position.

4.4.3 Connection of the negative pressure line

Assembly on an open container

A line is not required when taking measurements in an open container since the negative chamber is connected with the atmosphere.

Ensure that no dirt enters the open connection ports, for example by using connection screws with a 7MF4997-1CP bleed valve.

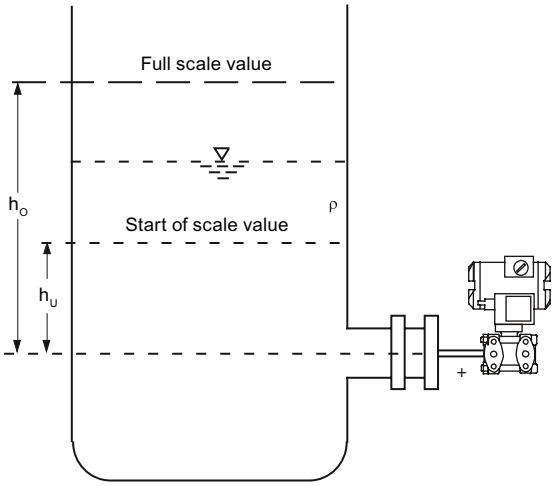

Measurement assembly on an open container

Formula:

Start of scale value: $p_{MA} = \rho \cdot g \cdot h_U$

Full-scale value: $p_{ME} = \rho \cdot g \cdot h_O$

h_U	Lower filling level	Δp_{MA}	Start of scale value
h_O	Upper filling level	Δp_{ME}	Full-scale value
p	Pressure	ρ	Density of the measured medium in the container
		g	Acceleration due to gravity

Assembly on a closed container

When taking measurements in a closed container without or with little condensate formation, the negative pressure line is not filled. Lay the line in such a way that pockets of condensate do not form. Install a condensation container if required.

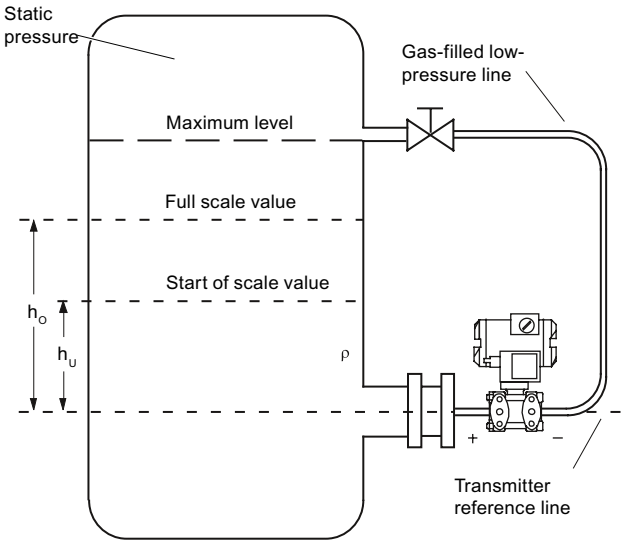

Measurement assembly on a closed container (no or little condensate separation)

Formula:

Start-of-scale value: $\Delta p_{MA} = \rho \cdot g \cdot h_U$

Full-scale value: $\Delta p_{ME} = \rho \cdot g \cdot h_O$

h_U	Lower filling level	Δp_{MA}	Start of scale value
h_O	Upper filling level	Δp_{ME}	Full-scale value
p	Pressure	ρ	Density of the measured medium in the container
		g	Acceleration due to gravity

When taking measurements in a closed container with strong condensate formation, you must fill the negative pressure line (mostly with the condensate of the measured medium) and install a condensate pot. You can cut off the device using the dual pneumatic block 7MF9001-2.

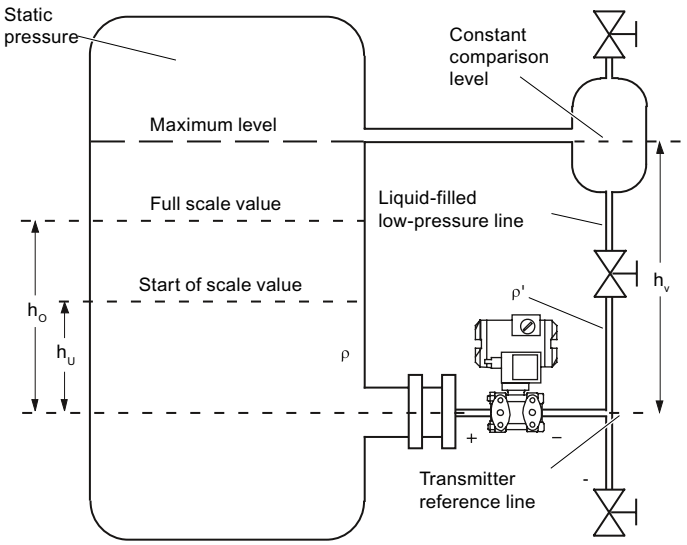

Formula:

Start-of-scale value:
$\Delta p_{MA} = g \cdot (h_U \cdot \rho - h_V \cdot \rho')$

Full-scale value:
$\Delta p_{MA} = g \cdot (h_O \cdot \rho - h_V \cdot \rho')$

Measurement assembly on a closed container (strong condensate formation)

h_U	Lower filling level	Δp_{MA}	Start of scale value
h_O	Upper filling level	Δp_{ME}	Full-scale value
h_V	Gland distance	ρ	Density of the measured medium in the container
p	Pressure	ρ '	Density of fluid in the negative pressure line corresponds to the prevailing temperature there
		g	Acceleration due to gravity

The process connection on the negative side is a female thread $^1/_4$-18 NPT or an oval flange.

Lay the line for the negative pressure using a seamless steel tube 12 mm x 1.5 mm.

4.5 "Remote seal" installation

4.5.1 Remote seal installation

General installation instructions

- Keep the measuring system in the factory packing until it is installed in order to protect it from mechanical damage.
- When removing from the factory packing and installing: ensure that damage to and mechanical deformations in the membrane are prevented.

- Never loosen the sealed filling screws on the remote seal and the measuring instrument.
- Do not cause damage to the remote separating membrane; scratches on the remote separating membrane, e.g. due to sharp-edged objects, are the main starting points for corrosion.
- Select suitable gaskets for sealing.
- Use a gasket having an adequately large inner diameter for flanging. Insert the gasket concentrically; contact with the membrane leads to deviations in measurements.
- When using gaskets made of soft materials or PTFE: follow the guidelines of the gasket manufacturer, especially regarding the tightening torque and setting cycles.
- At the time of installation, use suitable fastening components such as screws and nuts that are compliant with fitting and flange standards.
- Excessive tightening of screwed joints on the process connection may displace the zero point on the pressure transmitter.

Note

Commissioning

If a shut-off valve exists, open the shut-off valve slowly when commissioning in order to avoid pressure surges.

Note

Permissible ambient and operating temperatures

Install the pressure measuring device such that the permissible limits of ambient and measured medium temperatures are not overshot or undershot even with the consideration of the effect of convection and heat radiation.

- Note the effect of temperature on the measuring accuracy.
- When selecting the remote seals, ensure that fittings and flange components have adequate pressure-temperature resistance by selecting suitable materials and pressure ratings. The pressure rating specified on the remote seal applies to reference conditions according to IEC 60770.
- For the maximum permissible pressure at higher temperatures, please refer to the standard specified on the remote seal.

Using remote seals with pressure measuring device for hazardous areas:

- When using remote seals with pressure measuring device for hazardous areas, the permissible limits of ambient temperatures for the transmitter must not be exceeded. Hot surfaces on the cooling section (capillaries or cooling elements) are a possible source of ignition. Initiate suitable measures.
- When remote seals with a flame arrestor are used, the pressure measuring instrument determines the permissible ambient temperature. In the case of potentially explosive gaseous atmosphere, the temperature around the flame arrestor must not exceed +60 °C.

4.5.2 Installation of the remote seal with the capillary line

Notes

- Do not rest the measurement assembly on the capillary line.
- Do not bend capillary lines; risk of leakages and/or risk of considerable increase in the setting time of the measuring system.
- Owing to the risk of bending and breakages, pay attention to mechanical overloads at the joints such as capillary line-remote seal and capillary line-measuring device.
- Unwinding the excess capillary lines with a radius of at least 150 mm.
- Fasten the capillary line such that there are no vibrations.
- Permissible height differences:
  - When installing the pressure measuring device above the measuring point, keep the following in mind: the height difference of $H_{1max.}$ for remote seal measuring systems with silicone, glycerin or paraffin oil filling. = 7 m must not be exceeded.
  - If halocarbon oil is used as the filling liquid, this maximum height difference is only $H_{1max.}$ = 4 m, see installation types A and B.

If negative overpressure is observed during measurements, reduce the permissible height difference accordingly.

Installation type for gauge pressure and level measurements (open containers)

Installation type A

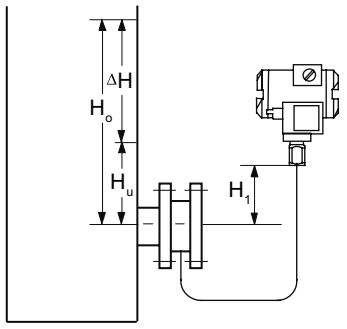

Start of scale value:
$p_{MA} = \rho_{FL} * g * H_U + \rho_{oil} * g * H_1$
Full-scale value:
$p_{ME} = \rho_{FL} * g * H_O + \rho_{oil} * g * H_1$

Pressure transmitter above the measuring point

Installation type B

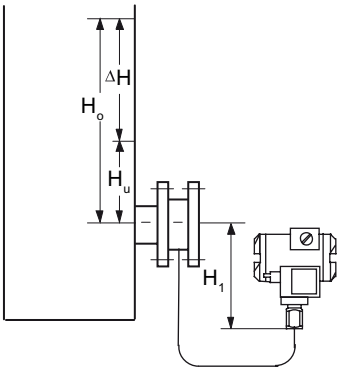

Pressure transmitter below the measuring point

Start of scale value:
$p_{MA} = \rho_{FL} * g * H_U - \rho_{oil} * g * H_1$
Full-scale value:
$p_{ME} = \rho_{FL} * g * H_O - \rho_{oil} * g * H_1$

$H_1 \leq 7$ m (23 ft); with halocarbon oil as the filling liquid, only $H_1 \leq 4$ m(13.1 ft)

Key

p_{MA}	Start of scale value
p_{ME}	Full-scale value
ρ_{FL}	Density of the process medium in the container
ρ_{oil}	Density of the filling oil in the capillary line of the remote seal
g	Acceleration due to gravity
H_U	Lower filling level
H_O	Upper filling level
H_1	Distance between the container flange and the pressure transmitter

For absolute pressure measurements (vacuum), install the measuring device at least at the height of the remote seal or below it (see installation types C).

Installation types for absolute pressure measurements (closed containers)

Installation type C_1

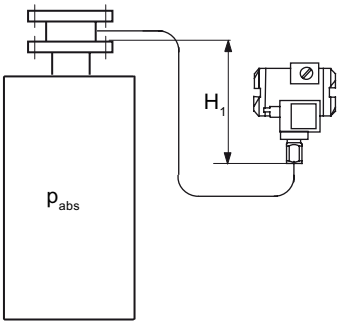

Start of scale value:
$p_{MA} = p_{start} + \rho_{oil} * g * H_1$
Full-scale value:
$p_{ME} = p_{end} + \rho_{oil} * g * H_1$

Installation type C_2

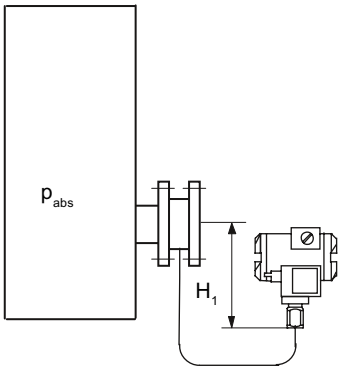

Pressure transmitter for absolute pressure always below the measuring point: $H_1 \geq 200$ mm (7.9 inch)

Key

p_{MA}	Start of scale value
p_{ME}	Full-scale value
p_{start}	Start of scale pressure
p_{end}	Full scale pressure
ρ_{oil}	Density of the filling oil in the capillary line of the remote seal
g	Acceleration due to gravity
H_1	Distance between the container flange and the pressure transmitter

Note

Effects of temperature

Keep the following instructions in mind in order to minimize keep the effects of temperature in remote seal measuring systems with the differential pressure measuring device:

Install the device such that the positive and negative sides are symmetrical as far as ambient effects, especially ambient temperatures, are concerned.

Installation type for differential pressure and flow rate measurements

Installation type D

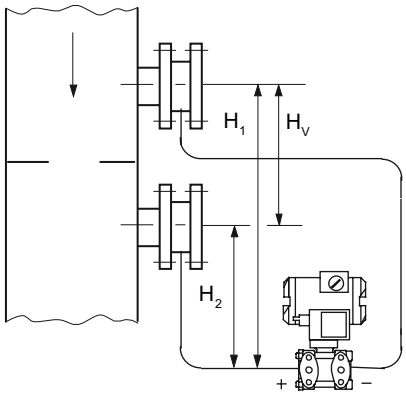

Start of scale value:
$p_{MA} = p_{start} - \rho_{oil} * g * H_V$
Full-scale value:
$p_{ME} = p_{end} - \rho_{oil} * g * H_V$

Key

p_{MA}	Start of scale value
p_{ME}	Full-scale value
p_{start}	Start of scale pressure
p_{end}	Full scale pressure
ρ_{oil}	Density of the filling oil in the capillary line of the remote seal
g	Acceleration due to gravity
H_V	Gland distance

Installation types for level measurements (closed containers)

Installation type E

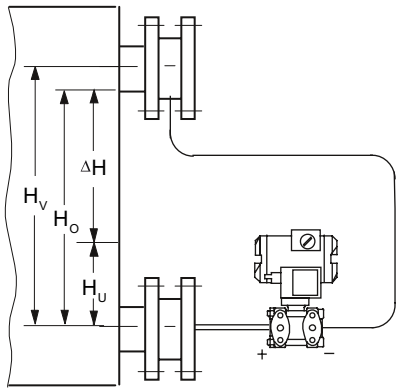

Start of scale value:
$p_{MA} = \rho_{FL} * g * H_U - \rho_{oil} * g * H_V$
Full-scale value:
$p_{ME} = \rho_{FL} * g * H_U - \rho_{oil} * g * H_V$

Key

p_{MA}	Start of scale value
p_{ME}	Full-scale value
ρ_{FL}	Density of the process medium in the container
ρ_{oil}	Density of the filling oil in the capillary line of the remote seal
g	Acceleration due to gravity
H_U	Lower filling level
H_O	Upper filling level
H_V	Gland distance

Installation type G

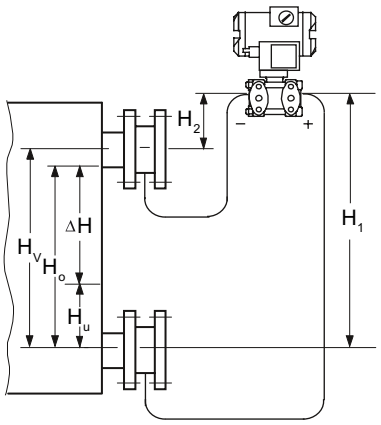

$H_1 \leq 7$ m (23 ft), for halocarbon oil, however only H1 ≤ 4 m (13.1 ft)

Start of scale value:
$p_{MA} = \rho_{FL} * g * H_U - \rho_{oil} * g * H_V$

Full-scale value:
$p_{ME} = \rho_{FL} * g * H_O - \rho_{oil} * g * H_V$

Pressure transmitter for differential pressure above the upper measuring point, no vacuum

Installation type H

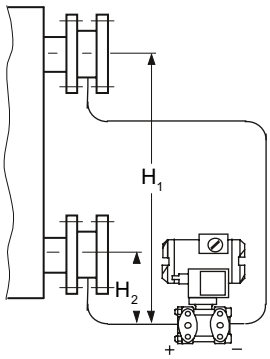

Start of scale value:
$p_{MA} = \rho_{FL} * g * H_U - \rho_{oil} * g * H_V$

Full-scale value:
$p_{ME} = \rho_{FL} * g * H_O - \rho_{oil} * g * H_V$

Below the lower measuring point

Installation type J

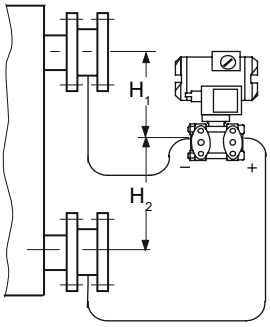

Between the measuring points, no vacuum

$H_2 \leq 7$ m (23 ft); with halocarbon oil as the filling liquid, only $H_2 \leq 4$ m(13.1 ft)

Start of scale value:

$p_{MA} = \rho_{FL} * g * H_U - \rho_{oil} * g * H_V$

Full-scale value:

$p_{ME} = \rho_{FL} * g * H_O - \rho_{oil} * g * H_V$

Key

p_{MA}	Start of scale value
p_{ME}	Full-scale value
ρ_{FL}	Density of the process medium in the container
ρ_{oil}	Density of the filling oil in the capillary line of the remote seal
g	Acceleration due to gravity
H_U	Lower filling level
H_O	Upper filling level
H_V	Gland distance

4.6 Turing the measuring cell against housing

Description

You can turn the measuring cell against the housing. Turning simplifies the transmitter operation in the case of an angled installation environment. The buttons and the current connection can thus also be operated for an external measuring device. The display also remains visible in enclosure covers with an inspection window.

Only limited turning is permissible! The turning range ① is marked at the foot of the electronic housing. An orientation mark ③ is provided at the throat of the measuring cell. This mark must remain in the marked section when turning.

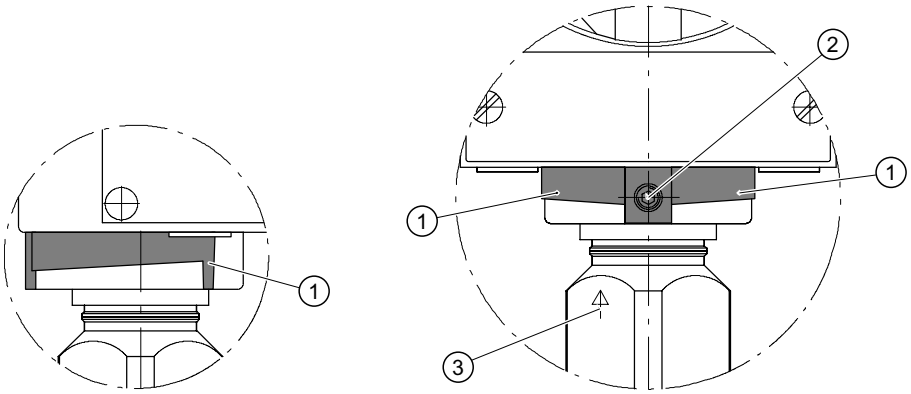

① Turning range
② Retaining screw
③ Orientation mark

Figure 4-4 Example: turning range of transmitters for pressure and absolute pressure from the gauge pressure series

The turning range for transmitters for differential pressure and flow rate, absolute pressure from the differential pressure series and level is identified in a similar manner.

Procedure

NOTICE
Follow the turning range, otherwise electrical connections of the measuring cell may get damaged.

1. Loosen the retaining screw ② (Allen screw 2.5 mm).
2. Turn the electronic housing against the measuring cell. Follow the marked turning range ① while doing so.
3. Tighten the retaining screw (torque: 3.4 to 3.6 Nm).

4.7 Rotating the display

You can rotate the display in the electronics enclosure. This makes it easier to read the display if the device is not being operated in a vertical position.

Procedure

1. Unscrew the cover of the electrical cable compartment. See section Structure (Page 19). An identification text "FIELD TERMINAL" is provided at the side of the housing.
2. Unscrew the display. Depending on the application position of the transmitter, you can reinstall it at four different positions. You can turn it by ±90° or ±180°.

3. Screw the covers back on as far as they will go.
4. Secure the covers with the cover catch.

Connecting 5

5.1 Basic safety instructions

5.1.1 Unsuitable cables and/or cable glands

⚠ WARNING

Unsuitable cables and/or cable glands

Danger of explosion in hazardous areas.

- Only use suitable cables and cable glands complying with the requirements specified in Chapter "Technical data (Page 169)".
- Tighten the cable glands in accordance with the torques specified in Chapter "Technical data (Page 169)".
- When replacing cable glands use only cable glands of the same type.
- After installation check that the cables are seated firmly.

⚠ WARNING

Hazardous contact voltage in versions with 4-conductor extension

Danger of electrocution in case of incorrect connection.

- For the electrical connection, refer to the information in Chapter "Technical data (Page 169)".

⚠ WARNING

Improper power supply

Danger of explosion in hazardous areas as result of incorrect power supply, e.g. using direct current instead of alternating current.

- Connect the device in accordance with the specified power supply and signal circuits. The relevant specifications can be found in the certificates, in Chapter "Technical data (Page 169)" or on the nameplate.

⚠ WARNING

Unsafe extra-low voltage

Danger of explosion in hazardous areas due to voltage flashover.

- Connect the device to an extra-low voltage with safe isolation (SELV).

⚠ WARNING

Lack of equipotential bonding

Danger of explosion through compensating currents or ignition currents through lack of equipotential bonding.

- Ensure that the device is potentially equalized.

Exception: It may be permissible to omit connection of the equipotential bonding for devices with type of protection "Intrinsic safety Ex i".

⚠ WARNING

Unprotected cable ends

Danger of explosion through unprotected cable ends in hazardous areas.

- Protect unused cable ends in accordance with IEC/EN 60079-14.

⚠ WARNING

Improper laying of shielded cables

Danger of explosion through compensating currents between hazardous area and the non-hazardous area.

- Only ground shielded cables that run into the hazardous area at one end.
- If grounding is required at both ends, use an equipotential bonding conductor.

⚠ WARNING

Connecting device in energized state

Danger of explosion in hazardous areas.

- Connect devices in hazardous areas only in a de-energized state.

Exceptions:

- Circuits of limited energy may also be connected in the energized state in hazardous areas.
- Exceptions for type of protection "Non-sparking nA" (Zone 2) are regulated in the relevant certificate

⚠ WARNING

Incorrect selection of type of protection

Danger of explosion in areas subject to explosion hazard.

This device is approved for several types of protection.

1. Decide in favor of one type of protection.
2. Connect the device in accordance with the selected type of protection.
3. In order to avoid incorrect use at a later point, make the types of protection that are not used permanently unrecognizable on the nameplate.

NOTICE

Ambient temperature too high

Damage to cable sheath.

- At an ambient temperature ≥ 60 °C (140 °F), use heat-resistant cables suitable for an ambient temperature at least 20 °C (68 °F) higher.

NOTICE

Incorrect measured values with incorrect grounding

The device must not be grounded via the "+" connection. It may otherwise malfunction and be permanently damaged.

- If necessary, ground the device using the "-" connection.

Note

Electromagnetic compatibility (EMC)

You can use this device in industrial environments, households and small businesses.

For metal housings there is an increased electromagnetic compatibility compared to high-frequency radiation. This protection can be increased by grounding the housing, see Chapter "Connecting the device (Page 60)".

Note

Improvement of interference immunity

- Lay signal cables separate from cables with voltages > 60 V.
- Use cables with twisted wires.
- Keep device and cables in distance to strong electromagnetic fields.
- Use shielded cables to guarantee the full specification according to HART.
- Refer to HART communication information in Chapter "Technical data (Page 169)".

5.2 Connecting the device

Opening the device

1. Unscrew the cover of the electrical cable compartment. An identification text "FIELD TERMINAL" is provided at the side of the housing.

Connecting the device

1. Lead the connecting cable through the cable gland ③.
2. Connect the device to the plant with the protective conductor connection ⑦.

3. Connect the wires to the terminals "+" and "-". ④
   Observe the correct polarity. If necessary, ground the device using the "-" connection by connecting the "-" connection to the ground terminal ⑨.
4. If necessary, connect the shield to the screw of the ground terminal ⑨. The ground terminal is electrically connected to the external protective conductor connection.

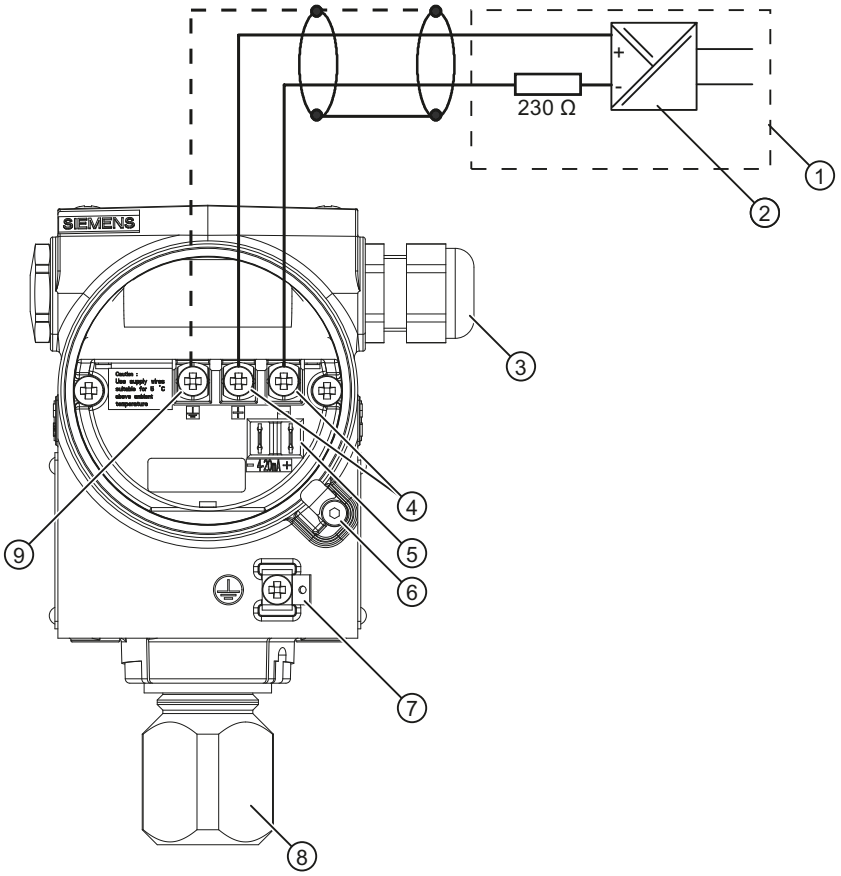

①	Feed separator with integrated load	⑤	Test connector for direct current measuring device or connection for external display
②	Auxiliary power	⑥	Safety catch
③	Cable entry for auxiliary power/analog output	⑦	Protective conductor connection/ equipotential bonding terminal
④	Connecting terminals	⑧	Process connection
		⑨	Ground terminal

Figure 5-1 Electrical connection, power supply

Closing the device

1. Screw the covers ④⑦ back on as far as they will go.
2. Secure each cover with the cover catch ③⑥.

3. Close the key cover ①.
4. Tighten the screws in the key cover.
5. Check the tightness of the blanking plugs ⑤ and cable gland ② in accordance with the degree of protection.

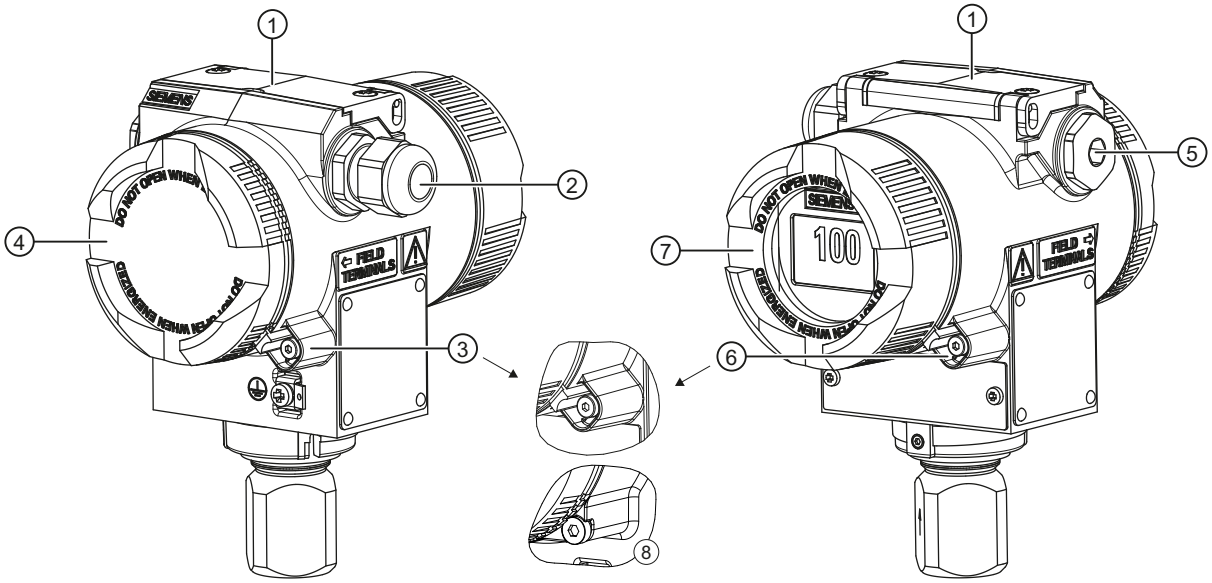

①	Key cover	⑤	Blanking plug
②	Cable gland	⑥	Safety catch (front)
③	Safety catch (back)	⑦	Cover (front), optionally with inspection window
④	Cover (rear) for electrical terminal compartment	⑧	Safety catch for stainless steel enclosure

Figure 5-2 View of the transmitter: Left: Back right: Front view

See also

Structure (Page 19)

5.3 Connecting the Han plug

⚠ WARNING

The connector may only be used for Ex ia devices and non-Ex devices; otherwise the safety required for the approval is not guaranteed.

Note

Observe the protection class of the Han plug when defining the protection class.

The contact parts for the coupling socket are also supplied.

Procedure

1. Slide the sleeve and the screwed joint on the cable.
2. Strip approx. 8 mm of the cable ends.
3. Crimp the contact parts on the cable ends.
4. Assemble the coupling socket.

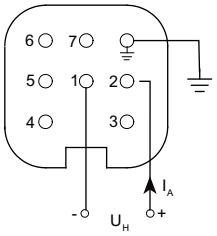

I_A Output current
U_H Auxiliary power

Connector pin assignment with Han 7D or Han 8D plug

5.4 Connecting the M12 connector

Procedure

CAUTION

A conductive connection must not exist between the shield and the connector housing.

WARNING

The connector may only be used for Ex ia devices and non-Ex devices; otherwise the safety required for the approval is not guaranteed.

Note

Observe the protection class of the M12 connector when defining the protection class.

For devices in which a connector is already available on the housing, the connection is established using a cable jack.

1. Thread the parts of the cable jack as described by the connector manufacturer.
2. Strip approximately 18 mm of the bus cable ①.
3. Twist the shield.
4. Thread the shield in the insulating sleeve.
5. Draw 8 mm of shrink sleeve over the cable, wires and shield up to the reference edge ②.

6. Screw the cable ends and the shield in the pin insert.
7. Fix the parts of the cable jack as described by the connector manufacturer.

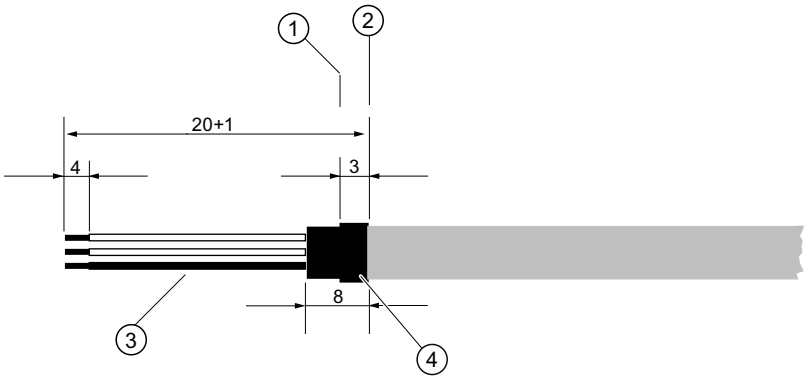

Figure 5-3 Preparing the connecting cable

①	Reference edge for stripping	③	Insulating sleeve over the shield
②	Reference edge for the dimension specifications for cable assembly	④	Shrink sleeve

Pin assignment

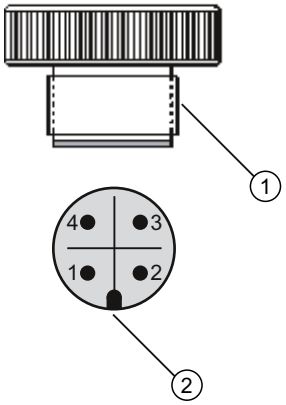

Layout for M12 connector

①	M12 x 1 thread
②	Positioning catch
1	+
2	Not connected
3	-
4	Shield

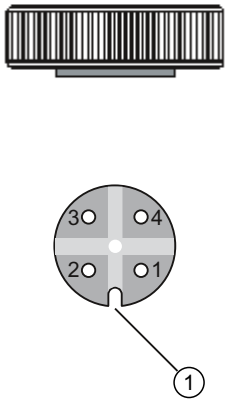

Layout for M12 jack

①	Positioning slot
1	+
2	Not connected
3	-
4	Shield
	Middle jack contact not connected

Operation

6

6.1 Overview of operation

Introduction

The following description contains an overview of the operating functions that you can execute using the pressure transmitter, and the safety notes that are to be observed when doing so. You can operate the transmitter on-site through HART communication. First, the on-site operation and then, the operating functions using HART are described.

Contents of the chapter

- Basic safety instructions (Page 66)
- Instructions for operation (Page 66)
- Display (Page 67)
- Local operation (Page 72)

Overview of operating functions

You can configure basic settings of the pressure transmitter using the buttons on the device. You can configure all settings through HART communication.

The following table describes the basic operating functions. More operating functions for special applications are accessible through HART. **Basic variables** of the device are marked in bold.

Table 6-1 Operating functions

Function	Using buttons	Using HART
Start of scale value	Yes	Yes
Full scale value	Yes	Yes
Electrical damping	Yes	Yes
Blind adjustment of the start of scale value	Yes	Yes
Blind adjustment of the full scale value	Yes	Yes
Zero point calibration (position correction)	Yes	Yes
Current transmitter	Yes	Yes
Fault current	Yes	Yes
Keyboard lock and write protection	Yes	Yes, release except for write protection
Unit type, unit	Yes	Yes

Function	Using buttons	Using HART
Characteristic curve (lin., rad.) (Not relevant for absolute and gauge pressure)	Yes	Yes
Customized characteristic curve	No	Yes
Diagnostic function	No	Yes

More operating functions for special applications are accessible through HART.

If a device does not have a display, its operations are limited. This is however not applicable for selecting functions using HART.

6.2 Basic safety instructions

Note

Incorrect reproduction of the process pressure

If you have changed the basic functions of the pressure transmitter, the display and the measurement output could be set such that the actual process pressure is not reproduced.

Therefore, check the basic parameters before commissioning.

6.3 Instructions for operation

The following rules are applicable for the operation of the pressure transmitter:

- The device counts numerical values always in an ascending order step by step starting from the least significant digit displayed.
  If you keep the button pressed for a longer time, it counts the next higher digit displayed. This procedure is used for fast coarse adjustment over a wide number range. Release the [↑] or [↓] button again for fine adjustment. Press the button again.

Violations of the measured value limits are output on the display by ⬆ or ⬇.

- The keyboard must have been unlocked in order to operate the device using the keyboard.
- If you are operating the transmitter locally, write access is denied through HART during this time.
  However, it is always possible to read the data, e.g. measured values.

Note

The setting is saved and the measured values are automatically displayed again if more than two minutes have passed after a button was pressed for the last time.

The operating instructions in the "Local operation without display" section apply if the device has been delivered with a blind cover.

6.4 Display

6.4.1 Display elements

Structure

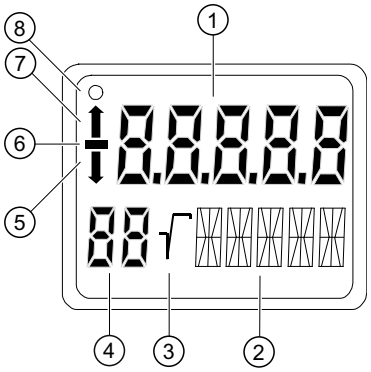

①	Measured value	⑤	Violation of lower limit
②	Unit/bar graph	⑥	Symbol for measured value
③	Root display	⑦	Violation of higher limit
④	Mode/button lock	⑧	Communication display

Figure 6-1 Display layout

Description

The display is used for the local display of the measured value ① with:

- Unit ②
- Mode ④
- Sign ⑥
- Statuses ⑤ and ⑦

Depending on the customer setting, the displayed measured value ① represents the following:

- The current emitted by the transmitter
- The percentage measurement value of the adjusted measurement type, e.g. level, related to the adjusted measurement range.
- The measurement value in a selectable physical unit

The *Violation of lower limit* ⑤ and *Violation of upper limit* ⑦ displays are also referred to as status since they have meanings dependent on the settings.

If the communication display ⑧ blinks, this indicates an active communication.

6.4.2 Units display

Description

The unit display comprises five 14-segment fields for representing the unit as a percentage value, physical unit or current value. A bar graph showing the percentage measured value range from 0 to 100% can be displayed as an alternative to the unit. The bar graph function is disabled by default.

Display

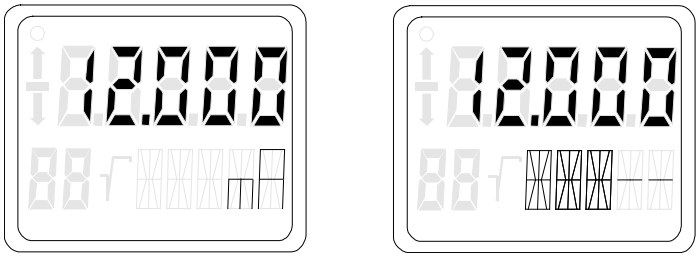

Figure 6-2 Examples for measured value display for current and bar graph

The following messages may appear as a ticker in the bottom line of the display. They have no influence on the current output.

Table 6-2 Message as ticker

Ticker	Meaning
"DIAGNOSTIC WARNING"	Is always displayed if: • An event configured by the user is to be signaled with a warning. For example: – Limit reached – Event counter for limit values exceeded – Calibration time expired – Current saturation reached • The status of one of the device variables is "UNCERTAIN".
"SIMULATION"	Is always displayed when the simulation of a pressure value or temperature value is active.

See also

Measured value status (Page 110)

6.4.3 Error display

Description

If hardware faults, software errors or diagnostic alarms occur in the transmitter, the message "Error" appears in the measured value display.

A ticker appears in the bottom line of the display indicating the type of error. This diagnostic information is also available via HART communication.

Display

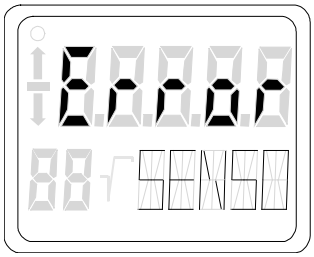

Figure 6-3 Example of error message

The following messages may appear as a ticker in the bottom line of the display.

Ticker	Meaning
"HARDWARE FIRMWARE ALARM"	Contains hardware faults such as: • incorrect checksum • incorrect EEPROM data • Defective EEROM • RAM fault • ROM fault • inconsistent data • EEPROMs not initialized
"DIAGNOSTIC ALARM"	Is always displayed if • an event configured by the user is to be signaled with an alarm. For example: – Limit reached – Event counter for limit values exceeded – Calibration time expired – Current saturation reached • the status of one of the device variables is "BAD".
"SENSOR BREAK"	Appears when there is a sensor break.

See also

Measured value status (Page 110)

6.4.4 Mode display

Description

The selected active mode is shown in the mode display.

Display

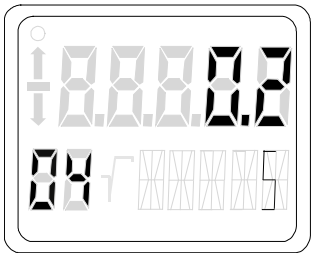

Figure 6-4 Example for mode display

In the example, a damping of 0.2 seconds was set in mode 4.

6.4.5 Status display

Description

The arrows of the status display have a different meaning depending on the mode setting. The table below shows the meanings of the arrows in the respective functions.

Meaning

Table 6-3 Meaning of the arrow displays

Function	Mode	Display ↑	Display ↓
Adjusting start of scale value	2	if the upper current limit is exceeded	if the value falls below the lower current limit
Adjusting full scale value	3	if the upper current limit is exceeded	if the value falls below the lower current limit
Adjusting damping	4	if the upper damping value is exceeded only for the pressure device version	if the value falls below the lower damping value only for the pressure device version
Blind adjustment of the start of scale value	5	if the upper sensor limit is exceeded	if the value falls below the lower sensor limit
Blind adjustment of the full scale value	6	if the upper sensor limit is exceeded	if the value falls below the lower sensor limit

Function	Mode	Display ↑	Display ↓
Position correction	7	if the max span is exceeded by more than 5% of the upper current limit	if the value falls below the lower current limit
Root application point	12	if the root application point of 15% is exceeded	if the value falls below the root application point of 5%
Keyboard operation	2, 3, 5, 6	when the span to be adjusted is larger than the maximum span	when the span to be adjusted is smaller than the minimum span
Normal operation		Current exceeds the upper saturation limit Pressure exceeds the upper sensor limit.	Current falls below the lower saturation limit Pressure falls below the lower sensor limit.

6.4.6 Overflow range

Description

The output signal is divided into defined ranges:

- Measuring range
- Saturation limits
- Fault current

The transmitter emits the output current according to the device variables selected as primary variable (PV). The working range of the current lies between 4 mA and 20 mA.

Meaning

When the measurement limits are exceeded or not reached, the measured values are correctly displayed in the overflow range.

A ticker is displayed in the bottom line of the display showing alternately the message UNDER or OVER and the selected unit. The possible overflow range can be adjusted via HART communication. If either of the overflow limits are violated, the output current remain constant. Violations of the measured value limits are output on the display by ↑ or ↓.

Note

The setting of the overflow range and the fault current range can be freely selected via HART communication.

Reference

NAMUR recommendation NE43 dated 03.02.2003

"Standardization of the signal level for the breakdown information of digital transmitters"

See also

Fault current (Page 118)
Setting the current limits (Page 119)

6.5 Local operation

6.5.1 Local control elements

Introduction

The transmitter can be operated on-site using the keys. Selectable modes can be used to choose and execute the functions described in the table. The number of available functions is limited if the device does not have a display.

Control elements

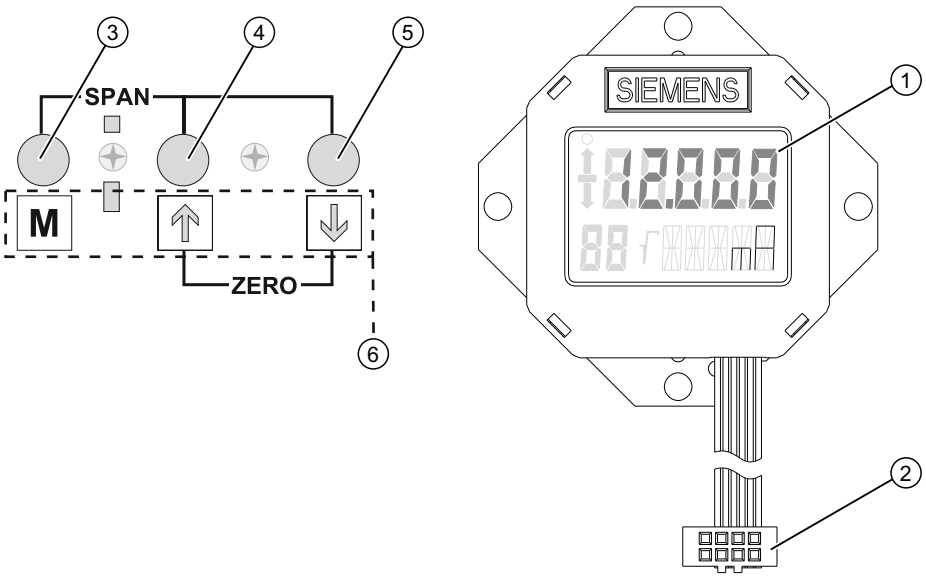

①	Display	④	Increment key
②	Connecting plug for the display	⑤	Decrement key
③	Mode key	⑥	Key symbols shown in the key cover

Figure 6-5 Position of keys and display

Operating functions

Note

Zero point calibration

For absolute pressure transmitters, the start of scale value is at vacuum.

A zero point calibration with transmitters which do not measure absolute pressure leads to faulty settings.

Table 6-4 Operating functions using keys

Function	Mode	Key function			Display, explanations
	[M]	[↑]	[↓]	[↑] and [↓]	
Measured value	The modes are selected here.				The current measured value is displayed as you have adjusted it in the "Measured value display, mode 13" function.
Start of scale value (only in "Pressure" measuring mode)	2	Current higher	Current lower	Set to 4 mA	Output current in mA
Full scale value (only in "Pressure" measuring mode)	3	Current higher	Current lower	Set to 20 mA	Output current in mA
Electrical damping	4	Damping higher	Damping lower	Set to 0	Time constant T63 in seconds Adjustment range: 0.0 s to 100.0 s
Start of scale value in the so-called blind adjustment	5	Pressure higher	Pressure lower	Set the start of scale value to 0	Start of scale value in the selected pressure unit
Full scale value in the so-called blind adjustment	6	Pressure higher	Pressure lower	Set the full scale value to upper measuring limit	Full scale value in the selected pressure unit
Zero point calibration (position correction)	7	Correction value higher	Correction value lower	execute	Ventilate the transmitter for gauge pressure, differential pressure, flow rate or level. Evacuate the transmitter for absolute pressure (< 0.1‰ of the measuring span). (Start of scale value remains unaffected) Measured value in pressure unit
Current transmitter	8	Current higher	Current lower	switch on	constant output current in mA "3.6"; "4", "12", "20" or "22.8" Switch off using the [M] key.
Output current in case of fault	9	Switch between lower fault current and upper fault current.		lower fault current	selected output current possible: Fault current limits adjusted by user

Function	Mode	Key function			Display, explanations	
	[M]	[↑]	[↓]	[↑] and [↓]		
Key lock or function lock	10	Switch between the five functions		–	0	None
					LA	all locked
					LO	all locked except for start of scale value
					LS	all locked except for start of scale value and full scale value
					L	Write protection Operation via HART not possible.
Characteristic curve[1)]	11	Switch between the four functions		linear	lin	linear
					srlin	square root extracting (linear up to the application point)
					sroff	Square root extracting (deactivated up to the application point)
					srli2	square root extracting (linear up to the application point 10%)
Application point of the square root extracting characteristic curve[1)]	12	Greater	Smaller	10% flow rate	Adjustment range of 5 to 15% flow rate.	
Measured value display	13	Select from three options.		–	• Display type (input value) • Output current in mA • Measured value in %	
Unit	14	Select from the table for measured value display.		In each case, the first value from the table of the physical unit	Physical unit	
[1)] Not relevant for gauge and absolute pressure)						

See also

Overview of operation (Page 65)

Operating functions through HART communication (Page 99)

6.5.2 Operation using buttons

Introduction

This overview informs you about the most important safety notes to be observed when operating the pressure transmitter. Furthermore, the overview guides you in adjusting the operating functions on site.

Condition

The keyboard must have been unlocked in order to operate the device using the buttons.

Procedure

In the default setting, the device is in the measured value display.

To adjust the operating functions, proceed as follows:

1. Loosen both the screws of the keyboard cover and lift it upwards.
2. Keep pressing the [M] button until the desired mode is displayed.
3. Keep pressing the [↑] or [↓] button until the desired value is displayed.
4. Press the [M] button.
   Now you have saved the values and the device goes to the next mode.
5. Close the keyboard cover using the two screws.

Note

The setting is saved and the measured values are automatically displayed again if more than two minutes have passed after a button was pressed for the last time.

See also

Releasing key lock or function lock (Page 91)

6.5.3 Start of scale value/full scale value

6.5.3.1 Difference between setting and adjusting

Introduction

In "Pressure" measuring mode, you can set or adjust the start of scale value and full scale value using the buttons. Modes 2 and 3 are used for this. Rising and falling characteristic curves can be realized with appropriate use of the buttons. If the transmitter is not in "Pressure" measuring mode, this mode is skipped in local operation.

Difference

The difference between setting and adjusting lies in the calculation.

Setting with reference pressure

Condition

Two reference pressures p_{r1} and p_{r2} are available. The reference pressures are initialized by the process or generated by a pressure sensor.

When setting, a desired start of scale value or a full scale value is allocated to the standard current values (4 mA or 20 mA). After setting, the span given on the nameplate may no longer correspond to the setting.

Depending on the series and measuring range, a maximum downscaling of 1:100 can be achieved (measuring span ratio = r, turn down).

The correlation between the measured pressure and the output current generated is linear. The square root extracting characteristic curve for differential pressure transmitters is an exception. Calculate the output current using the following formula.

$$I = \frac{p - MA}{ME - MA} * 16\ mA + 4\ mA$$

I	Output current	MA_{actual}	Old start of scale value
p	Pressure	ME_{actual}	Old full scale value
MA	Start of scale value	MA_{target}	New start of scale value
ME	Full scale value	ME_{target}	New full scale value

Figure 6-6 Current calculation formula for setting

Example of setting with reference pressure

A Initial situation
B Setting start of scale value
C Setting full scale value

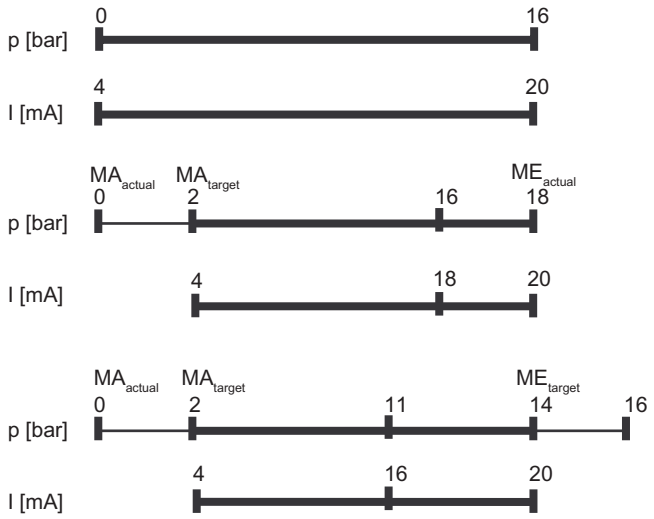

Explanations for the example of setting with reference pressure

A The measuring range is from 0 to 16 bar. You are changing the start of scale value from 0 to 2 bar and the full scale value from 16 to 14 bar. The measuring span is then 12 bar.

B 2 bar process pressure is created.

Use the [M] button to set the transmitter to mode 2. To set the start of scale value, press the [↑] and [↓] buttons simultaneously for 2 seconds.

If there is 2 bar input pressure, the transmitter produces an output current of 4 mA.

C 14 bar process pressure is created.

Use the [M] button to set the transmitter to mode 3. To set the full scale value, press the [↑] and [↓] buttons simultaneously for 2 seconds.

If there is 14 bar input pressure, the transmitter produces an output current of 20 mA.

D The output current can be calculated for any input pressure using the "current calculation formula for setting".

Note

If the value exceeds or falls below the preset measuring limits by more than 20% when setting, the setting function is not carried out. The old value is retained in this case.

With a marked elevation of the zero point, the full scale value must therefore previously be reduced such that it still lies within the permitted range after elevation of the zero point. This setting function is only possible in "Pressure" measuring mode.

Adjusting with reference pressure

Condition:

The reference pressure, the adjusted start of scale value and adjusted full scale value are known.

When adjusting, a start of scale value or a full scale value can be allocated to a desired current value with the aid of a reference pressure. This function is particularly suitable when the required pressures for the start of scale value and the full scale value are not available After adjustment, the measuring range specified on the nameplate may no longer correspond to the setting made.

Using the formulae below, the current to be set for the desired start of scale value and the full scale value can be calculated.

To calculate the output currents when setting the start of scale value or the full scale value, the reference pressure must be selected such that a value between 4 and 20 mA results for the current.

$$I = \frac{p - MA}{ME - MA} * 16\ mA + 4\ mA$$

$$I_{ME} = \frac{p_{ref} - MA_{target}}{ME_{target} - MA_{target}} * 16\ mA + 4\ mA$$

I	Output current	MA_{actual}	Old start of scale value
I_{MA}	Current to be adjusted with MA_{target}	ME_{actual}	Old full scale value
I_{ME}	Current to be adjusted with ME_{target}	MA_{target}	New start of scale value
p	Pressure	ME_{target}	New full scale value
p_{ref}	Existing reference pressure		

Figure 6-7 Current calculation formula for setting with reference pressure

Example of adjusting with reference pressure

A Initial situation
B Calculating start of scale value
C Calculating full scale value

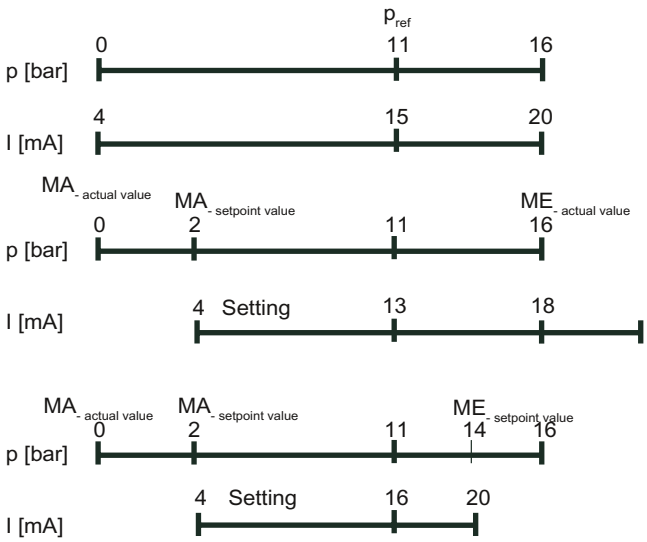

Explanations for the example of adjusting with reference pressure

A The measuring range is from 0 to 16 bar. You are changing the start of scale value from 0 to 2 bar and the full scale value from 16 to 14 bar. The measuring span is then 12 bar.

   A reference pressure of 11 bar is created.

B Use the [M] button to set the transmitter to mode 2.

   The "Current calculation formula for adjusting with reference pressure" can be used to calculate the current to be adjusted for the desired start of scale value I_{MA} (13 mA at 2 bar) with the existing reference pressure. It can be adjusted with the [↑] or [↓] buttons I_{MA}.

C Use the [M] button to set the transmitter to mode 3.

   The "Current calculation formula for adjusting" can be used to calculate the current to be adjusted for the desired full scale value I_{ME} (16 mA at 14 bar) with the existing reference pressure. It can be adjusted with the [↑] or [↓] buttons I_M.

Note

If the preset measuring limits are exceeded or fallen below by more than 20% during adjustment, the resulting current cannot be set above these limits.

With a marked elevation of the zero point, the full scale value must therefore previously be reduced such that it still lies within the permitted range after elevation of the zero point.

See also

Unit (Page 95)

6.5.3.2 Setting/adjusting the start of scale value

NOTICE
Inadvertent adjustment of parameters on devices without display or without visible display
Key lock is canceled if you press the [M] key for longer than 5 seconds, see chapter "Releasing key lock or function lock (Page 91)". In the case of a device without display or without a visible display, you could inadvertently change parameters. • Always press the [M] key for less than 5 seconds.

Introduction

Set or adjust the start of scale value of the pressure transmitter in mode 2.

You can also adjust the start of scale value or the full scale value separately as well as adjust both these values one after the other.

Condition

You are familiar with the correct operation of the transmitter and the associated safety notes.

You have selected a reference pressure that corresponds to the start of scale value and is within the permissible tolerance range.

The transmitter is in "Pressure" measuring mode.

Setting start of scale value

To set the output current of the start of scale value to 4 mA, proceed as follows:

1. Create the reference pressure.
2. Set mode 2.
3. Set the start of scale value to 4 mA.
4. Save with the [M] button.

Adjusting start of scale value

If you do not set the output current but constantly adjust it, you need to calculate the currents to be adjusted mathematically.

To the adjust the output current of the start of scale value, proceed as follows:

1. Create the reference pressure.
2. Set mode 2.
3. Adjust the output current of the start of scale value to the calculated value.
4. Save with the [M] button.

Setting the start-of-scale value without a display

You have a device with a cover that does not have an inspection window and you wish to set the start of scale value.

To set the output current of the start of scale value to 4 mA, proceed as follows:

1. Create the reference pressure.
2. Press the [↑] and [↓] buttons simultaneously.
   The device has set the start of scale value to 4 mA.
3. When you release the buttons, the device saves the adjusted value automatically.

Setting the start-of-scale value without a display

You have a device with a cover that does not have an inspection window and you do not wish to set the start of scale value, but adjust it.

You will need an ammeter for this purpose.

To the adjust the output current of the start of scale value, proceed as follows:

1. Connect the ammeter to the test connector.
2. Create the reference pressure.
3. Adjust the output current of the start of scale value using the [↑] or [↓] button.
4. When you release the button, the device saves the adjusted value automatically.

6.5.3.3 Setting/adjusting the full scale value

Introduction

Set or adjust the full scale value of the pressure transmitter in mode 3.

You can also adjust the start of scale value or the full scale value separately as well as adjust both these values one after the other.

Condition

You are familiar with the correct operation of the transmitter and the associated safety notes.

You have selected a reference pressure that corresponds to the full scale value and is within the permissible tolerance range.

The transmitter is in "Pressure" measuring mode.

Setting full scale value

To set the output current of the full scale value to 20 mA, proceed as follows:

1. Create the reference pressure.
2. Set mode 3.

3. Set the full scale value to 20 mA.
4. Save with the [M] button.

Adjusting full scale value

If you do not set the output current but constantly adjust it, you need to calculate the currents to be adjusted mathematically.

To the adjust the output current of the full scale value, proceed as follows:

1. Create the reference pressure.
2. Set mode 3.
3. Adjust the output current of the full scale value to the calculated value.
4. Save with the [M] button.

Setting the full-scale value without a display

You have a device with a cover that does not have an inspection window and you wish to set the full scale value.

To set the output current of the full scale value to 20 mA, proceed as follows:

1. Create the reference pressure.
2. Press and hold the [M] button.
3. Also press the [↑] and [↓] buttons simultaneously.
   The device has set the full scale value to 20 mA.
4. When you release the buttons, the device saves the adjusted value automatically.

Setting the full-scale value without a display

You have a device with a cover that does not have an inspection window and you do not wish to set the full scale value, but adjust it continuously.

You will need an ammeter for this purpose.

To the adjust the output current of the full scale value, proceed as follows:

1. Connect the ammeter to the test connector.
2. Create the reference pressure.
3. Press and hold the [M] button.
4. Adjust the output current of the full scale value to the calculated value using the [↑] or [↓] button.
5. When you release the button, the device saves the adjusted value automatically.

6.5.4 Setting/adjusting electrical damping

Difference between setting and adjusting

You can set or adjust the time constant of electrical damping using the buttons. Setting means that the time constant is automatically set to 0 seconds. Adjusting means that the time constant is adjusted between 0 and 100 seconds using the steps of 0.1 seconds. This electrical damping also has an effect on the built-in basic damping of the device.

Condition for "setting"

You are familiar with the correct operation of the transmitter and the associated safety notes.

Setting electrical damping

To set electrical damping to 0 seconds, proceed as follows:

1. Set mode 4.
2. Press the [↑] and [↓] buttons simultaneously.
3. Save with the [M] button.

Result

Electrical damping has been set to 0 seconds.

Condition for "adjusting"

The default setting of steps is an interval of 0.1 seconds. If you press the [↑] or [↓] button for a longer time, the step is increased.

Adjusting electrical damping

To adjust electrical damping, proceed as follows:

1. Set mode 4.
2. Adjust the desired damping.
3. Save with the [M] button.

Result

Electrical damping has been set to the desired time constant.

6.5.5 Blind start of scale value/full scale value

6.5.5.1 Difference between setting/adjusting and blind setting/adjusting

Differences

In contrast to setting/adjusting with a reference pressure, you do not need a reference pressure for blind setting/adjusting. You can adjust a value in the physical variable "pressure" without a reference pressure, and an output current with a reference pressure.

Blind adjusting

First select the desired physical unit. Then, adjust two pressure values using the [↑] and [↓] buttons and save them in the device. These theoretical pressure values are allocated to the standard current values 4 mA and 20 mA.

Depending on the series and measuring range, a maximum downscaling of 1:100 can be achieved (measuring span ratio = r, turn down).

The correlation between the measured pressure and the output current generated is linear. The square root extracting characteristic curve for differential pressure transmitters is an exception.

Example of blind adjusting

A Initial situation
B Blind adjustment of the start of scale value
C Blind adjustment of the full scale value

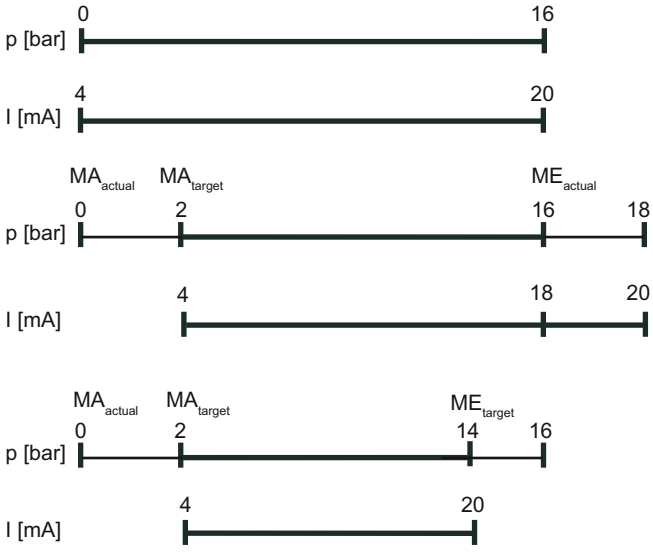

I	Output current	p	Pressure
MA_{actua}	Old start of scale value	MA_{target}	New start of scale value
ME_{actua}	Old full scale value	ME_{target}	New full scale value

Explanations for the blind adjusting example

A The measuring range is from 0 to 16 bar. You are changing the start of scale value from 0 to 2 bar and the full scale value from 16 to 14 bar. The measuring span is then 12 bar.
In this example you create no pressure.

B Use the [M] button to switch the transmitter to mode 5. To adjust the start of scale value to 2 bar, press one of the [↑] or [↓] buttons.
If there is 2 bar input pressure, the transmitter produces an output current of 4 mA.

C Use the [M] button to switch the transmitter to mode 6. To adjust the full scale value to 14 bar, press one of the [↑] or [↓] buttons.
If there is 14 bar input pressure, the transmitter produces an output current of 20 mA.

Note

If the preset measuring limits are exceeded or fallen below by more than 20% during adjustment, the resulting current cannot be set above these limits.

With a marked elevation of the zero point, the full scale value must therefore previously be reduced such that it still lies within the permitted range after elevation of the zero point.

Setting without reference pressure

Blind setting resets the start of scale value to the lower sensor limit and the full scale value to the upper sensor limit.

Note

If the value exceeds or falls below the preset measuring limits by more than 20% when setting, the setting function is not carried out. The old value is retained in this case.

With a marked elevation of the zero point, the full scale value must therefore previously be reduced such that it still lies within the permitted range after elevation of the zero point.

6.5.5.2 Blind setting of start of scale value

Introduction

Blind setting resets the start of scale value to the lower sensor limit.

Note

Changes in modes 5 and 6 have an exclusive effect on pressure scaling. This does not affect the scaling for level or customized characteristic curve. Therefore, only measured pressure values and pressure units are displayed in these modes.

Condition

You are familiar with the correct operation of the transmitter and the associated safety notes.

You have not created any reference pressure and have selected a pressure unit.

Procedure

To the set the start of scale value blindly, proceed as follows:

1. Set mode 5.
2. Press the [↑] and [↓] buttons simultaneously for 2 seconds.

6.5.5.3 Blind setting of full scale value

Introduction

Blind setting resets the full scale value to the upper sensor limit.

Note

Changes in modes 5 and 6 have an exclusive effect on pressure scaling. This does not affect the scaling for level or customized characteristic curve. Therefore, only measured pressure values and pressure units are displayed in these modes.

Condition

You are familiar with the correct operation of the transmitter and the associated safety notes.

You have not created any reference pressure and have selected a pressure unit.

Procedure

To the set the full scale value blindly, proceed as follows:

1. Set mode 6.
2. Press the [↑] and [↓] buttons simultaneously for 2 seconds.

6.5.5.4 Blind adjusting of the start of scale value

Introduction

In the case of blind adjustment, adjust the pressure value of the start of scale value continuously and without a reference pressure.

Note

Changes in modes 5 and 6 have an exclusive effect on pressure scaling. This does not affect the scaling for level or customized characteristic curve. Therefore, only measured pressure values and pressure units are displayed in these modes.

You can toggle between rising and falling characteristic curves.

Condition

You are familiar with the correct operation of the transmitter and the associated safety notes.

You have not created any reference pressure and have selected a pressure unit.

Procedure

To the adjust the pressure value of the start of scale value blindly, proceed as follows:

1. Set mode 5.
2. Adjust the pressure value of the start of scale value.
3. Save with the [M] button.

6.5.5.5 Blind adjustment of the full scale value

Introduction

In the case of blind adjustment, adjust the pressure value of the full scale value continuously and without a reference pressure.

Note

Changes in modes 5 and 6 have an exclusive effect on pressure scaling. This does not affect the scaling for level or customized characteristic curve. Therefore, only measured pressure values and pressure units are displayed in these modes.

You can toggle between rising and falling characteristic curves by swapping the start of scale value and the full scale value.

Condition

You are familiar with the correct operation of the transmitter and the associated safety notes.

You have not created any reference pressure and have selected a pressure unit.

Procedure

To the adjust the pressure value of the full scale value blindly, proceed as follows:

1. Set mode 6.
2. Adjust the pressure value of the full scale value.
3. Save with the [M] button.

6.5.6 Trimming the zero point

Introduction

The zero point is calibrated in mode 7. Zero point calibration corrects zero point errors resulting from the installation position of the pressure transmitter. The device type determines the way in which you proceed.

SIMATIC PDM or the HART communicator will display the total of all zero point corrections.

Condition

You are familiar with the correct operation of the transmitter and the associated safety notes.

Zero point calibration for gauge pressure transmitter

To calibrate the zero point, proceed as follows:

1. Pressurize the transmitter.
2. Set mode 7.
3. Press the [↑] and [↓] keys simultaneously for 2 seconds.
4. Save using the [M] key.

Zero point calibration for absolute pressure transmitter

Note

You need a reference pressure known to you which lies within the measuring limits.

To calibrate the zero point, proceed as follows:

1. Create the reference pressure.
2. Set mode 7.
3. Set the reference pressure on the display.
4. Save using the [M] key.

6.5.7 Current transmitter

Introduction

In mode 8, switch the pressure transmitter into the constant current operation. You can connect an external current transmitter in the constant current operation. The current then no longer corresponds to the process variable. The following output current can be adjusted irrespective of the input pressure:

- 3.6 mA
- 4.0 mA
- 12.0 mA
- 20.0 mA
- 22.8 mA

You can use HART communication to adjust intermediate values.

Procedure

To switch on the constant current operation, proceed as follows:

1. Set mode 8.
   "Cur" in the display stands for current.
2. Press the [↑] and [↓] buttons simultaneously.
3. Select constant current.

Switching off the constant current operation

To switch off the constant current operation, proceed as follows:

Press the [M] button in mode 8.

6.5.8 Output current in case of fault

Introduction

When a fault occurs, the upper fault current is displayed in the basic setting. In mode 9, you can choose between the output of the upper and lower fault current. The standard values 3.6 mA and 22.8 mA are set.

The standard values of the upper and lower fault current can be changed via HART communication.

Condition

You are familiar with the correct operation of the transmitter and the associated safety notes.

Procedure

To change the fault current, proceed as follows:

1. Set mode 9.
2. Select the fault current.
3. Save using the [M] key.

Note

If a current saturation interrupt is active, the setting of the output current may deviate from your setting in the case of a fault.

Resetting fault current

To reset the fault current to the basic setting, proceed as follows:

Press the [↑] and [↓] [M] keys simultaneously.

Fault causes

Fault currents may be triggered by:

- FW alarm
- HW alarm
- Diagnostic interrupt
- Sensor breakage
- Measured value status BAD

Reference

NAMUR recommendation NE43 dated 02/03/2003
"Standardization of the signal level for the breakdown information of digital transmitters"

6.5.9 buttons and function lock

Introduction

In mode 10, you can disable the functions that can be executed using buttons. Application example for a lock is e.g. safeguarding the saved parameters.

Lock options

You have the following lock options on the pressure transmitter:

Table 6-5 Meaning of lock modes

Lock mode	Meaning
0	The device can be operated by means of the keys and HART communication.
LA	Keys on the transmitter are locked. Exception: • Releasing key lock The device can be operated by means of HART communication.
LO	Keys on the transmitter are partially locked. Exception: • Setting start of scale value • Releasing key lock The device can be operated by means of HART communication.
LS	Keys on the transmitter are partially locked. Exception: • Setting start of scale value • Setting full scale value • Releasing key lock The device can be operated by means of HART communication.
L	Write protection Operation via keys and HART communication is blocked. Exception: • Releasing key lock

Note

If you want to select the LO or LS lock, we recommend you first select the measured value display of "Current" in "mA" or "%" in mode 13. Otherwise, a change in the output variable using the [↑] and [↓] buttons is not detected.

If the blind cover is provided, the LS lock mode is effective, i.e. only the zero point and the span can be changed. If you continuously operate the device with the blind cover, ensure that the LS lock mode is constantly set.

Condition

You are familiar with the correct operation of the transmitter and the associated safety notes.

Note

In the measured value display function, check whether the desired setting is displayed.

Procedure

To disable the buttons, proceed as follows:

1. Set mode 10.
2. Select the desired lock mode.
3. Confirm the lock mode with the [M] button.

6.5.10 Releasing key lock or function lock

Releasing key lock

⚠ WARNING

In the case of devices used for safety-relevant applications, only authorized personnel may release the key lock, e.g. overflow protection.

To release a set key lock (LA, LO, LS) using buttons, proceed as follows:

Press the [M] button for 5 seconds.

Releasing the write protection

To release a write protection for HART (L) using buttons, proceed as follows:

Press the [M] button for 5 seconds.

6.5.11 Flow rate measurement (only differential pressure)

Introduction

The characteristic curve representing the relationship between the output current and input pressure can be adjusted in mode 11. Adjust the root application point in mode 12.

You can select the following characteristic curve types of the output current:

- linear "lin": proportional to differential pressure
- square root extracting "sroff": proportional to flow rate, deactivated up to the application point
- square root extracting "srlin": proportional to flow rate, linear up to the application point
- square root extracting "srli2": proportional to flow rate, two-step linear up to the application point

Variable application point

The output current for the "srlin" and "sroff" functions can be displayed linearly or set to zero below the application point of the square root extracting characteristic curve.

Fixed application point

The "srli2" function has a permanently defined application point of 10%. The range up to this point contains two linear characteristic curve sections. The first section ranges from the zero point to 0.6% of the output value and 0.6% of the pressure value. The second section has a higher gradient and it goes up to the root application point at 10% of the output value and 1% of the pressure value. See the following figure for this purpose.

Procedure

Proceed as follows to set or adjust the type of characteristic curve:

1. Set mode 11.
2. Select the type of characteristic curve.
   To set the characteristic curve to "linear", press the [↑] and [↓] buttons simultaneously.
3. Save with the [M] button.

Proceed as follows to set or adjust the root application point: This procedure is not applicable for "srli2":

1. Set mode 12.
2. Select an application point between 5 and 15%.
   To set the application point to 10%, press the [↑] and [↓] buttons simultaneously.
3. Save with the [M] button.

Note

Mode 12 cannot be selected if the "linear" or "srli2" measuring mode has been adjusted in mode 11.

If the square root extracting characteristic curve has been adjusted in mode 11 and if the measured value display has been set to "Pressure" in mode 13, the root sign and the differential pressure corresponding to the flow rate are displayed.

The "srli2" square root extraction function is set as default in "Flow rate" measuring mode.

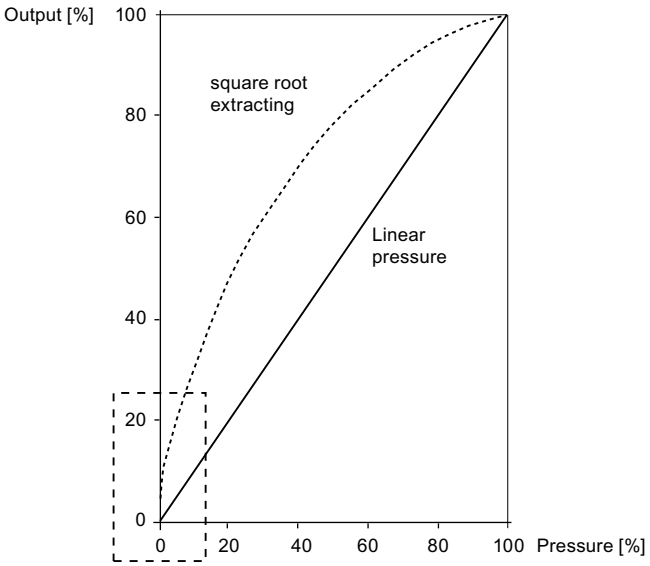

The dotted rectangle has been magnified in the form of the following characteristic curves in order to show the behavior of characteristic curves.

Characteristic curves and application point of square root extracting characteristic curves

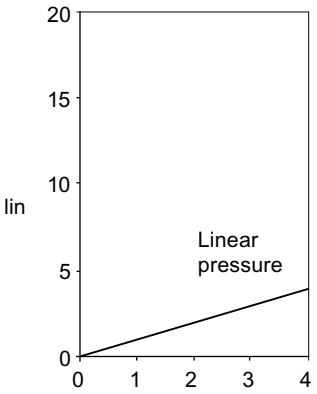

Characteristic curve "lin":

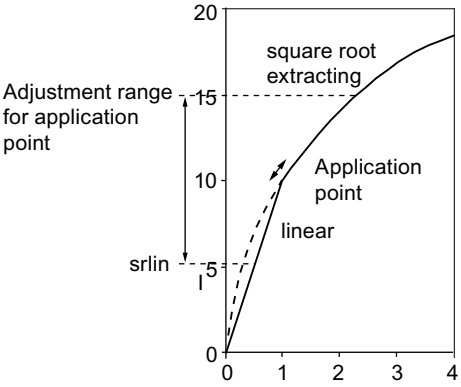

Square root extracting characteristic curve "srlin"

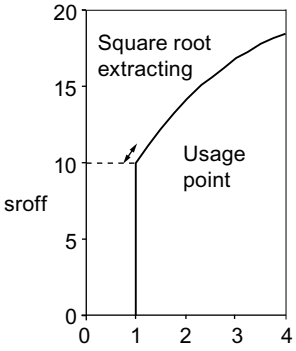

Characteristic curve "sroff"

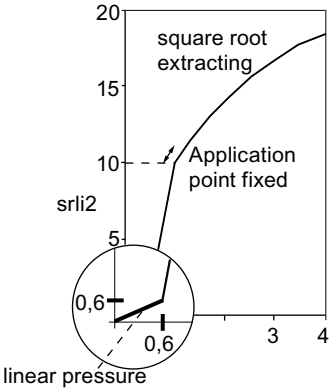

Characteristic curve "srli2"

6.5.12 Measured value display

Note

To use the operating functions with the buttons, first set the device variable (DV) parameters with a host system such as SIMATIC PDM. You will finds details of the relation between primary variable (PV) assignment and the DV in the following section:

Measuring mode "Pressure" (Page 101)

Introduction

In mode 13, adjust the following types of measured value display:

- mA
- %
- Display of the PV selected via HART. (Default setting: P pressure)

Table 6-6 Display of measuring mode/device variables

Display	DV	Meaning
P	0	Pressure
t-SE	1	Sensor temperature
t-EL	2	Electronics temperature
P-UNC	3	Pressure (untrimmed)
LEVEL	4	Level
Vol	5	Volume
MASS	6	Mass
V-Flo	7	Volumetric flow rate (not relevant for gauge or absolute pressure)
M-Flo	8	Mass flow rate (not relevant for gauge or absolute pressure)
CUSt	9	Users

Condition

You are familiar with the correct operation of the transmitter and the associated safety notes.

Procedure

To select the display type, proceed as follows:

1. Set mode 13.
2. Select the measured value display.
3. Save with the [M] button.

See also

Measured value display (Page 121)

6.5.13 Unit

Introduction

In mode 14, select the physical unit in which the measured value display of the device should be shown.

Condition

You are familiar with the correct operation of the transmitter and the associated safety notes.

You have already selected the desired measured value display via HART.

Procedure

To adjust the physical unit, proceed as follows:

1. Set mode 14.
2. Select a unit.
   Press the [↑] and [↓] buttons simultaneously to set the unit to the first value in the following table depending on the measuring mode set.
3. Save with the [M] button.

Instructions for selecting the unit

- Unit selection depends on the type of measurement set. For example, only pressure units are available in "Pressure" measuring mode and only level units are available in the "Level" measuring mode.
- The displayed measured value is always converted into the new unit. "9.9.9.9.9" appears on the display when its display capacity is exceeded.
- The selected unit is visible on the display in the measuring mode only if you have selected the display of a physical unit via HART. "mA" or "%" will be displayed if you have not selected mode 13, "Measuring mode".

Units

Table 6-7 Units available for pressure

Pressure units	Display		Pressure units	Display
mbar	mbar		Psi	PSi
bar	bar		Pa	Pa
mm water column (20°C / 68°F)	mmH2O		KPa²	KPa
Inch water column (20°C / 68°F)	inH2O		MPa	MPa
Feet water column (20°C / 68°F)	FTH2O		g/cm2	Gcm2
mm mercury column	mmHG		Kg/cm2	KGcm2
Inch mercury column	in_HG		Torr	TORR
mm water column (4°C / 39 °F)	m4H2O		ATM	ATM
Inch water column (4°C / 39°F)	i4H2O			

Table 6-8 Units available for level

Level unit	Display		Level unit	Display
Feet	FT		cm	cm
Inch	inch		mm	mm
M	m			

Table 6-9 Units available for mass

Mass unit	Display		Mass unit	Display
Gram	G		Long ton	lTon
Kilogram	KG		Pound	lb
Ton	T		Ounce	OZ
Short ton	STon			

Table 6-10 Units available for mass flow rate

Mass flow rate unit	Display		Mass flow rate unit	Display
g / s	G/S		Pound / s	P/S
g / min	G/m		Pound / min	lb/m
g / h	G/h		Pound / h	lb/h
Kg / s	KG/S		Pound / d	lb/d
Kg / min	KG/m		Short ton / min	ShT/m
Kg / h	KG/h		Short ton / h	ShT/h
Kg / d	KG/d		Short ton / d	ShT/d
T / min	T/m		Long ton / h	lT/h
T / h	T/h		Long ton / d	lT/d
T / d	T/d			

Table 6-11 Units available for temperature

Temperature unit	Display		Temperature unit	Display
° Celsius	° / C		Kelvin	K
° Fahrenheit	° / F		Rankine	R

Table 6-12 Units available for volume

Volume unit	Display		Volume unit	Display
M3	m3		Buschels	buShl
Liter	L		yard3	Yd3
Hectoliter	HL		Feet3	FT3
US gallon	Gal		inch3	in3
British gallon	in Gal		Standard l	STdL
British barrel	bbl		Standard m3	STdm3
British barrel liquid	bblli		Standard feet3	STFT3

Table 6-13 Units available for volumetric flow

Unit of volumetric flow	Display		Unit of volumetric flow	Display
m3 / second	m3/S		Gallon / hour	Gal/h
m3 / minute	m3/m		Gallon / day	Gal/d
m3 / hour	m3/H		Million gallon / day	MGl/D
m3 / day	m3/d		British gallons/second	iGl/S
Liter / second	L/S		British gallons/minute	iGl/m
Liters/minute	L/m		British gallons/hour	iGl/h
Liters/hour	L/h		British gallons/day	iGL/d
Million liter / day	mL/d		Standard m3 / hour	Sm3/h
Feet3 / second	FT3/S		Standard l / hour	STL/h
Feet3 / minute	FT3/m		Standard feet3 / minute	SFT3m
Feet3 / hour	FT3/h		British barrel liquid / second	bbl/S
Feet3 / day	FT3/d		British barrel liquid / minute	bbl/m
Gallon / second	Gal/S		British barrel liquid / hour	bbl/h
Gallons/minute	Gal/m		British barrel liquid / day	bbl/d

See also

Selection of the physical unit (Page 122)

Operating functions through HART 7

7.1 Operating functions through HART communication

Condition

You can operate the transmitter through HART communication. The following is required for this purpose:

- A HART communicator or PC software such as SIMATIC PDM.
- A HART modem to connect a PC with the transmitter or a lead to connect a HART communicator with the transmitter.

Introduction

The full functionality of the transmitter is available via HART communication. The HART communicator and PC software are not supplied with the transmitter. How to connect and operate a HART communicator or the PC software is described in separate operating instructions or in the online help for both these tools.

Fundamental description

The input signal is provided in the form of digital information in the following variables through HART communication:

- Pressure
- Level
- Volume
- Mass
- Volumetric flow
- Mass flow rate
- User programmable "characteristic curve"

As soon as you have set up the HART communication and the transmitter, you can adapt the transmitter to your relevant measuring task. When doing so you are assisted by the selectable measuring modes "Pressure", "Level", "Flow rate" and a user programmable "Characteristic curve". One or more device variables are permanently allocated to each measuring mode in order to execute corresponding measuring tasks.

See also

Overview of operation (Page 65)

7.2 Process tag data

You can store your process tag data in user definable fields. The following table contains information about the structure of these fields and the format in which you can enter information in these fields:

Table 7-1 Process tag data

Field	Explanations
Tag designation	Eight characters
Date	Day:Month:Year
Description	16 characters
Message	32 characters
Works number	Integer number
Tag designation long	32 characters
Freely definable material parameter	21 x 16 characters

7.3 Selecting the measuring modes

7.3.1 Overview of measuring modes

Overview

The transmitter can be set for the corresponding measuring task using a few parameters. You can select the following measuring modes:

- Pressure
- Level
- Flow rate
- Users: user programmable characteristic curve

You can use the measuring mode selector to activate measuring modes "Level", "Flow rate" and "User".

Selecting the device variables

One or more device variables are permanently allocated to each measuring mode. The following device variables are always active and are therefore always displayed:

- Pressure
- Sensor temperature
- Electronics temperature
- Pressure (untrimmed)

The following device variables are activated only when the allocated measuring mode is activated and parameterized simultaneously:

- "Level", "Volume" and "Mass" are allocated to the "Level" measuring mode.
- "Volumetric flow" and "Mass flow rate" are classified as "Flow rate" measuring mode.
- "User" is allocated to the "User" measuring mode.

The inactive device variables have the CONSTANT status.

7.3.2 Measuring mode selector

You can use this switch to toggle between measuring modes "Pressure", "Level", "Flow rate" and a characteristic curve programmable by a "User".
If a measuring mode has been selected using the measuring mode selector, it has to be configured. This does not mean that this block has an automatic effect on the current output (4 to 20 mA). For that, you need to switch the corresponding device variable to the primary variable (PV) using a so-called variable mapper.

7.3.3 Variable mapper

Introduction

In this transmitter, the dynamic variable that determines the behavior of current output is always called the primary variable (PV). You need to use the variable mapper for a number of purposes, including selecting which device variable is to be switched to PV. The variable selected as PV using a PC program such as SIMATIC PDM or using the HART Communicator is scaled once again in the analog output stage to a zero value and a limit value. These two values then correspond to the current values 4 and 20 mA.

As soon as the PV is switched over using the variable mapper, the start of scale value and full scale value in the analog output stage are preset to the limit values of the new device variables. You can define these limit values within the individual block functions.

The dynamic variables "Primary", "Secondary", "Tertiary" and "Quarternary" (PV, SV, TV, QV) can be interconnected with any active device variables. Various different measuring mode examples are conceivable with a 4 bar pressure transmitter.

See also

Measured value status (Page 110)

7.3.4 Measuring mode "Pressure"

The "Pressure" measuring mode contains the "Sensor trim" function, and is always active since it is the standard measuring mode. When the measuring mode selector is set to "Off", further measuring variables are not derived from the "Pressure" measuring variable. Except the first

four variables, all other device variables are marked as inactive and have the CONSTANT status. These four variables are mapped with dynamic variables PV, SV, TV and QV by default.

Switching an inactive device variable to the primary variable (PV) generates an error message since the variable currently does not have a valid measured value. This message is displayed in SIMATIC PDM or the HART communicator.

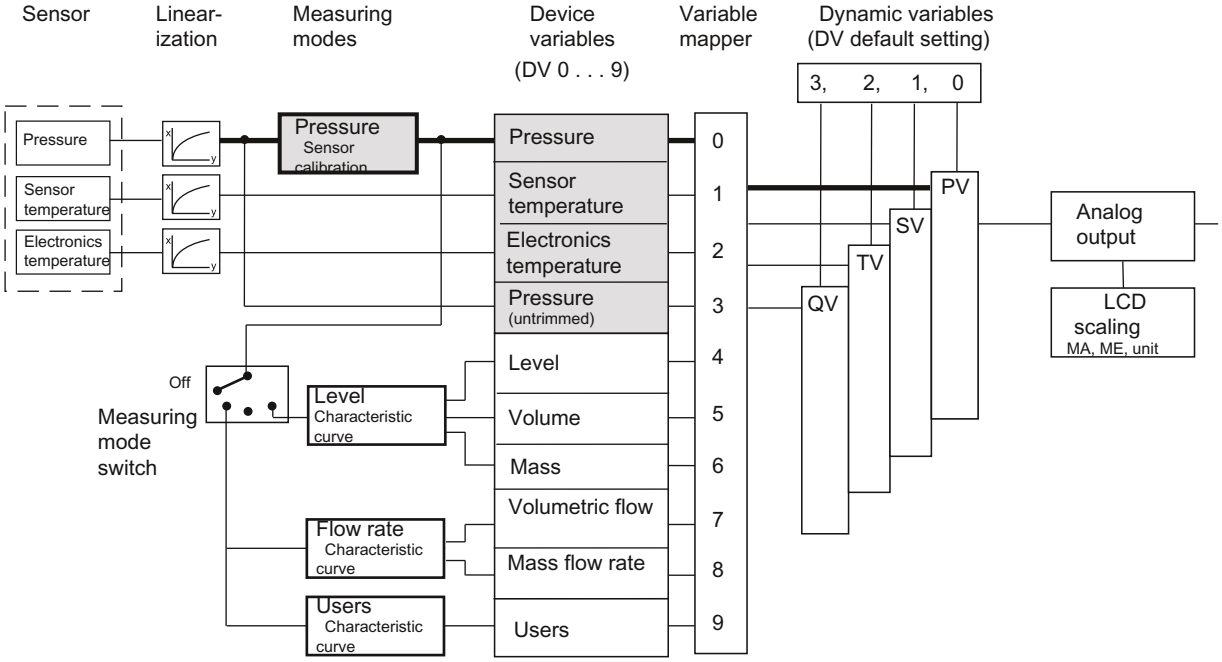

DV	Device variable
MA	Start of scale value
ME	Full scale value
PV	Primary variable
QV	Quarternary variable
SV	Secondary variable
TV	Tertiary variable

Figure 7-1 Measuring mode "Pressure"

7.3.5 Customized characteristic curve

Introduction

The customized "characteristic curve" is continuously active as an identical function in the three following measuring modes "Level", "Flow rate" and "User". This means that the customized "characteristic curve" always provides a result for the following function, thus also influencing the measured value status of the affected device variables.

In the device, the characteristic curve vertices are only provided once in the EEPROM. Therefore, if the measuring mode is changed, you will usually need to adjust the characteristic curve accordingly.

The characteristic curve function expects at least two and at the most 30 characteristic curve vertices as input parameters. Characteristic curve vertices are entered in pairs of values x %;y %. The values for the x-coordinate are only accepted by the device when they run monotonically. The y-coordinates, on the other hand, may also be non-monotonic. A warning will however be issued by the configuring device, which you as the user have to recognize and acknowledge. The output of the characteristic curve is not explicitly stored in a device variable, but rather is directly interconnected with the input of the next function block in each case. The pairs of values 0%;0% and 100%;100% are set as default values. In principle, rising and falling characteristic curves can be configured. With regard to the device variable status, rising characteristic curves are however preferred. Otherwise the meanings of HIGH LIMIT and LOW LIMIT are swapped.

See also

Measured value status (Page 110)

7.3.6 Measuring mode "Level"

Description

Once you have configured the measuring mode "Level", the device variables "Level", "Volume" and "Mass" are activated. They are all inferred from the measured pressure. The "Level" block here represents a series of permanently interconnected functions which you need to configure

with appropriate parameters. Only then will you be given a meaningful measured value for the three device variables.

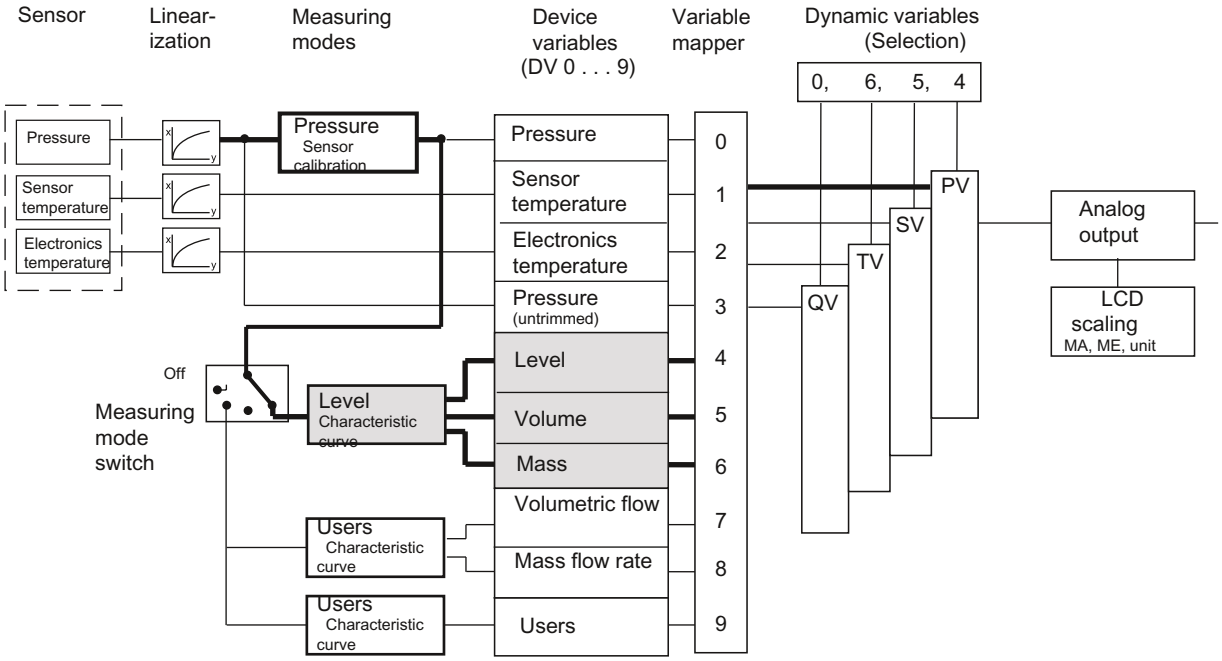

DV	Device variable
MA	Start of scale value
ME	Full scale value

Figure 7-2 Measuring mode "Level"

Functions of the "Level" block

The first function, "Input scaling, pressure", sets the pressure range used by the following functions in all three blocks in the same way. Ideally, this range corresponds to the sensor limits of the transmitter. In the following calculation examples, 0 and 4 bar are assumed for these sensor limits for all blocks. You can however also set a downscaling, e.g. 1:2. The downscaling of 1:2 means that 50% of the rated measuring range, here 2 bar, can control the following characteristic curve 100%.

Use the "Output scaling, level" to set the measuring limits for the measuring mode "Level" with a unit from the level range. Parameter settings in this example are 10 and 20 m. At 0 bar process pressure, 10 m is displayed in DV4 and 20 m is displayed at 2 bar. The values for the start of scale value and the full scale value, which are effective for the analog output, are configured in the "analog output" block.

In the calculation example, the two pairs of values 0%;0% and 100%;100% are configured for the customized "characteristic curve". This is the default setting. The measured value from the pressure scaling is transferred 1:1 in this example.

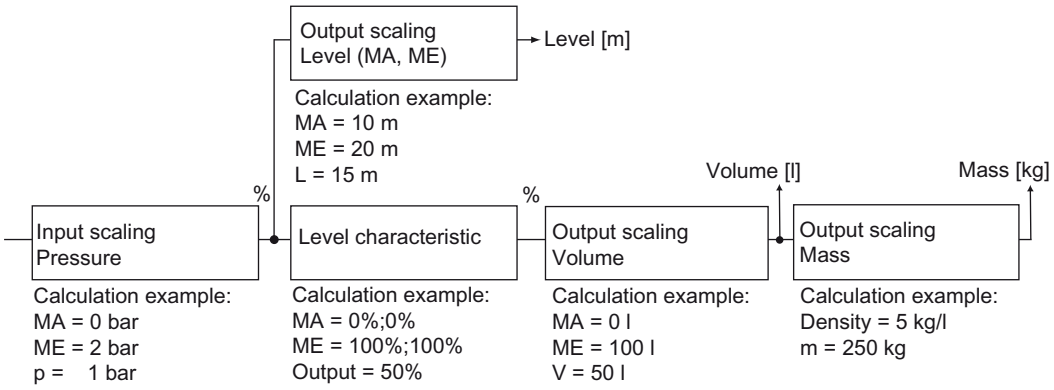

:

DV [x]	Device variable x
L	Level
m	Mass
MA	Start of scale value
ME	Full scale value
P	Pressure
V	Volume

Figure 7-3 Functions of the "Level" block

Configure the "Output scaling, volume" with a unit from the volume range and the measuring limits for the device variable "Volume". The characteristic curve output directly affects the volume scaling input.
In the calculation example, for the measuring limits from 0 and 100 l, a volume of 50 l is yielded for process pressure of 1 bar.

The "Level" parameter setting also still automatically activates the device variable for the mass. If you have not yet configured a value for the density, the initial value of 1 kg/l is preset. In the calculation example for the "Mass" device variable, a mass of 250 kg is derived at a density of 5 kg/l.

Note

When the density changes, the measuring range limits have to be adjusted accordingly.

You can configure all parameter settings for the "Level" block in SIMATIC PDM or the HART communicator. Activate the "Level" measuring mode for this purpose. For all settings, the measuring limits may be exceeded by +/-20%. Values which lie above or below that will be rejected by the device.

7.3.7 Measuring mode "Flow rate"

Description

When you activate the "Flow rate" measuring mode, only two other device variables are active: volumetric flow and mass flow rate. If another block was active earlier, the corresponding device variables remain inactive and have the "CONSTANT" status. The "Flow rate" block here represents a series of permanently interconnected functions which you need to configure with appropriate parameters.

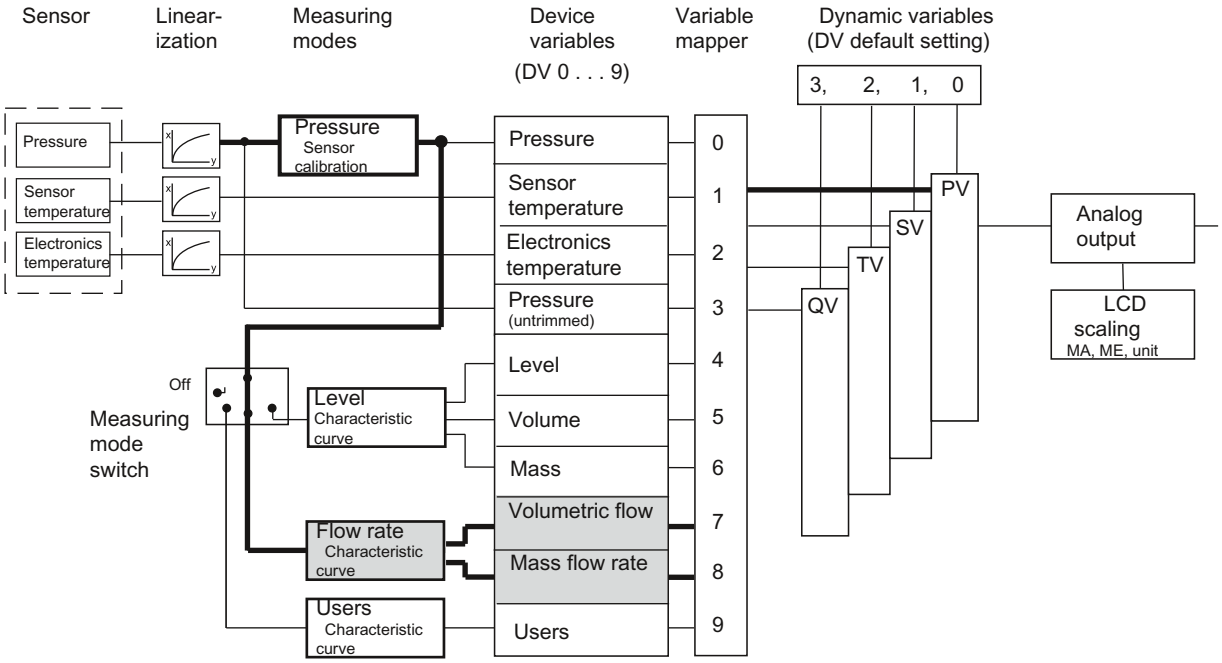

DV	Device variable
MA	Start of scale value
ME	Full scale value

Figure 7-4 Measuring mode "Flow rate"

Functions of the "Flow rate" block

The "Input scaling, pressure" function defines the pressure range of 0 to 2 bar that is interpreted as 0 and 100% by the following square root extracting function. A process pressure of 0.5 bar has been assumed in the following figure.

In the "Flow rate" measuring mode, a square root extracting characteristic curve "srlin2" is plotted with a fixed root application point of 10%.
In the calculation example, the input value for the "square root extracting function" is approximately 25% at a process pressure of 0.5 bar. The output value is approximately 50%.

Note

When using the "Flow rate" block, other square root extracting characteristic curves must be deactivated if required.

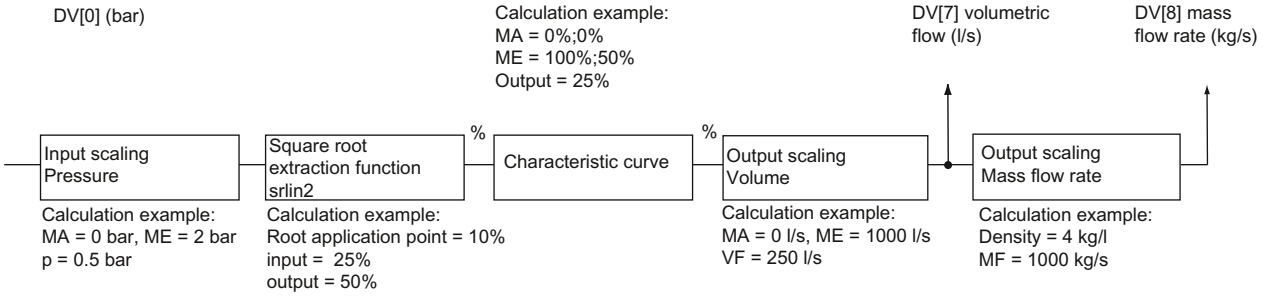

DV [x]	Device variable x	MF	Mass flow rate
MA	Start of scale value	p	Pressure
ME	Full scale value	VF	Volumetric flow

Figure 7-5 Functions of the "Flow rate" block

In the calculation example, the two pairs of values 0%;0% and 100%;50 % are configured for the customized "characteristic curve". This setting corresponds to a bisection of the input value for all output values.

Configure the output scaling "volumetric flow" with a unit from the volume flow range and the measuring limits for the device variable "Volumetric flow". In the calculation example, 0 l/s and 1000 l/s are defined as lower and upper measuring limits. The volumetric flow rate is 250 l/s at a process pressure of 0.5 bar.

The "Mass flow rate" device variable is automatically activated when the "Flow rate" block is configured. If you have not yet configured a value for the density, the initial value of 1 kg/l is preset.
In the calculation example, a mass of 1000 kg/s is derived for the "Mass flow rate" device variable at a value of 4 kg/l. The density value entered is only used to calculate the mass flow rate. The entered value of density has no effect on the diaphragm calculation that is to be carried out by the user.

In SIMATIC PDM or the HART communicator, the "Flow rate" block is configured in an online dialog box in an extremely compact manner. In this online dialog box, you can compile all values in a menu and transfer them to the device collectively.

7.3.8 Measuring mode "User"

Description

The "User" measuring mode is the simplest of the measuring modes that you can select with the measuring mode selector. Only one further device variable, "User", is activated in this measuring mode in addition to the four standard device variables. The variables "Level", "Volume", "Mass", "Volumetric flow" and "Mass flow rate" are marked as inactive and are given the status CONSTANT.

In the "User" measuring mode, you have an option to define a customized unit for output scaling. This customized unit is, e.g. a specific quantity of liquid. This quantity of liquid depends on the input process pressure.
Example: Fill the beverages in cans having a capacity of 0.33 l. You can now define a customized unit "Can" that is exactly equal to 0.33 l. The quantity of "cans" depends on the input process pressure.

Note

Permissible input values

All alphabetic a...z, A...Z and numeric 0...9 inputs are allowed for the customized unit. The following characters are also allowed:
° " $ / < > * , _ + - = @

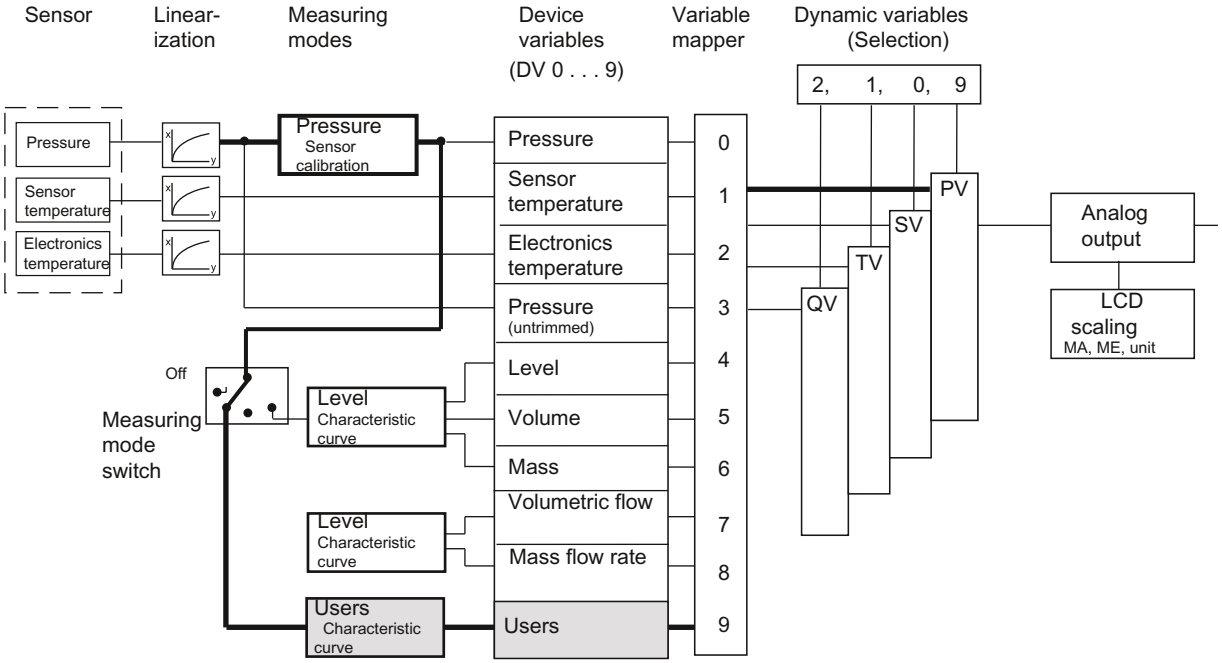

DV	Device variable	MA	Start of scale value
PV	Primary variable	ME	Full scale value
SV	Secondary variable		
TV	Tertiary variable		
QV	Quarternary variable		

Figure 7-6 Measuring mode "User"

Functions of the "User" block

The first function, "Input scaling, pressure", defines the pressure range which is used by the customized characteristic curve. Ideally, this range corresponds to the sensor limits.
In the calculation example, 0 and 2 bar are assumed. This means that with process pressure of 0.5 bar, there is a value of 25% on the characteristic curve.

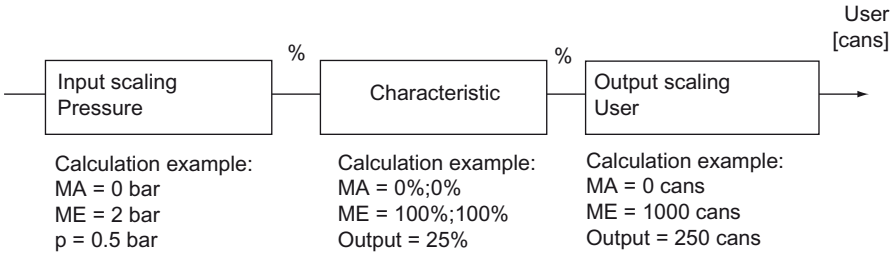

DV [x]	Device variable x	MA	Start of scale value
p	Pressure	ME	Full scale value

Figure 7-7 Functions of the "User" block

In the calculation example, the two pairs of values 0%;0% and 100%;100% are configured for the customized "characteristic curve". Any curve shapes can be calculated with the help of 30

characteristic curve vertices. These curve shapes can be stored in the device using SIMATIC PDM or the HART communicator.
In the calculation example, the value at the input of the characteristic curve is transferred 1:1 to the output.

In the calculation example, a number of filled cans is set for the output scaling. You can enter up to five characters for any given unit. Do not confuse this with the user-programmable display unit of the "Analog output" block.
In the calculation example, you have a start of scale value of 0 cans and a full scale value of 1000 cans. At a process pressure of 0.5 bar, you get a value of 250 cans for the "User" device variable.

See also

Analog output (Page 114)

Measured value status (Page 110)

7.3.9 Measured value status

Introduction

Every device variable is assigned a status byte to indicate the quality of the measured values. This status byte can have the following values:

- BAD
- GOOD
- MANUAL
- UNCERTAIN

The following values are also possible:

- CONSTANT
- HIGH LIMIT
- LOW LIMIT

A higher-level diagnosis program can display and analyze these states.

GOOD status

During smooth, uninterrupted operation, the measured value status of all active device variables is GOOD.

BAD/CONSTANT status

All inactive device variables have CONSTANT/BAD status.

If a variable having the BAD status is an output value for calculation, the measured value is BAD.

The basic measured values, namely pressure and temperatures, have the BAD status in the following cases:

- The analog-to-digital converter does not function.
- Linearization values in the EEPROM are defective.
- If the two end points of the customized characteristic curve are exceeded for the status of the device variables of the following function.

UNCERTAIN status

If a pressure value exceeds or falls below the sensor limits of the device by more than 20%, the corresponding measured value and the variables inferred from it are UNCERTAIN.

If the analog-to-digital converter for pressure control is over/underrange, the status is UNCERTAIN.

HIGH LIMIT and LOW LIMIT

If the analog-to-digital converter is overrange, the HIGH LIMIT label is allocated. If the analog-to-digital converter is underrange, the LOW LIMIT label is allocated.

Change in status

If the status of a device variable changes and it was right at the front of the sequence of operations for a block, e.g. pressure, then all variables that are derived from it will take on the same status. In the following example, the device variable "Pressure" has the BAD status. Since the measuring mode selector is set to "USER", the device variable "User" is also given the BAD status.

The reasons for changes in the status of a device variable are summarized in the table. If there were several reasons for a change in status, MANUAL always has the highest priority. BAD has the second highest and UNCERTAIN the third highest priority.

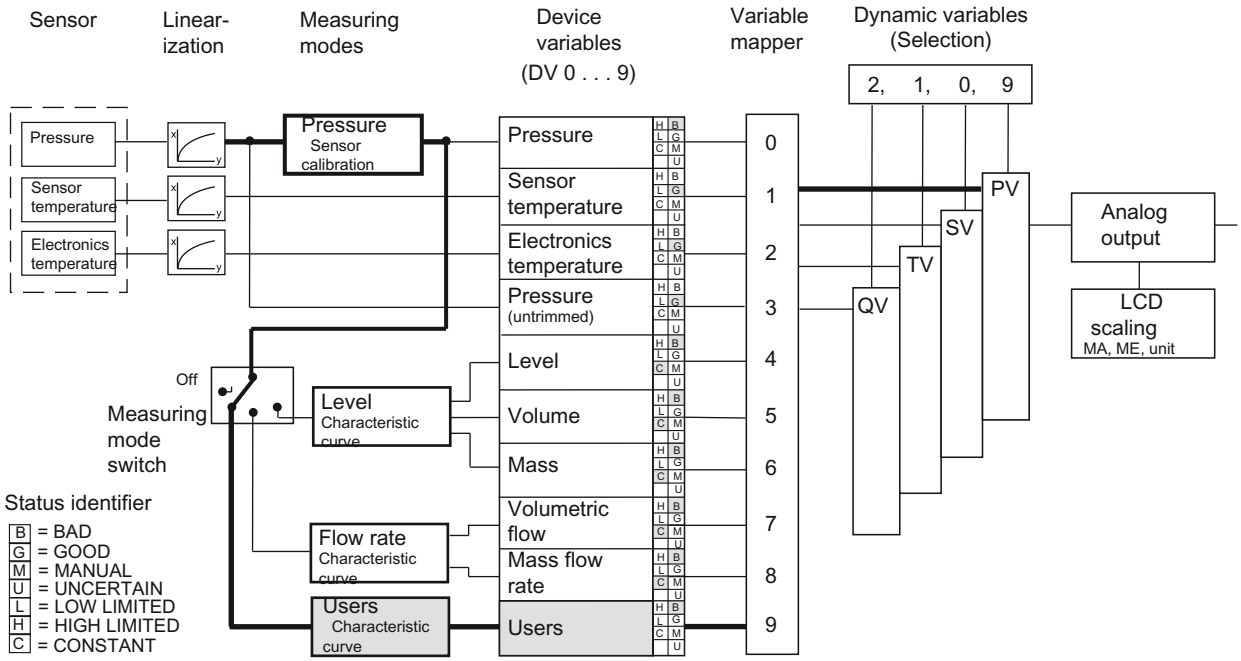

DV	Device variable	MA	Start-of-scale value
PV	Primary variable	ME	Full-scale value
SV	Secondary variable		
TV	Tertiary variable		
QV	Quarternary variable		

Figure 7-8 Device status dependency

Table 7-2 Events which result in a change of status

DV	Measuring mode	BAD	MANUAL	UNCERTAIN	CONSTANT	HIGH LIMIT	LOW LIMIT
0	Pressure	DV3 = BAD, fault in linearization	When DV0 is simulated	DV3 = UNCERTAIN	-	DV3 = HIGH LIMIT	DV3 = LOW LIMIT
1	Sensor temperature	DV2 = BAD, analog-to-digital converter in over/ underrange, fault in linearization	When DV1 is simulated	DV1 more than 20% outside the sensor limits DV2 = UNCERTAIN DV2 = MANUAL	-	Analog-to-digital converter in overrange	Analog-to-digital converter in underrange
2	Electronics temperature	Analog-to-digital converter in over/ underrange, fault in linearization	When DV2 is simulated	DV2 more than 20% outside the sensor limits	-	Analog-to-digital converter in overrange	Analog-to-digital converter in underrange

DV	Measuring mode	BAD	MANUAL	UNCERTAIN	CONSTANT	HIGH LIMIT	LOW LIMIT
3	Pressure (untrimmed)	Analog-to-digital converter in over/ underrange, DV1 sensor breakage, DV2 = BAD, fault in linearization	-	Analog-to-digital converter in overrange/ underrange, DV3 more than 20% outside the sensor limits DV2 = MANUAL	-	Analog-to-digital converter in overrange	Analog-to-digital converter in underrange
4	Level	If DV0 = BAD	When DV0 is simulated	DV0= UNCERTAIN	DV not active	DV0 = HIGH LIMIT	DV0 = LOW LIMIT
5	Volume	DV0 = BAD, Characteristic curve is faulty	When DV0 is simulated	DV0 = UNCERTAIN, input value is outside the specified characteristic curve range	Characteristic curve is faulty DV not active	DV4 = HIGH LIMIT, Characteristic curve for maximum value with gradient 0	DV4 = LOW LIMIT, Characteristic curve for minimum value with gradient 0
6	Mass	DV5 = BAD	When DV0 is simulated	DV5= UNCERTAIN	DV not active, DV5 = CONSTANT	DV5 = HIGH LIMIT	DV5 = LOW LIMIT
7	Volumetric flow (not absolute and gauge pressure)	DV0 = BAD, characteristic curve is faulty	When DV0 is simulated	DV0 = UNCERTAIN, input value is outside the specified characteristic curve range	Characteristic curve is faulty, DV not active	DV4 = HIGH LIMIT, Characteristic curve for maximum value with gradient 0	DV4 = LOW LIMIT, Characteristic curve for minimum value with gradient 0
8	Mass flow rate (not absolute and gauge pressure)	DV5 = BAD	When DV0 is simulated	DV5= UNCERTAIN	DV not active DV5 = CONSTANT	DV5 = #HIGH LIMIT	DV5 = LOW LIMIT
9	Users	DV0 = BAD, Characteristic curve is faulty	When DV0 is simulated	DV0 = UNCERTAIN, input value is outside the specified characteristic curve range	Characteristic curve is faulty DV not active	DV0 = HIGH LIMIT, Characteristic curve for maximum value with gradient 0	DV0 = LOW LIMIT, Characteristic curve for minimum value with gradient 0

If you use falling characteristic curves in the blocks, the meanings of HIGH LIMIT and LOW LIMIT are swapped around.

If you mix falling and rising characteristic curves, the meanings will be swapped each time a falling characteristic curve is run.

7.3.10 Analog output

Introduction

The "Analog output" block converts the value provided by the dynamic primary variable (PV) into a current value of 4 to 20 mA. When you actuate the measuring mode selector, you automatically define the start of scale value and the full scale value to the current values 4 and 20 mA, respectively. Limit values of corresponding device variables are used for scaling the analog output by default. You have entered these limits when setting the parameters of your measuring mode.

Example for measuring mode "Level"

This means that for a "Level" device variable as PV, 10 m corresponds to the value for 4 mA and 20 m corresponds to the value for 20 mA. You can change this presetting again in the "Analog output" block. This is done by restricting the range of the "Level" device variable for scaling the output current to e.g. 12 to 18 m. This downscaling has no effect on the previous block scaling. In this case, a current of 4 mA is output for a measured height of 12 m, and a current of 20 mA for 18 m.

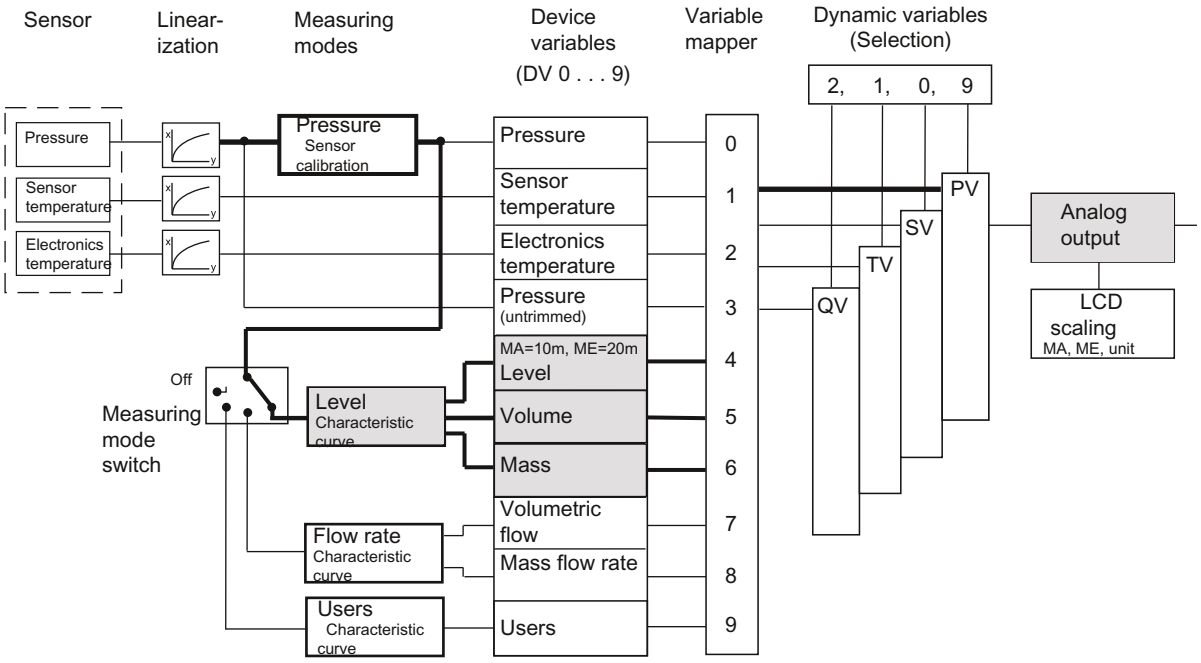

DV	Device variable	MA	Start of scale value
PV	Primary variable	ME	Full scale value
SV	Secondary variable		
TV	Tertiary variable		
QV	Quarternary variable		

Figure 7-9 "Analog output" scaling

Description of measuring mode "Level"

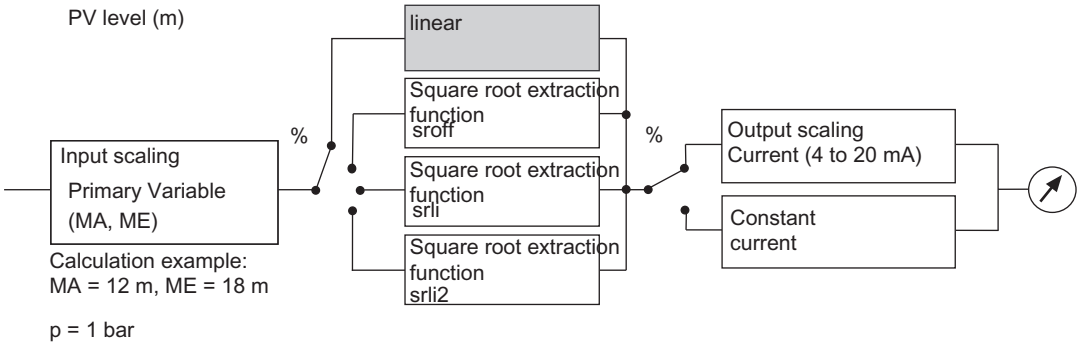

MA	Start of scale value	p	Pressure
ME	Full scale value	PV	Primary variable

Figure 7-10 "Analog output" block

Note

If, when setting the analog output, the values for the start of scale value zero and the full scale value are more than 20% below or above the limit values of the set PV (set using the variable mapper), the values will be rejected by the device. The values configured previously are retained. Similarly, the span must not fall below the minimum.

Minimum span = ME - MA

The square root extracting function can only be selected in the "Pressure" measuring mode.

The "srlin2" square root extracting function is set as default in the "Flow rate" measuring mode.

7.3.11 Scaling the display value

Introduction

You can scale the value shown in the display as you wish and allocate it any unit of 5 characters. The scaling of the value is independent of the selection of the measuring mode selector, the primary variable (PV) and the display unit defined. Use the "Display settings" item in SIMATIC PDM or the HART communicator for this purpose.

The percent value of the PV is the basis for this scaling. This percent value is also used to scale the current output. In SIMATIC PDM, this item is referred to as "Setting the PV output scaling". After selecting the "Display settings" menu item, you must enter a start-of-scale value, a full-scale value and a unit string.

This display option has the highest priority amongst all options. A switch over to %, mA or any other unit is not possible in this status. You need to deactivate the LCD scaling again for this purpose.

Example

In the Level measuring mode, the start of scale value is assumed as 0 m and the full scale value as 10 m in the example illustrated in the following picture. The value of 2 m is displayed at a process pressure of 0.4 bar.

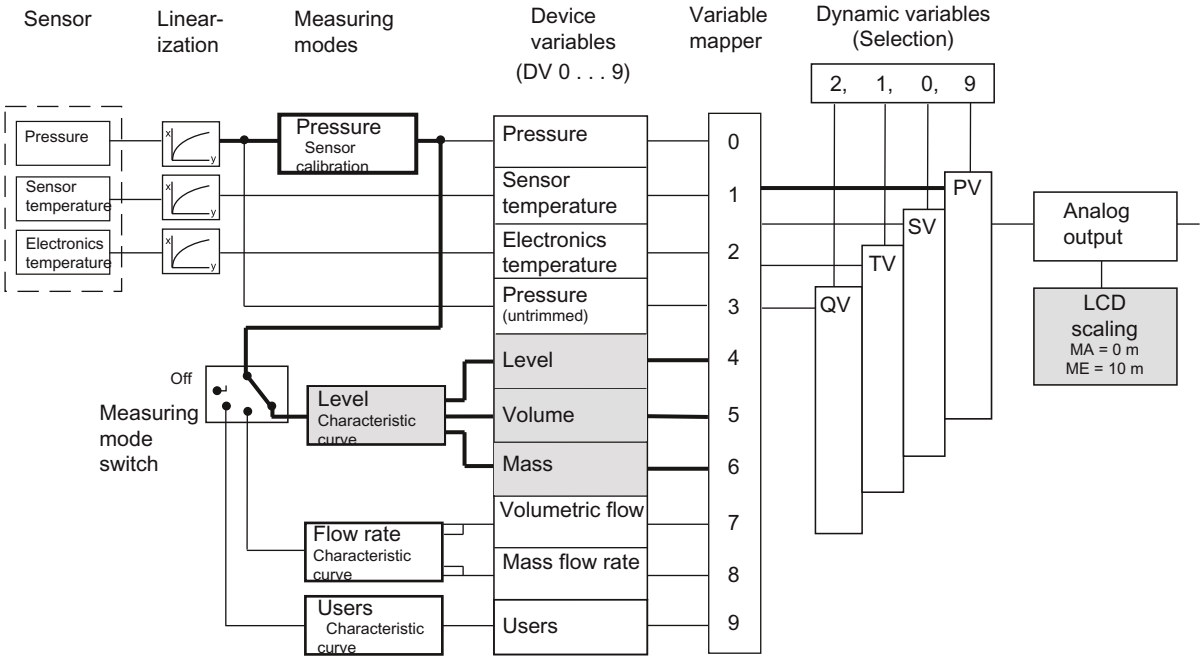

DV	Device variable	MA	Start-of-scale value
PV	Primary variable	ME	Full-scale value
SV	Secondary variable		
TV	Tertiary variable		
QV	Quarternary variable		

Figure 7-11 Free LCD scaling

7.4 Setting zero point and limit point

You can set the zero point and the limit point using the SIMATIC PDM or HART Communicator. You can use this function to realize rising or falling characteristic curves.

The pressure unit can be set separately for the display and for HART communication.

See also

Difference between setting and adjusting (Page 75)

7.5 Blind setting of zero point and limit point

- The start of scale value and the full scale value can be set without creating a reference pressure.
- Both values can be selected as any point within the sensor limits.
- The maximum downscaling is 1:100, depending on the series and the measuring range.

7.6 Zero point calibration (position correction)

Description

A zero point calibration is used to correct a zero point error resulting from the installation position.

Procedure

- Pressurize the device or evacuate it (at absolute pressure, < 0.1 ‰ of the measuring span).
- Perform the zero point calibration using SIMATIC PDM or the HART Communicator.
- If you do not have a vacuum, perform a trimming of the lower sensor calibration point at a known reference pressure.

CAUTION

For absolute pressure transmitters, the zero point is at vacuum. A zero point calibration with a pressurized transmitter will lead to faulty settings!

Note

The effective measuring range is reduced by the amount of the upstream pressure.

Example:

With an upstream pressure of 100 mbar, the effective measuring range of a 1-bar transmitter is reduced to a point between 0 and 0.9 bar.

See also

Trimming the sensor (Page 124)

7.7 Electrical damping

Description

You can set the time constant of electrical damping to a point within a range from 0 to 100 s. It always applies to the "Pressure" device variable (DV0) and thus to the measured values derived from it.

7.8 Fast response mode

Description

This mode is only intended for special applications such as fast recognition of jumps in pressure, e.g. pressure drop in the event of pipe breakage. The internal recording of measured values is sped up at the cost of accuracy. From your point of view, an increased low-frequency noise is caused for the measured value. For this reason, good accuracy can only be achieved by setting the measuring span to the maximum.

7.9 Current sensor

Description

The transmitter can be switched to constant current operation for test purposes. In that case, the current no longer corresponds to the process variable. A "C" will appear in the mode display of the display.

7.10 Fault current

Description

You can use this function to set the size of the lower (< 4 mA) and upper (> 20 mA) fault current. Both signal a hardware/firmware fault, sensor breakage, or that the alarm limit has been reached (diagnostic interrupt). ERROR will in this case appear in the display. You can obtain a detailed guide to the display using SIMATIC PDM or the HART Communicator.

Reference

NAMUR recommendation NE43 dated 03.02.2003
"Standardization of the signal level for the breakdown information of digital transmitters"

See also

Error display (Page 69)

Limit modules (Page 131)

7.11 Setting the current limits

Description

The level of the upper and lower fault current and the upper and lower saturation limits can be freely selected within the preset limits of the current output signal.

The specified accuracy of the current output signal is only valid within the current limits 4 to 20 mA.

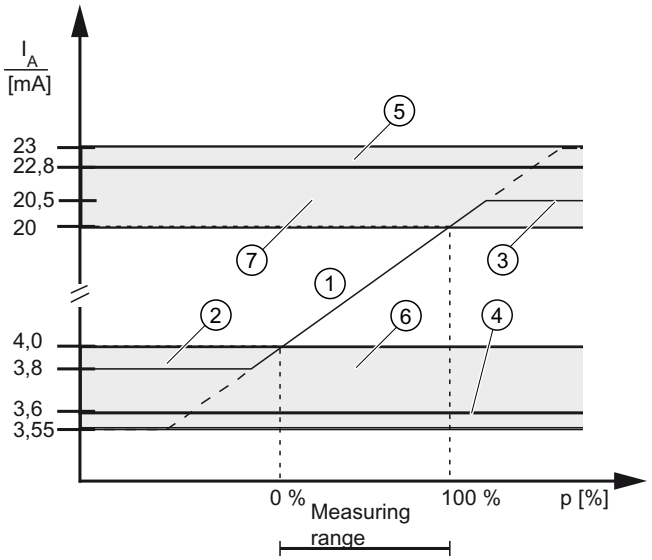

① Linear control range
② Lower saturation limit (default value)
③ Upper saturation limit (default value)
④ Lower fault current value (default value)
⑤ Upper fault current value (default value)
⑥ Recommended setting range for lower fault current range and lower control range limit
⑦ Recommended setting range for upper fault current range and upper control range limit

Figure 7-12 Current limits

7.12 Key lock and write protection

Introduction

You can use this function to lock the keys or activate write protection to safeguard the saved parameters.

Lock options

You have the following lock options:

Table 7-3 Meaning of the HART lock modes

Lock mode	Meaning
0	The device can be operated by means of the keys and HART communication.
LA	Keys on the transmitter are locked. Exception: • Releasing key lock The device can be operated by means of HART communication.
LO	Keys on the transmitter are partially locked. Exception: • Setting start of scale value • Releasing key lock The device can be operated by means of HART communication.
LS	Keys on the transmitter are partially locked. Exception: • Setting start of scale value • Setting full scale value • Releasing key lock The device can be operated by means of HART communication.
LL	Write protection You can now only release the lock using HART communication.

See also

buttons and function lock (Page 90)

Releasing key lock or function lock (Page 91)

7.13 Measured value display

Introduction

You can use this function to set one of three options for the device display:

- Display in mA
- Display in % (of the set measuring range)
- Display in a physical unit

Table 7-4 Display of measuring mode/device variables

DV	Description
0	Pressure
1	Sensor temperature
2	Electronics temperature
3	Pressure (untrimmed)
4	Level
5	Volume
6	Mass
7	Volumetric flow rate (not relevant to gauge or absolute pressure)
8	Mass flow rate (not relevant to gauge or absolute pressure)
9	Users

Points to note for "Pressure" DV

If the device variable (DV) is set to "Pressure", you can configure the displayed pressure unit with an extension, GAUGE (G) or ABS (A). The add-on has no effect on the real measured value.

To do so, select the option Gauge or Absolute under the "Pressure display type" menu item.

There are two options for the display:

- If the pressure unit is < 5 characters, an A or a G is added at the end, respectively.
- If the pressure unit is ≥ 5 characters, the letters GAUGE or ABS flash alternately with the pressure unit.

Figure 7-13 Add-on with example GAUGE

Note

The change of the display with GAUGE or ABS does not change the physical pressure used by the transmitter, rather only the nature of the display.

See also

Measured value display (Page 94)

7.14 Selection of the physical unit

Introduction

You can use this function to select a unit from a table with predefined units.

Description

The only units available will be those of the device variable that was mapped as the Primary Variable (PV).

The unit can be set separately for the display and for HART communication. You can also choose to link the setting of the two units.

See also

Unit (Page 95)

7.15 Bar graph

Description

You can use this to switch on the "Bar graph" function in the device display as an alternative to the unit display. The "Bar graph" function is disabled in the factory state.

See also

Display elements (Page 67)

7.16 Sensor calibration

7.16.1 Sensor trim

Description

The sensor trim can be used to set the characteristic curve of the transmitter at two sensor trim points. The results are then correct measured values at the sensor trim points. The sensor trim points can be selected as any points within the nominal range.

Devices that are not turned down prior to delivery are trimmed at 0 bar and the upper limit of the nominal range; devices that are turned down prior to delivery are trimmed at the lower and upper limits of the set pressure measuring range.

Application examples

- For a particular device that is not turned down (e.g. 63 bar), the typical measured value is 50 bar. To attain the highest possible accuracy for this value, set the upper sensor calibration at 50 bar.
- A 63-bar transmitter is turned down to 4 to 7 bar. You can attain the highest possible accuracy by selecting 4 bar for the lower sensor calibration point and 7 bar for the upper.
- A 250-mbar absolute pressure transmitter shows 25 mbar at 20 mbar (abs). A reference pressure of 100 mbar is available. You can carry out zero point correction by performing a lower sensor trim at 100 mbar.

Note

The accuracy of the test device should be at least three times as high as that of the transmitter.

7.16.2 Trimming the sensor

Trim the sensor at the lower trim point

The pressure at which the lower sensor trim is to be performed is applied at the transmitter. Via SIMATIC PDM or the HART Communicator, you instruct the transmitter to accept this pressure.

This represents an offset shift of the characteristic curve.

Trim the sensor at the upper trim point

The pressure at which the upper sensor trim is to be performed is applied at the transmitter. Via SIMATIC PDM or the HART Communicator, you instruct the transmitter to accept this pressure.

A gradient correction is thereby applied to the characteristic curve. The lower sensor trim point is not affected by this. The upper trim point needs to be greater than the lower trim point.

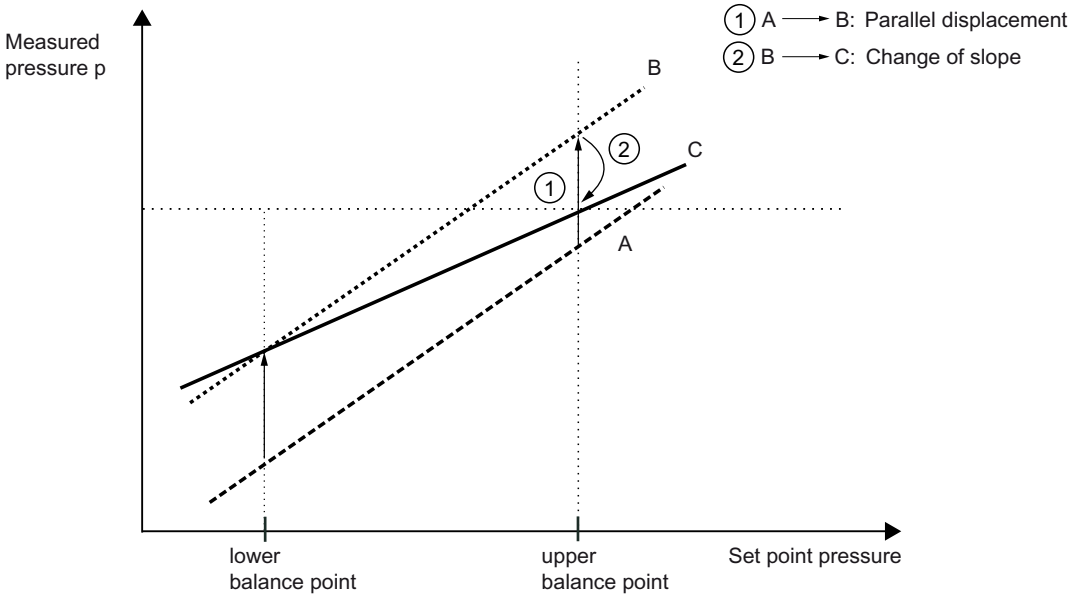

A Original characteristic

B Characteristic curve after lower sensor trim

C Characteristic curve after upper sensor trim

Figure 7-14 Sensor calibration

7.17 Current sensor trim

The current that is output by the transmitter can be trimmed independently of the pressure measuring circuit. This function is designed for compensating inaccuracies in the processing chain following the transmitter.

Example of an application

The current is to be measured as a voltage drop from 1 to 5 V at a resistance of 250 Ohm +/- 5%. To trim the tolerance of the resistance, set the current transmitter so that the voltage drop at 4 mA is exactly 1 V and at 20 mA is exactly 5 V.

- Trim at 4 mA:
  Use the current transmitter trim menu option to instruct the transmitter to output 4 mA. Read the measured value at an ammeter and input it. The transmitter uses this value for offset correction of the current.
- Trim at 20 mA:
  Use the current transmitter trim menu option to instruct the transmitter to output 20 mA. Read the measured value at an ammeter and input it. The transmitter uses this value for gradient correction of the current. The value for 4 mA is not affected by this.

Note

If a multimeter is used, it must always be sufficiently accurate.

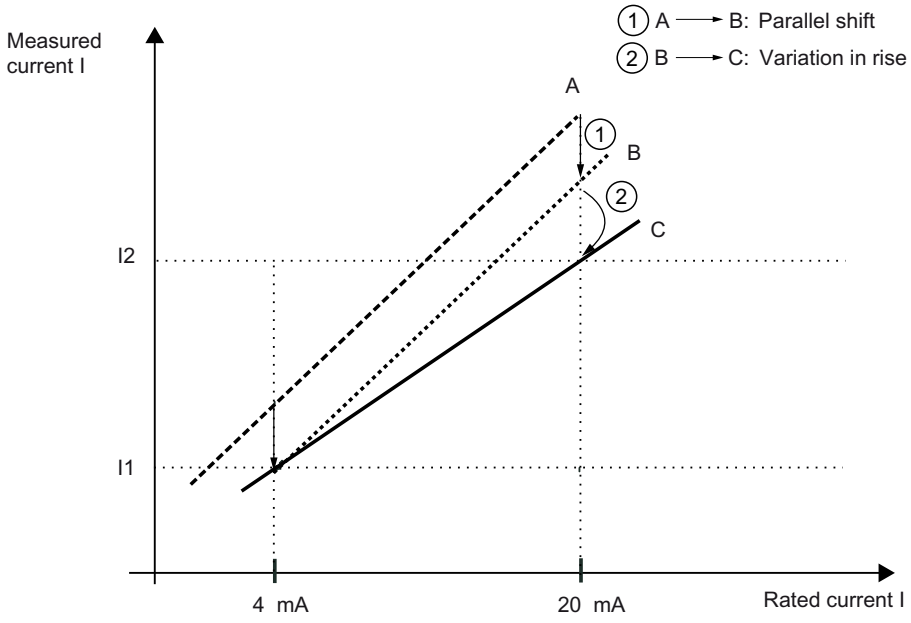

A Original characteristic

B Characteristic curve after current transmitter trim 4 mA

C Characteristic curve after current transmitter trim 20 mA

Figure 7-15 Current transmitter trim

7.18 Factory calibration

Introduction

You can use factory calibration to reset the transmitter to the factory state.

Description

You can use the menu-guided interface of SIMATIC PDM or HART Communicator to select the range of parameters to be reset:

1. Current trim
2. Sensor zero point calibration (position correction)
3. Pressure corrections (zero point calibration and sensor trim)
4. All parameters relevant for the processing of measured values, such as zero point, limit point, electrical damping, display unit, current trim, zero point calibration (position correction), sensor trim, measuring speed, interrupt current limits, interrupt setting, overflow ranges of current.
5. Variable mapper. This performs the following setting:
   PV= Pressure, SV= Sensor temp., TV= Electronics temp., QV= Non-linearized pressure

PV	Primary variable
SV	Secondary variable
TV	Tertiary variable
QV	Quarternary variable

See also

Factory calibration - FAQ (http://support.automation.siemens.com/WW/view/en/10806940/133000)

7.19 Static configuration data

Description

A further menu command in the corresponding operating program allows you to read and also write a series of sensor-specific material data. With the factory state, this data is pre-allocated according to the particular device model. These values are not contained in the "Factory calibration" function; in other words, changes in the device are permanently saved.

List of variable material parameters:

- Flange type
- Flange material
- Remote seal type
- Filling medium
- O-ring material
- Remote seal
- Remote seal diaphragm material
- Number of remote seals
- Sensor filling medium

- Sensor seal diaphragm material
- Transmitter model
- Housing material
- Tube length
- Process connection
- Electrical connection
- Process connection screw material
- Vent valve position

For a series of these material data items, you can enter any designation of your choice under the option "Special". This applies to the following parameters:

- Process connection
- Flange type
- Process connection screws
- O-ring material
- Material of vent valve
- Vent valve position
- Remote seal type
- Remote seal
- Diaphragm material
- Remote seal filling medium

You can use up to 16 characters for each entry.

7.20 Flow rate measurement (only differential pressure)

Description

For the "Differential pressure and flow rate" device version, you can select the characteristic curve of output current as follows without actuating the measuring mode selector:

- linear "lin": proportional to differential pressure
- square root extracting "sroff": proportional to flow rate, deactivated up to the application point
- square root extracting "srlin": proportional to flow rate, linear up to the application point
- square root extracting "srlin2": proportional to flow rate, two-step linear up to the application point

Variable application point

The output current for the "srlin" and "sroff" functions can be displayed linearly or set to zero below the application point of the square root extracting characteristic curve.

Fixed application point

The "srlin2" function has a permanently defined application point of 10%. The range up to this point contains two linear characteristic curve sections. The first section ranges from the zero point to 0.6% of the output value and 0.6% of the pressure value. The second section has a higher gradient and it goes up to the root application point at 10% of the output value and 1% of the pressure value.

See also

Flow rate measurement (only differential pressure) (Page 91)

7.21 Diagnostic functions

7.21.1 Overview

Description

HART communication allows you to activate and evaluate a wide range of diagnostic functions from a central control room or onsite:

- Calibration/service timer
- Min/max indicator
- Limit monitoring modules
- Simulation of measured pressure and temperature values
- Limit monitoring of all device variables

The diagnostics strategy employed for the transmitter incorporates a diagnostic warning and a diagnostic interrupt for diagnostic functions for monitoring limit values, e.g. for monitoring current saturation. This warning and interrupt can be configured:

- Diagnostic warning: The device transmits via HART communication the diagnostic event that has occurred. The current output value is unaffected. The message "Diagnostic Warning" alternates with the unit on the display.
- Diagnostic interrupt: The device goes into the fault current state. The message "Diagnostic Warning" or "Diagnostic Alarm" appears on the display, along with the message ERROR. In addition, the diagnostic event is made available via HART communication.

In the default settings, all warnings and alarms are switched off. You can choose to set either the diagnostic warning only or the diagnostic interrupt and warning. For HART communication, use the HART Communicator or PC software such as SIMATIC PDM. To see the steps

required, refer to the attached table for operation of the HART Communicator or the help functions in the SIMATIC PDM software.

7.21.2 Operating hours counter

Description

An operating hours counter can be read via HART communication for the electronics and another for the sensor. For HART communication, use the HART Communicator or PC software such as SIMATIC PDM. The counters are activated the first time the transmitter is put into operation. If the device is separated from its power supply, the counter readings are automatically stored in the non-volatile memories. That means that the current counter readings can be accessed at the next restart. The operating hours counters cannot be reset.

7.21.3 Calibration timer and service timer

Description

To ensure regular calibration of the electronics and for service work on the sensor, you activate a two-stage timer in each case. On expiry of the first time period, a calibration or service request is made. On expiry of a second time span set by parameter as a time difference, a diagnostic alarm is reported and a fault current is output.

The calibration intervals for the electronics are calculated using the following formula:

$$\text{Calibration interval} = \frac{\text{required accuracy} - \text{probable total error}}{\text{Stability/month}}$$

For performance of the calibration work, you must acknowledge the requests and alarms. Then you can reset the timer. In addition, there is a facility to deactivate the monitoring function.

The following procedure applies for acknowledgement of requests and alarms:

As long as the warning/alarm limit has not been reached, the following applies:

1. "Reset the timer" this resets the timer, which then restarts from 0. The monitoring remains active.
2. "Alarm/Acknowledge the request" this has no effect; the timer continues to run and the monitoring remains active.

When the warning/alarm limit has been reached, the following applies:

1. "Alarm/Acknowledge the request" resets the request / alarm message, but allows the timer to continue to run. In this state, a new alarm or warning is not possible since the time limits have already been exceeded.
2. "Reset timer" resets the request / alarm message, also resets the timer. It acknowledges the interrupt or warning at the same time. The timer immediately starts running again from zero and will report again when the warning/alarm limit is next reached. The next calibration interval is therefore immediately active.

7.21.4 Min/max indicator

Description

The measuring transmitter provides three min/max indicator pairs, which you can use to monitor the three measured variables Pressure, Sensor temperature, and Electronics temperature for negative and positive peak values. For each measured value, a resettable min/max indicator saves the maximum and minimum peak values in long-term storage in the two non-volatile memories. Consequently, the values are available even after the device is restarted. The min/max indicators are also updated during a simulation.

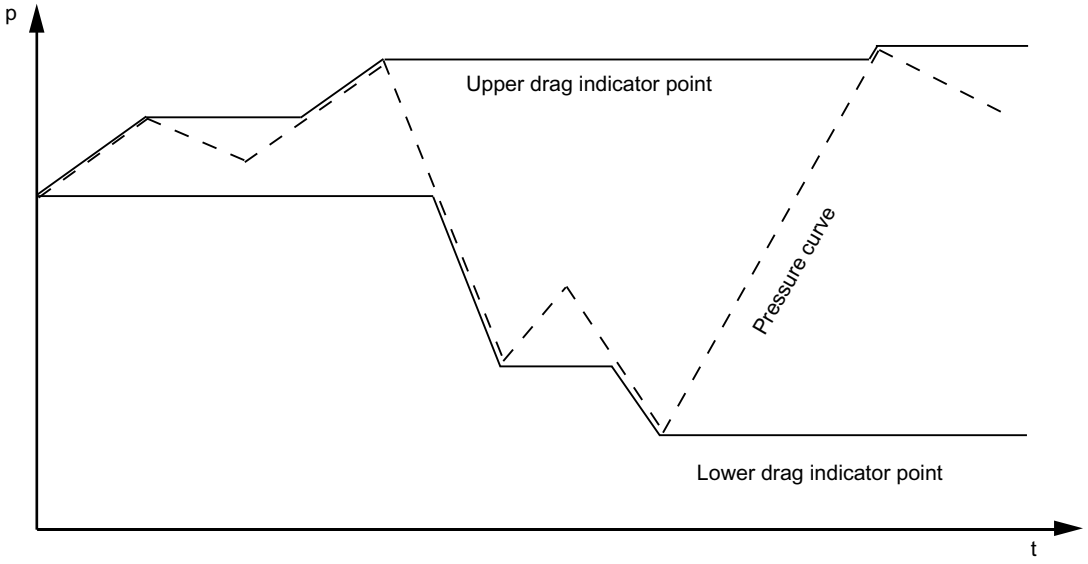

p Pressure t Time

Figure 7-16 Basic representation of min/max indicators

7.21.5 Limit modules

Introduction

The diagnostic functions of this device give you an option to monitor the measured values in programmable limits. If the limits are not adhered to, the device sends a warning through HART communication or notifies a higher-level instance about an analog fault current.

Monitoring of current saturation

You can monitor the current output in the saturation range using a simple limit module. This limit module is configured and activated via HART communication. For HART communication, use a HART communicator or PC software such as SIMATIC PDM.

You need to set two time periods to configure the limit module:
The first time period specifies how long the current output is allowed to be in saturation before an interrupt is triggered and the device outputs its set fault current. This first time period is the response time.
The second time period specifies the duration of the interrupt. This second time period is the stop time.

Different outputs of the fault current corresponding to the set response and stop times are shown in the following example.

Configuring the direction of fault current

The current value is proportional to pressure within the saturation limits. When the saturation limits are exceeded, the direction of fault current can however vary from the direction of saturation. The upper or the lower fault current is displayed depending on the parameter settings of the direction of fault current.

You can configure the direction of fault current for a current saturation interrupt depending on your requirements. The following settings are possible under the current saturation menu:

Active interrupt value	The applicable settings are those under the current interrupt type menu command.
Inverse interrupt value	The applicable settings are the inverse settings under the current interrupt type menu command.
Saturated interrupt value	The fault current is output in the direction of current saturation.
Inverse saturated interrupt value	The fault current is output in the opposite direction to current saturation.

The difference between different settings is evident in examples 3 and 4 in the following figure. Example 3 shows the direction of fault current with the "Saturated current value" setting. Example 4 shows the direction of fault current with the "Active upper interrupt value" setting.

Example

The configured saturation limits in the following figures are 3.8 mA and 20.5 mA.

Example 1: the response time starts at t_1. At t_1, current reaches the configured saturation limit of 20.5 mA for the first time. At t_2, the response time ends. The stop time begins and the interrupt is triggered. Time t_3 is the configured end of the stop time. At t_3, the interrupt is immediately revoked even if the current then drops below the saturation limit again.

Example 2: the duration of the current saturation is shorter than the response time (t_1, t_2). In that case, the device does not go into "fault current" state.

Example 3: the current drops below the lower saturation limit only for a short time. The fault current is not switched off until after the end of the stop time (t_3). The direction of fault current corresponds to the "Saturated interrupt value" setting. The fault current is output in the direction of current saturation.

Example 4: the current drops below the lower saturation limit only for a short time. The fault current is not switched off until after the end of the stop time (t_3). The direction of fault current corresponds to the "Active upper interrupt value" setting. The upper fault current is outputted although the direction of current saturation is downward.

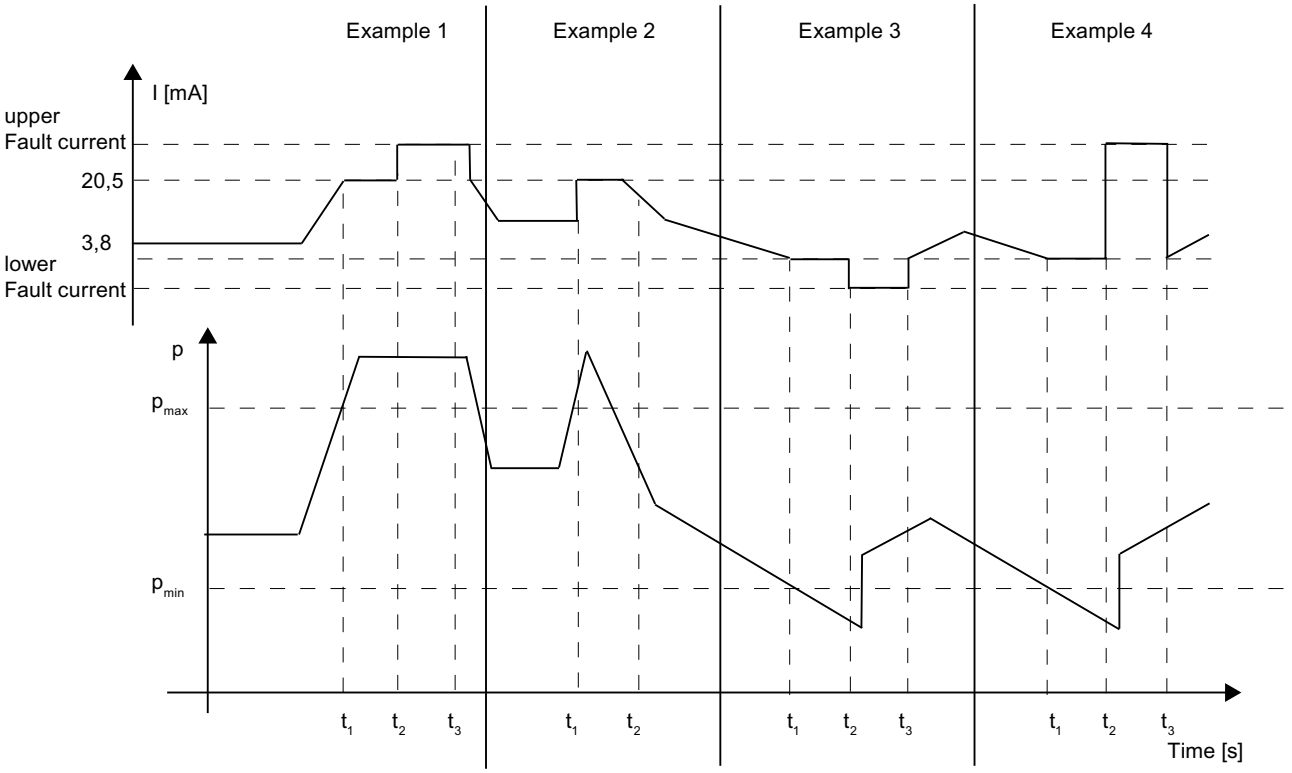

Figure 7-17 Four examples of saturation monitoring

See also

Fault current (Page 118)

7.22 Simulation

7.22.1 Overview of simulation

Description

With the "Simulation" diagnostic function, you can receive and process simulated measurement data onsite or in the control room without having process pressure or a temperature value. This allows you to run individual process sequences in the "cold" state and thus simulate process states. In addition, if you inject simulation values you can test the line routing from the control room to the individual transmitter.

The value to be simulated can be provided as a fixed value or in the form of a ramp function. Simulation of pressure and temperature values is handled in the same way in terms of parameter settings and function, so the following will only deal with the general simulation procedures "Fixed value" and "Ramp function".

For reasons of safety, all simulation data are held only in the non-volatile user memory. This means that when the device is restarted any simulation which may be active will be shut down. You can simulate the pressure and both temperature values. It should be noted here that changing the temperatures by simulation will have no effect on the measured pressure value.

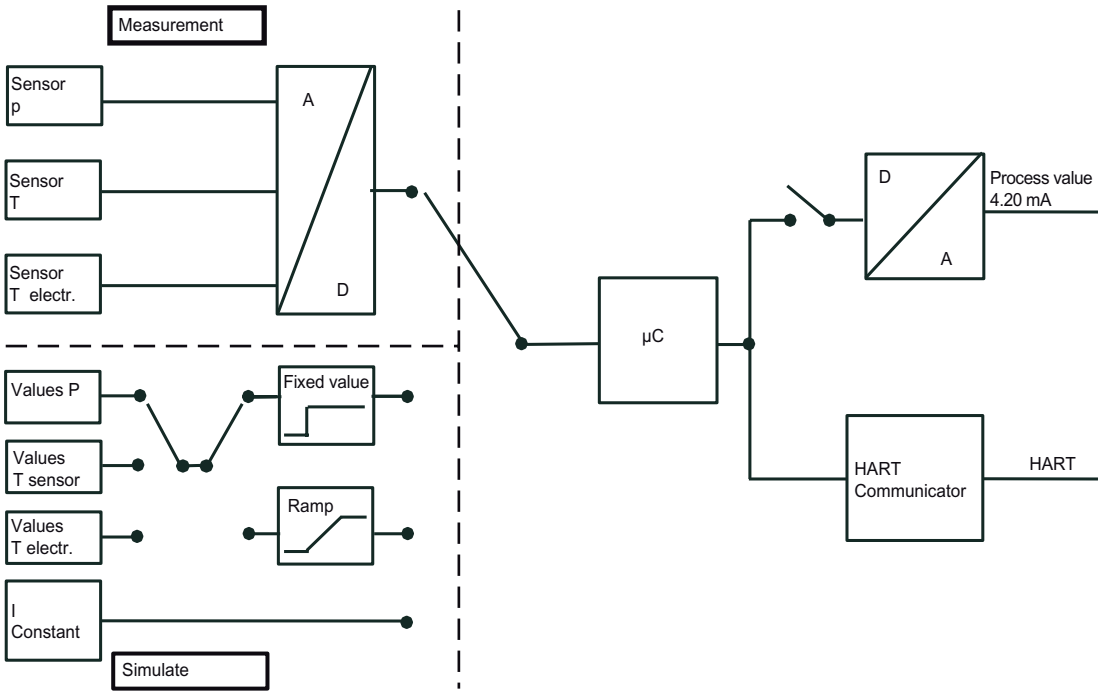

Figure 7-18 Block diagram of simulation

7.22.2 Simulation as fixed value

Description

Taking the physical unit into account you can set a fixed simulation value for all three possible simulation paths. You can simulate the pressure value and both temperature values simultaneously. While pressure simulation is activated, the transmitter will not react to changes in the process pressure. The output value for the current adjusts itself in accordance with the preset pressure value. Simulation of the temperature values has no effect on the current output. It can only be observed via HART communication.

7.22.3 Simulation with a ramp function

Description

In addition to the adjustable fixed values for all three simulation paths, you can, as a second option, also configure one ramp function in each case. Adjustable lower and upper values together determine the limits between which the simulation values with a rising or falling tendency can move. The step width can be calculated with the step number, which is also adjustable. You can specify the rate of rise of the ramp via the duration of the individual ramp steps.

$$\text{Increment} = \frac{\text{Upper range value} - \text{Lower range value}}{\text{Number of steps}}$$

7.23 Limit monitor

Description

You can activate up to three limit monitors in order to monitor any of the device variables. The limit monitor monitors a value at an upper or lower limit value. If this limit is violated it sends a diagnostic warning or a diagnostic interrupt. Select the "Limit Monitor" menu command in SIMATIC PDM or in the HART communicator. You can program the following values for each of the three limit monitors:

Table 7-5 Parameter of the limit monitor

Monitoring variable	You will be shown a list of the active device variables. This list is independent of the measuring mode selected.
Limit monitoring: warning / interrupt	Select whether a warning or a warning plus an interrupt should be triggered when a limit is violated.
Limit monitoring: upper / lower	Specify here whether a device variable monitors the upper limit, the lower limit, or both limits.
Upper limit value	Upper limit value in the unit of the device variable.
Lower limit value	Lower limit value in the unit of the device variable.

Hysteresis	Operating point for chatter suppression in the case of small pressure changes.
Response time	The time which must pass after the limit is violated before this violation is registered.
Stop time	The time for which a limit interrupt or warning will always be sustained even when the event which triggered it is no longer present.

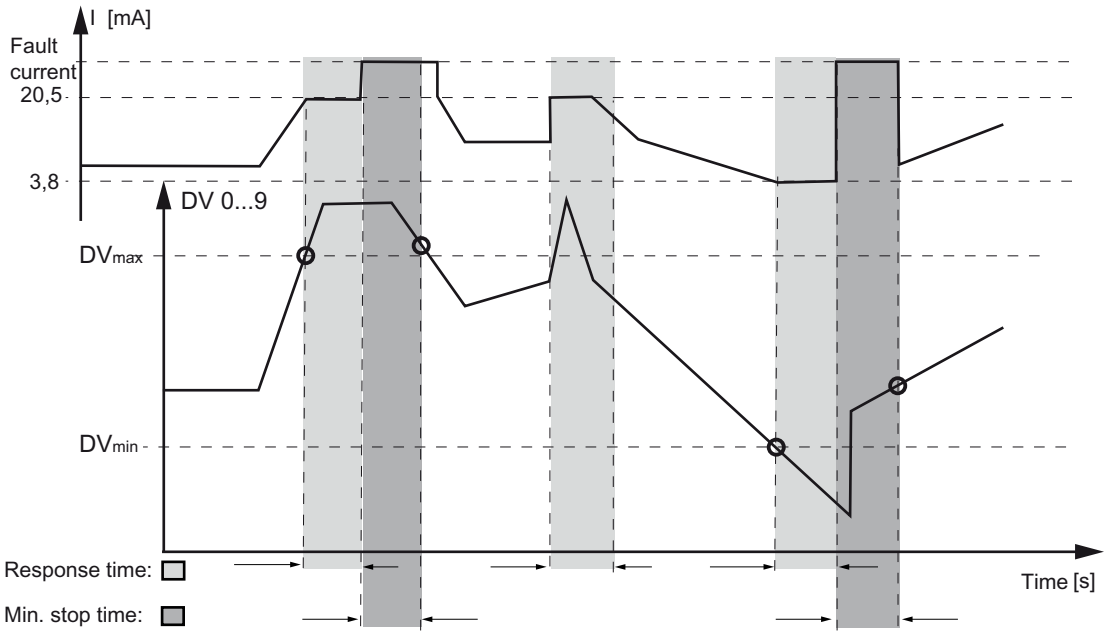

Figure 7-19 Trip levels for the limit monitor

You can count the limit violations for each limit monitor by activating an event counter that provides separate, cumulative totals of upper and lower limit violations. A diagnostic warning and / or a diagnostic interrupt can be issued once a certain number of violations is reached, a number which you can also program. You can program the following values for the event counter:

Table 7-6 Parameters of the event counter

Event counter: upper limit	Select here whether a warning or a warning plus an interrupt should be triggered when the comparison value is exceeded.
Event counter: lower limit	Select here whether a warning or a warning plus an interrupt should be triggered when the comparison value is not met.
Comparison value: upper limit	Specify here the number of overflows at which a warning or a warning plus an interrupt should be triggered.
Comparison value: upper limit	Specify here the number of underflows at which a warning or a warning plus an interrupt should be triggered.
Limit monitoring, warning/interrupt: upper limit	Select whether a warning or a warning plus an interrupt should be triggered when the event counter upper limit is violated.
Limit monitoring, warning/interrupt: lower limit	Select whether a warning or a warning plus an interrupt should be triggered when the event counter lower limit is violated.

Reset event counter upper limit	Here you can reset the upper limit counter to zero. A new event is not possible until the counter has been reset.
Reset event counter lower limit	Here you can reset the lower limit counter to zero. A new event is not possible until the counter has been reset.
Warning/interrupt acknowledgement	Here you can acknowledge each warning or interrupt separately.

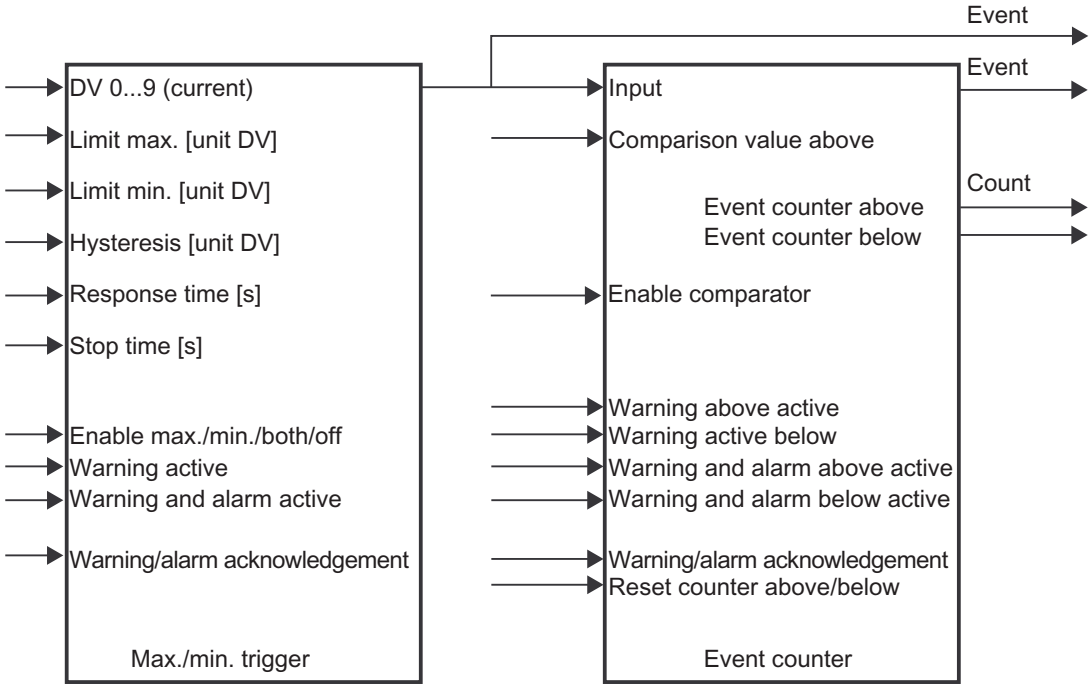

Figure 7-20 Limit monitor and event counter

Messages from the limit monitor and from the event counter can be acknowledged separately. Resetting the event counter starts a new monitoring interval.

Functional safety

8

8.1 General safety instructions

8.1.1 Safety-instrumented system

This chapter describes the functional safety in general and not specific to a device. The devices in the examples are selected as representative examples. The device-specific information follows in the next chapter.

Description

The combination of transmitter, automation system and final controlling element forms a safety-instrumented system that performs a safety function.

Functional principle of single-channel operation

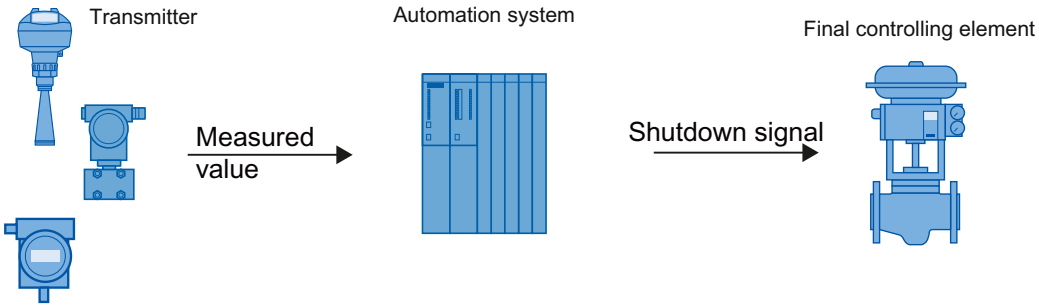

Figure 8-1 Safety-instrumented system for single-channel operation

The transmitter generates a process-related measured value that is transferred to the automation system. The automation system monitors this measured value. If the measured value exceeds the range of the high or low limit, the automation system generates a shutdown signal for the connected final controlling element, which switches the associated valve to the specified safety position.

Function principle of multi-channel operation

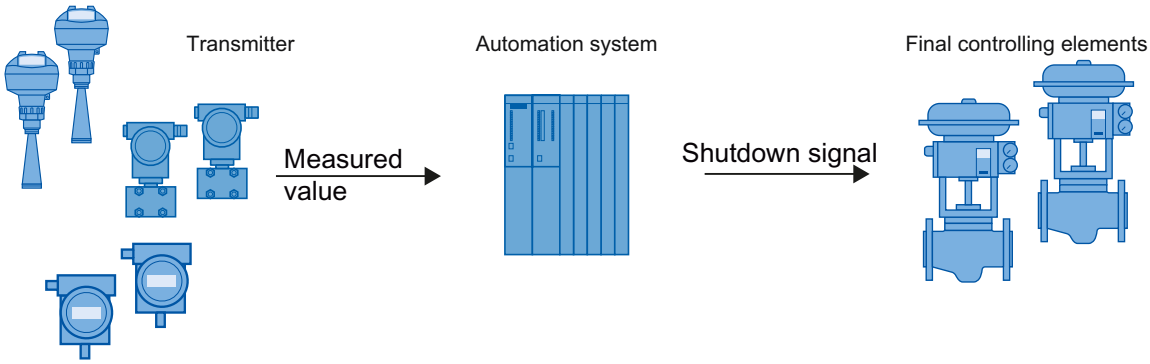

Figure 8-2 Safety-instrumented system (SIL3)

The transmitter generates process-related measured values that are transferred to the automation system. The automation system monitors these measured values. In the event of a fault, the automation system generates shutdown signals for connected final controlling elements that set the associated valve to the defined safety position.

Faults are:

- Violations of the preset high or low limits
- Simultaneously incoming measured values which are different from one another

8.1.2 Safety Integrity Level (SIL)

The international standard IEC 61508 defines four discrete Safety Integrity Levels (SIL) from SIL 1 to SIL 4. Every level corresponds to a probability range for the failure of a safety function.

Description

The following table shows the dependency of the SIL on the "average probability of dangerous failures of a safety function of the entire safety-instrumented system" (PFD_{AVG}) The table deals with "Low demand mode", i.e. the safety function is required a maximum of once per year on average.

Table 8-1 Safety Integrity Level

SIL	Interval
4	$10^{-5} \leq PFD_{AVG} < 10^{-4}$
3	$10^{-4} \leq PFD_{AVG} < 10^{-3}$
2	$10^{-3} \leq PFD_{AVG} < 10^{-2}$
1	$10^{-2} \leq PFD_{AVG} < 10^{-1}$

The "average probability of dangerous failures of the entire safety-instrumented system" (PFD_{AVG}) is normally split between the three sub-systems in the following figure.

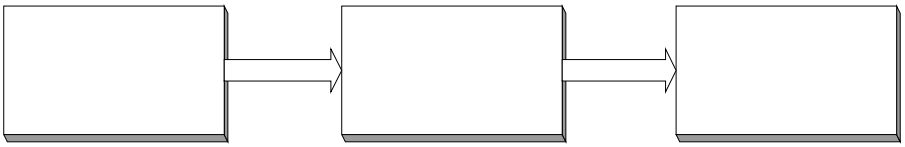

Figure 8-3 PFD distribution

The following table shows the achievable Safety Integrity Level (SIL) for the entire safety-instrumented system for type A/B subsystems depending on the safe failure fraction (SFF) and the hardware fault tolerance (HFT).

- Type A sub-systems include analog transmitters and shut-off valves **without** complex components, e.g. microprocessors (see also IEC 61508, Section 2).
- Type B subsystems include analog transmitters and shut-off valves **with** complex components, e.g. microprocessors (also see IEC 61508, Section 2).

SFF	HFT for type A sub-system			HFT for type B sub-system		
	0	1	2	0	1 (0) [1]	2 (1) [1]
< 60 %	SIL 1	SIL 2	SIL 3	Not permitted	SIL 1	SIL 2
60 to 90 %	SIL 2	SIL 3	SIL 4	SIL 1	SIL 2	SIL 3
90 to 99 %	SIL 3	SIL 4	SIL 4	SIL 2	SIL 3	SIL 4
> 99 %	SIL 3	SIL 4	SIL 4	SIL 3	SIL 4	SIL 4

[1] Operational reliability in accordance with IEC 61511-1, Section 11.4.4

Operational reliability

According to IEC 61511-1, Section 11.4.4, the hardware fault tolerance (HFT) can be reduced by one (values in brackets) for transmitters and final controlling elements with complex components if the following conditions apply to the device:

- The device is proven in operation.
- The user can configure only the process-related parameters, e.g. control range, signal direction in case of a fault, limiting values, etc.
- The configuration level of the firmware is blocked against unauthorized operation.
- The function requires SIL of less than 4.

8.2 Device-specific safety information for single-channel operation (SIL 2)

8.2.1 Safety function

Safety function for pressure transmitters

The safety function of SITRANS P refers to the measurement of pressures. An additional safety accuracy of 2% of the measuring range (complete span) must be added to the application-specific measuring error for an output current of 4 to 20 mA.

Total tolerance (safety function) = ± [application-specific measuring error + 2% safety accuracy].

Pressure transmitter safety accuracy: the maximum effect of an uncritical individual error on the measured value.

The diagnostics function will respond within 4 seconds in the worst-case scenario.

Note

Use of remote seals

If remote seals are used, the application-specific measurement error is the product of the transmitter and remote seal measurement errors.

⚠ WARNING

Disregarding conditions for fulfilling the safety function

Disregard can result in a malfunction of the process plant or application, e.g. process pressure too high, maximum level exceeded.

The binding settings and conditions are listed in the chapters "Settings (Page 140)" and "Safety characteristics (Page 142)".

These conditions must be strictly observed in order to fulfill the safety function.

8.2.2 Settings

The following settings must be adhered to after installing and commissioning as per the Operating Instructions:

Operation/configuration

While operating/configuring, ensure that the technical data of the pressure transmitter are adhered to in their respective version.

Checking the safety function

Note

You should check the safety function while the device is mounted, if possible. If this is not possible, you can also check the safety function when the device is not mounted. Make sure that the transmitter is mounted in the same position for testing as it is in in the system.

Note

If the transmitter is locked in Mode 10, deactivate the lock to check the safety function.

We recommend that:

- You check the status for warnings and alarms.
- You check the measurement value limits.
- Simulate various currents and the minimum and maximum fault currents.
- Check the measuring accuracy, which must be within the range of the application-specific measuring error for the safety function.
  - Set the measured value display to a unit of pressure in Mode 13.
  - Check the zero point, e.g. in a pressureless state, for gauge and differential pressure.
  - Check the zero point for absolute pressure, e.g. by applying a defined pressure.
  - Check the upper limit of the measuring range (URL) and the upper limit of the span set (URV) for gauge, absolute and differential pressure by applying a defined pressure.
  - Reset the measured value display to the required value in Mode 13.
- Check the triggering of the safety function.

Protection against configuration changes

After parameterizing/commissioning:

1. Set the lock mode in Mode 10 to write protection "L".
   Operation via keys and HART communication is blocked.
2. Protect the keys from unintended change in the parameters, e.g. by lead-sealing.

8.2.3 Requirements

Requirements

Functional safety has the following requirements:

- Only one DS III device is required for single-channel operation in accordance with SIL 2.
- Functional safety up to SIL 2 in accordance with IEC 61508/IEC 61511-1. The firmware version is listed in the "SIL Declaration of Conformity".

- Explosion protection for corresponding versions
- Electromagnetic compatibility in compliance with EN 61326

8.2.4 Behavior in case of faults

Repairs

Defective devices should be sent in to the repair department with details of the fault and the cause. When ordering replacement devices, please specify the serial number of the original device. You will find the serial number on the nameplate.

The address of the responsible SIEMENS repair center, contacts, spare parts lists, etc. can be found on the Internet.

8.2.5 Maintenance/Checking

Interval

We recommend that the functioning of the pressure transmitters be checked at regular intervals of one year.

Checking the safety function

Check the safety function as detailed in the chapter Settings (Page 140).

Checking safety

You should regularly check the safety function of the entire safety circuit in accordance with IEC 61508/61511. The testing intervals are determined in calculations for each individual safety circuit in a system (PFD_{AVG}).

Electronics and measuring cell

The safety function of the transmitter is ensured only if you use the electronics, measuring cell, display and connection board delivered by the factory. These components cannot be replaced.

8.2.6 Safety characteristics

The safety characteristics necessary for using the system are listed in the "SIL declaration of conformity". These values apply under the following conditions:

- The SITRANS P pressure transmitter is only used in applications with a low demand for the safety function (low demand mode).
- Communication with the HART protocol is used only for the following:
  - Device configuration
  - Reading diagnostics values
  - However, it is not used for operations critical to safety. In particular, the simulation function must not be activated in safety-related operation.
- The safety-related parameters/settings have been entered by local operation or HART communication before commencing safety-related operation. They are checked on the local display.
  (see "Settings" section)
- The safety function test has been concluded successfully.
- The transmitter is blocked against unwanted and unauthorized changes/operation.
- The current signal of 4 to 20 mA of the transmitter is evaluated by a safe system.
- Fault rates are calculated on the basis of a Mean Time To Repair (MTTR) of eight hours (order option C20) or 72 hours (order option C23).

See also

Settings (Page 140)

8.3 Device-specific safety information for redundant operation (SIL 3)

8.3.1 Safety function

Safety function for pressure transmitters

The safety function of SITRANS P refers to the measurement of pressures. An additional safety allowance of 2% of the measuring range (complete span) must be added to the application-specific measuring error for an output current of 4 to 20 mA.

Total tolerance (safety function) = ± [application-specific measuring error + 2% safety allowance].

Pressure transmitter safety allowance: the maximum effect of an uncritical individual error on the measured value.

The diagnostics function will respond within 4 seconds in the worst-case scenario.

Note

Use of remote seals

If remote seals are used, the application-specific measurement error is the product of the transmitter and remote seal measurement errors.

WARNING

Disregarding conditions for fulfilling the safety function

Disregard can result in a malfunction of the process plant or application, e.g. process pressure too high, maximum level exceeded.

The binding settings and conditions are listed in the chapters "Settings (Page 145)" and "Safety characteristics (Page 147)".

These conditions must be strictly observed in order to fulfill the safety function.

8.3.2 Requirements

Requirements

Functional safety has the following requirements:

- Two DS III devices are required for redundant operation in accordance with SIL 3. Operation with one DS III is not permissible.
- Functional safety up to SIL 3 in accordance with IEC 61508/IEC 61511-1. The firmware version is listed in the "SIL Declaration of Conformity".
- Explosion protection for corresponding versions
- Electromagnetic compatibility in compliance with EN 61326

Description

The sensor, logic unit/control system and final controlling element combine to form a safety-instrumented system, which executes a safety function. The focal point of this description is the sensor. Please refer to the corresponding standards for the requirements placed on the PLC and final controlling element.

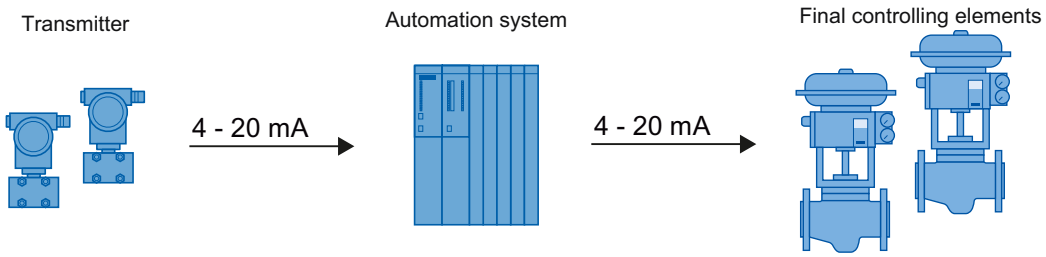

Figure 8-4 Safety-instrumented system in redundant operation

The PLC program must monitor the measured values of both DS III devices. As soon as the measured values differ by e.g. 2% or more, the system must be brought into the safe state and the fault must be located.

Note

Switching-off of system at high monitoring accuracy

The two transmitters are connected to the process at different positions. Actual differences in pressure ≥ the total tolerance (safety function) can occur when the process is started up or if there are other pressure variations. A difference in pressure ≥ the total tolerance (safety function) will shut down the system.

- Match the monitoring accuracy of the PLC to the process.
- Mount the two transmitters exposed to equal conditions.

8.3.3 Settings

Observe the following settings following installing and commissioning as per the Operating Instructions:

Operation/configuration

While operating/configuring, ensure that the technical data of the pressure transmitters in their respective versions is adhered to.

Checking the safety function

Note

You should check the safety function while the device is mounted, if possible. If this is not possible, you can also check the safety function when the device is not mounted. Make sure that the transmitter is mounted in the same position for testing as it is in in the system.

Note

If the transmitter is locked in Mode 10, deactivate the lock to check the safety function.

We recommend for both pressure transmitters:

- You check the status for warnings and alarms.
- You check the measurement value limits.
- Simulate various currents and the minimum and maximum fault currents.

- Check the measuring accuracy, which must be within the range of the application-specific measuring error for the safety function.
  - Set the measured value display to a unit of pressure in Mode 13.
  - Check the zero point, e.g. in a pressureless state, for gauge and differential pressure.
  - Check the zero point for absolute pressure, e.g. by applying a defined pressure.
  - Check the upper limit of the measuring range (URL) and the upper limit of the span set (URV) for gauge, absolute and differential pressure by applying a defined pressure.
  - Reset the measured value display to the required value in Mode 13.
- Check the triggering of the safety function.

Protection against configuration changes

After parameterizing/commissioning:

1. Set the lock mode in Mode 10 to write protection "L".
   Operation via keys and HART communication is blocked.
2. Protect the keys from unintended change in the parameters, e.g. by lead-sealing.

8.3.4 Behavior in case of faults

Repairs

Defective devices should be sent in to the repair department with details of the fault and the cause. When ordering replacement devices, please specify the serial number of the original device. You will find the serial number on the nameplate.

The address of the responsible SIEMENS repair center, contacts, spare parts lists, etc. can be found on the Internet.

8.3.5 Maintenance/Checking

Interval

We recommend that the functioning of the pressure transmitters be checked at regular intervals of one year.

Checking the safety function

Check the safety function as detailed in the chapter Settings (Page 145).

Checking safety

You should regularly check the safety function of the entire safety circuit in accordance with IEC 61508/61511. The testing intervals are determined in calculations for each individual safety circuit in a system (PFD_{AVG}).

Electronics and measuring cell

The safety function of the transmitter is ensured only if you use the electronics, measuring cell, display and connection board delivered by the factory. These components cannot be replaced.

8.3.6 Safety characteristics

The safety characteristics necessary for using the system are listed in the "SIL Declaration of Conformity". These values apply under the following conditions:

- Two DS III devices are required for redundant operation in accordance with SIL 3. The PLC program must monitor the measured values of both DS III devices. The system must be put into safe mode as soon as the measured values differ too greatly.
- SITRANS P pressure transmitters are only used in applications with a low demand for the safety function (low demand mode).
- Communication with the HART protocol is used only for the following:
  - Device configuration
  - Reading diagnostics values
  - However, it is not used for operations critical to safety. In particular, the simulation function must not be activated in safety-related operation.
- The safety-related parameters/settings have been entered by local operation or HART communication before commencing safety-related operation. They are checked on the local display.
  (see the "Settings" section)
- The safety function test has been concluded successfully.
- The transmitters are protected from accidental and unauthorized changes/operation.
- The transmitter current signal of 4 to 20 mA is evaluated by a safe system.
- Fault rates are calculated on the basis of a mean time to recovery (MTTR) of 8 hours (order option C20) or 72 hours (order option C23).

8.4 Add-on parts

This chapter contains safety information for add-on parts.

⚠ WARNING

Add-on parts unsuitable for process medium

Danger of injury or damage to device.

If the process medium is not suitable for the parts which come into contact with it, hot and/or toxic or corrosive substances could be released.

- Refer to the information in the chapter "Technical data (Page 169)".
- Make sure that the add-on parts are suitable for the corresponding application with regard to materials, temperature of process medium, and pressure.

8.4.1 Checking a device with add-on pneumatic block

Procedure

1. Check the connection between the transmitter and pneumatic block and between the pneumatic block and pipelines in the plant for leaks.
2. Observe the safety information and specifications in chapter Installing/mounting (Page 33).
3. Check the following valves for correct positioning and absence of leaks:
   - Process valves
   - Equalizer valve
   - Vent valves
   - Blowout valves or plugs
4. Observe the safety information and specifications in chapter Commissioning (Page 149).

8.4.2 Checking a device with add-on remote seal

Procedure

1. Check the connection between the transmitter and remote seal and between the remote seal and the plant for leaks.
2. Observe the safety information and specifications in chapter Installing/mounting (Page 33).

Commissioning 9

9.1 Basic safety instructions

⚠ DANGER

Toxic gases and liquids

Danger of poisoning when the device is vented.

If toxic process media are measured, toxic gases and liquids can be released when the device is vented.

- Before venting ensure that there are no toxic gases and liquids in the device. Take the appropriate safety measures.

⚠ WARNING

Improper commissioning in hazardous areas

Device failure or danger of explosion in hazardous areas.

- Do not commission the device until it has been mounted completely and connected in accordance with the information in Chapter "Technical data (Page 169)".
- Before commissioning take the effect on other devices in the system into account.

⚠ WARNING

Opening device in energized state

Danger of explosion in areas subject to explosion hazard.

- Only open the device in a de-energized state.
- Check prior to commissioning that the cover, cover locks, and cable inlets are assembled in accordance with the directives.

Exception: Devices having the type of protection "Intrinsic safety Ex i" may also be opened in energized state in hazardous areas.

Note

Hot surfaces

Hot process medium and high ambient temperatures lead to hot surfaces which can cause burns.

- Take corresponding protective measures, for example wear protective gloves.

9.2 Introduction to commissioning

Following commissioning, the transmitter is immediately ready for use.

To obtain stable measured values, the transmitter needs to be allowed to warm up for five minutes or so after the power supply is switched on.

The operating data must correspond to the values specified on the nameplate. If you switch on the auxiliary power, the transmitter will operate.

The following commissioning cases are typical examples. Configurations different from those listed here may be meaningful depending on the system configuration.

9.3 gauge pressure, absolute pressure from the differential pressure series and absolute pressure from the gauge pressure series

9.3.1 Commissioning for gases

Usual arrangement

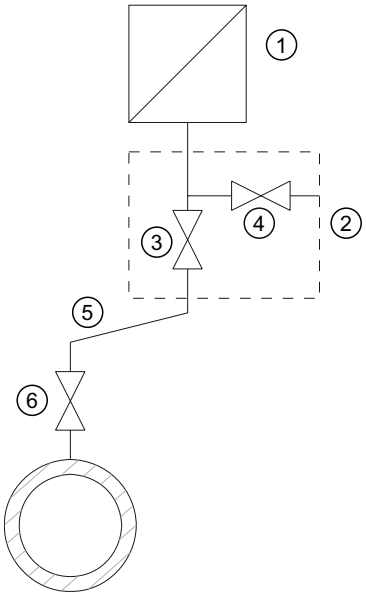

Measuring gases above the pressure tapping point

Special arrangement

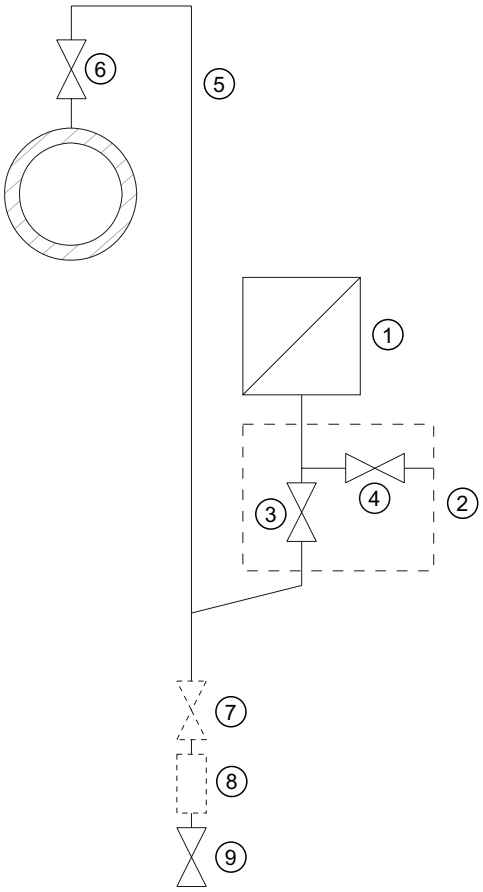

Measuring gases below the pressure tapping point

①	Pressure transmitter	⑤	Pressure line
②	Shut-off module	⑥	Shut-off valve
③	Shut-off valve to process	⑦	Shut-off valve (optional)
④	Shut-off valve for test connection or for bleed screw	⑧	Condensate vessel (optional)
		⑨	Drain valve

Condition

All valves are closed.

Procedure

To commission the transmitter for gases, proceed as follows:

1. Open the shut-off valve for the test connection ④.
2. Via the test connection of the shut-off fitting ②, apply the pressure corresponding to the start of scale value to the pressure transmitter ①.
3. Check the start of scale value.
4. If the start of scale value differs from the value desired, correct it.
5. Close the shut-off valve for the test connection ④.
6. Open the shut-off valve ⑥ at the pressure tapping point.
7. Open the shut-off valve for the process ③.

9.3.2 Commissioning with steam or liquid

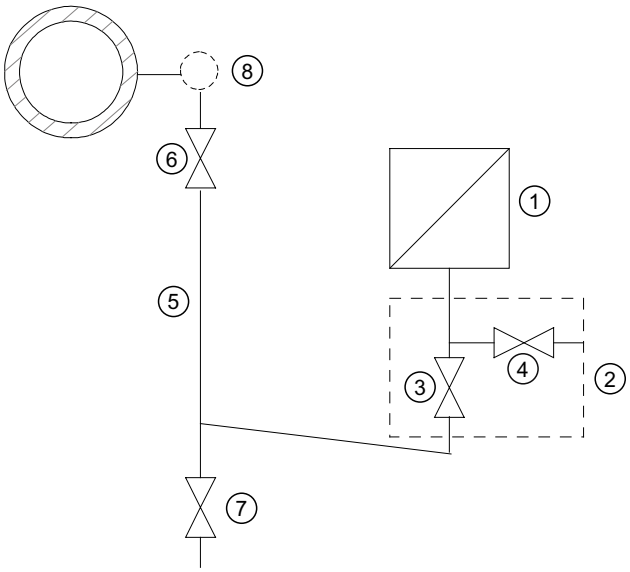

① Pressure transmitter
② Shut-off fitting
③ Shut-off valve to process
④ Shut-off valve for test connection or for bleed screw
⑤ Pressure line
⑥ Shut-off valve
⑦ Blow-out valve
⑧ Compensation vessel (steam only)

Figure 9-1 Measuring steam

Requirement

All valves are closed.

Procedure

To commission the transmitter for steam or liquid, proceed as follows:

1. Open the shut-off valve for the test connection ④.
2. Via the test connection of the shut-off module ②, apply the pressure corresponding to the start of scale value to the pressure transmitter ①.
3. Check the start of scale value.
4. If the start of scale value differs from the value desired, correct it.
5. Close the shut-off valve for the test connection ④.
6. Open the shut-off valve ⑥ at the pressure tapping point.
7. Open the shut-off valve for the process ③.

9.4 Differential pressure and flow rate

9.4.1 Safety notes for commissioning with differential pressure and flow rate

⚠ WARNING

Incorrect or improper operation

If the lock screws are missing or are not sufficiently tight, and/or if the valves are operated incorrectly or improperly, it could lead to serious physical injuries or considerable damage to property.

Measure

- Take care that the locking screw and/or the vent valve are screwed in and tightened.
- Ensure that the valves are operated correctly and properly.

⚠ WARNING

Hot mediums

In the case of hot mediums, the individual operational steps should be carried out one after the other. Otherwise, it could lead to excessive heating, thus causing damage to the valves and the transmitter.

9.4.2 Commissioning in gaseous environments

Usual arrangement

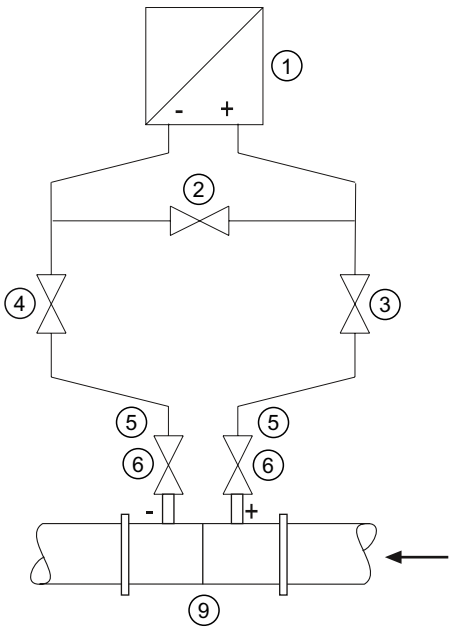

Special arrangement

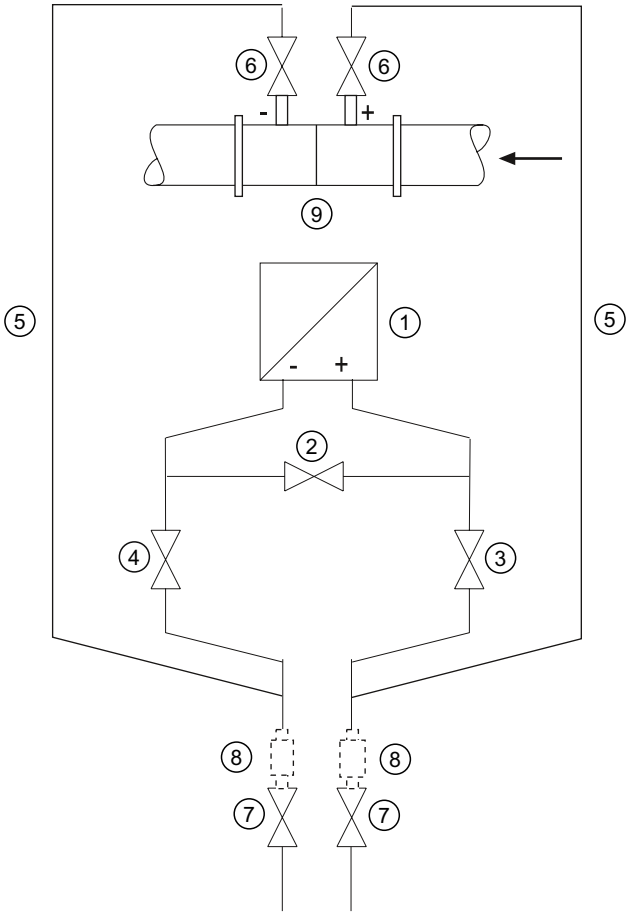

① Pressure transmitter
② Stabilizing valve
③, ④ Differential pressure valves
⑤ Differential pressure lines
⑥ Shut-off valves
⑦ Drain valves
⑧ Condensate vessels (optional)
⑨ Differential pressure transducer

Transmitter **above** the differential pressure transducer

Transmitter **below** the differential pressure transducer

Condition

All shut-off valves are closed.

Procedure

To commission the transmitter for gases, proceed as follows:

1. Open both the shut-off valves ⑥ at the pressure tapping point.
2. Open the stabilizing valve ②.

3. Open the differential pressure valve (③ or ④).
4. Check and if required correct the zero point when the start of scale value is 0 mbar (4 mA).
5. Close the stabilizing valve ②.
6. Open the other differential pressure valve (③ or ④).

9.4.3 Commissioning for liquids

Usual arrangement

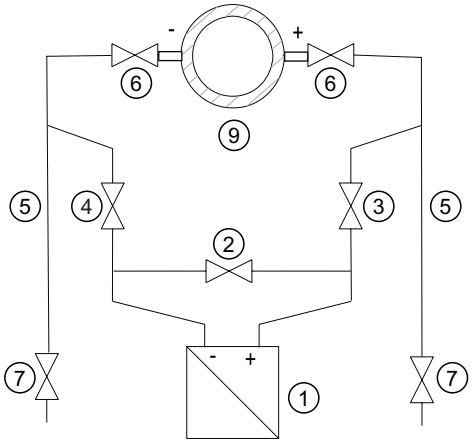

Special arrangement

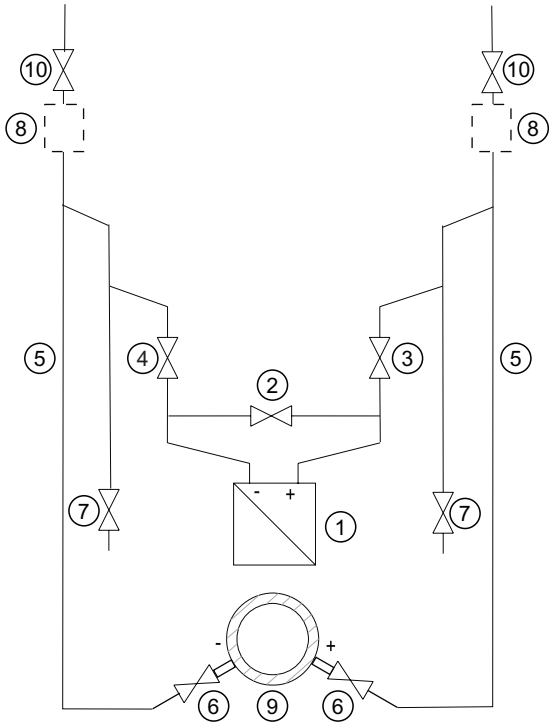

① Pressure transmitter
② Equalizer valve
③, ④ Differential pressure valves
⑤ Differential pressure lines
⑥ Shut-off valves
⑦ Drain valves
⑧ Gas collector vessels (optional)
⑨ Differential pressure transducer
⑩ Vent valves

Transmitter **below** the differential pressure transducer

Transmitter **above** the differential pressure transducer

Condition

All valves are closed.

Procedure

⚠ WARNING
The transmitter should not be depressurized if toxic substances are being used.

To commission the transmitter with liquids, proceed as follows:

1. Open both the shut-off valves ⑥ at the pressure tapping point.
2. Open the equalizer valve ②.
3. With **transmitters below the differential pressure transducer**, open both the blowout valves one after the other ⑦ until the air-free liquid emerges.
   In the case of a **transmitter above the differential pressure transducer**, open both the vent valves one after the other ⑩ until the liquid emerges.
4. Close both drain valves ⑦ or vent valves ⑩.
5. Open the differential pressure valve ③ and the vent valve on the positive side of the transmitter ① slightly, until fluid escapes without bubbles.
6. Close the vent valve.
7. Open the vent valve on the negative side of the transmitter ① slightly, until fluid escapes without bubbles.
8. Close the differential pressure valve ③.
9. Open the differential pressure valve ④ until the liquid emerges and then close it.
10. Close the vent valve on the negative side of the transmitter ①.
11. Open the differential pressure valve ③ by rotating it in half a turn.
12. Check and if required adjust the zero point (4 mA) if the start-of-scale value is 0 bar.
13. Close the equalizer valve ②.
14. Open the differential pressure valves (③ and ④) completely.

9.4.4 Commissioning with vapor

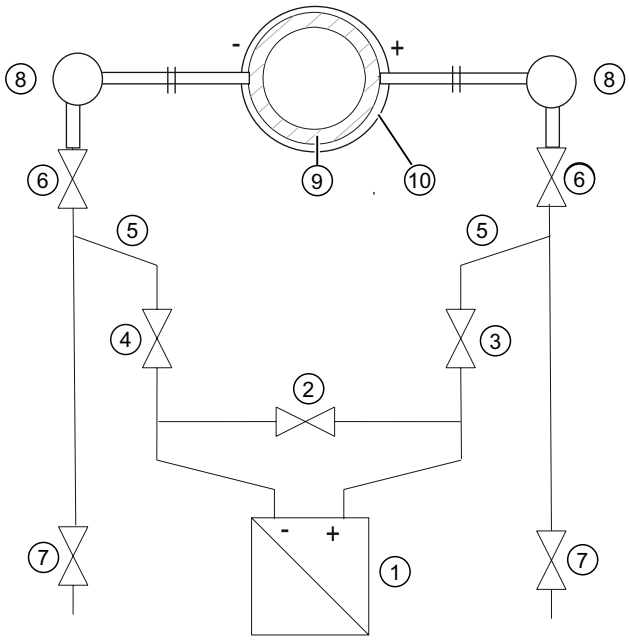

①	Pressure transmitter	⑦	Drain valves
②	Stabilizing valve	⑧	Condensate pots
③, ④	Differential pressure valves	⑨	Differential pressure transducer/Orifice plate
⑤	Differential pressure lines	⑩	Insulation
⑥	Shut-off valves		

Figure 9-2 Measuring steam

Condition

All valves are closed.

Procedure

NOTICE
The measuring result is error-free only if the differential pressure lines ⑤ have equally high condensate columns with the same temperature. The zero calibration must be repeated if required if these conditions are fulfilled. If the shut-off valves ⑥ and the differential pressure valves ③ are open at the same time and the stabilizing valve ② is opened, there is a possibility of the transmitter ① being damaged due to the streaming vapor.

To commission the transmitter for vapor, proceed as follows:

1. Open both the shut-off valves ⑥ at the pressure tapping point.
2. Open the stabilizing valve ②.

3. Wait until the steam in the differential pressure lines ⑤ and in the equalizing vessels ⑧ has condensed.
4. Open the differential pressure valve ③ and the vent valve on the positive side of the transmitter ① slightly, until condensate escapes without bubbles.
5. Close the vent valve.
6. Open the vent valve on the negative side of the transmitter ① slightly, until condensate escapes without bubbles.
7. Close the differential pressure valve ③.
8. Open the differential pressure valve ④ slightly, until condensate escapes without bubbles, then close it.
9. Close the vent valve on the negative side ①.
10. Open the differential pressure valve ③ by rotating it in half a turn.
11. Check and if required correct the zero point in case of start of scale value 0 bar (4 mA).
12. Close the stabilizing valve ②.
13. Fully open the differential pressure valves ③ and ④.
14. You can briefly open the drain valves ⑦ to clean the line. Close before steam starts to leak.

Service and maintenance 10

10.1 Basic safety instructions

WARNING

Impermissible repair of explosion protected devices

Danger of explosion in areas subject to explosion hazard.

- Repair must be carried out by Siemens authorized personnel only.

WARNING

Impermissible accessories and spare parts

Danger of explosion in areas subject to explosion hazard.

- Only use original accessories or original spare parts.
- Observe all relevant installation and safety instructions described in the instructions for the device or enclosed with the accessory or spare part.

WARNING

Use of incorrect device parts in potentially explosive environments

Devices and their associated device parts are either approved for different types of protection or they do not have explosion protection. There is a danger of explosion if device parts (such as covers) are used for devices with explosion protection that are not expressly suited for this type of protection. If you do not adhere to these guidelines, the test certificates and the manufacturer warranty will become null and void.

- Use only device parts that have been approved for the respective type of protection in the potentially explosive environment. Covers that are not suited for the "explosion-proof" type of protection are identified as such by a notice label attached to the inside of the cover with "Not Ex d Not SIL".
- Do not swap device parts unless the manufacturer specifically ensures compatibility of these parts.

⚠ WARNING

Maintenance during continued operation in a hazardous area

There is a danger of explosion when carrying out repairs and maintenance on the device in a hazardous area.

- Isolate the device from power.

- or -

- Ensure that the atmosphere is explosion-free (hot work permit).

⚠ WARNING

Commissioning and operation with pending error

If an error message appears, correct operation in the process is no longer guaranteed.

- Check the gravity of the error
- Correct the error
- If the error still exists:
  - Take the device out of operation.
  - Prevent renewed commissioning.

See also

Display in case of a fault (Page 163)

⚠ WARNING

Hot, toxic or corrosive process media

Danger of injury during maintenance work.

When working on the process connection, hot, toxic or corrosive process media could be released.

- As long as the device is under pressure, do not loosen process connections and do not remove any parts that are pressurized.
- Before opening or removing the device ensure that process media cannot be released.

⚠ WARNING

Improper connection after maintenance

Danger of explosion in areas subject to explosion hazard.

- Connect the device correctly after maintenance.
- Close the device after maintenance work.

Refer to Chapter "Connecting (Page 57)".

⚠ WARNING

Use of a computer in a hazardous area

If the interface to the computer is used in the hazardous area, there is a danger of explosion.

- Ensure that the atmosphere is explosion-free (hot work permit).

⚠ CAUTION

Releasing key lock

Improper modification of parameters could influence process safety.

- Make sure that only authorized personnel may cancel the key locking of devices for safety-related applications.

⚠ CAUTION

Hot surfaces

Danger of burns during maintenance work on parts having surface temperatures exceeding 70 °C (158 °F).

- Take corresponding protective measures, for example by wearing protective gloves.
- After carrying out maintenance, remount touch protection measures.

⚠ CAUTION

Hazardous voltage with open device in versions with 4-conductor extension

Danger of electrocution when the enclosure is opened or enclosure parts are removed.

- Disconnect the device before you open the enclosure or remove enclosure parts.
- Observe the special precautionary measures if maintenance is required while the device is live. Have maintenance work carried out by qualified personnel.

NOTICE

Electrostatic-sensitive devices

The device contains electrostatic-sensitive devices (ESD). ESD can be destroyed by voltages far too low to be detected by humans. These voltages can occur if you simply touch a component part or the electrical connections of a module without being electrostatically discharged. The damage to a module caused by overvoltage cannot normally be detected immediately; it only becomes apparent after a longer period of operating time has elapsed.

Protective measures against the discharge of static electricity:

- Make sure that no power is applied.
- Before working with modules, make sure that you discharge static from your body, for example by touching a grounded object.
- Devices and tools used must be free of static charge.
- Hold modules only by their edges.
- Do not touch connector pins or conductor tracks on a module with the ESD notice.

10.2 Maintenance and repair work

10.2.1 Defining the maintenance interval

⚠ WARNING

No maintenance interval has been defined

Device failure, device damage, and risk of injury.

- Define a maintenance interval for regular tests in line with device use and empirical values.
- The maintenance interval will vary from site to site depending on corrosion resistance.

10.2.2 Checking the gaskets

Inspect the seals at regular intervals

Note
Incorrect seal changes

Incorrect measured values will be displayed. Changing the seals in a process flange of a differential pressure measuring cell can alter the start-of-scale value.

- Changing seals in devices with differential pressure measuring cells may only be carried out by personnel authorized by Siemens.

Note
Using the wrong seals

Using the wrong seals with flush-mounted process connections can cause measuring errors and/or damage the diaphragm.

- Always use seals which comply with the process connection standards or are recommended by Siemens.

1. Clean the enclosure and seals.
2. Check the enclosure and seals for cracks and damage.
3. Grease the seals if necessary.
   - or -
4. Replace the seals.

10.2.3 Display in case of a fault

Check the start of scale value of the device from time to time.

Differentiate between the following in case of a fault:

- The internal self test has detected a fault, e.g. sensor break, hardware fault/Firmware fault.
  Displays:
  - Display: "ERROR" display and ticker with an error text
  - Analog output: Factory setting: Failure current 3.6 or 22.8 mA

  Or depending on the parameterization
  - HART: detailed error breakdown for display in the HART communicator or SIMATIC PDM
- Grave hardware faults, the processor is not functioning.
  Displays:
  - Display: no defined display
  - Analog output: failure current < 3.6 mA

In case of defect, you can replace the electronic unit by following the warning notes and the provided instruction manual.

See also

Error display (Page 69)

10.2.4 Changing the measuring cell and application electronics

Related

Each of the individual components "Measuring cell" and "Electronics" has a non-volatile memory (EEPROM).

Measuring cell data (e.g.: measuring range, measuring cell material, oil filling) and application-specific electronics data (e.g.: downscaling, additional electrical damping) are located in the measuring cell EEPROM. Application-specific data are lost when the measuring cell is changed. Application-specific data are not lost when the application electronics are changed.

You can backup application-specific data before changing the measuring cell and reload them afterwards. Use an input device which supports the HART protocol. (e.g. HART communicator, PC with HART modem and HART software or PC with HART modem and PDM software). Factory settings will be used if application-specific data are not backed up before the measuring cell is changed.

Technical developments enable advanced functions to be implemented in the firmware of the measuring cell or application electronics. Further technical developments are indicated by modified firmware statuses (FW). The firmware status does not affect whether the modules can be replaced. However, the scope of functions is limited to the function of existing components.

If a combination of certain firmware versions of measuring cell and application electronics is not possible for technical reasons, the device will identify this problem and go into "Fault current" mode. This information is provided via the HART interface.

10.3 Cleaning

⚠ WARNING

Dust layers above 5 mm

Danger of explosion in hazardous areas. Device may overheat du to dust build up.

- Remove any dust layers in excess of 5 mm.

NOTICE
Penetration of moisture into the device
Device damage.
• Make sure when carrying out cleaning and maintenance work that no moisture penetrates the inside of the device.

Cleaning the enclosure

- Clean the outside of the enclosure and the display window using a cloth moistened with water or a mild detergent.
- Do not use aggressive cleaning agents or solvents. Plastic components or painted surfaces could be damaged.

⚠ WARNING
Electrostatic charge
Danger of explosion in hazardous areas if electrostatic charges develop e.g. when cleaning plastic enclosures with a dry cloth.
• Prevent electrostatic charging in hazardous areas.

10.3.1 Servicing the remote seal measuring system

The remote seal measuring system usually does not need servicing.

If the mediums are contaminated, viscous or crystallized, it could be necessary to clean the diaphragm from time to time. Use only a soft brush and a suitable solvent to remove the deposits from the diaphragm. Do not use corrosive cleaning agents. Prevent the diaphragm from getting damaged due to sharp-edged tools.

NOTICE
Improper cleaning of diaphragm
Device damage. The diaphragm can be damaged.
• Do not use sharp or hard objects to clean the diaphragm.

10.4 Return procedure

Enclose the bill of lading, return document and decontamination certificate in a clear plastic pouch and attach it firmly to the outside of the packaging.

Required forms

- Delivery note
- Return goods delivery note (http://www.siemens.com/processinstrumentation/returngoodsnote)
  with the following information:
  - Product (item description)
  - Number of returned devices/replacement parts
  - Reason for returning the item(s)
- Decontamination declaration (http://www.siemens.com/sc/declarationofdecontamination)
  With this declaration you warrant "that the device/replacement part has been carefully cleaned and is free of residues. The device/replacement part does not pose a hazard for humans and the environment."
  If the returned device/replacement part has come into contact with poisonous, corrosive, flammable or water-contaminating substances, you must thoroughly clean and decontaminate the device/replacement part before returning it in order to ensure that all hollow areas are free from hazardous substances. Check the item after it has been cleaned. Any devices/replacement parts returned without a decontamination declaration will be cleaned at your expense before further processing.

The forms can be found on the Internet as well as in the documentation which comes with the device.

10.5 Disposal

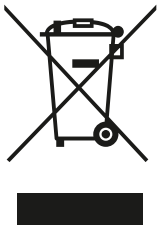

Devices identified by this symbol may not be disposed of in the municipal waste disposal services under observance of the Directive 2002/96/EC on waste electronic and electrical equipment (WEEE).

They can be returned to the supplier within the EC or to a locally approved disposal service. Observe the specific regulations valid in your country.

Note

Special disposal required

The device includes components that require special disposal.

- Dispose of the device properly and environmentally through a local waste disposal contractor.

Technical data

11

11.1 Overview of technical data

Introduction

The following overview of technical data provides you with a quick and easy access to relevant data and characteristic numbers.

Remember that the tables partially contain the data of the three communication types HART, PROFIBUS and Foundation Fieldbus. This data deviates in many cases. Therefore, adhere to the communication type used by you when using the technical data.

Contents of the chapter

- Input point (Page 170)
- Output (Page 177)
- Measuring accuracy (Page 177)
- Operating conditions (Page 183)
- Construction (Page 187)
- Display, keyboard and auxiliary power (Page 191)
- Certificates and approvals (Page 192)
- HART communication (Page 194)

11.2 Input point

Gauge pressure input						
	HART			**PROFIBUS PA or Foundation Fieldbus**		
Measured variable	Gauge pressure					
Span (continuously adjustable) or measuring range, max. operating pressure (in accordance with 97/23/EC Pressure Equipment Directive) and max. test pressure (in accordance with DIN 16086) (max. 120 bar for oxygen measurement)	Measuring span	Maximum operating pressure MAWP (PS)	Maximum permissible test pressure	Measuring range	Maximum permissible operating pressure	Maximum test pressure
	0.01 … 1 bar g (0.15 … 14.5 psi g)	4 bar g (58 psi g)	6 bar g (87 psi g)	1 bar g (14.5 psi g)	4 bar g (58 psi g)	6 bar g (87 psi g)
	0.04 … 4 bar g (0.58 … 58 psi g)	7 bar g (102 psi g)	10 bar g (145 psi g)	4 bar g (58 psi g)	7 bar g (102 psi g)	10 bar g (145 psi g)
	0.16 … 16 bar g (2.3 … 232 psi g)	21 bar g (305 psi g)	32 bar g (464 psi g)	16 bar g (232 psi g)	21 bar g (305 psi g)	32 bar g (464 psi g)
	0.63 … 63 bar g (9.1 … 914 psi g)	67 bar g (972 psi g)	100 bar g (1450 psi g)	63 bar g (914 psi g)	67 bar g (972 psi g)	100 bar g (1450 psi g)
	1.6 … 160 bar g (23 … 2321 psi g)	167 bar g (2422 psi g)	250 bar g (3626 psi g)	160 bar g (2321 psi g)	167 bar g (2422 psi g)	250 bar g (3626 psi g)
	4 … 400 bar g (58 … 5802 psi g)	400 bar g (5802 psi g)	600 bar g (8702 psi g)	400 bar g (5802 psi g)	400 bar g (5802 psi g)	600 bar g (8702 psi g)
	7,0 ... 700 bar g (102 ... 10153 psi g)	800 bar g (11603 psi g)	800 bar g (11603 psi g)	700 bar g (10153 psi g)	800 bar g (11603 psi g)	800 bar g (11603 psi g)
Lower measuring limit						
• Measuring cell with silicon oil filling	30 mbar a (0.44 psi a)					
• Measuring cell with inert liquid	30 mbar a (0.44 psi a)					
Upper measuring limit	100% of max. span (max. 120 bar g (1740 psi g) for oxygen measurement)			100% of max. measuring range (max. 120 bar g (1740 psi g) for oxygen measurement)		
Start-of-scale value	between the measuring limits (continuously adjustable)					

gauge pressure input, with flush mounted diaphragm						
	HART			**PROFIBUS PA or Foundation Fieldbus**		
Measured variable	Gauge pressure					
Measuring span (continuously adjustable) or measuring range, max permissible operating pressure and max. permissible test pressure	Span	Maximum operating pressure MAWP (PS)	Maximum test pressure	Measuring range	Maximum operating pressure	Maximum test pressure
	0.01 … 1 bar g (0.15 … 14.5 psi g)	4 bar g (58 psi g)	6 bar g (87 psi g)	1 bar g (14.5 psi g)	4 bar g (58 psi g)	6 bar g (87 psi g)
	0.04 … 4 bar g (0.58 … 58 psi g)	7 bar g (102 psi g)	10 bar g (145 psi g)	4 bar g (58 psi g)	7 bar g (102 psi g)	10 bar g (145 psi g)
	0.16 … 16 bar g (2.3 … 232 psi g)	21 bar g (305 psi g)	32 bar g (464 psi g)	16 bar g (232 psi g)	21 bar g (305 psi g)	32 bar g (464 psi g)
	0.6 … 63 bar g (9.1 … 914 psi g)	67 bar g (972 psi g)	100 bar g (1450 psi g)	63 bar g (914 psi g)	67 bar g (972 psi g)	100 bar g (1450 psi g)
Lower measuring limit						
• Measuring cell with silicon oil filling	100 mbar a (1.45 psi a)					
• Measuring cell with inert liquid	100 mbar a (1.45 psi a)					
• Measuring cell with neobee	100 mbar a (13.05 psi a)					
Upper measuring limit	100% of maximum measuring span			100 % of the max. measuring range		

Absolute pressure input, with flush-mounted diaphragm						
	HART			**PROFIBUS PA or Foundation Fieldbus**		
Measured variable	Gauge pressure					
Span (continuously adjustable) or measuring range, max. operating pressure and max. test pressure	Span	Maximum operating pressure MAWP (PS)	Maximum test pressure	Measuring range	Maximum operating pressure	Maximum test pressure
	43 … 1300 mbar a (17 ... 525 inH_2O)	2.6 bar a (37.7 psi a)	10 bar a (145 psi a)	1.3 bar a (18.9 psi a)	2.6 bar a (37.7 psi a)	10 bar a (145 psi a)
	160 … 5000 mbar a (2.32 … 72.5 psi a)	10 bar a (145 psi a)	30 bar a (435 psi a)	5 bar a (72.5 psi a)	10 bar a (145 psi a)	30 bar a (435 psi a)
	1 … 30 bar a (14.5 … 435 psi a)	45 bar a (653 psi a)	100 bar a (1450 psi a)	30 bar a (435 psi a)	45 bar a (653 psi a)	100 bar a (1450 psi a)
	Depending on the process connection, the span may differ from these values			Depending on the process connection, the measuring range may differ from these values		

Absolute pressure input, with flush-mounted diaphragm						
	HART			**PROFIBUS PA or Foundation Fieldbus**		
Lower measuring limit	0 bar a (0 psi a)					
Upper measuring limit	100% of maximum span			100 % of max. measuring range		

DS III input with PMC connection						
	HART			**PROFIBUS PA or Foundation Fieldbus**		
Measured variable	Gauge pressure					
Measuring span (continuously adjustable) or measuring range, max permissible operating pressure and max. permissible test pressure	Span	Maximum operating pressure MAWP (PS)	Maximum test pressure	Measuring range	Maximum permissible operating pressure	Maximum permissible test pressure
	0.01 … 1 bar g (0.15 … 14.5 psi g) [1]	4 bar g (58 psi g)	6 bar g (87 psi g)	1 bar g (14.5 psi g) [1]	4 bar g (58 psi g)	6 bar g (87 psi g)
	0.04 … 4 bar g (0.58 … 58 psi g)	7 bar g (102 psi g)	10 bar g (145 psi g)	4 bar g (58 psi g)	7 bar g (102 psi g)	10 bar g (145 psi g)
	0.16 … 16 bar g (2.3 … 232 psi g)	21 bar g (305 psi g)	32 bar g (464 psi g)	16 bar g (232 psi g)	21 bar g (305 psi g)	32 bar g (464 psi g)
Lower measuring limit						
• Measuring cell with silicon oil filling [2]	100 mbar a (1.45 psi a)					
• Measuring cell with inert liquid [2]	100 mbar a (1.45 psi a)					
• Measuring cell with neobee [2]	100 mbar a (13.05 psi a)					
Upper measuring limit	100% of maximum span			100 % of max. measuring range		

[1] 1 bar g (14.5 psi g) only in PMC-Style Standard, not in Minibolt

[2] For PMC-Style Minibolt, the measuring span should not be less than 500 mbar

Absolute pressure input (from the gauge pressure series)						
	HART			**PROFIBUS PA or Foundation Fieldbus**		
Measured variable	Absolute pressure					
Measuring span (continuously adjustable) or measuring range, max permissible operating pressure (as per 97/23/EC pressure device guideline) and max. permissible test pressure (as per DIN 16086)	Span	Maximum operating pressure MAWP (PS)	Maximum test pressure	Measuring range	Maximum operating pressure	Maximum test pressure
	8.3 … 250 mbar a (3 ... 100 inH_2O)	1.5 bar a (21.8 psi a)	6 bar a (87 psi a)	250 mbar a (100 inH_2O)	1.5 bar a (21.8 psi a)	6 bar a (87 psi a)
	43 … 1300 mbar a (17 ... 525 inH_2O)	2.6 bar a (37.7 psi a)	10 bar a (145 psi a)	1.3 bar a (18.9 psi a)	2.6 bar a (37.7 psi a)	10 bar a (145 psi a)
	160 … 5000 mbar a (2.32 … 72.5 psi a)	10 bar a (145 psi a)	30 bar a (435 psi a)	5 bar a (72.5 psi a)	10 bar a (145 psi a)	30 bar a (435 psi a)
	1 … 30 bar a (14.5 … 435 psi a)	45 bar a (653 psi a)	100 bar a (1450 psi a)	30 bar a (435 psi a)	45 bar a (653 psi a)	100 bar a (1450 psi a)
Lower measuring limit						
• Measuring cell with silicon oil filling	0 mbar a (0 psi a)					
• Measuring cell with inert liquid						
for process temperature -20°C < ϑ ≤ 60°C (-4°F < ϑ ≤ +140°F)	30 mbar a (0.44 psi a)					
for process temperature 60°C < ϑ ≤ 100°C (max. 85°C for measuring cell 30 bar) (140°F < ϑ ≤ 212°F (max. 185°F for measuring cell 435 psi))	30 mbar a + 20 mbar a • (ϑ - 60 °C)/°C (0.44 psi a + 0.29 psi a • (ϑ - 108 °F)/°F)					
Upper measuring limit	100% of max. span (max. 120 bar g (1740 psi g) for oxygen measurement)			100% of max. measuring range (max. 120 bar g (1740 psi g) for oxygen measurement)		
Start-of-scale value	between the measuring limits (continuously adjustable)					

Absolute pressure input (from the differential pressure series)				
	HART		**PROFIBUS PA or Foundation Fieldbus**	
Measured variable	Absolute pressure			
Measuring span (continuously adjustable) or measuring range and max permissible operating pressure (as per 97/23/EC pressure device guideline)	Span	Maximum operating pressure MAWP (PS)	Measuring range	Maximum operating pressure
	8.3 … 250 mbar a (3 ... 100 inH_2O)	32 bar a (464 psi a)	250 mbar a (100 inH_2O)	32 bar a (464 psi a)
	43 … 1300 mbar a (17 ... 525 inH_2O)	32 bar a (464 psi a)	1300 mbar a (525 inH_2O)	32 bar a (464 psi a)
	160 … 5000 bar a (2.32 … 72.5 psi a)	32 bar a (464 psi a)	5 bar a (72.5 psi a)	32 bar a (464 psi a)
	1 … 30 bar a (14.5 … 435 psi a)	160 bar a (2320 psi a)	30 bar a (435 psi a)	160 bar a (2320 psi a)
	5.3 … 100 bar a (76.9 … 1450 psi a)	160 bar a (2320 psi a)	100 bar a (1450 psi a)	160 bar a (2320 psi a)
Lower measuring limit				
• Measuring cell with silicon oil filling	0 mbar a (0 psi a)			
• Measuring cell with inert liquid				
for process temperature -20°C < ϑ ≤ 60°C (-4°F < ϑ ≤ +140°F)	30 mbar a (0.44 psi a)			
for process temperature 60°C < ϑ ≤ 100°C (max. 85°C for measuring cell 30 bar) (140°F < ϑ ≤ 212°F (max. 185°F for measuring cell 435 psi))	30 mbar a + 20 mbar a • (ϑ - 60 °C)/°C (0.44 psi a + 0.29 psi a • (ϑ - 108 °F)/°F)			
Upper measuring limit	100% of max. span (max. 120 bar g (1740 psi g) for oxygen measurement)		100% of max. measuring range (max. 120 bar g (1740 psi g) for oxygen measurement)	
Start of scale value	between the measuring limits (continuously adjustable)			

Differential pressure and flow rate input				
	HART		**PROFIBUS PA or Foundation Fieldbus**	
Measured variable	Differential pressure and flow rate			
Measuring span (continuously adjustable) or measuring range and max permissible operating pressure (as per 97/23/EC pressure device guideline)	Span	Maximum operating pressure MAWP (PS)	Measuring range	Maximum permissible operating pressure
	1 … 20 mbar (0.4015 … 8.031 inH_2O)	32 bar (464 psi)	20 mbar (8.031 inH_2O)	32 bar a (464 psi)
	1 … 60 mbar (0.4015 … 24.09 inH_2O)	160 bar (2320 psi)	60 mbar (24.09 inH_2O)	160 bar (2320 psi)
	2.5 … 250 mbar (1.004 … 100.4 inH_2O)		250 mbar (100.4 inH_2O)	
	6 … 600 mbar (2.409 … 240.9 inH_2O)		600 mbar (240.9 inH_2O)	
	16 … 1600 mbar (6.424 … 642.4 inH_2O)		1600 mbar (642.4 inH_2O)	
	50 … 5000 mbar (20.08 … 2008 inH_2O)		5 bar (2008 inH_2O)	
	0.3 … 30 bar (4.35 … 435 psi)		30 bar (435 psi)	
	2.5 … 250 mbar (1.004 … 100.4 inH_2O)	420 bar (6091 psi)	250 mbar (100.4 inH_2O)	420 bar (6091 psi)
	6 … 600 mbar (2.409 … 240.9 inH_2O)		600 mbar (240.9 inH_2O)	
	16 … 1600 mbar (6.424 … 642.4 inH_2O)		1600 mbar (642.4 inH_2O)	
	50 … 5000 mbar (20.08 … 2008 inH_2O)		5 bar (2008 inH_2O)	
	0.3 … 30 bar (4.35 … 435 psi)		30 bar (435 psi)	
Lower measuring limit				
• Measuring cell with silicon oil filling	-100% of max. measuring range (-33 % for 30 bar (435 psi) measuring cell) or 30 mbar a (0.44 psi a)			
• Measuring cell with inert liquid				

Differential pressure and flow rate input		
	HART	**PROFIBUS PA or Foundation Fieldbus**
for process temperature of -20°C < ϑ ≤ 60°C (-4°F < ϑ ≤ +140°F)	-100% of max. measuring range (-33 % for 30 bar (435 psi) measuring cell) or 30 mbar a (0.44 psi a)	
for process temperature 60°C < ϑ ≤ 100°C (max. 85°C for measuring cell 30 bar) (140°F < ϑ ≤ 212°F (max. 185°F for measuring cell 435 psi))	• -100% of max. measuring range (-33% for 30 bar (435 psi) measuring cell) • 30 mbar a + 20 mbar a • (ϑ - 60 °C)/°C (0.44 psi a + 0.29 psi a • (ϑ - 108 °F)/°F)	
Upper measuring limit	100% of max. span (max. 120 bar g (1740 psi g) for oxygen measurement)	100% of max. measuring range (max. 120 bar g (1740 psi g) for oxygen measurement)
Start of scale value	between the measuring limits (continuously adjustable)	

Level input				
	HART		**PROFIBUS PA or Foundation Fieldbus**	
Measured variable	Level			
Measuring span (continuously adjustable) or measuring range and max permissible operating pressure (as per 97/23/EC pressure device guideline)	Span	Maximum operating pressure MAWP (PS)	Measuring range	Maximum permissible operating pressure
	25 … 250 mbar (10 ... 100 inH_2O)	see the mounting flange	250 mbar (100 inH_2O)	see the mounting flange
	25 … 600 mbar (10 … 240 inH_2O)		600 mbar (240 inH_2O)	
	53 … 1600 mbar (21 … 640 inH_2O)		1600 mbar (640 inH_2O)	
	160 … 5000 mbar (2.32 … 72.5 psi)		5 bar (72.5 psi)	
Lower measuring limit				
• Measuring cell with silicon oil filling	-100% of the max. measuring range or 30 mbar a (0.44 psi a) depending on the mounting flange			
• Measuring cell with inert liquid	-100% of the max. measuring range or 30 mbar a (0.44 psi a) depending on the mounting flange			
Upper measuring limit	100% of maximum span		100 % of max. measuring range	
Start of scale value	between the measuring limits continuously adjustable			

11.3 Output

Output		
	HART	**PROFIBUS PA or Foundation Fieldbus**
Output signal	4 … 20 mA	Digital PROFIBUS-PA or Foundation Fieldbus signal
• Lower limit (continuously adjustable)	3.55 mA, set to 3.84 mA in the factory	–
• Upper limit (continuously adjustable)	23 mA, set to 20.5 mA or optionally 22.0 mA in the factory	–
• Ripple (without HART communication)	I_{SS} ≤ 0.5 % of the max. output current	–
adjustable time constants damping coefficient	0 … 100 s, continuously adjustable	0 … 100 s, continuously adjustable
Adjustable time constants (T63) with local operation	0 … 100 s, in steps of 0.1 s Factory-set to 2 s	0 … 100 s, in steps of 0.1 s Factory-set to 2 s
• Current transmitter	3.55 … 23 mA	–
• Failure signal	3.55 … 23 mA	–
Load	Resistor R [Ω]	–
• Without HART communication	$R = \frac{U_H - 10{,}5\ V}{23\ mA}$	–
	U_H Power supply in V	
• With HART communication		–
HART communicator (Handheld)	R =230 … 1100 Ω	–
SIMATIC PDM	R =230 … 500 Ω	–
Characteristic curve	• Linearly increasing or linearly decreasing • Linear increase or decrease or square root extracting increasing (only for DS III differential pressure and flow rate)	
Bus physics	–	IEC 61158-2
Polarity-independent	–	Yes

11.4 Measuring accuracy

Measuring accuracy (as per EN 60770-1) gauge pressure		
	HART	**PROFIBUS PA or Foundation Fieldbus**
Reference conditions	• Rising characteristic curve • Start of scale value 0 bar • Seal diaphragm: stainless steel • Measuring cell with silicon oil filling • Room temperature 25°C (77°F)	
	• Measuring span ratio r r = maximum measuring span or set measuring span	–

Measuring accuracy (as per EN 60770-1) gauge pressure		
	HART	**PROFIBUS PA or Foundation Fieldbus**
Measurement deviation with cut-off point setting, including hysteresis and repeatability.		
Linear characteristic curve		≤ 0,075 %
• r ≤ 10	≤ (0.0029 • r + 0.071) %	–
• 10 < r ≤ 30	≤ (0.0045 • r + 0.071) %	–
• 30 < r ≤ 100	≤ (0.005 • r + 0.05) %	–
Repeatability	Included in the measuring deviation	
Hysteresis	Included in the measurement deviation	
Settling time T_{63} without electrical damping	approx. 0.2 s	
Long-term drift at ±30°C (±54°F)		In 5 years ≤ 0.25 %
• 1- to 4-bar measuring cell	In 5 years ≤ (0.25 • r) %	
• 16- to 400-bar measuring cell	In 5 years ≤ (0.125 • r) %	
• 700-bar measuring cell	In 5 years ≤ (0.25 • r) %	
Ambient temperature influence	As percentage	
• at -10 … +60 °C (14 … 140 °F)	≤ (0.08 • r + 0.1) %	≤ 0,3 %
• at -40 … -10°C and +60 … +85 °C (-40 … 14°F and 140 … 185°F)	≤ (0.1 • r + 0.15) % per 10 K	≤ 0.25 % per 10 K
Influence of mounting position	≤ 0.05 mbar g (0.000725 psi g) per 10° inclination correction via zero offset	
Power supply influence	In percent per change in voltage 0.005 % per 1 V	–
Measuring value resolution	–	$3 • 10^{-5}$ of the rated measuring range

Gauge pressure measuring accuracy, with flush mounted diaphragm		
	HART	**PROFIBUS PA or Foundation Fieldbus**
Reference conditions	• Rising characteristic curve • Start of scale value 0 bar • Seal diaphragm: stainless steel • Measuring cell with silicon oil filling • Room temperature 25°C (77°F)	
	• Measuring span ratio r r = maximum measuring span or set measuring span	–
Measurement deviation with limit setting, including hysteresis and repeatability.		
Linear characteristic curve		≤ 0,075 %

Gauge pressure measuring accuracy, with flush mounted diaphragm		
	HART	**PROFIBUS PA or Foundation Fieldbus**
• r ≤ 10	≤ (0.0029 • r + 0.071) %	–
• 10 < r ≤ 30	≤ (0.0045 • r + 0.071) %	–
• 30 < r ≤ 100	≤ (0.005 • r + 0.05) %	–
Settling time T_{63} without electrical damping	Approx. 0.2 s	
Long-term drift at ±30° C (±54° F)	In 5 years ≤ (0.25 • r) %	In 5 years ≤ 0.25%
Ambient temperature influence	In percent	
• At -10 … +60 °C (14 … 140 °F)	≤ (0.1 • r + 0.2) %	≤ 0,3 %
• at -40 … -10°C and +60 … +85°C (-40 … 14°F and 140 … 185°F)	≤ (0.1 • r + 0.15) % per 10 K	≤ 0.25 % per 10 K
Process temperature influence	In pressure per temperature change	
• Temperature difference between process temperature and ambient temperature	3 mbar per 10 K (0.04 psi per 10 K)	
Influence of mounting position	In pressure per change in angle 0.4 mbar (0.006 psi) per 10° inclination Correction via zero offset	
Power supply influence	In percent per change in voltage 0.005 % per 1 V	–
Measured value resolution	–	3 • 10^{-5} of the rated measuring range

Measuring accuracy (as per EN 60770-1) DS III with PMC connection		
	HART	**PROFIBUS PA or Foundation Fieldbus**
Reference conditions	• Rising characteristic curve • Start of scale value 0 bar • Seal diaphragm: stainless steel • Measuring cell with silicon oil filling • Room temperature 25°C (77°F)	
	• Measuring span ratio r r = maximum measuring span or set measuring span	–
Measurement deviation with limit setting, including hysteresis and repeatability.		
Linear characteristic curve		≤ 0,075 %
• r ≤ 10	≤ (0.0029 • r + 0.071) %	–
• 10 < r ≤ 30	≤ (0.0045 • r + 0.071) %	–
• 30 < r ≤ 100 *)	≤ (0.005 • r + 0.05) %	–
Repeatability	Included in the measurement deviation	
Hysteresis	Included in the measurement deviation	
Settling time T_{63} without electrical damping	Approx. 0.2 s	

Measuring accuracy (as per EN 60770-1) DS III with PMC connection		
	HART	**PROFIBUS PA or Foundation Fieldbus**
Long-term drift at ±30° C (±54° F)	In 5 years ≤ (0.25 • r) %	In 5 years ≤ 0.25%
Ambient temperature influence	In percent	
• At -10 … +60 °C (14 … 140 °F)	≤ (0.08 • r + 0.1) %	≤ 0,3 %
• at -40 … -10°C and +60 … +85°C (-40 … 14°F and 140 … 185°F)	≤ (0.1 • r + 0.15) % per 10 K	≤ 0.25 % per 10 K
Process temperature influence	In pressure per temperature change	
• Temperature difference between process temperature and ambient temperature	3 mbar per 10 K (0.04 psi per 10 K)	
Influence of mounting position	In pressure per change in angle ≤ 0.1 mbar g (0.00145 psi g) per 10° inclination correction via zero offset	
Power supply influence	In percent per change in voltage 0.005 % per 1 V	–
Measured value resolution	–	3 • 10^{-5} of the rated measuring range

*) not for 4 bar PMC Minibolt

Absolute pressure measuring accuracy (from gauge and differential pressure series)		
	HART	**PROFIBUS PA or Foundation Fieldbus**
Reference conditions	• Rising characteristic curve • Start of scale value 0 bar • Seal diaphragm: stainless steel • Measuring cell with silicon oil filling • Room temperature 25°C (77°F)	
	• Measuring span ratio r r = maximum measuring span or set measuring span	–
Measurement deviation with limit setting, including hysteresis and repeatability.		
Linear characteristic curve		≤ 0,1 %
• r ≤ 10	≤ 0,1 %	–
• 10 < r ≤ 30	≤ 0,2 %	–
Settling time T_{63} without electrical damping	approx. 0.2 s	
Long-term drift at ±30°C (±54°F)	per year ≤ (0.1 • r) %	per year ≤ 0.1 %
Ambient temperature influence	In percent	
• At -10 … +60 °C (14 … 140 °F)	≤ (0.1 • r + 0.2) %	≤ 0,3 %
• at -40 … -10°C and +60 … +85°C (-40 … 14°F and 140 … 185°F)	≤ (0.1 • r + 0.15) % per 10 K	≤ 0.25 % per 10 K

Absolute pressure measuring accuracy (from gauge and differential pressure series)		
	HART	**PROFIBUS PA or Foundation Fieldbus**
Influence of mounting position	In pressure per change of angle • for absolute pressure (from the gauge pressure series): 0.05 mbar (0.000725 psi) per 10° inclination • for absolute pressure (from the differential pressure series): 0.7 mbar (0.001015 psi) per 10° inclination Correction via zero offset	
Power supply influence	In percent per change in voltage 0.005 % per 1 V	–
Measured value resolution	–	3 • 10^{-5} of the rated measuring range

Differential pressure and flow rate measuring accuracy		
	HART	**PROFIBUS PA or Foundation Fieldbus**
Reference conditions	• Rising characteristic curve • Start of scale value 0 bar • Seal diaphragm: stainless steel • Measuring cell with silicon oil filling • Room temperature 25°C (77°F)	
	• Measuring span ratio r r = maximum measuring span or set measuring span	–
Measurement deviation with limit setting, including hysteresis and repeatability.		
Linear characteristic curve		≤ 0,075
• r ≤ 10	≤ (0.0029 • r + 0.071) %	–
• 10 < r ≤ 30	≤ (0.0045 • r + 0.071) %	–
• 30 < r ≤ 100	≤ (0.005 • r + 0.05) %	–
Square root extracting characteristic curve (flow rate > 50%)		≤ 0,1 %
• r ≤ 10	≤ 0,1 %	–
• 10 < r ≤ 30	≤ 0,2 %	–
square root extracting characteristic curve (flow rate 25 … 50%)		≤ 0,2 %
• r ≤ 10	≤ 0,2 %	–
• 10 < r ≤ 30	≤ 0,4 %	–
Settling time T_{63} without electrical damping	• approx. 0.2 s • approx 0.3 s for measuring cell 20 and 60 mbar (0.29 and 0.87 psi)	
Long-term drift at ±30°C (±54°F)	≤ (0.25 • r) % per five years static pressure max. 70 bar g (1015 psi g)	≤ 0.25 % per five years static pressure max. 70 bar g (1015 psi g)
• 20 mbar (0.29 psi) measuring cell	≤ (0.2 • r) % per year	≤ 0.2 % per year
• 250, 600, 1600 and 5000 mbar (0.29, 0.87, 2.32 and 7.25 psi) measuring cell	≤ (0.125 • r) % every 5 years	≤ 0.125% every 5 years

Differential pressure and flow rate measuring accuracy		
	HART	**PROFIBUS PA or Foundation Fieldbus**
Effect of the ambient temperature (double values for measuring cell 20 mbar g (0.29 psi g))	As percentage	
• At -10 … +60°C (14 … 140°F)	≤ (0.08 • r + 0.1) %	≤ 0,3 %
• At -40 … -10°C and +60 … +85°C (-40 … 14°F and 140 … 185°F)	≤ (0.1 • r + 0.15) % per 10 K	≤ 0.25 % per 10 K
Effect of static pressure		
• At the start of scale value	≤ (0.1 • r) % per 70 bar (1015 psi)	≤ 0.1% per 70 bar (1015 psi)
Measuring cell 20 mbar (0.29 psi)	≤ (0.15 • r) % per 32 bar (464 psi)	≤ 0.15 % per 32 bar (464 psi)
• On the measuring span	≤ 0.15 % per 70 bar (1015 psi)	-
Measuring cell 20 mbar (0.29 psi)	≤ 0.2 % per 32 bar (464 psi)	-
Influence of mounting position	In pressure per change of angle ≤ 0.7 mbar (0.001015 psi) per 10° inclination Correction via zero offset	
Power supply influence	In percent per change in voltage 0.005 % per 1 V	–
Measured value resolution	–	3 • 10^{-5} of the rated measuring range

Level measuring accuracy		
	HART	**PROFIBUS PA or Foundation Fieldbus**
Reference conditions	• Rising characteristic curve • Start of scale value 0 bar • Seal diaphragm: stainless steel • Measuring cell with silicon oil filling • Room temperature 25°C (77°F)	
	• Measuring span ratio r r = maximum measuring span or set measuring span	–
Measurement deviation with limit setting, including hysteresis and repeatability.		
Linear characteristic curve		≤ 0,075
• r ≤ 10	≤ 0,15 %	–
• 10 < r ≤ 30	≤ 0,3 %	–
• 30 < r ≤ 100	≤ (0.0075 • r + 0.075) %	–
Settling time T_{63} without electrical damping	approx. 0.2 s	
Long-term drift at ±30°C (±54°F)	≤ (0.25 • r) % per five years static pressure max. 70 bar g (1015 psi g)	≤ 0.25 % per five years static pressure max. 70 bar g (1015 psi g)
Ambient temperature influence	As percentage	
• At -10 … +60°C (14 … 140°F) (0.4 instead of 0.2 at 10 < r ≤ 30)		

Level measuring accuracy		
	HART	**PROFIBUS PA or Foundation Fieldbus**
Measuring cell 250 mbar (3.63 psi)	≤ (0.5 • r + 0.2) %	≤ 0,7 %
Measuring cell 600 mbar (8.7 psi)	≤ (0.3 • r + 0.2) %	≤ 0,5 %
Measuring cell 1.6 and 5 bar (23.2 and 72.5 psi)	≤ (0.25 • r + 0.2) %	≤ 0,45 %
• At -40 … -10°C and +60 … +85°C (-40 … 14°F and 140 … 185°F) (double values for 10 < r ≤ 30)		
Measuring cell 250 mbar (3.63 psi)	≤ (0.25 • r + 0.15) %/10 K (≤ (0.25 • r + 0.15) %/18°F)	≤ 0.4 %/10 K (≤ 0.4 %/18°F)
Measuring cell 600 mbar (8.7 psi)	≤ (0.15 • r + 0.15) %/10 K (≤ (0.15 • r + 0.15) %/18°F)	≤ 0.3 %/10 K (≤ 0.3 %/18°F)
Measuring cell 1.6 and 5 bar (23.2 and 72.5 psi)	≤ (0.12 • r + 0.15) %/10 K (≤ (0.12 • r + 0.15) %/18°F)	≤ 0.27 %/10 K (≤ 0.27 %/18°F)
Effect of static pressure		
• At the start of scale value		
Measuring cell 250 mbar (0.29 psi)	≤ (0.3 • r) % per nominal pressure	≤ 0.3 % per nominal pressure
Measuring cell 600 mbar (8.7 psi)	≤ (0.15 • r) % per nominal pressure	≤ 0.15 % per nominal pressure
Measuring cell 1.6 and 5 bar (23.2 and 72.5 psi)	≤ (0.1 • r) % per nominal pressure	≤ 0.1 % per nominal pressure
• On the measuring span	≤ (0.1 • r) % per nominal pressure	≤ 0.1 % per nominal pressure
Influence of mounting position	depending on the fill fluid in the mounting flange	
Power supply influence	In percent per change in voltage 0.005 % per 1 V	
Measuring value resolution	–	3 • 10^{-5} of the rated measuring range

11.5 Operating conditions

Rated conditions for gauge pressure and absolute pressure (from the gauge pressure series)	
Installation conditions	
Ambient conditions	
• Ambient temperature	
Note	Observe the temperature class in hazardous areas.
Measuring cell with silicon oil filling	-40 … +85 °C (-40 … +185 °F)
Measuring cell with inert liquid	-20 … +85 °C (-4 … +185 °F)
Display	-30 … +85 °C (-22 … +185 °F)
Storage temperature	-50 … +85 °C (-58 … +185 °F)
• Climate class	
Condensation	Permitted

Rated conditions for gauge pressure and absolute pressure (from the gauge pressure series)	
• Degree of protection in accordance with EN 60529	IP65, IP68
• Degree of protection in accordance with NEMA 250	NEMA 4X
• Electromagnetic Compatibility	
Interference emission and interference immunity	As per EN 61326 and NAMUR NE 21
Medium conditions	
• Process temperature	
Measuring cell with silicon oil filling	-40 … +100 °C (-40 … +212 °F)
Measuring cell with inert liquid filling	-20 … +100 °C (-4 … +212 °F)
With extension to Zone 0	-20 … +60 °C (-4 … +140 °F)

Conditions of use for gauge pressure and absolute pressure with flush-mounted diaphragm	
Installation conditions	
Ambient temperature	
Note	Observe the temperature class in explosive atmospheres.
• Measuring cell with silicon oil filling	-40 … +85 °C (-40 … +185 °F)
• Measuring cell with inert liquid filling	-20 … +85 °C (-4 … +185 °F)
• Measuring cell with Neobee (FDA-compliant)	-10 … +85 °C (14 … 185 °F)
• Display	-30 … +85 °C (-22 … +185 °F)
• Storage temperature	-50 … +85 °C (-58 … +185 °F) (for Neobee: -20 ... + 85 °C (-4 ... +185 °F)) (for high-temperature oil: -10 ... + 85 °C (14 ... 185 °F))
Climate class	
Condensation	permitted
• Degree of protection in accordance with EN 60 529	IP65, IP68
• Degree of protection in accordance with NEMA 250	NEMA 4X
Electromagnetic compatibility	
• Emitted interference and interference immunity	In accordance with EN 61326 and NAMUR NE 21
Process medium conditions	
Process medium temperature[1)]	
• Measuring cell with silicon oil filling	-40 … +150°C (-40 … +302 °F) -40 … +200°C (-40 … +392 °F) with cooling extension
• Measuring cell with inert liquid filling	-20 … +100 °C (-4 … +212 °F) -20 … +200°C (-4 … +392 °F) with cooling extension

Conditions of use for gauge pressure and absolute pressure with flush-mounted diaphragm	
• Measuring cell with Neobee (FDA-compliant)	-10 … +150°C (14 … 302 °F) -10 … +200°C (14 … 392 °F) with cooling extension
• Measuring cell with high-temperature oil filling	-10 ... +250 °C (14 ... 482 °F) with cooling extension

[1] Observe the temperature limits in the process connection standards (e.g. DIN 32676 and DIN 11851) for the maximum process medium temperature for flush-mounted process connections.

Rated conditions DS III with PMC connection	
Installation conditions	
Ambient temperature	
Note	Observe the temperature class in hazardous areas.
• Measuring cell with silicon oil filling	-40 … +85 °C (-40 … +185 °F)
• Display	-30 … +85 °C (-22 … +185 °F)
• Storage temperature	-50 … +85 °C (-58 … +185 °F)
Climate class	
Condensation	Permitted
• Degree of protection in accordance with EN 60529	IP65, IP68
• Degree of protection in accordance with NEMA 250	NEMA 4X
Electromagnetic compatibility	
• Emitted interference and interference immunity	In accordance with EN 61326 and NAMUR NE 21
Process medium conditions	
• Process medium temperature	-40 … +100 °C (-40 … +212 °F)

Rated conditions for absolute pressure (from the differential pressure series), differential pressure and flow rate	
Installation conditions	
• Installation instruction	any
Ambient conditions	
• Ambient temperature	
Note	Observe the temperature class in hazardous areas.
Measuring cell with silicon oil filling	-40 … +85 °C (-40 … +185 °F)
• Measuring cell 30 bar (435 psi)	• -40 … +85°C (-40 … +185 °F) • for flow rate: -20 … +85°C (-4 … +185 °F)
Measuring cell with inert liquid filling	-20 … +85 °C (-4 … +185 °F)
Display	-30 … +85 °C (-22 … +185 °F)
Storage temperature	-50 … +85 °C (-58 … +185 °F)
• Climate class	
Condensation	Permitted

Rated conditions for absolute pressure (from the differential pressure series), differential pressure and flow rate	
• Degree of protection in accordance with EN 60529	IP65, IP68
• Degree of protection in accordance with NEMA 250	NEMA 4X
• Electromagnetic compatibility	
Emitted interference and interference immunity	In accordance with EN 61326 and NAMUR NE 21
Process medium conditions	
• Process medium temperature	
Measuring cell with silicon oil filling	-40 … +100 °C (-40 … +212 °F)
• Measuring cell 30 bar (435 psi)	• -40 … +85 °C (-40 … +185 °F) • With flow: -20 … +85 °C (-4 … +185 °F)
Measuring cell with inert liquid filling	-20 … +100 °C (-4 … +212 °F)
• Measuring cell 30 bar (435 psi)	• -40 … +85 °C (-40 … +185 °F) • With flow: -20 … +85 °C (-4 … +185 °F)
In conjunction with dust explosion protection	-20 … +60°C (-4 … +140°F)

Rated conditions for level	
Installation conditions	
• Installation instruction	specified through the flange
Ambient conditions	
• Ambient temperature	
Note	Observe the allocation of the max. permissible operating temperature to the max. permissible operating pressure of the relevant flange connection.
Measuring cell with silicon oil filling	-40 … +85 °C (-40 … +185 °F)
Display	-30 … +85 °C (-22 … +185 °F)
Storage temperature	-50 … +85 °C (-58 … +185 °F)
• Climate class	
Condensation	Permitted
• Degree of protection in accordance with EN 60529	IP65
• Degree of protection in accordance with NEMA 250	NEMA 4X
• Electromagnetic compatibility	
Emitted interference and interference immunity	In accordance with EN 61326 and NAMUR NE 21
Medium conditions	
• Process temperature	
Measuring cell with silicon oil filling	• Plus side: see the mounting flange • Minus side: -40 … +100°C (-40 … +212°F)

11.6 Construction

Construction for gauge pressure and absolute pressure (from the gauge pressure series)			
Weight	Approx. 1.5 kg (3.3 lb) for aluminum enclosure		
Material			
• Wetted parts materials			
Process connection	Stainless steel, mat. no. 1.4404/316L or Hastelloy C4, mat. no. 2.4610		
Oval flange	Stainless steel, mat. no. 1.4404/316L		
Seal diaphragm	Stainless steel, material no. 1.4404/316L or Hastelloy C276, material no. 2.4819		
• Non-wetted parts materials			
Electronics housing	• Copper-free die cast aluminum GD-AlSi 12 or stainless steel precision casting, mat. no. 1.4408 • Standard: Polyester-based paint Option: 2 coats: Coat 1: epoxy-based; coat 2: polyurethane • Stainless steel nameplate		
Mounting bracket	Steel or stainless steel		
Measuring cell filling	• Silicone oil • Neobee M20 • Inert liquid (max. 120 bar g (2320 psi g) for oxygen measurement)		
Process connection	G$^1/_2$B connection pin in accordance with DIN EN 837-1; $^1/_2$-14 NPT female thread or oval flange (PN 160 (MAWP 2320 psi g)) with M10 fastening screw thread in accordance with DIN 19213 or $^7/_{16}$-20 UNF in accordance with EN 61518. Male thread M20 x 1.5 and $^1/_2$-14 NPT.		
Electrical connection	Cable inlet using the following cable glands: • Pg 13.5 • M20 x 1.5 and ½-14 NPT or Han 7D/Han 8D connector[1)] – Cable diameter: 6 to 12 mm; types of protection "nA" and "ic" (Zone 2): 8 to 12 mm or a suitable cable gland for smaller diameters • M12 connector		
Torque for cable gland nut made of	Plastic	Metal	Stainless steel
	2.5 Nm (1.8 ft lb)	4.2 Nm (3.1 ft lb)	4.2 Nm (3.1 ft lb)

[1)] Han 8D is identical to Han 8U.

Construction for gauge pressure, with flush mounted diaphragm	
Weight	Approx 1.5 … 13.5 kg (3.3 … 30 lb) with aluminum enclosure
Material	
• Wetted parts materials	
Process connection	Stainless steel, mat. no. 1.4404/316L
Seal diaphragm	Stainless steel, mat. no. 1.4404/316L
• Non-wetted parts materials	

Construction for gauge pressure, with flush mounted diaphragm			
Electronics housing	• Non-copper aluminum die casting GD-AlSi 12 or stainless steel precision casting, mat. no. 1.4408 • Standard: Polyester-based paint Option: 2 coats: Coat 1: epoxy-based; coat 2: polyurethane • Stainless steel nameplate		
Mounting bracket	Steel or stainless steel		
Measuring cell filling	• Silicone oil • Neobee M20 • Inert liquid		
Process connection	• Flanges as per EN and ASME • F&B and Pharma flange, clamp and threaded connectors • NEUMO BioConnect/BioControl • PMC connections for the paper industry		
Electrical connection	Cable inlet using the following cable glands: • Pg 13.5 • M20x1.5 • ½-14 NPT • Han 7D/Han 8D plug[1)] • M12 connector		
Torque for cable gland nut made of	Plastic	Metal	Stainless steel
	2.5 Nm (1.8 ft lb)	4.2 Nm (3.1 ft lb)	4.2 Nm (3.1 ft lb)

1) Han 8D is identical to Han 8U.

DS III construction with PMC connection	
Weight	Approx. 1.5 kg (3.3 lb) for aluminum enclosure
Material	
• Wetted parts materials	
Gasket (standard)	PTFE flat gasket
O-ring (minibolt)	• FPM (Viton) • FFPM or NBR (optional)
Seal diaphragm	Hastelloy C276, mat. No. 2.4819
• Non-wetted parts materials	
Electronics housing	• Non-copper aluminum die casting GD-AlSi 12 or stainless steel precision casting, mat. no. 1.4408 • Standard: Polyester-based paint Option: 2 coats: Coat 1: epoxy-based; coat 2: polyurethane • Stainless steel nameplate
Mounting bracket	Steel or stainless steel
Measuring cell filling	• Silicone oil • Inert liquid
Process connection	

DS III construction with PMC connection			
• Standard	• Flush mounted • $1^1/_2$" • PMC Standard design		
• Minibolt	• Flush mounted • 1" • PMC Minibolt design		
Electrical connection	Cable inlet using the following cable glands: • Pg 13.5 • M20 x 1.5 • ½-14 NPT • Han 7D/Han 8D plug[1)] • M12 connector		
Torque for cable gland nut made of	Plastic	Metal	Stainless steel
	2.5 Nm (1.8 ft lb)	4.2 Nm (3.1 ft lb)	4.2 Nm (3.1 ft lb)

1) Han 8D is identical to Han 8U.

Design for absolute pressure (from the differential pressure series), differential pressure and flow rate	
Weight	Approx. 4.5 kg (9.9 lb) for aluminum enclosure
Material	
• Wetted parts materials	
Seal diaphragm	Stainless steel, mat. no. 1.4404/316L, Hastelloy C276, mat. no. 2.4819, Monel, mat. no. 2.4360, tantalum or gold
Pressure caps and locking screw	Stainless steel, mat. no. 1.4408 to PN 160, mat. no. 1.4571/316Ti for PN 420, Hastelloy C4, 2.4610 or Monel, mat. no. 2.4360
O-ring	FPM (Viton) or optionally: PTFE, FEP, FEPM and NBR
• Non-wetted parts materials	
Electronics housing	• Non-copper aluminum die casting GD-AlSi 12 or stainless steel precision casting, mat. no. 1.4408 • Standard: Polyester-based paint Option: 2 coats: Coat 1: epoxy-based; coat 2: polyurethane • Stainless steel nameplate
Pressure cap screws	Stainless steel
Mounting bracket	Steel or stainless steel
Measuring cell filling	• Silicone oil • Neobee M20 • Inert liquid (max. 120 bar g (2320 psi g) for oxygen measurement)
Process connection	$^1/_4$-18 NPT female thread and flat connection with $^7/_{16}$-20 UNF fastening screw thread in accordance with EN 61518 or M10 fastening screw thread in accordance with DIN 19213 (M12 for PN 420 (MAWP 6092 psi))

Design for absolute pressure (from the differential pressure series), differential pressure and flow rate			
Electrical connection	Screw terminals Cable inlet using the following cable glands: • Pg 13.5 • M20 x 1.5 • ½-14 NPT or Han 7D/Han 8D connector[1)] • M12 connector		
Torque for cable gland nut made of	Plastic	Metal	Stainless steel
	2.5 Nm (1.8 ft lb)	4.2 Nm (3.1 ft lb)	4.2 Nm (3.1 ft lb)

1) Han 8D is identical to Han 8U.

Construction for level	
Weight	
• as per EN (pressure transmitter with mounting flange, without tube)	approx 11 … 13 kg (24.2 … 28.7 lb)
• as per ASME (pressure transmitter with mounting flange, without tube)	approx 11 … 18 kg (24.2 … 39.7 lb)
Material	
• Wetted parts materials	
Plus side	
• Seal diaphragm on the mounting flange	Stainless steel, mat. no. 1.4404/316L, Monel 400, mat. no. 2.4360, Hastelloy B2, mat. no. 2.4617, Hastelloy C276, mat. no. 2.4819, Hastelloy C4, mat. no. 2.4610, tantalum, PTFE, ECTFE
• Sealing surface	smooth as per EN 1092-1, form B1 or ASME B16.5 RF 125 … 250 AA for stainless steel 316L, EN 2092-1 form B2 or ASME B16.5 RFSF for the remaining materials
Sealing material in the pressure caps	
• for standard applications	Viton
• for underpressure applications on the mounting flange	Copper
Minus side	
• Seal diaphragm	Stainless steel, mat. no. 1.4404/316L
• Pressure caps and locking screws	Stainless steel, mat. no. 1.4408
• O-ring	FPM (Viton)
• Non-wetted parts materials	
Electronics housing	• Non-copper aluminum die casting GD-AlSi 12 or stainless steel precision casting, mat. no. 1.4408 • Standard: Polyester-based paint Option: 2 coats: Coat 1: epoxy-based; coat 2: polyurethane • Stainless steel nameplate
Pressure cap screws	Stainless steel
Measuring cell filling	Silicone oil

Construction for level			
• Mounting flange fill fluid	Silicon oil or a different design		
Process connection			
• Plus side	Flange as per EN and ASME		
• Minus side	$^1/_4$-18 NPT female thread and flat connection with M10 fastening screw thread in accordance with DIN 19213 (M12 for PN 420 (MAWP 6092 psi)) or $^7/_{16}$-20 UNF in accordance with EN 61518		
Electrical connection	Screw terminals Cable inlet using the following cable glands: • Pg 13.5 • M20 x 1.5 • ½-14 NPT or Han 7D/Han 8D connector[1)] • M12 connector		
Torque for nut with			
• Cable gland made of plastic	2.5 Nm (1.8 ft lb)		
• Cable gland made of metal	4.2 Nm (3.1 ft lb)		
• Cable gland made of stainless steel	4.2 Nm (3.1 ft lb)		
Torque for cable gland nut made of	Plastic	Metal	Stainless steel
	2.5 Nm (1.8 ft lb)	4.2 Nm (3.1 ft lb)	4.2 Nm (3.1 ft lb)

[1)] Han 8D is identical to Han 8U.

11.7 Display, keyboard and auxiliary power

Display and user interface	
Keys	3 for on-site programming directly at the device
Display	• With or without integrated display (optional) • Cover with inspection window (optional)

Auxiliary power U_H		
	HART	**PROFIBUS PA or Foundation Fieldbus**
Terminal voltage at transmitter	• DC 10.5 V … 45 V • In the case of intrinsically safe operation 10.5 V … 30 V DC	–
Ripple	U_{SS} ≤ 0.2 V (47 … 125 Hz)	–
Noise	U_{eff} ≤ 1.2 V mV (0.5 to 10 kHz)	–
Auxiliary power	–	Bus-powered
Separate supply voltage	–	Not necessary
Bus voltage		
• Not	–	9 … 32 V
• For intrinsically safe operation	–	9 … 24 V
Current consumption		

Auxiliary power U_H		
	HART	**PROFIBUS PA or Foundation Fieldbus**
• Max. basic current	–	12.5 mA
• Starting current ≤ basic current	–	Yes
• Max. current in event of fault	–	15.5 mA
Error shut-down electronics (FDE) present	–	Yes

11.8 Certificates and approvals

Certificates and approvals		
	HART	**PROFIBUS PA or Foundation Fieldbus**
Classification according to Pressure Equipment Directive (PED 97/23/EC)	• for gases of Fluid Group 1 and liquids of Fluid Group 1; meets requirements of Article 3 Para. 3 (good engineering practice) • only for flow rate: for gases of Fluid Group 1 and liquids of Fluid Group 1; fulfills the basic safety requirements as per article 3, Para 1 (appendix 1); classified as category III, module H conformity evaluation by TÜV Nord	
Drinking water	In preparation	
Explosion protection		
• Intrinsic safety "i"	PTB 11 ATEX 2011 X	
Marking	(Ex) II 1/2G Ex ia/ib IIC T4/T5/T6 Ga/Gb	
Permissible ambient temperature	-40 … +85 °C (-40 … +185 °F) Temperature class T4 -40 … +70 °C (-40 … +158 °F) Temperature class T5 -40 … +60 °C (-40 … +140 °F) Temperature class T6	
Connection	To a certified intrinsically safe circuit with the max. values: U_i = 30 V, I_i = 100 mA, P_i = 750 mW, R_i = 300 Ω	FISCO supply unit U_0 = 17.5 V, I_0 = 380 mA, P_0 = 5.32 W Linear barrier U_0 = 24 V, I_0 = 174 mA, P_0 = 1 W
Effective inner capacitance	C_i = 6 nF	C_i = 1.1 nF
Effective inner inductance	L_i = 0.4 mH	L_i = 7 µH
• Flameproof enclosure encapsulation "d"	PTB 99 ATEX 1160	
Marking	(Ex) II 1/2 Ex d IIC T4, T6 Ga/Gb	
Permissible ambient temperature	-40 … +85 °C (-40 … +185 °F) Temperature class T4 -40 … +60 °C (-40 … +140 °F) Temperature class T6	
Connection	To a circuit with the operating values: U_H = 10.5 … 45 V DC	To a circuit with the operating values: U_H = 9 … 32 V DC
• Dust explosion protection for Zone 20 and 20/21	PTB 01 ATEX 2055	

Certificates and approvals			
		HART	**PROFIBUS PA or Foundation Fieldbus**
	Marking	(Ex) II 1 D IP65 T 120 °C, (Ex) II 1/2 D IP65 T 120 °C	
	Permissible ambient temperature	-40 ... +85 °C (-40 ... +185 °F)	
	max. surface temperature	120°C (248°F)	
	Connection	To a certified intrinsically safe circuit with the max. values: U_i = 30 V, I_i = 100 mA, P_i = 750 mW, R_i = 300 Ω	FISCO supply unit U_0 = 17.5 V, I_0 = 380 mA, P_0 = 5.32 W Linear barrier U_0 = 24 V, I_0 = 250 mA, P_0 = 1.2 W
	Effective inner capacitance	C_i = 6 nF	C_i = 1.1 nF
	Effective inner inductance	L_i = 0.4 mH	L_i = 7 µH
•	Dust explosion protection for Zone 22	PTB 01 ATEX 2055	
	Marking	(Ex) II 2 D IP65 T 120 °C	
	Connection	To a circuit with the operating values: U_H = 10.5 … 45 V DC; P_{max} = 1.2 W	To a circuit with the operating values: U_H = DC 9 … 32 V; P_{max} = 1.2 W
•	Type of protection "n" (Zone 2)	PTB 11 ATEX 2011 X	
	Marking	(Ex) II 2/3 G Ex nA II T4/T5/T6 Gc (Ex) II 2/3 G Ex ic IIC T4/T5/T6 Gc	
	Connection "nA"	U_n = 45 V	U_m = 32 V
	Connection "ic"	To a circuit with the operating values: U_i = 45 V	FISCO supply unit U_O =17.5 V, I_O = 570 mA Linear barrier U_0 = 32 V, I_0 = 132 mA, P_0 = 1 W
	Effective inner capacitance	C_i = 6 nF	C_i = 1.1 nF
	Effective inner inductance	L_i = 0.4 mH	L_i = 7 µH
•	Explosion protection in accordance with FM	Certificate of Compliance 3008490	
	Designation (XP/DIP) or IS; NI; S	CL I, DIV 1, GP ABCD T4 ... T6; CL II, DIV 1, GP EFG; CL III; CL I, ZN 0/1 AEx ia IIC T4 ... T6; CL I, DIV 2, GP ABCD T4 ... T6; CL II, DIV 2, GP FG; CL III	
	Permissible ambient temperature	T_a = T4: -40 ... +85 °C (-40 ... +185 °F) T_a = T5: -40 ... +70 °C (-40 ... +158 °F) T_a = T6: -40 ... +60 °C (-40 ... +140 °F)	
	Entity parameters	As per "control drawing" A5E00072770A: U_i = 30 V, I_i = 100 mA, P_i = 750 mW, R_i = 300 Ω, C_i = 6 nF, L_i = 0.4 mH	As per "control drawing" A5E00072770A: U_{max} = 17.5 V, I_{max} = 380 mA, P_{max} = 5.32 W, C_{max} = 6 nF, L_{max} = 0.4 mH
•	Explosion protection as per CSA	Certificate of Compliance 1153651	
	Designation (XP/DIP) or (IS)	CL I, DIV 1, GP ABCD T4 ... T6; CL II, DIV 1, GP EFG; CL III; Ex ia IIC T4 ... T6: CL I, DIV 2, GP ABCD T4 ... T6; CL II, DIV 2, GP FG; CL III	
	Permissible ambient temperature	T_a = T4: -40 ... +85 °C (-40 ... +185 °F) T_a = T5: -40 ... +70 °C (-40 ... +158 °F) T_a = T6: -40 ... +60 °C (-40 ... +140 °F)	
	Entity parameters	As per "control drawing" A5E00072770A: U_i = 30 V, I_i = 100 mA, P_i = 750 mW, R_i = 300 Ω, L_i = 0.4 mH, C_i = 6 nF	

11.9 HART communication

HART communication	
Load for a	
• HART communicator connection	230 … 1100 Ω
• HART modem	230 … 500 Ω
Cable	2-wire, shielded: ≤ 3.0 km (1.86 miles), multi-wired, shielded: ≤ 1.5 km (0.93 miles)
Protocol	HART Version 5.x
PC/laptop requirements	IBM-compatible, user memory > 32 MB, hard disk > 70 MB, depending on the type of modem: RS 232 interface or USB connection, VGA graphic
Software for computer	SIMATIC PDM

Dimension drawings

12

12.1 SITRANS P, DS III series for gauge pressure and absolute pressure from the gauge pressure series

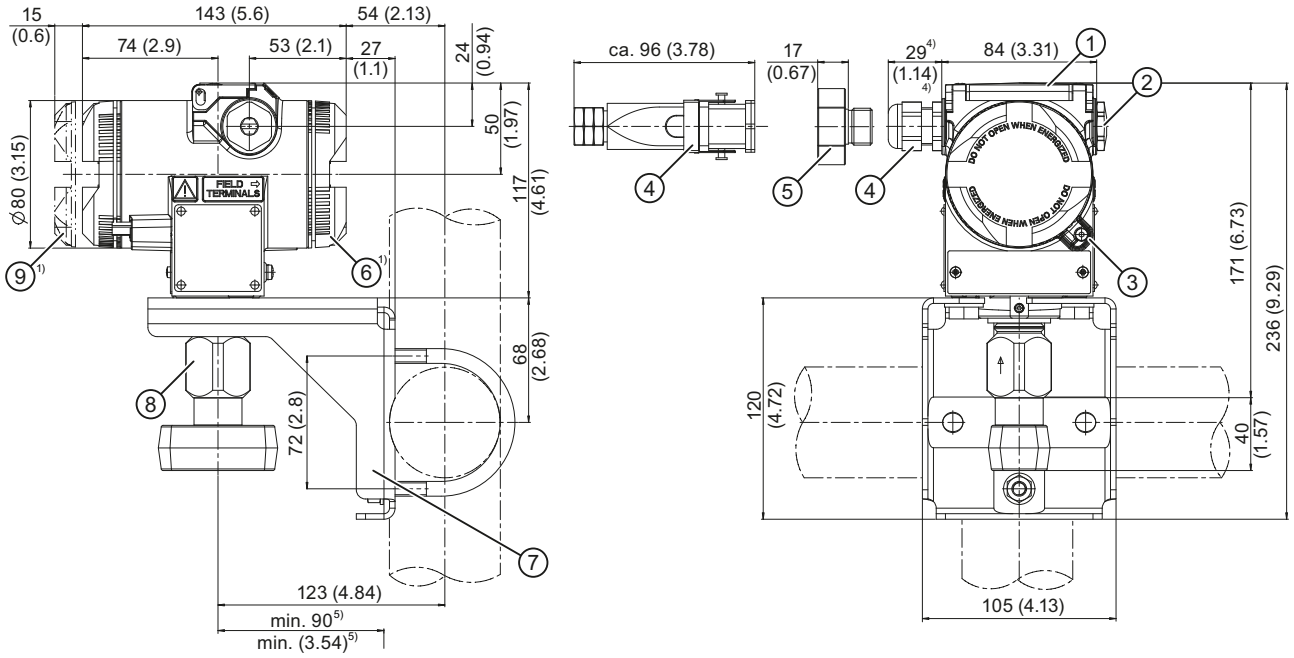

① Key cover
② Blanking plug
③ Cover catch (only for "flameproof enclosure" type of protection)
④ Electrical connection:
- Threaded joint Pg 13.5 (adapter)[2)3)],
- Threaded joint M20 x 1.5[3),]
- Threaded joint $^1/_2$-14 NPT
- Han 7D/Han 8D plug[2) 3)]
- M12 connector

⑤ Han 7D/Han 8D adapter
⑥ Connection side
⑦ Mounting bracket (optional)
⑧ Process connection:
- $^1/_2$-14 NPT,
- Connection pin G$^1/_2$A or
- Oval flange

⑨ Electronics side, display (longer for cover with inspection window)

1) Take additional 20 mm (0.79 inches) thread length into account
2) Not with "flameproof enclosure" type of protection
3) Not for "FM + CSA [is + XP]" type of protection
4) For Pg 13.5 with adapter approx 45 mm (1.77 inches)
5) Minimum distance for rotating

Figure 12-1 Pressure transmitter SITRANS P, DS III series for absolute pressure, from gauge pressure series, dimensions in mm (inches)

12.2 SITRANS P, DS III series for differential pressure, flow rate and absolute pressure from the differential pressure series

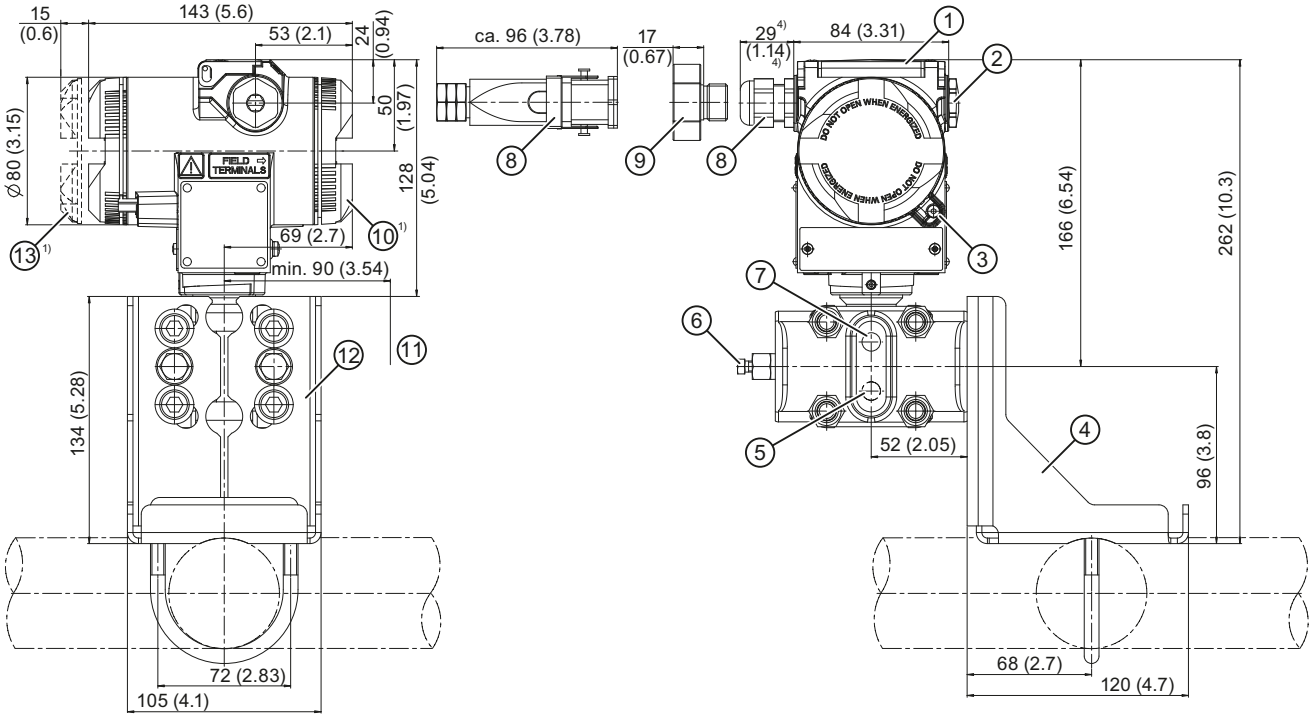

① Key cover
② Blanking plug
③ Cover catch (only for "flameproof enclosure" type of protection)
④ Mounting bracket (optional)
⑤ Lateral ventilation for gas measurement (addition H02)
⑥ Sealing plug, with valve (optional)
⑦ Lateral ventilation for liquid measurement
⑧ Electrical connection:
- Pg 13.5 gland (adapter)[2)3)]
- M20 x 1.5 gland[3)]
- $^1/_2$-14 NPT gland
- Han 7D/Han 8D plug[2) 3)]
- M12 connector

⑨ Han 7D/Han 8D adapter
⑩ Connection side
⑪ Space for enclosure rotation[5)]
⑫ Process connection: $^1/_4$-18 NPT (EN 61518)
⑬ Electronics side, display (longer for cover with inspection window)

1) Take an additional 20 mm (0.79 inches) thread length into account
2) Not with "flameproof enclosure" type of protection
3) Not for "FM + CSA [is + XP]" type of protection
4) For Pg 13.5 with adapter, approx 45 mm (1.77 inches)
5) 92 mm (3.62 inches) minimum distance for rotating the enclosure with display

Figure 12-2 Pressure transmitter SITRANS P, DS III series for differential pressure and flow rate, dimensions in mm (inches)

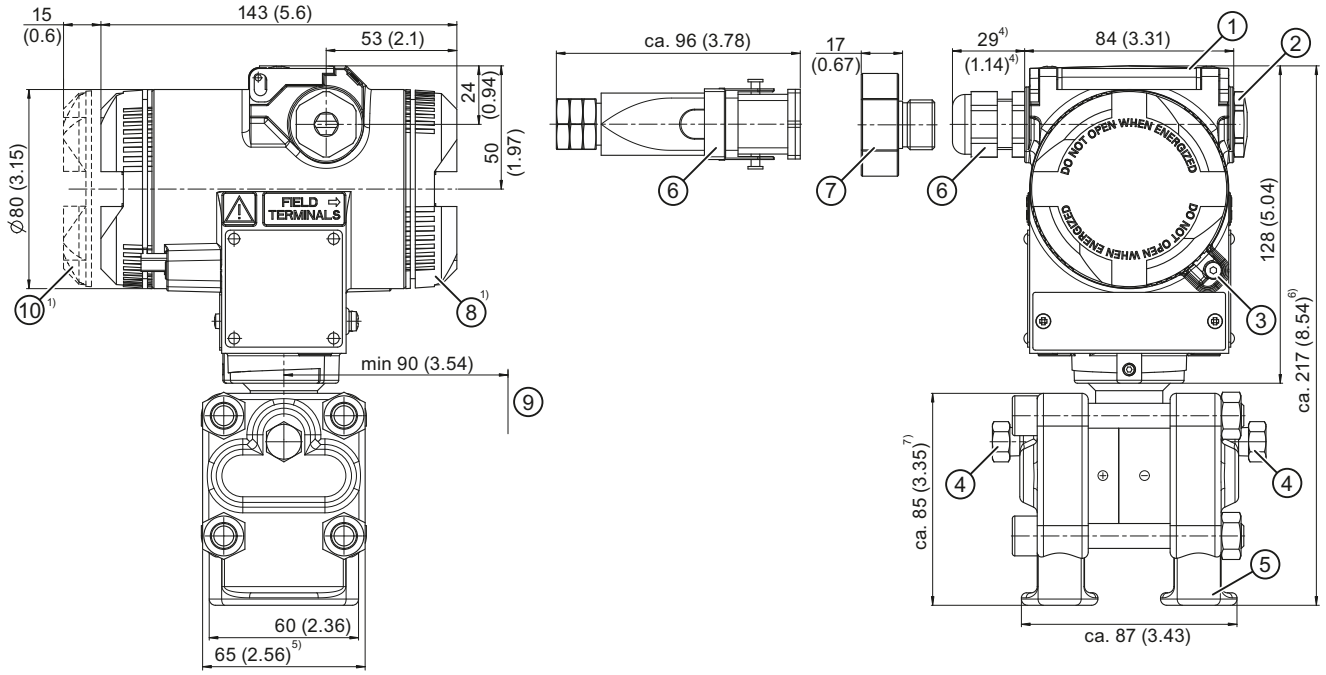

① Key cover
② Blanking plug
③ Cover catch (only for "flameproof enclosure" type of protection)
④ Sealing plug, with valve (optional)
⑤ Process connection: $^1/_4$-18 NPT (EN 61518)
⑥ Electrical connection:
- Pg 13.5 gland (adapter)[2)3)]
- M20 x 1.5 gland[3)]
- $^1/_2$-14 NPT gland
- Han 7D/Han 8D plug[2) 3)]
- M12 connector

⑦ Han 7D/Han 8D adapter
⑧ Connection side
⑨ Space for enclosure rotation[8)]
⑩ Electronics side, display (longer for cover with inspection window)

1) Take an additional 20 mm (0.79 inches) thread length into account
2) Not with "flameproof enclosure" type of protection
3) Not for "FM + CSA [is + XP]" type of protection
4) For Pg 13.5 with adapter, approx 45 mm (1.77 inches)
5) 74 mm (2.9 inch) for PN ≥ 420 (MAWP ≥ 6092 psi)
6) 219 mm (8.62 inches) for PN ≥ 420 (MAWP ≥ 6092 psi)
7) 91 mm (3.6 inches) for PN ≥ 420 (MAWP ≥ 6092 psi)
8) 92 mm (3.62 inches) minimum distance for rotating the enclosure with display

Figure 12-3 Pressure transmitter SITRANS P, DS III series for differential pressure and flow rate with caps for vertical differential pressure lines, dimensions in mm (inches)

12.3 SITRANS P, DS III series for level

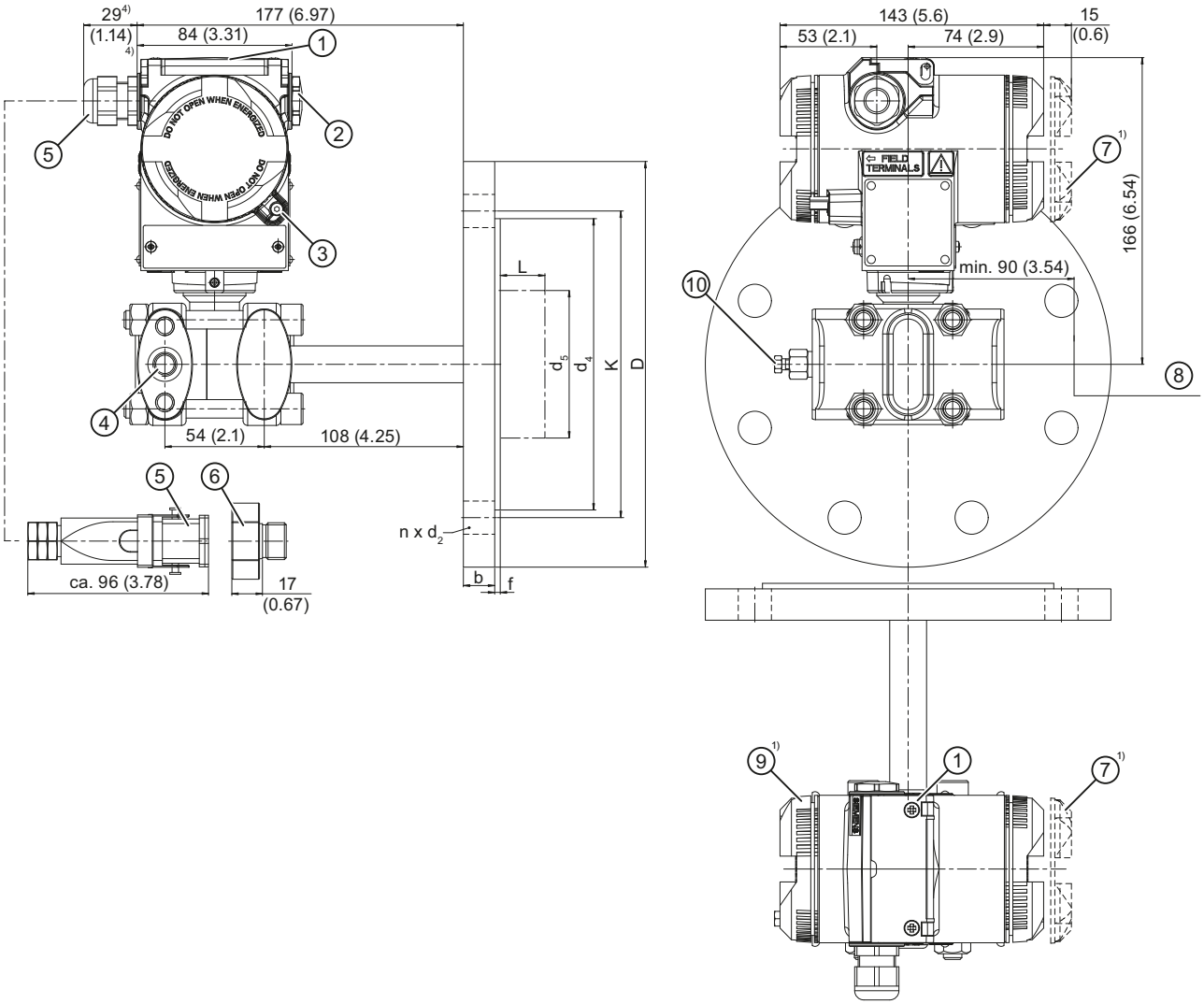

① Key cover
② Blanking plug
③ Cover catch (only for "flameproof enclosure" type of protection)
④ Process connection: Minus side $^1/_4$-18 NPT (EN 61518)
⑤ Electrical connection:
- Pg 13.5 gland (adapter)[2)3)]
- M20 x 1.5 gland[3)]
- $^1/_2$-14 NPT gland
- Han 7D/Han 8D plug[2) 3)]
- M12 connector

⑥ Han 7D/Han 8D adapter
⑦ Electronics side, display (longer for cover with inspection window)
⑧ Space for enclosure rotation[5)]
⑨ Connection side
⑩ Sealing plug with valve (optional)

1) Take an additional 20 mm (0.79 inches) thread length into account
2) Not with "flameproof enclosure" type of protection
3) Not for "FM + CSA [is + XP]" type of protection
4) For Pg 13.5 with adapter, approx 45 mm (1.77 inches)
5) 92 mm (3.62 inches) minimum distance for rotating the enclosure with display

Figure 12-4 Pressure transmitter SITRANS P, DS III series for level, including mounting flange, dimensions in mm (inches)

12.4 SITRANS P, DS III series (flush mounted)

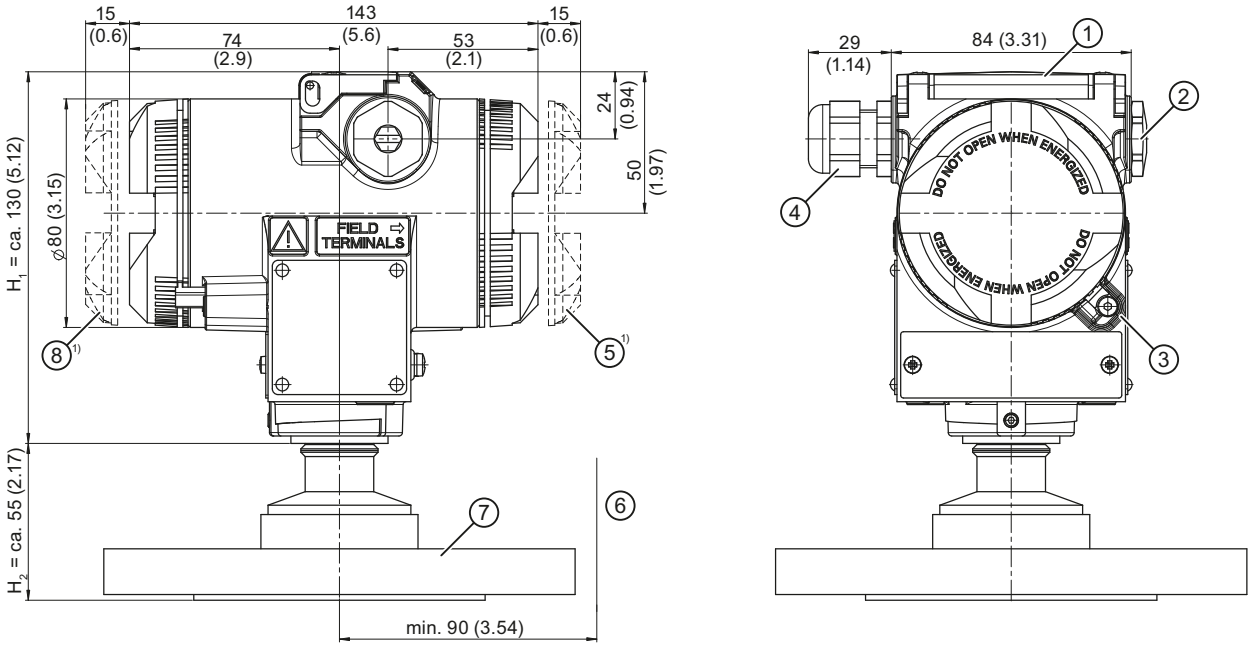

①	Key cover	⑤	Connection side
②	Blanking plug	⑥	Space for enclosure rotation[2)]
③	Cover catch (only for flameproof enclosure)	⑦	Process connection
④	Cable gland	⑧	Electronics side, display (longer for cover with inspection window)

1) Take additional 20 mm (approx.) thread length into account

2) 92 mm (3.62 inches) minimum distance for rotating the enclosure with display

Figure 12-5 SITRANS P DS III (flush mounted)

The screen consists of a SITRANS P DS III with an example flange. On this screen, the height is divided into H_1 and H_2.

H_1 Height of the device up to a defined cut

H_2 Height of the flange up to this defined cut

In the flange dimensions, only the height H_2 is specified.

12.4.1 Note 3A and EHDG

Note

Approvals

The references to the approvals for "EHEDG" and "3A" refer to the respective process connections and are not device-specific. Please refer to the technical data of the respective transmitter to see whether the desired certificate is available for your device/flange combination.

12.4.2 Connections as per EN and ASME

Flange as per EN

EN 1092-1

	DN	PN	⌀D	H_2
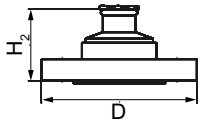	25	40	115 mm (4.5")	Approx. 52 mm (2")
	25	100	140 mm (5.5")	
	40	40	150 mm (5.9")	
	40	100	170 mm (6.7")	
	50	16	165 mm (6.5")	
	50	40	165 mm (6.5")	
	80	16	200 mm (7.9")	
	80	40	200 mm (7.9")	

Threaded connections

G3/4", G1" and G2" In accordance with DIN 3852

	DN	PN	⌀D	H_2
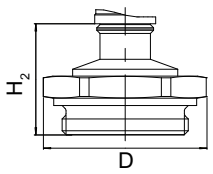	¾"	63	37 mm (1.5")	Approx. 45 mm (1.8")
	1"	63	48 mm (1.9")	Approx. 47 mm (1.9")
	2"	63	78 mm (3.1")	Approx. 52 mm (2")

Flanges as per ASME

ASME B 16.5				
	DN	**CLASS**	**⌀D**	**H_2**
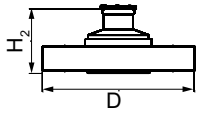	1"	150	110 mm (4.3")	Approx. 52 mm (2")
	1"	300	125 mm (4.9")	
	1½"	150	130 mm (5.1")	
	1½"	300	155 mm (6.1")	
	2"	150	150 mm (5.9")	
	2"	300	165 mm (6.5")	
	3"	150	190 mm (7.5")	
	3"	300	210 mm (8.1")	
	4"	150	230 mm (9.1")	
	4"	300	255 mm (10.0")	

12.4.3 F&B and pharma flange

Connections as per DIN

DIN 11851				
	DN	**PN**	**⌀D**	**H_2**
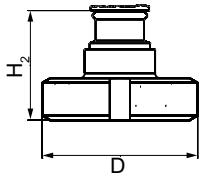	50	25	92 mm (3.6")	Approx. 52 mm (2")
	80	25	127 mm (5.0")	

DIN 11864-1 Form A - sterile threaded sockets				
	DN	**PN**	**⌀D**	**H_2**
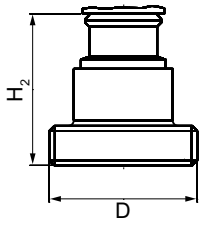	25	40	52 mm (2")	Approx. 52 mm (2")
	40	40	65 mm (2.6")	
	50	40	78 mm (3.1")	
	100	40	130 mm (5.1")	
Approvals	EHEDG			

DIN 11864-2 Form A - sterile collar flange

	DN	PN	⌀D	H_2
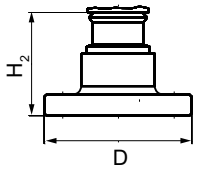	50	16	94 mm (3.7")	Approx. 52 mm (2")
	65	16	113 mm (4.4")	
	80	16	133 mm (5.2")	
	100	16	159 mm (6.3")	

Approvals	EHEDG

DIN 11864-2 Form A - sterile groove flange

	DN	PN	⌀D	H_2
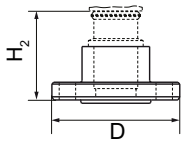	50	16	94 mm (3.7")	Approx. 52 mm (2")
	65	16	113 mm (4.4")	
	80	16	133 mm (5.2")	
	100	16	159 mm (6.3")	

Approvals	EHEDG

DIN 11864-3 Form A - sterile collar sockets

	DN	PN	⌀D	H_2
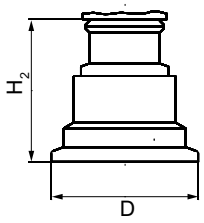	50	25	77.5 mm (3.1")	Approx. 52 mm (2")
	65	25	91 mm (3.6")	
	80	16	106 mm (4.2")	
	100	16	130 mm (5.1")	

Approvals	EHEDG

Tri-Clamp as per DIN 32676

	DN	PN	⌀D	H_2
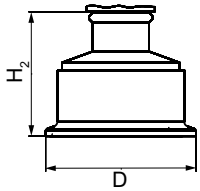	50	16	64 mm (2.5")	Approx. 52 mm (2")
	65	16	91 mm (3.6")	

Other connections

Varivent® connector				
	DN	**PN**	**⌀D**	**H_2**
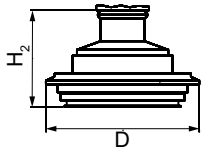	40-125	40	84 mm (3.3")	Approx. 52 mm (2")
Approvals	EHEDG			

Connection in accordance with DRD				
	DN	**PN**	**⌀D**	**H_2**
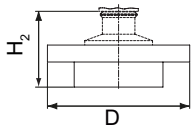	65	40	105 mm (4.1")	Approx. 52 mm (2")

BioConnect™ connectors

BioConnect™ screwed joint				
	DN	**PN**	**⌀D**	**H_2**
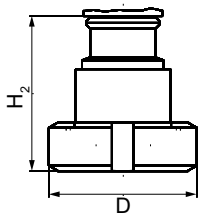	50	16	82 mm (3.2")	Approx. 52 mm (2")
	65	16	105 mm (4.1")	
	80	16	115 mm (4.5")	
	100	16	145 mm (5.7")	
	2"	16	82 mm (3.2")	
	2½"	16	105 mm (4.1")	
	3"	16	105 mm (4.1")	
	4"	16	145 mm (5.7")	
Approvals	EHEDG			

BioConnect™ flange connector

	DN	PN	⌀D	H_2
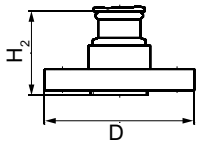	50	16	110 mm (4.3")	Approx. 52 mm (2")
	65	16	140 mm (5.5")	
	80	16	150 mm (5.9")	
	100	16	175 mm (6.9")	
	2"	16	100 mm (3.9")	
	2½"	16	110 mm (4.3")	
	3"	16	140 mm (5.5")	
	4"	16	175 mm (6.9")	
Approvals	EHEDG			

BioConnect™ clamp connector

	DN	PN	⌀D	H_2
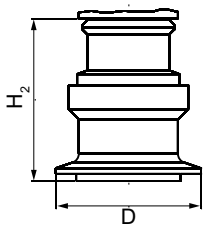	50	16	77.4 mm (3.0")	Approx. 52 mm (2")
	65	10	90.9 mm (3.6")	
	80	10	106 mm (4.2")	
	100	10	119 mm (4.7")	
	2"	16	64 mm (2.5")	
	2½"	16	77.4 mm (3.0")	
	3"	10	90.9 mm (3.6")	
	4"	10	119 mm (4.7")	
Approvals	EHEDG			

Connect S™ flanged joint

	DN	PN	⌀D	H_2
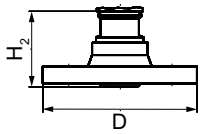	50	16	125 mm (4.9")	Approx. 52 mm (2")
	65	10	145 mm (5.7")	
	80	10	155 mm (6.1")	
	100	10	180 mm (7.1")	
	2"	16	125 mm (4.9")	
	2½"	10	135 mm (5.3")	
	3"	10	145 mm (5.7")	
	4"	10	180 mm (7.1")	
Approvals	EHEDG			

Other connections

BioControl™ connector				
	DN	**PN**	**⌀D**	**H_2**
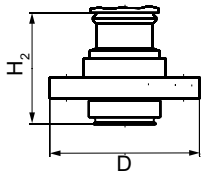	50	16	90 mm (3.5")	Approx. 52 mm (2")
	65	16	120 mm (4.7")	
Approvals	EHEDG			

12.4.4 PMC Style

Connections for the paper industry

PMC Style Standard				
	DN	**PN**	**⌀D**	**H_2**
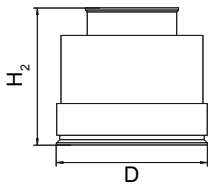	–	–	40.9 mm (1.6")	Approx. 36.8 mm (1.4")
	M44x1.25 cap nut			

PMC-Style Minibolt				
	DN	**PN**	**⌀D**	**H_2**
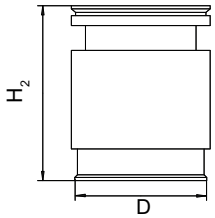	–	–	26.3 mm (1.0")	Approx. 33.1 mm (1.3")

12.4.5 Special connections

Tank connection

TG52/50 and TG52/150				
	DN	**PN**	**⌀D**	**H_2**
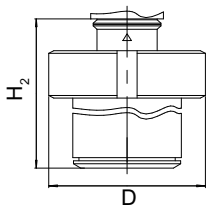	TG52/50			
	43.5 mm	10	63 mm (2.5")	Approx. 63 mm (2.5")
	TG52/150			
	43.5 mm	10	63 mm (2.5")	Approx. 170 mm (6.7")

SMS connectors

SMS sockets with union nut				
	DN	**PN**	**⌀D**	**H_2**
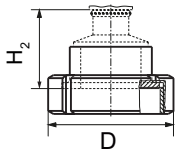	2"	25	84 mm (3.3")	Approx. 52 mm (2.1")
	2½"	25	100 mm (3.9")	
	3"	25	114 mm (4.5")	

SMS threaded sockets				
	DN	**PN**	**⌀D**	**H_2**
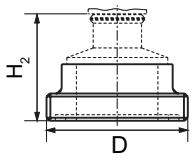	2"	25	70 x 1/6 mm (2.8")	Approx. 52 mm (2.1")
	2½"	25	85 x 1/6 mm (3.3")	
	3"	25	98 x 1/6 mm (3.9")	

IDF connectors

IDF sockets with union nut

	DN	PN	⌀D	H_2
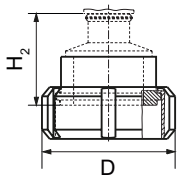	2"	25	77 mm (3.0")	Approx. 52 mm (2.1")
	2½"	25	91 mm (3.6")	
	3"	25	106 mm (4.2")	

IDF threaded sockets

	DN	PN	⌀D	H_2
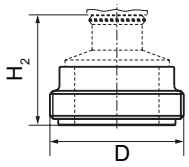	2"	25	64 mm (2.5")	Approx. 52 mm (2.1")
	2½"	25	77.5 mm (3.1")	
	3"	25	91 mm (3.6")	

Spare parts/accessories

13

13.1 Order data

In order to ensure that the ordering data you are using is not outdated, the latest ordering data is always available on the Internet:

Process instrumentation catalog (http://www.siemens.com/processinstrumentation/catalogs)

Selection and order data	Order no.
CD "sitrans p - pressure transmitters" with documentation in German/ English/French/Spanish/Italian, etc.	A5E00090345
HART modem	
• With serial interface RS232	7MF4997-1DA[1) D)]
• With USB interface	7MF4997-1DB[1) D)]
Weld-in support for PMC connection	
For Series SITRANS P, Series DS III and SITRANS P300	
• PMC Style Standard: Thread 1½"	7MF4997-2HA
• PMC-Style Minibolt: flush mounted 1"	7MF4997-2HB
Gaskets for PMC connection, (1 set = 5 pieces)	
• PTFE gasket for PMC Style Standard: Thread 1½"	7MF4997-2HC
• Viton gasket for PMC Style Minibolt: flush mounted 1"	7MF4997-2HD
Weld-in adapter for PMC connection	
For connection of weld-in support delay during welding for:	
• PMC Style Standard: Thread 1½"	7MF4997-2HE
• PMC-Style Minibolt: flush mounted 1"	7MF4997-2HF

1) Available from stock

D) Subject to export regulations AL: N, ECCN, EAR99H

Selection and order data	Order no.
Mounting bracket and fastening parts	
For SITRANS P, Series DS III, DS III PA and DS III FF	
For gauge pressure transmitter (7MF403.-.....-..C.)	
For transmitter for absolute pressure (7MF423.-.....-..C.)	
• Made of steel	7MF4997-1AB
• Made of stainless steel	7MF4997-1AH
Mounting bracket and fastening parts	
For SITRANS P, Series DS III, DS III PA and DS III FF	
For gauge pressure transmitter (7MF403.-.....-..A., -..B. and -..D.)	

Selection and order data	Order no.
For transmitter for absolute pressure (7MF423.-.....-..A., -..B. and -..D.)	
• Made of steel	7MF4997-1AC
• Made of stainless steel	7MF4997-1AJ
Mounting bracket and fastening parts	
For SITRANS P, Series DS III, DS III PA and DS III FF	
Differential pressure transmitter with flange thread	
• Made of steel	
For thread M10 (7MF433.-... and 7MF443.-...)	7MF4997-1AD
For thread M12 (7MF453.-...)	7MF4997-1AE
• Made of stainless steel	
For thread M10 (7MF433.-... and 7MF443.-...)	7MF4997-1AK
For thread M12 (7MF453.-...)	7MF4997-1AL
Mounting bracket and fastening parts	
For SITRANS P, Series DS III, DS III PA and DS III FF	
Differential and absolute transmitter with flange thread 7/16-20 UNF (7MF433.-..., 7MF443.-... and 7MF453.-...)	
• Made of steel	7MF4997-1AF
• Made of stainless steel	7MF4997-1AM
Cover	
For SITRANS P, Series DS III, DS III PA and DS III FF	
• Made of aluminum die casting, including gasket	
Without inspection window	7MF4997-1BB
With inspection window	7MF4997-1BE
• Made of stainless steel, including gasket	
Without inspection window	7MF4997-1BC
With inspection window	7MF4997-1BF
Analog display	
• Scale 0 ... 100%	7MF4997-1BN
• Customer-specific scale division as per the plain text specifications	7MF4997-1BP-Z Y20: .....
Digital display	
For SITRANS P, Series DS III, DS III PA and DS III FF	
Including the fastening material	7MF4997-1BR
Measuring point label	
• not labeled (five pieces)	7MF4997-1CA
• labeled (one piece) Specifications as per Y01 or Y02, Y15 and Y16 (refer to SITRANS P transmitter)	7MF4997-1CB-Z Y..: .....
Fastening screws, 50 pieces for: • Measuring point label • Earthing and connecting terminals • Digital display	7MF4997-1CD
Locking screws, (1 set = 2 pieces) for pressure cap	

Selection and order data	Order no.
• Made of stainless steel	7MF4997-1CG
• Made of Hastelloy	7MF4997-1CH
Vent valves, complete (1 set = 2 pieces)	
• Made of stainless steel	7MF4997-1CP
• Made of Hastelloy	7MF4997-1CQ
Electronics	
• For SITRANS P, Series DS III	7MF4997-1DK
• For SITRANS P, Series DS III PA	7MF4997-1DL
• For SITRANS P, Series DS III FF	7MF4997-1DM
Network card	
• For SITRANS P, Series DS III	7MF4997-1DN
• For SITRANS P, Series DS III PA and DS III FF	7MF4997-1DP
Sealing rings for pressure caps made of	
• FPM (Viton)	7MF4997-2DA
• PTFE (Teflon)	7MF4997-2DB
• FEP (with silicon core, suitable for food)	7MF4997-2DC
• FFPM (Kalrez, Compound 4079)	7MF4997-2DD
• NBR (Buna N)	7MF4997-2DE

13.2 Order data for SIMATIC PDM

You can find ordering data in the Catalog FI 01 "Field devices for process automation in the Chapter "Communication and software > Software > SIMATIC PDM - Process Device Manager".

Appendix A

A.1 Certificate

The certificates can be found on the enclosed CD and on the Internet under:

Certificates (http://www.siemens.com/processinstrumentation/certificates)

A.2 Literature and standards

No.	Standard	Description
/1/	IEC 61508 Section 1-7	Functional safety of following systems: • Safety-instrumented • Electrical • Electronic • Programmable Target group: Manufacturers and suppliers of equipment
/2/	IEC 61511 Section 1-3	Functional safety - Safety systems for the process industry Target group: Planners, constructors and users

A.3 Literature and catalogs

Table A-1

No.	Title	Publisher	Order no.
/1/	PNO guidelines PROFIBUS PA	PNO Technologiefabrik Haid-und-Neu-Str. 7 D-76131 Karlsruhe	2.091
/2/	Catalog ST 70 **SIMATIC** Products for Totally Integrated Automation	Siemens AG	E86060-K4670-A111-B1
/3/	Catalog ST 70 N**SIMATIC News** Products for Totally Integrated Automation	Siemens AG	E86060-K4670-A151-A3

No.	Title	Publisher	Order no.
/4/	Catalog ST 80 **SIMATIC HMI** operation and observation products	Siemens AG	E86060-K4680-A101-B4
/5/	Catalog IK PI **Industrial Communication**	Siemens AG	Internet address: IK PI Catalog (http://www.automation.siemens.com/net/html_76/support/printkatalog.htm) E86060-K6710-A101-B5

A.4 Overview of HART operating structure

The following overview applies to the HART communicator operating structure.

2 Online	1 (PV meas) *)						
	2 (PV) status						
	3 Module type						
	4 Identification	1 Operation Unit	1 Tag				
			2 Long Tag --> M **)				
			3 Descriptor				
			4 Message				
			5 Date				
		2 Device	1 Manufacturer				
			2 Model				
			3 Device identification				
			4 Distributor				
			5 MLFB Order Number	1 MLFB Order No --> M			
			6 Measurement type				
			7 Fabrication-No				
			8 Final asembly number				
			9 Sensor serial number				
			10 Revisions	1 Universal rev.			
				2 Field device rev.			
				3 Software rev.			
				4 Hardware rev.			
		3 Basic Parameters	1 Pressure unit				
			2 LSL (Lower Sensor Limit)				
			3 USL (Upper Sensor Limit)				
			4 Minimum Span				
			5 LRV (Lower Range Value)				
			6 URV (Upper Range Value))				
			7 Pressure damping				
			8 Pressure xfer function	xfer = transfer			
	5 Config Inp/Outp	1 Quick-Setup & Meas.	1 PV, Current, Status	1 (PV meas) *)			
				2 AO (analogue output)			
				3 (PV) % range			
				4 Status see --->	6 Diagnosis/Service		
				5 Measurement type			
			2 Meas.Val. & Status	1 Pressure Values	1 Pressure		
					2 Pres status		
					3 Untrimmed pressure		
					4 Untrimmed pres status		
				2 Temperature Values	1 Sens-Temp		
					2 Sens-Temp status		
					3 Electr-Temp		
					4 Electr-Temp status		
				3 Level, Vol, Mass Values (shown if valid items)	1 Level		
					2 Level status		
					3 Volume		
					4 Volume status		
					5 Mass		
					6 Mass status		
				4 Vol-, Mass- & Flow (shown if valid items)	1 Vol-Flow		
					2 Vol-Flow status		
					3 Mass-Flow		
					4 Mass-Flow status		
				5 Appl & Stat (shown if valid items)	1 Customer		
					2 Customer Status		
			3 Quick-Setup	1 Tag			
				2 Ext TAG --> M			
				3 PV is			
				4 (PV) unit			
				5 Position correction	1 Position corr --> M		
				6 LRV			
				7 URV			
				8 Pressure damping			
				9 Pressure xfer function			
		2 Input	1 Config Pres/Temp	1 Pressure sensor	1 Pressure		
					2 Untrimmed pres		
					3 Pressure units	1 Pres abs/rel	
						2 Pressure unit	
						3 Untrimmed pres unit	
				2 Temperature sensor	1 Sens-Temp		
					2 Electr-Temp		
					3 Temp units	1 Sens-Temp unit	
						2 Electr-Temp unit	
				3 Pres units see -->	1 Pressure sensor		
				4 Temp units see -->	2 Temperature sensor		
			2 Display Process Variables	1 Prozess variables	1 (PV measurement)		
					2 (PV) %rnge		
					3 AO		
					4 (SV measurement)		
					5 (TV measurement)		
					6 (QV measurement)		
			3 Meas Switch/Mapper	1 measurement			
				2 PV is			
				3 SV is			
				4 TV is			
				5 QV is			
				6 (measurement) config e.g. Level	1 Input scaling	1 Pres abs/rel	
						2 Pressure unit	
						3 Input LRV	
						4 Input URV	
					2 Level scaling e.g. Level scaling	1 Level unit	
						2 Level LRV	
						3 Level URV	

to be continued

continuance 5 Config Inp/Outp	continuance 2 Input	continuance 3 Meas Switch/Mapper	continuance 6 (measurement) config e.g. Level	3 Volume scaling	1 Volume unit 2 Vol LRV 3 Vol URV 2 Density unit 3 Density 3 Mass unit
			6 (measurement) config e.g. Flow	1 Input scaling	1 Pres abs/rel 2 Pressure unit 3 Input LRV 4 Input URV
				2 Flow scaling	1 Vol flow unit 2 Vol flow LRV 3 Vol flow URV 2 Density unit 3 Density 3 Mass flow unit
			6 (measurement) config e.g. Customer	1 Input scaling	1 Pres abs/rel 2 Pressure unit 3 Input LRV 4 Input URV
				3 Customer scaling	1 Cust unit (5 Ch) 2 Cust LRV 3 Cust URV
			7 Unser linearization if Level, Flow or Customer this is valid - otherwise not	1 Special Curve status --> 2 No curve points 3 Setup special char --> M 4 Display special char --> M	only if meas not pres
		4 Meas.Limits & Span	1 Module range		
			2 Active Device Variables	1 Pressure	1 Pressure unit 2 Pres USL 3 Pres LSL 4 Trimpoint sum 5 Pres min.span
				2 Sens-Temp	1 Sens-Temp unit 2 Sens-Temp USL 3 Sens-Temp LSL 4 Sens-Temp min.span
				3 Electr-Temp	1 Electr-Temp unit 2 Electr-Temp USL 3 Electr-Temp LSL 4 Electr-Temp min.span
				4 Untrimmed Pres	1 Untrimmed Pres unit 2 Untrimmed Pres USL 3 Untrimmed Pres LSL 4 Untr Pres min.span
			additional if measurement is mapped to level	5 Level	1 Level unit 2 Level USL 3 Level LSL 4 Level min.span
			additional if measurement is mapped to level	6 Volume	1 Volume unit 2 Volume USL 3 Volume LSL 4 Volume min.span
			additional if measurement is mapped to level	7 Mass	1 Mass unit 2 Mass USL 3 Mass LSL 4 Mass min.span
			additional if measurement is mapped to flow	5 Vol-Flow	1 Vol-Flow unit 2 Vol-Flow USL 3 Vol-Flow LSL 4 Vol-Flow min.span
			additional if measurement is mapped to flow	6 Mass-Flow	1 Mass-Flow unit 2 Mass-Flow USL 3 Mass-Flow LSL 4 Mass-Flow min.span
			additional if measurement is mapped to customer	5 Customer	1 (PV) unit 2 Customer USL 3 Customer LSL 4 Customer min. span
	3 Output	1 Analog output	1 Analog output		
			2 Percent range		
			3 Zero and Span	1 Zero/Span set	1 Apply values >1 2 Out Scaling PV >2
			4 Pres xfer function		
			5 Startpoint square root		
				>1 Out Scaling PV	1 Unit 2 LRV 3 URV 4 LSL 5 USL
				>2 Apply values	1 Apply values --> M
			6 Current Limits	1 Lower AO Limit 2 Upper AO Limit	
			7 Alarms	1 AO Alarm Type 2 Alarm LRV 3 Alarm URV	
		2 Sensor trim points	1 Lower sensor trim point 2 Upper sensor trim point		
		3 HART output	1 Polling address 2 Num request preambles 3 Num response preambles		
	4 Local meter	1 Meter type 2 Unit tracking 3 Local Display unit			
to be continued					

	continuance 5 Config Inp/Outp	continuance 4 Local Meter	4 LCD Settings	1 LCD Scaling, if On:	2 LCD Unit	
			5 Bargraph		3 LCD LRV	
					4 LCD URV	
			6 Access Control	1 Lokal keys control mode		
				2 Write protect		
				3 Set write protect --> M		
		5 Mech. Construction Mech = mechanical	1 No of electronic changes			
			2 Design	1 Sensor	1 Fill fluid	
					2 Isolation material	
					3 O ring material	
					4 Module range	
				2 Remote Seal	1 Number remote seal (RS)	
					2 RS type	
					3 RS isolator material	
					4 RS fill fluid	
					5 Extension length	
					6 Extension type	
					7 Capillar length	
			3 Process Connection	1 Process Connection		
				2 DrainVent / plug mat		
				3 DrainVent / plug pos		
				4 Process flange bolt		
				5 Flange type		
				6 Flange material		
			4 Electronic Connection	1 Electr housing material		
				2 Electr connection		
	6 Certif & Approv	1 Explos. Protection				Explos = Explosion Certif = Certification Approv = Approval
	7 Diagnosis/Service	1 Status	1 Status summary			
			2 Extended device status			
			3 Simulation status			
			4 Hardw/Firmw status	1 Status group 2		
				2 Status group 3		
				3 Status group 4		
				4 Status group 5		
			5 Diag Alarm Status	1 Status group 15		
				2 Status group 16		
			6 Diag Warn Status	1 Status group 19		
				2 Status group 20		
		2 Device	1 Selftest/Reset	1 Selftest --> M		
				2 Display Test --> M		
				3 Master reset --> M		
				4 Changes Config	1 Config changed counter	
			2 Sensor trim	1 Restore mfgr trims --> M		mfgr = manufacturer
				2 Sensor trim	1 Sensor trim points	1 Lower sensor trim point
						2 Upper sensor trim point
					2 Sensor trim	1 Pres zero trim--> M
						2 Lower sensor trim --> M
						3 Upper sensor trim --> M
					3 Trimpoint summary	
				3 Trim analog output	1 D/A trim --> M	
					2 Scaled D/A trim --> M	
				4 Position correction	1 Position corr --> M	
			3 Simulation/Test	1 Loop test --> M	Simulation AO	
				2 Inputs --> M	Simulation Fixed / Ramp	
			4 Access Control	1 Local keys control mode		
				2 Write protect		
				3 Set write protect --> M		
		3 Diagnostic settings	1 W/A time unit	W/A = warning/alarm		
			2 Calib interval	1 Calib status		
				2 W/A acknowledge --> M		
				3 Calib timer	1 Calib time	
					2 Reset timer --> M	
				4 Calib warning		
				5 Calib alarm		
				6 W/A activation		
			3 Service interval	1 Service status		
				2 W/A acknowledge --> M		
				3 Service timer	1 Service time	
					2 Reset timer --> M	
				4 Service warning		
				5 Service alarm		
				6 W/A activation		
			4 AO saturation	1 AO alarm type		
				2 Saturation alarm		
				3 Alarm duration		
				4 Alarm activation		
			5 Limiter setup	1 Display limiter --> M		
				2 Setup limiter --> M		
				3 Limiter status --> M		
				4 Limiter: Ack W/A --> M		Ack = acknowledge
				5 CmpCnt: Ack W/A --> M		CmpCnt =
				6 Reset counter. --> M		Comparation Counter
		4 View	1 Operating hours	1 Operating hours Electr		
				2 Operating hours Sensor		
			3 Min/Max pointer	1 Pressure pointer	1 Pres max	
					2 Pres min	
					3 Reset pointer --> M	
				2 Electr-Temp pointer	1 Electr-Temp max	
					2 Electr- Temp min	
					3 Reset pointer --> M	
				3 Sens-Temp pointer	1 Sens-Temp max	
					2 Sens-Temp min	
					3 Reset pointer --> M	

A.5 Technical support

Technical Support

You can contact Technical Support for all IA and DT products:

- Via the Internet using the **Support Request:**
  Support request (http://www.siemens.com/automation/support-request)
- E-mail (mailto:support.automation@siemens.com)
- **Phone:** +49 (0) 911 895 7 222
- **Fax:** +49 (0) 911 895 7 223

Further information about our technical support is available on the Internet at
Technical Support (http://www.siemens.com/automation/csi/service)

Service & Support on the Internet

In addition to our documentation, we offer a comprehensive knowledge base on the Internet at:

Services & Support (http://www.siemens.com/automation/service&support)

There you will find:

- The latest product information, FAQs, downloads, tips and tricks.
- Our newsletter with the latest information about our products.
- A Knowledge Manager to find the right documents for you.
- Our bulletin board, where users and specialists share their knowledge worldwide.
- Your local contact partner for Industry Automation and Drives Technologies in our partner database.
- Information about field service, repairs, spare parts and lots more under "Services."

Additional Support

Please contact your local Siemens representative and offices if you have any questions about the products described in this manual and do not find the right answers.

Find your contact partner at:

Partner (http://www.automation.siemens.com/partner)

Documentation for various products and systems is available at:

Instructions and manuals (http://www.siemens.com/processinstrumentation/documentation)

See also

Product information on SITRANS P in the Internet (http://www.siemens.com/sitransp)

Process instrumentation catalog (http://www.siemens.com/processinstrumentation/catalogs)

List of abbreviations

B

List of abbreviations

Table B-1 Units

Abbreviation	In full	Meaning
bar a	bar absolute	Pressure unit for absolute pressure
bar g	bar gauge	Pressure unit for gauge pressure
lb	Pfund (engl.: Pound)	Unit of weight
psi a	psi absolute	Pressure unit for absolute pressure
psi g	psi gauge	Pressure unit for gauge pressure

Table B-2 Other abbreviations

Abbreviation	In full	Meaning
PED	Pressure equipment directive	
HART	Highway Addressable Remote Transducer	Standardized protocol for transmission of information between field device and automation system.
LRL	Engl.: Lower Range Limit	Lower end of the measuring range
LRV	Engl.: Lower Range Value	Lower end of the set measuring span
MA	Start of scale value	Lower end of the set measuring span
ME	Full scale value	Upper end of the set measuring span
MAWP	Engl.: Maximum Allowable Working Pressure (PS)	Maximum permissible operating pressure
NFPA	National Fire Protection Association	US - American Fire Protection Organization
F&B	Food and beverage industry	
PDM	Engl.: Process Device Manager	Tool for communication with HART devices (manufacturer: Siemens)
URL	Engl.: Upper Range Limit	Upper end of the measuring range
URV	Engl.: Upper Range Value	Upper end of the set measuring span

B.1 Functional safety

Abbreviation	Full term in English	Meaning
FIT	Failure in Time	Frequency of failure Number of faults withing 10^9 hours
HFT	Hardware Fault Tolerance	Hardware fault tolerance: Capability of a function unit to continue executing a required function in the presence of faults or deviations.

Abbreviation	Full term in English	Meaning
MooN	"M out of N" voting	Classification and description of the safety-instrumented system in terms of redundancy and the selection procedures used. A safety-instrumented system or part that consists of "N" independent channels. The channels are connected to each other in such a way that "M" channels are in each case sufficient for the device to perform the safety instrumented function. Example: Pressure measurement: 1oo2 architecture. A safety-instrumented system decides that a specified pressure limit has been exceeded if one out of two pressure sensors reaches this limit. In a 1oo1 architecture, there is only one pressure sensor.
MTBF	Mean Time Between Failures	Average period between two failures
MTTR	Mean Time To Restoration	Average period between the occurrence of a fault in a device or system and restoration of functionality
PFD	Probability of Failure on Demand	Probability of dangerous failures of a safety function on demand
PFD_{AVG}	Average Probability of Failure on Demand	Average probability of dangerous failures of a safety function on demand
SFF	Safe Failure Fraction	Proportion of safe failures: Proportion of failures without the potential to bring the safety-instrumented system into a dangerous or non-permissible functional status.
SIL	Safety Integrity Level	The international standard IEC 61508 defines four discrete Safety Integrity Levels (SIL 1 to SIL 4). Each level corresponds to a range of probability for failure of a safety function. The higher the Safety Integrity Level of the safety-instrumented system, the lower the probability that it will not execute the required safety functions.
SIS	Safety Instrumented System	A safety-instrumented system (SIS) executes the safety functions that are required to achieve or maintain a safe status in a system. It consists of a sensor, logic unit/control system and final controlling element.
TI	Test Interval	Testing interval of the protective function

Glossary

ATEX

ATEX is an abbreviation of the French term "Atmosphère explosible" (potentially explosive atmosphere). ATEX stands for both EC directives in the area of explosion protection: ATEX product directive 94/9/EC and ATEX operating directive 1999/92/EC.

Auxiliary power supply

Auxiliary power supply refers to an electrical supply or reference voltage which some electrical circuits require apart from the standard supply. The auxiliary power supply can, for example, be specially stabilized, have a particular level or polarity and/or other properties which are important for the correct functioning of switch components.

Auxiliary voltage

→ *Auxiliary power supply*

Dangerous failure

Failure with the potential to bring the safety-instrumented system into a dangerous or non-functional status.

EEPROM

EEPROM (Electrically Erasable Programmable Read-Only Memory): a non-volatile, electronic memory module.

EEPROMs are often used where individual bytes of data (e.g. configuration data or runtime meters) change over time and must be stored safely in the event of a mains power failure.

Fail-safe

The capability of a control to maintain the safe state of the controlled device, e.g. machine, process, or to bring the device to a safe state even when faults/failures occur.

Failure/Fault

Failure:
A resource is no longer capable of executing a required function.

Fault:
Undesired state of a resource indicated by the incapability of executing a required function.

Fault

→ *Failure/Fault*

Fault tolerance

Fault tolerance N means that a device can execute the intended task even when N faults exist. The device fails to execute the intended function in case of N+1 faults.

Final controlling element

Converter that converts electrical signals into mechanical or other non-electrical variables.

Firmware

Firmware (FW) is software that is embedded on a chip in electronic devices – in contrast to software which is saved on hard disks, CD-ROMs or other media. These days, firmware is mostly stored in a flash memory or EEPROM.

Firmware usually contains the elementary functions for controlling the device, as well as input and output routines.

Frequency shift keying

Frequency shift keying is a simple form of modulation, where the digital values 0 and 1 modulate the actual current signal by means of two different frequencies.

Frequency Shift Keying (FSK)

→ *Frequency shift keying*

HART

HART (Highway Addressable Remote Transducer) is a standardized, widely used communications system used to structure industrial fieldbusses. The communications system provides digital communications for multiple participants (field devices) via a common databus. HART is based especially on the equally widely used 4/20 mA standard for the transfer of analog sensor signals. The cabling from existing older systems can be used directly and both systems operated in parallel.

HART specifies several protocol levels in the OSI model. It facilitates the transfer of process and diagnostics data and control signals between field devices and high-level control systems. Standardized parameter sets can be used for the manufacture-independent operation of all HART devices.

Typical applications include transmitters for measuring mechanical and electrical dimensions.

MAWP (PS)

Maximum Allowable Working Preassure (PS)

Non-volatile memory

→ *EEPROM*

Risk

The combination of probability of a damage occurring and its magnitude.

Safety function

Defined function executed by a safety-instrumented system with the objective of achieving or maintaining a safe system status taking into account a defined dangerous occurrence.

Example:
Limit pressure monitoring

Safety Instrumented Function

→ *SIF*

Safety Integrity Level

→ *SIL*

Safety-instrumented system

A safety-instrumented system executes the safety functions that are required to achieve or maintain a safe status in a system. It consists of a sensor, logic unit/control system and final controlling element.

Example:
A safety-instrumented system is made up of a pressure transmitter, a limit signal sensor and a control valve.

Sensor

Converter that converts mechanical or other non-electrical variables into electrical signals.

SIF

A part/function of a safety-instrumented system that reduces the risk of a dangerous failure occurring.

SIL

The international standard IEC 61508 defines four discrete Safety Integrity Levels (SIL) from SIL 1 to SIL 4. Each level corresponds to the probability range for the failure of a safety function. The higher the SIL of the safety-instrumented system, the higher probability that the required safety function will work.

The achievable SIL is determined by the following safety characteristics:

- Average probability of dangerous failure of a safety function in case of demand (PFD_{AVG})
- Hardware fault tolerance (HFT)
- Safe failure fractions (SFF)

srli2

→ *srlin2*

srlin2

"srli2" or "srlin2" is a type of square root extracting characteristic curve for the output current. This characteristic curve type is proportional to the flow rate, linear in two levels up to the application point and has a pre-defined application point of 10%.

"srli2" or "srlin2" are synonymous and technically there is no difference between them. The abbreviation "srli2" is used in sections that refer to the on-site operation of the pressure transmitter. The reason for the abbreviation is that the pressure transmitter display is restricted to five characters. The abbreviation "srlin2" is used for HART operation.

Index

PV
Primary variable, 102
QV
Quarternary variable, 102
SV
Secondary variable , 102
TV
Tertiary variable, 102

3

3A, 203

A

Acknowledgement, 129
Additional Support, 220
Ambient temperature, 183, 184, 185, 186
Influence, 178, 179, 180, 182
Analog output, 114
Analog output block, 114
Analog output stage, 101
Appendix, 215
Approval
3A, 203
EHEDG, 203
Approval plate, 22
Arrow display, 70

B

Bar graph, 123
Basic variables, 65
Blind adjustment, 117
Bridge output voltage, 25, 26, 27

C

Calibration
Current transmitter, 124
Sensor, 123
Calibration interval, 130
Calibration timer, 129
Certificate, 215
Certificates, 13
Certification, 215
Characteristic curve
lin, 92
srlin , 92
srlin2 , 92
sroff, 92
Characteristics
Safety, 142, 147
Configuration data, 126
Connector
M12, 63
Constant current operation, 88, 118
Control system, 137
Correct usage, (See improper device modifications)
Current limit, 119
Current transmitter, 88, 118
Customer Support Hotline, 220

D

Device
Electrostatic-sensitive, 16, 162
Device variable, 71, 110
DV, 102
Diagnostic interrupt, 118, 128
Diagnostic warning, 128
Differential pressure, 18, 19, 91, 127
Direct sunlight, 37
Display of unit, 68
Downscaling, 76
DV
Device variable, 102
Dynamic variable (DV), 101

E

EHEDG, 203
Electrical damping, 118
Electromagnetic compatibility, 184, 185, 186
Electromagnetic Compatibility
Compatibility, 142
Electronics, 142, 147
Electrostatic-sensitive device (ESD), 16, 162
EMC, 184, 185, 186
Equalizer valve, 156
Error display, 69

F

Factory calibration, 125
Failure current, 118
Fast recording of measured values, 118
Fast Response Mode, 118
Filling liquid, 25, 27, 28
Final controlling element , 137
Firmware, 9
Firmware version
    Safety Integrity Level, 141, 144
Flange, 27, 44
Full-scale value
    Set, 75
Function chart, 29

H

Han plug, 62
HART
    Modem, 17
HART communicator, 99
Hazardous area
    Laws and directives, 13
History, 9
Hotline, 220

I

Improper device modifications, 14
Input scaling, 104, 106, 109
Install
    Remote seal, 47
Installation, 40
Internet, 220

K

Keyboard lock, 90

L

L (level), 105
LCD scaling, 115
Level, 19
Limit monitor, 134
lin, 92, 127
Load, 177

M

M12 connector, 63
MA
    Start of scale value, 102
Maintenance, 142, 146
Mapper, 101, (Also see: Variable mapper)
Mass, 104, 105
MAWP, 221
ME
    Full scale value, 102
Measured value display, 75, 94
Measured value status, 111
Measuring accuracy, 141, 146
Measuring cell
    Differential pressure and flow rate , 26
    Absolute pressure, 29
    Gauge pressure, 25
    Level, 27
Measuring mode, 75, 100, 102, 106
Measuring mode selector, 101, 102
Measuring span, 76
Message
    OVER, 71
    UNDER, 71
Mounting bracket, 41
Mounting flange, 27
MTTR, 143, 147
MWP, (See MAWP)

N

Nameplate, 21

O

Operating structure , 217
operation
    Local, 75
Output scaling, 104, 110
Output scaling , 107

P

Pair of min/max pointer, 130
Pairs of values, 107, 110
Plug
    Han, 62
Position correction, 87

Pressure simulation, 134
Pressure unit, 122
Primary variable, 71, 94
Process connection, 20
PV
    Primary variable, 94

Q

Qualified personnel, 14

R

Ramp function, 133, 134
Remote seal
    Description, 31
    Install, 47
    Maintenance, 165
Response time, 131
Root application point, 92, 106

S

Safety
    Checking, 142, 147
Safety function, 140, 143
    Checking, 141, 142, 145, 146
Safety Integrity Level , 141, 144
Saturation limit , 119
Scope of delivery, 10
sensor calibration, 123
Service, 220
Service timer, 129
Settings, 140, 145
Shut-off valve, 153, 154, 156, 157
Signal range, 71
SIL 2, 137
Simulation, 130, 133
Single-channel operation, 137
Span, 76
srlin, 92, 127
srlin2, 92, 127
sroff, 92, 127
Stabilizing valve, 154, 155, 157
Start-of-scale value
    Set, 75
Stop time, 131
Structure, 19
Support, 220

T

Tank connection, 209
Technical data, 140, 145
Test certificates, 13
Transmitter, 137
Trimming
    lower trim point , 124
    upper trim point, 124
Turning range, 54

V

Variable mapper, 101
Vent valve, 127, 156, 158
Volume, 105

W

Write protection, 90, 141, 146

Z

Zero point calibration, 87, 117

www.siemens.com/processautomation

Siemens AG
Industry Automation (IA)
Sensors and Communication
Process Analytics
76181 KARLSRUHE
DEUTSCHLAND

Subject to change without prior notice
A5E00047092-08
© Siemens AG 2012

A5E00047092

A5E00047092

www.siemens.com/processautomation

OPERATION AND MAINTENANCE MANUAL

(1) MODEL 10 GRANULAR ACTIVATED CARBON ADSORPTION SYSTEM

FOR

KIRTLAND AFB ALBUQUERQUE, NM

SOLD TO: TECHSAS, INC.
BACLIFF, TX

PREPARED BY
CALGON CARBON CORPORATION
MOON TOWNSHIP, PA

CALGON CARBON PROJECT NUMBER: **CTO.150010.KRTAF**
CUSTOMER PURCHASE ORDER NUMBER: **560245**
DATE: OCTOBER, 2016

THIS MANUAL IS THE PROPERTY OF CALGON CARBON CORPORATION AND IS NOT TO BE REPRODUCED IN WHOLE OR PART, NOR EMPLOYED FOR ANY PURPOSE OTHER THAN SPECIFICALLY PERMITTED IN WRITING BY CALGON CARBON CORPORATION.

SAFETY DEPENDS ON YOU

Calgon Carbon Corporation's equipment is designed and built with safety in mind. However, proper installation and operation can increase your overall safety.

DO NOT INSTALL, OPERATE OR REPAIR THIS EQUIPMENT WITHOUT READING THIS MANUAL AND THE SAFETY PRECAUTIONS CONTAINED THROUGHOUT.

BE SURE THAT ALL INSTALLATION, OPERATION, MAINTENANCE AND REPAIR PROCEDURES ARE PERFORMED ONLY BY QUALIFIED INDIVIDUALS.

SAFETY HIGHLIGHTS

READ AND UNDERSTAND THE FOLLOWING SAFETY HIGHLIGHTS.

⚠ WARNING

This statement appears where the information must be followed exactly to avoid serious personal injury or loss of life

⚠ CAUTION

This statement appears where the information must be followed exactly to avoid minor personal injury or damage to equipment.

QUESTIONS, TROUBLESHOOTING, SPARE PARTS

Call Calgon Carbon Corporation at 1-800-422-7266

CALGON CARBON CORPORATION ♦ COPYRIGHT 2016 ♦ ALL RIGHTS RESERVED

TABLE OF CONTENTS

SECTION 1 SYSTEM DESCRIPTION

1.1. Introduction
1.2. Model 10 Specifications and Operating Conditions
1.3. General System Description

SECTION 2 INSTALLATION

2.1. Introduction
2.2. Foundations
2.3. Equipment Installation
2.4. General Handling and Lifting Instructions
2.5. Recommended Unloading and Placement Procedures

SECTION 3 OPERATION

3.1. Pre-Operation Check-Out
3.2. Filling An Adsorber With Carbon
3.3. Wetting (Deaerating The Carbon)
3.4. Backwashing and Backflushing
  3.4.1 Backwash / Backflush – General
  3.4.2 Backwashing An Adsorber
  3.4.3 Re-Starting System After Backwashing
3.5. Start-Up
  3.5.1 Series Flow
  3.5.2 Parallel Flow
3.6. Steady State Operation
  3.6.1 Monitoring
  3.6.2 Valve Operation
  3.6.3 Adsorber Sequencing – V-214A Lead, V-214B Lag
  3.6.4 Adsorber Sequencing – Taking Adsorber V-214A Off-Line
  3.6.5 Adsorber Sequencing – V-214A Back On-Line as the Lag Vessel
  3.6.6 Adsorber Sequencing – Taking Adsorber V-214B Off-Line
  3.6.7 Adsorber Sequencing – V-214B Back On-Line as the Lag Vessel
  3.6.8 Adsorber Sequencing – Adsorber Sequencing – Parallel Operation
3.7. Shutdown
  3.7.1 Short Term Shutdowns
  3.7.2 Extended Shutdowns
3.8. Troubleshooting Guide

CALGON CARBON CORPORATION ♦ COPYRIGHT 2016 ♦ ALL RIGHTS RESERVED

SECTION 4 CARBON TRANSFER PROCEDURE

4.1. Standard Trailer
4.2. Site Requirements
4.3. Spent Carbon Transfer to Trailer
4.3.1 Spent Carbon Transfer
4.3.2 Drain Water From Trailer
4.4. Fresh Carbon Transfer From Trailer
4.4.1. Fill The Trailer With Water
4.4.2. Transfer Carbon To Adsorber

SECTION 5 GENERAL INFORMATION

5.1. Maintenance
5.2. Safety Considerations
5.2.1. Oxygen Deficiency Due To Activated Carbon
5.2.2 Emergency Procedures
5.2.3. Pressure Relief Warning
5.3. Record Keeping

SECTION 6 ACTIVATED CARBON / ADSORPTION INFORMATION

6.1. Adsorption
6.2. Activated Carbon And How It Works
6.3. Factors Affecting Adsorption
6.4. Additional Adsorption Theory
6.5. Glossary

SECTION 7 CARBON DATA

- Activated Carbon Product Bulletin/Specifications
- Safety Data Sheet

CALGON CARBON CORPORATION ♦ COPYRIGHT 2016 ♦ ALL RIGHTS RESERVED

SECTION 8 OPERATING INFORMATION

Figure 1 – Vessel V-214A to V-214B Series Flow
Figure 2 – Vessel V-214B On-Line Vessel V-214A Carbon Transfer
Figure 3 – Series Flow Vessel V-214B to V-214A
Figure 4 – Vessel V-214A On-Line Vessel V-214B Carbon Transfer
Figure 5 – Parallel Flow Vessel V-214A and V-214B
Figure 6 – Vessel V-214B On-Line Vessel V-214A Backwashing
Figure 7 – Vessel V-214A On-Line Vessel V-214B Backwashing
Figure 8 – Calgon Carbon Standard Trailer
Figure 9 – Calgon Carbon Triple Compartment Trailer
Carbon Acceptance Canister Instructions
Spare Parts Program
Warranty
Video Agreement

- Model 10 Pressure Drop Curve – Series & Backwash
- Curve: Rate Of Wetting Versus Time For Granular Activated Carbon
- Curve: Percent Bed Expansion
- Application Bulletin: Disinfection Of Granular Activated Carbon
- ASME Section VIII - U1A Forms

SECTION 9 SPECIFICATIONS AND CATALOG CUT SHEETS

SECTION 10 SHIPPING SPECIFICATION

SECTION 11 DRAWINGS

SECTION 1

SYSTEM DESCRIPTION

SECTION 1

SYSTEM DESCRIPTION

1.1 INTRODUCTION

This manual covers a general description and operating procedures for a Model 10 Granular Carbon Adsorption System. This system is designed to treat liquid streams containing organic compounds amenable to adsorption using Calgon Carbon Corporation's granular activated carbon products. If the guidelines in this manual are read and followed carefully, the system can be operated efficiently and safely with minimal operating expense.

The recommended operating practices set forth in this manual are patterned to suit normal operating conditions. Different conditions may require modifications of these operating practices. Since varying operating conditions or problems may arise over long-term operation, the skill and judgment of the operating personnel should be exercised when needed.

This manual should be available to operating personnel and engineers so that the operating instructions are followed. Operators should record all operating data and maintenance work (overhauls, repairs, etc.) in an operator's logbook. Only trained personnel should operate the system and perform maintenance. If further information beyond what is contained in this manual is required, please contact the nearest Calgon Carbon Corporation regional sales office for assistance.

1.2 MODEL 10 SPECIFICATIONS AND OPERATING CONDITIONS

1. Adsorber Vessel Specifications:

- For Adsorber Vessel Specifications refer to Vessel Arrangement Drawing found in Section 11.
- For System Pressure Drop refer to the Pressure Drop Curve found in Section 8.

BACKWASHING INFORMATION:

Bed Expansion: 25%

- For Backwash Expansion Rates refer to the Bed Expansion Curve found in Section 8.

CALGON CARBON CORPORATION ♦ COPYRIGHT 2016 ♦ ALL RIGHTS RESERVED

2. System Weights and Dimensions (Approximate):

- For System Weights and Dimensions refer to the General Arrangement Drawing found in Section 11.

3. Vessel Accessories/Piping

Piping:

Process Piping:	8" Sch. 40 Carbon Steel
Carbon Transfer Piping:	4" Sch. 40 Carbon Steel (fill)
	4" PPL Lined Carbon Steel (discharge)
Backwash Piping:	8" Sch. 40 Carbon Steel

VESSEL NOZZLES	NUMBER	SIZE	FLANGE TYPE
Side Manway	1	20"	150#F.F.
Top Manway	1	14"x18"	Elliptical F.F.
Process In	1	8"	150# F.F.
Process Out	1	8"	150# F.F.
Carbon Inlet/Vent	1	4"	150# F.F.
Carbon Outlet	1	4"	150# F.F.
BW In			At Process Outlet
BW Out			At Process Inlet
Air Release	1	2”	150# F.F.
Sample Taps	3	2"	150# F.F.

Pressure Relief:

Pressure Relief Device:	Rupture Disk
Rupture Disk Material of Construction:	Graphite
Rupture Disk Stamped Burst Pressure:	125 psig
Rupture Disk Recommended Operating Ratio:	80%
Recommended Maximum Inlet Pressure:	100 psig

4. Carbon

Carbon Type:	OLC AW
Mesh Size:	12 x 40
Initial Fill:	40,000 Lbs. (Quantity per System)
Quantity per vessel:	20,000 Lbs.

CALGON CARBON CORPORATION ♦ COPYRIGHT 2016 ♦ ALL RIGHTS RESERVED

5. Materials of Construction List

WETTED CONTINUOUSLY		
ITEM	CCC SPECIFICATION NUMBER	MATERIAL OF CONSTRUCTION
Process and Carbon Fill Piping	C2 --	Sch. 40 Carbon Steel Pipe Cast Iron Fittings EPDM Gaskets
Process Valves	FLOWLINE	Ductile Iron Body Nylon Coated Ductile Iron Disk 416 Stainless Steel Shaft EPDM Seat
Carbon Discharge Piping	L1	PPL Lined Steel PPL Lined Cast Iron Fittings
Carbon Exchange Valves	4.08	316SS Body, Ball and Stem TFE Seats and Seals
Instrument and Flush Connection Piping	C13 S6	Sch. 40 Galvanized Carbon Steel 316 SS Tube and Fittings
Instrument and Flush Connection Valves	4.03	Bronze/Brass Body, Ball and Stem TFE Seats and Seals
Pressure Gauges	PI-217	316SS Bourdon Tube 316SS Connection
Rupture Disks	PSE-577	Graphite
Expansion Joints	24.06	Neoprene
Vessel Lining	VS7	Plasite 4110 Vinyl Ester
Vessel Manway Gaskets	G46	EPDM, Off-White
Underdrain Materials	22.106	Polypropylene Septa Ivory Rubber Gasket Polypropylene Expanding Ring
Basket Strainer	22.53	316 SS
Air/Vacuum Release	Crispin	AL Series
Vent and Sample Piping	S15	316 SS Pipe and Fittings
WETTED INTERMITTENTLY OR FOR SHORT TIME PERIODS		
Quick Connect Couplings	32.40 32.60	Malleable iron Aluminum

CALGON CARBON CORPORATION ♦ COPYRIGHT 2016 ♦ ALL RIGHTS RESERVED

6. Carbon Delivery

	STANDARD TRAILER (15 PSIG HOPPER)	MULTI COMPARTMENT TRAILER
Carbon (Lbs-dry):	20,000 (dry)	20,000 For GAC exchange 40,000 initial fill
Utility Requirements: Air (SCFM): (PSIG): Water (GPM): (PSIG):	 100 100 (**) 100 --	 100 100 (**) 100 --
Water Required to Fill Trailer (Gallons): Dry Carbon: Pre-Wetted Carbon:	 5,000 4,200	Compartment End Center 2,800 5,000 2,500 4,200
Height Clearance (Ft):	13	14
Overall Length: approx.	57’	62’
Empty Weight (Lbs):	32,000	37,000
Filled Weight (Lbs): Dry Carbon: Wet Carbon (Before Drain): (After Drain):	 52,000 94,000 72,000	For GAC Exchange 57,000 99,000 77,000

(*) Unloading accomplished with eductor
(**) Regulated down to 15 psig max.

1.3 GENERAL SYSTEM DESCRIPTION

The Model 10 Adsorption System is a unit consisting of two (2) vertical pressure vessels, each containing 20,000 pounds of granular activated carbon (total of 40,000 pounds per system). The vessels are complete with underdrain. Process piping and carbon transfer piping is shipped loose for installation in the field. The adsorber vessels are free-standing vessels, with the central piping assembly preassembled.

After connecting the influent and effluent piping to the system, the vessels may be operated in a series or parallel configuration.

Granular activated carbon will be delivered to the site in Calgon Carbon Corporation's bulk trailers for unloading directly as a water slurry into an empty adsorber.

CALGON CARBON CORPORATION ♦ COPYRIGHT 2016 ♦ ALL RIGHTS RESERVED

The stream to be treated is pumped to the adsorption system at a flow rate compatible with the design capacity of the unit. The adsorption system is operated in a downflow mode with the granular carbon beds in a series or parallel configuration.

In a series system, flow is directed into the top of the first vessel (lead adsorber) and flows down through the carbon. From the bottom of the lead adsorber, the stream flows into the top of the second adsorber (polish adsorber). Effluent from the polish vessel flows into the effluent line for discharge to a point determined by the client.

Initially, the impurities are adsorbed onto the carbon in the upper portion of the lead bed. As this top layer of carbon becomes saturated, adsorption takes place lower in the bed. Eventually all the carbon in the lead adsorber becomes saturated and the contaminant concentration of the effluent from the adsorber increases until it approaches or equals the influent concentration.

When the carbon in a vessel is exhausted, an empty trailer is sent to the site to remove the load of spent carbon. Pending completion of carbon acceptance by Calgon Carbon, the carbon will be returned to one of our plant sites for thermal reactivation.

The spent carbon is transferred from the adsorber to the bulk trailer by first filling the adsorber with water. The adsorber is then pressurized using compressed air as the motive force to facilitate the carbon transfer to the trailer.

Once the spent carbon transfer operation is completed, a charge of fresh carbon can be transferred into the empty adsorber. This is accomplished by filling the bulk trailer with water and placing a water cushion in the adsorber. The bulk trailer is then pressurized with compressed air to facilitate the carbon transfer into the adsorber.

In series operation, when the lead bed is taken out of service, flow may be directed to the polish adsorber (now the lead bed) for uninterrupted operation. After the first adsorber is emptied and then filled with fresh carbon, it can be placed on-stream in the polish position. At this point, the second adsorber becomes the lead bed of the two-stage operation. Series operation achieves the most efficient use of the carbon.

In parallel operation, the influent flow is directed to both vessels through a common inlet line. When contaminant breakthrough is detected from one or both vessels, the system is shut down for carbon replacement. If breakthrough occurs from only one bed, it is possible for the other adsorber to remain on-stream at its normal or a slightly higher flow rate. However, this is normally not done and both carbon beds are replaced. Parallel operation is used in situations where the carbon usage rate is low, the mass transfer zone is short, and/or two stage operations is not required.

CALGON CARBON CORPORATION ♦ COPYRIGHT 2016 ♦ ALL RIGHTS RESERVED

After start-up, records should be kept of pertinent data such as flow rate, pressure drop across each bed, total dissolved solids, temperature, pH, and/or specific performance requirements such as toxicity, BOD, COD, and TOC organic contaminant levels.

CALGON CARBON CORPORATION ♦ COPYRIGHT 2016 ♦ ALL RIGHTS RESERVED

SECTION 2

INSTALLATION

SECTION 2

INSTALLATION

2.1 INTRODUCTION

This section describes the offloading and installation of the modular carbon system. In addition to the instructions below, refer to the Shipping Specification included with this manual for instruction on shipping and handling of large adsorber systems.

2.2 FOUNDATIONS

The equipment can be set on a permanent or temporary foundation. A temporary foundation could be a steel skid or plate, paved area or concrete foundation to which the adsorber vessels can be secured. Any foundation, either temporary or permanent, must be adequate to support the operating weight of the unit. See the Calgon Carbon Corporation general arrangement drawing for the dimensions and weights of the system.

Before installation of a permanent system, the adsorber tanks should be oriented on the foundation to ensure that the inlet and outlet opening and anchor lugs are positioned properly. Anchoring can be installed either in the foundation or at time of vessel installation, provided local codes or regulations are satisfied. The outline of the adsorbers should be marked on the foundation.

2.3 EQUIPMENT INSTALLATION

A crane is required to off-load the vessels and piping skid. Lifting lugs are provided on all the vessels. A properly trained and experienced rigging crew should be employed to set the equipment. The vessels should be set on the foundation in a level position and be anchored as required by local codes and seismic regulations. Each vessel must be individually set.

1. The following instructions are typical for large modular adsorber systems. Refer to the project drawings for specific details; i.e. dimensions, weights and pipe sizes.
2. Before the equipment is shipped, a site visit is recommended to review specific site conditions that may affect delivery or installation. Special note should be made for:
    - Overhead clearances – power lines, trees, plant piping
    - Access to site – fences, trees, locations within neighborhood or plant
    - Soil conditions – Can the delivery truck get close to the installation site?
    - Foundations – Properly cured? Correct size to accept new system?

CALGON CARBON CORPORATION ♦ COPYRIGHT 2016 ♦ ALL RIGHTS RESERVED

3. Receive adsorption equipment in accordance with plant site requirements. Typically, one truck is used to ship the equipment. Shipment is normally comprised of the following items:

   - (2) Adsorber Vessels; Refer to project specific drawings for exact vessel dimensions and weight.
   - (12) Prefabricated pipe spools.
   - (1) Crate of hardware; Containing bolts, gaskets, pipe supports and u-bolts, gages etc.
   - (1) Valve Rack; Refer to the following table for the weight of a pipe rack.

Pipe Size	Weight
6”	2,800 lbs.
8”	3,900 lbs.
10”	6,300 lbs.

   Refer to the project drawings and material list enclosed in the crate for a comprehensive account of components provided for the particular job being installed.

4. Off load the equipment from truck to the pre-prepared mounting location. Set equipment on properly formulated foundation ensuring weight loading, anchor bolt depth, smooth level surface and adequate dimension for equipment footprint. For recommended lifting procedures refer to the section titled Lifting & Handling Guidelines.

5. The following installation steps can be accomplished in utilizing a crane for one day. Refer to the installation drawing, Figure 1, for generalized details and the project drawings for more specific details.
   - Set one vessel in proper location on the foundation
   - Position valve rack at the estimated point of hook-up. Make sure that vessel and valve rack are set true and level to plan.
   - Align the effluent nozzle on the bottom head, the effluent pipe, and rubber expansion joint with the appropriate valve rack connection.
   - Bolt-up snug when alignment is satisfactory.
   - Align the influent piping to the designated valve rack connection and connect expansion joint piping with tank nozzle on the top of the vessel, and bolt-up snuggly.
   - Attach all pipe bracket supports and u-bolts as provided.
   - When it is determined that complete line up is acceptable finish bolting both effluent and influent lines.
   - Set the second vessel into position and line up second vessel with valve rack and effluent/influent piping as previously described.
   - When accomplished finish the bolt-up.

CALGON CARBON CORPORATION ♦ COPYRIGHT 2016 ♦ ALL RIGHTS RESERVED

- When completely satisfied with installation bolt vessels to foundation using predetermined anchor bolt hardware.
- Connect (1) carbon fill, and (1) carbon discharge line to each vessel.
- Install the vessel sample ports and connecting hardware as detailed on the project drawings.
- Mount pressure gauges and instruments as shown on project drawings.
- Install the Carbon Acceptance Canister.
- If equipment is supplied with an electrical panel, run power feed to the panel and make connections per the interconnection drawing.

6. The customer should connect from the connections on the pipe rack; influent, effluent, backwash supply and backwash outlet, to the plant supply piping. Gaskets and bolts supplied by the customer.
   Client supplied effluent piping for the adsorption system should include an anti-siphon loop or adequate backpressure to ensure that the water level in the vessels covers the media during operation.

   The pressure relief discharges to the backwash outlet/vent line. The backwash outlet/vent line should have unrestricted flow to atmosphere.

7. Each vessel has underdrain nozzles pre-installed by CCC. For internal underdrains; ring type and internal cones, the septa should be checked for tightness before the manway covers are closed and secured.

8. The system is now ready for hydro testing and disinfection as required.

2.4 GENERAL HANDLING AND LIFTING INSTRUCTIONS

The recommended lift points are shown on the installation drawing; lifting lugs on vessel top head, vessel leg anchor base plates and location shown on the valve rack.

1. Always make lift attachments to the designated lift points when using chains or cables. Never lift using a vessel nozzle.
2. Operators of hoisting and moving equipment must follow proper rigging procedures at all times.
3. Always lift - NEVER roll or slide equipment.
4. When moving equipment, do not drop or allow hard impact. Do not allow cables, hooks, or spanner bars to swing against or slide over the vessel.
5. Never allow tools to strike or drop on equipment (especially inside or outside of vessels).
6. Never allow bare metal chains or cable to slide against the metal surface of equipment causing marring, deformation or serious defects in the metal.

CALGON CARBON CORPORATION ♦ COPYRIGHT 2016 ♦ ALL RIGHTS RESERVED

7. Avoid temporarily bracing vessels or equipment with metal structures, wood is acceptable for this application. Avoid striking vessel with tools or instruments of any kind.
8. All ladders used inside vessels shall have ends protected. Ladders shall have rubber protectors to prevent damaging the lining.
9. Workmen entering a lined vessel must wear soft-soled shoes, free of grit. Workmen must follow plant and OSHA requirements for confined space entry.

2.5 RECOMMENDED UNLOADING AND PLACEMENT PROCEDURES (REFER TO SHIPPING SPECIFICATION VS13)

1. Vessel and miscellaneous equipment unloading shall be accomplished in such a manner as to avoid damage to finished surfaces. Adequate padding may be necessary around the lifting point. Wooden chalks and crating should be carefully removed where necessary.
2. Utilize chains, nylon slings, or a spreader bar for hoisting vessels. The angle between the lifting point and the top of the equipment must always be 60° or greater. Workmen shall keep control over the vessel with guidelines. No metal rigging may come in contact with the vessel except for specifically designed lift points or lifting lugs.
3. A crane is required to off-load, move and hoist into position the vessels and piping assemblies. Lift points are provided on all pieces. A properly trained and experienced rigging crew shall be employed to set the equipment. The equipment shall be set on a solid foundation, made level as possible and anchored as required by local codes and seismic regulations. Each vessel must be individually set.
4. Piping connection points to vessels and valve rack shall be free of mechanical stress. Do not force pipe connections to these points for damage can result.
5. Follow safe anchor bolt installation practices.
6. Dirt marks shall be cleaned from the surface of all Equipment upon completion of the installation. Marred paint resulting on Vessels and all equipment pieces shall be touched up with a paint of comparable color and quality. More severe damage requires appropriate surface cleaning and preparation before primer and finishing paint are applied.

CALGON CARBON CORPORATION ♦ COPYRIGHT 2016 ♦ ALL RIGHTS RESERVED

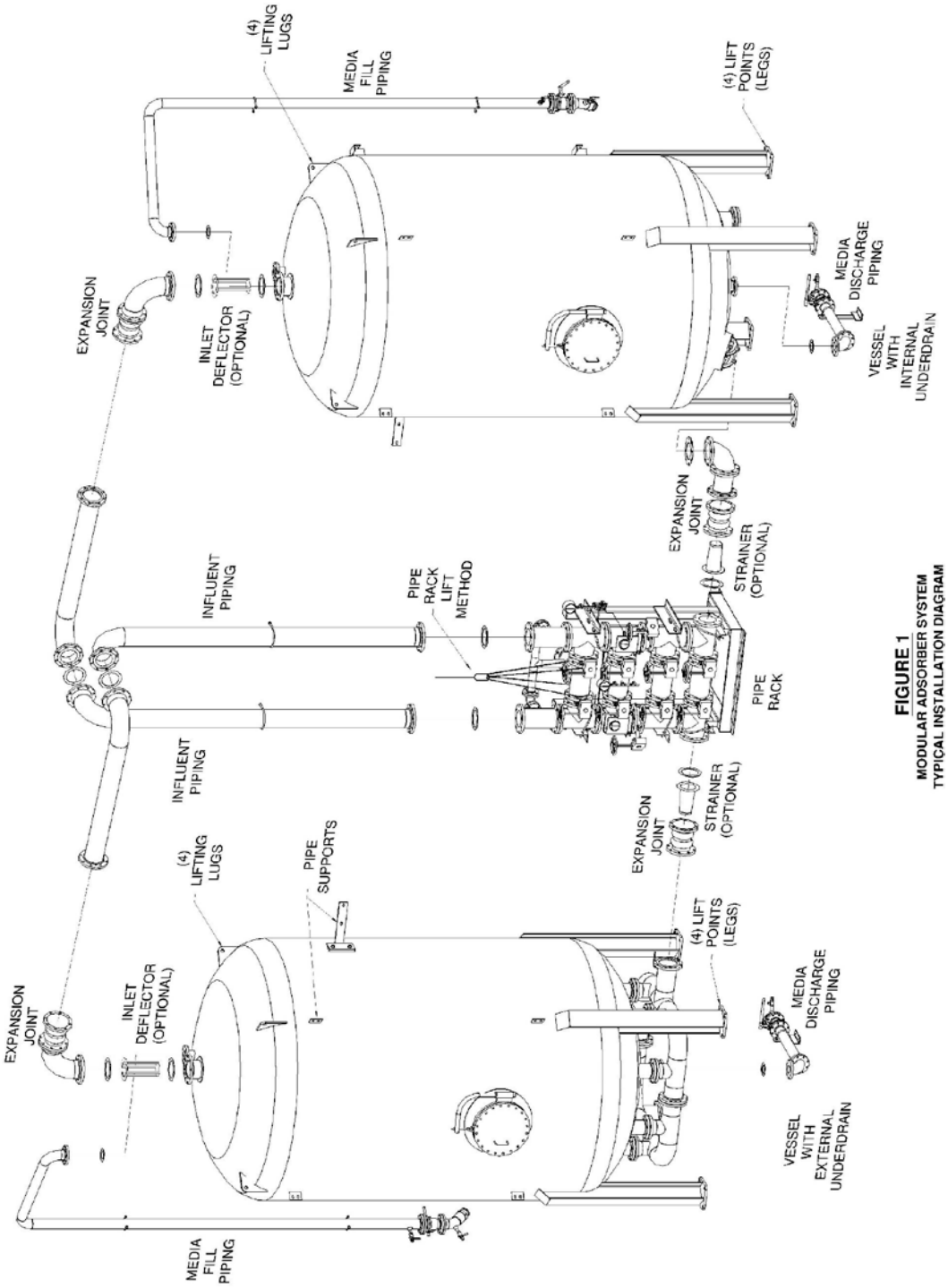

FIGURE 1
MODULAR ADSORBER SYSTEM
TYPICAL INSTALLATION DIAGRAM

SECTION 3

OPERATION

SECTION 3

OPERATION

3.1 PRE-OPERATION CHECK-OUT

All equipment and systems affiliated with the granular carbon adsorption system such as pumps, filters, etc. should be checked out according to the manufacturer's instructions. Specific activities to complete before operating the adsorption equipment should include the following:

1. Check all piping connections for proper installation and tightness.
2. Ensure that all gauges and instruments are functional and installed correctly. Re-zero or re-calibrate if necessary.
3. Close all valves in the adsorber piping system.
4. Install the carbon acceptance canister (if provided) after checking to ensure it is filled with carbon.

For potable water treatment installations, the client will be responsible for cleaning and disinfecting the vessels and piping prior to filling the system with carbon. The procedures to complete this step in the installation process are the responsibility of the client.

3.2 FILLING AN ADSORBER WITH CARBON

After the system has been checked, the adsorbers are ready to be filled with granular activated carbon. The carbon is transferred to the adsorbers as water slurry from Calgon Carbon trailers. The detailed procedures for making the transfer are given in Section 4.

The trailer driver connects the necessary hoses and operates all the valves on the trailer. A plant operator should be available to operate the valves on the adsorber system.

After all the carbon is transferred from the trailer, the driver disconnects the hoses and closes the valves on the trailer. The plant operator closes the valves in the vent and carbon fill lines on the adsorber. The adsorber is now ready to be backwashed or backflushed.

CALGON CARBON CORPORATION ♦ COPYRIGHT 2016 ♦ ALL RIGHTS RESERVED

3.3 WETTING (DEAERATING THE CARBON)

In a typical bed of virgin carbon, the pore volume is approximately 40% of the bed volume. Carbon which is shipped dry will contain air in these pores. Therefore, the carbon must be properly wetted prior to being placed on stream. If this is not done, the air within these pores will displace into the void spaces between the carbon particles during operation and cause high pressure drop and channeling in the adsorbers. These problems can cause premature breakthrough of contaminants. Air will not migrate out of the bed during normal downflow operation.

The time required for wetting is a function of liquid temperature and viscosity. Generally, a minimum wetting period of 24 hours is required using water at ambient temperatures, although a period of up to 72 hours is preferred for complete wetting. After wetting, backwashable adsorbers should be backwashed to remove air and segregate the carbon by size.

As an alternative, the Calgon Carbon Service trailer containing fresh carbon may be filled with water and allowed to stand for several hours. When the fresh carbon is transferred to the adsorber, the adsorber should be backwashed to eliminate any remaining air.

After the carbon has been wetted, the adsorber should be drained and then backfilled until water flows out the system vent line. The adsorber should be filled up-flow at 2 gpm/ft^2 maximum. For a Model 10 System this is 150 gpm, maximum.

If the unit must be placed on-stream before the carbon has been wetted, the adsorbers should be drained and backfilled when the pressure drop becomes prohibitive or after two days of operation, whichever occurs first.

For process applications, the same procedure is required. If the process liquid cannot be diluted with water and the carbon must be wetted with the process liquid there will be a significant heat of adsorption. In this case, Calgon Carbon should be contacted for specific instructions on the method to be used for wetting.

CALGON CARBON CORPORATION ♦ COPYRIGHT 2016 ♦ ALL RIGHTS RESERVED

3.4 BACKWASHING AND BACKFLUSHING

3.4.1 BACKWASH/BACKFLUSH -- GENERAL

Backwashing and backflushing are procedures involving running clean, contaminant-free water upflow through the adsorber. Backwashing or backflushing of a carbon bed can be done after fresh carbon has been transferred into an adsorber and wetted, or during operation to remove sediment from the top of the bed.

If the adsorbers are to be backwashed during operation, they should be backwashed prior to startup. The reasons for backwashing before placing fresh carbon on-line are to:

1. Size segregate the carbon so subsequent backwashing will return the carbon to the same relative position in the bed.
2. Remove any remaining air from the bed.
3. Remove carbon fines which can, in some cases, lead to excessive pressure drop and flow restriction.

Backwashing is done during operation to remove:

1. Sediment from the top of the bed.
2. Carbon fines that may be plugging the underdrain nozzles.
3. Air that is binding the bed. The need to backwash is indicated by an increased bed pressure drop.

Backwashing an adsorber results in expanding the carbon bed, removing air, suspended solids and carbon fines and classifying the carbon particles. The backwash flow rate depends upon the carbon particle mesh size and the water temperature (refer to the bed expansion curve in Section 8). Model 10 units are designed with significant straight side height to permit 30% bed expansion, and the selected backwash rate should limit the bed expansion to a maximum of 25%.

For your system, refer to Section 1.2 for the design backwash water flow rate. Note that this rate assumes a 55˚F backwash water source. Use the bed expansion curve in Section 8 to determine a backwash rate if the water source is at a different temperature.

CALGON CARBON CORPORATION ♦ COPYRIGHT 2016 ♦ ALL RIGHTS RESERVED

In a system that is not designed for backwashing, an operation termed backflushing can be used to remove fines from the upper portion of the bed. This operation will not remove fines from the lower portion of the bed because it does not expand the bed. Expansion of the bed allows the fines at the bottom of the bed to move to the top. However, fines do not always cause high pressure drop, and their removal is not always necessary.

The backflushing rate is 2 to 3 gpm/ft^2 and this is not significant enough to expand the carbon bed. For the Model 10 adsorber this is a flow rate from 150 gpm to 225 gpm. Flow rates of less than 225 gpm will not expand the bed; therefore, size segregation of the bed will not occur. The time required for backflushing is 30 to 45 minutes.

Normally when backwashing or backflushing, a clean external water source is used. The stream should be compatible with the system and free of suspended solids and organic contaminants which might affect adsorption. If necessary, effluent from the adsorber system may be used as the water source. In this case a tank with storage capacity for 15 minutes of backwash water (20,000 gallons) will be necessary.

When normal downflow operation is started after backwashing, the initial 5 to 15 minutes of effluent flow will be dark due to a small quantity of fines. Under normal operating conditions, this condition will clear up.

3.4.2 BACKWASHING AN ADSORBER (FIGURES 6 AND 7 IN SECTION 8)

In this mode, a clean external source is used as the source for the backwash water. Note that the lead adsorber is taken out of service while the backwashing procedure takes place. It is recommended that the entire system be taken off-line to retain all process conditions. However, for continuous flow, the lag adsorber can remain on-line while the lead bed is being backwashed.

For a system operating in parallel, only the vessel needing backwashed should be taken off-line when backwashing is required.

1. Isolate the adsorber to be backwashed. If adsorber V-214A is to be backwashed, refer to Section 3.6.4 for valve sequencing. If adsorber V-214B is to be backwashed, refer to Section 3.6.6 for sequencing. If entire system is taken off-line, make sure source is turned off (i.e., pump) and all valves at system are closed.
2. Open the vent valve (V6 for adsorber V-214A, V5 for adsorber V-214B).

CALGON CARBON CORPORATION ♦ COPYRIGHT 2016 ♦ ALL RIGHTS RESERVED

3. Open the backwash water inlet valve (V8 for adsorber V-214A, V7 for adsorber V-214B) and start the backwash pump. Backwash flow should be increased to design flow gradually, avoiding water hammer.

The backwash water enters the vessel through the effluent line and flows up through the underdrain and the carbon bed. The backwash water discharge from the vent line should be observed for clarity to determine the duration of backwashing. Backwashing for high pressure drop should take approximately 10 minutes. If excessive sediment and turbidity exists in the untreated water, the backwashing times may have to be increased to 15 minutes. A fresh carbon fill should be backwashed to classify the carbon. The time required for this step is approximately 15 minutes or until the backwash discharge is free of fines.

3.4.3 RE-STARTING SYSTEM AFTER BACKWASHING

The valve sequence given below describes the steps taken to bring a system on-line after backwashing. The valve numbers refer to bringing adsorber V-214A back on-line in the lead position. Valve numbers applying to placing adsorber V-214B back in the lead position are in parentheses.

1. Close the backwash water inlet valve V8. (V7)
2. Close vent valve V6. (V5)
3. Open cross-over valves V10, V12. (V9, V11)
4. Open influent valve V2. (V1)
5. Close influent valve V1. (V2)

3.5 START-UP

3.5.1 SERIES FLOW

The adsorber system is normally operated in a series mode. Valves in the influent and effluent lines are opened or closed, as required, to set the operation of the carbon vessels in the desired configuration. The first bed in the system is called the lead bed. The second bed is referred to as the polish or lag bed.

The following sequence of steps should be followed to bring an adsorption system on-line in the series mode:

1. Check that all the valves in the adsorption system are closed.

2. Open the valve in the effluent line from the polish adsorber (V4 for adsorber V-214A, V3 for adsorber V-214B).
3. Open the valves in the cross-over line between the adsorbers (V10. V12 for V-214A in the lead position, V9, V11 for V-214B in the lead position).
4. Start the feed pump and open the valve in the pump discharge line.
5. Slowly open the valve in the influent line to the lead adsorber (V2 for adsorber V-214A, V1 for adsorber V-214B) and allow the pressure to increase to the operating level.

At this point, flow should be established downflow through both vessels and they will be on-line in series.

Set the flow rate to the system at the desired value after flow is established to the unit. The flow control meters and control instrumentation will be provided by the client as required for the system.

In order to obtain full utilization of the carbon and prevent air entrapment and channeling in the bed, the water level must remain above the carbon bed. To prevent the bed from draining due to gravity or loss of influent supply, a vacuum break (anti-siphon) loop or backpressure should be included by the client in the effluent piping. This start-up sequence assumes that an anti-siphon loop is present in the effluent piping. If no anti-siphon loop or backpressure is present, start the system by starting the pump and opening the valves in the opposite order of the sequence given previously (i.e., open the influent valve first, followed by the cross-over valves and effluent valve).

After the system is operating at steady state, water flow to the Carbon Acceptance Canister (CAC) can be started. The GAC in the canister must first be wetted, refer to Section 3.3 for wetting instructions and Section 8 for information on the carbon acceptance canister.

3.5.2 PARALLEL FLOW

The following sequence of steps should be followed to bring an adsorption system on-line in the parallel mode:

1. Check that all the valves in the adsorption system are closed.
2. Open the valves in the effluent lines from the adsorbers (V3 and V4).
3. Start the feed pump and open the valve in the pump discharge line.

4. Slowly open the valve in the influent line to one adsorber (either V1 or V2) and allow the pressure to increase to the operating level.
5. Slowly open the valve in the influent line to the other adsorber (either V1 or V2) and allow the pressure to increase to the operating level.

At this point, flow should be established downflow through both vessels and they will be on-line in parallel.

Set the flow rate to the system at the desired value after flow is established to the unit. The flow control meters and control instrumentation will be provided by the client as required for the system.

In order to obtain full utilization of the carbon and prevent air entrapment and channeling in the bed, the water level must remain above the carbon bed. To prevent the bed from draining due to gravity or loss of influent supply, a vacuum break (anti-siphon) loop or backpressure should be included by the client in the effluent piping. This start-up sequence assumes that an anti-siphon loop is present in the effluent piping. If no anti-siphon loop or backpressure is present, start the system by starting the pump and opening the valves in the opposite order of the sequence given previously (i.e., open the influent valves first, followed by the effluent valves).

For parallel operation, flow is established to each vessel by opening the valves as indicated previously. Changing the flow to one vessel may result in a flow change to the other vessel. This occurs because the vessels share a common influent and effluent line. Flow meters can be installed in the individual influent lines to each vessel to balance the flow to each unit if required.

After the system is operating at steady state, water flow to the Carbon Acceptance Canister (CAC) can be started. The GAC in the canister must first be wetted, refer to Section 3.3 for wetting instructions and Section 8 for information on the carbon acceptance canister.

CALGON CARBON CORPORATION ♦ COPYRIGHT 2016 ♦ ALL RIGHTS RESERVED

3.6 STEADY STATE OPERATION

Once flow is established to both vessels and the flow rate is set, no further adjustments are made during normal operation. The operator should establish a routine to check the adsorbers and to collect operating data. This data can be used to establish a maintenance schedule, to determine when backwashing/backflushing is necessary, or to determine when fresh carbon is needed.

3.6.1 MONITORING

Sample connections are provided on the influent and effluent lines from each vessel to take periodic samples for analysis.

Pressure gauges are provided to determine the pressure drop across each carbon bed. Taking periodic pressure readings will provide the operator with historic data for troubleshooting purposes. In the event that operating conditions change, the operator has the capability of taking corrective action.

3.6.2 VALVE OPERATION

All valves should be operated in a slow and even motion. Abrupt opening and closing of the valves can shock the system. Since complete shut-off of flow while a pump is operating could cause damage to the pump, the valves should be operated in the proper sequence in order to always maintain flow through the system. If the vessels are identified as V-214A and V-214B then the corresponding valve positions during adsorption are given as follows:

PROCESS VALVE NUMBER	SERIES V-214A TO V-214B (FIGURE 1)	V-214B SINGLE OPERATION (FIGURE 2)	SERIES V-214B TO V-214A (FIGURE 3)	V-214A SINGLE OPERATION (FIGURE 4)	PARALLEL OPERATION (FIGURE 5)
V-1	Closed	Open	Open	Closed	Open
V-2	Open	Closed	Closed	Open	Open
V-3	Open	Open	Closed	Closed	Open
V-4	Closed	Closed	Open	Open	Open
V-5	Closed	Closed	Closed	Closed	Closed
V-6	Closed	Closed	Closed	Closed	Closed
V-7	Closed	Closed	Closed	Closed	Closed
V-8	Closed	Closed	Closed	Closed	Closed
V-9	Closed	Closed	Open	Closed	Closed
V-10	Open	Closed	Closed	Closed	Closed
V11	Closed	Closed	Open	Closed	Closed
V12	Open	Closed	Closed	Closed	Closed

Refer to Section 8 for the figures referenced in this table.

Single stage operation occurs for short time periods, such as during carbon transfer or backwashing, or during other routine maintenance on one of the adsorber vessels.

NOTE: FLOW SEQUENCE CHANGES (AS DESCRIBED IN THE FOLLOWING SECTIONS) SHOULD BE PERFORMED ONLY WHEN CARBON CHANGEOUTS, BACKWASHING, OR OTHER VESSEL MAINTENANCE IS REQUIRED.

3.6.3 ADSORBER SEQUENCING: V-214A LEAD, V-214B LAG

This sequence should be used to start up the system in series mode from V-214A to V-214B. Refer to Section 3.5.1 for additional details.

Starting valve position: All valves closed.

- Open valve V3
- Open valve V10, V12
- Open valve V1, V2

At this point, flow should be established from V-214A to V-214B.

3.6.4 ADSORBER SEQUENCING: TAKING ADSORBER V-214A OFF-LINE

When adsorber V-214A is taken off-line for carbon transfer or backwashing, all of the process flow should be sent through adsorber V-214B.

Starting valve position: Series flow from V-214A to V-214B.

- Open valve V1
- Close valve V10, V12
- Close valve V2

Flow should now be established through adsorber V-214B with adsorber V-214A off-line for carbon transfer or backwashing.

CALGON CARBON CORPORATION ♦ COPYRIGHT 2016 ♦ ALL RIGHTS RESERVED

3.6.5 ADSORBER SEQUENCING: V-214A BACK ON-LINE AS LAG VESSEL

After adsorber V-214A is filled with fresh carbon, it should be placed on-line in the polish position, with adsorber V-214B moved to the lead position.

Starting valve position: Single stage flow to V-214B.

- Open valve V9, V11
- Open valve V4
- Close valve V3

Flow should now be established from adsorber V-214B into adsorber V-214A.

3.6.6 ADSORBER SEQUENCING: TAKING ADSORBER V-214B OFF-LINE

When adsorber V-214B is taken off-line for carbon transfer or backwashing, all of the process flow should be sent through adsorber V-214A.

Starting valve position: Series flow from V-214B to V-214A.

- Open valve V2
- Close valve V9, V11
- Close valve V1

Flow should now be established through adsorber V-214A with adsorber V-214B off-line for carbon transfer or backwashing.

3.6.7 ADSORBER SEQUENCING: V-214B BACK ON-LINE AS LAG VESSEL

After adsorber V-214B is filled with fresh carbon, it should be placed on-line in the polish position, with adsorber V-214A moved to the lead position.

Starting valve position: Single stage flow to V-214A.

- Open valve V10, V12
- Open valve V3
- Close valve V4

Flow should now be established from adsorber V-214A into adsorber V-214B.

CALGON CARBON CORPORATION ♦ COPYRIGHT 2016 ♦ ALL RIGHTS RESERVED

3.6.8 ADSORBER SEQUENCING: PARALLEL OPERATION

The following sequence should be used to start up the system in parallel mode. Refer to Section 3.5.2 for details.

Starting valve position: All valves closed.

- Open valves V3 and V4
- Open valves V1 and V2

Flow should now be established through the system in parallel. When carbon transfer or backwashing is required, the system should be shut down until the operation is complete.

3.7 SHUTDOWN

3.7.1 SHORT TERM SHUTDOWNS

For short duration shutdowns lasting less than one or two weeks, little needs to be done. Close all valves in the adsorber piping system, and open the vent line valves on each vessel. The feed pumps should be shut down and the valves closed in the lines to and from the pumps. Any drain valves in the pump casing should be opened for the duration of the shutdown. Freeze protection measures such as draining lines at the low points should be taken when there is a chance of freezing. Freeze protection measures are usually the responsibility of the client.

3.7.2 EXTENDED SHUTDOWNS

For extended shutdowns, in addition to the steps in Section 3.7.1, the adsorbers should be drained of all water.

When the adsorbers are started up again, the carbon beds may require disinfection. If disinfection is required, the procedures to disinfect a carbon bed can be found in Section 8 of this manual. Once the disinfection is complete, backwashable adsorbers should be backwashed prior to start-up.

After disinfection, bring the adsorber back on-line in the downflow mode, monitor the effluent for coliform count and monitor the pressure drop.

CALGON CARBON CORPORATION ♦ COPYRIGHT 2016 ♦ ALL RIGHTS RESERVED

3.8 TROUBLESHOOTING GUIDE

PROBLEM		PROBABLE CAUSE		REMEDY
High pressure drop across adsorber.	1.	Bed not flooded. Bed is air bound.	1.	Open vent valve or carbon inlet valve to release pressure. Add water upflow to fill vessel. Establish constant forward flow, then close valve.
	2.	High feed pump pressure.	2.	Throttle feed pump.
	3.	High suspended solids loading or carbon fines around the nozzles.	3.	Test feed for suspended solids. Install influent filter. Backwash/backflush the adsorber.
	4.	Improper valve settings.	4.	Check valve sequence.
	5.	Carbon in effluent strainer.	5.	Shut down system. Clean out retainer and effluent line. Remove carbon from adsorber. Inspect vessel using side manway and repair damaged underdrain in adsorber.
Carbon in the effluent.	1.	Internal mechanical (i.e. underdrain) failure.	1.	Determine which adsorber is causing the problem, then remove carbon and make repairs. In addition, inspect carbon retainer in effluent line and replace if necessary.
Leaking flange.	1.	Loose bolts.	1.	Tighten bolts.

CALGON CARBON CORPORATION ♦ COPYRIGHT 2016 ♦ ALL RIGHTS RESERVED

3.8 TROUBLESHOOTING GUIDE

PROBLEM		PROBABLE CAUSE		REMEDY
Excessive flow out vent line.	1.	Broken rupture disk.	1.	Check the following conditions before replacing disk: 1) Check downstream valving to make sure that the system is not plugged off. 2) Check feed pump pressure to make sure it is not too high. 3) Check process valve sequence. 4) Check that excessive pressure build-up did not occur in closed vessels during extended shutdowns. Once the potential source of overpressurization is removed, replace rupture disk.
Sudden high contaminant concentration in effluent.	1.	Carbon heel from improper transfer.	1.	Wait until contaminant flushes out. Review transfer procedures.
	2.	Leaking valve.	2.	Repair/replace valve.
	3.	Mass transfer zone has extended into effluent.	3.	Replace carbon.

3.8 TROUBLESHOOTING GUIDE

Problem		PROBABLE CAUSE		REMEDY
Premature breakthrough of organics in the effluent.	1.	Influent concentration change.	1.	Confirm by analyzing effluent sample(s) before changing carbon.
	2.	Air in the influent stream.	2.	Open vent valve and fill bed upflow with water as required.
	3.	Background TOC or colloids present.	3.	Change carbon.
	4.	Leaking valves.	4.	Check operation of valves in influent and effluent lines.
	5.	Incorrect valve sequence.	5.	Sequence the flow through the system properly.
Carbon heel in empty vessel.	1.	Insufficient rinse water.	1.	Provide additional rinse water flow.
	2.	Mechanical failure.	2.	Check vessel internal parts and make repairs.
	3.	Foreign material on the carbon.	3.	Rinse vessel to remove carbon.

CALGON CARBON CORPORATION ♦ COPYRIGHT 2016 ♦ ALL RIGHTS RESERVED

SECTION 4

CARBON TRANSFER PROCEDURE

SECTION 4

CARBON TRANSFER PROCEDURE

4.1 STANDARD TRAILER

The procedures that are detailed in this section of the manual are for Calgon Carbon's standard carbon trailer. Carbon may be delivered in any of two types of trailers; the standard (single compartment) trailer, or the multi compartment trailer.

The multi compartment trailer (Figure 9 in Section 8) is built to hold 10,000 pounds of carbon in each end section and 20,000 pounds in its center section. The multi compartment trailer arrives at the site with fresh carbon in the end sections. First, spent carbon is transferred to the center section of the trailer and then the fresh carbon is transferred from the end compartments to the adsorber.

In cold weather conditions, steam may be used to thaw the trailer and transfer lines if necessary. Contact Calgon Carbon for trailer steaming procedures if required.

4.2 SITE REQUIREMENTS

A flat paved area is needed to support the Calgon Carbon service trailer which may weigh up to 100,000 pounds. The overhead clearance required for the adsorption system is 13 to 14 feet. Diagrams of the trailers with on-board piping are shown in Figures 8 and 9 in Section 8.

The utility and piping requirements to connect to the adsorber and trailer are as follows:

ADSORBER

Plant Air Line	3/4" Universal air connection 100 scfm at 30 psig min. (Attaches to 3/4" flush connection on carbon fill line above carbon inlet valve)
Plant Water Line	100 gpm (max) at 30 psig min. (Attach at drain connection using a 2" female Kamlock, or through backwash inlet using an 8" 150 lb. flanged connection)

CALGON CARBON CORPORATION ♦ COPYRIGHT 2016 ♦ ALL RIGHTS RESERVED

Trailer (See Figure 8 in Section 8)

Plant Air Line	3/4" Universal air connection (for both industrial and food grade trailer) 100 scfm regulated to 15 psig max.
Plant Water Line	4" Kamlock connection (female for industrial trailer, male for food grade trailer) 100 gpm regulated to 15 psig max. (Connect to Trailer Carbon Fill or Discharge Line)

4.3 SPENT CARBON TRANSFER TO TRAILER

Spent carbon transfer from the adsorber to the trailer is accomplished by pressurizing the adsorber with plant air. When the transfer is complete, the spent carbon in the trailer is drained of water. Prior to disconnecting any lines, the air supply must be shut off, and the adsorber and all transfer lines must be vented.

4.3.1 Spent Carbon Transfer

A. Prepare for Spent Carbon Transfer:

1. Close all adsorber valves.
2. Connect the adsorber carbon outlet line to the trailer carbon fill line using 4" flexible hose.
3. Open the center manway of the trailer or trailer vent valve T1 for venting.
4. Open valve T2 in the trailer carbon fill line.
5. Check that the adsorber is full of water.
6. To aid the initial phase of transferring spent carbon, fill the transfer line with water. To do this, use a 3/4" water hose to fill the transfer line with water at the adsorber carbon outlet valve's flush-out connection.

B. Transfer Spent Carbon

1. Open the 3/4" air line valve slowly and pressurize the adsorber to 25 to 30 psig.
2. Open the 4" adsorber carbon outlet valve (V14 for adsorber V-214A, V13 for adsorber V-214B) and transfer the spent carbon to the trailer.
3. As the trailer starts to fill with carbon slurry, open the trailer septa valves T8, T9, and T10 to drain off excess motive water.

CALGON CARBON CORPORATION ♦ COPYRIGHT 2016 ♦ ALL RIGHTS RESERVED

The transfer should take 20 to 30 minutes. The transfer will end with a loss of pressure in the adsorber and the sound of air in the transfer line.

A small heel of carbon may remain in the adsorber. This material will have to be removed. Close the carbon outlet valve on the adsorber and add plant water to the adsorber for 2-3 minutes (through the drain connection or backwash inlet). Leave the 3/4" air line open. When the adsorber pressure reaches 25 psig, open the adsorber carbon outlet valve (V14 for adsorber V-214A, V13 for adsorber V-214B) and transfer the remaining amount of carbon into the trailer.

C. End Transfer

1. Close the plant air line valve.
2. Vent the tank and lines through the trailer vent valve T1.
3. Open the adsorber vent valve (V5 or V6) to further aid the venting.
4. Close the adsorber carbon outlet valve (V14 for adsorber V-214A, V13 for adsorber V-214B).
5. Using a 3/4" water hose at the adsorber carbon discharge line flush-out connection, flush out the transfer line for a few minutes to remove all traces of carbon. Bleed the water hose and remove it.

4.3.2 Drain Water From Trailer

A. Prepare for Draining Water

1. Close all valves on the trailer. Close the trailer manway.
2. Connect the plant air line to the 3/4" connection on trailer carbon fill line using the air line hose.
3. Connect the trailer carbon discharge/drain line to the drain line in the trench by means of a 4" flexible hose.

B. Draining Trailer

1. Pressurize the trailer to 15 psig by slowly opening plant air line valve T4 on the trailer.
2. Open 2" trailer septa valves T8, T9, and T10.

By pressurizing the trailer, water will be drained in less time than if drained by gravity.

CALGON CARBON CORPORATION ♦ COPYRIGHT 2016 ♦ ALL RIGHTS RESERVED

C. End Draining

1. When the carbon is completely drained, close the air line valve T4 on the trailer.
2. Vent trailer slowly through trailer vent valve T1.
3. When venting is complete, close all valves on the trailer and disconnect all hoses.

The trailer is now full of drained spent carbon and is ready for return to Calgon Carbon for reactivation.

4.4 FRESH CARBON TRANSFER FROM TRAILER

Fresh carbon is transferred in a slurry using plant air pressure. The trailer is first filled with water to create the slurry. The carbon slurry hose on the trailer is connected to the adsorber fill line and the trailer carbon discharge line. After putting a water cushion in the adsorber, the trailer is pressurized and the carbon slurry is transferred to the empty adsorber. Prior to disconnecting any lines, the air supply must be shut off, and the trailer and all transfer lines must be vented.

Under no circumstances should the standard and triple compartment trailers be connected to a pressure source exceeding 15 psig.

4.4.1 Fill The Trailer With Water

If the carbon is wetted prior to delivery, about 4000 gallons of water will be required. If the carbon is dry, about 5000 gallons of water will be required. The trailer may be filled either upflow or downflow.

A. Filling Operation

1. Connect water line to the trailer (carbon fill line if filling downflow, carbon discharge line if filling upflow) using a 4" flexible hose.
2. Open one top manway to vent trailer during filling.
3. Open trailer vent line valve T1.
4. Open trailer water line valve (valve T2 if filling downflow, valves T8, T9, and/or T10 if filling upflow).
5. Open plant water line valve slowly and fill the trailer.

CALGON CARBON CORPORATION ♦ COPYRIGHT 2016 ♦ ALL RIGHTS RESERVED

The trailer will be filled with approximately 4000 to 5000 gallons of water. The trailer filling shall be visually determined by observing the water level through the manway or by metering the desired amount.

B. End Filling Operation

1. Close plant water line valve.
2. Close trailer water line valve (T2 for downflow, T8, T9, and T10 for upflow), manways, and trailer vent valve T1.
3. Disconnect hose.

4.4.2 Transfer Carbon To Adsorber

A. Prepare for Transfer

Place about 3000 gallons of water in the adsorber. This water cushion helps to protect the underdrain system and vessel lining. If the amount of water cannot be measured, fill the vessel until water flows from the lowest sample point nozzle. After water flows from this point, continue to fill the vessel for several minutes to allow the water cushion to rise several more inches.

1. Connect the adsorber fill line to the trailer carbon discharge/drain line using 4" flexible hose.
2. Connect the 3/4" plant air line to the trailer carbon fill line using the air line hose.
3. Close all valves on the adsorber.
4. Open the adsorber vent valve (V5 or V6).
5. To aid the initial phase of transferring fresh carbon, fill the transfer line with water. To do this, use a 3/4" water hose to fill the transfer line with water, at the carbon inlet valve's flush-out connection.

B. Transfer Fresh Carbon

1. Pressurize the trailer to 15 psig by slowly opening the plant air line valve and then slowly opening valve T4 in the trailer carbon fill line.
2. Open the adsorber fill line valve (V16 for adsorber V-214A, V15 for adsorber V-214B).

CALGON CARBON CORPORATION ♦ COPYRIGHT 2016 ♦ ALL RIGHTS RESERVED

3. The Calgon Carbon trailer driver will open the trailer carbon outlet valves T5, T6, and T7 to empty the respective hoppers.
4. If a water cushion is utilized, open an adsorber drain valve shortly after starting the transfer. This is done to reduce the amount of water that overflows at the end of the transfer. The disposal of the excess motive water is provided by the customer.

C. End Transfer

1. Close the plant air valve and vent the trailer through the adsorber vent valve.
2. Close the adsorber drain valve if it was utilized during the transfer.
3. Slowly open trailer vent valve T1 for additional venting.
4. When completely vented, close the adsorber fill line valve (V16 for adsorber V-214A, V15 for adsorber V-214B), disconnect the hoses, and close the trailer valves.
5. Refer to Sections 3.3 and 3.4.2 for instructions on wetting and backwashing/backflushing the adsorber.
6. After the adsorber has been backwashed/backflushed, shut off the plant water and close the vent valve on the adsorber.

CALGON CARBON CORPORATION ♦ COPYRIGHT 2016 ♦ ALL RIGHTS RESERVED

SECTION 5

GENERAL INFORMATION

SECTION 5

GENERAL INFORMATION

5.1 MAINTENANCE

As preventative maintenance, periodic inspection of the vessel internal parts should be made to ensure that the underdrain, vessel lining, and nozzles are in good condition. As a minimum, the adsorber should be inspected once per year, or during carbon transfers if the on-line period exceeds one year. Any nozzles showing signs of fatigue or surface area restriction due to pluggage of the nozzle slots should be replaced. Nozzles should be physically checked to ensure that they are tightly secured.

Systems with high backwash frequencies and rigorous backwash requirements should be inspected more frequently. The vessel must be fully emptied to allow inspection of the interior of the vessel. Follow the safety guidelines listed in the following sections when entering enclosed vessels. Calgon Carbon Operations personnel should be present during internal vessel inspections.

Pressure gauges should be installed on influent and effluent piping to determine the pressure drop across the carbon bed. Taking periodic pressure readings will give the operator the capability of monitoring the pressure drop across the carbon vessels over time. If a pressure increase is observed, then corrective action can be taken before the pressure drop becomes a problem.

To protect the vessel from high pressure, a safety device is provided to relieve pressure at the design rating of the vessels.

In order to prevent carbon from entering the effluent stream, a carbon retainer screen is installed in the expansion joint located in the effluent line from each adsorber. In the event of an underdrain nozzle failure, the strainer will fill with carbon and the pressure drop will increase to a point where the system flow is reduced. If this should occur, the system should be operated in single vessel mode (see Figure 2 or Figure 4 in Section 8) until the damaged underdrain in the other vessel is repaired.

CALGON CARBON CORPORATION ♦ COPYRIGHT 2016 ♦ ALL RIGHTS RESERVED

5.2 SAFETY CONSIDERATIONS

5.2.1 Oxygen Deficiency Due To Activated Carbon

Studies have shown that low oxygen content exists in vessels containing wet drained granular activated carbon. The laboratory experiments conducted since that time also have revealed that commercial activated carbons in a wet or moist condition will lower the oxygen content of an isolated space.

Preliminary indications of this research are:

1) The phenomenon occurs with all types of wet activated carbon.

2) The rate of oxygen uptake naturally varies with the degree of exposure of the wet carbon to the air. Thus, it is relatively rapid in a drained bed.

3) There is some indication of a limit to the carbon's capacity for oxygen, but until more is known, it would be prudent to assume that all carbons (fresh, used, reactivated) will also exhibit this characteristic. Similarly, although these tests were run with water, it should be assumed that the phenomenon will occur in other liquid and vapor systems.

Based on the properties of wet activated carbon, a confined space entry procedure should be established for any facility using carbon in confined vessels.

All confined spaces, including those containing activated carbon, should be presumed to be hazardous. Appropriate safety measures should always be taken before entering, as well as when workers are in a confined space. OSHA regulations applicable to respiratory protection in oxygen deficient atmospheres should be strictly adhered to.

CALGON CARBON CORPORATION ♦ COPYRIGHT 2016 ♦ ALL RIGHTS RESERVED

5.2.2 Emergency Procedures

In the event a malfunction which causes a shutdown of an adsorber should occur, the flow can either be switched to the second adsorber in the system or the flow can be stopped.

If a major leak or similar problem develops, flow to the adsorber should be stopped immediately and steps taken to correct the problem. Proper safety procedures should be observed at all times to prevent damage to the equipment or injury to personnel.

5.2.3 Pressure Relief Warning

TO AVOID VESSEL DAMAGE AND ENDANGERMENT OF OPERATING PERSONNEL, DO NOT BLOCK THE PRESSURE RELIEF DEVICE FROM VENTING TO ATMOSPHERE.

5.3 RECORD KEEPING

Normally, operating data is taken for: 1) flow rates, 2) which beds are in service, 3) pressure drop across each unit, and 4) necessary analytical work for influent and effluent to each adsorber. This may include: pH, TOC level, BOD, COD, toxicity, organic contaminant levels, and inorganic levels.

CALGON CARBON CORPORATION ♦ COPYRIGHT 2016 ♦ ALL RIGHTS RESERVED

SECTION 6

ACTIVATED CARBON / ADSORPTION INFORMATION

SECTION 6

ACTIVATED CARBON / ADSORPTION INFORMATION

6.1 ADSORPTION

There are two types of adsorption: physical and chemical.

Physical adsorption is usually explained in terms of surface structure (or energy per unit volume) of the solid. While molecules in the interior of any solid material are subject to equal forces in all directions, the molecules on the material's surface are subjected to unbalanced forces. This results in an imbalance with inward forces toward the solids. Molecules that are either gaseous or liquid then become attracted (adsorbed) to the solid's surface.

The attractive forces, known as London Dispersion Forces, are the same forces responsible for surface tension and condensation of vapors to liquid. These forces are a type of Van der Waals force and range from very weak to moderately strong. Physical adsorption is reversible and changing the process variables in a system can cause molecules to be desorbed.

Chemical adsorption is a chemical reaction between a molecule in a solution or vapor with the surface of an adsorbent such as activated carbon. The chemical reaction is usually irreversible. An example of chemical adsorption is chlorine removal from water. The chemical reaction of chlorine with carbon and water forms Cl- and CO3= ions.

An important aspect to any adsorbent is the amount of pore volume it contains per unit volume or per net weight. Examples of adsorbents are activated carbon, silica gel, activated gel, alumina, and zeolite.

6.2 ACTIVATED CARBON AND HOW IT WORKS

Any organic material with high carbon content (coal, wood, peat, coconut shells, etc.) can be used as the raw material for making activated carbons of various activities and properties. When making high quality granular activated carbon from coal, the raw material is ground and a binder is added to give the end product suitable hardness. The mixture is then re-compacted and crushed to give it the desired particle size. The carbon is then activated by thermally decomposing and removing carbon from the structure in a reducing atmosphere at about 1800°F. Furnace temperature and the furnace atmosphere are controlled to produce the desired adsorption properties in the product.

CALGON CARBON CORPORATION ♦ COPYRIGHT 2016 ♦ ALL RIGHTS RESERVED

The resultant product has an incredibly large internal pore volume per unit particle volume and a network of submicroscopic pores where the adsorption takes place. About 40% of the particle volume is used to contain adsorbates. One pound of activated carbon contains an effective total area of over 100 acres.

Activated carbon normally removes adsorbates (contaminants or desired products) from a solution (solute) through physical adsorption. The adsorbate would have to differ from the solute. For example, in aqueous solutions the solute should be more neutral or non-polar and have a higher molecular weight.

Many factors affect carbon adsorption in liquids, such as pH, flow rate, temperature, solubility, concentration of adsorbate, type and number of different adsorbates, viscosity, and the level of adsorbate removal required.

In any stream, there are four steps that occur in order for adsorption to take place. First, the adsorbate molecule must migrate through the bulk of solution toward the carbon particle. This is known as bulk diffusion. Second, the adsorbate penetrates the surface film to reach the exterior surface of the carbon. This is known as film diffusion. Third, the adsorbate diffuses through the transport or large pores. This is known as pore diffusion. Fourth, the adsorbate is adsorbed deep into the micropore structure of the activated carbon. In most water applications, the rate limiting step is the pore diffusion step.

In a typical fixed bed carbon system, the liquid flows down through an adsorber. Initially, the adsorbate is adsorbed onto the top most portion of the carbon. The rate of adsorption will determine the depth of carbon (mass transfer zone) that is utilized to remove the adsorbates. The varying concentration in the mass transfer zone is known as the wavefront.

Eventually, the wavefront moves through the bed and contamination breaks through into the effluent from the bed. This is known as the breakpoint. In a single or parallel adsorber system, the contaminants are usually monitored until the effluent approaches the allowable limit. The adsorber is then taken off-line and the spent carbon is removed. The adsorber is then refilled with fresh carbon and brought back on-line. In a series mode, the mass transfer zone in the first or lead bed is allowed to pass through the adsorber into the second bed. Usually, when adsorbing multiple components, the first two or three compounds that are being monitored in the effluent from the lead bed are allowed to approach their influent levels, at which point the adsorber is taken off-line.

CALGON CARBON CORPORATION ♦ COPYRIGHT 2016 ♦ ALL RIGHTS RESERVED

6.3 FACTORS AFFECTING ADSORPTION

Concentration: With each adsorbate, a high concentration will result in a higher adsorption capacity for that adsorbate on the carbon. For example, if an adsorbate has a one percent loading at 1 mg/l, it might have a three percent loading at 10 mg/l. However, the volume of carbon required to treat a fixed volume of solution will go up if the concentration goes up.

When the concentration of the feedstream changes dramatically, such as when a spill occurs upstream of a potable water plant intake, undesirable effects may occur. Concentrations at the intake of the plant may go up 100 to 1000 times the normal influent concentration. The activated carbon would adsorb the contamination with a higher capacity, if adsorptive capacity was available.

However, upon passage of the spill past the intake, the activated carbon may desorb some of the high level contamination to fresh carbon downstream of the mass transfer zone or into the effluent. When upsets occur, a conservative approximation is to assume that additional carbon is exhausted by the excess contaminant at the original loading rate for the normal influent level.

Another example is when the contaminant concentration in the influent decreases for a period of time. In this instance the adsorbate will start to desorb. The rate of desorption is slower than the rate of adsorption. Therefore, a conservative estimate of the overall effect is that a fixed volume at the reduced influent level will exhaust as much carbon as if the influent concentration was consistently high.

A steady feed concentration will help minimize the amount of carbon that is used in an application. A steady feed would usually be considered to be +/-25% of the average concentration. However, the carbon bed will act to average out upsets and variations, except when the bed is nearly exhausted.

Flow Rate: In many applications, the flow rate to the adsorber is varied because the flow demand changes. As the flow changes, so does the mass transfer zone (MTZ). These changes are approximated by a directly proportional relationship between MTZ length and flow rate. For example, if the MTZ is 1 foot at 250 gpm, it would be 2 feet at 500 gpm. If the flow rate is increased dramatically, the MTZ is further lengthened because some desorption may take place, resulting in less efficient operation. For the optimum carbon usage, the flow rate should be steady (if possible).

In a series configuration, increasing the flow rate usually has a minimal impact. In a parallel mode, this impact is more substantial since the carbon is usually taken off line on the basis of the effluent quality. since the MTZ is lengthened the on-stream time will be shortened.

CALGON CARBON CORPORATION ♦ COPYRIGHT 2016 ♦ ALL RIGHTS RESERVED

Viscosity: As viscosity increases in a system, the time to adsorb lengthens, and thus the MTZ lengthens. In a process application the temperature of the feedstream may be raised to offset increases in viscosity, but if the temperature is raised too high degradation of product may occur or the adsorption capacity of the carbon may be reduced. In water applications, viscosity has minimal impact because it is relatively low.

Temperature: In liquid phase systems, the adsorptive capacity is usually lowered at higher temperatures because the solubility is increased.

Feedstream pH: The pH of the feedstream can impact adsorption efficiency. This impact may be substantial since the pH affects the ionization of the adsorbate. Usually, the more ionic adsorbates have less adsorption capacity. Therefore, organic acids adsorb better at lower pH levels, while organic bases adsorb better at higher pH levels.

Water Characteristics: On each start-up of fresh carbon, the pH of the effluent stream may rise. This occurs because species like sulfates, nitrates and chlorine adsorb and displace alkaline species. The pH will return to normal, depending on water characteristics, after 250 to 350 bed volumes have been treated. If this is a problem, then either acid should be added to the effluent, or the carbon should be allowed to stand in a sodium sulfate solution for 10 to 12 hours.

The carbon has a capacity for sodium sulfate of 1% by weight. Therefore, the water in contact with the carbon should contain a quantity of sodium sulfate at least equal to 2% by weight of the carbon. In a 20,000 pound adsorber this would be 400 pounds of Na2SO4 in 5,000 gallons of water.

Solubility: The water solubility of a particular compound is a very good indicator of its adsorptivity. Generally, the more soluble a compound is, the more difficult it is to be adsorbed. Also, a more water soluble compound has a longer MTZ.

Suspended Solids: Suspended solids should usually be taken out of the feedstream before the carbon adsorbers. Suspended solids (>10 microns) will usually be filtered out within the first 6" of carbon and the pressure drop across the carbon will increase. If the pressure drop increases too much, the unit should be backwashed or backflushed. Normally, feed streams containing suspended solids of more than 50 ppm are pre-filtered.

CALGON CARBON CORPORATION ♦ COPYRIGHT 2016 ♦ ALL RIGHTS RESERVED

If the suspended solids are finer than 10 microns, the solids will usually not be filtered out by the carbon. The solids would then pass through the carbon into the effluent. This condition is very undesirable because the solids often contain dissolved or attached adsorbate and premature breakthrough can appear to occur. For materials to adsorb they must be in solution, so they can diffuse into the pore structure.

Immiscible Oils and Greases: Immiscible oils and greases have to be separated from the feedstream before the carbon adsorbers. If they are not removed, they may coat the carbon particles with a fine film. The adsorbates will not be able to pass through this film, and the carbon will not be effectively utilized. Oils and grease can also behave as a suspended, immiscible solid.

Heat of Adsorption: Heat is often given off when molecules are adsorbed. The amount of heat is conservatively estimated at two (2) times the heat of vaporization. In a process stream where the solvent is an organic liquid, a heat-up potential exists if the carbon has not been previously wetted and deaerated properly. Refer to Section 3.3 of this manual for wetting procedures.

Water has too low a heat of adsorption to cause a problem for aqueous solutions.

Competitive Adsorption: In most carbon applications (process, wastewater, groundwater, and potable water), more than one adsorbing compound is in the feedstream. Some of these compounds must be adsorbed while others may be permitted to pass through the carbon bed.

Unfortunately, the activated carbon cannot tell which of the molecules must be adsorbed. All of the components in the feedstream will compete for adsorption space, making the removal of target components less efficient. Therefore, competitive adsorption can cause premature breakthrough of the target component.

6.4 ADDITIONAL ADSORPTION THEORY

Desorption/Displacement: Desorption is the opposite of adsorption and may occur for many reasons. Changes in the feedstream components, temperature, pH, and feedstream concentration may promote desorption. In order to minimize desorption and optimize carbon usage, the feedstream should be stable (if possible). The rate at which desorption takes place is usually much slower than the adsorption rate.

CALGON CARBON CORPORATION ♦ COPYRIGHT 2016 ♦ ALL RIGHTS RESERVED

If a more strongly adsorbed organic enters the feed it will desorb the target adsorbate. This forces the target adsorbate to re-adsorb deeper in the carbon bed, and eventually breakthrough will occur.

Roll-Over in Competitive Adsorption: When an adsorber system runs beyond breakthrough, the more weakly adsorbed components originally in the feedstream can be desorbed into the effluent. The resulting concentrations may exceed the inlet concentrations. This phenomenon is known as roll-over. In a properly operated column system, roll-over of key components will not be observed in the effluent.

Effect of Bacteria: Higher pressure drops can be a result of bacteria growth in some wastewater applications. This is due to bacteria slime and exhaust gasses from the bacteria. If backwashing does not get rid of the pressure drop problem, then either NaOH washing or higher temperatures will control bacteria growth. Usually, sodium hydroxide washing is used in lined vessels. Do not use biocides, chlorine, or other additives, since they will adsorb and reduce carbon life without affecting the bacteria.

Refer to Section 8 for sodium hydroxide washing procedures.

6.5 GLOSSARY

The following terms are commonly used to describe adsorption theory, activated carbon, and adsorption systems.

ABRASION NUMBER -- A test performed on a particulate material to define the resistance of the particles to degrade on handling. It is calculated by contacting a sample with steel balls in a Ro-Tap machine and determining the ratio of the final to the original mean particle diameter.

ACTIVATED CARBON -- A carbonaceous material that is a crude form of graphite with a random and amorphous structure. The structure is highly porous, over a broad range of pore sizes, from visible to molecular cracks and crevices.

ACID WASHED ACTIVATED CARBON -- Activated carbon which has been washed with an acid solution for the purpose of dissolving the iron from the carbon. Acid washed carbons are usually used in systems/processes operating at low pH.

ADSORBATE -- Any substance that is or can be adsorbed on the adsorbent.

ADSORBENT -- Any solid having the ability to concentrate significant quantities of other substances on its surface. Activated carbon is an adsorbent.

ADSORBER -- A vessel designed to hold granular activated carbon.

CALGON CARBON CORPORATION ♦ COPYRIGHT 2016 ♦ ALL RIGHTS RESERVED

ADSORPTION -- A phenomenon where an adsorbate is physically attracted to the surface of the adsorbent.

ADSORPTION ISOTHERM -- A graphic depiction of the capacity of an adsorbent to adsorb a specific adsorbate. The measurements of capacity are performed at constant temperature using either varying amounts of the adsorbate or adsorbent.

ADSORPTION PORES -- The finest pores in the carbon structure. Pores which have adsorption capacity.

AGGLOMERATED -- Material that has formed into a solid mass.

AIR SCOURING -- A process that uses pressurized air to break-up any agglomerations in a carbon bed. Air is blown into the bottom of the bed before the bed is backwashed. Air scouring capability must be incorporated into the system design during the design phase.

APPARENT DENSITY -- A physical property that is defined as the mass per unit volume of a granular material under specified conditions. The apparent density includes the carbon skeleton volume plus the pore and void volumes.

ASH -- The noncombustible mineral matter that is contained in activated carbon and is the residue that remains after the combustion of a carbonaceous material. The measurement of ash is performed under specified conditions and is normally defined on a weight percent basis.

BACKWASH -- An operating method used to remove suspended solids from a carbon bed. Water is pumped into the bottom of the adsorber, flows upward through the carbon bed, and exits through the backwash outlet. The upward flow expands the bed and removes carbon fines, entrained air and suspended solids. The percent bed expansion (up to 50%) and time required for backwashing are a function of the backwash rate and water temperature.

BACKFLUSH -- A process similar to backwashing, but the flow rate is not high enough to expand the bed more than five percent.

CARBON HEEL -- Any quantity of spent carbon not removed from an adsorber before recharging the vessel with fresh carbon.

CARBON TETRACHLORIDE ACTIVITY -- A measurement of the increase in weight of a sample of activated carbon after air saturated with carbon tetrachloride is passed through the sample. The test is performed at a given temperature and the results are reported as weight percent.

CALGON CARBON CORPORATION ♦ COPYRIGHT 2016 ♦ ALL RIGHTS RESERVED

CARBON TRAILER -- A bulk trailer used to transport 20,000 pound (or less) loads of granular carbon to/from the customer's plant site.

CHEMISORPTION -- A chemical process that binds an adsorbate to the surface of an adsorbent by forces whose energy levels approximate those of a chemical bond.

COLOR BODIES -- Complex molecules which impart color (usually undesirable) to a solution. Carbon adsorption is often used for color removal applications.

COUNTER-CURRENT OPERATION -- A mode of operation where the flow of liquid is opposite the movement of the adsorbent. This method of operation produces the lowest carbon usage rate or highest efficiency.

CRITICAL BED DEPTH -- The distance between the fresh carbon and the spent carbon for a bed of activated carbon. In other words, it is the portion of the bed which is partially spent and the zone where adsorption takes place. The critical bed depth is measured in feet. For a single column system, this is the amount of carbon that is not completely utilized when the effluent objective is reached and the carbon is taken off-stream.

DEAERATION (WETTING) -- The process of removing air (gases) from a carbon bed and the carbon pores. The volume of air in activated carbon is in the void space and pore volume, which typically accounts for 80% of the total volume in a carbon bed (the carbon skeleton accounts for the other 20%).

DESORPTION -- The opposite of adsorption. A phenomenon where an adsorbed substance leaves the surface of the adsorbent.

EDUCTOR -- A device to motivate a slurry of activated carbon and water slurry through hoses and pipes. An eductor has no moving parts and utilizes pressurized water as the motive force.

FRESH CARBON--New carbon that is placed into an adsorber. Fresh carbon can be either virgin carbon or newly reactivated carbon.

HARDNESS NUMBER -- A measurement of the resistance of a granular carbon to the degradation action of steel balls in a Ro-Tap machine. This number is calculated by using the weight of granular carbon retained on a particular sieve after the carbon has been in vigorous contact with the steel balls.

HEAT OF ADSORPTION -- The heat given off when molecules are adsorbed.

IODINE NUMBER -- The measurement of the amount of iodine adsorbed by one gram of carbon. The concentration of iodine is 0.02N. The iodine number is reported as milligrams of iodine.

LAG ADSORBER -- The second bed of carbon through which the liquid passes in a series operated adsorption system. The lag vessel contains carbon that is partially spent when the carbon in the lead adsorber is completely spent.

LEAD ADSORBER -- The first bed of carbon through which the liquid passes in a series operated adsorption system. The lead vessel contains carbon that is the first to become spent.

MASS TRANSFER ZONE -- The adsorption gradient that exists in the carbon bed. It corresponds to the gradual transition of the carbon from spent to fresh.

MESH SIZE -- The measurement of the particle size of granular activated carbons determined by the U.S. Sieve Series. Particle size distribution within a mesh series is typically given in the specification of the particular Calgon Carbon carbon.

MOLASSES NUMBER -- A ratio of the optical densities of a molasses solution treated with a standard activated carbon compared to a molasses solution treated with the activated carbon in question.

MOISTURE -- The measurement of the amount of water adsorbed on activated carbon. Moisture is reported as percent. For Calgon Carbon's coal based products the moisture specification is less than 2% as packed.

PARALLEL FLOW -- The mode of operation when two or more adsorbers are operated so that the influent flow is distributed equally to each adsorber.

PARTICLE DENSITY -- A measurement of the weight per unit volume of granular activated carbon as determined by the displacement of mercury. Particle density is typically reported as g/cc. The particle density includes the carbon skeleton volume plus the pore volume.

POLISH ADSORBER -- See Lag Adsorber.

PORE VOLUME -- A measurement of the volume of pores in a unit weight of carbon. The pore volume is determined by obtaining the difference in the volumetric displacement of carbon in mercury and helium at standard conditions.

PRESSURE RELIEF DEVICE -- A device such as a rupture disk or a pressure relief valve which prevents a vessel from exceeding its design pressure.

REAL DENSITY -- A measurement of the weight per unit volume of the skeleton only of a carbon granule. This measurement excludes the pore volume and the inter-particle void space. This property is determined by helium displacement and is approximately 2.1 g/cc for coal-based carbons.

CALGON CARBON CORPORATION ♦ COPYRIGHT 2016 ♦ ALL RIGHTS RESERVED

REACTIVATED CARBON (REACT CARBON) -- Granular carbon that has been thermally reactivated for re-use as fresh carbon in adsorption systems.

REACTIVATION -- A process to remove adsorbates from spent granular activated carbons using vaporization and oxidation at temperatures greater than 1000NF. Reactivated carbon can be reused. Depending on the application the performance of the reactivated carbon can be less than, equal to, or better than virgin carbon. This is a type of carbon regeneration.

SERIES FLOW (LEAD-LAG OPERATION) -- A mode of operation where two or more adsorbers are operated so that each adsorber treats the entire influent flow, one after the other. When the carbon in the lead bed is spent, the carbon is replaced with fresh carbon and this adsorber is placed in the lag (polish) position.

SPECIFIC HEAT -- A physical property that is defined as the ratio of the quantity of heat required to raise the temperature of a compound through a particular temperature interval compared to the corresponding heat quantity for water. For Calgon Carbon carbons this value is approximately 0.20 cal/g/°C at temperatures less than 200°C.

SPENT CARBON -- Carbon that has adsorbed organic contaminants and must be removed from the system so that the effluent quality specifications are not exceeded.

SURFACE AREA -- A measurement of the total surface area available for adsorption inside the pores of activated carbon. Surface area is determined by the Brunauer, Emmett, and Teller method (BET Method), which uses the adsorption of nitrogen at liquid nitrogen temperature. Surface area is usually expressed in square meters per gram of carbon. The surface area of Calgon Carbon carbons ranges from 700 to 1200 square meters per gram.

TRANSFER TANK -- A storage tank designed to hold a charge of spent carbon. The purpose of the tank is to save on freight as only one truck is needed to deliver fresh carbon and return the spent carbon for reactivation.

TRANSPORT PORES -- Pores larger than the largest adsorption pores. These pores function as a diffusion path to transport adsorbates. Adsorption does not occur in these pores even at saturated conditions.

UNDERDRAIN -- A device located inside the adsorber to collect the fluid being treated. The underdrain permits the fluid to flow into the piping network while retaining the granular carbon in the vessel**.**

VENT -- A pipe line from an adsorber or transfer tank to an unrestricted sewer or the atmosphere.

VIRGIN CARBON -- Fresh granular activated carbon that has not been used.

CALGON CARBON CORPORATION ♦ COPYRIGHT 2016 ♦ ALL RIGHTS RESERVED

VOIDS -- The space (volume) between the carbon granules. For Calgon Carbon carbons the typical range is 37% to 43% by volume.

WATER CUSHION -- The water added to an adsorber or transfer tank before charging the vessel with carbon. This is done to protect the underdrain, nozzles and lining.

WAVE FRONT -- See Mass Transfer Zone

SECTION 7

CARBON DATA

OLC AW 12x40

Coconut Acid Washed Granular Activated Carbon

Applications

Liquid Chemical

Water Processing

Point-of-Entry/ Point-of-Use

Bottle & Brewing

Remediation Water Treatment

Industrial Wastewater

Pond/Aquarium/ Swim

OLC AW 12x40 coconut activated carbon can be used in a variety of water, wastewater and process liquid applications for the removal of dissolved organic compounds. OLC AW 12x40 has been used in applications such as process water purification, wastewater treatment and industrial chemical purification.

Description

OLC AW 12x40 is an acid washed coconut activated carbon for the removal of dissolved organic contaminants from water, wastewater and process liquids. These contaminants include taste and odor compounds, organic color, total organic carbon (TOC) and industrial chemicals such as chlorinated solvents (TCE, PCE). The pore structure enables it to be used for adsorption of both high and low molecule weight impurities from waters and liquids. The carbon is especially effective for adsorbing trace organic compounds such as vinyl chloride, methylene chloride, MTBE and THM's/disinfection by-products. OLC AW 12x40 is certified to NSF/ANSI 61 standard and complies with the requirements for activated carbon as defined by the Food Chemicals Codex (FCC) (8th Edition) published by the U.S. Pharmacopeia.

Features / Benefits

- Coconut carbon
- Low ash
- High hardness relative to other raw materials
- Acid washed to prevent ash leaching in acidic solutions
- A strongly adsorbing pore structure optimal for the treatment of chlorine and other organics
- Hardness and abrasion resistance required for thermal reactivation and minimizing generation of fines in operations requiring backwashing
- Pore structure provides a wide range of contaminant removal capabilities

Specifications	OLC AW 12x40
Iodine Number, mg/g	1050 min
Ash, wt%	3 max
Moisture (As packaged), wt%	5 max
Acid Soluble Ash, wt%	1.0 max
pH (Extractable) (ASTM)	6 min / 8 max
Hardness Number	97 min
Water Solubles, wt%	1 max
12 US Mesh [1.70 mm], wt%	5 max
< 40 US Mesh [0.425 mm] (PAN), wt%	5 max

Safety Message

Wet activated carbon can deplete oxygen from air in enclosed spaces. If use in an enclosed space is required, procedures for work in an oxygen deficient environment should be followed.

1.800.4CARBON calgoncarbon.com

© Copyright 2015 Calgon Carbon Corporation, All Rights Reserved

Typical Pressure Drop (OLC AW 12x40)

Based on a backwashed and segregated bed

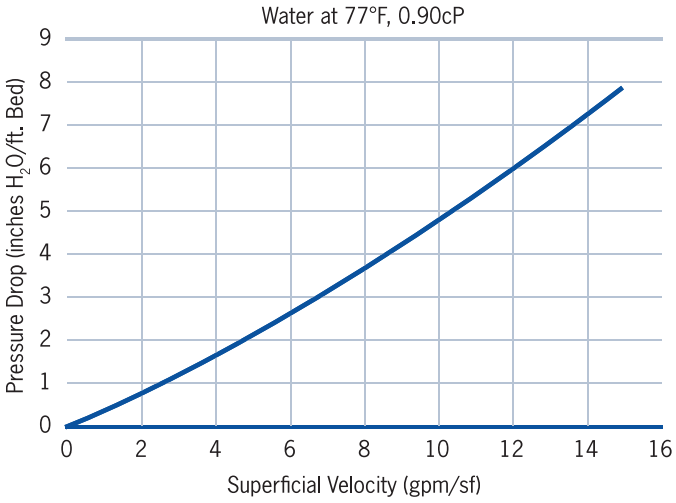

Typical Bed Expansion During Backwash

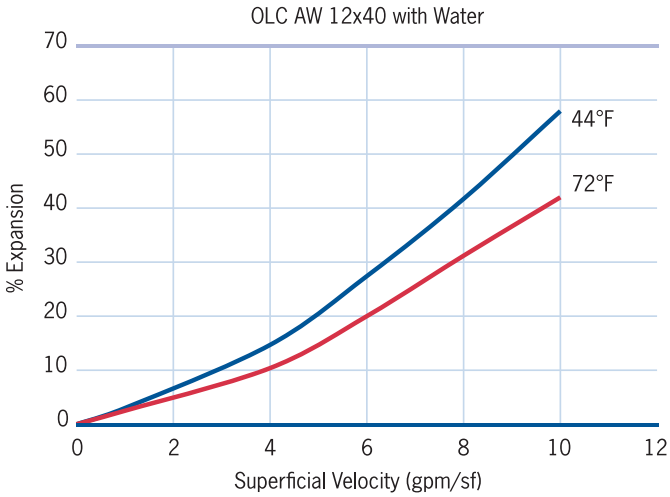

Design Considerations

OLC AW 12x40 coconut activated carbon is typically applied in down-flow packed-bed operations using both pressure and gravity systems. Design considerations for a carbon system is based on the user's operating conditions, the treatment objectives desired, and the chemical nature of the compound(s) being adsorbed. In general, downflow superficial velocity can be from 1 gpm/ft2 to 10 gpm/ft2, depending on the application and contact times can vary from 7.5 minutes to hours. Design may vary based on the type of liquid, contaminants to remove, and desired treatment objectives.

Safety Message

Wet activated carbon can deplete oxygen from air in enclosed spaces. If use in an enclosed space is required, procedures for work in an oxygen deficient environment should be followed.

© Copyright 2015 Calgon Carbon Corporation, All Rights Reserved

OLC AW 12X40
Safety Data Sheet

Issued: 04/20/2015
Supersedes: 12/30/2011
Version: 1.0

SECTION 1: Identification of the Substance/Mixture and of the Company/Undertaking

1.1. Product identifier

Product name : OLC AW 12X40

Product form : Substance

CAS No : 7440-44-0

Product code : 12146

Synonyms : Activated Carbon

1.2. Relevant identified uses of the substance or mixture and uses advised against

Use of the substance/mixture : Adsorbent

1.3. Details of the supplier of the safety data sheet

Calgon Carbon Corporation
P.O. Box 717
Pittsburgh, PA 15230
412-787-6700

1.4. Emergency telephone number

Emergency number : CHEMTREC (24 HRS): 1-800-424-9300

SECTION 2: Hazards Identification

2.1. Classification of the substance or mixture

GHS-US classification

Combustible Dust H232

Not classified as a simple asphyxiant. Product does not displace oxygen in the ambient atmosphere, but slowly adsorbs oxygen from a confined space when wet. Under conditions of anticipated and recommended use, product does not pose an asphyxiation hazard.

2.2. Label elements

GHS-US labeling

Signal word (GHS-US) : **Warning**

Hazard statements (GHS-US) : H232 - May form combustible dust concentrations in air

2.3. Other hazards

Other hazards not contributing to the classification : Wet activated carbon can deplete oxygen from air in enclosed spaces. If use in an enclosed space is required, procedures for work in an oxygen deficient environment should be followed.

2.4. Unknown acute toxicity (GHS-US)

No data available

SECTION 3: Composition/Information on Ingredients

3.1. Substance

Name	Product identifier	%
Activated Carbon	(CAS No) 7440-44-0	< 100

3.2. Mixture

Not applicable

SECTION 4: First Aid Measures

4.1. Description of first aid measures

First-aid measures general : If exposed or concerned, get medical attention/advice. Show this safety data sheet to the doctor in attendance. Wash contaminated clothing before re-use. Never give anything to an unconscious person.

First-aid measures after inhalation : IF INHALED: Remove to fresh air and keep at rest in a comfortable position for breathing.

First-aid measures after skin contact : IF ON SKIN (or clothing): Remove affected clothing and wash all exposed skin with water for at least 15 minutes.

First-aid measures after eye contact : IF IN EYES: Immediately flush with plenty of water for at least 15 minutes. Remove contact lenses if present and easy to do so. Continue rinsing.

First-aid measures after ingestion : IF SWALLOWED: Rinse mouth thoroughly. Do not induce vomiting without advice from poison control center or medical professional. Get medical attention if you feel unwell.

4.2. Most important symptoms and effects, both acute and delayed

Symptoms/injuries : Not expected to present a significant hazard under anticipated conditions of normal use. However, dust may cause irritation and redness of the eyes, irritation of the skin and respiratory system. The effects of long-term, low-level exposures to this product have not been determined.

4.3. Indication of any immediate medical attention and special treatment needed

No additional information available

SECTION 5: Firefighting Measures

5.1. Extinguishing media

Suitable extinguishing media : Water spray. Carbon dioxide. Dry chemical. Foam. Sand.

Unsuitable extinguishing media : None known.

5.2. Special hazards arising from the substance or mixture

Fire hazard : Dust may be combustible under specific conditions. May be ignited by heat, sparks or flames.

Explosion hazard : Dust may form explosive mixture in air.

Reactivity : No dangerous reactions known under normal conditions of use. Carbon oxides may be emitted upon combustion of material.

5.3. Advice for firefighters

Firefighting instructions : Wear NIOSH-approved self-contained breathing apparatus suitable for the surrounding fire. Use water spray or fog for cooling exposed containers. Evacuate area.

SECTION 6: Accidental Release Measures

6.1. Personal precautions, protective equipment and emergency procedures

General measures : Evacuate area. Keep upwind. Ventilate area. Spill should be handled by trained clean-up crews properly equipped with respiratory equipment and full chemical protective gear (see Section 8).

6.1.1. For non-emergency personnel

No additional information available

6.1.2. For emergency responders

No additional information available

6.2. Environmental precautions

Prevent entry to sewers and public waters. Avoid release to the environment. Product is not soluble, but can cause particulate emission of discharged into waterways. Dike all entrances to sewers and drains to avoid introducing material to waterways. Notify authorities if product enters sewers or public waters.

6.3. Methods and material for containment and cleaning up

For containment : Sweep or shovel spills into appropriate container for disposal. Minimize generation of dust.

Methods for cleaning up : Sweep or shovel spills into appropriate container for disposal. Minimize generation of dust. Dispose of material in compliance with local, state, and federal regulations.

6.4. Reference to other sections

No additional information available

SECTION 7: Handling and Storage

7.1. Precautions for safe handling

Precautions for safe handling : Avoid dust formation. Avoid contact with skin, eyes and clothing. Do not handle until all safety precautions have been read and understood. Wash hands and other exposed areas with mild soap and water before eating, drinking or smoking and when leaving work. Keep away from sources of ignition - No smoking.

7.2. Conditions for safe storage, including any incompatibilities

Storage conditions : Keep container tightly closed in a cool, dry, and well-ventilated place. Keep away from ignition sources.

SECTION 8: Exposure Controls/Personal Protection

8.1. Control parameters

Activated Carbon (7440-44-0)*	
OSHA PEL (TWA) (mg/m³)	≤ 5 (Respirable Fraction) ≤ 15 (Total Dust)

*Exposure limits are for inert or nuissance dust. No specific exposure limits have been established for this activated carbon product by OSHA or ACGIH.

8.2. Exposure controls

Appropriate engineering controls : Provide adequate general and local exhaust ventilation. Use process enclosures, local exhaust ventilation, or other engineering controls to control airborne levels below recommended exposure limits. Use explosion-proof equipment with flammable materials. Ensure adequate ventilation, especially in confined areas. Wet activated carbon can deplete oxygen from air in enclosed spaces. If use in an enclosed space is required, procedures for work in an oxygen deficient environment should be followed.

Personal protective equipment : Gloves. Safety glasses. Insufficient ventilation: wear respiratory protection.

Hand protection : Gloves should be classified under Standard EN 374 or ASTM F1296. Suggested glove materials are: Neoprene, Nitrile/butadiene rubber, Polyethylene, Ethyl vinyl alcohol laminate, PVC or vinyl. Suitable gloves for this specific application can be recommended by the glove supplier.

Eye protection : Use eye protection suitable to the environment. Avoid direct contact with eyes.

Skin and body protection : Wear long sleeves, and chemically impervious PPE/coveralls to minimize bodily exposure.

Respiratory protection : Use NIOSH-approved dust/particulate respirator. Where vapor, mist, or dust exceed PELs or other applicable OELs, use NIOSH-approved respiratory protective equipment.

SECTION 9: Physical and Chemical Properties

9.1. Information on basic physical and chemical properties

Physical state	: Solid
Appearance	: Granular, powder, or pelletized substance
Color	: Black
Odor	: Odorless
Odor threshold	: No data available
pH	: No data available
Relative evaporation rate (butylacetate=1)	: Not applicable
Melting point	: Not applicable
Freezing point	: Not applicable
Boiling point	: Not applicable
Flash point	: No data available
Auto-ignition temperature	: > 220 °C
Decomposition temperature	: No data available
Flammability (solid, gas)	: > 220 °C
Vapor pressure	: Not applicable
Relative vapor density at 20 °C	: Not applicable
Apparent density	: 0.4 - 0.7 g/cc
Solubility	: Insoluble.
Log Pow	: Not applicable
Log Kow	: Not applicable
Viscosity, kinematic	: Not applicable
Viscosity, dynamic	: Not applicable
Explosive properties	: No data available
Oxidising properties	: No data available
Explosive limits	: No data available

9.2. Other information

No additional information available

SECTION 10: Stability and Reactivity

10.1. Reactivity

No dangerous reactions known under normal conditions of use.

10.2. Chemical stability

Stable under use and storage conditions as recommended in section 7.

10.3. Possibility of hazardous reactions

None known.

10.4. Conditions to avoid

Avoid dust formation. Heat. Ignition sources. Exposure to high concentrations of organic compounds may cause bed temperature to rise.

10.5. Incompatible materials

Alkali metals. Strong oxidizing agents.

10.6. Hazardous decomposition products

Carbon monoxide (CO), carbon dioxide (CO_2).

SECTION 11: Toxicological Information

11.1. Information on toxicological effects

Acute toxicity : Not classified

Activated Carbon (7440-44-0)	
LD50 oral rat	> 2000 mg/kg

Skin corrosion/irritation : Not classified

Serious eye damage/irritation : Not classified

Respiratory or skin sensitisation : Not classified

Germ cell mutagenicity : Not classified

Carcinogenicity : Not classified

Silica: Crystalline, quartz (14808-60-7)	
IARC group	1 - Carcinogenic to humans
The International Agency for Research on Cancer (IARC) has classified "silica dust, crystalline, in the form of quartz or cristobalite" as carcinogenic to humans (group 1). However these warnings refer to crystalline silica dusts and do not apply to solid activated carbon containing crystalline silica as a naturally occuring, bound impurity. As such, we have not classified this product as a carcinogen in accordance with the US OSHA Hazard Communication Standard (29 CFR §1910.1200) but recommend that users avoid inhalation of product in a dust form.	

Reproductive toxicity : Not classified

Specific target organ toxicity (single exposure) : Not classified

Specific target organ toxicity (repeated exposure) : Not classified

Aspiration hazard : Not classified

Symptoms/injuries : Not expected to present a significant hazard under anticipated conditions of normal use. However, dust may cause irritation and redness of the eyes, irritation of the skin and respiratory system. The effects of long-term, low-level exposures to this product have not been determined.

SECTION 12: Ecological Information

12.1. Toxicity

No additional information available

12.2. Persistence and degradability

No additional information available

12.3. Bioaccumulative potential

No additional information available

12.4. Mobility in soil

No additional information available

12.5. Other adverse effects

No additional information available

SECTION 13: Disposal Considerations

13.1. Waste treatment methods

Waste treatment and disposal methods : Vacuum or shovel material into a closed container. Dispose in a safe manner in accordance with local/national regulations. Do not allow the product to be released into the environment. Subject to Calgon Carbon technical approval, non-powdered activated carbons may be reactivated to allow recycle and reuse.

Additional information : Activated carbon is an adsorbent media; hazard classification is generally determined by the adsorbate. Consult U.S. EPA guidelines listed in 40 CFR 261.3 for more information on hazardous waste disposal.

SECTION 14: Transport Information

14.1. In accordance with DOT

Not classified as hazardous for domestic land transport

UN-No.(DOT) : None on finished product

DOT NA no. : None on finished product

Proper Shipping Name (DOT) : Not regulated

Department of Transportation (DOT) Hazard Classes : None on finished product

Hazard labels (DOT) : None on finished product

Packing group (DOT) : None on finished product

DOT Quantity Limitations Passenger aircraft/rail (49 CFR 173.27) : None on finished product

14.2. Transport by sea

Not classified as hazardous for water transport

IMO / IMDG

UN/NA Identification Number : None on finished product

UN- Proper Shipping Name : Not regulated

Transport Hazard Class : None on finished product

14.3. Air transport

Not classified as hazardous for air transport

ICAO / IATA

UN/NA No : None on finished product

UN- Proper Shipping Name : Not regulated

Transport Hazard Class : None on finished product

Packing Group : None on finished product

Marine Pollutant : None on finished product

14.4. Additional information

Other information : Under the UN classification for activated carbon, all activated carbons have been identified as a class 4.2 product. However, this product type or an equivalent has been tested according to the *United Nations Transport of Dangerous Goods* test protocol for a "self-heating substance" (*United Nations Transportation of Dangerous Goods, Manual of Tests and Criteria, Part III, Section 33.3.1.6 - Test N.4 - Test Method for Self Heating Substances)* and it has been specifically determined that this product type or an equivalent does not meet the definition of a self-heating substance (class 4.2) or any other hazard class, and therefore should not be listed as a DOT hazardous material.

SECTION 15: Regulatory Information

15.1. US Federal regulations

OLC AW 12X40
All chemical substances in this product are listed in the EPA (Environment Protection Agency) TSCA (Toxic Substances Control Act) Inventory or are exempt

Cobalt (7440-48-4)	
Listed on the United States TSCA (Toxic Substances Control Act) inventory Listed on United States SARA Section 313	
SARA Section 313 - Emission Reporting	0.1 %

15.2. International regulations

No additional information available

15.3. US State regulations

California Proposition 65

WARNING: This product contains, or may contain, trace quantities of a substance(s) known to the state of California to cause cancer, birth defects, or other reproductive harm.

Silica: Crystalline, quartz (14808-60-7)				
U.S. - California - Proposition 65 - Carcinogens List	U.S. - California - Proposition 65 - Developmental Toxicity	U.S. - California - Proposition 65 - Reproductive Toxicity - Female	U.S. - California - Proposition 65 - Reproductive Toxicity - Male	No significance risk level (NSRL)
Yes	No	No	No	NA
Cobalt (7440-48-4)				
U.S. - California - Proposition 65 - Carcinogens List	U.S. - California - Proposition 65 - Developmental Toxicity	U.S. - California - Proposition 65 - Reproductive Toxicity - Female	U.S. - California - Proposition 65 - Reproductive Toxicity - Male	No significance risk level (NSRL)
Yes	No	No	No	NA
Titanium dioxide (13463-67-7)				
U.S. - California - Proposition 65 - Carcinogens List	U.S. - California - Proposition 65 - Developmental Toxicity	U.S. - California - Proposition 65 - Reproductive Toxicity - Female	U.S. - California - Proposition 65 - Reproductive Toxicity - Male	No significance risk level (NSRL)
Yes	No	No	No	NA

Aluminum oxide (1344-28-1)
U.S. - New Jersey - Right to Know Hazardous Substance List U.S. - Massachusetts - Right to Know List U.S. - Pennsylvania - RTK (Right to Know) - Environmental Hazard List
Calcium sulfate (7778-18-9)
U.S. - Massachusetts - Right to Know List U.S. - New Jersey - Right to Know Hazardous Substance List U.S. - Pennsylvania - RTK (Right to Know) List
Silica: Crystalline, quartz (14808-60-7)
U.S. - New Jersey - Right to Know Hazardous Substance List U.S. - Pennsylvania - RTK (Right to Know) List U.S. - Massachusetts - Right to Know List

SECTION 16: Other Information

Indication of changes : Revision 1.0: New SDS Created.

Revision Date : 04/20/2015

Other information : Author: CJS.

For internal use only : PR #1

Prepared according to Federal Register / Vol. 77, No. 58 / Monday, March 26, 2012 / Rules and Regulations

NFPA health hazard : 0 - Exposure under fire conditions would offer no hazard beyond that of ordinary combustible materials.

NFPA fire hazard : 1 - Must be preheated before ignition can occur.

NFPA reactivity : 0 - Normally stable, even under fire exposure conditions, and are not reactive with water.

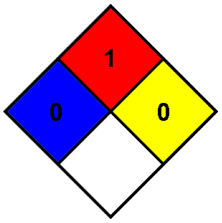

HMIS III Rating

Health : 0

Flammability : 1

Physical	: 0
Personal Protection	:

This information is based on our current knowledge and is intended to describe the product for the purposes of health, safety and environmental requirements only. It should not therefore be construed as guaranteeing any specific property of the product. The information is this document applies to this specific material as supplied. It may not be valid if product is used in combination with other materials. It is the user's responsibility to determine the suitability and completeness of this information for their particular use. While the information and recommendations set forth herein are believed to be accurate as of the date hereof, Calgon Carbon Corporation makes no warranty with respect to the same, and disclaims all liability for reliance thereon.

SECTION 8

OPERATING INFORMATION

SECTION 8

OPERATING INFORMATION

FIGURE 1 VESSEL V-214A TO V-214B SERIES FLOW

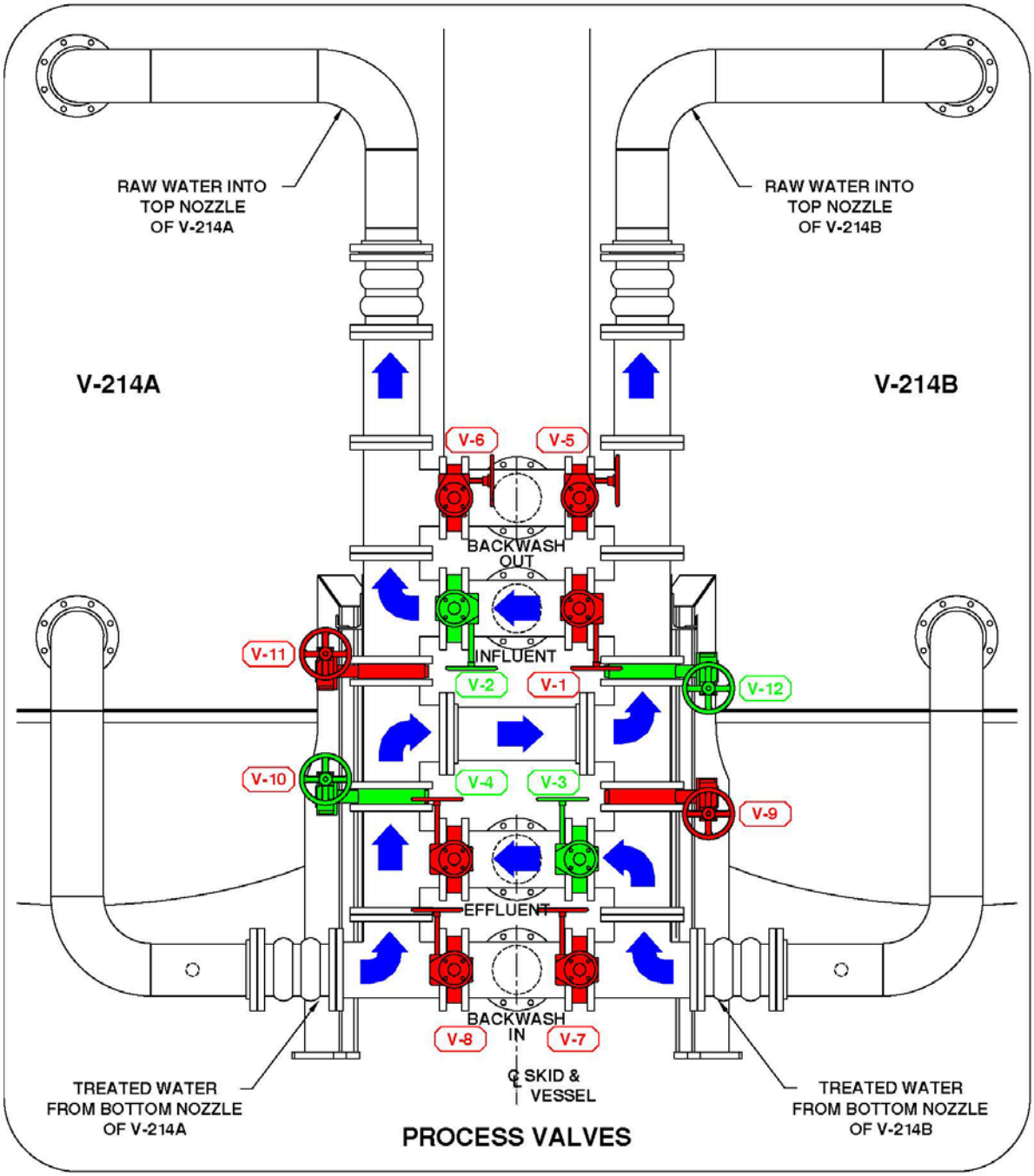

FIGURE 2 VESSEL V-214B ON-LINE VESSEL V-214A CARBON TRANSFER

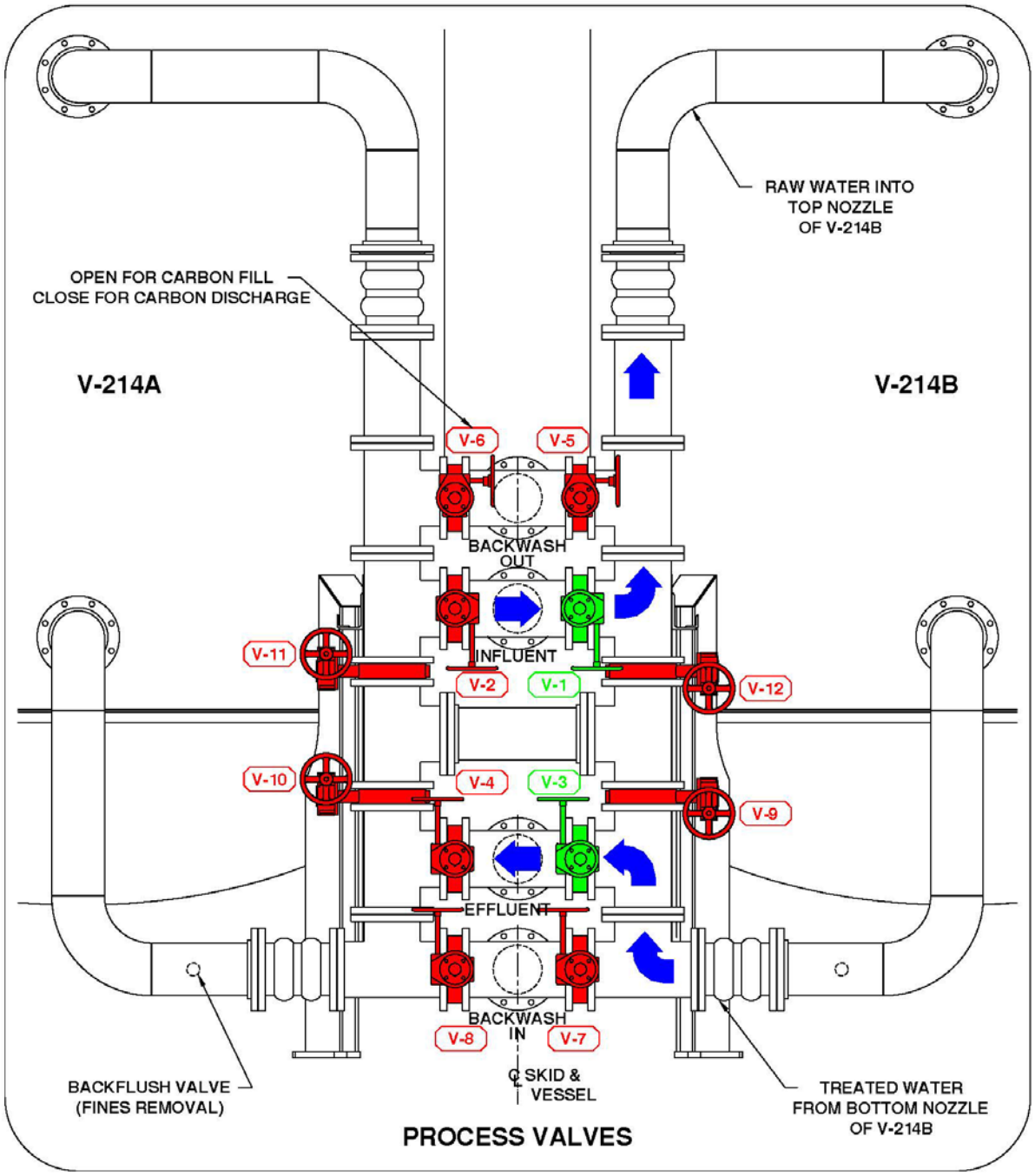

FIGURE 3 SERIES FLOW VESSEL V-214B TO V-214A

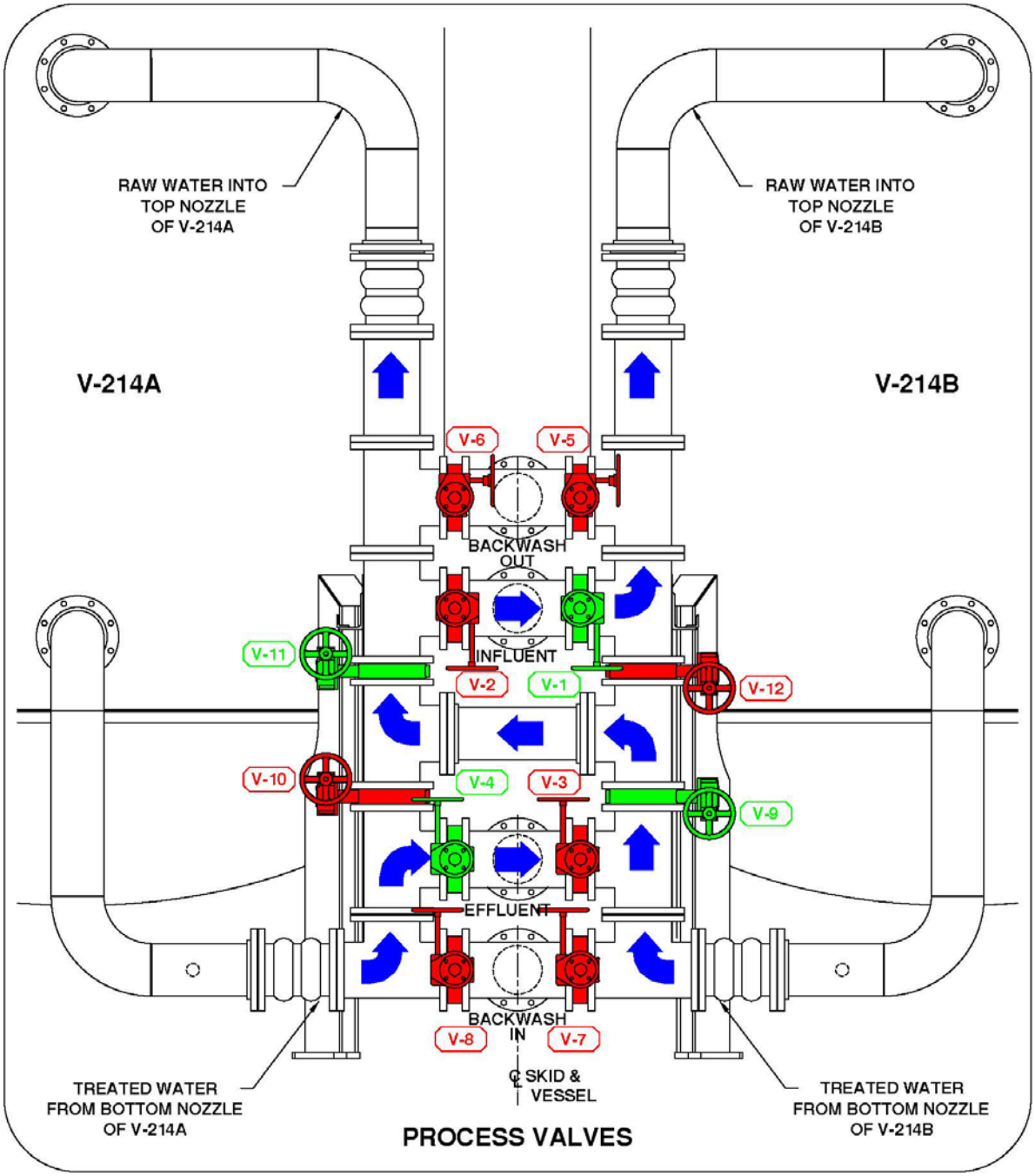

FIGURE 4 VESSEL V-214A ON-LINE VESSEL V-214B CARBON TRANSFER

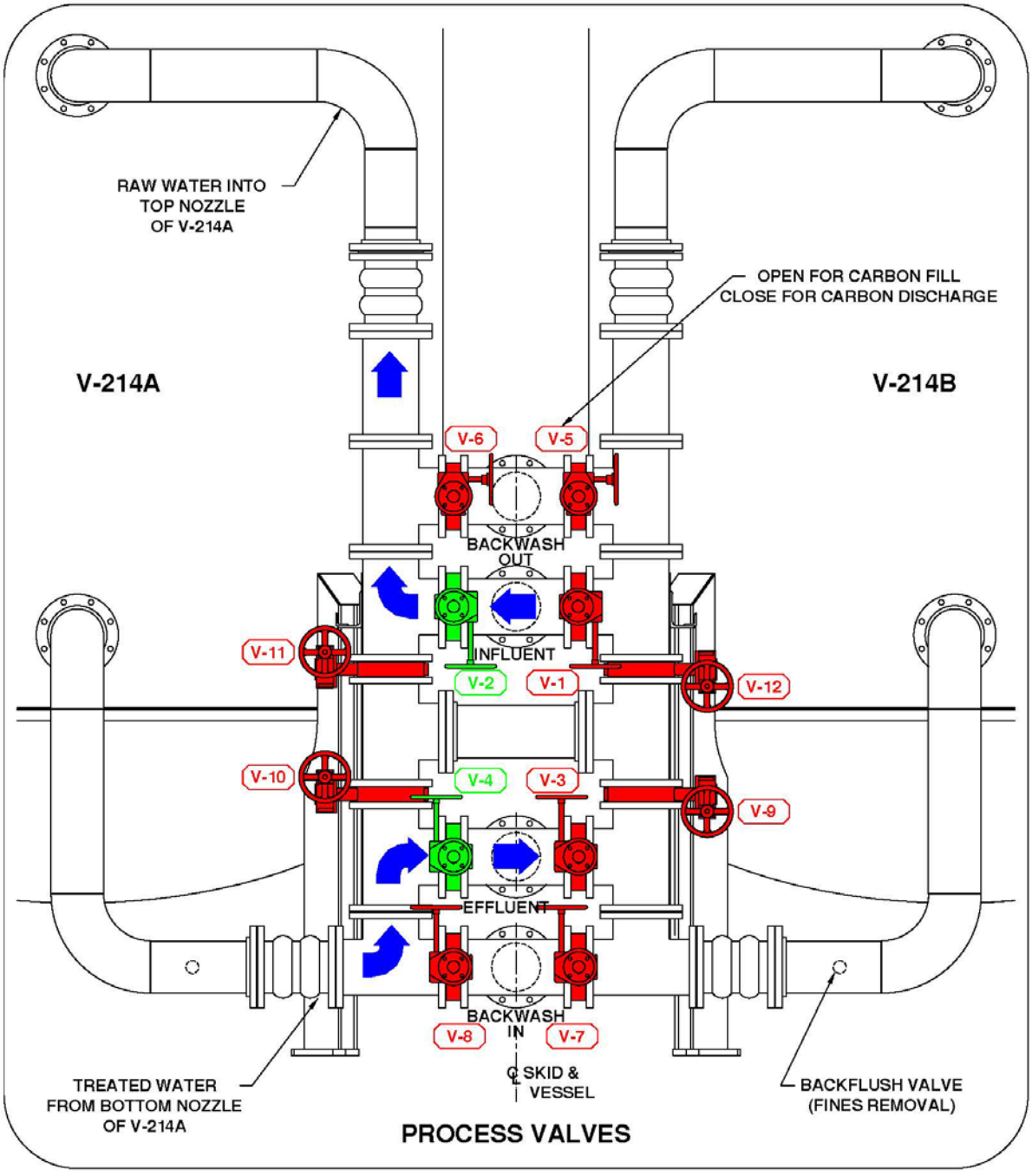

FIGURE 5 PARALLEL FLOW VESSEL V-214A AND V-214B

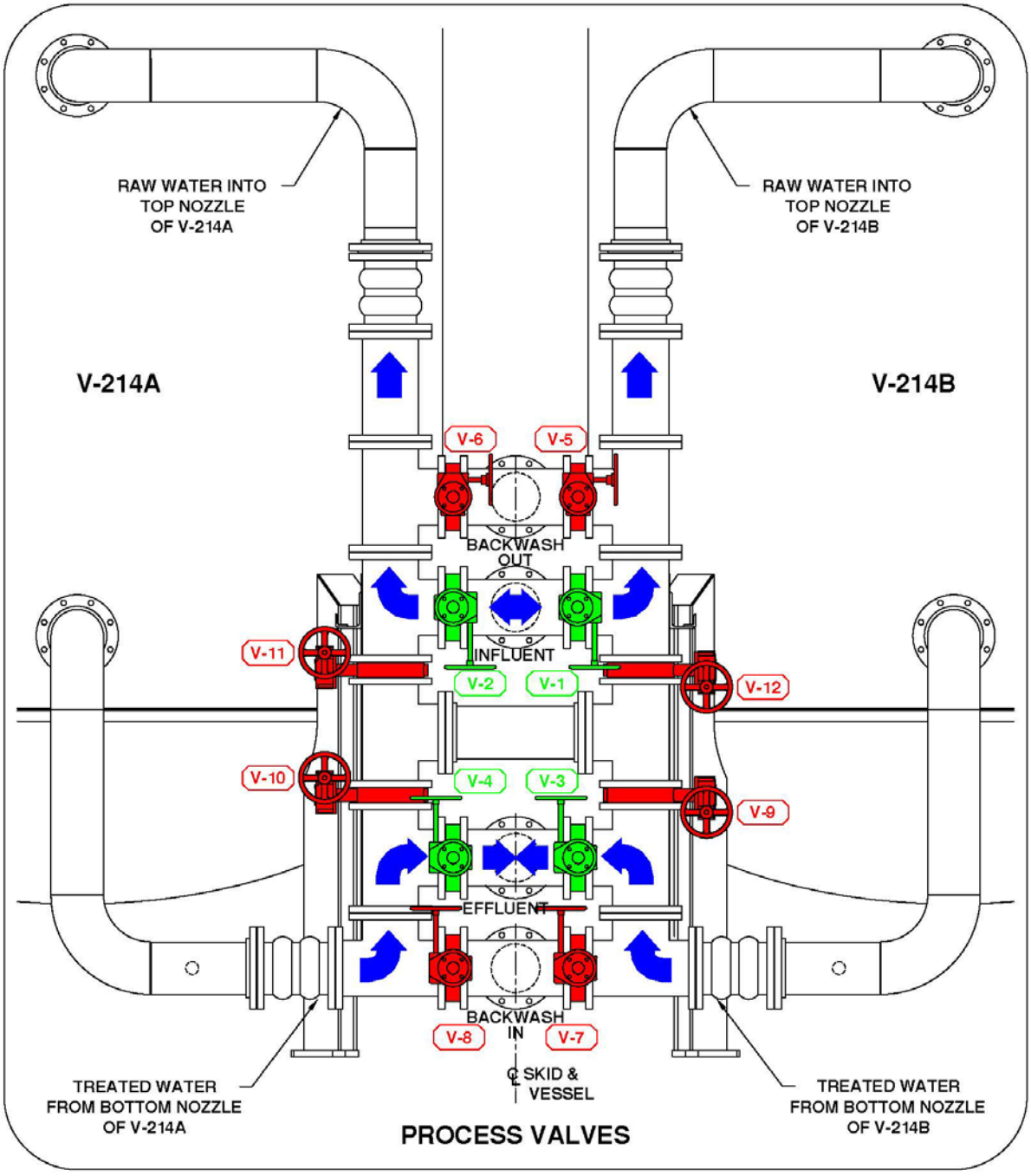

FIGURE 6 VESSEL V-214B ON-LINE VESSEL V-214A BACKWASHING

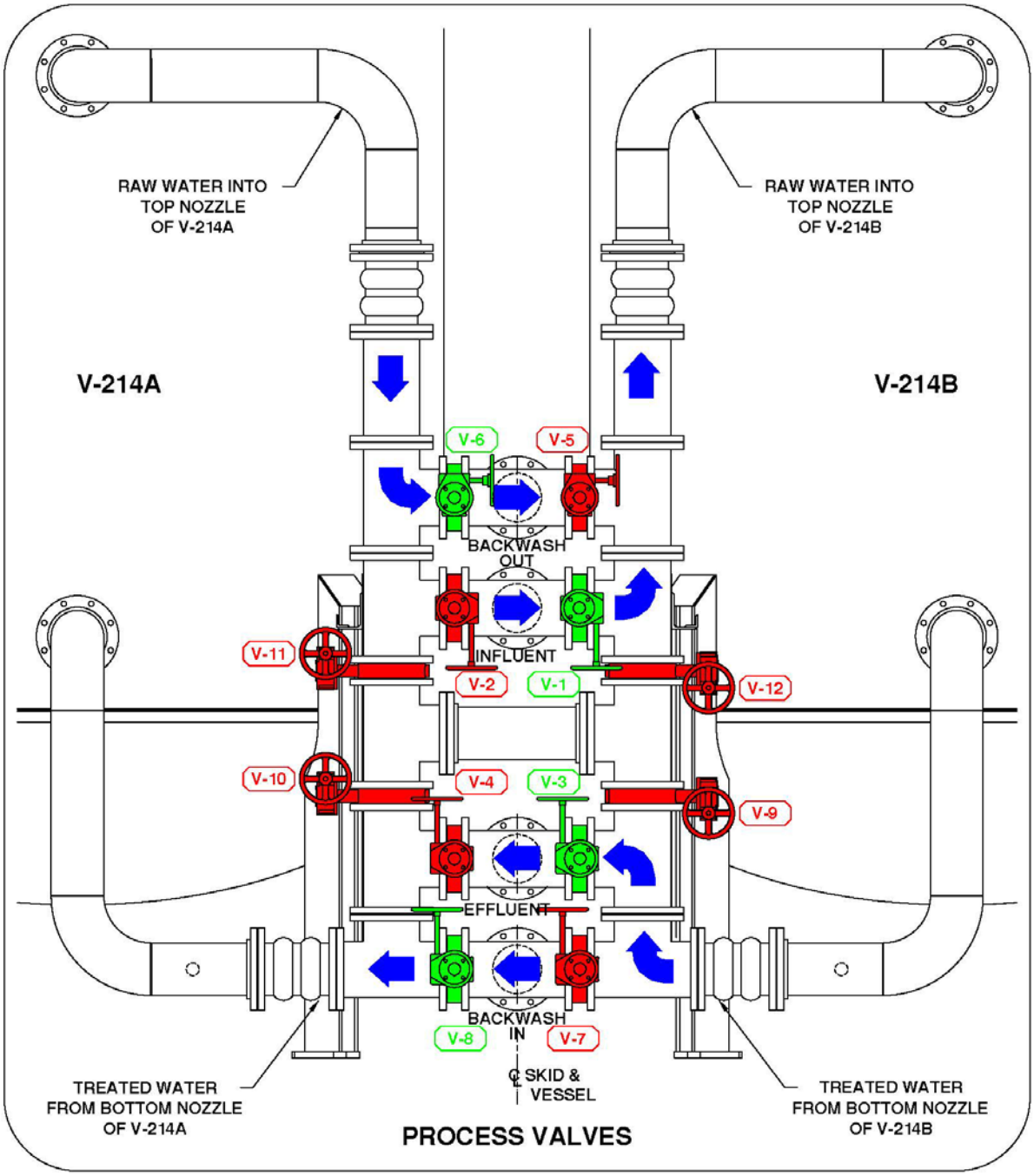

FIGURE 7 VESSEL V-214A ON-LINE VESSEL V-214B BACKWASHING

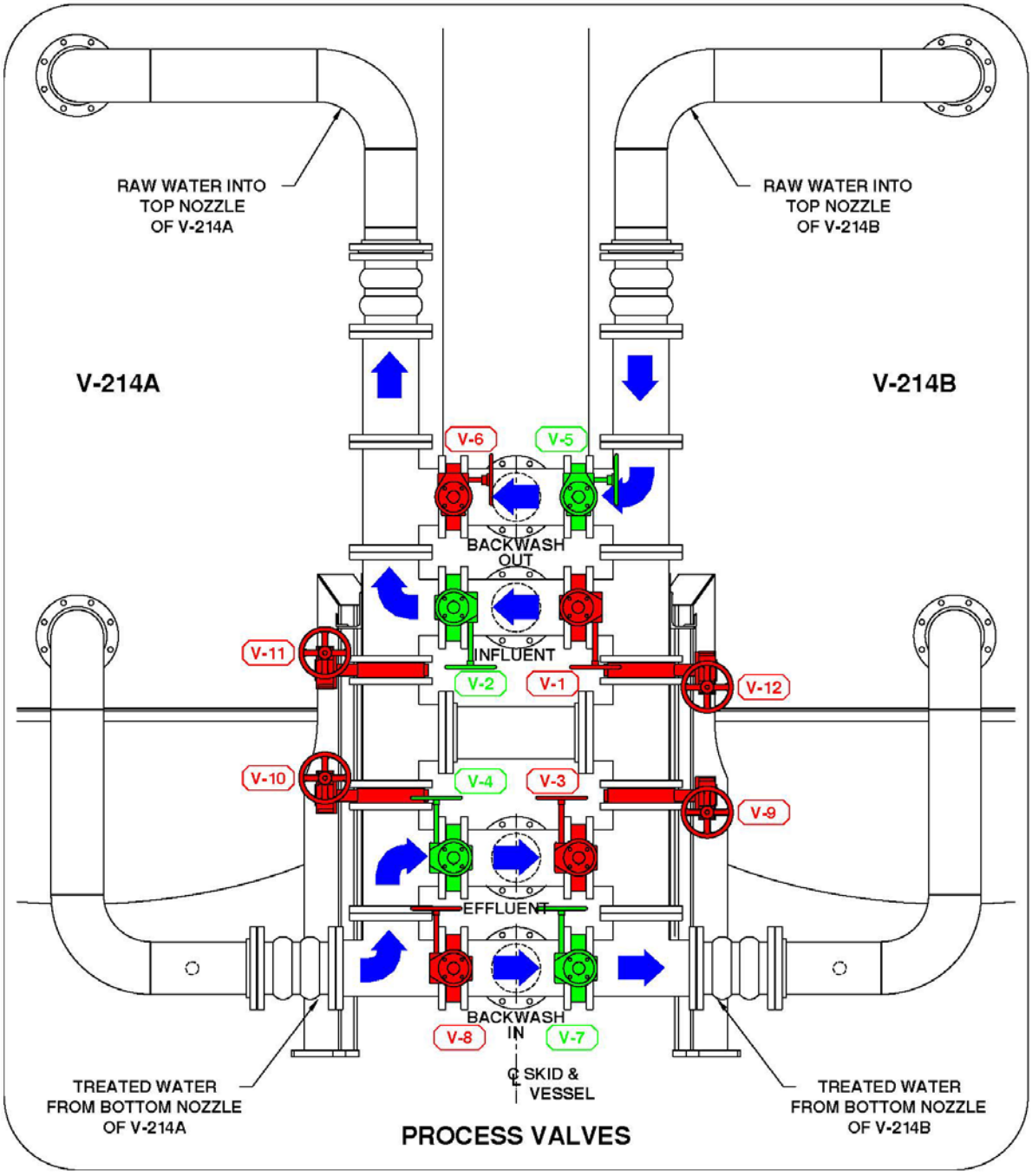

FIGURE 8 STANDARD TRAILER

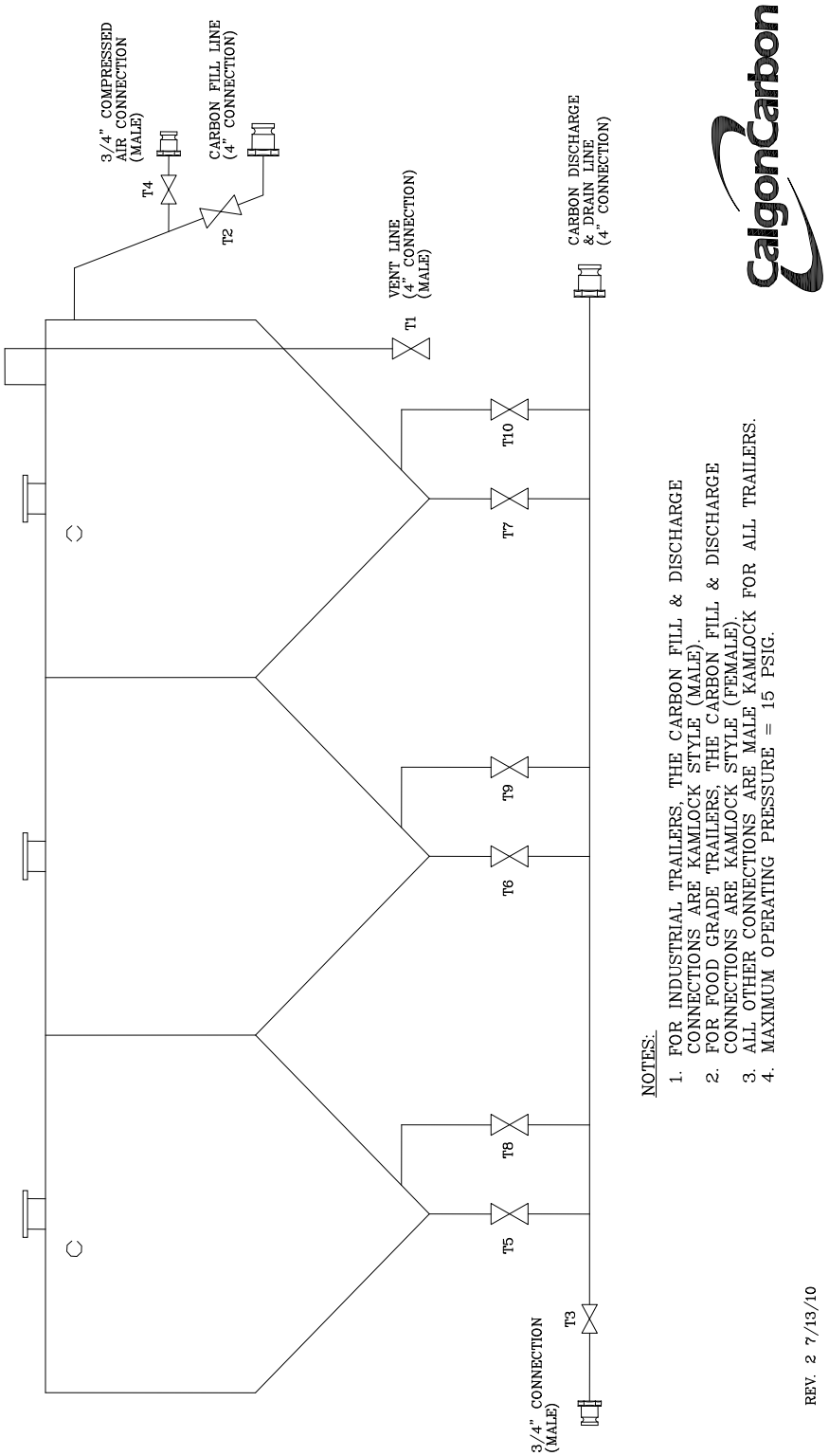

FIGURE 9 TRIPLE COMPARTMENT TRAILER

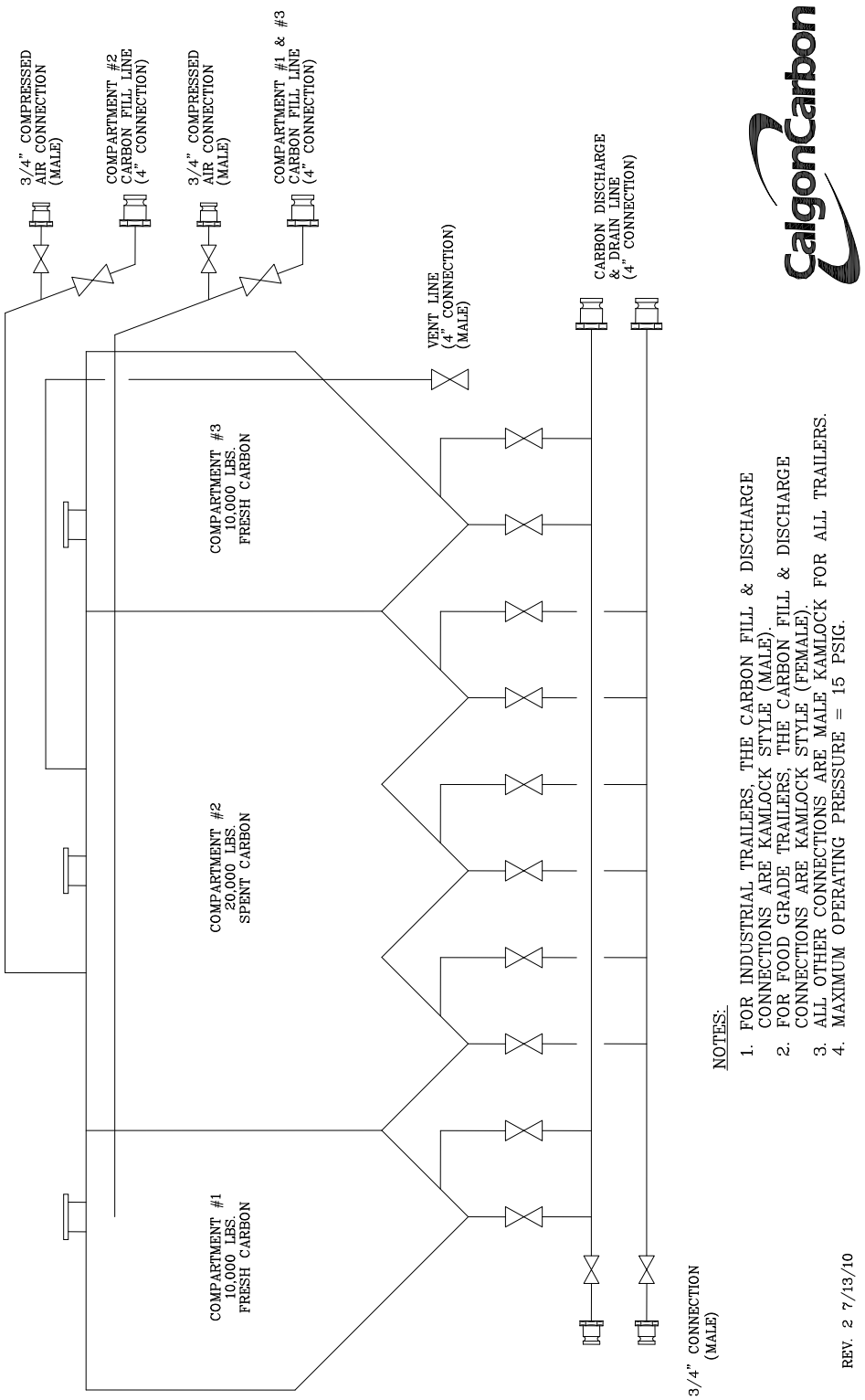

CARBON ACCEPTANCE CANISTER (CAC) INSTRUCTIONS

1. Connect the carbon acceptance canister (CAC) as shown on the drawing below. Start the adsorption system according to the operating manual. All valves in the influent and effluent lines to the CAC should be closed.

2. Open the top 2" plug on the CAC. Slowly fill the CAC with clean, hot water. If hot water is not available, ambient temperature water will be acceptable. Capacity of the CAC is approximately one (1) gallon.

3. For optimum performance, the water needs to be adsorbed into the carbon. To achieve this, allow the CAC to stand full with water for approximately 24 hours. After the water has been adsorbed, replace the plug in the top of the CAC.

4. Open both valves in the CAC effluent line. One valve, C-4, is located near the adsorption system's main effluent header and the other valve, C-3, is located near the CAC.

5. Disconnect the tubing on the CAC influent line at the isolation valve C-1 located on the system's main influent header.

6. Slowly open the CAC influent valve, C-2, to allow clean effluent water to back flow through the CAC to purge the lines and backflush the CAC. Allow about 5 gallons of clean water to flow through the CAC.

7. Close the valve, C-2, in the CAC influent line to stop the flow. Reconnect the tubing to the CAC influent isolation valve, C-1.

8.; Slowly open both of the valves in the CAC influent line to allow untreated water to flow through the CAC.

9. If the carbon adsorption system is to be backwashed or shutdown, close the influent valve, C-2, and the effluent valve, C-3, on the CAC, and open the top plug in the canister to vent the CAC. Once the adsorption system is placed back into service, tighten the plug and open the CAC influent and effluent valves.

10. The CAC should be left in service according to the following guidelines:

    a. If the adsorption system is operating in parallel mode, the CAC should be left on-line for about 1/10 th of the anticipated bed life.

    b. If the adsorption system is operating is series mode, the CAC

should be left on-line for about 1/5 th of the anticipated bed life.

11. After the CAC has been on-line for the recommended time period, it needs to be returned for carbon acceptance testing. The CAC is taken out of service by closing all of the valves in both the CAC influent and effluent lines. After the valves are closed, disconnect the effluent tubing connector at the CAC. Slowley open the top plug to vent the CAC. Slowly open the CAC effluent valve, C-3, and drain the water from the CAC to a suitable container. Ensure that all necessary safety precautions are taken depending on the hazardous nature of the process liquid. Open the CAC influent valve C-2 and carefully disconnect the tubing from the influent isolation valve, C-1, on the system header. Allow the liquid in the influent tubing to drain through the CAC and into the container.

12. Close the CAC influent valve C-2 and effluent valve C-3. Replace the top plug and remove the CAC from the adsorption system. Ship the CAC with the influent and effluent valves attached and closed. This is required to ensure that no water leaks from the CAC during shipment.

    Ship the CAC to: Calgon Carbon Corporation
    3000 GSK Drive
    Moon Township, PA 15108
    Attention: Carbon Acceptance Department

Contact the Calgon Carbon Sales Office in your area for additional information.

Unit Specifications

Max. Operating Pressure:	125 psig
Body and Septa:	PVC
Valves	PPL
Tubing	PPL
Flow Control Valve	Nickel Plated Brass

MEDIA ACCEPTANCE CANISTER

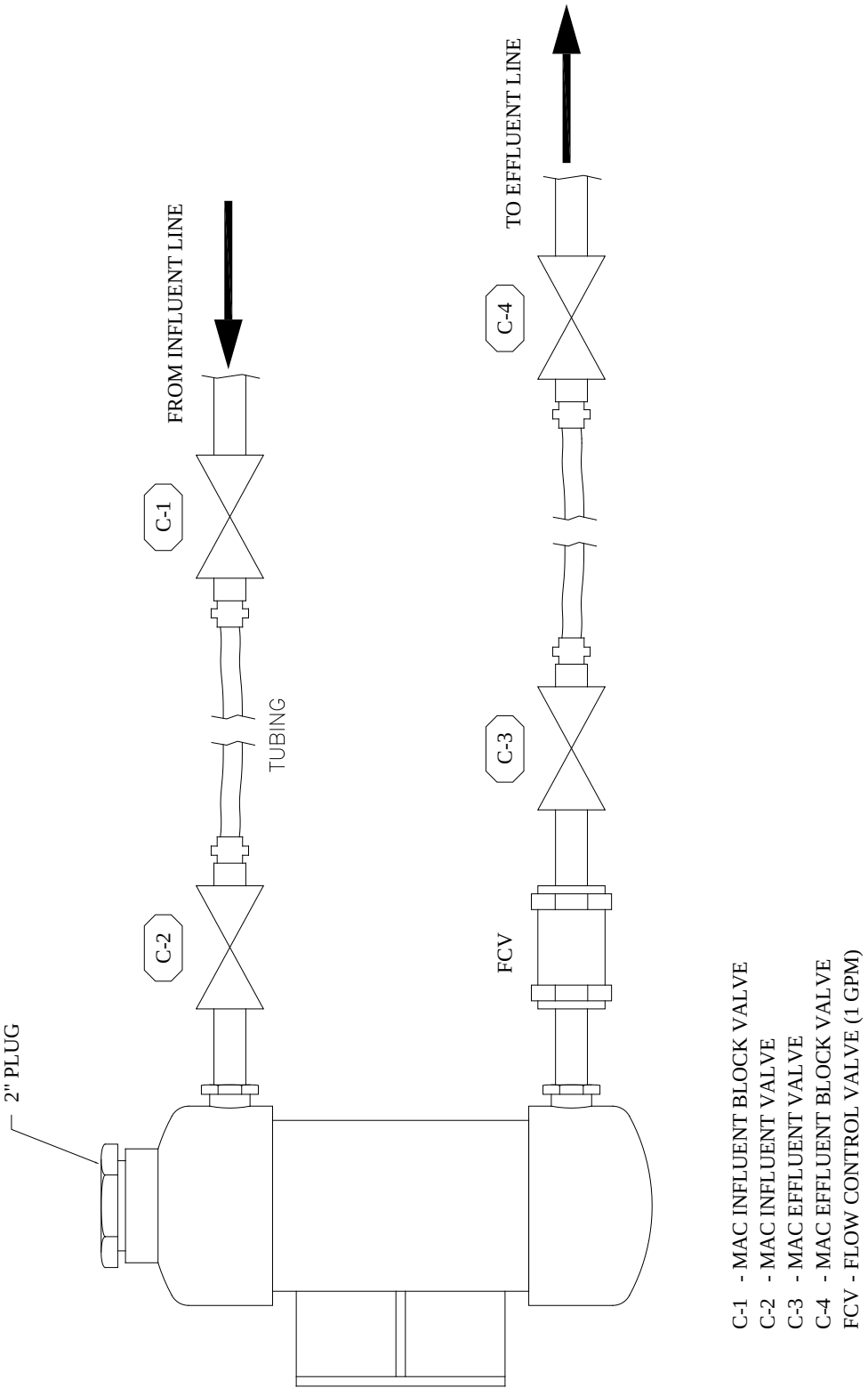

CALGON CARBON CORPORATION
SPARE PARTS PROGRAM

INTRODUCTION: Calgon Carbon Corporation has developed a standard product line of engineered treatment systems for air and water applications. Much of the fabrication, and assembly of these systems is done at Calgon Carbon's own facility; therefore most of the system parts and components are maintained in inventory. As a service to customers to provide a source of specified parts in a timely manner, these parts and components are available for purchase. Prices a valid for one year from the date on the list, after this time, the prices may be subject to revision.

ORDER ENTRY: The purchase order for spare parts should be entered using the spare parts order form provided. This form should be sent to:

Calgon Carbon Corporation
Order Service Department
P.O. Box 717
Pittsburgh, PA 15230-0717

Orders can also be placed via fax to 1-412-787-6323
Verbal orders can be placed by calling the Order Services Department at 1-412-787-6700

SHIPPING: Order shipping options are either Rush (next day delivery by UPS) or Normal (one week delivery by UPS). Other shipping directions should be requested at the time of ordering. Shipping charges will be added to the total price of the order.

SALES TAX: Sales tax will be added to the invoice unless a sales tax exemption certificate is provided with the order.

PAYMENT: An invoice will be sent to the billing address upon shipment of the order. Payment terms are net 30 days after shipment.

WARRANTY: Calgon Carbon Corporation warrants that the equipment sold hereunder shall be free of defects in material and workmanship for a period of one (1) year from the date of shipment. This warranty does not apply to problems associated with normal wear and tear, improper maintenance, negligence, misuse, abuse or failure to operate the equipment in strict accordance with the operating and maintenance plan provided. For those items provided by, but not directly manufactured by Calgon Carbon, the manufacturer=s warranty shall apply, provided warranty coverage exceeds that which is provided by Calgon Carbon. All other warranties, either expressed or implied, are hereby disclaimed, including, but not limited to, the warranty of merchantability and fitness for the particular purpose.

LIMITATIONS OF LIABILITY: The purchaser's exclusive remedy for any cause of action arising out of this transaction, including but not limited to breach of warranty, negligence and /or indemnification, is expressly limited to the maximum of the purchase price of the equipment sold hereunder. All claims of whatsoever nature shall be deemed waived unless made in writing within forty-five (45) days of the occurrence giving rise to the claim. In no event shall Calgon Carbon for any reason or pursuant to any provision of the warranty be liable for the incidental or consequential damages, or damages in excess of the purchase price of the equipment supplied, loss of profit, or fines imposed by Government agencies.

CALGON CARBON CORPORATION ♦ COPYRIGHT 2016 ♦ ALL RIGHTS RESERVED

WARRANTY

WARRANTIES: Seller warrants that the carbon adsorption system sold hereunder shall be free from defects in materials and workmanship for a period of one (1) year from the date of system start-up or eighteen (18) months from date of system shipment, whichever comes first. The warranty does not apply to problems associated with normal wear and tear, improper maintenance, negligence, misuse, or the failure to operate the system in strict accordance with the operating and maintenance plan provided. For those items provided by, but not directly manufactured by the Seller, the manufacturer's warranty shall apply provided warranty coverage exceeds that which is provided by the Seller. All other warranties, either express or implied, are hereby disclaimed including but not limited to the warranty of merchantability and fitness for a particular purpose.

Seller warrants that any/all activated carbon provided hereunder shall conform to the specifications for such grade as published from time to time by the Seller. There are no warranties made with regard to the activated carbon or system to be sold hereunder other than those contained in this paragraph or stated elsewhere in the proposal. All other warranties express or implied, are hereby disclaimed including, but not limited to, the warranty of merchantability and fitness for a particular purpose.

This warranty is limited to the replacement and/or repair by the Seller of any parts or materials which in the Seller's determination are defective. This warranty does not cover any charges by the Buyer for replacement of parts, adjustments or repairs, or any other work unless such charges shall be assumed or authorized in advance in writing by the Seller.

LIMITATION OF LIABILITY: Seller's liability and the Buyer's exclusive remedy for any cause of action arising out of this transaction, including but not limited to breach of warranty, negligence and/or indemnification is expressly limited to a maximum of the purchase price of the carbon adsorption system sold hereunder. All claims of whatsoever nature shall be deemed waived unless made in writing within forty-five (45) days of the occurrence giving rise to the claim. In no event shall the Seller for any reason or pursuant to any provision of these warranties be liable for incidental or consequential damages, or damages in excess of the purchase price of the system supplied, nor shall the Seller be liable for loss of profits or fines imposed by Governmental agencies.

FORCE MAJEURE: Except as otherwise provided hereafter, neither party shall be liable to the other party for failure to perform any of its obligations hereunder due to Act of God, accident, fire, flood, riot, war, sabotage, explosion, strike, labor disturbance, national defense requirements, governmental law, ordinance, rule or regulation, whether valid or invalid, extraordinary failure of equipment or apparatus, inability to obtain electricity or other type of energy, raw material, labor, equipment or transportation, or any similar or different contingency beyond the party's reasonable control which would make performance impractical whether or not the contingency is of the same class as those enumerated above. The party invoking Force Majeure shall provide the other party of its estimate as to when the Force Majeure condition will end. The minimum term of this agreement shall be extended by the duration of any Force Majeure period.

SECURITY INTEREST: Buyer represents that the System is equipment to be used for business, and shall remain personal property. Buyer grants the Seller a security interest in the System to secure the payment of the purchase price. Buyer will not sell, lease, transfer or encumber the System and will keep it free from any and all liens and security interests until the Seller has been paid in full and shall execute any and all necessary documents to protect such security interests.

MODIFICATION OR WAIVER OF PROVISIONS: This proposal cannot be modified except by agreement in writing signed by the Seller. A waiver or repeated waiver by the Seller of any provision or the breach of any provision shall not constitute a further waiver of such provision or breach.

ENTIRE AGREEMENT: The proposal, as signed by both parties, including the General Terms of Sale and any attachments referenced in the proposal, embodies the entire agreement between Buyer and Seller. The parties shall not be bound by or liable for any statement, representation, promise or understanding not set forth herein. Nothing contained in correspondence or discussions prior to the date of the agreement has any effect on this agreement unless specifically incorporated herein. No changes, modifications of, or additions to any portion of the agreement shall be valid unless reduced to writing, agreed to and signed by both parties, and incorporated into the agreement.

CALGON CARBON CORPORATION ♦ COPYRIGHT 2016 ♦ ALL RIGHTS RESERVED

NOTE: TO CUSTOMERS INTERESTED IN VIDEOTAPING CALGON CARBON CORPORATION REPRESENTATIVES DURING OPERATOR TRAINING SESSIONS, CARBON TRANSFERS, SYSTEM INSPECTIONS, OR OTHER SITE ACTIVITIES PRIOR WRITTEN PERMISSION FROM CALGON CARBON CORPORATION IS REQUIRED BEFORE VIDEOTAPING MAY COMMENCE.

VIDEOTAPING AGREEMENT

This agreement is made this ___ day of _____, 19___, by and between Calgon Carbon Corporation, hereinafter referred to as "CCC", a Delaware corporation and _____, (hereinafter referred to as "Owner-Operator").

In consideration for allowing Owner to videotape "CCC" personnel performing maintenance or service, or demonstrating the operation of _____ (the equipment) the Owner-Operator and "CCC" agree as follows:

The video tape is used at Owner-Operator's own risk and is not intended nor is it to be used as a substitute for safe operating procedure in accord with industry standard, training, safety instruction or the operation and maintenance manuals. CCC ASSUMES NO LIABILITY FOR THE COMPLETENESS OR ACCURACY OF THE VIDEO TAPE. ANY CLAIM FOR INJURY OR PROPERTY DAMAGE WHICH ARISES OUT OF OR IN CONNECTION WITH THE USE OF THE VIDEO TAPE BY THE OWNER-OPERATOR, ITS EMPLOYEES, OR AGENTS IS THE SOLE RESPONSIBILITY OF THE OWNER-OPERATOR.

OWNER-OPERATOR AGREES TO HOLD CCC HARMLESS AND PAY ALL LEGAL EXPENSESAND JUDGEMENTS INCLUDING PUNITIVE DAMAGES, RESULTING FROM LITIGATION WHERE THE TAPE IS ENTERED INTO EVIDENCE.

This tape is for the Owner-Operators own use, and the Owner agrees to not sell or transfer the tape to any other party.

CCC must receive a copy of the tape and reserves the right to final edit the tape at Owner-Operator's expense.

Owner-Operator must affix the label CCC provides to ALL the tapes and read the following statement on the tape both at the beginning and end of the taped presentation.

THIS IS NOT A CCC TRAINING OF SAFETY INSTRUCTION TAPE. FOR SAFETY OR TRAINING INSTRUCTIONS YOU MUST CONSULT THE OPERATION AND MAINTENANCE MANUAL AND/OR CCC PERSONNEL, AND FOLLOW SAFE OPERATING PROCEDURE IN ACCORD WITH INDUSTRY STANDARDS

Notwithstanding the reasonableness of the agreements herein, in the event that a court of competent jurisdiction determines that any part of the agreement set forth in paragraphs 1, 2, 3, 4, and 5 be held invalid or unenforceable, the provisions of this video agreement shall be deemed severable, and the remaining parts shall be valid and enforceable as though the invalid and unenforceable parts had not been included in the agreement.

When this agreement is accepted and signed by the Owner-Operator and accepted by CCC the video taping may start. It is understood that Owner-Operator's camera operator will not hinder or distract CCC personnel during their work.

Accepted by: _____ *Accepted by:* _____
(Owner-Operator)

_____ _____
(Signature) *(Signature)*

_____ _____
(Position) *(Position)*

By signing this, the signer is verifying they have authorization to make such agreements binding on the Owner-Operator.

Pressure Drop Curve
Model 10, 20,000 # OLC 12 x 40 Carbon, 8" Piping
60 deg. F., 80 spec. 22.106 septas

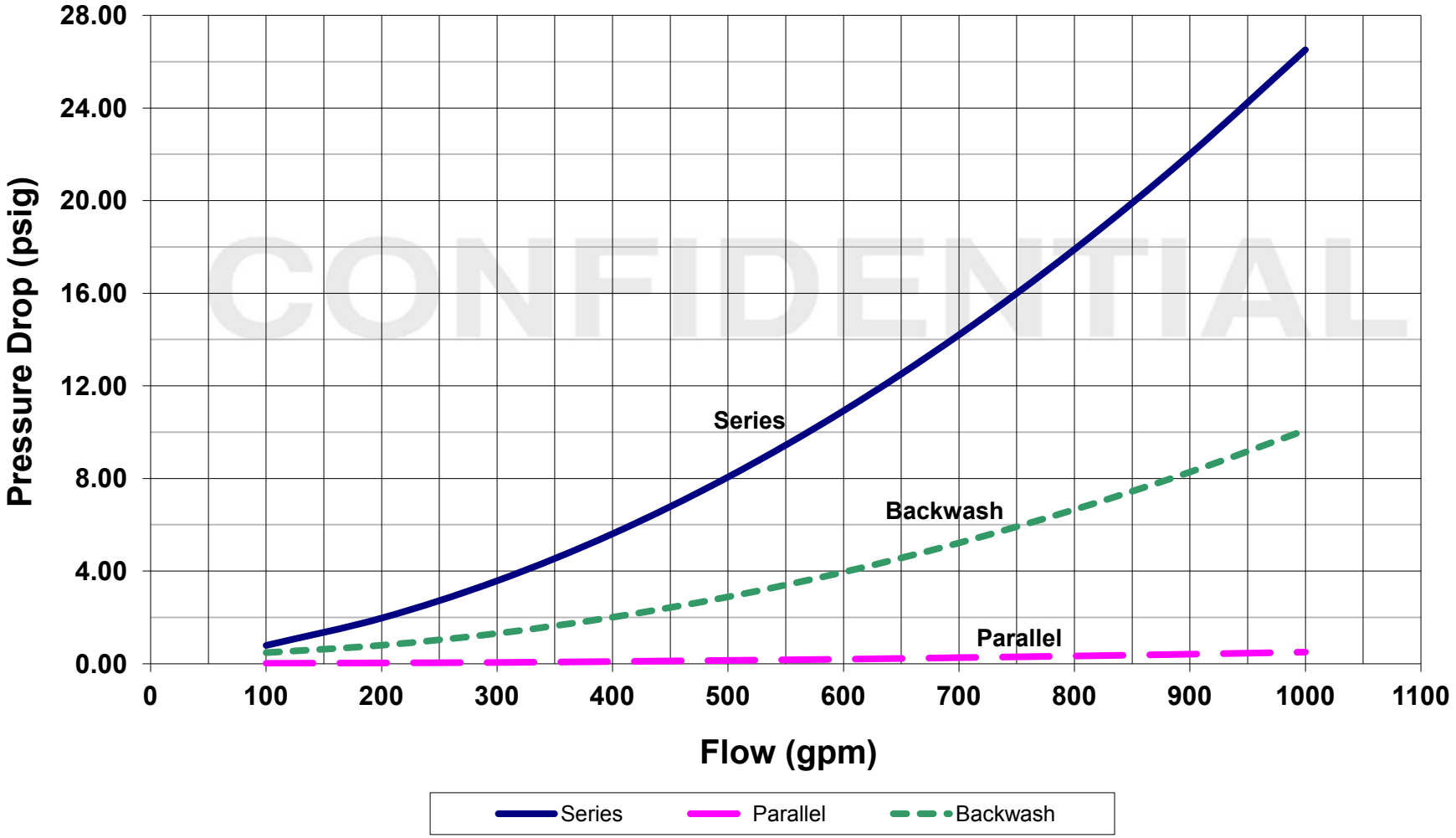

Wetting Times for GAC
80° F. Water

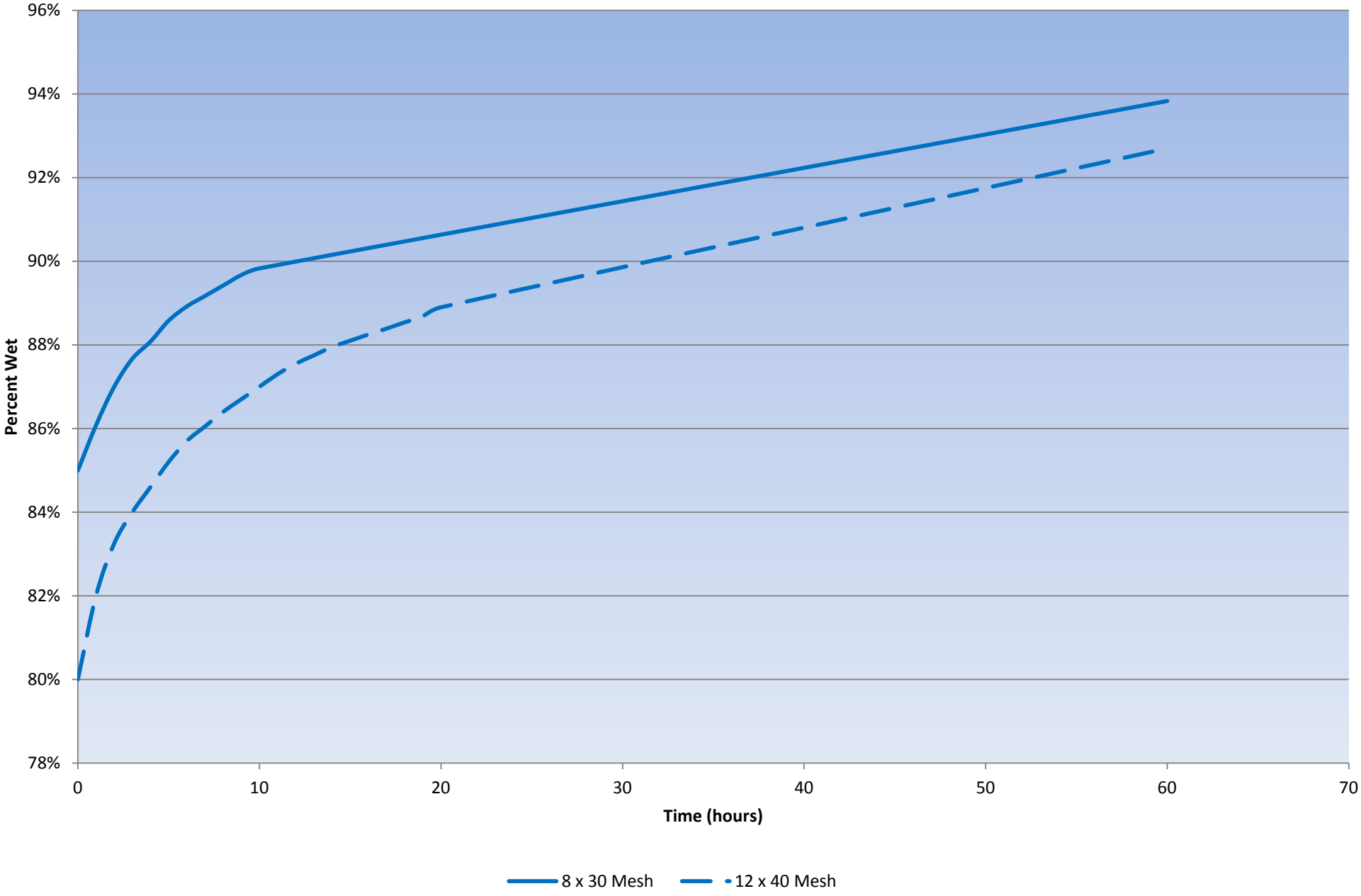

Bed Expansion Curve

Water at 60F, 12 x 40 Mesh Coconut GAC

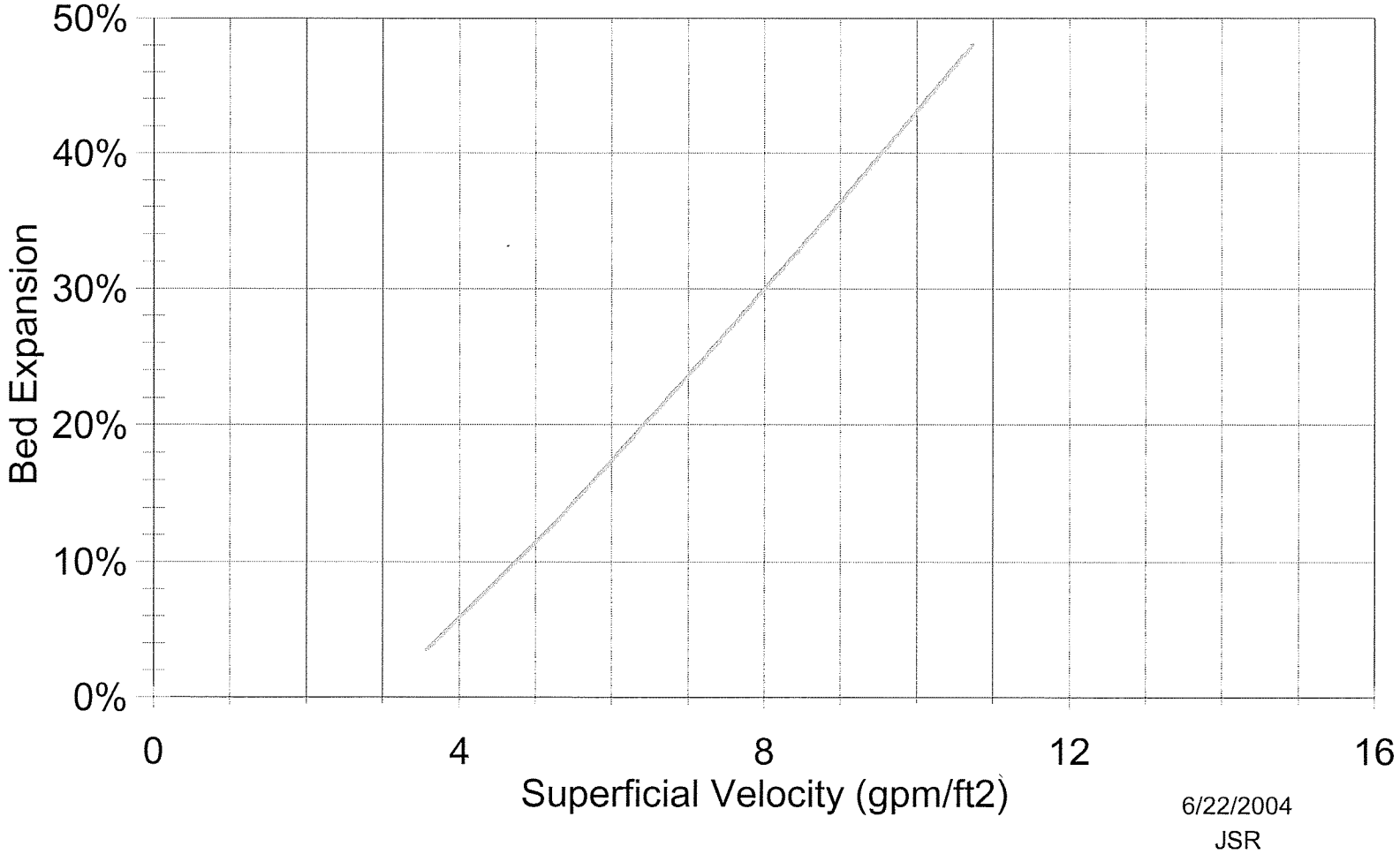

6/22/2004
JSR

Disinfection Of Granular Activated Carbon

CALGON CARBON CORPORATION

Introduction

There are situations where it becomes necessary to disinfect granular activated carbon (GAC) beds due to the presence of bacteria. The bacteria are usually present because of oxygen depletion in wastewater and potable water applications, and low temperatures (>140ºF) in food-related applications (sugars, etc.). The procedure described below is intended for in situ disinfection of carbon in an adsorber containing 20,000 pounds of GAC. By adjusting the amount of sodium hydroxide, larger or smaller carbon beds can be disinfected with this procedure.

Caution Due to the hazardous nature of sodium hydroxide (NaOH) and hydrochloric acid (HCl), appropriate protective clothing such as a face shield, goggles, gloves and impervious clothing must be worn when handling these chemicals. For specific instructions, refer to your plant procedures and/or material safety data sheets for these chemicals. Materials of construction must be compatible with NaOH and HCl.

Disinfection

1. Take the adsorber off line and make sure that a line on top of the adsorber is open to serve as a vent.
2. Drain the water from the adsorber through the adsorber effluent line.
3. Pump 5% sodium hydroxide into the adsorber through the effluent line. For Calgon Carbon's backwashable Model 10 and Model 12 adsorbers, the required volumes are 7,000 and 6,000 gallons, respectively. See step 9a for an alternate procedure.
4. Stop pumping when the NaOH solution overflows through the vent line.
5. Allow the carbon to soak in the sodium hydroxide for at least four hours.
6. Drain NaOH solution from the adsorber through the adsorber effluent line.

Neutralization

7. Wash the carbon by adding contaminant-free or clean water through the effluent line for 7-10 hours at a flow of 1.3-3 gpm/ft^2 in order to wash out the residual sodium hydroxide and neutralize the carbon. The disinfection is then complete.

8a. An alternate, faster procedure for neutralizing the carbon includes acid treatment. After the sodium hydroxide solution is drained from the adsorber, pump 5 gallons of reagent grade hydrochloric acid (37% HCl) into the adsorber through the effluent line.

8b. Fill the adsorber with clean water by backfilling through the effluent line at 3-5 gpm/ft^2 so as to thoroughly mix the content of the adsorber. Shut off the backfill water when it begins to overflow through the vent line.

8c. Allow the carbon to soak for 60 minutes, then drain the adsorber. Check the pH of the water, which should be in the range of 8 to 10.

8d. Wash the carbon by adding clean water through the effluent line at a rate of 1.3-3 gpm/ft^2 until the pH of the effluent water matches the influent water or within desired pH range. Disinfection is then complete.

Alternate Disinfection Procedure

9a. After step 2, add ~ 1,000 gallons of clear water through the effluent line.

9b. After completing step 9a, pump the contents of two 55-gallon drums of 50% sodium hydroxide into the adsorber through the effluent line.

9c. Fill the adsorber with clean water by backfilling through the effluent line at 3-5 gpm/ft^2 so as to thoroughly mix the contents of the adsorber.

9d. Shut off the backfill water when it begins to overflow through the vent line. Check the pH of the water exiting the vent line. It should be 13 or higher.

10. Go to step 5.

Safety Message

Wet activated carbon preferentially removes oxygen from air. In closed or partially closed containers and vessels, oxygen depletion may reach hazardous levels. If workers are to enter a vessel containing carbon, appropriate sampling and work procedures for potentially low oxygen spaces should be followed, including all applicable Federal and State requirements.

CALGON CARBON CORPORATION

Making Water and Air Safer and Cleaner

Calgon Carbon Corporation
P.O. Box 717
Pittsburgh, PA USA 15230-0717
1-800-422-7266
Tel: 412-787-6700
Fx: 412-787-6713

Chemviron Carbon
European Operations of
Calgon Carbon Corporation
Zoning Industriel C de Feluy
B-7181 Feluy, Belgium
Tel: + 32 (0) 64 51 18 11
Fx: + 32 (0) 64 54 15 91

Calgon Carbon Asia
65 Chulia Street
#37-03 OCBC Centre
Singapore 049513
Tel: +65 6 221 3500
Fx: +65 6 221 3554

Your local representative

Copyright© 2005 Calgon Carbon Corporation, all rights reserved.

FORM U-1A MANUFACTURER'S DATA REPORT FOR PRESSURE VESSELS

(Alternative Form for Single Chamber, Completely Shop or Field Fabricated Vessels Only)

As Required by the Provisions of the ASME Boiler and Pressure Vessel Code Rules, Section VIII, Division 1

1. Manufactured and certified by Calgon Carbon Corporation, 4301 Grand Avenue, Neville Island, Pennsylvania, 15225
(Name and address of Manufacturer)

2. Manufactured for Techsas Inc., 4819 West Bayshore Drive, Bacliff, Texas, 77518
(Name and address of Purchaser)

3. Location of Installation Kirtland Air Force, UNKNOWN, Albuqquerque, New Mexico, 87105
(Name and address)

4. Type vertical tank (Horizontal or vertical, tank) | V-214A to V-214B (Manufacturer's serial number) | N/A (CRN) | 91157783 REV.2 and 91157785 REV.1 (Drawing number) | 1646-1647 (National Board number) | 2016 (Year built)

5. ASME Code, Section VIII, Division 1 | 2015/ N/A [Edition and Addenda, if applicable (date)] | N/A (Code Case numbers) | N/A (Special service per UG-120(d))

6. Shell: SA-516 Gr. 70 (Material spec. number, grade) | 0.5000 in (Nominal thickness) | 0.0000 in (Corr. allow.) | 9' 11.0000" (ID) (Inner diameter) | 11' 8.0000" [Length (overall)]

Body Flanges on Shells												
									Bolting			
No.	Type	ID	OD	Flange Thk	Min Hub Thk	Material	How Attached	Location	Num & Size	Bolting Material	Washer (OD, ID, thk)	Washer Material
0	0	0.0"	0.0"	0	0	0	0	0	0 - 0	0	0	0

7. Seams: Welded Type 1 [Long. (welded, dbl., sngl., lap, butt)] | Spot [R.T.(spot or full)] | 85% (Eff.,%) | N/A (H.T. temp) | N/A (Time, hr) | Welded Type 1 [Girth. (welded, dbl., sngl., lap, butt)] | Spot [R.T. (spot or full)] | 100% (Eff., %) | 1 (No. of courses)

8. Heads: (a) Material SA-516 Gr.70 (Spec. no., grade) (b) Material SA-516 Gr.70 (Spec. no., grade)

	Location (Top, Bottom, Ends)	Minimum Thickness	Corrosion Allowance	Crown Radius	Knuckle Radius	Elliptical Ratio	Conical Apex Angle	Hemispherical Radius	Flat Diameter	Side to Pressure (Convex or Concave)
(a)	Top	0.4375	0.0000	0.0000"	0.0000	2:1	0	0.0000"	00000	Concave
(b)	Bottom	0.4375	0.0000	0.0000"	0.0000	2:1	0	0.0000"	00000	Concave

Body Flanges on Heads												
									Bolting			
	Location	Type	ID	OD	Flange Thk	Min Hub Thk	Material	How Attached	Num & Size	Bolting Material	Washer (OD, ID, thk)	Washer Material
(a)	N/A	N/A	N/A	N/A	N/A	N/A	N/A	N/A		N/A	N/A	N/A

9. MAWP 125 psi (Internal) None (External) at max. temp. 140 °F (Internal) None (External)

Min. design metal temp. -20 °F at 125 psi . Hydro, pneu., or comb. test pressure HYDRO AT at 163 psi .

Proof test N/A .

10. Nozzles, inspection and safety valve openings:

Purpose (Inlet, Outlet, Drain, etc.)	No.	Diameter or Size	Type	Material		Nozzle Thickness		Reinforcement Material	Attachment Details		Location (Insp. Open.)
				Nozzle	Flange	Nom.	Corr.		Nozzle	Flange	
Carbon Outlet Inlet	2	4"	FFSO	SA-106B	SA-105	0.5310	xxxx	xxxx	UW-16.1(e)	xxx	Head
Influent / Effluent	2	8"	FFSO	SA-106B	SA-105	0.5000	xxxx	xxxx	UW-16.1(e)	xxx	Shell
Manway	1	20"	FFSO	SA-106B	SA-105	0.5930	xxxx	SA-516 70	UW-16.1(e)	xxx	Shell
Manway	1	14" X 18"	Elliptical	SA-106C	SA-516 Gr. 70	1.0000	xxxx	xxxx	UW-16.1	(y-1)	Head
Sample Point	3	2"	FFSO	SA-106B	SA-105	0.1540	xxxx	xxxx	UW-16.1(e)	xxx	Shell
Air Release	1	2"	FFSO	SA-106B	SA-105	0.1540	xxxx	xxxx	UW-16.1(e)	xxx	Shell
xxx	x	x	x	x	x	x	x	x	x	x	x
xxx	x	x	x	x	x	x	x	x	x	x	x
xxx	x	x	x	x	x	x	x	x	x	x	x
xxx	x	x	x	x	x	x	x	x	x	x	x

Additional Nozzles - See Attached U-4...

11. Supports: Skirt None (Yes or no) Lugs 4 (Number) Legs 4 (Number) Other 8 clips (Describe) Attached Head / Shell and welded (Where and how)

12. Remarks: Manufacturer's Partial Data Reports properly identified and signed by Commissioned Inspectors, have been furnished for the following items of the report:

N/A

(Name of part, item number, Manufacturer's name and identifying stamp)

Hydro Test in vertical position - impact testing exempt per UG-20 (f) & UCS-66 (b)- over pressure protection provided by others.

FORM U-1A (Back)

NB Number 1646-1647

CERTIFICATE OF SHOP/FIELD COMPLIANCE

We certify that the statements made in this report are correct and that all details of design, material, construction, and workmanship of this vessel conform to the ASME BOILER AND PRESSURE VESSEL CODE, Section VIII, Division 1. "U" Certificate of Authorization Number 27471 expires December 24, 2017 .

Date 07/27/2016 Co. name **Calgon Carbon Corporation** (Manufacturer) Signed Theresa Goehring (Representative)

CERTIFICATE OF SHOP/FIELD INSPECTION

Vessel constructed by **Calgon Carbon Corporation** at **4301 Grand Avenue, Neville Island, Pennsylvania, 15225**

I, the undersigned, holding a valid commission issued by The National Board of Boiler and Pressure Vessel Inspectors and employed by Arise, of Brecksville,OH

have inspected the component described in this Manufacturer's Data Report on July 27, 2016 , and state that, to the best of my knowledge and belief, the Manufacturer has constructed this pressure vessel in accordance with ASME BOILER AND PRESSURE VESSEL CODE, Section VIII, Division 1. By signing this certificate neither the Inspector nor his/her employer makes any warranty, expressed or implied, concerning the pressure vessel described in this Manufacturer's Data Report. Furthermore, neither the Inspector nor his/her employer shall be liable in any manner for any personal injury or property damage or a loss of any kind arising from or connected with this inspection.

Date 07/27/2016 Signed Mark Gorist (Authorized Inspector) Commissions 15002A [National Board (incl. endorsements)]

FORM U-4 MANUFACTURER'S DATA REPORT SUPPLEMENTARY SHEET

As Required by the Provisions of the ASME Boiler and Pressure Vessel Code Rules, Section VIII, Division 1

1. Manufactured and certified by Calgon Carbon Corporation, 4301 Grand Avenue, Neville Island, Pennsylvania, 15225
(Name and address of Manufacturer)

2. Manufactured for Techsas Inc., 4819 West Bayshore Drive, Bacliff, Texas, 77518
(Name and address of Purchaser)

3. Location of installation Kirtland Air Force, UNKNOWN, Albuqquerque, New Mexico, 87105
(Name and address)

4. Type vertical tank (Horizontal, vertical, or sphere) | N/A (Tank, separator, heat exch., etc.) | V-214A to V-214B (Manufacturer's serial number)

N/A (CRN)	91157783 REV.2 and 91157785 REV.1 (Drawing number)	1646-1647 (National Board number)	2016 (Year built)

Data Report Item Number | Remarks

Purpose (Inlet, Outlet, Drain, etc.)	No.	Diameter or Size	Type	Material		Nozzle Thickness		Reinforcement Material	Attachment Details		Location (Insp. Open.)
				Nozzle	Flange	Nom.	Corr.		Nozzle	Flange	
xxx	x	x	x	x	x	x	x	x	x	x	x
xxx	x	x	x	x	x	x	x	x	x	x	x
xxx	x	x	x	x	x	x	x	x	x	x	x
xxx	x	x	x	x	x	x	x	x	x	x	x
xxx	x	x	x	x	x	x	x	x	x	x	x
xxx	x	x	x	x	x	x	x	x	x	x	x
xxx	x	x	x	x	x	x	x	x	x	x	x
xxx	x	x	x	x	x	x	x	x	x	x	x
xxx	x	x	x	x	x	x	x	x	x	x	x
xxx	x	x	x	x	x	x	x	x	x	x	x
xxx	x	x	x	x	x	x	x	x	x	x	x
xxx	x	x	x	x	x	x	x	x	x	x	x
xxx	x	x	x	x	x	x	x	x	x	x	x
xxx	x	x	x	x	x	x	x	x	x	x	x
xxx	x	x	x	x	x	x	x	x	x	x	
xxx	x	x	x	x	x	x	x	x	x	x	x
xxx	x	x	x	x	x	x	x	x	x	x	x
xxx	x	x	x	x	x	x	x	x	x	x	x
xxx	x	x	x	x	x	x	x	x	x	x	x
xxx	x	x	x	x	x	x	x	x	x	x	x
xxx	x	x	x	x	x	x	x	x	x	x	x
xxx	x	x	x	x	x	x	x	x	x	x	x
xxx	x	x	x	x	x	x	x	x	x	x	x
xxx	x	x	x	x	x	x	x	x	x	x	x

Certificate of Authorization: Type "U" No. 27471 Expires December 24, 2017

Date 07/27/2016 Name **Calgon Carbon Corporation** (Manufacturer) Signed Theresa Lochner (Representative)

Date 07/27/2016 Name Mark Gouin (Authorized Inspector) Commissions: 15002A [National Board (incl. endorsements)]

SECTION 9

SPECIFICATIONS AND CATALOG CUT SHEETS

AL SERIES

Air and Vacuum Valves

Crispin Air and Vacuum Valves

Valve Function

- Allows large quantities of air to be vented from systems being filled with liquid
- Features Vacuum Function

Features

- Meets AWWA C-512
- Peripheral guide system for unobstructed closure
- Drip tight closure
- Standard Buna-N seating material
- Available in sizes 1/2” thru 24”

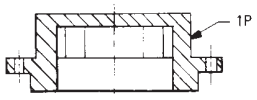

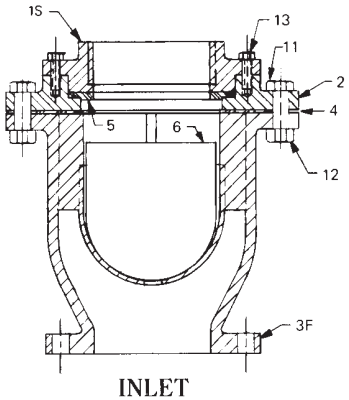

INLET

With Stainless Steel Trim

The Crispin Air and Vacuum Unit, with its orifice the same diameter as its inlet, allows large quantities of air to be vented from systems being filled with liquid. The same holds true in reverse for vacuum conditions when the system is drained.

Its design is such that the velocity of air passing through the valve will not blow the float shut at normal design volumes. It will not close until the arrival of liquid in the valve, and will not open to vent accumulating air as long as the system is under pressure and in operation.

Air and Vacuum Valves are available with stainless steel floats and either standard top or protectop in sizes up to and including 24.” All CRISPIN Air and Vacuum Valves have also guides which direct the float onto the seat upon closure. These guides are peripheral to the float, and fixed to the body or the cup and hanger assembly.

This peripheral guide system allows unobstructed closure because there are no guide bushings to collect dirt and then bind, and there are no shafts to bend or deform, which would prevent a drip tight seal.

Parts List for Air & Vacuum 1” – 24”

PART NO.	ITEM	MATERIAL (standard)
1S*	Top	Cast Iron
1P*	Protectop	Cast Iron
2	Flange	Cast Iron
3	Body, Screwed	Cast Iron
3F*	Body, 125 (1”-4” Threaded) ANSI Flanged	Cast Iron
3FH*	Body, 250 ANSI Flanged	Cast Iron
4	Gasket	Armstrong
5	Seat	Buna-N Rubber
6S	Float	Stainless Steel
11	Bolt	Steel
12	Nut	Steel
13	Bolt	Steel
14* (not shown)	Domed Screened Hood	HRCQ Steel

* Part No.’s 1P, 1S, 3F, 3FH and 14 are at customer’s option
For ease of maintenance, some of the above parts are provided as kits or assemblies.
Note: Prices and Materials are Subject to Change Without Notice

AL Crispin Valve, 600 Fowler Ave., Berwick, PA 18603 • 1-800-AIR-VALV • T: (570) 752-4524 • F: (570) 752-4962 • WWW.CRISPINVALVE.COM • sales@crispinvalve.com

Crispin Air and Vacuum Valves

Air and Vacuum Valve Detail*

MODEL	INLET	OUTLET	TRIM	HEIGHT	WIDTH	WEIGHT (lbs)
A5	1/2" NPT	1/2" NPT	IBBT	4 7/8"	4 3/4"	7
AL10	1" NPT	1" NPT	S/S	6 1/8"	6 1/4"	16
AL20	2" NPT	2" NPT	S/S	9 1/2"	8 3/4"	42
AL21	2" 125# Flg.	2" NPT	S/S	13 1/8"	8 3/4"	48
AL22	2" 250# Flg.	2" NPT	S/S	13 3/8"	8 3/4"	48
AL30	3" NPT	3" NPT	S/S	11 5/8"	11 1/2"	92
AL31	3" 125# Flg.	3" NPT	S/S	15 3/4"	11 1/2"	112
AL32	3" 250# Flg.	3" NPT	S/S	15 15/16"	11 1/2"	120
AL40	4" NPT	4" NPT	S/S	14 1/2"	14"	154
AL41	4" 125# Flg.	4" NPT	S/S	17 5/16"	14"	170
AL42	4" 250# Flg.	4" NPT	S/S	17 13/16"	14"	181
AL61	6" 125# Flg.	6" NPT	S/S	15 13/16"	15"	174
AL62	6" 250# Flg.	6" NPT	S/S	16 1/4"	15"	195
AL81	8" 125# Flg.	8" NPT	S/S	18 1/16"	17 3/4"	265
AL82	8" 250# Flg.	8" NPT	S/S	18 9/16"	17 3/4"	295
AL101	10" 125# Flg.	10" NPT	S/S	22 1/16"	21"	500
AL102	10" 250# Flg.	10" NPT	S/S	22 3/4"	21"	550
ALI21	12" 125# Flg.	12" hooded	S/S	28 1/2"	28"	725
AL122	12" 250# Flg.	12" hooded	S/S	30"	28"	778
AL141	14" 125# Flg.	14" hooded	S/S	31 1/2"	30"	970
AL142	14" 250# Flg.	14" hooded	S/S	32 1/4"	30"	1,157
AL161	16" 125# Flg.	16" hooded	S/S	36 1/2"	32 3/4"	1,025
AL162	16" 250# Flg.	16" hooded	S/S	37 1/2"	32 3/4"	1,115

Crispin valves are hydrostatically tested at 150% of their maximum working pressure.

*Consult factory for sizes above 16".

Submittal Sheet for Crispin AL Series

1”–4” Air & Vacuum Valve

Manufactured in compliance with ANSI/AWWA C512 **Date: October, 2001**

SUBMITTAL SHEET FOR AL SERIES

Specifications

Air & Vacuum Valve(s) shall be installed at high points in the main line or as directed by the engineer to release the air in the main during filling, or allow it to enter the system when draining, or when the system is subject to negative pressure.

The valve(s) shall operate by sealing the Buna-N rubber outlet seat with a peripheral float as the liquid enters the valve chamber to raise the float. All Crispin Valves are hydrostatically tested at 150% of their maxiumum working pressure.

1”-4”—The valve(s) shall be constructed with a cast iron body, and top flange with stainless steel trim, and shall have a_____” NPT screwed inlet and outlet, or ANSI Class (125, 250) flanged inlet with NPT screwed outlet. The peripheral guided float shall be stainless steel.

The valve(s) shall be Crispin Model_____, as manufactured by Crispin-Multiplex Manufacturing Co., Berwick, PA.

Option: A protectop shall be supplied to prevent debris from entering the outlet of the valve.

Option: [Where pressures are greater than 300 PSIG.] the valves shall be ANSI Class_____flanged inlet connection and shall have a (steel, stainless steel, or ductile iron) body, top and inlet flange.

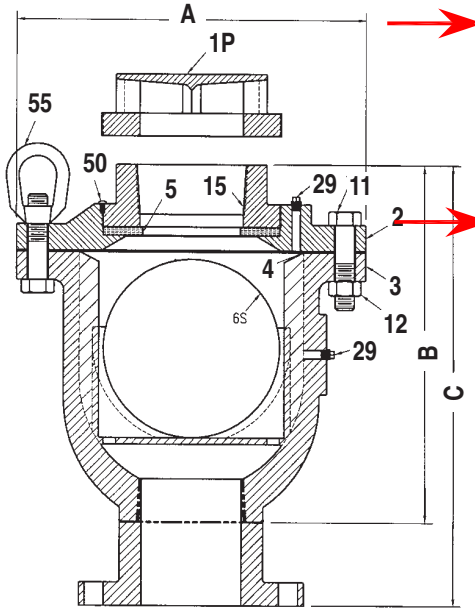

Standard operating pressure for Crispin Air Valves is 20 to 150 PSIG. Please check one of the following if your operating needs differ:

____ 2 to 40 PSIG
____ 151 to 300 PSIG

Size Specifications

MODEL	INLET SIZE	OUTLET SIZE	A	B	C	WEIGHT
*AL10	1” NPT	1” NPT	6.25	6.25		16
AL20	2” NPT	2” NPT	8.75	9.75		44
**AL21	2” 125# FLG	2” NPT	8.75		13.25	50
**AL22	2” 250# FLG	2” NPT	8.75		13.50	52
AL30	3” NPT	3” NPT	11.50	11.75		92
AL31	3” 125# FLG	3” NPT	11.50		15.75	112
AL32	3” 250# FLG	3” NPT	11.50		16.00	120
AL40	4” NPT	4” NPT	14.00	14.50		154
AL41	4” 125# FLG	4” NPT	14.00		17.50	170
AL42	4” 250# FLG	4” NPT	14.00		18.00	181

* Protectop not available ** Includes ANSI CL. 125 or 250 companion FLG & NPL
*** Parts are interchangable and optional at customer’s request

Air & Vacuum Parts List

ITEM	DESCRIPTION	MATERIAL	ASTM
***1S	TOP	CAST IRON	A126 CL. B
**1P	PROTECTOP	CAST IRON	A126 CL. B
2	FLANGE	CAST IRON	A126 CL. B
3F	BODY	CAST IRON	A126 CL. B
4	GASKET	ARMSTRONG N—8092	N/A
5	SEAT	BUNA—N RUBBER	D2000
6S	FLOAT	STAINLESS STEEL	A240
11	BOLT	STEEL	A307
12	NUT	STEEL	A563
29	PLUG	BRASS	B505
50	INTERFERENCE PIN	STAINLESS STEEL	A582
55	EYE BOLT	STEEL	A563

Crispin Valve, 600 Fowler Ave., Berwick, PA 18603 • 1-800-AIR-VALV • T: (570) 752-4524 • F: (570) 752-4962 • WWW.CRISPINVALVE.COM • sales@crispinvalve.com

Flow Line 70/71

Wafer & Lug Style
Sizes 2" - 12"

Flow Line™
Valve and Controls

Cartridge Seated Butterfly Valves

KEY FEATURES

Body

- One piece ribbed wafer and lugged body is Polyester coated as standard for a superior appearance and excellent resistance to external corrosion.
- Heavy duty ISO 5211 Top plate is slotted for ease of actuation and engineered to accept direct mounting of operators.
- Standard extended neck provides full clearance for 2” of insulation.

Disc

- Streamlined design offers higher Cv and lower pressure drop.

Shaft

- Triple shaft seals support the primary seal on machined radius of the disc. Our triple shaft seals ensure a dry stem design.
- Two secondary shaft seals are located inside the seat shaft holes and an environmental shaft seal eliminates contaminants from entering the shaft bore.
- Two self lubricated bronze bearings offer consistent torque valves and eliminate side loading.

Seat and Flange Seals

- Field replaceable, phenolic bonded cartridge seat provides no movement of the elastomer which is a common failure point of many resilient flexible seat designs.
- Torque fluctuation is eliminated by our phenolic bonded elastomer seats.
- Our dual purpose primary flange seal is widened offering additional compression of the elastomer against various flanges resulting in a positive seal.
- This resulting primary flange seal provides a smooth flow conduit for media and prevents build up in crevices created by traditional seat designs.
- Molded secondary flange seals assure no leakage when used with weld neck, slip on, and threaded flanges and eliminates the need for gaskets or O-rings.

Disc/Shaft Connection

- A high strength Double D drive ensures a positive shaft to disc connection.
- Disc floats inside the seat for positive sealing and extended seat life.
- No pins or bolts are exposed to flow.
- Offset shaft retainers mechanically retain the shaft in the body ensuring a blow out proof design.

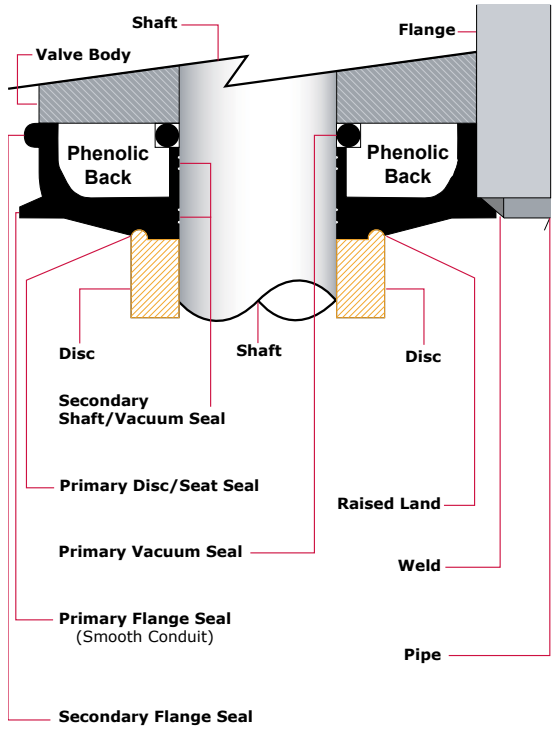

Shaft Sealing Method

- Disc shaft holes surrounded by a 360˚ machined radius are in constant contact with the flatted area of the seat.
- This design is far superior to resilient flexible seat designs that depend on the “squeeze” effect of the disc and seat interference which allows leakage behind the seat and up the shaft.
- The Flow Line shaft seal is achieved through a continuous pressure exerted from the flatted area of the seat to the machined radius of the disc.
- This sealing mechanism is further enhanced by forces exerted on the seat and shaft providing a secondary seal resulting in media free disc, shaft and seat connection.

Applicable Standards

ANSI B16.1	Conforms to ANSI Class 125 flange drilling.
ANSI B16.5	Conforms to ANSI 150 flange drilling.
ANSI B16.42	Conforms to ANSI Class 150 flange drilling, body wall thickness and pressure-temperature ratings.
ANSI B16.104	Exceeds Class VI shutoff requirements.
API 609	Butterfly Valve Category A.
AWWA C504	Diameter of stainless steel shaft exceeds AWWA Class 75B standard. Body wall thickness exceeds the AWWA Class 150B standard for butterfly valves.
MSS SP-25	Markings and identification conform to the requirements.
MSS SP-67	Butterfly Valves
ISO 5211	Actuator Mounting
USCG	Category “A” Title 46, CFR, Part 56

ENGINEERING

DIMENSIONS

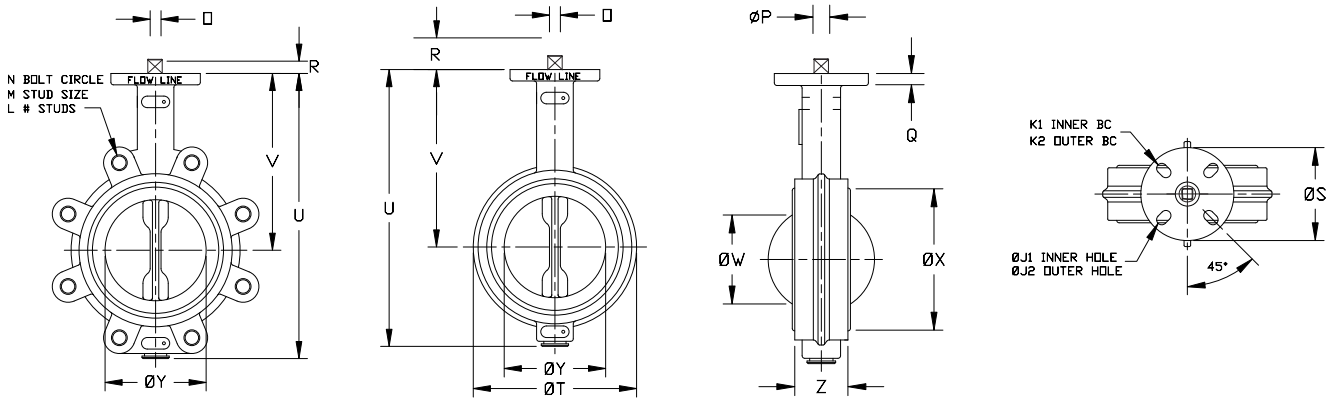

Valve Size	Z	Y	X	W	V	U	T	S	R	Q	P	O	Lug Drilling			Top Plate Drilling					Weight
													N	M	L	K1	K2	#holes	J1	J2	(lb)
2	1.74	2.25	2.65	1.46	5.62	8.44	4.12	4.00	0.827	.44	.551	0.551	4.75	5/8-11	4	2.76	3.25	4	.39	.41	8
2-1/2	1.86	2.81	3.15	2.14	6.12	9.19	4.88	4.00	0.827	.44	.551	0.551	5.50	5/8-11	4	2.76	3.25	4	.39	.41	10
3	1.86	3.31	3.78	2.74	6.38	9.69	5.38	4.00	0.827	.44	.551	0.551	6.00	5/8-11	4	2.76	3.25	4	.39	.41	11
4	2.11	4.19	4.78	3.60	7.12	11.00	6.88	4.00	0.827	.44	.551	0.551	7.50	5/8-11	8	2.76	3.25	4	.39	.41	17
5	2.24	5.06	5.84	4.58	7.75	12.12	7.75	4.00	1.063	.44	.670	.670	8.50	3/4-10	8	2.76	3.25	4	.39	.41	23
6	2.24	6.06	7.03	5.62	8.25	13.25	8.75	4.00	1.063	.44	.670	.670	9.50	3/4-10	8	2.76	3.25	4	.39	.41	29
8	2.54	7.94	8.96	7.43	9.44	15.56	11.00	6.00	1.063	.56	.866	0.866	11.75	3/4-10	8	4.02	5.00	4	.53	.53	44
10	2.74	10.00	11.09	9.38	11.25	18.69	13.38	6.00	1.063	.56	.866	0.866	14.25	7/8-9	12	4.02	5.00	4	.53	.53	66
12	3.24	11.94	13.09	11.35	12.19	21.69	16.12	6.00	1.063	.56	.866	0.866	17.00	7/8-9	12	4.02	5.00	4	.53	.53	99

CLASS II TORQUES (Inch-Pounds)

Shutoff Pressure	2"	2 1/2"	3"	4"	5"	6"	8"	10"	12"
50 PSI SHUTOFF	66	96	150	225	350	450	750	1325	2250
75 PSI SHUTOFF	98	141	237	261	504	651	1050	1778	2990
100 PSI SHUTOFF	103	148	249	343	531	685	1105	1872	3147
125 PSI SHUTOFF	107	155	260	376	553	714	1151	1950	3279
150 PSI SHUTOFF	110	158	265	384	564	728	1275	1989	3345
175 PSI SHUTOFF	121	175	283	417	632	814	1337	2320	3923
200 PSI SHUTOFF	132	192	300	450	700	900	1500	2650	4500
250 PSI SHUTOFF	145	211	318	486	770	990	1695	2995	5085
285 PSI SHUTOFF	160	232	337	528	847	1089	1915	3384	5746

Cv VALUES

Valve Size	10°	20°	30°	40°	50°	60°	70°	80°	90°
2	2	3.5	8	21	40	87	108	141	170
2-1/2	3	5	11	27	52	121	172	253	332
3	8	16	23	50	92	147	224	420	473
4	17	33	57	110	182	297	462	773	913
5	47	94	143	231	380	578	908	1485	1650
6	91	182	248	396	627	902	1386	2063	2178
8	116	231	330	528	858	1452	2508	4158	4257
10	223	446	633	935	1320	2090	3630	6710	7095
12	303	605	825	1320	2063	3135	5528	10230	10780

Class II

- Valve to be operated a minimum of once a month.
- Temperature well within resilient seat limits.
- Line media is a self lubricating. (Aqueous liquids)
- Minor chemical attacks on seat.
- Disc corrosion and media deposits to be mild.

Notes:
1. This chart to be used as a guide only.
2. These torque ratings do not apply to every possible service criteria, which may affect seating and unseating torque.
3. Torque values are applicable to Flow Line Series 70/71.
4. Do not apply a safety factor to the above torque values when sizing actuators.
5. Dynamic Torque should always be a consideration when sizing valves with high differential pressures.
6. For 3 way tee assemblies multiply the above torques by 1.5.

SPECIFICATIONS

HOW TO ORDER

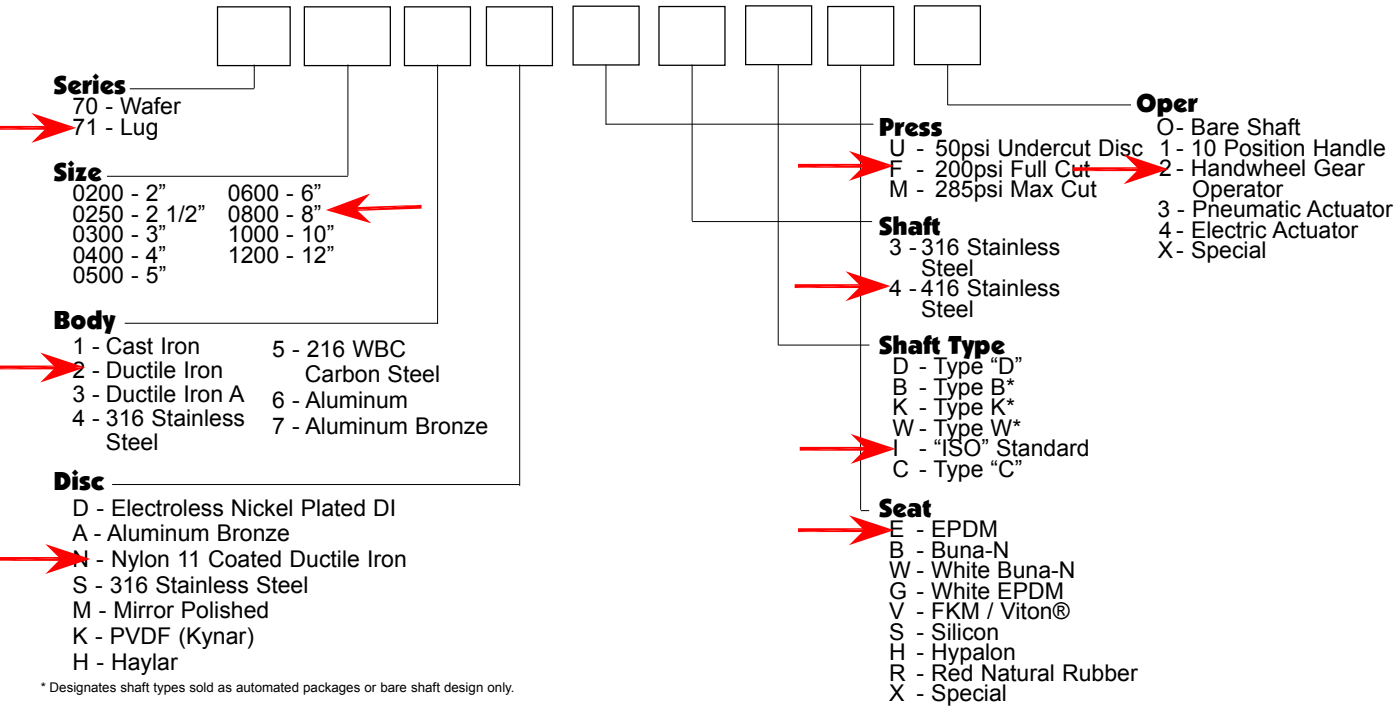

* Designates shaft types sold as automated packages or bare shaft design only.

Recommended Specifications

- Polyester coated ribbed wafer or lug bodies to provide extended necks for insulation and be able to install between ANSI 125/150 flanges. Lug design in sizes 2” - 12” to be fully rated for dead end service without any modification.
- Streamlined disc design with no pins or screws in the flow path and designed for high Cv and lower pressure drop.
- Upper and lower shaft design to utilize triple shaft seals as standard.
- Blow out proof design utilizing a Double D drive for a positive disc/shaft connection.
- Pressure responsive 360° sealing design will use constant pressure between machined radius on disc and flatted area of the seat.
- Valve to be Flow Line Series 70 wafer or Flow Line Series 71 lug design.

Components

Qty	Description	Qty	Description
1	Body	2	Shaft Retainers
1	Disc	1	Bearing Retainer
1	Upper Shaft	1	Environmental Shaft Seal
1	Lower Shaft	2	Secondary Shaft Seals
1	Seat	1	Thrust Bearing
		1	Inboard Bearing

Materials of Construction 2” - 12”

Body

- Cast Steel ASTM A-216 WCB
- 316 Stainless Steel ASTM A-351 CF8M
- Cast Iron ASTM A-126 Class B
- Ductile Iron ASTM A-536 (65-45-12)
- Ductile Iron ASTM A-395 (60-40-18)

Disc

- Electroless Nickel Plated Ductile Iron ASTM A-536 (65-45-12)
- Aluminum Bronze ASTM B-148 (954)
- Nylon 11 Coated Ductile Iron ASTM A-536 Grade (65-45-12)
- 316 Stainless Steel ASTM A-351 (CF8M)

Stem

- 316 Stainless Steel ASTM A-276 Type 316
- 416 Stainless Steel ASTM A-582 Type 416

Seat

EPDM - FDA Food Grade	-30 to + 275
Buna-N - FDA Food Grade	0 to +180
White Buna-N - FDA Food Grade	0 to + 180
Viton® - FDA Food Grade	0 to + 375
Silicon - FDA Food Grade	-80 to + 450
Hypalon	0 to + 180
Red Natural Rubber	0 to + 150

Viton® is a registered trademark of the E.I. DuPont De Nemours Company. FKM is the ASTM D1418 designation for Flourinated Hydrocarbon elastomers such as Viton® (DuPont) and Flourel® (3M).

FEATURES

- **Slotted ISO 5211 top plate and shaft for flexibility of direct mounting options**
- **Environmental shaft seal to keep contaminants from entering shaft bore**
- **Offset shaft retainers mechanically retain the shaft ensuring a blow out proof design**
- **One piece ribbed Polyester coated body with extended neck**
- **Streamlined disc with no pins or screws in flow path**
- **Primary seal provides a smooth flow conduit and prevents media buildup in crevices normally found with traditional designs**
- **Independent seals provide full vacuum rating**

- **High strength upper and lower shafts with triple shaft seals**
- **Two self lubricated bronze bearings to eliminate side loading**
- **Double D Drive for a positive disc/shaft connection with no pins or bolts exposed to flow**
- **Proven pressure responsive 360° sealing method uses constant pressure between machined radius on disc and flatted area of the seat that eliminates the "squeeze" of the interference seat design our competition relies on**
- **Phenolic bonded cartridge seat with primary and secondary seals provide no movement of the elastomer**
- **Two secondary shaft seals located inside the seat shaft holes**

The **Series 70 wafer** style and **Series 71 lug** style are heavy duty cartridge seated butterfly valves compatible ANSI 125/150 weld neck, slip on, and threaded flange standards. 2" - 12" valves are fully rated to 200 psi, bi-directional, dead end service. Valves with undercut discs to 50 psi are also available through the size range. Valves with Max cut Disc to 285 psi are also available through size range. All Series 70/71 valves, regardless of the rated working pressure, are vacuum rated to 29.92" of Mercury Gauge (0 Micron).

COATINGS

Flow Line Series 70 and 71 butterfly valve bodies are Polyester coated as standard. Polyester is a significant upgrade to paint or two part epoxy coatings. Our standard Polyester coating offers outstanding protection against abrasion and corrosion. The Flow Line Polyester coating is not affected by outdoor exposure and maintains excellent resistance to UV rays.

TEST	RESULT
Salty Fog Test	No change in excess of 2000 hours
Outdoor Weathering (UV Rays)	No noticeable change in excess of 12 months
50% Sulfuric Acid Test	No change for 48 hours

INSTALLATION, MAINTENANCE AND ASSEMBLY

Handle Kit

The Flow Line Handle Kit is designed for manual on/off and throttling service for quarter turn, resilient seated butterfly valves ranging from 2" - 12". The Polyester coated ductile iron handle kit includes the handle assembly with a locking lever and bolt on plate notched at 10 degree increments. The notched plate also includes on/off stops to prevent over travel of the handle and can be used with a padlock as standard. Other available options include an Infinite Throttling Handle Kit, Memory Stop and a 2" Square Nut.

Handwheel Gear Operator

The Flow Line Handwheel Gear Operator is designed for manual on/off and throttling service for quarter turn butterfly valves ranging from 2" - 12". The handwheel gear operator is constructed with a heavy duty, Polyester coated ductile iron housing, is completely self lubricated and weatherproof. Along with the gear operator, it also includes a valve position indicator, ductile iron handwheel and mechanical travel stops for field adjustment. Other available options include a Chainwheel Kit, Padlock Kit and a 2" Square Nut.

Actuation

Series 21 spring return actuators are available throughout the size range.

Series 50 solenoid valves are available in 1/8", 1/4", and 1/2"NPT.

Series 52 and 53 limit switches provide local and remote valve position.

Series 55 and 56 positioners are available with either a 3-15 psi or 4-20 MADC signal.

Installation

To install, simply close the valve, position between the flanges and assemble the valve to the flanges with studs or cap screws. Do not use flange gaskets. Flow Line Series 70 and 71 butterfly valves can be installed with the disc closed. Before hand tightening the flange bolts, fully open the disc to ensure disc O.D. clearance with pipe I.D. Hand tighten the flange bolts and close the valve to check for valve disc and pipe clearance. If contact is made, reposition as necessary and tighten all flange bolts to proper torque specification.

Maintenance and Repair

No regular maintenance or lubrication is required. Factory assembly procedures provide adequate lubrication for the life of the valve. To replace any component, remove valve from the line by fully closing valve disc. Spread flanges, remove all bolts then remove valve from line.

Testing

All Flow Line Series 70 and 71 butterfly valves are bi-directionally tested to 130 percent of rated working pressure. Test certification is available upon request at time of order.

Flanges

ANSI 125/150 cast iron, steel, raised face, flat faced weld neck, slip on and threaded flanges are suitable for use with Flow Line butterfly valves. Please contact the factory for proposed installation with plastic flanges.

Warranty

All products manufactured by Flow Line Valve and Controls are warranted against defects in material and workmanship for a period of 2 years from date of installation.

All statements, technical information and recommendations in the bulletin are for general use only. Flow Line Valve and Controls is not responsible for suitability or compatibility of these products in relation to system requirements. Consult Flow Line Valve and Controls distributors or factory for the specific requirements and material selection for your intended application. Flow Line Valve and Controls reserves the right to change or modify product design or product without prior notice. Flow Line Valve and Controls is not responsible for editorial or pictorial errors within this literature.

Flow Line Valve and Controls

110 Main Project Rd. Schriever, LA 70395
Phone (985) 414-6004 Fax (985) 414-6072
Toll 800-815-9226
www.flowlinevalves.com

Doc. No. FLBV1
© Flow Line

Series 71
Technical Drawing 71-001
Date: June 2009/Page 1 of 1

VALVE SIZE	Z	Y	X	W	V	U	S	R	Q	P	N	LUG DRILLING M	L	K1	TOP PLATE DRILLING K2	#holes	J1	J2	WGT. (LB)
2	1.74	2.25	2.65	1.46	5.62	8.44	4.00	.827	.44	.551	4.75	5/8-11	4	2.76	3.25	4	.39	41	8
2-1/2	1.86	2.81	3.15	2.14	6.12	9.19	4.00	.827	.44	.551	5.50	5/8-11	4	2.76	3.25	4	.39	.41	10
3	1.86	3.31	3.78	2.74	6.38	9.69	4.00	.827	.44	.551	6.00	5/8-11	4	2.76	3.25	4	.39	.41	11
4	2.11	4.19	4.78	3.60	7.12	11.00	4.00	.827	.44	.551	7.50	5/8-11	8	2.76	3.25	4	.39	.41	17
5	2.24	5.06	5.84	4.58	7.75	12.12	4.00	1.063	.44	.670	8.50	3/4-10	8	2.76	3.25	4	.39	.41	23
6	2.24	6.06	7.03	5.62	8.25	13.25	4.00	1.063	.44	.670	9.50	3/4-10	8	2.76	3.25	4	.39	.41	29
8	2.54	7.94	8.96	7.43	9.44	15.56	6.00	1.063	.56	.866	11.75	3/4-10	8	4.02	5.00	4	.53	.53	44
10	2.74	10.00	11.09	9.38	11.25	18.69	6.00	1.063	.56	.866	14.25	7/8-9	12	4.02	5.00	4	.53	.53	66
12	3.24	11.94	13.09	11.35	12.19	21.69	6.00	1.063	.56	.866	17.00	7/8-9	12	4.02	5.00	4	.53	.53	99

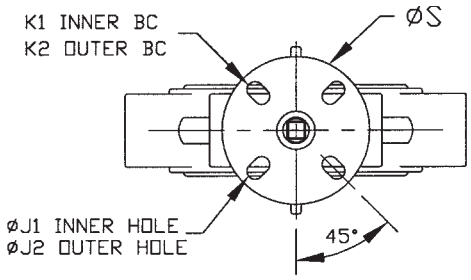

ITEM	DESCRIPTION	MATERIAL	REMARKS
4	STEM		
3	DISC		
2	SEAT		
1	BODY		

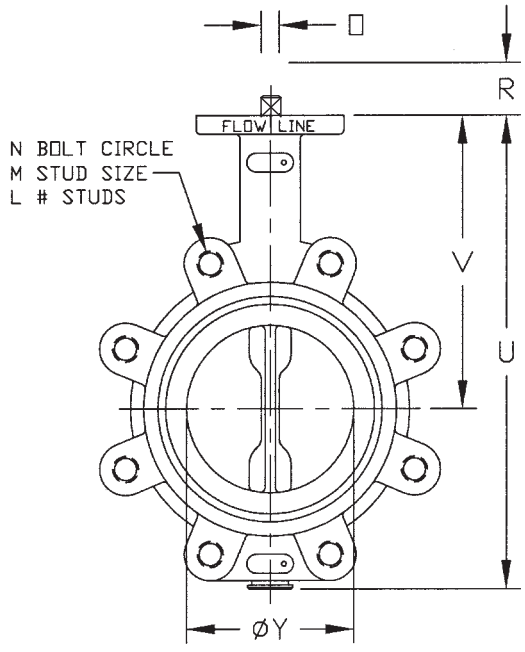

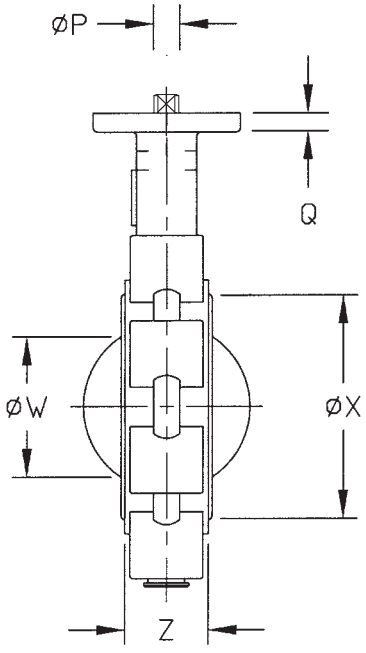

VALVE SIZE	FLANGE DRILLING	**DIMENSIONAL DATA SHEET**	PART NO.
PRESSURE RATING		**BUTTERFLY VALVE**	DRAWING NO. 71-001 / REV B
CUSTOMER/PROJECT		**SERIES 71**	DATE 6/09
INQ./PO NO.		**SIZES 2”-12”**	
ORDER NO.			
CERTIFIED BY	DATE		

Flow Line Valve and Controls, Inc.
PO Box 677, 110 Main Project Rd • Schriever, LA 70395 • Phone (985) 414-6004 • Fax (985) 414-6072
www.flowlinevalves.com

DIMENSIONS
Series 17 Chain Wheel

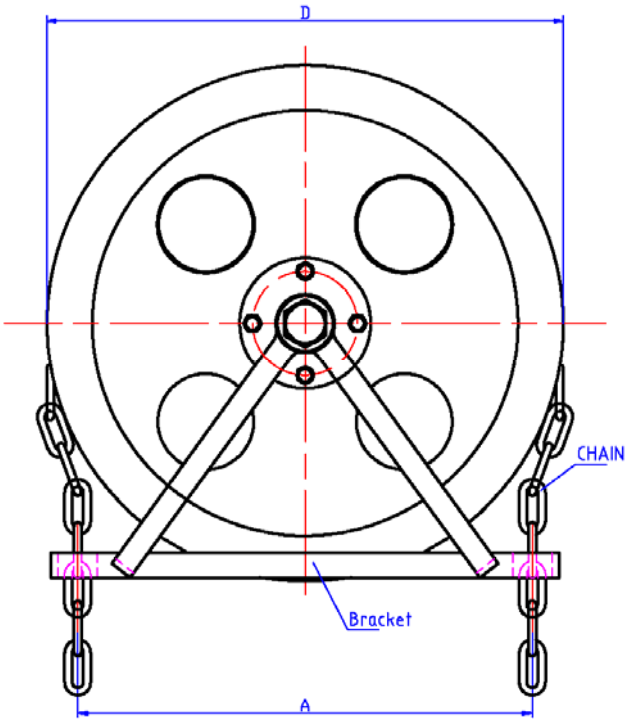

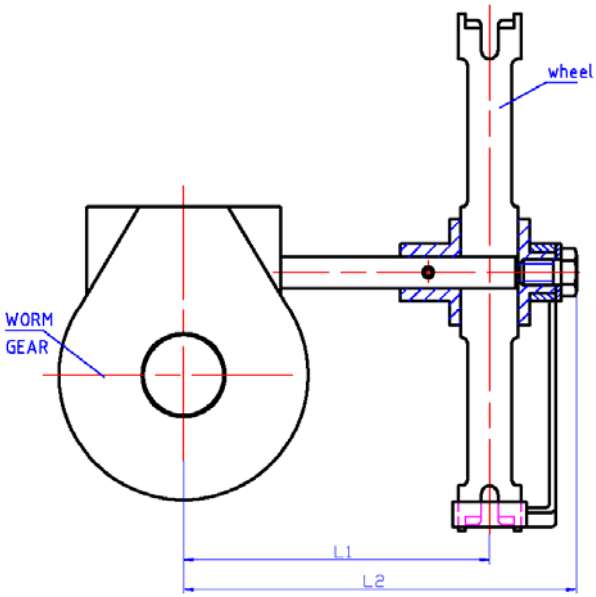

PART #	USE WITH GEAR OPERATOR PART #	D	L1	L2	A	SHAFT BORE*
17-32200	15-00202 15-00225 15-00203	7.87"	3.62"	5.62"	7.08"	0.629"
	15-00204 15-00205 15-00206	200 mm	92 mm	143 mm	180 mm	16 mm
17-32290	15-00208 15-00210	11.41"	6.41"	8.46"	10.62"	0.748"
	15-00212 15-00214	290 mm	163 mm	215 mm	270 mm	19 mm
17-32410	15-00216 15-00218	16.14"	10.10"	12.32"	14.96"	0.984"
	15-00220 15-00224	410 mm	257 mm	313 mm	380 mm	25 mm

* Standard shaft bore sizes, custom sizes available

Flow Line Controls, Inc.
P.O. Box 677 · Schriever, LA 70395 · Phone: 985-414-6003 · Toll Free 1-800-815-9226 ·Fax 985-414-6072
www.flowlinecontrols.com

 © 2009 Flow Line

Dimensions

Series 15 Gear Operator
Size: 15-00204, 15-00206,
and 15-00210

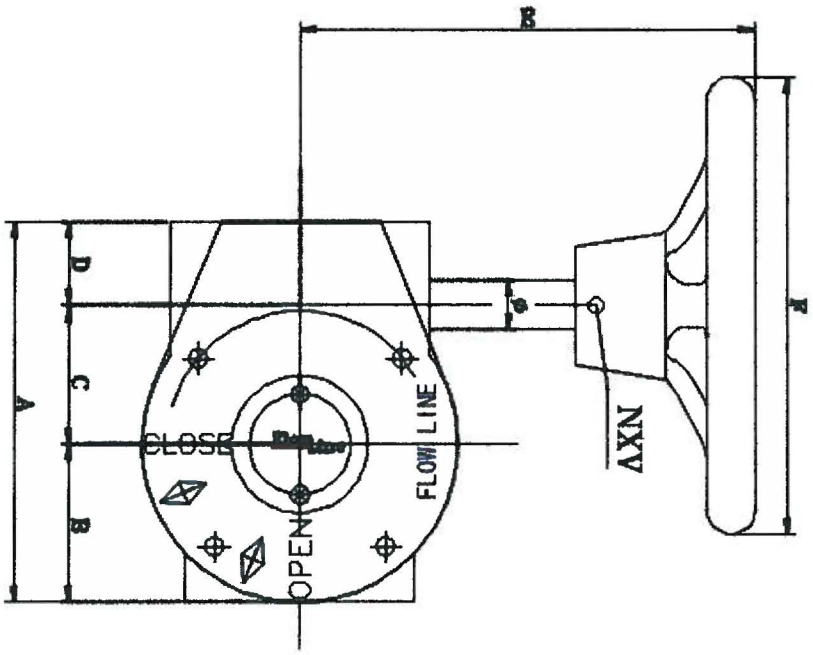

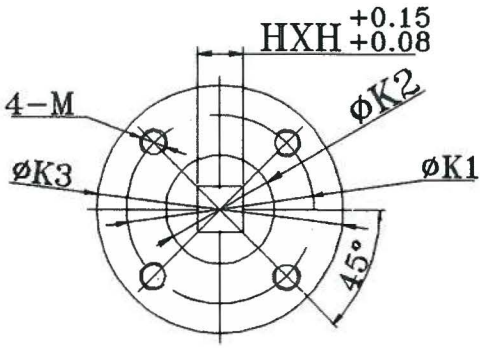

IS05211

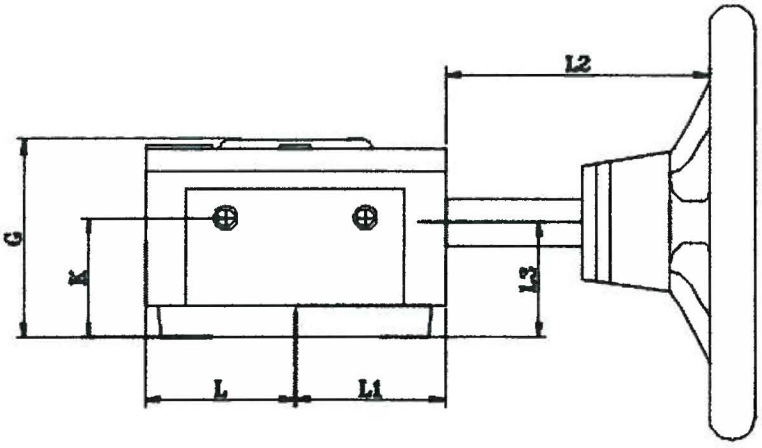

DIMENSIONS ARE INCHES UNLESS NOTED

SIZE	PART #	RATIO	A	B	C	D	E	F	G	H*H	K	L	L1	L2	L3	ISO5211	K1	K2	K3	M	ø	NXV	Torque Output
2"-4"	15-00204	24:1	4.88	2.00	1.77	1.10	6.14	7.48	2.56	14*14	1.57	2.05	2.05	4.05	1.57	F07	2.76	1.77	3.54	M8	0.63	5x36mm	1328
5"-6"	15-00206	24:1	4.88	2.00	1.77	1.10	6.14	7.48	2.56	17*17	1.57	2.05	2.05	4.05	1.57	F07	2.76	1.77	3.54	M8	0.63	5x36mm	1328
8"-10"	15-00210	30:1	6.73	2.87	2.6	1.14	9.25	11.37	3.15	22*22	1.73	2.87	2.87	6.41	1.73	F10	4.01	1.89	4.92	M10	0.75	6x45mm	4425

Drawn By: DAP
Revision: A
Date: 3-1-2016

DAP

Flow Line Valve and Controls, LLC
P.O. Box 677; 110 Main Project Road, Schriever, LA 70395
Phone: (985) 414-6004 Fax: (985) 414-414-6072
www.flowlinevalves.com

	BALL VALVES MATERIAL SPECIFICATION	SPEC NO:
CalgonCarbon	FORGED BRONZE, BRASS, OR BARSTOCK BRASS BODY REGULAR PORT BALL VALVE	4.03

SAP PART NUMBER:

CCC DRAWING NUMBER:

MATERIAL: Bronze or forged brass or barstock brass body regular port ball valve, blow-out proof stem, ball and seat retainer design to permit valve to be dead ended in either flow direction, chrome plated bronze or brass ball and stem, PTFE seats and seals (furnish glass fiber reinforced PTFE seats and graphited stem seal if required to meet pressure and temperature rating), wrench handle operated, threaded ends.

RATING: 500 PSIG @ 100 DEG. F.
150 PSIG @ 366 DEG. F.

MANUFACTURER: DuraValve / Siral or Equal.

SIZES: 1/4" thru 2"

MODELS: VRN5000 or Equal

GENERAL REQUIREMENTS:

PROPRIETARY AND CONFIDENTIAL
THIS DOCUMENT AND DESIGN DETAILS ARE THE PROPERTY OF CALGON CARBON CORPORATION AND ARE NOT TO BE REPRODUCED IN WHOLE OR PART, NOR EMPLOYED FOR ANY PURPOSE OTHER THAN SPECIFICALLY PERMITTED IN WRITING BY CALGON CARBON CORPORATION. THIS DOCUMENT IS LOANED AND SUBJECT TO RETURN ON DEMAND.

Issue Date: 01/01/89 Revision Date: 08/14/2003

Approved by Gerald Kirner on 02/09/2006

CALGON CARBON
SPECIFICATION 4.03

Ultra Pure™
A HAMMOND VALVE PRODUCT

UP8901* 1/4"-3"

Brass Ball Valve For Potable Water
Two-Piece • Full-Port
600 PSIG WOG
Threaded Ends

Dimensions and workmanship conform to MSS SP-110
ASME A112.4.14
***Also Available UP8901-07**
Designed in accordance with the requirements of California AB 1953, Vermont S 152 and Senate Bill S3874

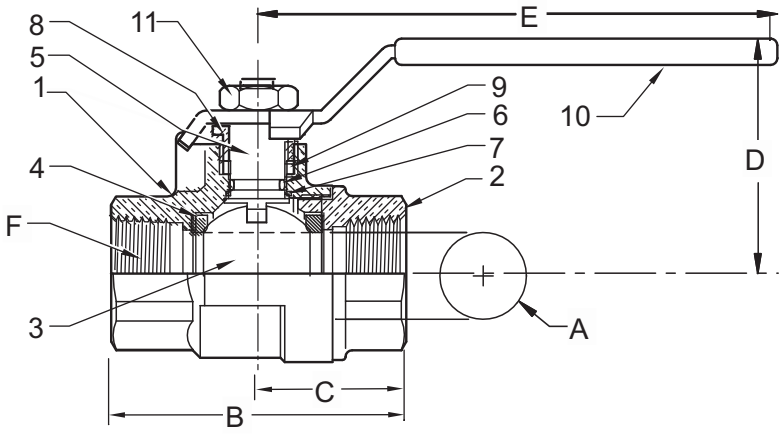

TESTED AND CERTIFIED UNDER INDUSTRY STANDARDS — WaterQuality

C SP US — ANSI Z 21.15a, ASME B16.44 — CGA 9.1a

C UL US — UL 125, UL 842 — **

MATERIAL LIST

ITEM	PART	MATERIALS	ASTM SPEC.
1	Body	Brass, Forged	B283 C27450
2	Tailpiece	Brass, Forged	B283 C27450
3	Ball	Brass w/Chrome	C27450
4	Ball Seal	PTFE	Commercial
5	Stem	Brass	C27450
6	O-Ring	Buna-N	D2006
7	Thrust Washer	PTFE	Commercial
8	Gland Nut	Brass	B16
9	Packing	PTFE	Commercial
10	Handle	Zinc Plated Steel	Commercial
11	Handle Nut	Zinc Plated Steel	Commercial

DIMENSIONS

Valve Size	UNITS	1/4"	3/8"	1/2"	3/4"	1"	1-1/4"	1-1/2"	2"	2-1/2"	3"
A	INCHES	0.39	0.39	0.51	0.76	1.00	1.26	1.50	2.00	2.48	2.95
	mm	9.9	9.9	12.7	19.3	25	32.0	38.1	51.0	63	74.9
B	INCHES	1.87	1.87	2.25	2.62	3.06	3.5	3.75	4.38	5.16	6
	mm	47	47	57	67	78	89	95	111	131.1	152.4
C	INCHES	0.95	0.95	1.12	1.31	1.91	2.21	1.87	2.19	2.58	3
	mm	24	24	61	33	49	56	47	56	65.5	76.2
D	INCHES	1.42	1.42	1.46	1.93	2.1	2.33	2.52	2.96	3.94	4.37
	mm	36	36	37	49	53	59	64	75	100.1	111
E	INCHES	3.14	3.14	3.14	4.35	4.35	5.00	5.00	6.90	7.87	7.87
	mm	80	80	80	110	110	127	127	175	199.9	199.9
F	THREAD SIZE	1/4" NPT	3/8" NPT	1/2" NPT	3/4" NPT	1" NPT	1-1/4" NPT	1-1/2" NPT	2" NPT	2-1/2" NPT	3" NPT
Cv		12	12	18	40	72	112	161	287	307	323
TORQUE	in-lb	16	16	19	58	69	89	124	210	445	563
	N.m	1.8	1.8	2.1	6.5	7.8	10	14	24	50	64
WEIGHT	lbs	0.33	0.34	0.47	0.89	1.24	1.66	2.34	4.94	7.4	10.47
	Kg	0.149	0.155	0.213	0.403	0.565	0.755	1.064	2.245	3.35	4.75

Hammond Valve
16550 W. Stratton Drive
New Berlin, WI 53151
Phone: 262-432-2702
Fax: 262-432-2703

Rev 11

*Same design as Milwaukee UPBA-475B.

Note: Lead free refers to the wetted surface of the pipe, fittings and fixtures in potable water systems that have a weighted average lead content ≤0.25%. Source: California Health and Safety Code (116875).

The information presented on this sheet is correct at the time of publication. Hammond Valve reserves the right to change design, and/or material specifications without notice. For the Installation, Operation and Maintenance Manual (IOM) see the engineering section on our website. For the most current information access www.hammondvalve.com
Hammond Valve is a registered trade mark of Milwaukee Valve Company.

HAMMONDVALVE

INSTALLATION -BALL VALVE ,THREADED END

1) Thoroughly clean and prepare the piping system before valve installation.
2) Remove the valve end caps if present, and inspect the valve ports and seating surfaces for cleanliness just prior to installation.
3) Support the valve to prevent unnecessary stresses induced by connecting pipe.
4) Be sure the rating of the valve is compatible with the intended service conditions.
5) Operate the valve from the full open to closed position.
6) PTFE thread sealant is recommended when making up connections. Consult the sealant manufacturer's instructions for proper use. Install on pipe and not on the valve.
7) Care should be used to not over tighten the valve onto the pipe, as it is possible to distort the internal parts of the valve.
8) Because bronze is a softer metal than steel, always put the pipe in a vise and turn the valve onto the pipe end. Always use a smooth-jawed wrench on the valve end on the same side of the valve to which the pipe or fitting is being installed to prevent distortion of the internal parts of the valve or transmission of torque and stress into the body joint. Pipe Wrenches should be used on a pipe and fittings only.
9) Take precaution also to prevent loosening body to tailpiece connection by reverse rotation during installment/alignment. Such loosening could comprise body to tailpiece sealing.
10) Verify the tightness of the packing nut after installation.

OPERATION

1) Ball valves are designed to be opened by rotating the lever handle in a counterclockwise direction, and closing in a clockwise direction. The handle indicates the ball port direction.
2) Under certain conditions, throttling flow in the near-closed position can destroy the valve seats. Consult factory for throttling service.

INSPECTION & MAINTENANCE

1) Periodic inspection and preventative maintenance is not required other than adjustment of stem packing, and cycling of the valve from open to closed position.
2) If a valve develops a packing leak, adjust the packing nut to increase the pressure on the stem packing. The packing nut should be turned in a clockwise direction approximately ¼ turn, or until the leakage stops. **Do not repack valves under pressure.**
3) Repair or replacement of two piece ball valves internal parts is not recommended. Damage can occur to the body and tailpiece during disassembly that would make the valve inoperable.

REPAIR PARTS Not available for ULTRA-PURE valves.

CalgonCarbon	BALL VALVES MATERIAL SPECIFICATION	SPEC NO:
	STAINLESS STEEL AND ENTRY FULL BORE BALL VALVE	4.08

SAP PART NUMBER:

CCC DRAWING NUMBER:

MATERIAL: Stainless steel and entry full bore ball valve 1/2" thru 4" size (Reduced Port for 6" & 8" Acceptable) with blow-out proof stem and seat retainer design to permit valve to be dead ended in either flow direction. Valve has lockable feature to lock the valve in either the open or shut position. Type 316 stainless steel body, ball and stem, TFE seats and seals, wrench operated, 150 lb. ANSI B16.5 flanged ends, raised face, 1/2" thru 4" size Face-to-face dimensions to conform to ANSI B16.10 for steel gate valves. Screwed body inserts not acceptable. Gear Operator for 6" and 8" size valves. No asbestos allowed.

RATING: 275 PSIG @ 100 DEG. F. or 110 PSIG @ 353 DEG. F.

MANUFACTURER: Modentic VL-11, Sharpe Valve #50116-R, or equal

SIZES: 1/2" thru 8"

MODELS: Modentic Figure No. VL-11-150 , Figure No. BV-150, or equal.

Issue Date: 01/01/89 Revision Date: 09/15/99

Approved by Joseph P. McMahon on 07/17/2001

CCC SPEC. 4.08

SHARPE® VALVES

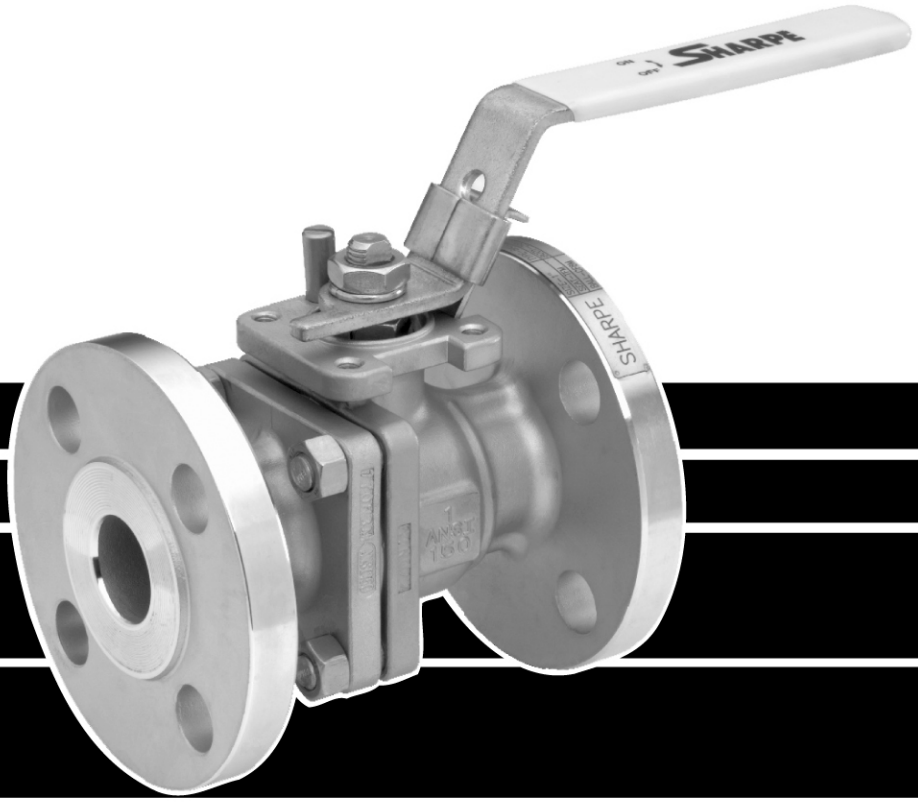

FLANGED FULL PORT BALL VALVE SERIES 50 / CLASS 150

SERIES 50
VALVE PARTS AND IDENTIFICATION

CLASS 150
BLOW OUT PROOF STEM
LOCKING DEVICE

APPLICABLE STANDARDS	
Wall Thickness	ASME B 16.34
Face to Face Dimensions	ASME B 16.10
Flange Dimensions	ASME B 16.5
Pressure Tests	ASME B 16.34 API 598 (Optional)
Basic Design	ASME B16.34

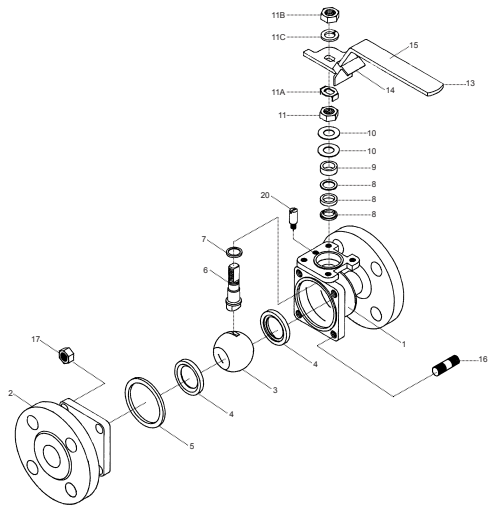

1/2" - 2"

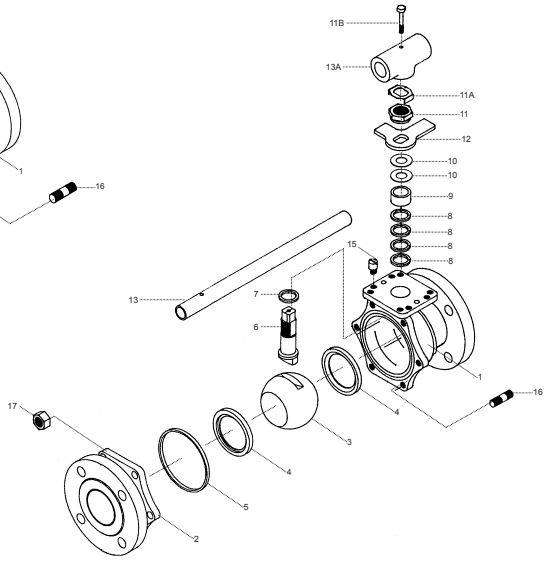

2-1/2" - 4"

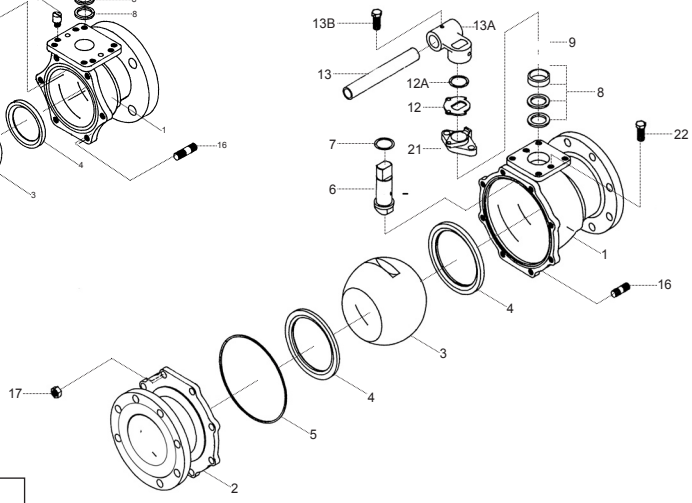

6" - 8"

PART NO.	PART	QTY.	MATERIAL
1	Body	1	316 Stainless Steel ASTM A351 CF8M Alloy 20 ASTM A351 CN7M Carbon Steel ASTM A216 WCB Hastelloy C ASTM A494 GR CW-12MW Monel ASTM A494 GR M35-1
2	End Connector	1	316 Stainless Steel ASTM A351 CF8M Alloy 20 ASTM A351 CN7M Carbon Steel ASTM A216 WCB Hastelloy C ASTM A494 GR CW-12MW Monel ASTM A494 GR M35-1
3	Ball	1	316 Stainless Steel Alloy 20 Hastelloy C
4	Seat	2	TFM(Super TFE) TFE Reinforced TFE NOVA PEEK
5	Body Seal	1	TFE
6	Stem	1	316 Stainless Steel Alloy 20 Hastelloy C 17-4PH (Option)
7	Thrust Bearing	2	Reinforced TFE
8	Stem Packing	3/4	Reinforced TFE
9	Gland Packing	1	304 Stainless Steel
10	Belleville Washer (1/2"-4")	2/4	304 Stainless Steel
11	Packing Nut (1/2"-4")	1	304 Stainless Steel
11A	Lock Tab	1	Stainless Steel
11B	Handle Nut	1	304 Stainless Steel
11C	Lock Washer	1	304 Stainless Steel (1/2"-2")

*See Dimensions

PART NO.	PART	QTY.	MATERIAL
12	Stopper	1	304 Stainless Steel
12A	Snap Ring	1	Stainless Steel (6"-8")
13	Handle	1	304 Stainless Steel (1/2"-2") Galvanized Steel (2-1/2"-4") Ductile Iron (6"-8")
13A	Wrench Block	1	Stainless Steel
13B	Hex Head Bolt	1	304 Stainless Steel
14	Locking Device (1/2"-2")	1	304 Stainless Steel
15	Sleeve	1	Vinyl
16	Body Stud	SEE* N	A193 B8 (SST) A193 B7 (CS)
17	Nut	SEE* N	A194 8 (SST) A194 2H (CS)
20	Stop Pin (1/2"-2") (2-1/2"-4")	1 2	304 Stainless Steel 304 Stainless Steel
21	Gland Flange (6"-8")	1	304 Stainless Steel
22	Gland Bolts (6"-8")	2	304 Stainless Steel

SERIES 50
DIMENSIONS

1/2” - 2”

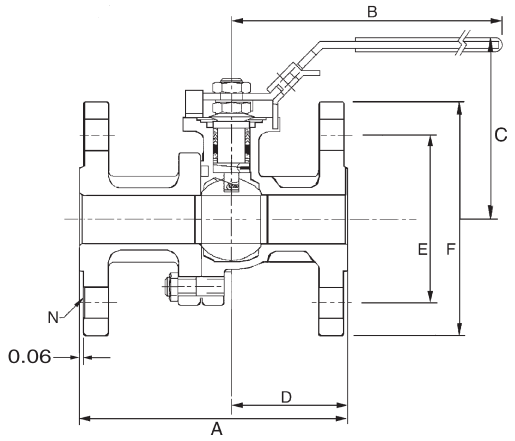

2-1/2” - 4”

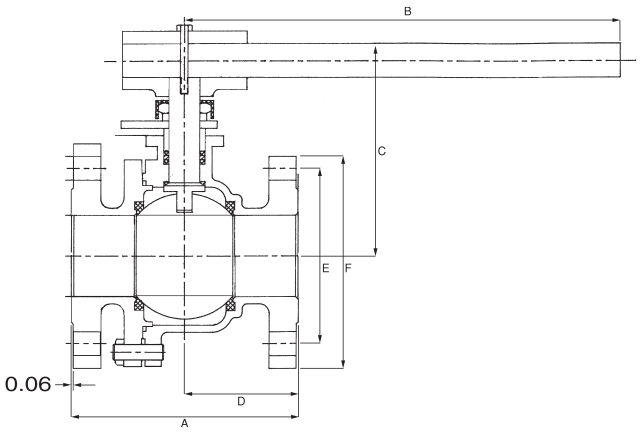

6” - 8”

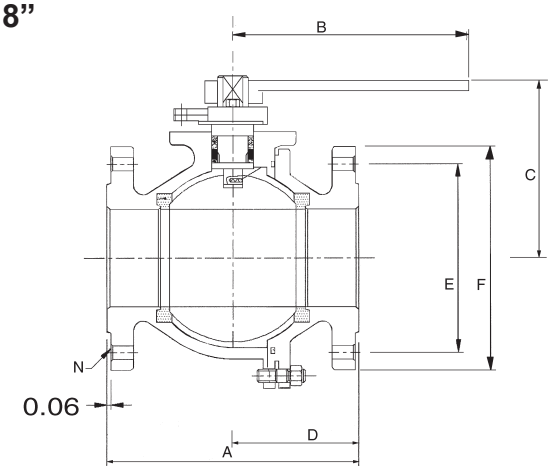

CV DATA	
1/2”	26
3/4”	50
1”	94
1-1/2”	260
2”	480
2-1/2”	750
3”	1300
4”	2300
6”	5400
8”	10000

PORT	
1/2”	0.59
3/4”	0.78
1”	1.00
1-1/2”	1.50
2”	2.00
2-1/2”	2.55
3”	3.00
4”	4.00
6”	6.00
8”	7.88

WEIGHT (lbs.)	
1/2”	4
3/4”	6
1”	8
1-1/2”	15
2”	20
2-1/2”	36
3”	45
4”	75
6”	135
8”	290

SIZE	A	B	C	D	E	F	N	G	H	I	J	K	W
1/2”	4.25	4.75	3.60	1.80	2.38	3.50	4	1.39	3/8-24 UNF	.22	.28	.63	M5
3/4”	4.62	4.75	3.75	2.00	2.75	3.85	4	1.39	3/8-24 UNF	.22	.28	.63	M5
1”	5.00	6.22	3.75	2.12	3.13	4.25	4	1.39	7/16-20 UNF	.30	.30	.90	M6
1-1/2”	6.50	9.00	4.50	2.76	3.56	5.00	4	1.94	9/16-18 UNF	.35	.42	1.18	M8
2”	7.00	9.00	4.80	3.08	4.75	6.00	4	1.94	9/16-18 UNF	.35	.42	1.18	M8
2-1/2”	7.50	13.75	6.70	3.09	5.50	7.00	4	2.84	M20	.55	.55	1.83	M10
3”	8.00	13.75	7.00	3.74	6.00	7.48	4	2.84	1-14 UNS	.745	.66	1.83	M10
4”	9.00	13.75	7.70	4.46	7.50	9.01	8	2.84	1-14 UNS	.745	.66	1.83	M10
6”	15.50	38.97	11.22	7.61	9.50	10.98	8	3.89	1.02	1.64	1.46	3.00	M12
8”	18.00	38.97	11.57	8.34	11.75	13.50	8	4.59	1.02	1.64	1.46	3.00	M12

The dimensions above are for information only, not for construction. For complete actuator mounting dimensions refer to Engineering Bulletin EB-2003.

1/2" - 4"

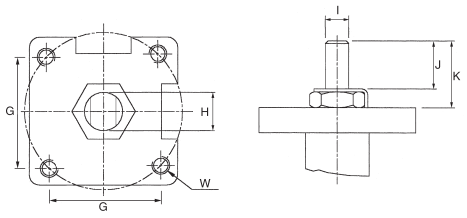

6" - 8"

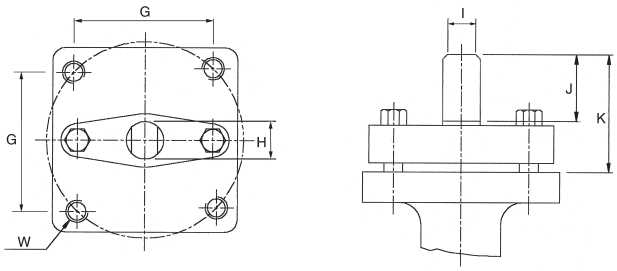

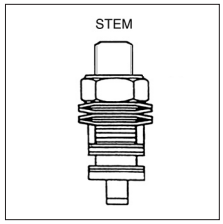

1/2" - 4"
STEM ARRANGEMENT
FOR ACTUATORS

SEAT PRESSURE/TEMPERATURE RATING SERIES 50

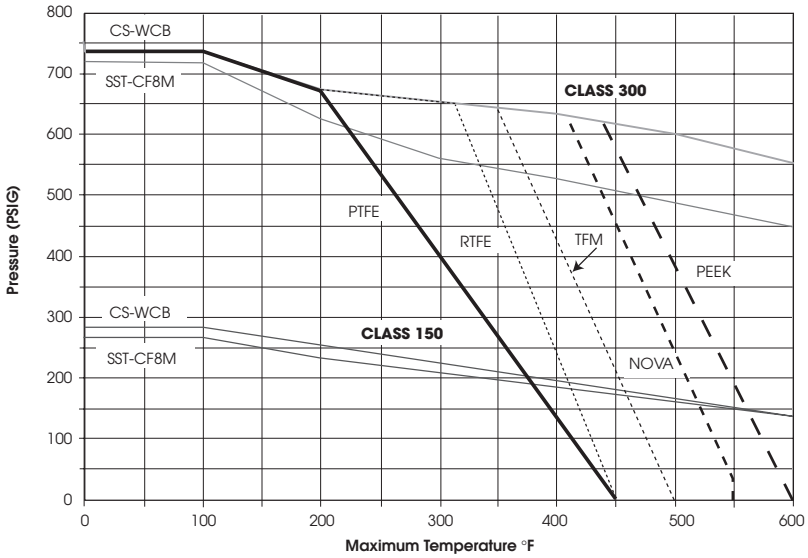

HOW TO ORDER

VALVE SIZE	VALVE SERIES	CLASS	ALLOY	SEATS	OPTIONS
1/2" 3/4" 1" 1-1/2" 2" 2-1/2" 3" 4" 6" 8"	50	150# = 11	2 = Alloy 20 4 = Carbon Steel 6 = Stainless Steel 5 = Hastelloy C 3 = Monel	T = TFE R = RTFE N = NOVA P = Peek M = TFM™	X = Oxygen Service OH = Oval Handle F = Fugitive Emissions Certified ANSI 593.00.01 E = Extended Stem L = Lockable Extended Stem D = Leak detection Stem GO = Gear Operator 7 = 17- 4PH Stem A = Nace

3/4" 50 11 6 T X

SHARPE® VALVES
A Division of Smith-Cooper International, LLC

Toll-Free 1-877-7SHARPE
(877) 774-2773
Fax: (708) 562-9250
E-Mail: info@sharpevalves.com
www.sharpevalves.com
1260 Garnet Drive
Northlake, Illinois 60164 U.S.A.

Due to continuous development of our product range we reserve the right to change the dimensions and information contained in the leaflet as required.
TFM is a registered trademark of Dyneon, LLC.

CalgonCarbon	BALL VALVES MATERIAL SPECIFICATION	SPEC NO:
	STAINLESS STEEL END ENTRY REGULAR PORT BALL VALVE	4.57

SAP PART NUMBER:

CCC DRAWING NUMBER:

MATERIAL: Stainless steel end entry regular port ball valve with blowout proof stem and seat retainer design to permit valve to be dead ended in either flow direction. ASTM A-296, Grade CF8M Type 316 stainless steel body, ball and stem, TFE seats and seals, wrench operated, threaded ends. Screwed body inserts or tail pieces not acceptable.

RATING: 80 PSIG @ 400 DEG. F. or 1500 PSIG @ 150 DEG. F.

MANUFACTURER: Modentic, Sharpe Valve #54576, Jamesbury, or equal.

SIZES: 1/4" thru 2"

MODELS: Modentic Figure No. V-008, Jamesbury Bulletin 210, Trueline - N600LL, or equal

Issue Date: 01/01/89 Revision Date: 09/15/99

Approved by Joseph P. McMahon on 07/17/2001

Series 50M76

2-Piece Ball Valve

SHARPE®

Valves, Automation & Controls

Features

- Full port
- 1000 WOG
- 316 Stainless Steel
- Locking device
- Blow-out proof stem
- Oval handle available

Dimensions

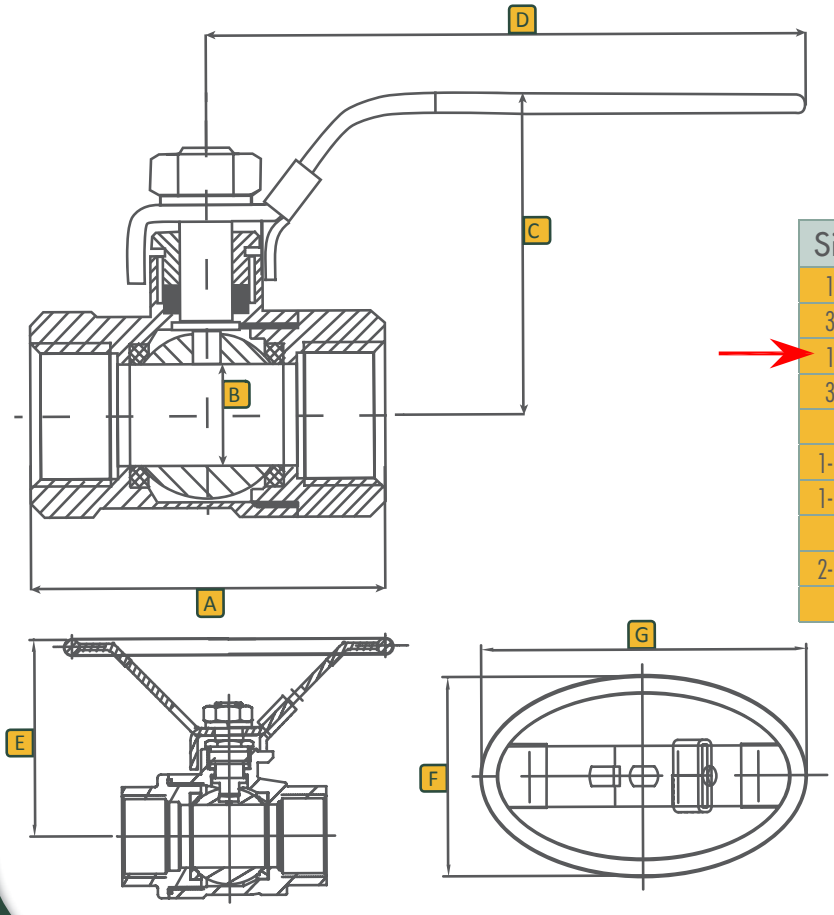

Dimensions (Inches)

Size	A	B	C	D	E	F	G
1/4	2.00	0.43	1.81	4.00	1.06	2.16	3.39
3/8	2.00	0.43	1.81	4.00	1.06	2.16	3.39
1/2	2.36	0.50	1.89	4.00	1.06	2.16	3.39
3/4	2.75	0.80	2.04	5.00	1.34	2.76	4.33
1	3.25	1.00	2.44	5.75	1.53	3.18	5.26
1-1/4	3.80	1.25	2.56	5.75	1.53	3.18	5.26
1-1/2	4.33	1.50	2.96	7.50	1.97	4.13	6.30
2	5.27	2.00	3.25	7.50	1.97	4.13	6.30
2-1/2	6.58	2.50	5.00	9.73	-	-	-
3	7.55	3.00	5.40	9.73	-	-	-

SHARPE - SERIES 50M76 | 2-Piece Ball Valve

Toll Free (877) 774-2773 | Local (708) 562-9221 | Fax (708) 562-0890 | www.sharpevalves.com

Parts & Materials

No.	Part Name	Qty	Material
1	Body	1	316 Stainless Steel
2	Ball	1	316 Stainless Steel
3	Cap	1	316 Stainless Steel
4	Seat	2	RTFE
5	Gasket	1	PTFE
6	Stem	1	316 Stainless Steel
7	Stem Packing	1 Set	PTFE
8	Handle	1	304 Stainless Steel
9	Nut	1	304 Stainless Steel
10	Thrust Washer	1	PTFE
11	Galand Nut	1	304 Stainless Steel
12	Spring Washer	1	304 Stainless Steel
13	Handle Cover	1	Plastic
14	Locking Pad	1	304 Stainless Steel

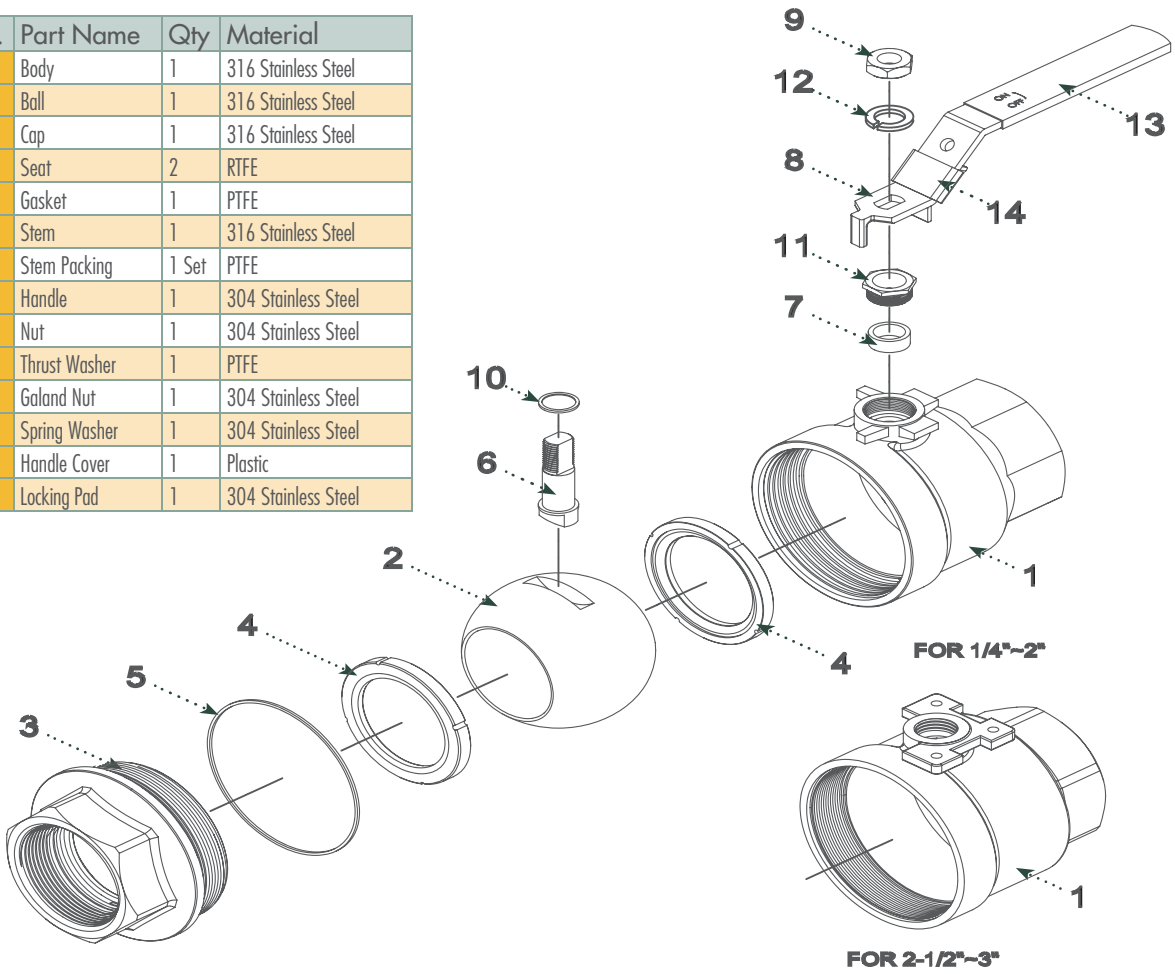

Technical Information

Size	Cv	Weight-Lbs
1/4	6	0.5
3/8	6	0.5
1/2	24	0.7
3/4	35	1.1
1	47	2.0
1-1/4	81	3.0
1-1/2	105	4.8
2	241	8.0
2-1/2	319	14.0
3	580	20.0

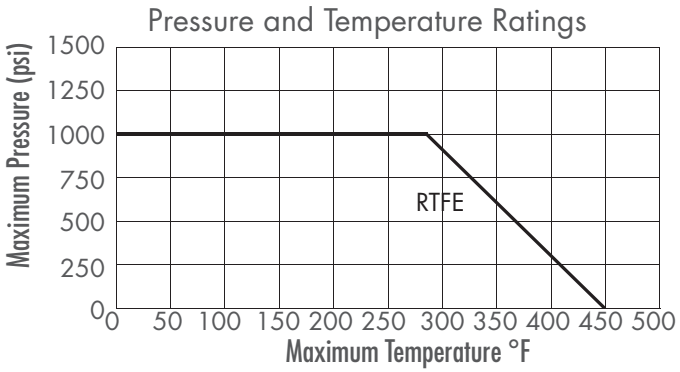

Ordering

Fig: 1/2 - 50M76
Description: 1/2" - Series 50M76

Size		Series	Options	
1/4	1-1/4	50M76	OH	Oval Handle
3/8	1-1/2			
1/2	2			
3/4	2-1/2			
1	3			

Due to continuous development of our product range, we reserve the right to change the dimensions and information for this product as required.

CalgonCarbon	STRAINERS MATERIAL SPECIFICATION	SPEC NO:
	SAMPLE PORT SEPTUM, TYPE 316 STAINLESS STEEL	22.29

SAP PART NUMBER: 1058440

CCC DRAWING NUMBER: 90100025

MATERIAL: Sample port septum, Type 316 stainless steel, 0.060" wedge wire with 0.008" slot opening, Septum to be 1" O.D. x 1 1/2" long with 1/2" threaded half-coupling one end and 1/8" thk. cap other end, Overall Length= 2 9/16"

MANUFACTURER: Orthos or equal

Issue Date: Revision Date: 10/22/2010

Approved by Joseph P. McMahon on 10/22/2010

BILL OF MATERIAL

ITEM	QUANTITY	SAP#	DESCRIPTION	MATERIAL
A	1		1/2" HALF COUPLING, 3000#, THREADED	316L SS
B	1		WEDGE WIRE, 1" O.D. X 1 1/2"LG., 0.060" WIRE W/0.008" SLOT	316L SS
C	1		CAP, 1" O.D. X 1/8" THK.	316L SS

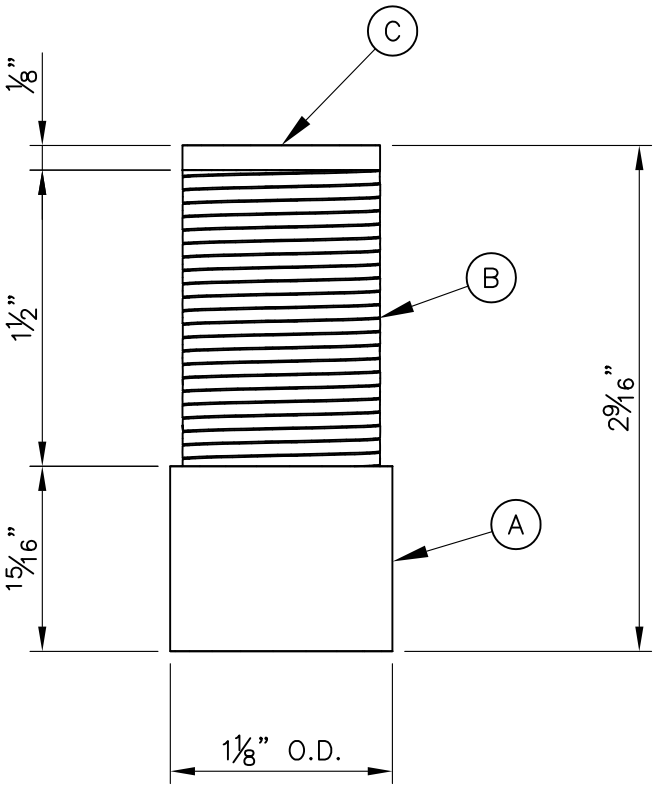

PLAN

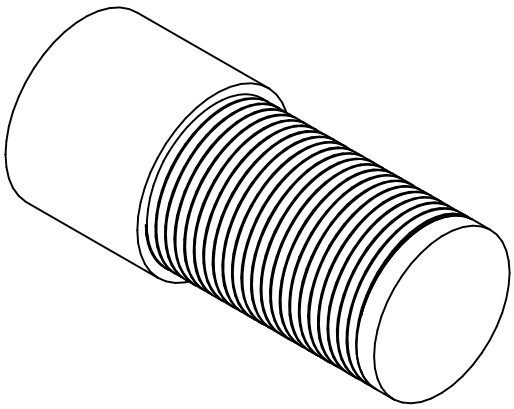

ISO

SAP NUMBER: 1058440

THIS DRAWING AND DESIGN IS THE PROPERTY OF CALGON CARBON CORPORATION AND IS NOT TO BE REPRODUCED IN WHOLE OR IN PART NOR EMPLOYED FOR ANY PURPOSE OTHER THAN SPECIFICALLY PERMITTED IN WRITING BY CALGON CARBON CORPORATION. THIS DRAWING LOANED SUBJECT TO RETURN ON DEMAND.

	NAME	DATE
DRAFTER	RES	10-21-2010
DESIGNER		
CHECKER		
APPROVAL		
PROJECT No.	STANDARD	

REV	DESCRIPTION	APP	DATE
2			
1			
0	ISSUED FOR FABRICATION	RES	10/21/10

REVISIONS

CalgonCarbon

CLIENT

TITLE
1/2" SAMPLE PORT
SEPTA DETAIL
CCC SPEC. 22.29

DWG. Size	SHEET No.	SCALE
A	1 OF 1	NONE

DWG. No. 90100025 REV. 0

V:\Products\Septa\90100025 Septa Spec 22.29.dwg Oct 07, 2014 - 11:12am

CalgonCarbon	STRAINERS MATERIAL SPECIFICATION	SPEC NO:
	BASKET STRAINER, TYPE 316 STAINLESS STEEL	22.53

SAP PART NUMBER:

CCC DRAWING NUMBER:

MATERIAL: Perforated basket strainer (Carbon Retainer) for 150 lb. Raised Face Flanges, type 316 stainless steel construction. Basket is to be Fabricated from 14 Gage 316 stainless steel with 1/8" holes drilled on 3/16" centers and covered with 40 mesh 316 stainless steel screen, this will then be covered by a 4 mesh 316 stainless steel support screen (0.063" wire diameter).

RATING: Support Screen is to be designed for 125 PSIG if plugged in forward or reverse flow.

MANUFACTURER: Mack Iron Works Company, or equal.

SIZES: 2" thru 12"

MODELS: Mack Iron Works Company Series PB-R/FF, Style PBL or equal.

Issue Date: 01/01/90 Revision Date: 08/23/90

Approved by Matthew R. McGowan on 06/16/99

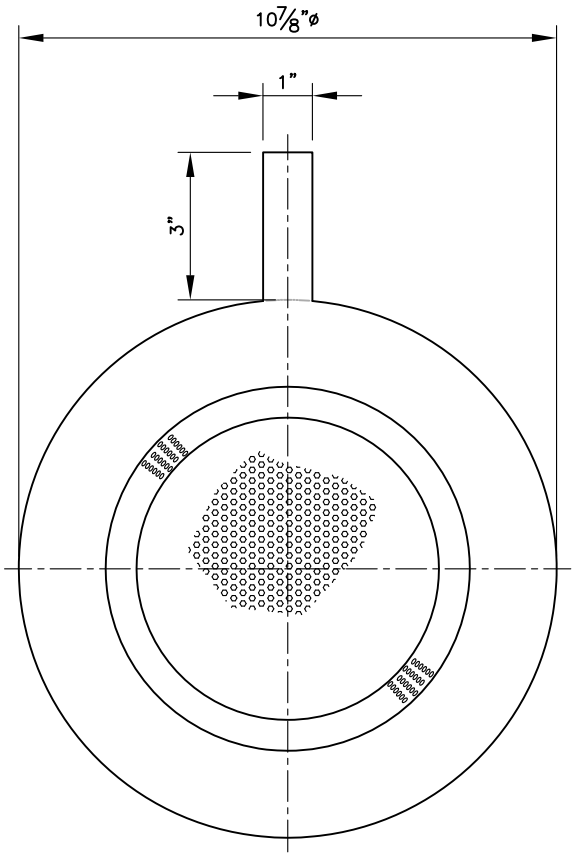

FRONT

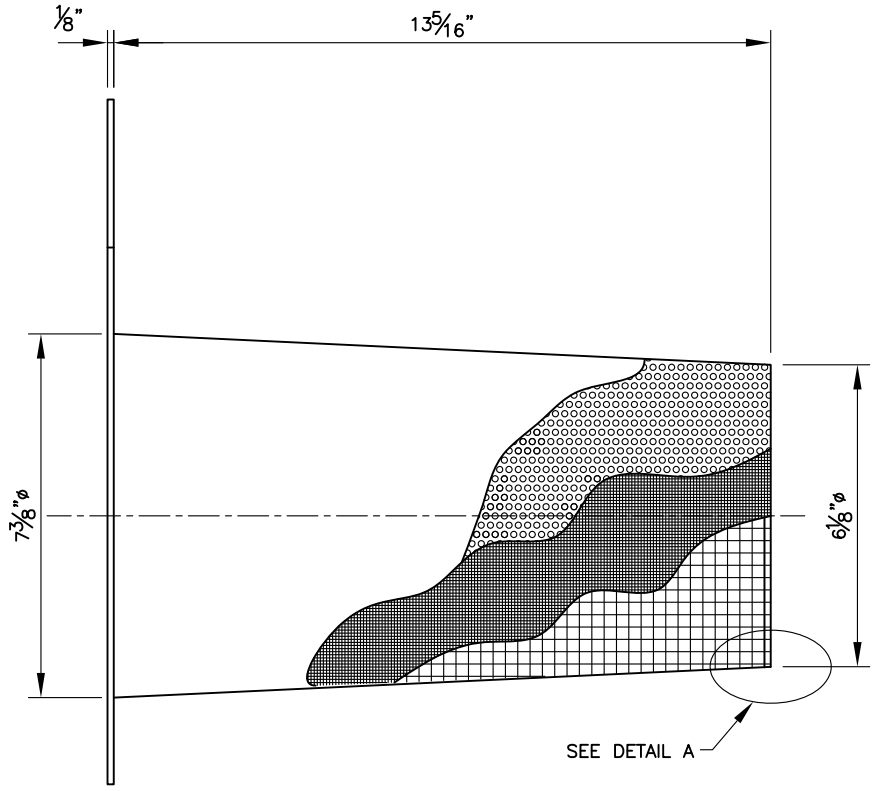

SIDE

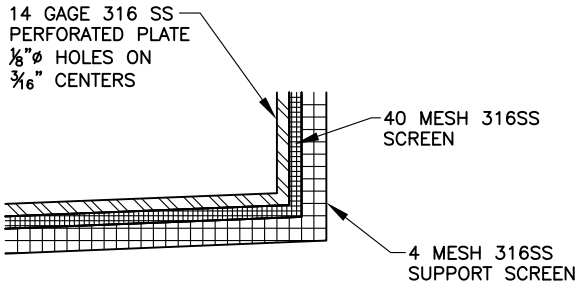

DETAIL A

THIS DRAWING AND DESIGN IS THE PROPERTY OF CALGON CARBON CORPORATION AND IS NOT TO BE REPRODUCED IN WHOLE OR IN PART NOR EMPLOYED FOR ANY PURPOSE OTHER THAN SPECIFICALLY PERMITTED IN WRITING BY CALGON CARBON CORPORATION. THIS DRAWING LOANED SUBJECT TO RETURN ON DEMAND.

	NAME	DATE
DRAFTER	BKM	8/29/06
DESIGNER		
CHECKER	RES	4/3/07
APPROVAL		
PROJECT No.	STANDARD	

REV	DESCRIPTION	APP	DATE
2			
1			
0	ISSUED FOR FABRICATION	RES	4/3/07

REVISIONS

CalgonCarbon

CLIENT: STANDARD

TITLE: 8" STRAINER, 316L SS
CCC SPEC 22.53
DETAILS

DWG. Size	SHEET No.	SCALE
A	1 OF 1	NONE

DWG. No. 90060220 REV. 0

V:\Products\Strainers\90060220 8inch Strainer.dwg Jul 24, 2013 – 9:21am

CalgonCarbon	STRAINERS MATERIAL SPECIFICATION	SPEC NO:
	FILTER NOZZLE, POLYPROPYLENE	22.106

SAP PART NUMBER:

CCC DRAWING NUMBER:

MATERIAL:

Filter Nozzle, 0.008"(0.2mm) Slot, 1" WW thread x 45 MM long with 3/4" six point nut, polypropylene construction. Expanding ring, 32 MM diameter 1" WW thread for 12-17 MM plate thickness, polypropylene construction. Pipe saddle, FDA approved Rubber to suit a schedule 80 PVC pipe, the pipe header size shall be specified by Calgon Carbon Corporation. All polypropylene parts used in this manufacture shall be virgin grade material and an ivory color.

MANUFACTURER: Orthos or equal.

MODELS: Orthos type C2, or equal.

Issue Date: 03/08/2005 Revision Date:

Approved by Gerald Kirner on 03/08/2005

Technical Information

Design

For general purposes the filter nozzles should be placed on 6" centers, with 8" centers being the maximum recommended (subject to the filter media, single or multi-layer, depth of bed, etc.). The filter nozzles are available in a wide variety of slot sizes to suit the media; and airtubes and tailpipes for air or water backwash can be provided as required.

Consistency of the Material

Filter nozzles made of polypropylene are resistant to many chemicals including the following examples:

@ 140°F / 60°C

- ammonia 10%
- formaldehyde 10%
- isopropanol all concentrations
- methanol 50%
- caustic soda solution 50%
- hydrochloric acid 10%
- sulfuric acid 10%
- soda water
- ozone (68°F / 20°C, 50 pphm)

In addition to virgin polypropylene (max. temperature 140°F), all filter nozzles are also available in glass fiber reinforced polypropylene (max. temperature 230°F) and Kynar (max. temperature 275°F). Other available materials include stainless steel, alloy 20 and hastelloy.

Installation Specifications

Recommended Torque	4.0 ft. lbs.
Max RPM	430

In lower temperatures polypropylene becomes more brittle. If nozzles are to be installed in cold weather, we recommend that all polypropylene materials are first warmed before installation.

When using with hot water (max. continuous temperature up to 230°F / 110°C, polypropylene with chemically combined 30% glass fiber is recommended.

PVDF is recommended for hot water with a continuous temperature of up to 275°F / 135°C. (Conditionally resistant to concentrated caustic solutions.)

Color Coded Polypropylene Nozzles

Slot Size	Color
0.2	ivory
0.3	green
0.35	white
0.5	grey
0.7	yellow
0.8	blue
1.0	black
1.5	orange
2.0	green

All specifications are subject to change without notice.

Conversion Chart

Multiply units in left column by proper factor below

LENGTH	in.	ft.	mm	cm	m
1 inch	1	0.0833	25.4	2.540	0.0254
1 foot	12	1	304.8	30.48	0.3048
1 millimeter	0.0394	0.0033	1	0.100	0.001
1 centimeter	0.3937	0.0328	10	1	0.01
1 meter	39.37	3.281	1000	100	1
AREA	**in.²**	**cm²**			
1 inch²	1	6.452			
1 centimeter²	0.1550	1			
VOLUME	**liter**	**U.S. gal.**			
1 liter	1	0.2642			
1 U.S. gallon	3.785	1			
VOLUME RATE	**gallon / min.**	**m³ / hr.**	**liter / hr.**		
1 gallon/minute	1	0.227	227		
1 m³/hour	4.403	1	1000		
1 liter/hour	0.063	0.001	1		
PRESSURE	**lbs. / in.²**	**ft. water at 39.2°F**	**bar**		
1 pound/in.²	1	2.307	0.069		
1 foot water	0.4335	1	0.0299		
1 Bar	14.50	33.45	1		

Filter Nozzles

Model C2

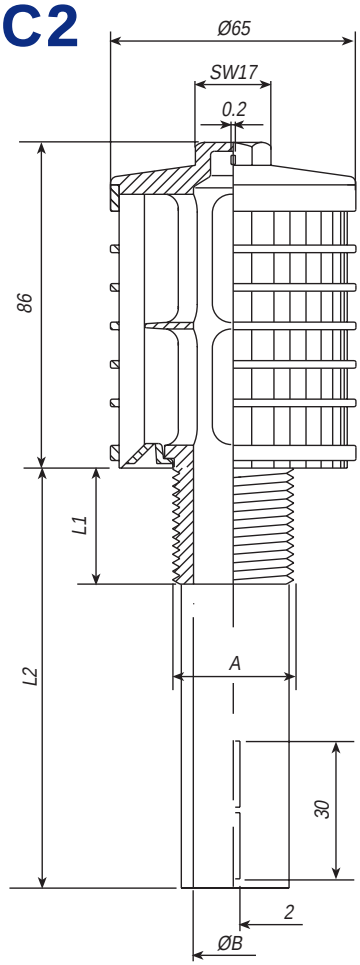

All dimensions in mm
unless otherwise noted.

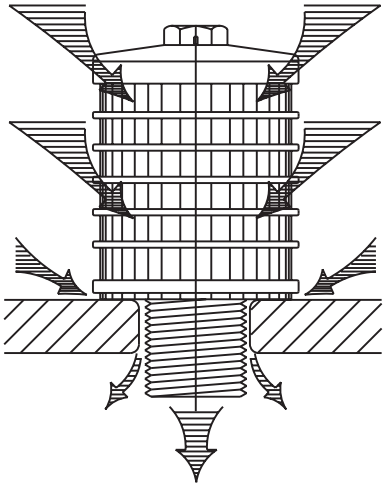

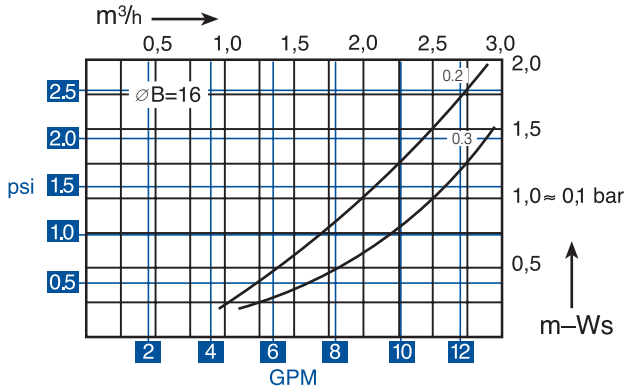

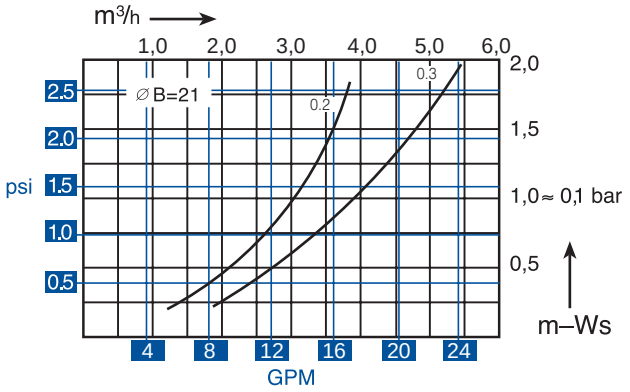

Model C2 Ordering Information

Slots	Thread	ØA	Thread Length — L1	Shaft — L2	ØB
36 x 0.2 = 3.70 cm²	3/4" NPT				16 = 2.00 cm²
36 x 0.3 = 5.50 cm²	1" NPT				21 = 3.40 cm²
	M24	24	20, 45, + 5 + 5...	L1, 80, 110, 140, 200, *up to* 400	16 = 2.00 cm²
	1" WW	25.4	45	L1, 80, 110, 140, 200, *up to* 400	16 = 2.00 cm²
	1-1/4" WW	32	20, 30, 45,	L1, 80, 110, 140, 200, *up to* 400	21 = 3.40 cm²
	G3/4"	26.5	20, 45, + 5 + 5...	L1, 80, 110, 140, 200, *up to* 400	16 = 2.00 cm²

Nuts / Washers / Expanding Rings

Model MU60

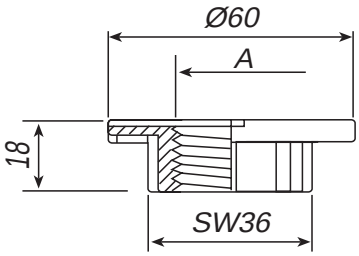

Model MU43

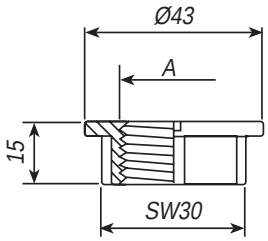

Model MUZ

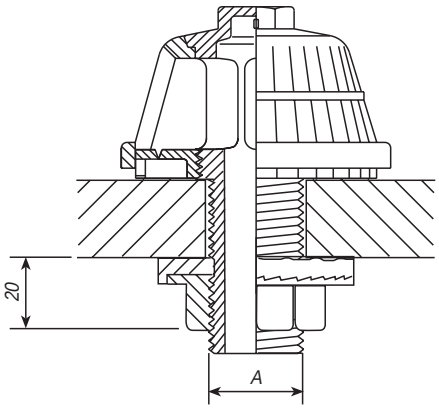

All dimensions in mm unless otherwise noted.

Ordering Information (Nuts)

Model #	Thread (A)
MU60	1-1/4" WW, 1" WW, M24
MU43	1" WW, M24, M20
MUZ	M24

Model DP

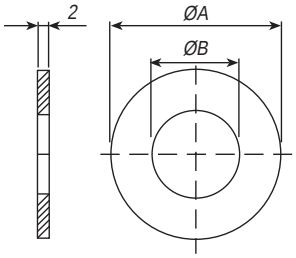

Model DG

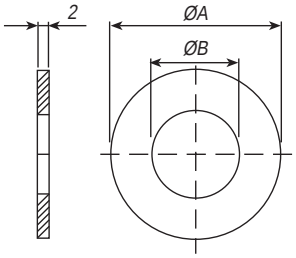

All dimensions in mm unless otherwise noted.

Ordering Information (Washers)

Model #	ØA	ØB	Material
DP	50	32	PP
	70	30	
		27	
		25	
		21	
DG	50	32	Rubber
	70	27	
		25	
		21	

Model DB65

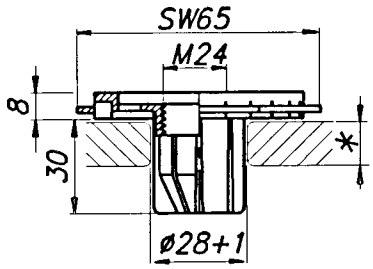

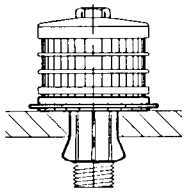

Model KSPB

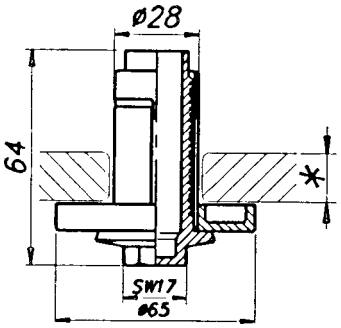

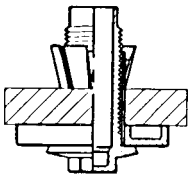

All dimensions in mm unless otherwise noted.

Ordering Information (Expanding Rings)

Model #	Plate Thickness
DB65	8 - 12
	12 - 17
	17 - 22

Model #	Plate Thickness
KSPB	8 - 28
	25 - 45

CalgonCarbon	EXPANSION JOINTS MATERIAL SPECIFICATION	SPEC NO:
	RUBBER EXPANSION JOINT, DOUBLE ARCH TYPE	24.06

SAP PART NUMBER:

CCC DRAWING NUMBER:

MATERIAL: Rubber expansion joint, double arch type, molded neoprene reinforced with multiple plies of nylon. Joint allows 4 way movement and 30 DEG. angular misalignment. Has loose steel backing flanges to be galvanized or zinc plated, 150 # drilling. No gaskets required. Control unit assemblies for pressures specified as 135 psi or greater.

RATING: 225 psi @ 170 DEG. F.

MANUFACTURER: Dynex, Inc., Proco Products, Inc., or Approved Equal.

SIZES: 1" thru 12"

MODELS: Dynex Series 702, Proco Products, Inc., Model 242-A-NN-4, with "blue" I.D. label or Approved Equal.

Issue Date: 01/01/89 Revision Date: 08/30/99

Approved by Matthew R. McGowan on 08/30/99

PROCO

The Expansion Joint and Check Valve People

CCC SPEC 24.06

Molded Spherical Joints Style 240/242

Proco Style 240/242 Molded Spherical Joints

Proco Style 240/242 Spherical Molded Expansion Joints are designed for piping systems to absorb pipe movements, relieve stress, reduce system noise/vibration, compensate for misalignment/offset and to protect rotating mechanical equipment against start-up surge forces.

The molded style 240 single sphere and 242 twin sphere designed bellows are inherently stronger than the conventional hand-built style spool arch type. Internal pressure within a "sphere" is exerted in all directions, distributing forces evenly over a larger area. The spherical design "flowing arch" reduces turbulence and sediment buildup.

Features and Benefits:

Absorbs Directional Movement

Thermal movements appear in any rigid pipe system due to temperature changes. The Style 240 and Style 242 spherical arch expansion joints allow for axial compression or axial extension, lateral deflection as well as angular movement. (Note: Rated movements in this publication are based on one plane movements. Multiple movement conditions are based on a multiple movement calculation. Contact Proco for information when designing multiple pipe movements.)

Easy Installation with Rotating Metallic Flanges

The floating metallic flanges freely rotate on the bellows, compensating for mating flange misalignment, thus speeding up installation time. Gaskets are not required with the Style 240 or Style 242, provided the expansion joints are mated against a flat face flange as required in the installation instructions.

Flange Materials/Drilling

The Proco Style 240 and Style 242 molded expansion joints are furnished complete with plated carbon steel flanges for corrosion protection. 304 or 316 stainless steel flanges are available upon request as well as ANSI 250/300 lb., BS-10, DIN PN10 & PN16 and JIS-10K drilling.

Absorbs Vibration, Noise and Shock

The Proco Style 240 and Style 242 molded expansion joints effectively dampen and insulate downstream piping against the transmission of noise and vibration generated by mechanical equipment. Noise and vibration caused by equipment can cause stress in pipe, pipe guides, anchors and other equipment downstream. Water hammer and pumping impulses can also cause strain, stress or shock to a piping system. Install the Style 240 or Style 242 molded expansion joints to help compensate for these system pressure spikes.

Wide Service Range with Low Cost

Engineered to operate up to 300 PSIG or 265°F, the Proco Style 240 and Style 242 can be specified for a wide range of piping requirements. Compared to conventional hand-built spool type joints, you will invest less money when specifying the mass-produced, consistent high quality, molded single or twin sphere expansion joints.

Material Identification

All Style 240 or Style 242 molded expansion joints have branded elastomer designations. Neoprene Tube/Neoprene Cover (NN) and Nitrile Tube/Neoprene Cover (NP) elastomer designated joints meet the Coast Guard Requirements and conform to ASTM F1123-87. 240C/NP-9 joints have ABS certification.

Large Inventory

Proco Products, Inc. maintains one of the largest inventories of rubber expansion joints in the world. Please contact us for price and availability.

Table 1: Available Styles • Materials

For Specific Elastomer Recommendations, See: **PROCO** "Chemical To Elastomer Guide"

240-A	240-C	240-AV,D,E,M	242-A,B,C	PROCO Material Code	Cover Elastomer [1]	Tube Elastomer [2]	Maximum Operating Temp. °F	Identifying Color Band/Label
		X	X	/BB[3]	Chlorobutyl	Chlorobutyl	250°	Black
		X	X	/EE[3]	EPDM	EPDM	250°	Red
X	X			/EE[3,4]	EPDM	FDA-EPDM	250°	Red
		X		/EQ[3]	EPDM	FDA-EPDM	250°	Red
X	X			/EE-9[3,5]	EPDM	EPDM	265°	DBL Red
	X			/ET-9[3,6]	EPDM	PTFE	265°	Red
	X			/HH	CSM	CSM	212°	Green
		X	X	/NH	Neoprene	CSM	212°	Green
	X			/NJ	Neoprene	FDA-Nitrile	212°	White
	X	X	X	/NN	Neoprene	Neoprene	225°	Blue
	X			/NT[6]	Neoprene	PTFE	225°	Blue
X	X	X	X	/NP	Neoprene	Nitrile	212°	Yellow
X	X			/NP-9[7]	Neoprene	Nitrile-ABS	212°	DBL Yellow

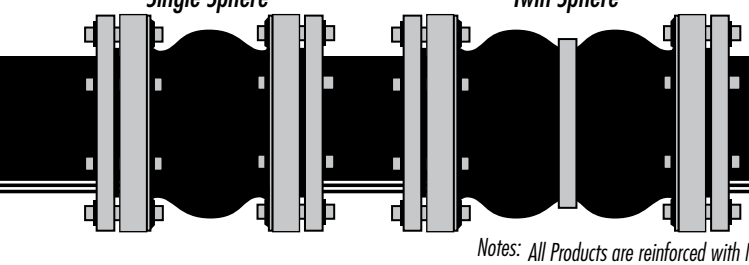

Protecting Piping and Equipment Systems from Stress/Motion

Notes:
All Products are reinforced with Nylon Tire Cord, except 240-A and 240-C which are reinforced with Polyester.
1. *All NN & NP elastomer designated joints meet the Coast Guard Requirements and conform to ASTM F 1123-87 and are marked accordingly.*
2. *Branding Label will be marked as "Food Grade".*
3. *BB, EE or EE-9 are good for 300°F blower service at 20 PSI or less.*
4. *240-A & 240-C expansion joints have black EPDM tube, but are FDA compliant.*
5. *EE-9 joints are peroxide cured.*
6. *Products with PTFE loose liner are not intended for vacuum service.*
7. *NP-9 joints have ABS certification.*
8. *All elastomers above are not intended for steam service.*

Information subject to change without notice.

Style 242 Twin Sphere Performance Data

Table 3: Sizes • Movements • Pressures • Flange Standards • Weights

NOMINAL Pipe Size I.D.	Neutral Length	PROCO Style Number [1]	242 Movement Capability: From Neutral Position [2]					Pressure [4]		Standard Flange Drilling Dimensions [8]					Weight in lbs	
			Axial Compression Inches	Axial Extension Inches	Lateral Deflection Inches	Angular Deflection Degrees	Thrust Factor [3]	Positive PSIG [5]	Vacuum [6] Inches of Hg	Flange O.D. Inches	Bolt Circle Inches	Number of Holes	Size of Holes Inches	Bolt Hole [7] Thread	Exp. Joint & Flanges	Control Unit Set (2 Rod)
1 (25)	10.00	242-C	2.000	1.188	1.750	45	4.43	225	26	4.25	3.13	4	0.625	—	5.2	3.6
1.25 (32)	7.0	**242-A**	2.000	1.188	1.750	45	6.34	225	26	4.63	3.5	4	0.625	1/2-13 UNC	5.3	3.5
	7.0	242-HA						300					0.625	—	6.5	3.5
	10.00	242-C						225					0.625	—	6.2	3.6
1.5 (40)	6.00	242-B	2.000	1.188	1.750	45	6.49	225	26	5.0	3.88	4	0.625	—	6.1	4.6
	6.00	242-HB						300					0.625	—	7.6	4.6
	7.00	**242-A**						225					0.625	1/2-13 UNC	6.8	4.8
	7.00	242-HA						300					0.625	—	8.3	4.8
	10.00	242-C						225					0.625	—	7.7	5.1
2 (50)	6.00	242-B	2.000	1.188	1.750	45	7.07	225	26	6.0	4.75	4	0.750	—	9.0	6.6
	7.00	**242-A**						225		6.0	4.75	4	0.750	—	9.0	7.0
	10.00	242-C						235		6.0	4.75	4	0.750	5/8-11 UNC	10.2	7.3
	6.00	Q-242-HB						300		6.0	4.75	4	0.750	—	10.5	6.6
	7.00	Q-242-HA						300		6.5	5.00	8	0.750	—	10.5	7.0
2.5 (65)	6.00	242-B	2.000	1.188	1.750	43	11.05	225	26	7.0	5.5	4	0.750	—	12.9	7.6
	7.00	**242-A**						225					0.750	—	13.3	8.0
	10.00	242-C						225					0.750	5/8-11 UNC	14.5	8.4
	6.00	Q-242-HB						300					0.750	—	15.3	7.6
	7.00	Q-242-HA						300					0.750	—	15.8	8.0
3 (80)	7.00	**242-A**	2.000	1.188	1.750	38	13.36	225	26	7.5	6.0	4	0.750	5/8-11 UNC	14.3	8.6
	9.00	242-B						225		7.5	6.0	4	0.750	—	15.2	9.0
	10.00	242-C						225		7.5	6.0	4	0.750	—	15.8	9.1
	12.00	242-C						300		7.5	6.0	4	0.750	—	16.0	9.9
	7.00	Q-242-HA						300		8.25	6.62	8	0.875	—	18.2	8.6
3.5 (90)	10.00	242-C	2.000	1.188	1.750	34	18.67	225	26	8.5	7.0	8	0.750	—	20.6	8.1
4 (100)	9.00	**242-A**	2.000	1.375	1.562	34	22.69	225	26	9.0	7.5	8	0.750	5/8-11 UNC	20.3	8.0
	10.00	242-C						225		9.0	7.5	8	0.750	—	21.3	8.2
	12.00	242-C						225		9.0	7.5	8	0.750	—	22.0	8.2
	9.00	Q-242-HA						300		10.0	7.88	8	0.750	3/4-10 UNC	26.4	8.0
5 (125)	9.00	**242-A**	2.000	1.375	1.562	29	30.02	225	26	10.0	8.5	8	0.875	—	24.5	8.3
	10.00	242-C						225		10.0	8.5	8	0.875	—	25.5	9.1
	12.00	242-C						225		10.0	8.5	8	0.875	—	26.0	9.1
	9.00	Q-242-HA						300		11.0	9.25	8	0.875	—	31.4	8.3
6 (150)	9.00	**242-A**	2.000	1.375	1.562	25	41.28	225	26	11.0	9.5	8	0.875	3/4-10 UNC	29.5	11.7
	10.00	242-C						225		11.0	9.5	8	0.875	—	30.5	11.9
	12.00	242-C						225		11.0	9.5	8	0.875	—	31.0	12.0
	14.00	242-C						225		11.0	9.5	8	0.875	—	32.0	12.0
	9.00	Q-242-HA						300		12.5	10.62	12	0.875	—	38.6	11.7
8 (200)	9.00	242-B	2.375	1.375	1.375	19	63.62	225	26	13.5	11.75	8	0.875	—	42.3	14.5
	10.00	242-C						225		13.5	11.75	8	0.875	—	43.4	15.0
	12.00	242-C						225		13.5	11.75	8	0.875	—	44.0	15.2
	13.00	**242-A**						225		13.5	11.75	8	0.875	—	43.8	15.4
	14.00	242-C						225		13.5	11.75	8	0.875	3/4-10 UNC	46.0	16.0
	9.00	Q-242-HB						300		15.0	13.0	12	1.000	—	55.4	14.5
	13.00	Q-242-HA						300		15.0	13.0	12	1.000	—	57.5	15.4

See Notes Page 6

Style 242 Twin Sphere Performance Data

Table 3: Sizes • Movements • Pressures • Flange Standards • Weights

NOMINAL Pipe Size I.D.	Neutral Length	PROCO Style Number [1]	242 Movement Capability: From Neutral Position [2]					Pressure [4]		Standard Flange Drilling Dimensions [8]					Weight in lbs	
			Axial Compression Inches	Axial Extension Inches	Lateral Deflection Inches	Angular Deflection Degrees	Thrust Factor [3]	Positive PSIG [5]	Vacuum [6] Inches of Hg	Flange O.D. Inches	Bolt Circle Inches	Number of Holes	Size of Holes Inches	Bolt Hole [7] Thread	Exp. Joint & Flanges	Control Unit Set (2 Rod)
10 (250)	12.00	242-B	2.375	1.375	1.375	15	103.87	225	26	16.0	14.25	12	1.000	—	64.1	23.5
	13.00	**242-A**						225		16.0	14.25	12	1.000	—	65.5	24.5
	14.00	242-C						225		16.0	14.25	12	1.000	7/8-9 UNC	66.7	24.5
	12.00	Q-242-HB						275		17.5	15.25	16	1.125	—	86.5	23.5
	13.00	Q-242-HA						275		17.5	15.25	16	1.125	—	88.4	24.5
12 (300)	12.00	242-B	2.375	1.375	1.375	13	137.89	225	26	19.0	17.00	12	1.000	—	94.0	30.0
	13.00	**242-A**						225		19.0	17.00	12	1.000	—	95.0	31.0
	14.00	242-C						225		19.0	17.00	12	1.000	7/8-9 UNC	99.1	31.0
	12.00	Q-242-HB						275		20.5	17.75	16	1.250	—	110.0	30.0
	13.00	Q-242-HA						275		20.5	17.75	16	1.250	—	110.0	31.0
14 (350)	13.75	**242-A**	1.750	1.118	1.118	9	182.65	150	26	19.0	18.75	12	1.125	—	112.0	32.0
16 (400)	12.00	242-C	1.750	1.118	1.118	8	240.53	125	26	23.5	21.25	16	1.125	—	124.0	28.8
	12.00	242-HC						175					1.125	—	160.0	28.8
	13.75	**242-A**						125					1.125	—	132.0	30.8
	13.75	242-HA						175					1.125	—	170.2	30.8
18 (450)	12.00	242-C	1.750	1.118	1.118	7	298.65	125	26	25.0	22.75	16	1.250	—	138.0	35.1
	13.75	**242-A**						125					1.250	—	146.0	36.1
	13.75	242-HA						175					1.250	—	181.2	36.1
20 (500)	12.00	242-C	1.750	1.118	1.118	7	363.05	125	26	27.5	25.0	20	1.250	—	172.0	35.0
	13.75	**242-A**						125					1.250	—	182.0	35.5
	13.75	242-HA						175					1.250	—	182.0	35.5
24 (600)	12.00	242-C	1.750	1.118	1.118	5	510.70	110	26	32.5	29.5	20	1.375	—	190.0	47.0
	13.75	**242-A**						110					1.375	—	220.0	48.0
	13.75	242-HA						160					1.375	—	266.2	48.0
30 (750)	12.00	242-C	1.750	1.118	1.118	4	779.31	110	26	38.75	36.0	28	1.375	—	270.0	62.0

NOTES:

Standard Proco Style 242-A Expansion Joints shown in Bold Type are considered Standards and are inventoried in large quantities.

1. *"HW" denotes Heavy Weight Construction. For sizes 2" I.D. thru 12" I.D., Proco will only offer these items with 300 lb. drilling and are denoted by Q-242-HW. All Q-240-HW units will only be sold with control units.*

2. *Movements shown in the above tables are non-concurrent.*

3. *Calculation of Thrust (Thrust Factor). When expansion joints are installed in the pipeline, the static portion of the thrust is calculated as a product of the area of the I.D. of the arch of the expansion joint times the maximum pressure (design, test or surge) that will occur in the line. The result is a force expressed in pounds.*
Take design, surge or test pressure X thrust factor to calculate end thrust.

"Effective Area"

Thrust Factor=

$T = \frac{\pi}{4}(D)^2, (P)$

T= Thrust
P= PSI (Design, Test or Surge)
D= Arch I.D.

4. *Pressure rating is based on 170°F operating temperature. The pressure rating is reduced at higher temperatures.*

5. *Pressures shown at maximum "operating pressure". Test pressure is 1.5 times "operating pressure". Burst pressure is 4 times "operating pressure". If factory hydro-test is required, an additional joint per size must be purchased and tested. Once hydro-tested this joint may not be sent to field for installation as the beaded end will have taken a (compressed) set and can not be reused.*

6. *Vacuum rating is based on neutral installed length, without external load. Products should not be installed in extension for vacuum applications. Flattening of the arch in extended mode will cause the arch to collapse.*

7. *Style 242A/NN (neoprene elastomer only) expansion joints 1.0" I.D. thru 12" I.D. are available with tapped (threaded) holes and must be specified at time of order.*

8. *In addition to standard 150 lb. drilled flanges, Proco can provide expansion joints listed above in 300 lb. drilling, BS-10 (British) drilling, Metric PN10 and PN16 drilling and JIS 10kg/cm drilling.*

Style 240/242 Drilling Chart

Table 4: Flange Drilling

NOMINAL Pipe Size Inch (mm)	American 125/150# Conforms to ANSI B16.1 and B16.5						American 250/300# Conforms to ANSI B16.1 and B16.5					British Standard 10:1962 Conforms to BS 10 Table E				
	Flange Thickness	Flange O.D.	Bolt Circle	No. of Holes	Drilled Hole Size	Threaded Hole Size	Flange Thickness	Flange O.D.	Bolt Circle	No. of Holes	Hole Size	Flange Thickness	Flange O.D.	Bolt Circle	No. of Holes	Hole Size
1 (25)	0.55 (14.0)	4.25 108.0	3.13 79.4	4 4	0.62 15.9	1/2 - 13 UNC	0.63 16.0	4.88 124.0	3.5 88.9	4 4	0.75 19.1	0.59 15.0	4.5 114.0	3.25 82.6	4 4	0.62 15.9
1.25 (32)	0.55 (14.0)	4.63 118.0	3.5 88.9	4 4	0.62 15.9	1/2 - 13 UNC	0.63 16.0	5.25 133.0	3.88 98.4	4 4	0.75 19.1	0.59 15.0	4.75 121.0	3.44 87.3	4 4	0.62 15.9
1.5 (40)	0.55 (14.0)	5.0 127.0	3.88 98.4	4 4	0.62 15.9	1/2 - 13 UNC	0.63 16.0	6.12 156.0	4.50 114.3	4 4	0.88 22.2	0.59 15.0	5.25 133.0	3.88 98.4	4 4	0.62 15.9
2 (50)	0.63 (16.0)	6.0 152.0	4.75 120.7	4 4	0.75 19.1	5/8 - 11 UNC	0.71 18.0	6.50 165.0	5.00 127.0	8 8	0.75 19.1	0.63 16.0	6.0 152.01	4.5 114.3	4 4	0.75 19.1
2.5 (65)	0.71 18.0	7.0 178.0	5.5 139.7	4 4	0.75 19.1	5/8 - 11 UNC	0.71 18.0	7.5 191.0	5.88 149.2	8 8	0.88 22.2	0.71 18.0	6.5 165.0	5.0 127.0	4 4	0.75 19.1
3 (80)	0.71 18.0	7.5 191.0	6.0 152.4	4 4	0.75 19.1	5/8 - 11 UNC	0.79 20.0	8.25 210.0	6.62 168.2	8 8	0.88 22.2	0.71 18.0	7.25 184.0	5.75 146.1	4 4	0.75 19.1
3.5 (90)	0.71 18.0	8.5 216.0	7.0 177.8	8 8	0.75 19.1	5/8 - 11 UNC	0.79 20.0	9.0 229.0	7.25 184.2	8 8	0.88 22.2	0.71 18.0	8.0 203.0	6.5 165.1	8 8	0.75 19.1
4 (100)	0.71 18.0	9.0 229.0	7.5 190.5	8 8	0.75 19.1	5/8 - 11 UNC	0.79 20.0	10.0 254.0	7.88 200.0	8 8	0.88 22.2	0.71 18.0	8.5 216.0	7.0 177.8	8 8	0.75 19.1
5 (125)	0.79 20.0	10.0 254.0	8.5 215.9	8 8	0.88 22.2	3/4 - 10 UNC	0.87 22.0	11.0 279.0	9.25 235.0	8 8	0.88 22.2	0.79 20.0	10.0 254.0	8.25 209.6	8 8	0.75 19.1
6 (150)	0.87 22.0	11.0 279.0	9.5 241.3	8 8	0.88 22.2	3/4 - 10 UNC	0.87 22.2	12.5 318.0	10.62 269.9	12 12	0.88 22.2	0.87 22.2	11.0 279.0	9.25 235.0	8 8	0.88 22.2
8 (200)	0.87 22.0	13.5 343.0	11.75 298.5	8 8	0.88 22.2	3/4 - 10 UNC	0.95 24.0	15.0 381.0	13.0 330.2	12 12	1.00 25.4	0.87 1 22.2	3.25 337.0	11.5 292.1	8 8	0.88 22.2
10 (250)	0.95 24.0	16.0 406.0	14.25 362.0	12 12	1.00 25.4	7/8 - 9 UNC	1.02 26.0	17.5 445.0	15.25 387.4	16 16	1.13 28.6	0.95 24.0	116.0 406.0	14.0 355.6	12 12	0.88 22.2
12 (300)	0.95 24.0	19.0 483.0	17.0 431.8	12 12	1.00 25.4	7/8 - 9 UNC	1.02 26.0	20.5 521.0	17.75 450.9	16 16	1.25 31.8	0.95 24.0	18.0 457.0	16.0 406.4	12 12	1.00 25.4
14 (350)	1.02 26.0	21.0 533.0	18.75 476.3	12 12	1.13 28.6	1 - 8 UNC	1.10 28.0	23.0 584.0	20.25 514.4	20 20	1.25 31.8	1.02 26.0	20.75 527.0	18.5 469.9	12 12	1.00 25.4
16 (400)	1.10 28.0	23.5 597.0	21.25 539.8	16 16	1.13 28.6	1 - 8 UNC	1.18 30.0	25.5 648.0	22.5 571.5	20 20	1.38 34.9	1.10 28.0	22.75 578.0	20.5 520.7	12 12	1.00 25.4
18 (450)	1.18 30.0	25.0 635.0	22.75 577.9	16 16	1.25 31.8	1 1/8 - 7 UNC	1.18 30.0	28.0 711.0	24.75 628.7	24 24	1.38 34.9	1.18 30.0	25.25 641.0	23.0 584.2	16 16	1.00 25.4
20 (500)	1.18 30.0	27.5 699.0	25.0 635.0	20 20	1.25 31.8	1 1/8 - 7 UNC	1.18 30.0	30.5 775.0	27.0 685.8	24 24	1.38 34.9	1.18 30.0	27.75 705.0	25.25 641.4	16 16	1.00 25.4
24 (600)	1.18 30.00	32.06 813.0	29.5 749.3	20 20	1.38 34.9	1 1/4 - 7 UNC	1.18 30.0	36.0 914.0	32.0 812.8	24 24	1.62 41.3	1.18 30.0	32.5 826.0	29.75 755.7	16 16	1.25 31.8
30 (750)	1.26 32.0	38.75 984.0	36.0 914.4	28 28	1.38 34.9	1 1/4 - 7 UNC	1.26 32.0	43.0 1092.0	39.25 997.0	28 28	2.00 50.8	1.26 32.0	39.25 997.0	36.5 927.1	20 20	1.38 34.9

Installation Instructions for Non-Metallic Expansion Joints with Beaded End Flanges

1. Service Conditions:

Make sure the expansion joint rating for temperature, pressure, vacuum*, movements and selection of elastomeric materials match the system requirements. Contact the manufacturer if the system requirements exceed those of the expansion joint selected.
(*Vacuum service for spherical rubber connectors: Vacuum rating is based on neutral installed length. These products should not be installed "extended" on vacuum applications.)

2. Alignment:

Expansion joints are not designed to make up for piping misalignment errors. Piping misalignment should be no more than 1/8" in any direction. Misalignment of an expansion joint will reduce the rated movements and can induce severe stress of the material properties, thus causing reduced service life.

3. Anchoring:

Anchors are required wherever the piping system changes direction. Expansion joints should be located as close as possible to anchor points. If an anchoring system is not used, it is recommended that control rods be installed on the expansion joint to prevent excessive movements from occurring due to pressure thrust of the line.

4. Pipe Support:

Piping must be supported so expansion joints do not carry any pipe weight.

5. Mating Flanges:

Install the expansion joint against the mating pipe flanges and install bolts so that the bolt head is against the expansion joint flange. Flange-to-flange dimension of the expansion joint must match the breech opening*. (*A spherical rubber connector must be compressed 1/8" to 3/16" during installation in order to obtain a correct installed face-to-face dimension.)

Make sure the mating flanges are clean and are a flat-faced type. When attaching beaded end flange expansion joints to raised face flanges, the use of metal gaskets are required to prevent metal flange faces from cutting rubber bead during installation.
Never install expansion joints next to wafer type check or butterfly valves. Serious damage to the rubber flange bead can result due to lack of flange mating surface and/or bolt connection.

6. Bolting Torque:

Table 8 shows the recommended torque values for non-metallic expansion joints with beaded end type-flanges: Tighten bolts in stages by alternating around the flange. Use the recommended torque values in Table 8 to achieve a good seal. Never tighten an expansion joint to the point that there is metal-to-metal contact between the expansion joint flanges and the mating flanges. A slight bulge in the rubber beaded end should create a flush tight seal.
Note: Torque values are approximate due to mating flange surfaces, installation offsets, operating pressures and environmental conditions.

7. Storage:

Ideal storage is in a warehouse with a relatively dry, cool location. Store flanges face down on a pallet or wooden platform. Do not store other heavy items on top of the expansion joints. Ten year shelf life can be expected with ideal conditions. If storage must be outdoors, place on a wooden platform and joints should not be in contact with the ground. Cover with a tarpaulin.

8. Large Joint Handling:

Do not lift with ropes or bars through the bolt holes. If lifting through the bore, use padding or a saddle to distribute the weight. Make sure cables or forklift tines do not contact the rubber. Do not let expansion joints sit vertically on the edges of the flanges for any period of time.

9. Additional Tips:

A. Do not insulate over a non-metallic expansion joint. This facilitates inspection of the tightness of the joint bolting.
B. It is acceptable (but not necessary) to lubricate the expansion joint flanges with a thin film of graphite dispersed in glycerin or water to ease disassembly at a later time.
C. Do not weld in the near vicinity of a non-metallic joint.
D. If expansion joints are to be installed underground, or will be submerged in water, contact manufacturer for specific recommendations.
E. If the expansion joint will be installed outdoors, make sure the cover material will withstand ozone, sunlight, etc.
F. Check the tightness of lead-free flanges two or three weeks after installation and retighten if necessary.

Warning: Expansion joints may operate in pipelines or equipment carrying fluids and/or gasses at elevated temperature and pressures and may transport hazardous materials. Precautions should be taken to protect personnel in the event of leakage or splash. Rubber joints should not be installed in areas where inspection is impossible. Make sure proper drainage is available in the event of leakage when operating personnel are not available.

Installation Instructions for Non-Metallic Expansion Joints with Beaded End Flanges

Table 8:	Bolt-Torque				
Nominal Pipe Size Expansion Joint I.D. Inch /(mm)	Step 1 FT-LBS (Nm)	Rest	Step 2 FT-LBS (Nm)	Rest	Step 3 FT-LBS (Nm)
1 (25)	18 (25)	30 Min	30 (40)	60 Min	45-60 (60-80)
1.25 (32)	18 (25)	30 Min	30 (40)	60 Min	45-60 (60-80)
1.5 (40)	18 (25)	30 Min	30 (40)	60 Min	45-60 (60-80)
2 (50)	18 (25)	30 Min	30 (40)	60 Min	45-60 (60-80)
2.5 (65)	18 (25)	30 Min	35 (50)	60 Min	50-60 (70-80)
3 (80)	25 (35)	30 Min	45 (60)	60 Min	60-75 (80-100)
3.5 (90)	25 (35)	30 Min	45 (60)	60 Min	60-75 (80-100)
4 (100)	25 (35)	30 Min	45 (60)	60 Min	60-75 (80-100)
5 (125)	25 (35)	30 Min	45 (60)	60 Min	60-75 (80-100)
6 (150)	30 (40)	30 Min	50 (70)	60 Min	60-75 (80-100)
8 (200)	30 (40)	30 Min	50 (70)	60 Min	60-75 (80-100)
10 (250)	30 (40)	30 Min	50 (70)	60 Min	75-85 (100-115)
12 (300)	30 (40)	30 Min	50 (70)	60 Min	75-85 (100-115)
14 (350)	30 (40)	30 Min	60 (80)	60 Min	75-95 (110-130)
16 (400)	30 (40)	30 Min	60 (80)	60 Min	75-95 (110-130)
18 (450)	30 (40)	30 Min	60 (80)	60 Min	90-95 (120-130)
20 (500)	30 (40)	30 Min	65 (90)	60 Min	95-185 (130-250)
24 (600)	30 (40)	30 Min	65 (90)	60 Min	95-185 (130-250)
30 (750)	30 (40)	30 Min	65 (90)	60 Min	95-220 (130-300)

Note: Bolt torque based on new bolts and nuts

Right: Flanges with correct ID help prevent damage to rubber.

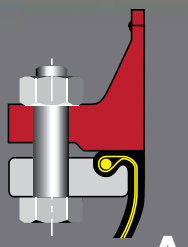

Wrong: Insure matting flanges I.D. is flush with rubber.

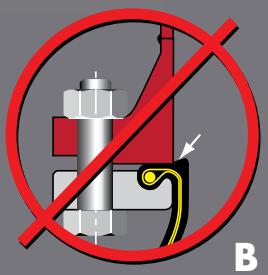

Right: Weld neck flanges with correct ID prevent damage to rubber.

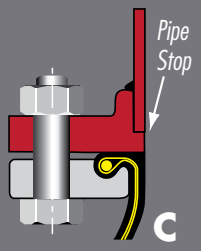

Wrong: Uneven end of pipe can cause damage to rubber.

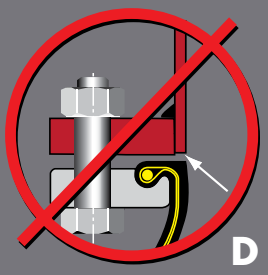

Right: In case of B, D, F an additional metal gasket can be used to prevent damage to rubber.

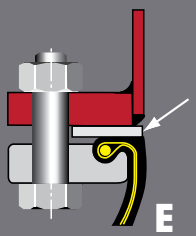

Wrong: Inner edge of flanges damages rubber.

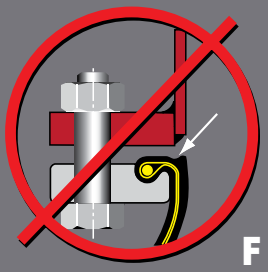

Right: Well rounded smooth edge prevents damage to rubber.

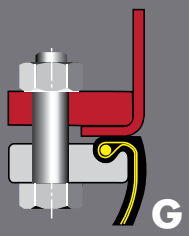

Tighten opposing nuts/bolts gradually according to the following sequence

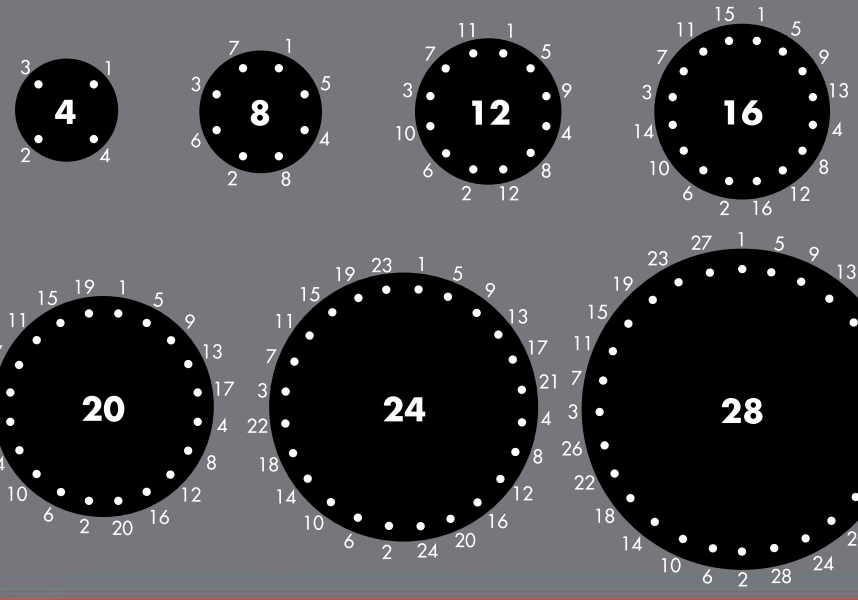

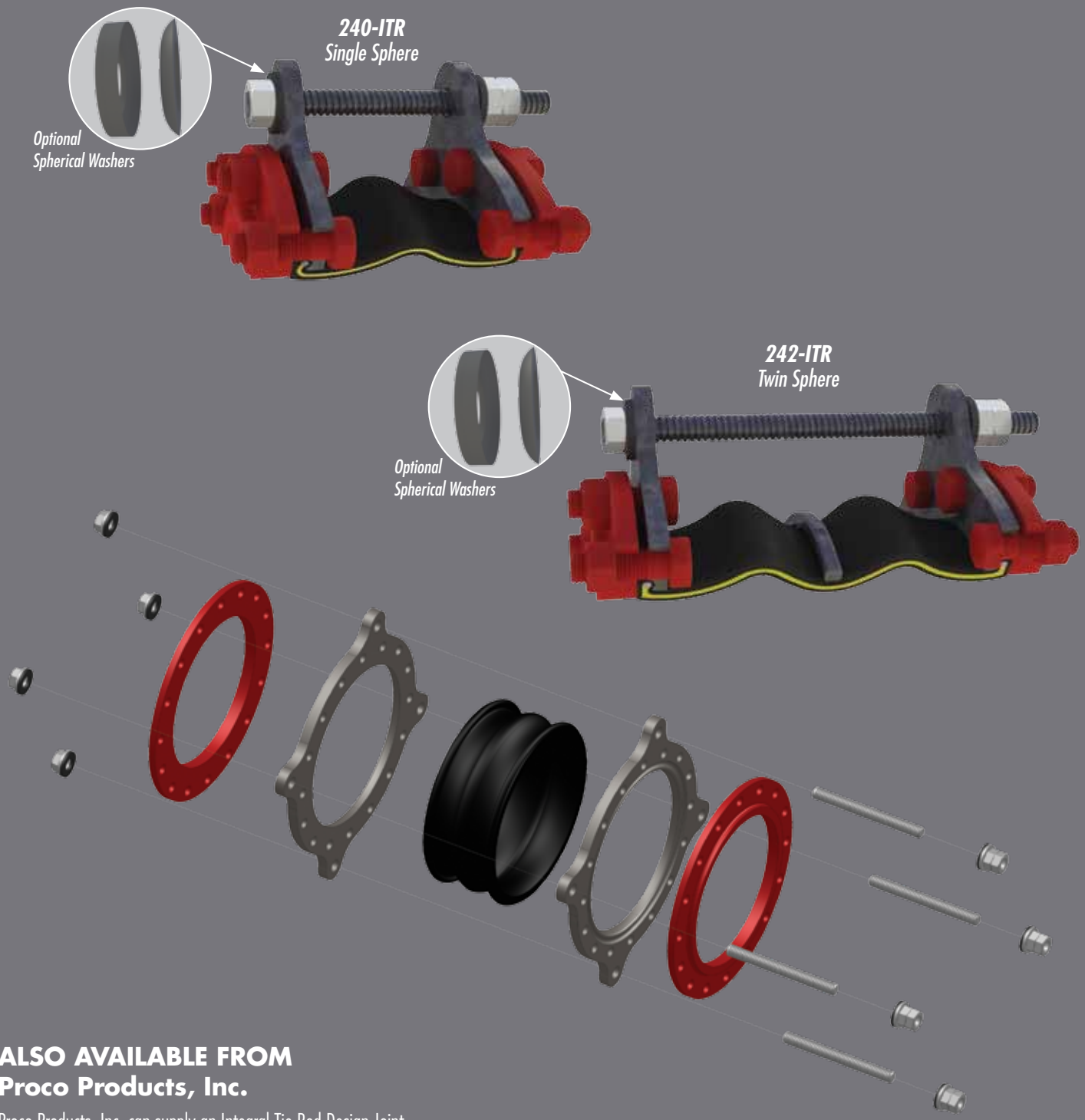

ALSO AVAILABLE FROM
Proco Products, Inc.

Proco Products, Inc. can supply an Integral Tie Rod Design Joint when space prohibits use of typical rod designs.

PROCO PRODUCTS, INC.

2431 North Wigwam Dr. (95205)
P.O. Box 590 • Stockton, CA
95201-0590 • USA

Toll-Free Phone: (800) 344-3246
Facsimile: (209) 943-0242
(209) 943-6088
email: sales@procoproducts.com
website: http://www.procoproducts.com

NATIONWIDE AND CANADA

INTERNATIONAL

American Water Works Association

IDCO Industrial Distributor Co-op

NAHAD Charter Listed Member — Safety · Quality · Reliability

Fluid Sealing Association FSA

Water Environment Federation® — Preserving & Enhancing the Global Water Environment — MEMBER

REPRESENTED BY:

Revised 3/11

CalgonCarbon	HOSE FITTINGS MATERIAL SPECIFICATION	SPEC NO:
	UNIVERSAL HOSE COUPLING - MALLEABLE IRON	32.40

SAP PART NUMBER:

CCC DRAWING NUMBER:

MATERIAL: Universal Hose Coupling, Malleable iron, male pipe thread on one end with other end for connecting to universal coupling.

RATING: 90 psig @ 140 DEG. F.

MANUFACTURER: Chicago Pneumatic, or equal.

SIZES:
1/4" - C-36844Y
3/8" - C-36843Y
1/2" - C-36842Y
3/4" - C-36841Y
1" - C-36840Y

NOTE: Above model number includes one standard type rubber gasket No. C-101158Y for air service. For water service use neoprene gasket No. C-101160Y.

Issue Date: Revision Date:

Approved by Joseph P. McMahon on 10/30/98

HOSE END

Ductile Iron (machined serrations)

hose size	part number	list each
3/8	UH-38	7.98
1/2	UH-2	4.99
5/8	UH-58	7.61
3/4	UH-3	5.15
1	UH-4	6.88

Brass (machined serrations)

3/8	UHB-38	–
1/2	UHB-2	12.60
5/8	UHB-58	–
3/4	UHB-3	14.49
1	UHB-4	18.59

316 Stainless (machined serrations)

1/2	UHSS-2	43.47
3/4	UHSS-3	36.71
1	UHSS-4	40.57

FEMALE NPT

Ductile Iron

npt size	part number	list each
3/8	UF-38	6.88
1/2	UF-2	6.30
3/4	UF-3	5.93
1	UF-4	7.72

Brass

3/8	UFB-38	–
1/2	UFB-2	–
3/4	UFB-3	–
1	UFB-4	–

316 Stainless

1/2	UFSS-2	44.71
3/4	UFSS-3	38.75
1	UFSS-4	41.73

MALE NPT

Ductile Iron

npt size	part number	list each
3/8	UM-38	6.88
1/2	UM-2	5.72
3/4	UM-3	6.09
1	UM-4	6.83

Brass

3/8	UMB-38	–
1/2	UMB-2	–
3/4	UMB-3	–
1	UMB-4	–

316 Stainless

1/2	UMSS-2	44.71
3/4	UMSS-3	38.75
1	UMSS-4	41.73

BLANK END

Ductile Iron

size	part number	list each
All	UB	9.82

Brass

All	UBB	–

THREE WAY

Ductile Iron

size	part number	list each
All	UTW	17.85

Brass

All	UTWB	–

UNIVERSAL WASHER

Nitrile

size	part number	list each
All	UG	0.53

Never use Universal Washers in UniversaLock Couplings

SAFETY CLIP

size	part number	list each
All	SC	0.26

TWO-BOLT UNIVERSAL CLAMP

Ductile Iron

hose o.d. min to max	part no.	list each
3/4 to 15/16	UC-2	5.78
1 to 1-1/4	UC-3	5.83
1-1/4 to 1-17/32	UC-4	10.08

DISTRIBUTOR AUTHORIZATION

Safety is of paramount concern to everyone. Due to the volatile nature of compressed air, and in accordance with our ISO 9000 quality system, we reserve the right to restrict sales of our UniversaLock® Couplings to only those distributors authorized by Campbell Fittings.

Please contact our customer service department for more information.

HOSE END

Ductile Iron (machined serrations)

hose size	part number	list each
1/2	ULH-2	19.10
3/4	ULH-3	19.10
1	ULH-4	19.10

MALE END

Ductile Iron

npt size	part number	list each
1/2	ULM-2	19.10
3/4	ULM-3	19.10
1	ULM-4	19.10

FEMALE END

Ductile Iron

npt size	part number	list each
1/2	ULF-2	19.10
3/4	ULF-3	19.10

UNIVERSALOCK WASHER

Nitrile

size	part number	list each
All	ULW	2.13

Never use UniversaLock Washers in standard Universal Couplings

CalgonCarbon	HOSE FITTINGS MATERIAL SPECIFICATION	SPEC NO:
	QUICK DISCONNECT MALE ADAPTER - ALUMINUM	32.60

SAP PART NUMBER:

CCC DRAWING NUMBER:

MATERIAL: Quick disconnect male adapter, Aluminum, male NPT on one end with other end for connecting to quick disconnect female coupler.

RATING: 150 psig @ 100 DEG. F.

MANUFACTURER: Dixon, Ever-Tite

SIZES: 1/2" thru 4"

MODELS: Dixon "Andrews" line, type F, Ever-Tite Part F, or equal.

Issue Date: 04/16/90 Revision Date: 09/15/99

Approved by Matthew R. McGowan on 09/27/99

"EZ BOSS-LOCK"

No more fumbling with clamps, wire, clips or pins . .
Just close the handles and the locking mechanism is engaged.

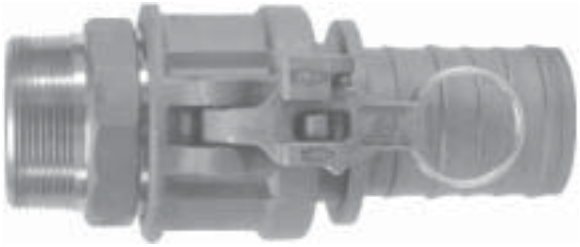

Unlike other safety couplings . . .

- **The EZ Boss-Lock is extremely EASY TO OPEN!!!** *The release lever is under your thumb when you want to open the fitting.* **ERGONOMIC.**
- **The EZ Boss-Lock is resistant to accidental disconnection when being dragged.** *The release lever opens in the direction opposite to the cam arm, so movements that tend to open the release lever also tend to close the cam arm!!!*
- **The EZ Boss-Lock alerts you if it is not properly engaged.** *If the rotating lever is not flush with the handle, it is not properly engaged.*
- **The EZ Boss-Lock has no sliding pins to jam**. *The EZ Boss-Lock's rotating action helps keep the locking device free of debris.*
- **The EZ Boss-Lock has no sliding pins to pop open.** *The EZ Boss-Lock is designed to protect critical parts from impact and to withstand rugged use.*
- **The EZ Boss-Lock can be supplied with special shanks custom suited to your needs.** *The EZ Boss-Lock is available with Swaged and PF shank designs, for hard to couple chemical hoses.*
- **The EZ Boss-Lock cam arm assemblies are made of investment cast Stainless Steel with plated Carbon Steel pull rings.**
- **The EZ Boss-Lock is easier to insert into the hose tubes on Tank Trucks, and easier to use in restricted spaces.** *This is due to the smaller maximum O.D. and a more snag free exterior.*
- **The EZ Boss-Lock Cam Arm assemblies can be retrofitted onto Undamaged Stainless Steel Boss-Lock.** *This allows you to protect your investment in Stainless Steel Boss-Lock couplings while you upgrade.*
- **The EZ Boss-Lock is Made in the USA.**

All measurements in this brochure are for reference only and are subject to change. Where dimensions are critical, please consult the factory. For products not shown or special application questions, please consult the factory.

CAM & GROOVE LINE DRAWINGS

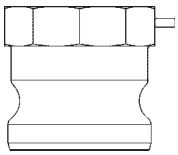

TYPE A
(male adapter x female NPT)

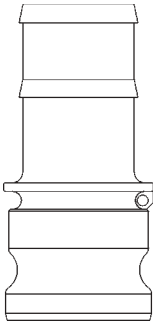

TYPE E
(male adapter x hose shank)

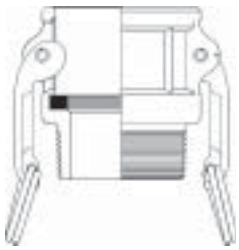

TYPE B
(female coupler x male NPT)

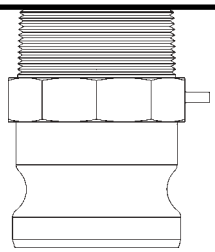

TYPE F
(male adapter x male NPT)

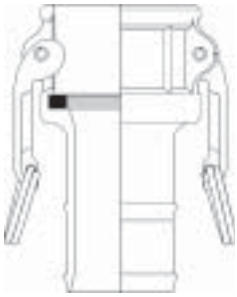

TYPE C
(female coupler x hose shank)

TYPE DC *
(dust cap)

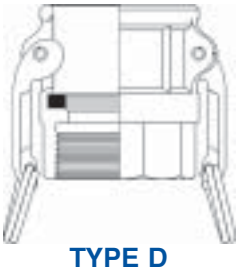

TYPE D
(female coupler x female NPT)

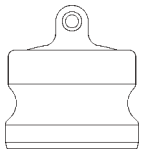

TYPE DP *
(dust plug)

NOTE: Line drawings are representative of the Dixon / "Andrews" line of cam and groove.

** Dust Caps and Dust Plugs are NOT to be used in Pressure Applications for safety and environmental reasons.*

WARNING:
SAFETY ALERT
UNDER NO CIRCUMSTANCES should Cam and Groove couplings be used for compressed air or steam service!

6 Dixon "Andrews" / "Boss-Lock" Type F Adapters

Male Adapter x Male NPT

Size	Aluminum Part #	Aluminum Hard Coat Part #	Brass Part #	Unplated Malleable Iron Part #	Plated Malleable Iron Part #	Stainless Steel Part #
1/2"	***50-F-AL***	***----***	***50-F-BR***	***----***	***----***	***50-F-SS***
3/4" x 1/2"	***7550-F-AL***	***----***	***7550-F-BR***	***----***	***----***	***7550-F-SS***
3/4"	***75-F-AL***	***----***	***75-F-BR***	***----***	***75-F-PM***	***75-F-SS***
1"	***100-F-AL***	***----***	***100-F-BR***	***----***	***100-F-PM***	***100-F-SS***
1 1/4"	***125-F-AL***	***----***	***125-F-BR***	***----***	***----***	***125-F-SS***
1 1/2"	***150-F-AL***	***150-F-ALH***	***150-F-BR***	***150-F-MI***	***150-F-PM***	***150-F-SS***
2"	***200-F-AL***	***200-F-ALH***	***200-F-BR***	***200-F-MI***	***200-F-PM***	***200-F-SS***
2 1/2"	***250-F-AL***	***----***	***250-F-BR***	***----***	***250-F-PM***	***250-F-SS***
3"	***300-F-AL***	***300-F-ALH***	***300-F-BR***	***300-F-MI***	***300-F-PM***	***300-F-SS***
4"	***400-F-AL***	***400-F-ALH***	***400-F-BR***	***400-F-MI***	***400-F-PM***	***400-F-SS***
5"	***500-F-AL***	***----***	***----***	***----***	***----***	***----***
6"	***600-F-AL***	***600-F-ALH***	***600-F-BR***	***----***	***600-F-PM***	***600-F-SS***
8" AND*	***800-F-AL***	***----***	***----***	***----***	***----***	***----***
8" BL*	***801-F-AL***	***----***	***----***	***----***	***----***	***----***

* "Andrews" and "Boss-Lock" Cam and Groove Couplings **DO NOT INTERCHANGE IN THE 8" SIZE.**

SAFETY ALERT

- The 8" "Boss-Lock" were designed to interchange with 8" Cam & Groove Couplings manufactured by P.T. Coupling.

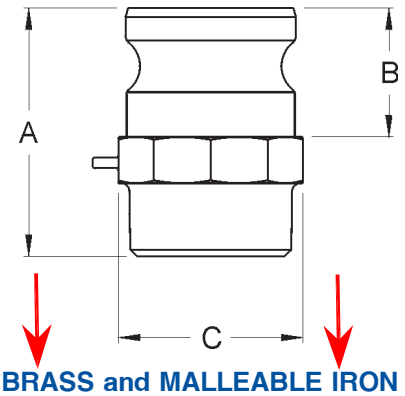

ALUMINUM, BRASS and MALLEABLE IRON DIMENSIONS

Size	1/2"	3/4 x 1/2"	3/4"	1"	1 1/4"	1 1/2"	2"	2 1/2"	3"	4"	5"	6"	8" AND	8" BL
A Overall Length	2 1/8	2 7/16	2 1/16	2 3/8	2 15/16	3 5/32	3 17/32	4 3/8	4 15/32	4 21/32	4 1/2	5 17/32	6 15/16	6 3/8
B Adapter Length	1	1	1	1 5/16	1 9/16	1 5/8	1 7/8	1 15/16	2	2 1/16	2 5/16	2 1/4	3 9/16	3 1/16
C Distance Across Flats	1	1 5/16	1 3/8	1 1/2	1 7/8	2 1/4	2 11/16	3 1/4	3 3/4	5	6 1/2*	8 1/32*	10 5/8*	10 5/8*

STAINLESS STEEL DIMENSIONS

Size	1/2"	3/4 x 1/2"	3/4"	1"	1 1/4"	1 1/2"	2"	2 1/2"	3"	4"	5"	6"	8" AND	8" BL
A Overall Length	2 1/8	2 1/4	2 1/16	2 23/32	2 15/16	3 1/8	3 21/32	4 5/16	4 17/32	4 59/64	------	4 15/16	------	------
B Adapter Length	1	1	1	1 5/16	1 9/16	1 5/8	1 7/8	1 15/16	2	2 1/16	------	2 1/4	------	------
C Distance Across Flats	1	1 5/16	1 5/16	1 1/2	1 7/8	2 1/4	2 11/16	3 1/4	3 3/4	5	------	7 3/4*	------	------

* Distance Over Lugs

CalgonCarbon	CARBON STEEL PIPE MATERIAL SPECIFICATION	SPEC NO:
	CARBON STEEL PIPE WITH STEEL FITTINGS	C02

SAP PART NUMBER:

CCC DRAWING NUMBER:

MATERIAL:
Carbon steel pipe with steel fittings

RATING:
125 PSIG @ 350 DEG. F, 200 PSIG @ 150 DEG. F, Includes corrosion allowance of 0.050" min.

CONSTRUCTION:
Screwed for 1 1/2" and smaller, welded and/or flanged for 2" and larger.

PIPE:
Carbon steel, ASTM A53, Grade B: Threaded, schedule 80, seamless, 1 1/2" and smaller, plain end, schedule 40, seamless, 2" to 10", Plain end, 3/8" wall, seamless, 12" and above.

FITTINGS:
3000 lb ANSI B16.11, forged steel, threaded ends, 1 1/2" and smaller. Schedule 40, ANSI B16.9, ASTM A234, Grade WPB, carbon steel, butt welding ends, 2"-12". 3/8" wall, ANSI B16.9, ASTM A234, Grade WPB, carbon steel, butt welding ends, 14" to 24", or 125# flanged cast iron elbows and tees, ASTM A126, Class B with 125# ANSI B16.1 drilling with dimensions per ANSI A21.10 (AWWA C110). Location of tapped holes for drains shall be in accordance with ANSI B16.1. Use thread-o-lets on branch connections 1-1/2" and smaller, use stub-in or reducing tee connections for 2" and above.

UNIONS:
3000 lb forged steel, ASTM A105, Grade 2, integral steel seat, ground joint, threaded ends.

FLANGES:
150 lb ANSI B16.5, ASTM A105 forged carbon steel, slip-on, weld neck, or MSS lap joint/stub end for 2" and larger, threaded 1 1/2" and smaller. Where bolting to flat face cast iron flanges, flanges shall be furnished with a flat face. Others shall be raised face.

Issue Date: 12/01/89 Revision Date: 03/25/2008

Approved by Joseph P. McMahon on 03/25/2008

CalgonCarbon	CARBON STEEL PIPE MATERIAL SPECIFICATION	SPEC NO:
	GALVANIZED CARBON STEEL PIPE	C13

SAP PART NUMBER:

CCC DRAWING NUMBER:

MATERIAL: Galvanized carbon steel pipe with galvanized iron or steel fittings.

RATING: 275 PSIG @ -20 to 150 DEG. F
215 PSIG @ 350 DEG. F Includes corrosion allowance of 0.050" minimum.

CONSTRUCTION: Screwed 3" and smaller
No bending permitted

PIPE: Galvanized carbon steel, ASTM A53:
Threaded, schedule 40, butt welded seam 2" and smaller.
Threaded schedule 40, butt welded seam or seamless, 2 1/2" and 3".

FITTINGS: 150 lb., ANSI B16.3, ASTM A197, galvanized malleable iron, banded, threaded ends.

UNIONS: 150 LB., ASTM A197, galvanized malleable iron, integral iron seat, ground joint, threaded ends.

FLANGES: 150 lb., ANSI B16.5, ASTM A105, Grade 1, galvanized forged carbon steel, threaded.

Where bolting to flat face cast iron flanges, steel flanges shall be furnished with a flat face. Others shall be raised face

ORIFICE FLANGES: Instrument item.

BOLTING: See attached Fastener Specification F03.

GASKETS: See attached Gasket Specification G02.

Issue Date: 12/01/89 Revision Date: 04/10/92

Approved by Gerald Kirner on 11/09/2005

CalgonCarbon	FASTENER MATERIAL SPECIFICATION	SPEC NO:
		F03

SAP PART NUMBER:

CCC DRAWING NUMBER:

MATERIAL:
Hex Bolt, low or medium carbon steel, ASTM A307 Grade B.
1/4" through 4" Proof load 55,000 psi.
1/4" through 4" Tensile strength: 60,000 psi minimum, 100,000 psi maximum.
Zinc plated.
Threads to be UNC unless specified UNF bolts to include (1) heavy hex nut, ASTM A563, Grade A.

Issue Date: 01/01/89 Revision Date: 07/16/2001

Approved by Matthew R. McGowan on 07/16/2001

CalgonCarbon	GASKET MATERIAL SPECIFICATION	SPEC NO:
	1/8" EPDM RUBBER (FDA)	G-46

SAP PART NUMBER:

CCC DRAWING NUMBER:

MATERIAL:	EPDM, Color: Off-White, 1/8" thick.
RATING:	Durometer (Shore A +/- 5): 60
MANUFACTURER:	Garlock or equal.
SIZES:	Pipe gasket flange dimension per ANSI B16.21
MODELS:	Garlock- 8316 or equal.
SPECIFICATIONS:	Meets FDA Requirements

SERVICE CONDITIONS:
Temperature: -40 thru 300 degrees F. Pressure: 250 psig

Issue Date: 03/12/2008 Revision Date: 03/25/2008

Approved by Joseph P. McMahon on 03/26/2008

CalgonCarbon	PRESSURE INDICATING GAGES MATERIAL SPECIFICATION	SPEC NO:
	PI-213 TO PI-218; PI-448 TO PI-560	IS008

SAP PART NUMBER:

CCC DRAWING NUMBER:

MATERIAL: As listed below:

Case:	4-1/2" size, stainless steel, steel, brass, aluminum and phenol.
Socket:	1/2" NPT male bottom connection, stainless steel.
Dial:	White litho with black figures.
Pointer:	Balanced micrometer.
Bourdon Tube:	Stainless steel.
Movement:	Stainless steel and Delrin.
Accuracy:	1% of full range.
Liquid Fill:	None

RATING: Temperature range of -4 DEG. F. to +150 DEG. F.

MANUFACTURER: Ashcroft, WIKA

MODELS: Ashcroft "Duragauge" - 1279, WIKA 232.34

NOTES: As listed below:

1. Spec. IS008 replaces Spec. No. 7209A-CS263
2. This specification replaces the Specs. listed below.

RANGE: As listed below:

ITEM NO.	SCALE RANGE	REPLACES THESE ITEMS	
PI-213	0-15 PSIG	PI-101,7	SPEC. No. 7209A-CS161,2 (IS001,2)
PI-214	0-30 PSIG	PI-102,8	SPEC. No. 7209A-CS161,2 (IS001,2)
PI-215	0-60 PSIG	PI-103,9	SPEC. No. 7209A-CS161,2 (IS001,2)
PI-216	0-100 PSIG	PI-104,10	SPEC. No. 7209A-CS161,2 (IS001,2)
PI-217	0-160 PSIG	PI-105,11	SPEC. No. 7209A-CS161,2 (IS001,2)
PI-218	0-200 PSIG	PI-106,12	SPEC. No. 7209A-CS161,2 (IS001,2)
PI-448	0-300 PSIG		
PI-557	0-300 PSIG *		
PI-449	0-400 PSIG		
PI-556	0-400 PSIG *		
PI-450	0-800 PSIG		
PI-558	0-800 PSIG *		
PI-559	0-1500 PSIG		
PI-560	0-1500 PSIG *		*With Steam Coil Siphon

GENERAL REQUIREMENTS:

Tag each assembly with Item No. and Service.

Issue Date: 01/01/89 Revision Date: 12/16/2005

Approved by Gerald Kirner on 03/21/2006

Bourdon Tube Pressure Gauges
Solid-Front Process Gauge - SS Wetted Parts
Type 232.34 - Dry Case
Type 233.34 - Liquid-filled Case

Applications

- For applications with high dynamic pressure pulsations or vibration a liquid filled case and socket restrictor are available
- Suitable for corrosive environments and gaseous or liquid media that will not obstruct the pressure system
- Process industry: chemical/petrochemical, power stations, mining, on and offshore, environmental technology, mechanical engineering and plant construction

Special features

- Excellent load-cycle stability and shock resistance
- Solid front thermoplastic case
- Positive pressure ranges to 30,000 psi
- All lower mount connection gauges are factory prepared for liquid filling

(LBM: must install membrane prior to field filling)

Bourdon Tube Pressure Gauge Model 232.34

Standard Features

Design
ASME B40.100

Sizes
4½" & 6" (115 & 160 mm) dial size

Accuracy class
± 0.5% of span (ASME B40.100 Grade 2A)
± 1.0% of span (ASME B40.100 Grade 1A)
(for 20,000 psi range and above)

Ranges
Vacuum / Compound to 200 psi
Pressure from 15 psi to 30,000 psi
or other equivalent units of pressure or vacuum

Working pressure

Steady:	full scale value
Fluctuating:	0.9 x full scale value
Short time:	1.5 x full scale value

Operating temperature
Ambient: -40°F to +150°F (-40°C to +66°C) - dry
-4°F to +150°F (-20°C to +66°C) - glycerine filled
-40°F to +150°F (-40°C to +66°C) - silicone filled
Medium: max. +212°F (+100°C) (See Note 1 on reverse)

Temperature error
Additional error when temperature changes from reference temperature of 68°F (20°C) ±0.4% for every 18°F (10°C) rising or falling. Percentage of span.

Weather protection
Weather resistant (NEMA 3 / IP54) - without membrane
Weather tight (NEMA 4X / IP65) - dry case or filled case with membrane installed

Pressure connection
Material: 316L stainless steel
Lower mount (LM) or lower back mount (LBM)
1/4" or 1/2" NPT with M4 internal tap

Restrictor
Material: Stainless steel (0.6 mm)

Bourdon tube
Material: 316L stainless steel
≤ 1,000 PSI: C-type
≥ 1,500 PSI: helical type

Movement
Stainless steel. Internal stop pin at 1.3 x full scale
Overload and underload stops - standard
Dampened movement - optional

Dial
White aluminum with black lettering, stop pin at 6 o'clock

Pointer
Black aluminum, adjustable

Case
Black fiberglass-reinforced thermoplastic (POCAN)
Solid front, blowout back
Turret-style case with built in rear flange lugs

WIKA
Part of your business

Window
Clear acrylic with Buna-N gasket

~~Case filling~~
~~Glycerine 99.7% - Type 233.34~~

Cycle testing
400,000 - 2,000,000* cycles, depending upon pressure range

* Liquid filled

Note 1: The maximum continuous media temperature for this gauge is 212°F. However, higher temperatures can be maintained safely for short term exposure per table to the right. The user should consider temperature error and gauge component degradation when exposing gauge to any media or ambient temperature above 212°F. For continuous use in either ambient or media temperatures above 212°F, a diaphragm seal or other heat dissipating means is recommended. Consult factory for technical inquiries and application assistance.

~~Optional extras~~

- ~~Silicone dampened movement~~
- ~~Panel mounting adaptor kit (field assembled)~~
- ~~Silicone case filling~~
- ~~Halocarbon case filling~~
- ~~Cleaned for oxygen service~~
- ~~Instrument glass or safety glass window~~
- ~~Drag pointer (maximum reading indicator)~~
- ~~Alarm contacts switches (magnetic or inductive)~~
- ~~Special process connections~~
- ~~Custom dial layout~~
- ~~External zero adjustment~~

Short term, intermittent maximum media temperature limits
(Optional glass window required for all these temperatures)

500°F (260 °C) -	Dry Gauge
250°F (130°C) -	Liquid filled gauge
300°F (150°C) -	Dampened movement gauge

Dimensions

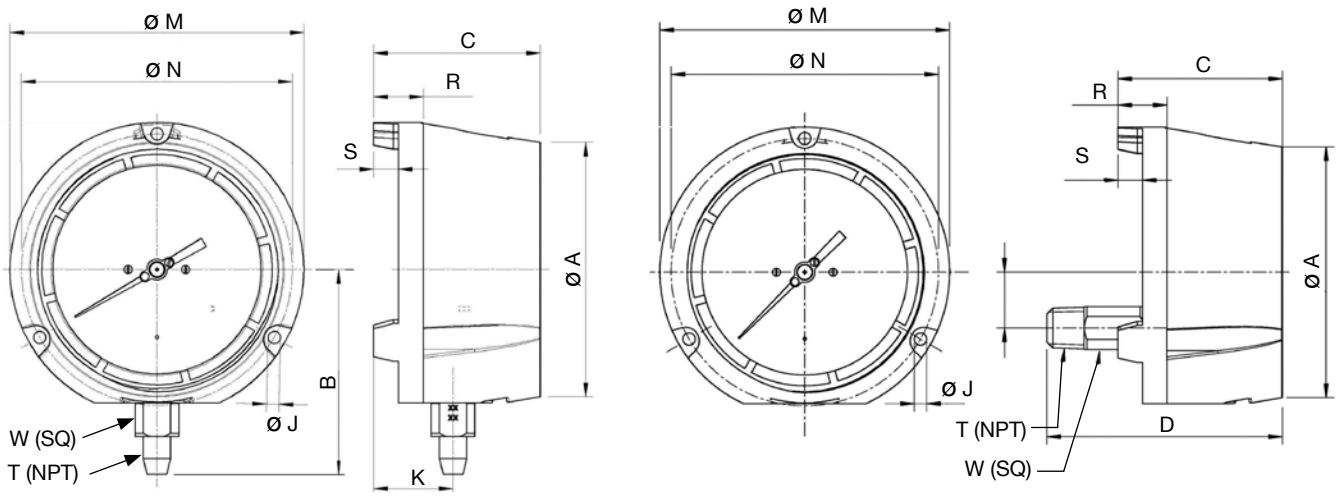

Size		A	B	C	D	J	K	L	M	N	R	S	T	W	Weight[1]	
4.5”	mm	128	103	84	120.3	6.3	40	28.5	148	136.5	25	12.5		22	2 lb.	dry
	in	5	4.06	3.31	4.74	0.248	1.57	1.12	5.83	5.37	0.99	0.49	1/2”	0.87	3 lb.	filled
6”	mm	164	122.5	88	123.4	7.1	40.2	28.5	190	177.8	25.4	12.7		22	3 lb.	dry
	in	6.46	4.82	3.46	4.86	0.28	1.58	1.12	7.5	7	1	0.5	1/2”	0.87	4 lb.	filled

[1] Weight without optional accessories

Ordering information
Pressure gauge model / Nominal size / Scale range / Size of connection / Optional extras required
Specifications and dimensions given in this leaflet represent the state of engineering at the time of printing.
Modifications may take place and materials specified may be replaced by others without prior notice.

WIKA Instrument Corporation
1000 Wiegand Boulevard
Lawrenceville, GA 30043
Tel (770) 513-8200 Toll-free 1-888-WIKA-USA
Fax (770) 338-5118
E-Mail info@wika.com
www.wika.com

CalgonCarbon	RUPTURE DISKS MATERIAL SPECIFICATION	SPEC NO:
	PSE-155 TO PSE-157;PSE-252;PSE-301 TO PSE-306;PSE-577;PSE-580	IS015

SAP PART NUMBER:

CCC DRAWING NUMBER:

MATERIAL: Impervious graphite.

Type: Standard.
Vacuum Support: Furnish for disks with bursting pressure of 15 psig or less.

FLANGES: 150 # ANSI RF or FF companion flanges (furnished by others)

MANUFACTURER: Zook, BS&B or equal.

SIZES: As listed below:

ITEM NO.	SIZE	BURSTING PRESSURE
PSE-155	1"	75 PSIG +/- 5%
PSE-156	1-1/2"	75 PSIG +/- 5%
PSE-157	2"	75 PSIG +/- 5%
PSE-170	2"	125 PSIG +/- 5%
PSE-252	3"	75 PSIG +/- 5%
PSE-301	3"	35 PSIG +/- 5%
PSE-302	3"	50 PSIG +/- 5%
PSE-303	3"	65 PSIG +/- 5%
PSE-304	3"	87 PSIG +/- 5%
PSE-305	3"	150 PSIG +/- 5%
PSE-306	3"	75 PSIG +/- 5%
PSE-307	3"	100 PSIG +/- 5%
PSE-577	3"	125 PSIG +/- 5%
PSE-580	4"	125 PSIG +/- 5%

MODELS: Zook - Mono Type Disk, BS&B - Monobloc Model MB or equal

SPECIFICATIONS: ASME UD stamp required.

NOTES: As listed below:

1 - Tag with Item No. and Service.
2 - IS015 replaces Spec. No. 7209a-CS172

SERVICE CONDITIONS:
As listed below:

Fluid Under Disks:	Water
Pressure Fluctuation:	Back Pressure:
Temperature:	40 to 150 degrees F.
Operating Pressure:	80% of bursting pressure.
Back Pressure:	Atmospheric.

GENERAL REQUIREMENTS:
As listed Below:

Bursting Pressure:	See table above
Coincident Temperature:	150 degrees F.
Relieving Capacity:	In accordance with ASME

Issue Date: 04/06/90 Revision Date: 08/15/2012

Approved by Joseph P. McMahon on 08/15/2012

CCC SPEC. IS015
PSE-577

Bulletin no. 6000-3

ZOOK®

Graphite Rupture Disks

ASME CERTIFIED

ISO 9001

ZOOK Enterprises, LLC
16809 Park Circle Drive
Box 419
Chagrin Falls, OH 44022 U.S.A.

Local **440.543.1010**
U.S.A. Toll Free **800.543.1043**
Fax **440.543.4930**
E-Mail **zook@zook.cc**
www.zook.cc

ZOOK Rupture Disks provide many exclusive performance and service benefits. Information contained in this bulletin **should not** be applied to other rupture disks including impervious graphite designs of similar appearance.

ZOOK® Graphite Rupture Disks…

protect equipment and personnel from the effects of overpressurization in static and dynamic pressurized systems. The disk is designed to rupture at a predetermined burst rating when installed in a piping system.

Each disk is made from a single piece of graphite, a high-purity form of carbon, which is impregnated with phenolic resin. The resulting material, called impervious graphite, is impermeable and is resistant to most corrosives.

Easy to install and maintain, disks:

- are tamperproof
- have no springs or moving parts
- mount directly between standard flanges without special holders.

Options and accessories increase the flexibility of standard disks. TFE coated disks offer stick-resistant surfaces. Special gaskets and stainless steel armor are also available. Spacer rings let you replace metal rupture disks without requiring piping modification. For unique applications, our engineering department will work with you to create a custom-designed disk.

ZOOK is the first and largest company in the world committed to manufacturing QUALITY impervious graphite rupture disks, through product innovations and superior service. ZOOK is the first graphite rupture disk manufacturer to earn the ASME Code UD symbol stamp and certificate of authorization. Also, ZOOK's quality management system is certified to ISO 9001 and TÜV standards.

In addition:

- ZOOK offers 1-day shipment of disks with over 100 rating and diameter combinations. Service personnel are also available 24 hours-a-day, 7 days-a-week, 365 days-a-year to handle your emergency shut-down needs
- produces a standard line of graphite disks as small as 1/2" diameter and disks with burst ratings as low as 0.25 psig
- tests disk performance at cryogenic and elevated temperatures

Applications

ZOOK Disks enhance *SAFETY* in chemical, petrochemical, pharmaceutical, food, medical, and related processing systems around the world. Other applications include: storage tanks, tank trailers, rail cars, barges, pressured switchgear, and air conditioning compressors.

ZOOK Disks also increase *system efficiency* by:

- eliminating back pressure effects on overpressure devices in common vent lines
- solving sourcing and cost problems for disks used with highly corrosive fluids
- offering ultra low rated pressure settings
- preventing relief valves from fouling and leaking

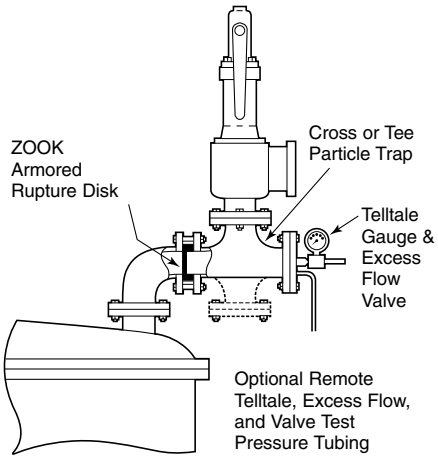

Installation

ZOOK Graphite Rupture Disks fit directly between standard flanges without the need for additional holders.

A flow arrow on each disk indicates proper orientation.

Armor provides additional protection from extraneous stress to the disk resulting from misaligned piping. Armor is standard on selected diameter and burst ratings and is required in fire case and toxic services. See ARMOR, page 7, for more information.

Gaskets should be ring type, non-metallic, relatively soft, and properly sized. See GASKETS, page 8, for more information.

Normal good practice should be followed when making flange connections. Particular attention should be paid to ensure:

- concentric alignment of the disk and gaskets
- uniform cross-tightening of flange bolts
- adequate support of piping to withstand external loading and thrust during blowdown
- protection of personnel and equipment against high velocity open discharge of process material and rupture disk particles

METAL Rupture Disk Installation

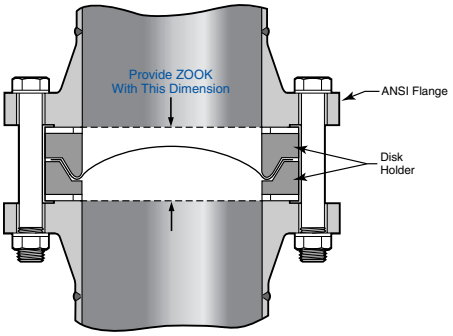

Graphite Rupture Disk Replacement

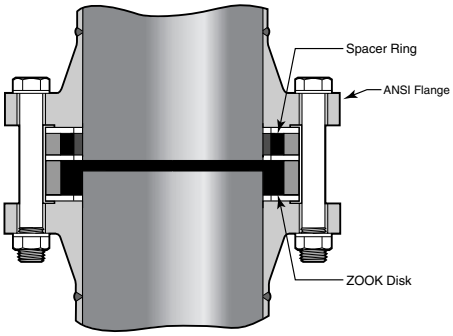

When replacing a metal rupture disk with a ZOOK Graphite Rupture Disk, a graphite lined armored spacer ring can be provided to fill the space of existing flange face-to-face distance, eliminating the need for piping modifications.

Detailed installation instructions are provided with each disk.

MONO Type Disks

the best choice for low and intermediate burst ratings

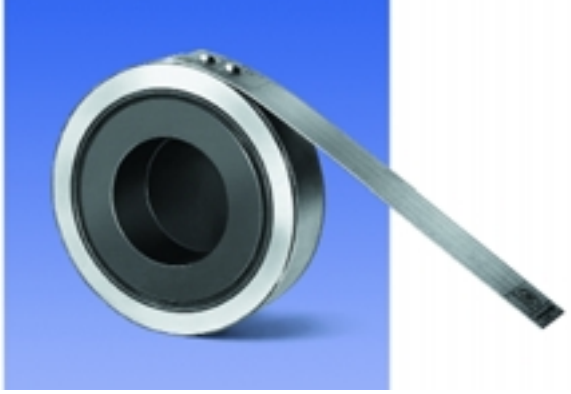

- Sizes 1/2″ thru 24″ diameters
- Designed to fit ANSI Class 150 flanges (Higher ratings to fit Class 300 flanges are furnished in the INVERTED and DUPLEX Type Disks)
- Burst ratings 0.25 to 150 psig
- 0% manufacturing range
- Operating pressures to 90% of the disk's marked burst pressure (Consult ZOOK for operating ratio for burst pressures below 15 psig)
- Temperature ratings –290°F to +700°F (–179°C to +371°C). Maximum temperature rating without insulation is 430°F (221°C) or 700°F (371°C) with insulation. Consult ZOOK for higher temperature ratings. The specified temperature shall be at the disk location at the time when the disk is expected to rupture
- Counterbored side of the disk contacts the process media
- Vacuum supports are available for ratings below 25 psig
- May be configured to withstand high back pressure generated in closed piping systems – request Bak-Pressure™ bulletin
- Stocked MONO Disks, ready for immediate shipment

  Sizes: 1″, 1-1/2″, 2″, 3″, 4″, 6″, 8″ to fit ANSI Class 150 flanges

  Burst Ratings: 10, 15, 20, 25, 30, 40, 50, 75, 100, 125, 150 psig @ 72°F (22°C)

Note: Sizes 6″ and 8″ with burst ratings 125 and 150 psig @ 72°F (22°C) are stocked in INVERTED type

- ASME UD stamping available

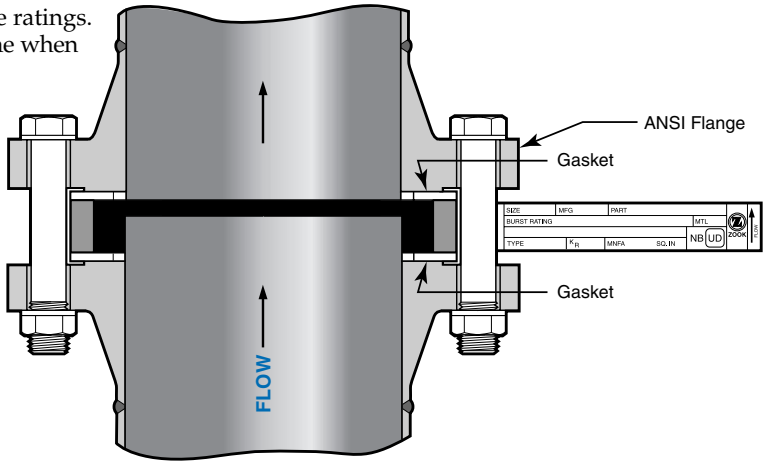

Certified Flow Resistance Factor (K_r)

Support Style	K_r
MONO – no support	0.26
MONO – with bar	2.40
MONO – with cross	5.40
MONO – with ring	6.44
MONO – with plate	15.70

Required Vacuum Support Style for Full Vacuum Service

Size	Burst Rating	Support Style
1″	below 25 psig	MONO – with ring
1-1/2″	below 25 psig	MONO – with bar
2″ - 14″	9 to 25 psig	MONO – with bar
2″ - 14″	5 to below 9 psig	MONO – with cross
2″ - 14″	below 5 psig	MONO – with plate

Specifications – ANSI Class 150

Disk Sizes	Minimum net flow area (MNFA) Sq. inches					Disk Dimensions				Burst Ratings psig	
	Full Bore	Vacuum support style				Diameter		Thickness*			
		Ring	Bar	Cross	Plate	I.D.	O.D.	Standard Disk	Insulated Unit	Min.	Max.
1/2″	0.19	N/A	N/A	N/A	N/A	1/2″	1-3/4″	5/8″	1-3/4″	25	150
3/4″	0.44	N/A	N/A	N/A	N/A	3/4″	2-1/8″	5/8″	1-3/4″	25	150
1″	0.78	0.44	0.60	0.47	0.32	1″	2-1/2″	7/8″	2-1/4″	10	150
1-1/2″	1.76	N/A	1.34	1.05	0.72	1-1/2″	3-1/4″	7/8″	2-1/4″	7	150
2″	3.14	N/A	2.39	1.86	1.30	2″	4″	7/8″	2-1/4″	3	150
3″	7.06	N/A	5.56	4.31	2.95	3″	5-1/4″	7/8″	2-1/4″	2	150
4″	12.56	N/A	10.56	8.81	5.47	4″	6-3/4″	7/8″	2-1/4″	1.5	150
6″	28.27	N/A	22.27	17.27	12.05	6″	8-5/8″	7/8″	2-1/4″	1	100
8″	50.26	N/A	40.26	31.82	21.14	8″	10-7/8″	1-1/8″	2-3/4″	0.50	100
10″	78.53	N/A	63.53	50.78	32.66	10″	13-1/4″	1-1/2″	3-3/8″	0.25	100
12″	113.09	N/A	89.09	69.09	47.24	12″	16″	2″	4-3/8″	0.25	75
14″	137.88	N/A	108.06	83.31	58.07	13-1/4″	17-5/8″	2-1/4″	4-7/8″	0.25	50
16″	182.65	N/A	144.52	112.65	84.49	15-1/4″	20-1/8″	2-1/2″	5-3/8″	0.25	50
18″	233.70	N/A	181.95	153.70	104.31	17-1/4″	21-1/2″	2-3/4″	5-7/8″	0.25	50
20″	291.03	N/A	233.28	184.53	122.49	19-1/4″	23-3/4″	3″	6-3/8″	0.25	40
24″	424.55	N/A	354.80	294.05	190.61	23-1/4″	28-1/8″	3″	6-3/8″	0.25	25

*Standard disk thickness does not include gaskets.
Insulated unit thickness includes all gaskets

Note: Maximum pressure rating of ANSI Class 150 flanges is 290 psig @ 100°F (38°C). The maximum pressure rating is lower at higher temperatures. Reference ASME/ANSI B16.5

Technical Data

Testing Method

Standard disks are rated at the specified burst pressure without applying a Manufacturing Design Range (MDR) by bursting two or more disks to establish burst accuracy. Where higher than room temperature (+40°F to +100°F) service is specified, oven tests can be conducted, or disks can be room temperature tested with compensation made using a temperature curve developed specifically for our disks. (These disks are designated *Chart Compensated Disks.*)
ASME disks are tested at the specified coincident temperature.

ASME Code and Jurisdictional Regulations

Most jurisdictions require ASME Code compliance on Boiler and Pressure Vessel construction. All pressure vessels within the scope of the ASME Code Section VIII, Div. 1 shall be provided with pressure relief devices. It is the responsibility of the ***user*** to ensure that the required devices are properly installed prior to initial operation of the pressure vessels.

If company policy or jurisdictional regulation requires ASME Code compliance, the rupture disk devices used for pressure vessel overpressure protection shall bear the ASME Code UD symbol. The UD marking is the manufacturer's declaration that the device was manufactured in full compliance with the ASME Code.

Disks specified to ASME Code requirements are rated using a 0% MDR unless a special MDR is specified and agreed upon. 0% MDR disks are marked with the specified burst rating. Refer to the certified type for the flow resistance factors (K_r) and the Minimum Net Flow Area (MNFA).

Pressure Ratings and Burst Tolerances

Burst ratings range from 0.25 psig to above 1000 psig for sizes 1/2″ thru 24″. Refer to minimum and maximum values in tables provided for each disk. Standard burst tolerances are:

Pressure Rating psig @ 72°F (22°C)	Burst Tolerance
Above 40	±5%
15 to 40	±2.0 psi
5 to less than 15	±1.0 psi
Above 1 to less than 5	±0.75 psi
1 or less	+0.75 psi /−0

Consult ZOOK for tighter burst tolerance

Corrosion Resistance

Depending on the type and options, disks handle almost any corrosive except free fluorine. See CORROSION Guide, page 8.

Vacuum

Disks are self-supporting up to full vacuum at burst ratings of 25 psig and higher. At lower pressures, integral vacuum supports are available only for MONO Disks. External vacuum supports are available for DUPLEX Disks. Consult ZOOK for partial vacuum services.

Dimensional Standards

Standard disks fit directly between ANSI Class 150 or 300 flanges with flat or raised faces. Flat ring gaskets are required and can be attached to the disk before shipment. Consult ZOOK for flange requirements other than ANSI.

Capacity and Flow Resistance

Full bore opening at time of rupture is a consistent characteristic of ZOOK Disks and results in very low flow resistance values (K_r). Refer to K_r values in tables provided for each disk type.

Service Life

Indefinite service life is normal in static systems. Replacement is unnecessary at operating-pressure to burst-rating ratios to 90%. In cycling service, this ratio should be lowered.

Burst Sensors

For remote and quick detection of a ruptured condition, ZOOK offers the ZENSOR™: Rupture disk and sensing element are integral parts of the electrical circuit to eliminate false readings. Model BA: An external re-usable and replaceable indicator. Specify Model BA-L for optional leak detection.

Armor

Armor is available on any standard style, size and rating of graphite rupture disk. Standard material is Carbon Steel (316SS optional). Armor is required on the following:

- Disks for ANSI Class 300 flanges
- TWO-WAY Type Disks
- Disks rated for temperatures above 338°F (170°C), regardless of disk style or flange class
- Disks for ANSI Class 150 flanges. See table at right with the following sizes and burst ratings:

Sizes	Rated Over psig @ 72°F (22°C)
1/2″ - 3″	150
4″	100
6″ - 10″	75
12″ - 24″	50

Where fire or blowdown temperatures exceeding 338°F (170°C) are design considerations, armor is required. Armored disks typically withstand the same conditions, i.e. blowdown temperatures, as the piping.

Disks not covered above are furnished unarmored unless armor is specifically ordered. Armor is highly recommended for:

- added safety
- greater reliability
- easier installation

WARNING

If a disk ruptures, material may:

- vent at high velocity with significant reaction thrust force
- contain disk particles and other solids and liquids
- be toxic or flammable.

The end user must make provisions to prevent personal injury and equipment damage. Use of disks described in this bulletin are intended for use only by persons with requisite technical skill and at their own discretion and risk. Because application, installation, and use are beyond our control, we make no warranties expressed or implied and do not assume any liability exceeding purchase price of the disk.

It is the responsibility of the end user to fully understand his process and determine the disk needed to properly protect the system.

Gaskets

Gaskets used with graphite disks are stocked in the following materials: Neoprene, Non-asbestos, solid PTFE, and PTFE envelope. Gaskets can be supplied loose or attached to the disk (Note: field installation of gaskets NOT recommended on TWO-WAY Disks or Insulted Units)

When supplying your own gaskets, follow dimensions in the chart, especially the inside diameter which provides proper clearance to ensure accurate burst. 1/8″ thick gasket is recommended. Gaskets for INSULATED Disks are made from high-temperature material and are always supplied attached.

Gasket Dimensions

Disk Size	Flanges			
	ANSI Class 150		ANSI Class 300	
	I.D.	O.D.	I.D.	O.D.
1/2″	3/4″	1-3/4″	3/4″	2″
3/4″	1″	2-1/8″	1″	2-1/2″
1″	1-5/16″	2-1/2″	1-5/16″	2-3/4″
1-1/2″	1-29/32″	3-1/4″	1-29/32″	3-5/8″
2″	2-1/2″	4″	2-1/2″	4-1/4″
3″	3-3/4″	5-1/4″	3-3/4″	5-3/4″
4″	5″	6-3/4″	4-3/4″	7″
6″	7-1/8″	8-5/8″	7-1/8″	9-3/4″
8″	8-7/8″	10-7/8″	9″	12″
10″	11-5/8″	13-1/4″	N/A	N/A
12″	13-3/4″	16″	N/A	N/A
14″	14-1/2″	17-5/8″	N/A	N/A
16″	17″	20-1/8″	N/A	N/A
18″	19-1/2″	21-1/2″	N/A	N/A
20″	21-3/4″	23-3/4″	N/A	N/A
24″	25″	28-1/8″	N/A	N/A

Corrosion Guide

Refer to the chart to determine which disk is best suited for your system fluid. Corrosives not shown can typically be accommodated by our unlined Graphite Disks. If in doubt, use the DUPLEX Disk or contact ZOOK to obtain a material sample for testing.

INSULATED Disks cannot be used with liquids, hydrofluoric and phosphoric acids or concentrated alkalis.

	MONO and INVERTED Disks	DUPLEX Disks*
Aluminum Hydroxide	No	Yes
Ammonium Hydroxide	No	Yes
Bromine (free)*	No	Yes
Calcium Chlorate	No	Yes
Calcium Hydroxide	No	Yes
Calcium Hypochlorite	No	Yes
Chloral	No	Yes
Chlorine (free)	No	Yes
Chromic Acid (plating)	No	Yes
Fluorine (free)	No	No
Hydrofluoric Acid	No	Yes
Iodine (free)	No	Yes
Molten Metal Alkalis	Yes	Yes
Nitric Acid	No	Yes
Oleum	No	Yes
Ozone	No	Yes
Potassium Chlorate	No	Yes
Potassium Hydroxide	No	Yes
Potassium Hypochlorite	No	Yes
Sodium Chlorate	No	Yes
Sodium Hydroxide	No	Yes
Sodium Hypochlorite	No	Yes
Sulfur Trioxide	No	Yes
Sulfuric Acid	No	Yes

*Upon request we will furnish liners in Kynar, FEP, PFA, or PTFE

Other Rupture Disks

Metal Rupture Disks and Disk Holders...

- Forward and Reverse-Acting Designs
- Full range of burst ratings and materials
- Non-fragmenting designs available
- Available with insert holders for bubbletight, metal-to-metal sealing

Sanitary Rupture Disks...

protect sanitary piping systems

- Metal or Graphite materials
- Ideal for food, pharmaceutical, medical, biotech other high purity systems
- Full range of burst ratings
- Comply with FDA requirements
- Full size range available
- No special holders or fittings required

Rail Car Rupture Disks...

can be used for a full year without change-out (regardless of number of trips)

- 60, 100, 135 or 165 psig burst ratings
- Meets or exceeds AAR A5.03 and A5.04 specifications
- Steel armored for added safety and greater reliability

Bak-Pressure™ Disks...

guard against excess pressure in common piping systems

- Burst ratings from 0.25 to over 1000 psig
- Sizes from 1/2″ thru 24″

Transportation Rupture Disks...

protect over-the-road tank trailers and intermodal tanks

- Sizes from 2″ thru 4″
- Metal or graphite materials available
- Stocked burst ratings: 30, 35, 40, 45, and 50 psig in graphite disks
- Last up to one year without change-out

For more information on any ZOOK Graphite Rupture Disks or to place an order contact:

ZOOK Enterprises, LLC
16809 Park Circle Drive
Box 419
Chagrin Falls, OH 44022

Local **440.543.1010**
U.S.A. Toll Free **800.543.1043**
Fax **440.543.4930**
E-Mail **zook@zook.cc**
www.zook.cc

CalgonCarbon	LINED PIPE MATERIAL SPECIFICATION	SPEC NO:
	PLASTIC LINED STEEL PIPE WITH PLASTIC LINED FLANGED FITTINGS	L01

SAP PART NUMBER:

CCC DRAWING NUMBER:

MATERIAL: Plastic lined steel pipe with plastic lined flanged fittings.

RATING: 150 PSIG @ minus 20 DEG. to plus 225 DEG. F.

CONSTRUCTION: Flanged 1" to 8", Crane Resistoflex brand piping system using polypropylene resin lined steel pipe and lined cast iron flanged fittings. Each spool piece and fitting to be furnished with ends of plastic liner formed over flanged ends to form a molded raised face.

PIPE: Schedule 40, ANSI B36.10, ASTM A53, steel pipe with lining.

FITTINGS: 125 lb., ANSI B16.1, ASTM A126, Class A, cast iron flanged with lining.

FLANGES: 125 lb., ANSI B16.1, ASTM A126, Class A, cast iron, threaded, flat face with smooth finish, drilled and chamfered.

BOLTING: See attached Fastener Specification F03.

FIELD FABRICATION: For piping not shop fabricated Contractor must have special tools and equipment to cut the lined pipe and form the molded raised face on the job. See Crane Resistoflex Design Manual for necessary equipment and instructions.

LINING: Thermally stabilized polypropylene resin.

Issue Date: 08/04/2009 Revision Date: 08/04/2009

Approved by Joseph P. McMahon on 08/13/2009

CalgonCarbon	STAINLESS STEEL PIPE MATERIAL SPECIFICATION	SPEC NO:
	INSTRUMENT PIPING, HEAT TRACING, ETC.	S06

SAP PART NUMBER:

CCC DRAWING NUMBER:

MATERIAL: Stainless steel tubing and flareless compression fittings, and stainless steel pipe and fittings.

RATING: 150 PSIG @ 365 DEG. F.
300 PSIG @ 100 DEG. F.

CONSTRUCTION: For tubing systems 1" and smaller. Pipe and screwed pipe fittings to be used for take-off connections on larger pipe, manifolding, connections to screwed instruments, equipment, etc. Tubing to be used for all other piping in the system.

PIPE NIPPLES: ASTM A312, Type 316, seamless, Schedule 80S, ANSI B36.19, annealed and pickled.

PIPE FITTINGS: Type 316 stainless steel screwed fittings, dimensions per ANSI B16.3, forged, wrought or cast material rated 150 lb. Camco Fittings Co., or equal.

TUBING: Type 316 stainless steel seamless tubing, 0.035" wall thickness, annealed and pickled, hardness 70-74 Rockwell "B", 1/4 O.D.

TUBE FITTINGS: Type 316 stainless steel, flareless compression fittings, Crawford Fitting Company "Swagelok", or equal.

Issue Date: 01/01/89 Revision Date:

Approved by Joseph P. McMahon on 07/24/98

CalgonCarbon	STAINLESS STEEL PIPE MATERIAL SPECIFICATION	SPEC NO:
	TYPE 316 STAINLESS STEEL PIPE AND FITTINGS	S15

SAP PART NUMBER:

CCC DRAWING NUMBER:

MATERIAL: Type 316 stainless steel pipe and fittings.

RATING: 150 PSIG @ 365 DEG. F.
300 PSIG @ 100 DEG.F.

CONSTRUCTION: Screwed for 3" and smaller

PIPE: Threaded, Schedule 40S, ASTM A312, Type316, welded, ANSI B36.19, annealed and pickled.

FITTINGS: Type 316 stainless steel screwed fittings, general dimensions to conform to ANSI B16.3 for malleable iron screwed fittings. Forged, wrought or cast material rated 150 Lb. @ 365 DEG.F., Camco Fittings Co., or equal.

FLANGES: Type 316 stainless steel, threaded, MSS-SP-51, 150 Lb. flat face, serrated finish.

ORIFICE FLANGES: Instrument Item.

BOLTING: See attached Fastener Specification F03.

GASKETS: See attached Gasket Specification G02.

Issue Date: 12/01/89 Revision Date: 06/20/2001

Approved by Gerald Kirner on 06/21/2001

SECTION 10

SHIPPING SPECIFICATION

SPECIFICATION NUMBER: VS-13

SHIPPING OF STANDARD METAL ADSORBER SYSTEMS

1.0 INTRODUCTION

1.1 The following Calgon Carbon Corporation shipping, and handling instructions are designed to protect the mechanical integrity and the surface finish of the adsorber vessels and/or piping comprising an adsorption system. Proper handling procedures are required to ensure against damage to the new equipment.

1.2 The shipping and handling instructions outlined here are only recommendations and do not relieve any party from full responsibility for proper inspection, handling, shipping preparation, transporting, or unloading of the equipment. Also, the purchaser should be aware that failure to take the precautions outlined here may invalidate the equipment warranty.

2.0 GENERAL HANDLING AND LIFTING INSTRUCTIONS

2.1 Calgon Carbon Corporation equipment is designed with specific locations for lifting and will withstand normal handling procedures. The lifting lugs, shown on the general arrangement installation drawing, are generally located on top of the vessel. Fork tubes are located near the bottom of the equipment.

Refer to the project drawings is required before handling the equipment.

2.2 Normal precautions to follow to prevent equipment damage are as follows:

2.2.1 Operators of hoist equipment must follow proper safety and rigging procedures at all times.

2.2.2 Always lift -- ***NEVER*** roll or slide the vessels or piping.

2.2.3 When moving equipment, do not drop or allow hard impact. Do not allow cables, hooks, or spanner bars to swing against the vessel.

2.2.4 Never allow tools to strike or drop on equipment (especially inside or outside of vessels).

2.2.5 All ladders used inside vessels should have ends protected. They should be wood construction; if not, ladders must have rubber protectors to prevent damaging the lining.

2.2.6 Workmen entering a lined vessel must wear soft-soled shoes, free of grit. Workmen must follow plant and OSHA requirements for confined space entry.

2.2.7 Always make lifting attachments to the lifting lugs when using chains or cables. Never lift from the nozzles.

2.2.8 Never lift a vessel by using any fitting or appurtenance other than the lift lugs. When lift lugs are not provided as part of the equipment, nylon web rigging slings must be used by attachment directly to the corners of the structural frame. It is recommended that the nylon web be protected with rubber pads or sheets to prevent cutting or tearing across the corners.

CALGON CARBON CORPORATION ♦ COPYRIGHT 2016 ♦ ALL RIGHTS RESERVED

3.0 PREPARATION FOR SHIPMENT

3.1 Calgon Carbon Corporation and their representatives are to take reasonable precautions when preparing equipment for shipment. Normally, a flat-bed truck will be used to transport the vessels, pipe rack and piping to the customer. Any hold-down location where a chain or strap contacts a painted surface must be protected with rubber sheeting, carpeting or other similar material.

3.2 Vessel loading will be the responsibility of the fabrication shop. Securing the load on the truck will be the responsibility of the truck driver. Painted surfaces must be protected from damage.

3.3 The pipe rack loading, if supplied, is the responsibility of the fabrication shop. The truck driver is to secure the rack to the truck bed. Points of contact are to be padded to protect the equipment.

3.4 All loose piping is to be loaded in such a manner as to avoid damage to painted surfaces. No chains are to be in direct contact with piping. Padding is to be used. Loading of loose piping will be the responsibility of the fabrication shop. The truck driver is to secure the piping to the truck bed.

4.0 SHIPPING REQUIREMENTS

4.1 Systems are typically shipped on one (1) truck. An additional truck may be required due to specific height or weight restrictions.

4.2 Once the vessels, pipe racks or loose piping are loaded onto a truck, they shall not be unloaded again until they reach their final destination.

4.3 No vessels, pipe racks or loose piping shall be shipped without a complete bill of lading which itemizes all parts. Also, no shipment shall be made without the completed packing list for crated parts which has been initialed by the person who packed and the person doing the checking.

5.0 INSPECTION UPON RECEIPT

5.1 The purchaser should arrange for an inspector or an authorized person at the jobsite to inspect and also supervise the off-loading of the system.

5.2 Check the bill of lading against the equipment received.

5.3 If damage has occurred during transit, it must be noted on the delivery receipt prior to signing acceptance. If damage has occurred, a claim should be filed promptly with the delivery carrier. If excessive damage is found:

- Do not unpack or unload the equipment
- Document the extent of the damage with photographs
- Contact your Calgon Carbon representative

5.4 If no claim is filed, the purchaser accepts all further responsibility for damaged equipment.

5.5 If damage has occurred and is not repaired by Calgon Carbon Corporation prior to the equipment being put into service, the purchaser accepts all future responsibility for the effects of equipment failure resulting from such damage.

CALGON CARBON CORPORATION ♦ COPYRIGHT 2016 ♦ ALL RIGHTS RESERVED

6.0 RECOMMENDED INSPECTION PROCEDURES

The following should be used as a guideline in making an inspection of the equipment prior to unloading.

6.1 The adsorber vessel exterior should be visually examined for damage. Any sign of impacting may result in cracked or flaking of the vessel interior lining. If this damage has occurred, it is required that the manway be opened and the interior lining be visually inspected.

6.2 Check the equipment for any signs of breakage, abrasion, shifting or rotation that may have resulted in damage to the paint on vessels, pipe rack, or loose piping.

6.3 Upon discovering minor or major damage, contact your Calgon Carbon representative to report your findings.

7.0 UNLOADING

7.1 Calgon Carbon Corporation specifically does not assume responsibility for the unloading of vessels, pipe racks or piping. Shipment will be considered complete when the equipment arrives at the jobsite and prior to removal of the equipment from the truck by the purchaser. The presence of Calgon Carbon Corporation representative(s) at the delivery or installation site does not relieve the purchaser of any of his responsibility for proper handling procedures.

7.2 All instructions shown in the Unloading/Foundations Section of the Calgon Carbon Corporation Operation and Maintenance Manual for this equipment shall be followed.

7.3 Vessel and pipe rack unloading shall be accomplished in such a manner as to avoid damage to finished surfaces. Adequate padding may be necessary around the lifting point.

7.4 The use of chains, slings, or a spreader bar is required for hoisting vessels and the pipe rack. The angle between the lifting point and the top of the equipment must always be 60° or greater. Workmen should keep control over the vessel with guidelines.

8.0 INSTALLATION

8.1 All instructions shown in Installation Section of the Calgon Carbon Corporation Operation and Maintenance Manual for this equipment shall be followed.

**** REVISIONS * ****

This specification has been revised as indicated below. The new pages added and/or the existing pages revised are attached as replacements for those previously issued.

REVISION	DATE	BY	PAGE	REMARKS
A	1-15-93	JMcM	All	Issued for Comment
B	5/19/93	JPM	All	Issued for Comment
C	9/1/93	JPM	2-3	Issued for Comment
D	10/12/93	JPM	3	Issued for Comment
E	11/13/07	JSR	All	
F	02/29/2008	RES	All	Modified to include vapor-phase equipment

ISSUED: JANUARY 15, 1993

CALGON CARBON CORPORATION ♦ COPYRIGHT 2016 ♦ ALL RIGHTS RESERVED

SECTION 11

DRAWINGS

SECTION 11

DRAWINGS

DRAWING INDEX

DRAWING NUMBER	REVISION	TITLE
91157779	0	Model 10 Carbon Adsorber System, 8" Piping, Non-Potable, Flow Diagram
91157780	0	Model 10 System, 125 PSIG, 10 ø Vessel, 8" Piping, General Arrangement; Sheets 1 & 2
91157781	1	Model 10, 125 PSIG, 10 Ft. Dia., V-214A Vessel Arrangement; Sheets 1 & 2
91157782	1	Model 10, 125 PSIG, 10 Ft. Dia., V-214B Vessel Arrangement; Sheets 1 & 2

CALGON CARBON CORPORATION ♦ COPYRIGHT 2016 ♦ ALL RIGHTS RESERVED

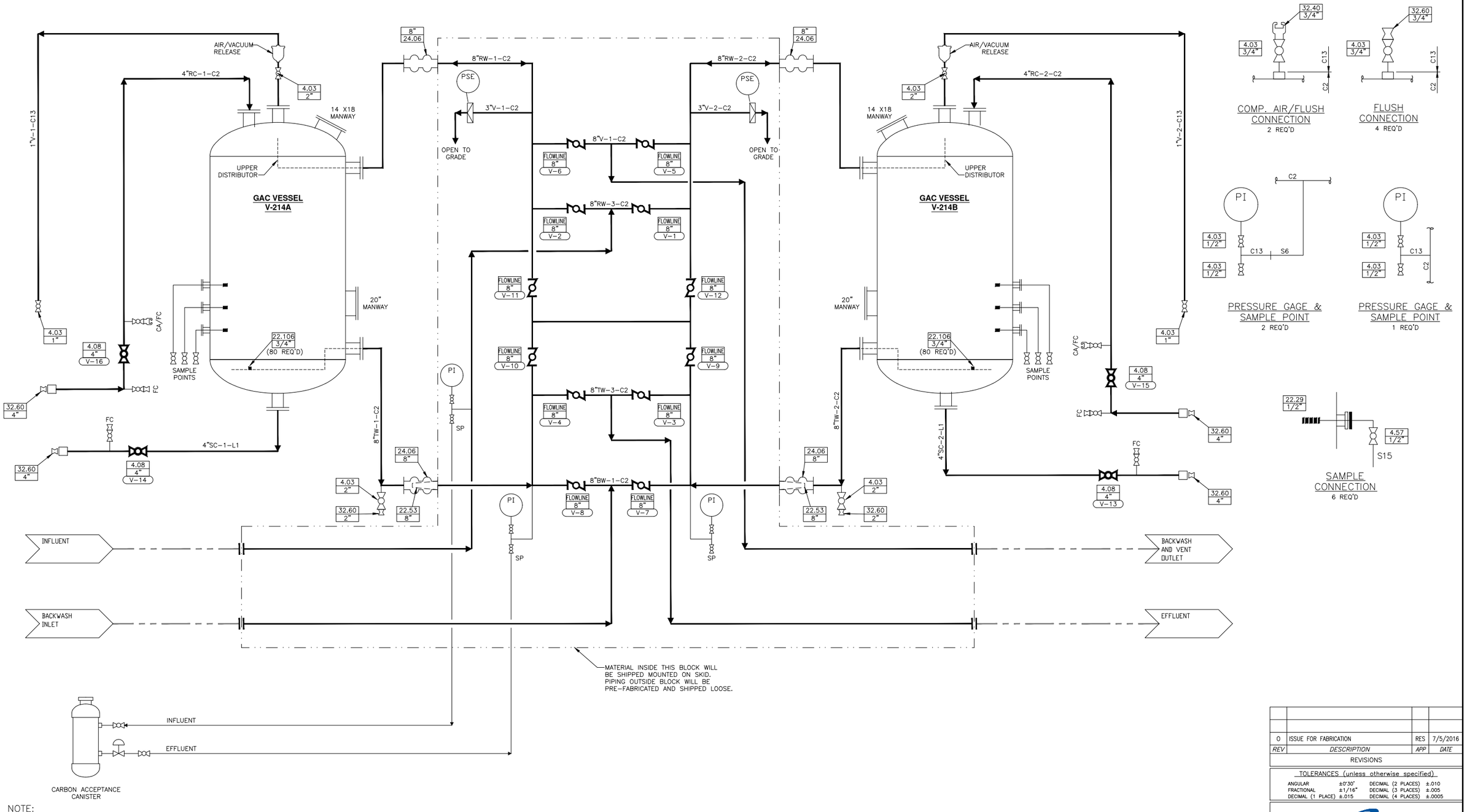

NOTE:
FOR CAC INSTALLATION, SEE O&M MANUAL.

MEDIA	INSTRUMENTATION	DESIGN CONDITIONS	LEGEND	ADSORBERS	UTILITY REQUIREMENTS
MEDIA: OLC AW 12 X 40 QUANTITY PER VESSEL: 20,000 LBS. SERVICE: NON-POTABLE	PI 217 PSE 577 FOR 100 psig MAX. OPER. PRESS. AIR/VACUUM RELEASE - CRISPIN AL SERIES PROCESS VAVLES - FLOWLINE W/ NYLON COATED DISC	FLOW RATE - 700 GPM (SERIES) 1400 GPM (PARALLEL) INFLUENT PRESSURE - 100 PSIG MAX. INFLUENT TEMP. - 120°F MAX. BACKWASH RATE - 550 GPM @ 60° F ELECTRIC POWER - 120 V, 60~ SINGLE PHASE, 15 AMP	BW - BACKWASH WATER FC - FLUSH CONNECTION RC - REACT.(OR VIRGIN) CARBON RW - RAW WATER SC - SPENT CARBON SLURRY SP - SAMPLE PORT TW - TREATED WATER V - VENT	10'-0" O.D. x 10'-0" S.S. ASME 2:1 ELLIPTICAL TOP AND BOTTOM HEADS. CARBON STEEL CONSTRUCTION. ASME SECT. VIII, DIV. 1 W/ PLASITE 4110 LINING 125 PSIG @ 140°F DESIGN.	AIR, CARBON TRANSFER - 100 SCFM @ 30 PSIG MIN. PLANT WATER - 100 GPM @ 30 PSIG MIN.

THIS DRAWING AND DESIGN IS THE PROPERTY OF CALGON CARBON CORPORATION AND IS NOT TO BE REPRODUCED IN WHOLE OR IN PART NOR EMPLOYED FOR ANY PURPOSE OTHER THAN SPECIFICALLY PERMITTED IN WRITING BY CALGON CARBON CORPORATION. THIS DRAWING LOANED SUBJECT TO RETURN ON DEMAND.

	NAME	DATE
DRAFTER	JPARRISH	12/11/2015
DESIGNER		
CHECKER	RES	7/5/2016
APPROVAL		
PROJECT No.	CTO.150010.KRTAF	

REV	DESCRIPTION	APP	DATE
0	ISSUE FOR FABRICATION	RES	7/5/2016

REVISIONS

TOLERANCES (unless otherwise specified)

ANGULAR	±0°30'	DECIMAL (2 PLACES)	±.010
FRACTIONAL	±1/16"	DECIMAL (3 PLACES)	±.005
DECIMAL (1 PLACE)	±.015	DECIMAL (4 PLACES)	±.0005

CalgonCarbon

CLIENT
KIRTLAND AFB
ALBUQUERQUE, NM

TITLE
MODEL 10 CARBON ADSORBER SYSTEM
8" PIPING, NON-POTABLE
FLOW DIAGRAM

DWG. Size	SHEET No.	SCALE
D	1 OF 1	NONE

DWG. No. 91157779 REV. 0

V:\2015\CTO.150010.KRTAF\Drawings\Process\91157779 P&ID.dwg Oct 12, 2016 - 2:11pm

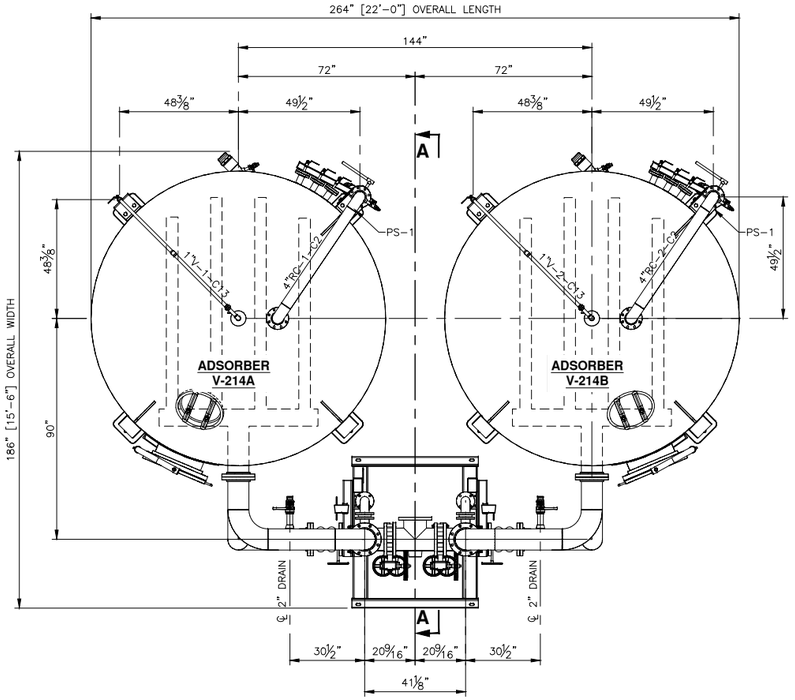

PLAN

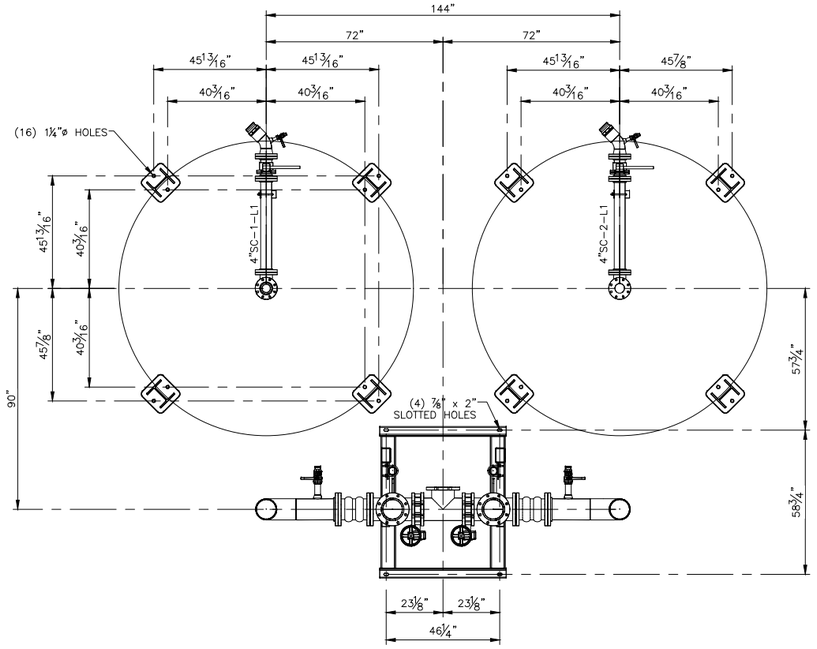

LOWER PLAN

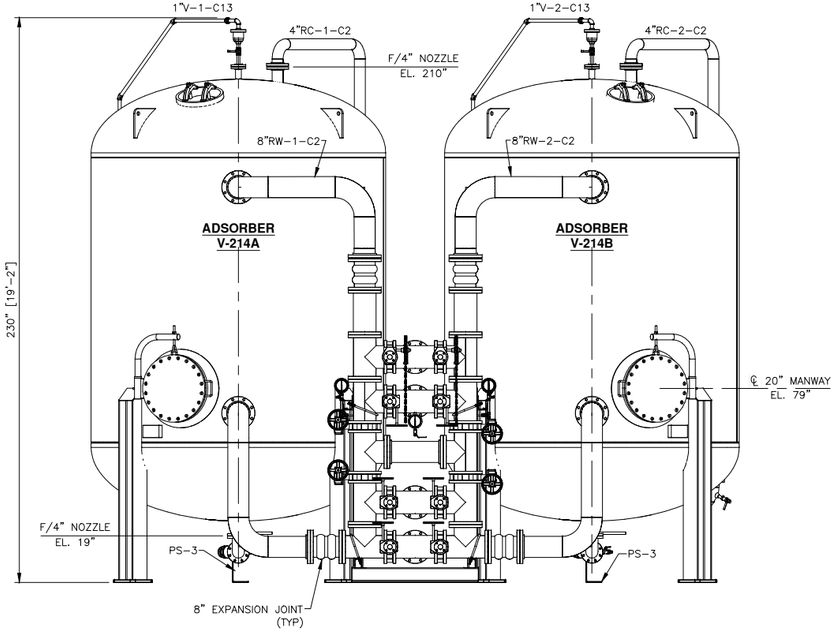

ELEVATION

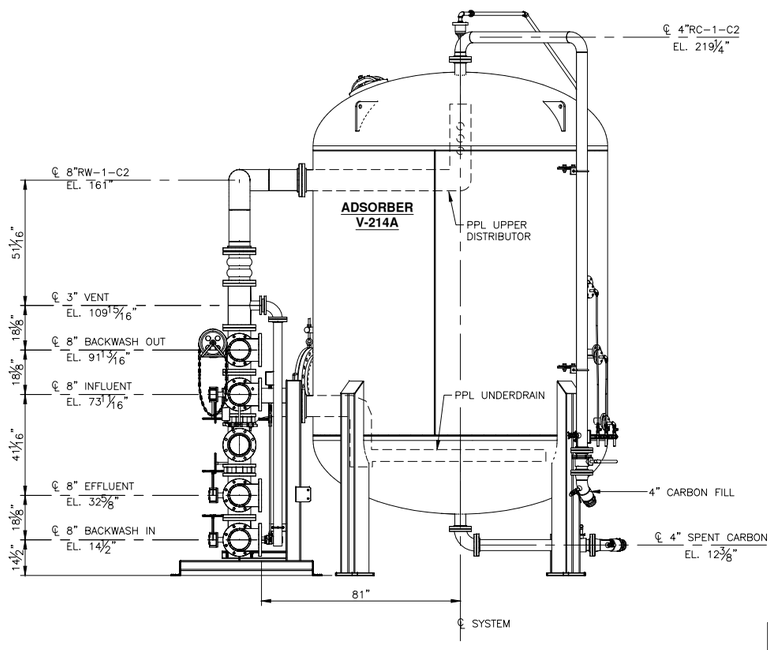

SECTION A-A

SYSTEM DATA	
DESIGN CONDITIONS	125 PSIG @ 140° F
DESIGN CODE	ASME SECTION VIII DIVISION1
APPROXIMATE WEIGHTS (LB.)	
VESSEL (EMPTY)	14,100
CARBON (PER VESSEL)	20,000
VESSEL (OPERATING)	90,000
SYSTEM (EMPTY)	40,000
SYSTEM (OPERATING)	214,000

NOTE:
1.) PIPE PAINTED TO MATCH VESSEL.

PIPE SUPPORT SCHEDULE			
ITEM#	REQ'D	DRAWING#	DESCRIPTION
PS-1	4	90110065	RAW CARBON
PS-2	4	90110118	AIR / VACUUM RELEASE
PS-3	2	91168001	SPENT CARBON
PS-4	2	91167959	SAMPLE/UNDER CONE VENT

REV	DESCRIPTION	APP	DATE
0	ISSUE FOR FABRICATION	RES	6/29/2016

REVISIONS

TOLERANCES (unless otherwise specified)

ANGULAR	±0°30"	DECIMAL (2 PLACES)	±.010
FRACTIONAL	±1/16"	DECIMAL (3 PLACES)	±.005
DECIMAL (1 PLACE)	±.015	DECIMAL (4 PLACES)	±.0005

THIS DRAWING AND DESIGN IS THE PROPERTY OF CALGON CARBON CORPORATION AND IS NOT TO BE REPRODUCED IN WHOLE OR IN PART NOR EMPLOYED FOR ANY PURPOSE OTHER THAN SPECIFICALLY PERMITTED IN WRITING BY CALGON CARBON CORPORATION. THIS DRAWING LOANED SUBJECT TO RETURN ON DEMAND.

	NAME	DATE
DRAFTER	JPARRISH	12/15/2015
DESIGNER		
CHECKER	JFS	6/28/2016
APPROVAL		
PROJECT No.	CTO.150010.KRTAF	

CalgonCarbon

CLIENT
KIRTLAND AFB
ALBUQUERQUE, NM

TITLE
MODEL 10 SYSTEM, 125 PSIG
10'ø VESSEL, 8" PIPING
GENERAL ARRANGEMENT

DWG. Size	SHEET No.	SCALE
D	1 OF 2	NONE
DWG. No. 91157780		REV. 0

V:\2015\CTO.150010.KRTAF\Drawings\General Arrangements\91157780 GA.dwg Oct 12, 2016 - 2:17pm

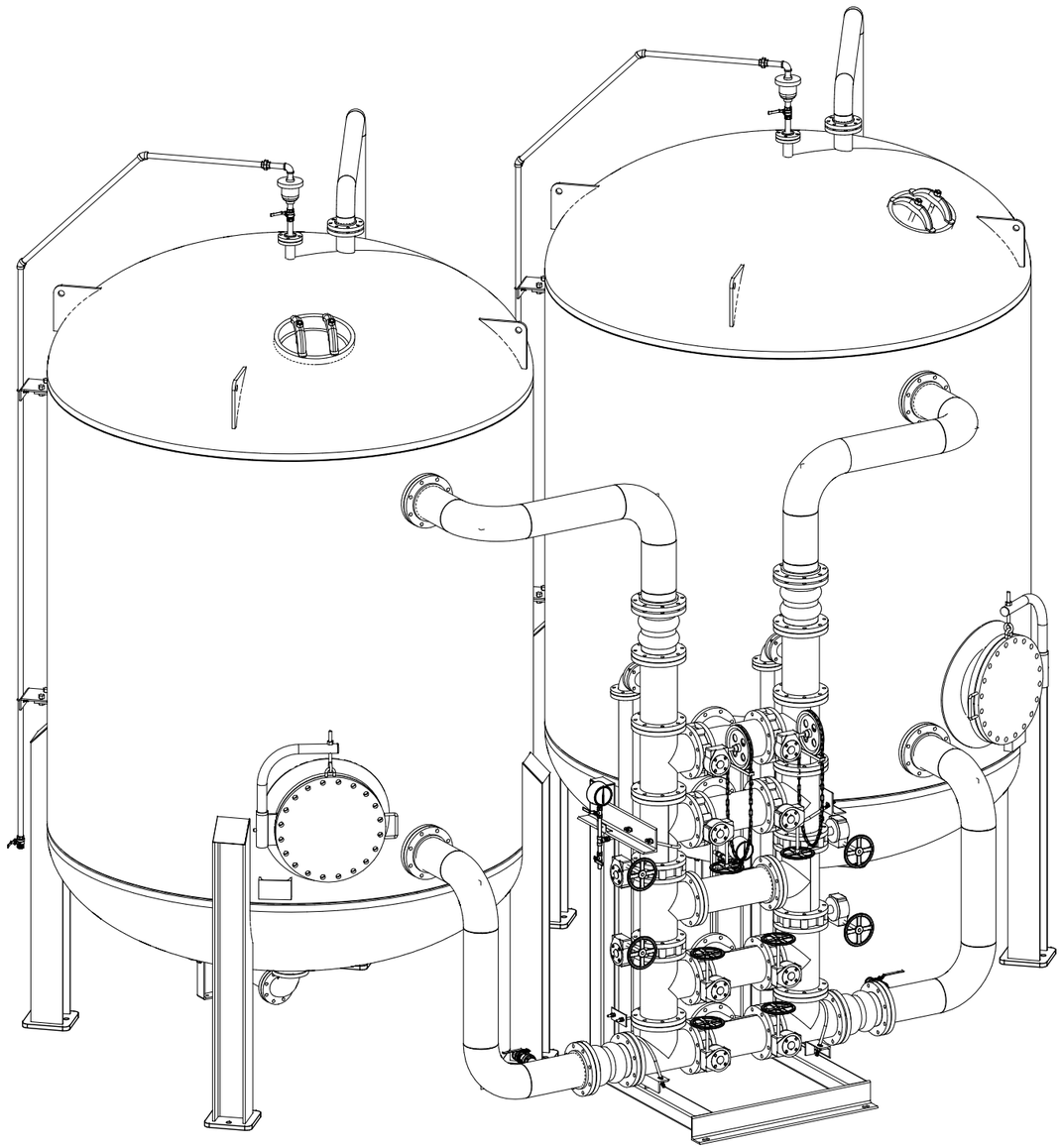

ISOMETRIC FRONT VIEW

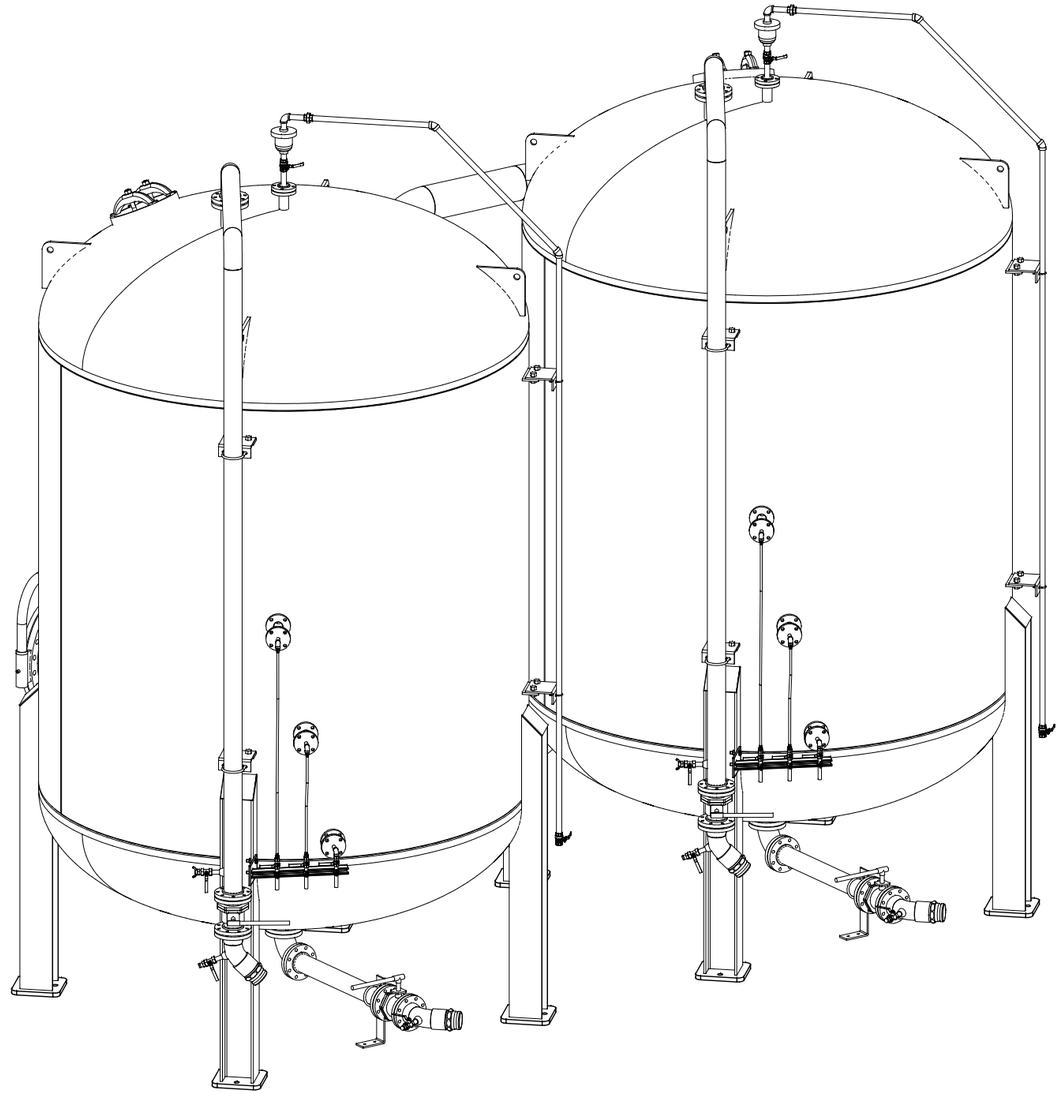

ISOMETRIC REAR VIEW

0	ISSUE FOR FABRICATION	RES	6/29/2016
REV	*DESCRIPTION*	*APP*	*DATE*

REVISIONS

TOLERANCES (unless otherwise specified)

ANGULAR	±0°30"	DECIMAL (2 PLACES)	±.010
FRACTIONAL	±1/16"	DECIMAL (3 PLACES)	±.005
DECIMAL (1 PLACE)	±.015	DECIMAL (4 PLACES)	±.0005

THIS DRAWING AND DESIGN IS THE PROPERTY OF CALGON CARBON CORPORATION AND IS NOT TO BE REPRODUCED IN WHOLE OR IN PART NOR EMPLOYED FOR ANY PURPOSE OTHER THAN SPECIFICALLY PERMITTED IN WRITING BY CALGON CARBON CORPORATION. THIS DRAWING LOANED SUBJECT TO RETURN ON DEMAND.

	NAME	DATE
DRAFTER	JPARRISH	12/15/2015
DESIGNER		
CHECKER	JFS	6/28/2016
APPROVAL		
PROJECT No.	CTO.150010.KRTAF	

CalgonCarbon

CLIENT
KIRTLAND AFB
ALBUQUERQUE, NM

TITLE
MODEL 10 SYSTEM, 125 PSIG
10'ø VESSEL, 8" PIPING
GENERAL ARRANGEMENT

DWG. Size D	*SHEET No.* 2 OF 2	*SCALE* NONE	
DWG. No. 91157780		*REV.* 0	

V:\2015\CTO.150010.KRTAF\Drawings\General Arrangements\91157780 GA.dwg Oct 12, 2016 - 2:19pm

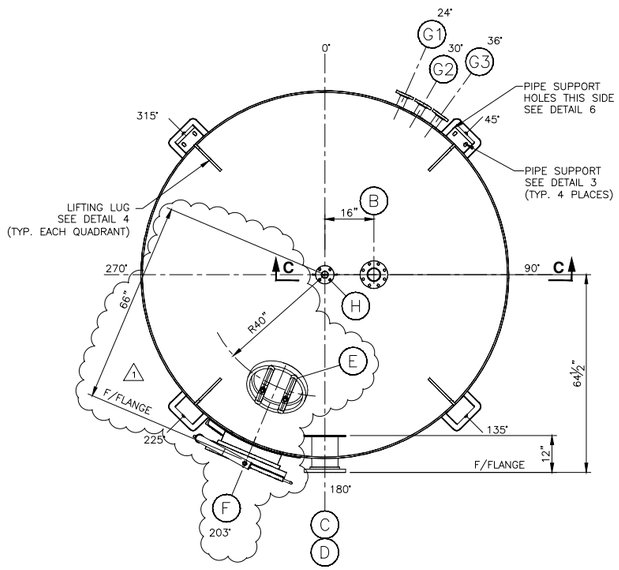

PLAN

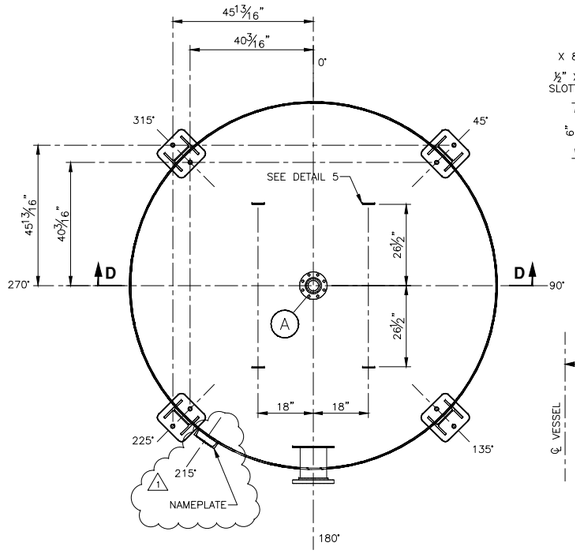

SECTION A-A

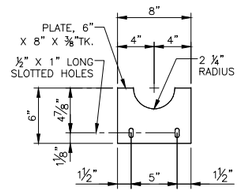

DETAIL 7
UPPER DISTRIBUTOR CLIP

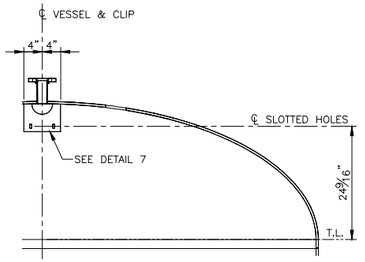

SECTION C-C

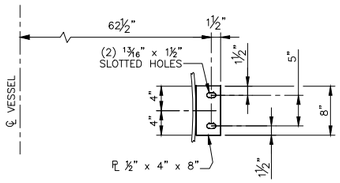

DETAIL 3
PIPE SUPPORT
(4) REQ'D

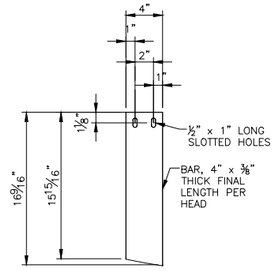

DETAIL 5
UNDER DRAIN CLIP
(4) REQ'D

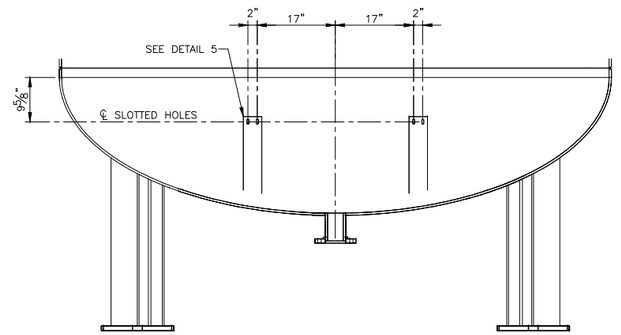

SECTION D-D
UNDER DRAIN CLIP

VESSEL DESCRIPTION	VESSEL V-214A	
REFERENCES	VESSEL SPECIFICATION VS1	
DESIGN CONDITIONS	125 PSIG @ 140° F	
OPERATING CONDITIONS		
PROCESS FLUID	WATER, S.G. = 1.0	
WALL THICKNESS	PER CODE REQUIREMENTS	
MATERIALS OF CONSTRUCTION	SHELL	SA-516 GR. 70
	TOP HEAD	SA-516 GR. 70
	BOT. HEAD	SA-516 GR. 70
	NOZZLES	SA-106 GR. B (UNLESS NOTED)
	FLANGES	SA-105 (UNLESS NOTED)
	LINING	PLASITE 4110 35-45 MIL NOMINAL DFT PER CCC SPEC. VS-7
	FORCE CURED PER NSF 61 CRITERIA	NO
	SUPPORTS	A-992
	BOLTING	MANWAY: A-325 GR 1, GALVANIZED NOZZLES: A-307 GR B, ZINC PLATED
	GASKETS	EPDM (45-55 DUROMETER)
TYPE CONSTRUCTION	FUSION WELDED	
CORROS. ALLOW	NONE	
CODE	ASME SECTION VIII, DIVISION 1, LATEST EDITION	
INSPECTION	BY CALGON & CODE AGENCY	
STAMPING	ASME "U", NBR	
TESTING	HYDROSTATIC PER CODE	
STRESS RELIEF	PER CODE	
RADIOGRAPH	PER CODE AND CALGON CALCULATIONS	
NAMEPLATE	ASME	
STENCILS	LINED TANK – DO NOT WELD OR BURN	
SEISMIC LOAD	IBC 2006, Ss = .458, SITE CLASS D, I = 1.25	
INSULATION	NONE – SEE NOTE 6	
SURFACE PREP	EXTERIOR	BRUSH BLAST PER SSPC-SP7
	INTERIOR	WHITE METAL BLAST PER SSPC-SP5
1 PAINTING	PRIMER COAT	SHERWIN-WILLIAMS RECOATABLE EPOXY PRIMER (LIGHT GRAY)
	FINISH COAT	SHERWIN-WILLIAMS ACROLON 218 PER CCC SPEC. RS-15. COLOR: SW7425 – WHITE 5-7 MILS DFT TOTAL COATING
CAPACITIES	FULL	7,700 GAL
	OPERATING	7,700 GAL AT 100% FILL
	MEDIA	20,000 LBS.
WEIGHTS	EMPTY	14,100 LBS.
	FULL H_2O	79,000 LBS.
	FULL PRODUCT	34,100 LBS. (DRY CARBON)
	OPERATING	90,000 LBS.

NOZZLE SCHEDULE

MARK	REQ'D	SIZE	DRILLING	FACING	DESCRIPTION
A	1	4"	150#	F.F.	CARBON OUTLET
B	1	4"	150#	F.F.	CARBON INLET/VENT
C	1	8"	150#	F.F.	INFLUENT
D	1	8"	150#	F.F.	EFFLUENT
E	1	14X18	ELLIP.		MANWAY W/ ¼" THK. GASKET
F	1	20"	150#	F.F.	MANWAY W/BLIND FLANGE & GASKET
G	3	2"	150#	F.F.	SAMPLE POINT
H	1	2"	150#	F.F.	AIR RELEASE

NOTES:

1. ALL INTERIOR WELDS & EDGES TO BE GROUND TO 1/8" RADIUS MIN.
2. ALL NOZZLES MUST BE FLUSH ON INSIDE OF SHELL, U.O.N
3. 20" MANWAY FLG. TO BE SECURED WITH (2) BOLTS. REMAINDER OF BOLTS & NUTS TO BE PACKAGED AND SHIPPED IN THE CRATE.
4. REMOVE ALL WATER & DIRT AFTER HYDROTEST.
5. REMOVE ALL WELD SPATTER.
6. CONTACT CCC FOR HEAT TRACE REQUIREMENTS.
7. ALL FLANGE BOLT HOLES TO STRADDLE CENTERLINES.
8. FOR MANWAY DETAIL SEE DWG. 90110066.

ELEVATION
SEE PLAN FOR TRUE ORIENTATION

DETAIL 2
SAMPLE POINT
(3) REQ'D

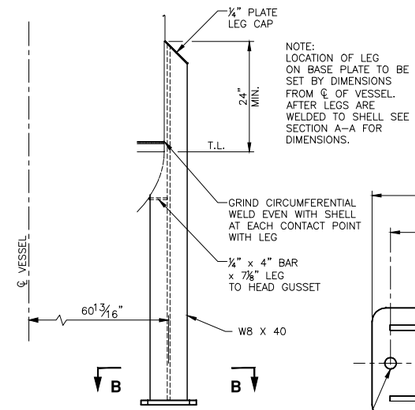

DETAIL 1
VESSEL SUPPORT LEG
(4) REQ'D

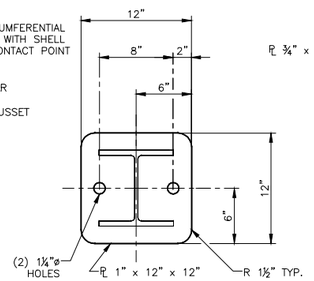

SECTION B-B
BASE PLATE
(4) REQ'D

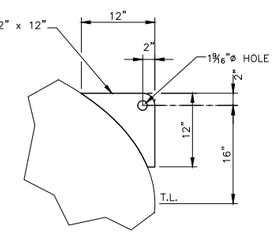

DETAIL 4
LIFTING LUG
(4) REQ'D

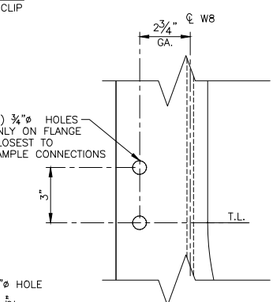

DETAIL 6
AT LEG LOCATED AT 45° ONLY

REV	DESCRIPTION	APP	DATE
1	MANWAYS, SAMPLE NOZZLE, PAINT & COLOR	MHS	7/6/2016
0	ISSUE FOR FABRICATION	MHS	5/16/2016

REVISIONS

TOLERANCES (unless otherwise specified)

ANGULAR	±0°30'	DECIMAL (2 PLACES)	±.010
FRACTIONAL	±1/16"	DECIMAL (3 PLACES)	±.005
DECIMAL (1 PLACE)	±.015	DECIMAL (4 PLACES)	±.0005

THIS DRAWING AND DESIGN IS THE PROPERTY OF CALGON CARBON CORPORATION AND IS NOT TO BE REPRODUCED IN WHOLE OR IN PART NOR EMPLOYED FOR ANY PURPOSE OTHER THAN SPECIFICALLY PERMITTED IN WRITING BY CALGON CARBON CORPORATION. THIS DRAWING LOANED SUBJECT TO RETURN ON DEMAND.

	NAME	DATE
DRAFTER	JPARRISH	12/18/2015
DESIGNER		
CHECKER	M. SAULSBERY	5/16/2016
APPROVAL		
PROJECT No.	CTO.150010.KRTAF	

CalgonCarbon

CLIENT: KIRTLAND AFB ALBUQUERQUE, NM

TITLE: MODEL 10, 125 PSIG 10 FT DIA. VESSEL ARRANGEMENT

DWG. Size	SHEET No.	SCALE
D	1 OF 2	NONE

DWG. No. 91157781 REV. 1

C:\Users\jparrish\oppdata\local\temp\AcPublish_2096\91157781 PV1 Ves Argt.dwg Jul 06, 2016 - 11:24am

BILL OF MATERIAL					
ITEM	QTY.	DESCRIPTION	MATERIAL	SAP No.	CCC SPEC
1	80	SEPTA	PPL	---	22.106
2	1	DECAL, DANGER, MANWAY	---	1058401	---
3	2	DECAL, CALGON LOGO	---	1059524	---
4	2	DECAL, LINED TANK	---	1025014	---
5	1	DECAL, DANGER, ELLIPTICAL MANWAY	---	1002706	---
6	1	GASKET, ELLIPTICAL 14" X 18" X ¼" THICK	WHITE EPDM	1053980	G46
7	1	GASKET, 20", 150#, ⅛" THICK	WHITE EPDM	1054140	G46
8	20	BOLT, 1 ⅛" X 5" LG, HVY. HEX W/ NUT, GALVANIZED	A-325 GR 1	1060550	---

MATERIAL FOR ONE VESSEL, TWO REQUIRED

NOTES:

1.) LOCATE MANWAY DANGER DECALS ITEMS (2) & (5) AS SHOWN.

2.) LOCATE LINED TANK DECALS ITEM (4) NEAR BOTTOM WELD SEAM TO CLEAR PIPING.

3.) LOCATE CCC LOGOS ITEM (3) AT 0° & 180°, HEIGHT AS SHOWN.

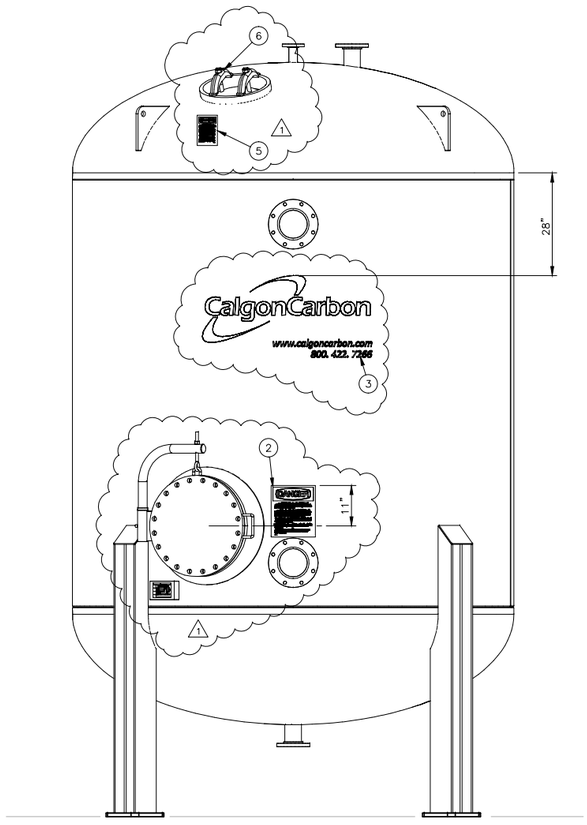

FRONT ELEVATION

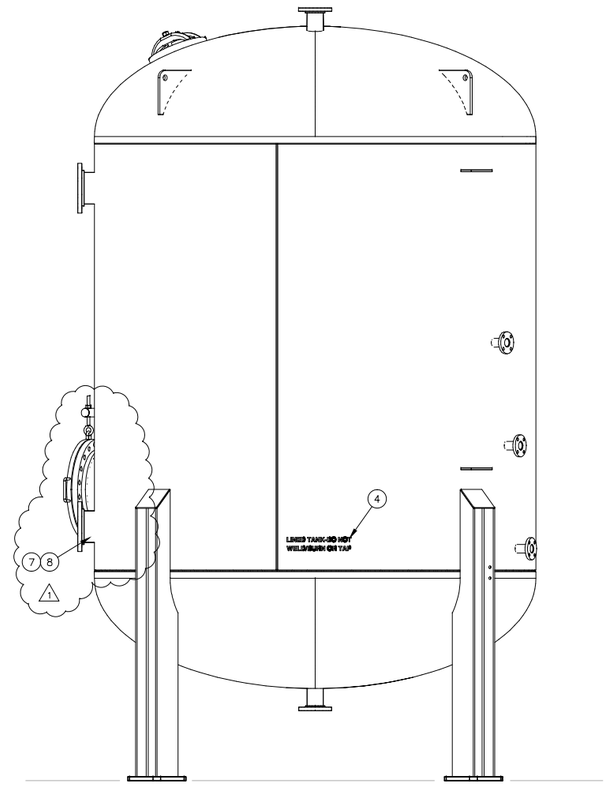

RIGHT ELEVATION

THIS DRAWING AND DESIGN IS THE PROPERTY OF CALGON CARBON CORPORATION AND IS NOT TO BE REPRODUCED IN WHOLE OR IN PART NOR EMPLOYED FOR ANY PURPOSE OTHER THAN SPECIFICALLY PERMITTED IN WRITING BY CALGON CARBON CORPORATION. THIS DRAWING LOANED SUBJECT TO RETURN ON DEMAND.

	NAME	DATE
DRAFTER	JPARRISH	12/18/2015
DESIGNER		
CHECKER	M. SAULSBERY	5/16/2016
APPROVAL		
PROJECT No.	CTO.150010.KRTAF	

REV	DESCRIPTION	APP	DATE
1	MANWAYS, SAMPLE NOZZLE, PAINT & COLOR	MHS	7/6/2016
0	ISSUE FOR FABRICATION	MHS	5/16/2016

REVISIONS

TOLERANCES (unless otherwise specified)

ANGULAR	±0°30'	DECIMAL (2 PLACES)	±.010
FRACTIONAL	±1/16"	DECIMAL (3 PLACES)	±.005
DECIMAL (1 PLACE)	±.015	DECIMAL (4 PLACES)	±.0005

CalgonCarbon

CLIENT: KIRTLAND AFB
ALBUQUERQUE, NM

TITLE: MODEL 10, 125 PSIG
10 FT DIA.
VESSEL ARRANGEMENT

DWG. Size	SHEET No.	SCALE
D	2 OF 2	NONE

DWG. No. 91157781 REV. 1

C:\Users\jparrish\oppdata\local\temp\AcPublish_2096\91157781 PV1 Ves Arrgt.dwg Jul 06, 2016 - 11:24am

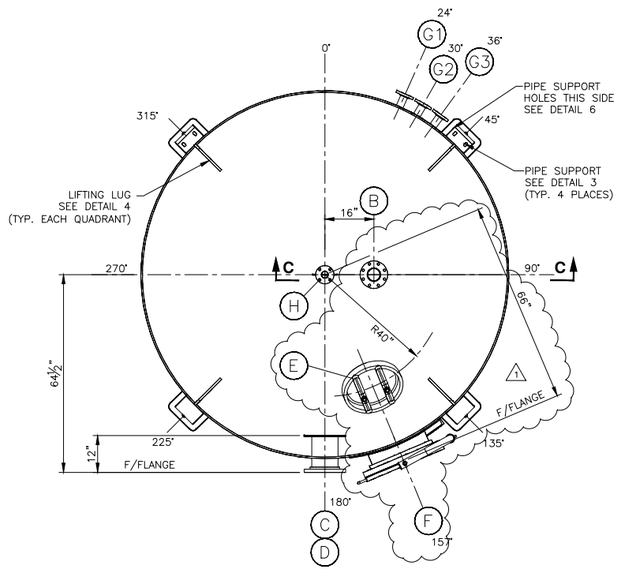

PLAN

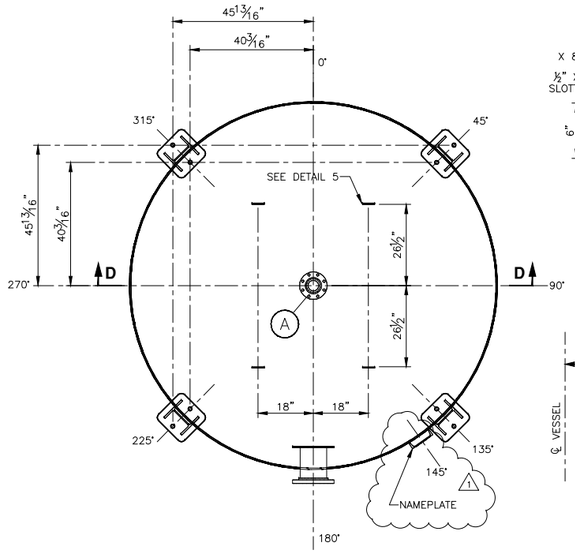

SECTION A-A

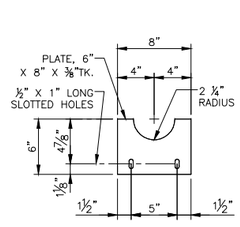

DETAIL 7
UPPER DISTRIBUTOR CLIP

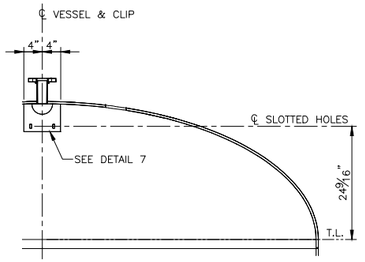

SECTION C-C

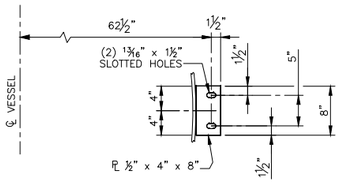

DETAIL 3
PIPE SUPPORT
(4) REQ'D

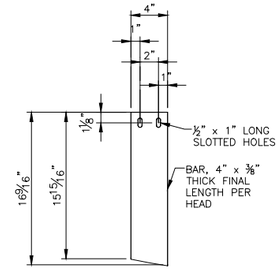

DETAIL 5
UNDER DRAIN CLIP
(4) REQ'D

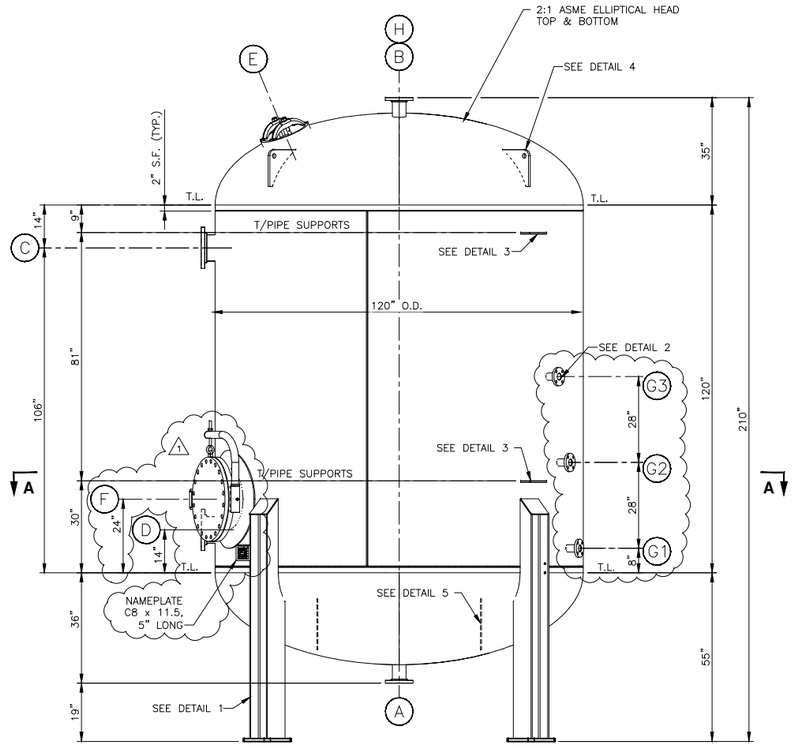

ELEVATION
SEE PLAN FOR TRUE ORIENTATION

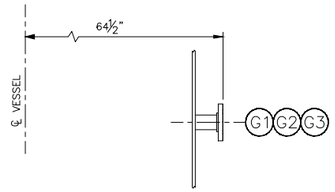

DETAIL 2
SAMPLE POINT
(3) REQ'D

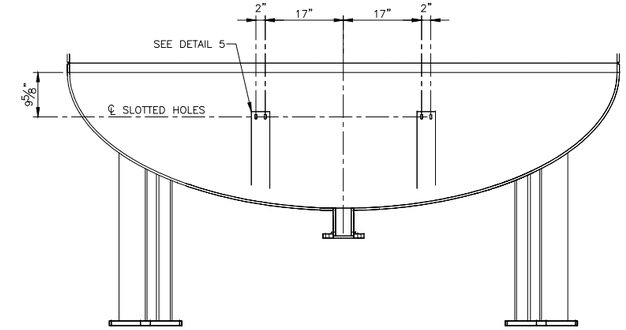

SECTION D-D
UNDER DRAIN CLIP

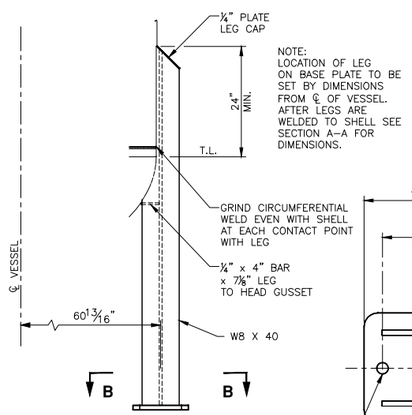

DETAIL 1
VESSEL SUPPORT LEG
(4) REQ'D

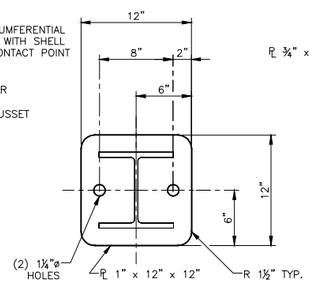

SECTION B-B
BASE PLATE
(4) REQ'D

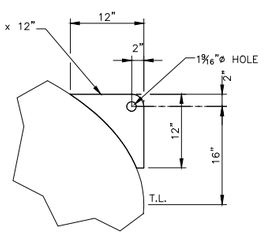

DETAIL 4
LIFTING LUG
(4) REQ'D

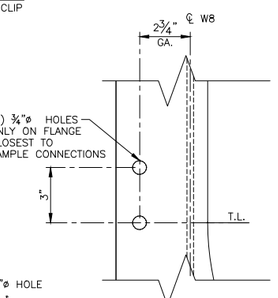

DETAIL 6
AT LEG LOCATED AT 45° ONLY

VESSEL DESCRIPTION	VESSEL V-214B
REFERENCES	VESSEL SPECIFICATION VS1
DESIGN CONDITIONS	125 PSIG @ 140° F
OPERATING CONDITIONS	
PROCESS FLUID	WATER, S.G. = 1.0

WALL THICKNESS	PER CODE REQUIREMENTS		
MATERIALS OF CONSTRUCTION	SHELL	SA-516 GR. 70	
	TOP HEAD	SA-516 GR. 70	
	BOT. HEAD	SA-516 GR. 70	
	NOZZLES	SA-106 GR. B (UNLESS NOTED)	
	FLANGES	SA-105 (UNLESS NOTED)	
	LINING	PLASITE 4110 35-45 MIL NOMINAL DFT PER CCC SPEC. VS-7	
	FORCE CURED PER NSF 61 CRITERIA		NO
	SUPPORTS	A-992	
	BOLTING	MANWAY: A-325 GR 1, GALVANIZED NOZZLES: A-307 GR B, ZINC PLATED	
	GASKETS	EPDM (45-55 DUROMETER)	

TYPE CONSTRUCTION	FUSION WELDED	
CORROS. ALLOW	NONE	
CODE	ASME SECTION VIII, DIVISION 1, LATEST EDITION	
INSPECTION	BY CALGON & CODE AGENCY	
STAMPING	ASME "U", NBR	
TESTING	HYDROSTATIC PER CODE	
STRESS RELIEF	PER CODE	
RADIOGRAPH	PER CODE AND CALGON CALCULATIONS	
NAMEPLATE	ASME	
STENCILS	LINED TANK - DO NOT WELD OR BURN	
SEISMIC LOAD	IBC 2006, Ss = .458, SITE CLASS D, I = 1.25	
INSULATION	NONE - SEE NOTE 6	
SURFACE PREP	EXTERIOR	BRUSH BLAST PER SSPC-SP7
	INTERIOR	WHITE METAL BLAST PER SSPC-SP5
1 PAINTING	PRIMER COAT	SHERWIN-WILLIAMS RECOATABLE EPOXY PRIMER (LIGHT GRAY)
	FINISH COAT	SHERWIN-WILLIAMS ACROLON 218 PER CCC SPEC. RS-15. COLOR: SW7425 - WHITE 5-7 MILS DFT TOTAL COATING
CAPACITIES	FULL	7,700 GAL
	OPERATING	7,700 GAL AT 100% FILL
	MEDIA	20,000 LBS.
WEIGHTS	EMPTY	14,100 LBS.
	FULL H_2O	79,000 LBS.
	FULL PRODUCT	34,100 LBS. (DRY CARBON)
	OPERATING	90,000 LBS.

NOZZLE SCHEDULE

MARK	REQ'D	SIZE	DRILLING	FACING	DESCRIPTION
A	1	4"	150#	F.F.	CARBON OUTLET
B	1	4"	150#	F.F.	CARBON INLET/VENT
C	1	8"	150#	F.F.	INFLUENT
D	1	8"	150#	F.F.	EFFLUENT
E	1	14X18	ELLIP.		MANWAY W/ ¼" THK. GASKET
F	1	20"	150#	F.F.	MANWAY W/BLIND FLANGE & GASKET
G	3	2"	150#	F.F.	SAMPLE POINT
H	1	2"	150#	F.F.	AIR RELEASE

NOTES:

1. ALL INTERIOR WELDS & EDGES TO BE GROUND TO 1/8" RADIUS MIN.
2. ALL NOZZLES MUST BE FLUSH ON INSIDE OF SHELL, U.O.N
3. 20" MANWAY FLG. TO BE SECURED WITH (2) BOLTS. REMAINDER OF BOLTS & NUTS TO BE PACKAGED AND SHIPPED IN THE CRATE.
4. REMOVE ALL WATER & DIRT AFTER HYDROTEST.
5. REMOVE ALL WELD SPATTER.
6. CONTACT CCC FOR HEAT TRACE REQUIREMENTS.
7. ALL FLANGE BOLT HOLES TO STRADDLE CENTERLINES.
8. FOR MANWAY DETAIL SEE DWG. 90110066.

REV	DESCRIPTION	APP	DATE
1	MANWAYS, SAMPLE NOZZLES, PAINT & COLOR	MHS	7/6/2016
0	ISSUE FOR FABRICATION	MHS	5/16/2016

REVISIONS

TOLERANCES (unless otherwise specified)

ANGULAR	±0°30'	DECIMAL (2 PLACES)	±.010
FRACTIONAL	±1/16"	DECIMAL (3 PLACES)	±.005
DECIMAL (1 PLACE)	±.015	DECIMAL (4 PLACES)	±.0005

THIS DRAWING AND DESIGN IS THE PROPERTY OF CALGON CARBON CORPORATION AND IS NOT TO BE REPRODUCED IN WHOLE OR IN PART NOR EMPLOYED FOR ANY PURPOSE OTHER THAN SPECIFICALLY PERMITTED IN WRITING BY CALGON CARBON CORPORATION. THIS DRAWING LOANED SUBJECT TO RETURN ON DEMAND.

	NAME	DATE
DRAFTER	JPARRISH	12/18/2015
DESIGNER		
CHECKER	M. SAULSBERY	5/16/2016
APPROVAL		
PROJECT No.	CTO.150010.KRTAF	

CalgonCarbon

CLIENT: KIRTLAND AFB ALBUQUERQUE, NM

TITLE: MODEL 10, 125 PSIG 10 FT DIA. VESSEL ARRANGEMENT

DWG. Size	SHEET No.	SCALE
D	1 OF 2	NONE

DWG. No. 91157782 REV. 1

C:\Users\jparrish\oppdata\local\temp\AcPublish_2096\91157782 PV2 Ves Arrgt.dwg Jul 06, 2016 - 11:24am

BILL OF MATERIAL					
ITEM	QTY.	DESCRIPTION	MATERIAL	SAP No.	CCC SPEC
1	80	SEPTA	PPL	---	22.106
2	1	DECAL, DANGER, MANWAY	---	1058401	---
3	2	DECAL, CALGON LOGO	---	1059524	---
4	2	DECAL, LINED TANK	---	1025014	---
5	1	DECAL, DANGER, ELLIPTICAL MANWAY	---	1002706	---
6	1	GASKET, ELLIPTICAL 14" X 18" X ¼" THICK	WHITE EPDM	1053980	G46
7	1	GASKET, 20", 150#, ¼" THICK	WHITE EPDM	1054140	G46
8	20	BOLT, 1 ⅛" X 5" LG, HVY. HEX W/ NUT, GALVANIZED	A-325 GR 1	1060550	---

MATERIAL FOR ONE VESSEL, TWO REQUIRED

NOTES:

1.) LOCATE MANWAY DANGER DECALS ITEMS (2) & (5) AS SHOWN.

2.) LOCATE LINED TANK DECALS ITEM (4) NEAR BOTTOM WELD SEAM TO CLEAR PIPING.

3.) LOCATE CCC LOGOS ITEM (3) AT 0° & 180°, HEIGHT AS SHOWN.

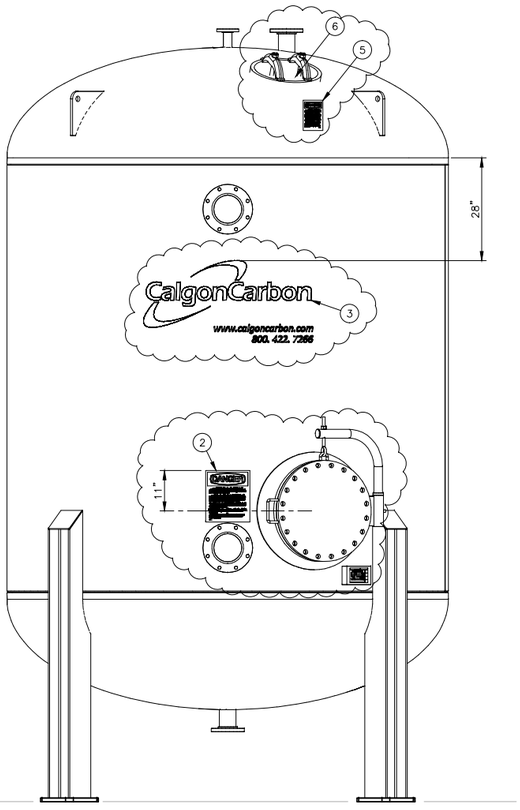

FRONT ELEVATION

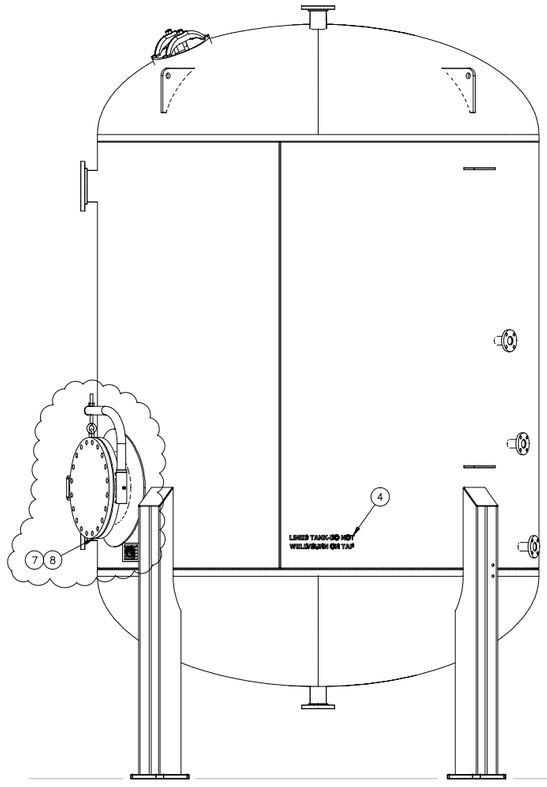

RIGHT ELEVATION

THIS DRAWING AND DESIGN IS THE PROPERTY OF CALGON CARBON CORPORATION AND IS NOT TO BE REPRODUCED IN WHOLE OR IN PART NOR EMPLOYED FOR ANY PURPOSE OTHER THAN SPECIFICALLY PERMITTED IN WRITING BY CALGON CARBON CORPORATION. THIS DRAWING LOANED SUBJECT TO RETURN ON DEMAND.

	NAME	DATE
DRAFTER	JPARRISH	12/18/2015
DESIGNER		
CHECKER	M. SAULSBERY	5/16/2016
APPROVAL		
PROJECT No.	CTO.150010.KRTAF	

REV	DESCRIPTION	APP	DATE
1	MANWAYS, SAMPLE NOZZLES, PAINT & COLOR	MHS	7/6/2016
0	ISSUE FOR FABRICATION	MHS	5/16/2016

REVISIONS

TOLERANCES (unless otherwise specified)

ANGULAR	±0°30'	DECIMAL (2 PLACES)	±.010
FRACTIONAL	±1/16"	DECIMAL (3 PLACES)	±.005
DECIMAL (1 PLACE)	±.015	DECIMAL (4 PLACES)	±.0005

CalgonCarbon

CLIENT: KIRTLAND AFB
ALBUQUERQUE, NM

TITLE: MODEL 10, 125 PSIG
10 FT DIA.
VESSEL ARRANGEMENT

DWG. Size	SHEET No.	SCALE
D	2 OF 2	NONE

DWG. No. 91157782 REV. 1

C:\Users\jparrish\appdata\local\temp\AcPublish_2096\91157782 PV2 Ves Arrgt.dwg Jul 06, 2016 - 11:24am

Status Date: **31-Jan-2018**

SUBMITTAL LOG
KIRTLAND AFB BULK FUELS FACILITY
CONTRACT NUMBER W912DR-12-D-0006 DM01
KAFB-106239 Conveyance Line Installation

Submittal Tracking #	Subcontractor	Spec. Section/ Doc.	Paragraph	Document Description/Title	Submittal Deadline	Submittal/ Resubmittal Date	Approval Date Date	Status	Comments
1	RMCI, Inc.	40 05 13	Pipelines, Liquid Process Piping	HDPE Pipe and Fittings	7/20/17 10:16 AM	7/21/17 3:00 PM	7/25/17 8:21 AM	Complete	
2	RMCI, Inc.	00 00 00	No Spec	Bilco Hatches	7/20/17 12:25 PM	7/25/17 11:00 AM	7/28/17 2:42 PM	Complete	
3	RMCI, Inc.	00 00 00	No Spec	Directional Drill Conduit	8/1/17 8:00 AM	8/2/17 8:00 AM	8/2/17 9:55 AM	Complete	
4	RMCI, Inc.	00 00 00	No Spec	Concrete Mix Design	8/1/17 8:00 AM	8/2/17 8:00 AM	8/2/17 9:48 AM	Complete	
5	RMCI, Inc.	31 00 00	Earthwork	Buried Warning Tape	8/1/17 8:00 AM	8/2/17 8:00 AM	8/2/17 9:52 AM	Complete	
6	RMCI, Inc.	40 05 13	Pipelines, Liquid Process Piping	Nuts, Bolts, Gasket Kits	8/1/17 8:00 AM	8/31/17 12:07 PM	9/6/17 10:26 AM	Complete	
7	RMCI, Inc.	00 00 00	No Spec	Tracer Wire	8/1/17 8:00 AM	8/16/17 8:30 AM	8/16/17 3:39 PM	Complete	
8	RMCI, Inc.	40 05 13	Pipelines, Liquid Process Piping	Steel Piping	8/1/17 8:00 AM	8/16/17 8:30 AM	8/16/17 3:29 PM	Complete	
9	RMCI, Inc.	40 05 13	Pipelines, Liquid Process Piping	Check Valve	8/1/17 8:00 AM	9/13/17 7:50 AM	9/13/17 4:40 PM	Complete	Resubmitted on 9/13/17
10	RMCI, Inc.	40 05 13	Pipelines, Liquid Process Piping	Pipe Supports	8/1/17 8:00 AM	8/3/17 12:50 PM	8/3/17 3:34 PM	Complete	
11	RMCI, Inc.	41 05 13	Pipelines, Liquid Process Piping	Wall Sleeve and Link Seal	8/1/17 8:00 AM	8/16/17 8:45 AM	8/16/17 3:22 PM	Complete	
12	RMCI, Inc.	40 05 13	Pipelines, Liquid Process Piping	Leak Detection System	8/1/17 8:00 AM	8/4/17 8:48 AM	8/7/17 10:30 AM	Complete	
13	RMCI, Inc.	00 00 00	No Spec	Basecourse Underneath Electrical Pad	9/7/17 12:13 PM	9/7/17 3:20 PM	9/12/17 3:21 PM	Complete	
14	RMCI, Inc.	00 00 00	No Spec	Gavel Underneath Electrical Pad	9/7/17 12:17 PM	9/7/17 3:20 PM	9/12/17 3:29 PM	Complete	
15	RMCI, Inc.	00 00 00	No Spec	Fencing and Gates	9/7/17 2:03 PM	9/11/17 9:45 PM	9/12/17 3:39 PM	Complete	
16	RMCI, Inc.	00 00 00	No Spec	Precast Vault Submittals	9/11/17 1:00 PM	9/13/17 7:50 AM	9/18/17 12:55 PM	Complete	
17	RMCI, Inc.	00 00 00	No Spec	Precast Vault Concrete Mix Design Submittals	9/11/17 1:00 PM	9/13/17 7:50 AM	9/14/17 12:24 PM	Complete	
18	RMCI, Inc.	00 00 00	No Spec	Pipe Coating	10/30/17 1:00 PM	11/1/17 9:00 AM	11/6/17 9:31 AM	Complete	
19	RMCI, Inc.	32 92 19	Seeding	Seed Certifications	11/17/17 10:00 AM	11/28/17 10:45 AM	11/28/17 3:30 PM	Complete	Resubmitted on 11/28/17
	RMCI, Inc.	31 00 00	Earthwork	Density Test Reports	As Completed	With Daily CQM Reports	With Daily CQM Reports	Complete	POST COMPLETION SUBMITTAL
	RMCI, Inc.	41 05 13	Pipelines, Liquid Process Piping	Hydrostatic Test Reports	As Completed	With Daily CQM Reports	With Daily CQM Reports	Complete	POST COMPLETION SUBMITTAL
	RMCI, Inc.	42 05 13	Pipelines, Liquid Process Piping	Pneumatic Test Reports	As Completed	With Daily CQM Reports	With Daily CQM Reports	Complete	POST COMPLETION SUBMITTAL
	RMCI, Inc.	43 05 13	Pipelines, Liquid Process Piping	Fusion Test Reports	As Completed	With Daily CQM Reports	With Daily CQM Reports	Complete	POST COMPLETION SUBMITTAL
	RMCI, Inc.	44 05 13	Pipelines, Liquid Process Piping	Fusion Welder Certifications	As Completed	With Daily CQM Reports	With Daily CQM Reports	Complete	POST COMPLETION SUBMITTAL
	RMCI, Inc.	00 00 00	No Spec	Concrete Test Reports	As Completed	With Daily CQM Reports	With Daily CQM Reports	Complete	POST COMPLETION SUBMITTAL
	RMCI, Inc.	00 00 00	No Spec	Electronic As-Builts	12/29/17 5:00 PM	12/29/17 5:00 PM			POST COMPLETION SUBMITTAL
	RMCI, Inc.	00 00 00	No Spec	Asphalt Mix Design					NOT NEEDED
	RMCI, Inc.	00 00 00	No Spec	Asphalt Test Reports					NOT NEEDED
	Wilson Electric	00 00 00	No Spec	Metering	8/7/17 3:30 PM	8/8/17 2:30 PM	8/14/17 11:58 AM	Complete	
	Wilson Electric	00 00 00	No Spec	MV Cable	8/7/17 3:30 PM	12/7/17 12:51 PM	12/7/17 1:43 PM	Complete	Resubmitted on 12/7/17
	Wilson Electric	00 00 00	No Spec	MV Terminations	8/7/17 3:30 PM	8/8/17 2:30 PM	8/14/17 11:44 AM	Complete	
	Wilson Electric	00 00 00	No Spec	Breaker/junction boxes	8/15/17 12:30 PM	8/16/17 11:00 AM	8/21/17 1:38 PM	Complete, with clarification	Wilson Electric Response: "The breakers in the Sentron Unit are what Siemens says are what are needed for adequate protection. They did say that the breakers can be changed out in the field with what is specified"
	Wilson Electric	00 00 00	No Spec	Transformer	8/15/17 12:30 PM	10/9/17 1:15 PM	10/10/17 2:54 PM	Complete	Resubmitted 10/9/17
	Wilson Electric	00 00 00	No Spec	Pull Boxes	8/16/17 5:07 PM	8/17/17 8:50 AM	8/24/17 12:04 PM	Complete	
	Wilson Electric	00 00 00	No Spec	Fiber Optic System	8/25/17 3:51 PM	9/6/17 2:30 PM	9/12/17 7:26 AM	Complete	
	Wilson Electric	00 00 00	No Spec	Pulling Plan					Identified at Preparatory Phase Meeting, instructed by USACE on 12-20-17 that a pulling plan would not be required as all of the runs were straight runs.
	Wilson Electric	00 00 00	No Spec	VLF Testing Certifications	As Completed	With Daily CQM Reports	With Daily CQM Reports	Complete	Identified at Preparatory Phase Meeting
8	Techsas, Inc.	00 00 00	No Spec	KAFB-106239 VFD	10/2/17 3:31 PM	11/21/17 9:05 AM	11/22/17 12:56 PM	Complete	10/10/17 15:33 USACE requested additional information requiring resubmittal
9	Techsas, Inc.	00 00 00	No Spec	PLC and Instrumentation	10/2/17 3:31 PM	10/13/17 9:30 AM	10/17/17 3:23 PM	Complete	
10	Techsas, Inc.	00 00 00	No Spec	Well Pump and Components	10/2/17 3:31 PM	10/31/17 12:00PM	10/6/17 9:49 AM	Complete	
11	Techsas, Inc.	00 00 00	No Spec	Recovery Well Vault Components	10/2/17 3:31 PM	10/13/17 9:30 AM	12/7/17 11:14 AM	Complete	Resubmitted on 12/05/17
	I&C Solutions			None					NOT NEEDED
	EA	00 00 00	No Spec	Existing Conveyance Line Drainage Plan	9/26/17 5:00 PM	9/27/17 3:27 PM	10/2/17 12:25 PM	Complete	
					--END OF LOG--				

DEPARTMENT OF THE ARMY
ALBUQUERQUE DISTRICT, CORPS OF ENGINEERS
ALBUQERQUE DISTRICT OFFICE
4101 JEFFERSON PLAZA NE
ALBUQUERQUE, NM 87109

SUBMITTAL REVIEW VERIFICATION SHEET

PROJECT TITLE: Kirtland BFF Mid-Plume Pump and Treat System Expansion
CONTRACT NUMBER: W912DR-12-D-0006 DM01
DATE RECEIVED: 7-21-2017
DATE REVIEWED: 7-25-2017

DESCRIPTION OF ITEMS REVIEWED:

1. HDPE Pipe and Fittings

NO EXCEPTIONS TAKEN.	X
EXCEPTIONS AS NOTED ON DRAWINGS AND/OR ATTACHED SHEETS(S). RESUBMISSION NOT REQUIRED.	
EXCEPTIONS AS NOTED ON DRAWINGS AND/OR ATTACHED SHEETS(S). RESUBMISSION REQUIRED.	
RECEIPT ACKKNOWLEDGED.	

Notes:

NOTE: ITEMS REVIEWED AS TO GENERAL LAYOUT ONLY. DIMENSIONS AND QUANTITIES NOT CHECKED. REVIEW DOES NOT RELIEVE CONTRACTOR OF RESPONSIBILITIES FOR ANY ERRORS WHICH MAY EXIST AS CONTRACTOR SHALL BE RESPONSIBLE FOR DIMENSIONS AND DESIGN OF ADEQUATE CORRECTIONS, DETAILS AND SATISFACTORY CONSTRUCTION OF WORK.

SIGNATURE SANCHEZ.AMY.ELIZABETH.1454434338 Digitally signed by SANCHEZ.AMY.ELIZABETH.1454434338 DN: c=US, o=U.S. Government, ou=DoD, ou=PKI, ou=USA, cn=SANCHEZ.AMY.ELIZABETH.1454434338 Date: 2017.07.25 08:17:21 -06'00' **DATE** 07/25/2017

EA Engineering, Science, and Technology, Inc., PBC

Submittal Review Sheet 1

Project Name: **Kirtland BFF Mid-Plume Pump and Treat System Expansion**			Date Received: **07/20/2017**
Project Owner: **Kirtland Air Force Base**			Checked By: **Tyler Curley**
Contractor: **RMCI, Inc.**	Engineer: **EA Engineering, Science and Technology, Inc., PBC.**		Log Page: **NA**
Address: **6211 Chappell Rd NE, Albuquerque, NM 87113**	Address: **320 Gold Ave. SW, Suite 1300 Albuquerque, NM 87102**		EA No.: 62599DM01
			Spec. Section: **40 05 13 - Pipelines Liquid Process Piping**
			Drawing/Detail No.:
ATTN: Philip Johnson	ATTN: **Devon Jercinovic**	1st Sub	Re-Sub
Date Transmitted: **07/20/2017**	Prev. Transmittal Date:		

Item No.	No. Copies	Description	Manufacturer	Mfg/Vendor Dwg or Detail	Action Taken*
1	1	HDPE Pipe and Fittings	Harrington Industrial Plastics LLC		**B**

The Action Designated Above is in Accordance with the Following Legend:

A – Furnish as Submitted
B – Furnish as Noted
C – Revise and Re-submit
1. Not enough information for review.
2. No reproducible submitted.
3. Copies illegible.
4. Not enough copies submitted.
5. Wrong sequence number.
6. Wrong resubmittal number.
7. Wrong Spec. Section.
8. Wrong form used.
9. See Comments.

D – Rejected
E – Engineer's Review not Required
1. Submittal not required.
2. Supplemental Information. Submittal retained for Information purposes only.
3. Information reviewed and approved on prior submittal.
4. See Comments.

Review is for general compliance with Contract Documents. No responsibility is assumed for correctness of dimensions or detail. Contractor is required to specify deviations from contract requirements. Lack of exceptions noted by Engineer does not waive Contractor's obligation to comply with Drawings and Specifications.

Comments:
Items reviewed and confirmed to meet requirements
(Reviewed Material in Parentheses)
Issues in Bold

- Piping material is PE 4710 for both the carrier and containment piping instead of PE 4710/3608 as specified. The pressure rating of the containment pipe is 125 psi when using PE 4710 compared to 100 psi of the specified PE 3608. Due to the higher pressure rating of the PE 4710 I feel this is an acceptable material. Spec sheet provided to RMCI by manufacturer is included and replaces the Spec sheet in the submittal (page 23 of the submittal).

EA Engineering, Science, and Technology, Inc., PBC

By: _____ Date: 7/21/17

Distribution: [1] Contractor [1] Engineer [1] Owner

Asahi/America, Inc.

SPECIFICATION FOR
FLUID-LOK HDPE DUAL CONTAINMENT PIPE

SECTION 1500 MECHANICAL

1. GENERAL

1.1.1 Summary

This specification shall govern the materials and installation of High Density Polyethylene dual contained system of pipe and structures. Materials identified in ASTM D-2657 shall be purchased and installed according to this specification. The general contractor shall be responsible for the overall operation of the complete system. The mechanical contractor shall be responsible for the acceptable condition of the containment piping. No deviation from this specification shall be allowed without express written consent of the engineer.

1.1.2 References

ASME B31.3 Hydrostatic Testing Guidelines

AWW C901-Polyethylene Pressure Pipe, Tubing and Fittings, ½" through 3" for Water
AWWA C906-Polyethylene (PE) Pressure Pipe and Fittings, 4" through 63" for Water Distribution.

ASTM F714-Polyethylene Plastic Pipe Based on Outside Diameter (3" to 63")

NSF Std #14-Plastic Piping Components & Related Materials

ASTM C-1147-Practice for Determining Short Term Tensile Weld Strength of Chemical Resistance

ASTM D-638-Test Method of Tensile Properties of Plastics

ASTM D-790-Test Method for Flexural Properties of Unreinforced and Reinforced Plastics and Electrical Insulating Materials

ASTM D-1238-Test Method for Flow Rates of Thermal Plastics by Extrusion Plastometer

ASTM D-1248-Specification for Polyethylene Plastics Molding and Extrusion Materials

ASTM F-1248-Determination of Environmental Stress Crack Resistance (ESCR) of Polyethylene Pipe

ASTM D-1505-Test Method for Density of Plastics by the Density Gradient Technique

ASTM D-1599-Test Method for Short Time Hydraulic Failure Pressure of Plastic Pipe, Tubing and Fittings

ASTM D-1693-Test Method for Environmental Stress Cracking of Ethylene Plastics

ASTM D-2122-Method for Determining Dimensions of Thermal Plastic Pipe and Fittings

ASTM D-2239-Polyethylene Plastic Pipe (SIDR-PR). (Iron Pipe Size; Inside Diameter)

ASTM D-2513- Specification for Thermoplastic Gas Pressure Pipe, Tubings and Fittings

ASTM D-2657-Guideline for Polyolefin Thermoplastic Butt Fusion Heat Welding

ASTM D-2737-Polyethylene Plastic Tubing (Copper Tube Size; Outside Diameter)

ASTM D-2837- Method for Obtaining Hydrostatic Design Basis for Thermal Plastic Pipe Materials

ASTM D-3035-Polyethylene (PE) Plastic (DR-PR) Based on Controlled Outside Diameter (1/2" to 24")

ASTM D-3350-Specification for Polyethylene Plastics Pipe and Fittings Material

ASTM D-4218-Test Method for Carbon Black Content in Polyethylene Compounds by the Muffle-Furnace Technique
Plastic Piping Institute Best Practices TR 31/9-79

1.1.3 Definitions

Product pipe = Inside pipe or carrier pipe
Containment Pipe – Outer pipe

1.1.4 System Description

A. System shall be a double-containment piping system produced on High Density Polyethylene on both the product and containment pipe.
B. System shall provide the ability to incorporate leak detection as specified within the Leak Detection Section. Access tees, pull ropes and low-point instrumentation taps shall be provided as specified by leak detection vendor or contract drawings.
C. System shall provide full containment of all accessories such as floor drains, cleanouts, valves and tanks, etc.

1.2 System Performance Requirements

System shall handle the following:

Description	Product Pipe	Containment Pipe
Operation Pressure		
Operating Temperature		
Test Pressure		
Media concentration		

1.2.1 Submittals

Submit the following:

A. Product data for each type of double containment specified including details of construction relative to materials, dimensions of individual components, profiles and finishes.
B. Product certificates signed by manufacturer of double containment product stating compliance with stated requirements.
C. Welder certificates certifying that welders comply with the installation procedures as outlined by ASTM D 2657 Section 9 prior to construction.
D. Qualifications of firms supplying double containment piping. Firms must have a minimum of 10 years experience in the design, installation and operation of a thermoplastic double-wall piping system.

1.2.2 Quality Assurance

A. Obtain components from a single source having responsibility and accountability to answer and resolve problems regarding proper installation, compatibility, performance and acceptance.
B. Design, fabricate and install double-containment piping to meet ASME/ANSI B31.3 where applicable manufacturer shall provide thermal stress analysis demonstrating the ability of the double-containment piping system to handle the stated piping conditions with a restrained or a flexible design, as follows:

1. **Restrained Design**
   The system shall be restrained with no accommodation for inner-pipe movement. Location of anchors shall be responsibility of manufacturer.

2. **Flexible Design**
   The system shall be a flexible design with provisions to allow inner and outer pipe ability to move independent of one another. Anchors will be selectively used to direct thermal expansion into expansion loops, offsets, etc. Size, location and quantity of expansion loops, etc., shall be responsibility of manufacturer.

1.2.3 Delivery, Storage and Handling

A. Deliver double-containment piping as a factory assembled unit with protective wrapping/coverings.

B. Store products on elevated platforms in a dry location with protection from elements.
C. Lift, support and transport double-containment piping per manufacturer's recommendations.

1.2.4 Warranty
Warranty period is one year after date of substantial completion of installation.

1.2.5 Extra Materials
Turn over to owner at end of construction necessary welding equipment as suggested by manufacturer for repair and maintenance of the double-containment product.

PART 2. PRODUCTS

2.1 Manufacturers
Subject to the compliance with requirements and products that may be incorporated into the work include Fluid-Lok by Asahi/America, Inc. of Malden, Massachusetts 1-800-343-3618.

2.2 Materials
A. PIPE AND FITTINGS

The pipe used to fabricate the system supplied under this specification shall be high density, extra high molecular weight polyethylene pipe. The pipe and fittings shall conform to ASTM D-3350 with minimum cell classification values of 345464C. The pipe and fittings shall be made from the same polyethylene resin base which meets this specification.

B. PHYSICAL PROPERTIES OF PIPE COMPOUND

Density – the density shall be no less than 0.955 gms/ccm as referenced in ASTM D1505.

Melt Index-the melt index shall be no greater than 0.15 gms/10 minutes when tested in accordance with ASTM D 1238.

Flex Modulus-flexural modulus shall be 135,000 psi as referenced in ASTM D638.

Tensile Strength at yield-tensile strength shall be 3,200 to less than 3,500 psi as referenced in ASTM D638.

ESCR-Environmental Stress Crack Resistance shall be in excess of 5,000 hours with zero failures when tested in accordance with ASTM D 1693-Condition C.

Hydrostatic Design Basis shall be 1,600 psi at 23 degrees C when tested in accordance with ASTM D2837.

Tested according to ASTM F 1248, ring specimen ESCR is zero failures in more than 1,000 hours.

No slow-crack growth pipe ring failures in more than 32 days of testing at 1,600 psi, cycled at 9 RPMs according to Battelle Rotary Test.

The HDPE pipe extruder and resin manufacturer shall be the same company. Third party testing data may be required by the engineer to certify the manufacturer's material data.

Chemical resistance date from the pipe manufacturer on the application will be provided as part of the submittal. The engineer may require a certification letter from the manufacturer as part of the submittal.

C. PIPE DIMENSIONS AND SDR

Pipe supplied under this specification shall have IPS (Iron Pipe Size) OD and shall meet ASTM D 3035. Pipe sizes shall be as specified in the following table. The dual containment combination, inner by outer pipe, the ID and OD of the carrier and containment, and the SDRs shall be as specified herein.

Pipe Size	Carrier ID	Carrier OD	Carrier SDR	Cont ID	Cont OD	Const SDR

Fittings shall be manufactured to the same IPS ID and OD as the pipe.

All molded and fabricated fittings shall meet the pressure requirements of the system as specified and based on ASTM D2837 Hydrostatic Design Basis for Thermoplastic Pipes.

All molded fittings shall be manufactured per ASTM D3261.

Pipe joints and fittings shall be supplied to the job site ready for simultaneous butt-fusion.

Cleanouts shall be installed every 600 feet or as per the drawings. Cleanouts shall be capped with metallic blind flanges and a full blind gasket (to prevent condensation on the inside of the metal blind) for easy access. (Alternate: Position cleanouts in leak detection manholes, valve boxes or well heads).

Carrier pipe support shall be with full round centralizers welded to the carrier pipe. Centralizer support spacing per Plastic Piping Institute standards and manufacturer's recommendations.

The centralizers shall be machined for accuracy from pipe grade resin ½" sheet stock HDPE. Centralizers have openings at 6 o'clock and 12 o'clock per the drawings. The opening at 6 o'clock will permit the flow of liquid between the carrier pipe and the containment pipe. Then minimum vertical opening shall be .75 inches or greater including allowance for internal beads. The minimum horizontal opening shall be 1.25 inches. The opening at 12 o'clock shall be the same dimensions.

The OD of the centralizer shall match the ID of the containment piping as closely as possible.

All pipe and fittings with a carrier pipe diameter of 8" or larger and all piping with a carrier pipe of 6" DR 11 or lower DR (thicker wall) shall have the centralizers extrusion welded to the carrier pipe based on the specified support spacing above. End centralizers shall be extrusion welded to the carrier pipe and the containment piping at the ends of all pipe and fittings.

The pipe and fitting manufacturer shall provide documentation that the fabricator/welders have a minimum of 2 years experience fabricating dual containment systems and shall show compliance with ASTM C 1147.

Force Transfer Dogbones™ shall be used to anchor the differential and the total forces from thermal expansion / contraction. The Force Transfer Dogbone™ shall be a mass anchor machined from solid high density polyethylene pipe grade resin. The coupling shall anchor the inner carrier pipe and the outer containment pipe to an external anchor point. Force Transfer Dogbones™ shall be used to protect fittings from thermal expansion as required by the manufacturer's thermal analysis of the system based on the standards outlined in this specification.

Force Transfer Dogbones™ shall simultaneously fused into the system.

Solid Force Transfer Dogbones™ shall be used to segment the annular space as required and drawn.

Force Transfer Dogbones™ shall be ported unless indicated on the drawings. Ports shall provide a continuous annular space and match the openings in the centralizers. POSITION PORTS PROPERLY DURING INSTALLATION.

End termination/Force Transfer Dogbones™ shall be used to seal the system at both ends. The coupling shall be simultaneously butt fused to the carrier and containment pipe to seal the annular space. No other closure or termination will be allowed. This fitting will also provide the transition to single wall piping.

Tie-ins to other piping systems and/or equipment where butt-fusion is not applicable shall be with HDPE flange adapters and coated metal back-up rings, unless otherwise specified by the engineer on the drawings. Mechanical compression or clamp style fittings will not be allowed under this specification.

PART 3. EXECUTION

3.1 Installation

A. Install double-containment piping to comply with manufacturer's recommended procedures.
B. Installers shall be pre-qualified through sufficient training in butt fusion techniques according to ASTM D2657 Section 9.
C. Hot gas welding shall not be allowed for wetted components.
D. Manufacturer/Manufacturer's Representative shall provide on-site training in the assembly, installation and operation of double-containment systems.
E. Install continuous running pull rope for installation of leak detection cable if required. Manufacturer shall supply pipe spools with pull rope in place.

3.2 Testing

Pressure Systems

Testing shall be conducted in accordance with manufacturer's recommendations. The owner shall be notified at the time of test and choose to be present.

A. Product Pipe
Should be tested hydrostatically to 150% of operating pressure per ASME B31.3 part 345 or per local code.

B. Containment Pipe
The containment piping shall be hydrostatically tested to 150% of operating pressure per ASME B31.3 or per local codes. The product pipe must be pressurized to the same pressure as the test to prevent collapsing of product pipe.

Alternate to containment pipe hydrostatic test.

To avoid moisture in the containment space, an air test can be conducted on the containment pipe. Pressure test is recommended at 5 psi and shall not exceed 10 psi. The inner carrier shall be full of water and under pressure to avoid any possible collapse.

When testing with air, the ambient temperature should be above 32°F and extra safety precautions for personnel shall be put in place during the test.

Drainage Systems

C. Product Pipe
Product pipe shall be tested to 10 feet of H_2O or less. Compressed air or gas may be used at 10 psi where conditions warrant at temperatures above 45°F. Systems with elevation changes greater than 20 feet of H_2O shall be tested at 1-1/2 times the elevation head. Fabricated fittings shall not be used for these systems; pressure fittings should be used in their place.

D. Containment Pipe
Containment pipe should be tested per 3.2.C. Compressed air/gas shall be used for systems where electronic leak detection shall be used to prevent contamination of the annular space with moisture. In no case shall a test pressure of greater than 10 psi of compressed gas/air be allowed. Ambient temperature shall be above 32°F when using air/gas for testing.

Simultaneous Pipe

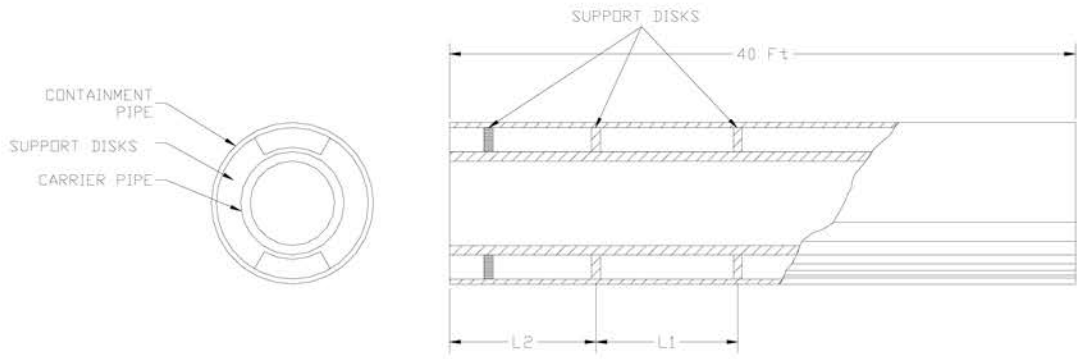

SDR Rating	11 x 11	11 x 17	11 x 26	17 x 26	26 x 26	26 x 32.5
Part Number	4001	4002	4085	4005	4695	4977

Size	Standard SDR	Size Code	L1	L2
1" x 3"	11 x 11	134	34.25	35.25
1" x 4"	11 x 17	401	34.25	35.25
1.5" x 4"	11 x 17	415	34.25	35.25
2" x 4"	11 x 17	420	37.0	38.0
2" x 6"	11 x 17	530	37.0	38.0
3" x 6"	11 x 17	531	48.0	49.0
	11 x 26		48.0	49.0
	17 x 26		43.75	44.75
4" x 8"	11 x 17	583	53.25	54.25
	11 x 26		53.25	54.25
	17 x 26		48.0	49.0
6" x 10"	11 x 17	627	60.0	61.0
	17 x 26		60.0	61.0
	26 x 26		53.25	54.25
8" x 12"	17 x 26	660	68.5	69.5
	26 x 32.5		60.0	61.0
10" x 14"	17 x 26	702	68.5	69.5
12" x 16"	26 x 26	690	80.0	81.0
12" x 18"	17 x 26	711	80.0	81.0

in inches
More sizes and SDRs available

Asahi America Inc. 35 Green St Malden Ma 02148 Office 1-781-321-5409 Fax 1-781-321-4421
Email: asahi@asahi-america.com
Internet: www.asahi-america.com

22.5° Elbow
Part Number + Size Code

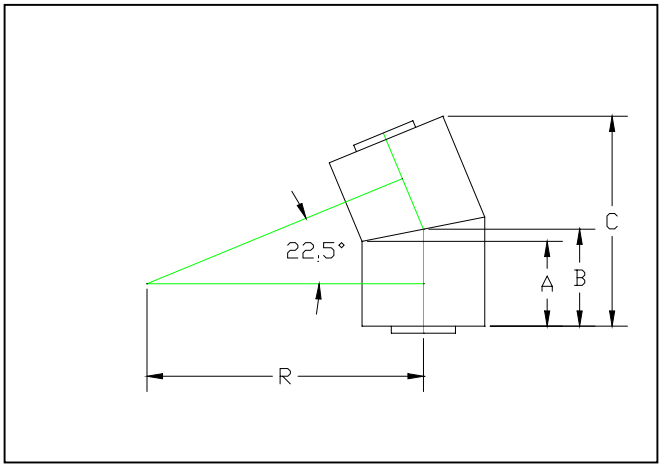

SDR RATING	11 x 11	11 x 17	11 x 26	17 x 26	26 x 26	26 x 32.5
PART # Number	4957	4958	4959	4960	4961	4981

SIZE	Standard SDR	Size Code	A	B	C	R
1” x 3”	11 x 11	134	3.0”	3.5”	7.4”	7.4
1” x 4” 1.5” x 4” 2” x 4”	11 x 17	401 415 420	5.0”	5.6”	11.6”	11.6”
2” x 6”	11 x 17	530	6.0”	6.9”	14.5”	14.5”
3” x 6”	11 x 17 11 x 26 17 x 26	531	6.0”	6.9”	14.5”	14.5”
4” x 8”	11 x 17 11 x 26 17 x 26	583	6.0”	7.1”	15.5”	15.5”
6” x 10”	11 x 17 17 x 26 26 x 26	627	6.0”	7.4”	16.6”	16.6”
8” x 12”	17 x 26 26 x 32.5	660	8.0”	9.7”	21.3”	21.3”
10” x 14”	17 x 26	702	8.0”	9.9”	22.0”	22.0”
12” x 16”	26 x 26	690	10.0”	12.1”	26.7”	26.7”

Asahi America Inc. 35 Green St Malden Ma 02148 Office 1-781-321-5409 Fax 1-781-321-4421
Email: asahi@asahi-america.com
Internet: www.asahi-america.com

45° Elbow
Part Number + Size Code

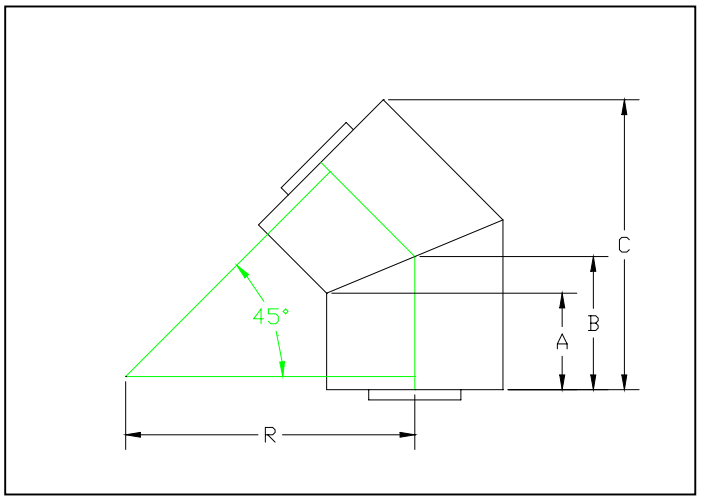

SDR RATING	11 x 11	11 x 17	11 x 26	17 x 26	26 x 26	26 x 32.5
PART # Number	4021	4022	4025	4026	4027	4693

SIZE	Standard SDR	Size code	A	B	C	R
1” x 3”	11 x 11	134	C.F.	C.F.	C.F.	C.F.
1” x 4” 1.5” x 4” 2” x 4”	11 x 17	401 415 420	4.7”	5.0”	10.13”	10.13”
2” x 6”	11 x 17	530	5.13”	6.5”	13.44”	13.44”
3” x 6”	11 x 17 11 x 26 17 x 26	531	5.13”	6.5”	13.44”	13.44”
4” x 8”	11 x 17 11 x 26 17 x 26	583	4.71”	6.5”	14.14”	14.14”
6” x 10”	11 x 17 26 x 26 17 x 26	627	5.77”	8.0”	17.46”	17.46”
8” x 12”	17 x 26 26 x 32.5	660	5.86”	8.5”	19.02”	19.02”
10” x 14”	17 x 26	702	C.F.	C.F.	C.F.	C.F.
12” x 16”	26 x 26	690	C.F.	C.F.	C.F.	C.F.
12” x 18”	17 x 26	711	C.F.	C.F.	C.F.	C.F.

45° Lateral
Part Number + Size Code

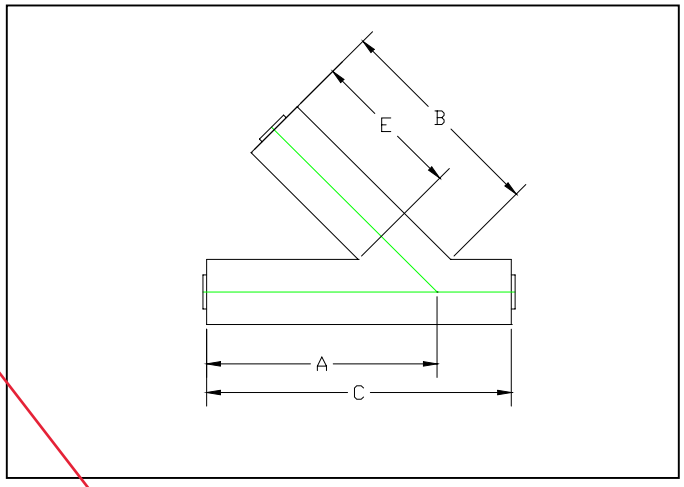

SDR RATING	11 x 17	11 x 26	17 x 26	26 x 26	26 x 32.5
PART # Number	4047	4087	4048	4052	4053

SIZE	Standard SDR	Size code	A	B	C	E	Gusset Thickness
2” x 4”	11 x 17	420	19.5”	19.5”	26.5”	14.1”	N/R
2” x 6”	11 x 17	530	27.6”	27.9”	35.5”	19.9”	N/R
3” x 6”	11 x 17 11 x 26 17 x 26	531	27.6”	27.9”	35.5”	19.9”	N/R
4” x 8”	11 x 17 11 x 26 17 x 26	583	30.4”	30.4”	40.2”	20.0”	N/R
6” x 10”	11 x 17 17 x 26 26 x 26	627	40.3”	35.0”	50.5”	20.0”	1.0”
8” x 12”	17 x 26 26 x 23.5	660	44.0”	35.4”	54.6”	20.0”	1.0”
10” x 14”	17 x 26	702	47.3”	38.9”	58.2”	22.0”	1.0”
12” x 16”	26 x 26	690	55.3”	45.3”	66.0”	26.0”	1.0”
12” x 18”	17 x 26	711	59.5”	49.7”	71.2”	28.0”	1.5”

90° Elbow
Part Number + Size Code

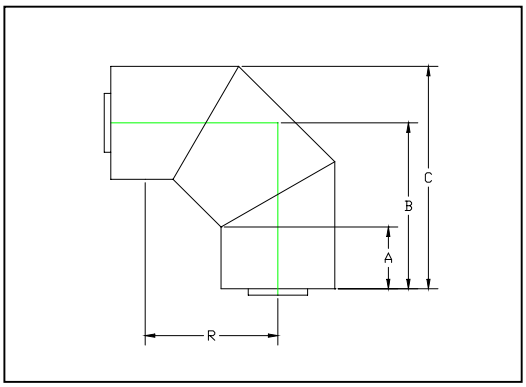

SDR RATING	11 x 11	11 x 17	11 x 26	17 x 26	26 x 26	26 x 32.5
PART # Number	4011	4012	4015	4016	4017	4974

SIZE	Standard SDR	Size code	A	B	C	R
1” x 3”	11 x 11	134	C.F.	C.F.	C.F.	C.F.
1” x 4” 1.5” x 4” 2” x 4”	11 x 17	401 415 420	4.07”	8.54”	10.79”	6.5”
2” x 6”	11 x 17	530	5.13”	11.45”	14.76”	8.9”
3” x 6”	11 x 17 11 x 26 17 x 26	531	5.13”	11.45”	14.76”	8.9”
4” x 8”	11 x 17 11 x 26 17 x 26	583	4.71”	12.66	16.97”	10.05”
6” x 10”	11 x 17 17 x 26 26 x 26	627	5.77”	14.72”	20.09”	11.93”
8” x 12”	17 x 26 26 x 32.5	660	5.86”	15.92	22.3”	13.0”
10” x 14”	17 x 26	702	C.F.	C.F.	C.F.	C.F.
12” x 16”	26 x 26	690	C.F.	C.F.	C.F.	C.F.
12” x 18”	17 x 26	711	C.F.	C.F.	C.F.	C.F.

Access Port with Flange
Part Number + Size Code

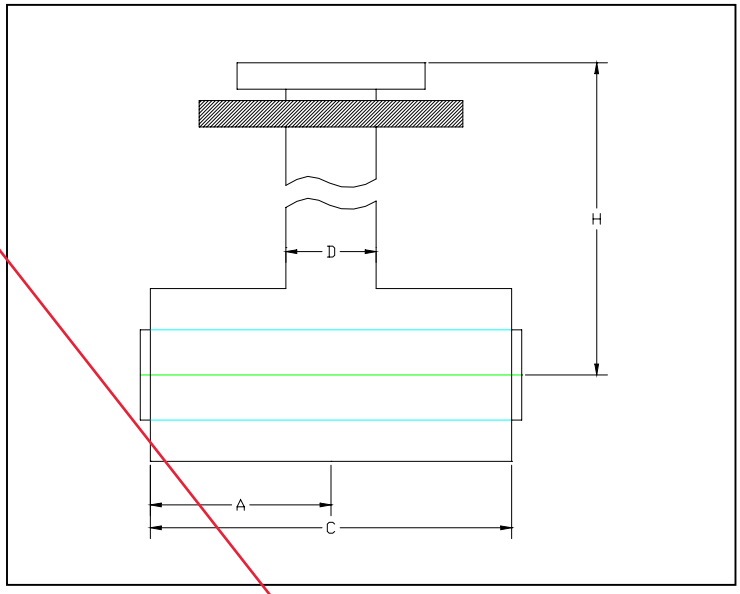

SDR RATING	11 x 11	11 x 17	11 x 26	11 x 32.5	17 x 17	17 x 26	17 x 32.5	26 x 26	26 x 32.5	32 x32
PART # Number	4916	4917			4918					

SIZE	Size code	A	C	D	H
1” x 4”	401	6.0”	12.0”	4.5”	Varies
2” x 6” 3” x 6”	530 531	9.0”	18.0”	4.5”	Varies
3” x 8” 4” x 8”	582 583	9.0”	18.0”	4.5”	Varies
6” x 10”	627	9.0”	18.0”	4.5”	Varies
8” x 12”	660	9.0”	18.0”	4.5”	Varies

Asahi America Inc. 35 Green St Malden Ma 02148 Office 1-781-321-5409 Fax 1-781-321-4421
Email: asahi@asahi-america.com
Internet: www.asahi-america.com

Dogbone End Termination

Part Number + Size Code

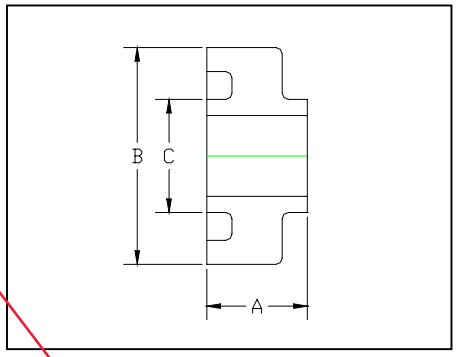

SDR RATING	11 x 11	11 x 17	11 x 26	17 x 26	26 x 26	26 x 32.5
PART # Number	4940	4941	4938	4939	4947	4948

SIZE (SDRxSDR)	Size code	A	B	C
1” x 3” (11 x 11)	134	2.5”	3.5”	1.315”
1” x 4” (11 x 17)	401	2.5”	4.5”	1.315”
1.5” x 4” (11 x 17)	415	2.5”	4.5”	1.9”
2” x 4” (11 x 17)	420	2.5”	4.5”	2.375”
2” x 6” (11 x 17)	530	3.0”	6.625”	2.375”
3” x 6” (11 x 17)	531	3.0”	6.625”	3.5”
3” x 6” (11 x 26)	531	3.0”	6.625”	3.5”
3” x 6” (17 x 26)	531	3.0”	6.625”	3.5”
4” x 8” (11 x 17)	583	4.0”	8.625“	4.5”
4” x 8” (11 x 26)	583	3.0”	8.625”	4.5”
4” x 8” (17 x 26)	583	3.0”	8.625”	4.5”
6” x 10” (11 x 17)	627	4.0”	10.75”	6.625”
6” x 10” (17 x 26)	627	3.0”	10.75”	6.625”
6” x 10” (26 x 26)	627	3.0”	10.75”	6.625”
8” x 12” (17 x 26)	660	4.0”	12.75”	8.625”
8” x 12” (26 x 32)	660	3.0”	12.75”	8.625”
10” x 14” (17 x 26)	702	4.0”	14.0”	10.75”
10” x 16” (17 x 26)	633	4.0”	16.0”	10.75”
10” x 16” (26 x 26)	633	4.0”	16.0”	10.75”
12” x 16” (26 x 26)	690	4.0”	16.0”	12.75”
12” x 18” (17 x 26)	711	4.0”	18.0”	12.75”

Fabricated Tee

Part Number + Size Code

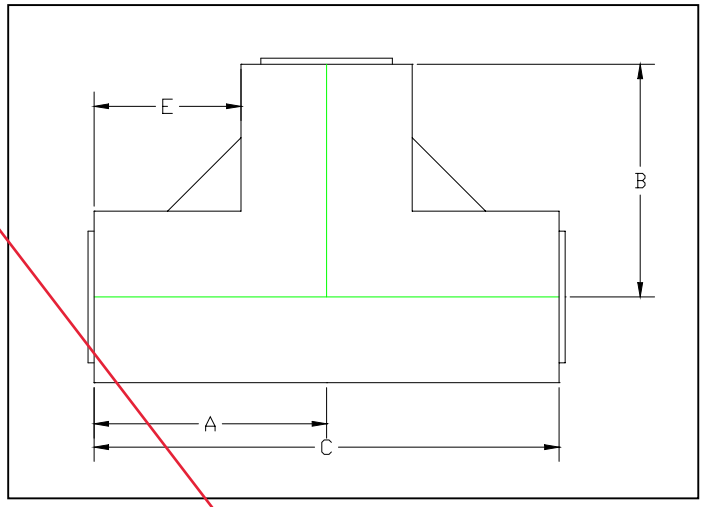

SDR RATING	11 x 17	11 x 26	17 x 26	26 x 26	26 x 32.5
PART # Number					

SIZE	Standard SDR	Size code	A	B	C	E
6” x 10”	11 x 17 17 x 26 26 x 26	627	13.5”	16”	27.5”	8.1”
8” x 12”	17 x 26 26 x 32.5	660	24.0”	24.0”	48.0”	17.6”
10” x 14”	17 x 26	702	24.0”	24.0”	48.0”	17.0”
12” x 16”	26 x 26	690	24.0”	24.0”	48.0”	16.0”
12” x 18”	17 x 26	711	24.0”	24.0”	48.0”	15.0”

Asahi America Inc. 35 Green St Malden Ma 02148 Office 1-781-321-5409 Fax 1-781-321-4421
Email: asahi@asahi-america.com
Internet: www.asahi-america.com

Long Sweep 45° Elbow

Part Number + Size Code

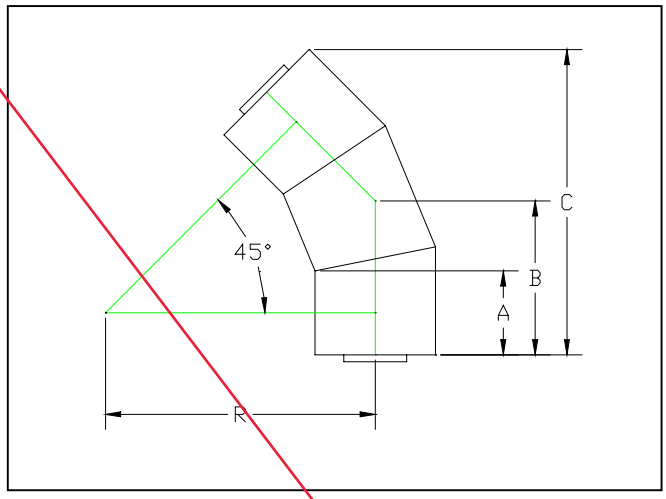

SDR RATING	11 x 11	11 x 17	11 x 26	11 x 32.5	17 x 17	17 x 26	17 x 32.5	26 x 26	26 x 32.5	32 x32
PART # Number	4121	4022	4025	4028	4029	4026	4023	4027	4056	4024

SIZE	Size code	A	B	C	R
1” x 3”	134	3.0”	5.4”	10.4”	9.3”
1” x 4” 1.5” x 4” 2” x 4”	401 415 420	5.0”	8.5”	16.1”	14.2”
2” x 6” 3” x 6”	530 531	6.0”	10.6”	20.5”	18.4”
3” x 8” 4” x 8”	582 583	6.0”	11.0”	21.9”	19.4”
6” x 10”	627	6.0”	11.5”	23.4”	20.4”
8” x 12”	660	8.0”	15.0”	30.0”	26.5”
10” x 14”	702	8.0”	15.3”	30.9”	27.1”
10” x 16” 12” x 16”	633 690	10.0”	18.7”	37.6”	33.1”
12” x 18”	711	10.0”	19.1”	39.0”	34.1”
14” x 20”	717	11.0”	21.1”	43.1”	37.7”
16” x 22”	735	11.0”	21.5”	44.5”	38.7”
18” x 24”	738	11.0”	21.9”	45.9”	39.7”
20” x 28”	785	10.0”	21.2”	46.1”	39.0”
22” x 30”	789	10.0”	21.6”	47.9”	40.1”
24” x 32”	793	10.0”	22.1”	48.9”	41.1”

Asahi America Inc. 35 Green St Malden Ma 02148 Office 1-781-321-5409 Fax 1-781-321-4421
Email: asahi@asahi-america.com
Internet: www.asahi-america.com

Long Sweep
60° Elbow
Part Number + Size Code

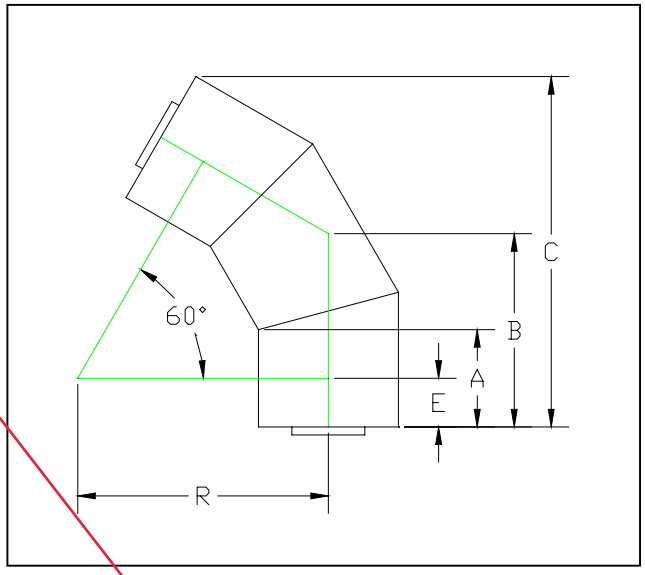

SDR RATING	11 x 11	11 x 17	11 x 26	11 x 32.5	17 x 17	17 x 26	17 x 32.5	26 x 26	26 x 32.5	32 x32
PART # Number	4121	4022	4025	4028	4029	4026	4023	4027	4056	4024

SIZE	Size code	A	B	C	E	R
1” x 3”	134	3.0”	5.4”	10.4”	1.5”	9.3”
1” x 4” 1.5” x 4” 2” x 4”	401 415 420	5.0”	8.5”	16.1”	2.5”	14.2”
2” x 6” 3” x 6”	530 531	6.0”	10.6”	20.5”	3.0”	18.4”
3” x 8” 4” x 8”	582 583	6.0”	11.0”	21.9”	3.0”	19.4”
6” x 10”	627	6.0”	11.5”	23.4”	3.0”	20.4”
8” x 12”	660	8.0”	15.0”	30.0”	4.0”	26.5”
10” x 14”	702	8.0”	15.3”	30.9”	4.0”	27.1”
10” x 16” 12” x 16”	633 690	10.0”	18.7”	37.6”	5.0”	33.1”
12” x 18”	711	10.0”	19.1”	39.0”	5.0”	34.1”
14” x 20”	717	11.0”	21.1”	43.1”	5.5”	37.7”
16” x 22”	735	11.0”	21.5”	44.5”	5.5”	38.7”
18” x 24”	738	11.0”	21.9”	45.9”	5.5”	39.7”
20” x 28”	785	10.0”	21.2”	46.1”	5.0”	39.0”
22” x 30”	789	10.0”	21.6”	47.9”	5.0”	40.1”
24” x 32”	793	10.0”	22.1”	48.9”	5.0”	41.1”

Asahi America Inc. 35 Green St Malden Ma 02148 Office 1-781-321-5409 Fax 1-781-321-4421
Email: asahi@asahi-america.com
Internet: www.asahi-america.com

Long Sweep
90° Elbow

Part Number + Size Code

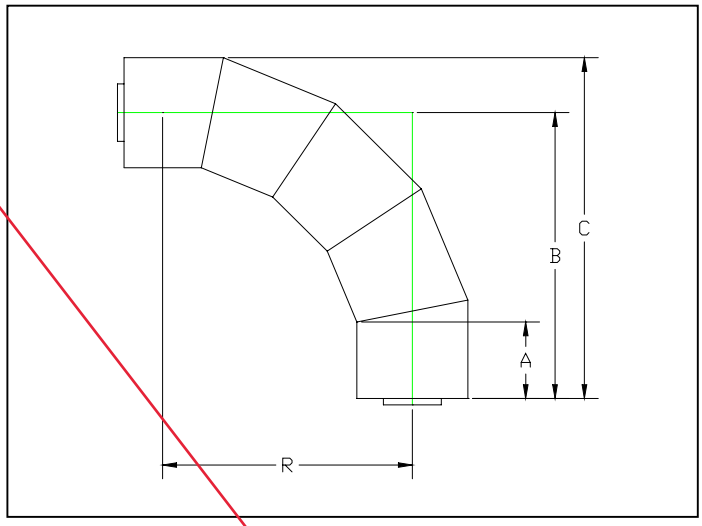

SDR RATING	11 x 11	11 x 17	11 x 26	11 x 32.5	17 x 17	17 x 26	17 x 32.5	26 x 26	26 x 32.5	32 x32
PART # Number										

SIZE	Size code	A	B	C	R
1” x 3”	134	3.0”	10.8”	12.5”	9.3”
1” x 4” 1.5” x 4” 2” x 4”	401 415 420	5.0”	16.8”	19.1”	14.2
2” x 6” 3” x 6”	530 531	6.0”	21.4”	24.7”	18.3”
3” x 8” 4” x 8”	582 583	6.0”	22.4”	26.7”	19.4”
6” x 10”	627	6.0”	23.5”	28.8”	20.1”
8” x 12”	660	8.0”	30.5”	36.8”	26.5”
10” x 14”	702	8.0”	31.0”	38.0”	27.1”
10” x 16” 12” x 16”	633 690	10.0”	38.1”	46.1”	33.1”
12” x 18”	711	10.0”	39.1”	48.1”	34.1”
14” x 20”	717	11.0”	43.2”	53.2”	37.7”
16” x 22”	735	11.0”	44.2”	55.2”	38.7”
18” x 24”	738	11.0”	45.2”	57.2”	39.7”
20” x 28”	785	10.0”	44.1”	58.1”	39.0”
22” x 30”	789	10.0”	45.1”	60.1”	40.1”
24” x 32”	793	10.0”	46.1”	62.1”	41.1”

Asahi America Inc. 35 Green St Malden Ma 02148 Office 1-781-321-5409 Fax 1-781-321-4421
Email: asahi@asahi-america.com
Internet: www.asahi-america.com

Tee

Part Number + Size Code

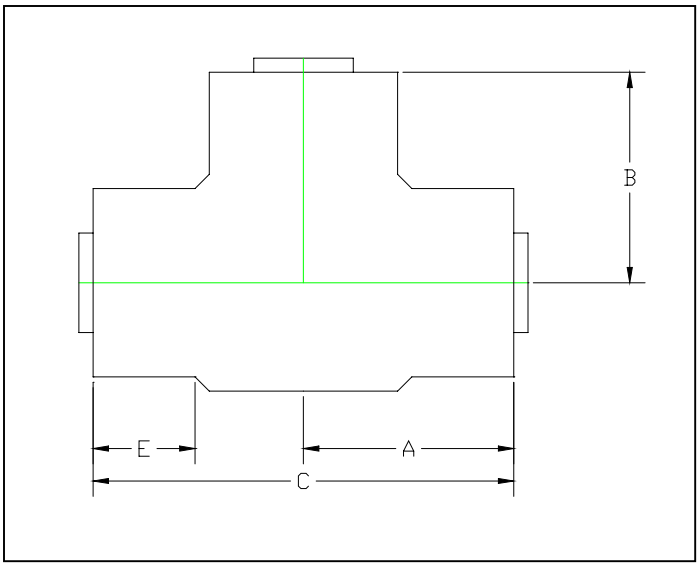

SDR RATING	11 x 11	11 x 17	11 x 26
PART # Number	4031	4032	4091

SIZE	Size code	A	B	C	E
1” x 3”	134	5.9”	5.6”	11.8”	3.0”
1” x 4” 1.5” x 4” 2” x 4”	401 415 420	6.7”	5.6”	13.9”	3.0”
2” x 6” 3” x 6”	530 531	8.9”	7.8”	17.8”	3.75”
4” x 8”	583	11.8”	9.5”	23.6”	4.0”

Asahi America Inc. 35 Green St Malden Ma 02148 Office 1-781-321-5409 Fax 1-781-321-4421
Email: asahi@asahi-america.com
Internet: www.asahi-america.com

P-Trap

Part Number + Size Code

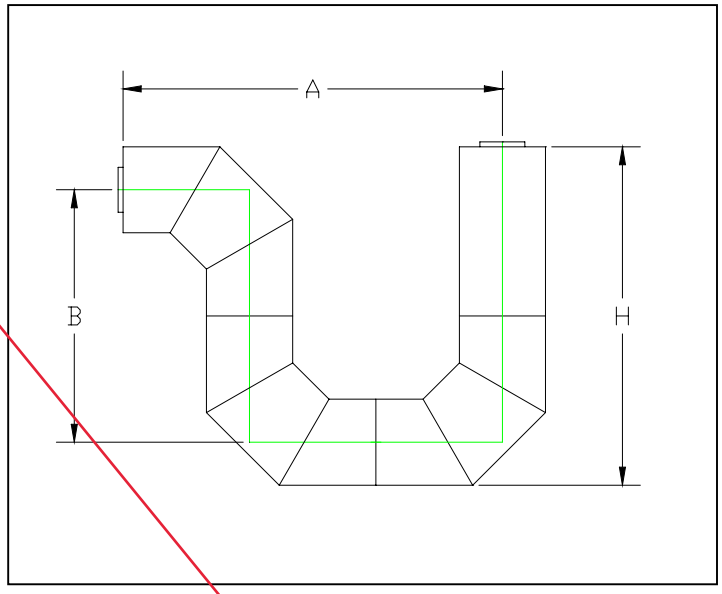

SDR RATING	11 x 11	11 x 17	11 x 26	11 x 32.5	17 x 17	17 x 26	17 x 32.5	26 x 26	26 x 32.5	32 x32
PART # Number	4901	4902	4097	4903	4904	4975	4905	4949	4950	4906

SIZE	Size code	A	B	H
1” x 3”	(134)	15.39”	10.26”	13.76”
1” x 4” 1.5” x 4” 2” x 4”	(401) (415) (420)	25.62”	17.08”	21.58”
2” x 6” 3” x 6”	(530) (531)	34.35”	22.90”	29.52”
3” x 8” 4” x 8”	(582) (583)	37.98”	25.32”	33.94”
6” x 10”	(627)	44.16”	29.44”	40.18”

Asahi America Inc. 35 Green St Malden Ma 02148 Office 1-781-321-5409 Fax 1-781-321-4421
Email: asahi@asahi-america.com
Internet: www.asahi-america.com

Reducers

Part Number + Size Code

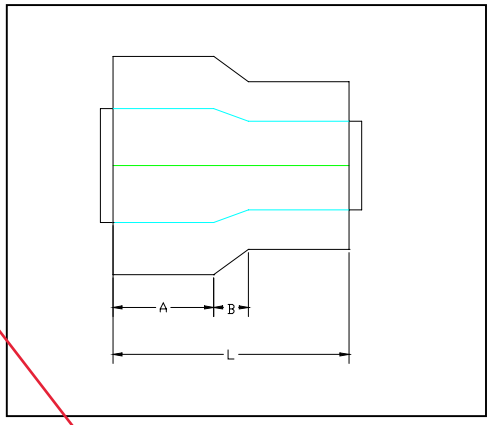

SDR RATING	11 x 11	11 x 17	11 x 26	11 x 32.5	17 x 17	17 x 26	17 x 32.5	26 x 26	26 x 32.5	32 x32
PART # Number	4071	4072	4096	4073						4074

SIZE	Size code	A	B	L
1” x 4” to 1” x 3” 1.5” x 4” to 1” x 3” 2” x 4” to 1” x 3”		3.13”	2.38”	8.62”
2” x 6” to 1” x 3” 3” x 6” to 1” x 3”		5.12”	2.36”	11.42”
2” x 6” to 1” x 4” 2” x 6” to 1.5” x 4” 2” x 6” to 2” x 4” 3” x 6” to 1” x 4” 3” x 6” to 1.5” x 4” 3” x 6” to 2” x 4”		3.0”	1.875	7.5”
4” x 8” to 2” x 6” 4” x 8” to 3” x 6”		4.0”	1.38”	9.38”
6” x 10” to 4” x 8” 8” x 12” to 4” x 8”		6.0”	4.0”	16.0”
8” x 12” to 6” x 10”		6.0”	4.0”	16.0”
10” x 14” to 8” x 12”		7.0”	4.0”	16.0”
10” x 16” to 10” x 14” 12” x 16” to 10” x 14”		7.0”	4.0”	18.0”
12” x 18” to 10” x 16” 12” x 18” to 12” x 16”		7.0”	4.0”	18.0”

Restraint Dogbone
Part Number + Size Code

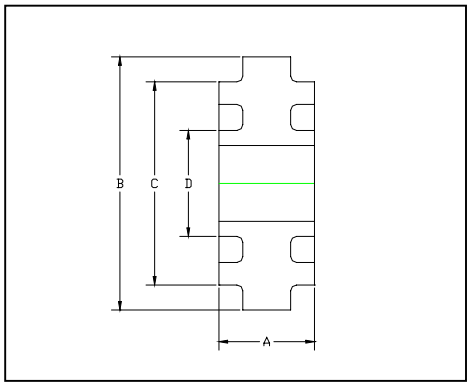

SDR RATING	11 x 11	11 x 17	11 x 26	11 x 32.5	17 x 17	17 x 26	17 x 32.5	26 x 26	26 x 32.5	32 x32
PART # Number	4951	4952	4953			4954		4955	4956	

SIZE (SDRxSDR)	Size code	A	B	C	D
1” x 3” (11 x 11)	134	2.5”	6.0”	3.5”	1.315”
1” x 4” (11 x 17)	401	2.5”	6.625”	4.5”	1.315”
1.5” x 4” (11 x 17)	415	2.5”	6.625”	4.5”	1.9”
2” x 4” (11 x 17)	420	2.5”	6.625”	4.5”	2.375”
2” x 6” (11 x 17)	530	3.0”	8.625”	6.625”	2.375”
3” x 6” (11 x 17)	531	3.0”	8.625”	6.625”	3.5”
3” x 6” (11 x 26)	531	3.0”	8.625”	6.625”	3.5”
3” x 8” (11 x 17)	582	4.0”	10.75”	8.625”	3.5”
4” x 8” (11 x 17)	583	4.0”	10.75”	8.625“	4.5”
4” x 8” (11 x 26)	583	3.0”	10.75”	8.625”	4.5”
4” x 8” (17 x 26)	583	3.0”	10.75”	8.625”	4.5”
6” x 10” (11 x 17)	627	4.0”	12.75”	10.75”	6.625”
6” x 10” (17 x 26)	627	3.0”	12.75”	10.75”	6.625”
6” x 10” (26 x 26)	627	3.0”	12.75”	10.75”	6.625”
8” x 12” (17 x 26)	660	4.0”	15.0”	12.75”	8.625”
8” x 12” (26 x 32)	660	3.0”	15.0”	12.75”	8.625”
10” x 14” (17 x 26)	702	4.0”	18.0”	14.0”	10.75”
10” x 16” (17 x 26)	633	4.0”	20.0”	16.0”	10.75”
10” x 16” (26 x 26)	633	4.0”	20.0”	16.0”	10.75”
12” x 16” (26 x 26)	690	4.0”	20.0”	16.0”	12.75”
12” x 18” (17 x 26)	711	4.0”	22.0”	18.0”	12.75”
14” x 20” (17 x 26)	717	4.0”	24.0”	20.0”	14.0”
16” x 22” (26 x 32)	735	4.0”	26.0”	22.0”	16.0”
18” x 24” (26 x 32)	738	4.0”	28.0”	24.0”	18.0”
20” x 28” (26 x 32)	785	4.0”	32.0”	28.0”	20.0”
22” x 30” (26 x 32)	789	4.0”	34.0”	30.0”	22.0”
24” x 32” (26 x 32)	793	4.0”	36.0”	32.0”	24.0”

Force Transfer Dogbone End Termination with Plug
Part Number + Size Code

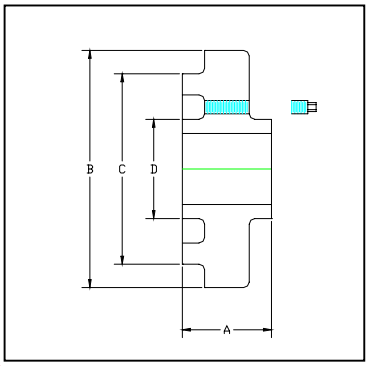

SDR RATING	11 x 11	11 x 17	11 x 26	17 x 26	26 x 26	26 x 32.5
PART # Number						

SIZE (SDRxSDR)	Size code	A	B	C	D
1” x 3” (11 x 11)	134	2.5”	6.0”	3.5”	1.315”
1” x 4” (11 x 17)	401	2.5”	6.625”	4.5”	1.315”
1.5” x 4” (11 x 17)	415	2.5”	6.625”	4.5”	1.9”
2” x 4” (11 x 17)	420	2.5”	6.625”	4.5”	2.375”
2” x 6” (11 x 17)	530	3.0”	8.625”	6.625”	2.375”
3” x 6” (11 x 17)	531	3.0”	8.625”	6.625”	3.5”
3” x 6” (11 x 26)	531	3.0”	8.625”	6.625”	3.5”
3” x 6” (17 x 26)	531	3.0”	8.625”	6.625”	3.5”
4” x 8” (11 x 17)	583	4.0”	10.75”	8.625“	4.5”
4” x 8” (11 x 26)	583	3.0”	10.75”	8.625”	4.5”
4” x 8” (17 x 26)	583	3.0”	10.75”	8.625”	4.5”
6” x 10” (11 x 17)	627	4.0”	12.75”	10.75”	6.625”
6” x 10” (17 x 26)	627	3.0”	12.75”	10.75”	6.625”
6” x 10” (26 x 26)	627	3.0”	12.75”	10.75”	6.625”
8” x 12” (17 x 26)	660	4.0”	15.0”	12.75”	8.625”
8” x 12” (26 x 32)	660	3.0”	15.0”	12.75”	8.625”
10” x 14” (17 x 26)	702	4.0”	18.0”	14.0”	10.75”
12” x 16” (26 x 26)	690	4.0”	20.0”	16.0”	12.75”
12” x 18” (17 x 26)	711	4.0”	22.0”	18.0”	12.75”

Restraint Dogbone End Termination
Part Number + Size Code

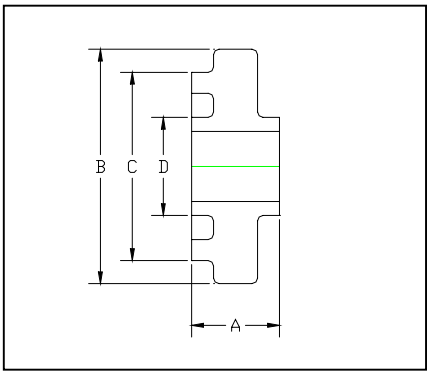

SDR RATING	11 x 11	11 x 17	11 x 26	17 x 26	26 x 26	26 x 32.5
PART # Number						

SIZE (SDRxSDR)	Size Code	A	B	C	D
1” x 3” (11 x 11)	134	2.5”	6.0”	3.5”	1.315”
1” x 4” (11 x 17)	401	2.5”	6.625”	4.5”	1.315”
1.5” x 4” (11 x 17)	415	2.5”	6.625”	4.5”	1.9”
2” x 4” (11 x 17)	420	2.5”	6.625”	4.5”	2.375”
2” x 6” (11 x 17)	530	3.0”	8.625”	6.625”	2.375”
3” x 6” (11 x 17)	531	3.0”	8.625”	6.625”	3.5”
3” x 6” (11 x 26)	531	3.0”	8.625”	6.625”	3.5”
3” x 6” (17 x 26)	531	3.0”	8.625”	6.625”	3.5”
4” x 8” (11 x 17)	583	4.0”	10.75”	8.625“	4.5”
4” x 8” (11 x 26)	583	3.0”	10.75”	8.625”	4.5”
4” x 8” (17 x 26)	583	3.0”	10.75”	8.625”	4.5”
6” x 10” (11 x 17)	627	4.0”	12.75”	10.75”	6.625”
6” x 10” (17 x 26)	627	3.0”	12.75”	10.75”	6.625”
6” x 10” (26 x 26)	627	3.0”	12.75”	10.75”	6.625”
8” x 12” (17 x 26)	660	4.0”	15.0”	12.75”	8.625”
8” x 12” (26 x 32)	660	3.0”	15.0”	12.75”	8.625”
10” x 14” (17 x 26)	702	4.0”	18.0”	14.0”	10.75”
10” x 16” (17 x 26)	633	4.0”	20.0”	16.0”	10.75”
10” x 16” (26 x 26)	633	4.0”	20.0”	16.0”	10.75”
12” x 16” (26 x 26)	690	4.0”	20.0”	16.0”	12.75”
12” x 18” (17 x 26)	711	4.0”	22.0”	18.0”	12.75”
14” x 20” (17 x 26)	717	4.0”	24.0”	20.0”	14.0”
16” x 22” (26 x 32)	735	4.0”	26.0”	22.0”	16.0”
18” x 24” (26 x 32)	738	4.0”	28.0”	24.0”	18.0”
20” x 28” (26 x 32)	785	4.0”	32.0”	28.0”	20.0”
22” x 30” (26 x 32)	789	4.0”	34.0”	30.0”	22.0”
24” x 32” (26 x 32)	793	4.0”	36.0”	32.0”	24.0”

Fluid-Lok® - HDPE

Fluid-Lok® HDPE double containment piping system is available in high density polyethylene and has the widest variety of sizes and wall thickness options. Fluid-Lok® provides a cost-effective piping material with sound engineering design to create a reliable HDPE double wall system for environmental protection. The system is designed around centralizing the carrier pipe inside the containment pipe and locking the two components together. Once inner and outer pipe and fittings are fabricated and locked together, all field welds are performed as in a single wall piping system; inner and outer welds are joined reliably at the same time.

Supply Range

Standard Sizes: 1x3 though 24x32
Materials: PE 4710, PE 3608

Welding Methods:
Simultaneous butt fusion

Features and Benefits

- Homogenous material inside and out, providing equal chemical resistance on the carrier and containment pipe.
- Many leak detection options. Systems can be provided with continuous leak detection cable, low- point sensors, or manual observation ports.
- Custom components can also be supplied for each specific project including:
  - Thermoplastic manholes
  - Double contained valve boxes
  - Observation ports
  - Double contained tanks
  - Custom fittings and assemblies

Sample Specification

System shall be a double containment piping system produced with high density polyethylene on both the product and containment pipe and shall provide the ability to incorporate leak detection as specified. Access tees, pull ropes and low-point instrumentation taps shall be provided as specified by leak detection specifications or contract drawings.

Please consult Asahi/America for expanded product sample specification.

Why Choose Fluid-Lok®?

Available in various SDR combinations to allow cost savings when high pressures are not required (sizes 3x6 and up).

Domestically made HDPE 4710/3608 conforming with Buy American Act requirements.

Fluid-Lok® Ideal Applications

- **Landfill**
- **Ground water remediation**
- **Mining slurry**

ASAHI/AMERICA®

JM Eagle *Building essentials for a better tomorrow™*

POLYETHYLENE WATER & SEWER

SUBMITTAL AND DATA SHEET

Carrier Piping

HDPE IRON PIPE SIZE (I.P.S.) PRESSURE PIPE

ANSI/NSF-61, 14 LISTED

PE 4710		DR 7 (333 psi)			DR 9 (250 psi)			DR 11 (200 psi)		
PIPE SIZE	AVG. O.D.	MIN. T.	AVG. I.D.	WEIGHT LB/FT	MIN. T.	AVG. I.D.	WEIGHT LB/FT	MIN. T.	AVG. I.D.	WEIGHT LB/FT
1/2	0.840	0.120	0.586	0.12	0.093	0.643	0.10	0.076	0.679	0.08
3/4	1.050	0.150	0.732	0.19	0.117	0.802	0.15	0.095	0.849	0.12
1	1.315	0.188	0.916	0.29	0.146	1.005	0.23	0.120	1.061	0.20
1-1/4	1.660	0.237	1.158	0.46	0.184	1.270	0.37	0.151	1.340	0.31
1-1/2	1.900	0.271	1.325	0.61	0.211	1.453	0.49	0.173	1.533	0.41
2	2.375	0.339	1.656	0.95	0.264	1.815	0.77	0.216	1.917	0.64
3	3.500	0.500	2.440	2.06	0.389	2.675	1.66	0.318	2.826	1.39
4	4.500	0.643	3.137	3.40	0.500	3.440	2.75	0.409	3.633	2.30
5-3/8	5.375	0.768	3.747	4.85	0.597	4.109	3.92	0.489	4.338	3.29
5	5.563	0.795	3.878	5.20	0.618	4.253	4.20	0.506	4.490	3.52
6	6.625	0.946	4.619	7.36	0.736	5.065	5.96	0.602	5.349	4.99
7	7.125	0.976	5.056	8.52	0.792	5.446	6.89	0.648	5.751	5.78
8	8.625	1.232	6.013	12.48	0.958	6.594	10.09	0.784	6.963	8.46
10	10.750	1.536	7.494	19.40	1.194	8.219	15.68	0.977	8.679	13.14
12	12.750	1.821	8.889	27.28	1.417	9.746	22.07	1.159	10.293	18.49
14	14.000	2.000	9.760	32.90	1.556	10.107	26.61	1.273	11.301	22.30
16	16.000	2.286	11.154	42.97	1.778	12.231	34.75	1.455	12.915	29.12
18	18.000	2.571	12.549	54.37	2.000	13.760	43.97	1.636	14.532	36.84
20	20.000	2.857	13.943	67.13	2.222	15.289	54.28	1.818	16.146	45.49
22	22.000	3.143	15.337	81.23	2.444	16.819	65.68	2.000	17.76	55.05
24	24.000	3.429	16.732	96.67	2.667	18.346	78.18	2.182	19.374	65.52
26	26.000	—	—	—	2.889	19.875	91.75	2.364	20.988	76.90
28	28.000	—	—	—	3.111	21.405	106.40	2.545	22.605	89.15
30	30.000	—	—	—	3.333	22.934	122.13	2.727	24.219	102.35
32	32.000	—	—	—	—	—	—	2.909	25.833	116.46
34	34.000	—	—	—	—	—	—	3.091	27.447	131.48
36	36.000	—	—	—	—	—	—	3.273	29.061	147.41

I.D. : Inside Diameter
O.D. : Outside Diameter
T. : Wall Thickness

* For data, sizes, or classes not reflected in these charts, please contact JM Eagle™ for assistance.

Revised 3/7/2013. This information may have been updated. Please download the latest version at www.jmeagle.com

JM Eagle *Building essentials for a better tomorrow™*

Containment Piping

HDPE IRON PIPE SIZE (I.P.S.) PRESSURE PIPE (continued)

ANSI/NSF-61, 14 LISTED

PE 4710		DR 13.5 (160 psi)			DR 17 (125 psi)			DR 19 (111 psi)		
PIPE SIZE	AVG. O.D.	MIN. T.	AVG. I.D.	WEIGHT LB/FT	MIN. T.	AVG. I.D.	WEIGHT LB/FT	MIN. T.	AVG. I.D.	WEIGHT LB/FT
1/2	0.840	—	—	—	—	—	—	—	—	—
3/4	1.050	0.078	0.885	0.10	—	—	—	—	—	—
1	1.315	0.097	1.109	0.16	—	—	—	—	—	—
1-1/4	1.660	0.123	1.399	0.26	—	—	—	—	—	—
1-1/2	1.900	0.141	1.601	0.34	—	—	—	—	—	—
2	2.375	0.176	2.002	0.53	0.140	2.078	0.43	—	—	—
3	3.500	0.259	2.951	1.16	0.206	3.063	0.94	0.184	3.110	0.84
4	4.500	0.333	3.794	1.91	0.265	3.938	1.55	0.237	3.998	1.39
5-3/8	5.375	0.398	4.531	2.73	0.316	4.705	2.21	0.283	4.775	1.99
5	5.563	0.412	4.690	2.92	0.327	4.870	2.36	0.293	4.942	2.13
6	6.625	0.491	5.584	4.15	0.390	5.798	3.35	0.349	5.885	3.02
7	7.125	0.528	6.006	4.80	0.419	6.237	3.88	0.375	6.330	3.49
8	8.625	0.639	7.270	7.03	0.507	7.550	5.68	0.454	7.663	5.12
10	10.750	0.796	9.062	10.92	0.632	9.410	8.82	0.566	9.550	7.95
12	12.750	0.944	10.749	15.36	0.750	11.160	12.41	0.671	11.327	11.19
14	14.000	1.037	11.802	18.52	0.824	12.253	14.98	0.737	12.438	13.49
16	16.000	1.185	13.488	24.19	0.941	14.005	19.55	0.842	14.215	17.61
18	18.000	1.333	15.174	30.61	1.059	15.755	24.75	0.947	15.992	22.29
20	20.000	1.481	16.860	37.79	1.176	17.507	30.53	1.053	17.768	27.52
22	22.000	1.630	18.544	45.75	1.294	19.257	36.86	1.158	19.545	33.30
24	24.000	1.778	20.231	54.44	1.412	21.007	43.99	1.263	21.322	39.63
26	26.000	1.926	21.917	63.89	1.529	22.759	51.61	1.368	23.100	46.51
28	28.000	2.074	23.603	74.09	1.647	24.508	59.87	1.474	24.875	53.94
30	30.000	2.222	25.289	85.04	1.765	26.258	68.74	1.579	26.653	61.92
32	32.000	2.370	26.976	96.76	1.882	28.010	78.18	1.684	28.430	70.45
34	34.000	2.519	28.660	109.26	2.000	29.760	88.28	1.790	30.205	79.54
36	36.000	2.667	30.346	122.49	2.118	31.510	98.98	1.895	31.983	89.17
42	42.000	3.111	35.404	166.70	2.471	36.761	134.72	2.211	37.314	121.37
48	48.000	3.556	40.462	217.76	2.824	42.013	175.97	2.526	42.644	158.52
54	54.000	—	—	—	3.177	47.265	222.67	2.842	47.975	200.63

* For data, sizes, or classes not reflected in these charts, please contact JM Eagle™ for assistance.

Revised 3/7/2013. This information may have been updated. Please download the latest version at www.jmeagle.com

DOUBLE WALL SYSTEMS

Installing any piping system properly requires preplanning. The installation is more than the welding of components. It requires the proper environment, material inventory, welding equipment, tools, and thorough training. This guide is to assist in the planning and installation of a double wall pipe system either in a pipe rack or trench.

This guide will concentrate on Duo-Pro and Fluid-Lok systems, as produced and supplied by Asahi/America, Inc. Duo-Pro and Fluid-Lok systems are similar with only a few minor exceptions. Both systems are highly engineered systems, fabricated from single wall components to provide the widest variety of selection and performance for all circumstances. By the time a Duo-Pro system arrives on site, most of the engineering and design layout work should have been completed.

Covered in this guide are the steps to plan and complete a successful installation.

Step 1. Welding Environment
Step 2. Tool Selection
Step 3. Material Handling
Step 4. Training and Preparation
Step 5. Tool Commission and Daily Checks
Step 6. Pipe Cutting
Step 7. Weld Preparation
Step 8. Weld Inspection
Step 9. Hanging
Step 10. Trenching and Burial
Step 11. System Testing
Step 12. Repair Procedures

Step 1. Welding Environment

Asahi/America does not set requirements for proper welding environments. As the installer, it is necessary to choose the environment based on the installation type, timing or quality goal. In most systems, pipe is either going into a pipe rack, beneath a floor or wall, or buried underground. In all these cases, conducting welds in the actual final location may not always be the most convenient location for welding. In fact, in most cases, it is preferable to prefabricate spool piece components and conduct final welds or hook-up in the pipe rack.

If possible, set up a welding area to build the spool pieces. The weld area should be situated in an area that has reduced exposure to wind, possible rain, and extreme cold temperatures. Building spool pieces inside a weld shop may prove advantageous. A fairly controlled environment and organized work space will improve efficiency and quality of the system to be installed.

Not all welding can be conducted in a shop and eventually field welds will need to be done. Some systems will be installed completely outside, with all the welds perhaps conducted in place.

When welding outside, several factors have to be considered. It is always important not to weld in the rain. Rain will damage equipment and improperly influence the weld. For rainy days, a shelter or tent should be constructed over equipment. In addition to rain, high winds and cold temperatures, below 40° F, will negatively influence the welding process. If these conditions are not avoidable, a heated tent structure is recommended. For specific recommendations by tool type, consult the Asahi/America Engineering Department.

When conducting field welds in a pipe rack or in a trench, it is important to have the location of the weld well planned. Vertical welds in any location will prove difficult to conduct and should be avoided. The field weld that connects up prefabricated spool pieces should be a pipe-to-pipe weld whenever possible. Pipe-to-pipe welds are easier to align and level, making the weld easier to conduct in possibly tight quarters.

In all field welds, in the rack or in a trench, it is important to have ample room for welding equipment and to choose the proper welding equipment. In some underground installations, it may be necessary to increase the width of the trench in weld locations. Many underground systems are welded above ground and then lowered down into the trench to avoid placing equipment in narrow trenches. The same is true in crowded pipe racks. Many times it will prove more efficient to prefab spools and use flanges or unions to connect them together in the pipe rack. Consult Asahi/America for the design and use of a double contained flange.

Step 2. Tool Selection

The selection of the type of welding method conducted on a double wall industrial piping project should be based on the following criteria:

- Material
- Sizes to be installed
- Welding location
- Type of installation
- Similar to dissimilar material
- Available expertise

For assembling double containment piping systems made from PVDF, PP, E-CTFE, and HDPE, there are many choices of equipment available, each having its advantages and disadvantages. On all Asahi/America's standard double wall containment systems, butt fusion is the only joining system offered due to its ideal functionality in this application. Tables F-15 and F-16 contain data on available welding equipment. There is no one right piece of equipment that can handle all sizes and materials. It is absolutely critical to have the right equipment on site for proper installation.

ASAHI/AMERICA
Rev. EDG–02/A
P.O. Box 653 • 35 Green Street, Malden, MA 02148 • Tel: (800) 343-3618, (781) 321-5409
Fax: (800) 426-7058 • Internet: http://www.asahi-america.com • Email: asahi@asahi-america.com

Table F-15. Equipment Selection: Simultaneous Fusion

Description	Pro 150 x 150	Pro 150 x 45	Pro 45 x 45	PVDF x PVDF	HDPE SDR 11 x 11	HDPE SDR 11 x 17	HDPE SDR 17 x 17
Shop 4	1 x 3: A	2 x 4: A	2 x 4: A	1 x 3: A	1 x 3: A	1 x 3: A	1 x 3: A
Miniplast	2 x 4: A	—	—	2 x 4: A	2 x 4: A	2 x 4: A	2 x 4: A
Shop 12	2 x 4: A	2 x 4: A	2 x 4: A	2 x 4: A	2 x 4: A	2 x 4: A	2 x 4: A
	3 x 6: A	3 x 6: A	3 x 6: A	3 x 6: A	3 x 6: A	3 x 6: A	3 x 6: A
	4 x 8: B	4 x 8: B	4 x 8: B	4 x 8: B	4 x 8: B	4 x 8: B	4 x 8: B
	6 x 10: X	6 x 10: B	6 x 10: B	6 x 10: B	6 x 10: X	6 x 10: X	6 x 10: x
Field 6	2 x 4: A	2 x 4: A	2 x 4: A	2 x 4: A	2 x 4: A	2 x 4: A	2 x 4: A
	3 x 6: A	3 x 6: A	3 x 6: A	3 x 6: A	3 x 6: A	3 x 6: A	3 x 6: A
Field 12	3 x 6: A	3 x 6: A	3 x 6: A	3 x 6: A	3 x 6: A	3 x 6: A	3 x 6: A
	4 x 8: A	4 x 8: A	4 x 8: A	4 x 8: A	4 x 8: A	4 x 8: A	4 x 8: A
	6 x 10: A	6 x 10: A	6 x 10: A	6 x 10: A	6 x 10: A	6 x 10: A	6 x 10: A
	8 x 12: B	8 x 12: A	8 x 12: B	—	8 x 12: B	8 x 12: B	8 x 12: B
Field 20	4 x 8: B	4 x 8: B	4 x 8: B	—	4 x 8: B	4 x 8: B	4 x 8: B
	6 x 10: A	6 x 10: A	6 x 10: A	—	6 x 10: A	6 x 10: A	6 x 10: A
	8 x 12: A	8 x 12: A	8 x 12: A	—	8 x 12: A	8 x 12: A	8 x 12: A
	10 x 14: A	10 x 14: A	10 x 14: A	—	10 x 14: A	10 x 14 A	10 x 14: A
	12 x 16: A	12 x 16: A	12 x 16: A	—	12 x 16: A	12 x 16: A	12 x 16: A
	—	14 x 18: A	14 x 18: A	—	—	14 x 18: A	14 x 18: A
	—	16 x 20: A	16 x 20: A	—	—	16 x 20: A	16 x 20: A
MacElroy 1-4	X	X	X	X	1 x 3 A	1 x 3 A	—
	X	X	X	X	1 x 4 A	1 x 4 A	—
	X	X	X	X	1.5 x 4 A	1.5 x 4 A	—
	X	X	X	X	2 x 4 A	2 x 4 A	—
MacElroy 2-8	X	X	X	X	2 x 4 A	2 x 4 A	—
	X	X	X	X	3 x 6 A	3 x 6 A	3 x 6 A
	X	X	X	X	4 x 8 A	4 x 8 A	4 x 8 A
MacElroy 4-12	X	X	X	X	4 x 8 A	4 x 8 A	4 x 8 A
	X	X	X	X	6 x 10 A	6 x 10 A	6 x 10 A
	X	X	X	X	8 x 12 A	8 x 12 A	8 x 12 A
MacElroy 6-18	X	X	X	X	6 x 10 A	6 x 10 A	6 x 10 A
	X	X	X	X	8 x 12 A	8 x 12 A	8 x 12 A
	X	X	X	X	10 x 14 or 10 x 16 A	10 x 14 or 10 x 16 A	10 x 14 or 10 x 16 A
	X	X	X	X	12 x 16 or 12 x 18 A	12 x 16 or 12 x 18 A	12 x 16 or 12 x 18 A
MacElroy 8-24	X	X	X	X	8 x 12 B	8 x 12 B	8 x 12 B
	X	X	X	X	10 x 14 or 10 x 16 B	10 x 14 or 10 x 16 B	10 x 14 or 10 x 16 B
	X	X	X	X	12 x 16 or 12 x 18 A	12 x 16 or 12 x 18 A	12 x 16 or 12 x 18 A
	X	X	X	X	14 x 20 or 14 x 22 A	14 x 20 or 14 x 22 A	14 x 20 or 14 x 22 A
	X	X	X	X	16 x 22 or 16 x 24 A	16 x 22 or 16 x 24 A	16 x 22 or 16 x 24 A
	X	X	X	X	18 x 24 A	18 x 24 A	18 x 24 A

A: Recommended. B: Will work, but a better choice is available. X: Not recommended.

Table F-16. Equipment Selection: Staggered Welding

Description	Pro 150 x 150	Pro 150 x 45	Pro 45 x 45	PVDF x Pro 150	PVDF x Pro 45	PVDF x PVDF
1 x 4	Shop 4 Shop 10	Shop 4 Shop 10	DNA	Shop 4 Shop 10	DNA	Shop 4 Shop 10
2 x 4	Shop 4 Shop 10	Shop 4 Shop 10	DNA	Shop 4 Shop 10	Shop 4 Shop 10	Shop 4 Shop 10
3 x 6	Shop 10	Shop 10	DNA	Shop 10	Shop 10	Shop 10
4 x 8	Shop 10	Shop 10	Shop 10	Shop 10	Shop 10	Shop 10
6 x 10	Shop 10 carrier Field 12 containment	Shop 10 carrier Field 12 containment	Shop 10 carrier Field 12 containment	Shop 10 carrier Field 12 containment	Shop 10 carrier Field 12 containment	Shop 10 carrier Field 12 containment
8 x 12	Shop 10 carrier Field 12 containment	Shop 10 carrier Field 12 containment	Shop 10 carrier Field 12 containment	Shop 10 carrier Field 12 containment	Shop 10 carrier Field 12 containment	Shop 10 carrier Field 12 containment
10 x 14	Shop 10 carrier Field 12 containment	Shop 10 carrier Field 12 containment	Shop 10 carrier Field 12 containment	Shop 10 carrier Field 12 containment	Shop 10 carrier Field 12 containment	Shop 10 carrier Field 12 containment

P.O. Box 653 • 35 Green Street, Malden, MA 02148 • Tel: (800) 343-3618, (781) 321-5409
Fax: (800) 426-7058 • Internet: http://www.asahi-america.com • Email: asahi@asahi-america.com

Step 3. Material Handling

When pipe, fittings, and fabrications arrive on site, they should be inspected to ensure the proper components have arrived and no damage has occurred during shipment. Asahi/America goes to great lengths to ensure that pipe and fittings are properly packaged for shipment. If damage occurs, the freight company should be notified immediately.

Preferably, pipe should be stored inside or in a trailer. Care should be taken to properly support pipe during storage. Use the hanging criteria for the proper support distance. Pipe can be stacked during storage. Heavier pipes of larger dimensions should be stored at the bottom. However, it may prove more practical to segregate by size for easier access during the project. Pipe should not be stored above the recommended maximum height of 4 feet.

If material is stored outside, it is preferable to cover with a tarp in case of rain. PVDF is UV resistant, but polypropylene will degrade over time when exposed directly to UV. Depending on the size of the pipe and the wall thickness, it could cause physical damage that could reduce the allowable pressure rating. In all cases, the UV will cause a color change over time that may not be acceptable for aesthetic reasons. In general, covering polypropylene during storage is recommended.

Fittings are best kept in their boxes or bags, as they are shipped in separate containers by size, style, and material. This will allow for simplified picking and inventory control throughout the project.

Step 4. Training and Preparation

A double containment system is a critical utility within a plant. It is often under flooring or underground where it is not easily accessible. In addition, double containment systems also are in overhead piping and provide additional needed safety for plant personnel from a leak in a hazardous chemical system. A repair to a system can prove difficult and costly. One bad weld can cause hours of repair and frustration, as well as lost revenue. For these reasons, it is critical to receive training at the time of job start-up and use certified personnel throughout the course of a project.

Tool operation is only one of several factors in a thorough training course. Operators, inspectors, and managers need to understand the physical nature of the material, how to properly handle it, how to inspect welds, how to identify potential problems, how to properly maintain equipment and finally, how best to tie into a line and test it.

During Asahi/America's certified training sessions, all of the above topics are discussed. For the installation of a double containment system, the following training sessions are available:

- Tool Operator Training
- Quality Control Inspection

Both of these can be conducted on site during the time of the start-up. The depth of training in a double containment piping system is based on the system type to be installed. Systems that require staggered fusion are more involved to install and may require the operation of different equipment.

In addition to the above on-site training, Asahi/America also offers courses that are held at the corporate office for the following topics:

- Certified Maintenance and Repair
- Certified Trainer (prerequisites apply)

Consult with Asahi/America's Engineering Department for dates and availability of corporate programs.

During the on-site training process, Asahi/America certified trainers will set recommendations for the class size based on the tool type. In general, groups of four are recommended for the welding operation portion of the training. Typically, two groups can be certified in one day on the welding portion of the seminar. On simple installations, it may be faster; and on more complex installations, it may be longer. To reduce the distraction within the class, it is important that only personnel who will be conducting the weld operation during the project participate in the training. It is also recommended that if a third party QC is to be used that they also attend the full training course to fully understand the welding process and QC parameters.

Preparation

To best use training time, preparation should be made prior to the trainers' arrival on site. A recommended list of preparations follows.

- Ensure that project material is on site. It is not critical to have all material, but enough to start the project. Once training is complete, it is practical for the trainer to oversee the beginning portion of the installation. Many times new questions and challenges arise once the actual installation starts. In addition, if there is a significant period of time between the training and actual installation, operators may forget portions of the training or different operators may now be slated for the welding operation. Both scenarios require additional training.
- Ensure required tools are on site. Do not open the tools until a certified trainer is present. If more tools are ordered during a project, this is no longer required as proper unpacking and set up of the equipment is covered in the training process.
- Ensure that the correct power is available. Many pieces of equipment require 220 Volt single or three phase power supply. Consult with the factory or distributor at the time of tool ordering.
- If possible, have a conference room with an overhead projector available for the classroom portion of the training. If this is not available, select an area where all personnel will be able to see and hear the trainer for this portion of the discussion.

P.O. Box 653 • 35 Green Street, Malden, MA 02148 • Tel: (800) 343-3618, (781) 321-5409
Fax: (800) 426-7058 • Internet: http://www.asahi-america.com • Email: asahi@asahi-america.com

- Ensure that pipe samples are available for the training session. Asahi/America does not normally provide samples for the training.
- Ensure extra components such as welding rod, support discs, and hot air welders are ordered and available at the time of training. Such components.will be required throughout the project.

Formal training can be the key factor in starting a project off in the right direction. Take advantage of this service while on site. Asahi/America also offers field technicians for hire to oversee project welding and training for any specified amount of time. Contact the Asahi/America Engineering Department for more information.

Step 5. Tool Commission and Daily Checks

Checking equipment and welding technique daily is recommended. This is particularly important on larger projects where there are many welders on site. This daily check will allow QA to ensure all welders are up to speed on tool operation, welding technique, and inspection. Most problems in the field occur due to improper usage of equipment, rather than equipment failure.

During the initial training of the project, many welds are produced in the presence of a qualified trainer. These welds should be kept and used for the daily checks. Each welder should conduct one coupon test weld and submit it to QA. The coupons should be compared to initial samples. Inspection should include bead formation, sizing, and weld label.

Conducting preventive maintenance to the equipment at the beginning of each day is also required. The maintenance recommended varies on each weld tool type. Consult the Operation Manual for items to be checked daily.

By keeping equipment in good operating condition and ensuring all operators are up to speed, tool problems or welding errors are less likely to occur.

Step 6. Pipe Cutting

Cutting plastic pipe can be handled in a variety of methods. In small dimensions, 1/2" through 4", roll wheel pipe cutters are commonly available and work well. These types of cutters are similar to a tube cutter, but only larger. When using a roll cutter on PP or PE, it is important to ensure the wheel has a larger radius than the wall thickness of the pipe so it will cut all the way through. A roll cutter will only cut single wall pipe. It can be used to cut the inner and outer pipe separately, but if a pipe is already fabricated into a double contained configuration, a roll cutter cannot be used. Poly-Flo systems cannot be cut using a roll cutter.

In most sizes, band saws, vertical or horizontal, will work very well for plastic. Since plastic pipes can have a very heavy wall thickness, it is important to travel slowly through the band saw to avoid the blade from bending and creating an angled cut. For smaller pipe sizes and Poly-Flo pipes up to 2 x 3, a circular blade chop saw will also provide neat and accurate cuts. A miter box chop saw is also very useful if angled welds are to be done in the field.

If only manual saws are available, a hack saw will certainly cut through small dimensions, but avoid using a fine blade as it will take considerable time. In addition, reciprocating saws are generally not the best choice as the blades are only long enough to cut one wall at a time. If too fine of a blade is used, the material will become hot and can fuse itself back together partially behind the blade travel.

Step 7. Weld Preparation

The type of material and system will dictate welding method and tool selection. One important factor in welding a Duo-Pro or Fluid-Lok system is the alignment of the support discs. To allow the pulling of cable, it is necessary to have the disc openings aligned at the pipe bottom.

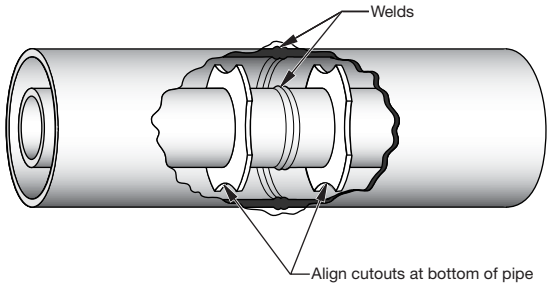

Figure F-93. Support disc alignment

In a Poly-Flo system, it is important to rotate the pipe ribs. Since a Poly-Flo system cannot accommodate leak detection cable, rotating the ribs is recommended to allow a possible leak to make its path to the bottom annular space.

The cold weld is more difficult to identify, and virtually impossible to detect with the naked eye. Two cross-sectional views of a pipe wall that has been welded are shown in Figure F-79. Weld 1 is a good fusion joint, while Weld 2 is a cold weld. Notice in the cold weld there is very little material joined together in the pipe wall area. The molten material has been forced to the outer and inner bead, and the unheated sections of the pipe have been forced together in the pipe wall region. In the proper Weld 1, you can see there is material joined together in the pipe wall, as well as in the inner and outer beads.

P.O. Box 653 • 35 Green Street, Malden, MA 02148 • Tel: (800) 343-3618, (781) 321-5409
Fax: (800) 426-7058 • Internet: http://www.asahi-america.com • Email: asahi@asahi-america.com

Step 8. Weld Inspection

To ensure a safe and on-time system start-up, initiating a standard inspection process is recommended on each project. This quality assurance measure can be conducted by a third party QC or can be done by each individual operator after each weld. A recommended inspection report for recording quality assurance on each weld is attached to the end of Section F. Use the recommendation of this weld inspection guide in conjunction with the equipment manual to achieve the best project results.

To inspect butt-fusion joints, the inspector should look for the following characteristics on each weld.

- Welds should have two beads that are 360° around the pipe.
- Beads should be of consistent height and width.
- Beads should have a rounded shape.
- Beads should be free of burrs or foreign material.
- A bead on either side should not reduce greatly in width or disappear.
- Components welded should be properly aligned and cannot be misaligned by more than 10% of the wall thickness.

When welding the inner and outer pipe and fitting simultaneously, the outer bead will provide an accurate depiction of the inner weld. If the outer pipe appears improperly aligned, the inner pipe will also be out of alignment. For simultaneous fusion, it is necessary to ensure the carrier component is flush in length with the containment component. Check on each part with a straight edge after the planing and prior to the heating step of welding. Other methods include marking the ends of the carrier in four locations 90° apart prior to planing. If planing on the containment pipe is complete and all the original marks on the carrier have been removed by the planer, then both parts are flush.

Figure F-94 shows a detail of a standard butt-fusion bead formation.

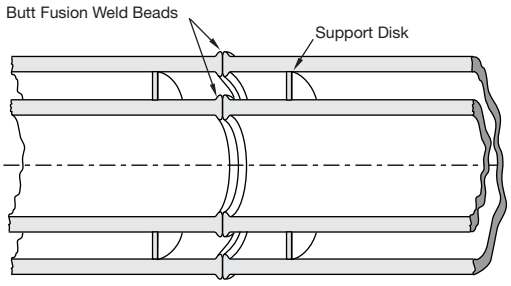

Figure F-94. Typical butt-fusion weld bead

Butt-fusion beads will vary in size and a little in shape with different materials. In general, PP and HDPE will have larger bead formations in comparison to PVDF. With PP and HDPE, there will be a pronounced double-bead formation that will be simple to identify. With PVDF, there will also be a double-bead formation, but not as pronounced. The material will appear to flow more together, making what appears to be one single weld. However, upon examination, you will always see the seam where the components were joined. In addition, when butt welding PVDF pipe to fittings, the fitting bead will be larger than the pipe bead. This is normal as the resin used to produce PVDF fittings flows at a higher rate when melted compared to the resin used to extrude pipes. Mechanically, there will be no issues on strength of the joint, only the appearance of the weld.

Since outside temperatures and conditions will have some effect on bead sizes, there is no formal specification for the size of the bead. Also, measuring each bead would be time consuming. During the training process, welding one of each size to use as a rough gauge for the project may prove useful. These sample coupons can be referred to on a regular basis to check welding throughout the project.

If bead formations do not meet the inspection criteria, they should be rejected. Consult the operation manual for each tool on how to correct the problem. If problems persist, contact Asahi/America for assistance. Many times these issues can be cleared up quickly over the phone, avoiding waste in time and material. Never continue welding if proper fusion cannot be accomplished. This will only add to problems at a later time.

Limitations of Inspection

Following proper weld procedures in conjunction with a thorough inspection process will lead to a safe and reliable system. However, a weld cannot be 100% judged by viewing it after the fusion is complete. Bad welds with obvious problems can be identified, such as missing beads, small beads, and misalignment, but other problems may not be easily found.

A cold weld occurs when an operator either maintains too high a force during the heat soak time or joins the material together at too high a force. Molten material is then pushed to the outer bead and cooler material is forced together inside the weld.

P.O. Box 653 • 35 Green Street, Malden, MA 02148 • Tel: (800) 343-3618, (781) 321-5409
Fax: (800) 426-7058 • Internet: http://www.asahi-america.com • Email: asahi@asahi-america.com

The problem with inspecting a cold weld is the outer bead is the same as a good joint. Since the occurrence of a cold weld is difficult to find and inspect, it is important to use proper welding procedures when joining the material. The issue of inspecting and avoiding a cold weld is no different than a PVC joint that has not been primed prior to cementing. You cannot tell after the weld is made, but if you correctly follow procedures, it will not occur. Cold welds can be avoided with the following operating techniques on all butt fusion and socket fusion equipment.

- Ensure proper heating element temperature throughout the project.
- Use the correct welding parameters by pipe size, wall thickness, and material.
- Do not delay between removal of heating element and joining of material.
- Do not slam material together after heating. Material should be joined quickly, but the pressure build up should be smooth and even.
- Do not join components together above the joining force.

Step 9. Hanging

Hanging any thermoplastic double wall system is not that much different than hanging a metal system. Typically, the spacing between hangers is shorter due to the flexibility of plastic. In addition, the type of hanger is important.

Hangers should be placed based on the spacing requirements provided in Appendix A. Since thermoplastic materials vary in strength and rigidity, it is important to select hanging distances based on the material you are hanging. Also, operating conditions must be considered. If the pipe is operated at a higher temperature, the amount of hangers will generally be increased. Finally, if the system is exposed to thermal cycling, the placement of hangers, guides, and anchors is critical In these cases. The hanger locations should be identified by the system engineer and laid out to allow for expansion and contraction of the pipe over its life of operation.

When selecting hangers for a system, it is important to avoid using a hanger that will place a pinpoint load on the pipe when tightened. For example, a U-bolt hanger is not acceptable for high-purity thermoplastic piping systems. See Figures F-95 and F-96.

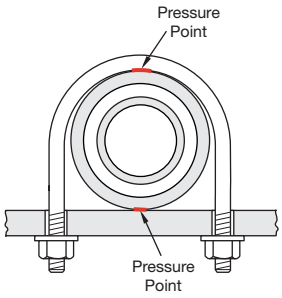

Figure F-95. Effects of U-bolt on pipe– not recommended

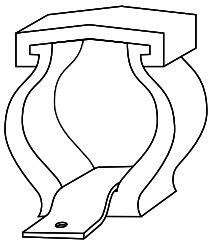

Figure F-96. Recommended hanger

Hangers that secure the pipe 360° around the pipe are preferred. Thermoplastic clamps are also recommended over metal clamps, as they are less likely to scratch the pipe in the event of movement. If metal clamps are specified for the project, they should be inspected for rough edges that could damage the pipe. Ideally, if a metal clamp is being used, an elastomeric material should be used in between the pipe and the clamp. This is a must for PVDF and E-CTFE systems, which are less tolerant to scratching.

P.O. Box 653 • 35 Green Street, Malden, MA 02148 • Tel: (800) 343-3618, (781) 321-5409
Fax: (800) 426-7058 • Internet: http://www.asahi-america.com • Email: asahi@asahi-america.com

Step 10. Trenching and Burial

Proper trenching and burial of a pipe system requires engineering prior to an installation. Asahi/America's *Engineering Manual* (Section C) provides a comprehensive guide to burial calculations load tolerance of thermoplastic pipe. This information should be supplied and be specified prior to installation. Refer to Asahi/America's manual for the burial calculations.

For installation purposes, it is important to look at several factors as the installer of underground piping.

- Soil conditions should match that of the specification and/or drawings.
- Trenches should be dug according to plan.
- Pipe should be surrounded by specified soil type and compaction.
- Accommodations for welding in the trench should be made.
- Safety issues of being in a trench should always be observed.

For each underground installation, burial designs will specify depth of trench and width of trench. The wider the trench, the more load the pipe will see upon compaction. Therefore, it is important to follow trench design closely to avoid excess load on the pipe. In addition to the trench details, the type of soil becomes important. Different types of soils have differing densities and will create differing loads on the buried pipe. If the soil does not match that of the design, it needs to be rechecked or different top fill may be required.

The surrounding material of the pipe is also important. Items such as large rocks may cause pinpoint loads on the pipe that could eventually damage the pipe. Figure F-97 depicts a recommended cross section of a trench and proper fill material and compaction.

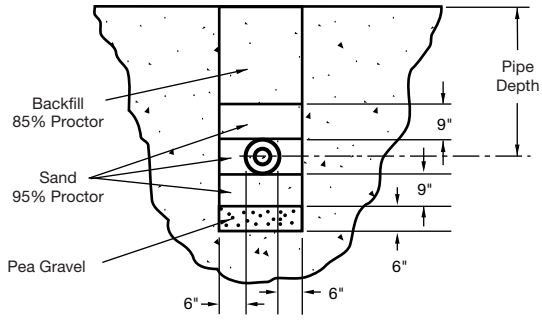

Figure F-97. Trench detail

Welding in a trench should also be preplanned. It is common that all welding is done above ground, and then, the welded components are all lowered into the trench. In many instances it may be necessary to weld in the trench. For conducting welds in a trench, it is important to allocate space for the machine as it will be wider than the pipe itself. Widening of the trench may be required to accommodate the machine.

Step 11. System Testing

Procedures for testing installed sections of Duo-Pro systems must take into account factors affecting both carrier and containment pipes. Basic recommendations may be given, but a comprehensive testing program should be developed for each and every system design. The program should be developed based on the needs and characteristics of the particular system at hand.

All pressure tests must be conducted prior to backfilling a buried system.

Carrier Pipe, Pressure System

If the carrier piping is intended for pressure service greater than 10 feet of head, a hydrostatic pressure test must be conducted.

In any hydrostatic pressure test, provisions must be made to vent all air out of the inner pipe. If necessary, special high-point vents should be installed to bleed any trapped air. Air pockets can create a dangerous situation if a cold weld exists and is found during a test. Compressed air pockets can contribute to extensive propagation of fault lines when a failure occurs. Compressed air or gas should not be used for pressure testing of any carrier pipe in excess of 10 psi.

Pressure tests should be conducted at a maximum of 150 percent of the operating pressure of the lowest rated component of the system.

F

Filling the System
The piping should be capped off at the end of the spool section to be tested and fitted with an adapter to allow tie-in for testing. All flanges in the vertical position should be left open at this point. Bleed off air through the relief valves.

Introduce water very slowly into the system at the low point. In no instance should the water velocity exceed two feet per second. When the water fills all vertical risers, the flanges can be resealed. The relief valves should be left open until it is certain that all air is out of the system.

The system can then be brought up to pressure through gradual steps using a hand pump or other similar equipment.

Do not use city water pressure to accomplish this step if the water pressure in the city mains is greater than the pressure test to be conducted.

Conducting the Test
The test should be done in gradual steps of 10 psi for Pro 150/PE 150, 5 psi for Pro 45/PE 45, or 10 psi for PVDF until the desired pressure is achieved. There will be some gradual drop in pressure due to natural creep effects and elongation of the pipe wall. Also, there could be some drop occurring due to thermal expansion effects where there are sudden environmental temperature changes.

After one hour, check the pressure gauge. If there is a decrease without an indication of leakage, pump the pressure back up to the test pressure. If the total pressure drops more than 10% after the second pressurization, the test can be considered a failed test. Check the system for leaks or other problems. Otherwise, continue the pressure test for a minimum of two hours up to a recommended duration of 12 hours or as required by local code requirements.

Cyclic Hydrostatic Testing
In critical applications, the inner piping should be tested hydrostatically for more than one cycle. To test for more than one cycle, do not empty the system and start all over. Instead, drop the system pressure down to below 5 psi, and then raise it back in gradual steps of 10 to 20 psi to the desired test pressure. Follow the same procedures as described above. Repeat this procedure for as many cycles as required up to a maximum recommendation of seven cycles.

Note: Do not use fabricated drainage fittings in pressurized systems where a pressure over 10 feet of head is required. Use molded pressure fittings in these applications.

Carrier Pipe, Drainage Systems
Inner piping that is intended for drainage service (10 feet of head or less) should be tested by implementing a 10-foot standing water test. A 10-foot standing water test consists of welding or attaching in some manner a 10-foot riser to the upstream (high end) of the system. It is not unusual that there are several high points (branch connections) in a system. It is important that every riser or branch connection be affixed with a 10-foot riser in order to ensure that every point in the system will see 10 feet of head. In fact, at the low point, the system will see a pressure equal to 10 feet of head plus the value of the elevation change. A maximum of 20 feet of head must not be exceeded in a drainage system.

To consider a standing water test acceptable, the water level after 12 hours should be at a level equal to the level at the start of the test, minus normal evaporation and expansion due to temperature fluctuations. Compressed air or gas should not be used for pressure testing of any carrier pipe in excess of 10 psi.

Containment Pipe, Pressure Systems

If outer piping is designed and required to withstand the same pressure as the inside piping, then a hydrostatic pressure test should be conducted for both inner and outer pipes. This is for situations where the inner pipe pressure is greater than 10 psi. It is important to remember that when the annular space is pressurized during this situation, two pipes are involved. A plastic pipe is always less capable of withstanding external pressure than internal pressure. The inner pipe should be kept full of water at a pressure equal to the pressure test of the outer pipe.

Equal pressure on the carrier and containment is necessary for the following reasons:

1. To prevent possible collapse of the inner piping during the test.
2. Both the inner and outer piping will elongate equally, thus minimizing any differential stress or stress buildup between the two pipes.
3. In the event of a carrier failure, the containment piping must handle the same pressure as the carrier. The inner pipe will continue to pressurize the outer pipe until the two reach an equilibrium.

P.O. Box 653 • 35 Green Street, Malden, MA 02148 • Tel: (800) 343-3618, (781) 321-5409
Fax: (800) 426-7058 • Internet: http://www.asahi-america.com • Email: asahi@asahi-america.com

Filling the System
The outer piping can be filled after the inner test is conducted or at the same time as the inner pipe. The system should be filled in the exact same way as described for pressurized carrier pipe.

Do not use city water pressure to accomplish this step if the water pressure in the city mains is greater than the pressure test to be conducted.

In many cases, it is not an advantage to conduct a hydrostatic test on the annular space, as it is very difficult to dry the space after the test. An air test can be used as an alternative. The pressure should be no higher than 10 psi, and extra safety precautions must be made for surrounding personnel. In all cases, the ambient temperature should be above 32° F. The carrier pipe should also be filled with water and pressurized any time a test is conducted on the annular space.

Conducting the Test

Testing is conducted on the containment in the same manner as the carrier. The test should be done in gradual steps of 10 psi for Pro 150/PE 150, or 5 psi for Pro 45/PE 45 until the desired test pressure is achieved. There will be some gradual drop in pressure due to natural creep effects and elongation of the pipe wall. Also, there could be some drop occurring due to thermal expansion effects where there are sudden ambient changes.

After one hour, check the pressure gauge. If there is a decrease without an indication of leakage, pump the pressure back up to the test pressure. If the total pressure drops more than 10% after this second pressurization, the test can be considered a failed test. Check the system for leaks or other problems. In larger systems and pipelines exposed to large changes in temperature, it may take several tries to get the pressure to remain constant. Otherwise, continue the pressure test for a minimum of two hours up to a recommended duration of 12 hours. A cyclic hydrostatic test as described above for the inner pipes may be used where appropriate.

Note: Do not use fabricated drainage fittings in pressurized systems where a pressure exceeding 10 feet of head is required. Use molded pressure fittings in these applications.

Containment Pipe, Drainage Systems
Outer piping that is intended for drainage capability (10 feet of head or less) or that is flowing open ended, should be tested by implementing a 10-foot standing water test. It should be noted that the carrier pipe pressure must be maintained equal to the outer pipe pressure at all points in order that the inner pipe does not collapse. Pro 45/PE 45 inside carrier pipe is common in some large-diameter systems such as drainage mains. In order to test these systems, special consideration must be given to ensure that the inner pipe is kept under equal pressure with the outer pipe.

The standing water test should be conducted in the same manner as the inside pipes. A riser should be attached to every vertical riser equal to 10 feet, and the system filled with water. The level should be checked after 12-18 hours, and if no fluid has escaped (minus normal evaporative losses and expansion due to temperature fluctuation), the test should be considered successful. It should be noted that the total of the elevational change plus 10 feet should not exceed the sum of 20 feet.

In order not to trap fluid in the annular space, a low-pressure compressed air or nitrogen test (≤10 psi) may be used. Note that if this type of test is used, the carrier inner pipe must be filled with fluid and kept to at least the level of the pressure in the annular space to prevent collapse. If this type of test is used, it is required to "soap" each joint thoroughly to check for visual leaks. In addition, the pressure gauge must also be checked after 2-12 hours for indication. Again, any time compressed air is used, extra safety precautions should be taken. Air tests should be done at 32° F or higher ambient temperature.

Annular Test, Drainage Systems

The purpose of the annular test is to test both the carrier and containment simultaneously. For low-pressure drainage systems, an annular test can be conducted to reduce test time. This type of test can only be used on drainage systems using Pro 150 carrier.

Cap off the carrier and containment pipe, and provide a pressure gauge on each. Using low-pressure compressed air (≤10 psi), charge the annular space. In a tight system, the containment gauge should read 10 psi (minus losses due to creep), and the carrier gauge should be zero. If there is a leak in the containment piping, the containment gauge will begin to drop. If, however, there is a leak in the carrier piping, the inner piping will become pressurized. See Figure F-98 for typical test results. Pressure should be maintained on the system for 2-12 hours to ensure against a possible slow leak.

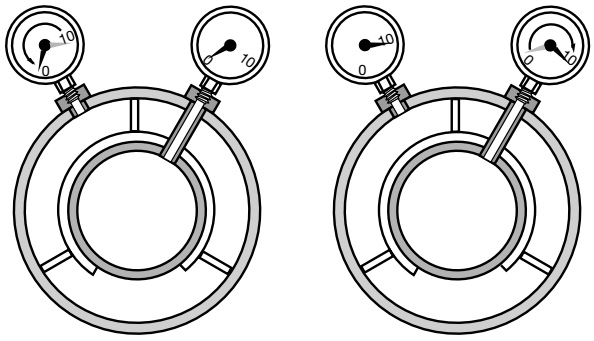

(a) Leak Out of Containment Pipe (b) Leak In to Carrier Pipe

Figure F-98. Annular pressure test leak indications

P.O. Box 653 • 35 Green Street, Malden, MA 02148 • Tel: (800) 343-3618, (781) 321-5409
Fax: (800) 426-7058 • Internet: http://www.asahi-america.com • Email: asahi@asahi-america.com

Drying the Annular Space

If the annular space is contaminated with water due to the test procedures or other unforeseen events, it is essential that all moisture be removed thoroughly to minimize condensation that may cause false alarms in leak detection cables and low-point sensors. As discussed in Section C, *Engineering Theory and Design Considerations*, the installation of properly sized vents and drains will assist greatly with this process. It may be necessary to use Vortek blowers and/or clean dry air to remove all moisture completely. The greater the number of vents and drains, the higher the volume of air can be pushed through the system, thereby decreasing the drying time. As it is extremely difficult to remove moisture from the annular space, it may be appropriate to use compressed air (≤10 psi) for testing carrier and containment pipe where pressure requirements are low. Use of compressed air will not contaminate the annular space with moisture.

Locating a Leak

In the event of a leak in the carrier, the pressure should be relieved and the water drained to prevent flooding of the annular space. To determine the location of the leak, Asahi/America has available ultrasonic leak detection guns, as shown in Figure F-99. The gun is capable of hearing disturbances in air flow (vibration) through the containment wall. To locate the leak, put a compressed air charge on the carrier piping (≤10 psi). Using the gun, walk the pipe line placing the gun extension against the containment wall. The compressed air escaping through a leak will be heard through the ear phones of the gun, thus locating the leak. In many situations, the time required to locate a leak on the carrier pipe using this technology is less than one hour.

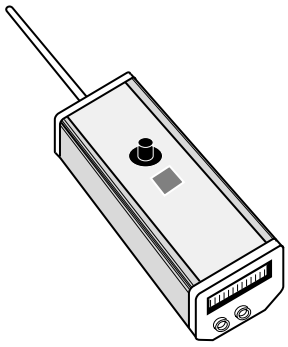

Figure-99. Ultrasonic leak detection gun

Step 12. Repair Procedures

A properly designed, installed, and maintained double-containment piping system will provide years of reliable service. The system, however, should offer the means to perform a repair in the event of a mishap, and this repair should be of such quality that the operating parameters, pressure, temperature, and safety factors are not reduced. The Duo-Pro and Fluid-Lok systems offer this capability for all pressure ratings with minimum disruption to site conditions.

The first step in a repair procedure is to isolate the leak source. The ease of finding a leak is determined by the leak detection method selected at the time of installation. The use of a leak detection cable will pinpoint the location of the leak to plus or minus three feet, and is possibly the most efficient system. The low-point sensors will identify a zone that has been contaminated. Further testing methods will be required to locate the actual leak source. Several methods are available for this, including the use of an ultrasonic test gun (Figure F-99), fiber optic cameras, and dye solutions. These methods, although more time consuming, are viable alternatives to leak detection cable.

The second step in a repair procedure is to flush the carrier and containment pipes to remove any hazardous chemicals that will create safety concerns for the workers doing the repairs. The ability to flush the system is determined by the initial design. The installation of high-point vents and low-point drains in the containment pipe will provide a safe means to perform the flushing. Attempts to install high-point vents and low-point drains during repair are costly and potentially dangerous.

To completely weld a system repair, the pipe must be flexible in movement in the axial direction. If movement is not present, then a double-wall flange repair may prove convenient. Double-wall flanges may have reduced pressure ratings. Consult factory prior to installation.

The third step is to expose the damaged pipe and perform the repair procedure with one of the following methods.

P.O. Box 653 • 35 Green Street, Malden, MA 02148 • Tel: (800) 343-3618, (781) 321-5409
Fax: (800) 426-7058 • Internet: http://www.asahi-america.com • Email: asahi@asahi-america.com

Repairs to Systems without Flexibility

Flanged Repairs (similar materials)

Duo-Pro and Poly-Flo systems offer patented, double-wall flanges that permit the flow of fluids through the annular space, as shown in Figure F-100. (Consult factory for pressure rating.)

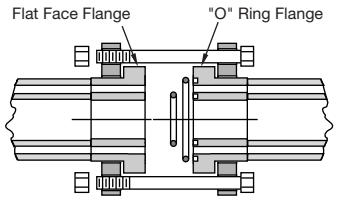

Figure F-100. Double-wall flange

1. The damaged section of pipe is removed first (Figure F-101).

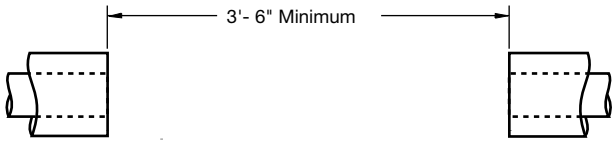

Figure F-101. Remove damaged section of pipe

2. Plane ends and install supports discs. Next, weld two flanges onto the exposed pipe ends.

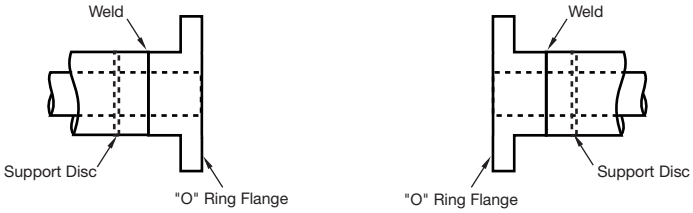

Figure F-102. Install double-wall flanges

3. A flanged spool piece is fabricated and installed.

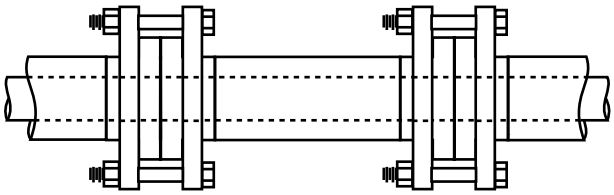

Figure F-103. Install flanged spool

4. The system is then tested and returned to working order.

For all repair methods, a minimum of 3'- 6" is required to facilitate use of welding equipment.

Repairs to Systems with Flexibility

Butt-Fusion Repairs (similar materials)

The second method of repair is performed without the use of flanges but instead, only with thermal butt fusion. The use of butt fusion, as the repair procedure requires a larger excavation due to the requirement that the pipe be able to move at least three inches to perform the weld.

To perform the repair:

1. The damaged section of pipe is removed and the area cleared to allow the pipe to move in the radial direction. Note that only one end of the pipe needs this flexibility (Figure F-104).

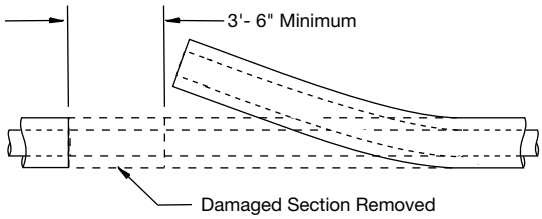

Figure F-104. Remove damaged section of pipe

2. The pipe in the ground is prepared for simultaneous fusion.

3. A spool of pipe is assembled and butt welded to the stationary pipe.

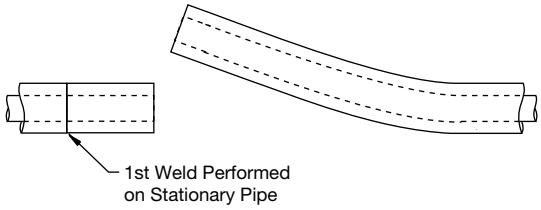

Figure F-105. Install new spool

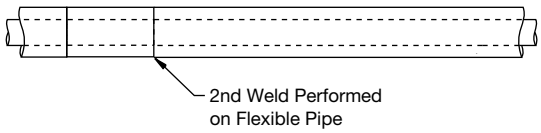

Figure F-106. Butt weld spool to remaining pipe

4. The second weld is then performed on the flexible side.

5. The system is then tested and returned to working order.

F

The repair procedures described above are appropriate for Duo-Pro and Poly-Flo systems when the same material is used for the carrier and containment piping. To perform a repair on a system with a PVDF carrier and a polypropylene containment, the following steps should be followed.

Repairing PVDF Carrier/Polypropylene Containment (Duo-Pro only)

Flanged Repairs (dissimilar materials)

To perform the repair:

1. The damaged section of pipe is removed and prepared.

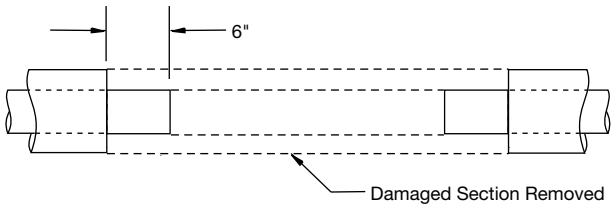

Figure F-107. Remove damaged section of pipe

2. Polypropylene flanges are welded to the containment pipe.

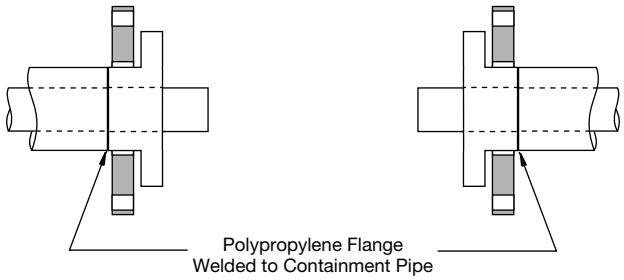

Figure F-108. Weld polypropylene flanges to pipe ends

3. PVDF flanges are bolted to the polypropylene flanges. Now both the inner and outer piping are similar material.

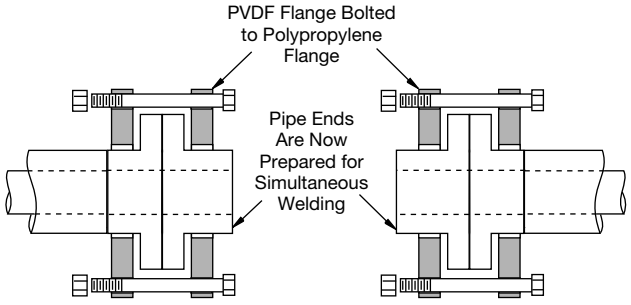

Figure F-109. Bolt polypropylene flanges to PVDF flanges

4. The repair procedure is now the same as for similar materials, as described above.

There are other repair options available that require the use of slip couplings, electro-fusion couplings, and use of hot-gas welding and extrusion welding. These repair options are adequate for drainage systems only and require well-trained technicians to perform the repair. Consult the Asahi/America Engineering Department for assistance.

P.O. Box 653 • 35 Green Street, Malden, MA 02148 • Tel: (800) 343-3618, (781) 321-5409
Fax: (800) 426-7058 • Internet: http://www.asahi-america.com • Email: asahi@asahi-america.com

DEPARTMENT OF THE ARMY
ALBUQUERQUE DISTRICT, CORPS OF ENGINEERS
ALBUQERQUE DISTRICT OFFICE
4101 JEFFERSON PLAZA NE
ALBUQUERQUE, NM 87109

SUBMITTAL REVIEW VERIFICATION SHEET

PROJECT TITLE: Kirtland BFF Mid-Plume Pump and Treat System Expansion
CONTRACT NUMBER: W912DR-12-D-0006 DM01
DATE RECEIVED: 7-26-2017
DATE REVIEWED: 7-28-2017

DESCRIPTION OF ITEMS REVIEWED:

1. Bilco Hatches

NO EXCEPTIONS TAKEN.	**X**
EXCEPTIONS AS NOTED ON DRAWINGS AND/OR ATTACHED SHEETS(S). RESUBMISSION NOT REQUIRED.	
EXCEPTIONS AS NOTED ON DRAWINGS AND/OR ATTACHED SHEETS(S). RESUBMISSION REQUIRED.	
RECEIPT ACKKNOWLEDGED.	

Notes:

NOTE: ITEMS REVIEWED AS TO GENERAL LAYOUT ONLY. DIMENSIONS AND QUANTITIES NOT CHECKED. REVIEW DOES NOT RELIEVE CONTRACTOR OF RESPONSIBILITIES FOR ANY ERRORS WHICH MAY EXIST AS CONTRACTOR SHALL BE RESPONSIBLE FOR DIMENSIONS AND DESIGN OF ADEQUATE CORRECTIONS, DETAILS AND SATISFACTORY CONSTRUCTION OF WORK.

SIGNATURE _____ **DATE** 7/28/2017

EA Engineering, Science, and Technology, Inc., PBC

Submittal Review Sheet 1

Project Name: **Kirtland BFF Mid-Plume Pump and Treat System Expansion**				Date Received: **7/20/17**	
Project Owner: **Kirtland Air Force Base**				Checked By: **Tyler Curley**	
Contractor: **RMCI, Inc.**	Engineer: **EA Engineering, Science and Technology, Inc., PBC.**			Log Page: **NA**	
Address: **6211 Chappell Rd NE, Albuquerque, NM 87113**	Address: **320 Gold Ave. SW, Suite 1300 Albuquerque, NM 87102**			EA No.: 62599DM01	
				Spec. Section: **00 00 00 - Items called out on the plans. No specs**	
				Drawing/Detail No.: **S-101**	
ATTN: Philip Johnson	ATTN: **Devon Jercinovic**			1st Sub	Re-Sub
Date Transmitted: **07/20/2017**	Prev. Transmittal Date:				

Item No.	No. Copies	Description	Manufacturer	Mfg/Vendor Dwg or Detail	Action Taken*
1	1	Bilco Hatches	HD Supply Waterworks, Ltd.		A

The Action Designated Above is in Accordance with the Following Legend:

A – Furnish as Submitted
B – Furnish as Noted
C – Revise and Re-submit
1. Not enough information for review.
2. No reproducible submitted.
3. Copies illegible.
4. Not enough copies submitted.
5. Wrong sequence number.
6. Wrong resubmittal number.
7. Wrong Spec. Section.
8. Wrong form used.
9. See Comments.

D – Rejected
E – Engineer's Review not Required
1. Submittal not required.
2. Supplemental Information. Submittal retained for Information purposes only.
3. Information reviewed and approved on prior submittal.
4. See Comments.

Review is for general compliance with Contract Documents. No responsibility is assumed for correctness of dimensions or detail. Contractor is required to specify deviations from contract requirements. Lack of exceptions noted by Engineer does not waive Contractor's obligation to comply with Drawings and Specifications.

Comments:
Items reviewed and confirmed to meet requirements
(Reviewed Material in Parentheses)
Issues in Bold

- Vault hatches meet specifications and dimensions of pre-cast vault drawings.

By: _____ Date: 7-25-17

EA Engineering, Science, and Technology, Inc., PBC

Distribution: [1] Contractor [1] Engineer [1] Owner

Junction Vaut, Qty 1

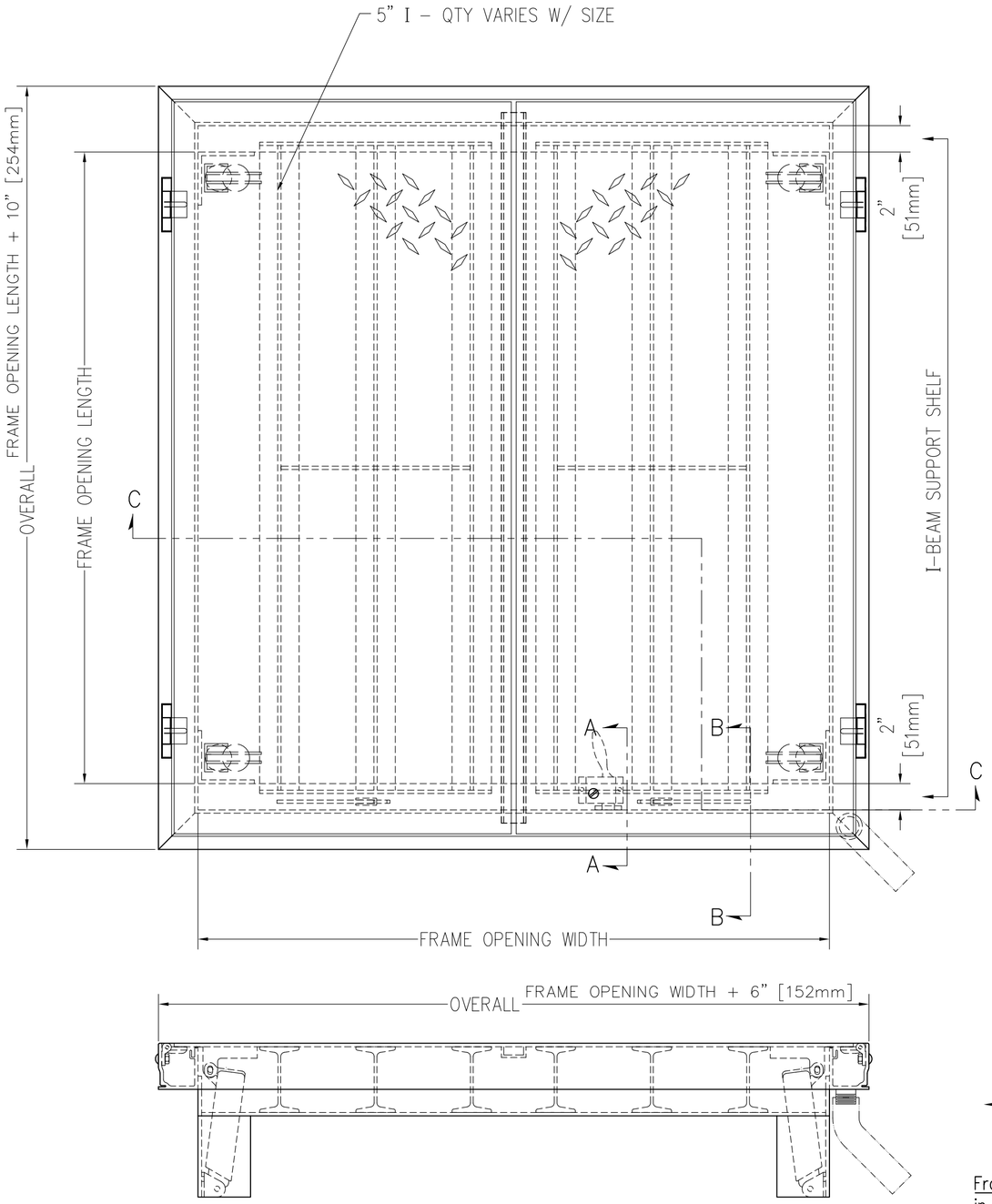

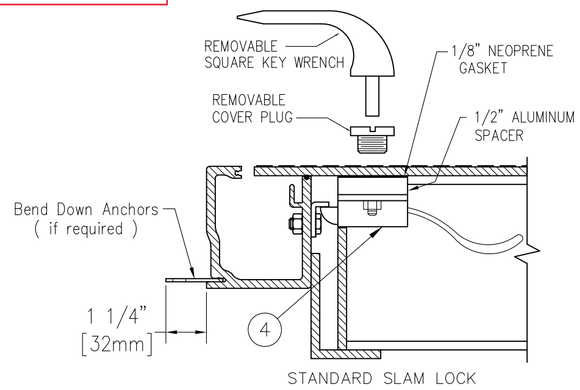

SECTION A–A

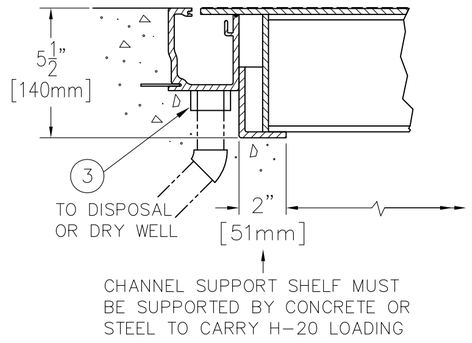

SECTION B–B

NOTE:
DESIGNED TO WITHSTAND H–20 WHEEL LOADINGS SUITABLE FOR USE IN OFF–STREET LOCATIONS WHERE NOT SUBJECTED TO HIGH DENSITY TRAFFIC

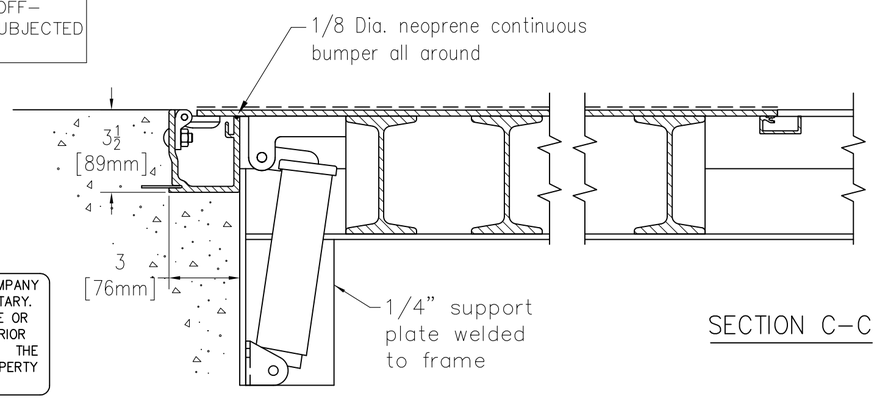

SECTION C–C

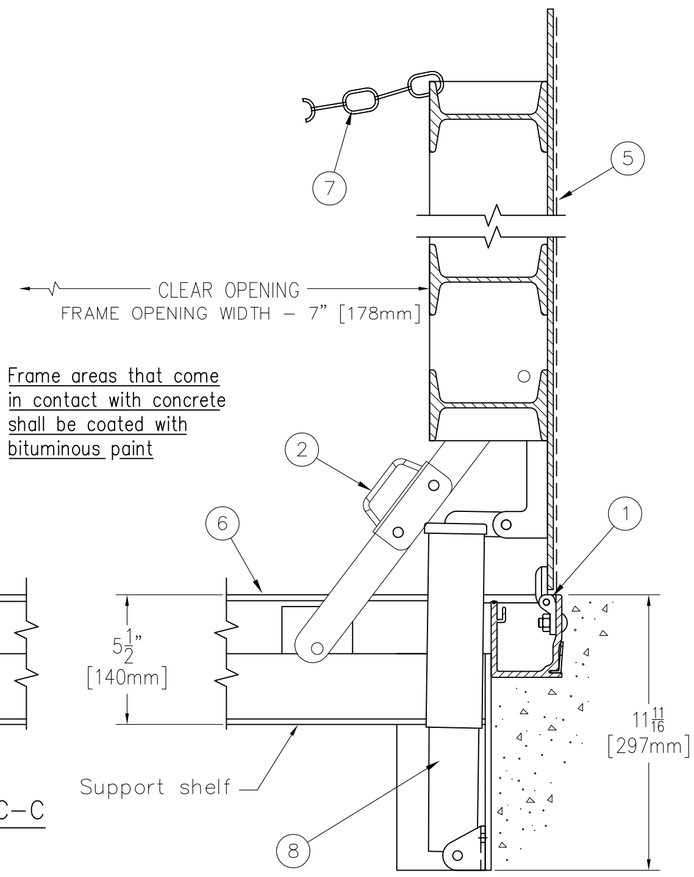

THIS DRAWING IS THE PROPERTY OF THE BILCO COMPANY AND INCORPORATES INFORMATION WHICH IS PROPRIETARY. PUBLICATION AND/OR PUBLIC DISTRIBUTION IN WHOLE OR IN PART IS EXPRESSLY PROHIBITED WITHOUT THE PRIOR WRITTEN CONSENT OF THE BILCO COMPANY. THE INFORMATION CONTAINED HEREIN REMAINS THE PROPERTY OF THE BILCO COMPANY. ALL RIGHTS RESERVED.

SPECIFICATIONS

1. Bilco heavy duty forged stainless steel hinges with stainless steel pins
2. Bilco automatic hold open arm
3. 1–1/2" drain coupling
4. Standard slam lock
5. 1/4" aluminum diamond pattern plate cover
6. Bilco 1/4" aluminum channel frame with recessed anchors
7. Heavy duty check chain
8. Stainless steel lifting mechanism

SHOP FINISH:
ALUMINUM: MILL FINISH
HARDWARE: TYPE 316 STAINLESS STEEL
(unless otherwise specified)

REINFORCED FOR H20 LOADING

INSTALLER NOTES:

A. Use caution. Cover is spring loaded. Do not remove safety shipping bolt until unit is to be installed and in normal horizontal operating position.
B. Be sure unit is set on slight pitch toward drain corner.
C. Before anchoring in place open and close door. Check to see that the door in the closed position rests on the frame all around. If not, shim under the frame at the proper corner.
D. Do not reduce 1 1/2" drain pipe to dry well or disposal system.
E. Bend down anchors if required

Customer:

P.O. N°

Job:

Sales Rep:

Manufacturers of Doors for Special Services
Bilco® THE BILCO COMPANY
New Haven, Connecticut 06505

DOUBLE LEAF ACCESS DOOR
TYPE JD-ALH20 - EXTERIOR

QTY	TYPE	SIZE WIDTH x LENGTH
☐	JD-1ALH20	4'-0" x 2'-6" [1220mm] x [762mm]
☐	JD-2ALH20	4'-0" x 4'-0" [1220mm] x [1220mm]
☐	JD-3ALH20	4'-0" x 6'-0" [1220mm] x [1830mm]
☐	JD-4ALH20	5'-0" x 5'-0" [1525mm] x [1525mm]

© 11-16-09 THE BILCO COMPANY

Well Head Vault, Qty 2

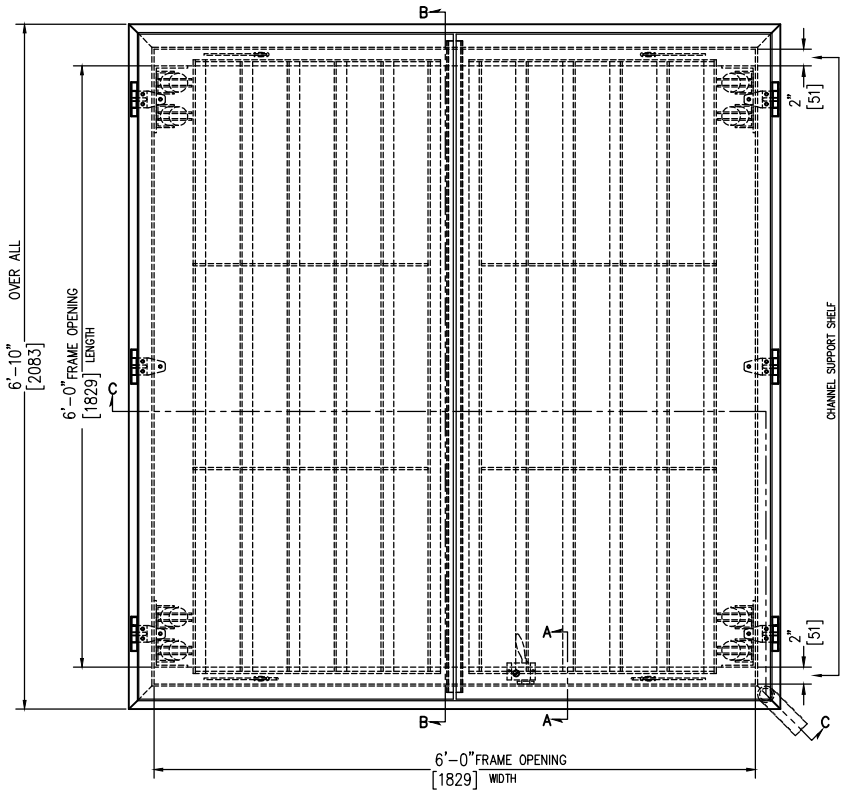

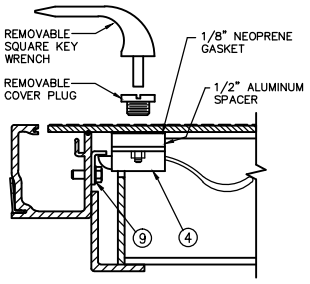

SECTION A-A
STANDARD SLAM LOCK

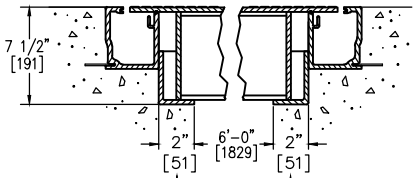

CHANNEL SUPPORT SHELF MUST BE SUPPORTED BY CONCRETE OR STEEL TO CARRY H-20 LOADING

SECTION B-B

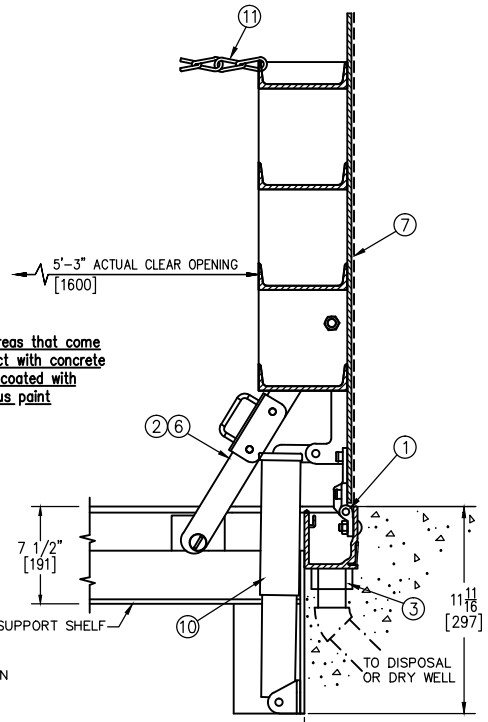

Frame areas that come in contact with concrete shall be coated with bituminous paint

NOTE:
DESIGNED TO WITHSTAND H-20 WHEEL LOADINGS SUITABLE FOR USE IN OFF-STREET LOCATIONS WHERE NOT SUBJECTED TO HIGH DENSITY TRAFFIC

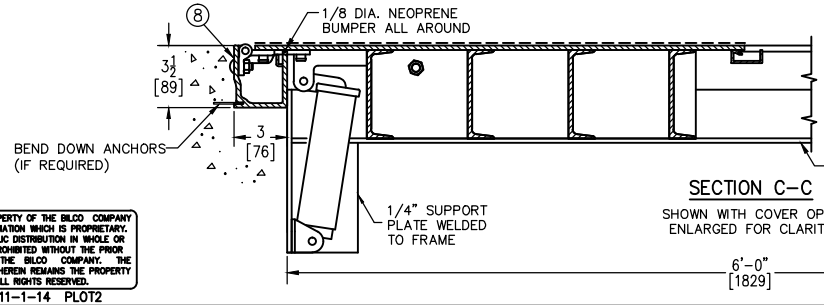

SECTION C-C
SHOWN WITH COVER OPEN
ENLARGED FOR CLARITY

SPRINGS 2 @ 300 & 2 @ 400

THIS DRAWING IS THE PROPERTY OF THE BILCO COMPANY AND INCORPORATES INFORMATION WHICH IS PROPRIETARY. PUBLICATION AND/OR PUBLIC DISTRIBUTION IN WHOLE OR IN PART IS EXPRESSLY PROHIBITED WITHOUT THE PRIOR WRITTEN CONSENT OF THE BILCO COMPANY. THE INFORMATION CONTAINED HEREIN REMAINS THE PROPERTY OF THE BILCO COMPANY. ALL RIGHTS RESERVED.

JD-HN_AL 11-1-14 PLOT2

Sym.	Revision	Date	By
A	New Release	7-14-17	root

SPECIFICATIONS:

1. Bilco heavy duty forged stainless steel hinges with stainless steel pins
2. Guide arm (if req'd)
3. 1-1/2" drain coupling
4. Standard slam lock
5.
6. Bilco automatic lock open arm
7. 1/4" aluminum diamond pattern plate cover
8. Bilco 1/4" aluminum channel frame with recessed anchors
9. Stainless steel lock strike
10. Stainless steel spring lifting mechanism
11. Heavy duty check chain

INSTALLER NOTES:

A. Use caution. Cover is spring loaded. Do not remove safety shipping bolt until unit is to be installed and in normal horizontal operating position.
B. Be sure unit is set on slight pitch toward drain corner.
C. Before anchoring in place open and close door. Check to see that the door in the closed position rests on the frame all around. If not, shim under the frame at the proper corner.
D. Do not reduce 1 1/2" drain pipe to dry well or disposal system.
E. Bend down anchors if required

(1) UNIT(S) REQUIRED AS SHOWN (Aluminum Weldment)
COVER REINF. FOR H-20 LOADING

SHOP FINISH:
COVER: MILL FINISH
FRAME: MILL FINISH
HARDWARE: STAINLESS STEEL TYPE 316 (UNLESS OTHERWISE SPECIFIED)

Customer: HD SUPPLY WATERWORKS ALBUQUERQ
ALBUQUERQUE NM 64TH ST
WACO, TX 76714

P.O. N°

Job:

Builder:

Architect:

Engineer:

Sales Rep: MOUNTAIN WEST SALES INC.
2718 UNIVERSITY BLVD NE
ALBUQUERQUE, NM 87107

Manufacturers of Doors for Special Services
THE BILCO COMPANY
New Haven, Connecticut 06505

TYPE "JD"- (H20) ALUMINUM DOUBLE LEAF ACCESS DOOR - SIZE 6'-0" x 6'-0" [1829mm x 1829mm]

Drawn By	Date	Drawing No.	Rev.
CAD	7-14-17	JD-X10172	A
SHEAR	Scale DO NOT SCALE		

DEPARTMENT OF THE ARMY
ALBUQUERQUE DISTRICT, CORPS OF ENGINEERS
ALBUQERQUE DISTRICT OFFICE
4101 JEFFERSON PLAZA NE
ALBUQUERQUE, NM 87109

SUBMITTAL REVIEW VERIFICATION SHEET

PROJECT TITLE: Kirtland BFF Mid-Plume Pump and Treat System Expansion
CONTRACT NUMBER: W912DR-12-D-0006 DM01
DATE RECEIVED: 8-02-2017
DATE REVIEWED: 8-02-2017

DESCRIPTION OF ITEMS REVIEWED:

1. Directional Drill Conduit

NO EXCEPTIONS TAKEN.	**X**
EXCEPTIONS AS NOTED ON DRAWINGS AND/OR ATTACHED SHEETS(S). RESUBMISSION NOT REQUIRED.	
EXCEPTIONS AS NOTED ON DRAWINGS AND/OR ATTACHED SHEETS(S). RESUBMISSION REQUIRED.	
RECEIPT ACKKNOWLEDGED.	

Notes:

NOTE: ITEMS REVIEWED AS TO GENERAL LAYOUT ONLY. DIMENSIONS AND QUANTITIES NOT CHECKED. REVIEW DOES NOT RELIEVE CONTRACTOR OF RESPONSIBILITIES FOR ANY ERRORS WHICH MAY EXIST AS CONTRACTOR SHALL BE RESPONSIBLE FOR DIMENSIONS AND DESIGN OF ADEQUATE CORRECTIONS, DETAILS AND SATISFACTORY CONSTRUCTION OF WORK.

SIGNATURE _____ DATE 8/2/17

EA Engineering, Science, and Technology, Inc., PBC

Submittal Review Sheet 1

Project Name: **Kirtland BFF Mid-Plume Pump and Treat System Expansion**				Date Received: **8/1/17**	
Project Owner: **Kirtland Air Force Base**				Checked By: **Tyler Curley**	
Contractor: **RMCI, Inc.**	Engineer: **EA Engineering, Science and Technology, Inc., PBC.**			Log Page: **NA**	
Address: **6211 Chappell Rd NE, Albuquerque, NM 87113**	Address: **320 Gold Ave. SW, Suite 1300 Albuquerque, NM 87102**			EA No.: **62599DM01**	
				Spec. Section: **No Specs**	
				Drawing/Detail No.: **No Drawing**	
ATTN: **Phillip Johnson**	ATTN: **Devon Jercinovic**			1st Sub	Re-Sub
Date Transmitted: **08/01/2017**	Prev. Transmittal Date:				

Item No.	No. Copies	Description	Manufacturer	Mfg/Vendor Dwg or Detail	Action Taken*
1	1				

The Action Designated Above is in Accordance with the Following Legend:

A – Furnish as Submitted
B – Furnish as Noted
C – Revise and Re-submit
1. Not enough information for review.
2. No reproducible submitted.
3. Copies illegible.
4. Not enough copies submitted.
5. Wrong sequence number.
6. Wrong resubmittal number.
7. Wrong Spec. Section.
8. Wrong form used.
9. See Comments.

D – Rejected
E – Engineer's Review not Required
1. Submittal not required.
2. Supplemental Information. Submittal retained for Information purposes only.
3. Information reviewed and approved on prior submittal.
4. See Comments.

Review is for general compliance with Contract Documents. No responsibility is assumed for correctness of dimensions or detail. Contractor is required to specify deviations from contract requirements. Lack of exceptions noted by Engineer does not waive Contractor's obligation to comply with Drawings and Specifications.

Comments:
Items reviewed and confirmed to meet requirements
(Reviewed Material in Parentheses)
Issues in Bold

-

By: _____ Date: 8/1/2017

Distribution: [1] Contractor [1] Engineer [1] Owner

UNITED POLY SYSTEMS

C O N D U I T

Applications include:

Telecom, Energy, DOT, Etc.

Installation:

Existing Conduit, Plow, Direct Burial,
HDD (Horizontal Directional Drilling)

- Product may be striped for a number of different indicators
- Product is manufactured in IPS (iron pipe size) and DIPS (ductile iron pipe size 4" and up). Product available in ¾" to 16" diameters
- The material requirements for PE conduit shall be classified in accordance with ASTM Standard D 3350 "Standard Specification for Polyethylene Plastic Pipe and Fittings Materials". ASTM D 3350 defines important physical properties of HDPE materials into ranges, or cell classes, so that each property can be defined within a range that is appropriate for the application.
- For HDPE conduit according to ASTM F 2160, the High Density Polyethylene material is defined as noted below:

Property	Range or Minimum Requirement	Units	Cell Class	Test Method
Density	0.941-0.955	g/cc	3	ASTM D 792 or 1505
Melt Index [a]	<0.25-0.40	g/10 minutes	3or4	ASTM D 1238
Flexural Modulus	110,000-160,000	Psi	4or5	ASTM D 790
Tensile Strength	3000-4000	Psi	4or5	ASTM D 638
Environmental Stress Crack Resistance [b]	F20>192	Hours (condition C)	3or4	ASTM D 1693
HDB	Not Defined		0,1,2,3,or 4	ASTM D2837

*Nominal values are to be used as guidelines only; this is not a product specification and does not indicate minimum or maximum values.

4707 E. Kearney, Springfield, MO 65803 • 417.708.9887 • www.unitedpolysystems.com

Print line

The duct product shall be sequentially marked and identified along its outer length in contrasting color. The print interval shall be every two feet and shall include the following:

MANUFACTURER'S NAME: United Poly Systems

PRODUCT SIZE/SDR

PRODUCTION CODE (Date, Location, Period)

SPECIFICATION

LENGTH OF CONDUIT (in feet) on reel

Optional custom print lines are available and may include customer name, project name, application etc.

Minimum Order Quantities

Minimum order quantities are as follows:

Size (in)	Color	Minimum (ft)
¾”	Any	2500
1”	Any	2500
1 ¼”	Orange or Black	2000
1 ¼”	Other	3000
1 ½”	Orange or Black	1500
1 ½”	Other	2500
2”	Orange or Black	1000
2”	Other	2000
2 ½”	Orange or Black	2500
2 ½”	Other	5000
3”	Orange or Black	1000
3”	Other	2000
4”	Orange or Black	500
4”	Other	750
	Ducts larger than 4”diameter offered in black or w/stripes only	
5”		1000
6”		900
8”		560
10”		560
12”		480
14”		560
16”		480

Reel Dimensions

Standard dimensions for United Poly Systems reels are as follows:

All reels come in a standard 48” width unless otherwise requested by customer. Standard common reel diameters are 48”, 66”, 72”, 83” 96”, 102”, 114” and 120”.

Segmented reels are also available in 2-way, 3-way or 4-way configurations. United Poly Systems does not currently parallel wrap duct.

¾” and 1” size ducts are wrapped to a preferred diameter reel size of 48”, 66” or 72”.

6” duct is offered on 450’ 120” reels or in coils of 500’

United Poly Systems will not coil 4” schedule 40 HDPE pipe due to the potential for compromise of product integrity.

Options

- Straight longitudinal internal ribbing is available for all pipes 2” and below.
  - ***UNIFORM STRAIGHT INTERNAL RIBS SPANNING THE LENGTH OF THE PIPE***
- Optional custom print lines are available and may include customer name, project name, application, lightning bolt etc.
- Pull tape is offered in a number of tensile strengths. United Poly Systems standard pull tape is an 1130# strength, while other options include strengths from 200# to 2500#.
- Segmented reels are available in 2-way, 3-way or 4-way configurations. United Poly Systems does not currently parallel wrap duct.
- A number of colors and stripes are offered to customize the product to the customer’s needs. United Poly Systems offers orange, blue, black, red, gray, white, green, yellow, terracotta, violet, brown, lilac, and custom colors upon customer’s request.

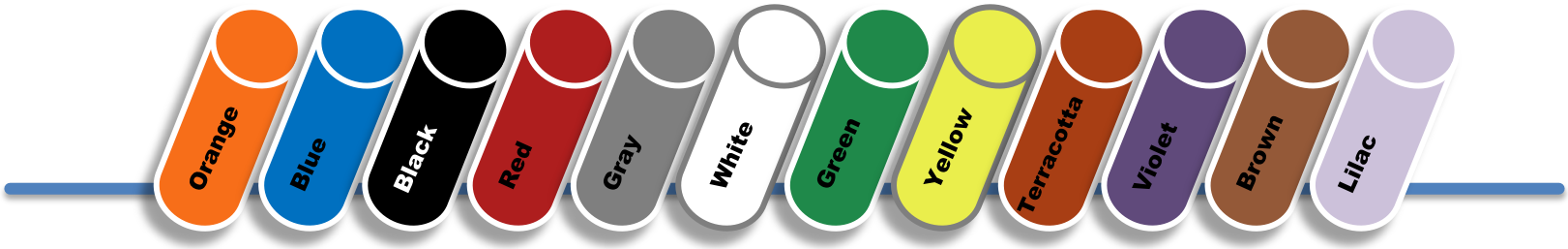

Custom colors available upon request

Coil Sizes

Standard coil lengths are as follows:

Size (in)	Standard Coil Footages (ft)	Quantity per pallet	Coil ID(in)	Coil Width (in)
¾”	500 - 1000	8	30	10 - 20
1”	500 - 1000	7 - 5	30	11 - 20
1 ¼”	500 - 1000	5 - 3	30	16 - 29.5
1 ½”	500 - 1000	8 - 6	51 - 51	13.5 - 16
2”	500 - 1000 - 1500 - 2000	7 - 4 - 3 - 3	51 - 51 - 51 - 51	14 - 22.5 - 28 - 32
3”	500 - 1000	4 - 2	69.5 - 69.5	23.5 - 45
4”	500 - 600 - 800	3 - 2 - 2 - 2	69.5 - 70 - 69.5	31 - 48 - 49
5”	500	2	84	50
6”	450	2	84	50

Internal Ribbing

United Poly Systems is proud to offer HDPE duct with longitudinal internal ribbing for ¾” to 2” diameters. Ribbed duct offers a way to maximize the distance cable may be pulled and jetted into conduit. The internal ribs help to reduce the coefficient of friction within that particular pipe. Air may flow more readily around the cable and contact with the wall of the duct is reduced thereby reducing friction and simplifying instillation. Inside ribbed duct is available up to 6’ diameter conduit. Ribbed conduit is offered on segmented reels with or without any of our pre-installed pull tape options and can be manufactured in any solid color or striping.

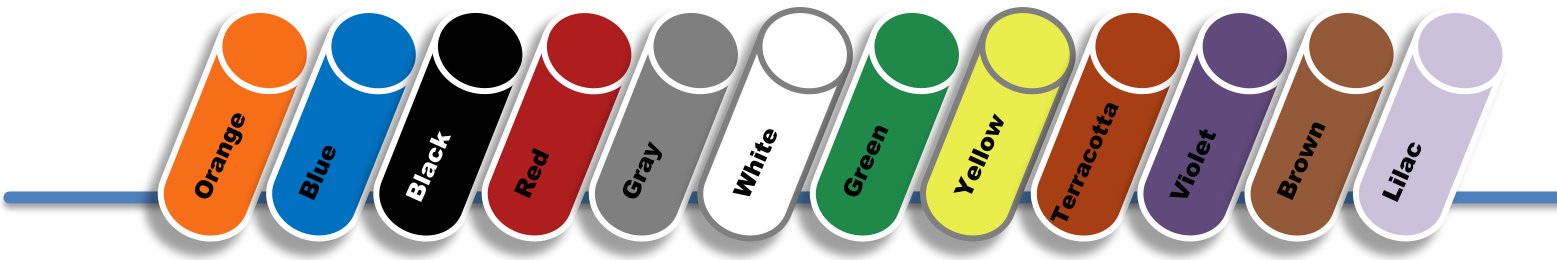

Custom colors available upon request

4707 E. Kearney, Springfield, MO 65803 • 417.708.9887 • www.unitedpolysystems.com

Notes

¬ Ovality of 2 inch and smaller conduit shall not exceed 7% off the coil. Coiled conduit larger than 2 inch through 3 inch IPS shall not exceed 10%. Ovality in coiled 4 inch and greater diameter conduit and casing is largely a packaging condition where greater than 15% ovality shall be corrected in
the field by processing the roundable conduit through re-rounding and straightening equipment during installation. Straight lengths of conduit shall have ovality of 5% or less.
PPI. *HDPE Solid Wall Conduit Model Specification Power and Communications Conduit and Casing*. Tech. no. MS-5. 2008.

¬ HDPE conduit will ovalize when it is coiled, and after a period of time,will set into the coiled state. A residual curve is normal for all coiled HDPE duct products. Since larger duct is coiled into a relatively tighter bending radius, residual curvature and ovality is greater for larger diameters. Some couplers may be affected by ovalized duct, along with installations where cable-fill ratios reach near capacity, or where larger diameter cables are being placed. Residual curvature and ovality may be corrected in the field by running the entire coil through rerounding and straightening equipment during installation.

¬ **Schedule 40 HDPE conduit through 3" has a wall thickness greater than SDR 15.5. Schedule *40 HDPE conduits in diameters above 3" and Schedule 80 in 6" have wall thickness ranges that are less than SDR 15.5. United Poly Systems will not offer these sizes in continuous coils to preserve pipe integrity and limit ovality*.**

¬ "All HDPE pipes produced under ASTM D3035, F714, D2447, D2239 and D2737 specifications are suitable for the transport of liquids, including water, fluid chemicals, effluents, municipal sewage, etc. The user should consult with the HDPE pipe manufacturer to determine whether the composition of the liquid material being transported is compatible with polyethylene pipe so as not to affect the service life below limits acceptable to the user."
PPI. Resistance of Solid Wall Polyethylene Pipe to a Sanitary Sewage Environment. Tech. no. 15. 2009.

¬ **Pressure Rating (psig) Comparison Between PE 4710 and PE 3408 for Water Applications**

	DR 9	DR 11	DR 13.5	DR 17
PE 4710	252	202	161	126
PE 3408	200	160	128	100

¬ **RECOMMENDED COLOR CODE**

This color code is only intended for solid wall pipe used outside of buildings

Color or Stripe Color	Solid Wall Piping Application
Red	Electric power lines, cable, conduit, and lighting cables
Orange	Telecommunication, alarm or signal lines, cables, or conduit
Yellow	Fuel gas (methane or propane), oil, petroleum, steam, or gaseous materials
Green	Sewers and drain lines
Blue	Potable water
Violet(Purple)	Reclaimed water, irrigation, and slurry lines

The recommended color code provided in this document is consistent with the American Public Works Association (APWA) Uniform Color Code.

DEPARTMENT OF THE ARMY
ALBUQUERQUE DISTRICT, CORPS OF ENGINEERS
ALBUQERQUE DISTRICT OFFICE
4101 JEFFERSON PLAZA NE
ALBUQUERQUE, NM 87109

SUBMITTAL REVIEW VERIFICATION SHEET

PROJECT TITLE: Kirtland BFF Mid-Plume Pump and Treat System Expansion
CONTRACT NUMBER: W912DR-12-D-0006 DM01
DATE RECEIVED: 8-02-2017
DATE REVIEWED: 8-02-2017

DESCRIPTION OF ITEMS REVIEWED:

1. Concrete Mix Design

NO EXCEPTIONS TAKEN.	**X**
EXCEPTIONS AS NOTED ON DRAWINGS AND/OR ATTACHED SHEETS(S). RESUBMISSION NOT REQUIRED.	
EXCEPTIONS AS NOTED ON DRAWINGS AND/OR ATTACHED SHEETS(S). RESUBMISSION REQUIRED.	
RECEIPT ACKKNOWLEDGED.	

Notes:

NOTE: ITEMS REVIEWED AS TO GENERAL LAYOUT ONLY. DIMENSIONS AND QUANTITIES NOT CHECKED. REVIEW DOES NOT RELIEVE CONTRACTOR OF RESPONSIBILITIES FOR ANY ERRORS WHICH MAY EXIST AS CONTRACTOR SHALL BE RESPONSIBLE FOR DIMENSIONS AND DESIGN OF ADEQUATE CORRECTIONS, DETAILS AND SATISFACTORY CONSTRUCTION OF WORK.

SIGNATURE _____ **DATE** 8/2/2017

EA Engineering, Science, and Technology, Inc., PBC

Submittal Review Sheet 1

Project Name: **Kirtland BFF Mid-Plume Pump and Treat System Expansion**				Date Received: **8/1/17**	
Project Owner: **Kirtland Air Force Base**				Checked By: **Tyler Curley**	
Contractor: **RMCI, Inc.**	Engineer: **EA Engineering, Science and Technology, Inc., PBC.**			Log Page: **NA**	
Address: **6211 Chappell Rd NE, Albuquerque, NM 87113**	Address: **320 Gold Ave. SW, Suite 1300 Albuquerque, NM 87102**			EA No.: 62599DM01	
				Spec. Section: **No Specs**	
				Drawing/Detail No.: **No Drawing**	
ATTN: Philip Johnson	ATTN: **Devon Jercinovic**			1st Sub	Re-Sub
Date Transmitted: **08/01/2017**	Prev. Transmittal Date:				

Item No.	No. Copies	Description	Manufacturer	Mfg/Vendor Dwg or Detail	Action Taken*
1	1	Concrete Mix Design	Duke City Redi Mix		A

The Action Designated Above is in Accordance with the Following Legend:

A – Furnish as Submitted
B – Furnish as Noted
C – Revise and Re-submit
1. Not enough information for review.
2. No reproducible submitted.
3. Copies illegible.
4. Not enough copies submitted.
5. Wrong sequence number.
6. Wrong resubmittal number.
7. Wrong Spec. Section.
8. Wrong form used.
9. See Comments.

D – Rejected
E – Engineer's Review not Required
1. Submittal not required.
2. Supplemental Information. Submittal retained for Information purposes only.
3. Information reviewed and approved on prior submittal.
4. See Comments.

Review is for general compliance with Contract Documents. No responsibility is assumed for correctness of dimensions or detail. Contractor is required to specify deviations from contract requirements. Lack of exceptions noted by Engineer does not waive Contractor's obligation to comply with Drawings and Specifications.

Comments:
Items reviewed and confirmed to meet requirements
(Reviewed Material in Parentheses)
Issues in Bold

4,000 PSI concrete conforming to COA specifications for exterior structures.

By: _____ Date: 8/1/17

Distribution: [1] Contractor [1] Engineer [1] Owner

CITY OF ALBUQUERQUE

Department of Municipal Development
Melissa R. Lozoya, P.E., Acting Director

February 2, 2017

Duke City Redi Mix
P.O. Box 250
Moriarty, NM 87035

Attention: Mr. Miles Shiver, General Manager

Subject: Review and Evaluation of the Request for Authorization Period for Portland Cement Concrete Submittal, December 21, 2016; CA² Testing, December 21, 2016; and Sampled December 19, 2016.

CODES	APPLICATION(S)	f'c @ 28 days, psi
50.17	Interior Concrete	3,000
51.17	Hydraulic Structures	3,500
→ 52.17	Structures	4,000
54.17	Sanitary Sewer	4,000
55.17	Exterior Concrete	3,000
56.17	Exterior Concrete, Slip Formed	3,000
57.17	High Early Release	4,000 psi @ 7 days
59.17	Lean Fill	N/A

PO Box 1293

Albuquerque

New Mexico 87103

www.cabq.gov

Sir:

The City of Albuquerque Department of Municipal Development Street Maintenance Division has reviewed and evaluated the subject Portland Cement Concrete Submittal for authorization for the period of 2017-2018. The review and evaluation were conducted in order to verify compliance with the requirements of the City of Albuquerque Standard Specifications for Public Works Construction, 1986 Edition, Updates 1-9. The submittal's authorization may be extended for a period of fourteen (14) months from latest date of sampling of the aggregates, assuming, (1) if there are no changes in materials and/or suppliers, (2) the production concrete performance complies with the requirements of the reference submittal design mixes, (3) the design mixes are produced at a ready mix plant and/or transit mix trucks certified to comply with the requirements of SECTION 101-PORTLAND CEMENT CONCRETE. Written plant and transit mix truck certifications shall be made available to for plant(s) and the transit mix trucks for inspection, and submitted to the Engineer upon request.

The design mixes specified in the submittal were proportioned with ASTM C33 aggregates as Orona Pit washed concrete sand, South Valley Pit #89 (3/8" Los Lunas) intermediate and #67 (7/8" Los Lunas) coarse aggregates; Holcim, Florence, Co. Type I-II LA Portland Cement; Salt River Materials 4 Corners, NM, ASTM C 618 Class F fly ash, Sika Plastocrete 161 Water Reducing Admixture and Sika-Air Air-Entraining Admixture.

The fine aggregate failed to meet the grading requirements of ASTM Section 6.1 for the #30 sieve. The intermediate aggregate failed to meet the grading requirements of ASTM C33 Table 3 for the #200 sieve. A variance request for the gradation was included in the submittal.

Based on this review and evaluation, the request for re-authorization for the Portland Cement Concrete Submittal for the 2017-2018 period was determined to comply with the requirements of City of Albuquerque Standard Specifications for Public Works Construction, Updates 1-9, with the included variations. The submittal is authorized for use on City and City related projects for a period of fourteen (14) months from date of sampling, December 19, 2017, to February 19, 2018. *Accelerating, normal range, and high range water reducing admixtures (flowable concrete application(s)), retarding and color admixtures, are not authorized for use in the design mixes included in the submittal and this extension.*

The review and evaluation are only to verify compliance with the design and specification concepts of the City of Albuquerque Standard Specifications for Public Works Construction, 1986 Edition, and **Updates 1-9. It shall not be construed as relieving the Contractor of the full responsibility of providing materials, equipment, and the work required either by a specific contract or contract plans, and/or specification: a) the proper fitting and construction of the work; b) accuracy and completeness of the submittal; c) selecting the fabrication and fabrication techniques of construction; and, d) performing the work in a safe manner.**

This authorization does not relieve the CONTRACTOR of the responsibility to provide the design mixes submittal for use on a specific project for authorization by the ENGINEER. The submittal shall include copies of this authorization, and the authorized design mixes submittal.

submittal may not comply. It is the responsibility of the CONTRACTOR to provide submittals and materials that comply with a CONTRACT.

Authorized by:

S Woodall

Stephen P. Woodall, PE
Pavement & Materials Engineer

Copies: David Harrison, PE, Division Manager, Construction Services
Shahab Biazar, PE, City Engineer, Planning Department
File

Attachments: 1

7705 BROADWAY S.E.
ALBUQUERQUE, NEW MEXICO
P.O. Box 250
Moriarty, NM 87035
PHONE: (505) 877-5777
FAX: (505) 452-0806
DukeCityRediMix@aol.com

December 21, 2016

City of Albuquerque Public Works Dept.
Materials Testing Bureau
Attn: Phillip Romo, P.E.
P.O. Box 1293
Albuquerque, NM 87103

RE: 2017 Portland Cement Concrete Recertification
Submittals for the City of Albuquerque

Attached is certification of Duke City' Redi-Mix's City of Albuquerque mix designs performed by Concrete, Aggregate & Asphalt Testing, LLC for your approval. We trust the submitted items will satisfy the requirements in Section 101-Portland Cement Concrete, City of Albuquerque Standard Specifications for Public Works Construction.

Feel free to contact me at (505) 877-5777 if you need any additional information.

Sincerely,

W M Shiver, III

Miles Shiver
Managing Partner
Duke City Redi-Mix, LLC

CA2 TESTING

PO Box 1228
414 Bibb Industrial Drive
Las Vegas, NM 87701

Phone: 505-718-3030
Fax: 505-425-9159
E-mail: leaann@ca2testing.com

December 21, 2016

Miles Shiver
Duke City Redi Mix
7705 Broadway SE
Albuquerque, NM 87105

RE: 2017 Concrete mix designs recertification as per Section 101 of the City of Albuquerque (CoA) Amendment 1 to Table 101C of Section 101 of the City of Albuquerque Standard Specifications for Public Works Construction Update #8.

Dear Sir,
We have completed the aggregate testing and review analysis has been performed on data obtained and provided on the referenced concrete mixes for recertification for use on projects for 2017 in accordance with the City of Albuquerque Standard Specifications for Public Works Construction – Section 101 and Amendment 1 of Table 101.C – update #8.

The mix performance data for the 3000 and 4000 psi exterior concrete (52.16 & 55.16) mixes were provided by Duke City Redi-Mix and is contained in Appendix A. When current year mix data was not available, data from the original lab design was used. The statistical analysis of the performance data confirms that the original 2009 laboratory trial data is still representative and valid. The strength data for 2016 shows that the mixes performed equal to or better than the original designs and the mixes meet and exceed the necessary overdesign requirements.

The component materials are essentially the same as when the original mixes were established. The coarse and fine aggregates gradation data was reviewed and compared to last years and also to verify that they meet the gradation specification requirements. The fine aggregate failed to meet the grading requirements of ASTM C33 Section 6.1 for the #30 sieve. However, ASTM C33 Section 6.3 states that the fine aggregate shall meet the requirements of Section 6 provided that the supplier can demonstrate to the purchaser or specifier that the class of concrete specified will have relevant properties. Also, the fineness modulus has remained within the 0.20 of the "base fineness modulus". Hence a variation is requested for the fine aggregate grading. The specific gravities of the fly ash and aggregates have changed and the 2017 recommended mix proportions have been adjusted to reflect the changes.

Appendix B contains data and information on the individual constituents: cement, flyash, aggregates and admixtures. A copy of the original mix design submittal is included in Appendix C.

PO Box 1228
414 Bibb Industrial Drive
Las Vegas, NM 87701

Phone: 505-718-3030
Fax: 505-425-9159
E-mail: leaann@ca2testing.com

Based on the items discussed above, including laboratory dry density and compressive strength testing of the lean fill trial batch, certification is hereby given that the Portland cement concrete mixes listed below comply with the City of Albuquerque Standard Specifications for Public Works Construction – Section 101 and Amendment 1 of Table 101.C and Section 207– update #8.

Mix Code	Mix Strength	Mix Use
50.17	3000 psi	Interior concrete (heated areas) foundations and slabs on grade
51.17	3500 psi	Hydraulic structures, storm drain structures & channels and water reservoirs
52.17	4000 psi	Exterior structures, bridges/bridge decks, parking structures
54.17	4000 psi	Sanitary sewer and manhole structures
55.17	3000 psi concrete	Exterior structures, sidewalks, storm drain manholes, Misc exterior
56.17	3000 psi	Exterior concrete – curb & gutter, curb machine (low slump)
57.17	4000 psi	High early release concrete
59.17	N/A	Lean Fill, Section 207

If there should be any questions, please do not hesitate to call.

Sincerely,

LEA ANN MARQUEZ
NEW MEXICO
16029
PROFESSIONAL ENGINEER

Lea Ann Marquez, P.E.

City Of Albuquerque 3000 PSI - Interior

Interior Structure & Slab on Grade, Heated areas, Section 510

Client: Duke City Redimix
Address: 7705 Broadway SE
Albuquerque, NM 87105

Report Date: 12/21/2016

CONCRETE MIX PROPORTIONS

Mix Code: **50.17**

Material Description	Material Source	SSD Batch Weights	Specific Gravity SSD	Absorption	Abs Vol in Ft^3
Cement, type I-II LA>	***Holcim I/II***	425	3.15		2.16
Ash, type F	***SRM 4 Corners Fly Ash***	120	1.95		0.99
	Total Cementitious>	545			
Fine Aggregate/Lb>	***Orona Concrete Sand***	1161	2.564	2.08%	7.26
Coarse Aggregate #1/	***South Valley Pit 7/8"***	1345	2.738	2.20%	7.87
Coarse Aggregate #2/	***South Valley Pit 3/8"***	550	2.768	2.30%	3.19
Coarse Aggregate #3/	***N/A***	0	1	1.00%	
	Total design coarse aggregate at ssd:	1895			
	Total design FA & CA at ssd:	3057		18.30	
Air Content % by volume>	Entrained	5.5			1.49
Water @ SSD aggregates>	Gals/cubic yard:	30.5			4.07
	Lbs per cubic yard:	254			
	Total Weight>	3856		Total Volume>	27.0
Air Entraining Admixture - OZ	***Sika Air***	2.7	oz.	0.50	oz/cwt
MRWR - OZ	***Sika Plastocrete 161***	27.3	oz.	5.0	oz/cwt

Temperature and slump variations may cause adjustments in admixtures dosages.

	Design	Specs	Production
Total Cementitious content in lbs:	545		
Cement content in lbs:	425	> 423	425
Water/cementitious ratio:	0.47	< 0.5	0.47
Water/cement ratio:	0.60		
Ash wt as % of cement wt only:	28.2%		
Ash wt as % of total cementitious:	22.0%	> 20%	22.0%
Orona Concrete Sand	38.0%		
South Valley Pit 7/8"	44.0%		
South Valley Pit 3/8"	18.0%		
N/A	0.0%		

Adjusted Workability Factor	34.1
Coarseness Factor	50.6
Target corrected air content:	4.5-7.5%
Anticipated Air Content:	5.5%
Aggregate Correction Factor:	1.50
Target slump:	< 4"
Anticipated Slump:	4
Anticipated Unit Weight:	142.7
Max Theo. unit weight:	151.0
Calc'd Air:	5.5%

Age in Days	Average compressive strength	Specs
3	2964	
7	3918	
14	4281	f'c = 3000 psi
28	4720	f'cr = 4200 psi

Batch weights and anticipated plastic and hardened properties are based on trial batches Alb. 1, 2, 3, 4 & 5 which were batched 4/1/09. Volumetrics were updated based on December 2017 aggregate testing.

Concrete, Aggregate and Asphalt Testing, LLC
P.O. Box 1228 - 414 Bibb Industrial Drive
Las Vegas, NM 87701
(505)718-3030 phone

City Of Albuquerque 3500 PSI - Exterior

Hydraulic Structures, Storm Drain Structures & Channels, and Water Reservoirs Sectio
510, 512, and 602

CA2 TESTING

Client: Duke City Redimix
Address: 7705 Broadway SE
Albuquerque, NM 87105

Report Date: 12/21/2016

CONCRETE MIX PROPORTIONS

Mix Code: **51.17**

Material Description	Material Source	SSD Batch Weights	Specific Gravity SSD	Absorption	Abs Vol in Ft^3
Cement, type I-II LA>	*Holcim I/II*	519	3.15		2.64
Ash, type F	*SRM 4 Corners Fly Ash*	146	1.95		1.20
	Total Cementitious>	665			
Fine Aggregate/Lb>	*Orona Concrete Sand*	1106	2.564	2.08%	6.91
Coarse Aggregate #1/	*South Valley Pit 7/8"*	1280	2.738	2.20%	7.49
Coarse Aggregate #2/	*South Valley Pit 3/8"*	524	2.768	2.30%	3.03
Coarse Aggregate #3/	*N/A*	0	1	1.00%	
	Total design coarse aggregate at ssd:	1804			
	Total design FA & CA at ssd:	2910		17.42	
Air Content % by volume>	Entrained	5.5			1.49
Water @ SSD aggregates>	Gals/cubic yard:	31.9			4.26
	Lbs per cubic yard:	266			
	Total Weight>	3840		Total Volume>	27.0
Air Entraining Admixture - OZ	*Sika AIr*	3.3	oz.	0.50	oz/cwt
MRWR - OZ	*Sika Plastocrete 161*	33.3	oz.	5.0	oz/cwt

Temperature and slump variations may cause adjustments in admixtures dosages.

	Design	Specs	Production
Total Cementitious content in lbs:	665		
Cement content in lbs:	519	> 517	519
Water/cementitious ratio:	0.40	< 0.4	0.40
Water/cement ratio:	0.51		
Ash wt as % of cement wt only:	28.2%		
Ash wt as % of total cementitious:	22.0%	> 20%	22.0%
Orona Concrete Sand	38.0%		
South Valley Pit 7/8"	44.0%		
South Valley Pit 3/8"	18.0%		
N/A	0.0%		

Adjusted Workability Factor	37.3
Coarseness Factor	50.6
Target corrected air content:	4.5-7.5%
Anticipated Air Content:	5.5%
Aggregate Correction Factor:	1.50
Target slump:	< 4"
Anticipated Slump:	4
Anticipated Unit Weight:	142.1
Max Theo. unit weight:	150.4
Calc'd Air:	5.5%

Age in Days	Average compressive strength	Specs
3	4019	
7	5313	
14	5085	f'c = 3500 psi
28	6400	f'cr = 4700 psi

Batch weights and anticipated plastic and hardened properties are based on trial batches Alb. 1, 2, 3, 4 & 5 which were batched 4/1/09. Volumetrics were updated based on December 2017 aggregate testing.

Concrete, Aggregate and Asphalt Testing, LLC
P.O. Box 1228 - 414 Bibb Industrial Drive
Las Vegas, NM 87701
(505)718-3030 phone

City Of Albuquerque 4000 PSI - Exterior

Structures, Bridges/Bridge decks, and Parking Structures, Section 337 and 510

CA2 TESTING

Client: Duke City Redimix
Address: 7705 Broadway SE
Albuquerque, NM 87105

Report Date: 12/21/2016

CONCRETE MIX PROPORTIONS

Mix Code: **52.17**

Material Description	Material Source	SSD Batch Weights	Specific Gravity SSD	Absorption	Abs Vol in Ft³
Cement, type I-II LA>	*Holcim I/II*	566	3.15		2.88
Ash, type F	*SRM 4 Corners Fly Ash*	160	1.95		1.31
	Total Cementitious>	725			
Fine Aggregate/Lb>	*Orona Concrete Sand*	1079	2.564	2.08%	6.74
Coarse Aggregate #1/	*South Valley Pit 7/8"*	1221	2.738	2.20%	7.14
Coarse Aggregate #2/	*South Valley Pit 3/8"*	539	2.768	2.30%	3.12
Coarse Aggregate #3/	*N/A*	0	1	1.00%	
	Total design coarse aggregate at ssd:	1760			
	Total design FA & CA at ssd:	2839		16.99	
Air Content % by volume>	Entrained	5.5			1.49
Water @ SSD aggregates>	Gals/cubic yard:	32.5			4.34
	Lbs per cubic yard:	271			
	Total Weight>	3834		Total Volume>	27.0
Air Entraining Admixture - OZ	*Sika Air*	3.6	oz.	0.50	oz/cwt
MRWR - OZ	*Sika Plastocrete 161*	36.3	oz.	5.0	oz/cwt

Temperature and slump variations may cause adjustments in admixtures dosages.

	Design	Specs	Production
Total Cementitious content in lbs:	725		
Cement content in lbs:	566	> 564	566
Water/cementitious ratio:	0.37	< 0.4	0.37
Water/cement ratio:	0.48		
Ash wt as % of cement wt only:	28.2%		
Ash wt as % of total cementitious:	22.0%	> 20%	22%
Orona Concrete Sand	38.0%		
South Valley Pit 7/8"	43.0%		
South Valley Pit 3/8"	19.0%		
N/A	0.0%		

Adjusted Workability Factor	39.7
Coarseness Factor	51.3
Target corrected air content:	4.5-7.5%
Anticipated Air Content:	5.5%
Aggregate Correction Factor:	1.50
Target slump:	< 4"
Anticipated Slump:	4
Anticipated Unit Weight:	141.9
Max Theo. unit weight:	150.2
Calc'd Air:	5.5%

Age in Days	Average compressive strength	Specs
3		
7	4119	
14		f'c = 4000 psi
28	5711	f'cr = 5050 psi

Batch weights and anticipated plastic and hardened properties are based on trial batches Alb. 1, 2, 3, 4 & 5 which were batched 4/1/09. Volumetrics were updated based on December 2017 aggregate testing. Compressive strength results from statistical analysis ranging from 1/4/16 thru 6/16/16.
f'cr = 3780 psi
f'cr = 4012 psi

Concrete, Aggregate and Asphalt Testing, LLC
P.O. Box 1228 - 414 Bibb Industrial Drive
Las Vegas, NM 87701
(505)718-3030 phone

City Of Albuquerque 4000 PSI - Exterior

Sanitary Sewer and Manhole Structures Section 900

Client: Duke City Redimix
Address: 7705 Broadway SE
Albuquerque, NM 87105

Report Date: 12/21/2016

CONCRETE MIX PROPORTIONS

Mix Code: **54.17**

Material Description	Material Source	SSD Batch Weights	Specific Gravity SSD	Absorption	Abs Vol in Ft^3
Cement, type I-II LA>	*Holcim I/II*	659	3.15		3.35
Ash, type F	*SRM 4 Corners Fly Ash*	186	1.95		1.53
	Total Cementitious>	845			
Fine Aggregate/Lb>	*Orona Concrete Sand*	985	2.564	2.08%	6.15
Coarse Aggregate #1/	*South Valley Pit 7/8"*	1224	2.738	2.20%	7.17
Coarse Aggregate #2/	*South Valley Pit 3/8"*	452	2.768	2.30%	2.62
Coarse Aggregate #3/	*N/A*	0	1	1.00%	
	Total design coarse aggregate at ssd:	1677			
	Total design FA & CA at ssd:	2661		15.92	
Air Content % by volume>	Entrained	5.5			1.49
Water @ SSD aggregates>	Gals/cubic yard:	35.3			4.71
	Lbs per cubic yard:	294			
	Total Weight>	3800		Total Volume>	27.0
Air Entraining Admixture - OZ	*Sika Air*	4.2	oz.	0.50	oz/cwt
MRWR - OZ	*Sika Plastocrete 161*	42.3	oz.	5.0	oz/cwt

Temperature and slump variations may cause adjustments in admixtures dosages.

	Design	Specs	Production
Total Cementitious content in lbs:	845		
Cement content in lbs:	659	> 658	659
Water/cementitious ratio:	0.35	< 0.4	0.35
Water/cement ratio:	0.45		
Ash wt as % of cement wt only:	28.2%		
Ash wt as % of total cementitious:	22.0%	> 20%	22.0%
Orona Concrete Sand	37.0%		
South Valley Pit 7/8"	46.0%		
South Valley Pit 3/8"	17.0%		
N/A	0.0%		

Adjusted Workability Factor	41.2
Coarseness Factor	52.2
Target corrected air content:	4.5-7.5%
Anticipated Air Content:	5.5%
Aggregate Correction Factor:	1.50
Target slump:	< 4"
Anticipated Slump:	4
Anticipated Unit Weight:	140.7
Max Theo. unit weight:	148.8
Calc'd Air:	5.5%

Age in Days	Average compressive strength	Specs
3		
7	4117	
14		f'c = 4000 psi
28	7560	f'cr = 5200 psi

Batch weights and anticipated plastic and hardened properties are based on trial batches Alb. 1, 2, 3, 4 & 5 which were batched 4/1/09. Volumetrics were updated based on December 2017 aggregate testing. Compressive strenth results shown are based on 2014 statistical data. Not enough data for 2016 to perform an analysis.

Concrete, Aggregate and Asphalt Testing, LLC
P.O. Box 1228 - 414 Bibb Industrial Drive
Las Vegas, NM 87701
(505)718-3030 phone

City Of Albuquerque 3000 PSI - Exterior

Exterior Structures, Sidewalks, Storm Drain Manholes, Misc Concrete
Sections 340, 346, 420, 510, 511, 701 and 1500

Client: Duke City Redimix
Address: 7705 Broadway SE
Albuquerque, NM 87105

Report Date: 12/21/2016

CONCRETE MIX PROPORTIONS

Mix Code: **55.17**

Material Description	Material Source	SSD Batch Weights	Specific Gravity SSD	Absorption	Abs Vol in Ft^3
Cement, type I-II LA>	*Holcim I/II*	471	3.15		2.40
Ash, type F	*SRM 4 Corners Fly Ash*	133	1.95		1.09
	Total Cementitious>	604			
Fine Aggregate/Lb>	*Orona Concrete Sand*	1131	2.564	2.08%	7.07
Coarse Aggregate #1/	*South Valley Pit 7/8"*	1310	2.738	2.20%	7.67
Coarse Aggregate #2/	*South Valley Pit 3/8"*	536	2.768	2.30%	3.10
Coarse Aggregate #3/	*N/A*	0	1	1.00%	
	Total design coarse aggregate at ssd:	1846			
	Total design FA & CA at ssd:	2977		17.82	
Air Content % by volume>	Entrained	5.5			1.49
Water @ SSD aggregates>	Gals/cubic yard:	31.5			4.20
	Lbs per cubic yard:	262			
	Total Weight>	3844	Total Volume>		27.0
Air Entraining Admixture - OZ	*Sika Air*	3.0	oz.	0.50	oz/cwt
MRWR - OZ	*Sika Plastocrete 161*	30.2	oz.	5.0	oz/cwt

Temperature and slump variations may cause adjustments in admixtures dosages.

	Design	Specs	Production
Total Cementitious content in lbs:	604		
Cement content in lbs:	471	> 470	471
Water/cementitious ratio:	0.43	< 0.45	0.43
Water/cement ratio:	0.56		
Ash wt as % of cement wt only:	28.2%		
Ash wt as % of total cementitious:	22.0%	> 20%	22%
Orona Concrete Sand	38.0%		
South Valley Pit 7/8"	44.0%		
South Valley Pit 3/8"	18.0%		
N/A	0.0%		

Adjusted Workability Factor	35.7
Coarseness Factor	50.6
Target corrected air content:	4.5-7.5%
Anticipated Air Content:	5.5%
Aggregate Correction Factor:	1.50
Target slump:	< 4"
Anticipated Slump:	4
Anticipated Unit Weight:	142.2
Max Theo. unit weight:	150.5
Calc'd Air:	5.5%

Age in Days	Average compressive strength	Specs
3		
7	3569	
14		f'c = 3000 psi
28	4914	f'cr = 3540 psi

Batch weights and anticipated plastic and hardened properties are based on trial batches Alb. 1, 2, 3, 4 & 5 which were batched 4/1/09. Volumetrics were updated based on December 2017 aggregate testing. Compressive strength results from statistical analysis ranging from 1/11/16 thru 5/3/16.
f'cr = 3540 psi
f'cr = 3439 psi

Concrete, Aggregate and Asphalt Testing, LLC
P.O. Box 1228 - 414 Bibb Industrial Drive
Las Vegas, NM 87701
(505)718-3030 phone

City Of Albuquerque 3000 PSI - Exterior

Exterior Structures, Curb & Gutter, Curb Machine (Low Slump), Section 340

Client: Duke City Redimix
Address: 7705 Broadway SE
Albuquerque, NM 87105

Report Date: 12/21/2016

CONCRETE MIX PROPORTIONS

Mix Code: **56.17**

Material Description	Material Source	SSD Batch Weights	Specific Gravity SSD	Absorption	Abs Vol in Ft^3
Cement, type I-II LA>	*Holcim I/II*	471	3.15		2.40
Ash, type F	*SRM 4 Corners Fly Ash*	133	1.95		1.09
	Total Cementitious>	604			
Fine Aggregate/Lb>	*Orona Concrete Sand*	1148	2.564	2.08%	7.18
Coarse Aggregate #1/	*South Valley Pit 7/8"*	1330	2.738	2.20%	7.78
Coarse Aggregate #2/	*South Valley Pit 3/8"*	544	2.768	2.30%	3.15
Coarse Aggregate #3/	*N/A*	0	1	1.00%	
	Total design coarse aggregate at ssd:	1874			
	Total design FA & CA at ssd:	3022		18.09	
Air Content % by volume>	Entrained	5.5			1.49
Water @ SSD aggregates>	Gals/cubic yard:	29.5			3.94
	Lbs per cubic yard:	246			
	Total Weight>	3872		Total Volume>	27.0
Air Entraining Admixture - OZ	*Sika Air*	3.0	oz.	0.50	oz/cwt
MRWR - OZ	*Sika Plastocrete 161*	30.2	oz.	5.0	oz/cwt

Temperature and slump variations may cause adjustments in admixtures dosages.

	Design	Specs	Production
Total Cementitious content in lbs:	604		
Cement content in lbs:	471	> 470	471
Water/cementitious ratio:	0.41	< 0.45	0.41
Water/cement ratio:	0.52		
Ash wt as % of cement wt only:	28.2%		
Ash wt as % of total cementitious:	22.0%	> 20%	22%
Orona Concrete Sand	38.0%		
South Valley Pit 7/8"	44.0%		
South Valley Pit 3/8"	18.0%		
N/A	0.0%		

Adjusted Workability Factor	35.7
Coarseness Factor	50.6
Target corrected air content:	4.5-7.5%
Anticipated Air Content:	5.5%
Aggregate Correction Factor:	1.50
Target slump:	< 2.5"
Anticipated Slump:	2 1/2
Anticipated Unit Weight:	143.3
Max Theo. unit weight:	151.6
Calc'd Air:	5.5%

Age in Days	Average compressive strength	Specs
3		
7	4431	
14		f'c = 3000 psi
28	5924	f'cr = 4200 psi

Batch weights and anticipated plastic and hardened properties are based on trial batches Alb. 1, 2, 3, 4 & 5 which were batched 4/1/09. Volumetrics were updated based on December 2017 aggregate testing. Compressive strenth results shown are based on 2014 statistical data. Not enough data for 2016 to perform an analysis.

Concrete, Aggregate and Asphalt Testing, LLC
P.O. Box 1228 - 414 Bibb Industrial Drive
Las Vegas, NM 87701
(505)718-3030 phone

City Of Albuquerque - High Early Release Concrete

Client: Duke City Redimix
Address: 7705 Broadway SE
Albuquerque, NM 87105

Report Date: 12/21/2016

CONCRETE MIX PROPORTIONS

Mix Code: **57.17**

Material Description	Material Source	SSD Batch Weights	Specific Gravity SSD	Absorption	Abs Vol in Ft^3
Cement, type I-II LA>	*Holcim I/II*	542	3.15		2.76
Ash, type F	*SRM 4 Corners Fly Ash*	153	1.95		1.26
	Total Cementitious>	695			
Fine Aggregate/Lb>	*Orona Concrete Sand*	1090	2.564	2.08%	6.81
Coarse Aggregate #1/	*South Valley Pit 7/8"*	1262	2.738	2.20%	7.38
Coarse Aggregate #2/	*South Valley Pit 3/8"*	516	2.768	2.30%	2.99
Coarse Aggregate #3/	*N/A*	0	1	1.00%	
	Total design coarse aggregate at ssd:	1778			
	Total design FA & CA at ssd:	2867		17.16	
Air Content % by volume>	Entrained	5.5			1.49
Water @ SSD aggregates>	Gals/cubic yard:	32.5			4.34
	Lbs per cubic yard:	271			
	Total Weight>	3833	Total Volume>		27.0
Air Entraining Admixture - OZ	*Sika Air*	3.5	oz.	0.50	oz/cwt
MRWR - OZ	*Sika Plastocrete 161*	34.8	oz.	5.0	oz/cwt

Temperature and slump variations may cause adjustments in admixtures dosages.

	Design	Specs	Production
Total Cementitious content in lbs:	695		
Cement content in lbs:	542	N/A	542
Water/cementitious ratio:	0.39	N/A	0.39
Water/cement ratio:	0.50		
Ash wt as % of cement wt only:	28.2%		
Ash wt as % of total cementitious:	22.0%	> 20%	22.0%
Orona Concrete Sand	38.0%		
South Valley Pit 7/8"	44.0%		
South Valley Pit 3/8"	18.0%		
N/A	0.0%		

Adjusted Workability Factor	38.1
Coarseness Factor	50.6
Target corrected air content:	4.5-7.5%
Anticipated Air Content:	5.5%
Aggregate Correction Factor:	1.50
Target slump:	< 4"
Anticipated Slump:	4
Anticipated Unit Weight:	141.9
Max Theo. unit weight:	150.1
Calc'd Air:	5.5%

Age in Days	Average compressive strength	Specs
3	3915	f'c = 4000 psi
7	5325	f'cr = 5200 psi
14	5908	
28	6478	

Batch weights and anticipated plastic and hardened properties are based on trial batches Alb. 1, 2, 3, 4 & 5 which were batched 4/1/09. Volumetrics were updated based on December 2017 aggregate testing.

Concrete, Aggregate and Asphalt Testing, LLC
P.O. Box 1228 - 414 Bibb Industrial Drive
Las Vegas, NM 87701
(505)718-3030 phone

City Of Albuquerque - Lean Fill

Client: Duke City Redimix
Address: 7705 Broadway SE
Albuquerque, NM 87105

Report Date: 12/29/2016

MIX PROPORTIONS

10/29/2013 batch date — Mix Code: **59.17**

Material Description	Material Source	SSD Batch Weights	Specific Gravity SSD	Absorption	Abs Vol in Ft^3
Cement, type I-II LA>	*Holcim I/II*	47	3.15		0.24
Ash, type F	*SRM 4 Corners Fly Ash*	0	1.95		0.00
	Total Cementitious>	47			
Fine Aggregate/Lb>	*Orona Concrete Sand*	2004	2.564	2.08%	12.53
Coarse Aggregate #1/L	*South Valley Pit 7/8"*	0	2.738	2.20%	0.00
Coarse Aggregate #2/L	*South Valley Pit 3/8"*	987	2.768	2.30%	5.71
Coarse Aggregate #3/L	*N/A*	0	1	1.00%	
	Total design coarse aggregate at ssd:	987			
	Total design FA & CA at ssd:	2991		18.22	
Air Content % by volume>	Entrained	5.0			1.35
Water @ SSD aggregates>	Gals/cubic yard:	53.9			7.19
	Lbs per cubic yard:	449			
	Total Weight>	3487		Total Volume>	27.0
Air Entraining Admixture - OZ	*Sika AIr*	0.3	oz.	0.60	oz/cwt
MRWR - OZ	*Sika Plastocrete 161*	0.0	oz.	0.0	oz/cwt

Temperature and slump variations may cause adjustments in admixtures dosages.

	Design	Specs	Production
Total Cementitious content in lbs:	47		
Cement content in lbs:	47	> 47	47
Water/cementitious ratio:	9.55	N/A	9.55
Water/cement ratio:	9.55		
Ash wt as % of cement wt only:	0.0%		
Ash wt as % of total cementitious:	0.0%	N/A	0.0%
Orona Concrete Sand	67.0%		
South Valley Pit 7/8"	0.0%		
South Valley Pit 3/8"	33.0%		
N/A	0.0%		

Adjusted Workability Factor	45.9
Coarseness Factor	2.5
Target corrected air content:	> 2%
Anticipated Air Content:	3.5%
Aggregate Correction Factor:	0.80
Target slump:	5 - 8"
Anticipated Slump:	5 1/2
Anticipated Unit Weight:	131.8
Max Theo. unit weight:	135.8
Calc'd Air:	3.0%

Concrete, Aggregate and Asphalt Testing, LLC
P.O. Box 1228 - 414 Bibb Industrial Drive
Las Vegas, NM 87701
(505)718-3030 phone

City Of Albuquerque - Lean Fill

Client: Duke City Redimix
Address: 7705 Broadway SE
Albuquerque, NM 87105

Report Date: 12/29/2016

	Age in Days	compressive strength (psi)	avg	specs	Moisture Content	Dry Density	% Compaction	specs
10/30/13	1	7						
10/30/13	1	9						
10/30/13	1	6	7		9.3	124	99.7%	> 95%
11/05/13	7	14						
11/05/13	7	12						
11/05/13	7	16	14		9.1	123.5	99.3%	
11/12/13	14	23						
11/12/13	14	25	24		8.8	123.8	99.5%	
11/26/13	28	43						
11/26/13	28	41			9.2	124.1	99.7%	
11/26/13	28	40	41	< 60 psi	9.3	123.8	99.5%	

	Combined grading	SPEC	Individual Sieve retained
1"	100	100	
3/4"	100	95-100	0
1/2"	100		0
3/8"	98	82-100	2
#4	73	70-100	24
#8	61	55-85	12
#16	56	38-60	5
#30	45		11
#50	18	6-30	27
#100	2	2-10	15
#200	1.4		1

Workability Factor: 60.9
Adjusted Workability Factor 47.2
Coarseness Factor: 5.9

Maximum Density 124.4
Optimum Moisture 7.8

Note: Proctor tested Fall 2013

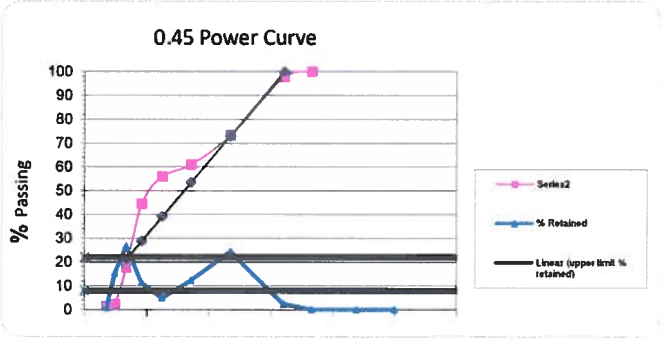

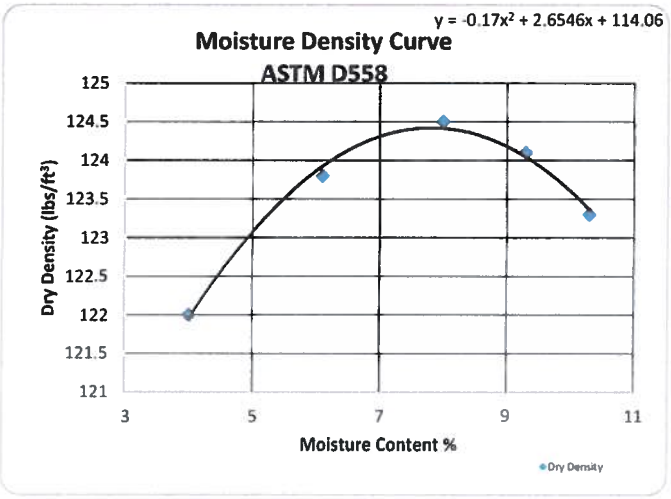

Concrete, Aggregate and Asphalt Testing, LLC
P.O. Box 1228 - 414 Bibb Industrial Drive
Las Vegas, NM 87701
(505)718-3030 phone

FOC0SBMRVWWKSHT3X3.xls

PORTLAND CEMENT CONCRETE SUBMITTAL ANALYSIS

REPORT DATE: 13-Jan-17
SUPPLIER: Duke City Redi Mix

ENGLISH BATCH WEIGHTS		CODE	50.17		51.17		52.17		54.17		55.17		56.17		57.17	
DESCRIPTION		APPLICATION	Interior		Hydraulic Structures		Structures		Sanitary		Exterior		Exterior Low Slump		HER	
BATCH WEIGHTS		UNITS		ft^3		ft^3		ft^3		ft^3		ft^3		ft^3		ft^3
c_d= DESIGN CEMENT	Holcim Type-II LA	pcy	425	2.16	519	2.64	566	2.88	659	3.35	471	2.40	471	2.40	542	2.76
fa_d= DESIGN FLY ASH	SRM- 4 Corners	pcy	120	0.97	146	1.18	160	1.30	186	1.51	133	1.08	133	1.08	153	1.24
fa_d : (c_d+fa_d) ratio	20.0 % minimum		22.00	22.00	22.00	22.00	22.00	22.00	22.00	22.00	22.00	22.00	22.00	22.00	22.00	22.00
W_d = DESIGN WATER		pcy	254.00	4.07	266.00	4.26	271.00	4.34	294.00	4.71	262.00	4.20	246.00	3.94	271.00	4.34
			30.50	30.49	31.90	31.93	32.50	32.53	35.30	35.29	31.50	31.45	29.50	29.53	32.50	32.53
AGG1, FA	Orona	pcy	1,161	7.26	1,106	6.91	1,079	6.74	985	6.16	1,131	7.07	1,148	7.18	1,090	6.81
AGG2, CA1	South Valley Pit	pcy	1,345	7.87	1,280	7.49	1,221	7.15	1,224	7.16	1,310	7.67	1,330	7.78	1,262	7.39
AGG3, CA2	South Valley Pit	pcy	550	3.18	524	3.03	539	3.12	452	2.62	536	3.10	544	3.15	516	2.99
ADMX1, AEA	Sika Air	oz/cy	2.7		3.3		3.6		4.2		3.0		3.0		3.5	
	TARGET Entr Air	%	5.5	1.49	5.5	1.49	5.5	1.49	5.5	1.49	5.5	1.49	5.5	1.49	5.5	1.49
ADMX2, NWRDA	Sika Plastocrete 161	oz/cy	27.3		33.3		36.3		42.3		30.2		30.2		34.8	
ADMX3, MRWRA	0	oz/cy														
ADMX4, HRWRA	0	oz/cy														
ADMX5, ACCEL	0	oz/cy														
ADMX6, RETARDER	0	oz/cy														
ENGLISH ANALYSIS																
TOTAL		pcy	3,856.0	3,855	3,840.0	3,841	3,834.0	3,836	3,800.0	3,800	3,844.0	3,843	3,872.0	3,872	3,860.0	3,834
UNIT WEIGHT		pcf	142.7	142.78	142.1	142.26	141.9	141.97	140.7	140.74	142.2	142.28	143.3	143.30	142.9	141.89
YIELD		ft3	27.00	27.000	27.00	27.000	27.00	27.020	27.00	27.000	27.00	27.010	27.00	27.020	27.00	27.020
WATER TO CEMENTITIOUS RATIO: $[w:(c+fa)]_d$			0.47	0.466	0.40	0.400	0.37	0.373	0.35	0.348	0.43	0.434	0.41	0.407	0.39	0.390
Trial Mix/Specification: $[w:(c+fa)]_{max}$																
COMPLIANCE: $[w:(c+fa)]_d \leq [w:(c+fa)]_{max}$			0.000		0.000		0.000		0.000		0.000		0.000		0.000	
Design Water: w_d		pcy	254	254	266	266	271	271	294	294	262	262	246	246	271	271
Req'd Cementitious: $(c_d'+fa_d')= [w:(c+fa)]_d$ x Wbw_d		pcy	540	545	665	665	732	726	840	845	609	604	600	604	695	695
Req'd Fly Ash: $fa_d'= (c_d' + fa_d') \times fa_d/(c_d+fa_d)$		pcy	119	120	146	146	161	160	185	186	134	133	132	133	153	153
Delta $(fa)_{del}$= fad-fad'		pcy	1		0		-1		1		-1		1		0	
Req'd: $c_d'= (c_d'+fa_d') - fa_d'$		pcy	421	425	519	519	571	566	655	659	475	471	468	471	542	542
Minimum Cement Content Specified, lbs/yd^3		pcy	423		517		564		658		470		470		542	
Delta $(c)_{del}$= cd-cd' If negative, adjust water		pcy	4		0		-5		4		-4		3		0	
FA:(FA+CA1+CA2)		%	18	17	18	17	19	18	17	16	18	17	18	17	18	17
DESIGN STRENGTH, f_d @ 28 DAYS		psi	4,720		6,400		5,711		7,560		4,914		5,924		5,325	@7 dys
REQUIRED, f_{cr} @ 28 DAYS		psi	4,200		4,700		5,050		5,200		3,540		4,200		5,200	@7 dys
SLUMP	NORMAL	in.	4		4		4		4		4		2.5		4	
	W/HRWRDA	in.														
ENTRAINED AIR		%	5.5		5.5		5.5		5.5		5.5		5.5		5.5	

DEPARTMENT OF THE ARMY
ALBUQUERQUE DISTRICT, CORPS OF ENGINEERS
ALBUQERQUE DISTRICT OFFICE
4101 JEFFERSON PLAZA NE
ALBUQUERQUE, NM 87109

SUBMITTAL REVIEW VERIFICATION SHEET

PROJECT TITLE: Kirtland BFF Mid-Plume Pump and Treat System Expansion
CONTRACT NUMBER: W912DR-12-D-0006 DM01
DATE RECEIVED: 8-02-2017
DATE REVIEWED: 8-02-2017

DESCRIPTION OF ITEMS REVIEWED:

1. Detectable Warning Tape

NO EXCEPTIONS TAKEN.	**X**
EXCEPTIONS AS NOTED ON DRAWINGS AND/OR ATTACHED SHEETS(S). RESUBMISSION NOT REQUIRED.	
EXCEPTIONS AS NOTED ON DRAWINGS AND/OR ATTACHED SHEETS(S). RESUBMISSION REQUIRED.	
RECEIPT ACKKNOWLEDGED.	

Notes:

NOTE: ITEMS REVIEWED AS TO GENERAL LAYOUT ONLY. DIMENSIONS AND QUANTITIES NOT CHECKED. REVIEW DOES NOT RELIEVE CONTRACTOR OF RESPONSIBILITIES FOR ANY ERRORS WHICH MAY EXIST AS CONTRACTOR SHALL BE RESPONSIBLE FOR DIMENSIONS AND DESIGN OF ADEQUATE CORRECTIONS, DETAILS AND SATISFACTORY CONSTRUCTION OF WORK.

SIGNATURE _____ **DATE** 8/2/2017

EA Engineering, Science, and Technology, Inc., PBC

Submittal Review Sheet 1

Project Name: **Kirtland BFF Mid-Plume Pump and Treat System Expansion**				Date Received: **8/1/17**		
Project Owner: **Kirtland Air Force Base**				Checked By: **Tyler Curley**		
Contractor: **RMCI, Inc.**	Engineer: **EA Engineering, Science and Technology, Inc., PBC.**			Log Page: **NA**		
Address: **6211 Chappell Rd NE, Albuquerque, NM 87113**	Address: **320 Gold Ave. SW, Suite 1300 Albuquerque, NM 87102**			EA No.: **62599DM01**		
				Spec. Section: **31 00 00 2.2.2**		
				Drawing/Detail No.: **C-301/E-501**		
ATTN: **Phillip Johnson**	ATTN: **Devon Jercinovic**			1st Sub		Re-Sub	
Date Transmitted: **08/01/2017**	Prev. Transmittal Date:					

Item No.	No. Copies	Description	Manufacturer	Mfg/Vendor Dwg or Detail	Action Taken*
1	1	Detectable Warning Tape	Pro-Line Safety Products		C-9

The Action Designated Above is in Accordance with the Following Legend:

A – Furnish as Submitted
B – Furnish as Noted
C – Revise and Re-submit
1. Not enough information for review.
2. No reproducible submitted.
3. Copies illegible.
4. Not enough copies submitted.
5. Wrong sequence number.
6. Wrong resubmittal number.
7. Wrong Spec. Section.
8. Wrong form used.
9. See Comments.

D – Rejected
E – Engineer's Review not Required
1. Submittal not required.
2. Supplemental Information. Submittal retained for Information purposes only.
3. Information reviewed and approved on prior submittal.
4. See Comments.

Review is for general compliance with Contract Documents. No responsibility is assumed for correctness of dimensions or detail. Contractor is required to specify deviations from contract requirements. Lack of exceptions noted by Engineer does not waive Contractor's obligation to comply with Drawings and Specifications.

Comments:
Items reviewed and confirmed to meet requirements
Issues in Bold

Detectable warning (3" green striped) is suitable for the GWTS influent line.

By: _____ Date: 8/1/17

Distribution: [1] Contractor [1] Engineer [1] Owner

DETECTABLE TAPE (5.0 MIL)

Solid Aluminum Foil Core • Virgin Clear Polypropylene Film Laminated Top Structure
Virgin Clear Polyethylene Film Laminated Base Structure • Reverse Printed Polypropylene Structure
Acid, Alkali, Chemical, and Oil Resistant • Direct Burial Rated • Made in the USA

Applications and Information

- **Pro-Line's Detectable Marking Tape** is used for detecting, locating, identifying, and protecting buried utility lines for gas, water, sewer, telecommunication, and electrical markets. The width of tape used, is determined by the size of, and depth at which the underground utility line is buried. The depth at which detectable tape is buried, is determined by the width of the tape used.
- **DETECT:** Aluminum core is detected through means of inductive locating.
- **LOCATE:** Line is located and marked after inductive locating is performed.
- **IDENTIFY:** Utility type is identified by both the APWA color-code and utility legend printed on the marking tape.
- **PROTECT:** Detectable tape works 24 hours a day and year round, even if tape is not inductively located during excavation, the tape provides a "stop-sign" effect that is highly visible.

Standards and References

Pro-Line's Detectable Marking Tape meets or exceeds all applicable ASTM specifications.

- ASTM D2103-08: Standard Specification for Polyethylene Films and Sheeting.
- ASTM D882-09: Standard Test Method for Tensile Properties and Elongation of Thin Plastic Sheeting.
- ASTM D2578-08: Standard Test Method for Wetting Tension of Polyethylene and Polypropylene Films.
- ASTM D792-08: Standard Test Methods for Density of Plastics by Displacement.
- ASTM D671-93: Standard Test Method for Flexural Fatigue of Plastics.

Construction

Pro-Line's Detectable Marking Tape consists of a minimum 5.0 mil overall thickness. Construction is 0.8 mil clear virgin polypropylene film, reverse printed and laminated to a 0.35 solid aluminum foil core and then laminated to a 3.75 mil clear virgin polyethylene film. Tape is printed with our APWA Color-Coded, patented "Diagonally Striped" design with big, bold, black lettering to identify a specific buried utility line.

Specifications

DETECTABLE UNDERGROUND MARKING TAPE
Underground marking tape shall be a (2", 3", 4", 6", or 12" width), detectable marking tape, with a minimum 5.0 mil overall thickness. Tape shall be manufactured using a 0.8 mil clear virgin polypropylene film, reverse printed and laminated to a **0.35 mil solid aluminum foil core**, and then laminated to a 3.75 mil clear virgin polyethylene film. Tape shall be printed using a diagonally striped design for maximum visibility, and meet the APWA Color-Code standard for identification of buried utilities. Detectable marking tape shall be **Pro-Line Safety Products** or approved equal and made in the USA.

DETECTABLE TAPE (5.0 MIL)

TABLE 1: DETECTABLE TAPE CONSTRUCTION (Polypropylene, Aluminum Foil, and Polyethylene)

PROPERTY	2" WIDTH	3" WIDTH	4" WIDTH	6" WIDTH	12" WIDTH
Nominal Overall Thickness	5.0 mil	5.0 mil	5.0 mil	5.0 mil	5.0 mil
Aluminum Foil Core Thickness	0.35 mil	0.35 mil	0.35 mil	0.35 mil	0.35 mil
Polyethylene Film Thickness	3.75 mil	3.75 mil	3.75 mil	3.75 mil	3.75 mil
Polypropylene Film Thickness	0.80 mil	0.80 mil	0.80 mil	0.80 mil	0.80 mil
Polypropylene Print Method	Reverse Printed	Reverse Printed	Reverse Printed	Reverse Printed	Reverse Printed
Print Design #1 (Patented)	**Diagional Striped**	**Diagional Striped**	**Diagional Striped**	**Diagional Striped**	**Diagional Striped**
Print Design #2 (Custom)	Solid Block	Solid Block	Solid Block	Solid Block	Solid Block
Print Design #3 (Custom)	Solid Flood	Solid Flood	Solid Flood	Solid Flood	Solid Flood
Print Design Color-Code	APWA Color-Code	APWA Color-Code	APWA Color-Code	APWA Color-Code	APWA Color-Code

Diagional striped design is a PATENTED design of Pro-Line Safety Products that enhances tape visibility for superior protection.

Please note that there may be a nominal + or - 10% difference throughout the overall thickness.

TABLE 2: TESTING SPECIFICATIONS (Physical and Mechanical Properties)

TEST DESCRIPTION	STANDARD	2" WIDTH	3" WIDTH	4" WIDTH	6" WIDTH	12" WIDTH
Aluminum Foil Core	MFG. SPECS	Virgin Grade	Virgin Grade	Virgin Grade	Virgin Grade	Virgin Grade
Polyethylene Film	MFG. SPECS	Virgin Grade	Virgin Grade	Virgin Grade	Virgin Grade	Virgin Grade
Polypropylene Film	MFG. SPECS	Virgin Grade	Virgin Grade	Virgin Grade	Virgin Grade	Virgin Grade
Adhesive Type	MFG. SPECS	AV1257/CA100	AV1257/CA100	AV1257/CA100	AV1257/CA100	AV1257/CA100
Adhesive Bond Strength	BOILING WATER	5 hrs W/O Peel	5 hrs W/O Peel	5 hrs W/O Peel	5 hrs W/O Peel	5 hrs W/O Peel
Printed Inks	MFG. SPECS	Chromabond	Chromabond	Chromabond	Chromabond	Chromabond
Print Repeat	MFG. SPECS	Varies by Legend	Varies by Legend	Varies by Legend	Varies by Legend	Varies by Legend
Coefficient Friction	ASTM D4521-96	0.247 Static	0.247 Static	0.247 Static	0.247 Static	0.247 Static
Density	ASTM D792-66	1.09 g/cm³	1.09 g/cm³	1.09 g/cm³	1.09 g/cm³	1.09 g/cm³
Elongation (MD)	ASTM D882-80A	139%	139%	139%	139%	139%
Elongation (TD)	ASTM D882-80A	80%	80%	80%	80%	80%
Flexural Fatigue	ASTM D671-93	Pliable Hand	Pliable Hand	Pliable Hand	Pliable Hand	Pliable Hand
Printability	ASTM D2578-08	45 Dynes	45 Dynes	45 Dynes	45 Dynes	45 Dynes
Tensile Strength	ASTM D882-09	15,000 psi	15,000 psi	15,000 psi	15,000 psi	15,000 psi

WEIGHTS, MEASUREMENTS AND PACKAGING

PRODUCT PART NO.	SIZE (WIDTH)	NOMINAL OVERALL THICKNESS	NOMINAL THICKNESS OF STRUCTURAL MATERIALS			RECOMMENDED BURIAL DEPTHS FOR DETECTION	PRODUCT WEIGHT PER ROLL	STANDARD PACKAGING
			ALUMINUM FOIL THICKNESS	POLYETHYLENE THICKNESS	POLYPROPYLENE THCINKESS			
10311**XXX**3	2" x 1000'	5.0 MIL	0.35 MIL	3.75 MIL	0.80 MIL	6-9 inches	4.75 lbs	9 / CARTON
10312**XXX**3	3" x 1000'	5.0 MIL	0.35 MIL	3.75 MIL	0.80 MIL	9-12 inches	7.13 lbs	6 / CARTON
10313**XXX**3	4" x 1000'	5.0 MIL	0.35 MIL	3.75 MIL	0.80 MIL	12-15 inches	9.50 lbs	4 / CARTON
10314**XXX**3	6" x 1000'	5.0 MIL	0.35 MIL	3.75 MIL	0.80 MIL	15-18 inches	14.25 lbs	3 / CARTON
10316**XXX**3	12" x 1000'	5.0 MIL	0.35 MIL	3.75 MIL	0.80 MIL	18-24 inches	28.50 lbs	1 / CARTON

****FOR CUSTOM LEGENDS OR SIZES CALL 800.554.3424****

PRINT LEGEND	PART #
CAUTION BURIED CHILLED WATER LINE BELOW	103
CAUTION BURIED GEOTHERMAL LINE BELOW	128
CAUTION BURIED POTABLE WATER LINE BELOW	115
CAUTION BURIED WAT	
CAUTION BURIED FOR	
CAUTION BURIED FOR	
CAUTION BURIED SAN	
CAUTION BUIRED SEWER LINE BELOW	319
CAUTION BURIED STORM DRAIN LINE BELOW	321
CAUTION BURIED STORM SEWER LINE BELOW	322

PRINT LEGEND	PART #
CAUTION BURIED CATV LINE BELOW	402
CAUTION BURIED COMMUNICATION LINE BELOW	404
CAUTION BURIED FIBER OPTIC CABLE BELOW	406
BELOW	423
TER LINE	512
R LINE BELOW	517
OW	605
CAUTION BURIED HIGH VOLTAGE LINE BELOW	610
CAUTION BURIED GAS LINE BELOW	809
CAUTION BURIED PIPELINE BELOW	814

SPECIAL ORDER TAPE-
3x1000' DETECT GREEN STRIPE TAPE MARKED:
"GWTS INFLUENT PIPELINE BELOW"

DETECTABLE TAPE (5.0 MIL)

PRO-LINE SAFETY PRODUCTS
A DIVISION OF PRO-PAK IND. INC.

PRO-LINE SAFETY PRODUCTS COMPANY
1099 ATLANTIC DRIVE, UNIT 1 • WEST CHICAGO, IL 60185
TOLL FREE: 800.554.3424

MADE IN THE U.S.A. WITH PRIDE

DEPARTMENT OF THE ARMY
ALBUQUERQUE DISTRICT, CORPS OF ENGINEERS
ALBUQERQUE DISTRICT OFFICE
4101 JEFFERSON PLAZA NE
ALBUQUERQUE, NM 87109

SUBMITTAL REVIEW VERIFICATION SHEET

PROJECT TITLE: Kirtland BFF Mid-Plume Pump and Treat System Expansion
CONTRACT NUMBER: W912DR-12-D-0006 DM01
DATE RECEIVED: 9-01-2017
DATE REVIEWED: 9-06-2017

DESCRIPTION OF ITEMS REVIEWED:

1. Nuts, Bolts and Gasket Kits

NO EXCEPTIONS TAKEN.	**X**
EXCEPTIONS AS NOTED ON DRAWINGS AND/OR ATTACHED SHEETS(S). RESUBMISSION NOT REQUIRED.	
EXCEPTIONS AS NOTED ON DRAWINGS AND/OR ATTACHED SHEETS(S). RESUBMISSION REQUIRED.	
RECEIPT ACKKNOWLEDGED.	

Notes:

NOTE: ITEMS REVIEWED AS TO GENERAL LAYOUT ONLY. DIMENSIONS AND QUANTITIES NOT CHECKED. REVIEW DOES NOT RELIEVE CONTRACTOR OF RESPONSIBILITIES FOR ANY ERRORS WHICH MAY EXIST AS CONTRACTOR SHALL BE RESPONSIBLE FOR DIMENSIONS AND DESIGN OF ADEQUATE CORRECTIONS, DETAILS AND SATISFACTORY CONSTRUCTION OF WORK.

SIGNATURE SANCHEZ.AMY.ELIZABETH.1454434338 Digitally signed by SANCHEZ.AMY.ELIZABETH.1454434338 DN: c=US, o=U.S. Government, ou=DoD, ou=PKI, ou=USA, cn=SANCHEZ.AMY.ELIZABETH.1454434338 Date: 2017.09.06 10:08:15 -06'00' **DATE** 9/6/2017

EA Engineering, Science, and Technology, Inc., PBC

Submittal Review Sheet 1

Project Name: **Kirtland BFF Mid-Plume Pump and Treat System Expansion**			Date Received: **8/31/17**
Project Owner: **Kirtland Air Force Base**			Checked By: **Tyler Curley**
Contractor: **RMCI, Inc.**	Engineer: **EA Engineering, Science and Technology, Inc., PBC.**		Log Page: **NA**
Address: **6211 Chappell Rd NE, Albuquerque, NM 87113**	Address: **320 Gold Ave. SW, Suite 1300 Albuquerque, NM 87102**		EA No.: **62599DM01**
			Spec. Section: **40 05 13 2.4.3.1**
			Drawing/Detail No.: **C-301**
ATTN: **Philip Johnson**	ATTN: **Devon Jercinovic**	1st Sub	Re-Sub
Date Transmitted: **09/01/2017**	Prev. Transmittal Date: **08/28/2017**		

Item No.	No. Copies	Description	Manufacturer	Mfg/Vendor Dwg or Detail	Action Taken*
1	1	Nuts, bolts, gasket kits	M&M Bolt and Screw		A

The Action Designated Above is in Accordance with the Following Legend:

A – Furnish as Submitted
B – Furnish as Noted
C – Revise and Re-submit
1. Not enough information for review.
2. No reproducible submitted.
3. Copies illegible.
4. Not enough copies submitted.
5. Wrong sequence number.
6. Wrong resubmittal number.
7. Wrong Spec. Section.
8. Wrong form used.
9. See Comments.

D – Rejected
E – Engineer's Review not Required
1. Submittal not required.
2. Supplemental Information. Submittal retained for Information purposes only.
3. Information reviewed and approved on prior submittal.
4. See Comments.

Review is for general compliance with Contract Documents. No responsibility is assumed for correctness of dimensions or detail. Contractor is required to specify deviations from contract requirements. Lack of exceptions noted by Engineer does not waive Contractor's obligation to comply with Drawings and Specifications.

Comments:
Items reviewed and confirmed to meet requirements
(Reviewed Material in Parentheses)
Issues in Bold

Nuts and bolts meet ASTM A193.
Gasket material meets specifications. Supplier will cut to be in accordance with ASME B16.21

By: _____ Date: 09/01/17

Distribution: [1] Contractor [1] Engineer [1] Owner

M & M Bolt & Screw, Inc

110 SENTRY DRIVE
MANSFIELD, TEXAS 76063-3608

Phone (817) 453-0001 TOLL FREE (888) 676-2658
FAX (817) 453-0038

August 25, 2017 Job Name: KAFB Conveyance Line

HD Supply Waterworks
6135 Second Street NW
Albuquerque, NM 87107

To Whom It May Concern:

This letter is to certify that all materials provided exceed or conform to all ASTM, AWWA, ASME, SAE, ANSI and/or API specifications.

BOLT	SPECIFICATION
Bolts	
Heavy Hex Bolts 304 SS "USA"	ASTM A193 GR. B-8
(Bolts Dimensional)	ASME B18.2.1
Nuts	
Heavy Hex Nuts 304 SS "USA"	ASTM A193 GR. 8
(Nuts Dimensional)	ASME B18.2.2

Respectfully,
Scotty Murphy

SUBMITTAL INFORMATION

"BOLTS, NUTS AND FLAT WASHERS"
"ABSTRACT OF ASTM A193/ASTM A194"
"GRADE B8" T-304

GRADE: UNSTABILIZED 18 CHROMIUM, 8 NICKEL, (AISI TYPE 304)

CHEMICAL REQUIREMENTS:

	RANGE	VARIATION
CARBON MAX	0.08	0.01 OVER
MANGANESE	2.00	0.04 OVER
PHOSPHOROUS, MAX	0.045	0.01 OVER
SULFUR, MAX	0.03	0.005 OVER
SILICON	1.00	0.005 OVER
CHROMIUM	16.00 - 20.00	0.20
NICKEL	8.00 - 10.5	0.15

MECHANICAL REQUIREMENTS:

	MINIMUM
TENSILE STRENGTH (KSI)	75
YIELD STRENGTHS (KSI)	30
ELONGATION (%)	30
REDUCTION OF AREA (%)	50
HARDNESS (BRINELL)	223
HARDNESS (ROCKWELL)	B96

NOTES: MATERIALS ARE CARBIDE SOLUTION TREATED

IDENTIFICATION SYMBOL: B8

OTHER:

ALL BOLTS, NUTS & STUDS, UNLESS OTHERWISE SPECIFIED IN THE PURCHASE ORDER SHALL BE THREADED IN ACCORDANCE WITH ANSI/ASME B1.1, PAGE A-26, CLASS 2a FIT.

BOLT HEADS SHALL BE IN ACCORDANCE WITH THE DIMENSIONS OF ANSI/ASME B18.2.1, PAGE C-1. UNLESS OTHERWISE SPECIFIED IN THE PURCHASE ORDER, THE HEAVY HEX SCREWS SERIES SHOULD BE USED. NUTS SHALL CONFORM TO ASTM 194, UNLESS OTHERWISE SPECIFIED, THE HEAVY HEX SERIES SHALL BE USED.

ADDITIONAL INFORMATION CAN BE FOUND IN ASTM 193/A193M, DTD 1997 (ALLOY STEEL AND STAINLESS STEEL BOLTING MATERIALS FOR HIGH-TEMPERATURE SERVICES) AND IN ASTM A194/A194M, DTD 1997 (CARBON AND ALLOY STEEL NUTS FOR BOLTS FOR HIGH-TEMPERATURE SERVICE).

FLAT WASHERS: ALL WASHERS SHALL BE OF THE SAME MATERIAL AS THE NUTS.

SUBMITTAL USED FOR:
4"X1/8" FF RR GASKET

DuPont™ Teflon® PTFE Specifications

TYPICAL PROPERTIES of TEFLON® PTFE

ASTM or UL test	Property	PTFE (unfilled)	PTFE (25% glass filled)	PTFE (25% carbon filled)
	PHYSICAL			
D792	Density (lb/in³) (g/cm³)	0.078 2.16	0.081 2.25	0.075 2.08
D570	Water Absorption, 24 hrs (%)	< 0.01	0.02	0.05
	MECHANICAL			
D638	Tensile Strength (psi)	3,900	2,100	1,900
D638	Tensile Modulus (psi)	80,000	-	-
D638	Tensile Elongation at Break (%)	300	270	75
D790	Flexural Strength (psi)	No break	1,950	2,300
D790	Flexural Modulus (psi)	72,000	190,000	160,000
D695	Compressive Strength (psi)	3,500	1,000	1,700
D695	Compressive Modulus (psi)	70,000	110,000	87,000
D785	Hardness, Shore D	D50	D60	D62
D256	IZOD Notched Impact (ft-lb/in)	3.5	-	-
	THERMAL			
D696	Coefficient of Linear Thermal Expansion (x 10^{-5} in./in./°F)	7.5	6.4	6.0
D648	Heat Deflection Temp (°F / °C) at 264 psi	132 / 55	150 / 65	150 / 65
D3418	Melting Temp (°F / °C)	635 / 335	635 / 335	635 / 335
-	Max Operating Temp (°F / °C)	500 / 260	500 / 260	500 / 260
C177	Thermal Conductivity (BTU-in/ft²-hr-°F) (x 10^{-4} cal/cm-sec-°C)	1.70 5.86	3.1 10.6	4.5 15.5
UL94	Flammability Rating	V-O	V-O	V-O
	ELECTRICAL			
D149	Dielectric Strength (V/mil) short time, 1/8" thick	285	-	-
D150	Dielectric Constant at 1 MHz	2.1	2.4	-
D150	Dissipation Factor at 1 MHz	< 0.0002	0.05	-
D257	Volume Resistivity (ohm-cm)at 50% RH	> 10^{18}	> 10^{15}	10^{4}

NOTE: The information contained herein are typical values intended for reference and comparison purposes only. They should NOT be used as a basis for design specifications or quality control. Contact us for manufacturers' complete material property datasheets.
All values at 73°F (23°C) unless otherwise noted.

TEFLON ® is a registered trademark of DuPont

The gasket material is ordered in large rolls. The gaskets are then machined/cut by the supplier to meet the requirements of the project.

DEPARTMENT OF THE ARMY
ALBUQUERQUE DISTRICT, CORPS OF ENGINEERS
ALBUQERQUE DISTRICT OFFICE
4101 JEFFERSON PLAZA NE
ALBUQUERQUE, NM 87109

SUBMITTAL REVIEW VERIFICATION SHEET

PROJECT TITLE: Kirtland BFF Mid-Plume Pump and Treat System Expansion
CONTRACT NUMBER: W912DR-12-D-0006 DM01
DATE RECEIVED: 8-16-2017
DATE REVIEWED: 8-16-2017

DESCRIPTION OF ITEMS REVIEWED:

1. Tracer Wire

NO EXCEPTIONS TAKEN.	**X**
EXCEPTIONS AS NOTED ON DRAWINGS AND/OR ATTACHED SHEETS(S). RESUBMISSION NOT REQUIRED.	
EXCEPTIONS AS NOTED ON DRAWINGS AND/OR ATTACHED SHEETS(S). RESUBMISSION REQUIRED.	
RECEIPT ACKKNOWLEDGED.	

Notes:

NOTE: ITEMS REVIEWED AS TO GENERAL LAYOUT ONLY. DIMENSIONS AND QUANTITIES NOT CHECKED. REVIEW DOES NOT RELIEVE CONTRACTOR OF RESPONSIBILITIES FOR ANY ERRORS WHICH MAY EXIST AS CONTRACTOR SHALL BE RESPONSIBLE FOR DIMENSIONS AND DESIGN OF ADEQUATE CORRECTIONS, DETAILS AND SATISFACTORY CONSTRUCTION OF WORK.

SIGNATURE SANCHEZ.AMY.ELIZABETH.1454434338 **DATE** 8/16/2017

EA Engineering, Science, and Technology, Inc., PBC

Submittal Review Sheet 1

Project Name: **Kirtland BFF Mid-Plume Pump and Treat System Expansion**			Date Received: **8/15/17**		
Project Owner: **Kirtland Air Force Base**			Checked By: **Tyler Curley**		
Contractor: **RMCI, Inc.**	Engineer: **EA Engineering, Science and Technology, Inc., PBC.**		Log Page: **NA**		
Address: **6211 Chappell Rd NE, Albuquerque, NM 87113**	Address: **320 Gold Ave. SW, Suite 1300 Albuquerque, NM 87102**		EA No.: 62599DM01		
			Spec. Section: **31 00 00 2.3**		
			Drawing/Detail No.:		
ATTN: Phillip Johnson	ATTN: **Devon Jercinovic**		1st Sub		Re-Sub 1
Date Transmitted: **08/15/2017**	Prev. Transmittal Date: **8/1/15**				

Item No.	No. Copies	Description	Manufacturer	Mfg/Vendor Dwg or Detail	Action Taken*
1	1	Tracer wire	Pro Trace		A

The Action Designated Above is in Accordance with the Following Legend:

A – Furnish as Submitted
B – Furnish as Noted
C – Revise and Re-submit
1. Not enough information for review.
2. No reproducible submitted.
3. Copies illegible.
4. Not enough copies submitted.
5. Wrong sequence number.
6. Wrong resubmittal number.
7. Wrong Spec. Section.
8. Wrong form used.
9. See Comments.

D – Rejected
E – Engineer's Review not Required
1. Submittal not required.
2. Supplemental Information. Submittal retained for Information purposes only.
3. Information reviewed and approved on prior submittal.
4. See Comments.

Review is for general compliance with Contract Documents. No responsibility is assumed for correctness of dimensions or detail. Contractor is required to specify deviations from contract requirements. Lack of exceptions noted by Engineer does not waive Contractor's obligation to comply with Drawings and Specifications.

Comments:
Items reviewed and confirmed to meet requirements
Issues in Bold

Tracer wire has equal permformance rating plus increased tensile strength.

By: _____ Date: 8/15/17

Distribution: [1] Contractor [1] Engineer [1] Owner

RMCI, INC
PO Box 91447
Albuquerque NM 87199

RE: KAFB - Groundwater Conveyance Infrastructure Installation

ITEM	***PRODUCT***
	Proline 10GA Tracer Wire
Resubmittal 40 05 13-003	
NOTES:	
	Copper Clad Tracer Wire has = Signal Strength as solid copper. But is
	43% Stronger then Solid Copper. i.e. Tensile Strength

TRACER WIRE

PRO-TRACE® HF-CCS PE30

HF-CCS PE30 (HIGH-FLEX / OPEN-TRENCH)

Tracer Wire • High-Flex Copper Clad Steel (HF-CCS) • 21% IACS Conductivity • Corrosion Resistant
High-Density, High Molecular Weight Polyethylene (HMWPE-HDPE) Insulation • Moisture, Chemical, and Oil Resistant
Impact, Crush, and Abrasion Resistant • RoHS Compliant • Direct Burial Rated • 30 Volts • Made in the USA

"PRO-TRACE® HF-CCS -- FLEXIBILITY & STRENGTH -- IT'S THE FUTURE OF TRACER WIRE"

Applications and Information

- **PRO-TRACE® HF-CCS PE30** is used for tracer wire applications not exceeding 30 Volts. Tracer wire is used to conductively locate buried utility lines for the gas, water, sewer, telecommunication, and electrical markets.
- **PRO-TRACE® HF-CCS PE30** is designed to embody the flexibility, memory, and feel of copper. It also has a 43% higher break-load, minimizing damage during installation and while in service. Equal to copper in signal tracing performance. It simply outperforms copper tracer wire. Designed for open-trench and plow-in installations using 1 wire.
- Considerably lower in cost and great price stability compared to copper.
- RoHS Compliant, made in the USA, and works with connectors you already use.

Standards and References

PRO-TRACE® HF-CCS PE30 conductors meets or exceeds all applicable ASTM specifications, and requirements of the National Electrical Code.

- ASTM B910 / B190M: Standard Specification for Annealed Copper-Clad Steel Wire
- ASTM B170: Standard Specification for Oxygen-Free Electrolytic Copper
- ASTM D1248: Standard Specification for Polyethylene Plastics Extrusion Materials For Wire and Cable

Construction

PRO-TRACE® HF-CCS PE30 is a flexible, copper-clad steel tracer wire. A low carbon steel core, metallurgically bonded with a copper cladding, that is uniform and continuous, creating a bi-metal conductor that acts as one and is corrosion resistant. Special annealing processes are performed during the cladding process giving HF-CCS the flexibility and feel of copper, but 43% higher in strength which means less breaks then copper tracer wire.

PRO-TRACE® HF-CCS PE30 uses a 30 mil, high-density, high molecular weight polyethylene (HDPE) insulation. HDPE provides an excellent balance of surface smoothness, processing ease and electrical consistency. HDPE provides superior strength against underground elements that help prevent accidental breaks caused buy rocks in shifting soil conditions.

Specification Example

Tracer wire for open-trench installation shall be a 12 AWG solid, PRO-TRACE® HF-CCS PE30. Conductor shall be soft-drawn, 21% IACS, copper clad steel, utilizing a AISI 1006 low carbon steel core (required to meet break load and flexibility), with breakload of 282 lbs (55,000 psi). Conductor shall be extruded with a 30 mil, high density, high molecular weight polyethylene (HMW-HDPE) persuant to ASTM D1248 standard. Tracer wire shall be rated for direct burial use at 30 volts and RoHS compliant. Tracer wire shall be PRO-TRACE® HF-CCS PE30 as manufactured by **Pro-Line Safety Products** and made in the USA.

Specification Updated: 9.26.2011 09:23:00 CST

PRO-TRACE® is a registered trademark of Pro-Line Safety Products Co.

TABLE 1: CONDUCTOR (Physical, Mechanical and Electrical Properties)

PROPERTY	18 AWG	16 AWG	14 AWG	12 AWG	10 AWG	8 AWG
Conductor Type	HF-CCS	HF-CCS	HF-CCS	HF-CCS	HF-CCS	HF-CCS
Conductor Temper	Annealed	Annealed	Annealed	Annealed	Annealed	Annealed
Steel Grade	AISI 1006	AISI 1006	AISI 1006	AISI 1006	AISI 1006	AISI 1006
Copper Grade	UNS C10200	UNS C10200	UNS C10200	UNS C10200	UNS C10200	UNS C10200
Rated Break Load	70 lbs	111 lbs	177 lbs	282 lbs	448 lbs	713 lbs
Rated Tensile Strength	55,000 psi	55,000 psi	55,000 psi	55,000 psi	55,000 psi	55,000 psi
Elongation	20.0%	20.0%	20.0%	21.0%	21.0 %	22.0%
Nominal Copper Thickness (% of Diameter)	3.0%	3.0%	3.0%	3.0%	3.0%	3.0%
Nominal Copper Weight (Per 1,000')	13.0%	13.0%	13.0%	13.0%	13.0%	13.0%
Nominal DC Resistance	30.399 ohms	19.119 ohms	12.024 ohms	7.562 ohms	4.756 ohms	2.991 ohms

TABLE 2: INSULATION (Physical, Mechanical and Electrical Properties)

TEST DESCRIPTION	ASTM STANDARD	TYPICAL VALUES
Density @ 23°C	ASTM D1505	0.945 g/cm^3
Melt Flow Rate	ASTM D1238	0.70 g/10 min
Tensile Strength	ASTM D638	3,400 psi
Tensile Strength Retention	ASTM D638	90% after 48 hours @ 100°C
Tensile Elongation	ASTM D638	500%
Tensile Elongation Retention	ASTM D638	90% after 48 hours @ 100°C
Environmental Stress Cracking	ASTM D1693	0 failures @ 48 hours
Thermal Stress Cracking	ASTM D2951	0 failures @ 96 hours
Brittleness Temperature	ASTM D746	-76°C
Melting Temperature	ASTM D3418	260°C
Oxidative Induction Time	ASTM D3895	170 min @ 200°C
Dielectric Constant	ASTM D1531	2.32 @ 1 MHz
Dissipation Factor	ASTM D1531	0.00006 @ 1 MHz
DC Volume Resistivity @ 23°C	ASTM D257	> 1 x 10^{15} ohm-cm

PRODUCT PART NO.	PRODUCT DESCRIPTION	RATED BREAK LOAD	RATED TENSILE STRENGTH	HDPE INSULATION THICKNESS	NOMINAL O.D.	APPROX. WEIGHT PER 1,000 FT		STANDARD PACKAGES
						CCS WEIGHT	SHIPPING WEIGHT	
WEIGHTS, MEASUREMENTS AND PACKAGING								
74418XXXX	18 SOL HF-CCS PE30	70 lbs	55,000 psi	0.030"	0.101"	4.4191	7.14	500' / 1000' / 2500'
74416XXXX	16 SOL HF-CCS PE30	111 lbs	55,000 psi	0.030"	0.111"	7.0219	10.15	CUSTOM ORDER
74411XXXX	14 SOL HF-CCS PE30	177 lbs	55,000 psi	0.030"	0.124"	11.1800	14.82	500' / 1000' / 2500'
74412XXXX	12 SOL HF-CCS PE30	282 lbs	55,000 psi	0.030"	0.141"	17.7644	22.05	500' / 1000' / 2500'
74413XXXX	10 SOL HF-CCS PE30	448 lbs	55,000 psi	0.030"	0.162"	28.2537	33.35	500' / 1000' / 2500'
74414XXXX	8 SOL HF-CCS PE30	713 lbs	55,000 psi	0.030"	0.189"	44.9297	51.05	CUSTOM ORDER

INSULATION COLOR & REEL LENGTH			
COLOR	500' REEL	1000' REEL	2500' REEL
BLACK	0132	0141	0147
BLUE	0232	0241	0247
GREEN	0532	0541	0547
ORANGE	0632	0641	0647
PURPLE	0832	0841	0847
RED	0932	0941	0947
WHITE	1132	1141	1147
YELLOW	1232	1241	1247
SOME PART NUMBERS MAY BE SUBJECT TO MINS			

REEL & PACKAGING INFORMATION					
SIZE	LENGTH	MATERIAL	REEL DIMENSION	ARBOR HOLE	PALLET QUANTITY
14 AWG	500	PLYWOOD (TREATED)	8" x 4"	1.5"	162,000 FT
	1000	PLYWOOD (TREATED)	8" x 9"	1.5"	180,000 FT
	2500	PLYWOOD (TREATED)	12" x 6"	1.5"	180,000 FT
12 AWG	500	PLYWOOD (TREATED)	8" x 6"	1.5"	126,000 FT
	1000	PLYWOOD (TREATED)	8" x 9"	1.5"	108,000 FT
	2500	PLYWOOD (TREATED)	12" x 9"	1.5"	120,000 FT
10 AWG	500	PLYWOOD (TREATED)	8" x 9"	1.5"	72,000 FT
	1000	PLYWOOD (TREATED)	12" x 6"	1.5"	80,000 FT
	2500	PLYWOOD (TREATED)	12" x 12"	1.5"	80,000 FT
8 AWG	500	PLYWOOD (TREATED)	8" x 9"	1.5"	54,000 FT
	1000	PLYWOOD (TREATED)	12" x 9"	1.5"	48,000 FT
	2500	PLYWOOD (TREATED)	16" x 10"	1.5"	45,000 FT

TRACER WIRE

PRO-TRACE® HF-CCS PE30

Specification Updated: 9.26.2014 09:23:00 CST

PRO-LINE SAFETY PRODUCTS
A DIVISION OF PRO-PAK IND, INC.

PRO-LINE SAFETY PRODUCTS COMPANY
1099 ATLANTIC DRIVE, UNIT 1 • WEST CHICAGO, IL 60185
TOLL FREE: 800.554.3424

MADE IN THE U.S.A. WITH PRIDE

DEPARTMENT OF THE ARMY
ALBUQUERQUE DISTRICT, CORPS OF ENGINEERS
ALBUQERQUE DISTRICT OFFICE
4101 JEFFERSON PLAZA NE
ALBUQUERQUE, NM 87109

SUBMITTAL REVIEW VERIFICATION SHEET

PROJECT TITLE: Kirtland BFF Mid-Plume Pump and Treat System Expansion
CONTRACT NUMBER: W912DR-12-D-0006 DM01
DATE RECEIVED: 8-16-2017
DATE REVIEWED: 8-16-2017

DESCRIPTION OF ITEMS REVIEWED:

1. Junction Vault Steel Piping

NO EXCEPTIONS TAKEN.	**X**
EXCEPTIONS AS NOTED ON DRAWINGS AND/OR ATTACHED SHEETS(S). RESUBMISSION NOT REQUIRED.	
EXCEPTIONS AS NOTED ON DRAWINGS AND/OR ATTACHED SHEETS(S). RESUBMISSION REQUIRED.	
RECEIPT ACKKNOWLEDGED.	

Notes:

NOTE: ITEMS REVIEWED AS TO GENERAL LAYOUT ONLY. DIMENSIONS AND QUANTITIES NOT CHECKED. REVIEW DOES NOT RELIEVE CONTRACTOR OF RESPONSIBILITIES FOR ANY ERRORS WHICH MAY EXIST AS CONTRACTOR SHALL BE RESPONSIBLE FOR DIMENSIONS AND DESIGN OF ADEQUATE CORRECTIONS, DETAILS AND SATISFACTORY CONSTRUCTION OF WORK.

SIGNATURE SANCHEZ.AMY.ELIZABETH.1454434338 Digitally signed by SANCHEZ.AMY.ELIZABETH.1454434338 DN: c=US, o=U.S. Government, ou=DoD, ou=PKI, ou=PKI, cn=SANCHEZ.AMY.ELIZABETH.1454434338 Date: 2017.08.16 15:25:37 -06'00' **DATE** 8/16/2017

EA Engineering, Science, and Technology, Inc., PBC

Submittal Review Sheet 1

Project Name: **Kirtland BFF Mid-Plume Pump and Treat System Expansion**			Date Received: **8/15/17**			
Project Owner: **Kirtland Air Force Base**			Checked By: **Tyler Curley**			
Contractor: **RMCI, Inc.**	Engineer: **EA Engineering, Science and Technology, Inc., PBC.**		Log Page: **NA**			
Address: **6211 Chappell Rd NE, Albuquerque, NM 87113**	Address: **320 Gold Ave. SW, Suite 1300 Albuquerque, NM 87102**		EA No.: 62599DM01			
			Spec. Section: **40 05 13 2.2.3.3**			
			Drawing/Detail No.: **NA**			
ATTN: Phillip Johnson	ATTN: **Devon Jercinovic**		1st Sub		Re-Sub	1
Date Transmitted: **08/15/2017**	Prev. Transmittal Date: **8/1/15**					

Item No.	No. Copies	Description	Manufacturer	Mfg/Vendor Dwg or Detail	Action Taken*
1	1	Junction Vault Steel Piping	Custom Piping Sytems		A

The Action Designated Above is in Accordance with the Following Legend:

A – Furnish as Submitted
B – Furnish as Noted
C – Revise and Re-submit
1. Not enough information for review.
2. No reproducible submitted.
3. Copies illegible.
4. Not enough copies submitted.
5. Wrong sequence number.
6. Wrong resubmittal number.
7. Wrong Spec. Section.
8. Wrong form used.
9. See Comments.

D – Rejected
E – Engineer's Review not Required
1. Submittal not required.
2. Supplemental Information. Submittal retained for Information purposes only.
3. Information reviewed and approved on prior submittal.
4. See Comments.

Review is for general compliance with Contract Documents. No responsibility is assumed for correctness of dimensions or detail. Contractor is required to specify deviations from contract requirements. Lack of exceptions noted by Engineer does not waive Contractor's obligation to comply with Drawings and Specifications.

Comments:
Items reviewed and confirmed to meet requirements
Issues in Bold

A53 Grade B carbon steel conforms to Specs

Flanges conform to the Specs.

By: _____ Date: 8/16/17

Distribution: [1] Contractor [1] Engineer [1] Owner

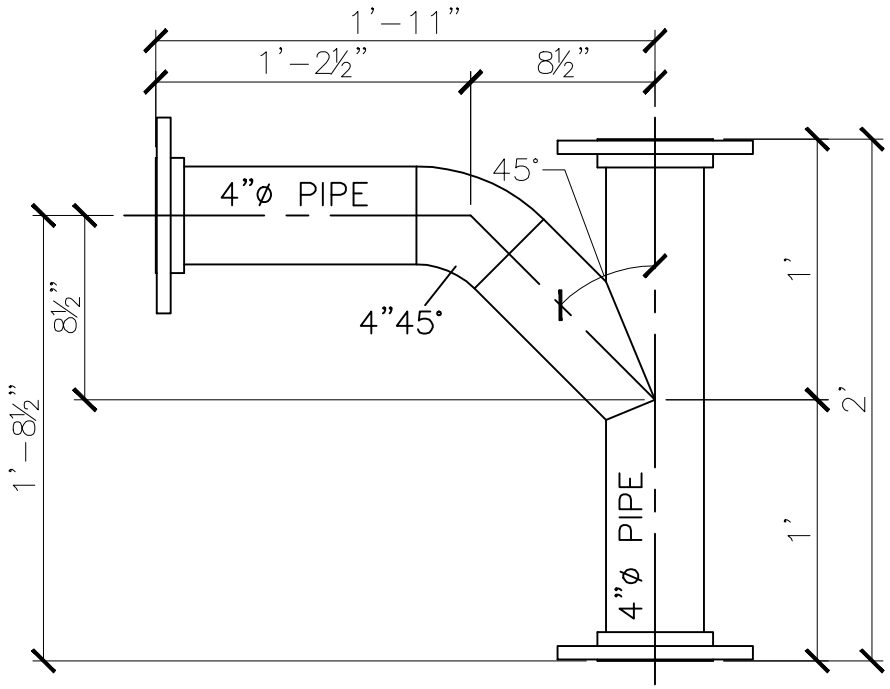

1. Pipe: Std. Wt. A53 Grade B

2. Fittings: ASTM A-234

3. Flanges: Class 150, 1/16" Raised Face, Conforming to ASTM A105/A105M and ASME B16-5.

4. Lining: Bare

5. Coating: Bare

6. All dimensions are theoretical. Contractor must verify depth of existing infrastructure and all dimensions prior to fabrication.

7. All welds to be performed by a certified welder in accordance with ASME Section IX BPVC.

APPROVED:_____

DATE:_____

8/9/17
N.T.S.
Dwg. Number 1.0

KIRTLAND AIR FORCE BASE
4" JUNCTION VAULT PIPING

Custom Piping Systems LLC
4230 Milling Rd
San Antonio, TX. 78219
P-210.867.6356 F-210.558.9975
"Providing Custom Fabrications for the Water & Waste Water Industries"

TEL: 708/594-1700
FAX: 708/458-0106
www.weldbend.com

For Ring Type Joint Facing Dimension information see page 148.

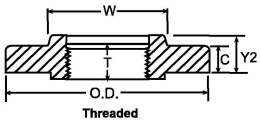

Threaded

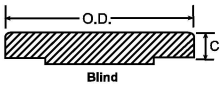

Blind

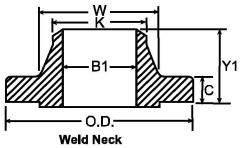

Weld Neck

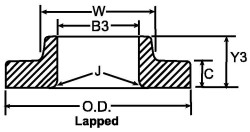

Lapped

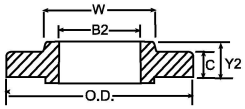

Slip-on

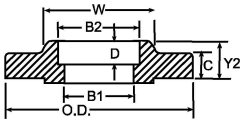

Socket Weld

Pipe Size	Outside Diameter of Flange	Thickness of Flange (Min.)	Thickness of Lap Joint (Min.)	Diameter of Hub *	Diameter of Weld Neck	Length Through Hub			Thread Length (Min.)	Bore			Lap Joint Radius	Depth of Socket
						Threaded, Slip-on & Socket Weld	Lap Joint	Weld Neck		Slip-on & Socket Weld (Min.)	Lap Joint (Min.)	Weld Neck & Socket Weld		
	O.D.	C	C	W	K	Y2	Y3	Y1	T	B2	B3	B1 ▲	J	D
ASME B16.5														
½	3.50	0.38	0.44	1.19	0.84	0.56	0.62	1.81	0.62	0.88	0.90	0.62	0.12	0.38
¾	3.88	0.44	0.50	1.50	1.05	0.56	0.62	2.00	0.62	1.09	1.11	0.82	0.12	0.44
1	4.25	0.50	0.56	1.94	1.32	0.62	0.69	2.12	0.69	1.36	1.38	1.05	0.12	0.50
1 ¼	4.62	0.56	0.62	2.31	1.66	0.75	0.81	2.19	0.81	1.70	1.72	1.38	0.19	0.56
1 ½	5.00	0.62	0.69	2.56	1.90	0.81	0.88	2.38	0.88	1.95	1.97	1.61	0.25	0.62
2	6.00	0.69	0.75	3.06	2.38	0.94	1.00	2.44	1.00	2.44	2.46	2.07	0.31	0.69
2 ½	7.00	0.81	0.88	3.56	2.88	1.06	1.12	2.69	1.12	2.94	2.97	2.47	0.31	0.75
3	7.50	0.88	0.94	4.25	3.50	1.12	1.19	2.69	1.19	3.57	3.60	3.07	0.38	0.81
3 ½	8.50	0.88	0.94	4.81	4.00	1.19	1.25	2.75	1.25	4.07	4.10	3.55	0.38	
4	9.00	0.88	0.94	5.31	4.50	1.25	1.31	2.94	1.31	4.57	4.60	4.03	0.44	
5	10.00	0.88	0.94	6.44	5.56	1.38	1.44	3.44	1.44	5.66	5.69	5.05	0.44	
6	11.00	0.94	1.00	7.56	6.63	1.50	1.56	3.44	1.56	6.72	6.75	6.07	0.50	
8	13.50	1.06	1.12	9.69	8.63	1.69	1.75	3.94	1.75	8.72	8.75	7.98	0.50	
10	16.00	1.12	1.19	12.00	10.75	1.88	1.94	3.94	1.94	10.88	10.92	10.02	0.50	
12	19.00	1.19	1.25	14.38	12.75	2.12	2.19	4.44	2.19	12.88	12.92	12.00	0.50	
14	21.00	1.31	1.38	15.75	14.00	2.19	3.12	4.94	2.25	14.14	14.18	13.25	0.50	
16	23.50	1.38	1.44	18.00	16.00	2.44	3.44	4.94	2.50	16.16	16.19	15.25	0.50	
18	25.00	1.50	1.56	19.88	18.00	2.62	3.81	5.44	2.69	18.18	18.20	17.25	0.50	
20	27.50	1.62	1.69	22.00	20.00	2.81	4.06	5.62	2.88	20.20	20.25	19.25	0.50	
24	32.00	1.81	1.88	26.12	24.00	3.19	4.38	5.94	3.25	24.25	24.25	23.25	0.50	
		WN BLD												
ASME B16.47 Series A														
30	38.75	2.88 2.88		30.75	30.00			5.32						
36	46.00	3.50 3.50		36.75	36.00			6.13						
42	53.00	3.75 3.75		43.00	42.00			6.69						
48	59.50	4.19 4.19		49.12	48.00			7.50						
		WN BLD												
ASME B16.47 Series B														
30	34.94	1.69 1.94		31.00	30.06			3.88						
36	41.62	2.00 2.25		37.19	36.06			4.57						
42	48.25	2.25 2.65		43.38	42.12			5.19						
48	54.81	2.50 3.00		48.50	48.12			5.82						

WELDBEND NOTES

1. Standard flange facings on page 146.
2. All dimensions are in inches.
3. Calculated flange weights on page 99.
4. For dimensional tolerances see page 144.
5. Weld end preparations on page 154.
6. Thread standards on page 156.
7. Blind flanges may be produced with or without hubs.
8. All flanges conform to ASTM A105/ASME SA105.
9. All flanges ½"-24" conform to ASME B16.5.
   All flanges 30" and larger conform to ASME B16.47.

* A taper shall not exceed 7 degrees on threaded, slip-on and lapped flanges.
▲ Dimensions listed for socket weld and weld neck flanges are for Standard bore unless specified by purchaser.

Copyright © 2010 by Weldbend Corporation. All Rights Reserved.

DEPARTMENT OF THE ARMY
ALBUQUERQUE DISTRICT, CORPS OF ENGINEERS
ALBUQERQUE DISTRICT OFFICE
4101 JEFFERSON PLAZA NE
ALBUQUERQUE, NM 87109

SUBMITTAL REVIEW VERIFICATION SHEET

PROJECT TITLE: Kirtland BFF Mid-Plume Pump and Treat System Expansion
CONTRACT NUMBER: W912DR-12-D-0006 DM01
DATE RECEIVED: 09-13-2017
DATE REVIEWED: 09-13-2017

DESCRIPTION OF ITEMS REVIEWED:

1. Junction Vault Check Valve

NO EXCEPTIONS TAKEN.	**X**
EXCEPTIONS AS NOTED ON DRAWINGS AND/OR ATTACHED SHEETS(S). RESUBMISSION NOT REQUIRED.	
EXCEPTIONS AS NOTED ON DRAWINGS AND/OR ATTACHED SHEETS(S). RESUBMISSION REQUIRED.	
RECEIPT ACKKNOWLEDGED.	

Notes:

NOTE: ITEMS REVIEWED AS TO GENERAL LAYOUT ONLY. DIMENSIONS AND QUANTITIES NOT CHECKED. REVIEW DOES NOT RELIEVE CONTRACTOR OF RESPONSIBILITIES FOR ANY ERRORS WHICH MAY EXIST AS CONTRACTOR SHALL BE RESPONSIBLE FOR DIMENSIONS AND DESIGN OF ADEQUATE CORRECTIONS, DETAILS AND SATISFACTORY CONSTRUCTION OF WORK.

SIGNATURE SANCHEZ.AMY.ELIZABETH.1454434338 Digitally signed by SANCHEZ.AMY.ELIZABETH.1454434338 DN: c=US, o=U.S. Government, ou=DoD, ou=PKI, ou=USA, cn=SANCHEZ.AMY.ELIZABETH.1454434338 Date: 2017.09.13 11:27:12 -06'00' **DATE** 9/13/2017

EA Engineering, Science, and Technology, Inc., PBC

Submittal Review Sheet 1

Project Name: **Kirtland BFF Mid-Plume Pump and Treat System Expansion**			Date Received: **9/12/17**	
Project Owner: **Kirtland Air Force Base**			Checked By: **Tyler Curley**	
Contractor: **RMCI, Inc.**	Engineer: **EA Engineering, Science and Technology, Inc., PBC.**		Log Page: **NA**	
Address: **6211 Chappell Rd NE, Albuquerque, NM 87113**	Address: **320 Gold Ave. SW, Suite 1300 Albuquerque, NM 87102**		EA No.: 62599DM01	
			Spec. Section: **40 05 13 2.6.4.1**	
			Drawing/Detail No.:	
ATTN: Phillip Johnson	ATTN: **Devon Jercinovic**		1st Sub	Re-Sub
Date Transmitted: **09/13/2017**	Prev. Transmittal Date:			

Item No.	No. Copies	Description	Manufacturer	Mfg/Vendor Dwg or Detail	Action Taken*
1	1	Junction Vault Check Valve	Mueller Co.		A

The Action Designated Above is in Accordance with the Following Legend:

A – Furnish as Submitted
B – Furnish as Noted
C – Revise and Re-submit
1. Not enough information for review.
2. No reproducible submitted.
3. Copies illegible.
4. Not enough copies submitted.
5. Wrong sequence number.
6. Wrong resubmittal number.
7. Wrong Spec. Section.
8. Wrong form used.
9. See Comments.

D – Rejected
E – Engineer's Review not Required
1. Submittal not required.
2. Supplemental Information. Submittal retained for Information purposes only.
3. Information reviewed and approved on prior submittal.
4. See Comments.

Review is for general compliance with Contract Documents. No responsibility is assumed for correctness of dimensions or detail. Contractor is required to specify deviations from contract requirements. Lack of exceptions noted by Engineer does not waive Contractor's obligation to comply with Drawings and Specifications.

Comments:
Items reviewed and confirmed to meet requirements
Issues in Bold

Check valve conforms to specs (flanges are compatible with ASME B16.5)

By: _____ Date: 9/13/17

Distribution: [1] Contractor [1] Engineer [1] Owner

Mueller Co.
Reliable Connections

September 12, 2017

To Whom It Might Concern,

There is a lot of confusion regarding flange standards. There are three standards that are often referenced when specifying flanges:

- ANSI/ASME B16.1 – Gray Iron Pipe Flanges and Flanged Fittings: Classes 25, 125 and 250
- ANSI/ASME B16.42 – Ductile Iron Pipe Flanges and Flanged Fittings: Classes 150 and 300
- ANSI/ASME B16.5 – Pipe Flanges and Flanged Fittings: NPS 1/2 through NPS 24 Metric/Inch Standard

ANSI/ASME B16.5 Class 150 (aka 150#) is a standard for flanges that are on the end of steel pipe or flanges made for steel pipe. Mueller manufacturers both Gray Iron and Ductile Iron Flat Face (FF); Gray Iron valves comply with ANSI/ASME B16.1 Class 125 and Ductile Iron valves comply with ANSI/ASME B16.42 Class 150.

B16.1 Class 125, B16.42 Class 150 and B16.5 Class 150 are dimensionally the same with the material being the significant difference. Therefore FF valves and fittings manufactured to these standards will mate. FF and Raised Face flanges should not be used together.

For a more complete explanation of these standards please reference the attached white paper found on pages 2 & 3 of this document.

MUELLER CO.

Amanda Owens

9/12/17

Amanda Owens
Date

Application Engineer
Water Products Division
Mueller Company
1401 Mueller Ave.
Chattanooga TN, 37406
aowens@muellercompany.com

What's Up With Flanges?

There's a lot of confusion regarding pressure ratings of flanged valves for water works service. Industry standards, manufacturer's literature and project specifications often contradict or are subject to interpretation which leads to delays, improper equipment and potential system failures.

ASME and ANSI

Most flanged valves for water works service in North America are supplied with flanges conforming to dimensional standards developed by the American Society of Mechanical Engineers (ASME) and accredited by the American National Standards Institute (ANSI). Various "committees" within ASME are charged with developing, issuing and maintaining individual standards. The ASME "B16" committees have this responsibility for valves, flanges and flanged fittings. Standardized dimensions for cast iron flanges and flanged fittings are provided in ANSI/ASME B16.1 standard, steel and stainless steel dimensions in the ANSI/ASME B16.5 standard and ductile iron in the ANSI/ASME B16.42 standard. Compliance with the applicable standardized flange and flanged fitting dimensions is voluntary but ensures uniformity so that flanged valves from one manufacturer will bolt to flanges from another.

Flange Classes

There are four common pressure "classes" within the ANSI/ASME standards listed above. Class 125 and Class 250 are "cast iron" flanges and flanged fittings while Class 150 and Class 300 are ductile iron, steel or stainless steel. Hence, ANSI/ASME B16.1 Class 125 flanges are made from cast iron, ANSI/ASME B16.5 Class 150 can be made from steel or stainless and ANSI/ASME B16.42 Class 150 is made from ductile iron.

However, the bolting pattern is the same for both Class 125 and 150 so, regardless of material, they will bolt together. This is also the case for Class 250 and 300. Cast iron flanges are usually supplied "flat faced" while ductile iron and steel are usually "raised face." When bolting a cast iron flange to a steel or ductile iron flange, the "raised face" of the mating flange should be removed to avoid breaking the cast iron flange when tightening the bolts.

Pressure and Temperature

The ANSI/ASME standards also provide pressure ratings for various "classes" of flanges and flanged fittings. The pressure ratings change based on the material from which it is made and/or the temperature at which it operates. The nominal flange "Class" (e.g., Class 125) generally represents the maximum working pressure at the temperature of saturated steam at that pressure. For example, an ANSI/ASME B16.1 Class 125 flange is rated for 125 PSI at 353º F.

But when used at colder temperatures, such as that of water, the ANSI/ASME maximum working pressure is higher than the nominal class. ANSI/ASME B16.1 rates Class 125 flanges and flanged fittings made from high strength cast iron for 200 PSI at temperatures up to 150º F. ANSI/ASME B16.42 rates Class 150 ductile iron flanges and fittings for 250 PSI at temperatures up to 100º F.

Complete flange and flanged fitting pressure-temperature ratings can be found in tables within the applicable ANSI/ASME B16.x standard.

Are you confused?

It gets worse.

Enter AWWA
The American Water Works Association (AWWA) also has committees charged with addressing the particular needs of the water works industry.

The AWWA C110 committee considered the ANSI/ASME pressure ratings too conservative when used on water. Through burst testing they determined flanges and fittings made from high strength cast iron and with dimensions conforming to ANSI/ASME B16.1 Class 125 could be rated for a working pressure of 250 PSI with at least a 3.0 safety factor. This allows Class 125 cast iron flanges and flanged fittings to have the same pressure rating as Pressure Class 250 ductile iron pipe.

AWWA C110 does not address ANSI/ASME B16.1 Class 250 cast iron flanges or flanged fittings that have a 300 to 500 PSI or higher pressure rating and a totally different bolt pattern than Class 125. Mistakes sometimes occur because cast iron or ductile iron flanged fittings have "250" cast in them (indicating a 250 PSI pressure rating) but the flange dimensions and bolt pattern conform to ANSI/ASME B16.1 Class 125 (or ANSI/ASME B16.42 Class 150). These will not bolt to an ANSI/ASME B16.1 Class 250 flange!

Valve Pressure Ratings
ANSI/ASME B16 and AWWA C110 pressure ratings are based on flanges and flanged fittings conforming to standardized geometry and dimensions, including wall thickness. By comparison, valves are available in countless types, shapes, configurations and geometries that vary from one manufacturer to the other.

While the valve's connecting flanges may conform to ANSI/ASME B16.x dimensions, there are many reasons why its pressure rating may not be the same as a flange or flanged fitting made from identical material as the valve. It is the responsibility of the valve manufacturer to establish the pressure ratings for their products. The design professional should consult the manufacturer's published information and not assume it is the same as the flange or fitting being bolted to it.

However, the pressure ratings of many ANSI/ASME B16.x flanged valves used in waterworks service are defined in AWWA standards applicable to that type of valve. The pressure rating (or Pressure Class) listed in the AWWA valve standard may or may not conform to the ANSI/ASME B16.x or the AWWA C110 pressure rating, leading to even more confusion.

The AWWA "valve" standards which define a Pressure Class or pressure rating are too numerous to detail in this commentary but include C500 gate valves, C504 butterfly valves, C507 ball valves, C508 check valves and C517 eccentric plug valves. The design professional should become familiar with the applicable AWWA valve standard and select the pressure class that is adequate for the working pressure and be aware that the valve's pressure class and connection flange class may not correspond.

One should remember that "a chain is only as strong as its weakest link" so every component of a piping system should be able to withstand the highest pressure that could be realized at the location where it is installed.

2"-12" SWING TYPE LEVER AND WEIGHT CHECK VALVES – FL. X FL.

- Catalog number---
  A-2600-6-01BB flanged ends, with bronze disc facing
  A-2602-6-01B1 flanged ends, with rubber disc facing
- Sizes---2", 2-1/2", 3", 4", 6", 8", 10", 12"
- Meets all applicable parts of ANSI/AWWA C508 Standard
- Epoxy coated interior & exterior for corrosion resistance
- Certified to NSF 61
- Flanged end dimensions and drilling comply with ANSI B16.1, class 125
- Iron body, bronze mounted (IBBM)
- Choice of bronze or rubber disc facing
- For vertical or horizontal installation
- O-ring sealed stuffing box
- Adjustable weight to control opening and closing of clapper, lever can be installed on either side of valve
- 200 psig (1379 kPa) maximum working pressure, 400 psig (2758 kPa) test pressure

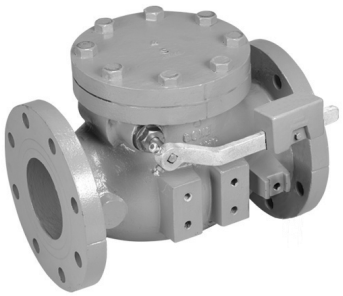

A-2600-6-01BB

Options

- Stainless Steel Nuts & Bolts
- Allen Bradley Limit Switch
- Tapped Bosses
- PN 10/PN 16 Flange Drilling 4"-12"

Check Valve Parts (2011-present)

Catalog Part No.	Description	Material	Material Standard
C-301	Retaining Plug	Brass	ANSI B21
C-306	O-ring C	Rubber	ASTM D2000, BK 707
C-307	O-ring B	Rubber	ASTM D2000, BK 707
C-308	Gasket	Rubber	ASTM D2000, BK 807
C-309	Cover Bolt	Zinc Coated Steel	A307 Grade B
C-310	Washer	Brass	ANSI B21
C-311	Spacer	Brass	ANSI B21
C-312	Disc Nut	Brass	ANSI B21
C-313	Disc Stud	Brass	ANSI B21
C-314	Snap Ring	Stainless Steel	—
C-315	Weight Bolt & Nut	Zinc Coated Steel	A307 Grade B
C-318	Pin	Stainless Steel	ASTM A276 Type 304
C-319	Test Plug	Malleable Iron	A47
C-320	Key	Stainless Steel	ASTM A276 Type 304
C-321	Hinge Pin	Stainless Steel	ASTM A276 Type 304
C-322	Weight Arm	Ductile Iron	A536 Gr. 65-45-12
C-323	Bolt & Nut	Zinc Coated Steel	A307 Grade B
C-325	Seat Nut	Brass	ANSI B21
C-327	Body Seat Ring	Bronze	ANSI B62
C-329	Arm	Ductile Iron	A536 Gr. 65-45-12
C-330	Weight	Cast Iron	ASTM A126 Cl. B
C-331	Cover	Cast Iron	ASTM A126 Cl. B
C-332	Disc	Cast Iron	ASTM A126 Cl. B
C-333	Body	Cast Iron	ASTM A126 Cl. B
Rubber Faced Disc Parts			
C-316	Disc Seat Bolt	Stainless Steel	ASTM A276 Type 304
C-326	Disc Seat Ring	Rubber	ASTM D2000, BK 807
C-328	Seat Holder	Cast Iron*	ASTM A126 Cl. B
Bronze Faced Disc Parts			
C-326	Disc Seat Ring	Bronze	ANSI B62

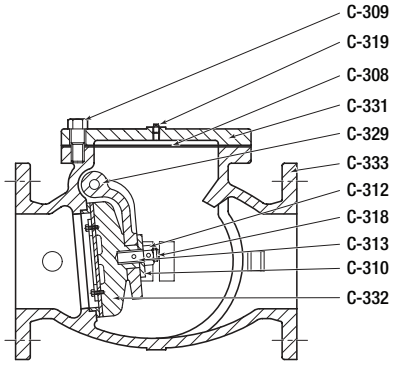

Valve body and clapper
Rubber faced disc shown

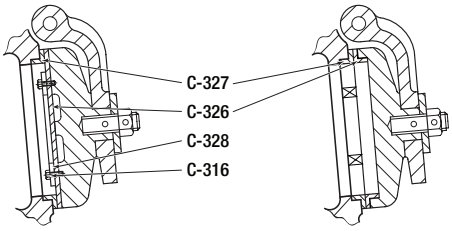

Rubber faced disc clapper

Bronze faced disc clapper

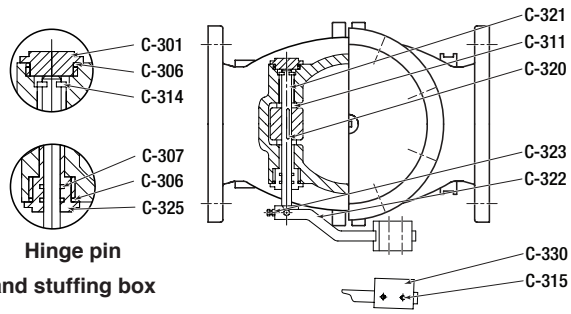

Hinge pin
and stuffing box

Lever assembly and weight

*2"- 6" sizes are cast iron, ASTM A126 Cl. B, 8"- 12" sizes are ductile iron ASTM A536 Gr. 65-45-12.

2"-12" SWING TYPE LEVER AND WEIGHT CHECK VALVE DIMENSIONS-FL.X FL.

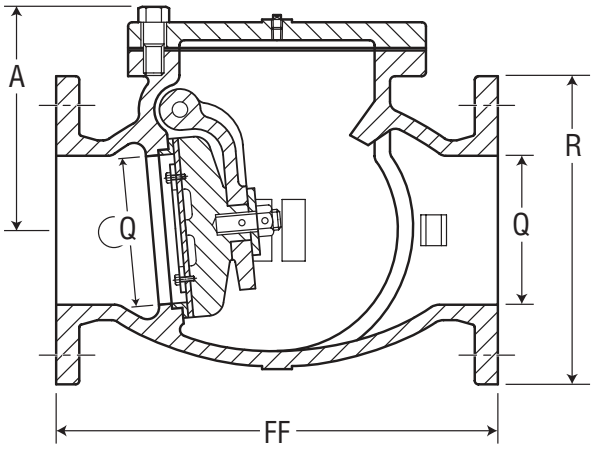

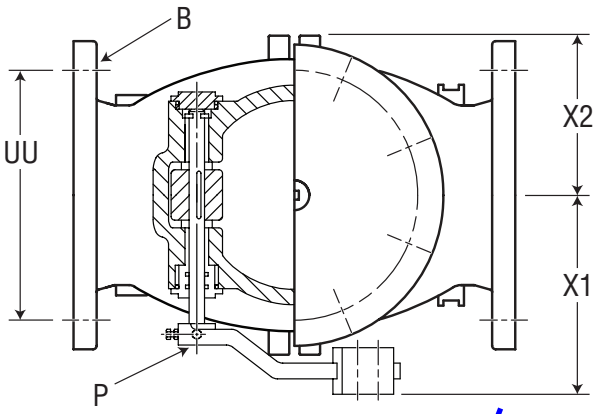

Dimension**	Size*			
	2"	2-1/2"	3"	4"
Q (bore)	2.00	2.50	3.00	4.00
R	6.00	7.00	7.50	9.00
FF	8.00	8.50	9.50	11.50
X1	5.13	5.13	6.31	7.13
X2	2.81	3.56	4.06	4.94
A	4.31	5.69	6.06	6.88
P (hinge pin diameter)	.38	.38	.50	.50
B (number and size of bolts)	4--.75	4--.75	4--.75	8--.75
UU (bolt circle diameter)	4.75	5.50	6.00	7.50
Weight	35	51	67	91

Dimension**	Size*			
	6"	8"	10"	12"
Q (bore)	6.00	8.00	10.00	12.00
R	11.00	13.50	16.00	19.00
FF	14.00	19.50	24.50	27.50
X1	8.69	10.88	12.25	14.38
X2	5.94	8.06	9.19	10.81
A	8.50	9.94	11.19	13.56
P	.75	.88	1.00	1.13
B (number and size of bolts)	8--.88	8--.88	12--1.00	12--1.00
UU (bolt circle diameter)	9.50	11.75	14.25	17.00
Weight	164	282	420	638

*Nominal
**All dimensions are in inches. All weights are in pounds and are approximate.

DEPARTMENT OF THE ARMY
ALBUQUERQUE DISTRICT, CORPS OF ENGINEERS
ALBUQERQUE DISTRICT OFFICE
4101 JEFFERSON PLAZA NE
ALBUQUERQUE, NM 87109

SUBMITTAL REVIEW VERIFICATION SHEET

PROJECT TITLE: Kirtland BFF Mid-Plume Pump and Treat System Expansion
CONTRACT NUMBER: W912DR-12-D-0006 DM01
DATE RECEIVED: 08-03-2017
DATE REVIEWED: 08-03-2017

DESCRIPTION OF ITEMS REVIEWED:

1. 40 05 13-006 Junction Vault Pipe Supports

NO EXCEPTIONS TAKEN.	**X**
EXCEPTIONS AS NOTED ON DRAWINGS AND/OR ATTACHED SHEETS(S). RESUBMISSION NOT REQUIRED.	
EXCEPTIONS AS NOTED ON DRAWINGS AND/OR ATTACHED SHEETS(S). RESUBMISSION REQUIRED.	
RECEIPT ACKKNOWLEDGED.	

Notes:

NOTE: ITEMS REVIEWED AS TO GENERAL LAYOUT ONLY. DIMENSIONS AND QUANTITIES NOT CHECKED. REVIEW DOES NOT RELIEVE CONTRACTOR OF RESPONSIBILITIES FOR ANY ERRORS WHICH MAY EXIST AS CONTRACTOR SHALL BE RESPONSIBLE FOR DIMENSIONS AND DESIGN OF ADEQUATE CORRECTIONS, DETAILS AND SATISFACTORY CONSTRUCTION OF WORK.

SIGNATURE SANCHEZ.AMY.ELIZABETH.1454434338 Digitally signed by SANCHEZ.AMY.ELIZABETH.1454434338 DN: c=US, o=U.S. Government, ou=DoD, ou=PKI, ou=USA, cn=SANCHEZ.AMY.ELIZABETH.1454434338 Date: 2017.08.03 15:29:32 -06'00' **DATE** 8/3/2017

EA Engineering, Science, and Technology, Inc., PBC

Submittal Review Sheet 1

Project Name: **Kirtland BFF Mid-Plume Pump and Treat System Expansion**			Date Received: **8/1/17**		
Project Owner: **Kirtland Air Force Base**			Checked By: **Tyler Curley**		
Contractor: **RMCI, Inc.**	Engineer: **EA Engineering, Science and Technology, Inc., PBC.**		Log Page: **NA**		
Address: **6211 Chappell Rd NE, Albuquerque, NM 87113**	Address: **320 Gold Ave. SW, Suite 1300 Albuquerque, NM 87102**		EA No.: 62599DM01		
			Spec. Section: **40 05 13 2.10**		
			Drawing/Detail No.:		
ATTN: Phillip Johnson	ATTN: **Devon Jercinovic**		1st Sub		Re-Sub
Date Transmitted: **08/01/2017**	Prev. Transmittal Date:				

Item No.	No. Copies	Description	Manufacturer	Mfg/Vendor Dwg or Detail	Action Taken*
1	1	Junction Vault Pipe Supports	Material Resources Inc.		A

The Action Designated Above is in Accordance with the Following Legend:

A – Furnish as Submitted
B – Furnish as Noted
C – Revise and Re-submit
1. Not enough information for review.
2. No reproducible submitted.
3. Copies illegible.
4. Not enough copies submitted.
5. Wrong sequence number.
6. Wrong resubmittal number.
7. Wrong Spec. Section.
8. Wrong form used.
9. See Comments.

D – Rejected
E – Engineer's Review not Required
1. Submittal not required.
2. Supplemental Information. Submittal retained for Information purposes only.
3. Information reviewed and approved on prior submittal.
4. See Comments.

Review is for general compliance with Contract Documents. No responsibility is assumed for correctness of dimensions or detail. Contractor is required to specify deviations from contract requirements. Lack of exceptions noted by Engineer does not waive Contractor's obligation to comply with Drawings and Specifications.

Comments:
Items reviewed and confirmed to meet requirements
Issues in Bold

Pipe supports conform to specs.

By: _____ Date: 8/3/17

Distribution: [1] Contractor [1] Engineer [1] Owner

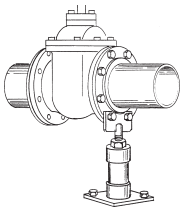

Material Resources, Inc.

STANDON ADJUSTABLE PIPE SUPPORTS

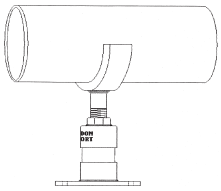

Standon Model S92 Saddle Support

The Standon Model S92 Saddle Support was specifically designed to fit your pipe! A nearly 50% circumferential cradle (170°), and a pipe-to-saddle gap clearance of less than .125" guarantees excellent performance.

The Standon Saddle Support comes with an oversized base and an adjustable collar allowing up to 3" of fine adjustment.

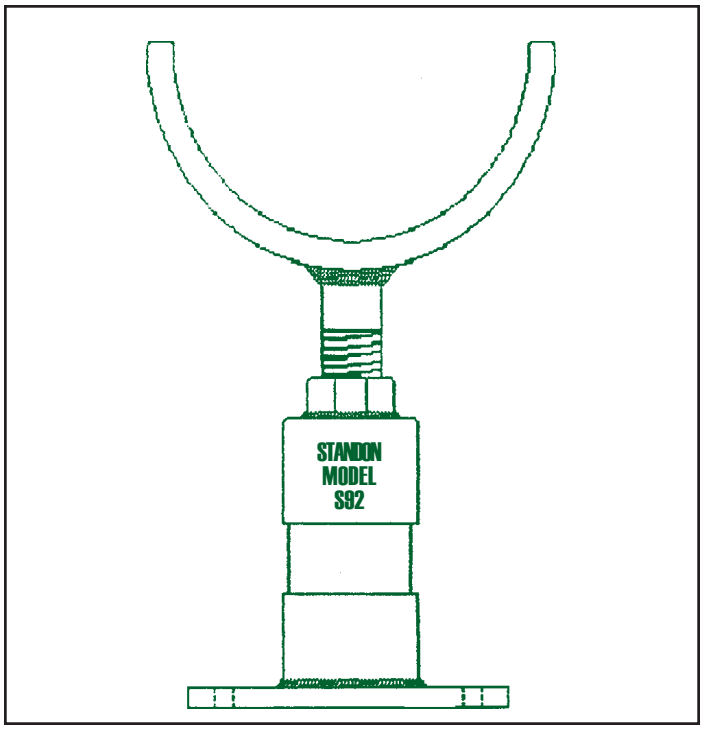

The Standon Saddle Support is offered in a variety of metals and sizes. Because corrosion is a concern, we offer a galvanized finish. Better yet - try our 100% 304 stainless steel version.

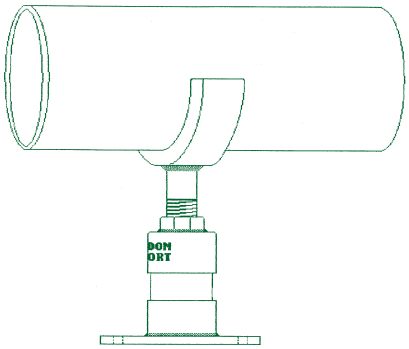

Packaged in an easily inventoried box, the Standon Saddle Support is always ready to do the job. An installation guide is included with each Support. The customer supplies the course extension pipe (size is determined by the size of the support being used). The extension pipe should be field cut to the length required. No threading is needed. The collar and base cups are sized to accept standard sizes of iron pipe. Schedule 40 is the minimum thickness recommended.

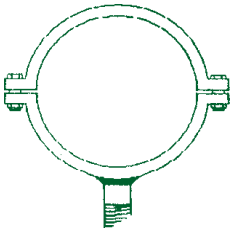

The Standon model C92 is a two piece, full circle saddle clamp. It comes supplied with two bolts and nuts to retain the matching top saddle.

"Quality you can Stand On"

"All Models Tested to 10,000 lbs. Compressive Strength"

For product availability and ordering information on these and other products offered by Material Resources Inc. please call:

(503) 533-5256 or **FAX (503) 533-5501**

or visit our website at

www.standon.net

MATERIAL RESOURCES, INC.

PO Box 247

Forest Grove, Oregon 97116

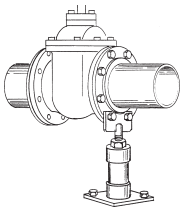

Material Resources, Inc.

STANDON ADJUSTABLE PIPE SUPPORTS

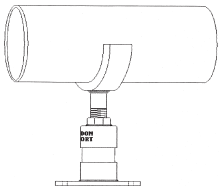

Standon Model S92 Saddle Support Product Specification Sheet

ALL MODELS TESTED TO OVER 10,000 POUNDS - COMPRESSIVE STRENGTH

MATERIAL -

Saddle strap:	ASTM A36
Collar / base cups:	ASTM A53 D.O.M. tubing
Thread stud:	ASTM A36, rolled thread, grade ASTM A307
Base plate:	ASTM A36 sheet steel

Optional Material - 100% 304L or 316L Stainless steel

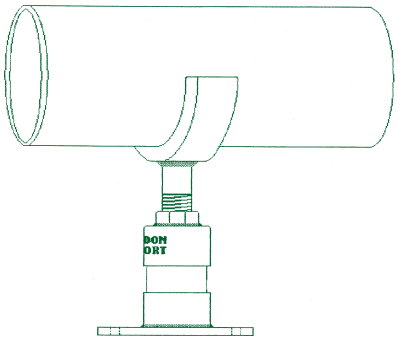

FABRICATION -

All welds:	100% MIG welding, electrode E70XX
Saddle:	Formed to ductile iron pipe radius
	Optional neoprene liner available for IPS pipe

FINISH - All supports have corrosion resistant, electro-galvanized finish.
Hot dip galvanizing available - specify at time of order

OPTION- A neoprene liner is available to isolate pipe from saddle.

DIMENSIONS - (Note: call manufacturer for 30" through 48" support info.)

SUPPORT SIZE	STRAP SIZE	THRD STUD	BASE PLATE	EXTENSION PIPE REQ.	MINIMUM DIST. TO FLOOR
2″	.375" x 2"	1" x 6"	4" x 6" x .25"	2" Sch. 40	7"
2.5″	.375" x 2"	1" x 6"	4" x 6" x .25"	2" Sch. 40	7"
3″	.375" x 2"	1" x 6"	4" x 6" x .25"	2" Sch. 40	7"
4″	.50" x 2"	1" x 6"	8" x 8" x .25"	2" Sch. 40	7"
6″	.50" x 2"	1" x 6"	8" x 8" x .25"	2" Sch. 40	7"
8″	.50" x 2"	1" x 6"	8" x 8" x .25"	2" Sch. 40	7"
10″	.50" x 2"	1" x 6"	8" x 8" x .25"	2" Sch. 40	7"
12″	.50" x 2"	1" x 6"	8" x 8" x .25"	2" Sch. 40	7"
14″	.625" x 3"	1.5" x 6"	8" x 8" x .5"	3" Sch. 40	9.5"
16″	.625" x 3"	1.5" x 6"	8" x 8" x .5"	3" Sch. 40	9.5"
18″	.75" x 4"	2" x 6"	8" x 8" x .5"	4" Sch. 40	10"
20″	.75" x 4"	2" x 6"	8" x 8" x .5"	4" Sch. 40	10"
24″	.75" x 4"	2" x 6"	8" x 8" x .5"	4" Sch. 40	10"

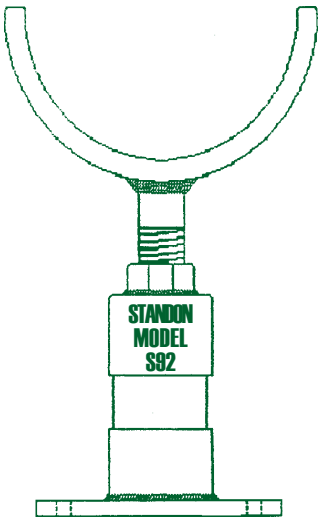

INSTALLATION -

To insure proper Support performance and stability; After final height adjustment is attained, apply tack welds to both support cups and extension pipe. Use E70XX electrode for welds. The base plate should be anchored to the floor with removable anchor bolts. If re-adjustment is required at a later date, remove anchor bolts and rotate entire lower unit using collar nut. Re-anchor base plate.

For product availability and ordering information on these and other products offered by Material Resources Inc please call:

(503) 533-5256 or (877)693-0727

FAX (503) 533-5501

WWW.STANDON.NET

MATERIAL RESOURCES, INC.

2800 Taylor Way Bldg. 2 C

PO Box 247

Forest Grove, OR 97116

DEPARTMENT OF THE ARMY
ALBUQUERQUE DISTRICT, CORPS OF ENGINEERS
ALBUQERQUE DISTRICT OFFICE
4101 JEFFERSON PLAZA NE
ALBUQUERQUE, NM 87109

SUBMITTAL REVIEW VERIFICATION SHEET

PROJECT TITLE: Kirtland BFF Mid-Plume Pump and Treat System Expansion
CONTRACT NUMBER: W912DR-12-D-0006 DM01
DATE RECEIVED: 8-16-2017
DATE REVIEWED: 8-16-2017

DESCRIPTION OF ITEMS REVIEWED:

1. Wall Sleeves and link seal.

NO EXCEPTIONS TAKEN.	**X**
EXCEPTIONS AS NOTED ON DRAWINGS AND/OR ATTACHED SHEETS(S). RESUBMISSION NOT REQUIRED.	
EXCEPTIONS AS NOTED ON DRAWINGS AND/OR ATTACHED SHEETS(S). RESUBMISSION REQUIRED.	
RECEIPT ACKKNOWLEDGED.	

Notes:

NOTE: ITEMS REVIEWED AS TO GENERAL LAYOUT ONLY. DIMENSIONS AND QUANTITIES NOT CHECKED. REVIEW DOES NOT RELIEVE CONTRACTOR OF RESPONSIBILITIES FOR ANY ERRORS WHICH MAY EXIST AS CONTRACTOR SHALL BE RESPONSIBLE FOR DIMENSIONS AND DESIGN OF ADEQUATE CORRECTIONS, DETAILS AND SATISFACTORY CONSTRUCTION OF WORK.

SIGNATURE SANCHEZ.AMY.ELIZABETH.1454434338 Digitally signed by SANCHEZ.AMY.ELIZABETH.1454434338 DN: c=US, o=U.S. Government, ou=DoD, ou=PKI, ou=USA, cn=SANCHEZ.AMY.ELIZABETH.1454434338 Date: 2017.08.16 15:18:10 -06'00' **DATE** 8/16/2017

EA Engineering, Science, and Technology, Inc., PBC

Submittal Review Sheet 1

Project Name: **Kirtland BFF Mid-Plume Pump and Treat System Expansion**			Date Received: **8/15/17**		
Project Owner: **Kirtland Air Force Base**			Checked By: **Tyler Curley**		
Contractor: **RMCI, Inc.**	Engineer: **EA Engineering, Science and Technology, Inc., PBC.**		Log Page: **NA**		
Address: **6211 Chappell Rd NE, Albuquerque, NM 87113**	Address: **320 Gold Ave. SW, Suite 1300 Albuquerque, NM 87102**		EA No.: 62599DM01		
			Spec. Section: **NA**		
			Drawing/Detail No.: **S-101**		
ATTN: Phillip Johnson	ATTN: **Devon Jercinovic**		1st Sub		Re-Sub 1
Date Transmitted: **08/15/2017**	Prev. Transmittal Date: **08/01/2017**				

Item No.	No. Copies	Description	Manufacturer	Mfg/Vendor Dwg or Detail	Action Taken*
1	1	Wall sleeves and link seal.	Link Seal		A

The Action Designated Above is in Accordance with the Following Legend:

A – Furnish as Submitted
B – Furnish as Noted
C – Revise and Re-submit
1. Not enough information for review.
2. No reproducible submitted.
3. Copies illegible.
4. Not enough copies submitted.
5. Wrong sequence number.
6. Wrong resubmittal number.
7. Wrong Spec. Section.
8. Wrong form used.
9. See Comments.

D – Rejected
E – Engineer's Review not Required
1. Submittal not required.
2. Supplemental Information. Submittal retained for Information purposes only.
3. Information reviewed and approved on prior submittal.
4. See Comments.

Review is for general compliance with Contract Documents. No responsibility is assumed for correctness of dimensions or detail. Contractor is required to specify deviations from contract requirements. Lack of exceptions noted by Engineer does not waive Contractor's obligation to comply with Drawings and Specifications.

Comments:
Items reviewed and confirmed to meet requirements
Issues in Bold

Link seal conforms to drawing S-101

By: _____ Date: 8/16/17

Distribution: [1] Contractor [1] Engineer [1] Owner

EXPERIENCE COUNTS

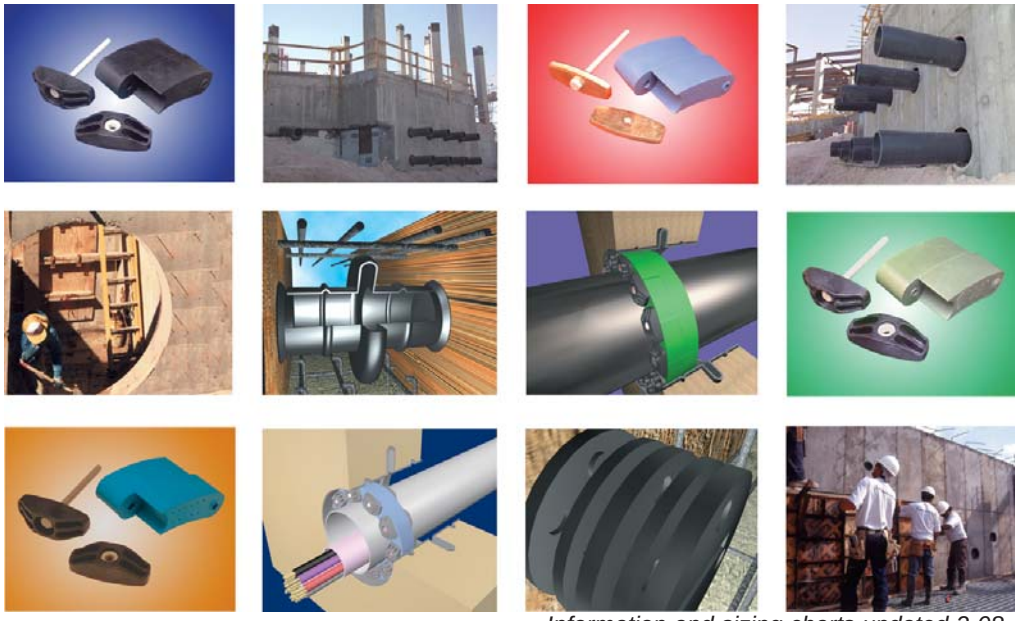

Information and sizing charts updated 2-08.

ENGINEERING MANUAL

Link-Seal® Modular Seals
Century-Line® Sleeves
Cell-Cast® Disks

APPROVED
THE INDUSTRY'S HEAVY DUTY PENETRATION SEAL

Use the original engineered fit...
there are no equals!

Made in U.S.A.

The system is the solution.

LinkSeal® Modular Seals...

The best way to permanently seal any cylindrical object, of any size, passing through any type of concrete barrier is to use Link-Seal® modular seals. From ductle iron to pre-stressed concrete to metal or plastic pipe, conduit or cables - whatever your application - Link-Seal® modular seals will effect a hydrostatic seal capable of holding 20 psig (40 feet of static head) between the pipe and the penetration cylinder through which the pipe passes.

in combination with Century-Line® sleeves...

The best way to guarantee a perfect seal is to use Century-Line® sleeves with Link-Seal® modular seals. They're engineered and sized to provide a stable hole that matches dimensionally with Link-Seal® modular seals. It makes ordering quick and easy and guarantees a perfect fit - and seal - each and every time.

or Cell-Cast® disks.

For larger holes in poured concrete structures, (29.25" to 64.75"Ø) Cell-Cast® disks are used to produce a dimensionally stable hole and smooth concrete surface that is perfect for use with Link-Seal® modular seals.

Tighten Your Specifications!

Approvals - - - - - - - -ISO 9001:2000, Factory Mutual
Elastomers - - - - - - - - - - - - - -EPDM, Nitrile, Silicone
Made in America (U.S.A) - - - - - - - - - - - - - - - - - -YES
Permanent Identification - - - - - - - - - - - - - - - - - -YES
Corrosion Resistant Fasteners
316 Stainless as Standard - - - - - - - - - - - - - -YES
16 Model Sizes -YES
Hi/Low Temp. Seals -YES
FM Approved Fire Seals - - - - - - - - - - - - - - - - - - -YES
Bolts available in USA or Metric Format - - - - - - -YES
Bolts pass 1470 hour salt spray test - - - - - - - - - - -YES
Non-conductive CS Molded
Sleeve Penetration System - - - - - - - - - - - - - - - -YES
Low torque Pressure Plate and Elastomer - - - - -YES
Special "V" Modification - - - - - - - - - - - - - - - - - - -YES
Color Coded elastomers - - - - - - - - - - - - - - - - - - -YES
Cell-Cast® Hole Forms - - - - - - - - - - - - - - - - - - -YES
On Staff Seal Engineering Assistance - - - - - - - - -YES
Worldwide Stocking Distributors - - - - - - - - - - - - -YES
Bolt and nut specifications per ASTM standards---YES

(See Link-Seal® Modular Seal specification,section 2.2, on page 26)

Link-Seal® Modular Seal

The following is a partial listing of the many Federal agencies, associations, code groups, laboratories and organizations which have approved, listed, specified, tested or otherwise indicated acceptance of Link-Seal® modular seals.

General Code Groups, Associations, Laboratories and Approval Authorities

AWWA - American Water Works Association
API - American Petroleum Institute
TUV - Technischer Überwachungs-Verein
Bureau Veritas - Marine Division
ASME - American Society of Mechanical Engineers
DNV - Det Norske Veritas
FM - Factory Mutual Engineering Corporation
LLOYD'S - Lloyd's Register of Shipping
NACE - National Association of Corrosion Engineers

Governmental Agencies

Bureau of Public Roads - Division of Bridges
United States Coast Guard
Corps. of Engineers
GSA - General Services Administration
Military Specifications
TVA - Tennessee Valley Authority

Link-Seal® Modular Seal Features

Saves time and money...
Link-Seal® modular seals install in up to 75% less time when compared to lead-oakum joints, hand fitted flashings, mastics or casing boots.

Positive hydrostatic seal...
Link-Seal® modular seals are rated at 20 psig (40 feet of head), which exceeds the performance requirements of most applications.

Long seal life...
Link-Seal® modular seals are designed for use as a permanent seal. Seal elements are specially compounded to resist aging and attack from ozone, sunlight, water and a wide range of chemicals.

Maximum protection against corrosion...
Standard fasteners employ the use of a proprietary coating process on carbon steel. For extremely corrosive environments, corrosion resistant 316 stainless steel hardware is offered as a standard.

ISO Quality Assurance...
Link-Seal® modular seals are manufactured in an ISO 9001:2000 certified facility. In addition, they are completely manufactured and assembled in the U.S.A.

Certification/Approvals...
Factory Mutual Fire Approvals.
Det Norske Veritas Marine Deak/Bulkhead Penetration Certification.
Also a wide variety of approvals from various Federal agencies, associations, code groups, laboratories and organizations.

Configure a Link-Seal® modular seal to match your application...
Color coded EPDM, Nitrile, & Silicone elastomers may be used with various hardware options to match performance characteristics with service conditions.

Choose a Link-Seal® modular seal to match your pipe size and wall opening...
Link-Seal® modular seals are now available in 16 sizes to provide a solution for varying pipe penetration applications.

Link-Seal® Modular Seal Applications

- Mechanical Contractors - Interior Piping Systems
- Floor Sleeves
- Wall Sleeves
- Manhole Pipe Entry Seals
- Waste Treatment Plants
- Cased Road Crossings
- Elevator Shafts
- Thermal Storage Systems
- Fire Protection Wall Penetrations
- Cased Railroad Crossings
- Electrical Isolation of Pipes
- Precast Concrete Vault Seals
- Insulated Pipe Seals
- Dual Containment Seals
- Marine Applications
- Noise Dampening
- Flexible Sign & Pole Supports
- Electrical Isolation of Pipe Supports
- Mining
- Pulp & Paper
- Decorative Fountains
- Bank Tube Transfer Systems
- Pool Contractors
- Electrical Contractors
- Marine Applications
- Waste & Water Treatment
- Telecommunications
- Valve Pits
- Refrigeration Buildings
- Overhead Signs
- Guard Post Assemblies
- Power Generation Dams
- Offshore Oil Rigs
- High Pressure Tank Guards
- Underground Steel Tanks
- Precast Concrete Manufacturers
- Perimeter Berm Installations Around Tank Farms
- Flow Restrictors in Sewer Maintenance
- Fluid Overflow Devices
- Noise and Sway Dampener
- Through Deck Fire Breaks
- Parking Garage Column Protectors
- Cable TV Installations
- Bridge Construction
- Septic Tank Installations
- Coal Preparation Plants
- Flag Pole Installations
- Tunneling Operations

Link-Seal® Modular Seal Model Properties

with EPDM Seal Elements

EPDM (Black)
EPDM (Blue) Low Durometer

Model "C" or "L" Link-Seal Modular Seal

Suitable for use in water, direct ground burial and atmospheric conditions. Provides electrical isolation where cathodic protection is required.
Type: Standard
Seal Element: EPDM (Black) or EPDM (Blue)
Pressure Plates: Reinforced Nylon Polymer
Bolts & Nuts: Steel with 2-part Zinc Dichromate & proprietary corrosion inhibiting coating.
Temp. Range: -40 to +250ºF (-40 to +121ºC)*

Model "S-316" Link-Seal Modular Seal

For chemical processing & waste water treatment. EPDM rubber is resistant to most inorganic acids and alkalis, some organic chemicals (acetone, alcohol, ketones).
Type: Stainless
Seal Element: EPDM (Black) or EPDM (Blue)
Pressure Plates: Reinforced Nylon Polymer
Bolts & Nuts: 316 Stainless Steel
Temp. Range: -40 to +250ºF (-40 to +121ºC)*

* = Sustained operation near temperature limits may affect life expectancy.

with Nitrile Seal Elements

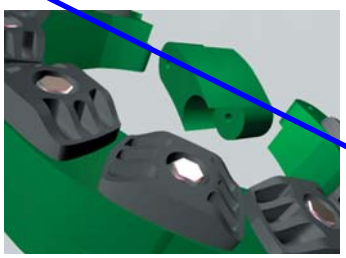

Nitrile (Green)

Model "O" Link-Seal Modular Seal

Nitrile rubber is resistant to oils, fuel and many solvents (gasoline, motor oil, kerosene, methane, jet fuel, hydraulic fluid, water, etc.).
Type: Oil Resistant
Seal Element: Nitrile (Green) Note: Not U.V resistant.
Pressure Plates: Reinforced Nylon Polymer
Bolts & Nuts: Steel with 2-part Zinc Dichromate & proprietary corrosion inhibiting coating.
Temp. Range: -40 to +210ºF (-40 to +99ºC)*

Model "OS-316" Link-Seal Modular Seal

Combination of oil resistant rubber and stainless steel hardware.
Type: Oil Resistant
Seal Element: Nitrile (Green) Note: Not U.V resistant.
Pressure Plates: Reinforced Nylon Polymer
Bolts & Nuts: 316 Stainless Steel
Temp. Range: -40 to +210 ºF (-40 to +99ºC)*

* = Sustained operation near temperature limits may affect life expectancy.

with Silicone Seal Elements

Silicone (Grey)

Model "T" Link-Seal Modular Seal

Silicone rubber is ideal for temperature extremes. The "T" model is one-hour Factory Mutual approved.
Type: High/Low Temperature
Seal Element: Silicone (Grey)
Pressure Plates: Steel Zinc Dichromate
Bolts: Steel with 2-part Zinc Dichromate & proprietary corrosion inhibiting coating.
Temp. Range: -67 to +400ºF (-55 to +204ºC)*

Model "FD/FS" Link-Seal Modular Seal

Double seal for added protection.
Type: Fire Seals
Seal Element: Silicone (Grey)
Pressure Plates: Steel zinc dichromate
Bolts: Steel with 2-part Zinc Dichromate proprietary corrosion inhibiting coating.
Temp. Range: -67 to +400ºF (-55 to +204ºC)*

NOTE: Sustains a constant temp. of 325ºF (163º C.)
* = Sustained operation near temperature limits may affect life expectancy.

Material Properties of Link-Seal Modular Seal Elements

PROPERTY	ASTM METHOD	EPDM (EPDM L)	NITRILE	SILICONE
Hardness (shore A)	D-2240	50 ±5 (40 ±5)	50 ±5	50 ±5
Tensile	D-412	1450 psi	1300 psi	860 psi
Elongation	D-412	400%	300%	250%
Compression Set	S-395	15% 22 hrs. @ 158ºF (70ºC)	45% 22 hrs. @ 212ºF (100ºC)	40% 22 hrs. @ 350ºF (177ºC)
Specific Gravity	D-297	1.10	1.15	1.40

Material Properties of Composite Pressure Plates

PROPERTY	ASTM METHOD	VALUE
Izod Impact - Notched	D-256	2.05 ft-lb/in
Tensile Strength @ Yield	D-638	20,000 psi
Tensile Strength - Break	D-638	20,250 psi
Flexural Strength @ Yield	D-790	30,750 psi
Flexural Modulus	D-790	1,124,000 psi
Elongation, Break	D-638	11.07%
Specific Gravity	D-792	1.38
Moisture Content	--	0.18%

Bolt & Nut Specifications

Standard: Carbon Steel
Carbon steel, zinc dichromated per ASTM B633, with an additional corrosion inhibiting proprietary organic coating. (passes 1470 hour salt spray test)
Tensile Strength = 60,000 psi, minimum.

Option: Stainless Steel
ANSI Type = 316, Per ASTM F593-95
Tensile Strength = 85,000 psi, average.

Dimensional Data

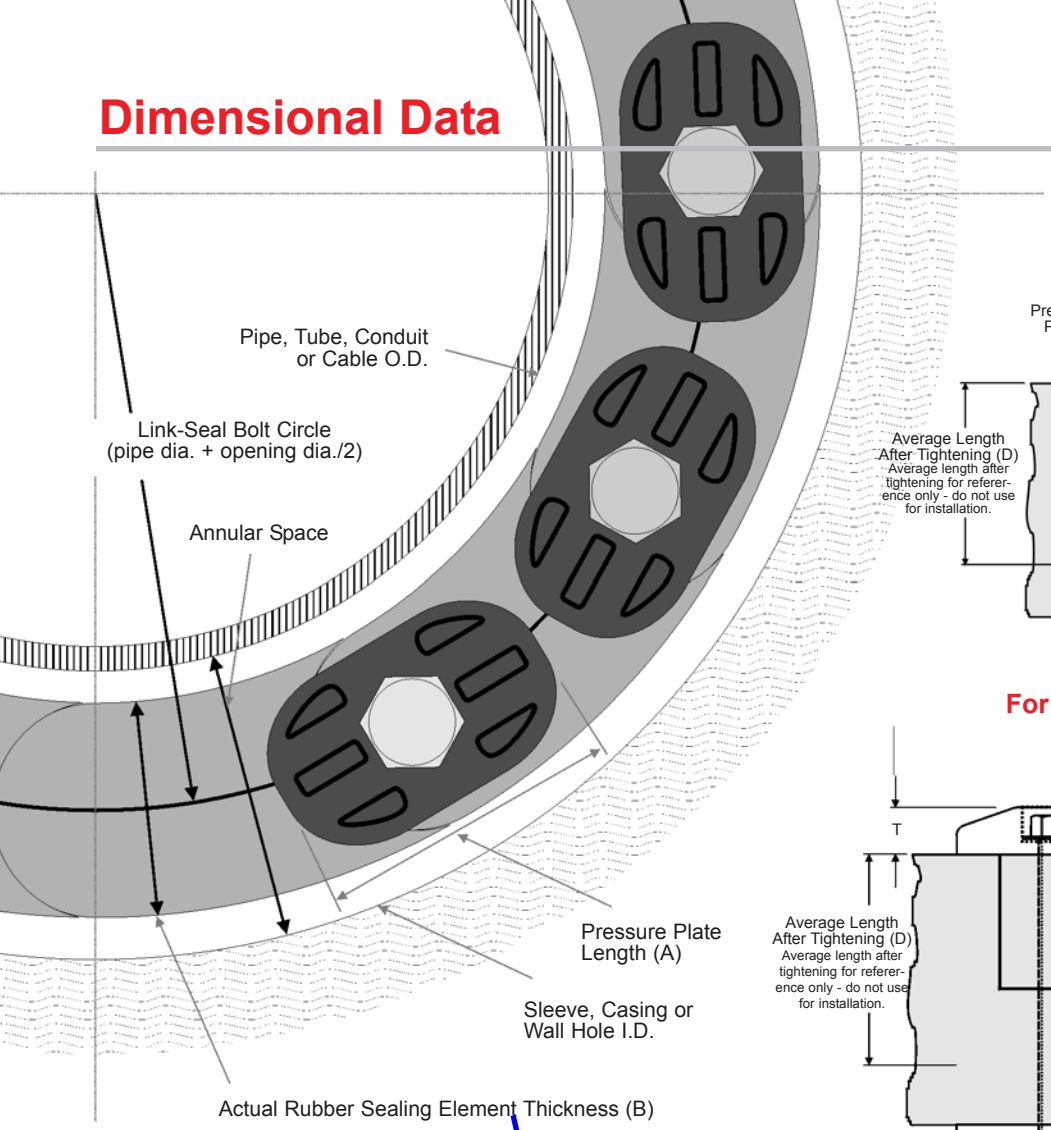

For LS-200 through LS-315

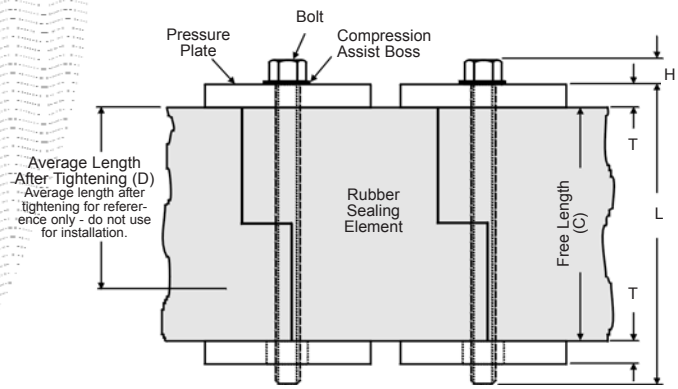

For LS-325 through LS-600

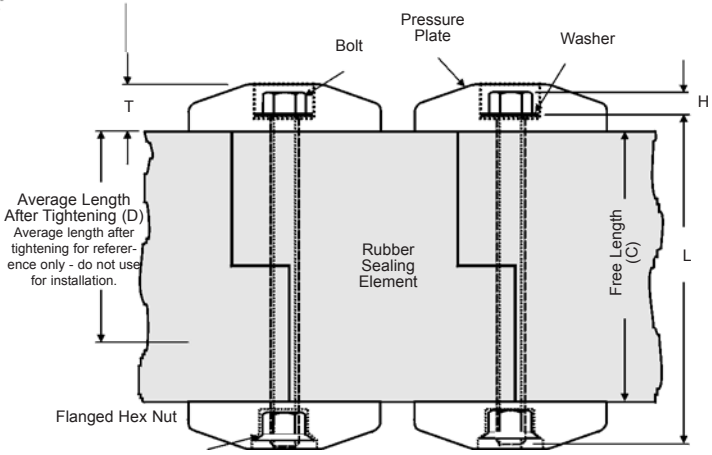

Dimensional Data for Models C, L, O, S-316 and OS-316 (Dimensions in inches except as noted)

	RUBBER SEALING ELEMENT			PRESSURE PLATE		BOLT				WEIGHT FOR 10 LINK SECTION (LBS)	MIN. REQUIRED SEATING WIDTH
LINK-SEAL MODEL NO.	ACTUAL THICKNESS (B)	FREE LENGTH (C)	AVG. LENGTH AFTER TIGHTENING (D)	(A)	(T)	HEX ACROSS FLATS	(H)	THREAD SIZE	(L)		
LS-200-C	0.48	1.75	1.38	1.06	0.31	M5 (slotted hex)	0.18	M5	2.50	0.75	2.25
LS-275-C	0.61	1.75	1.38	0.90	0.31	M5 (slotted hex)	0.18	M5	2.50	0.85	2.25
LS-300-C	0.69	2.37	1.87	1.50	0.44	0.50	0.22	5/16-18	3.50	2.10	3.00
LS-315-C	0.81	2.37	1.87	1.44	0.44	0.50	0.22	5/16-18	3.50	3.00	3.00
LS-325-C	0.88	2.63	2.00	3.13	1.00	0.50	0.22	5/16-18	4.50	5.50	4.00
LS-340-C	1.00	2.70	2.25	1.52	0.67	0.50	0.22	5/16-18	4.50	3.40	4.00
LS-360-C	1.24	2.70	2.25	2.05	0.77	0.50	0.22	5/16-18	4.50	5.00	4.00
LS-400-C	1.38	3.50	2.75	3.50	1.06	0.56	0.25	3/8-16	5.00	12.00	5.00
LS-410-C	1.43	3.37	2.87	2.52	0.88	0.56	0.25	3/8-16	5.00	8.20	5.00
LS-425-C	1.06	3.00	2.25	3.50	1.19	0.56	0.25	3/8-16	5.00	10.00	5.00
LS-475-C	1.56	3.38	2.63	2.63	0.88	0.56	0.25	3/8-16	5.00	10.00	5.00
LS-500-C	2.25	3.75	2.75	3.63	1.06	0.75	0.34	1/2-13	5.50	22.50	5.00
LS-525-C	2.06	3.75	2.87	3.63	1.06	0.75	0.34	1/2-13	5.50	21.00	5.00
LS-575-C	1.81	3.75	3.00	3.00	1.00	0.75	0.34	1/2-13	5.50	15.50	5.00
LS-600-C	3.09	4.00	3.00	6.00	1.90	1.16	.50	M20X2.5	7.10	60.60	6.00
LS-650-C	2.71	3.98	3.00	3.96	1.19	.75	.31	M12X1.75	6.88	26.10	6.00

Installation Techniques - Link-Seal® Modular Seals

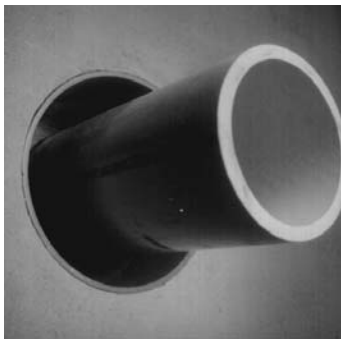

1. Center the pipe, cable or conduit in wall opening or casing. Make sure the pipe will be adequately supported on both ends. Link-Seal® modular seals are not intended to support the weight of the pipe.

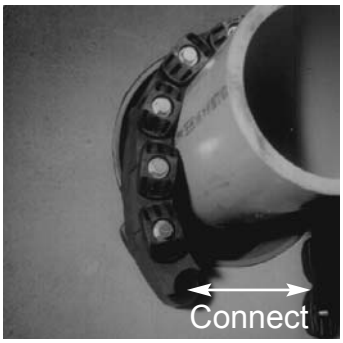

2. Loosen rear pressure plate with nut just enough so links move freely. Connect both ends of belt around the pipe.

3. Check to be sure all bolt heads are facing the installer. Extra slack or sag is normal. Do not remove links if extra slack exists. **Note:** On smaller diameter pipe, links may need to be stretched.

4. Slide belt assembly into annular space. For larger size belts, start inserting Link-Seal modular seal assembly at the 6 O'Clock position and work both sides up toward the 12 O'Clock position in the annular space.

5. Using a hand socket or offset wrench ONLY, start at 12 O' Clock. Do not tighten any bolt more than 4 turns at a time. Continue in a clockwise manner until links have been uniformly compressed. (Approx. 2 or 3 rotations)

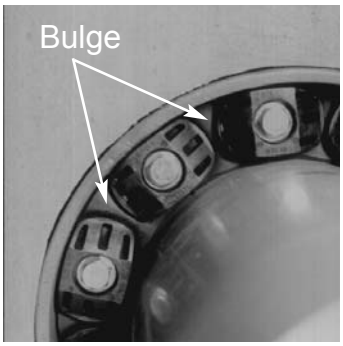

6. Make 2 or 3 more passes at 4 turns per bolt MAXIMUM, tightening all bolts clockwise until all sealing elements **"bulge"** around all pressure plates. On type 316 stainless steel bolts, hand tighten ONLY without power tool.

7. If the seal doesn't appear to be correct using the instructions provided, **Call PSI at 800-423-2410.**

Installation Notes: The Link-Seal® modular seal bolt heads are usually recessed below the wall opening or the edge of casing pipe and therefore a socket or offset wrench must be used.
Hand Tools: Use 5/16" hex or #6 screwdriver for LS-200. 1/2" hex requires 3/8" drive socket wrench. 9/16" and 3/4" hex requires 1/2" drive socket wrench. (Tools not provided.)

Always Wear Safety Equipment When Installing Link-Seal® modular seals!

Always Wear Safety Equipment When Using Link-Seal® Modular Seals!

Link-Seal® Modular Seal - Do's

1. Make sure pipe is centered.
2. Install the belt with the pressure plates evenly spaced.
3. Install the exact number of links indicated in sizing charts.
4. Check to make sure pipe is supported properly during backfill operations. Note: Link-Seal modular seals are not intended to support the weight of the pipe.
5. Make sure seal assembly and pipe surfaces are free from dirt.
6. For tight fits, use non-polluting liquid detergent to assist installation.

Link-Seal® Modular Seal - Don'ts

1. Don't Install the belt with the pressure plates aimed in irregular directions. (Staggered)
2. Don't Install Link-Seal® modular seals where weld-beads or other irregular surfaces exist without consideration of the sealing requirements.
3. Don't torque each bolt completely before moving on to the next.
4. Don't use high speed power tools (450 rpm or more)
5. Do not use power tools on Link-Seal modular seal 316 stainless steel bolts.
6. Don't use grease installing Link-Seal modular seals.

If the seal doesn't appear to be correct using the techniques provided, **Call PSI at 713-747-6948 or 800-423-2410.**

Typical Specification

1.0 General

Under this section there shall be furnished and installed a complete Link-Seal® modular seal assembly, manufactured by PSI-Thunderline/Link-Seal® located at 6525 Goforth Street, Houston, TX 77021, as shown on drawings and specifications. For clarification, complete assembly is defined as a combined:

A. Wall opening (i.e. steel sleeve, Thermoplastic (HDPE) sleeve, cored hole or formed hole). The wall opening size and/or type shall be selected according to information found in the most recent Link-Seal® modular seal catalog.

B. Sufficient quantity and type of Link-Seal® modular seals required to effectively provide a hydrostatic and/or fire-rated seal.

C. Each individual link shall be conspicuously and permanently identified with the name of the manufacturer and model number. Manufacturers other than the above-named company wishing to quote equipment in this section shall submit detail drawings of their proposed equipment and suitable evidence of a minimum of 25 years of experience and results to the engineer to obtain written approval to quote at least ten (10) days prior to bid opening.

2.0 Link-Seal® Modular Seal Rubber Links

Shall be modular, mechanical type, consisting of inter-locking synthetic rubber links shaped to continuously fill the annular space between the pipe and the wall opening. The elastomeric element shall be sized and selected per manufacturer's sizing procedure and have the following properties as designated by ASTM. Coloration shall be throughout elastomer for positive field inspection. Each link shall have a permanent identification of the size and manufacturer's name molded into it.

A. For Standard Service Applications = Model C
-40 to +250ºF (-40 to +121ºC)
EPDM = ATSM D2000 M3 BA510
Color = Black

B. For Thin Walled Pipe Applications = Model L
-40 to +250ºF (-40 to +121ºC)
EPDM = ATSM D2000 M3 BA510
Color = Blue

C. For Hydrocarbon Service Applications = Model O
-40 to +210ºF (-40 to +99ºC)
Nitrile = ASTM D2000 M1BF510
Color = Green

D. For High Temperature or Fire Seal Applications = Model T
-67 to +400ºF (-55 to +204ºC)
Silicone = ASTM D2000 M1GE505
Color = Gray
Reference shall always be made to the latest published Link-Seal® modular seal selection guide for the service intended.

2.1 Link-Seal® Modular Seal Pressure Plates

A. Link-Seal® modular seal pressure plates shall be molded of glass reinforced Nylon Polymer with the following properties:

Izod Impact - Notched =	2.05ft-lb/in. per ASTM D-256
Flexural Strength @ Yield =	30,750 psi per ASTM D-790
Flexural Modulus =	1,124,000 psi per ASTM D-790
Elongation Break =	11.07% per ASTM D-638
Specific Gravity =	1.38 per ASTM D-792

B. Models LS200-275-300-315 shall incorporate the most current Link-Seal® Modular Seal design modifications and shall include an integrally molded compression assist boss on the top (bolt entry side) of the pressure plate, which permits increased compressive loading of the rubber sealing element. Models 315-325-340-360-400-410-425-475-500-525-575-600 shall incorporate an integral recess known as a "Hex Nut Interlock" designed to accommodate commercially available fasteners to insure proper thread engagement for the class and service of metal hardware. All pressure plates shall have a permanent identification of the manufacturer's name molded into it.

C. For fire and Hi-Temp service, pressure plates shall be steel with 2-part Zinc Dichromate Coating.

2.2 Link-Seal® Modular Seal Hardware

All fasteners shall be sized according to latest Link-Seal® modular seal technical data. Bolts, flange hex nuts shall be either:

A. Mild Steel with a 60,000 psi minimum tensile strength and 2-part Zinc Dichromate coating per ASTM B-633 and Organic Coating, tested in accordance with ASTM B-117 to pass a 1,470 hour salt spray test.

B. 316 Stainless Steel per ASTM F593-95, with a 85,000 psi average tensile strength.

3.0 Wall Opening

A. Century-Line® Sleeves - for openings to 24.81" diameter.
Where pipes must pass through walls and floors of new structures, unless otherwise shown or specified, install molded non-metallic high density polyethylene Model CS Century-Line® sleeves as manufactured by PSI-Thunderline/Link-Seal®. Model CS sleeves shall have integrally formed hollow water stop sized having a minimum of four inches larger than the outside diameter of the sleeve itself and allowing 1/2" movement between wall forms to resist pour forces. Each sleeve assembly shall have end caps manufactured of the same material as the sleeve itself and installed at each end of the sleeve so as to prevent deformation during the initial concrete pour, and to facilitate attaching the sleeve to the wall forms. End caps shall remain in place to protect the opening from residual debris and rodent entry prior to pipe insertion.

B. Cell-Cast® Disks - for openings from 29.25" to 64.74" diameter.
The contractor shall install Cell-Cast® disks, providing a round hole in conformance with Link-Seal® modular seal sizing data. Cell-Cast® disks shall consist of 3" and/or 4" lightweight interlocking polyethylene cells stacked to form the thickness of the poured concrete wall. Molded into each cell shall be a cavity to accept a 2" x 4" nailer.

4.0 Quality Assurance

Link-Seal® Modular Seal components and systems shall be domestically manufactured at a plant with a current ISO-9001:2000 registration. Copy of ISO-9001:2000 registrations shall be a submittal item.

NOTE: Link-Seal Modular Seals are specifically designed as hydrostatic and/or fire rated seals and are not considered to be pipe supports. When appropriate, Link-Seal Modular Seals should be used with proper pipe supports on both ends.

Frequently Asked Questions

1) Q - Can Link-Seal® modular seals be used with pipe types not listed in the standard published charts?
A - Yes, The best way to permanently seal any cylindrical object, of any size, passing through any type of concrete barrier is to use Link-Seal® modular seals. From ductle iron to pre-stressed concrete to metal or plastic pipe, conduit or cables - whatever your application - Link-Seal® modular seals will effect a hydrostatic seal capable of holding 20 psig (40 feet of static head) between the pipe and the penetration cylinder through which the pipe passes.

2) Q - How much angular pipe movement will Link-Seal® modular seals allow and still maintain a seal?
A - Link-Seal® modular seals may allow angular pipe movement or misalignment depending on the ratio of annular space of the penetration to the expanded range of the Link-Seal® model sized for the penetration. Please call PSI for more information.

3) Q - When is the recommended time to install Link-Seal® modular seals?
A - Always install Link-Seal® modular seals prior to any final connections. This helps prevent off-center pipe alignment.

4) Q - Is it necessary to use WS or CS sleeves when installing Link-Seal® modular seals?
A - WS model steel and CS model HDPE sleeves are specially designed for use with Link-Seal® modular seals. When installed with Link-Seal® modular seals these sleeves provide the best possible assurance of a quality wall penetration system.

5) Q - What tools are required to install Link-Seal® modular seals?
A - A socket or offset wrench with 5/16", 1/2", 3/8", 9/16", 3/4" & 1-3/16" sockets will handle all installations. A low speed (450 RPM or less) power tool is suggested for multiple installations to increase efficiency.

6) Q - Can I use power tools when installing Link-Seal modular seals with 316 stainless steel bolts?
A - No, please refer to suggested installation techniques.

7) Q - Sometimes when installing a Link-Seal® modular seal belt, it hangs loose on the pipe even though all my sizing calculations are correct. Why does it appear that I have too many links?
A - Link-Seal® modular seals are basically sized to fit the annular space, not the pipe. Use the assemblies suggested by the charts or calculation. It may not look right, but it will fit.

8) Q - Can Link-Seal® modular seals be used for penetrations where the pipe is off-center to the opening?
A - Centering is very important. Contact PSI for more information.

9) Q - How do I install Link-Seal® modular seals over a weld-bead?
A - Weld-beads and all other irregularities on the pipe or opening should be addressed in accordance with the manufacturer's and/or project engineer's suggestions to provide a round, smooth and clean surface for Link-Seal® installation.

10) Q - My wall is 24" thick. Do I need Link-Seal® modular seals on both sides of the wall?
A - In many cases, one single Link-Seal® modular seal assembly is appropriate. Double seals are typically found in critical applications such as fire walls or nuclear power stations. Double seals are also suggested for building foundation wall penetrations where the wall thickness is greater than 12".

11) Q- Can Link-Seal modular seals be used with manhole vault installed thimbles, not sleeves?
A- No, only if the area creates a penetration cylinder, such that the axis of the cylinder is parrallel to the axis of the pipe going through it.

12) Q- Can lubricant be used to install Link-Seal® modular seals?
A- Yes, any non-polluting liquid detergent is preferred over a grease. If you need to use grease or another lubricant, please contact PSI.

13) Should you grout over Link-Seal® modular seals?
A- Link-Seal modular seals do not require any assistance to create a water tight seal, if they are installed per our published installation techniques. Any material placed between the seal and the ID of the penetration is not recommended. However, if grout is needed for appearance purposes only, it's suggested that the links be installed far enough into the penetration to accommodate a layer of "bubble wrap". If the pipe needs future maintenance the grout can be removed and access can be gained to the bolts of the Link-Seal modular seal.

14) What model Link-Seal® modular seals should be used for submerged sea water applications?
A- For submerged sea water applications use Model S-316 Link-Seal modular seals. See page 5 for material property information.

15) Why is it sometimes difficult to seal an insulated pipe with Link-Seal® modular seals?
A- Jacket thickness, or more importantly, its ability to maintain its diameter without deforming is key to success of the Link-Seal modular seal's ability to seal. If the jacket withstands the constricting force of the Link-Seal modular seal without cracking or deforming, Link-Seal modular seals are effective. If the jacket "gives", much like an aluminum can, the jacket will crack enabling water to go directly into the insulation and by pass the Link-Seal modular seal installation.

16) Q - Is it necessary to use riser clamps, pipe saddles and hanger supports with Link-Seal® modular seals?
A - Link-Seal® modular seals are penetration type seals. It is not intended to be a structural support. Standard pipe hanger practice should always be applied.

Updated engineering catalogs, literature, CAD Drawings, submittals and installation techniques are available on-line at: www.linkseal.com

DEPARTMENT OF THE ARMY
ALBUQUERQUE DISTRICT, CORPS OF ENGINEERS
ALBUQERQUE DISTRICT OFFICE
4101 JEFFERSON PLAZA NE
ALBUQUERQUE, NM 87109

SUBMITTAL REVIEW VERIFICATION SHEET

PROJECT TITLE: Kirtland BFF Mid-Plume Pump and Treat System Expansion
CONTRACT NUMBER: W912DR-12-D-0006 DM01
DATE RECEIVED: 08-04-2017
DATE REVIEWED: 08-07-2017

DESCRIPTION OF ITEMS REVIEWED:

1. 40 05 13-008 Leak Detection System

NO EXCEPTIONS TAKEN.	**X**
EXCEPTIONS AS NOTED ON DRAWINGS AND/OR ATTACHED SHEETS(S). RESUBMISSION NOT REQUIRED.	
EXCEPTIONS AS NOTED ON DRAWINGS AND/OR ATTACHED SHEETS(S). RESUBMISSION REQUIRED.	
RECEIPT ACKKNOWLEDGED.	

Notes:

NOTE: ITEMS REVIEWED AS TO GENERAL LAYOUT ONLY. DIMENSIONS AND QUANTITIES NOT CHECKED. REVIEW DOES NOT RELIEVE CONTRACTOR OF RESPONSIBILITIES FOR ANY ERRORS WHICH MAY EXIST AS CONTRACTOR SHALL BE RESPONSIBLE FOR DIMENSIONS AND DESIGN OF ADEQUATE CORRECTIONS, DETAILS AND SATISFACTORY CONSTRUCTION OF WORK.

SIGNATURE SANCHEZ.AMY.ELIZABETH.1454434338 Digitally signed by SANCHEZ.AMY.ELIZABETH.1454434338 DN: c=US, o=U.S. Government, ou=DoD, ou=PKI, ou=USA, cn=SANCHEZ.AMY.ELIZABETH.1454434338 Date: 2017.08.07 10:16:26 -06'00' **DATE** 8/7/2017

EA Engineering, Science, and Technology, Inc., PBC

Submittal Review Sheet 1

Project Name: **Kirtland BFF Mid-Plume Pump and Treat System Expansion**			Date Received: **8/1/17**	
Project Owner: **Kirtland Air Force Base**			Checked By: **Tyler Curley**	
Contractor: **RMCI, Inc.**	Engineer: **EA Engineering, Science and Technology, Inc., PBC.**		Log Page: **NA**	
Address: **6211 Chappell Rd NE, Albuquerque, NM 87113**	Address: **320 Gold Ave. SW, Suite 1300 Albuquerque, NM 87102**		EA No.: 62599DM01	
			Spec. Section: **2.4.4.5**	
			Drawing/Detail No.:	
ATTN: Phillip Johnson	ATTN: **Devon Jercinovic**		1st Sub	Re-Sub
Date Transmitted: **08/01/2017**	Prev. Transmittal Date:			

Item No.	No. Copies	Description	Manufacturer	Mfg/Vendor Dwg or Detail	Action Taken*
1	1	Leak Detection	PermAlert		A

The Action Designated Above is in Accordance with the Following Legend:

A – Furnish as Submitted
B – Furnish as Noted
C – Revise and Re-submit
1. Not enough information for review.
2. No reproducible submitted.
3. Copies illegible.
4. Not enough copies submitted.
5. Wrong sequence number.
6. Wrong resubmittal number.
7. Wrong Spec. Section.
8. Wrong form used.
9. See Comments.

D – Rejected
E – Engineer's Review not Required
1. Submittal not required.
2. Supplemental Information. Submittal retained for Information purposes only.
3. Information reviewed and approved on prior submittal.
4. See Comments.

Review is for general compliance with Contract Documents. No responsibility is assumed for correctness of dimensions or detail. Contractor is required to specify deviations from contract requirements. Lack of exceptions noted by Engineer does not waive Contractor's obligation to comply with Drawings and Specifications.

Comments:
Items reviewed and confirmed to meet requirements
Issues in Bold

Leak detection consists on suitable material and will allow pin-pointing of any leaks should they occur. Consists of a continuous sensing cable instead of individual probes.

By: _____ Date: 8/4/17

Distribution: [1] Contractor [1] Engineer [1] Owner

Yellow highlighted spot indicates approximate location of access tees.

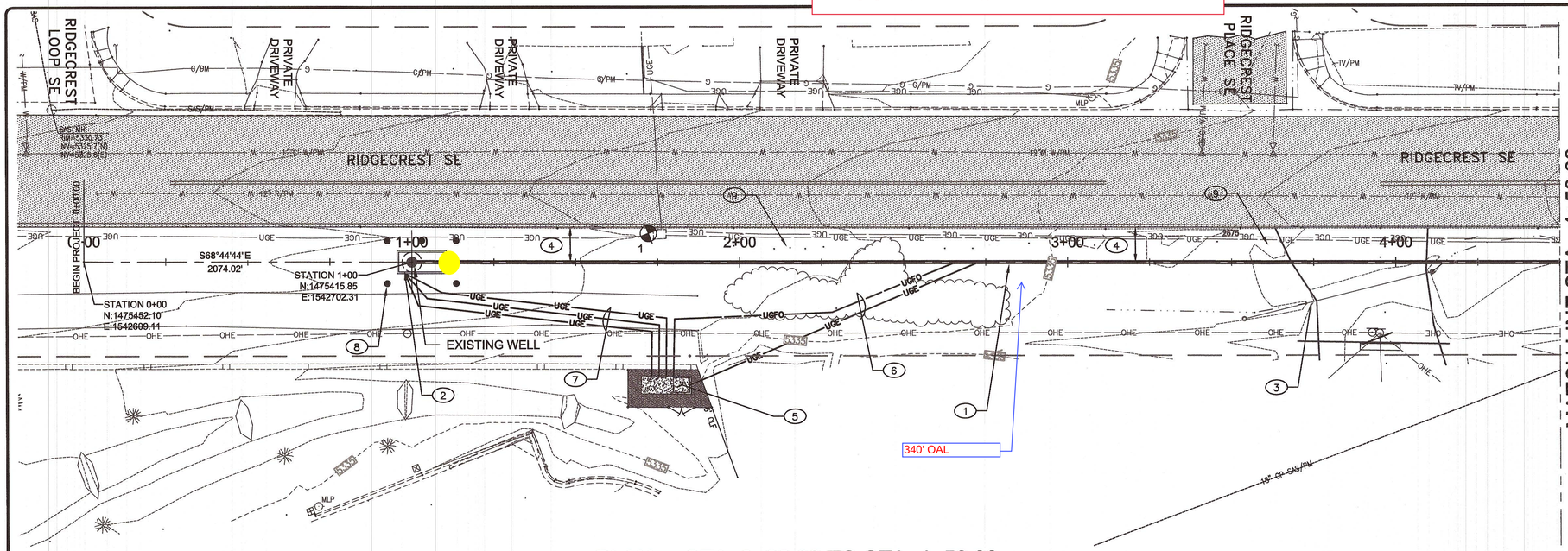

PLAN - STA: 0+00.00 TO STA: 4+50.00

SCALE: 1" = 20'

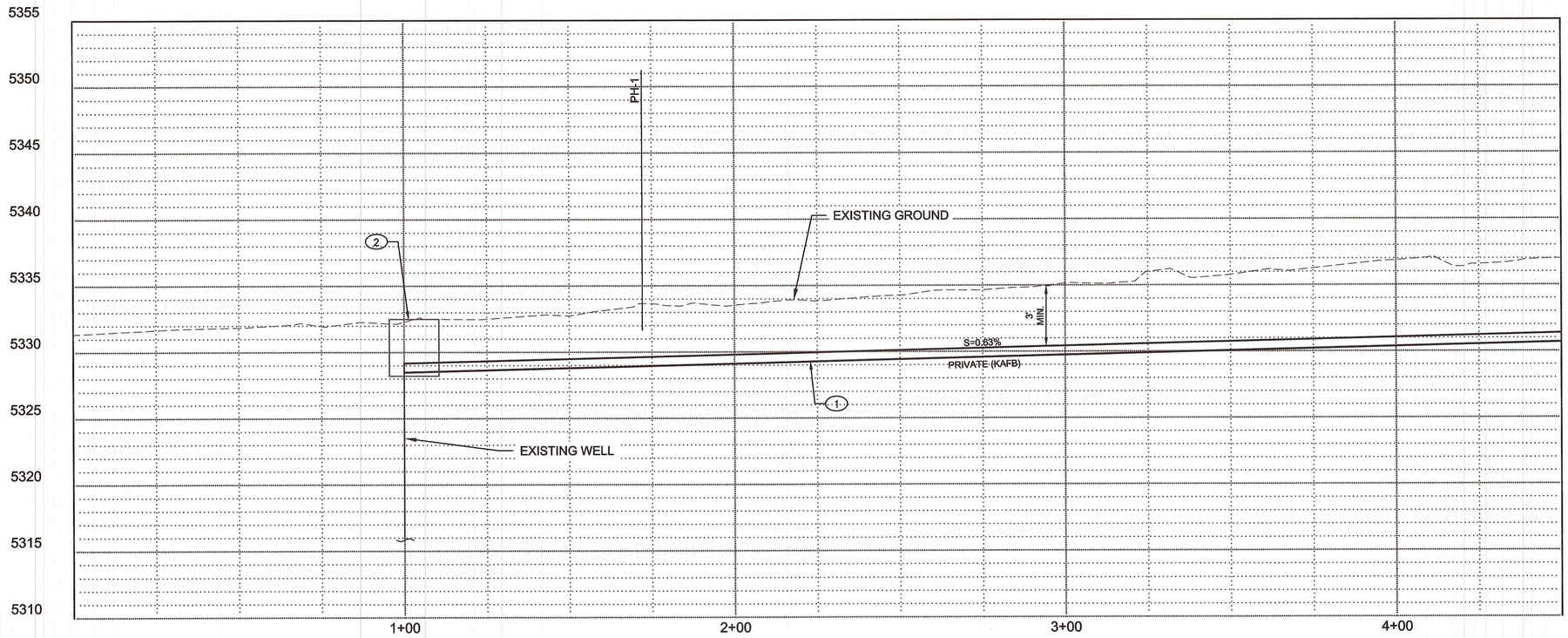

PROFILE - STA: 0+00.00 TO STA: 4+50.00

GENERAL NOTES:

1. MAINTAIN A MINIMUM OF 3 FEET OF SOIL COVER OVER INSTALLED 4"x8" DOUBLE WALL PIPE.
2. PROVIDE A MINIMUM OF 18" OF VERTICAL SEPARATION WHEN CROSSING OVER OR UNDER EXISTING UTILITIES.

KEYED NOTES:

1. NEW PRIVATE 4"x8" HDPE PIPELINE. SEE C-301, DETAIL 2 FOR TYP. TRENCH SECTION
2. NEW REINFORCED PRECAST CONCRETE WELL VAULT W/ - 5 GUARD POSTS. SEE C-302 DETAIL 1 FOR VAULT DETAIL.
3. REMOVE AND SALVAGE EXIST. CULVERT PIPE. RESET TO EXISTING ELEVATION AFTER PIPELINE IS INSTALLED AND BACKFILLED.
4. INSTALL PIPELINE 10' OFF EXISTING EDGE OF PAVEMENT UNLESS OTHERWISE NOTED.
5. ELECTRICAL EQUIPMENT YARD. SEE C-401 FOR ENLARGED PLAN.
6. SEE C-301, DETAIL 5 FOR TRENCH SECTION.
7. SEE E-501, DETAIL 2 FOR TRENCH SECTION.
8. GUARD POST (TYP. OF 5) SEE C-301, DETAIL 4.
9. RESTORE EXISTING SWALE AFTER PIPELINE INSTALLATION IS COMPLETE. SEED SWALE AND ALL GROUND DISTURBED BY CONSTRUCTION WITH COA STANDARD SPEC. (1012) NATIVE GRASS SEED MIX AND PROCEDURES.

HORIZONTAL
SCALE: 1" = 20'
VERTICAL
SCALE: 1" = 5'

20' 0 20' 40' 60' HORIZ.
5' 0 5' 10' 15' VERT.

POTHOLE TABLE

NO.	DESCRIPTION	DEPTH
1	2" DIA. ELEC.	25"

COA PROJECT NO: 586082

Design Review Committee	City Engineer Approval	Last Design Update	No. / Day / Yr.	No. / Day / Yr.

GEORGE NEMETH NEW MEXICO 12284 REGISTERED PROFESSIONAL ENGINEER
5-3-17

NO.	REVISION DESCRIPTION	DATE	BY
5			
4			
3			
2			
1			

Name
Location

KIRTLAND AIR FORCE BASE
BULK FUELS FACILITY
KAFB - 106239 CONVEYANCE LINE
CONVEYANCE LINE INSTALLATION
STA: 0+00 TO STA: 4+50

SMITH ENGINEERING COMPANY
2201 SAN PEDRO NE BLDG 4, SUITE 200
ALBUQUERQUE, NM 87110

JOB NO: 116112
DATE: MAY 3, 2017
SHEET NO: C-201 / 12 OF 27

G:\SEC-----PROJECTS\116112 KAFB Groundwater Reclam Pipeline\ENGINEERING\CADD\PLANSET\C-201- Plan and Profile.dwg May 03, 2017 - 9:22am Saved By: jamiev

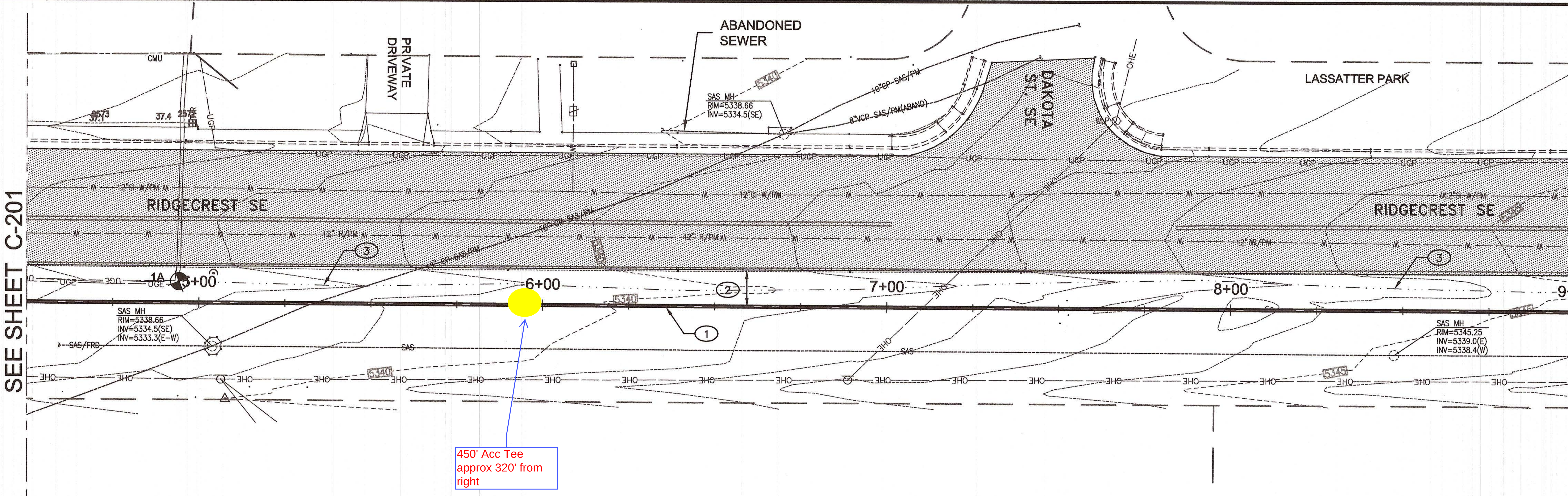

PLAN - STA: 4+50.00 TO STA: 9+00.00

SCALE: 1" = 20'

HORIZONTAL SCALE: 1" = 20'
VERTICAL SCALE: 1" = 5'

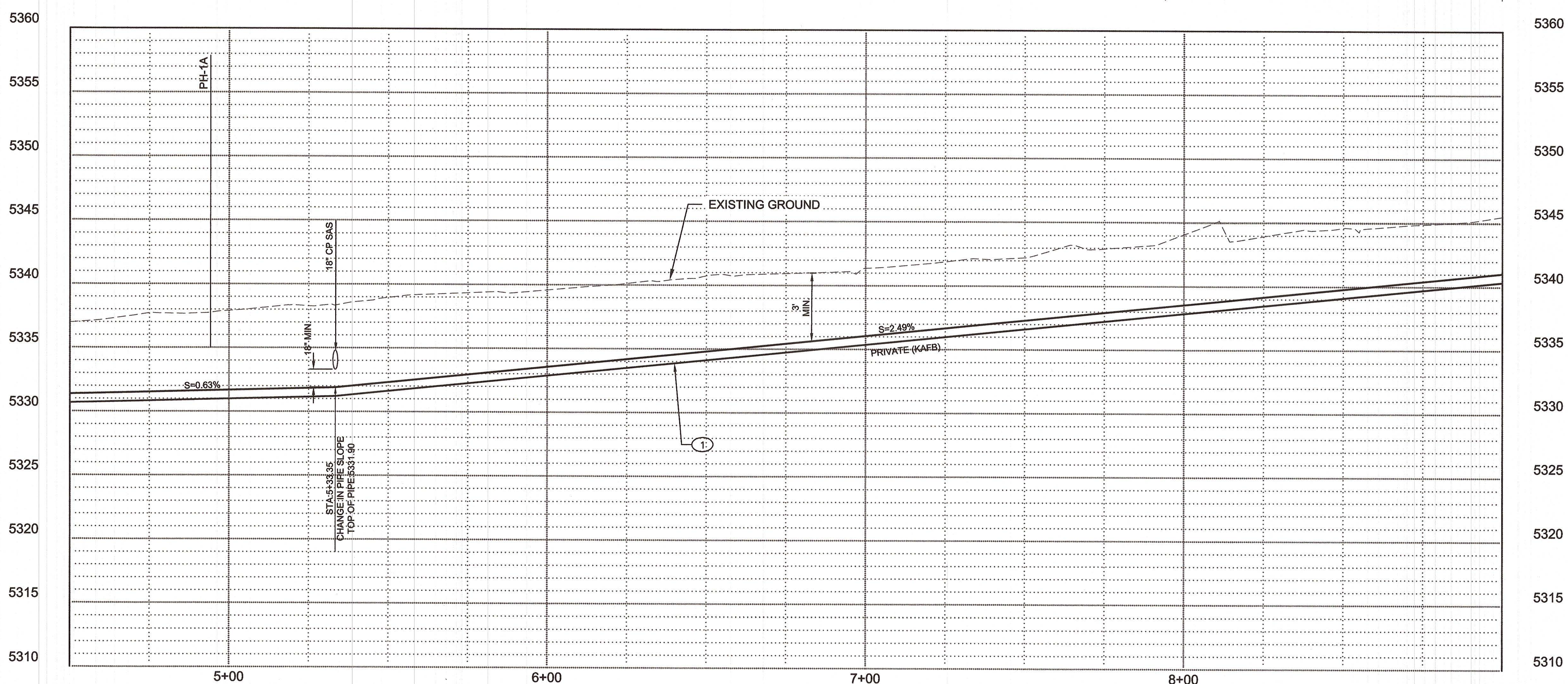

PROFILE - STA: 4+50.00 TO STA: 9+00.00

GENERAL NOTES:

1. MAINTAIN A MINIMUM OF 3 FEET OF SOIL COVER OVER INSTALLED 4"x8" DOUBLE WALL PIPE.
2. PROVIDE A MINIMUM OF 18" OF VERTICAL SEPARATION WHEN CROSSING OVER OR UNDER EXISTING UTILITIES.

KEYED NOTES:

1. NEW PRIVATE 4"x8" HDPE PIPELINE. SEE C-301, DETAIL 2 FOR TYP. TRENCH SECTION.
2. INSTALL PIPELINE 10' OFF EXISTING EDGE OF PAVEMENT. UNLESS OTHERWISE NOTED.
3. RESTORE EXISTING SWALE AFTER PIPELINE INSTALLATION IS COMPLETE. SEED SWALE AND ALL GROUND DISTURBED BY CONSTRUCTION WITH COA STANDARD SPEC. (1012) NATIVE GRASS SEED MIX AND PROCEDURES.

POTHOLE TABLE

NO.	DESCRIPTION	DEPTH
1A	2- 1.5" DIA. ELEC.	33"

COA PROJECT NO: 586082

Design Review Committee	City Engineer Approval	No. / Day / Yr.	No. / Day / Yr.

Last Design Update

GEORGE NEMETH, NEW MEXICO, 12284, REGISTERED PROFESSIONAL ENGINEER, 5-3-17

NO.	REVISION DESCRIPTION	DATE	BY
1			
2			
3			
4			
5			

Name
Location

KIRTLAND AIR FORCE BASE
BULK FUELS FACILITY
KAFB - 106239 CONVEYANCE LINE

CONVEYANCE LINE INSTALLATION
STA: 4+50 TO STA: 9+00

SMITH ENGINEERING COMPANY
2201 SAN PEDRO NE BLDG 4, SUITE 200
ALBUQUERQUE, NM 87110

JOB NO: 116112
DATE: MAY 3, 2017
SHEET NO: C-202 / 13 OF 27

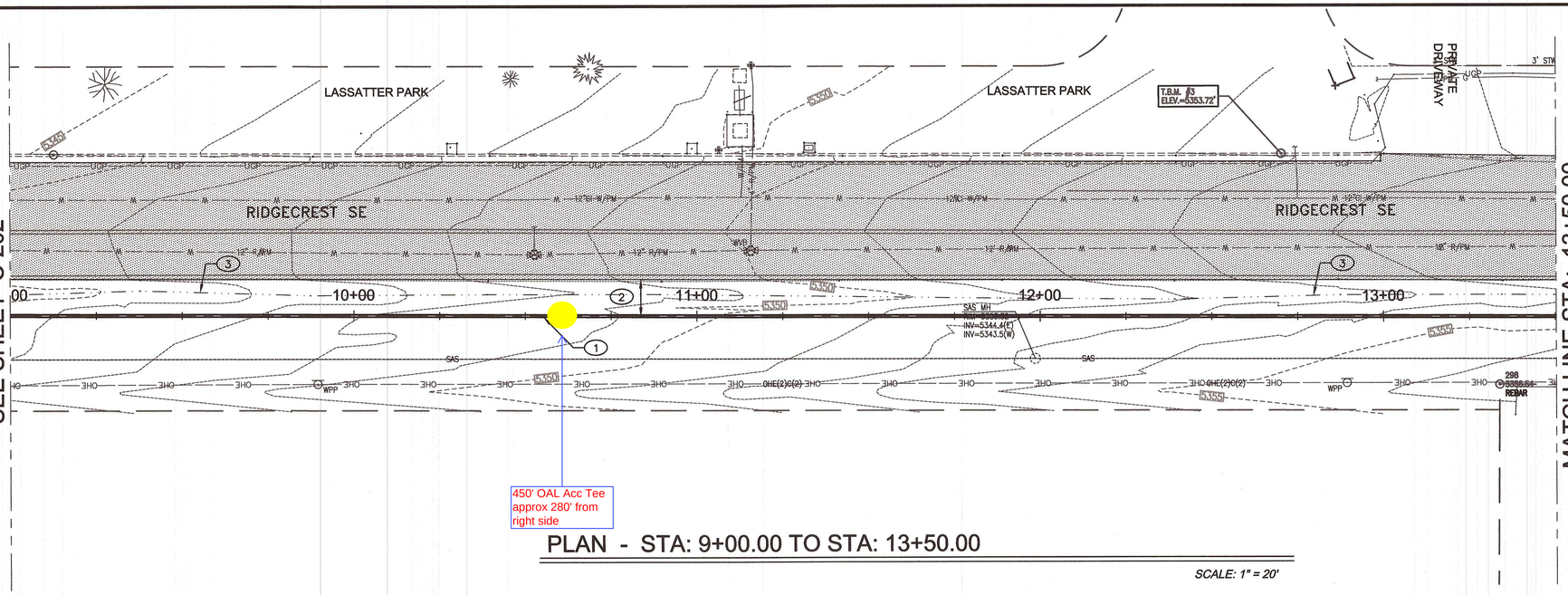

PLAN - STA: 9+00.00 TO STA: 13+50.00

SCALE: 1" = 20'

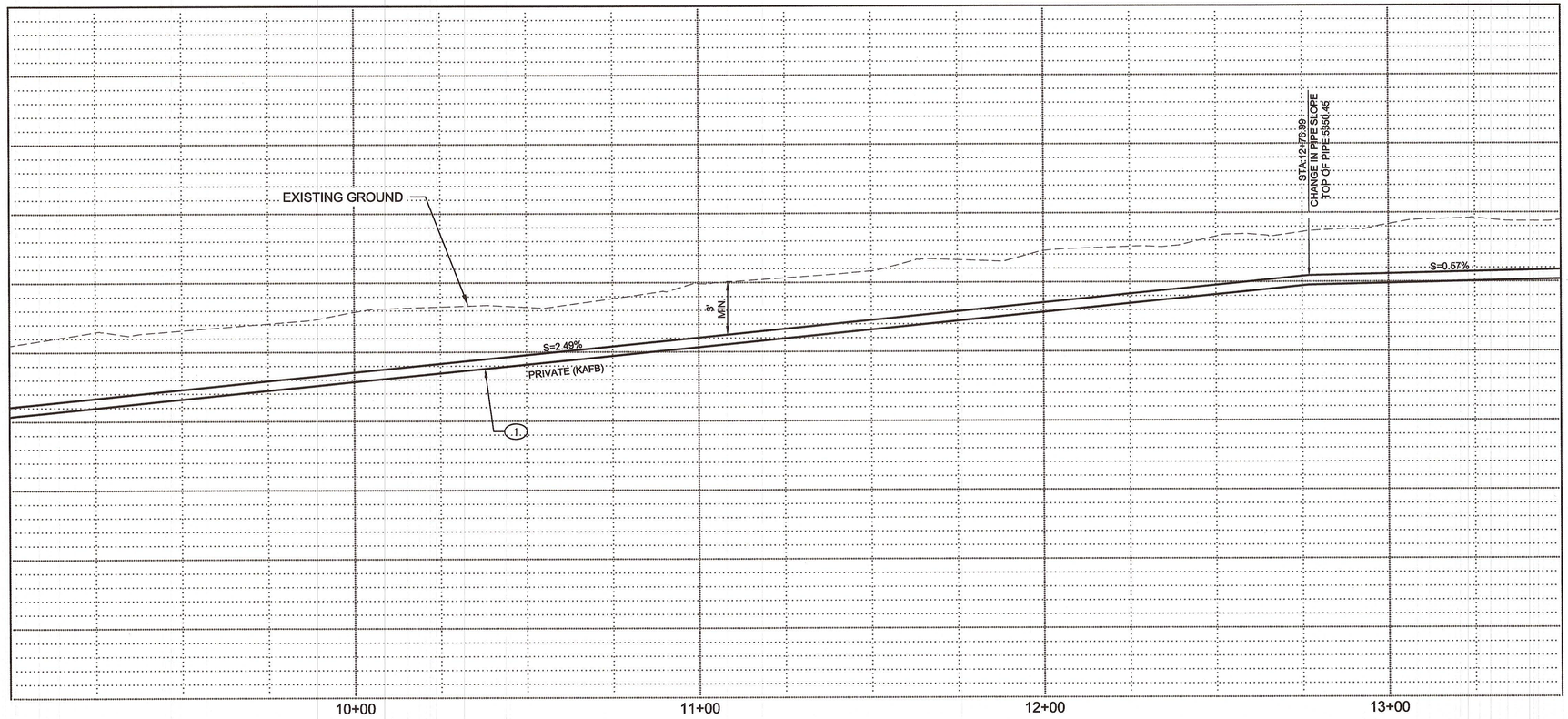

PROFILE - STA: 9+00.00 TO STA: 13+50.00

GENERAL NOTES:

1. MAINTAIN A MINIMUM OF 3 FEET OF SOIL COVER OVER INSTALLED 4"x8" DOUBLE WALL PIPE.
2. PROVIDE A MINIMUM OF 18" OF VERTICAL SEPARATION WHEN CROSSING OVER OR UNDER EXISTING UTILITIES.

KEYED NOTES:

(1) NEW PRIVATE 4"x8" HDPE PIPELINE. SEE C-301, DETAIL 2 FOR TYP. TRENCH SECTION.

(2) INSTALL PIPELINE 10' OFF EXISTING EDGE OF PAVEMENT. UNLESS OTHERWISE NOTED.

(3) RESTORE EXISTING SWALE AFTER PIPELINE INSTALLATION IS COMPLETE. SEED SWALE AND ALL GROUND DISTURBED BY CONSTRUCTION WITH COA STANDARD SPEC. (1012) NATIVE GRASS SEED MIX AND PROCEDURES.

HORIZONTAL
SCALE: 1" = 20'
VERTICAL
SCALE: 1" = 5'

20' 0 20' 40' 60' HORIZ.
5' 0 5' 10' 15' VERT.

GEORGE NEMETH
NEW MEXICO
12284
REGISTERED PROFESSIONAL ENGINEER
5-3-17

NO.	REVISION DESCRIPTION	DATE	BY
1			
2			
3			
4			
5			

Name
Location

KIRTLAND AIR FORCE BASE
BULK FUELS FACILITY
KAFB - 106239 CONVEYANCE LINE

CONVEYANCE LINE INSTALLATION
STA: 9+00 TO STA: 13+50

COA PROJECT NO: 586082

Design Review Committee	City Engineer Approval	Last Design Update	No. / Day / Yr.	No. / Day / Yr.

SMITH ENGINEERING COMPANY
2201 SAN PEDRO NE BLDG 4, SUITE 200
ALBUQUERQUE, NM 87110

JOB NO: 116112
DATE: MAY 3, 2017
SHEET NO: C-203 / 14 OF 27

Q:\SEC----PROJECTS\116112 KAFB Groundwater Reclam Pipeline\ENGINEERING\CADD\PLANSET\C-203--Plan and Profile.dwg May 03, 2017 - 9:31am Saved By: jerrep

MATCH LINE STA: 13+50.00
SEE SHEET C-203

MATCH LINE STA: 18+00.00
SEE SHEET C-205

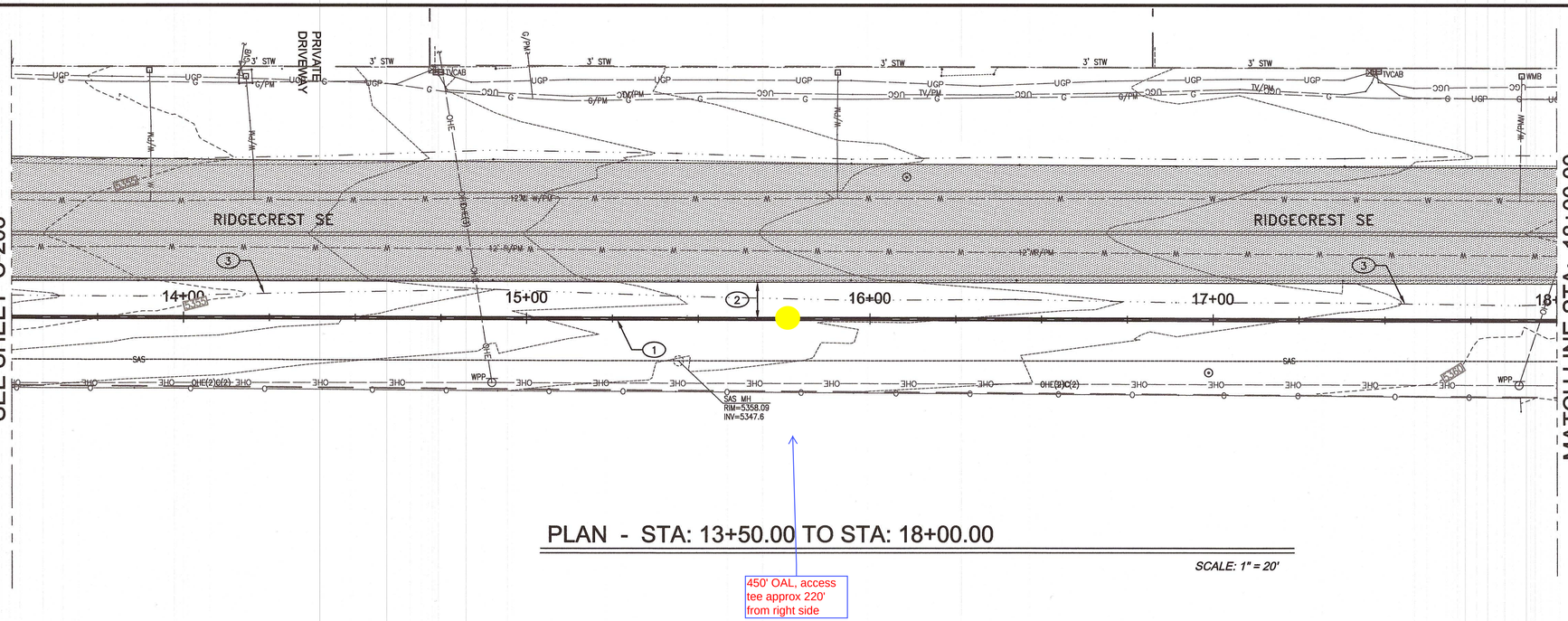

PLAN - STA: 13+50.00 TO STA: 18+00.00

SCALE: 1" = 20'

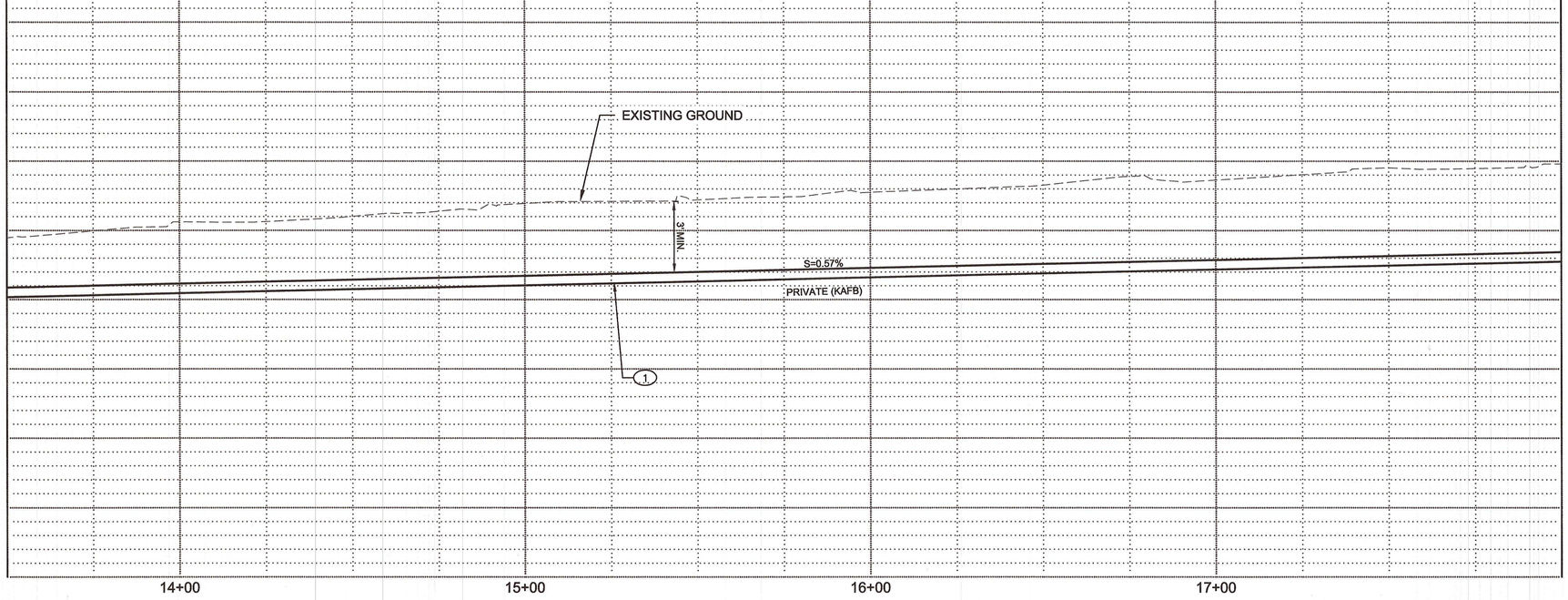

PROFILE - STA: 13+50.00 TO STA: 18+00.00

GENERAL NOTES:

1. MAINTAIN A MINIMUM OF 3 FEET OF SOIL COVER OVER INSTALLED 4"x8" DOUBLE WALL PIPE.
2. PROVIDE A MINIMUM OF 18" OF VERTICAL SEPARATION WHEN CROSSING OVER OR UNDER EXISTING UTILITIES.

KEYED NOTES:

(1) NEW PRIVATE 4"x8" HDPE PIPELINE. SEE C-301, DETAIL 2 FOR TYP. TRENCH SECTION.

(2) INSTALL PIPELINE 10' OFF EXISTING EDGE OF PAVEMENT. UNLESS OTHERWISE NOTED.

(3) RESTORE EXISTING SWALE AFTER PIPELINE INSTALLATION IS COMPLETE. SEED SWALE AND ALL GROUND DISTURBED BY CONSTRUCTION WITH COA STANDARD SPEC. (1012) NATIVE GRASS SEED MIX AND PROCEDURES.

HORIZONTAL
SCALE: 1" = 20'
VERTICAL
SCALE: 1" = 5'

20' 0 20' 40' 60' HORIZ.
5' 0 5' 10' 15' VERT.

COA PROJECT NO: 586082

Design Review Committee	City Engineer Approval	Last Design Update	No. / Day / Yr.	No. / Day / Yr.

GEORGE NEMETH
NEW MEXICO
12284
REGISTERED PROFESSIONAL ENGINEER
5-3-17

NO.	REVISION DESCRIPTION	DATE	BY
5			
4			
3			
2			
1			

Name
Location

KIRTLAND AIR FORCE BASE
BULK FUELS FACILITY
KAFB - 106239 CONVEYANCE LINE

CONVEYANCE LINE INSTALLATION
STA: 13+50 TO STA: 18+00

SMITH ENGINEERING COMPANY
2201 SAN PEDRO NE BLDG 4, SUITE 200
ALBUQUERQUE, NM 87110

JOB NO: 116112
DATE: MAY 3, 2017
SHEET NO: C-204 / 15 OF 27

Q:\SEC-----PROJECTS\116112 KAFB Groundwater Reclam Pipeline\ENGINEERING\CADD\PLANSET\C-204-plan and Profile.dwg May 03, 2017 - 9:35am Saved By: jerrep

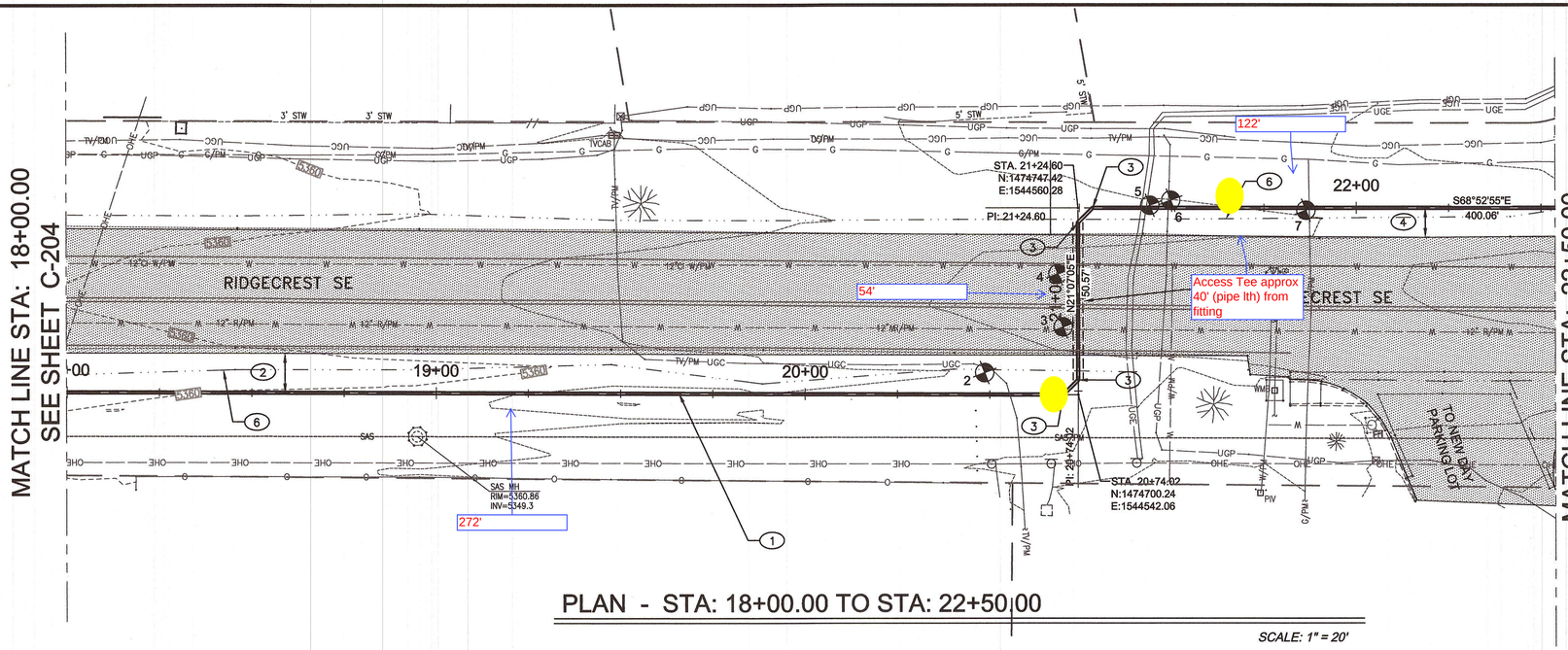

PLAN - STA: 18+00.00 TO STA: 22+50.00

SCALE: 1" = 20'

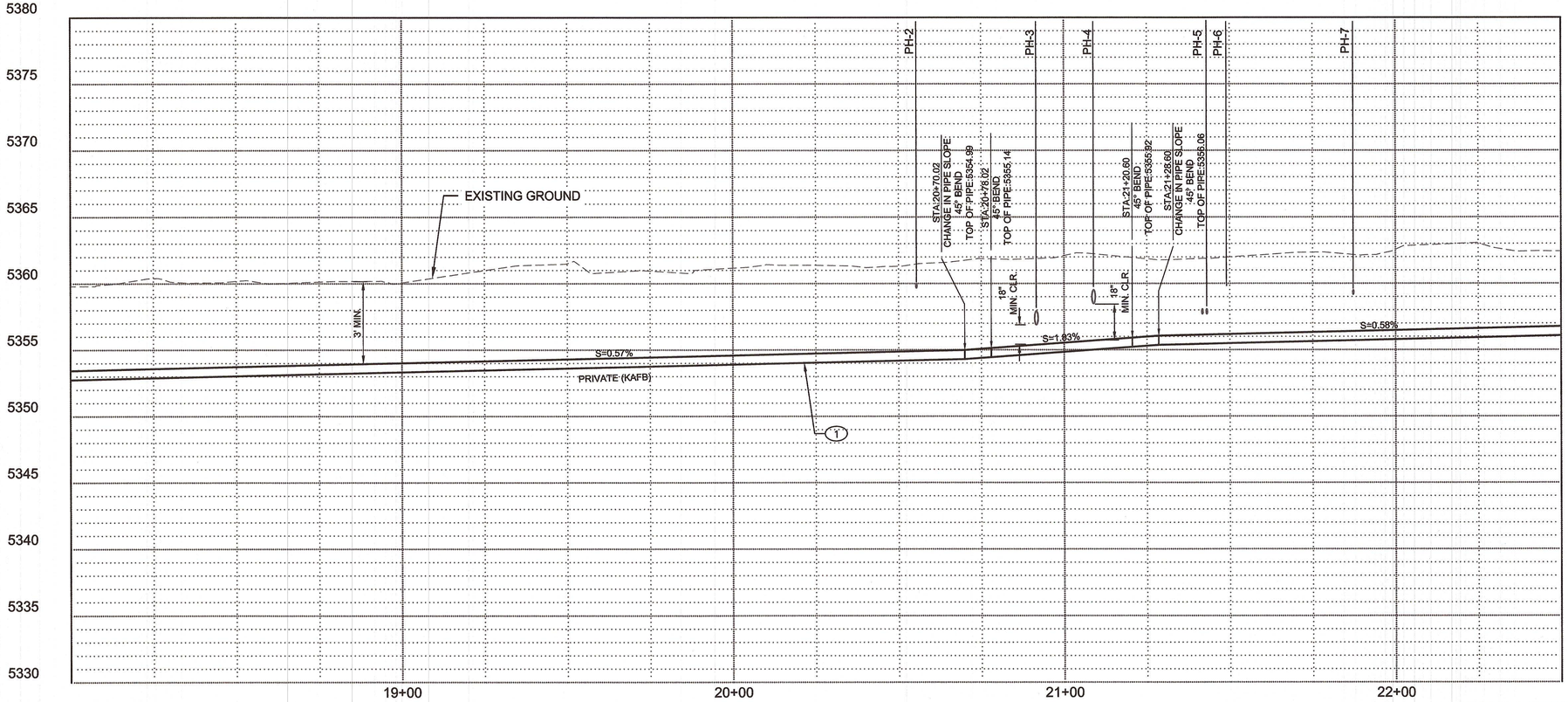

PROFILE - STA: 18+00.00 TO STA: 22+50.00

GENERAL NOTES:

1. MAINTAIN A MINIMUM OF 3 FEET OF SOIL COVER OVER INSTALLED 4"x8" DOUBLE WALL PIPE.
2. PROVIDE A MINIMUM OF 18" OF VERTICAL SEPARATION WHEN CROSSING OVER OR UNDER EXISTING UTILITIES.

KEYED NOTES:

1. NEW PRIVATE 4"x8" HDPE PIPELINE. SEE C-301, DETAIL 2 FOR TYP. TRENCH SECTION.
2. INSTALL PIPELINE 10' OFF EXISTING EDGE OF PAVEMENT. UNLESS OTHERWISE NOTED.
3. 45° BEND
4. INSTALL PIPELINE 8' OFF EXISTING EDGE OF PAVEMENT. UNLESS OTHERWISE NOTED.
5. HORIZONTAL DIRECTIONAL DRILL FROM STA. 20+74.02 TO STA. 21+24.60. EXISTING ASPHALT TO REMAIN UNDISTURBED.
6. RESTORE EXISTING SWALE AFTER PIPELINE INSTALLATION IS COMPLETE. SEED SWALE AND ALL GROUND DISTURBED BY CONSTRUCTION WITH COA STANDARD SPEC. (1012) NATIVE GRASS SEED MIX AND PROCEDURES.

HORIZONTAL
SCALE: 1" = 20'
VERTICAL
SCALE: 1" = 5'

20' 0 20' 40' 60' HORIZ.
5' 0 5' 10' 15' VERT.

POTHOLE TABLE

NO.	DESCRIPTION	DEPTH
2	1.5" DIA. HDPE CATV	17"
3	12" DIA. PVC WATER	50"
4	12" DIA. CI WATER	32"
5	1" DIA. ELEC	48"
6	1" DIA. TEL	28"
7	1.5" DIA. HDPE GAS	31"

COA PROJECT NO: 586082

GEORGE NEMETH NEW MEXICO 12284 REGISTERED PROFESSIONAL ENGINEER
5-3-17

NO.	REVISION DESCRIPTION	DATE	BY
5			
4			
3			
2			
1			

Name
Location

KIRTLAND AIR FORCE BASE
BULK FUELS FACILITY
KAFB - 106239 CONVEYANCE LINE

CONVEYANCE LINE INSTALLATION
STA: 18+00 TO STA: 22+50

Design Review Committee | City Engineer Approval | Last Design Update | No. / Day / Yr. | No. / Day / Yr.

SMITH ENGINEERING COMPANY
2201 SAN PEDRONE BLDG 4, SUITE 200
ALBUQUERQUE, NM 87110

JOB NO: 116112
DATE: MAY 3, 2017
SHEET NO: C-205 / 16 OF 27

Q:\SEC-----PROJECTS\116112 KAFB Groundwater Reclam Pipeline\ENGINEERING\CADD\PLANSET\C-205-Plan and Profile.dwg May 03, 2017 - 9:38am Saved By: jarriep

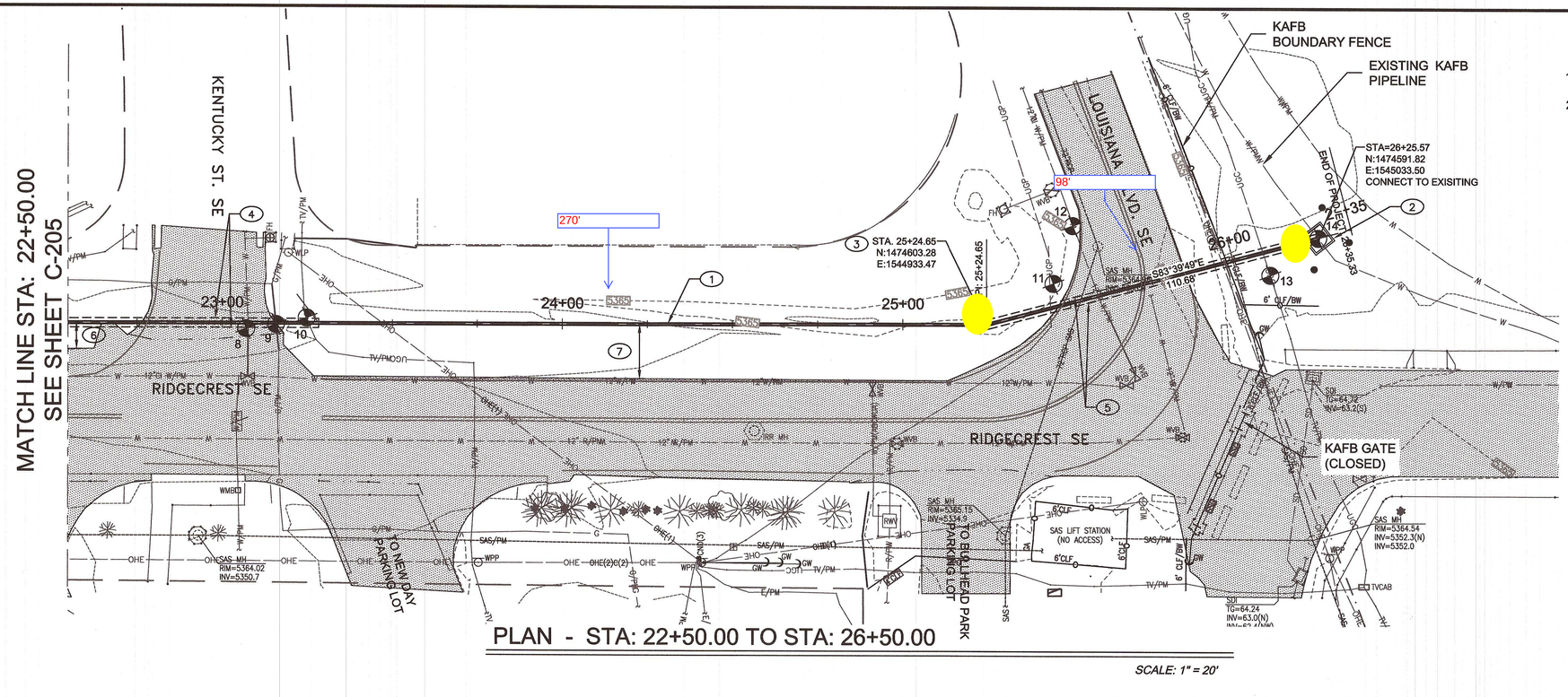

PLAN - STA: 22+50.00 TO STA: 26+50.00

SCALE: 1" = 20'

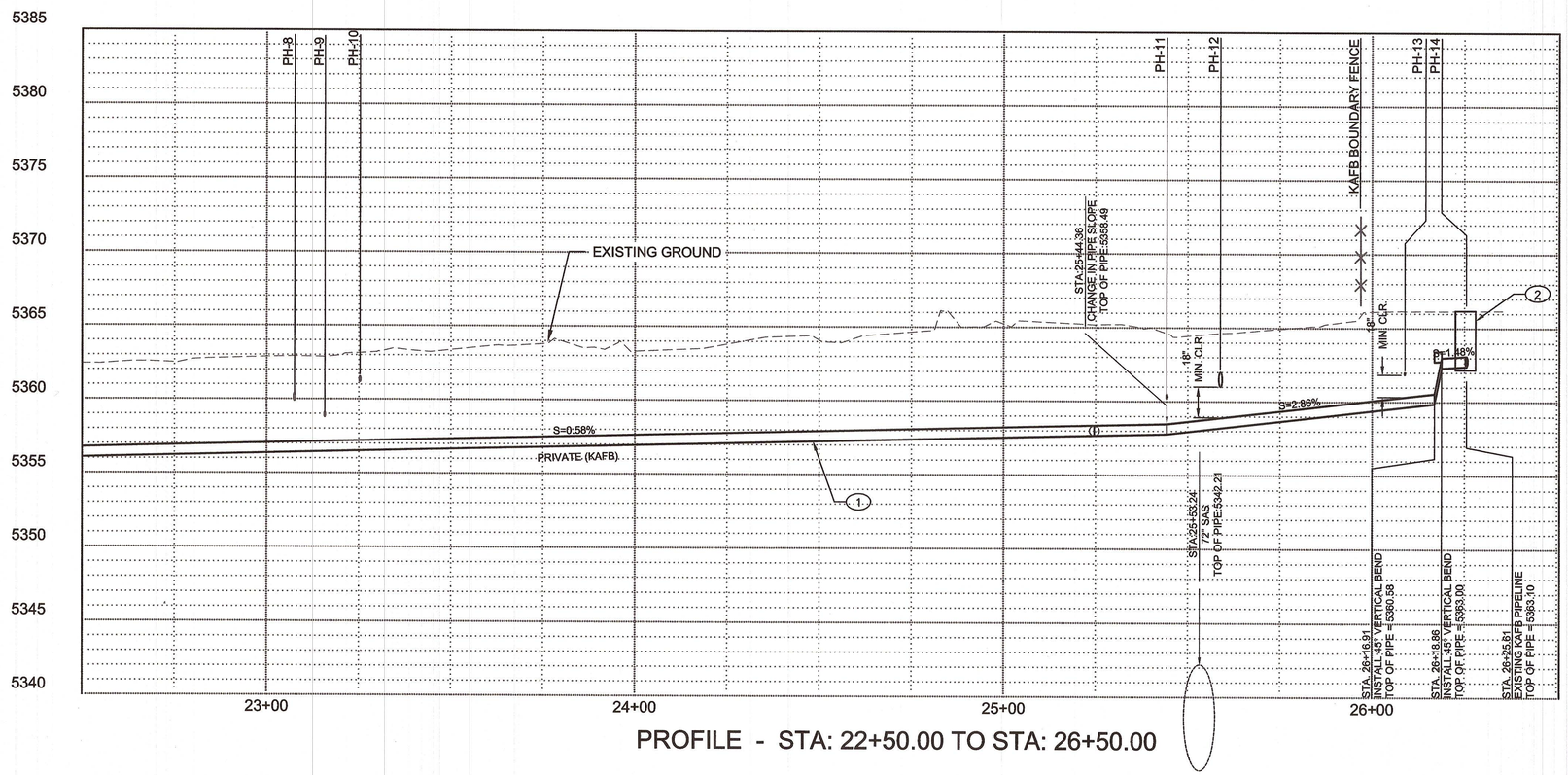

PROFILE - STA: 22+50.00 TO STA: 26+50.00

GENERAL NOTES:

1. MAINTAIN A MINIMUM OF 3 FEET OF SOIL COVER OVER INSTALLED 4"x8" DOUBLE WALL PIPE.
2. PROVIDE A MINIMUM OF 18" OF VERTICAL SEPARATION WHEN CROSSING OVER OR UNDER EXISTING UTILITIES.

KEYED NOTES:

1. NEW PRIVATE 4"x8" HDPE PIPELINE. SEE C-301, DETAIL 2 FOR TYP. TRENCH SECTION
2. NEW REINFORCED PRECAST CONCRETE JUNCTION VAULT W/ - 4 GUARD POSTS. SEE C-301 DETAIL 3.
3. 15° BEND
4. HORIZONTAL DIRECTIONAL DRILL FROM STA. 22+54.19 TO STA. 23+28.32. EXISTING ASPHALT TO REMAIN UNDISTURBED.
5. HORIZONTAL DIRECTIONAL DRILL FROM STA. 25+ 24.65 TO STA. 26+25.57. EXISTING ASPHALT TO REMAIN UNDISTURBED.
6. INSTALL PIPELINE 8' OFF EXISTING EDGE OF PAVEMENT. UNLESS OTHERWISE NOTED.
7. INSTALL PIPELINE 16' OFF EXISTING EDGE OF PAVEMENT. UNLESS OTHERWISE NOTED.

POTHOLE TABLE

NO.	DESCRIPTION	DEPTH
8	6" DIA PVC WL	29"
9	2" DIA. STEEL GAS	44"
10	2.5" CATV	21"
11	4" DIA. HDPE FIBER OPTIC	49"
12	12" DIA. DI WATER	34"
13	2 - 2" COMM.	48" & 50"
14	8" WATER	37"

DEPTH IS TO TOP OF UTILITY.

GEORGE NEMETH NEW MEXICO 12284 REGISTERED PROFESSIONAL ENGINEER
5-3-17

NO.	DESCRIPTION	DATE	BY
1			
2			
3			
4			
5			

Name
Location

KIRTLAND AIR FORCE BASE
BULK FUELS FACILITY
KAFB - 106239 CONVEYANCE LINE

CONVEYANCE LINE INSTALLATION
STA: 22+50 TO STA: 26+50

SMITH ENGINEERING COMPANY
2201 SAN PEDRO NE BLDG 4, SUITE 200
ALBUQUERQUE, NM 87110

COA PROJECT NO: 586082

Design Review Committee	City Engineer Approval	Last Design Update	No. / Day / Yr.	No. / Day / Yr.

JOB NO: 116112
DATE: MAY 3, 2017
SHEET NO: C-206 / 17 OF 27

Q:\SEC----PROJECTS\116112 KAFB Groundwater Reclam Pipeline\ENGINEERING\CADD\PLANSET\C-206-Plan and Profile.dwg May 03, 2017 - 8:41am Saved By: jamier

Access Tee

Access Port with Flange
Part Number + Size Code

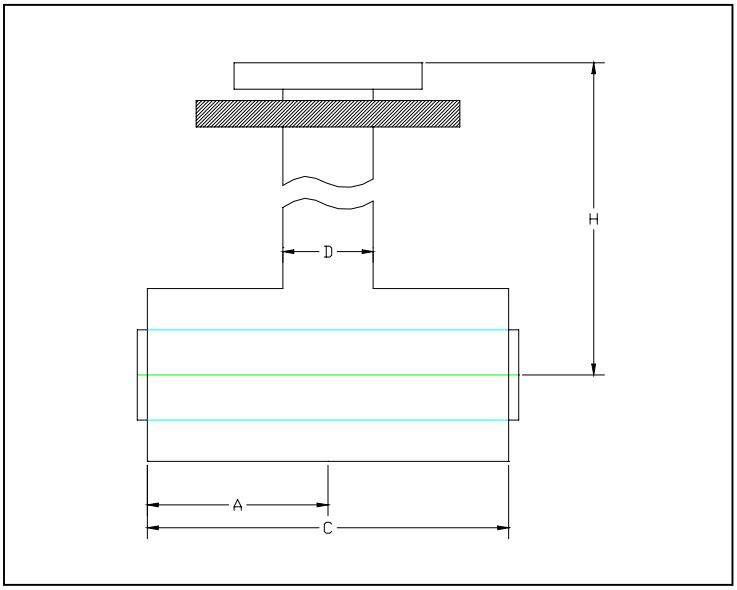

SDR RATING	11 x 11	11 x 17	11 x 26	11 x 32.5	17 x 17	17 x 26	17 x 32.5	26 x 26	26 x 32.5	32 x32
PART # Number	4916	4917			4918					

SIZE	Size code	A	C	D	H
1” x 4”	401	6.0”	12.0”	4.5”	Varies
2” x 6” 3” x 6”	530 531	9.0”	18.0”	4.5”	Varies
3” x 8” 4” x 8”	582 583	9.0”	18.0”	4.5”	Varies
6” x 10”	627	9.0”	18.0”	4.5”	Varies
8” x 12”	660	9.0”	18.0”	4.5”	Varies

Asahi America Inc. 35 Green St Malden Ma 02148 Office 1-781-321-5409 Fax 1-781-321-4421
Email: asahi@asahi-america.com
Internet: www.asahi-america.com

Leak Detection/Location Systems

PAL-AT® • LIQUIDWATCH® • FLUIDWATCH®

PermAlert™

Division of Perma-Pipe, Inc.

PAL-AT detects and locates leaks for

~~Data Centers~~, Jet Fuel Systems, Tank Farms, ~~Clean Rooms and Other Applications~~

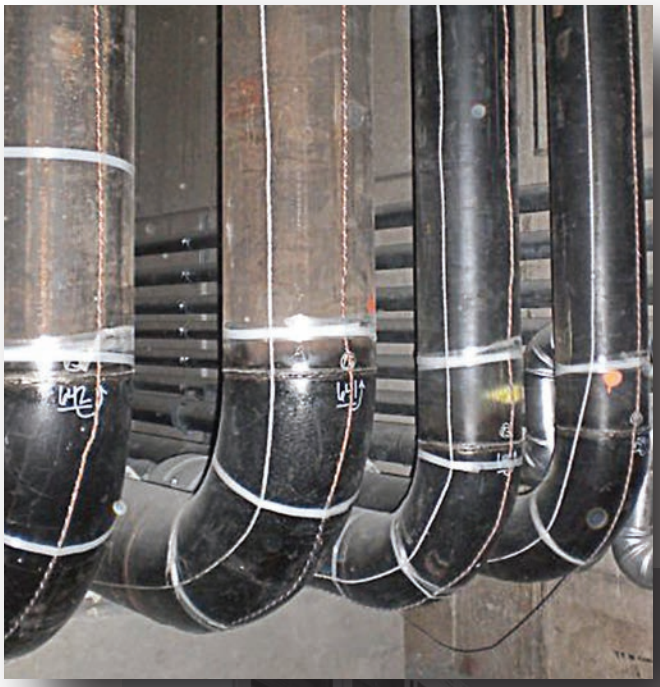

Why PAL-AT®? *Control the damage and you control costs*

In most monitoring situations, just knowing that you have a liquid leak is not good enough. You need to know: Where is it? When did it occur? Where did it start? Is there more than one leak? You need accurate information and you need it now!

The sooner you pinpoint the where and when, the sooner you can begin to control and minimize damage to your facility, personnel, the environment and to your balance sheet.

With PAL-AT® you can have this type of information instantly. PAL-AT is a sophisticated micro-processor system with multi-sensing and remote monitoring capabilities. Its advanced technology provides dependable around the clock surveillance of all monitored areas. And it's the first system to actually help manage your risks and associated costs.

PAL-AT® ADVANTAGES

Wet Cable Start Up and Multiple Leak Location and Multilevel Alarms: Because the PAL-AT system uses data specific to the condition of the installed sensor cable, the system's software can incorporate short lengths of wet cable in a reference map. This allows continous monitoring, even though the cable may be wet due to liquid entering the monitored area during installation, condensation at start up or small leaks in the system. After moisture is detected, a "new" reference map is made automatically to continue to provide leak surveillance. Changes in the cable in relation to the new reference map from additional sections of wet cable (additional or growing leak), will cause PAL-AT to re-alarm. The alarm queue stores the information for retrieval by the BMS, PALCOM® 10 or by the operator at the panel.

Versatility: PAL-AT models can monitor up to four separate sensing zones each having up to 7,500 ft (2300 m) of sensor cable. Each sensor cable can be integrated with liquid probes and float switches for the monitoring of underfloor areas, sumps, trays, single and/or double-wall piping and tanks. The PAL-AT system permits cost effective installation of complex systems, with its ability to integrate different cable types and probes that can monitor for leaks in multiple piping networks, tanks, subfloors and other sensitive work areas. Hydrocarbon sensing cables can be direct buried for monitoring pipelines and aboveground storage tanks.

Low Power Installation: For solar and/or battery applications, 24 VDC connection and reduced power consumption is available to reduce power supply initial costs. A four sensor circuit unit is available to effectively monitor pipelines.

Communications: can be via Ethernet, RS-485, RS-232, or other means, as desired by the user.

System Archives: Date and time ledgers of all significant operating events, including power failure, cable leak/short/break/fault and probe activation are stored in permanent memory. The stored documentation is very helpful to the system's operator to establish if clean-up, repairs and other remedial efforts were promptly performed and in compliance with local codes.

Security System: PAL-AT has a multi-level security password system that requires a security code before accepting commands for advanced system functions. This allows access to control functions, based on the operator's responsibilities.

UL Listed, FM Approved, CE compliance and EPA Third Party Tested: The optional Zener Barrier Panel is UL (US and Canada), FM, ATEX, IECEx listed to provide connections for intrinsically safe sensor circuits for use Class I, Division 1, Groups C and D or Zone 0, Group IIB hazardous locations.

Other Features:

- 2 line X 40 character display, showing status, date and time
- Keypad entry of system data and alarm acknowledgement
- RS232 and RS485 serial ports
- Ethernet connection and Modbus TCP/IP
- Modbus RTU
- Remote trouble shooting and control using PALCOM® 10 software
- Battery back-up of date and time functions
- Programmable Relays: SPDT, 10A, 250 VAC
- Automatic restart when power is restored after power loss
- Available in other languages

FM APPROVED
c UL us LISTED
IEC IECEx

Leak Detection *At Work*

PermAlert leak detection systems provide protection for the following applications:

Wet Benches
Dry Storage
Pharmaceutical Manufacturing
Process Control Rooms
File Storage Areas
Sprinkler System Monitoring
Chemical Storage Areas
Environmental Chambers
Microfilm Storage Rooms
Military Mothballing Facilities
Cable Trays and Tunnels
Microwave Relay Stations
Museum Storage
Radioactive Liquid Storage
Landfill Leachate Piping Systems
Hazardous Chemical Storage
Mining Industry
POP Sites

Double-Wall Piping
Buried Chilled/Hot Water Lines
Buried Steam Lines
Hospital Operating Rooms
Ground Water Monitoring
Manholes, Electrical/Mechanical
Process Drain Lines
Solvent Leak Detection
Acid Leak Detection
Electrical Vaults
Laboratories
Underground Storage Tanks
Data Centers
Airport Hydrant Systems
Semiconductor Facilities
Computer Rooms
Tank Farms, Above/Below Grade
Web Hosting Facilities

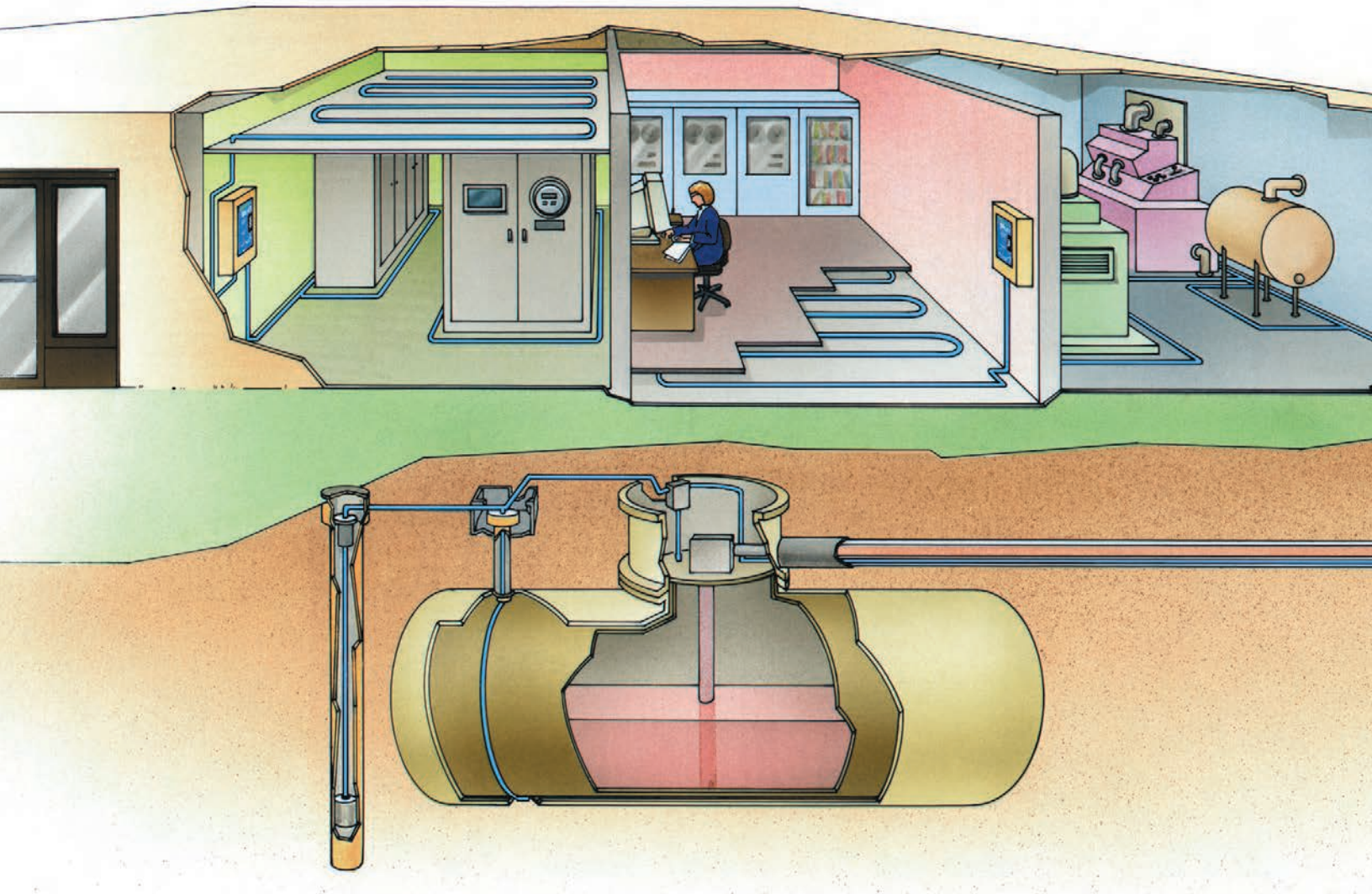

Centralized Operations with *PALCOM® 10 Network Software*

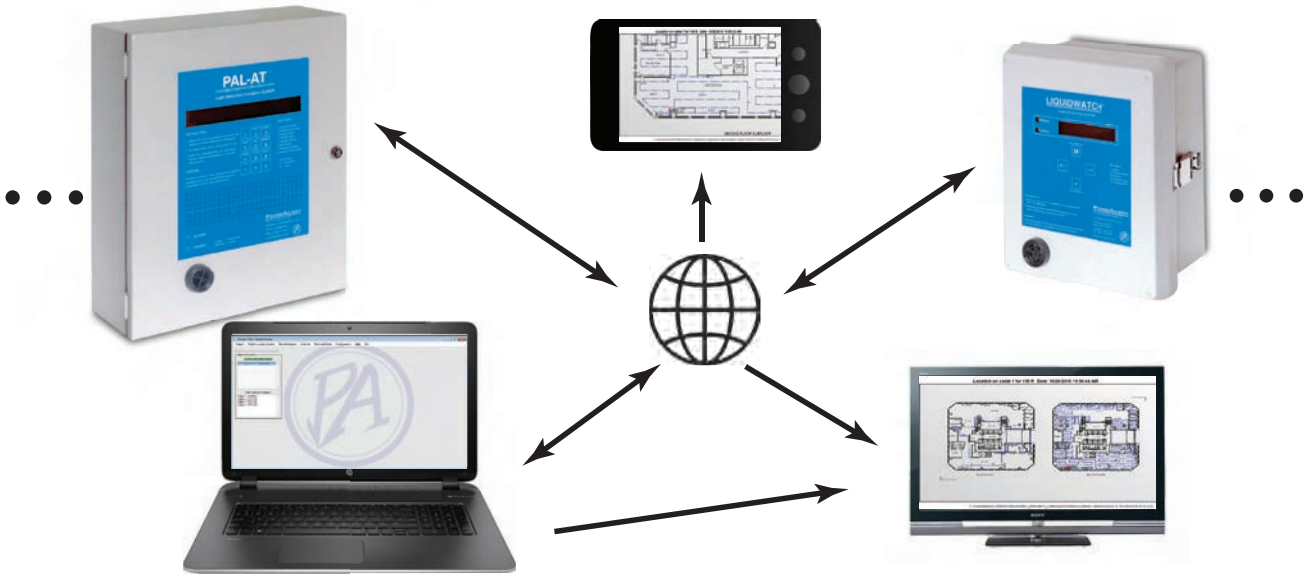

PALCOM® 10 w/GLS is an interactive remote monitoring software package for Windows®. It is designed to remotely monitor up to 254 PAL-AT® cable leak detection systems and LiquidWatch® probe leak detection systems. A computer is connected to the systems via Ethernet, RS-485 or RS-232. The software is supplied with two auxiliary programs, GLSViewer and GraphViewer.

Graphic Locator System (GLS) drawings are displayed with **GLSViewer**. A GLS drawing shows a leak detection installation and a flashing icon identifies the location of a problem on a sensor cable or probe. This enables an operator to locate the problem quickly without having to locate a hardcopy site reference drawing.

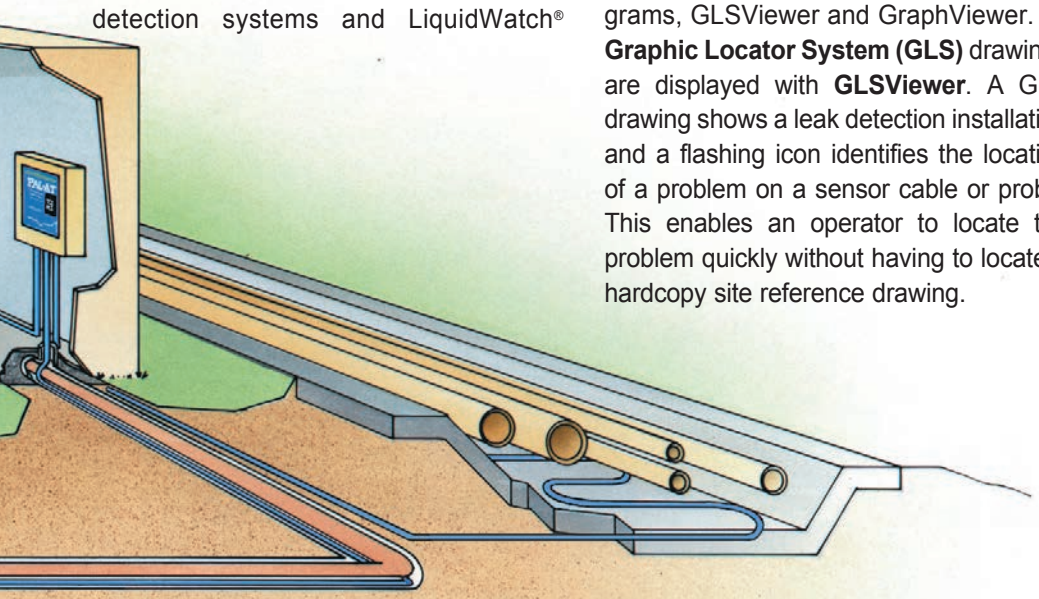

The **Graph** feature is only used with PAL-AT systems. PALCOM captures and plots PAL-AT "map" data. The graphs are opened automatically in **GraphViewer**. The graphs are TDR (time-domain reflectometry) traces and can be interpreted by trained personnel who are familiar with characteristics of the PAL-AT system. This documentation can be used for compliance records and troubleshooting.

The **Automonitor** function continuously checks all leak detection systems and updates the status of the systems 24/7. The status of each system and each cable is displayed. PALCOM automatically keeps a record of all archived events, which can be reviewed or printed.

SMS email and text messages are sent when an event is detected. An email message includes several images of the GLS drawing that zoom in to the event location. This provides 24/7 notification of leak detection events to any location.

Remote Keypad enables an operator to view the LCD display information and operate all functions of a system by using the computer keyboard instead of being at the alarm panel.

PAL-AT® *Sensor Cable*

The PAL-AT sensing string can be made up of any combination of probes and sensor cables. Sensor cables and probes are designed to serve a wide variety of applications.

With PAL-AT's sensor technology, the system is not subject to false alarms caused by dust or other non-liquid conductive materials that may come in contact with the cable or from casually stepping on the cable. Several sensor cables are capable of detecting and locating both water-based and hydrocarbon liquids and others will detect only hydrocarbons, ignoring water. In some applications, the sensor cable can be dried and reused after a leak is repaired and clean up has been completed. The state-of-the-art "Gold cables" have no exposed metal and are designed for corrosive chemical applications. The length of sensor cable that must be "wetted" with a specific liquid, before an alarm condition occurs, is referred to as the cable sensitivity. Sensitivity is a function of sensor string length and PAL-AT monitoring panel settings.

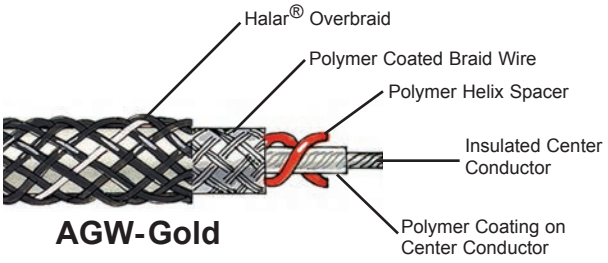

AGW-Gold is a quick drying cable, that is chemically resistant and designed to detect highly corrosive liquid leaks, such as acids, bases and solvents. Typical applications are secondary containment pipes, computer rooms, sub-floors of clean rooms and high temperature applications.

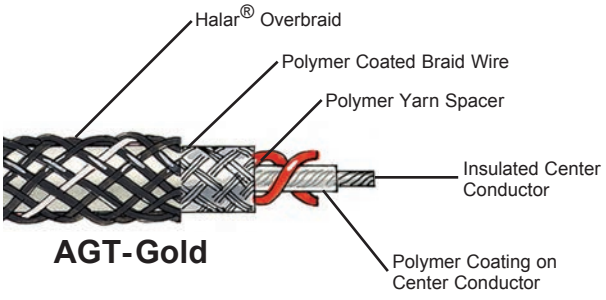

AGT-Gold is a wicking cable specially designed for the detection of accumulations at a shallow depth of 1/16 inch of liquid. The cable is chemically resistant and designed to detect water, highly corrosive acid, base and solvent leaks. Typical applications are in computer rooms (attached to single wall piping), clean room sub-floors, aboveground single wall pipes and equipment applications. AGT-Gold is suitable for stable, humidity-controlled rooms. This cable requires more drying time than AGW-Gold.

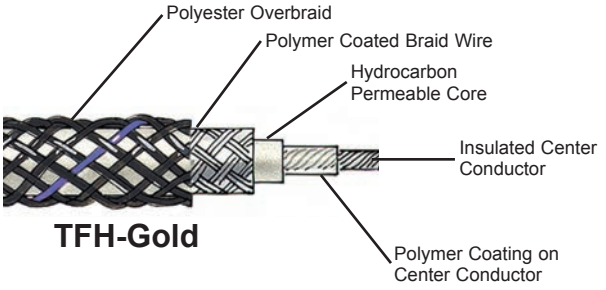

TFH-Gold is a wicking cable specifically designed to detect only hydrocarbons. This cable may be direct buried in slotted PVC screen pipe to a maximum depth of 20 feet (6m) to locate fuel leaks while ignoring the presence of water. This cable is ideal for monitoring single-wall pipes and tanks.

In addition to sensor cable, PermAlert provides jumper cables. Jumper cable is used to connect the monitoring unit and sensing string or link sensing strings between monitored areas.

PERMALERT *Probes*

Probes monitor for leaks at specific locations. PermAlert offers several probes to monitor for water-based liquids, chemicals and/or hydrocarbons. They can be connected in series to the sensing string for PAL-AT or wired to the LiquidWatch System.

PHLR Probe will only detect hydrocarbon liquid and is typically installed in the interstitial space of double-wall tanks, sumps, double contained piping or other low points for detecting hydrocarbon leakage.

PWS Probes will detect water-based liquids.

PSTV and PTHL Probes are float switches, designed for installation in a 2" stand pipe on double-wall tanks. They allow monitoring of the interstitial space of a double-wall tank or high/low level of the product in the tank. Special materials are available for specific liquids for chemical compatability.

PFS Probe is a float switch designed to monitor liquids in manholes, sumps, etc. It will detect water-based or hydrocarbon liquids. Special materials are available for specific liquids for chemical compatability.

Speciality Probes: With the use of the PA10 (LiquidWatch) and the PT10 (PAL-AT) our systems can monitor probes that are specially required for given applications providing for greater flexibility in meeting customers requirements.

PT10 Probe Integrator and the PA10 Adapter monitor any normally-closed or normally-open switch that indicates an alarm condition. The switches can be temperature, pressure or other sensors, as required. Typical examples are reed type float switches in double contained piping and brine monitoring switches in double-wall tanks.

How does PAL-AT work?

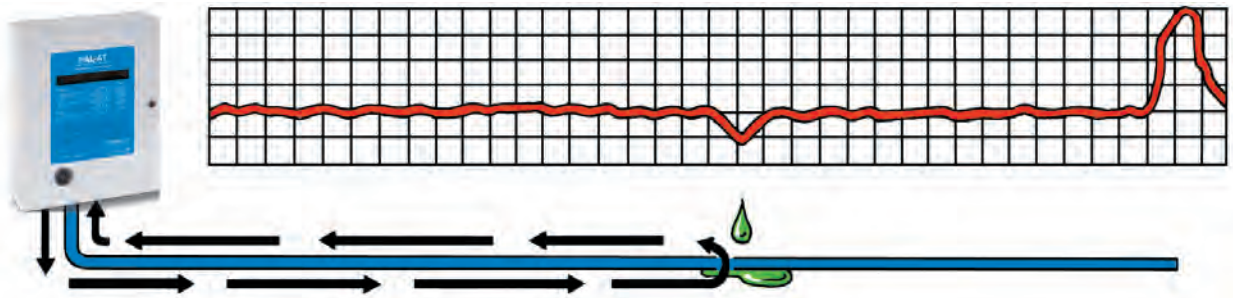

PAL-AT operates similar to radar by sending out safe energy pulses, two thousand times each second on the sensor cable. The reflections (echoes), generated by these energy pulses are specific to the condition of the installed sensor cable. These reflections are stored in memory as a reference map. The alarm unit continuously measures the cable reflections and compares them with the values of the reference map stored in memory. Liquids in sufficient quantities to "wet" the sensor cable will alter the cable's impedance at the leak location. This alteration of impedance will change the energy reflected from the cable at this location. The monitoring unit recognizes the change in energy reflection from the wet portion of cable and enters into alarm. A new reference map with the change is stored automatically allowing monitoring to continue. The alarm queue stores the alarm messages and must be cleared by the operator. The system also detects and locates breaks, shorts and probe activations. This allows for fast response to the location of the alarm for repairs or remedial action.

The PAL-AT locates the point of origin of a leak or cable fault within ± 0.3% of the sensor string length or ± 6 feet, whichever is greater for water based liquids and ± 0.6% of the sensor string or ± 6 feet for hydrocarbon liquids. In the alarm mode, the unit activates output relays to facilitate the control of valves or remote alarms, while providing output to the BMS via Modbus, PALCOM 10, audio and visual alarms, including a digital display of the distance to the leak origin at the panel.

LiquidWatch® *Leak Detection Systems*

PRODUCT FEATURES

- Sensing of organic liquids (hydrocarbons and solvents) or water within seconds of contact
- Vapor and gases are ignored
- Remote monitoring capability with an RS-232 interface and relays
- UL, cUL Listed with Class I, Division 1, Groups C & D sensor circuits optional
- NEMA 4X Enclosure
- Up to 64 probes and 16 programmable alarm relays available
- Optional Modbus RTU Available

Specifications

Part 1 - System

1.1 The Discrete Point Monitoring System (D.P.M.S.) shall consist of a monitoring unit, probe module, relay module and probes. The D.P.M.S. shall be capable of detecting liquids in contact with a sensor probe connected to the monitoring panel. It shall not detect vapors or gases.

1.2 When liquid is detected, an audible alarm shall sound and an LCD readout of the probe activation shall be visible on the front display. The D.P.M.S. system shall alarm within one (1) minute or less after contact with liquid, depending on the liquid.

1.3 The system supplier shall have at least ten (10) years experience in the manufacturing of leak detection systems.

Part 2 - Components

2.1 The standard sensors shall be probes. The PHLR hydrocarbon probe shall be less than 1⅛" in diameter and less than 2" long for use with organic liquids. The hydrocarbon probe shall reset after the elements are cleaned and/or replaced.The PWS conductivity probe shall be of solid state construction and corrosion resistant housing. The conductivity probes shall reset after liquids are removed from the probe. Lead wires shall consist of 24 AWG shielded conductor with color coded insulation.

2.2 The use of other probes such as float switches, ground water monitoring or other devices shall use a dry contact to indicate an alarm condition. Float switch probes shall be resettable after fluids are removed and shall use material of construction suitable for liquids to be sensed for corrosion resistance.

2.3 The monitoring panel shall be modular in design and accept up to sixty-four (64) probes and sixteen (16) programmable alarm relays. The LCD shall provide indication of the system's status. When a probe alarms, the type of alarm (active, short or break) and the probe number shall be indicated. Using the membrane keypad the operator shall be able to program the system and review the history archive. An RS-232 interface port shall be available for use in remote monitoring of the unit using ASCII commands. A Modbus RTU interface shall be available for interface to a BMS system. The enclosure shall be NEMA 4X.

Part 3 - Safety

3.1 The unit must be UL Listed and provide connections for intrinsically safe sensor circuits for use in Class I, Division 1, Groups C & D hazardous locations (where required).

LiquidWatch® Monitoring Units have been engineered to meet a broad range of customer needs. The system can be configured with up to sixty-four (64) probes and sixteen (16) alarm relays. The modular design allows for meeting current needs while allowing for future expansion of the system.

LiquidWatch employs a two (2) line, twenty (20) character backlit LCD with a membrane keypad for operator interface. The probe circuits are supervised and provide alarms for probe active, short and break conditions. Probes can be programmed on a leak alarm to operate one of sixteen (16) optional relays for remote alarm indication or operation of a shut down procedure.

LiquidWatch Monitoring Units are equipped with normally energized 10 A, 240 VAC, DPDT relays: 1 common alarm relay and up to sixteen (16) programmable relays (in modules of four). The alarm console can be located up to 20,000 feet (6000m) from the probes. The probe modules (8 probes per module) can be mounted remotely to reduce wiring costs.

The patented PHLR probe for LiquidWatch is solid-state design and responds in seconds after contact with organic liquids. Hydrocarbon fumes or vapors have no effect, thereby virtually eliminating false alarms.

The LiquidWatch Monitoring Unit can also monitor any switch (float switch, thermostat, high level switch, dry contact, etc.), using the optional probe adapter.

FluidWatch® *Leak Detection Systems*

PRODUCT FEATURES

- Senses water based liquids within seconds of contact
- Sensitivity from several inches to several feet
- Durable sensor cable
- Available in sensor lengths: 10 ft to 100 ft
- Comes in a kit, complete with (if required) jumper cable, sensor cable, cable clips and cable tags
- 120 VAC, 240 VAC or 24 VDC input power

The FluidWatch® Leak Detection Monitoring Unit is engineered to monitor small areas for water leaks. Typical applications include unmanned equipment rooms, small raised floor areas and small tanks. The system continuously monitors the capacitance of the sensor cable and detects changes. Seconds after the coaxial sensor cable contacts water or water-based liquids, the unit enters into alarm. The sensor cable can be quickly dried in place after the leak is cleaned up and the system is back online.

FluidWatch (115/240 volt version) uses an LED "traffic light" display to indicate status: Green - normal, Yellow - break and Red - leak. An audible alarm and two (2) 250 VAC, 10 A, SPDT relays activate when either a leak or break occurs. There are two (2) operator buttons, one to test the system and the other to silence the alarm.

Internal jumpers are used to enable alarm silencing, to select cable sensitivity and to enable automatic silencing upon return of the system to normal conditions.

FluidWatch II System is a low voltage (10-30 V AC/DC) with the status display on the circuit board and three relays (two leak and one fault) for use with CRAC/CRAH units and other applications not requiring an alarm horn.

Specifications

Part 1 - System

1.1 FluidWatch Leak Detection System shall consist of an electronic monitoring unit, coaxial water-sensing cable, interconnecting jumper cable, cable clamps and identification tags. All cable connectors shall be factory installed.

The system supplier shall have at least ten (10) years experience in the manufacture of the leak detection systems.

Part 2 - Components

2.1 The monitoring unit shall be able to monitor a length of sensing cable. Three (3) LED's shall be visible on the door of the unit indicating System Monitoring (Green), Leak Detection (red) or Cable Break (Yellow). The unit shall have an audible alarm and be equipped with two (2) normally energiized SPDT Form 1C relays having contacts rated for 10 A continuous at 250 VAC. The audible alarm and relays shall be activated in the event of a leak or a continuity fault.

The system shall have two (2) external switches for operator input, test and alarm silence. Internal switches shall select cable sensitivity (high, medium and low), enable the silence button, enable automatic silence when the cable dries and select 120/240 VAC operating voltage.

The monitoring unit shall be powered by [120 VAC] [240 VAC] [24 VDC]. It shall be housed in a modified NEMA 4X nonmetallic enclosure with nominal dimensions or 7" x 7" x3".

2.2 The sensor shall be a coaxial cable consisting of an insulated center conductor, water permeable dielectric core and outer braid conductor.

The sensing cable shall have the ability to detect the presence of water at any point along the cable's length. The cable shall be easily field repairable, flexible and carry less than six (6) VAC under normal operating conditions.

The sensing cable shall be available in lengths of 50, 75 and 100 feet or special lengths as required up to 100 feet. All sensing cable shall be supplied with connectors.

2.3 The system shall include one monitoring unit, one length of sensing cable, one jumper cable to connect the sensing cable to the monitoring unit, one cable clamp for every five (5) feet of sensing and jumper cable and five (5) cable tags.

Part 3 - Installation

3.1 All FluidWatch system components shall be installed in accordance with manufacturer's installation instructions.

3.2 The monitoring unit shall be installed and powered in accordance with NEC and local code requirements.

PAL-AT® Specification Guide

The leak detection/location system shall consist of microprocessor based monitoring unit(s) capable of continuous monitoring of a sensor string for leaks/faults. The unit shall have a sensing range of (3,000 ft) [900m], (7,500 ft) [2300m] per cable. The alarm unit(s) shall operate on the principle of pulsed energy reflection and be capable of mapping the entire length of the sensor cable and storing the digitized system map in non-volatile memory. The alarm unit(s) shall provide continuous indications that the sensor cable is being monitored.

After the detection of a minor leak, the leak detection/location system shall reset itself and continue to monitor the entire sensing string for a growing leak or an additional leaks(s) even if they are smaller than the leak(s) previously acknowledged. The system shall be capable of accounting for minor installation irregularities, static moisture and puddles (such as condensation) with no loss in accuracy or sensitivity. The system shall locate the point of origin of the first leak or fault within ± 0.3% of the sensor string length or ± 6 feet, whichever is greater for water-based liquids and ± 0.6% of the sensor string length or ± 6 feet, whichever is greater for hydrocarbon based liquids. The monitoring unit shall report and record, to non-volatile memory, the type of fault, distance, date and time of an alarm. The alarm queue will require clearing by an operator after alarms are detected to reset from the alarm mode.

The system manufacturer shall have at least fifteen (15) years of experience with leak detection/location sensor cable technology and provide a factory trained representative at on-site meetings for pre-construction sensor/electronics installation, commissioning and owner training.

The system shall have multi-level security passwords for access to operating functions with recording of all password entries to non-volatile memory.

The alarm unit(s) shall be enclosed in a NEMA 12 enclosure and have a two line by forty character display providing status and alarm data. The monitoring unit(s) shall have a factory mounted alarm horn. The unit shall be UL listed and CE compliant. The optional Zener Barrier Panel will provide connections for intrinsically safe sensor circuits for use in Class I, Division 1, Groups C and D/Zone 0, Group IIB hazardous locations.

The system shall be tested and found to comply with the limits for a Class A digital device, pursuant to Part 15 of the FCC rules and so labeled.

The system shall be evaluated by an independent third party according to the Third Party Procedures developed according to the U.S. EPA's "Standard Test Procedure for Evaluating Leak Detection Methods: Liquid-Phase Out-of-Tank Product Detectors".

Ability to locate a leak shall not depend on battery backed-up functions. In the event of power failure, system conditions and parameters shall be stored in non-volatile memory allowing the unit(s) to automatically resume monitoring, without resetting, upon restoration of power.

The monitoring unit(s) power requirements shall be 110/240 VAC, 50 VA, 50/60 Hz, single phase. Monitoring units shall be equipped with RS-232, RS-485 and Ethernet communication ports and a minimum of three SPDT output relays, rated for 250 VAC, 10 amps.

The sensor cable, connectors, (probes) and jumpers shall be supplied by the manufacturer of the monitoring unit(s). The cable sensing principle shall provide for continuous monitoring while short lengths of the cable are in contact with liquids, without altering the systems sensitivity and/or accuracy.

Software will be provided that allows remote or on-site interface through communication ports for user interface, troubleshooting and diagnostics. Software shall have the ability to interface with the PAL-AT monitoring units and retrieve each of the stored reference maps and current condition TDR traces. The software shall be able to have a digital map of the layout of the system and indicate on the map the location of alarms. The software shall have SMS capability to send text messages with drawings attached, facilitating the users response to alarms.

PermAlert™
Division of Perma-Pipe, Inc.
6410 West Howard Street
Niles, Illinois 60714
Phone 847-966-2190
Fax 847-470-1204
www.permalert.com

The information contained in this document is subject to change without notice. PermAlert believes the information contained herein to be reliable, but makes no representations as to its accuracy or completeness.

PermAlert, Division of Perma-Pipe, Inc., sole and exclusive warranty is as stated in the Standard Terms and Conditions of Sale for these products. In no event will PermAlert be liable for any indirect, incidental, or consequential damages.

Halar is a Registered Trademark of Ausimont USA, Inc.

Windows is a Trademark of Microsoft Corporation.

PAL-AT, PALCOM, LiquidWatch and FluidWatch are registered trademarks of PERMA-PIPE, Inc.

PAL (01/17 3M PG) Printed in the U.S.A. ©2017 PERMA-PIPE, Inc.

PermAlert™
Division of Perma-Pipe, Inc.

PAL-AT® ~~AT30C~~/AT75C/~~AT30K~~
Leak Detection System
Product Data

PRODUCT FEATURES / BENEFITS

- Locates multiple leaks without loss of accuracy or sensitivity
- Detects growing leaks
- Locates breaks and shorts to reduce downtime
- Displays location of leaks up to location of breaks/shorts
- Ethernet and RS-232/RS-485 serial ports
- Able to commission system with limited initial lengths of wet cable
- Not susceptible to dust/dirt contamination of the sensor string
- Modbus TCP, RTU, and RTU over TCP protocols
- Optional BACnet IP gateway available
- FM Approved for FM 7745 - Diesel Leak Detector
- Zener barrier panel (ZBP) provides intrinsically safe sensor cable output circuits for hazardous locations:
  Class I, Division 1, Groups C & D
  Zone 0, Group IIB

PRINCIPLE OF OPERATION

PAL-AT®'s TDR pulse echo technology operates similar to radar. Thousands of times each minute, safe energy pulses are sent out on the sensor cables. As these energy pulses travel down the cable, reflections are returned to the monitoring unit and a "map" of the reflected energy from the cable is stored in memory. The presence of liquids on the sensor cable, in sufficient quantities to "wet" the cable, will alter its electrical properties. This alteration will cause a change of the reflection at that location. When PAL-AT recognizes a change, it enters into alarm mode and automatically creates a new "map". This becomes the base line for the system, allowing PAL-AT to continue monitoring the cable for growing leaks, new leaks, breaks, shorts and/or faults. The alarms are stored in an alarm queue to be acknowledged by an authorized user.

SECURITY SYSTEM

PAL-AT requires a password entry before alarms can be acknowledged or system information can be changed. This feature limits access to only those employees who have been authorized to perform the advanced functions.

SYSTEM ARCHIVES

Date and time history of significant events including power failure and cable leak/fault/break/short are stored in nonvolatile memory providing a documented record of system alarms.

OUTPUT RELAYS

PAL-AT has several dry contact output relays, rated for 10 A @ 250 VAC. A fault relay monitors for loss of power. A common alarm relay is activated when any fault is detected on any cable. It is reset when the audible alarm is silenced. A cable relay can be programmed to activate when any fault occurs or only when leaks are detected. The relay will stay active until the alarm is acknowledged.

COMMUNICATION

PAL-AT has an Ethernet port and two serial ports, RS-485 and RS-232, to interface with PALCOM® 10 w/GLS software or custom software. Refer to the Communication Options Data Sheet for detailed information.

MODBUS

PAL-AT communicates via Modbus TCP and Modbus RTU to pass system and cable status data to a Modbus host. It also enables the host to acknowledge the alarm queue remotely.

Model No.	Part No.	Cable Capacity	Maximum Cable Range Feet	(Meters)
~~AT30C~~	~~8028300~~	~~1~~	~~3000~~	~~(900)~~
AT75C	8028310	1	7500	(2300)
~~AT30K~~	~~8028320~~	~~4~~	~~7500~~	~~(2300)~~

*Refer to Sensor Cables Product Data for Technical details

CE

FM APPROVED

c UL us LISTED
Leak Detection System
4ER7

PermAlert™
Division of Perma-Pipe, Inc.

PAL-AT® AT30C/AT75C/AT30K
Zener Barrier Panel
Product Data

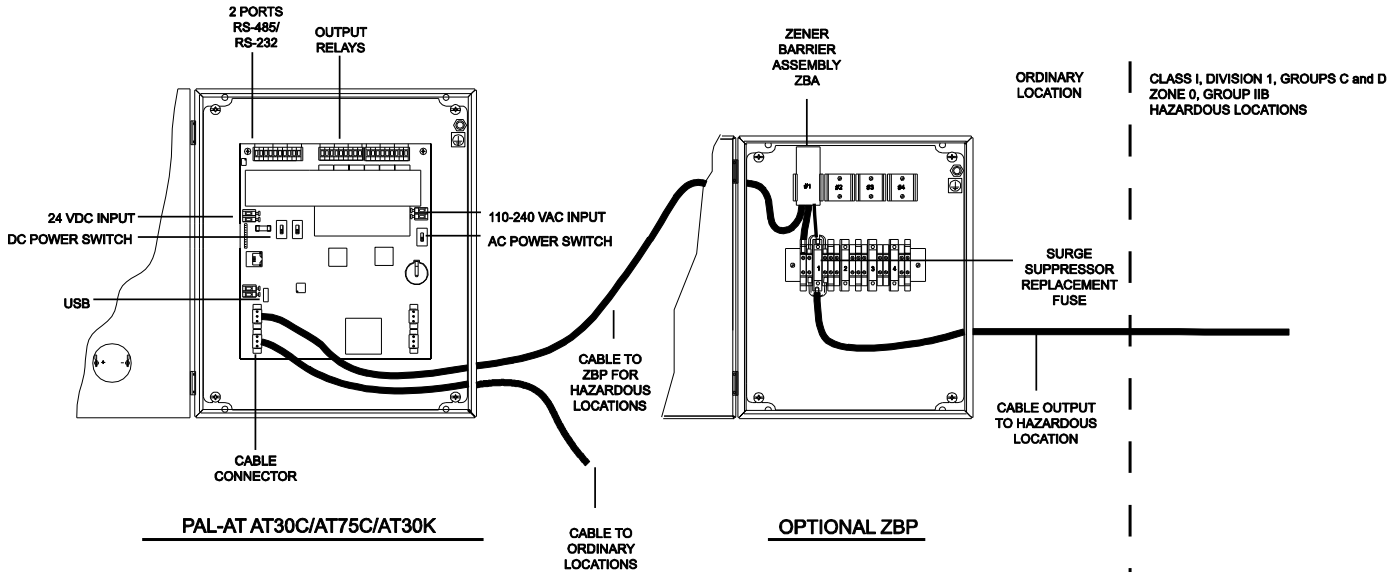

HAZARDOUS AREAS

An optional **Zener Barrier Panel (ZBP)** is available if PAL-AT cables or probes are installed in Class I, Division 1, Groups C & D / Zone 0, Group IIB hazardous locations. The ZBP includes one **Zener Barrier Assembly (ZBA)**. One ZBA is required for each cable sensing string. The ZBP is expandable to hold up to four ZBAs.

FM 7745 Approval

The PAL-AT system has been certified by FM Approvals as a diesel leak detector per FM 7745. **Contact PermAlert for specific FM requirements**.

SURGE SUPPRESSOR

Each ZBA also functions as a surge suppressor to reduce damage to the PAL-AT from external voltage surges. It is used when cable locations are subject to frequent voltage surges or nearby lightning strikes. It has a replaceable fuse to get the system back on-line quickly. Each ZBA protects one cable string.

Model Number	Part Number	Description
ZBP	8028115	Zener Barrier Panel
ZBA	8028110	Zener Barrier Assembly
	8027884	FM Approval Modification

92P1

TECHNICAL DATA:

PAL-AT

- Dimensions: 13.75" x 11.81" x 4.00" (350 mm x 300 mm x 102 mm) Type 12 (IP52)
- Power: 110-240 VAC, 50/60 Hz, 0.3 A/50 VA 24 VDC, 1 A/24 VA
- Weight: 14.6 lb (6.6 kg)
- Operating Range:-4°F to 122°F (-20°C to 50°C)

ALARM OUTPUTS:

- Fault Conditions: Leak, Break, Short or Probe Activation
- Distance to Fault Location
- Date and Time of Fault
- Activation of Output Relays
- Red LED Optical Alarm
- BMS Interface
- Modbus TCP/RTU Output
- BACnet IP gateway available

ZBP:

- Dimensions: 11.81" x 9.84" x 4.00" (300 mm x 250 mm x 102 mm) Type 4, 12 (IP66)
- Weight: 12.0 lb (5.4 kg)
- Operating Range:-4°F to 140°F (-20°C to 60°C)

The information contained in this document is subject to change without notice. PermAlert, a Division of PERMA-PIPE, Inc., believes the information contained herein to be reliable, but makes no representations as to accuracy or completeness. PermAlert offers a sole and exclusive warranty as is stated in the Standard Terms and Conditions of Sale for these products. In no event will PermAlert be liable for any indirect, incidental or consequential damages.

PermAlert • 6410 W. Howard St. • Niles, IL 60714-3302
Ph: 847 966-2190 • Fax 847 470-1204 • www.permalert.com

© 2017 PERMA-PIPE, Inc. • All Rights Reserved • *Printed in the U.S.A.* • (02/17)

PermAlert™
Division of Perma-Pipe, Inc.

Sensor Cables
Product Data

The PAL-AT® family of sensor cables are able to meet the specific requirements of a wide variety of applications and environments including subfloors, containment pipe systems, direct burial and foam insulated pipes. The sensor cables offer the leak detection designer flexibility and choice in selecting the proper cable for the desired system sensitivity.

All **PAL-AT** cables and connectors are easily spliced or repaired in the field to minimize downtime and repair cost.

PAL-AT AGW-Gold and AGT-Gold sensor cables have the ability to detect both water-based and hydrocarbon liquids. This reduces the number of sensor cables required in many applications. Each of these PAL-AT sensor cables can be dried and reused after a water-based or volatile hydrocarbon leak has been cleaned up. These cables have no exposed metal and are designed for corrosive chemical applications. Each individual strand of braid wire is coated with a high-temperature, corrosion-resistant polymer and the length of the cable is covered with a fluoropolymer overbraid. Because there is no exposed metal, the Gold cables eliminate the need for special isolation precautions in cathodic-protected pipe applications.

PAL-AT TFH-Gold hydrocarbon sensor cable uses a hydrocarbon permeable core to detect hydrocarbon liquids while ignoring water-based liquids. In most cases, the sensor cable must be replaced after exposure to hydrocarbons.

ATP

ATP is a cable designed to monitor pre-fabricated polyurethane insulated pipes. The twisted pair type sensor cable will detect water-based liquids. The cable is factory installed in the insulation of each pipe length. The sections of ATP cable are easily spliced together as the pipe is assembled in the field.

Liquids Detected with TFH-Gold < 5 Minutes

Liquid (tested at 70°F)		
Gasoline	Alcohol	Acetone
Diesel Fuel	Naptha	Crude Oil**
Kerosene	MEK	Transformer
Jet Fuel	Xylene	Oil**

**Contact PermAlert for details on these and other liquids.

AGW-Gold

AGW-Gold is a quick drying cable that is chemically resistant and designed to detect highly corrosive liquid leaks such as acids, bases and solvents. Typical applications are secondary contained pipes in chemical installations, subfloors of clean room manufacturing areas, computer rooms and high temperature applications such as steam pipe containment systems. The cable has passed UL 910 for Plenum Rating.

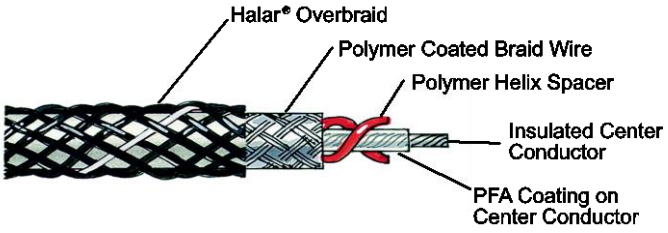

AGT-Gold

AGT-Gold is a wicking cable that is chemically resistant and designed to detect highly corrosive acid, base, and solvent leaks. Typical applications are clean rooms, subfloors, aboveground single-wall pipes and equipment applications. AGT-Gold should be installed in temperature and humidity controlled environments. This cable requires more drying time than AGW-Gold.

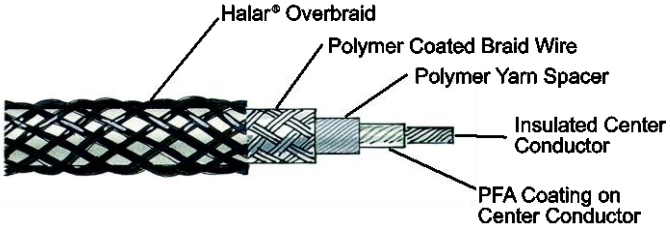

TFH-Gold

TFH-Gold is a wicking cable specifically designed to detect only hydrocarbons. This cable may be direct buried in slotted PVC pipe, or screen pipe, to a maximum depth of 20 ft (6 m) to locate fuel leaks while ignoring the presence of water. This is ideal for monitoring single-wall pipes and tanks. The cable is suitable for applications where hydrogen sulfide or other corrosive gases may be encountered, such as refineries and oil fields.

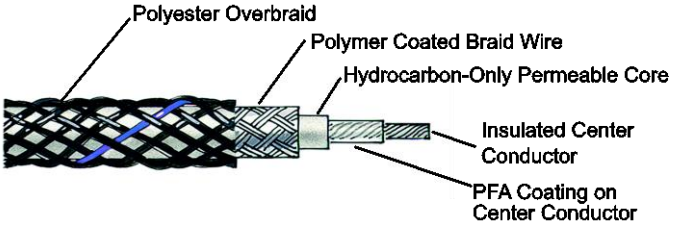

*Halar® is a registered trademark of Ausimont USA, Inc.

Sensitivity is the length of wet cable that is required to activate the PAL-AT under standard sensitivity settings. The length required for quick-drying AGW-Gold refers to the submerged length of the cable. ~~Wicking cables AGT-Gold and TFH-Gold will quickly draw a liquid into the cable through capillary action when it is in contact with a 1/16" (2 mm) film of liquid. The length of wet cable required for wicking cables is the saturated length of cable. For example, if a few inches of AGT-Gold cable contact a film of water at 5,000 ft (1,500 m), in less than two minutes, the cable will be saturated sufficiently and the PAL-AT will go into alarm.~~ The PAL-AT sensitivity can be adjusted.

Sensitivity and Accuracy

Effective Length ft(m)		<2,500 (750)	<5,000 (1500)	<7,500 (2300)
Sensitivity				
AGW-Gold, ~~AGT-Gold~~	Water	3 (1)	3 (1)	3 (1)
AGW-Gold, ~~AGT-Gold~~	Hydrocarbon	6 (2)	15 (4)	23 (7)
~~TFH~~	~~Hydrocarbon~~	~~6 (2)~~	~~18 (5)~~	~~30 (9)~~
~~ATP~~	~~Water~~	~~3 (1)~~	~~6 (2)~~	~~N/A~~
Accuracy ft(m)				
AGW-Gold, ~~AGT-Gold~~	Water	±6 (2)	±12 (4)	±18 (5)
AGW-Gold, ~~AGT-Gold~~	Hydrocarbon	±6 (2)	±26 (8)	±40 (12)
~~TFH-Gold, TFH~~	~~Hydrocarbon~~	~~±6 (2)~~	~~±30 (9)~~	~~±48 (15)~~
~~ATP~~	~~Water~~	~~±10 (3)~~	~~±30 (9)~~	~~N/A~~

Cable Type	**Part No.**	**Temp. (max.) ◦F (◦C)**	**O.D. In (mm)**	**Liquids Detected**
AGW-Gold	8017705	400 (205)	.31 (8.0)	water-based & hydrocarbon
~~AGT-Gold~~	~~8017700~~	~~250 (120)~~	~~.31 (8.0)~~	~~water-based & hydrocarbon~~
~~TFH-Gold~~	~~8017640~~	~~250 (120)~~	~~.31 (8.0)~~	~~hydrocarbon only~~
~~TFH~~	~~8017635~~	~~250 (120)~~	~~.31 (8.0)~~	~~hydrocarbon only~~
~~ATP~~	~~8017732~~	~~250 (120)~~	~~.20 (5.0)~~	~~water-based only~~

NOTES:

- Effective length is the total length of sensor cable, and effective length of jumper cable and probes **(see Jumper Cable Data Sheet)** that are connected together to form the "sensing string". For cables longer than 5,000 ft, an additional effective length of 50 ft is added for each connector exceeding 1 connector per 500 ft of cable.
- The actual length or the effective length of a sensor string cannot exceed the maximum cable range for the selected Leak Detection System.
- Temperatures shown are continuous operating exposures.

SENSOR CABLE SPECIFICATIONS

AGW-Gold

Sensor cable shall be of fluoropolymer and polymer coated wire construction with no exposed metal parts. Cable shall detect water-based, chemical and hydrocarbon liquids. The sensor cable can be flushed and dried in-place and will not require replacement after a leak event of any volatile liquid. The cable shall have a breaking strength of at least 100 lb (45 kg) and shall be resistant to corrosion, abrasion and most chemicals tested in accordance with exposure procedures in ASTM D-543.

~~AGT-Gold~~

~~Sensor cable shall be of fluoropolymer and polymer coated wire construction with no exposed metal parts. Sensor cable shall detect accumulations at a shallow depth of 1/16" (1.5 mm) and be resistant to most acids, bases and solvents and be capable of being flushed and dried in place. The cable will not require replacement after a leak event of any compatible and/or volatile liquid. The cable shall have a breaking strength of at least 100 lb (45 kg) and shall be resistant to corrosion, abrasion and most chemicals tested in accordance with exposure procedures in ASTM D-543.~~

~~TFH-Gold~~

~~Sensor cable shall detect only hydrocarbons while ignoring water and water-based liquids. The cable is designed for direct burial in slotted PVC pipe, or screen pipe, to a maximum depth of 20 ft (6 m) and capable of providing a response time of not more than four minutes after contact with most hydrocarbon liquids. The sensor cable is not reusable after exposure to hydrocarbons.~~

~~ATP~~

~~Sensor cable shall be a twisted-pair construction. The cable insulation shall be irradiated cross-linked PE. The cable shall be designed to detect water-based liquids and be factory installed in polyurethane foam insulation.~~

ATP COMPONENTS

Part No.	**Description**
8017732	ATP Sensor Cable
8027800	ATP Crimp Splice Kit
8068308	ATP Crimp Tool

The information contained in this document is subject to change without notice. PermAlert, a Division of PERMA-PIPE, Inc., believes the information contained herein to be reliable, but makes no representations as to accuracy or completeness. PermAlert offers a sole and exclusive warranty as is stated in the Standard Terms and Conditions of Sale for these products. In no event will PermAlert be liable for any indirect, incidental or consequential damages.

PermAlert • 6410 W. Howard St. • Niles, IL 60714-3302
Ph: 847 966-2190 • Fax 847 470-1204 • www.permalert.com

© 2017 PERMA-PIPE, Inc. • All Rights Reserved • Printed in the U.S.A. • (06/17)

PAL-AT®

INSTALLATION MANUAL

MODELS AT30C, AT75C & AT30K

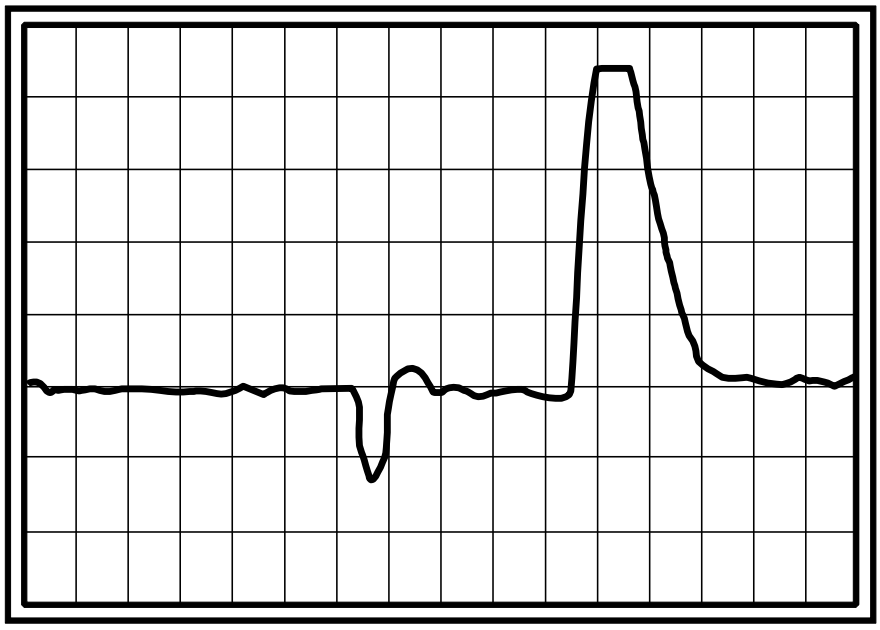

PermAlert™

Division of Perma-Pipe, Inc.

Notice

The information contained in this manual, including but not limited to any product specifications, is subject to change without notice.

PERMALERT (PERMALERT), A DIVISION OF PERMA-PIPE, INC., PROVIDES NO WARRANTY WITH REGARD TO THIS MANUAL OR ANY OTHER INFORMATION CONTAINED HEREIN AND HEREBY EXPRESSLY DISCLAIMS ANY WARRANTIES, INCLUDING IMPLIED WARRANTIES, OF MERCHANTABILITY OR FITNESS FOR ANY PARTICULAR PURPOSE WITH REGARD TO ANY OF THE FOREGOING. PERMALERT ASSUMES NO LIABILITY FOR ANY DAMAGES INCURRED DIRECTLY OR INDIRECTLY FROM ANY TECHNICAL OR TYPOGRAPHICAL ERRORS OR OMISSIONS CONTAINED HEREIN OR FOR DISCREPANCIES BETWEEN THE PRODUCT AND THE MANUAL. IN NO EVENT SHALL PERMALERT BE LIABLE FOR ANY INCIDENTAL, CONSEQUENTIAL, SPECIAL, OR EXEMPLARY DAMAGES, WHETHER BASED ON TORT, CONTACT OR OTHERWISE, ARISING OUT OF OR IN CONNECTION WITH THIS MANUAL OR ANY OTHER INFORMATION CONTAINED HEREIN OR THE USE THEREOF.

Caution --This manual may not be up-to-date.

Please check the PermAlert website, www.permalert.com, for the latest revision of this manual.

The manual is typically revised at least once a year. The revision date is on the back cover.

Contact techsupport@permalert.com for technical assistance with the PAL-AT system.

Table of Contents

Safety Information 4

1 Introduction 5

1.1 General Description 5
1.2 Applications 5
1.3 Receiving and Handling Precautions 5
1.4 Materials and Equipment Normally Supplied by PermAlert 5
1.5 Materials and Equipment Normally Supplied by Installing Contractor 6

2 PAL-AT Alarm/Locator Panel 7

2.1 Alarm/Locator Panel Installation 7
2.2 Terminals 8
2.3 Power Connection 8
2.4 Audible Alarm Wiring 8
2.5 Control Relays 8
2.6 Communications 11
2.6.1 Port 1 - RS-485/RS-232 11
2.6.2 Port 2 - RS-232 11
2.6.3 Ethernet 11
2.7 Replaceable Parts 11
2.7.1 Battery 11
2.7.2 24 VDC Fuse 12
2.8 Contrast Adjustment 12
2.9 Impedance Jumper Setting 12
2.10 UL 12
2.11 FCC and CE Compliance Requirements 12

3 Zener Barrier Panel 13

3.1 Introduction 13
3.2 Panel Installation 13
3.2 Panel Wiring 15
3.3 Zener Barrier Assembly (ZBA) Installation 15
3.4 Fuse Protection 15
3.5 Allowable Cables and Probes 15

4 Jumper Cable and Junction Box Installation 17

4.1 Jumper Cable 17
4.2 Calibration Points 18

4.3 Junction Boxes 18

5 Cable Installation in Secondary Contained Piping 19

5.1 General 19
5.2 Pull Points 20
5.3 Cable Splices 22
5.3.1 Factory Installed Fiber Pull Rope to Continuous Pull Wire Rope Splice 22
5.3.2 Wire Rope to Wire Rope Splice 23
5.3.3 Wire Rope to Wire Rope Splice (alternate) 24
5.3.4 Wire Rope to Leak Detection Cables 25
5.4 Installation of the Continuous Pull Rope 27
5.5 Installing Sensor and Jumper Cables 29
5.6 Air Testing 32

6 Installation of Direct Buried Sensor Cable 33

6.1 General 33
6.2 Installing the Sensor Cable 34
6.3 Above Ground Storage Tanks 37

7 Cable Installation for Raised Floor Areas 39

7.1 General 39
7.2 Install the Sensor Cable 39
7.3 Locator Chart 40

8 Cable Connectors 41

8.1 General 41
8.2 Cable Connector Installation 41
8.2.1 CAGOLD and CATFH Connectors for Sensor Cables AGW-Gold, AGT-Gold, TFH-Gold and TFH 41
8.2.2 CAJMP Connectors for Jumper Cables JMP-U/-UD 44
8.2.3 CAJPP Connectors for Jumper Cables JPP and JMP 46
8.2.4 CAGOLD Connector for ATP Cable 47
8.3 Shrink Tubing 49
8.3.1 Cable Type TFH 49
8.3.2 Cable Types AGW-Gold, AGT-Gold and TFH-Gold 50
8.3.3 Cable Types JMP-U/-UD, JPP and JMP 51
8.4 Cable and Connector Testing Procedures 51
8.4.1 General 51
8.4.2 Continuity Test 51
8.4.3 Alternative System Test 52
8.4.4 Insulation Test 52

8.5 Cable Connections to Panels 52
8.5.1 General 52
8.5.2 Ferrule Installation in PAL-AT Panel 52
8.5.3 Ferrule Installation in Zener Barrier Panel 54
8.5.4 ATP Cable Connection at PAL-AT 56

9 Probes 57

9.1 UL Requirements 57
9.2 Probe Integrator Selection 57
9.3 Probe Installation 57
9.4 PHLR Hydrocarbon Probe 59
9.4.1 Cleaning Sensor Elements Procedure 60
9.4.2 Testing the Probe 61
9.4.3 Troubleshooting 61
9.4.4 Calibrating the Probe 61
9.5 Typical Installations 62
9.6 Probe Tests 67

10 ATP Cable in Polyurethane Foam Insulation 69

10.1 General 69
10.2 Pipe Installation Precautions 69
10.3 System Configuration 69
10.4 Calibration Points 69
10.5 ATP Cable and Connector Testing Procedures 69
10.5.1 Continuity Test 70
10.5.2 Insulation Test 70
10.5.3 Insulation Test with Wet Cloth 71
10.6 Start of Run 71
10.7 ATP Cable Splices 72
10.8 ATP Cable at Tee Connections 74
10.9 End of Run Termination 75
10.10 Requirements for Field Joints with Wind-Down End Seals 76

Appendix A – Special Instructions 77

A.1 Supply Power 77
A.2 Control Drawing 77
A.3 Zener Barrier Panel (ZBP) 77
A.4 Probe Integrator 77
A.5 Probe Integrator Static Precautions 77
A.6 ZBP Enclosure Fittings 78

WARRANTY 79

Safety Information

Please Read This Installation Manual

Please take the time to read this installation manual carefully. It will help you set up and operate your system properly. **Failure to follow these instructions may impair the safety of the equipment**. Please save this installation manual for future reference.

For your safety

Caution: *To reduce the risk of fire or electric shock, do not expose the PAL-AT to rain or moisture.*

CAUTION: TO REDUCE THE RISK OF ELECTRIC SHOCK,
TURN OFF POWER BEFORE OPENING ENCLOSURE DOOR.
REFER ALL SERVICING TO QUALIFIED PERSONNEL

This symbol alerts the user to the presence of uninsulated, dangerous voltage within the system enclosure that may be of sufficient magnitude to constitute a risk of electric shock.

This symbol alerts the user to the presence of important operating and maintenance instructions in this manual.

Approvals and Certifications

Regulatory Compliance Statements

FCC Class A Notice

This device complies with part 15 of the FCC Rules. Operation is subject to the following two conditions.

1. This device may not cause harmful interference, and
2. This device must accept any interference received, including interference that may cause undesired operation

NOTE: This equipment has been tested and found to comply with the limits for a Class A digital device, pursuant to Part 15 of the FCC Rules. These limits are designed to provide reasonable protection against harmful interference when the equipment is operated in a commercial environment. This equipment generates, uses, and can radiate radio frequency energy and, if not installed and used in accordance with this instruction manual, may cause harmful interference to radio communications.

Operation of this equipment in a residential area is likely to cause harmful interference in which case the user will be required to correct the interference at his own expense.

Changes or modifications not expressly approved by the party responsible for compliance could void the user's authority to operate the equipment.

The party responsible for product compliance:

Perma-Pipe, Inc.
6410 W. Howard St.
Niles, IL 60714

1 Introduction

1.1 General Description

This PAL-AT® Installation Manual is intended for use as a general installation guide for PAL-AT alarm/locator panels, sensor cable, cable connectors, and probes. Users (installers) should independently evaluate the suitability of this information and PermAlert's products for their application and specific installation. If you receive a PermAlert product not described in this manual, contact PermAlert for the appropriate instructions. PermAlert is a division of Perma-Pipe, Inc. Refer to the PermAlert website, permalert.com, for the latest revision of manuals and product data sheets.

1.2 Applications

The PAL-AT system consists of an electronic microprocessor-based alarm/locator panel that monitors sensor cables and/or probes. The sensor cable may be installed in many applications including: secondary contained piping; directly in the ground adjacent to fuel pipes or tanks; computer room subfloors; cleanroom subfloors, or any area where liquids need to be detected. There are several PAL-AT models available including:

AT30C: Monitors 1 cable up to 3,000 ft [900 m].

AT75C: Monitors 1 cable up to 7,500 ft [2300 m].

AT30K: Monitors 4 cables each up to 7,500 ft [2300 m].

Applications monitoring cables in hazardous locations must use a Zener Barrier Panel (see section 3).

1.3 Receiving and Handling Precautions

The following general precautions should be observed:

1. **Do not use substitute materials or short cut recommended procedures**. Understanding and following this guide is essential to avoid installation problems.
2. Collect the needed quantities of all materials well in advance of scheduled work.
3. Check the packing list against received items. **Report immediately any shortages or damaged materials to the delivering carrier.**
4. All cable must be tested immediately upon receipt following the cable test procedures contained in this manual. Report immediately to PermAlert any cables that fail the tests. Failure to report within ten workdays of receipt of goods shall waive the purchaser's right to file a warranty claim.
5. **The recommended minimum bend radius for all sensor and jumper cables is 1.5" [38mm].**
6. Care must be taken to store all PAL-AT components in a dry and protected area at all times. Electronic alarm/locator panels and sensor cable should be wrapped and sealed with plastic.
7. System drawings, provided by the designer, should indicate the extent, general location, and arrangement of leak detection equipment, cable, and probes. The contractor (installer) should become familiar with all details of the installation before proceeding.
8. Electrical work should be performed by a qualified electrician.

1.4 Materials and Equipment Normally Supplied by PermAlert

Each system may include the following items as quoted:

1. Leak detection/location alarm panel
2. Leak sensor cable
3. Jumper cable
4. Cable connector assemblies
5. Adhesive backed cable mounts (CMA) furnished for attachment of sensor cable to flat surfaces
6. Probe assembly, including a PT10 Probe Integrator installed in a NEMA 4X [IP66] junction box with 60' of jumper cable and one cable connector assembly

7. Watertight junction boxes conforming to NEMA 4X [IP66].

Maximum No. of Cable Connectors in Enclosure	Enclosure Dimensions
1	6" x 6" x 4" [150 mm x 150 mm x 100 mm]
2	8" x 6" x 4" [200 mm x 150 mm x 100 mm]
4	10" x 8" x 4" [250 mm x 200 mm x 100 mm]

8. Watertight cord grips
9. Shrink tubing for cable connectors
10. Non-corrosive RTV adhesive/sealant for cable connectors

1.5 Materials and Equipment Normally Supplied by Installing Contractor

Each system may require the installing contractor to supply the following items:

1. Pull rope, 1/8" [3 mm] diameter, 7 strands, steel wire rope aircraft cable. For installation of cable in fiberglass or other plastic piping systems, use plastic coated (non-vinyl) wire rope. Provide pull rope in quantities equal to 120% of system length. (Included with Perma-Pipe piping systems)
2. Cable spool rack or stand
3. PVC electrical tape
4. Miscellaneous pipe nipples, unions, and fittings, as required to provide watertight jumper cable connections to sensor cable.
5. 1" rigid or liquid-tight flexible electrical conduit, as required, for installation of jumper cable within manholes, pits, and buildings. Use 1" conduit hub, OZ Gedney CH-100, or equal, connection to junction boxes.
6. Electrical conduit, junction boxes, and wiring, as required.
7. Ohmmeter for testing jumper cables and sensor cables.
8. 1000-volt megger for testing ATP sensor cable.
9. Hole saw or knockout punch.
10. Construction adhesive mastic for attachment of cable mounts to unsealed concrete surfaces
11. Hot air gun for shrink tube application on cable connector assemblies

2 PAL-AT Alarm/Locator Panel

2.1 Alarm/Locator Panel Installation

The PAL-AT panel is designed to be permanently mounted indoors in a dry area. The enclosure is rated Type 12 [IP52]**.** It must not be located in direct sunlight to prevent excessive heat buildup. **In all installations, the ambient temperature surrounding the PAL-AT panel must be within the limits below.** The equipment is designed to be safe in the following range of environmental conditions:

a) Indoor use;
b) Altitude up to 6,560 ft [2000 m];
c) Temperature -4°F [-20°C] to 122°F [50°C];
d) Maximum relative humidity 95%;
e) Pollution degree 2.

Warning: Do not mount the PAL-AT panel in a hazardous location. The panel must be in an ordinary location even though sensor cables may be located in hazardous locations. Refer to the Zener Barrier Panel section of this manual.

Mount the PAL-AT panel securely to a wall, using ¼" [M6] hardware in the 4 holes on the back of the panel (see figure 2-1). If it is mounted to a typical ½" plasterboard wall, use ¼" x 1 ½" [M6 x 40mm] lag screws to secure it to the studs (nominal 2" x 4" [50mm x 100mm]). The panel can also be mounted to steel mounting channel struts using ¼" [M6] machine screws.

The PAL-AT panel is connected to the sensor cable using jumper cable (Type JMP-U, JMP-UD or JPP). An exception to this requirement is ATP cable that uses 50' [15 m] of ATP for jumper (see section 9). **At least 50' [15 m] of jumper cable (65' [20 m] if JPP) must be connected between the panel and the connection to the sensor cable.**

The jumper cable must be run in a separate conduit from the power supply cable. All conduit fittings must be appropriately rated and installed properly to maintain the rating of the enclosure. All electrical connections must comply with local codes. **Remove the system board from the white back panel (six #6-32 screws) before drilling holes in the enclosure for conduit openings to prevent damage and contamination from metal shavings.**

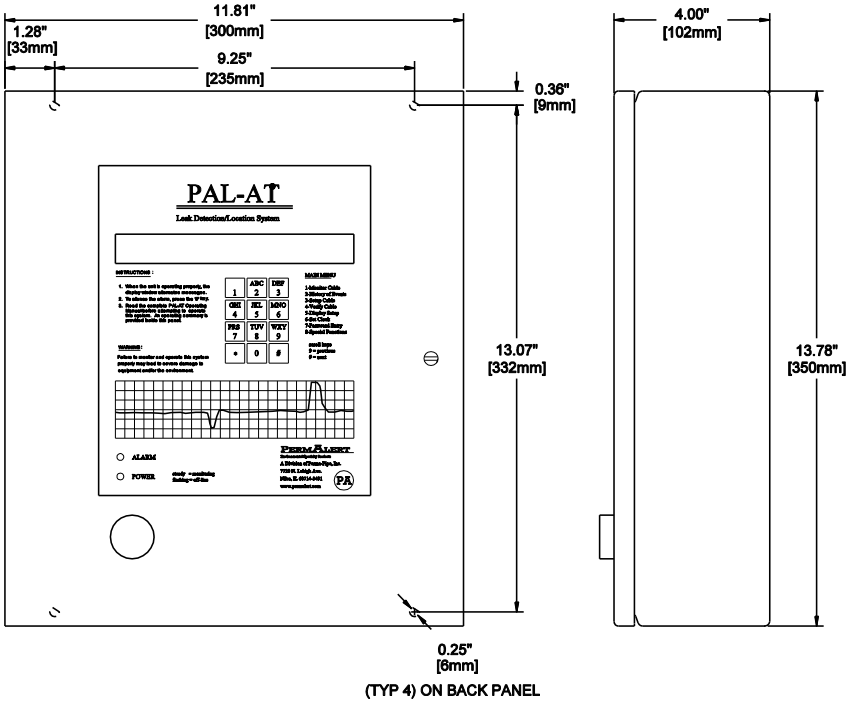

Models AT30C, AT75C and AT30K
Mounting Dimensions

Figure 2-1

2 PAL-AT Alarm Panel

2.2 Terminals

The terminals on the PAL-AT system board use a quick-connect design that provides an easy, fast and robust connection. A flat blade screwdriver, 1/8" [3.5 mm], is used to press down on the terminal lever and open the terminal for easy wire insertion. Release the lever, and the wire is tightly clamped. **The acceptable wire size for connection to any terminal, including the mains, is 28 - 12 AWG [0.08-2.5 mm^2].** The terminals can accommodate solid or stranded wires. **If ferrules are used with stranded wire, the maximum wire size is 14 AWG [1.5 mm^2].** Refer to the detail located at the upper right side of figures 2-2 and 2.3. **Caution: The lever only travels 1/8" [3.5 mm] to open the terminal completely, and only requires 5 - 8 lbs [2-4 kg] force. Do not exceed these limits or the terminal will be damaged.**

2.3 Power Connection

The PAL-AT must be permanently wired to instrument-quality power using appropriate certified conduit, fittings, and wiring. Refer to figures 2-2 and 2-3 wiring diagrams for details. The PAL-AT contains a universal power supply. The power requirement is 110-240 VAC, 50 / 60 Hz, 0.3 A / 50 VA.

A suitable external over-current protection device, such as a fuse or circuit breaker (15 A), and disconnect device is recommended. The over-current protection and disconnect devices shall be installed on all ungrounded conductors, i.e. the terminal marked hot (L) (and neutral (N) terminal if ungrounded for 240 VAC). The disconnect device shall be located near the equipment and marked with appropriate ON (I) OFF (O) markings as specified by local codes. The ground conductor shall have green with a yellow stripe insulation and be connected to the grounding connection on the upper right corner of the back panel as shown. Installation should be performed by qualified personal in accordance with local codes and procedures.

The PAL-AT can also be powered by a 24 VDC, 1 A / 24 VA, over-current protected power source at terminal T5. Fuse F1 on the PAL-AT system board protects the 24 VDC input. It is a 2A, 250 V, time-delay, 5 x 15 mm fuse.

Caution - Before accessing the PAL-AT panel, the panel must be disconnected from the power source and isolated from any hazardous voltage present in the panel, e.g. relay wiring.

Three internal switches on the system board control the power source utilized by the panel. These switches are intended for use by service personnel. Set the AC Power Switch (SW3) and the 24 VDC Power Switch (SW1) in the down, or "OFF" position. Next, set the Input Power Select Switch (SW2) to either VAC or VDC depending on the desired power source. The panel is controlled by SW3 for AC power *or SW1 for DC power.*

2.4 Audible Alarm Wiring

An internal 90-dBA pulse horn is supplied. An optional chime alarm is available. The wiring for the horn is a 2-wire cable connected to terminal strip T6. The red wire must be connected between the "+" terminal on the horn and the "+" T6 terminal. The black wire must be connected between the "-" terminal on the horn and the "-" T6 terminal. The terminal provides 24 VDC @ 10 mA.

2.5 Control Relays

PAL-AT has 3 to 6 SPDT output relays, depending on the model, rated for 250 VAC, 10 A. They are labeled "Fault Alarm", "Common Alarm" and "Cable x", where x=1 to 4 for the appropriate cable number (see figures 2-2 and 2-3). The relay contacts are labeled in their unpowered or "on-the-shelf" condition.

The fault relay is energized whenever the panel is powered. It is used to monitor for power loss.

The common alarm relay will be switched in response to any fault condition. The # key can be pressed to reset the common alarm relay to its normal state and deactivate the internal audible alarm for up to 96 hours. The default reset time is 12 hours.

The cable relay(s) will activate when a fault is detected and will reset when the fault returns to normal or the alarm queue is cleared. The default setting is to activate for all alarms, but it is firmware selectable to activate in response to only leak and probe active alarms.

Control devices or auxiliary equipment should be connected to the cable relay(s) so they will not be reactivated when the alarm is silenced. PAL-AT is shipped with the common alarm and cable

relays configured to operate in a normally de-energized mode, so they energize when the panel is in the alarm state (see the *PAL-AT Operating Manual* for changing relay configuration).

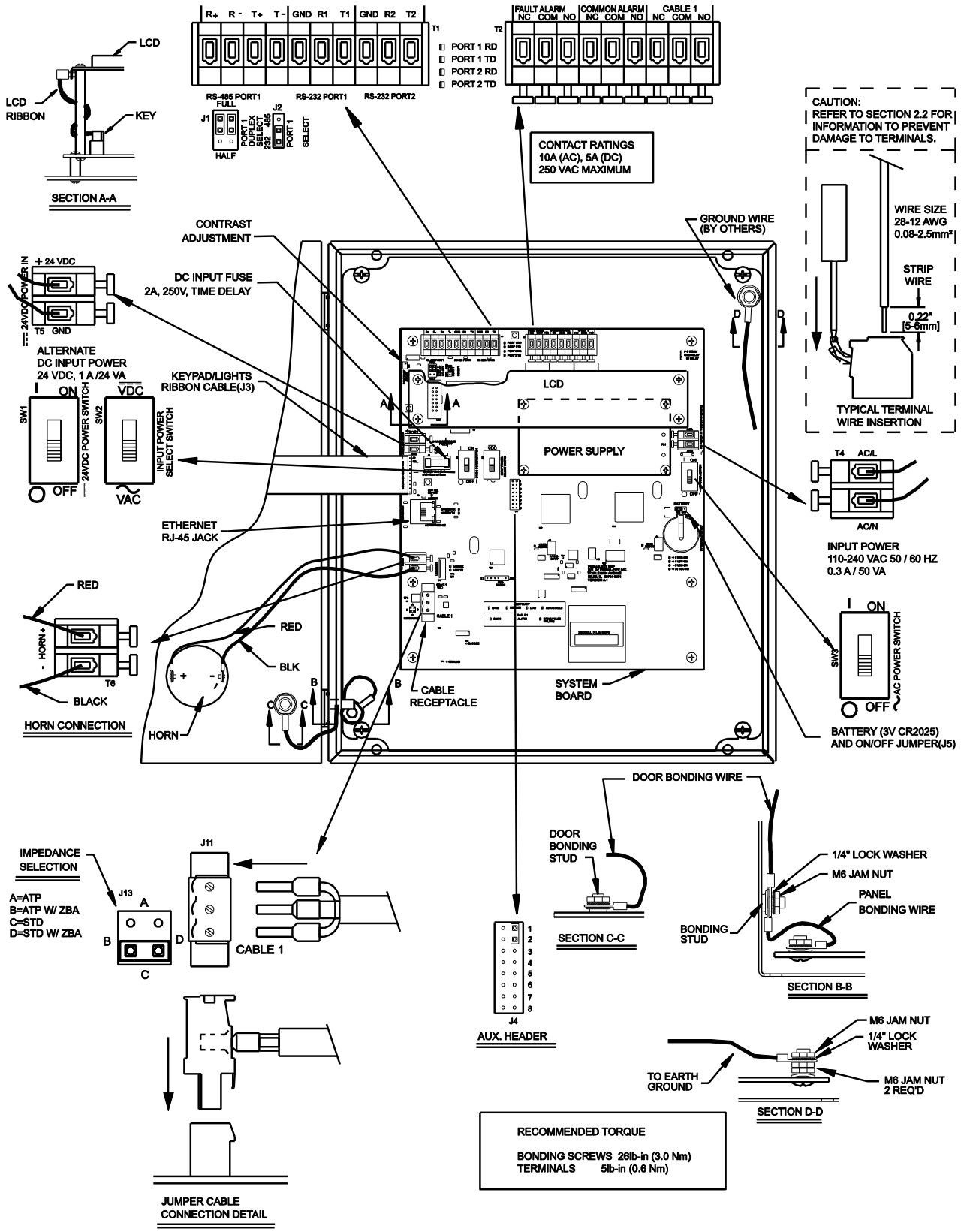

Figure 2-2
Wiring Diagram for PAL-AT Models AT30C & AT75C

2 PAL-AT Alarm Panel

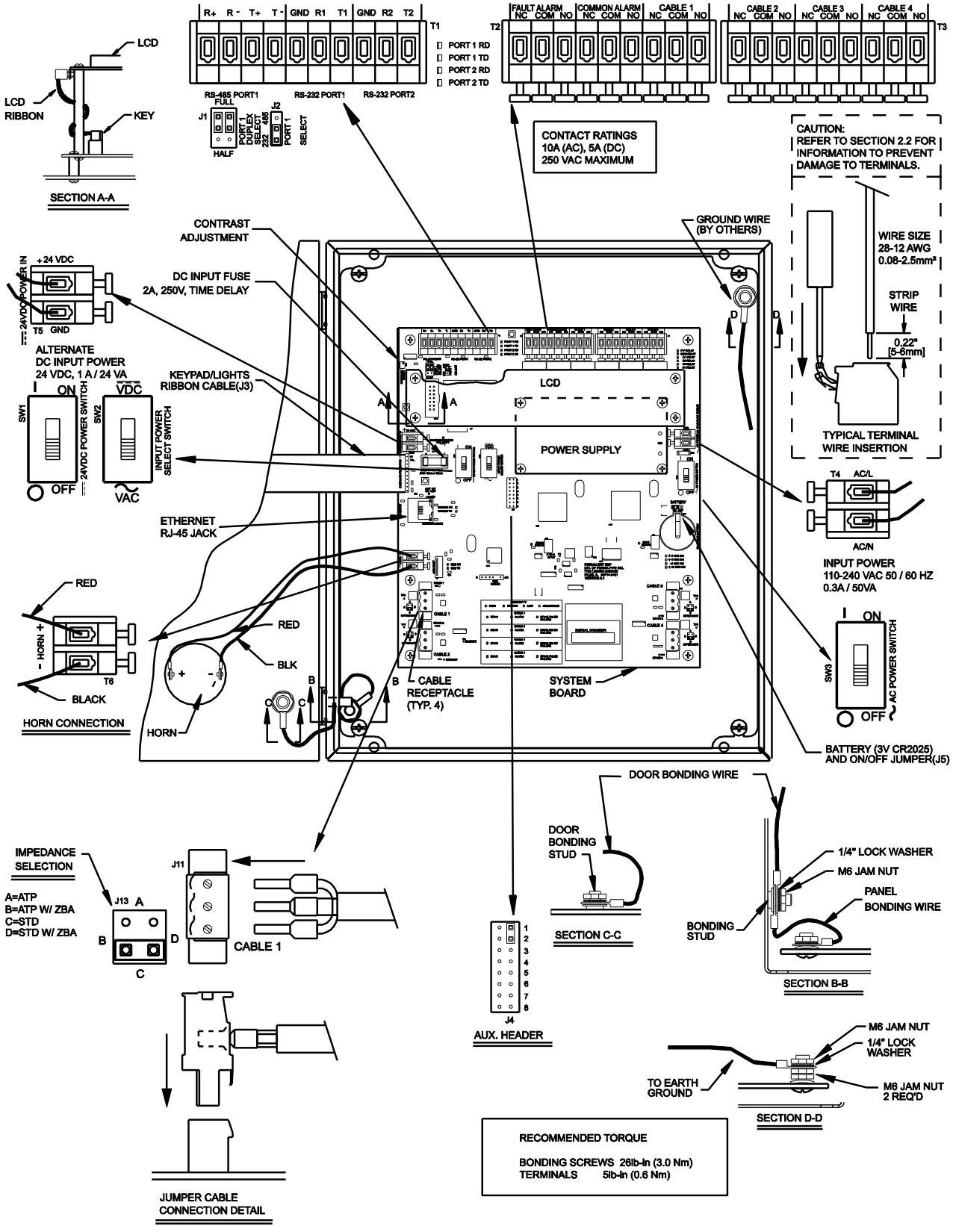

Figure 2-3
Wiring Diagram for PAL-AT Model AT30K

2.6 Communications

PAL-AT is provided with several options for communication. The options include:

Port 1 – RS-485/RS-232
Port 2 – RS-232
Ethernet - RJ-45 connector

Refer to the *PAL-AT Operating Manual* for complete operating details and firmware configuration.

2.6.1 Port 1 - RS-485/RS-232

Port 1 can be configured for RS-485 or RS-232 (refer to figures 2-2 and 2-3). To configure it for RS-485, jumper J2 should be placed in the top position. Then the two jumpers at J1 can be set to select either full (top positions) or half-duplex (bottom positions).

Full duplex is available using two twisted-pairs connected to T1 terminals R+, R-, T+ and T-.

Half duplex, or 2-wire RS-485, requires a jumper wire connecting terminal R+ to T+ and a jumper from R- to T-. Each PAL-AT is a full load for the RS-485 network. A crimp ferrule is recommended to connect each incoming RS-485 lead to the corresponding jumper wire to insure a solid connection of the two wires in the T1 terminals.

All RS-485 cables in the network should be properly terminated as per EIA RS-485 recommendations. Typically the network is a daisy-chain configuration and two 120 ohm termination resistors are installed, one at each end of the network. Shields of the network cables should be connected together and grounded at only one point.

Port 1 can be configured for RS-232 by moving J2 to the bottom position. Then a 3-conductor cable should be connected to T1 terminals GND, R1 (receive) and T1 (transmit). The baud rate is configured via the PAL-AT firmware.

2.6.2 Port 2 - RS-232

RS-232 communications through port 2 requires a 3-conductor cable connected to T1 terminals GND, R2 (receive) and T2 (transmit). The baud rate is configured via the PAL-AT firmware.

2.6.3 Ethernet

An Ethernet RJ-45 jack provides a TCP connection to the PAL-AT. There are three ports available to handle different protocols: port 1024 for ASCII data (PALCOM), port 502 for Modbus TCP, and port 1050 for Modbus RTU over TCP.

An optional BACnet gateway is also available. Refer to Modbus to BACnet Converter Instructions (DOCID: PPPA-PRC-CSV-006) for more information.

Refer to the *PAL-AT Operating Manual* for complete operating details and firmware configuration.

2.7 Replaceable Parts

Caution - Before accessing the PAL-AT panel, the panel must be disconnected from the power source and isolated from any hazardous voltage present in the panel, e.g. relay wiring.

2.7.1 Battery

Battery BT1 on the PAL-AT system board maintains the clock settings when the panel is off. Jumper J5, located above the battery, must be set “On” (left position) to enable the battery. The battery is a 3 V lithium type.

Replace Battery With Energizer CR2025 Only. Use of Another Battery May Present A Risk of Fire or Explosion.

Caution, Battery May Explode if Mistreated. Do Not Recharge, Disassemble or Dispose Of in Fire.

It can be obtained locally or through PermAlert. It is replaceable by gently lifting the retaining clip to remove the old battery and sliding in the new one. Be careful to install the battery correctly. The lettering on the battery (+) should be facing out.

2.7.2 24 VDC Fuse

In addition to a user supplied external overcurrent protection device, fuse F1 on the PAL-AT system board protects the 24 VDC input. It is a 2 A, 250 V, time-delay, 5 x 15 mm fuse. It can be obtained locally or through PermAlert.

2.8 Contrast Adjustment

The contrast of the LCD can be adjusted by turning the contrast adjustment screw on the system board (see figures 2-2 and 2-3). This may be necessary to get the best viewing angle, depending on the mounting height of the PAL-AT panel.

2.9 Impedance Jumper Setting

Refer to figures 2-2 and 2-3 for positioning the impedance jumper. The 2-pin jumper is placed in position A, B, C, or D according to the type of cable and whether a Zener Barrier Assembly (for hazardous locations) is connected to the selected cable. The position should be:

Jumper Position	Cable Type	Zener Barrier Ass'y Installed
A	ATP only	No
B	ATP only	N/A
C	All others	No
D	All others	Yes

2.10 UL

PAL-AT is listed by Underwriters Laboratories, Inc. for installation in ordinary locations. The optional Zener Barrier Panel must be installed if any leak detection circuits are located in hazardous locations.

CAUTION - The maximum operating voltage allowed in the PAL-AT panel is 250 VAC. In addition, the voltage on any wires to the control relays must be limited to 250 VAC.

2.11 FCC and CE Compliance Requirements

Each PAL-AT system is supplied with several "ferrite blocks" (PermAlert part # 8058207) to comply with FCC and CE regulations for a Class A digital device. The sensor cables, jumper cables, and all communications wires must pass through two blocks before exiting the enclosure (see figure 2-4). All relay wires and power wires must pass through one block.

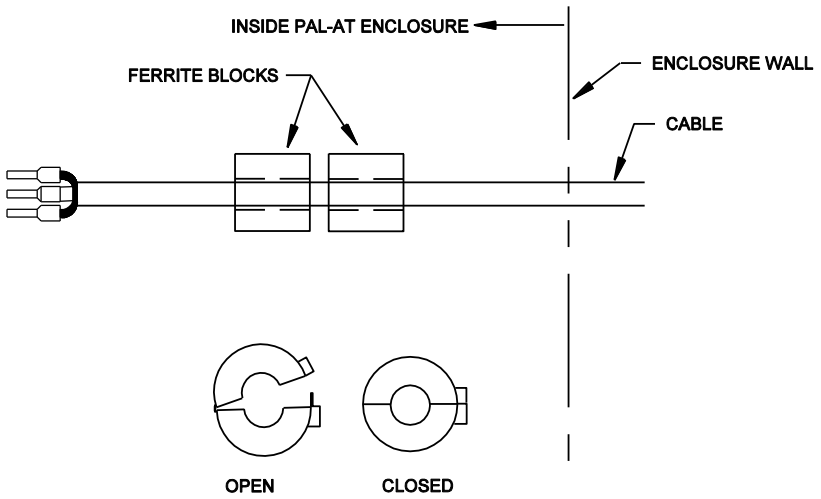

NOTE: JUMPER CABLES AND COMMUNICATION CABLES MUST PASS THROUGH 2 FERRITE BLOCKS.
RELAY WIRES AND POWER WIRES MUST PASS THROUGH 1 FERRITE BLOCK.
A FERRITE BLOCK CAN HAVE MORE THAN 1 WIRE IN IT IF THERE IS SUFFICIENT SPACE.

Figure 2-4
Ferrite Block Assembly

3 Zener Barrier Panel

3.1 Introduction

The optional Zener Barrier Panel (ZBP) is available for connection to PAL-AT when leak detection cables and probes are installed in hazardous locations. It provides intrinsically safe output circuits for use in Class I, Division 1 Groups C and D hazardous locations (Zone 0, Group IIB) when used with PAL-AT sensor cables, jumper cables, and probes, installed in accordance with the instructions in this manual. **Refer to Appendix A, Special Instructions, for intrinsic safety requirements.**

The ZBP also functions as a surge suppressor and reduces the chance of damage to the internal Zener Barrier Assemblies (ZBA) and PAL-AT from external voltage spikes, e.g. nearby lightning strikes.

3.2 Panel Installation

The ZBP is designed to be permanently mounted indoors in a dry, non-hazardous location. The enclosure is rated Type 4, 12 [IP66] (see figures 3-1, 3-2, and 3.3). The enclosure must not be located in direct sunlight to prevent excessive heat buildup. **In all installations, the ambient temperature surrounding the panel must not be less than -4°F [-20°C] and not exceed 140°F [60°C].** Relative humidity must be less than 95% (non-condensing).

The ZBP must be located adjacent to the PAL-AT panel. **Each Zener Barrier Assembly (ZBA) in the panel has a 5 ft [1.5 m] cable connected to the cable plug in the PAL-AT. The cable must be run in conduit between the two panels.**

The jumper cable from the ZBP to the sensing cable in the hazardous location must be routed in conduit. All conduit fittings must be appropriately rated and installed properly to maintain the rating of the enclosures. All electrical connections must comply with local codes. Seal-offs may be required to prevent vapors from traveling into the ZBP.

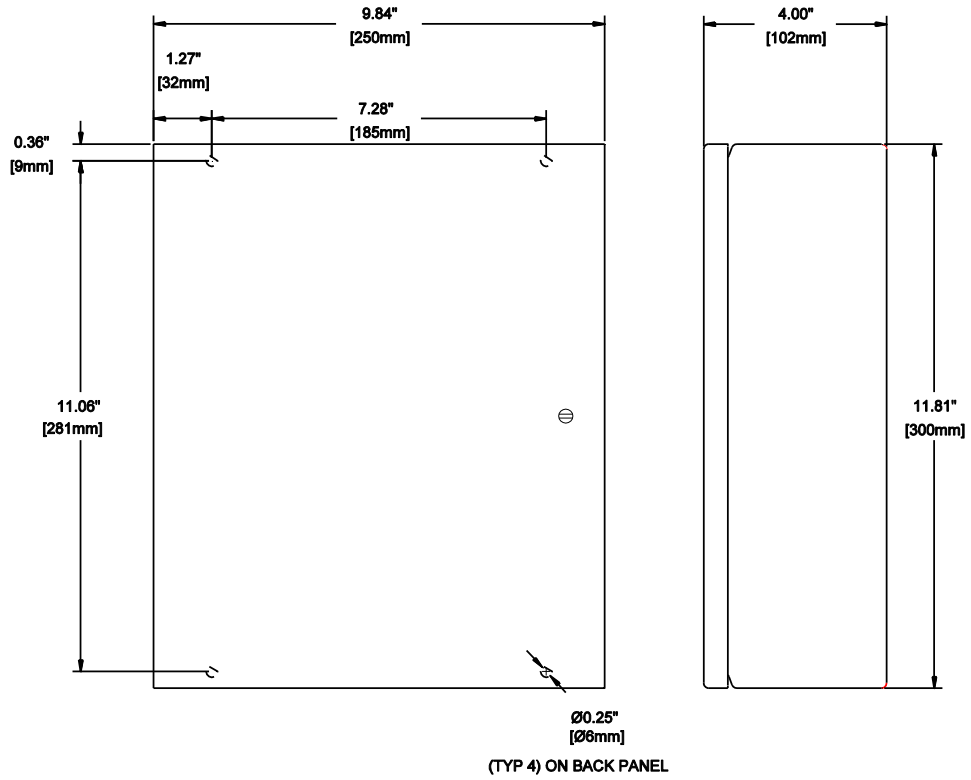

Figure 3-1
Zener Panel Mounting

3 Zener Barrier Panel

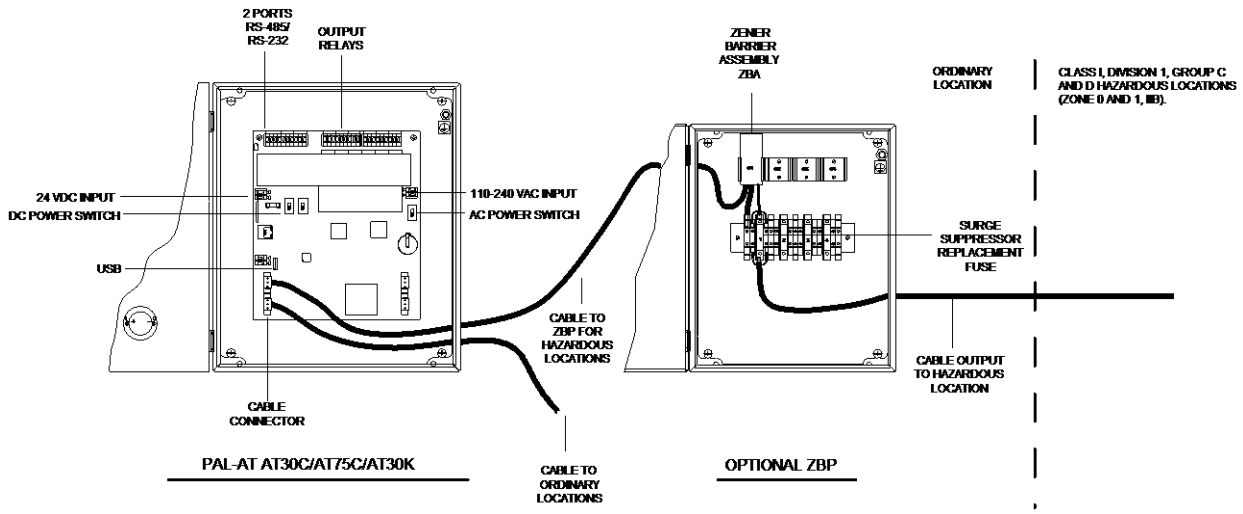

Figure 3-2
PAL-AT and Zener Barrier Panel

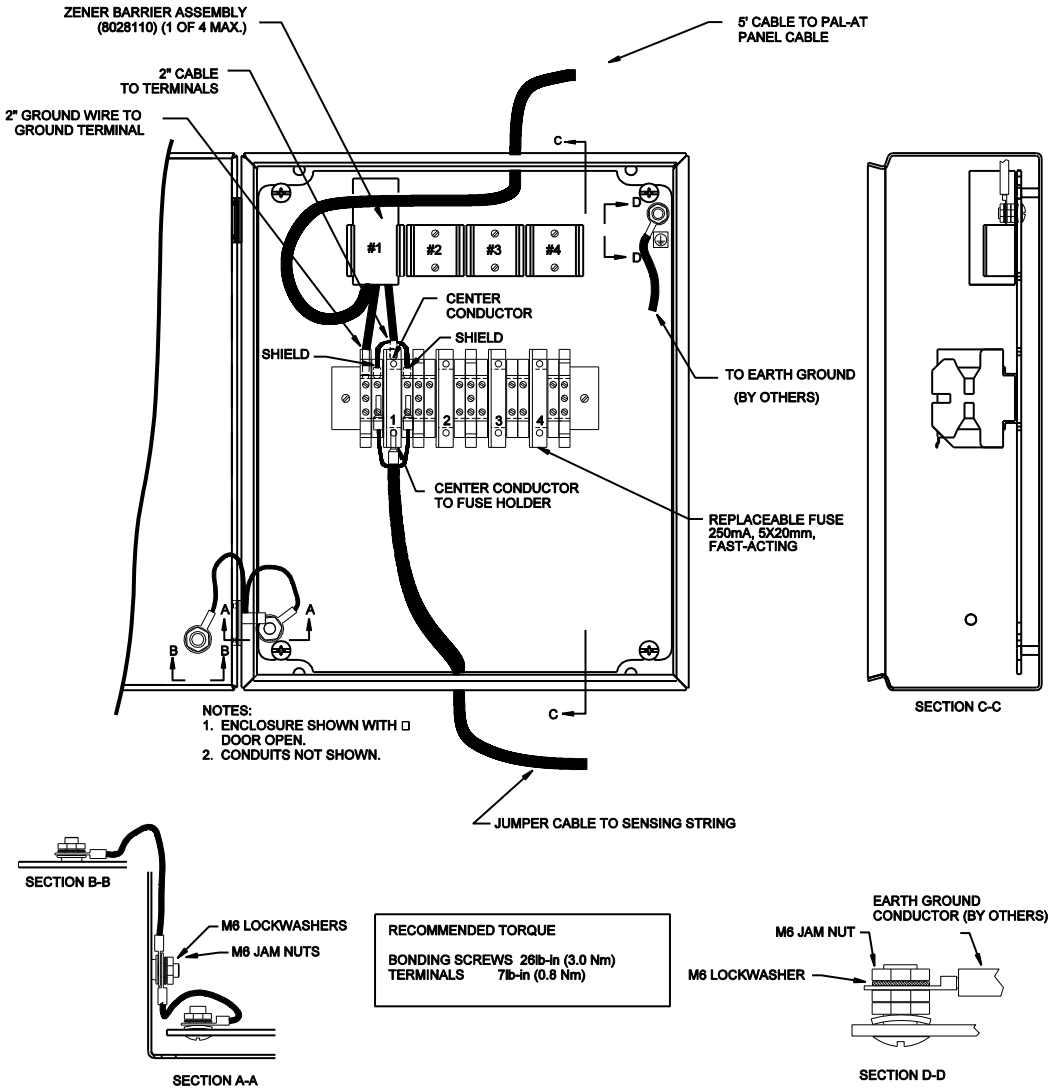

Figure 3-3

Zener Barrier Panel (ZBP) Wiring

3.2 Panel Wiring

The standard Zener Barrier Panel (ZBP) includes one zener barrier assembly (ZBA) and has provisions to install three additional ZBA's. Each ZBA has a 2" [50 mm] coaxial cable lead, a 5' [1.5 m] coaxial lead and a 2" [50 mm] ground wire.

The 5' [2 m] cable should be routed through conduit and connected to the appropriate cable plug in the PAL-AT panel. The jumper cable to the PAL-AT sensing string should be connected to the fuse holder and adjacent terminal blocks for the appropriate cable number. The jumper cable should have a ferrule on the center conductor and two ferrules on the braid. Refer to section 8, Cable Connectors, for details.

A customer supplied earth ground wire, minimum 12 AWG [4 mm^2], must be connected between the ground connection on the upper right corner of the white back plate of the enclosure and the ground bus of the power distribution panel.

3.3 Zener Barrier Assembly (ZBA) Installation

Refer to figure 3-3 to install a ZBA.

1. If an existing ZBA is to be replaced, loosen the four screws on the terminal strip for the ground wire, coaxial cable center conductor, and two coaxial cable braid wire ferrules. Lift the ZBA out of the mounting clip. Remove the end of the 5 ft. long cable from the connector in the PAL-AT panel.
2. Position and rotate the new ZBA so the 2" ground wire aligns with the appropriate ground terminal (green/yellow terminal). Note the ground terminal for barrier #4 is on the opposite side of the fuse holder as the other barriers. Loosely insert the ground wire, the coaxial center conductor ferrule and two braid wire ferrules into the ground terminal, fuse holder and adjacent terminals. The ground wire ferrule is a snug fit in the terminal and may have to be rotated slightly to insert fully.
3. Press and hold the ground wire fully inserted into the ground terminal, while tightening the terminal screw. Next, press and hold in place the coaxial center conductor ferrule into the fuse terminal and tighten the terminal screw. Similarly, press, hold and tighten each of the braid wire ferrules. Snap the zener barrier assembly into the plastic holder. The 5' [1.5 m] cable should be routed through conduit and connected to the appropriate cable plug in the PAL-AT panel.

3.4 Fuse Protection

Each Zener Barrier Assembly is protected from external voltage surges by a replaceable fuse in the terminal strip fuse holder. The 5 x 20 mm fuse is rated 250 mA, 250 V, fast-acting (Littelfuse 0217.250 or equal). A replacement may be purchased from PermAlert (part # 8067989) or obtained locally.

3.5 Allowable Cables and Probes

Refer to Appendix A – Special Instructions for the PAL-AT control drawing and additional intrinsic safety requirements for hazardous areas. The following cables, probes, and probe integrators supplied by PermAlert comply with the allowable electrical characteristics:

Part No.	Cable Type	Part No.	Probe Type	Part No.	Probe Type
8017705	AGW-Gold	8027888	PHLR-S	8027920	PSTV-L
8017700	AGT-Gold	8027889	PHLR-L	8027633	PTHL-S
8017640	TFH-Gold	8027911	PHLR-P-S	8027970	PTHL-L
8017635	TFH	8027912	PHLR-P-L	8027629	PT10-SC
8017715	JMP-U	8027623	PFS-S	8027932	PT10-SO
8017718	JMP-UD	8027910	PFS-L	8027930	PT10-LC
8017685	JPP	8027624	PSTV-S	8027934	PT10-LO

Note: A PWS probe or a probe integrator connected to a customer supplied probe having an exposed conductive surface, may not be connected to a ZBA.

3 Zener Barrier Panel

4 Jumper Cable and Junction Box Installation

4.1 Jumper Cable

1. Jumper cable (types JMP-U, JMP-UD, or JPP) is used to connect sensor cable segments and probes in series to form the sensing circuit (sensing string). Jumper cable is not affected by occasional contact with water and can be installed in building and vaults. In underground locations and areas where damage may occur to the jumper cable, electrical conduit should be used to provide protection. In wet environments or areas subject to flooding, cable connectors on jumper cable should be located in watertight electrical junction boxes (NEMA 4 or 4X) [IP66].
2. At least 50' [15 m] of jumper cable (65' [20 m] for type JPP) must be installed from the PAL-AT panel or Zener Barrier Panel to the first section of sensor cable or probe. An exception is connecting to ATP cable (see section 10).
3. Table 4-1 lists the length of jumper installed at the very end of a sensing string. A cable connector must be installed to terminate the end of the last jumper cable section and a threaded plastic cap is supplied to cover the connector.
4. Refer to section 9, table 9-1 for additional jumper cable required in a probe section.
5. Where possible, jumper cable connections to sensor cable should be made within the monitored area. PermAlert recommends the use of OZ Gedney, or equal, cord grips installed as shown in figure 4-1. Cord grips must clamp only jumper cable or TFH cable. The plastic outer braid on TFH cable must be pulled back so the cord grip is located on the smooth outer jacket.
6. Check the cable/connector assembly with an ohmmeter in accordance with the cable testing procedures contained in this manual.
7. The recommended minimum bend radius for all jumper cables is 1.5” [38mm].

Table 4-1
End of System Jumper Cable Length

System Length ft / [m]	JMP-U/UD End Jumper Length ft / [m]	JPP End Jumper Length ft / [(m]
0–2500 / [0-750]	30 / [9]	40 / [12]
2500-5000 / [750-1500]	50 / [15]	65 / [20]
5000-7500 / [1500-2300]	100 / [30]	125 / [40]

4 Jumper Cable Installation

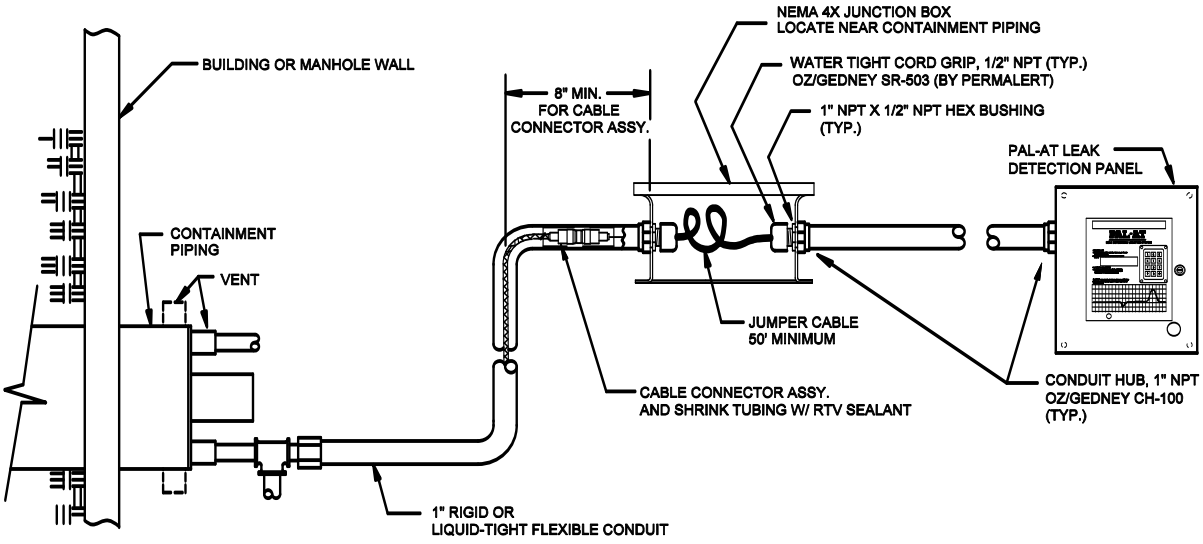

Figure 4-1
Typical Cable Connection in Monitored Areas with Junction Boxes

4.2 Calibration Points

1. During the initial setup and calibration of the PAL-AT system, connectors at selected locations (calibration points) are temporarily disconnected. **Therefore, it is imperative to have accessibility to connectors at calibration points at all times until the system is brought on-line.**
2. Reported fault location accuracy of the first leak is dependent upon the use of and distance between calibration points. Calibration points are required at changes of cable types unless connected to short lengths of jumper cable (15' [5 m] or less). Additional calibration intervals of 500' [150 m] or less will result in location accuracy of within +/- 5' [1.5 m]. Systems installed with calibration intervals exceeding 500' [150 m] will have a location accuracy of less than +/- 1% of the cable length from the previous calibration point.

4.3 Junction Boxes

There are two series of junction boxes supplied by PermAlert. The standard, polyester box has a maximum temperature rating of 150°F [65°C]. A fiberglass box is available for temperatures to 300°F [150°C].

1. Locate and install all junction boxes before installing any cable. Locate junction boxes as indicated on system drawings or as required. These locations include calibration points, the start and end of cable runs, manholes, probes, etc. Care must be taken to prevent water from contaminating these areas.
2. Securely mount the junction boxes to a vertical wall. In manholes or pits that might collect and hold water, mount junction boxes as high as possible. Use NEMA 4X [IP66] junction boxes at all locations.
3. Use a hole saw to cut the junction box as needed for conduit.
4. When jumper cable is installed in electrical conduit, use watertight conduit hubs and cord grips at junction boxes. Discard the male bushing supplied with the hub and use the cord grip supplied in its place. Depending upon the specific products used, a lock nut may be required on the cord grip's threads to pull the hub tight to the wall of the junction box.

   Caution: Always keep junction boxes and electrical conduits capped to prevent water from entering.

5 Cable Installation in Secondary Contained Piping

5.1 General

In secondary contained pipe applications, the sensor cable is installed in the bottom (6 o'clock position) of the air space between the product pipe(s) and secondary containment (outer casing or conduit). The leak detection cable is a sensitive sensor, capable of detecting small amounts of liquid. **Therefore, every effort must be made to keep the cable dry and prevent water from entering the air space. In addition, long-term accumulations of water, corrosive liquids, or hydrocarbon liquids in the containment pipe may degrade the containment or the leak detection system components.** The piping system must remain sealed during installation to prevent moisture entering the system. The installing contractor must install caps on the open ends of pipe installed in a trench to prevent liquids from entering the conduit or containment pipe.

Caution: A heated system using mineral wool or fiberglass insulation should be carefully monitored during startup. If the insulation is wet (even from atmospheric moisture) prior to startup, the water may combine with the ammonium sulfate binders in the insulation and release ammonia when the pipe is heated. The ammonia is detrimental to the leak detection cable and may be detrimental to the piping system if left uncorrected.

If the system becomes wet, it must be completely dried. Drying methods can consist of pulling a vacuum on the interstitial space, using compressors with desiccant dryers, or other methods. Obtain guidance from your piping supplier on proper techniques to be used with your system.

This section is intended to cover installation methods typically employed with any fabricated secondary contained pipe systems. Typically, these manufactured products are custom fabricated with product pipes positioned by specially designed supports within the secondary containment. **All pipe supports and changes in direction must have guides constructed out of stainless steel, minimum ¾" [20 mm] ID tubing, with flared ends. Plastic supports must be avoided when the carrier pipe is metal. Consult with the piping system manufacturer before installation to ensure provisions are being made for the cable installation.** Because the sensor cable installation is dependent upon the design provisions employed by the pipe manufacturer, it is recommended the secondary pipe manufacturer supply the leak detection/location products. This sole source responsibility will greatly facilitate proper installation with lower cost.

The following charts are general references for installing a sensor cable into field-constructed secondary contained pipe system built with piping components. Typically, these systems are constructed using standard lengths of pipe and fittings for the product and secondary containment structures. Components of the piping system should be designed, manufactured, and installed to facilitate sensor cable installation. Because the sensor cable is placed on the bottom of the air space, there must be a continuous unobstructed passage for the cable(s) being pulled into the system. **PermAlert recommends a 1" [25 mm] air space. Pipe support design and alignment is critical. Pipe supports and other surfaces the cable contacts during "pulling" operations must be smooth to prevent snagging or damaging the cable.**

Field joint designs and procedures employed in the installation of the piping system must prevent damage to the pull rope and/or sensor cable.

Pull ropes must be installed as the pipe system is assembled together to facilitate the installation. Special stainless steel ¾" [20 mm] ID guide tubes must be installed in the air space of the containment straight, elbows, tees and wyes (lateral) at the factory. Pull points must be designed and provided at specific locations to facilitate the installation of the pull cable and leak detection cable. **The recommended minimum bend radius for all sensor and jumper cables is 1.5" [38mm].**

5 Cable Installation

Leak Detection Sizing Chart
Polypropylene / Polyethylene Piping SDR Sizes

Pipe Size (in) [mm]	Casing Size (in) [mm]	SDR11/SDR11	SDR11/SDR32.5
1.5 [40]	4 [100]	OK	OK
2 [50]	6 [150]	OK	OK
3 [80]	6 [150]	OK	OK
4 [100]	8 [200]	OK	OK
6 [150]	10 [250]	OK	OK
8 [200]	12 [300]	OK	OK
10 [250]	14 [350]	NO	OK
12 [300]	16 [400]	N/A	OK
14 [350]	18 [450]	N/A	OK
16 [400]	20 [500]	N/A	OK

Leak Detection Sizing Chart
For Standard Weight Steel and Fiberglass Pipe
(w/o insulation, 10 gauge steel or fiberglass containment)

Pipe Size (in) [mm]	Casing Size (in) [mm]
2 [50]	6 [150]
3 [80]	6 [150]
4 [100]	8 [200]
6 [150]	10 [250]
8 [200]	12 [300]
10 [250]	14 [350]
12 [300]	16 [400]

Note:

1. **Not all pipe types or sizes are shown in the above charts. For different systems, contact PermAlert.**
2. **Chart is based on smooth pulling surfaces and installation of guide tubes.**
3. **Multi pipe system will require factory sizing.**

5.2 Pull Points

1. Sensor cable must be “pulled” into the monitored areas using a continuous pull rope free of splices between pull points. Surfaces the cable contacts during “pulling” operations must be smooth to prevent snagging or damaging the cable.
2. Generally, pull points can be located at 500' [150 m] intervals for straight runs. Each 90° fitting on the run reduces the interval by 150' [50 m]. For example, a run of 50' [15 m] with three elbows is allowable (500' - (3 x 150') = 50').
3. Pull point designs should be selected not only based on accessibility during installation, but potential future cable replacement. When future cable replacement is a consideration, it is recommended underground installations have watertight junction boxes or secondary contained access points installed at grade or in vaults (see figure 5-1).

Caution: Pulling points often become calibration locations. When this occurs, accessibility to the cable connectors is necessary during the initial commissioning of the PAL-AT and the system’s setup procedures.

4. **Pull ports may also be used for periodic testing**. If so, a short length of sensor cable (minimum 5' - AGW-Gold, 15' – TFH/TFH-Gold) with connectors should be installed in the pull port during the initial setup. It is used as a test piece and can be replaced if needed after testing without setting up the cable string again.

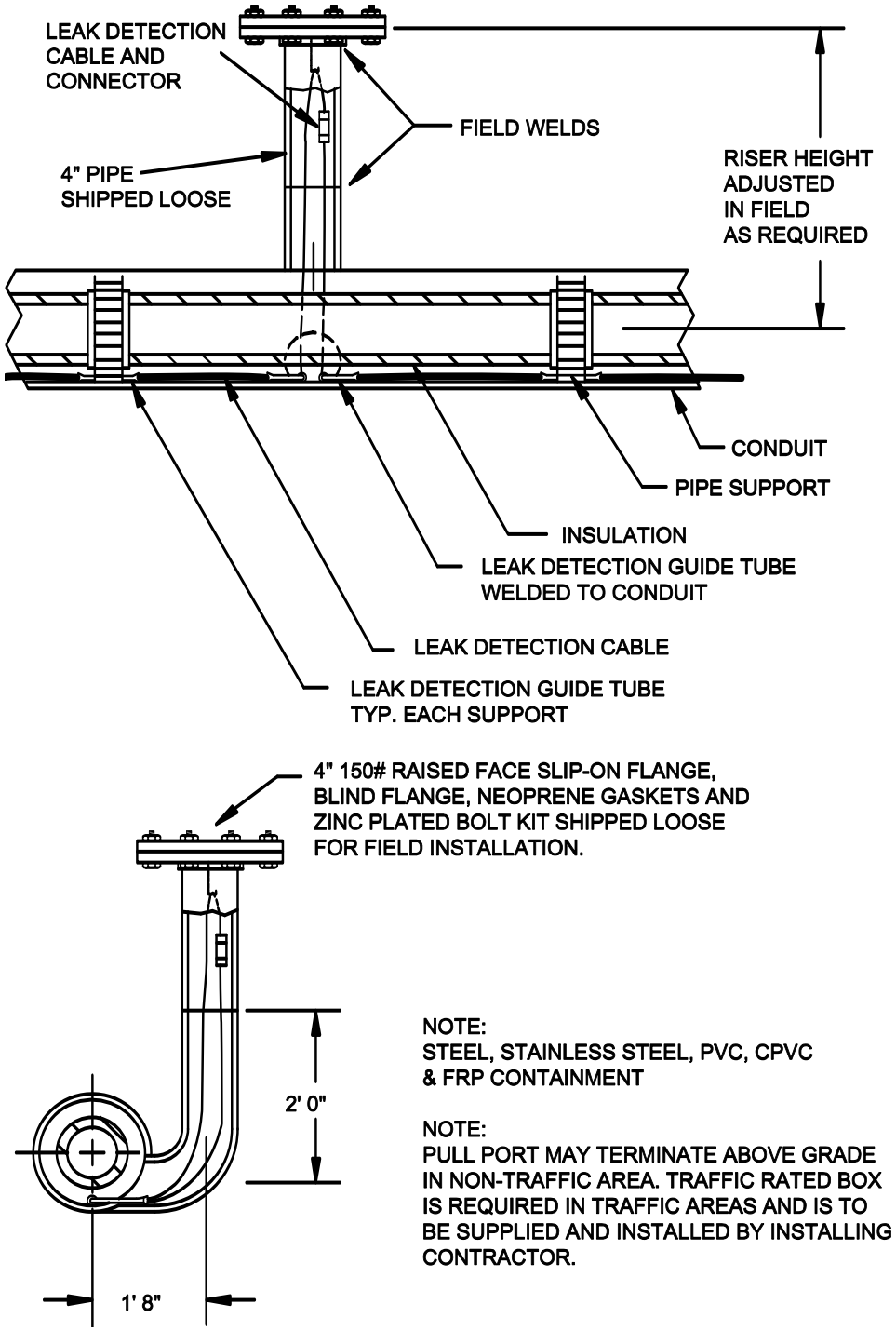

Figure 5-1
Detail of Pulling Point

5 Cable Installation

5.3 Cable Splices

Continuous pull rope and sensor cable are "pulled" into the secondary containment during certain stages of installation. Several splices are used to provide secure attachments to pull ropes and cable during this procedure. The following methods are recommended for splicing.

Note: When using tape to seal the splices, use only PVC electrical tape. PVC tape minimizes drag on the cable and reduces snags.

5.3.1 Factory Installed Fiber Pull Rope to Continuous Pull Wire Rope Splice

Step A Extend 12" to 18" [300 mm to 450 mm] of fiber rope and 14" to 20" [350 mm to 500 mm] of wire rope.

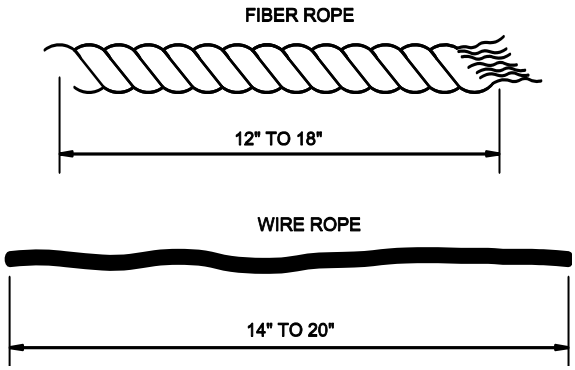

Step B Wrap a small amount of electrical tape around the fiber rope's end to prevent unraveling. Using a small pointed object (such as a nail), slightly separate the fiber rope braid and weave the wire rope into each opening of the braid as you go.

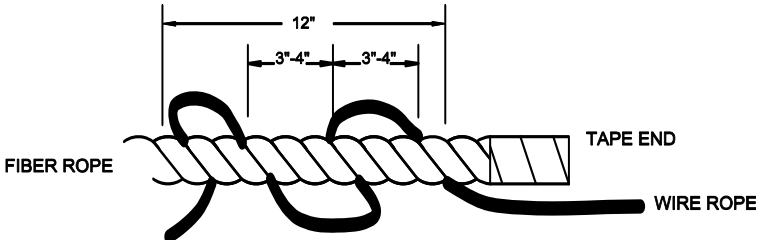

Step C Pull the wire rope tight, as it is woven into the braid.

Step D Using electrical tape, wrap the entire length of the splice area. The tape should extend approximately 2" [50 mm] over each end of the splice.

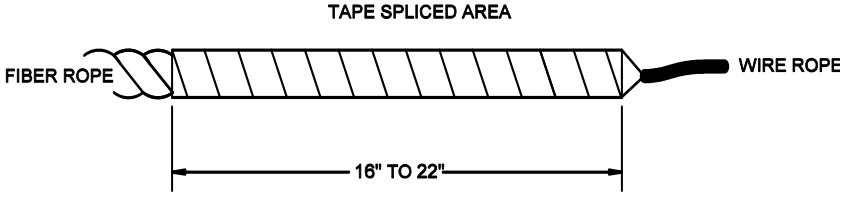

5.3.2 Wire Rope to Wire Rope Splice

Step A Extend 12" to 18" [300 mm to 450 mm] of each wire rope end for the splice.

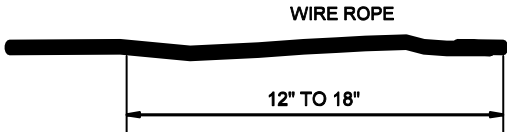

Step B Unravel each of the 12" to 18" ends into a 3-strand and a 4-strand section (approximately 50% in each), keeping the adjacent strands together.

Step C Starting approximately ¼" to ½" [6 mm to 12 mm] from the start of the wire rope's split, intertwine a section from each of the two ropes.

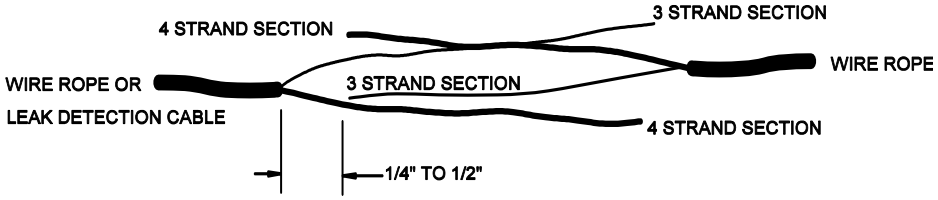

Step D Line up the two remaining sections and intertwine them together in a similar manner. In order to minimize the size of the splice, make sure the starting points for each intertwining operation line up with each other.

Step E Starting at approximately 1" [25 mm] from the beginning of the splice, wrap electrical tape around the splice until the entire splice, plus 1" on each end, is covered. Normally only one wrap is needed. Make sure both ends of the tape wrap are tapered and smooth in case the pull direction must be reversed.

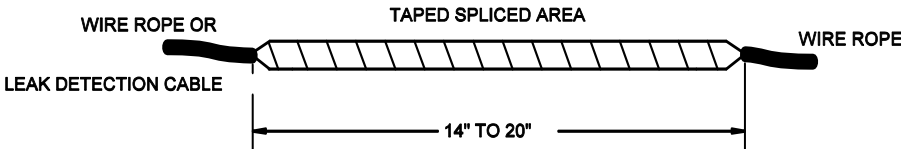

5.3.3 Wire Rope to Wire Rope Splice (alternate)

Note: Use this splice when splicing two different size wire ropes together

Step A Extend 8"-10" [200 mm to 250 mm] of each wire rope to be spliced.

Step B Unravel each of the 8"-10" sections (to approximately the same length) into two sections to form a Y with three adjacent spiral strands on one side, three adjacent spiral strands with center strand on the other.

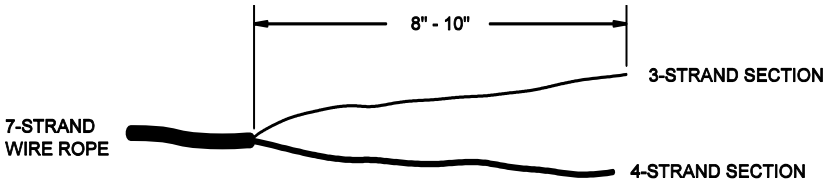

Step C Taking one end of the first cable, fold over the 4-strand section of the Y to form a loop. Join the 3-strand section to the 4-strand section. Wrap the 3-strand section around the 4-strand section so the strands appear as in the original undisturbed cable.

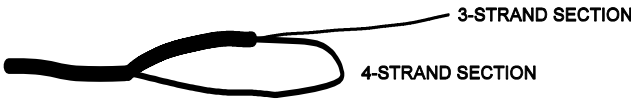

Step D Take the second cable Y end and place the 4-strand end through the eye of the first cable loop.

Step E Repeat steps A through C.

Step F Using a pair of pliers, crimp the ends of the loops.

Step G Spiral wrap the splice tightly, using electrical tape.

5.3.4 Wire Rope to Leak Detection Cables

The following steps apply in general to all sensor and jumper cables. However, there may be slight variations to the steps presented depending on the cable selected. For example, the jumper cables have an outer jacket but no plastic overbraid, while the TFH cable has both a jacket and an overbraid.

Step A Extend the 7-strand 1/8" [3 mm] wire rope for splicing. Cut the end so all strands are even.

Step B Unravel 8" [200 mm] of the wire rope into two sections to form a "Y" with three adjacent spiral strands on one side and four strands on the other side.

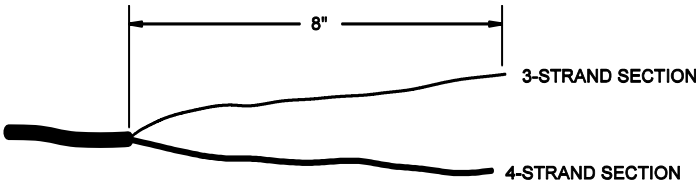

Step C Extend approximately 5' [1.5 m] of cable for the splice. Form a small loop in the shape of a "U" 5' from the end of the cable and tape it in place tightly. Do not kink the cable when forming the "U" (Skip this step with jumper cables.)

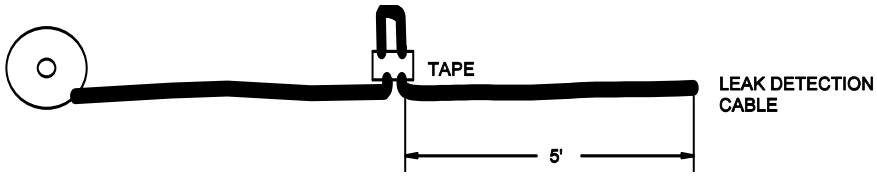

Step D Cut the end of the cable so the plastic overbraid, jacket, metallic braid, center conductor insulation, and center conductor are flush at the end of the cable.

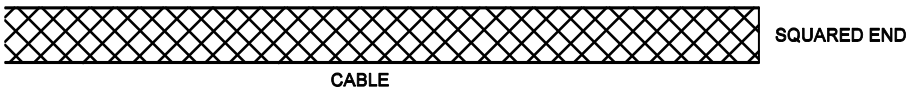

Step E Slide the plastic overbraid back over the sensor cable at least 24” [600 mm] and tape in place tightly.

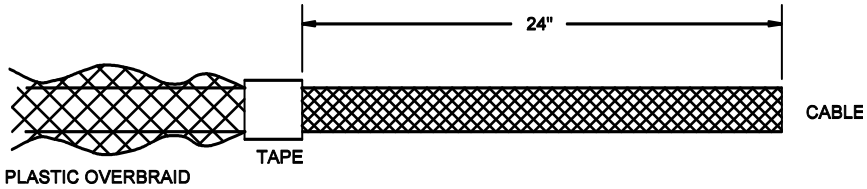

5 Cable Installation

Step F Cut 5" [125 mm] off the exposed end of the sensing cable.

Step G Cut off 15"-18" [380 mm to 450 mm] of the outer jacket and tightly tape the edge of the outer jacket to the metallic braid. (This applies to only TFH and jumper cables.)

Step H Slide 12" [300 mm] of the metal braid back towards the taped jacket. Tape the metallic braid in place.

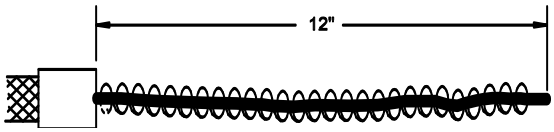

Step I Cut 4" [100 mm] off the end of the center conductor and conductor insulation.

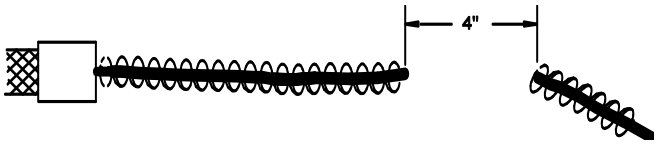

Step J Carefully remove 6"-8" [150 mm to 200 mm] of the dielectric spacer material and conductor insulation from the center conductor. Do not cut the center conductor strands when removing the thin film of insulation. Securely tape the end of the dielectric spacer to the center conductor.

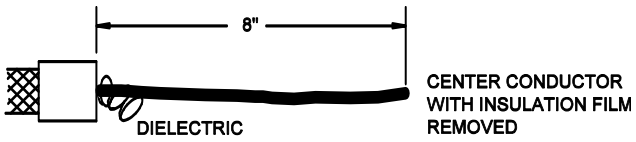

Step K Insert 1" [25 mm] of the cable's center conductor into the throat of the wire rope.

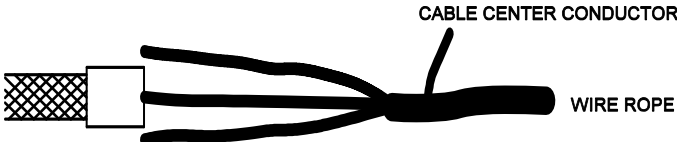

Step L Carefully braid 1" of the 3 and 4-strand sections of the wire rope.

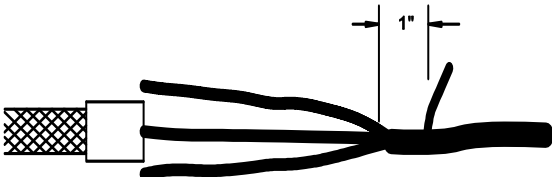

Step M Insert the center conductor of the cable into the next section of the Y throat of the wire rope. Continue to wrap and insert until approximately 5"-7" [125 mm to 175 mm] of the cable center conductor is woven into the wire rope. Tape the end of the wire rope with electrical tape. Cut off excess wire rope at the end of the splice if necessary.

Step N Spirally tape the entire spliced wire rope/center conductor area tightly from front to end.

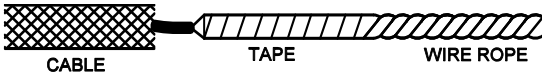

Step O Carefully slide the metallic braid over the woven splice area making sure the braid extends over the splice as much as possible, and is tight.

Step P Tightly tape the metallic braid in place, from the left end. Extend the tape just past the woven splice area. (Include 2”-3" [50 mm to 75 mm] of the white jacket if applicable.)

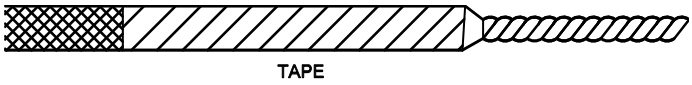

Step Q Carefully slide the plastic overbraid over the cable splice. Extend the plastic overbraid over the splice area as far as possible.

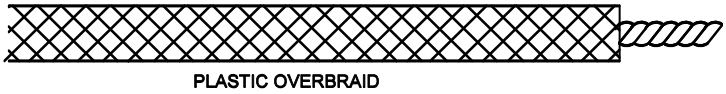

Step R Tightly tape the plastic overbraid in place, spirally, from the front end. Extend the tape just past the spliced area. The finished splice should be tapered in appearance.

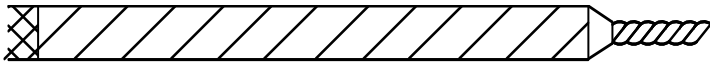

5.4 Installation of the Continuous Pull Rope

1. PermAlert recommends the installation of a continuous pull rope, free of splices between properly located and accessible pull points.
2. All sections of factory-prefabricated piping should be supplied with a factory-installed pull rope. The factory-installed ropes shall be used to pull the continuous pull rope into the air space before the secondary containment field joint closures are completed. Make sure the factory installed pull rope moves freely in each section of conduit when laying the pipe in the trench.

5 Cable Installation

3. Pulling the continuous pull rope into the air space of the secondary containment requires careful planning on the installer's part. Care must be taken during the installation of the pipe system to proceed in a manner to maintain accessibility to the factory installed pull rope.
4. The installation of the continuous pull rope and the pipe system must proceed simultaneously. Working ahead on closing the pipe system joints may prevent the successful installation of the pull rope, necessitating the reopening of a joint(s). **Avoid allowing water, mud or other debris from entering the air space.** This can prevent successful cable pulling and a functional system.
5. **Caution all workers involved in the pipe installation that the factory installed pull rope should never be "temporarily" removed with the expectation it can be replaced later.** Losing the end of the pull rope and allowing it to fall back inside the secondary containment must be avoided. Special care must be taken at risers where the weight of the rope, in the vertical section of the pipe, tends to pull the rope into the secondary containment.

Step A Splice the continuous pull rope to the factory installed pull rope. Follow splicing procedures contained in the "Cable Splices" section.

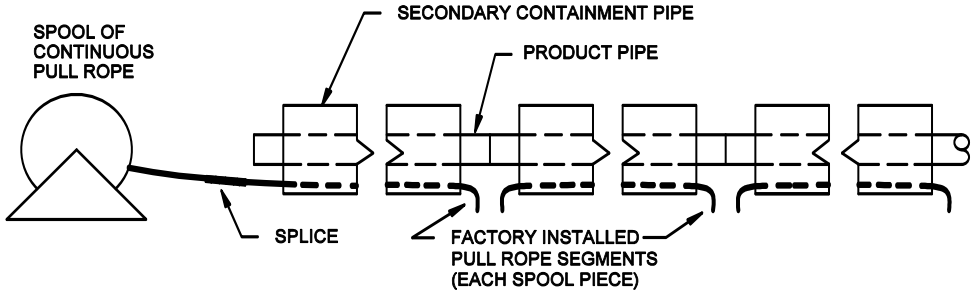

Step B Go to the first uncompleted secondary containment field joint and pull the continuous pull rope into the first section of piping until the splice exits the field joint.

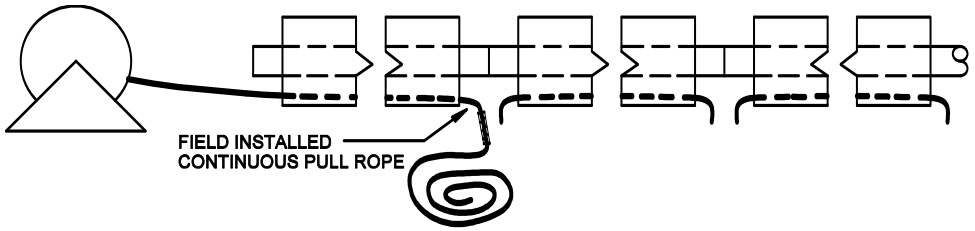

Step C Break the splice on the factory installed pull rope and discard the pull rope. Splice the continuous pull rope to the next section of factory pull rope, and pull the continuous pull rope into the next pipe

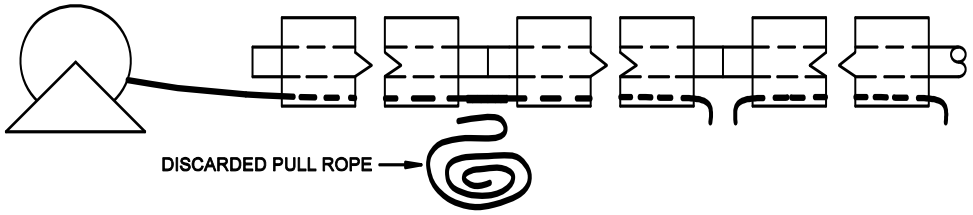

Step D Return to the first field joint. If the product pipes are insulated, apply insulation material. To prevent the continuous pull rope from being damaged during joining of the secondary containment, it must be held off the bottom of the containment. Attach the pull rope temporarily to the carrier pipe (insulation) by looping a piece of 22 gauge steel wire around the carrier pipe (insulation) and twisting the ends together to form a hook around the pull rope.

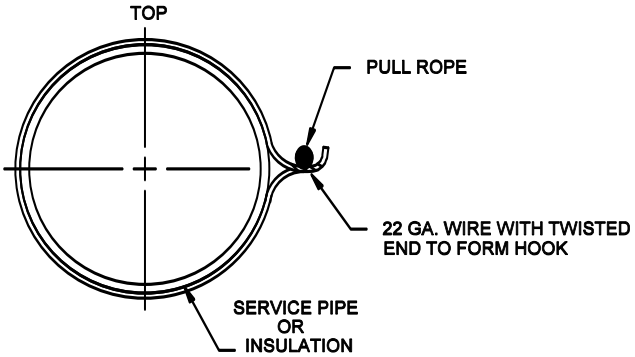

Step E The secondary containment field joint can now be made. After closing the field joint of the secondary containment, restrain the continuous pull rope at the spool end, and pull on the rope at the open field joint in order to pull the rope off the wire hook.

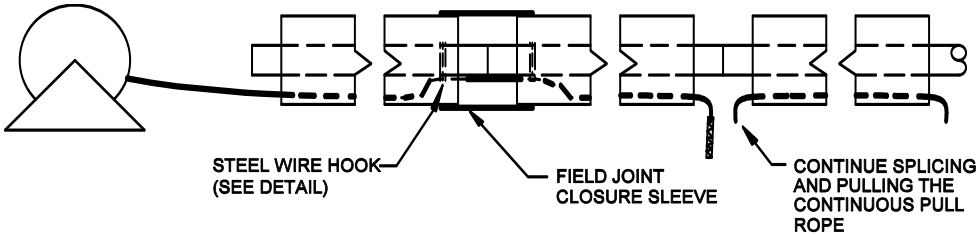

Step F Pull the continuous pull rope from the previously sealed joint to the next open field joint.

Step G Repeat the sequence of splicing, pulling and closing the field joints of the secondary containment until the continuous pull rope has been pulled through the entire piping run. Each time after completing 3 or 4 field closures, move the continuous pull rope back and forth in the containment to insure the pull rope moves freely.

5.5 Installing Sensor and Jumper Cables

1. After all other work is completed and the area is free and clear of all activities that can cause damage, the sensor cable should be installed. **Care must be taken during installation of sensor cable to avoid contact with potential contaminants such as water puddles or oil.**
2. PermAlert recommends installing the sensor cable before backfilling of underground secondary contained pipe systems.
3. **Keep the cable dry and clean.** Tent the spool area and do not install the sensor cable during a rainstorm.
4. Slowly play out the cable by hand rotating the spool. Never attempt pulling loose coils of cable off the end of the spool. When loose coils are pulled taut, kinks may form that could prevent bringing the system on-line.
5. **Always be careful to prevent the cable from falling into the secondary containment.** Be particularly careful at risers, where the weight of the cable in the vertical section of pipe tends to pull back the cable.
6. The bottom of a secondary containment that penetrates into a vault or building should be fitted with a minimum 1" [25 mm] threaded pipe coupling or similar fitting. This fitting will be located where the sensor cable enters (exits) the secondary contained piping system.
7. Check that the air spaces of secondary containment, at termination points of the piping system, are dry. Drain plugs in the containment should be provided for this purpose. If water is found, dry the system completely before attempting installation of the sensor cable.

8. Place the spool of sensor cable at the high end of the run. At this time, do not route the pull rope or cable through the junction box and conduit.
9. Splice the sensor cable to the continuous pull rope using the method described in section 4.3, "Cable Splices".
10. At least two workers are required to pull sensor cable. Work should proceed continuously from pull point to pull point. At the lowest elevation between two pull points, one person should slowly pull on the pull rope. At the higher elevation pull point, the second person should carefully play out the cable while pushing it into the interstitial air space. This push/pull action significantly reduces the pulling force required to install the cable. If a problem does arise, the workers must be able to signal each other quickly. Walkie-talkies are recommended so communication can occur to prevent cable damage.
11. **The pulling force should never exceed 50 lb [23 kg].** If a snag is encountered, carefully work the cable back and forth in an attempt to clear the cable. If the snag cannot be cleared, contact PermAlert's Field Service Department for assistance.
12. Where electrical conduit and junction boxes are required, use watertight NEMA 4X [IP66] boxes and mount per the instructions contained in this guide. Temporarily pull enough sensor cable out of the secondary containment and into the junction box (approximately 2' [600 mm]) to allow installation of cable connectors (see figure 5-2). **Make sure the bushings and cord grips are slipped on the jumper cable before installing the cable connectors.** Attach the cable connectors, test them, and push the assemblies into the electrical conduits. Thread and tighten the cord grips making a watertight seal against the jumper cable. The conduit termination points must be sealed. **Do not leave conduit termination points open, or moisture may enter and wet the sensor cable.**
13. **The ends of all cables should be kept dry during installation. If the cable ends are submerged in water, capillary action will wick water into the center conductor. This could cause corrosion and shorten the life of the cable.**
14. **If TFH cable is installed, the ends of the cable must be immediately sealed with the shrink tube caps supplied by PermAlert to prevent water from entering the cable under the jacket.** Make sure the polyester overbraid is not under the shrink cap to insure a good seal. **If water is allowed to enter the ends of TFH cable, it must be replaced.**

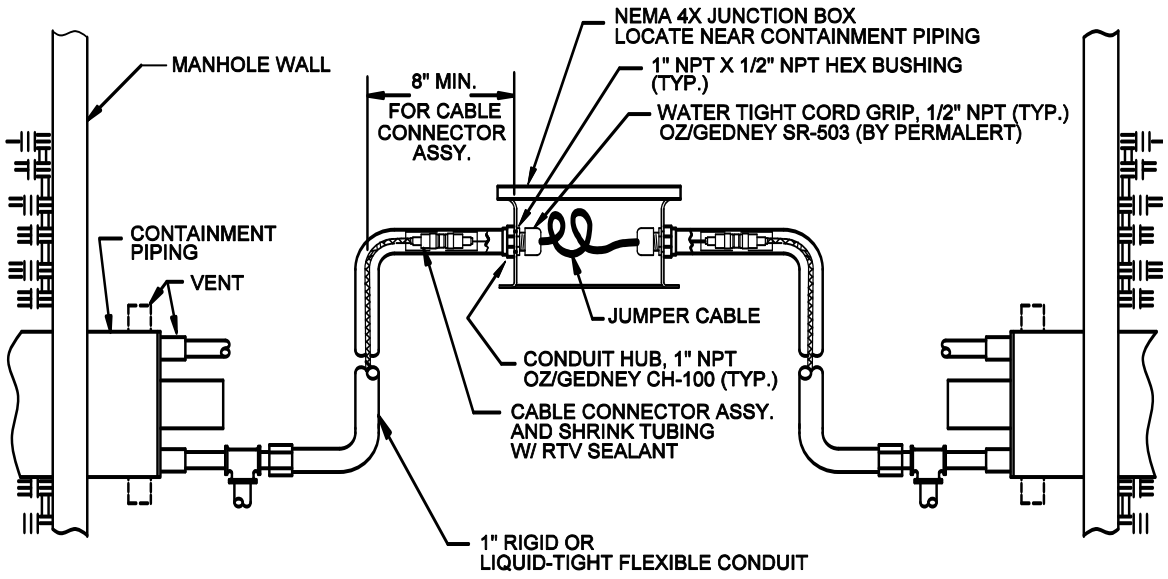

Figure 5-2
Cable Connections with Electrical Conduit and Junction Boxes

15. In contained pipe systems where branch runs and main runs are monitored, jumper cable can be used to return to the main from the branch. For these installations, PermAlert can furnish a cable routing drawing showing locations requiring the installation of sensor cable and jumper. Depending on the design of the secondary contained system and the free unobstructed air space available, both cables (sensor and jumper) may be installed in the secondary containment air space. This will require simultaneously pulling both cables, and most likely will reduce the length of cables that can be pulled at one time. When 2 cables are installed in the same air space, both cables must be pulled out of the secondary containment through the threaded coupling and finally connected together with a cable connector in either: (1) a watertight capped pipe chamber connected to the threaded coupling, as shown in figure 5-3 or (2) a NEMA 4X [IP66] junction box. This type of termination should also be accessible to allow for future maintenance. As an alternative to pulling both cables into the air space of the secondary containment, jumper cable can be routed in electrical conduit. If connectors must be used, it is recommended they be installed in accessible watertight NEMA 4X [IP66] junction boxes located at grade.

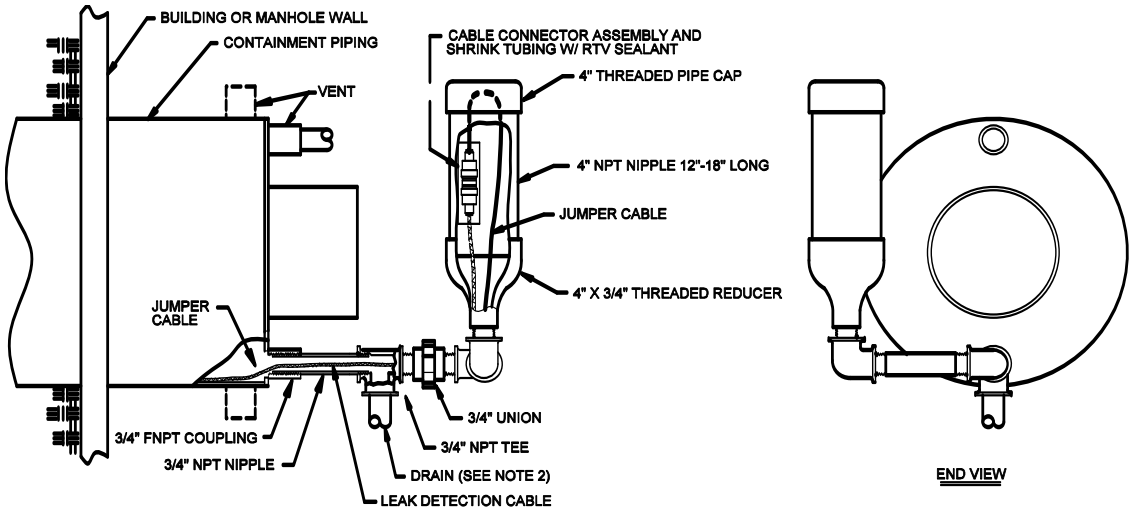

Figure 5-3
Branch Line Routing of Jumper Cable

16. At least 50' [15 m] of jumper cable must be installed from the PAL-AT panel before connection to sensor cable. Refer to table 1 (see section 3) for jumper installed at the very end of a sensing string in an enclosure (see figure 5-4). A cable connector must be attached to terminate the end of the jumper cable. Install the red plastic cap supplied with the PAL-AT, over the connector to keep it clean. The termination of the sensing string should be accessible for future maintenance.

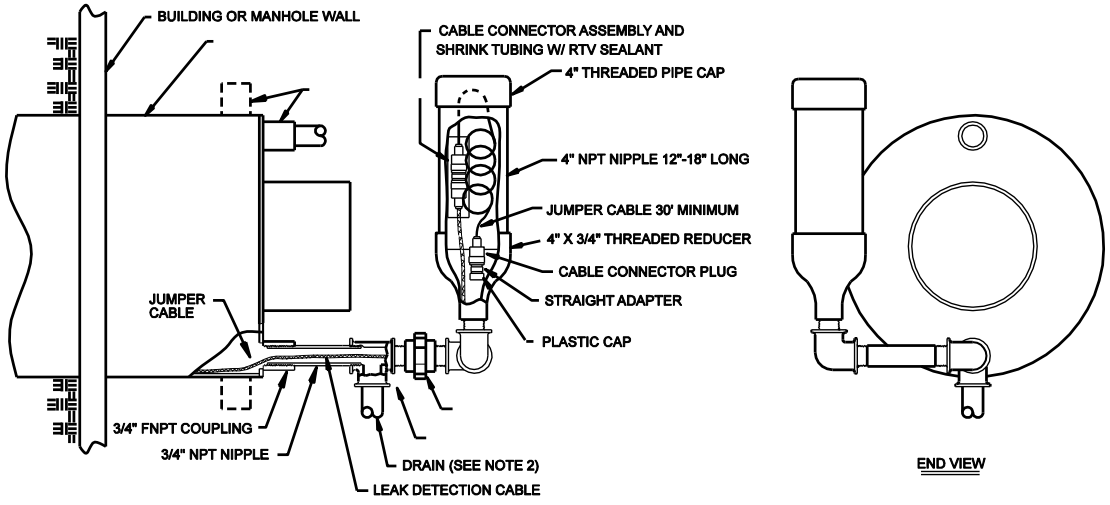

Figure 5-4
Termination of Sensing String

5.6 Air Testing

1. Air testing of the secondary containment must be performed before backfilling.
2. All sensor cable termination chambers (see figures 5-3 and 5-4) must be completely installed before applying the air test. Also, cap any open vents or drains. Be careful to prevent the pull rope or sensor cable from being blown back into the secondary containment.
3. Assemble required piping for air test and follow test procedure provided by the secondary containment piping manufacturer's installation guide.

   CAUTION: THE COMPRESSED AIR SUPPLY MUST BE FREE OF WATER AND OIL.
4. After the air test has been completed, remove test piping and cap test ports on the secondary containment.

6 Installation of Direct Buried Sensor Cable

6.1 General

The following instructions and precautions are very important for the successful installation and operation of the PAL-AT system with direct buried sensor cable. These instructions do not cover every possible situation, but are intended as guidelines for the majority of applications. Remember, the sensor cable is a sensitive electrical cable and should not be crushed, stretched, kinked, cut or damaged. If you have any questions regarding the installation of the direct buried cables, contact PermAlert. Failure to follow these instructions may result in damage to the cables or its jacket and prevent or limit operation of the PAL-AT system.

1. TFH and TFH-Gold cables are constructed of materials that detect hydrocarbon liquids, but ignore the presence of water. TFH cable has an outer jacket to protect the nickel-plated, copper braid wire. TFH-Gold cable does not have an outer jacket, but uses polymer-coated braid wire that is corrosion resistant.
2. These unique sensor cables can be installed in wet soil environments while monitoring for the leakage of hydrocarbon liquids. This feature permits direct burial of TFH/TFH-Gold, in 1½" or 2" "screened" or slotted PVC pipe, for the monitoring of underground single wall piping and tanks. The maximum burial depth of TFH/TFH-Gold cables is 20' [6 m]. This limitation is due to the fact the cable materials repel water to a maximum pressure of 8.7 psi [0.6 bar]. If the cable jacket (TFH) or cable core (TFH-Gold) is damaged, water may enter the cable and prevent or limit the operation of the PAL-AT system.
3. The location of the slotted pipe and hydrocarbon detection cable is determined by several variables. These variables include soil type, backfill material, product in the pipeline, water table, pipeline pressure and leak rate. Another consideration is if the installation is new or a retrofit of an existing pipeline.
4. It is recommended to slide a fabric sleeve or sock liner over the slotted PVC pipe to minimize soil entering and possibly blocking the pipe after an extended time. A 3" sleeve is typically available in home improvement stores and other sizes are available at industrial sources.
5. The sensor cables must be located where the hydrocarbon liquids will collect and allow detection. For some applications, the use of a closed synthetic liner, installed in the pipe trench, may be considered to facilitate the collection of hydrocarbon liquid for detection and reduce soil contamination. Normally one cable located in a slotted pipe adjacent to an underground pipe will provide satisfactory results. The slotted pipe may be located under the service pipe for a new installation. If the system is installed with an existing pipeline, the slotted pipe can be installed a few inches to the side of the pipeline to minimize the excavation cost.

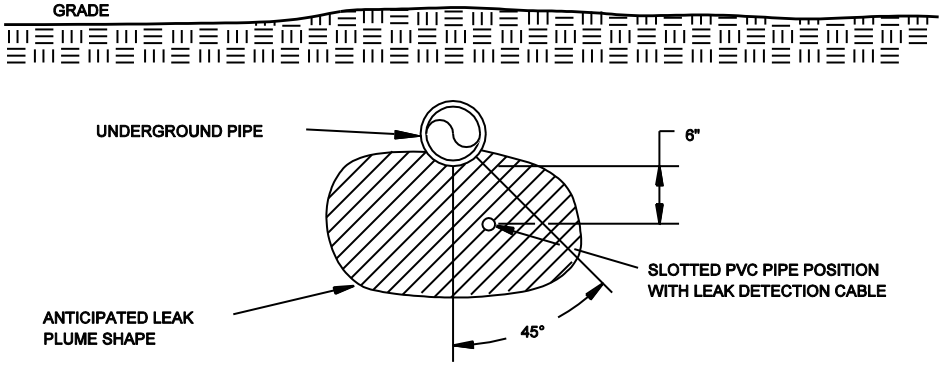

6. If buried TFH/TFH-Gold is submerged in water and the water freezes, the resulting compression of the cable may be detected as a leak and cause an alarm. This effect should be considered when determining the placement of the cable to reduce false alarms. It does not damage the cable.
7. **The recommended minimum bend radius for all sensor and jumper cables is 1.5" [38mm].**

8. If a synthetic liner is not installed under the slotted pipe, a compacted clay/silt base layer should be used under the pipe to minimize the vertical migration of a leak. The slotted pipe should be covered with backfill material of sand or soil.
9. It is recommended to have 12" [300 mm] inches of backfill installed and compacted with hand tampers above the slotted pipe before mechanical compactors are used, to prevent crushing the pipe.
10. During the storage and installation of TFH cable, the ends of the cable must be protected to keep water from entering. The cable is shipped with shrink tube caps on the ends. Additional caps are supplied with TFH connectors to be installed on the cable temporarily until the connectors are installed. The caps should be installed over the jacket, but under the outer plastic overbraid of the cable. The cable ends should not be immersed in water at any time, even with the shrink caps installed. After the connectors are installed, if there is any possibility of water contacting the connectors, they should be sealed with non-corrosive RTV and shrink tubing immediately. If the connector needs to be reopened later for calibration, slit open the outer shrink tubing. Replace it with a new shrink tube immediately after calibration. Shrink tube caps are not required for TFH-Gold.
11. The sensor cable must be protected from damage when it is in the trench before backfilling. The cable must be protected when pipes are being welded or other work is occurring nearby. The cable should not be stepped on.
12. All connectors of sensor cable must be located in junction boxes at or above grade. A vertical riser of PVC conduit or other material suitable for the project must be installed to provide protection to the cable through the backfill and into the junction box (see figure 6-1). Follow the instructions for installing cable connectors using shrink tubing and RTV sealant to insure a watertight assembly.

CAUTION: It is extremely important to prevent damage to the TFH cable jacket. A damaged cable must be replaced.

6.2 Installing the Sensor Cable

1. After all other work is completed and the area is free and clear of all activities that can cause damage, the sensor cable should be installed.

Care must be taken during installation of sensor cable to avoid contact with potential contaminants such as oil, hydrocarbon liquid, soap or other material that may contain surfactants. Contamination by any of these liquids will destroy the water repellency of the cable and it will need to be replaced.

2. When the construction schedule allows, the PAL-AT panel should be permanently mounted and connected with electrical power before installing jumper or sensor cable. This will allow the system's setup and calibration procedures to proceed efficiently. For additional information on calibration points, refer to the *PAL-AT Operating Manual*.
3. Slowly play out the cable by hand rotating the spool. Never pull loose coils of cable off the end of the spool. When loose coils are pulled taut, kinks form in the cable that could prevent bringing the system on-line. Protect open ends of the cable from damage, contaminants and moisture.
4. Starting from the panel, connect a minimum of 50' [15 m] of jumper cable before connecting the sensor cable. Route the sensor cable as shown on the contract drawings. Refer to table 1 (see section 3) for amount of jumper cable to be connected to the end of the sensing string.
5. Make sure all TFH cable ends are sealed with shrink tubing after installation.

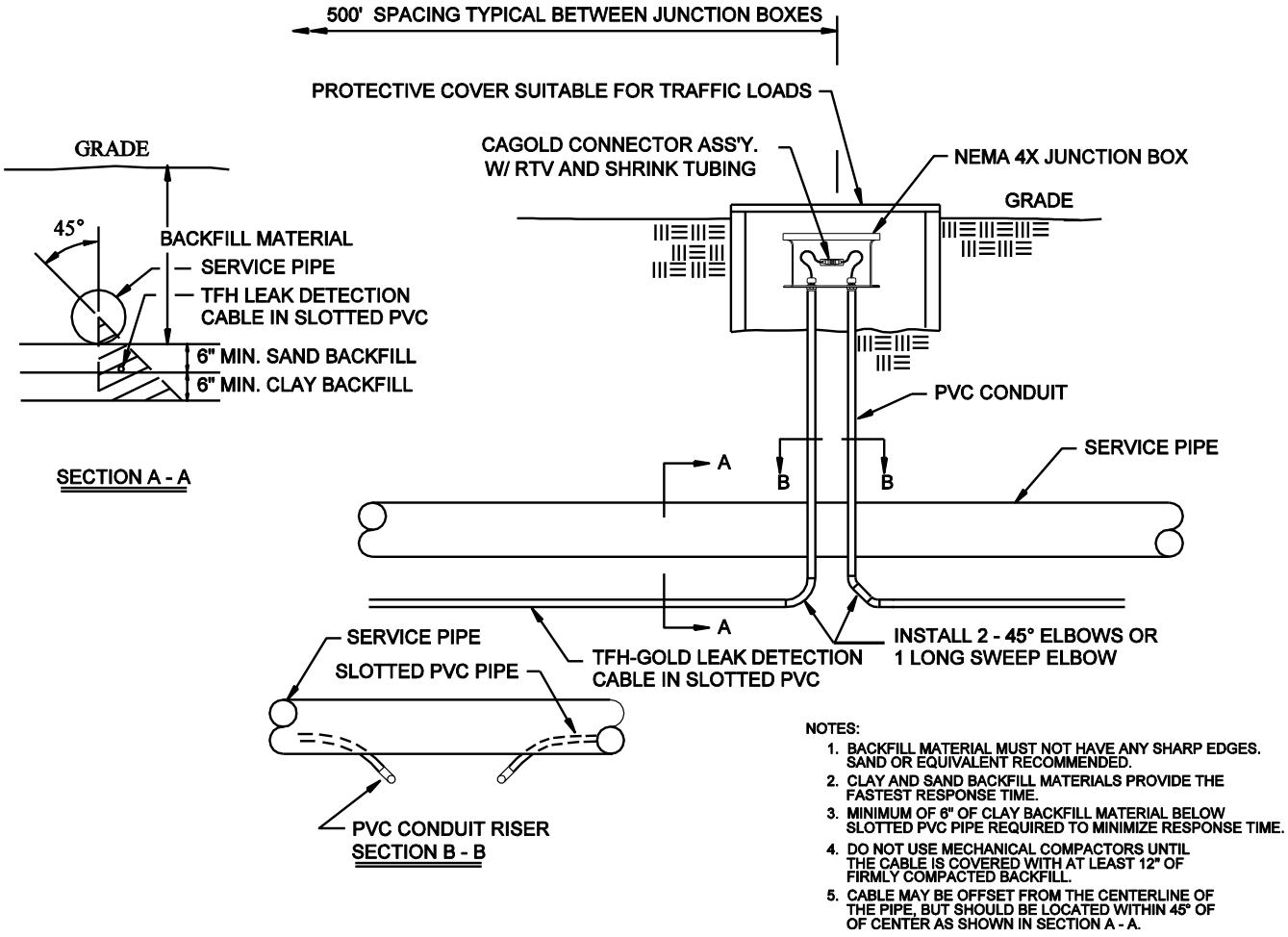

Figure 6-1
Direct Buried TFH/TFH-Gold Hydrocarbon Sensor Cables

6 Direct Buried Sensor Cable

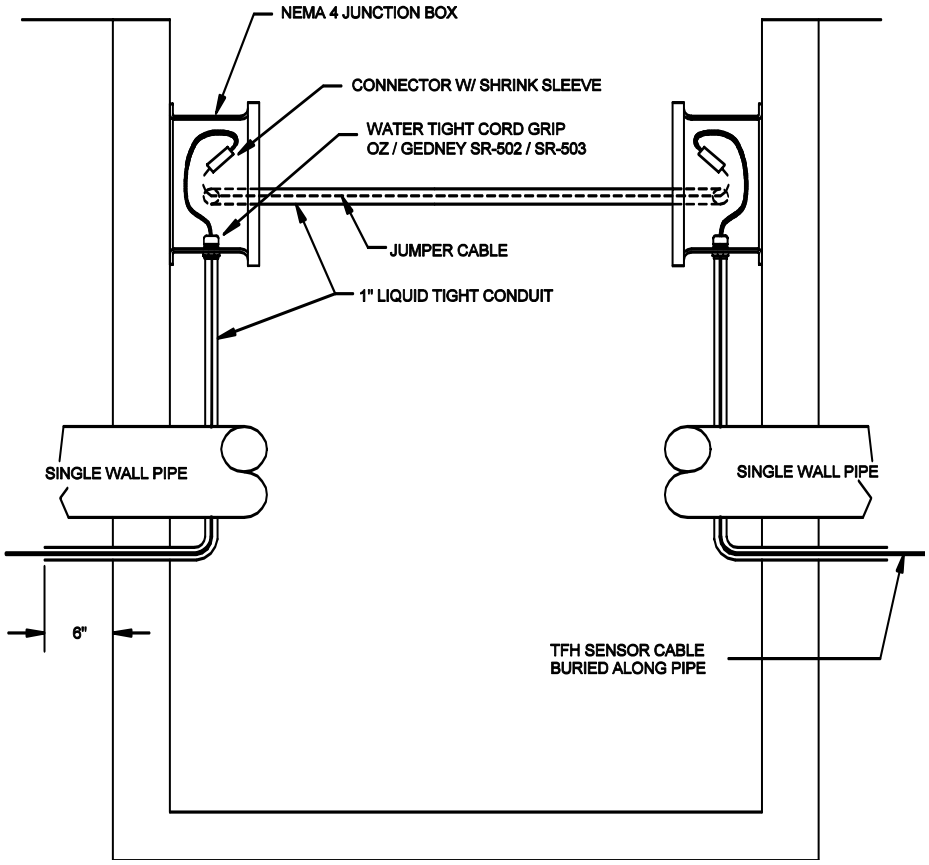

Figure 6-2
Hydrant Valve Pit / Manhole Penetration
Direct Buried Cable

6.3 Above Ground Storage Tanks

Above ground storage tanks can be monitored for leaks by installing TFH/TFH-Gold sensor cable in slotted PVC pipe under the bottom of the tank or around the perimeter. Figures 6-3 and 6-4 show two such applications. For specific applications, contact PermAlert for assistance.

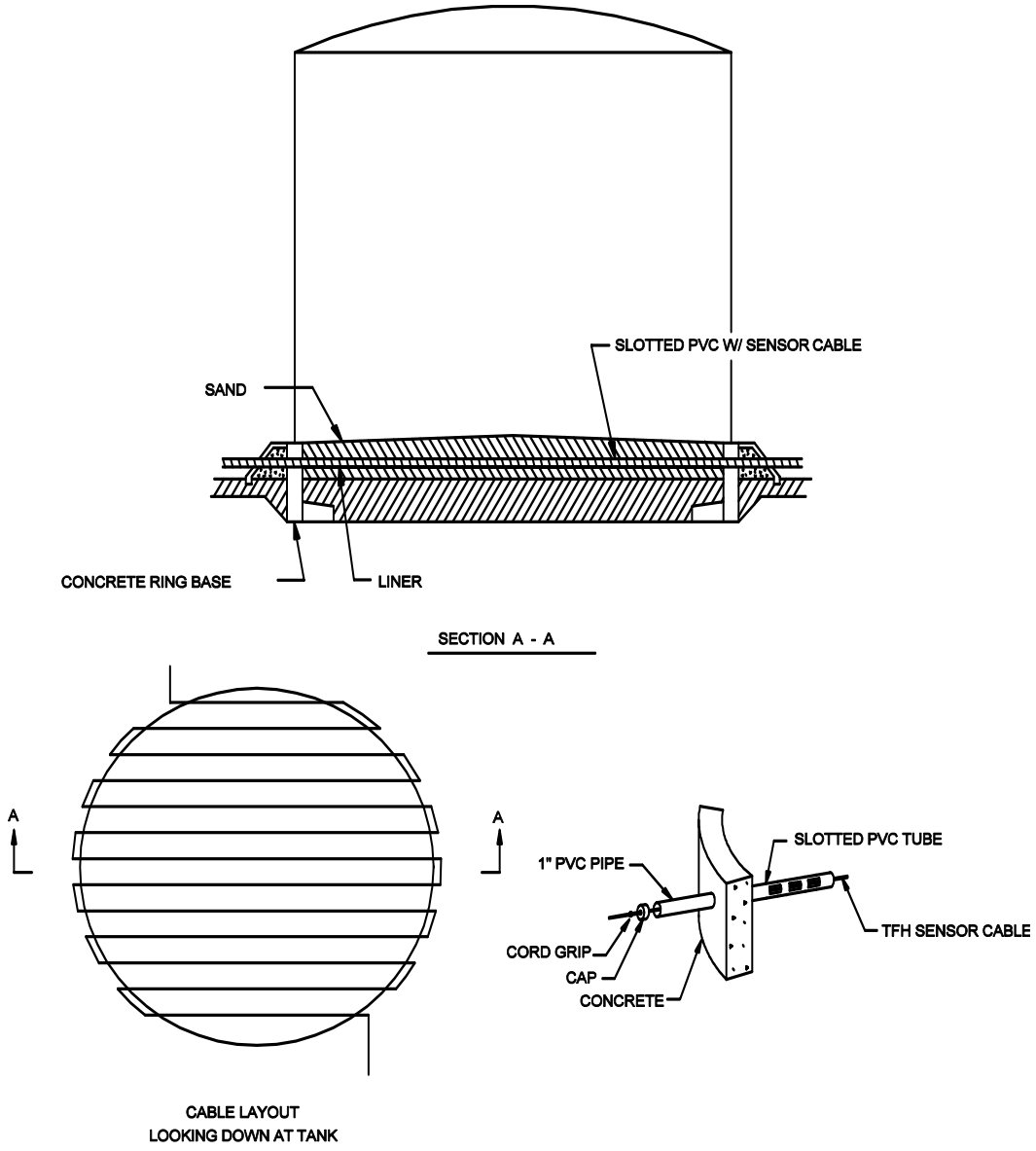

Figure 6-3
Double Bottom Above Ground Storage Tank

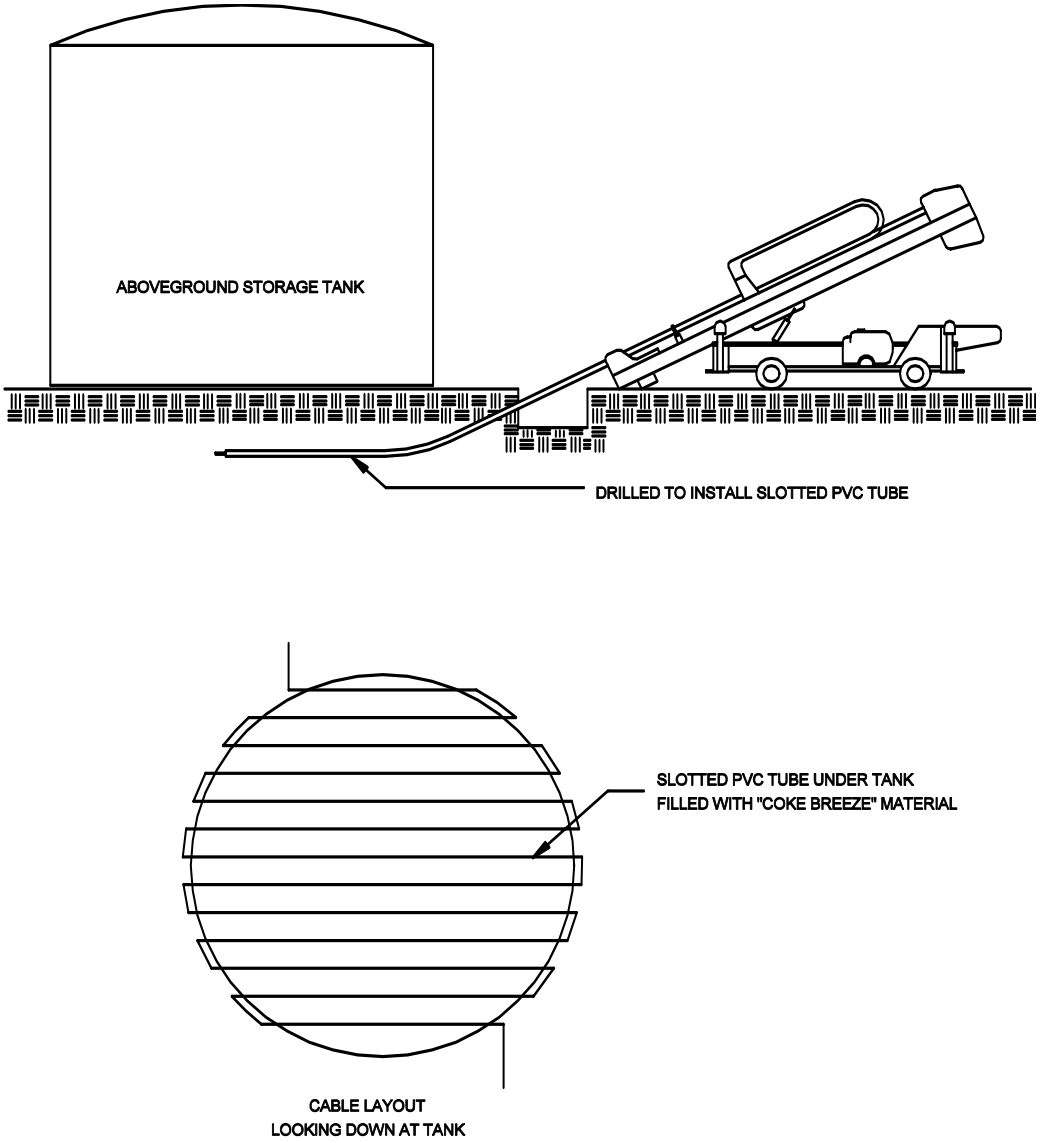

Figure 6-4
Above Ground Storage Tank Horizontal Drilling

7 Cable Installation for Raised Floor Areas

7.1 General

The PAL-AT sensor cables can be installed in ceilings or on subfloors below raised flooring to detect water, hydrocarbons, or chemical liquids. AGT-Gold responds quickly to thin films of liquid. AGW-Gold allows a small accumulation before detecting a leak and dries quickly after removal of the liquid. AGW-Gold was tested and passed UL910 for Plenum applications. AGW-Gold is the preferred selection unless the application requires wicking of the liquid for detection of small liquid leakage.

The AGT-Gold sensor cable has a polypropylene yarn dielectric and is designed to absorb liquids readily and detect leaks quickly. It also absorbs moisture from the air if the air is saturated or near saturation. PermAlert recommends a maximum of 80% relative humidity, keeping in mind the relative humidity will increase if the temperature of the air or a surface in the airflow decreases. In subfloor applications, care must be taken to make sure the cable is not located directly in the airflow where localized higher humidity or saturated air is present.

If the humidity level cannot be controlled and intermittent high humidity conditions exist, then the best option is to use the quick-drying AGW-Gold cable in place of the wicking AGT-Gold cable.

7.2 Install the Sensor Cable

1. After all other work is completed and the area is free and clear of all activities that can cause damage, the sensor cable should be installed. Care must be taken during installation of the sensor cable to avoid contact with potential contaminants, such as water puddles or oil.
2. When the construction schedule allows, the PAL-AT panel should be permanently mounted and connected with electrical power before installing jumper or sensor cable. This will allow the system's setup and calibration procedures to proceed efficiently. For additional information on calibration points, refer to the *PAL-AT Operating Manual*.
3. Slowly play out the cable by hand rotating the spool. Never pull loose coils of cable off the end of the spool. When loose coils are pulled taut, kinks form in the cable that could prevent bringing the system on-line. **Keep the cable dry and clean.**
4. Starting from the PAL-AT panel, connect a minimum of 50' [15 m] of JMP-UD jumper cable (65' [20 m] for type JPP) before connecting the sensor cable. Route the sensor cable as shown on the contract drawings. Most designs require the sensor cable to be installed in a serpentine pattern of 4' [1.2 m] centers. Normally, this method gives satisfactory protection and does not require the cable to be repositioned when equipment is moved later. Typically, centers of 6’ to 12’ [2 m to 4 m] can be used if the facility has low risk (see figure 7-1).
5. If the serpentine pattern cannot be adapted to the installation, an alternative is to isolate the potential leakage areas. Typically, this means running the sensor cable around the perimeter of the room and placing a run of cable under or near any water lines or drains in the room's interior. The sensor cable should be routed around air conditioning units and chillers so an overflow from a plugged condensate tray must pass the sensor cable before it can reach power or data cables.
6. The sensor cable should not be routed directly in the airflow from an air-handling unit, especially if a humidifier is being used. In this case, the unit may send out drops of water that can collect in the cable and give an alarm for a minor puddle.

   This is more critical with AGT-Gold cable. The wicking nature of the cable will absorb the fine spray from the humidifier and cause an alarm. Typically, the cables are 3' to 5' from the perimeter of the air units.
7. Refer to table 1 (see section 3) for amount of jumper cable to be connected to the end of the sensing string.
8. Cables are attached to the subfloors and ceilings with fasteners (cable mounts). Normally, cable mounts are spaced on 8' [2.5 m] intervals along the sensor and jumper cable length. Additional cable mounts are located adjacent to all changes in direction of the sensor cable.

9. Cable mounts (CMA) ordered from PermAlert are adhesive backed. When installations require mounting to unsealed concrete surfaces, it is recommended construction mastic be used. Care must be taken to ensure the mastic does not touch the sensor cable. This material can be purchased from most supply houses. Inspect subfloor (or ceiling) surfaces to be sure it is clean and dry before beginning installation. Cable tags (CTA) are typically installed on 50' [15 m] intervals for location purposes.
10. In high traffic areas, cable shields should be used to protect the cable from damage.
11. Service loops (slack cable) should be positioned at connector locations.

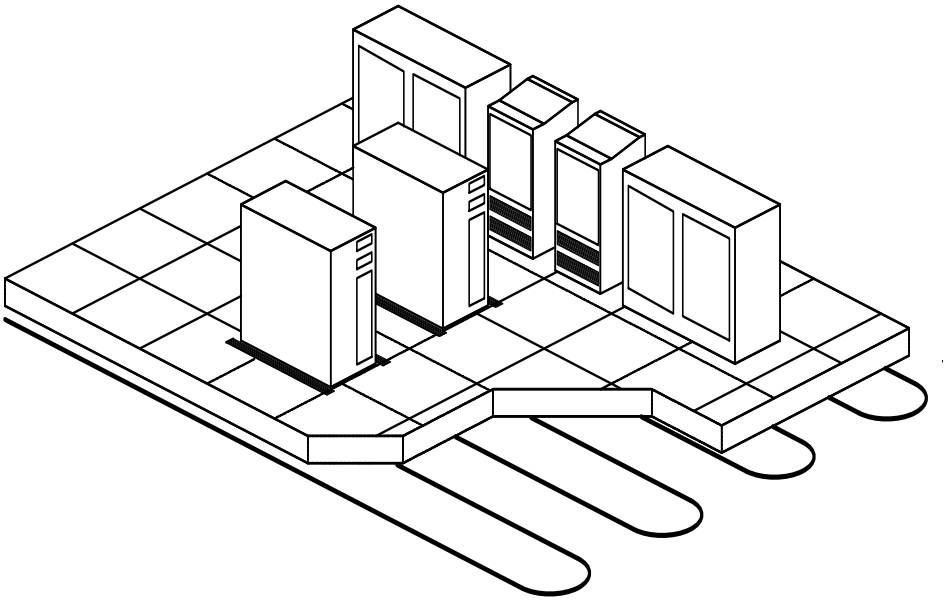

Figure 7-1
Computer Room Floor

7.3 Locator Chart

A graphic display map drawn to scale shall be prepared by the contractor (installer) after completion of installation from "as built" drawings. The map shall indicate, in relation to the raised floor grid, the location of the cable, connectors, and landmarks (such as equipment, walls, and drains). Cable distance readings shall be marked off in 100' [30 m] (or other suitable) increments, beginning at the monitoring panel, to facilitate physically locating a leak detected by the system. The locator chart should be placed in a plastic frame suitable for permanent mounting adjacent to the PAL-AT panel.

8 Cable Connectors

8.1 General

This section outlines: (1) the installation procedures for several types of connectors; (2) the application of shrink tubing; and (3) the electrical testing of connectors and cable. **All connectors are crimp style and soldering is not required**.

Instructional videos for Cable Connector Installations are available at the PermAlert web site, www.permalert.com.

WARNING For Hazardous Locations – Some cable connectors are located in NEMA 4X [IP66] junction boxes that are made of plastic and as such, present a possible electrostatic hazard. They are not intended to be cleaned, but if they are, a damp cloth should be used**.**

8.2 Cable Connector Installation

1. Cable connectors must be installed at changes of cable types, pull points, junction boxes, calibration points, and at the termination of the sensing string.
2. All the PAL-AT cables, except ATP, are coaxial construction consisting of an insulated center conductor and a braid shield. Jumper cables and TFH sensor cable have a polymer jacket over the braid. All coaxial sensor cables also have a polymer overbraid surrounding the cable.
3. **Crimp style connectors are required for all sensor cables and all jumper cables**.
4. **TFH sensor cable ends must be kept dry and encapsulated in shrink tubing until the connectors are installed. Connectors that become calibration points during the commissioning of the system should not be installed prior to commissioning, if they cannot be kept dry. Install the shrink tube caps, included with the connectors, on the end of the cables temporarily.**

8.2.1 CAGOLD and CATFH Connectors for Sensor Cables AGW-Gold, AGT-Gold, TFH-Gold and TFH

The CAGOLD connector assembly for AGW-Gold, AGT-Gold and TFH-Gold consists of two crimp style UHF plugs, two #14 AWG wire ferrules, one UHF straight adapter, and one piece of shrink tubing. The CATFH assembly for TFH includes the same connectors and 3 pieces of shrink tubing. Steps A thru I must be followed to install a connector.

Step A Measure and cut the required length of cable.

Step B Carefully cut and remove 2½" [65 mm] of the plastic overbraid. It may be helpful to slide the remaining overbraid back several inches and use electrical tape to hold it in place out of the way.

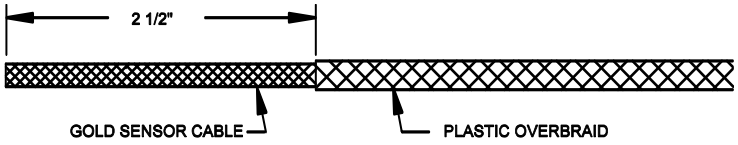

TFH cable has a white outer jacket under the overbraid. Remove 2 ½" [65 mm] of the white jacket.

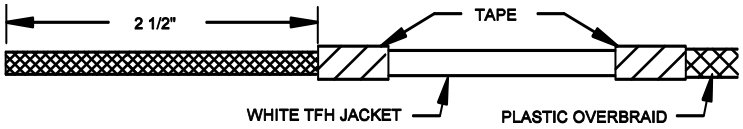

Step C Skip this step for TFH cable. A sanding tool (included with the purchase of a crimp tool) is inserted into the cable. The tool is a 6" [150 mm] length of stainless steel tubing.

For AGW-Gold, insert the center conductor and two plastic spiral spacers into the end of the tool. Then slowly rotate the tool counterclockwise and gently push the tool 3" [75 mm] into the cable underneath the braid wire.

For TFH-Gold, insert the center conductor and the white core into the end of the tool. Then slowly rotate the tool and gently push the tool 3" [75 mm] into the cable underneath the braid wire.

For AGT-Gold, slide the braid wire back 2" [50 mm] and remove 1 7/8" [47 mm] of the yarn spacer. Then insert the sanding tool 3" [75 mm] over the center conductor and slide the braid wire back over the tool.

For all three cables, hold the end of the braid in place against the sanding tool while you sand the 1¼" [32 mm] area as shown below. Rotate the cable slightly and repeat the sanding process until the entire circumference of the 1¼" section has been sanded. The gold-colored plastic coating on the braid strands does not have to be removed completely. However, the outer surface of the braid strands should have bare copper exposed around the entire circumference of the cable.

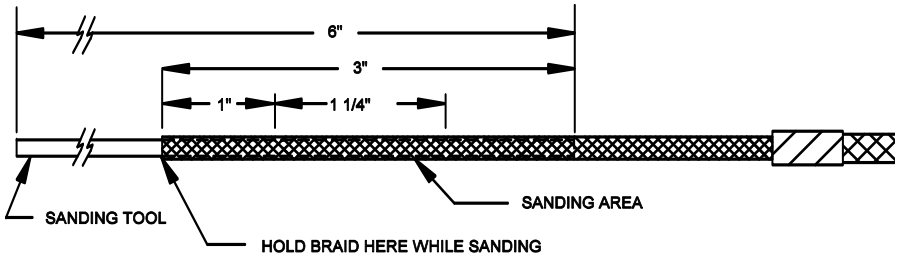

Step D Carefully cut and remove approximately 1¼" [32 mm] of braid (this should remove all the unsanded braid wire). Tap the cable gently on a hard surface to knock off loose strand ends, clippings and any debris.

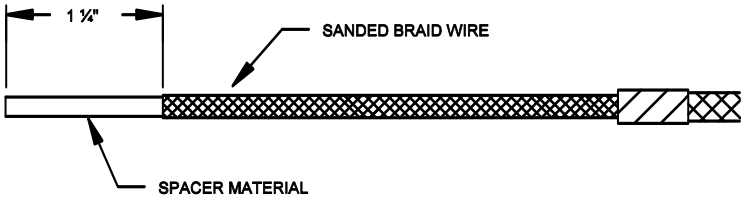

Step E For AGW-Gold and TFH cables, slide the braid back an additional ¾" [19 mm] then remove 1 7/8" [47 mm] of spacer material (plastic spiral on AGW-Gold and white core on TFH).

Or

For TFH-Gold cable, the white core needs to be "thinned" for 1 7/8" [47 mm] to reduce the diameter of the white core slightly so it fits into the connector body. This requires a wire stripper tool set for #10 AWG. First, make sure the center conductor is straight so the thin film of insulation on the conductor is not nicked. Starting ½" from the end, strip the wire using the #10 setting. This does not remove the white core, but stretches it and makes it smaller in diameter. Continue this process, moving in ½" increments from the end. Each time apply the tool and strip to the end of the cable, until the insulation over the last 1 7/8" of the conductor is thinned. Cut off the white material that was stretched past the end of the center conductor. Next, using a #14 AWG wire stripper, strip ¾" of the white core from the center conductor.

For all cables, remove ¾" of the thin film of insulation from the center conductor.

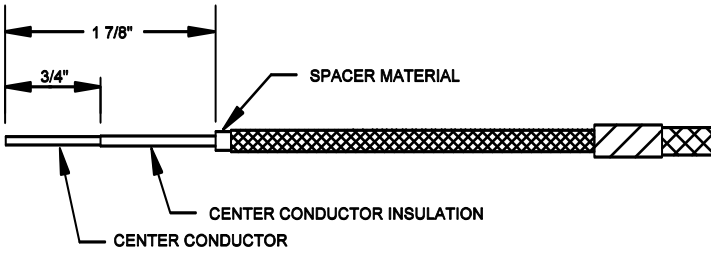

Step F For TFH cable only, slide one 4" [100 mm] piece of heavy wall shrink tubing over the end of the cable, and position it over the overbraid.

For all cables, slide the UHF plug coupling ring onto the cable. Then slide the outer crimp ferrule onto the cable.

A ¾" [19 mm] long, #14 AWG [1.5 mm^2] wire ferrule should be installed on the center conductor. If the wire ferrule is slightly crushed, the conductor will not slide in easily. If this happens, push the ferrule onto a piece of solid #14 AWG copper wire (or standard 3d finish nail) to straighten the ferrule. Slide the ferrule over the conductor until it stops at the center conductor insulation. Make sure all the strands go through the ferrule and extend out of the end.

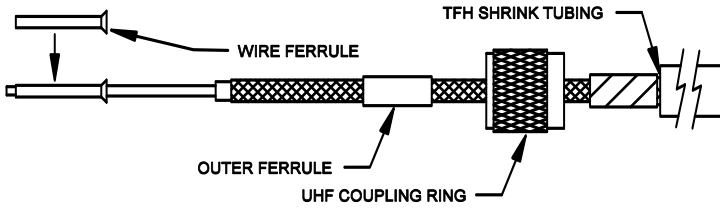

Step G Slide the UHF plug body over the cable center conductor. Be sure all the strands of the center conductor or the wire ferrule slide completely through the center contact of the plug. At the same time, slide the braid over the inner ferrule to the UHF plug body.

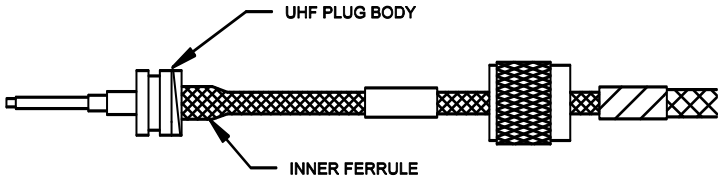

Step H Slide the outer ferrule over the braid and up against the UHF plug body. Make sure the braid extends slightly past the end of the outer ferrule against the UHF plug body. **Caution: Once the crimp tool (PermAlert Part No. 8068301) starts to close, it must be closed completely before it will open again.** Position the crimp tool (0.255" die) carefully around the outer ferrule and crimp it.

Crimp the end of the center contact as shown using a 0.100" die. Leave a 1/8" [3 mm] gap from the end of the plug and trim the excess center conductor and ferrule.

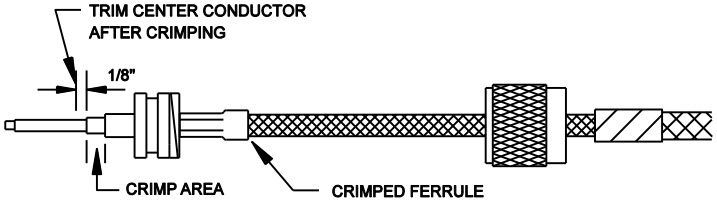

Step I Slide the plastic overbraid as close to the UHF plug body as possible to remove any slack. Trim it so there is approximately a 1" [25 mm] gap between the end of the overbraid and the end of the ferrule.

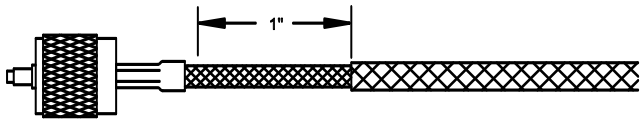

Test all connections as described in the "Cable and Connector Testing Procedures" section. Each end of the cable in the stage shown above will be fastened together by using one UHF straight adapter. All cable connectors should be encapsulated with non-corrosive RTV sealant and shrink tubing.

8.2.2 CAJMP Connectors for Jumper Cables JMP-U/-UD

The CAJMP connector assembly for JMP-U/-UD jumper cables consists of two crimp style UHF plugs and one UHF straight adapter. It also includes 2 pieces of shrink tubing and spiral cable wrap. Steps A thru H must be followed to install a connector.

Step A Measure and cut the required length of cable.

Step B Carefully cut and remove 1 5/8" [41 mm] of the outer jacket, 3/4" [19 mm] of the braid and 3/4" [19 mm] of the plastic dielectric core. JMP-U has a sticky water-blocking material on the braid. To make handling it easier, keep your fingers and tools damp with water.

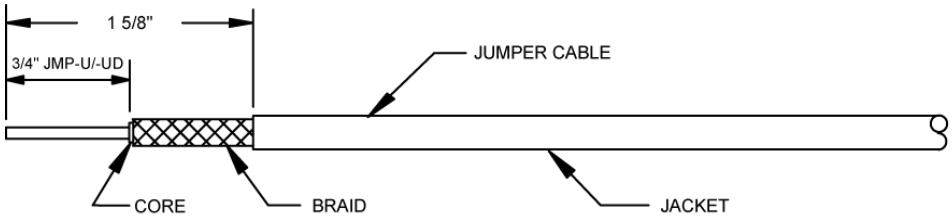

Step C Slide the 3" [75 mm] piece of shrink tubing onto the cable. Next, slide the UHF coupling ring and the outer ferrule onto the cable.

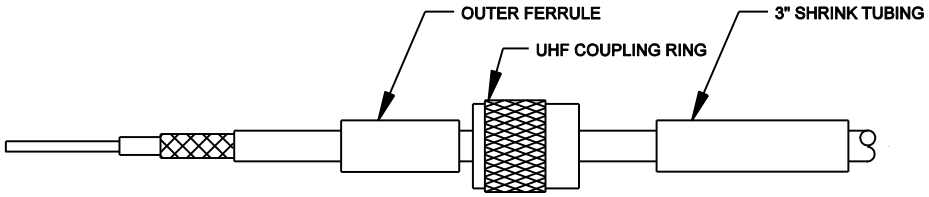

Step D Slide the UHF plug body over the cable center conductor. Be sure all the strands of the center conductor slide completely through the center contact of the plug. At the same time, the plastic core should fit inside the inner ferrule of the plug body and the braid should go over the outside of the inner ferrule. When the cable is inserted properly, 1/8" [3 mm] to 3/8" [9 mm] of the center conductor will extend past the end of the UHF plug body and **the plastic core will be tight against the plug body inside the inner ferrule**.

Note: Before installing JMP-U/-UD, flair the braid wire I.D. slightly with a small 1/8" [3 mm] slotted screwdriver so the braid will slide over the inner ferrule. **Be careful to keep the wire braided, i.e. two strands thick, over the inner ferrule, to have the correct thickness for a good crimp**.

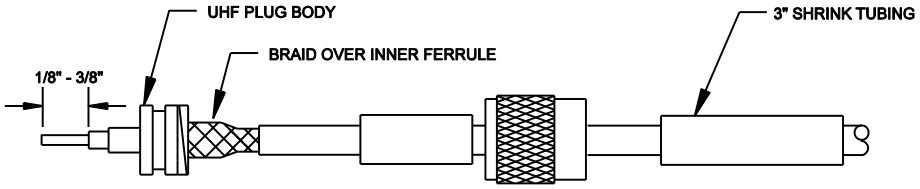

Step E Slide the outer ferrule over the braid and up to the UHF plug body. Make sure the braid extends slightly past the end of the outer ferrule against the UHF plug body. **The center conductor should extend at least 1/8" [3 mm] past the end of the connector**. **Caution: Once the crimp tool (PermAlert Part No. 8068300) starts to close, it must be closed completely before it can be opened again**. Position the crimp tool 0.429" die carefully around the outer ferrule and crimp it.

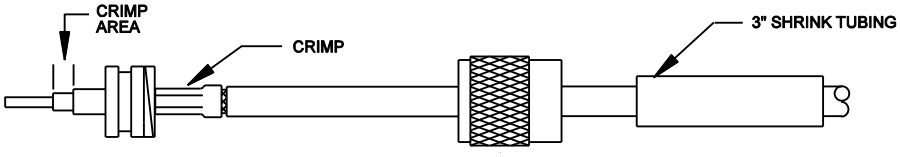

The procedure for crimping the center conductor requires a short length of #14 AWG solid copper wire to fill the center contact of the connector. Strip 3/8" of insulation from the wire. Bend the end of the strands of the center conductor slightly to the side. Next, carefully slide the bare #14 AWG wire all the way into the center contact as shown. The #14 wire should be inserted next to the JMP-U conductor and not into the strands of the conductor. Be careful so the strands of JMP-U do not slide into the connector with the #14 wire. Crimp the center contact as shown using a **0.100" die**.

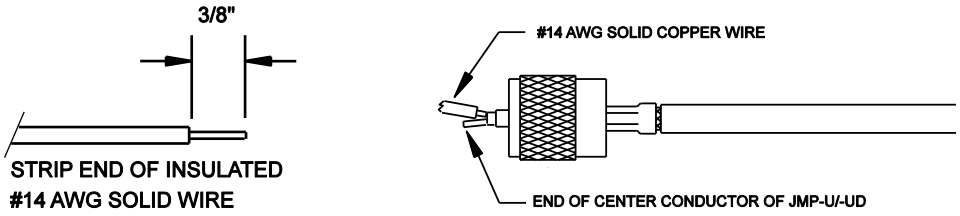

Step F Trim any center conductor (and #14 AWG wire, if applicable) extending out of the center contact of the plug. Thread the UHF coupling ring onto the UHF plug body.

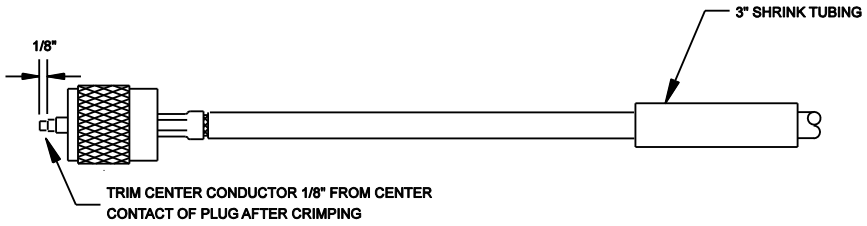

Step G Place a 2" piece of plastic cable wrap around the cable jacket and slide it under the uncrimped end of the outer ferrule as far as possible.

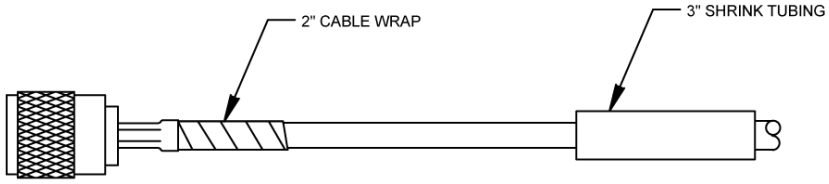

Step H Slide the 3" [75 mm] piece of shrink tubing over the crimped outer ferrule until it completely covers the ferrule. Make sure the shrink tubing does not slide onto the plug body. Heat the shrink tubing with a heat gun until it has fully shrunk and adhesive oozes out the end. Let the assembly cool before handling.

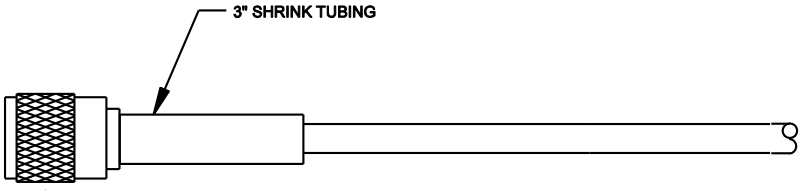

Test all connections as described in the "Cable and Connector Testing Procedures" section. Each end of the cable in the stage shown above will be fastened together by using one UHF straight adapter. All cable connectors should be encapsulated with non-corrosive RTV sealant and shrink tubing.

8.2.3 CAJPP Connectors for Jumper Cables JPP and JMP

The CAJPP connector assembly for JPP and JMP jumper cables consists of two crimp style UHF plugs and one UHF straight adapter. Steps A thru F must be followed to install a connector. It is recommended to use Ideal Stripmaster® Model 45-091 or 45-092 wire strippers, or equal, for stripping the wires. Use the die openings for stranded wire for the wire size specified in the steps below.

Step A Measure and cut the required length of cable. The connector components are shown below.

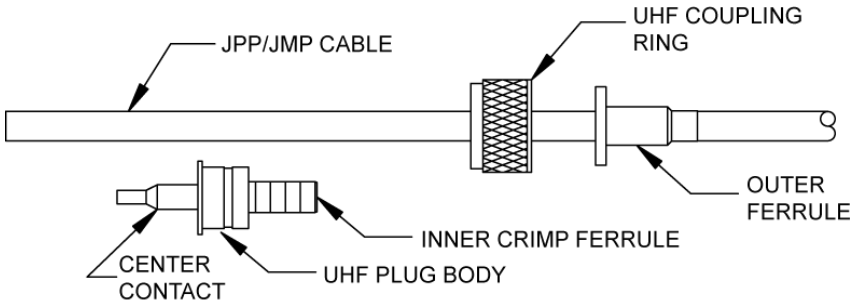

Step B Carefully mark the cable jacket at 3/8", 3/4" and 1 5/8" from the end.
At the 3/8" mark, strip the wire with the 14 AWG stripping hole. You may need to repeat the strip with the 16 AWG stripping hole to remove all the core insulation.
At the 3/4" mark, strip the wire with the 12 AWG stripping hole to remove the braid.
At the 1 5/8" mark, strip the wire with the 10 AWG stripping hole to remove the jacket.

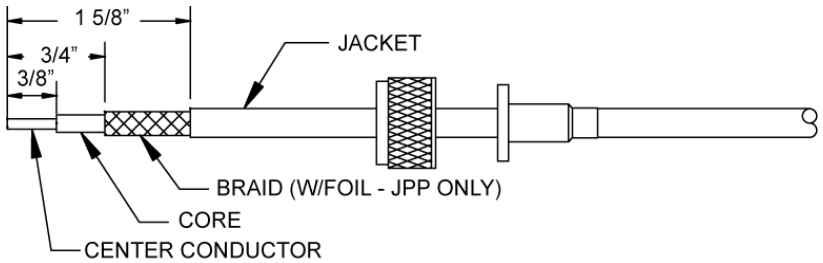

Step C **JPP only -** JPP has foil wrapped under the braid and bonded to the core insulation. Slide the braid back to the jacket to expose the foil. Use long nose pliers with serrated grip surfaces and gently squeeze the foil near the end of the core. Gently rotate the pliers back and forth 10° - 30° several times until the foil breaks free from the core. Unwrap the foil and remove it. This step may need to be repeated to remove all the foil under the exposed braid.

Step D Slide the UHF plug body over the cable center conductor. Be sure all the strands of the center conductor slide completely through the center contact of the plug. At the same time, the plastic core should fit inside the large section of the center contact and the braid should go over the outside of the inner ferrule. When the cable is inserted properly, 1/16" [1.5 mm] to 1/8" [6 mm] of the center conductor will extend past the end of the UHF plug body and the plastic core will be inside the center contact. **Caution: Once the crimp tool (PermAlert Part No. 8068300) starts to close, it must be closed completely before it can be opened again**. Crimp the center contact in the crimp area using a 0.068" die.

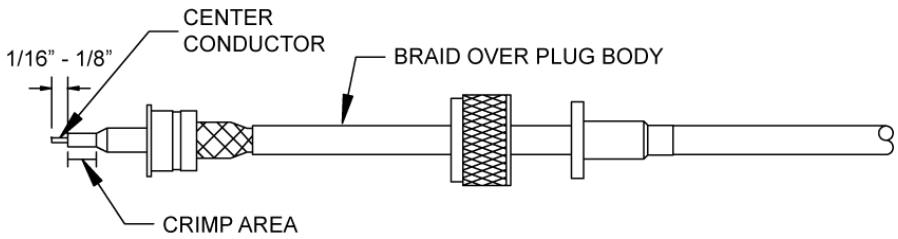

Step E Slide the UHF coupling ring onto the plug. Slide the outer ferrule (and the remaining foil, if any, for JPP cable) over the braid and up to the UHF plug body. Make sure the braid extends slightly past the end of the outer ferrule against the UHF plug body. Position the crimp tool 0.255" die carefully around the outer ferrule. Hold the outer ferrule tight against the plug body and crimp it. The UHF coupling ring is now captive and cannot be removed from the plug body.

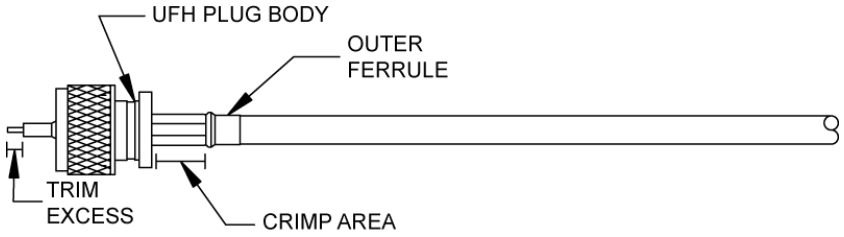

Step F Trim any center conductor extending out of the center contact of the plug.

Test all connections as described in the “Cable and Connector Testing Procedures” section. Each end of the cable in the stage shown above will be fastened together by using one UHF straight adapter. All cable connectors should be encapsulated with non-corrosive RTV sealant and shrink tubing.

8.2.4 CAGOLD Connector for ATP Cable

The CAGOLD cable connector can be used at a calibration point to make it reusable, instead of the standard permanent crimp connector. Steps A thru G must be followed to install a connector.

Step A Make sure the red and white wires are twisted with an approximate 2”–3” [50mm-75mm] pitch and then cut off excess ATP cable. Slide the UHF coupling ring onto the cable, followed by the outer ferrule.

Step B Remove ½” [12 mm] of the insulation on the red wire.

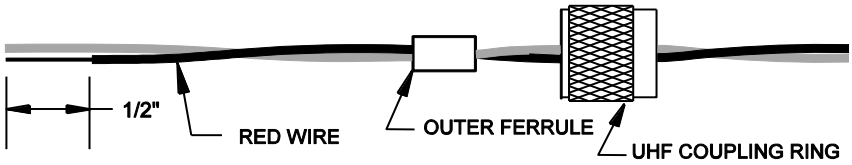

Step C As a measuring guide, slide the plug body onto the red wire until it stops against the wire insulation. The wire should extend out of the center contact. Cut the white wire even with the shoulder of the plug body. Remove the plug body and strip ½” [12 mm] of the insulation from the white wire.

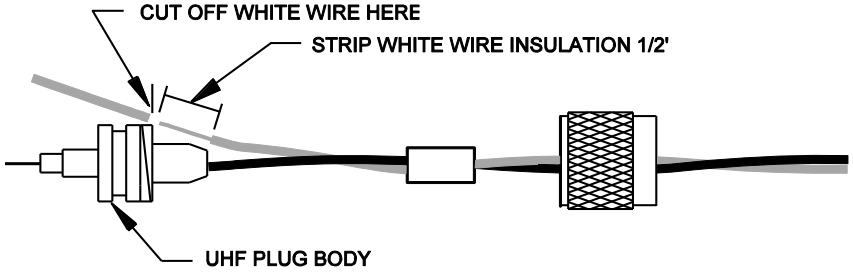

Step D Slide the plug body on the red wire again until the white wire is just past the tapered end of the inner ferrule. Then slide the outer ferrule over the end of the inner ferrule and the white wire until it is a snug fit.

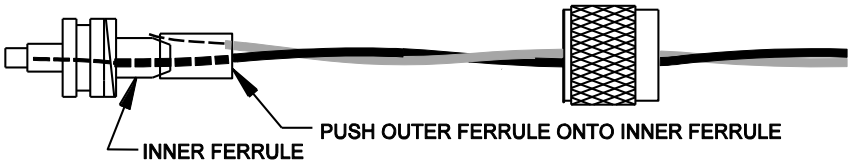

Step E Next, take the crimp tool and clamp the 0.255” die around the twisted wires behind the outer ferrule. Be careful not to pinch the wires. They should slide freely through the die. Then push the plug body toward the crimp tool to force the outer ferrule and white wire to slide over the inner ferrule until they are tight against the plug shoulder as shown in the second view.

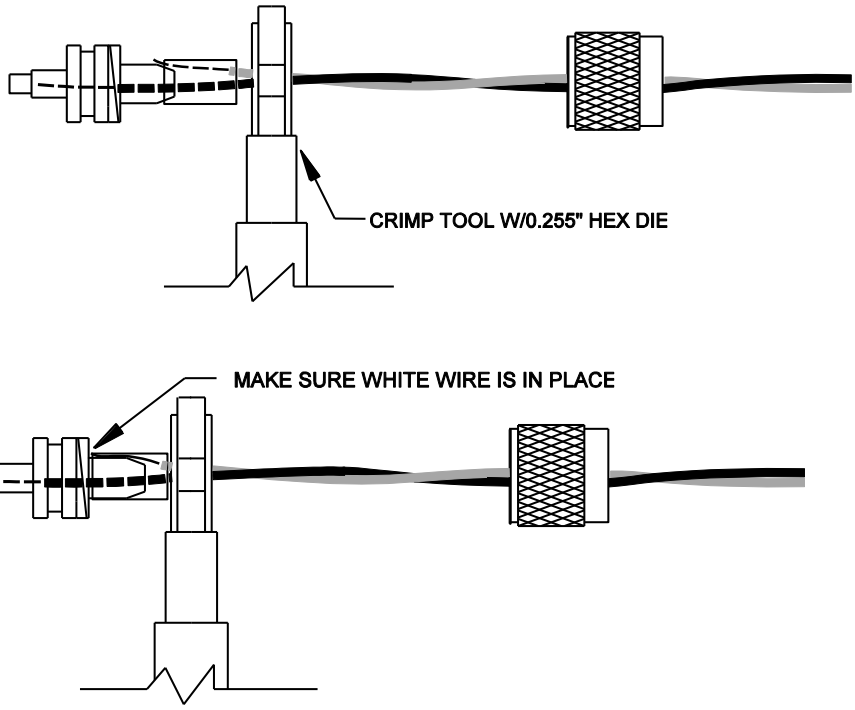

Step F Use the 0.255” hex die and crimp the outer ferrule.

Step G Bend a short length of #18 AWG [0.75 mm^2] solid copper wire to a ¼” [6mm] long right angle and insert it into the center contact next to the ATP conductor. Insert it as far as the bend.

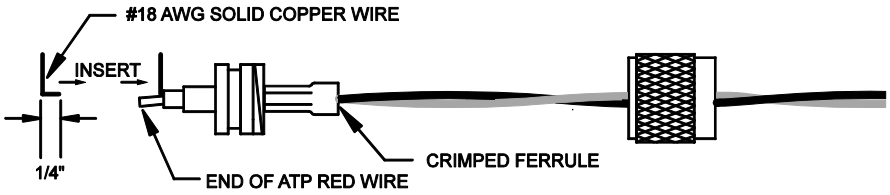

Straighten the copper wire so it does not interfere with the crimp tool closing. Crimp the center contact using the crimp tool 0.100” die. Trim excess wire as shown. Slide the coupling ring to the plug body and thread it onto the body. If there are any gaps between the red and white wires, twist the connector slightly to remove them.

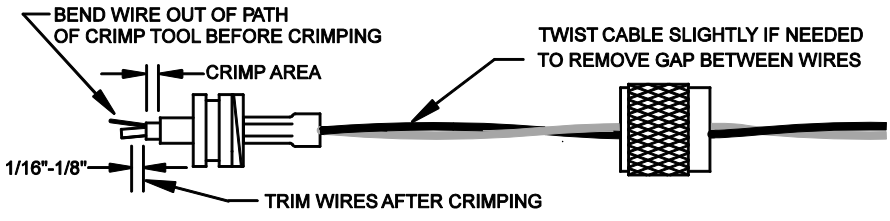

8.3 Shrink Tubing

All cable connectors installed in inaccessible locations or locations subject to frequent leaks or corrosive environments must be encapsulated with shrink tubing. This applies to sensor cables and jumper cables. Connectors used for calibration points should not be sealed until the system has been brought online unless they may be exposed to water before start-up.

8.3.1 Cable Type TFH

1. **The TFH cable connector assemblies must be encapsulated in watertight shrink tubing.** Test connectors according to the "Cable and Connector Testing Procedures" before heating the shrink tubing. **Connectors used for calibration points must be kept dry until the system has been commissioned. After commissioning, the shrink tubing should be installed. If water is allowed to enter the end of the cable and get under the jacket, the cable must be replaced**.
2. Install the shrink tubing in accordance with the following steps:

Step A Slide the overbraid and cable jacket back from the reducing adapter, to expose ½" [12 mm] of braid wire. Smooth the excess cable jacket away from the connector, so there is at least 5" [125 mm] of smooth surface adjacent to the connector. If the sensor cable is being connected to a jumper cable, skip steps A and B for jumper cable.

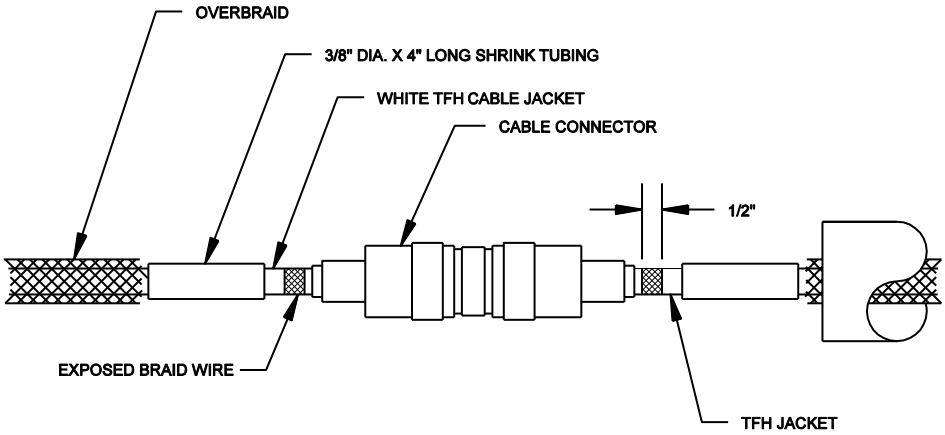

Step B Place a 1/4" [6 mm] bead of non-corrosive RTV sealant around the cable on the exposed braid wire.

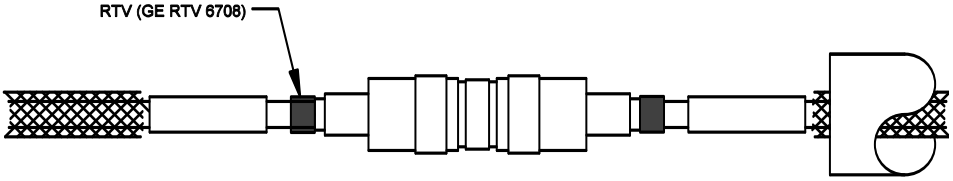

Step C Slide the 4" [100 mm] long shrink tubing to the reducing adapter, if the CASTD connector is used. Make sure there are no wrinkles in the cable jacket. Make sure the shrink tubing does not overlap the reducing adapter. Slide the shrink tubing over the outer crimp ferrule to the back of the connector body if the CAGOLD crimp style connector is used. Heat the shrink tubing with a heat gun until it has fully shrunk and adhesive oozes out the end. Do not disturb the assembly until the shrink tubing has cooled (approximately 5-10 minutes).

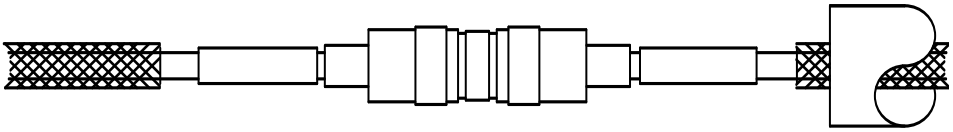

Step D After both cable ends have been sealed with the 4" [100 mm] shrink tubing, recheck that the connectors are tightened securely. Test the connector according to the "Cable and Connector Testing Procedures". Then slide and center the 8" [200 mm] shrink tubing over the connector and heat it until it is fully shrunk and adhesive oozes out the ends.

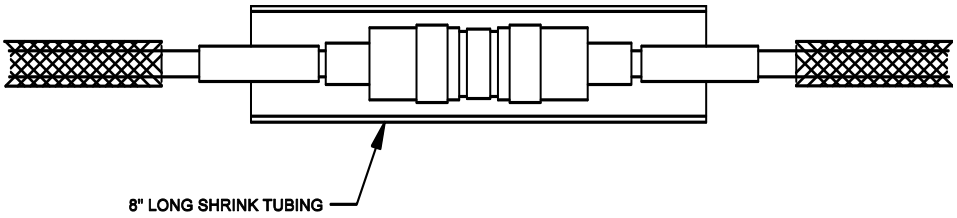

Step E Slide the overbraid to the connector and tape in place with electrical tape.

8.3.2 Cable Types AGW-Gold, AGT-Gold and TFH-Gold

Step A Install connectors and test them following the "Cable and Connector Testing Procedures" in this manual.

Step B Slide a 6" [150 mm] piece of shrink tubing on the cable and tighten the connector assembly securely.

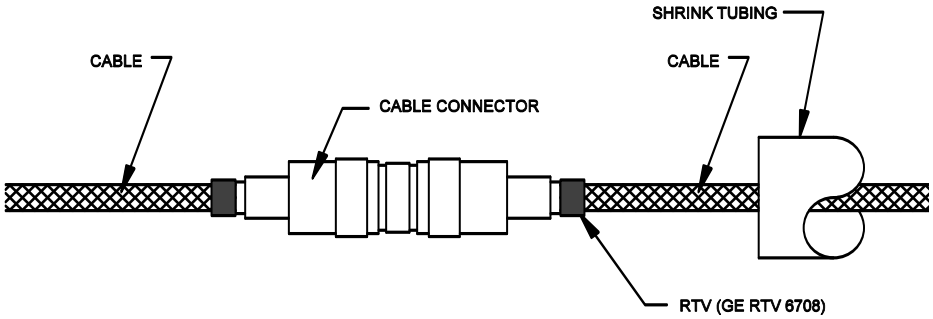

Apply a minimum ¼" [6 mm] bead of **noncorrosive type RTV** completely around the cable next to the end of each of the connectors.

Step C Center the shrink tubing over the connector. Carefully heat the tubing, slightly, over the center of the connector. **Caution: If the shrink tubing is overheated in the center area, it may tear as it tries to shrink to the size of the cable. Next heat the remainder of the tubing. Do not heat the tubing any longer than required to shrink the tubing around the cable.**

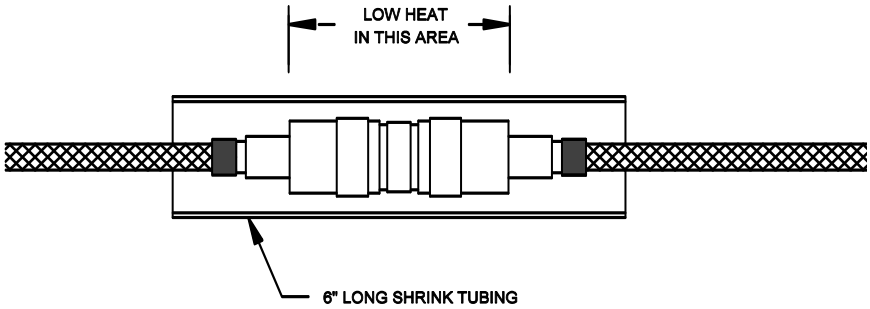

8.3.3 Cable Types JMP-U/-UD, JPP and JMP

Step A Install connectors and test them following the "Cable and Connector Testing Procedures" in this manual.

Step B Slide a 6" [150 mm] piece of shrink tubing on the cable and tighten the connector assembly securely.

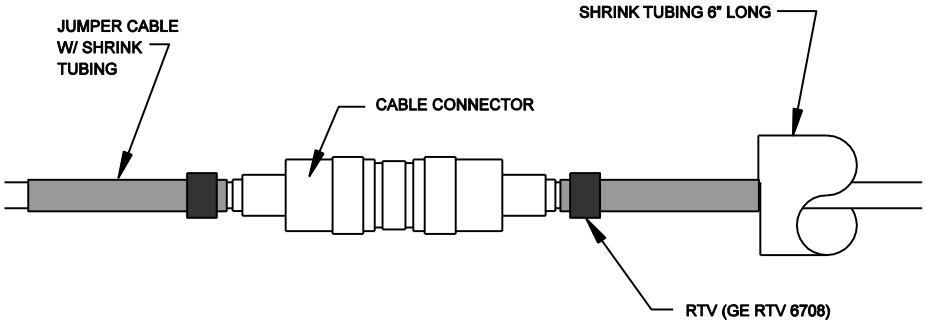

Apply a minimum ¼" [6 mm] bead of **noncorrosive type RTV** completely around the cable on the installed shrink tubing next to the end of each of the connectors.

Step C Center the 6" long shrink tubing over the connector. Carefully heat the tubing, slightly, over the center of the connector. **Caution: If the shrink tubing is overheated in the center area, it may tear as it tries to shrink to the size of the cable. Next heat the remainder of the tubing. Do not heat the tubing any longer than required to shrink the tubing around the cable.**

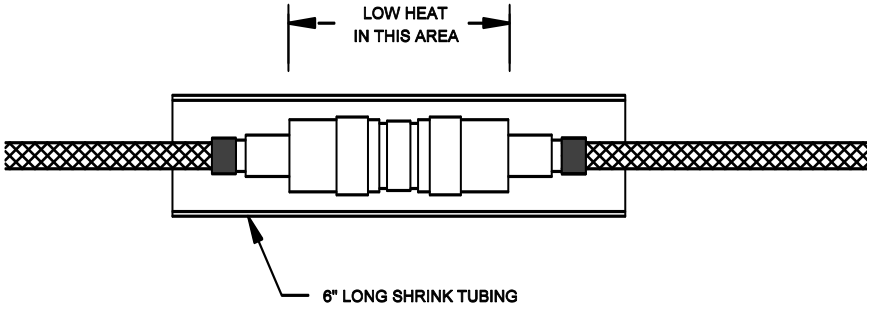

8.4 Cable and Connector Testing Procedures

8.4.1 General

The following tests should be performed on each length of cable after both connectors are installed. Figure 8-1 illustrates the tests. Any overbraid or outer jacket is not shown.

8.4.2 Continuity Test

The continuity test checks for broken cable, open connectors, and poor connections.

1. Connect a short jumper wire with alligator clips between the UHF connector's center contact and the body of the connector at one end of the cable, as shown in figure 8-1. **Note: Do not clip onto the threaded coupling ring because the ring is not tightly secured, resulting in intermittent readings**.
2. Connect the ohmmeter's test leads to the connector's center contact and connector body on the other end of the cable.
3. The ohmmeter reading should be less than 10 ohms/1000' [10 ohms/300 m] of cable. If it is not, check the jumper wire, test lead connections, and repeat the test. If the problem persists, contact the PermAlert Field Service Department for assistance.

8.4.3 Alternative System Test

1. Connect the entire cable string to the PAL-AT panel.
2. Make sure the panel is turned off. Set the impedance jumper for the cable under test – position C (w/o ZBA) or D (w/ZBA). If applicable, make sure the replaceable fuse in the ZBP is good.
3. Measure the resistance at the far end of the cable string. Connect one test lead to the center contact of the last connector and the other lead to the connector body. The resistance should be less than 60 ohms + 10 ohms/1000' [75 ohms/300 m] of cable string.
4. If intermittent connections are suspected, gently flex the connectors while the meter is monitored.

8.4.4 Insulation Test

The insulation test checks for a short between the center conductor and outer braid.

1. Remove the jumper wire used in the continuity test, as shown in figure 8-1 and connect one ohmmeter test lead to the connector's center contact and the other lead to the connector body.
2. A good cable will give a full-scale reading (at least 10 megohms). Test readings below full scale indicate damaged cable or an improperly installed connector. If you cannot resolve the problem, contact PermAlert's Field Service Department for assistance.

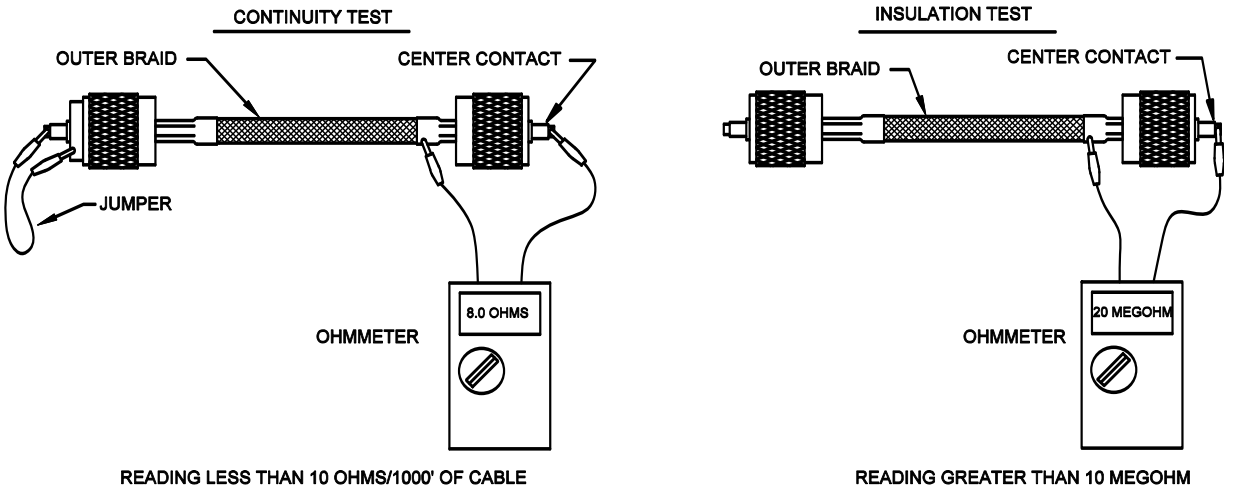

Figure 8-1
Cable Test Procedures

8.5 Cable Connections to Panels

8.5.1 General

The ends of the jumper cables connected to the PAL-AT panel or Zener Barrier Panel need to be terminated with wire ferrules. The ferrules provide a positive connection and prevent stray strands of the wires from shorting to adjacent terminals.

8.5.2 Ferrule Installation in PAL-AT Panel

Step A Remove 1.25” [32 mm] of cable jacket

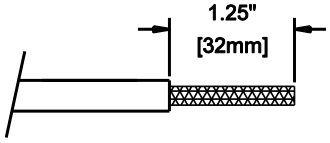

Step B Separate the braid wire into two equal groups. It is easier to unbraid the wire if it is done in ¼” long increments. It is helpful when working with JMP-U cable to keep tools and fingers damp

when touching the sticky, water-blocking material. Twist each group into a small wire. Remove 1.0" [25 mm] of insulation from the center wire.

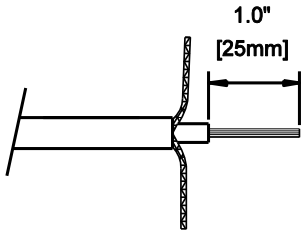

Step C JMP-U/-UD Cable

Slide a 14 AWG [2.5 mm²] uninsulated ferrule onto the center wire until it is tight against the center insulation. Crimp the ferrule using a 2.5 mm² die. Then crimp it again with a 1.5 mm die. Slide a 16 AWG [1.5 mm²] insulated ferrule over each group of braid wire twisted strands. Spread the ferrules apart to fit into the connector as shown. Align the ferrule ends as shown while minimizing slack in the braid wire. Crimp the ferrules using a 1.0 mm crimp die.

JMP (from ZBA) or JPP Cable

Slide an 18 AWG (1.0mm²) insulated ferrule onto the center wire until the ferrule insulation is completely over the wire insulation. Crimp the ferrule using a 0.50 mm crimp die. Slide an 18 AWG (1.0mm²) insulated ferrule over each group of braid wire twisted strands. Spread the ferrules apart to fit into the connector as shown. Align the ferrule ends as shown while minimizing slack in the braid wire. Crimp the ferrules using a 0.50 mm crimp die.

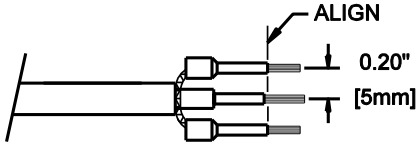

Step D Trim excess wire from the end of the ferrules.

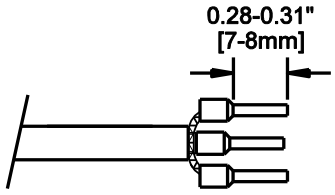

Step E The cable ferrules should be inserted into the cable plug and tightened as shown. **Before connecting the cable, route the excess cable in the enclosure so there will not be excessive strain or twisting at the terminals**. Insert the plug into the appropriate receptacle as shown. The center conductor ferrule should be in the center terminal of the plug and the two braid ferrules in the outer terminals. When removing the cable, grip the plug and pull it straight out of the receptacle. **Note the plug and receptacle are polarized so they can only be connected one way**.

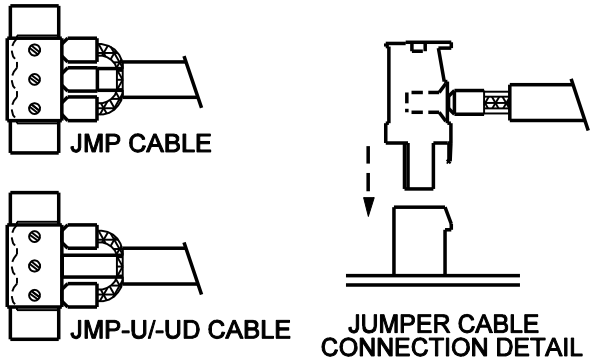

8.5.3 Ferrule Installation in Zener Barrier Panel

Step A Remove 1.5” [38 mm] of cable jacket.

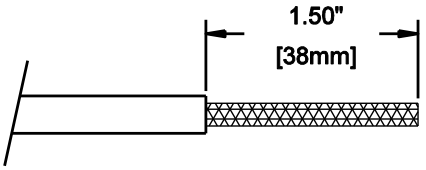

Step B Separate the braid wire into two equal groups. Twist each group into a small wire. Remove 1.25” [32 mm] of insulation from the center wire.

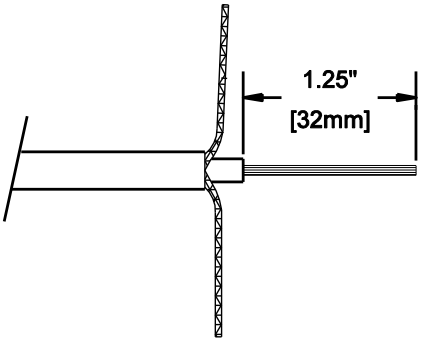

Step C JMP-U/-UD Cable

Slide a 14 AWG [2.5 mm²] uninsulated ferrule onto the center wire until it is tight against the center insulation. Crimp the ferrule using a 2.5 mm² die. Then crimp it again with a 1.5 mm die. Slide a 16 AWG [1.5 mm²] insulated ferrule over each group of braid wire twisted strands. Align the ferrule ends as shown while minimizing slack in the braid wire. Crimp the ferrules using a 1.0 mm crimp die.

JPP Cable

Slide an 18 AWG (1.0mm²) insulated ferrule onto the center wire until the ferrule insulation is completely over the wire insulation. Crimp the ferrule using a 0.50 mm crimp die. Slide an 18 AWG (1.0mm²) insulated ferrule over each group of braid wire twisted strands. Align the ferrule ends as shown while minimizing slack in the braid wire. Crimp the ferrules using a 0.50 mm crimp die.

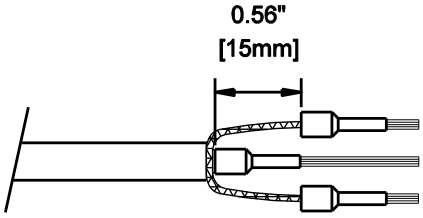

Step D Trim excess wire from the end of the ferrules.

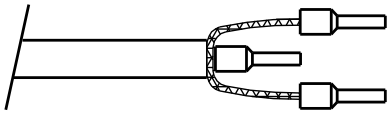

Step E **Before connecting the cable, route the excess cable in the enclosure so there will not be excessive strain or twisting at the terminals**. Insert the center wire into the fuse holder terminal and tighten the screw. Then insert one of the braid ferrules in the adjacent braid terminal and fasten it. Repeat with the remaining braid ferrule. If the ferrules were installed properly, there should be very little slack braid wire.

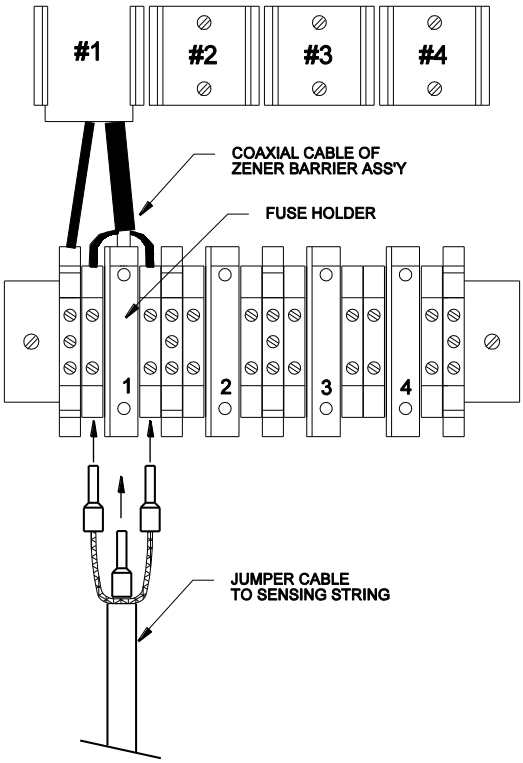

8.5.4 ATP Cable Connection at PAL-AT

The ATP cable uses two of the three cable plug terminals as shown below. Strip 3/8" [10mm] of insulation from the end of the red and white wires. Insert the red wire into the center terminal and the white wire into either of the side terminals of the cable plug and tighten as shown. **Before connecting the plug, route the excess cable in the enclosure so there will not be excessive strain or twisting at the terminals**. Insert the plug into the appropriate receptacle as shown. When removing the cable, grip the plug and pull it straight out of the receptacle. **Note the plug and receptacle are polarized so they can only be connected one way.**

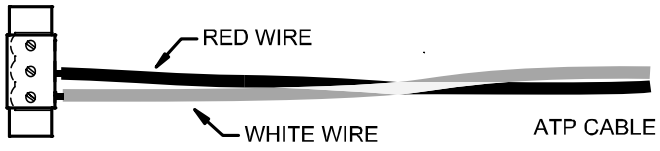

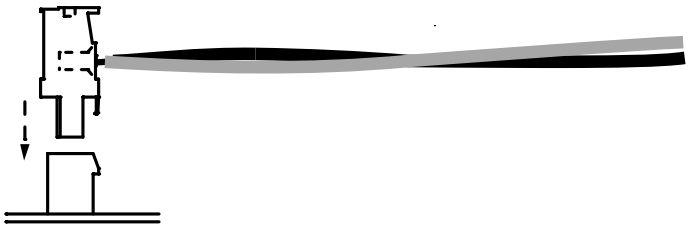

ATP CABLE
CONNECTION DETAIL

9 Probes

9.1 UL Requirements

All PermAlert probes are approved for installation in ordinary, or unclassified, locations. All PermAlert probes, **except the PWS water probe**, are also approved for installation in hazardous locations (see figures 3-2 and 3-3) when the sensing string is connected to a Zener Barrier Panel and Zener Barrier Assembly.

9.2 Probe Integrator Selection

All probe integrators have a red or blue band(s) of shrink tubing on the probe lead cable. A probe integrator with a red band(s) is used with PHLR, PSTV, PFS and PTHL probe or a normally closed switch. A probe integrator with a blue band(s) is used with the PWS probe or a normally open switch.

The number of bands on the probe integrator indicates where it can be used in the sensing string. One band (-S model) indicates the probe integrator must be connected to the system in the first 5,000' [1500 m] of sensing string. Two bands (-L model) indicate the probe integrator must be connected to the sensing string beyond 5,000' [1500 m] (Contact factory for specific requirements).

9.3 Probe Installation

1. All PAL-AT probes are furnished with a probe integrator and 60' [18 m] of JMP-U jumper cable in a NEMA 4X [IP66] junction box. The probe integrator allows the attachment of probes to the PAL-AT monitoring system. The standard 10" x 8" x 4" [250 mm x 200 mm x 100 mm] junction box can house one integrator. A 12" x 10" x 4" [300 mm x 250 mm x 100 mm] junction box is recommended if 2 probe integrators are located in one box.
2. The maximum temperature for a probe integrator is 180°F [80°C] in ordinary locations. **If a probe integrator is connected to a ZBA in a hazardous location, the maximum temperature is 140°F [60°C**].
3. The standard polyester probe junction box is rated for 150°F [65°C]. An optional high- temperature fiberglass box is also available. Make sure the enclosure is appropriate for the ambient temperature.
4. Some probe components (epoxy, shrink tubing, etc.) are resistant to many hydrocarbons and chemicals. However, the probes should be cleaned promptly after a leak event. **If left exposed to hydrocarbon liquids or chemicals for extended periods, the probes may require replacement.**
5. Mount the probe integrator junction box at a location close to the point being monitored. PermAlert supplies probes with 20' [6 m] of twin lead cable. Uncoil the twin lead cable. **Do not splice on additional wire to lengthen the leads.** If the probe integrator is located in a manhole or pit, which may collect and hold water, mount the junction box as high as possible.
6. Figures 9-1 and 9-2 show the recommended installation procedures. Figures 9-3 thru 9-7 show typical probe installations. Install the probe and use electrical conduit and/or watertight cord grips, as necessary, to prevent water entry where the probe twin lead penetrates the monitored area. If the probe lead length is longer than 5' [1.5 m] and the probe is installed in the first 800' [245 m] of a system, plastic conduit should be used instead of metal conduit. The cord grip (part # 8057950) with the oval opening in the bushing is used with the twin lead cable. The cord grip (part # 8057954) with the round hole is for the jumper cable.
7. Once a probe is installed, the twin lead should be routed to the junction box containing the probe integrator. **Trim the excess length of the probe twin lead before splicing it to the probe integrator.** Splice the leads to the integrator by using the crimp connectors supplied with the probe. Heat the splice with a heat gun to seal the adhesive-lined shrink tubing on the connector.
8. Use all 60' [18 m] of jumper cable furnished with the probe integrator. **If the jumper cable leads are too long, do not shorten,** but loosen the watertight cord grips and coil the excess jumper cable within the probe junction box. One jumper cable length is shorter than the other is. Connect the shorter end (10') [2.5 m] to the cable segment closest to the PAL-T panel. The longer end of jumper cable (50') [15 m] should be routed to the connection point for the continuation of the sensing string.
9. Additional jumper cable may be required to be added to the end of a probe installed beyond 3000' [900 m] on the cable string (see table 9-1).

10. If the probe is the end of the sensing string, refer to table 4-1 (section 4) for the required length of jumper cable needed to be added to the end of the probe.
11. Additional jumper cable may be connected on either side of the probe integrator to facilitate connection of remote sensing string components.
12. Refer to the "Cable Connector Installation" section of this manual and install a connector on each length of jumper cable. Test all connectors using the "Cable and Connector Testing Procedures".
13. Cable connections to jumper cable from the probe integrators will become calibration points and must be accessible during system start-up.
14. The maximum number of probes per cable string is 10. A maximum of three probes installed past 5000' [1500 m] is allowed (Contact factory).

Table 9-1
Additional Jumper Cable after Probe

Probe Location on Sensing String ft / [m]	Additional JMP-U/-UD At End of Probe ft / [m]			Additional JPP At End of Probe ft / [m]		
	Twin Lead Length			Twin Lead Length		
	20 / [6]	15 / [4.5]	10 / [3]	20 / [6)	15 / [4.5]	10 / [3]
0-3000 / [0-900]	0 / [0]	0 / [0]	0 / [0]	0 / [0]	0 / [0]	0 / [0]
3001-4000 / [900-1200]	20 / [6]	0 / [0]	0 / [0]	25 / [8]	0 / [0]	0 / [0]
4001-5000 / [1200-1500]	60 / [18]	25 / [8]	20 / [6]	80 / [25]	35 / [11]	25 / [8]
Over 5000 / [over 1500]	Contact Factory					

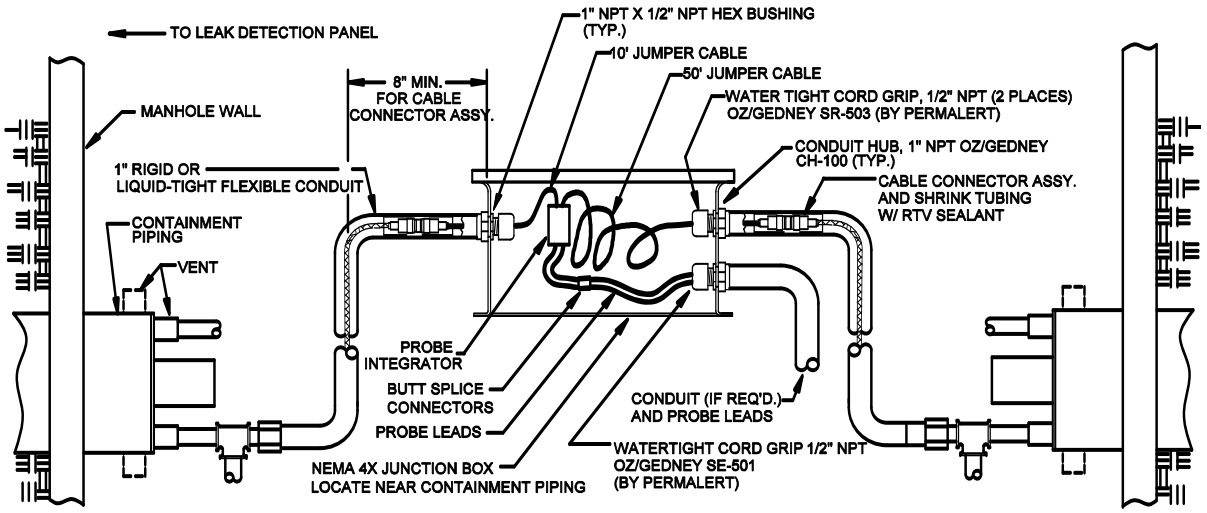

NOTES:

1. WATERTIGHT CORD GRIPS, CONDUIT HUBS AND CONDUIT ARE RECOMMENDED
2. THE 10' AND 50' JUMPER CABLE CONNECTED TO THE PROBE INTEGRATOR MUST NOT BE SHORTENED. COIL EXCESS WITHIN NEMA 4X JUNCTION BOX.
3. 50' LENGTH OF JUMPER CABLE ATTACHED TO THE PROBE INTEGRATOR MUST BE DOWNSTREAM OF THE PROBE INTEGRATOR AWAY FROM THE PAL-AT PANEL
4. CONDUIT SHOULD BE USED TO PROTECT THE PROBE LEADS IN APPLICATIONS WHERE DAMAGE MAY OCCURE
5. MARK UNPROTECTED PROBE LEADS WITH CABLE TAG, PART NUMBER 8057661.
6. ALLOW SLACK ON SENSOR CABLES TO INSTALL CONNECTORS.

Figure 9-1
Typical Probe Connection in Monitored Areas

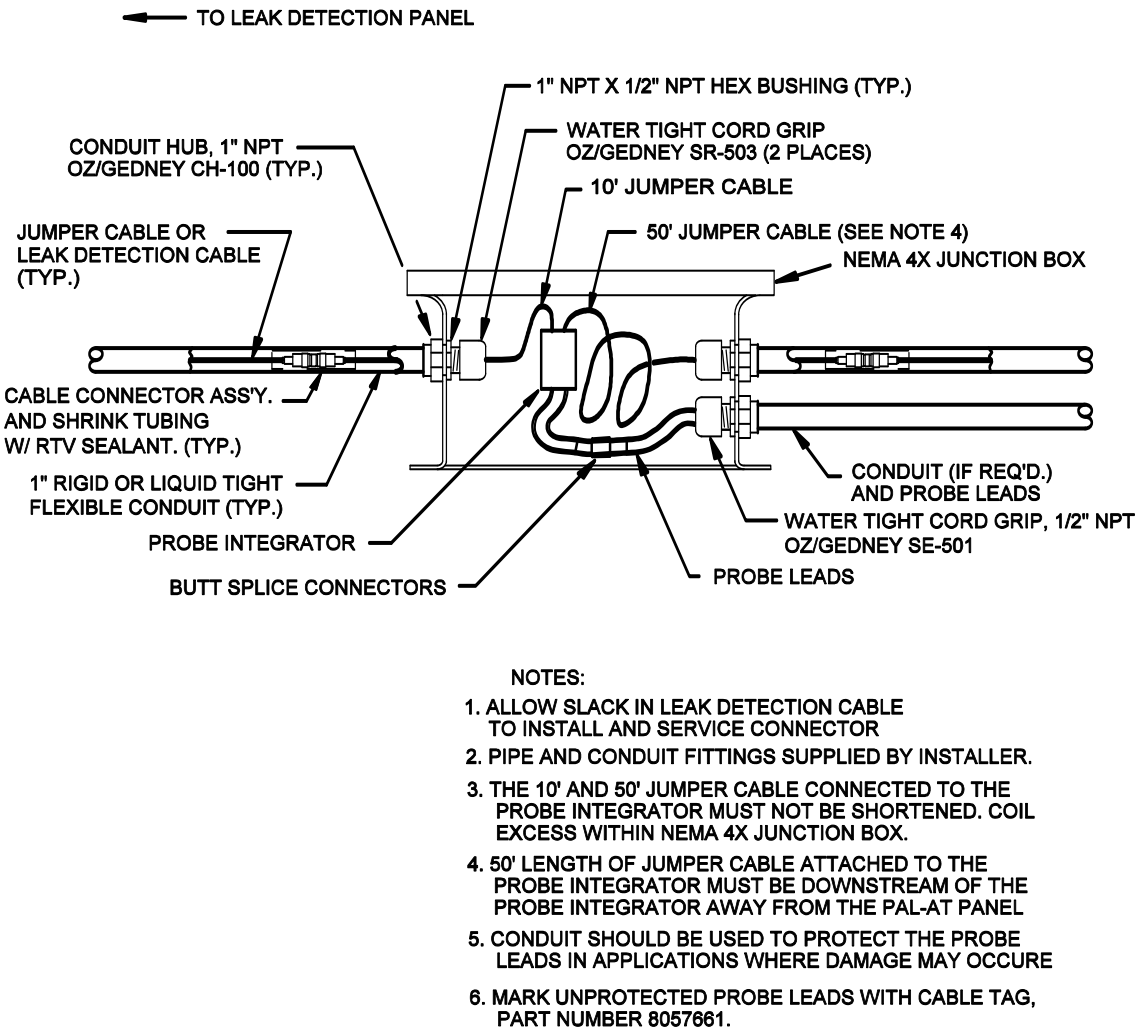

NOTES:

1. ALLOW SLACK IN LEAK DETECTION CABLE TO INSTALL AND SERVICE CONNECTOR
2. PIPE AND CONDUIT FITTINGS SUPPLIED BY INSTALLER.
3. THE 10' AND 50' JUMPER CABLE CONNECTED TO THE PROBE INTEGRATOR MUST NOT BE SHORTENED. COIL EXCESS WITHIN NEMA 4X JUNCTION BOX.
4. 50' LENGTH OF JUMPER CABLE ATTACHED TO THE PROBE INTEGRATOR MUST BE DOWNSTREAM OF THE PROBE INTEGRATOR AWAY FROM THE PAL-AT PANEL
5. CONDUIT SHOULD BE USED TO PROTECT THE PROBE LEADS IN APPLICATIONS WHERE DAMAGE MAY OCCURE
6. MARK UNPROTECTED PROBE LEADS WITH CABLE TAG, PART NUMBER 8057661.

Figure 9-2
Typical Conduit Connection Detail

9.4 PHLR Hydrocarbon Probe

The PHLR series is a reusable hydrocarbon probe that detects hydrocarbon liquids in sumps, interstitial spaces of pipes and any other areas where hydrocarbon liquids can accumulate to a depth of ¼" [6 mm]. The probe is designed to detect fuels (gasoline, diesel fuel, jet fuel, crude oil, etc.) and many hydrocarbon solvents. The probe is reusable by cleaning or replacing the sensor elements. There are two models of the PHLR probe available:

- The standard PHLR is designed for non-pressurized locations such as sumps, manholes, and non-pressurized containments. The PHLR can be installed in any orientation – vertical or horizontal.
- The PHLR-P is designed for pressurized containment applications. This model is ideal for typical sealed, containment piping systems that are maintained under pressure with a nitrogen or air blanket. The PHLR-P should be installed in a vertical orientation. **The PHLR-P has vent holes that must not be submerged in a liquid before the containment is pressurized** (see figure 9-4).

An extension to the probe housing can easily be added with standard ¾" Schedule 40 PVC pipe to accommodate installation requirements.

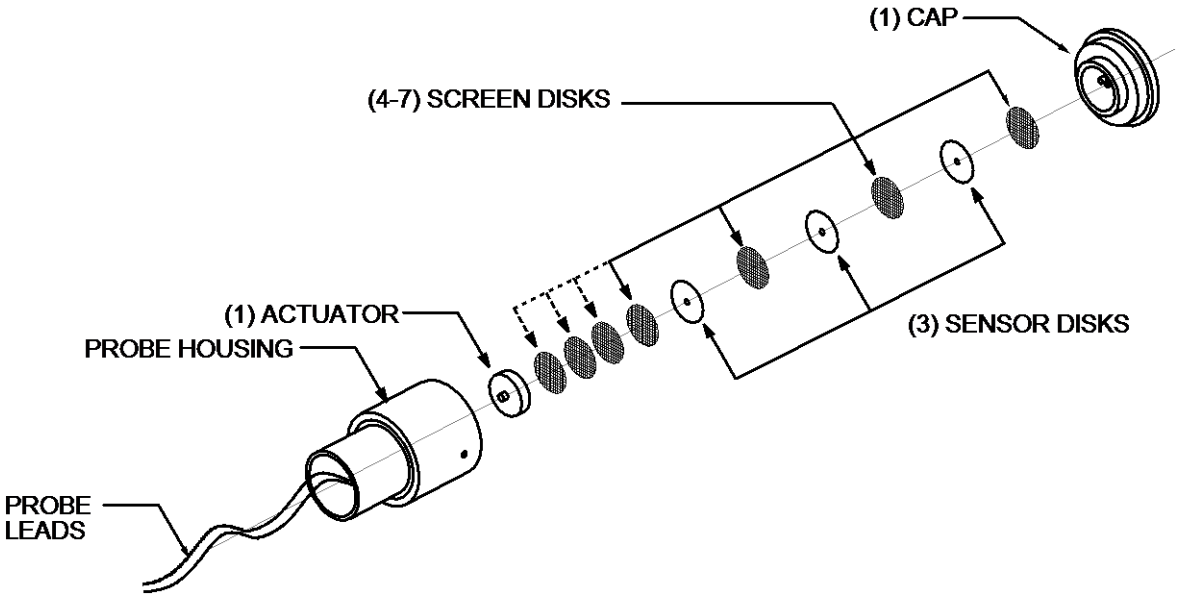

Figure 9-3
PHLR Sensor Package

9.4.1 Cleaning Sensor Elements Procedure

The replacement sensor package consists of 10 disks: seven screen disks and three sensor disks as shown in figure 9-3. The replacement package includes all removable parts: probe cap, sensor elements, and actuator. Replacement sensor elements can also be purchased separately.

The following procedure is a general guideline to follow to clean the probe and sensor elements after exposure to hydrocarbon liquids.

Caution: It is the user's responsibility to determine safety precautions and the suitability of exposing personnel to the hydrocarbon liquid on the probes and various cleaning solvents suggested.

The sensor disks swell after exposure to fuels and solvents. The swelling forces the actuator to move and operate a low-force sealed switch. Volatile hydrocarbon liquids, such as gasoline, will eventually evaporate resulting in the sensor disks returning to their original size. This allows the switch to return to the normal position. A faster resetting process is to disassemble the probe to speed the evaporation of the liquid. Other liquids, such as diesel fuel and jet fuel that do not evaporate, must be flushed with a solvent to remove the contamination. Disassemble and clean the probe as follows:

1. Remove excess hydrocarbon contamination from the exterior of the probe.
2. Hold the switch in a vertical position with the cap downward and unscrew the cap. Do this over a table so the small parts are not lost if they are dropped. **Be very careful not to lose the sensor disks.** They are very similar to contact lenses in size and texture.
3. Place the actuator, screens, cap, and sensor disks into a small container of solvent. Coleman Camp Fuel, which is naphtha, works well and evaporates very quickly. Other solvents that evaporate quickly and completely are also suitable.
4. Soak the components for a minute or two and then remove them.
5. Let the solvent evaporate until the disks return to the original diameter and fit into the cap easily. If the sensor disks do not slip easily into the circular holder in the cap, repeat the cleaning process. The disks should be about 0.5" [12 mm] diameter when dry.

6. Reassemble the switch. Carefully alternate the screens and three sensor disks in the cap as shown in figure 9-3. If there are more than 4 screens, place the extra screens on top. Place the actuator on top of the top screen. The actuator has a small point in the center of one side that must face the probe housing as shown. Hold the probe housing vertically and screw the cap finger-tight into the bottom of the housing.
7. If response time is over 5 minutes for diesel fuel at room temperature, insert the optional fifth screen next to the actuator. Make sure the extra screen does not activate the probe when it is tightened. If so, remove the extra screen. The extra screen accommodates manufacturing tolerances and reduces the amount of swelling of the sensor disks required before the probe activates.

9.4.2 Testing the Probe

The assembled probe can be easily tested with an ohmmeter and a small paperclip.

1. Connect the ohmmeter leads to the probe leads.
2. The reading should be very low, typically under two ohms.
3. Insert the paper clip into one of the five holes in the center of the cap and press gently (1-2 oz of force [25 g to 50 g]) into the switch.
4. The ohmmeter should read an open circuit or 0.L.
5. Remove the paper clip and the meter should return to the original low reading.
6. Disconnect the ohmmeter.

9.4.3 Troubleshooting

If the test results are not as expected, the following checks should help determine the problem.

- If the original reading is greater than 2 ohms or open, or 0.L, then
    - Check the sensor disks and screens are installed correctly. They must be flat, not folded over.
    - Verify the diameter has returned to the original size. Clean again if needed.
    - Recalibrate the probe as described below.
- If the ohmmeter reading is not an open circuit, 0.L, when the paperclip is inserted, then
    - Check the meter leads or probe wires are not shorted together.
    - Disassemble the probe and make sure the actuator point is oriented properly to press into the center of the switch in the probe housing.
    - Recalibrate the probe as described below.

9.4.4 Calibrating the Probe

If the sensor elements are replaced, it is necessary to use the correct number of screen elements for optimum sensitivity (see figure 9-3). The number of screens required varies due to manufacturing tolerances of the probe. A multimeter is required.

1. Set the multimeter to the ohms function, auto-ranging scale, and connect to the probe leads.
2. Assemble the probe with seven screens and three elements as shown. Tighten the cap finger tight.
3. If the meter reading is less than 2 ohms, the probe fails the calibration. Make sure there are no extra screen or sensor disks installed.
4. If the reading is 0.L, remove a screen (shown by the dashed arrows in figure 9-3). If the reading is less than 2 ohms, the calibration is complete.
5. If more than four screens are installed repeat step 4.
6. If the reading is 0.L with four screens, the probe fails the calibration. Make sure there are three sensor disks and at least four screen disks installed.

If the reading in step 4 is not less than 2 ohms, hold the probe in a vertical orientation and gently tap the housing. The switch resistance should be less than 2 ohms in the normal dry state.

9 Probes

9.5 Typical Installations

Contained Pipe

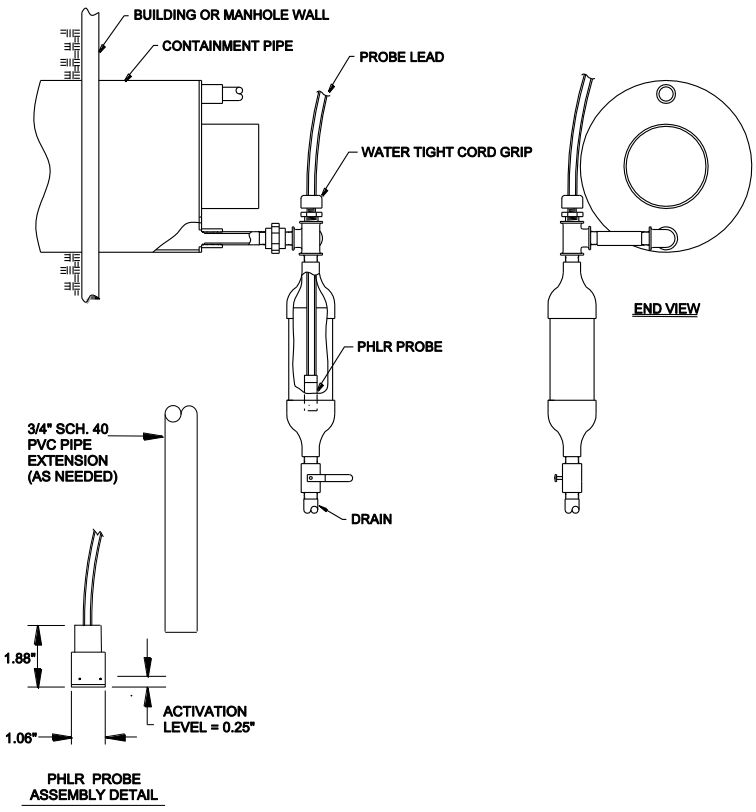

Pressurized Contained Pipe

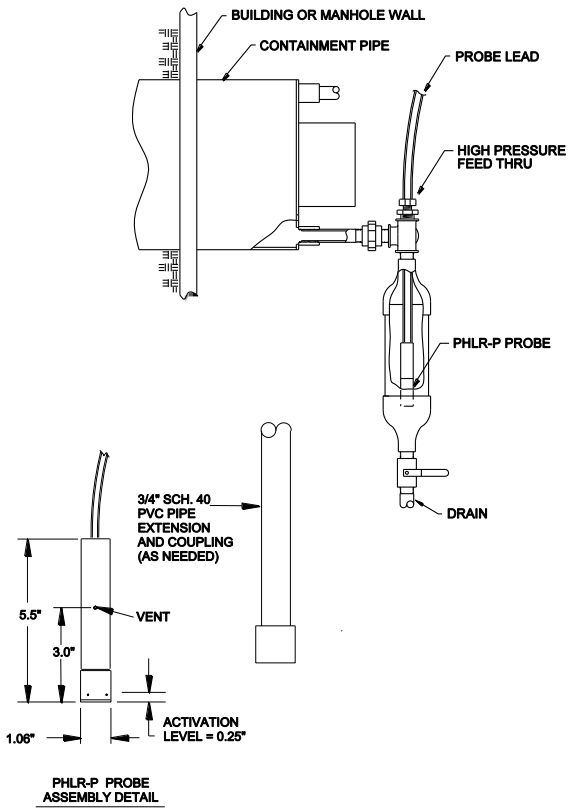

Double-Wall Tanks

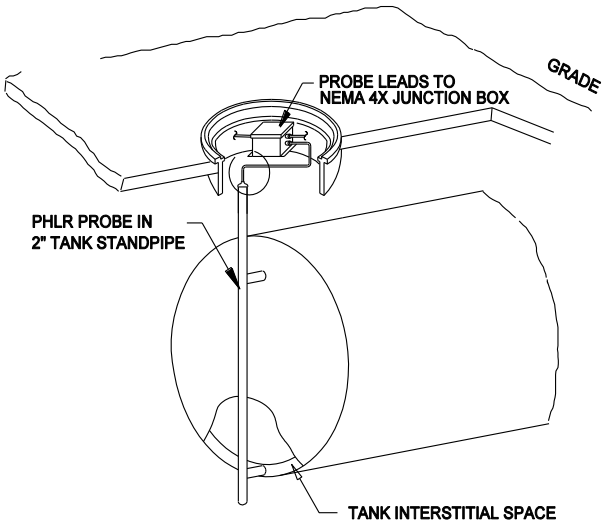

Contained Area

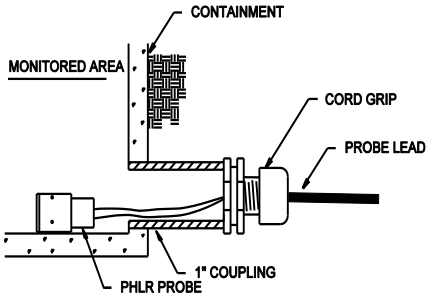

Figure 9-4
Typical PHLR and PHLR-P Probe Installations

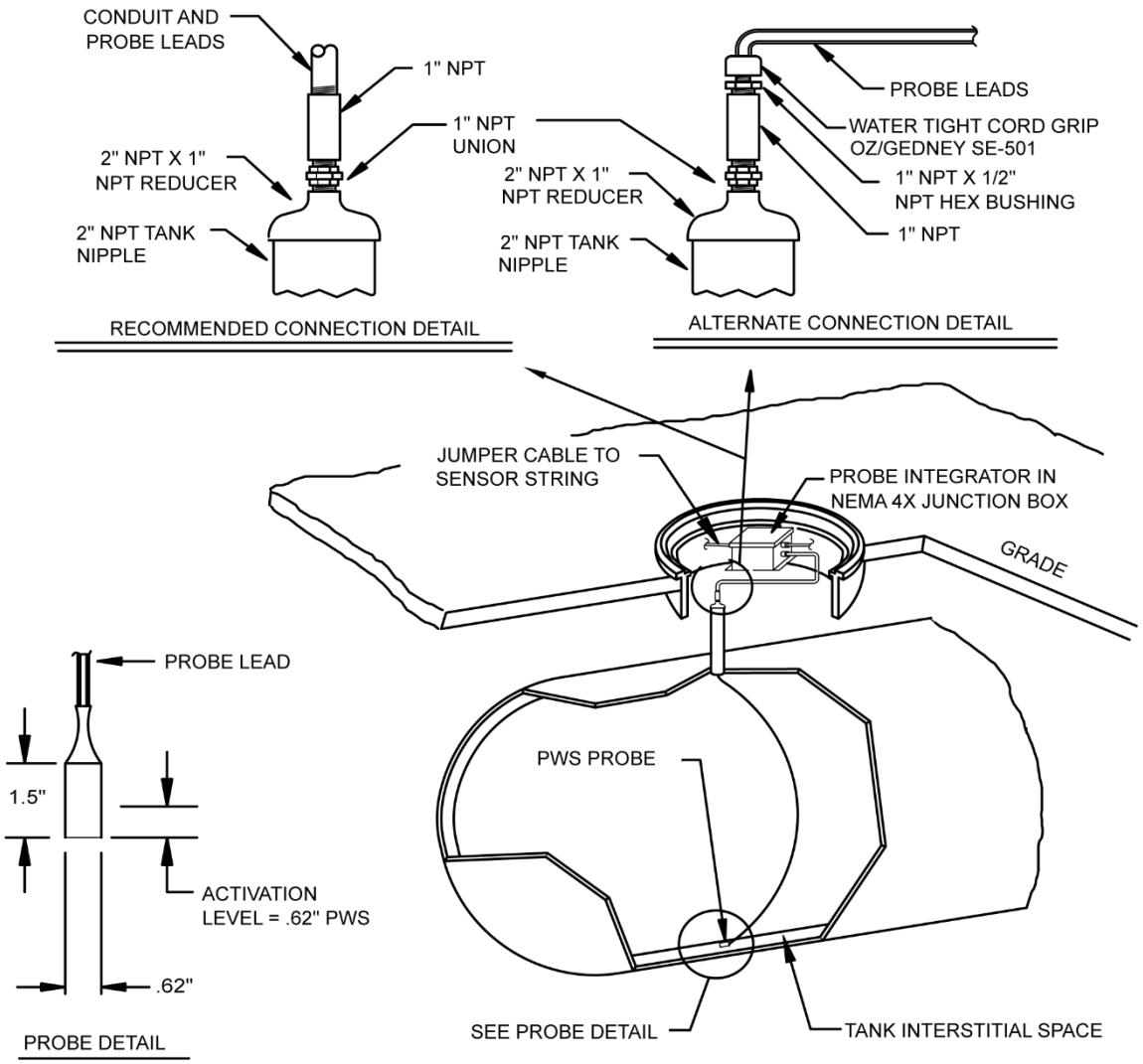

NOTES:

1. LENGTH OF PROBE LEAD IS 20 FEET MAX.

Figure 9-5
Typical PWS Probe Installation

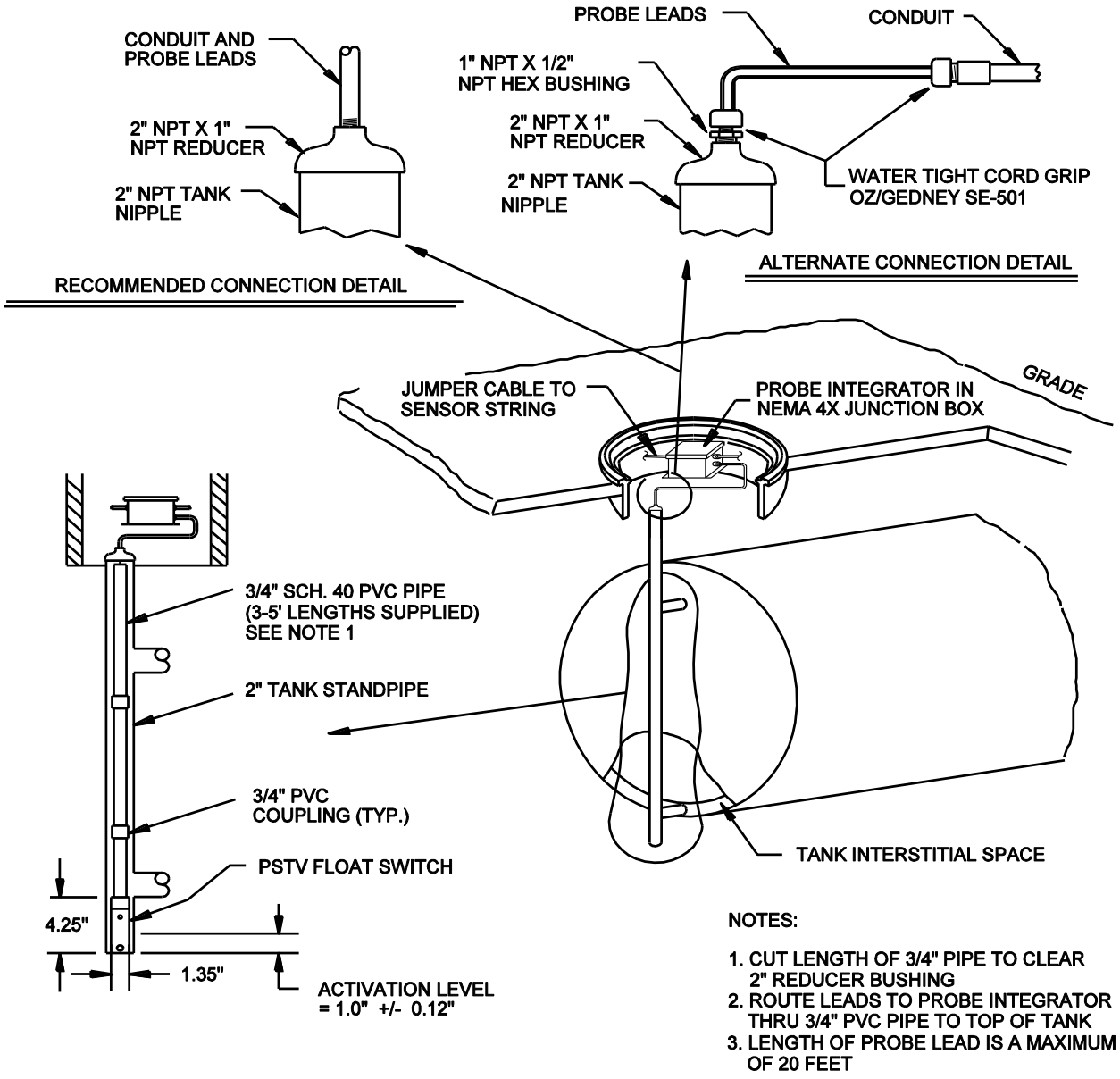

Figure 9-6
Typical PSTV Tank Float Switch Installation

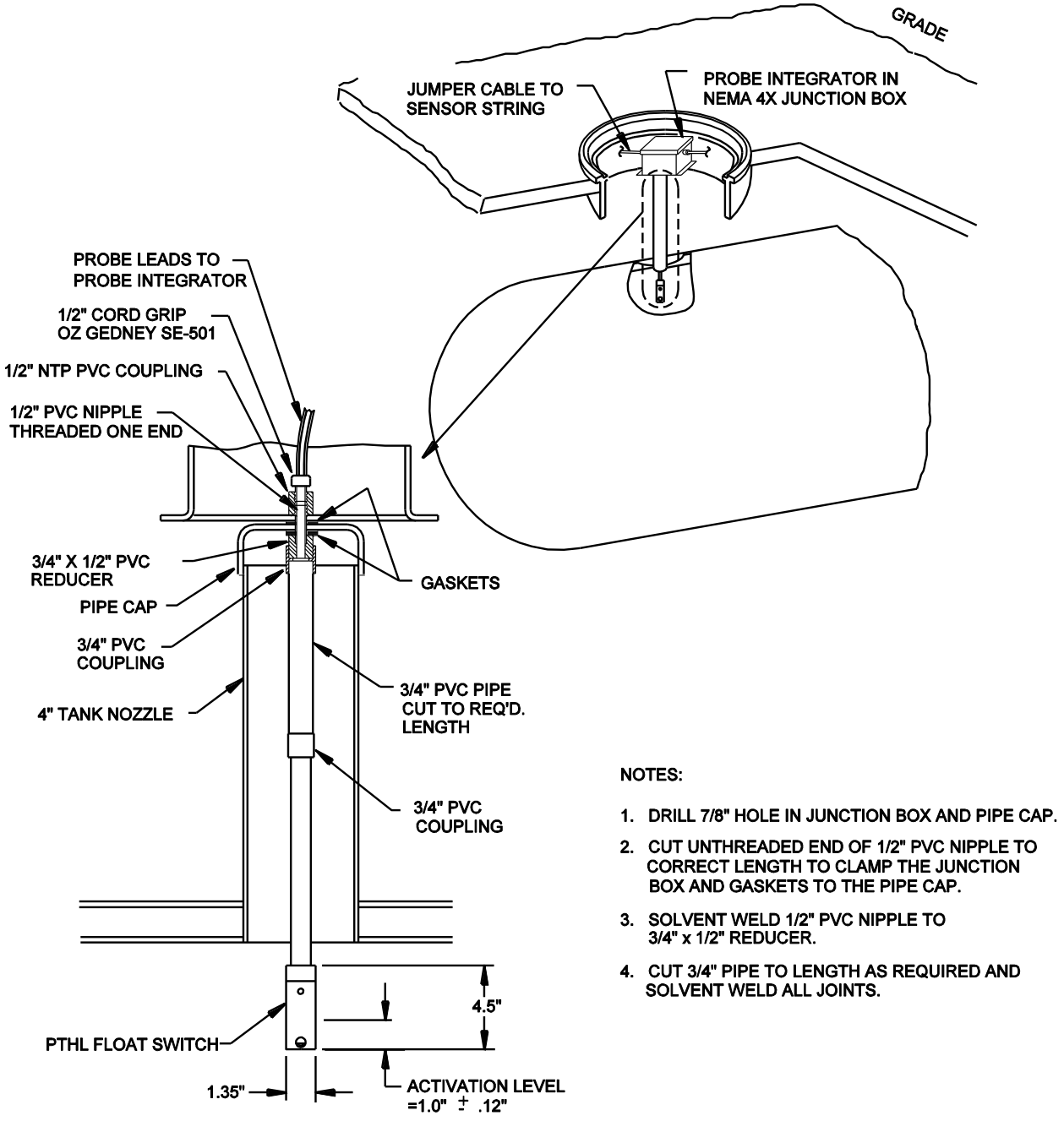

Figure 9-7
Typical PTHL Installation

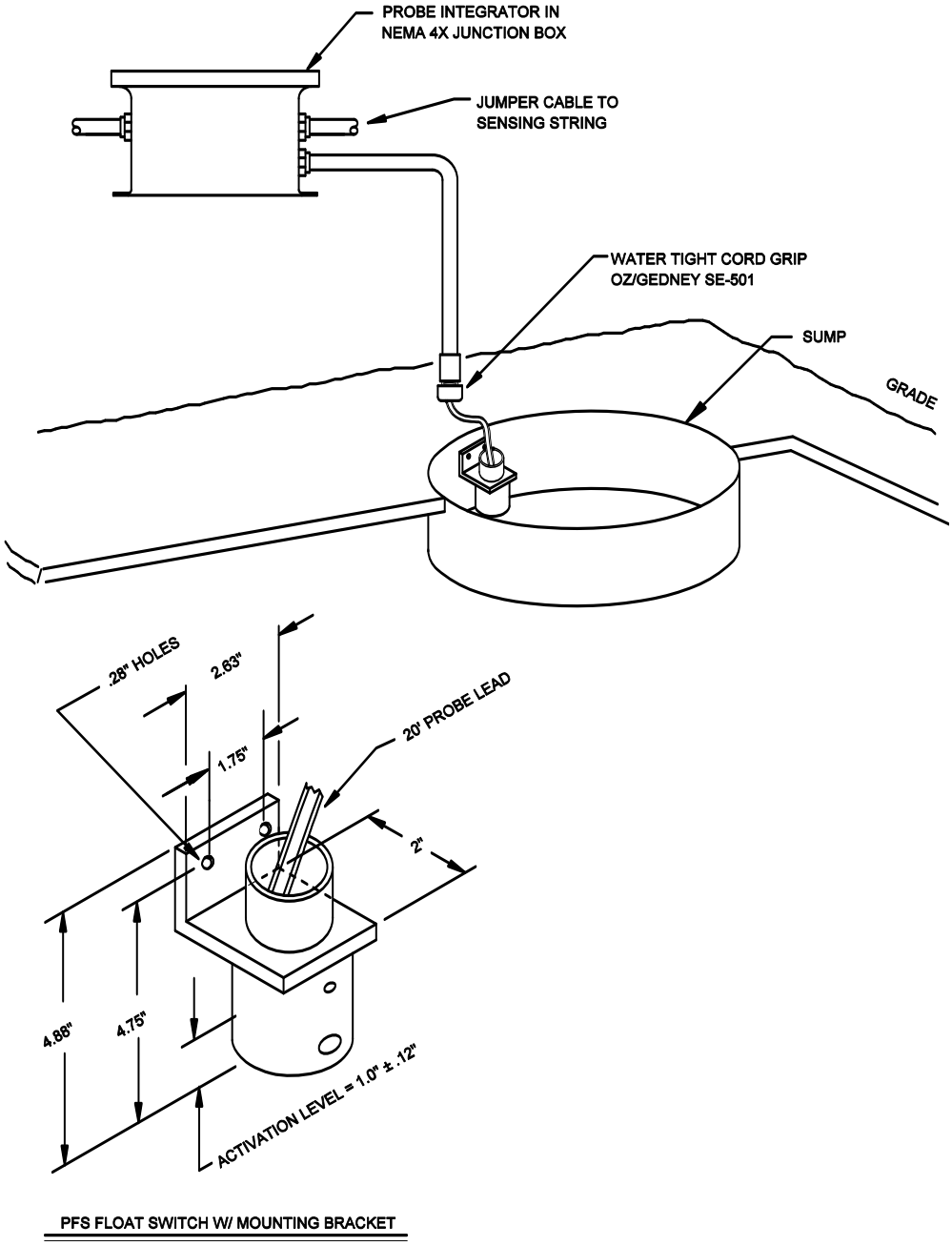

Figure 9-8
Typical PFS Installation

9.6 Probe Tests

Figure 9-9 shows a typical probe integrator test setup. There are four test procedures based on the type of integrator used. The red lead of an ohmmeter should be connected to the center pin of either of the connectors (point A). The black lead should be connected to the connector housing (point B). The ohmmeter should be set to resistance. Follow the test procedure in figure 9-10 to test the probe integrator and probes.

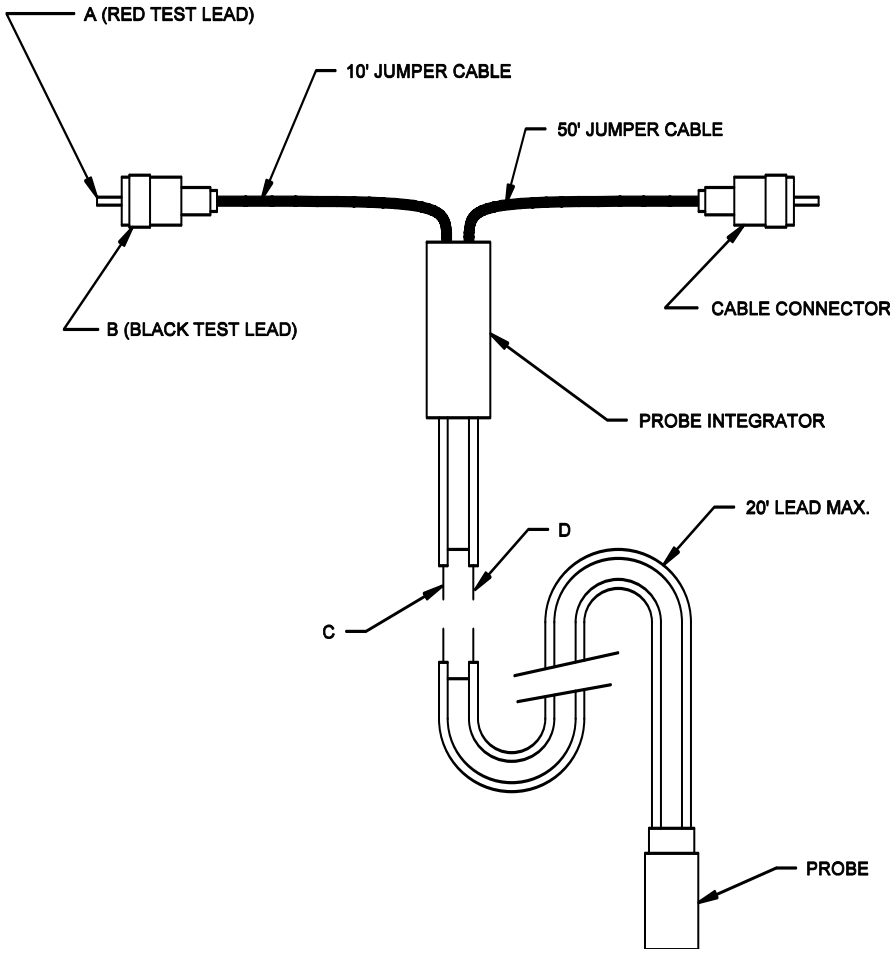

Figure 9-9
Probe Integrator Test Setup

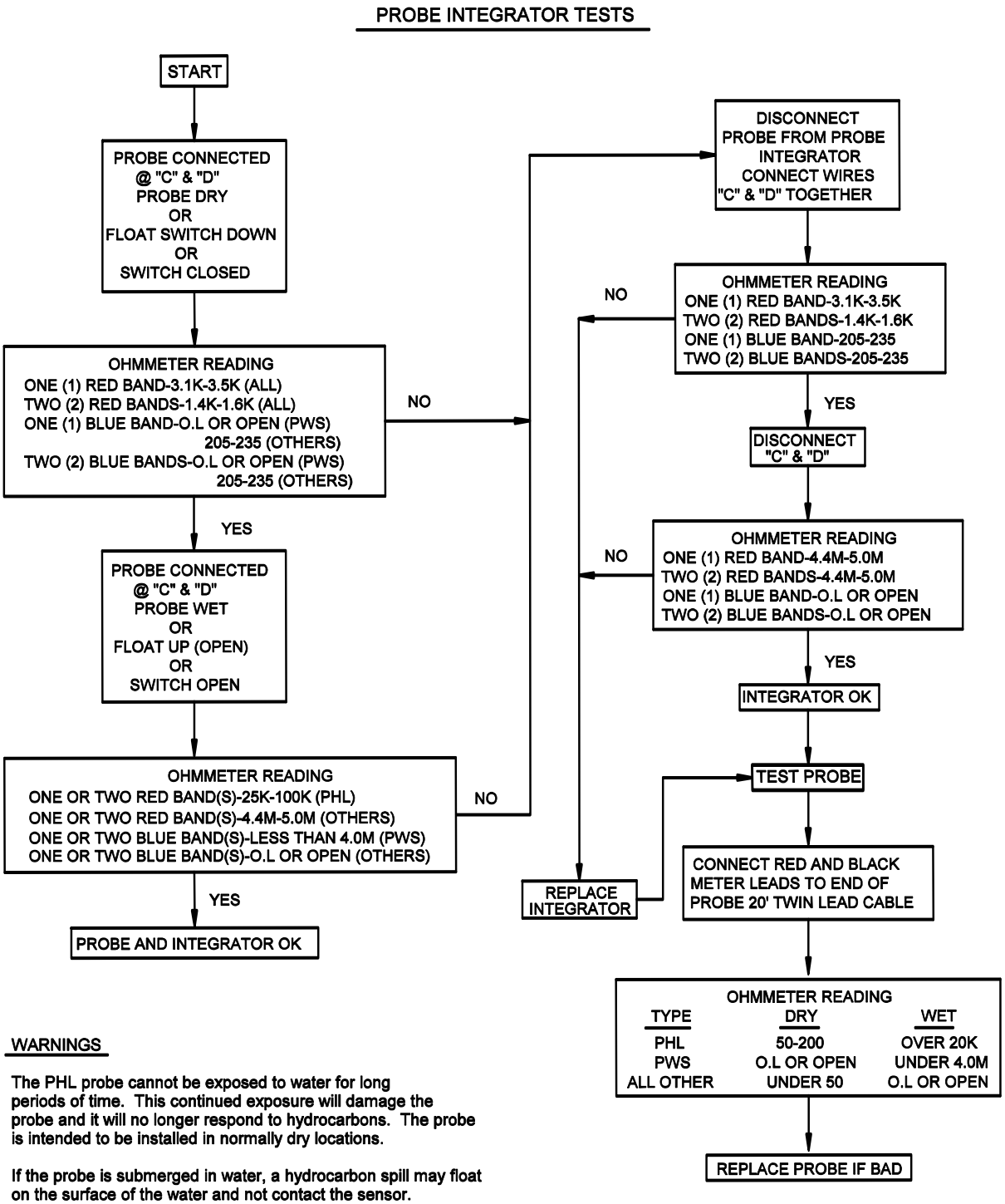

Figure 9-10
Probe Integrator Test

10 ATP Cable in Polyurethane Foam Insulation

10.1 General

This section outlines installation procedures for ATP twisted pair leak detection cable. The cable has two insulated solid copper wires, one red and the other white. It is installed at the factory in polyurethane foam insulation.

The cable is typically installed at the 12 o'clock position in the foam insulation for straight runs. It may be in other orientations for fittings and returns from branch runs, so check the drawing layout for specific job information. **It is very important that the ATP cable be installed straight across each field joint. The pipe should be rotated so the location where the ATP cable exits the polyurethane foam in adjacent pipe sections line up to each other. The exit location is stenciled "ATP" on the pipe jacket.**

10.2 Pipe Installation Precautions

Extra cable extends past each end of the pipe and is coiled around the pipe to protect it during shipping. **The extra cable must be protected from damage and must be moved away from the pipe before welding the pipe. Repeated bending of the cable can also damage it.**

There are several techniques to protect the ATP cable during the pipe welding/brazing process, depending on the pipe dimensions and material. The cable can be exposed to temperatures of 300°F [150°C] for a short time. A wet rag next to the cable can reduce the temperature sufficiently in some cases. **If the ATP cable is within 6" from the weld, additional precautions must be taken.** There are heat block insulator paste products available that can be placed on the pipe between the heat source and the cable. Typically, the process involves applying a thick layer of insulator paste around the pipe and then removing it after the welding operation (per manufacturer's instructions).

10.3 System Configuration

A PAL-AT Leak Detection and Location System can monitor 1 to 4 cables, or sensing strings, depending on the model. **A sensing string used to monitor ATP must only monitor ATP. No jumper cable, probes or other types of sensor cables can be connected to the string.**

An ATP cable string has at least 50' [15 m] of ATP connected to the panel that replaces the standard jumper cable. The ATP "jumper" cable connects directly to the ATP cable in the pipe foam insulation at the start of the pipeline. Watertight electrical conduit should be used to protect the cable and keep it dry. **The watertight requirement for conduit is critical to prevent false alarms.**

10.4 Calibration Points

During the initial setup and calibration of the PAL-AT system, connectors at selected locations, called calibration points, are temporarily disconnected. **Therefore, it is imperative to have accessibility to connectors at calibration points at all times until the system is brought on-line.** The cable at these locations can be prepared for permanent crimp connectors, but the connectors should not be crimped until the calibration process is completed for each section. A reusable connector (CAGOLD) can be installed at these points to allow multiple making/breaking the connection if needed (see section 8.2.4).

10.5 ATP Cable and Connector Testing Procedures

The following "Continuity Test" and "Insulation Test with Wet Cloth" should be performed after each pair of crimp connectors is installed at a field joint, prior to installing the polyurethane foam. In addition, the continuity test and standard insulation test should be performed again, prior to backfilling the pipe. When performing connector tests, if a CAGOLD connector is used, the center pin of the UHF connector is connected to the red wire and the connector housing is connected to the white wire.

A 9-volt digital multimeter, e.g. a Fluke Model 75, **can be used for the continuity test** and a **500-volt megger must be used for the insulation test**.

10.5.1 Continuity Test

The continuity test checks for broken cable, open connectors and poor connections. The test can be performed on the entire ATP sensor string or a partial section.

1. At the start of the pipe (or at the connector in the panel) temporarily connect the red and white wires together. A short jumper wire with alligator clips or wire nut can be used. If a UHF connector is installed, connect the jumper between the UHF connector's center contact and the body of the connector, as shown. **Note: Do not clip onto the threaded coupling ring because it is not tightly secured and will give intermittent readings**

2. Connect the ohmmeter's test leads to the red and white wires on the other end of the cable.

3. The ohmmeter reading should be less than 6 ohms/1000 ft [20 ohms/1000 m] of cable. If it is not, check the jumper wire, test lead connections and repeat the test. If the problem still persists, check the last connector installed and correct the problem.

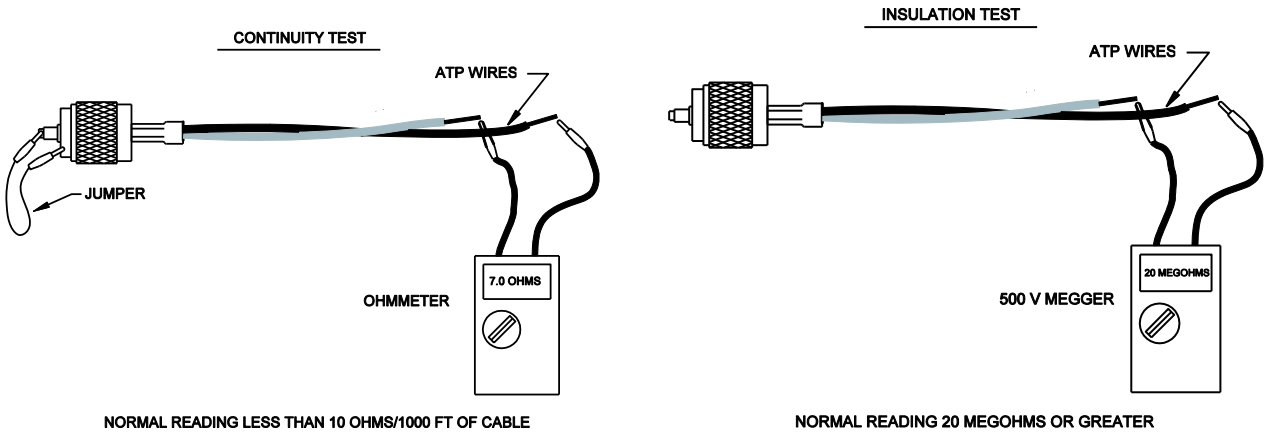

ATP Cable Test Procedures

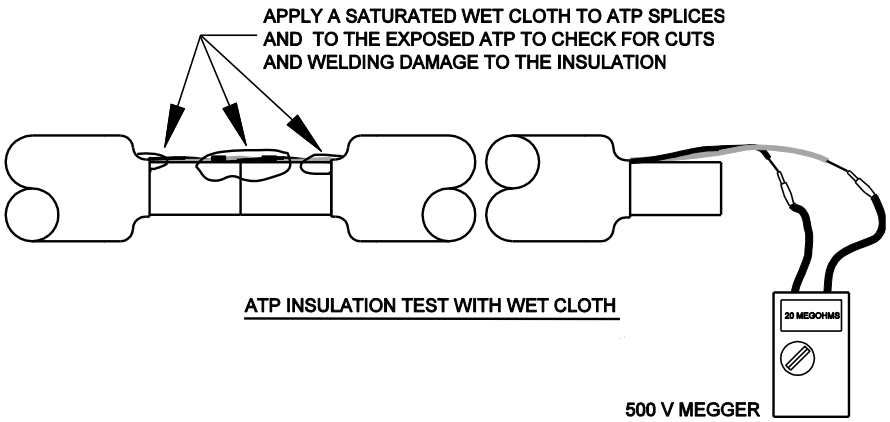

ATP Wet Cloth Test Procedure

10.5.2 Insulation Test

This insulation test checks for a short between the red and white wires or from either wire to the pipe. The test can be performed on the entire ATP sensor string or a partial section.

The ATP cable must be disconnected from the PAL-AT panel when conducting the insulation tests or damage to the equipment will result. A 500-volt megger is used to measure the resistance between the wires and the carrier pipe.

1. If the jumper wire used in the continuity test is still installed, remove it.

2. Perform this test at the unconnected end of the length of ATP.

3. Connect one of the megger test leads to the red wire and the other lead to the pipe. The reading should be “open” or greater than 20 megohms.
4. Check the white wire in a similar manner.
5. Connect one of the megger test leads to the red wire and the other lead to the white wire. The reading should be “open” or greater than 20 megohms.
6. A good cable will have a reading of at least 20 megohms. If any reading is less than 20 megohms, check the last connection for a short and repair the problem. The wire insulation may be damaged or adhesive lined shrink tubing was not installed over a splice and the condition must be corrected.

10.5.3 Insulation Test with Wet Cloth

This insulation test checks for a short between the red and white wires or from either wire to the pipe. This test should be performed when the ATP splice connections are completed at each field joint, before the field joint insulation and jacket are installed.

The ATP cable must be disconnected from the PAL-AT panel when conducting the insulation tests or damage to the equipment will result. A 500-volt megger is used to measure the resistance between the wires and the carrier pipe. Make sure no one is touching the wet cloth when the megger test is conducted.

7. If the jumper wire used in the continuity test is still installed, remove it.
8. Perform this test at the unconnected end of the length of ATP just added to the sensor string.
9. Place a saturated cloth on the splices and exposed ATP cable at the field joint. The water will enter any damaged wire insulation and cause a low megger reading.
10. Connect one of the megger test leads to the red wire and the other lead to the pipe. The reading should be “open” or greater than 20 megohms.
11. Check the white wire in a similar manner.
12. Connect one of the megger test leads to the red wire and the other lead to the white wire. The reading should be “open” or greater than 20 megohms.
13. A good cable will have a reading of at least 20 megohms. If any reading is less than 20 megohms, check the last connection for a short and repair the problem. The wire insulation may be damaged or adhesive lined shrink tubing was not installed over a splice and the condition must be corrected.
14. Remove the wet cloth and dry the pipe before insulating the field joint.

10.6 Start of Run

The initial length of ATP cable from the PAL-AT panel is connected to the ATP cable at the start of the pipe run as shown in figure 10-1.

The ATP cable should be connected to the cable plug in the PAL-AT panel as follows:

Before connecting the cable to the plug, route the excess cable in the enclosure so there will not be excessive strain or twisting at the terminals. Connect the ATP red wire to the center terminal of the cable plug. The white wire should be connected to either of the side terminals of the plug. Insert the plug into the appropriate receptacle as shown. When removing the cable, grip the plug and pull it straight out of the receptacle. **Note the plug and receptacle are polarized so they can only be connected one way**.

10 ATP Cable

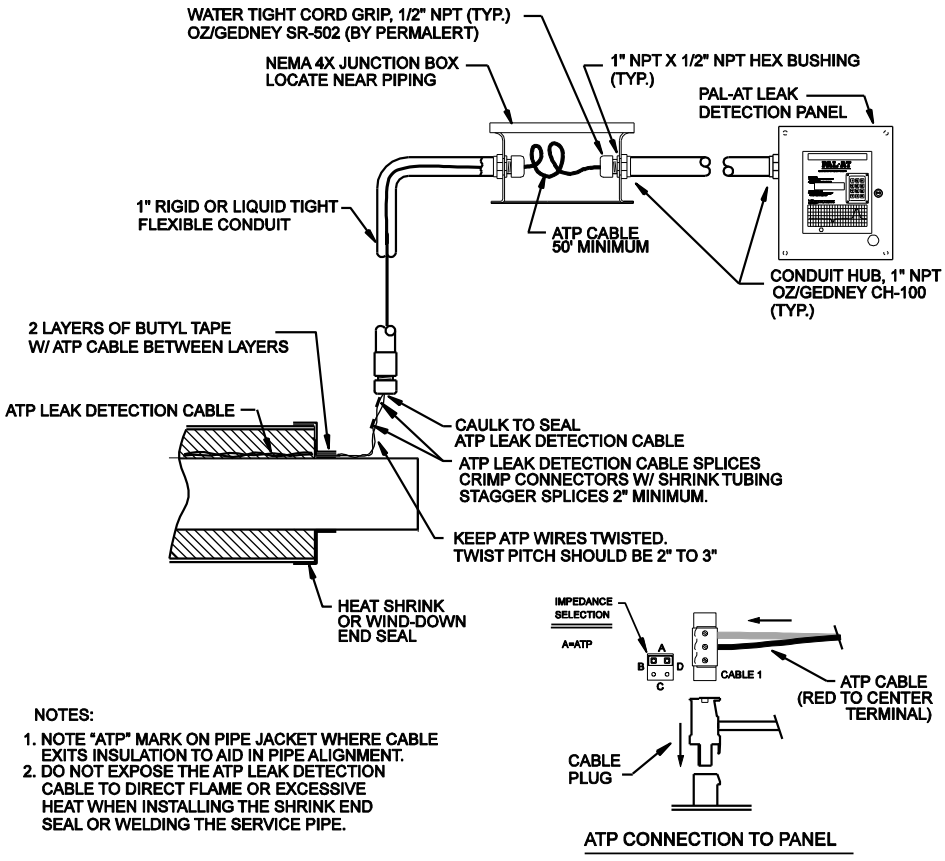

Figure 10-1
ATP Cable Connection - Start of Run

10.7 ATP Cable Splices

The ATP cable is spliced at field joints with crimp connectors using the following steps (see figure 10-2).

1. The red wires should be spliced on one side of the pipe joint and the white wires on the other side, each splice approximately 3"- 4" [75 mm -100 mm] from the end of the pipe.
2. If the ATP cable from the first pipe is not directly in line with the cable from the second pipe, the cable should be routed in as direct a line as possible between the two splice points (refer to Branch Return design in figure 10-2).
3. Cut the red wire from one pipe so the end is centered over the first splice location. Cut the other red wire so the wires meet. Minimize excess slack in the wire.
4. Strip 5/16"-3/8" [7 mm - 9 mm] of insulation from the ends of the red wires. The wire size is 1.5 mm^2 (metric size). If the correct stripping tool, Model T60/124, part number 8068309, is not available, use a tool for #14 AWG. Do not use a smaller die or uncalibrated hand tool, such as wire cutters, that may damage the conductor.
5. **Slide a 1½" [38 mm] long piece of adhesive lined shrink tubing on the wire before crimping the connector**.
6. The crimp tool, Model T60/125, part number 8068308, is ratcheted so the crimp must be completed once it is started. The crimp connector has an indentation (wire stop) in the center. **Two crimps are required, one on each half of the connector. The model T60/125 crimp tool must be used**.
7. Insert one red wire into the connector and place the connector in the T60/125 tool so the die is centered over the half of the connector with the wire. Make sure the wire is fully inserted into the connector until it hits the stop, and then crimp the connector.

8. Repeat step 7 with the other red wire.
9. Try to pull the splice apart with 10-25 lb [4.5-11 kg] force to ensure the wires were correctly seated in the connector.
10. Repeat steps 3-9 for the white wire. The red and white wires must be twisted with a 2" – 3" [50-75 mm] pitch throughout the splice area before crimping the second connector.
11. Slide the 2 pieces of shrink tubing over the splices and shrink the tubing. There should be no copper wire exposed after the tubing shrinks. If so, the connector should be replaced.
12. **There should not be gaps between the red and white twisted wires**. If they are not in contact with each other, twist the wires slightly to eliminate any gap.
13. Test each wire for continuity and insulation as described above.

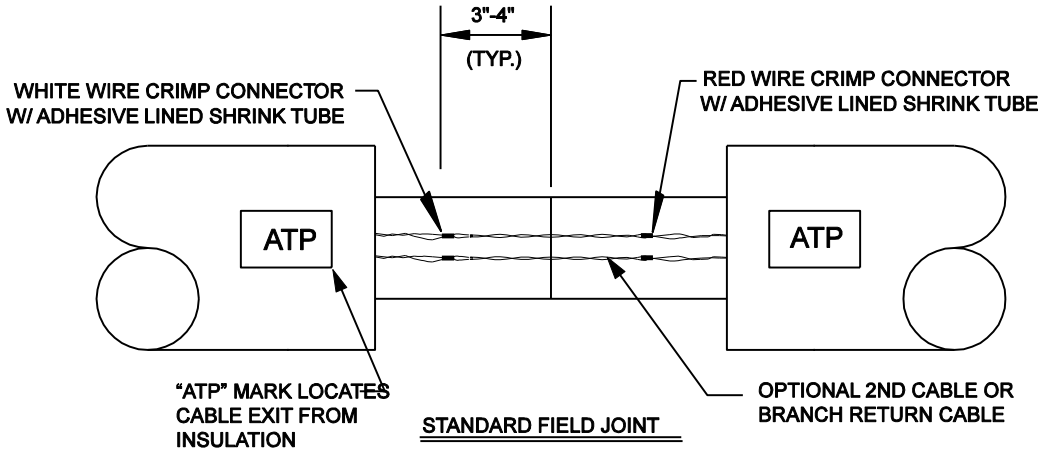

NOTES:

1. NOTE "ATP" MARK ON PIPE JACKET WHERE CABLE EXITS INSULATION TO AID IN PIPE ALIGNMENT.
2. DO NOT EXPOSE THE ATP LEAK DETECTION CABLE TO DIRECT FLAME OR EXCESSIVE HEAT WHEN INSTALLING THE SHRINK END SEAL OR WELDING THE SERVICE PIPE.
3. KEEP ATP LEAK DETECTION CABLE WIRES TWISTED. TWIST PITCH 2" TO 3" IN FIELD JOINT AREA.
4. ONLY USE THE CRIMP CONNECTORS AND CRIMP TOOL SUPPLIED BY PERMALERT.

Figure 10-2
ATP Connection Details

10.8 ATP Cable at Tee Connections

Two lengths of ATP cable are used on branch lines and tees (see figures 10-2 and 10-3). Both cables are typically at the 12 o'clock, position separated 2" - 3" apart. The ATP cable from the preceding section before a tee is connected to the ATP cable using the procedure described above. At the end of the branch, the two cables are spliced together as shown.

The return length of ATP cable from the end of the branch is spliced at the tee to the appropriate ATP cable as shown below using the standard procedure.

An optional second ATP cable may be supplied as a spare or to make all sections available for branch installation.

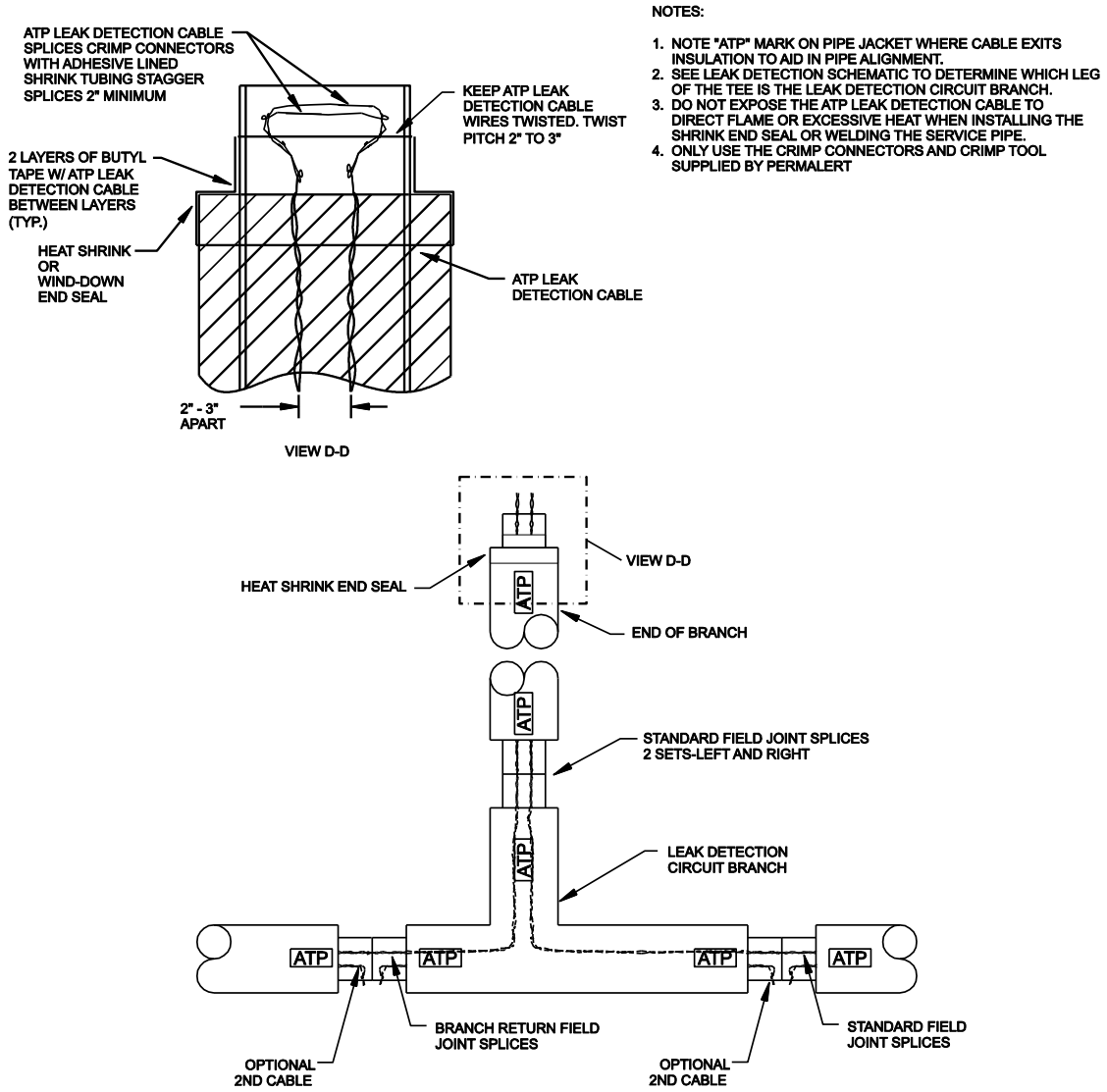

Figure 10-3
ATP Cable at Tee and End of Branch

10.9 End of Run Termination

Install a NEMA 4X [IP66] junction box near the end of the pipe. Electrical conduit should be used to protect the wire if the box is more than a few inches from the pipe end seal. The ATP cable from the pipe should be spliced to 50 ft [15 m] of ATP cable that is coiled in the junction box (100 ft [30 m] is required if the cable length is greater than 3300 ft [1000 m]). Make sure the ATP cable remains twisted. The splices to the red and white wires should be staggered and encapsulated with shrink tubing as described previously.

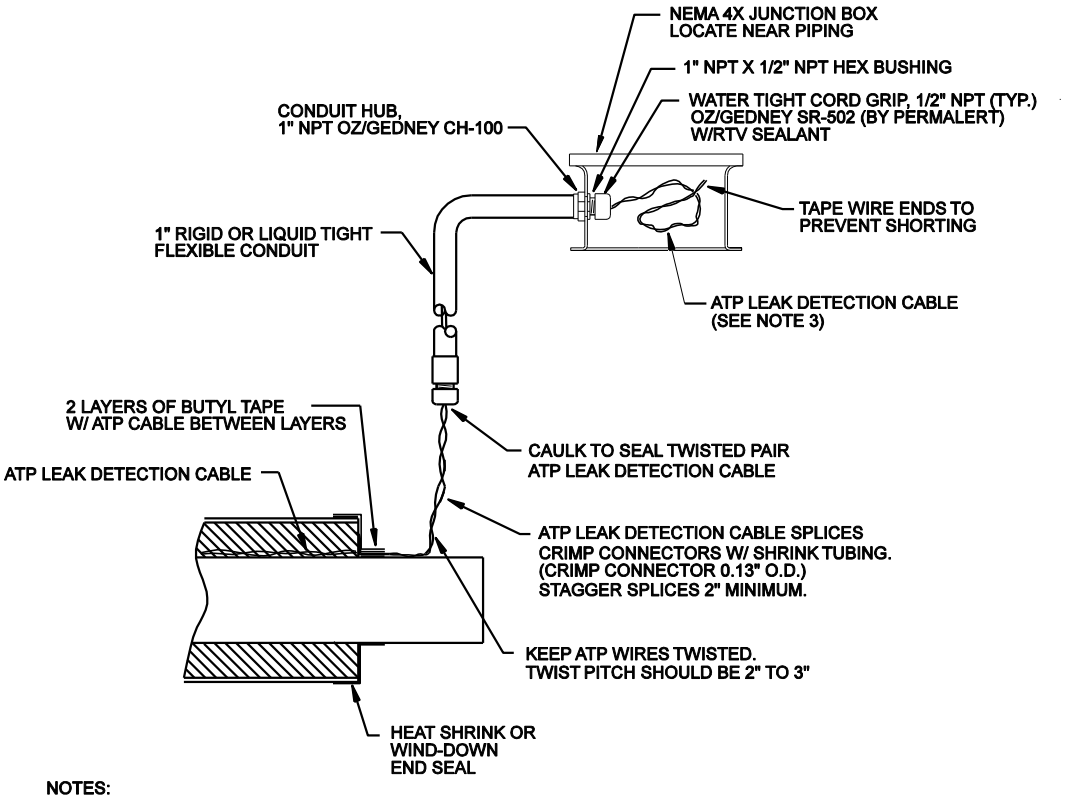

NOTES:

1. DO NOT EXPOSE THE ATP LEAK DETECTION CABLE TO DIRECT FLAME OR EXCESSIVE HEAT WHEN INSTALLING THE SHRINK END SEAL OR WELDING THE SERVICE PIPE.
2. ONLY USE THE CRIMP CONNECTORS AND CRIMP TOOL SUPPLIED BY PERMALERT.
3. ATP LEAK DETECTION CABLE LENGTHS:
   50' MINIMUM FOR LEAK DETECTION CIRCUIT< 3300 FT.
   100 ' MINIMUM FOR LEAK DETECTION CIRCUIT> 3300 FT.
4. NOTE "ATP" MARK ON PIPE JACKET WHERE CABLE EXITS INSULATION TO AID IN PIPE ALIGNMENT.

Figure 10-4

ATP Cable End of Run Detail

10.10 Requirements for Field Joints with Wind-Down End Seals

This procedure only applies to field joints where two pipes with wind-down end seals are joined together. **It should not be performed until immediately before the insulation and shrink sleeve are applied to seal the field joint.**

1. Drill two 1” diameter holes through the jacket **in the wind-down portion of only one** of the end seals. It does not matter which of the two end seals is drilled (see Figure 10-5).
2. **The holes should be spaced at least 2” away from the ATP cable to prevent accidental damage to the cable during drilling**.
3. One hole should be located in the top half on the end seal and the other approximately opposite it in the bottom half.
4. **Be careful not to damage the ATP cable or pipe when drilling the holes.**
5. Test the ATP wires for continuity and insulation as described above after drilling the holes.
6. Proceed with the normal field joint closing procedure.

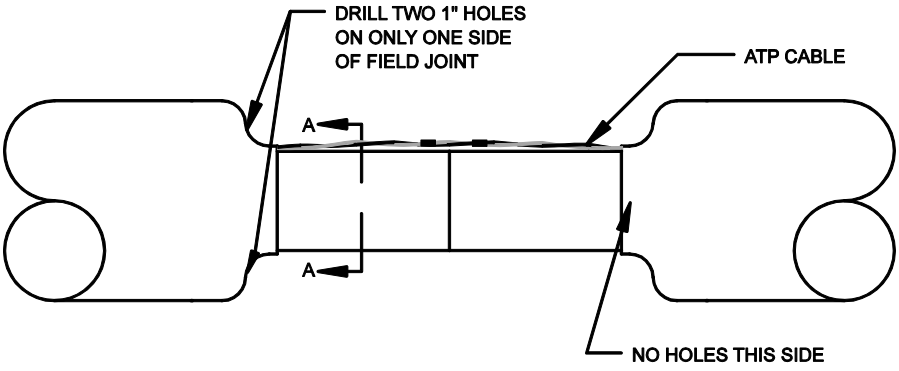

TYPICAL FIELD JOINT W/WIND-DOWN END SEALS

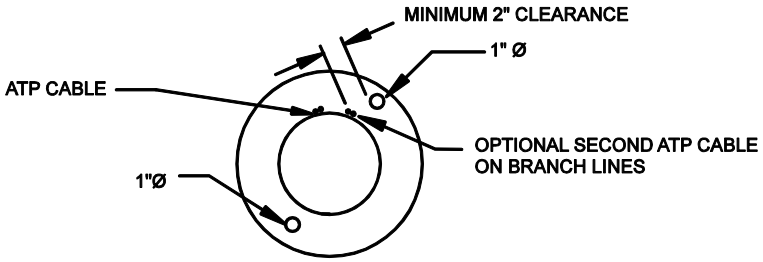

SECTION A-A

Figure 10-5

Wind-Down End Seal Modification

Appendix A – Special Instructions

A.1 Supply Power

Supply Power shall be provided by a UL Recognized Power Supply Cat No PS-35-24, manufactured by Meanwell Enterprises, or a Listed Class 2 Power Supply.

A.2 Control Drawing

Refer to control drawing LD-4901-A0, shown in Figure A-1, for intrinsic safety requirements.

A.3 Zener Barrier Panel (ZBP)

Sensing cable strings that are located in hazardous areas must connect to a Zener Barrier Panel (ZBP), which is located in an unclassified area. Inside the ZBP is one Zener Barrier Assembly (ZBA) for each cable sensing string to connect the PAL-AT panel to the ZBP.

The following information for the ZBP is provided for proper connection and installation:

Model ZBP, Part No. 8028115 1 2 3 4

This Leak Detection Equipment (Associated Apparatus) provides intrinsically safe circuits for use in Class I Division 1 Groups C and D hazardous locations when the unit is installed in accordance with control drawing (Descriptive System Document) LD-4901-A0.

Maximum input voltage: Um = 250 VAC

WARNING - SUBSTITUTION OF COMPONENTS MAY IMPAIR INTRINSIC SAFETY.

Each zener barrier assembly (ZBA) is assigned the following output parameters:

Uo:	16.02 V dc	Co:	1.0 µF
Io:	1.125 A	Lo:	56.5 µH
Po	1.248 W	Lo/Ro:	31.58 µH/Ω

ATEX/IECEx Certificate number: DEMKO 12 ATEX 1014815X
II (1) G [Ex ia] IIB
IECEx UL 11.0028X
[Ex ia Ga] IIB

CE 0539 Ex

Ambient Temperature: -20 °C <= Tamb <= 60 °C

A.4 Probe Integrator

Probe integrators connect probes to the sensing strings. Probes supplied by PermAlert include the probe integrator. The following information for probe integrators is provided for proper connection and installation:

Probe Integrators, part numbers 8027629, 8027930, 8027932, 8027934, for use with ZBP.

ATEX/IECEx Certificate number: DEMKO 12 ATEX 1014815X
II 1G Ex ia IIB T4
IECEx UL 11.0028X
Ex ia Ga IIB T4

CE 0539 Ex

Ambient Temperature: -20 °C <= Tamb <= 60 °C: Temp Code T4

A.5 Probe Integrator Static Precautions

WARNING FOR HAZARDOUS LOCATIONS - Probe integrators are encapsulated in plastic and present a possible electrostatic hazard. They are not intended to be cleaned, but if they are, a damp cloth should be used.

A.6 ZBP Enclosure Fittings

Appropriate fittings, hubs and blanking elements for use on holes on the ZBP enclosure shall contain one of the following type ratings: 4, 6, 6P, 12, 12K or 13, to maintain the type rating of the selected fitting.

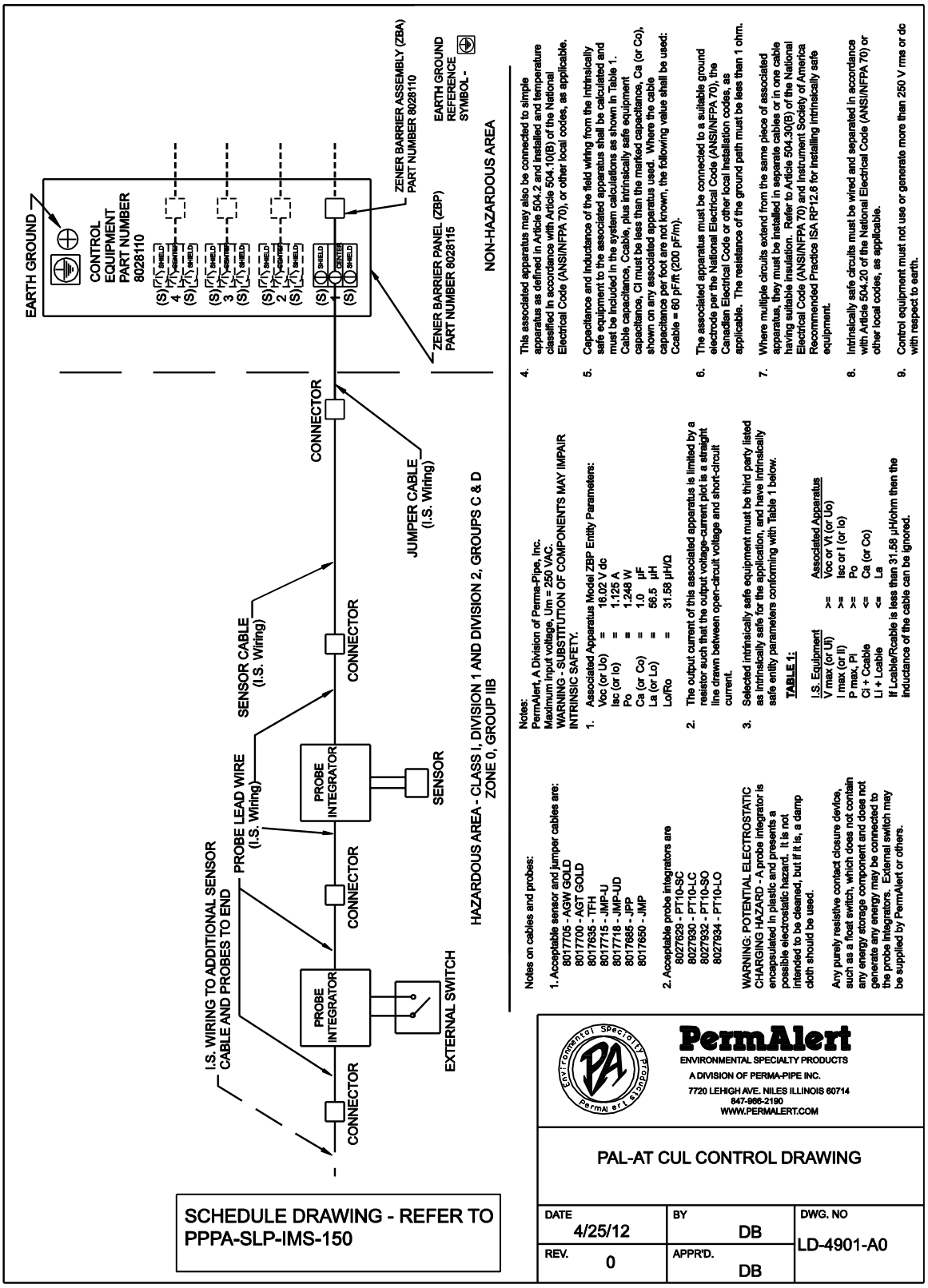

Figure A-1
PAL-AT Control Drawing

WARRANTY

Seller warrants that the PermAlert Leak Detection System (the "System") will be free from defects in materials and workmanship for a period of twelve (12) months from the date of first use of the System or eighteen (18) months from the date of shipment by Seller to Buyer of the System; whichever is earlier. Seller is not responsible for damage to the System occurring in transit or arising from the installation, alteration or repair of the System by persons other than Seller's employees, or from any abnormal or improper use of, negligence with respect to or accident affecting the System. Seller's sole obligation and liability, and Buyer's sole remedy, under this warranty shall be the repair or replacement, at Seller's election, by Seller of any defective materials or workmanship covered by this warranty, without the charge to Buyer. Repaired or replacement materials shall be delivered to Buyer f.o.b. Seller's plant or f.o.b. such other location as Seller shall designate. Seller shall not be responsible for any product returned to Seller without Seller's prior express consent. Buyer shall be responsible for returning the defective or non-conforming product(s) to Seller at Buyer's expense. No claim shall be permitted under the warranty contained herein unless Buyer notifies Seller in writing within ten (10) days after Buyer first hears of facts giving rise to any such claim and unless notice is given within the warranty period as provided above. In order to be valid, any notice sent to Seller in connection with said claim under this warranty must reasonably specify the defect which is the subject of such claim. Buyer shall be responsible for testing and inspecting the System promptly after receipt and thereafter at such intervals as are reasonably prudent so as to inform Seller of any defects which exist in the System. Notwithstanding the filing of a claim hereunder, this warranty shall expire after the warranty period in respect to materials and workmanship which are not then the subject of a proper claim.

To the maximum extent permitted by law, Buyer irrevocably waives all claims against Seller for money damages relating to the condition, use and performance of the goods sold pursuant hereto, including claims based upon tort, strict liability, negligence and product liability. Notwithstanding the provisions of the preceding sentence, if money damages are assessed against Seller, in no event shall Seller's liability for such damages exceed the purchase price of products sold by Seller.

IN NO EVENT, WHETHER BECAUSE OF A BREACH OF WARRANTY OR REPRESENTATION OR ANY OTHER CAUSE, WHETHER BASED UPON CONTRACT, TORT, WARRANTY OR OTHERWISE, ARISING OUT OF THE PERFORMANCE OR NON-PERFORMANCE BY SELLER OF ITS OBLIGATIONS UNDER THIS AGREEMENT OR WITH RESPECT TO THE PRODUCTS SOLD PURSUANT HERETO SHALL SELLER BE LIABLE FOR LOST EARNINGS, INCOME OR PROFITS OR INDIRECT, INCIDENTAL CONSEQUENTIAL DAMAGES.

THE IMPLIED WARRANTIES OF MERCHANTABILITY AND FITNESS FOR A PARTICULAR PURPOSE AND, EXCEPT AS SPECIFICALLY SET FORTH HEREIN, ALL OTHER WARRANTIES AND REPRESENTATIONS, EXPRESS OR IMPLIED, ARE HEREBY DISCLAIMED AND EXCLUDED. NOTHING SHALL BE CONSTRUED AS AN ADDITIONAL WARRANTY UNLESS SPECIFICALLY DESIGNATED AS SUCH IN WRITING AND SIGNED BY THE SELLER, IN WHICH CASE SUCH ADDITIONAL WARRANTY SHALL BE SUBJECT TO THE PROVISIONS OF THE APPROPRIATE PARAGRAPHS HEREIN AS TO DURATION AND LIMITATION OF REMEDY UNLESS SUCH ADDITIONAL WARRANTY EXPRESSLY VARIES SUCH PROVISIONS.

Extended warranty period may be available. Contact PermAlert for more information.

Division of Perma-Pipe, Inc.
6410 West Howard Street
Niles, Illinois 60714-3302
www.permalert.com

©2017, PERMA-PIPE, Inc. All Rights Reserved. (6/17)

DEPARTMENT OF THE ARMY
ALBUQUERQUE DISTRICT, CORPS OF ENGINEERS
ALBUQERQUE DISTRICT OFFICE
4101 JEFFERSON PLAZA NE
ALBUQUERQUE, NM 87109

SUBMITTAL REVIEW VERIFICATION SHEET

PROJECT TITLE: Kirtland BFF Mid-Plume Pump and Treat System Expansion
CONTRACT NUMBER: W912DR-12-D-0006 DM01
DATE RECEIVED: 09-07-2017
DATE REVIEWED: 09-12-2017

DESCRIPTION OF ITEMS REVIEWED:

1. NMDOT Base Course

NO EXCEPTIONS TAKEN.	**X**
EXCEPTIONS AS NOTED ON DRAWINGS AND/OR ATTACHED SHEETS(S). RESUBMISSION NOT REQUIRED.	
EXCEPTIONS AS NOTED ON DRAWINGS AND/OR ATTACHED SHEETS(S). RESUBMISSION REQUIRED.	
RECEIPT ACKKNOWLEDGED.	

Notes:

NOTE: ITEMS REVIEWED AS TO GENERAL LAYOUT ONLY. DIMENSIONS AND QUANTITIES NOT CHECKED. REVIEW DOES NOT RELIEVE CONTRACTOR OF RESPONSIBILITIES FOR ANY ERRORS WHICH MAY EXIST AS CONTRACTOR SHALL BE RESPONSIBLE FOR DIMENSIONS AND DESIGN OF ADEQUATE CORRECTIONS, DETAILS AND SATISFACTORY CONSTRUCTION OF WORK.

SIGNATURE SANCHEZ.AMY.ELIZABETH.1454434338 Digitally signed by SANCHEZ.AMY.ELIZABETH.1454434338 DN: c=US, o=U.S. Government, ou=DoD, ou=PKI, ou=USA, cn=SANCHEZ.AMY.ELIZABETH.1454434338 Date: 2017.09.12 15:14:06 -06'00' **DATE** 9/12/2017

EA Engineering, Science, and Technology, Inc., PBC

Submittal Review Sheet 1

Project Name: **Kirtland BFF Mid-Plume Pump and Treat System Expansion**			Date Received: **9/7/17**	
Project Owner: **Kirtland Air Force Base**			Checked By: **Tyler Curley**	
Contractor: **RMCI, Inc.**	Engineer: **EA Engineering, Science and Technology, Inc., PBC.**		Log Page: **NA**	
Address: **6211 Chappell Rd NE, Albuquerque, NM 87113**	Address: **320 Gold Ave. SW, Suite 1300 Albuquerque, NM 87102**		EA No.: 62599DM01	
			Spec. Section: **NA**	
			Drawing/Detail No.:	
ATTN: Phillip Johnson	ATTN: **Devon Jercinovic**		1st Sub	Re-Sub
Date Transmitted: **09/07/2017**	Prev. Transmittal Date:			

Item No.	No. Copies	Description	Manufacturer	Mfg/Vendor Dwg or Detail	Action Taken*
1	1	Base Course	Duke City Redi Mix		A

The Action Designated Above is in Accordance with the Following Legend:

A – Furnish as Submitted
B – Furnish as Noted
C – Revise and Re-submit
1. Not enough information for review.
2. No reproducible submitted.
3. Copies illegible.
4. Not enough copies submitted.
5. Wrong sequence number.
6. Wrong resubmittal number.
7. Wrong Spec. Section.
8. Wrong form used.
9. See Comments.

D – Rejected
E – Engineer's Review not Required
1. Submittal not required.
2. Supplemental Information. Submittal retained for Information purposes only.
3. Information reviewed and approved on prior submittal.
4. See Comments.

Review is for general compliance with Contract Documents. No responsibility is assumed for correctness of dimensions or detail. Contractor is required to specify deviations from contract requirements. Lack of exceptions noted by Engineer does not waive Contractor's obligation to comply with Drawings and Specifications.

Comments:
Items reviewed and confirmed to meet requirements
Issues in Bold

.Using approved DOT base course.

By: _____ Date: 9/7/17

Distribution: [1] Contractor [1] Engineer [1] Owner

NMDOT Base Course Submittal

Project:	Commercial Submittal (Various)	Report Date:	11/28/16
Client:	Duke City Redi mix	Sample Date:	11/11/16
Address:	7705 Broadway SE	Sampled By:	Client
	Albuquerque, NM 87105	Material Tested:	**Recycled Base Course**
	Attn. Miles Shiver,IV	Date Tested:	11/15/16 - 11/25/16
		Tested By:	Mary P - Annlee
	NMDOT Section 303 (2014)	Visual Description:	Crushed Concrete / Gravel mix
Sample received:	11/11/2016	Sample Location:	Stockpile at Plant
Laboratory #:	ABQ LL262-16	Sample Source:	Various

Sieve Analysis

C-117 & C136/T-11 & T-27

Sieve Size	% Passing	Specs
	NMDOT 2014	
	section 303	
		Type I
1.5" (37.5mm)		
1" (25mm)	100	100
3/4" (19mm)	96	80-100
1/2" (12.5mm)	74	
3/8" (9mm)	62	
#4 (4.75mm)	40	30-60
#8 (2.36mm)		
#10 (2mm)	30	20-45
#16 (1.18mm)		
#30 (0.6mm)		
#40 (0.425mm)	16	
#50 (0.3mm)		
#80 (0.18mm)	8	
#100 (0.15mm)		
#200 (0.75mm)	3.1	3-10

Classification of Soil . A-1-a

Stone fragments,Gravel and Sand

General rating as Excellent to Good

Note : NP = Non Plastic

Type Rammer Mechanical

Rammer ID #:ABQ CA2-4009

Calibration Date: 6/24/2016

Next Calibration Due: 6/24/2017

Test Results

Standard	Physical Properties		Results	Specs
NMDOT Sect 901	Aggregate Index	Aggregate Index	22	35% max
C-88	Soundness	Coarse Soundness Loss, %	1.3	
C-131	L.A.	LA Wear, %	39.4%	
T-96	Abrasion	Grading	B	
D5821	Fractured	1 face	98	50% Min
	Faces	2 faces	97	
D-4318	Atterburg	Liquid Limit	0	25 Max
	Limits	Plastic Limit	0	
T-89/90		Plasticity Index	(NP) 0	6.0 Max
T-180	Proctor	Max Density, (lbs/ft^3)	124.8	
	(Modified)	Optimum Moisture, %	7.8	
	Dry Prep	Method	D	

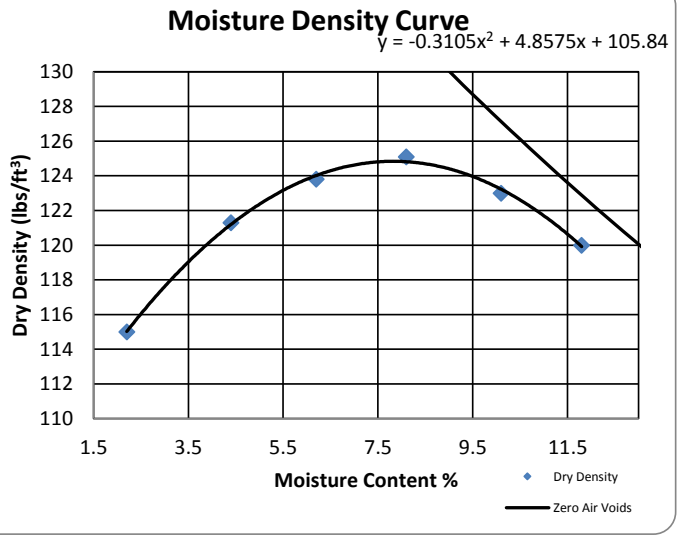

Reports to: fax/email

Miles Shiver, IV mshiver4@dukecityredimix.com

Office 505-877-5777

Respectfully Submitted,

Danny Marquez

Danny Marquez, General Manager

Concrete, Aggregate and Asphalt Testing, LLC
414 Bibb Industrial Dr.
P.O.Box 1228
Las Vegas, NM 87701
505-718-3030

DEPARTMENT OF THE ARMY
ALBUQUERQUE DISTRICT, CORPS OF ENGINEERS
ALBUQERQUE DISTRICT OFFICE
4101 JEFFERSON PLAZA NE
ALBUQUERQUE, NM 87109

SUBMITTAL REVIEW VERIFICATION SHEET

PROJECT TITLE: Kirtland BFF Mid-Plume Pump and Treat System Expansion
CONTRACT NUMBER: W912DR-12-D-0006 DM01
DATE RECEIVED: 09-07-2017
DATE REVIEWED: 09-12-2017

DESCRIPTION OF ITEMS REVIEWED:

1. Crushed Gravel

NO EXCEPTIONS TAKEN.	**X**
EXCEPTIONS AS NOTED ON DRAWINGS AND/OR ATTACHED SHEETS(S). RESUBMISSION NOT REQUIRED.	
EXCEPTIONS AS NOTED ON DRAWINGS AND/OR ATTACHED SHEETS(S). RESUBMISSION REQUIRED.	
RECEIPT ACKKNOWLEDGED.	

Notes:

NOTE: ITEMS REVIEWED AS TO GENERAL LAYOUT ONLY. DIMENSIONS AND QUANTITIES NOT CHECKED. REVIEW DOES NOT RELIEVE CONTRACTOR OF RESPONSIBILITIES FOR ANY ERRORS WHICH MAY EXIST AS CONTRACTOR SHALL BE RESPONSIBLE FOR DIMENSIONS AND DESIGN OF ADEQUATE CORRECTIONS, DETAILS AND SATISFACTORY CONSTRUCTION OF WORK.

SIGNATURE SANCHEZ.AMY.ELIZABETH.1454434338 Digitally signed by SANCHEZ.AMY.ELIZABETH.1454434338 DN: c=US, o=U.S. Government, ou=DoD, ou=PKI, ou=USA, cn=SANCHEZ.AMY.ELIZABETH.1454434338 Date: 2017.09.12 15:27:00 -06'00' **DATE** 9/12/2017

EA Engineering, Science, and Technology, Inc., PBC

Submittal Review Sheet 1

Project Name: **Kirtland BFF Mid-Plume Pump and Treat System Expansion**			Date Received: **9/7/17**	
Project Owner: **Kirtland Air Force Base**			Checked By: **Tyler Curley**	
Contractor: **RMCI, Inc.**	Engineer: **EA Engineering, Science and Technology, Inc., PBC.**		Log Page: **NA**	
Address: **6211 Chappell Rd NE, Albuquerque, NM 87113**	Address: **320 Gold Ave. SW, Suite 1300 Albuquerque, NM 87102**		EA No.: 62599DM01	
			Spec. Section: **NA**	
			Drawing/Detail No.:	
ATTN: Phillip Johnson	ATTN: **Devon Jercinovic**		1st Sub	Re-Sub
Date Transmitted: **09/07/2017**	Prev. Transmittal Date:			

Item No.	No. Copies	Description	Manufacturer	Mfg/Vendor Dwg or Detail	Action Taken*
1	1	Crushed Gravel	Duke City Redi Mix		A

The Action Designated Above is in Accordance with the Following Legend:

A – Furnish as Submitted
B – Furnish as Noted
C – Revise and Re-submit
1. Not enough information for review.
2. No reproducible submitted.
3. Copies illegible.
4. Not enough copies submitted.
5. Wrong sequence number.
6. Wrong resubmittal number.
7. Wrong Spec. Section.
8. Wrong form used.
9. See Comments.

D – Rejected
E – Engineer's Review not Required
1. Submittal not required.
2. Supplemental Information. Submittal retained for Information purposes only.
3. Information reviewed and approved on prior submittal.
4. See Comments.

Review is for general compliance with Contract Documents. No responsibility is assumed for correctness of dimensions or detail. Contractor is required to specify deviations from contract requirements. Lack of exceptions noted by Engineer does not waive Contractor's obligation to comply with Drawings and Specifications.

Comments:
Items reviewed and confirmed to meet requirements
Issues in Bold

.Using approved DOT crushed gravel.

By: _____ Date: 9/7/17

Distribution: [1] Contractor [1] Engineer [1] Owner

Aggregate Test Report

Project:	Supplier Information	Report Date:	12/21/16
Client:	**Duke City Redi Mix**	Sample Date:	12/1/16
Address:	**7705 Broadway SE**	Sampled By:	David
	Albuquerque, NM 87105	Material Tested:	7/8" Concrete Aggregate
		Date Tested:	12/1-12/12/2016
		Tested By:	David & Mary
		Sample Location:	Stockpile
Laboratory #:	ABQ LL281-16	Sample Source:	South Valley Pit, Los Lunas, NM

Sieve Analysis

C-117 & C136/T-11 & T-27

Sieve Size	% Passing	ASTM C33 #67 Specs
6" (150mm)		
3" (75mm)		
2" (50mm)		
1.5" (37.5mm)		
1" (25mm)	100	**100**
3/4" (19mm)	99	**90-100**
1/2" (12.5mm)	64	
3/8" (9mm)	42	**20-55**
#4 (4.75mm)	8	**0-10**
#8 (2.36mm)	4	**0 - 5**
#10 (2mm)	3	
#16 (1.18mm)	3	
#30 (0.6mm)	3	
#40 (0.425mm)		
#50 (0.3mm)	2	
#80 (0.18mm)		
#100 (0.15mm)	2	
#200 (0.75mm)	1.7	**0 - 1.5**
Fineness Modulus		

Test Results

Standard	Physical Properties		Results	ASTM C33 Specs
C-127	Coarse	Bulk Specific Gravity	2.678	
	Specific	Bulk Specific Gravity, SSD	2.738	
T-85	Gravity &	Apparent Specific Gravity	2.849	
	Absorption	Absorption, %	2.2	
C-142	Clay/Friable	Coarse Aggregate, %	0.1	**< 2.0**
T-112	Particles			
C-131	L.A.	LA Wear, %	26.7	**< 50**
T-96	Abrasion	Grading	B	
C-88	Soundness	Coarse Soundness Loss, %	0.6	**< 18**
	5 cycles			
T-104	$MgSO_4$	Fine Soundness Loss, %		
D5821	Fractured	1 face	100	
	Faces	2 faces	100	

Reports to: fax/email
Miles Shiver Dukecityredimix@aol.com

Respectfully Submitted,

L. Marquez

Lea Ann Marquez, PE

Concrete, Aggregate, and Asphalt Testing, LLC
PO Box 1228
Las Vegas, NM 87701
(505)718-3030

Aggregate Test Report

Project:	Supplier Information	Report Date:	12/21/16
Client:	**Duke City Redi Mix**	Sample Date:	12/1/16
Address:	**7705 Broadway SE**	Sampled By:	David
	Albuquerque, NM 87105	Material Tested:	3/8" Coarse Aggregate
		Date Tested:	12/1-12/12/2016
		Tested By:	David & Mary
		Sample Location:	Stockpile
Laboratory #:	ABQ LL281-16	Sample Source:	South Valley Pit

Sieve Analysis

C-117 & C136/T-11 & T-27

Sieve Size	% Passing	ASTM C33 #89 Specs
6" (150mm)		
3" (75mm)		
2" (50mm)		
1.5" (37.5mm)		
1" (25mm)		
3/4" (19mm)		
1/2" (12.5mm)	100	100
3/8" (9mm)	98	90 - 100
#4 (4.75mm)	49	20 - 55
#8 (2.36mm)	12	5 - 30
#10 (2mm)		
#16 (1.18mm)	6	0 - 10
#30 (0.6mm)	5	
#40 (0.425mm)		
#50 (0.3mm)	4	0 - 5
#80 (0.18mm)		
#100 (0.15mm)	3	
#200 (0.75mm)	2.7	
Fineness Modulus		

Test Results

Standard		Physical Properties	Results	ASTM C33 Specs
C-127	Coarse	Bulk Specific Gravity	2.707	
	Specific	Bulk Specific Gravity, SSD	2.768	
T-85	Gravity &	Apparent Specific Gravity	2.883	
	Absorption	Absorption, %	2.3	
C-142	Clay/Friable	Fine Aggregate, %	0.3	**< 2.0**
T-112	Particles			
D5821	Fractured	1 face	100	
	Faces	2 faces	100	

Reports to: fax/email
Miles Shiver Dukecityredimix@aol.com

Respectfully Submitted,

L. Marquez

Lea Ann Marquez, PE

Concrete, Aggregate, and Asphalt Testing, LLC
PO Box 1228
Las Vegas, NM 87701
(505)718-3030

DEPARTMENT OF THE ARMY
ALBUQUERQUE DISTRICT, CORPS OF ENGINEERS
ALBUQERQUE DISTRICT OFFICE
4101 JEFFERSON PLAZA NE
ALBUQUERQUE, NM 87109

SUBMITTAL REVIEW VERIFICATION SHEET

PROJECT TITLE: Kirtland BFF Mid-Plume Pump and Treat System Expansion
CONTRACT NUMBER: W912DR-12-D-0006 DM01
DATE RECEIVED: 09-11-2017
DATE REVIEWED: 09-12-2017

DESCRIPTION OF ITEMS REVIEWED:

1. Chain Link Fence and Gate

NO EXCEPTIONS TAKEN.	X
EXCEPTIONS AS NOTED ON DRAWINGS AND/OR ATTACHED SHEETS(S). RESUBMISSION NOT REQUIRED.	
EXCEPTIONS AS NOTED ON DRAWINGS AND/OR ATTACHED SHEETS(S). RESUBMISSION REQUIRED.	
RECEIPT ACKKNOWLEDGED.	

Notes:

NOTE: ITEMS REVIEWED AS TO GENERAL LAYOUT ONLY. DIMENSIONS AND QUANTITIES NOT CHECKED. REVIEW DOES NOT RELIEVE CONTRACTOR OF RESPONSIBILITIES FOR ANY ERRORS WHICH MAY EXIST AS CONTRACTOR SHALL BE RESPONSIBLE FOR DIMENSIONS AND DESIGN OF ADEQUATE CORRECTIONS, DETAILS AND SATISFACTORY CONSTRUCTION OF WORK.

SIGNATURE SANCHEZ.AMY.ELIZABETH.1454434338 Digitally signed by SANCHEZ.AMY.ELIZABETH.1454434338 DN: c=US, o=U.S. Government, ou=DoD, ou=PKI, ou=USA, cn=SANCHEZ.AMY.ELIZABETH.1454434338 Date: 2017.09.12 15:32:31 -06'00' **DATE** 9/12/2017

EA Engineering, Science, and Technology, Inc., PBC

Submittal Review Sheet 1

Project Name: **Kirtland BFF Mid-Plume Pump and Treat System Expansion**			Date Received: **9/7/17**	
Project Owner: **Kirtland Air Force Base**			Checked By: **Tyler Curley**	
Contractor: **RMCI, Inc.**	Engineer: **EA Engineering, Science and Technology, Inc., PBC.**		Log Page: **NA**	
Address: **6211 Chappell Rd NE, Albuquerque, NM 87113**	Address: **320 Gold Ave. SW, Suite 1300 Albuquerque, NM 87102**		EA No.: 62599DM01	
			Spec. Section: **NA**	
			Drawing/Detail No.:	
ATTN: Phillip Johnson	ATTN: **Devon Jercinovic**		1st Sub	Re-Sub
Date Transmitted: **09/11/2017**	Prev. Transmittal Date:			

Item No.	No. Copies	Description	Manufacturer	Mfg/Vendor Dwg or Detail	Action Taken*
1	1	Fencing	Triwest Fence		A

The Action Designated Above is in Accordance with the Following Legend:

A – Furnish as Submitted
B – Furnish as Noted
C – Revise and Re-submit
1. Not enough information for review.
2. No reproducible submitted.
3. Copies illegible.
4. Not enough copies submitted.
5. Wrong sequence number.
6. Wrong resubmittal number.
7. Wrong Spec. Section.
8. Wrong form used.
9. See Comments.

D – Rejected
E – Engineer's Review not Required
1. Submittal not required.
2. Supplemental Information. Submittal retained for Information purposes only.
3. Information reviewed and approved on prior submittal.
4. See Comments.

Review is for general compliance with Contract Documents. No responsibility is assumed for correctness of dimensions or detail. Contractor is required to specify deviations from contract requirements. Lack of exceptions noted by Engineer does not waive Contractor's obligation to comply with Drawings and Specifications.

Comments:
Items reviewed and confirmed to meet requirements
Issues in Bold

Fencing will match VA chain link fencing.

By: _____ Date: 9/11/17

Distribution: [1] Contractor [1] Engineer [1] Owner

TRIWEST FENCE LLC

110 Denny Road
Bernalillo, NM 87004
Telephone (505) 400-0373
Fax (505) 898-3697

CHAIN LINK FENCE AND GATE WITH PVC SLATS

PROJECT:

GROUNDWATER CONVEYANCE INFASTRUCTURE INSTALLATION KAFB, NM

General Contractor

RMCI, INC.

FENCING CONTRACTOR:

TRIWEST FENCE LLC

Bernalillo, New Mexico

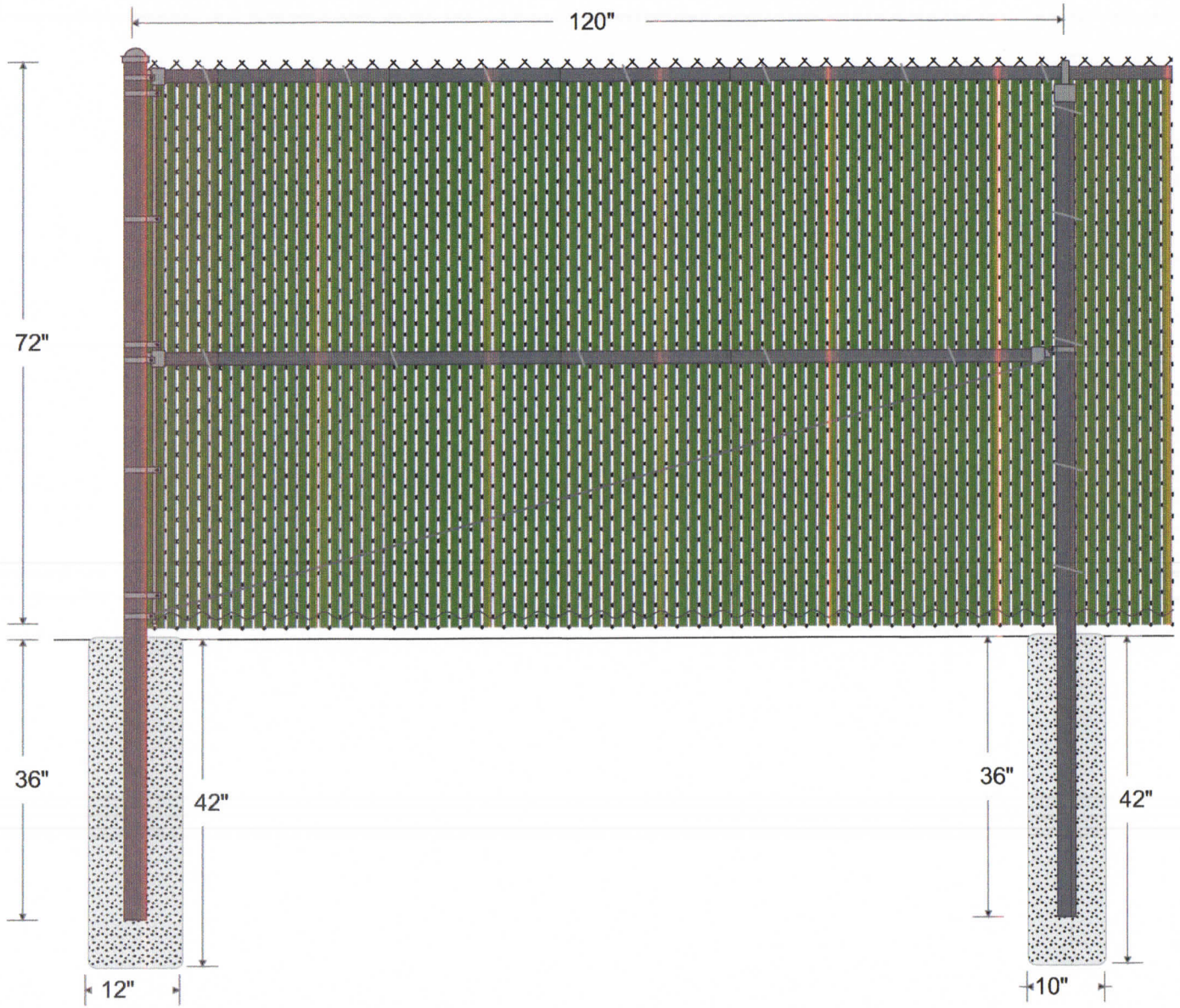

FABRIC: 72" 9 GA. G.A.W. (2" Mesh) BK CHAIN LINK FABRIC.

TOP RAIL: 1 5/8" O.D. DQ-40 PIPE, 1.83 lbs. per foot. Top rail 21' in length, joined with 1 5/8" SLEEVE.

LINE POST: 2 3/8" O.D. DQ-40 PIPE POST, 3.11 lbs. per foot. Line posts set 10' on center maximum spacing. Concrete footing: 10" diameter, 36" depth.

TERMINAL POST: 2 7/8" O.D. DQ-40 PIPE POST, 4.64 lbs. per foot. Concrete footing: 12" diameter, 36" depth.

BRACING: Terminal posts braced and trussed to the nearest line post with 1 5/8" O.D. DQ-40 PIPE and 3/8" TRUSS ROD & IND. TRUSS ROD TIGHTENER.

TENSION WIRE: 7 GA. COIL SPRING GALVANIZED (COIL) TENSION WIRE attached to bottom of fence fabric with 9 GA. STEEL HOG RING spaced 18" on center.

FITTINGS: REGULAR BRACE BAND & CARRIAGE BOLT, PRESSED STEEL RAIL-END, PRESSED STEEL EYE-TOP, PRESSED STEEL CAP, 3/16" X 3/4" TENSION BAR, REGULAR TENSION BAND & CARRIAGE BOLT.

TIE WIRE: 8 1/4" 9 GA. STEEL TIE WIRE & 6 1/2" 12 GA. STEEL TIE WIRE spaced 15" on center for line posts & 18" on center for rails.

PVC SLATS, GREEN, BOTTOM LOCK TUBULAR

POST FOOTING: TRUCK POURED CONCRETE.

TRIWEST FENCE LLC

TriWest Fence LLC
110 Denny Road
Bernalillo, NM 87004
505-898-3678

GROUNDWATER CONVEYANCE INFASTR
KAFB, NM

LINE OF FENCE

Drawn: EA 06/05/2017
File: RMCI BASE WORK

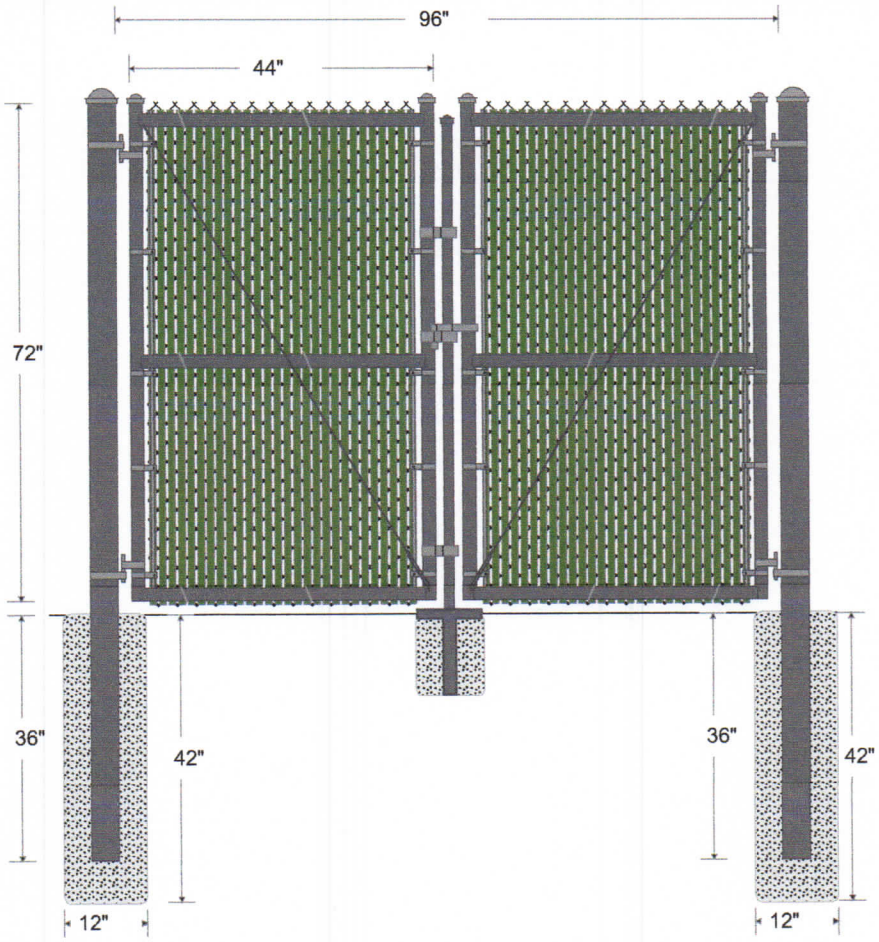

FABRIC: 72" 9 GA. G.A.W. (2" Mesh) BK CHAIN LINK FABRIC.

BRACING: Terminal posts braced and trussed to the nearest line post with 1 5/8" O.D. DQ-40 PIPE and 3/8" TRUSS ROD & IND. TRUSS ROD TIGHTENER.

GATES: Framework of 1 7/8" DQ-40 PIPE, 2.28 lbs. per foot. Gates braced and trussed as necessary. Same fabric as fence.

GATE POST: 4" O.D. DQ-40 PIPE POST, 6.56 lbs. per foot. Concrete footing: 12" diameter, 36" depth.

FITTINGS: REGULAR BRACE BAND & CARRIAGE BOLT, PRESSED STEEL RAIL-END, PRESSED STEEL EYE-TOP, PRESSED STEEL CAP, 3/16" X 3/4" TENSION BAR, REGULAR TENSION BAND & CARRIAGE BOLT.

TIE WIRE: 8 1/4" 9 GA. STEEL TIE WIRE & 6 1/2" 12 GA. STEEL TIE WIRE spaced 15" on center for line posts & 18" on center for rails.

POST FOOTING: TRUCK POURED CONCRETE.

TRIWEST FENCE LLC

TriWest Fence LLC
110 Denny Road
Bernalillo, NM 87004
505-898-3678

GROUNDWATER CONVEYANCE INFASTR
KAFB , NM

8' DOUBLE GATE, 1 7/8" DQ-40 PIPE FRAME

Drawn: EA 06/05/2017
File: RMCI BASE WORK

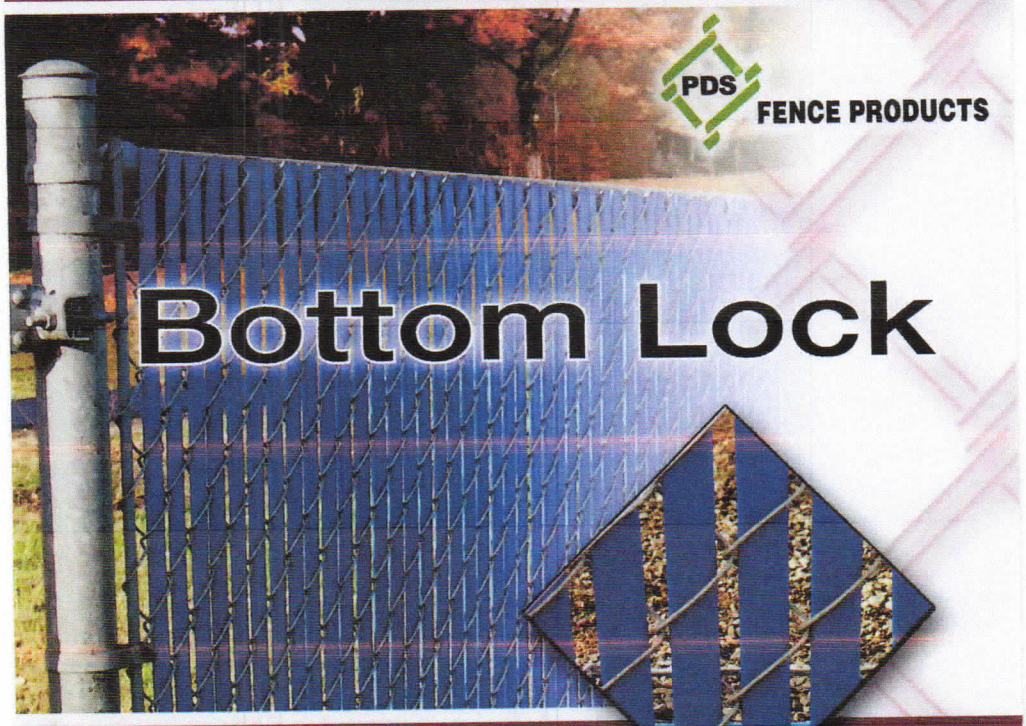

Decorative Inserts for Chain Link Fence

- Easy Installation
- Low Maintenance
- Secure Bottom Rail Makes Installation a "Snap"
- Durable, Long-Lasting Design
- 9 Distinctive Colors
- 25-Year Limited Warranty
- 2" and 2 1/4" Mesh (1 3/4 available)
- Commercial, Residential, Industrial Use

US Patent 6,068,243 / 5,165,664 / 5,234,199

West Coast:
3110 70th Avenue East
Tacoma, WA 98424
1-800-822-7528 (SLAT)

PEXCO

www.pdsfence.com
www.pexco.com

East Coast:
764 S. Athol Rd.
Athol, MA 01331
1-800-755-7528 (SLAT)

PVC Slats are to match what is existing. The attached photo represents what is existing near the site.

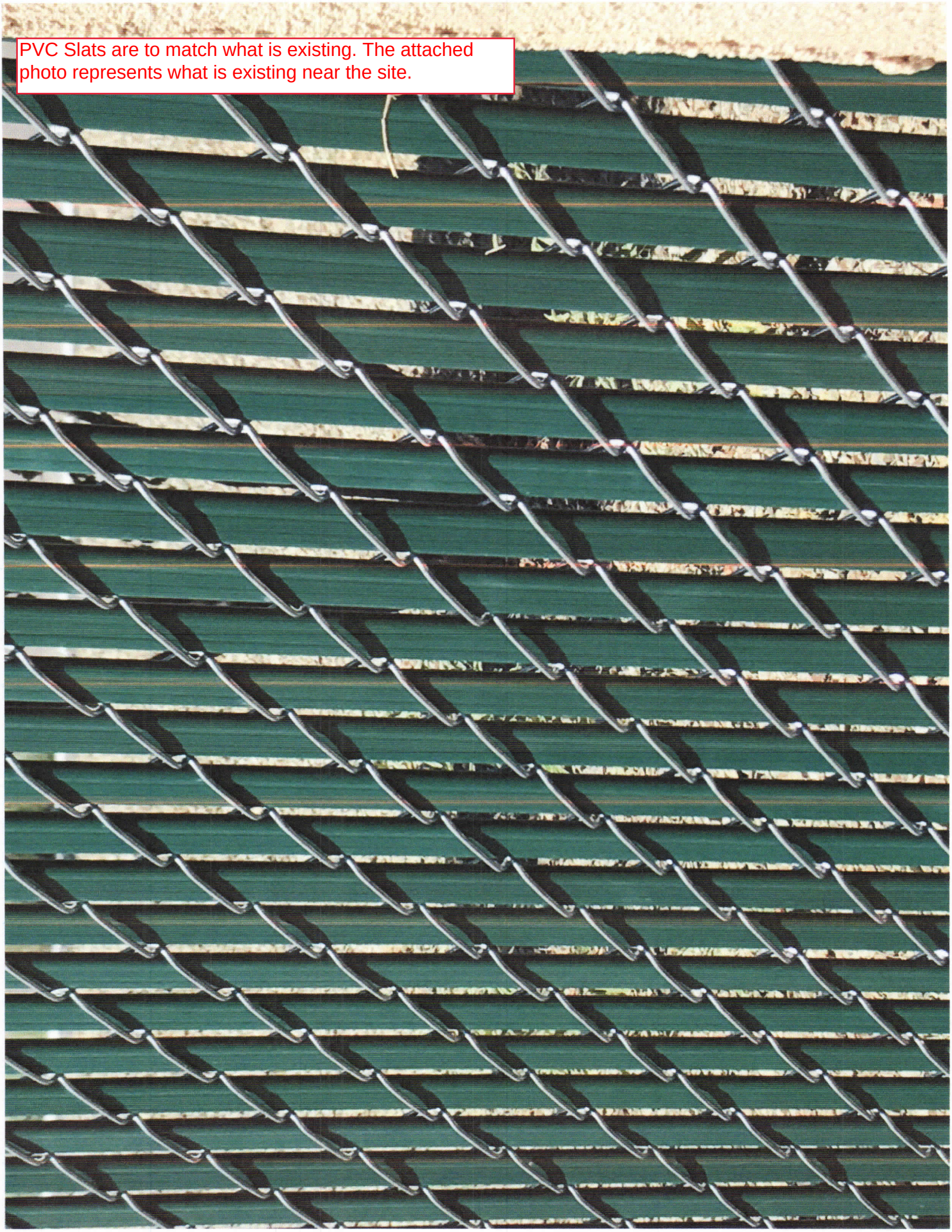

DEPARTMENT OF THE ARMY
ALBUQUERQUE DISTRICT, CORPS OF ENGINEERS
ALBUQERQUE DISTRICT OFFICE
4101 JEFFERSON PLAZA NE
ALBUQUERQUE, NM 87109

SUBMITTAL REVIEW VERIFICATION SHEET

PROJECT TITLE: Kirtland BFF Mid-Plume Pump and Treat System Expansion
CONTRACT NUMBER: W912DR-12-D-0006 DM01
DATE RECEIVED: 09-13-2017
DATE REVIEWED: 09-18-2017

DESCRIPTION OF ITEMS REVIEWED:

1. Precast Vaults

NO EXCEPTIONS TAKEN.	**X**
EXCEPTIONS AS NOTED ON DRAWINGS AND/OR ATTACHED SHEETS(S). RESUBMISSION NOT REQUIRED.	
EXCEPTIONS AS NOTED ON DRAWINGS AND/OR ATTACHED SHEETS(S). RESUBMISSION REQUIRED.	
RECEIPT ACKKNOWLEDGED.	

Notes:

NOTE: ITEMS REVIEWED AS TO GENERAL LAYOUT ONLY. DIMENSIONS AND QUANTITIES NOT CHECKED. REVIEW DOES NOT RELIEVE CONTRACTOR OF RESPONSIBILITIES FOR ANY ERRORS WHICH MAY EXIST AS CONTRACTOR SHALL BE RESPONSIBLE FOR DIMENSIONS AND DESIGN OF ADEQUATE CORRECTIONS, DETAILS AND SATISFACTORY CONSTRUCTION OF WORK.

SIGNATURE SANCHEZ.AMY.ELIZABETH.1454434338 Digitally signed by SANCHEZ.AMY.ELIZABETH.1454434338 DN: c=US, o=U.S. Government, ou=DoD, ou=PKI, ou=USA, cn=SANCHEZ.AMY.ELIZABETH.1454434338 Date: 2017.09.18 12:50:32 -06'00' **DATE** 9/18/2017

EA Engineering, Science, and Technology, Inc., PBC

Submittal Review Sheet 1

Project Name: **Kirtland BFF Mid-Plume Pump and Treat System Expansion**				Date Received: **9/7/17**		
Project Owner: **Kirtland Air Force Base**				Checked By: **Tyler Curley**		
Contractor: **RMCI, Inc.**	Engineer: **EA Engineering, Science and Technology, Inc., PBC.**			Log Page: **NA**		
Address: **6211 Chappell Rd NE, Albuquerque, NM 87113**	Address: **320 Gold Ave. SW, Suite 1300 Albuquerque, NM 87102**			EA No.: 62599DM01		
				Spec. Section: **NA**		
				Drawing/Detail No.:		
ATTN: Phillip Johnson	ATTN: **Devon Jercinovic**			1st Sub		Re-Sub
Date Transmitted: **09/13/2017**	Prev. Transmittal Date:					

Item No.	No. Copies	Description	Manufacturer	Mfg/Vendor Dwg or Detail	Action Taken*
1	1	Precast Vault	All American Precast, INC		A

The Action Designated Above is in Accordance with the Following Legend:

A – Furnish as Submitted
B – Furnish as Noted
C – Revise and Re-submit
1. Not enough information for review.
2. No reproducible submitted.
3. Copies illegible.
4. Not enough copies submitted.
5. Wrong sequence number.
6. Wrong resubmittal number.
7. Wrong Spec. Section.
8. Wrong form used.
9. See Comments.

D – Rejected
E – Engineer's Review not Required
1. Submittal not required.
2. Supplemental Information. Submittal retained for Information purposes only.
3. Information reviewed and approved on prior submittal.
4. See Comments.

Review is for general compliance with Contract Documents. No responsibility is assumed for correctness of dimensions or detail. Contractor is required to specify deviations from contract requirements. Lack of exceptions noted by Engineer does not waive Contractor's obligation to comply with Drawings and Specifications.

Comments:
Items reviewed and confirmed to meet requirements
Issues in Bold

Precast vaults meet specifications

By: _____ Date: 9/13/17

Distribution: [1] Contractor [1] Engineer [1] Owner

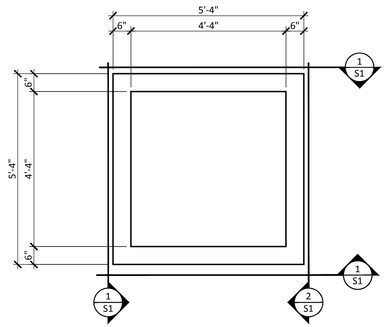

BASE PLAN

SCALE: 1/2"=1'-0"

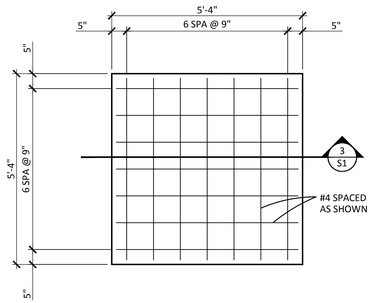

BASE REINFORCING PLAN

SCALE: 1/2"=1'-0"

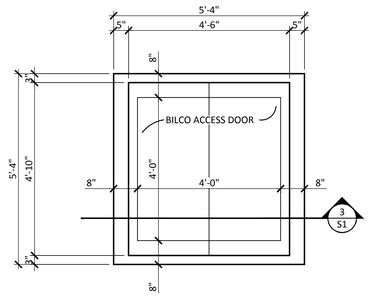

LID PLAN

SCALE: 1/2"=1'-0"

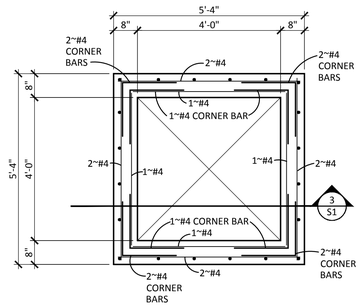

LID REINFORCING PLAN

SCALE: 1/2"=1'-0"

GENERAL STRUCTURAL NOTES

1. CODES AND MANUALS:
   International Building Code, 2009 Edition
   ACI 318-05
2. DESIGN LOADS:
   A. Horizontal:
      1. Live Load: 150 psf on lid
      2. Equivalent Lateral Pressure: 60 pcf
3. GENERAL:
   A. The Contractor shall verify all dimensions in the field.
   B. The Contractor shall be responsible for providing safe and adequate shoring for all parts of the structure during construction.
4. MATERIALS:
   A. Cast-in-place concrete:
      1. Hardrock concrete (unit wt.=150 pcf)
         a. 4,000 psi @ 28 days (air entrained) concrete.
   B. Reinforcing steel:
      1. All reinforcing steel shall conform to ASTM A615 Grade 60, except stirrups and ties shall be Grade 40.
      2. The contractor shall be responsible to see that all rebar is properly aligned and tied in place before placing concrete.

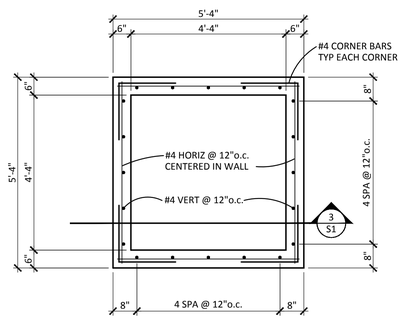

WALL REINFORCING PLAN

1/2"=1'-0"

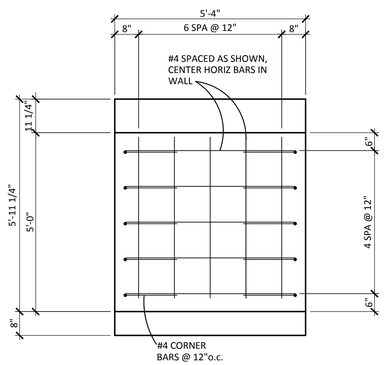

1 S1 NOTE:
REVIEWER PROVIDE SIZE &
LOCATION OF WALL OPENINGS

1/2"=1'-0"

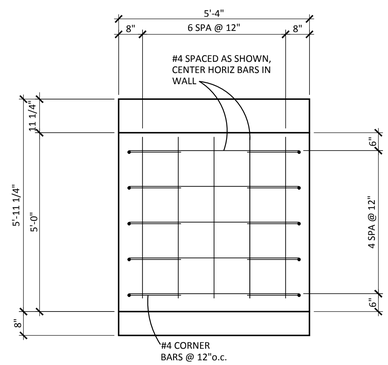

2 S1

1/2"=1'-0"

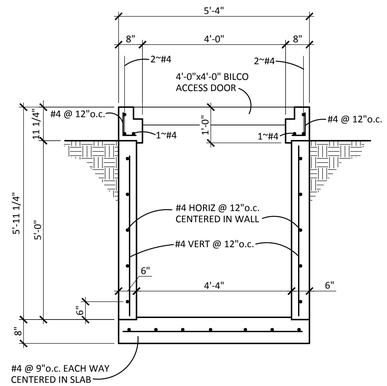

3 S1

1/2"=1'-0"

Side penetrations will be cored/cut in field

MacCORNACK ENGINEERING, LLC
1776 Montaño Rd. NW STE 24
Los Ranchos, New Mexico 87107

CLIENT: **ALL AMERICAN PRECAST, INC.**
3167 San Mateo NE Box 340
Albuquerque, N.M.

PROJECT: **PRECAST CONCRETE VAULTS**
BULK FUELS FACILITY
Kirtland Air Force Base

DRAWING: **VAULT PLANS, SECTIONS and GENERAL STRUCTURAL NOTES**

JOB NO:	DATE:	SHEET NO:
A47-015	08/30/17	**S1**

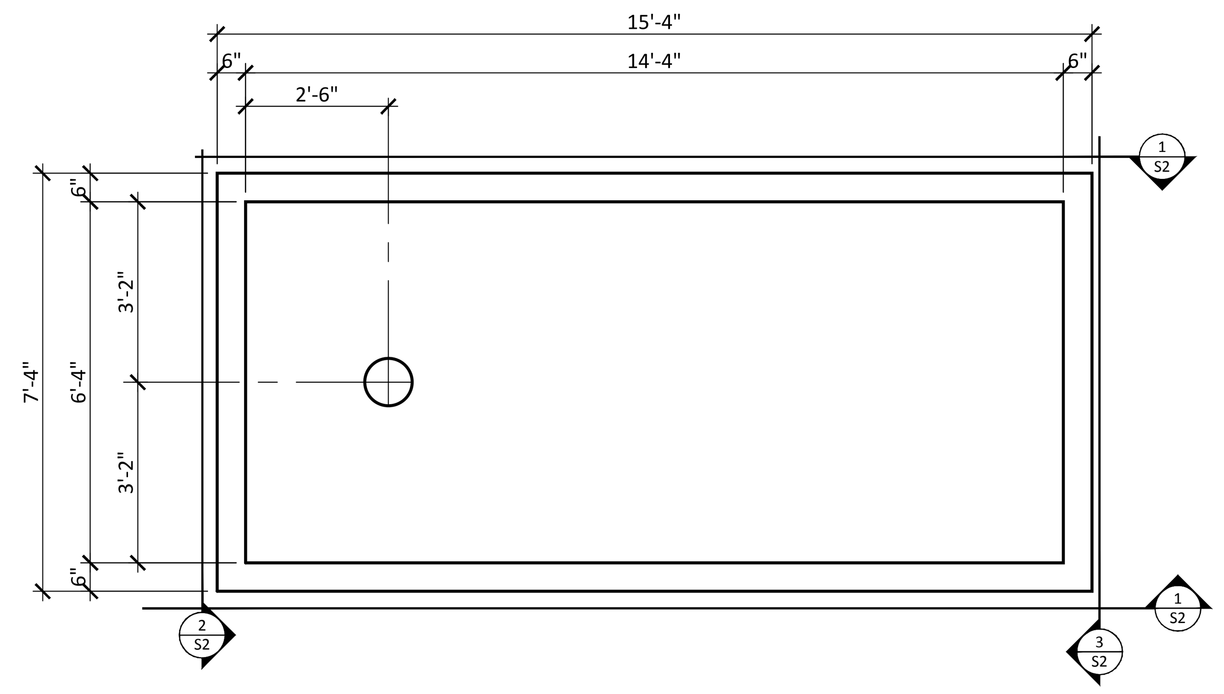

BASE PLAN

3/8"=1'-0"

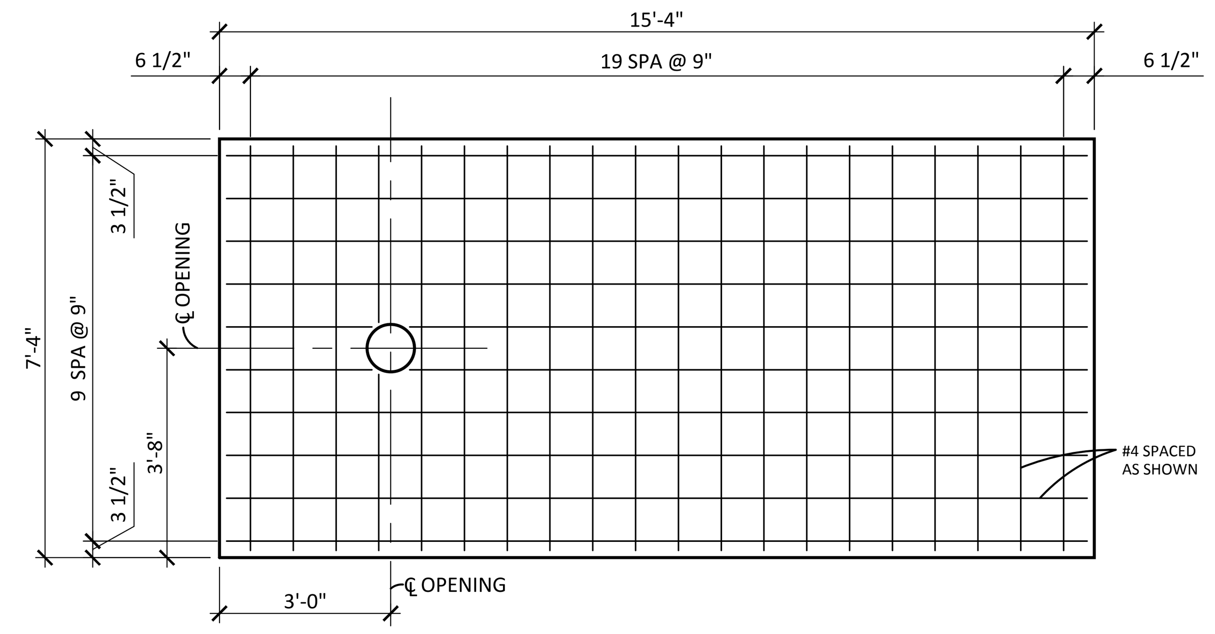

BASE REINFORCING PLAN

3/8"=1'-0"

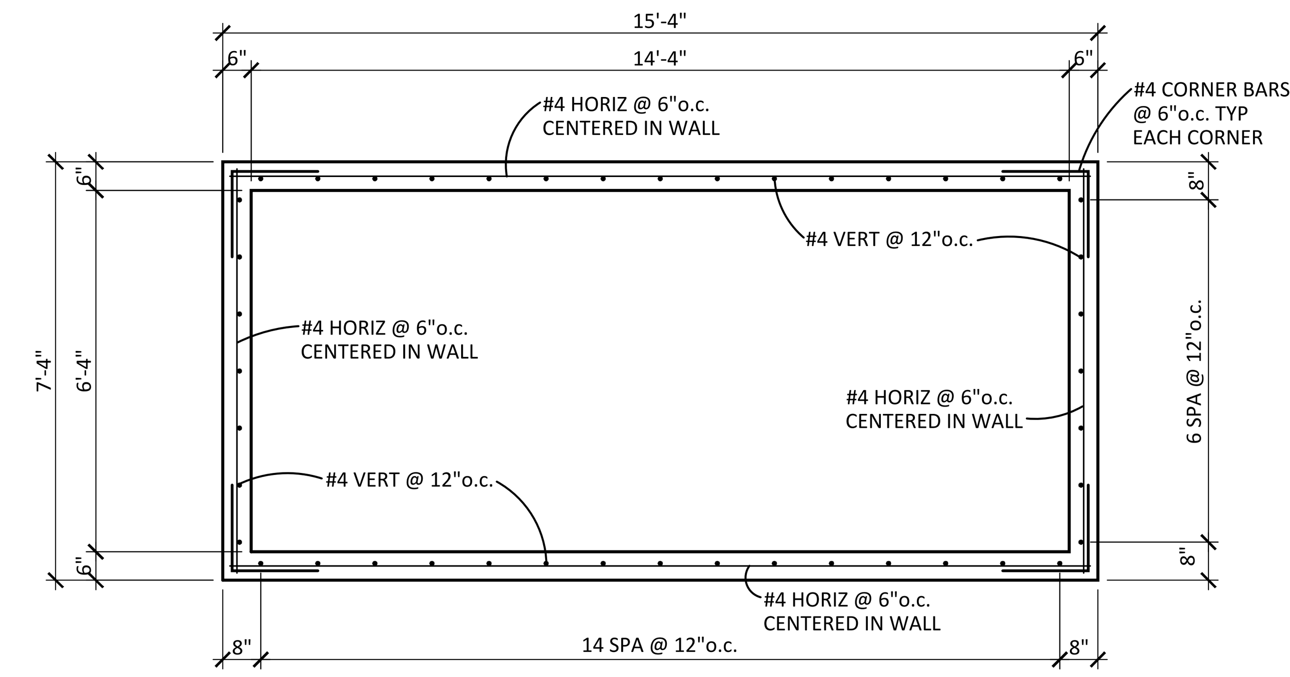

WALL REINFORCING PLAN

3/8"=1'-0"

GENERAL STRUCTURAL NOTES

1. CODES AND MANUALS:
   International Building Code, 2009 Edition
   ACI 318-05
2. DESIGN LOADS:
   A. Horizontal:
      1. Live Load: 150 psf on lid
      2. Equivalent Lateral Pressure: 60 pcf
3. GENERAL:
   A. The Contractor shall verify all dimensions in the field.
   B. The Contractor shall be responsible for providing safe and adequate shoring for all parts of the structure during construction.
4. MATERIALS:
   A. Cast-in-place concrete:
      1. Hardrock concrete (unit wt.=150 pcf)
         a. 4,000 psi @ 28 days (air entrained) concrete.
   B. Reinforcing steel:
      1. All reinforcing steel shall conform to ASTM A615 Grade 60, except stirrups and ties shall be Grade 40.
      2. The contractor shall be responsible to see that all rebar is properly aligned and tied in place before placing concrete.

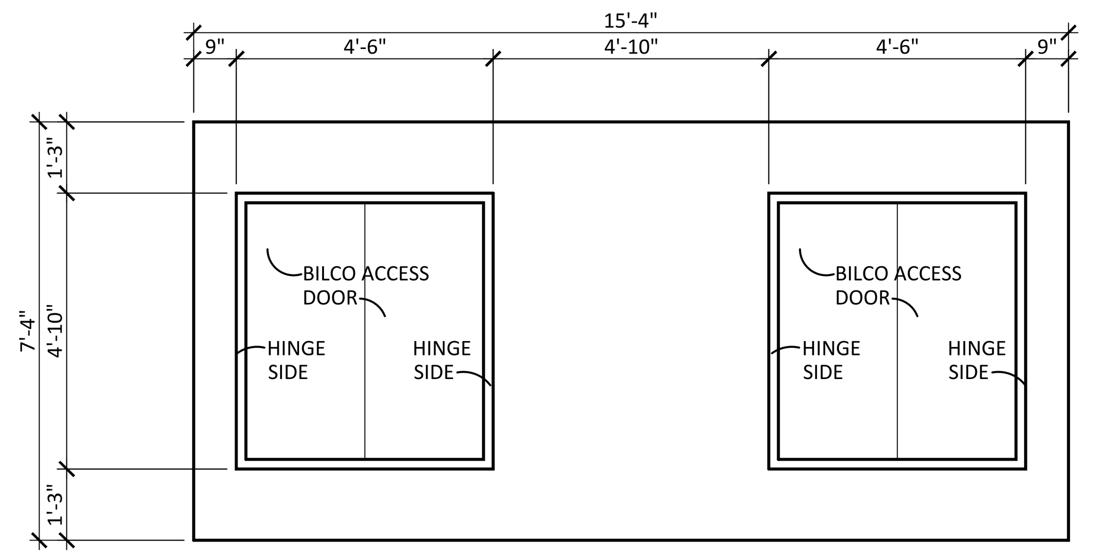

LID PLAN

3/8"=1'-0"

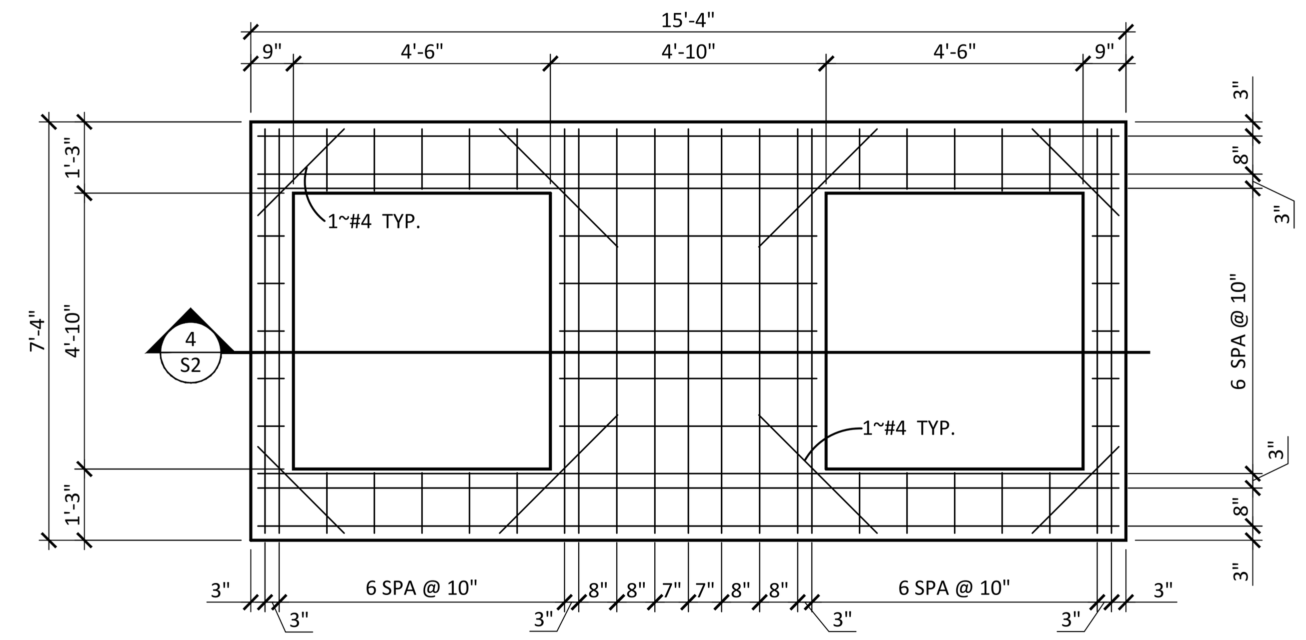

LID REINFORCING PLAN ~ TOP MAT

3/8"=1'-0"

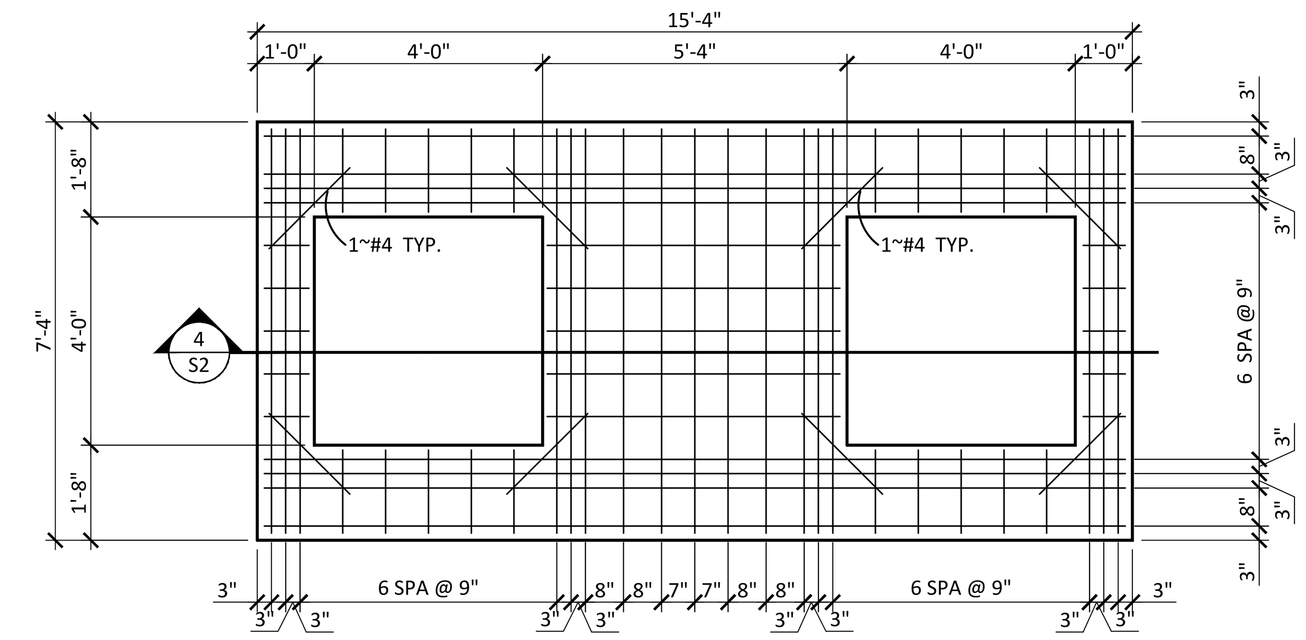

LID REINFORCING PLAN ~ BOTTOM MAT

3/8"=1'-0"

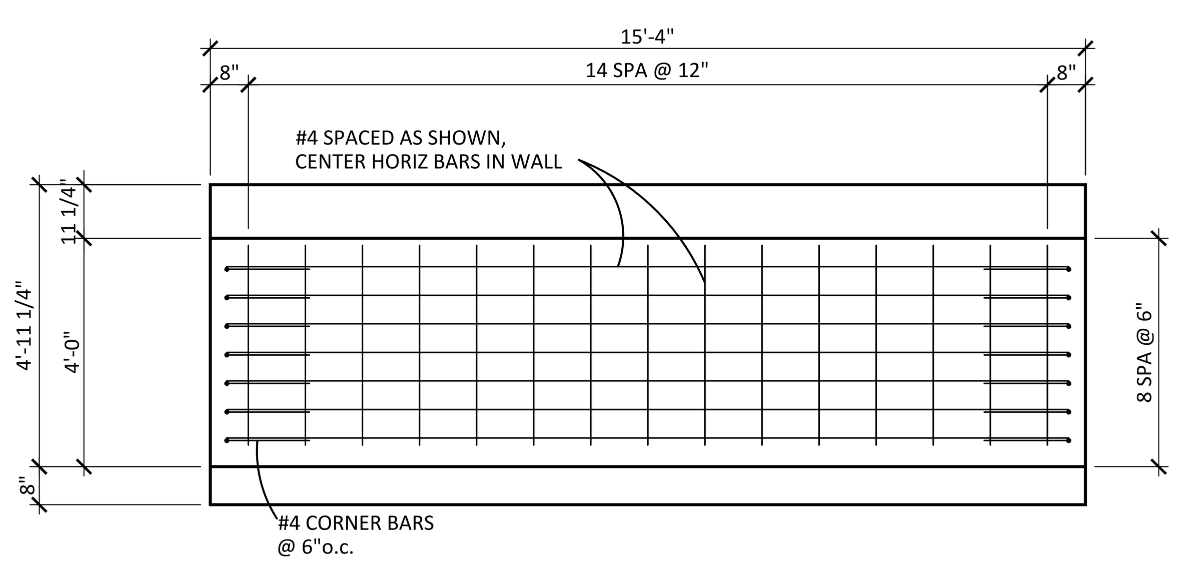

NOTE:
REVIEWER PROVIDE SIZE &
LOCATION OF WALL OPENINGS

1 S2

3/8"=1'-0"

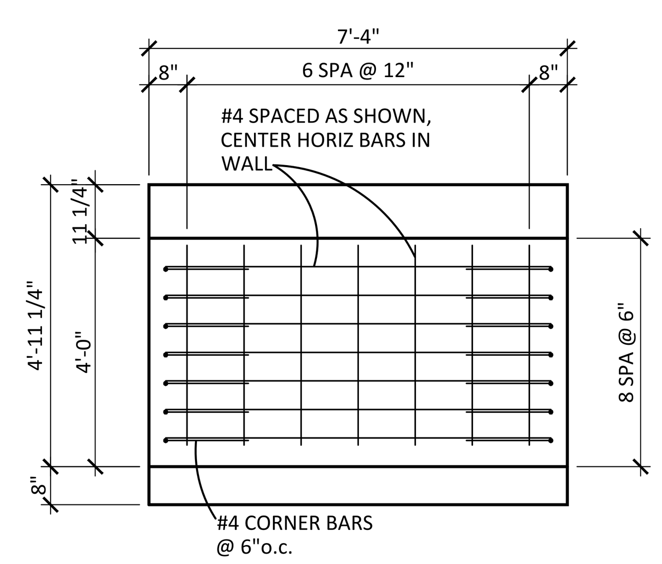

2 S2

3/8"=1'-0"

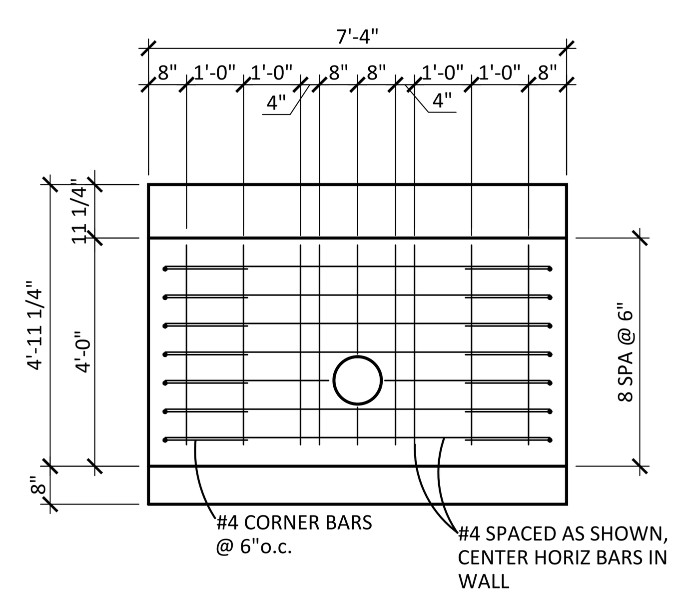

NOTE:
REVIEWER PROVIDE SIZE &
LOCATION OF WALL OPENINGS

3 S2

3/8"=1'-0"

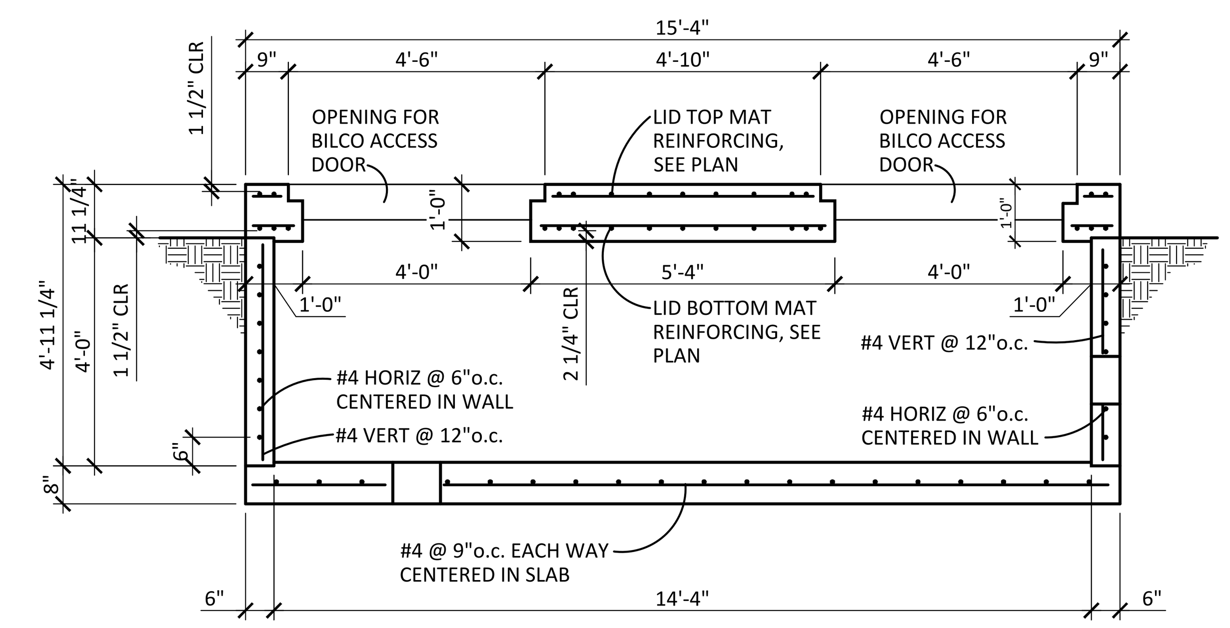

4 S2

3/8"=1'-0"

Penetration will be 12-inch diameter.
Side penetration will be 37-inches below grade form the crest of the pipe.

MacCORNACK ENGINEERING, LLC
1776 Montaño Rd. NW STE 24
Los Ranchos, New Mexico 87107

CLIENT:	**ALL AMERICAN PRECAST, INC.** 3167 San Mateo NE Box 340 Albuquerque, N.M.
PROJECT:	**PRECAST CONCRETE VAULTS** BULK FUELS FACILITY Kirtland Air Force Base
DRAWING:	**VAULT PLANS, SECTIONS and GENERAL STRUCTURAL NOTES**
JOB NO: A47-015	DATE: 08/30/17
SHEET NO:	S2

DONALD A. MacCORNACK NEW MEXICO 8638 REGISTERED PROFESSIONAL ENGINEER 8-30-17

BIDCO C-56 PREFORMED BUTYL MASTIC SEALANT

ECONOMICAL

RELIABLE

EASY-TO-INSTALL

1" Coils will be used.

NPC Bidco, Inc.
St. Joe Drive & Lewis Street • Park Hills, Missouri 63601
Tel: 800-442-0141 Fax: 573-431-1035

BIDCO C-56 PREFORMED BUTYL MASTIC JOINT SEALANT

AVAILABLE STANDARD SIZES*

COILS				
Width & Length	Cross Section	Pieces Per Carton	Linear Feet Per Carton	Pallet Size # Cartons/lbs.
.5" x 21.0'	oval	10	210	45 ctns./24 lbs.
.75" x 14.5'	.66 x .66	10	145	45 ctns./36 lbs.
1.0" x 14.5'	.88 x .88	8	116	45 ctns./50 lbs.
1.25" x 14.5'	.78 x 1.38	5	72.5	45 ctns./49 lbs.
1.5" x 10.0'	1 1/8 x 1.5	5	50	45 ctns./49 lbs.
2.0" x 10.0'	1.5 x 2 1/16	4	40	45 ctns./68 lbs.

STRIPS				
Width & Length	Cross Section	Pieces Per Carton	Linear Feet Per Carton	Pallet Size # Cartons/lbs.
.75" x 30"	.478 x 1.0	50	125	36 ctns./35 lbs.
1.0 x 30"	.58 x 1.6	35	87	36 ctns./37 lbs.
1.25 x 42"	.5 x 2.5	28	98	36 ctns./71 lbs.
1.5 x 42"	.75 x 2.5	20	70	36 ctns./75 lbs.
1.75 x 42"	.75 x 3.25	13	45	36 ctns./61 lbs.
2.0" x 42"	1.0 x 3.25	10	35	36 ctns./65 lbs.

* Custom sizes also available

NPC Bidco, Inc.
St. Joe Drive & Lewis Street
Park Hills, Missouri 63601
Tel: 800-442-0141 • Fax: 573-431-1035

ESTIMATING GUIDE — VERTICAL

COILS				STRIPS	
Inside Diameter of Pipe	Annular Space – 1/64" to 1/4"	Annular Space – 5/16" to 1/2"	Annular Space – 9/16" to 11/16"	Size of Pipe	Strip Size
42"	.75"	1.0"	1.25"	42"	1.25"
48"	.75"	1.0"	1.25"	48"	1.50"
54"	1.0"	1.0"	1.25"	54"	1.50"
60"	1.0"	1.25"	1.50"	60"	1.75"
66"	1.0"	1.25"	1.50"	66"	1.75"
72"	1.0"	1.25"	1.50"	72"	2.0"
84"	1.0"	1.25"	1.50"	84"	2.0"
96"	1.0"	1.25"	1.50"	96"	2.0"

ESTIMATING GUIDE — HORIZONTAL

COILS				STRIPS	
Inside Diameter of Pipe	Annular Space – 1/64" to 1/4"	Annular Space – 5/16" to 1/2"	Annular Space – 9/16" to 11/16"	Size of Pipe	Strip Size
12"	.50"	.75"	1.0"	12"	1.0"
15"	.50"	.75"	1.0"	15"	1.0"
18"	.50"	.75"	1.0"	18"	1.0"
21"	.50"	.75"	1.0"	21"	1.0"
24"	.75"	1.0"	1¼"	24"	1.25"
30"	.75"	1.0"	1¼"	30"	1.50"
33"	.75"	1.0"	1¼"	33"	1.50"
36"	.75"	1.0"	1¼"	36"	1.50"
39"	1.0"	1.25"	1½"	39"	1.50"
42"	1.0"	1.25"	1½"	42"	1.50"
45"	1.0"	1.25"	1½"	45"	1.50"
48"	1.0"	1.25"	1½"	48"	1.75"
54"	1.25"	1.50"	1½"	54"	1.75"
60"	1.25"	1.50"	2.0"	60"	1.75"
66"	1.25"	1.50"	2.0"	66"	1.75"
72"	1.25"	1.50"	2.0"	72"	2.0"
78"	1.25"	1.50"	2.0"	78"	2.0"
84"	1.50"	1.50"	2.0"	84"	2.0"
96"	1.50"	1.50"	2.0"	96"	2.0"
102"	1.50	1.50"	2.0"	102"	2.0"
108"	1.50"	1.50"	2.0"	108"	2.0"

BIDCO C-56 PREFORMED BUTYL MASTIC SEALANT

General Product Description:

NPC's Bidco C-56 Preformed Butyl Mastic Sealant is custom engineered to meet the most exacting standards of the precast concrete industry.

C-56 remains flexible and forms a permanent bond to a wide variety of substrates including concrete, metals and plastics. Adhesion and cohesion at the time of installation are excellent and actually improve after the joint has been formed and placed into service.

This sealant is designed not to shrink, oxidize or harden and has excellent resistance to temperature extremes, acid and alkaline environments. It is also non-toxic.

Bidco C-56 bonds instantly to joint surfaces and to itself. Always butt ends of preformed sealant together – never overlap. Leave protective release paper on sealant during application and remove only after structure is ready for coupling.

Product Features:

- Available in coil or strip form
- New, crush-proof packaging
- Non-stick, non-tear plastic backing

Primary Applications:

- Concrete Pipe
- Utility Vaults
- Septic Tanks
- Sanitary and Storm Sewer Manoles
- Box Culverts
- Burial Vaults
- Wet Wells
- Concrete Wall Panel Systems

NPC Bidco C-56 Meets or Exceeds:

- Federal Specifications SS-S-210 A "Sealing Compound, Preformed Plastic for Pipe Joints", Type 1, Rope Form
- AASHTO Designation M-198 75 I, Type B, Flexible Plastic Gasket (Bitumin)
- ASTM Designation C-990-91.

TYPICAL APPLICATIONS

Sealing Concrete Pipe & Culverts		Sealing Manholes, Septic Tanks & Vaults	
Single Coil			
Groove / Tongue — Open Joint	Groove / Tongue — Closed Joint	Tongue / Groove — Open Joint	Tongue / Groove — Closed Joint
Double Coil			
Groove / Tongue — Open Joint	Groove / Tongue — Closed Joint	Open Joint	Closed Joint
Single Coil used with O-Ring			
Groove / Tongue — Open Joint	Groove / Tongue — Closed Joint	Tongue / Groove — Open Joint	Tongue / Groove — Closed Joint

TECHNICAL DATA

CHEMICAL COMPOSITION	SPECIFICATION	REQUIREMENT	C-56
Content of Hydrocarbon — % by weight	ASTM D4-86	50 - 70	56.0
Inert Mineral Filler — % by weight	AASHTO T III	30 - 50	44.0
Volitile Matter — % by weight	ASTM D-6	2.0 max.	below 1
PHYSICAL PROPERTIES			
Specific Gravity — 77° F	ASTM D-71	1.2 - 1.35	1.23
Ductility — 77° F	ASTM D-113	5.0 min.	10.0 +
Softening Point — 77° F	ASTM D-36	320 min.	380
Penetration — 77° F	ASTM D-217	50 - 210	102
Accelerated Aging (mechanical oven for 4 hours @ 212° F)			Maintained 99+% of Solids (Flexibility not affected)
Elongation Initial — 77° F			300% min.
Two Weeks — Total Water Immersion			300% min.
Flow Resistance (1" wide overhead joint exposed to 135° F for 7 days)			No Flow
Storage Life			Indefinite
Application Temperature Range			0 to 125° F
Service Temperature Range			-20 to 200° F
CHEMICAL RESISTANCE (TOTAL IMMERSION – 30 DAYS)			
5% Sulfuric Acid			No Visible Deterioration
5% Hydrochloric Acid			No Visible Deterioration
5% Potassium Hydroxide			No Visible Deterioration
Saturated Hydrogen Sulfide Solution			No Visible Deterioration

NPC Bidco, Inc.
St. Joe Drive & Lewis Street • Park Hills, Missouri 63601
Tel: 800-442-0141 Fax: 573-431-1035

DEPARTMENT OF THE ARMY
ALBUQUERQUE DISTRICT, CORPS OF ENGINEERS
ALBUQERQUE DISTRICT OFFICE
4101 JEFFERSON PLAZA NE
ALBUQUERQUE, NM 87109

SUBMITTAL REVIEW VERIFICATION SHEET

PROJECT TITLE: Kirtland BFF Mid-Plume Pump and Treat System Expansion
CONTRACT NUMBER: W912DR-12-D-0006 DM01
DATE RECEIVED: 09-13-2017
DATE REVIEWED: 09-14-2017

DESCRIPTION OF ITEMS REVIEWED:

1. Precast Vault Concrete Mix Design

	X
NO EXCEPTIONS TAKEN.	
EXCEPTIONS AS NOTED ON DRAWINGS AND/OR ATTACHED SHEETS(S). RESUBMISSION NOT REQUIRED.	
EXCEPTIONS AS NOTED ON DRAWINGS AND/OR ATTACHED SHEETS(S). RESUBMISSION REQUIRED.	
RECEIPT ACKKNOWLEDGED.	

Notes:

NOTE: ITEMS REVIEWED AS TO GENERAL LAYOUT ONLY. DIMENSIONS AND QUANTITIES NOT CHECKED. REVIEW DOES NOT RELIEVE CONTRACTOR OF RESPONSIBILITIES FOR ANY ERRORS WHICH MAY EXIST AS CONTRACTOR SHALL BE RESPONSIBLE FOR DIMENSIONS AND DESIGN OF ADEQUATE CORRECTIONS, DETAILS AND SATISFACTORY CONSTRUCTION OF WORK.

SIGNATURE SANCHEZ.AMY.ELIZABETH.1454434338 Digitally signed by SANCHEZ.AMY.ELIZABETH.1454434338 DN: c=US, o=U.S. Government, ou=DoD, ou=PKI, ou=USA, cn=SANCHEZ.AMY.ELIZABETH.1454434338 Date: 2017.09.14 12:22:01 -06'00' **DATE** 9/14/2017

EA Engineering, Science, and Technology, Inc., PBC

Submittal Review Sheet 1

Project Name: **Kirtland BFF Mid-Plume Pump and Treat System Expansion**			Date Received: **9/12/17**		
Project Owner: **Kirtland Air Force Base**			Checked By: **Tyler Curley**		
Contractor: **RMCI, Inc.**	Engineer: **EA Engineering, Science and Technology, Inc., PBC.**		Log Page: **NA**		
Address: **6211 Chappell Rd NE, Albuquerque, NM 87113**	Address: **320 Gold Ave. SW, Suite 1300 Albuquerque, NM 87102**		EA No.: 62599DM01		
			Spec. Section: **NA**		
			Drawing/Detail No.:		
ATTN: Phillip Johnson	ATTN: **Devon Jercinovic**		1st Sub		Re-Sub
Date Transmitted: **09/13/2017**	Prev. Transmittal Date:				

Item No.	No. Copies	Description	Manufacturer	Mfg/Vendor Dwg or Detail	Action Taken*
1	1	Precast Vault Concrete Mix Design	All American Precast, INC		A

The Action Designated Above is in Accordance with the Following Legend:

A – Furnish as Submitted
B – Furnish as Noted
C – Revise and Re-submit
1. Not enough information for review.
2. No reproducible submitted.
3. Copies illegible.
4. Not enough copies submitted.
5. Wrong sequence number.
6. Wrong resubmittal number.
7. Wrong Spec. Section.
8. Wrong form used.
9. See Comments.

D – Rejected
E – Engineer's Review not Required
1. Submittal not required.
2. Supplemental Information. Submittal retained for Information purposes only.
3. Information reviewed and approved on prior submittal.
4. See Comments.

Review is for general compliance with Contract Documents. No responsibility is assumed for correctness of dimensions or detail. Contractor is required to specify deviations from contract requirements. Lack of exceptions noted by Engineer does not waive Contractor's obligation to comply with Drawings and Specifications.

Comments:
Items reviewed and confirmed to meet requirements
Issues in Bold

Concrete mix design conforms to the specs.

By: _____ Date: 9/13/17

Distribution: [1] Contractor [1] Engineer [1] Owner

Precast Vault Concrete Mix Design

DUKE CITY REDI- MIX, LLC.

P.O. BOX 250
MORIARTY, NM 87035
(505) 877-5777
FAX: (505) 452-0806

CONCRETE MIX DESIGN

MIX CODE:	**453423 AEA**	**MIX DESCRIPTION:**	**4500 P.S.I. 3/4" AEA**
DESIGN SLUMP:	**4**	**WATER/CEMENT RATIO:**	**0.37716042**

MATERIAL		WEIGHT(lbs)	SPECIFIC GRAVITY	VOLUME(cuft)
Southway Los Lunas 3/4" Course Aggregate		1470	2.74	8.60
Southway Los Lunas 3/8" Course Aggregate		432	2.74	2.53
Southway Hwy 263 Concrete Sand		1091	2.59	6.75
Holcim Type I-II LA Cement		530	3.15	2.70
Four Corners Class F Flyash		137	2.00	1.10
Water (gals)	30.2	251.566	1.00	4.03
Sika 161 WR		45	-	
Sika Air		8	-	1.35
TOTALS:		**3911.566**		**27.06**

Miles Shiver

DUKE CITY REDI-MIX
Managing Partner

Product Description	**4500 3/4 AEA**
Product code	**453423AEA**
Plant	**Broadway**
Date Range	

Month To Date Statistics	Concrete Temp Deg F	Slump Inches	Ambient Temp Deg F	Unit Weight PCF	Testing Facility Cylinder Breaks 7 day	14 day	28 Avg	28 day	28 day	28 day	56 day		
High	83	7	8	149	5420	5140	6985	7000	6970	6560			
Low	57	3	2	137	3160	4160	4517	4470	4380	4470			
Standard Deviation	4.5	0.8	1.2	2.4	529.7	434.6	604.0	619.5	610.2	480.4			
Average	70	5	5	143	4108	4528	5566	5560	5556	5417			
Specifications													

Detail of test results

Date	Truck Number	Ticket Number	Concrete Temp Deg F	Slump Inches	Ambient Temp Deg F	Unit Weight PCF	Testing Facility Cylinder Breaks 7 day	14 day	28 Avg	28 day	28 day	28 day	56 day	Location	Test Facility
10/6/2014	134	215851	70	5.50	1.5		4350		**5973**	5900	6000	6020		SW Pre K	Amec
10/6/2014	140	153006	83	3.50	3.8	148.5	4250		**6210**	6080	6340			SWRP	Vinyard
10/8/2014	157	216027	76	4.00	5.3	142.1	4360		**5853**	5760	5920	5880		SW Pre K	Amec
10/8/2014	158	153705	71	4.50	3.6	147.4	4640		**6600**	6700	6500			SWRP	Vinyard
10/11/2014	147	153920	65	5.00	3.2	145.8	5020		**6735**	6810	6660			SWRP	Vinyard
10/15/2014	140	216651	70	6.00	2.5	143.8	4030		**5413**	5200	5560	5480		SW Pre K	Amec
10/17/2014	118	216792	71	6.00	6.3	139.7	3580		**4727**	4770	4710	4700		SW Pre K	Amec
10/17/2014	146	216808	70	5.50	4.1	143.3	3750		**5067**	5320	4930	4950		SW Pre K	Amec
10/17/2014	154	216780	74	5.50	3.0	145.0	4060		**5593**	5580	5610	5590		SW Pre K	Amec
10/24/2014	134	217320	70	6.00	4.7	142.3	3500		**4807**	4720	4840	4860		SW Pre K	Amec
10/28/2014	117	217584	68	5.00	4.9	143.5	3740		**5040**	5140	4920	5060		SW Pre K	Amec
10/30/2014	134	217709	70	5.00	5.5	143.1	4380		**5710**	5830	5620	5680		SW Pre K	Amec
11/5/2014	143	218127	69	4.50	4.0	142.3	4180		**5590**	5570	5700	5500		SW Pre K	Amec
11/5/2014	158	218082	68	5.00	5.9	141.0	4270		**5613**	5560	5500	5780		SW Pre K	Amec
11/6/2014	150	218247	78	5.00	5.1	142.8	4380		**5810**	5740	5740	5950		SW Pre K	Amec
11/7/2014	118	218343	78	5.50	4.7	143.5	4300		**5637**	5570	5680	5660		SW Pre K	Amec
11/11/2014	154	218488	73	5.00	6.3	140.3	3320		**4640**	4640	4690	4590		SW Pre K	Amec
11/13/2014	158	218708	66	6.00	4.9	141.7	3160		**4517**	4560	4520	4470		SW Pre K	Amec
11/13/2014	157	218670	64	4.50	4.0	144.8	4490		**6050**	6050	6090	6010		SW Pre K	Amec
11/14/2014	147	155745	72	4.25	5.5	145.3	4380		**5705**	5650	5760			SWRP	Vinyard
11/26/2014	104	156354	72	4.00	5.0	145.7	4710		**6420**	6430	6410			SWRP	Vinyard
12/5/2014	107	156703	73	4.00	4.6	145.6	4760		**6535**	6530	6540			SWRP	Vinyard
12/6/2014	117	156745	67	4.60	4.0	146.0	5090		**6555**	6440	6670			SWRP	Vinyard
12/9/2014	149	156833	69	6.75	4.5	140.6	3340		**4593**	4540	4590	4650		Bargain Square	Geo
12/9/2014	103	156843	65	2.50	4.6	145.9	4500		**6190**	6160	6220			SWRP	Vinyard
12/9/2014	107	156866	69	4.00	5.0	145.2	4650		**6460**	6590	6330			SWRP	Vinyard
12/10/2014	155	220359	69	4.50	3.3	145.0	4340		**6060**	6010	6060	6110		SW Pre K	Amec
12/12/2014	146	157107	70	4.50	3.3	146.3	4770		**6760**	6880	6640			SWRP	Vinyard
12/16/2014	156	220782	70	4.50	5.0	141.9	4070		**5650**	5570	5690	5690		SW Pre K	Amec
12/19/2014	134	157434	70	5.00	5.5	140.4	3350		**4865**	4910	4820			SWRP	Vinyard
12/19/2014	140	221180	72	4.00	3.3	144.8	4100		**5740**	5730	5750	5740		SW Pre K	Amec
12/23/2014	143	157601	64	4.50	5.1	138.9	3380		**6210**	6180	6250	6200		SW Pre K	Amec
12/31/2014	157	221694	57	5.00	4.4	143.3	3850		**5340**	5280	5290	5450		SW Pre K	Amec
1/5/2015	104	221764	66	5.50	6.7	139.7	3650		**5183**	5270	5100	5180		SW Pre K	Amec
1/6/2015	153	221864	69	4.00	4.8	143.5	3940		**5567**	5440	5660	5600		SW Pre K	Amec
1/7/2015	143	221984	70	5.00	5.4	142.0	3580		**5283**	5260	5250	5340		SW Pre K	Amec
1/8/2015	102	158135	71	4.00	5.5	145.6	3380	4160	**5380**	5390	5370			SWRP	Vinyard
1/9/2015	107	222184	70	5.50	5.0	142.6	3440		**5030**	5050	5020	5020		SW Pre K	Amec

1/9/2015	159	158176	68	4.25	4.4	139.5	4360	4520	**5720**	5670	5770			SWRP	Vinyard
1/14/2015	155	158325	66	4.50	6.6	142.3	3360	4290	**5145**	5120	5170			SWRP	Vinyard
1/15/2015	158	222469	67	5.00	4.5	142.4	3760		**5460**	5450	5520	5410		SW Pre K	Amec
1/16/2015	158	158475	68	4.50	6.1	144.7	4210	5140	**6985**	7000	6970			SWRP	Vinyard
1/23/2015	103	223095	67	4.50	6.0	140.9	3700		**5307**	5300	5340	5280		SW Pre K	Amec
1/26/2015	151	223234	69	5.00	6.5	142.4	3600		**4903**	4890	4930	4890		SW Pre K	Amec
1/28/2015	118	223427	77	5.00	6.0	143.1	3470		**5293**	5340	5270	5270		SW Pre K	Amec
2/2/2015	104	223788	70	5.50	6.3	140.5	3500		**4903**	4990	4870	4850		SW Pre K	Amec
2/9/2015	159	224358	68	5.00	7.1	138.4	3350		**4750**	4500	4380	5370		SW Pre K	Amec
2/19/2015	157	225173	70	6.00	5.0	142.1	4000		**5377**	5510	5300	5320		SW Pre K	Amec
3/5/2015	146	226117	70	5.00	4.0	143.9	4380		**5720**	5660	5760	5740		SW Pre K	Amec
3/6/2015	157	226225	75	5.00	4.5	143.8	4150		**5657**	5670	5590	5710		SW Pre K	Amec
3/6/2015	152	226242	73	3.00	4.0	146.5	5070		**6610**	6680	6590	6560		SW Pre K	Amec
3/12/2015	143	226668	70	5.50	4.0	143.9	4050		**5610**	5590	5600	5640		SW Pre K	Amec
3/23/2015	159	509379	68	4.50	7.5	137.1	3250		**4525**	4470	4580		5030	SW Pre K	Amec
3/24/2015	103	227726	70	3.00	5.0	146.7	4090		**5440**	5400	5480			SWRP	Vinyard
4/8/2015	143	228945	69	5.00	6.8	144.3	4410		**5155**	5080	5230			SWRP	Vinyard
4/9/2015	133	229084	65	4.00	5.5	144.9	5060		**6395**	6410	6380			SWRP	Vinyard
4/14/2015	133	229520	67	5.00	3.5	144.7	4620		**6007**	5920	5970	6130		SW Pre K	Amec
4/17/2015	159	229887	65	5.50	5.1	141.6	4160		**5230**	5230	5170	5290		SW Pre K	Amec
4/20/2015	157	230047	75	5.50	3.5	143.2	4400		**5470**	5430	5540	5440		SW Pre K	Amec
4/23/2015	153	230269	72	4.50	6.5	139.2	4010		**4980**	4900	4930	5110		SW Pre K	Amec
4/24/2015	159	230495	70	5.00	6.0	141.0	3690		**4887**	4800	4910	4950		SW Pre K	Amec
4/29/2015	140	230798	70	5.50	4.9	141.4	3650		**4803**	4810	4890	4710		SW Pre K	Amec
5/1/2015	108	231094	82	4.00	4.5	143.9	4200		**5340**	5470	5210			SWRP	Vinyard
12/21/2015	165	16549997	66	5.50	4.7	143.8	4530		**6160**	6240	6080			Santa Ana Pueblo	Western
12/21/2015	165	49987	59	5.00	6.1	145.6	4460		**5765**	5810	5720			Santa Ana Pueblo	Western
1/15/2016	165	50088	66	6.00	3.5	145.2	5420		**5345**	5470	5220			Santa Ana Pueblo	Western
1/15/2016	145	50080	61	7.25	5.5	141.4	4100		**4975**	4840	5110			Santa Ana Pueblo	Western
4/29/2016	149	50962	65	6	4.7	139.6	5040		**5445**	5620	5270			Santa Ana Pueblo	Western
4/14/2016	157	179602	73	5	5.8	142.7	4380		**5563**	5530	5650	5510		KAFB Repair KUN	Amec

Concrete Mix Analysis

Project:	**AAPI-NM Westside Interceptor**	**Project No:**	
Client:	**All American Precast**	**Lab No.:**	
Mix Description:	**4500 AEA 3/4"**		
		Analysis Date:	10/03/16
Mix Code:	**453423 AEA**	**Analysis By:**	Miles

Data Source:	Duke City Database
Test Date Range:	10/06/14 to 04/14/16
Number of Tests:	75

	Slump, in. (1)	Air Content, % (1)	28 Day Compressive Strength, psi
Average Value	**5.00**	**5.00**	**5566**
Standard Deviation	0.80	1.20	604
Upper Specification Limit	8	7.5	
Lower Specification Limit	1	4.5	4500
Upper Conformance Factor	3.75	2.08	(2)
Lower Conformance Factor	(2)	0.42	1.76
Upper (Limit) Probability of Nonconformance			0.00
Lower (Limit) Probability of Nonconformance	0.00		5.82
Probability of Conformance to Specifications, %	**100**	**100**	**94**

Number of Tests Modification Factor (k):	1.02
f'c + 1.34ks	5326
f'c + 2.33ks - 500	5435
Required f'cr	**5435**
Mix Design Average > f'cr:	**Yes**

Notes:

(1) Statistical data for Slump and Air Content are for information only since Out-of-Specification test results are grounds for immediate rejection of the concrete.

(2) It is impossible to exceed the limit. Hence, Noncompliance is 0.

Alkali-Silica Reaction Analysis Report

Client:	**Duke City Redi Mix**	**Date Reported:**	6/30/2016 ☐ Revised
Address:	**7705 Broadway SE**	**Project:**	Various
	Albuquerque, NM 87105	**Project #:**	
		Aggregate Source(s):	Orona Sand 35%/Southvalley Rock 65%
		Cement Source:	GCC Tijeras, I/II
Test requested by:	Miles Shiver	**Admixture Source:**	SRM 4 Corners Cl. F fly ash
Samples Received:	6/13/2016	**Admixture Percentage**	25% *by wt of cement or*
Laboratory #:	443-16		20% *by wt of cementitious*

Standard Test Method for Determining the Potential Alkali Reactivity of Combinations of Cementitious Materials and Aggregate (Accelerated Mortar Bar Method) ASTM C1567-11

								Specs
Batch date:	6/13/2016	Reading	Bar A	Bar B	Bar C	Calibration	Avg Bar	% expansion	
Test Date:	6/14/16	Initial	0.2986	0.3066	0.3164	0.0704	0.3072		
	6/15/16	Zero	0.3039	0.3126	0.3225	0.0710	0.3130		
	6/20/16	5	0.3035	0.3123	0.3227	0.0706	0.3128		
			0.000%	0.001%	0.006%			**0.0023%**	
	6/23/16	8	0.3041	0.3130	0.3230	0.0698	0.3134		
			0.014%	0.016%	0.017%			**0.0157%**	
	6/27/16	12	0.3046	0.3134	0.3235	0.0701	0.3138		
			0.016%	0.017%	0.019%			**0.0173%**	
	6/29/16	14	0.3052	0.3141	0.3242	0.0703	0.3145		
			0.020%	0.022%	0.024%			**0.02%**	**< 0.10%**

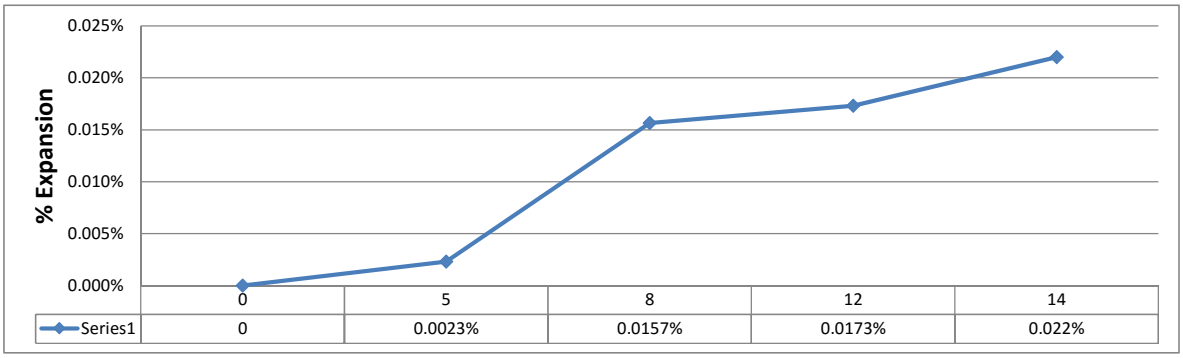

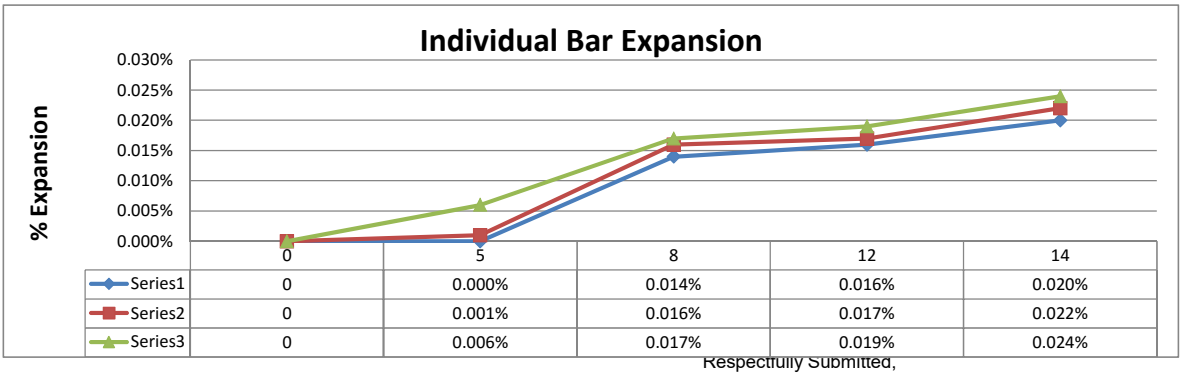

Respectfully Submitted,

L. Marquez

Lea Ann Marquez, PE

Concrete, Aggregate and Asphalt Testing, LLC
414 Bibb Industrial Dr.
P.O.Box 1228
Las Vegas, NM 87701
505-718-3030

Material Certification Report

Material: Portland Cement
Type: I-II Low Alkali
Test Period: 01-August-2016 - 31-August-2016

Certification

This Holcim cement meets the specifications of ASTM C150 for Type I-II and complies with AASHTO M85 specifications for Type I cement.

General Information

Supplier:	Holcim (US) Inc	Source Location:	Portland Plant
Address:	3500 Highway 120 Florence, CO 81226		3500 Highway 120 Florence, CO 81226
Contact:	Kevin Tate / (719)288-1431		
Date Issued:	7-September-2016		

The following information is based on average test data during the test period.
The data is typical of cement shipped by Holcim; individual shipments may vary.

Tests Data on ASTM Standard Requirements

Chemical			Physical		
Item	**Limit [1]**	**Result**	**Item**	**Limit [1]**	**Result**
SiO_2 (%)	-	20.1	Air Content (%)	12 max	8
Al_2O_3 (%)	6 max	4.6	Blaine Fineness (m^2/kg)	260-430	414
Fe_2O_3 (%)	6 max	3.4			
CaO (%)	-	63.3	Autoclave Expansion (%) (C151)	0.80 max	0.01
MgO (%)	6 max	1.4	Compressive Strength Mpa (psi)		
SO_3 [2]	3 max	3.2			
Loss on Ignition (%)	3.5 max	2.7	1 day	-	18.9 (2737)
Insoluble Residue (%)	1.5 max	0.59	3 day	10 (1450.0) min	29.5 (4277)
CO_2 (%)	-	1.5	7 day	17 (2465.0) min	35.9 (5202)
Limestone (%)	5 max	4.0	28 day	28 (4060) min	45.3 (6567)
$CaCO_3$ in Limestone (%)	70 min	82	Initial Vicat minutes	45-375	113
Inorganic Processing Addition (%)	5 max	0.0			
Potential Phase Compositions [3]:			Mortar Bar Expansion (%) (C1038)	-	0.01
C_3S (%) - ADJ	-	55.1			
C_2S (%) - ADJ	-	15.2			
C_3A (%) - ADJ	8 max	6.2			
$C_3S + 4.75C_3A$ (%)	-	84.5			

Test Data on ASTM Optional Requirements

Chemical			Physical		
Item	**Limit [1]**	**Result**	**Item**	**Limit [1]**	**Result**
Equivalent Alkalis (%)	0.60 max	0.57	Heat of Hydration kJ/kg (cal/g) 7 Days [4]	-	360 (86)

Notes (*1-9)

1 - Dashes in the Limit / Result columns mean Not Applicable.

2 - It is permissible to exceed the specification limit provided that ASTM C1038 Mortar Bar Expansion does not exceed 0.020% at 14 days.

3 - Adjusted per Annex A1.6 of ASTM C150 and AASHTO M85.

4 - Test results represent the most recent value and is provided for information only. Analysis of Heat of Hydration tested by CTL Group Skokie, IL.

Salt River Materials Group
100% AMERICAN™

Duke City Redi Mix
Attn: Miles Shiver
PO BOX 250
Moriarity, NM 87035

Clarkdale Cement Plant
601 N. Cement Plant Rd
Clarkdale, AZ 86324

19th Ave. Terminal
1802 W. Lower Buckeye Rd
Phoenix, AZ 85007

Lower Buckeye Terminal
1941 W. Lower Buckeye Rd
Phoenix, AZ 85007

21st Ave. Terminal
1325 N. 21st Ave.
Phoenix, AZ 85009

54th Ave. Terminal
5402 W Buchanan St.
Phoenix, AZ 85043

Dobson Storage
9595 E. McKellips Rd.
Scottsdale, AZ 85250

Cholla Fly Ash Plant
4801 Frontage Rd.
Joseph City, AZ 86032

Four Corners Fly Ash Plant
End of County Road 6675
Fruitland, NM 87416

San Juan Fly Ash Plant
End of County Road 6800
Waterflow, NM 87421

Escalante Fly Ash Plant
County Road 19
Prewitt, NM 87405

Gallup Transfer Terminal
900 N 9th St.
Gallup, NM 87301

San Diego Terminal
920 Bay Marina Dr.
National City, CA 91950

Fontana Budway Terminal
13600 Napa St.
Fontana, Ca 92335

Bakersfield Terminal
32535 7th Standard Rd.
Bakersfield, CA 93314

Stockton Terminal
1300 N. Gertrude Ave.
Stockton, CA 95215

Sacramento Terminal
4520 50th St.
McClellan Park, CA 95652

Panaca Pozzolan Plant
333 Hansen St.
Panaca, NV 89042

Denver Terminal
220 East 54th Avenue
Denver, CO 80216

Product: ASTM C618 Class F, Four Corners Fly Ash
AASHTO M295

POZZOLAN TEST REPORT

8-24-16 Ctl#: 121916

Lot: 6428	**Results**	**Specifications**
Chemical Analysis (C311 / C114 / D4326)		
Silicon Dioxide, SiO_2	62.05 %	---
Aluminum Oxide, Al_2O_3	23.45 %	---
Ferric Oxide, Fe_2O_3	4.36 %	---
$SiO_2+Al_2O_3+Fe_2O_3$	89.86 %	70.00 Min
Calcium Oxide, CaO	2.30 %	---
Magnesium Oxide, MgO	1.21 %	---
Sulfur Trioxide, SO_3	0.33 %	5.00 Max
Moisture Content	0.05 %	3.00 Max
Loss on Ignition	0.33 %	6.00 Max
Sodium Oxide, Na_2O	1.35 %	---
Potassium Oxide, K_2O	1.48 %	---
Total Alkalis (%Na_2O + 0.658% K_2O)	2.32 %	---
Available Alkalis as Na_2O Equivalent	0.71 %	---
Physical Analysis		
Fineness, amount retained on #325 sieve, % (C430)	24.70	34.00 Max
variation, points from average	0.66	5.00 Max
Density, g/cm^3 (C188)	1.94	---
Variation from average, %	0.02	5.00 Max
Strength Activity Index with Portland Cement (C311 / C109)		
at 7 days, % of cement control	79.34	---
at 28 days, % of cement control	82.69	75.00 Min
Water Requirement (C311)		
% of cement control	95.87	105.00 Max
Soundness, autoclave expansion or contraction, % (C311 / C151)	-0.03	0.80 Max

All tests have been made in strict accordance with the current standards of the American Society for Testing and Materials covering the type of material specified.

Lee Gorby, Quality Assurance Manager
30 SEP 2016

AAP® AASHTO R18

PHOENIXCEMENT

Aggregate Test Report

Project:	Supplier Information	Report Date:	11/13/15
Client:	**Duke City Redi Mix**	Sample Date:	11/4/15
Address:	**7705 Broadway SE**	Sampled By:	Jacob
	Albuquerque, NM 87105	Material Tested:	7/8" Concrete Aggregate
	Espanola, NM 87532	Date Tested:	11/5/15-011/13/15
		Tested By:	Mary/Steven
Sample received:	11/4/2015	Sample Location:	Stockpile
Laboratory #:	ABQ LL50-15	Sample Source:	South Valley pit

Sieve Analysis

C-117 & C136/T-11 & T-27 **ASTM C33 #67**

Sieve Size	% Passing	Specs
6" (150mm)	From Supplier QC dated 1-5-15 through 11-9-15	
3" (75mm)		
2" (50mm)		
1.5" (37.5mm)		
1" (25mm)	100	**100**
3/4" (19mm)	97	**90-100**
1/2" (12.5mm)	50	
3/8" (9mm)	26	**20-55**
#4 (4.75mm)	4	**0-10**
#8 (2.36mm)	2	**0-5**
#10 (2mm)		
#16 (1.18mm)	2	
#30 (0.6mm)	2	
#40 (0.425mm)		
#50 (0.3mm)	2	
#80 (0.18mm)		
#100 (0.15mm)	2	
#200 (0.075mm)	1.1	**0-1.5**
Fineness Modulus		

Test Results

Standard		Physical Properties	Results	ASTM Specs
C-127	Coarse	Bulk Specific Gravity	2.719	
	Specific	Bulk Specific Gravity, SSD	2.778	
T-85	Gravity &	Apparent Specific Gravity	2.889	
	Absorption	Absorption, %	2.1	
C-131	L.A.	LA Wear, %	35.5	**< 50**
T-96	Abrasion	Grading	B	
C-142	Clay/Friable	Coarse Aggregate, %	0.1	**< 2.0**
T-112	Particles			
C-88	Soundness	Coarse Soundness Loss, %	0.92	**< 18**
	5 cycles			
T-104	$MgSO_4$	Fine Soundness Loss, %		
D5821	Fractured	1 face	100	
	Faces	2 faces	100	

Reports to: fax/email
Miles Shiver Dukecityredimix@aol.com

Respectfully Submitted,

L. Marquez

Lea Ann Marquez, PE

Concrete, Aggregate and Asphalt Testing, LLC ABQ Lab
9430 San Mateo NE Unit H
Albuquerque, NM 87113
505-362-6422

Aggregate Test Report

Project:	Supplier Information	Report Date:	11/13/15
Client:	**Duke City Redi Mix**	Sample Date:	11/4/15
Address:	**7705 Broadway SE**	Sampled By:	Jacob
	Albuquerque, NM 87105	Material Tested:	3/8" Concrete Aggregate
	Espanola, NM 87532	Date Tested:	11/5/15-011/13/15
		Tested By:	Mary/Steven
Sample received:	11/4/2015	Sample Location:	Stockpile
Laboratory #:	ABQ LL50-15	Sample Source:	South Valley Pit

Sieve Analysis

C-117 & C136/T-11 & T-27 **ASTM C33 #8**

Sieve Size	% Passing	Specs
6" (150mm)	From Supplier QC dated 1-5-15 through 11-9-15	
3" (75mm)		
2" (50mm)		
1.5" (37.5mm)		
1" (25mm)		
3/4" (19mm)		
1/2" (12.5mm)	100	**100**
3/8" (9mm)	93	**85-100**
#4 (4.75mm)	27	**10-30**
#8 (2.36mm)	6	**0-10**
#10 (2mm)		
#16 (1.18mm)	5	**0-5**
#30 (0.6mm)	3	
#40 (0.425mm)		
#50 (0.3mm)	3	
#80 (0.18mm)		
#100 (0.15mm)	3	
#200 (0.075mm)	2.1	**0-2**
Fineness Modulus		

Test Results

ASTM C33

Standard		Physical Properties	Results	Specs
C-127	Coarse	Bulk Specific Gravity	2.724	
	Specific	Bulk Specific Gravity, SSD	2.79	
T-85	Gravity &	Apparent Specific Gravity	2.914	
	Absorption	Absorption, %	2.1	
C-142	Clay/Friable	Coarse Aggregate, %	0.1	**< 2.0**
T-112	Particles			
D5821	Fractured	1 face	100	
	Faces	2 faces	100	

Reports to: fax/email
Miles Shiver Dukecityredimix@aol.com

Respectfully Submitted,

L. Marquez
Lea Ann Marquez, PE

Concrete, Aggregate and Asphalt Testing, LLC ABQ Lab
9430 San Mateo NE Unit H
Albuquerque, NM 87113
505-362-6422

Aggregate Test Report

Project:	Supplier Information	Report Date:	11/13/15
Client:	**Duke City Redi Mix**	Sample Date:	11/4/15
Address:	**7705 Broadway SE**	Sampled By:	Jacopb
	Albuquerque, NM 87105	Material Tested:	Concrete Sand
	Espanola, NM 87532	Date Tested:	11/5/15-011/13/15
		Tested By:	Mary/Steven
Sample received:	11/4/2015	Sample Location:	Stockpile
Laboratory #:	ABQ LL50-15	Sample Source:	Orona Sand

Sieve Analysis

C-117 & C136/T-11 & T-27 **ASTM C33**

Sieve Size	% Passing	Specs
6" (150mm)	From Supplier QC dated 1-5-15 through 11-9-15	
3" (75mm)		
2" (50mm)		
1.5" (37.5mm)		
1" (25mm)		
3/4" (19mm)		
1/2" (12.5mm)		
3/8" (9mm)	100	**100**
#4 (4.75mm)	96	**95-100**
#8 (2.36mm)	88	**80-100**
#10 (2mm)		
#16 (1.18mm)	81	**50-85**
#30 (0.6mm)	65	**25-60**
#40 (0.425mm)		
#50 (0.3mm)	25	**5-30**
#80 (0.18mm)		
#100 (0.15mm)	2	**0-10**
#200 (0.075mm)	1.1	**0-3**
Fineness Modulus	2.44	

Test Results

ASTM C33

Standard		Physical Properties	Results	Specs
C-128	Fine	Bulk Specific Gravity	2.562	
	Specific	Bulk Specific Gravity, SSD	2.592	
T-84	Gravity &	Apparent Specific Gravity	2.641	
	Absorption	Absorption, %	1.1	
D2419	Sand Equiv.	Sand Equivalent, %	80	
T176				
C-142	Clay/Friable	Fine Aggregate, %	0.2	**< 3.0**
T-112	Particles			
C40	Organic	Organic Impurities	N/I	
	Impurities			
C-88	Soundness	Coarse Soundness Loss, %		
	5 cycles			
T-104	$MgSO_4$	Fine Soundness Loss, %	5.6	**< 15**

ASTM C33-13 6.3 Note 3 "Fine aggregate that conforms to the grading requirements of a specification, prepared by another organization such as a state transportation agency, which is in general use in the area, should be considered as having a satisfactory service record with regard to those concrete properties affected by grading."
The concrete sand is currently in use for NMDOT projects under NMDOT Lab #'s 15-00281cg, 00282cg, 00283cg, 00271cg and several others.

Reports to: fax/email
Miles Shiver Dukecityredimix@aol.com

Respectfully Submitted,

L. Marquez
Lea Ann Marquez, PE

Concrete, Aggregate and Asphalt Testing, LLC ABQ Lab
9430 San Mateo NE Unit H
Albuquerque, NM 87113
505-362-6422

Product Data Sheet
Edition 10.2005
Identification no. 161
Plastocrete 161

Construction

Plastocrete® 161

Water Reducing Admixture

Description

Plastocrete 161 is a lignin polymer-type water-reducing admixture.

Plastocrete 161 meets the requirements of ASTM C-494 Types A, B and D.

Applications

Plastocrete 161 is recommended for use in all applications where high quality concrete with superior workability is required.

Advantages

Plastocrete 161 water reducing admixture provides an economical and highly effective means of reducing the amount of mixing water required to produce concrete of a certain slump by acting as a dispersant for the cement particles in the mix.

Through this dispersing action more of the surface area of the cement particles is available for early hydration. The more cement particles hydrated by contact with the mixing water, the greater the compressive strength of the concrete.

Plastocrete 161 is formulated as a Type A water reducer to allow up to 10% water reduction and maximize the benefits of increased hydration in both the hardened and plastic states.

- Reduced water content required to achieve desired slump, increases compressive and flexural strengths and allows the use of more economical mixes.
- Improved paste quality makes concrete easier to pump and finish.
- Consistent normal setting times throughout the recommended dosage.
- Lower water cement ratios provide decreased permeability and increased durability.
- Plastocrete 161 does not contain intentionally added chlorides and will not initiate nor promote the corrosion of steel in the concrete.

How to Use

Dosage

Dosage rates will vary depending on the material used, ambient conditions and the requirements of a specific project.

For general concreting applications, Sika recommends a dosage rate between 2-4 fl.oz./100 lbs. (130-260 ml/100 kg) of cementitious materials for normal setting characteristics. Dosage rates of 4-6 fl.oz./100 lbs. (260-390 ml/100 kg) of cementitious materials are recommended for applications where higher water reduction is needed as well as extended workability and prolonged setting times.

Dosage rates outside the recommended range may be used where specialized materials such as microsilica are specified, extreme ambient conditions are encountered or unusual project conditions require special consideration. In this case please contact your local regional Sika office or Sika technical service department at 1-800-933-7452 for further information.

Construction

Mixing

Plastocrete 161 is added at the concrete plant. Measure required quantity manually or by automated dispenser. Add into the water line at the batch plant or to the mixer at the end of the batching cycle.

Combination with other Admixtures: Plastocrete 161 works effectively as a single admixture or in combination with other admixtures in the Sika System. When air entrained concrete is specified, Sika recommends the use of Sika air entraining admixtures.

When used in combination with other admixtures, care must be taken to dispense each admixture separately into the concrete. Do not mix with dry cement.

Packaging

Plastocrete 161 is supplied in 55 gallon (208 liter) drums and bulk delivery.

Storage and Shelf-life

Plastocrete 161 should be stored at above 40°F (5°C). If frozen, thaw and agitate thoroughly to return to normal state before use.

Shelf life when stored in dry warehouse conditions between 50°F and 80°F (10°C - 27°C) is one year.

Typical Data

Appearance	Dark Brown liquid
Specific Gravity	Approx. 1.2

Caution

Skin and eye irritant; avoid contact. The use of NIOSH approved respirator, safety goggles and rubber gloves is recommended. Avoid breathing product. Use with adequate ventilation. Remove contaminated clothing.

Handling and Storage

Avoid direct contact. Wear personal protective equipment (chemical resistant goggles/gloves/clothing) to prevent direct contact with skin and eyes. Use only in well ventilated areas. Wash thoroughly with soap and water after use. Remove contaminated clothing and launder before reuse.

First Aid

Eyes: Hold eyelids apart and flush thoroughly with water for 15 minutes. **Skin:** Remove contaminated clothing. Wash skin thoroughly for 15 minutes with soap and water. **Inhalation:** Remove person to fresh air. **Ingestion:** Do not induce vomiting. Dilute with water. Contact a physician. **In all cases, contact a physician immediately if symptoms persist.**

Clean Up

Use personal protective equipment (chemical resistant goggles/gloves/clothing). Without direct contact, remove spilled or excess product and place in suitable sealed container. Dispose of excess product and container in accordance with applicable environmental regulations.

KEEP CONTAINER TIGHTLY CLOSED • KEEP OUT OF REACH OF CHILDREN • NOT FOR INTERNAL CONSUMPTION • FOR INDUSTRIAL USE ONLY

All information provided by Sika Corporation ("Sika") concerning Sika products, including but not limited to, any recommendations and advice relating to the application and use of Sika products, is given in good faith based on Sika's current experience and knowledge of its products when properly stored, handled and applied under normal conditions in accordance with Sika's instructions. In practice, the differences in materials, substrates, storage and handling conditions, actual site conditions and other factors outside of Sika's control are such that Sika assumes no liability for the provision of such information, advice, recommendations or instructions related to its products, nor shall any legal relationship be created by or arise from the provision of such information, advice, recommendations or instructions related to its products. The user of the Sika product(s) must test the product(s) for suitability for the intended application and purpose before proceeding with the full application of the product(s).

Sika reserves the right to change the properties of its products without notice. All sales of Sika product(s) are subject to its current terms and conditions of sale which are available at www.sikacorp.com or by calling 800-933-7452.

Prior to each use of any Sika product, the user must always read and follow the warnings and instructions on the product's most current Technical Data Sheet, product label and Material Safety Data Sheet which are available at www.sikaconstruction.com or 800-933-7452. Nothing contained in any Sika materials relieves the user of the obligation to read and follow the warnings and instruction for each Sika product as set forth in the current Technical Data Sheet, product label and Material Safety Data Sheet prior to product use.

SIKA warrants this product for one year from date of installation to be free from manufacturing defects and to meet the technical properties on the current Technical Data Sheet if used as directed within shelf life. User determines suitability of product for intended use and assumes all risks. Buyer's sole remedy shall be limited to the purchase price or replacement of product exclusive of labor or cost of labor. **NO OTHER WARRANTIES EXPRESS OR IMPLIED SHALL APPLY INCLUDING ANY WARRANTY OF MERCHANTIBILITY OR FITNESS FOR A PARTICULAR PURPOSE. SIKA SHALL NOT BE LIABLE UNDER ANY LEGAL THEORY FOR SPECIAL OR CONSEQUENTIAL DAMAGES. SIKA SHALL NOT BE RESPONSIBLE FOR THE USE OF THIS PRODUCT IN A MANNER TO INFRINGE ON ANY PATENT OR ANY OTHER INTELLECTUAL PROPERTY RIGHTS HELD BY OTHERS.**

Sika Corporation
201 Polito Avenue
Lyndhurst, NJ 07071
Phone: (201) 933-8800
Fax: (201) 933-6225
www.sikaconstruction.com

Sika Canada Inc.
601, Delmar Avenue
Pointe-Claire, QC H9R 4A9
Phone: (514) 697-2610
Fax: (514) 697-3087
www.sika.ca

1-800-933-SIKA

Regional Information and Sales Centers. For the location of your nearest Sika representative, contact your regional center.

U.S. : **North East Region:** Fairless Hills, PA, Phone: (215) 295 -6600 **North Central Region:** Marion, OH, Phone: (800) 851-1545
South East Region: Conyers, GA, Phone: (770) 760-1300 **South Central Region:** Mesquite, TX, Phone: (972) 289-6480
Western Region: Santa Fe Springs, CA, Phone: (562) 903-3650

Canada: **Ontario:** Mississauga, ON, Phone: (905) 795-3177, **Alberta:** Edmonton, AB, Phone: (780) 486-6111

Quality Certification Numbers: Lyndhurst: FM 69711 (ISO 9000), FM 70421 (QS 9000), Marion: FM 69715, Kansas City: FM 69107, Santa Fe Springs: FM 69408

Sika and Plastocrete are registered trademarks. Made in USA. Printed in USA.

Product Data Sheet
Edition 09.25.2009
Identification no. 147-540
Sika Air

Construction

Sika® Air

Air Entraining Admixture

Description

Sika Air admixture is an aqueous solution of organic materials.

Sika Air meets the requirements of ASTM C-260 for air entraining admixtures.

Applications

Sika Air is recommended for use whenever air entrained concrete is desired. Ready-mix, precast and block producers can achieve predictable and uniform entrained air contents in concrete, even where harsh lean mixes are used or fly-ash is added to the concrete.

Advantages

Durability:

- Air entrainment is recognized as the most effective prevention against concrete scaling in exposed environments. Air entrained concrete delivers particular benefits in the form of increased concrete durability. This is important in colder climates where frost and freeze-thaw cycles can cause scaling and damage to the concrete surface.
- Air entraining agents help to prevent scaling by creating microscopic air voids that water trapped in the concrete can expand into when the concrete freezes, thus preventing cracks caused by the natural expansion. Entrained air voids in the concrete will also increase durability in harsh environments where concrete is exposed to deicing salts, marine salts and sulfates.

Workability and Placeability:

- Workability and placeability are also improved by the lubricating action of the microscopic bubbles in the concrete. Concrete will flow better, and bleeding and shrinkage will be reduced because less water is needed to obtain the desired workability.

How to Use

Dosage

Dosage rates for Sika Air will typically fall between 0.5 and 3 fl. oz. per 100 lbs. (32 - 195 ml/100 kg) of cementitious to entrain between 4 and 6 percent air. Higher air contents may be obtained by increasing the dosage rate.

Dosage rates will vary depending on the air content required for a particular project. Typically air contents will be specified in the range of 4 to 8 percent by volume.

Other factors that may affect the amount of air entrained into the concrete including total cementitious content, type of pozzolanic materials, sand gradation, salt/clay in aggregates, temperature and water content. The use of fly ash, particularly high LOI fly ash, can result in a higher dosage of air entrainment. Sika recommends that trial mixes be performed whenever material or any other changes are made that may affect the amount of entrained air.

In mixes requiring a lower or higher amount dosage rate, please contact your local regional Sika office or Sika technical service department at 1-800-933-7452 for further information.

Construction

Mixing	Measure the required quantity per batch manually or with automatic dispenser equipment. Add Sika Air to mixing water or sand. Do not mix with dry cement. When Sika Air is used in combination with other admixtures, care must be taken to dispense each admixture separately into the mix. **Combination with Other Admixtures:** Combination with other admixtures, particularly water reducers and retarders, may increase the amount of entrained air in the mix. Air contents should be checked with an air-meter after batching and dosage adjustments made at the concrete plant.
Packaging	Sika Air is available in 55 gallon drum (208 liter), 275 gallon totes (1040 liters) drums and bulk delivery.
Storage and Shelf life	Sika Air should be stored at above 40°F (5°C). If frozen, thaw and agitate thoroughly to return to normal state. Shelf life when stored in dry warehouse conditions between 50°F and 80°F (10°C - 27°C) is one year.

Typical Data

Appearance	Dark Amber liquid.
Specific Gravity	Approx. 1.0
CAUTION: IRRITANT	Contains Aqueous Solution (CAS:Mixture). May cause eye/skin/respiratory irritaton. May be harmful if swallowed.
Handling and Storage	Avoid direct contact. Wear personal protective equipment (chemical resistant goggles/gloves/clothing) to prevent direct contact with skin and eyes. Use only in well ventilated areas. Wash thoroughly with soap and water after use. Remove contaminated clothing and launder before reuse.
First Aid	**Eyes:** Hold eyelids apart and flush thoroughly with water for 15 minutes. **Skin:** Remove contaminated clothing. Wash skin thoroughly for 15 minutes with soap and water. **Inhalation:** Remove person to fresh air. **Ingestion:** Do not induce vomiting. Dilute with water. Contact physician. **In all cases contact a physician immediately if symptoms persist.**
Safety	Tested and Certified by WQA according to NSF/ANSI 61 Section 5 for materials safety.
Clean Up	Use personal protective equipment (chemical resistant goggles/gloves/clothing). Without direct contact, remove spilled or excess product and place in suitable sealed container. Dispose of excess product and container in accordance with applicable environmental regulations.

KEEP CONTAINER TIGHTLY CLOSED • KEEP OUT OF REACH OF CHILDREN • NOT FOR INTERNAL CONSUMPTION • FOR INDUSTRIAL USE ONLY

All information provided by Sika Corporation ("Sika") concerning Sika products, including but not limited to, any recommendations and advice relating to the application and use of Sika products, is given in good faith based on Sika's current experience and knowledge of its products when properly stored, handled and applied under normal conditions in accordance with Sika's instructions. In practice, the differences in materials, substrates, storage and handling conditions, actual site conditions and other factors outside of Sika's control are such that Sika assumes no liability for the provision of such information, advice, recommendations or instructions related to its products, nor shall any legal relationship be created by or arise from the provision of such information, advice, recommendations or instructions related to its products. The user of the Sika product(s) must test the product(s) for suitability for the intended application and purpose before proceeding with the full application of the product(s).

Sika reserves the right to change the properties of its products without notice. All sales of Sika product(s) are subject to its current terms and conditions of sale which are available at www.sikacorp.com or by calling 800-933-7452.

Prior to each use of any Sika product, the user must always read and follow the warnings and instructions on the product's most current Technical Data Sheet, product label and Material Safety Data Sheet which are available at www.sikaconstruction.com or 800-933-7452. Nothing contained in any Sika materials relieves the user of the obligation to read and follow the warnings and instruction for each Sika product as set forth in the current Technical Data Sheet, product label and Material Safety Data Sheet prior to product use.

SIKA warrants this product for one year from date of installation to be free from manufacturing defects and to meet the technical properties on the current Technical Data Sheet if used as directed within shelf life. User determines suitability of product for intended use and assumes all risks. Buyer's sole remedy shall be limited to the purchase price or replacement of product exclusive of labor or cost of labor. **NO OTHER WARRANTIES EXPRESS OR IMPLIED SHALL APPLY INCLUDING ANY WARRANTY OF MERCHANTIBILITY OR FITNESS FOR A PARTICULAR PURPOSE. SIKA SHALL NOT BE LIABLE UNDER ANY LEGAL THEORY FOR SPECIAL OR CONSEQUENTIAL DAMAGES. SIKA SHALL NOT BE RESPONSIBLE FOR THE USE OF THIS PRODUCT IN A MANNER TO INFRINGE ON ANY PATENT OR ANY OTHER INTELLECTUAL PROPERTY RIGHTS HELD BY OTHERS.**

Sika Corporation
201 Polito Avenue
Lyndhurst, NJ 07071
Phone: (201) 933-8800
Fax: (201) 933-6225
www.sikaconstruction.com

Sika Canada Inc.
601, Delmar Avenue
Pointe-Claire, QC H9R 4A9
Phone: (514) 697-2610
Fax: (514) 697-3087
www.sika.ca

1-800-933-SIKA

Regional Information and Sales Centers. For the location of your nearest Sika representative, contact your regional center.

U.S. : **North East Region:** Fairless Hills, PA, Phone: (215) 295 -6600 **North Central Region:** Marion, OH, Phone: (800) 851-1545
South East Region: Conyers, GA, Phone: (770) 760-1300 **South Central Region:** Mesquite, TX, Phone: (972) 289-6480
Western Region: Santa Fe Springs, CA, Phone: (562) 903-3650

Canada: **Ontario:** Mississauga, ON, Phone: (905) 795-3177, **Alberta:** Edmonton, AB, Phone: (780) 486-6111

Quality Certification Numbers: Lyndhurst: FM 69711 (ISO 9000), FM 70421 (QS 9000), Marion: FM 69715, Kansas City: FM 69107, Santa Fe Springs: FM 69408

Sika is a registered trademark. Made in USA. Printed in USA.

DEPARTMENT OF THE ARMY
ALBUQUERQUE DISTRICT, CORPS OF ENGINEERS
ALBUQERQUE DISTRICT OFFICE
4101 JEFFERSON PLAZA NE
ALBUQUERQUE, NM 87109

SUBMITTAL REVIEW VERIFICATION SHEET

PROJECT TITLE: Kirtland BFF Mid-Plume Pump and Treat System Expansion
CONTRACT NUMBER: W912DR-12-D-0006 DM01
DATE RECEIVED: 11-1-2017
DATE REVIEWED: 11-6-2017

DESCRIPTION OF ITEMS REVIEWED:

1. Pipe Coating associated with the KAFB-106239 conveyance line.

NO EXCEPTIONS TAKEN.	**X**
EXCEPTIONS AS NOTED ON DRAWINGS AND/OR ATTACHED SHEETS(S). RESUBMISSION NOT REQUIRED.	
EXCEPTIONS AS NOTED ON DRAWINGS AND/OR ATTACHED SHEETS(S). RESUBMISSION REQUIRED.	
RECEIPT ACKKNOWLEDGED.	

Notes:

NOTE: ITEMS REVIEWED AS TO GENERAL LAYOUT ONLY. DIMENSIONS AND QUANTITIES NOT CHECKED. REVIEW DOES NOT RELIEVE CONTRACTOR OF RESPONSIBILITIES FOR ANY ERRORS WHICH MAY EXIST AS CONTRACTOR SHALL BE RESPONSIBLE FOR DIMENSIONS AND DESIGN OF ADEQUATE CORRECTIONS, DETAILS AND SATISFACTORY CONSTRUCTION OF WORK.

SIGNATURE SALAZAR.CARLOS.F.IV.1232198555 **DATE** 11/6/2017

EA Engineering, Science, and Technology, Inc., PBC

Submittal Review Sheet 1

Project Name: **Kirtland BFF Mid-Plume Pump and Treat System Expansion**			Date Received: **10/26/17**	
Project Owner: **Kirtland Air Force Base**			Checked By: **Tyler Curley**	
Contractor: **RMCI, Inc.**	Engineer: **EA Engineering, Science and Technology, Inc., PBC.**		Log Page: **NA**	
Address: **6211 Chappell Rd NE, Albuquerque, NM 87113**	Address: **320 Gold Ave. SW, Suite 1300 Albuquerque, NM 87102**		EA No.: **62599DM01**	
			Spec. Section: **NA**	
			Drawing/Detail No.: **RFI #1**	
ATTN: **Phillip Johnson**	ATTN: **Devon Jercinovic**		1st Sub	Re-Sub
Date Transmitted: **11/01/2017**	Prev. Transmittal Date:			

Item No.	No. Copies	Description	Manufacturer	Mfg/Vendor Dwg or Detail	Action Taken*
1	1	Pipe Coating	Sherwin Williams		A

The Action Designated Above is in Accordance with the Following Legend:

A – Furnish as Submitted
B – Furnish as Noted
C – Revise and Re-submit
1. Not enough information for review.
2. No reproducible submitted.
3. Copies illegible.
4. Not enough copies submitted.
5. Wrong sequence number.
6. Wrong resubmittal number.
7. Wrong Spec. Section.
8. Wrong form used.
9. See Comments.

D – Rejected
E – Engineer's Review not Required
1. Submittal not required.
2. Supplemental Information. Submittal retained for Information purposes only.
3. Information reviewed and approved on prior submittal.
4. See Comments.

Review is for general compliance with Contract Documents. No responsibility is assumed for correctness of dimensions or detail. Contractor is required to specify deviations from contract requirements. Lack of exceptions noted by Engineer does not waive Contractor's obligation to comply with Drawings and Specifications.

Comments:
Items reviewed and confirmed to meet requirements
Issues in Bold

Coating is of specified alkyd type.

By: _____ Date: 11/01/17

Distribution: [1] Contractor [1] Engineer [1] Owner

SHERWIN-WILLIAMS
816 1ST ST NW
ALBUQUERQUE, NM 87102 2353
(505) 243-6677

10/23/2017

BOGAN BROTHERS PAINTING
3435 VASSAR DR NE
ALBUQUERQUE NM 871072025

Re: Submittal for KAFB Groundwater Conveyance Steel Pipe

Dear Jeff Chynoweth:

Thank you for considering Sherwin-Williams products for the KAFB Groundwater Conveyance Steel Pipe project. Included in this package is the Sherwin-Williams submittal for the above referenced project.

Should you require assistance or have any questions or concerns, please contact me at or e-mail me at john.c.anderson@sherwin.com.

Sincerely,

John Anderson
Sherwin-Williams
Sales Representative

SCHEDULE

Bollards and Steel Pipe in Vault

Steel

Primer: B50WZ0001 - Kem Kromik® Universal Metal Primer Off White

Apply at 6.0-8.0 WFT to achieve 3.3-4.4 DFT

Topcoat: B56W00311 - Steel-Master 9500 30% Silicone Alkyd Enamel Extra White/Tint Base

Apply at 3.5-5.0 WFT to achieve 2.2-3.2 DFT

END OF SECTION

KEM KROMIK®
UNIVERSAL METAL PRIMER

B50NZ0006 BROWN
B50WZ0001 OFF WHITE
B50AZ0006 GRAY

As of 08/25/2017, Complies with:			
OTC	No	LEED® 09 NC,.CI	No
OTC Phase II	No	LEED® 09 CS	No
SCAQMD	No	LEED® 09 S	No
CARB	No	LEED® v4 Emissions	No
CARB SCM 2007	No	LEED® v4 VOC	No
Canada	No	MPI	Yes

CHARACTERISTICS

KEM KROMIK UNIVERSAL METAL PRIMER is a rust inhibiting, modified phenolic alkyd resin primer designed for use over iron and steel substrates. Can be used as a universal primer under high performance topcoats. Suitable as a barrier coat over conventional coatings which would normally be attacked by strong solvents in high performance coatings.

Features:
- High film build to protect sand blasted steel
- Corrosion resistant
- Universal, can be topcoated with epoxies and urethanes
- Exterior/interior metal primer
- Suitable for use in USDA inspected facilities

For use on properly prepared:
- Steel

Recommended for use in:
- Shopcoat primer
- Maintenance primer
- Structural steel
- Machinery
- Structural steel
- Marine vessels
- Barrier coating
- Hand rail
- Storage tanks
- Bar joists
- Steel pipe

Tinting: **DO NOT TINT**
Shelf Life: 36 months, unopened
Finish: Flat

White B50WZ0001
(may vary by base)
VOC(less exempt solvents) 389 g/L - 3.24 lb/gal
(as per 40 CFR 59.406 and SOR/2009-264, s. 12)
Volume Solids: 55 ± 2%
Weight Solids: 75 ± 2%
Weight per Gallon: 12.86 lb/gal ± .2 lb
Flash Point: 80°F TCC

Brown B50NZ0006
(may vary by base)
VOC(less exempt solvents) 409 g/L - 3.24 lb/gal
(as per 40 CFR 59.406 and SOR/2009-264, s. 12)
Volume Solids: 53 ± 2%
Weight Solids: 73 ± 2%
Weight per Gallon: 12.62 lb/gal ± .2 lb
Flash Point: 80°F TCC

SPECIFICATIONS

Color: White, Brown & Gray
Recommended Spread Rate per coat: White B50WZ0001 (varies by base)

wet mils:	6.0 –8.0
dry mils:	3.3 - 4.4
coverage:	267- 200 sq ft/gal approximate

Theoretical coverage: 882 sq ft/gal @ 1 mil dry
Drying Schedule @ 6.0 mils wet, 50% RH:

	@ 40°F/4.5°C	@ 77°F/25°C	@ 110°F/43°C
To touch:	2 hours	30 minutes	15 minutes
Tack handle:	2.5 hours	1 hours	20 minutes
To recoat: with itself & alkyds	2.5 hours	1 hours	45 minutes
To recoat:*	36 hours	16 hours	16 hours
To cure:	7 days	7 days	7 days

* Recoat with hot solvents or high performance coatings. For maximum adhesion, acrylic topcoats require 48 - 72 hours drying of primer. Drying and recoat times are temperature, humidity, and film thickness dependent.

RECOMMENDED SYSTEMS

Steel:
1ct. Kem Kromik Universal Primer
1-2 cts. Topcoat
Acceptable Topcoats:
Acrolon 218 HS Polyurethane
Hi-Solids Polyurethane
Industrial Enamel
Macropoxy HS Epoxy
Metalatex Semi-Gloss Enamel
Pro Industrial Acrylic
Pro Industrial DTM Acrylic
Pro Industrial Waterbased Epoxy
Pro Industrial Waterbased Alkyd-Urethane
Pro Industrial Multi-Surface Acrylic
Pro Industrial Pre-Catalyzed Epoxy & Urethane
Pro Industrial Urethane Alkyd Enamel
Pro Industrial Waterbased Acrolon 100
Sher-Cryl
Silver-Brite Aluminum
Steel Master 9500
Tile-Clad HS Epoxy

The systems listed above are representative of the product's use, other systems may be appropriate. Other topcoats may be appropriate.

System: (unless otherwise indicated)
Substrate: Steel
Surface Preparation: SSPC-SP6/NACE 3
Primer: 1ct. Kem Kromik Universal Metal Primer,@ 3.0 –4.4 mils dft/ct.

Adhesion[1]:
Method: ASTM D3359
Result: 4B
Corrosion Resistance[1]:
Method: ASTM D5894, 1008
Result: Pass
Dry Heat Resistance:
Method: ASTM D2485
Result: 200°F
Flexibility[1]:
Method: ASTM D522, 1/4" mandrel
Result: Pass
Fineness of grind[2]:
Method: Hegman
Result: 4 Hegman minimum
Sag Test[2]:
Method: ASTM D4400
Result: 12 mils minimum
Viscosity[2]: 84-94 KU
Water Resistance[1]:
Result: Pass

[1] 1ct. Kem Kromik Primer 4.5-5 WFT [2] Standard test based on Certificate of Analysis

continued on back

KEM KROMIK® UNIVERSAL METAL PRIMER

SURFACE PREPARATION

WARNING! Removal of old paint by sanding, scraping or other means may generate dust or fumes that contain lead. Exposure to lead dust or fumes may cause brain damage or other adverse health effects, especially in children or pregnant women. Controlling exposure to lead or other hazardous substances requires the use of proper protective equipment, such as a properly fitted respirator (**NIOSH** approved) and proper containment and cleanup. For more information, call the National Lead Information Center at **1-800-424-LEAD** (in US) or contact your local health authority.

Iron & Steel- Minimum surface preparation is Hand Tool Clean per SSPC-SP2. Remove all oil and grease from surface by Solvent Cleaning per SSPC-SP1. For better performance, use Commercial Blast Cleaning per SSPC-SP6/NACE 3, blast clean all surfaces using a sharp, angular abrasive for optimum surface profile (2 mils). Prime any bare steel within 8 hours or before flash rusting occurs.

Previously Painted Surfaces - If in sound condition, clean the surface of all foreign material. Smooth, hard or glossy coatings and surfaces should be dulled by abrading the surface. Apply a test area, allowing paint to dry one week before testing adhesion. If adhesion is poor, additional abrasion of the surface and/or removal of the previous coating may be necessary. Retest surface for adhesion. If paint is peeling or badly weathered, clean surface to sound substrate and treat as a new surface as above. Recognize that any surface preparation short of total removal of the old coating may compromise the service length of the system.
Other substrates may or may not be appropriate. If a specific substrate is not listed above, consult your Sherwin-Williams representative for more information.

As a "Barrier" Coat - If it is necessary to topcoat a previously painted surface with chemically resistant or strong solvent topcoats, Kem Kromik Universal Metal Primer can be used as a barrier coat to help reduce lifting. Apply a coat of Kem Kromik Universal Metal Primer to a small area to test for adhesion or bleeding. If there is evidence of either poor adhesion or bleeding, clean surface to bare steel and apply recommended system.

APPLICATION PROCEDURES

Apply paint at the recommended film thickness and spreading rate as indicated on front page. Application of coating above maximum or below minimum recommended spreading rate may adversely affect coating performance. Spreading rates are calculated on volume solids and do not include an application loss factor due to surface profile, roughness, or porosity of the surface, skill, and technique of the applicator, method of application, various surface irregularities, material lost during mixing, spillage, over thinning, climatic conditions, and excessive film build.

SAFETY PRECAUTIONS

Refer to the SDS sheets before use. **FOR PROFESSIONAL USE ONLY**
Published technical data and instructions are subject to change without notice. Contact your Sherwin-Williams representative for additional technical data and instructions.

PERFORMANCE TIPS

Mix paint thoroughly to a uniform consistency with slow speed power agitation prior to use.
Stripe coat crevices, welds, and sharp angles to prevent early failure in these areas.
When using spray application, use a 50% overlap with each pass of the gun to avoid holidays, bare areas, and pinholes. If necessary, cross spray at a right angle.
Not recommended for immersion service or exposure to acids, alkalis, or strong solvents.
Intimate contact with the steel surface and primer is necessary for adequate rust inhibition and adhesion.
For maximum adhesion, acrylic topcoats require 48 - 72 hours drying of primer.

APPLICATION

Refer to the SDS sheet before use

Temperature:	40°F(4.5°C) minimum
	120°F(49°C) maximum
	(Air, surface, and material)
	At least 5°F above dew point
Relative humidity:	85% maximum

The following is a guide. Changes in pressures and tip sizes may be needed for proper spray characteristics. Always purge spray equipment before use with listed reducer. Any reduction must be compatible with the existing environmental and application conditions.

Reducer	Not recommended
Clean Up	Xylene,R2K4

Airless Spray

Pressure	1800-3000 psi
Hose	1/4" ID
Tip	.015-.019"
Filter	60 mesh

Conventional Spray

Gun	Binks 95
Fluid Nozzle	63C
Air Nozzle	63PB
Atomization Pressure	50 PSI
Fluid Pressure	15-20 PSI

Brush ..... Natural Bristle

Roll.... .3/8" woven with solvent resistant core

If specific application equipment is not listed above, equivalent equipment may be substituted

CLEANUP INFORMATION

Clean spills, spatters & tools with compliant cleanup solvent. After cleaning, flush spray equipment with compliant cleanup solvent to prevent rusting of the equipment. Follow manufacturer's safety recommendations when using solvents.

DANGER: Rags, steel wool, other waste soaked with this product, and sanding residue may spontaneously catch fire if improperly discarded. Immediately place rags, steel wool, other waste soaked with this product, and sanding residue in a sealed, water-filled, metal container. Dispose of in accordance with local fire regulations.

HOTW	08/09/2017	B50NZ0006	37 409
HOTW	08/09/2017	B50WZ0001	38 389
HOTW	08/09/2017	B50AZ0006	19 386

SP

The information and recommendations set forth in this Product Data Sheet are based upon tests conducted by or on behalf of The Sherwin-Williams Company. Such information and recommendations set forth herein are subject to change and pertain to the product offered at the time of publication. Consult your Sherwin-Williams representative or visit www.paintdocs.com to obtain the most current version of the PDS and/or an SDS.

STEEL MASTER™ 9500
30% SILICONE ALKYD

B56W00311 EXTRA WHITE
B56T00304 CLEAR TINT BASE
B56B00300 BLACK
B56Y00300 SAFETY YELLOW

As of 07/26/2017, Complies with:			
OTC	Yes	LEED® 09 NC,.CI	No
OTC Phase II	No	LEED® 09 CS	No
SCAQMD	No	LEED® 09 S	No
CARB	No	LEED® v4 Emissions	No
CARB SCM 2007	No	LEED® v4 VOC	No
Canada	Yes	MPI	

CHARACTERISTICS

STEEL MASTER 9500 is an exterior/interior, 30% silicone alkyd, protective topcoat. Dries to a tough, flexible finish with very good gloss and color retention and long term exterior durability for a single component alkyd product.

Features:
- Excellent color and gloss retention compared to conventional alkyds
- High gloss providing a "wet look"
- Can be applied as low as 45°F (7°C)
- Easy application properties
- Interior / Exterior application
- Suitable for use in USDA inspected facilities

For use on properly prepared:
- Steel
- Galvanized
- Aluminum
- Concrete & Masonry

Recommended for use in:
- Exterior equipment
- Machinery
- Signs
- Logo and identification enamel
- Buildings
- Structural steel
- Piping, tanks

Tinting with Maxitoner:

Base	Strength
Extra White & Clear Tint Base only	100%

Check color before using. Five minutes minimum mixing on a mechanical shaker is required for complete mixing of color.

Shelf Life: 36 months, unopened
Finish: 80°+@60° Gloss

Extra White B56W00311
(may vary by base)

VOC(less exempt solvents) 307 g/L - 2.56 lb/gal
(as per 40 CFR 59.406 and SOR/2009-264, s. 12)
Volume Solids: 64 ± 2%
Weight Solids: 76 ± 2%
Weight per Gallon: 10.82 lb/gal ± .2 lb
Flash Point: 112°F TCC

SPECIFICATIONS

Color: Extra White, Clear Tint Base, Black & Safety Yellow
Recommended Spread Rate per coat: Extra White B56W00311 (varies by base)

wet mils:	3.5 - 5.0
dry mils:	2.2 - 3.2
coverage:	466 - 320 sq ft/gal approximate

Theoretical coverage: 1026 sq ft/gal @ 1 mil dry
Drying Schedule @ 4.0 mils wet, 50% RH:

	@ 50°F/10°C	@ 77°F/25°C	@ 100°F/38°C
To touch:	5 hours	4 hours	1 hour
To handle:	2.5 days	8 hours	8 hours
To recoat:	2.5 days	18 hours	8 hours
To cure:	30 days	14 days	3 days

Drying and recoat times are temperature, humidity, and film thickness dependent.

RECOMMENDED SYSTEMS

Steel & Rusted Galvanized, acrylic primer:
1ct. Pro Industrial Pro-Cryl Primer
1-2cts. Steel Master 9500
Steel alkyd primer:
1ct. Kem Bond HS
Or
1ct. Kem Kromik Universal Metal Primer
1-2cts. Steel Master 9500
Aluminum:
1ct. DTM Wash Primer
1-2cts. Steel Master 9500

Galvanized Metal:
1ct. Galvite HS
1-2cts. Steel Master 9500
Concrete Block:
1ct. Pro Industrial Heavy Duty Block Filler
1-2cts. Steel Master 9500
Concrete Masonry:
1ct. Loxon Concrete and Masonry Primer
1-2cts. Steel Master 9500

The systems listed above are representative of the product's use, other systems may be appropriate. Other primers may be appropriate.

System: (unless otherwise indicated)
Substrate: Steel
Surface Preparation: SSPC-SP10
Primer: 1 ct. Kem Kromik Universal Metal Primer
Finish: 2 cts Steel Master 9500
*unless otherwise noted below

Adhesion:
Method: ASTM D4541
Result: 991 psi
Density[1]:
Result: 10.63-10.93
Dry Heat Resistance:
Method: ASTM D2485
Result: 200°F (discolors)
Fineness of grind[1]:
Method: Hegman
Result: 6 Hegman minimum

Salt Fog Resistance:
Method: ASTM B117, 1000 hours
Result: Rating 10 per ASTM D610 for rusting (field); Rating 10 per ASTM D714 for blistering
Sag Test[1]:
Method: ASTM D4400
Result: 9 mils minimum
Viscosity[1]: 90-100 KU

[1] *Standard test based on Certificate of Analysis*

continued on back

STEEL MASTER™ 9500 30% SILICONE ALKYD

SURFACE PREPARATION

WARNING! Removal of old paint by sanding, scraping or other means may generate dust or fumes that contain lead. Exposure to lead dust or fumes may cause brain damage or other adverse health effects, especially in children or pregnant women. Controlling exposure to lead or other hazardous substances requires the use of proper protective equipment, such as a properly fitted respirator (**NIOSH** approved) and proper containment and cleanup. For more information, call the National Lead Information Center at **1-800-424-LEAD** (in US) or contact your local health authority.

Iron & Steel- Minimum surface preparation is Hand Tool Clean per SSPC-SP2. Remove all oil and grease from surface by Solvent Cleaning per SSPC-SP1. For better performance, use Commercial Blast Cleaning per SSPC-SP6/NACE 3, blast clean all surfaces using a sharp, angular abrasive for optimum surface profile (2 mils). Prime any bare steel within 8 hours or before flash rusting occurs. Primer required.

Aluminum (Untreated) - Remove all oil, grease, dirt, oxide and other foreign material by Solvent Cleaning per SSPC-SP1. Primer required.

Galvanized Steel (Untreated) - Remove all oil, grease, dirt, oxide and other foreign material by Solvent Cleaning per SSPC-SP1. Allow to weather a minimum of six months prior to coating. When weathering is not possible or the surface has been treated with chromate or silicates, first solvent clean per SSPC-SP1 and apply a test patch. Allow paint to dry at least one week before testing adhesion. If adhesion is poor, brush blasting per SSPC-SP16 is necessary to remove these treatments. Rusty galvanizing requires a minimum of Hand Tool Cleaning per SSPC-SP2, prime the area the same day as cleaned. Primer required.

Concrete Block - Surface should be thoroughly clean and dry. Air, material and surface temperatures must be at least 50°F (10°C) before filling. Use Pro Industrial Heavy Duty Block Filler or Loxon Block Surfacer. The filler must be thoroughly dry before topcoating.
Masonry - All masonry must be free of dirt, oil, grease, loose paint, mortar, masonry dust, etc. Clean per SSPC-SP13/Nace 6/ ICRI No. 310.2R, CSP 1-3. Poured, troweled, or tilt-up concrete, plaster, mortar, etc. must be thoroughly cured at least 30 days at 75°F(23.9°C). Form release compounds and curing membranes must be removed by brush blasting. Brick must be allowed to weather for one year prior to surface preparation and painting. Weathered masonry and soft or porous cement board must be brush blasted or power tool cleaned to remove loosely adhering contamination and to get to a hard, firm surface. Apply one coat alkali resistant primer, following label recommendations. Primer required.

Previously Painted Surfaces - If in sound condition, clean the surface of all foreign material. Smooth, hard or glossy coatings and surfaces should be dulled by abrading the surface. Apply a test area, allowing paint to dry one week before testing adhesion. If adhesion is poor, additional abrasion of the surface and/or removal of the previous coating may be necessary. Retest surface for adhesion. If paint is peeling or badly weathered, clean surface to sound substrate and treat as a new surface as above. Recognize that any surface preparation short of total removal of the old coating may compromise the service length of the system.

Other substrates may or may not be appropriate. If a specific substrate is not listed above, consult your Sherwin-Williams representative for more information.

APPLICATION PROCEDURES

Apply paint at the recommended film thickness and spreading rate as indicated on front page. Application of coating above maximum or below minimum recommended spreading rate may adversely affect coating performance. Spreading rates are calculated on volume solids and do not include an application loss factor due to surface profile, roughness, or porosity of the surface, skill, and technique of the applicator, method of application, various surface irregularities, material lost during mixing, spillage, over thinning, climatic conditions, and excessive film build.

SAFETY PRECAUTIONS

Refer to the SDS sheets before use. **FOR PROFESSIONAL USE ONLY**
Published technical data and instructions are subject to change without notice. Contact your Sherwin-Williams representative for additional technical data and instructions.

PERFORMANCE TIPS

Mix paint thoroughly to a uniform consistency with slow speed power agitation prior to use.
Stripe coat crevices, welds, and sharp angles to prevent early failure in these areas.
When using spray application, use a 50% overlap with each pass of the gun to avoid holidays, bare areas, and pinholes. If necessary, cross spray at a right angle.
Do not use colorants formulated for interior use only when applying exterior.
No reduction of material is recommended, as this can affect film build, appearance, and adhesion.

APPLICATION

Refer to the SDS sheet before use
Temperature: 45°F(7°C) minimum
100°F(38°C) maximum
(Air, surface, and material)
At least 5°F above dew point
Relative humidity: 85% maximum

The following is a guide. Changes in pressures and tip sizes may be needed for proper spray characteristics. Always purge spray equipment before use with listed reducer. Any reduction must be compatible with the existing environmental and application conditions.

Reducer .....Not recommended
Clean Up .....Mineral Spirits, R1K4

Airless Spray
Pressure .....2700-3000 psi
Hose .....3/8" ID
Tip ....013-.017"
Filter .....100 mesh

Conventional Spray
Gun.....Binks 95
Fluid Nozzle..... 63B
AirNozzle 63PB
Atomization Pressure .....50-60 psi
Fluid Pressure .....10-20 psi

Brush .....Natural Bristle
Roll.1/4-3/8" woven with solvent resistant core

If specific application equipment is not listed above, equivalent equipment may be substituted.

In order to avoid blockage of spray equipment, clean equipment before use or before periods of extended downtime with compliant solvent.

CLEANUP INFORMATION

Clean spills, spatters & tools with compliant cleanup solvent. After cleaning, flush spray equipment with compliant cleanup solvent to prevent rusting of the equipment. Follow manufacturer's safety recommendations when using solvents.

HOTW	07/26/2017	B56W00311	16 307
HOTW	07/26/2017	B56T00304	12 300

The information and recommendations set forth in this Product Data Sheet are based upon tests conducted by or on behalf of The Sherwin-Williams Company. Such information and recommendations set forth herein are subject to change and pertain to the product offered at the time of publication. Consult your Sherwin-Williams representative or visit www.paintdocs.com to obtain the most current version of the PDS and/or an SDS.

SAFETY DATA SHEET

B50WZ1

Section 1. Identification

Product name : KEM KROMIK® Universal Metal Primer (VOC Comp.)
Off White

Product code : B50WZ1

Other means of identification : Not available.

Product type : Liquid.

Relevant identified uses of the substance or mixture and uses advised against

Not applicable.

Manufacturer : THE SHERWIN-WILLIAMS COMPANY
101 W. Prospect Avenue
Cleveland, OH 44115

Emergency telephone number of the company : US / Canada: (216) 566-2917
Mexico: SETIQ 01-800-00-214-00 / (52) 55-5559-1588 24 hours / 365 days a year

Product Information Telephone Number : US / Canada: (800) 524-5979
Mexico: Not Available

Regulatory Information Telephone Number : US / Canada: (216) 566-2902
Mexico: Not Available

Transportation Emergency Telephone Number : US / Canada: (800) 424-9300
Mexico: SETIQ 01-800-00-214-00 / (52) 55-5559-1588 24 hours / 365 days a year

Section 2. Hazards identification

OSHA/HCS status : This material is considered hazardous by the OSHA Hazard Communication Standard (29 CFR 1910.1200).

Classification of the substance or mixture : FLAMMABLE LIQUIDS - Category 3
SKIN CORROSION/IRRITATION - Category 2
SERIOUS EYE DAMAGE/ EYE IRRITATION - Category 2A
CARCINOGENICITY - Category 1A
TOXIC TO REPRODUCTION (Unborn child) - Category 2
SPECIFIC TARGET ORGAN TOXICITY (SINGLE EXPOSURE) (Respiratory tract irritation) - Category 3
SPECIFIC TARGET ORGAN TOXICITY (REPEATED EXPOSURE) (lungs) - Category 1
ASPIRATION HAZARD - Category 1

Percentage of the mixture consisting of ingredient(s) of unknown oral toxicity: 12.3%
Percentage of the mixture consisting of ingredient(s) of unknown dermal toxicity: 21.6%
Percentage of the mixture consisting of ingredient(s) of unknown inhalation toxicity: 14.7%

GHS label elements

Hazard pictograms :

Signal word : Danger

Section 2. Hazards identification

Hazard statements : Flammable liquid and vapor.
Causes serious eye irritation.
Causes skin irritation.
May cause cancer.
Suspected of damaging the unborn child.
May be fatal if swallowed and enters airways.
May cause respiratory irritation.
Causes damage to organs through prolonged or repeated exposure. (lungs)

Precautionary statements

Prevention : Obtain special instructions before use. Do not handle until all safety precautions have been read and understood. Wear protective gloves. Wear eye or face protection. Wear protective clothing. Keep away from heat, hot surfaces, sparks, open flames and other ignition sources. No smoking. Use explosion-proof electrical, ventilating, lighting and all material-handling equipment. Use only non-sparking tools. Take precautionary measures against static discharge. Keep container tightly closed. Use only outdoors or in a well-ventilated area. Do not breathe vapor. Do not eat, drink or smoke when using this product. Wash hands thoroughly after handling.

Response : Get medical attention if you feel unwell. IF exposed or concerned: Get medical attention. IF INHALED: Remove person to fresh air and keep comfortable for breathing. Call a POISON CENTER or physician if you feel unwell. IF SWALLOWED: Immediately call a POISON CENTER or physician. Do NOT induce vomiting. IF ON SKIN (or hair): Take off immediately all contaminated clothing. Rinse skin with water or shower. IF ON SKIN: Wash with plenty of soap and water. Take off contaminated clothing and wash it before reuse. If skin irritation occurs: Get medical attention. IF IN EYES: Rinse cautiously with water for several minutes. Remove contact lenses, if present and easy to do. Continue rinsing. If eye irritation persists: Get medical attention.

Storage : Store locked up. Store in a well-ventilated place. Keep cool.

Disposal : Dispose of contents and container in accordance with all local, regional, national and international regulations.

Supplemental label elements

DELAYED EFFECTS FROM LONG TERM OVEREXPOSURE. Contains solvents which can cause permanent brain and nervous system damage. Intentional misuse by deliberately concentrating and inhaling the contents can be harmful or fatal. WARNING: This product contains chemicals known to the State of California to cause cancer and birth defects or other reproductive harm. FOR INDUSTRIAL USE ONLY. Adequate ventilation required when sanding or abrading the dried film. If Adequate ventilation cannot be provided wear an approved particulate respirator (NIOSH approved). Follow respirator manufacturer's directions for respirator use. DELAYED EFFECTS FROM LONG TERM OVEREXPOSURE. Abrading or sanding of the dry film may release Crystalline Silica which has been shown to cause lung damage and cancer under long term exposure.

Please refer to the SDS for additional information. Keep out of reach of children. Do not transfer contents to other containers for storage.

Hazards not otherwise classified : DANGER: Rags, steel wool, other waste soaked with this product, and sanding residue may spontaneously catch fire if improperly discarded. Immediately place rags, steel wool, other waste soaked with this product, and sanding residue in a sealed, water-filled, metal container. Dispose of in accordance with local fire regulations.

Section 3. Composition/information on ingredients

Substance/mixture : Mixture

Other means of identification : Not available.

CAS number/other identifiers

Section 3. Composition/information on ingredients

Ingredient name	% by weight	CAS number
Calcium Carbonate	38.13	471-34-1
Xylene	10.41	1330-20-7
Titanium Dioxide	10.01	13463-67-7
Talc	3.91	14807-96-6
1,2,4-Trimethylbenzene	3.7	95-63-6
Toluene	3.15	108-88-3
Light Aromatic Hydrocarbons	2.46	64742-95-6
Ethylbenzene	1.84	100-41-4
Cumene	0.49	98-82-8
Crystalline Silica, respirable powder	0.21	14808-60-7
Methyl Isobutyl Ketone	0.14	108-10-1

Any concentration shown as a range is to protect confidentiality or is due to batch variation.

There are no additional ingredients present which, within the current knowledge of the supplier and in the concentrations applicable, are classified as hazardous to health and hence require reporting in this section.

Occupational exposure limits, if available, are listed in Section 8.

Section 4. First aid measures

Description of necessary first aid measures

Eye contact : Immediately flush eyes with plenty of water, occasionally lifting the upper and lower eyelids. Check for and remove any contact lenses. Continue to rinse for at least 10 minutes. Get medical attention.

Inhalation : Remove victim to fresh air and keep at rest in a position comfortable for breathing. If it is suspected that fumes are still present, the rescuer should wear an appropriate mask or self-contained breathing apparatus. If not breathing, if breathing is irregular or if respiratory arrest occurs, provide artificial respiration or oxygen by trained personnel. It may be dangerous to the person providing aid to give mouth-to-mouth resuscitation. Get medical attention. If necessary, call a poison center or physician. If unconscious, place in recovery position and get medical attention immediately. Maintain an open airway. Loosen tight clothing such as a collar, tie, belt or waistband.

Skin contact : Flush contaminated skin with plenty of water. Remove contaminated clothing and shoes. Wash contaminated clothing thoroughly with water before removing it, or wear gloves. Continue to rinse for at least 10 minutes. Get medical attention. Wash clothing before reuse. Clean shoes thoroughly before reuse.

Ingestion : Get medical attention immediately. Call a poison center or physician. Wash out mouth with water. Remove dentures if any. Remove victim to fresh air and keep at rest in a position comfortable for breathing. If material has been swallowed and the exposed person is conscious, give small quantities of water to drink. Stop if the exposed person feels sick as vomiting may be dangerous. Aspiration hazard if swallowed. Can enter lungs and cause damage. Do not induce vomiting. If vomiting occurs, the head should be kept low so that vomit does not enter the lungs. Never give anything by mouth to an unconscious person. If unconscious, place in recovery position and get medical attention immediately. Maintain an open airway. Loosen tight clothing such as a collar, tie, belt or waistband.

Most important symptoms/effects, acute and delayed

Potential acute health effects

Eye contact : Causes serious eye irritation.

Inhalation : May cause respiratory irritation.

Skin contact : Causes skin irritation.

Ingestion : May be fatal if swallowed and enters airways.

Over-exposure signs/symptoms

Section 4. First aid measures

Eye contact : Adverse symptoms may include the following:
pain or irritation
watering
redness

Inhalation : Adverse symptoms may include the following:
respiratory tract irritation
coughing
reduced fetal weight
increase in fetal deaths
skeletal malformations

Skin contact : Adverse symptoms may include the following:
irritation
redness
reduced fetal weight
increase in fetal deaths
skeletal malformations

Ingestion : Adverse symptoms may include the following:
nausea or vomiting
reduced fetal weight
increase in fetal deaths
skeletal malformations

Indication of immediate medical attention and special treatment needed, if necessary

Notes to physician : Treat symptomatically. Contact poison treatment specialist immediately if large quantities have been ingested or inhaled.

Specific treatments : No specific treatment.

Protection of first-aiders : No action shall be taken involving any personal risk or without suitable training. If it is suspected that fumes are still present, the rescuer should wear an appropriate mask or self-contained breathing apparatus. It may be dangerous to the person providing aid to give mouth-to-mouth resuscitation. Wash contaminated clothing thoroughly with water before removing it, or wear gloves.

See toxicological information (Section 11)

Section 5. Fire-fighting measures

Extinguishing media

Suitable extinguishing media : Use dry chemical, CO_2, water spray (fog) or foam.

Unsuitable extinguishing media : Do not use water jet.

Specific hazards arising from the chemical : Flammable liquid and vapor. Runoff to sewer may create fire or explosion hazard. In a fire or if heated, a pressure increase will occur and the container may burst, with the risk of a subsequent explosion. The vapor/gas is heavier than air and will spread along the ground. Vapors may accumulate in low or confined areas or travel a considerable distance to a source of ignition and flash back.

Hazardous thermal decomposition products : Decomposition products may include the following materials:
carbon dioxide
carbon monoxide
phosphorus oxides
metal oxide/oxides

Section 5. Fire-fighting measures

Special protective actions for fire-fighters : Promptly isolate the scene by removing all persons from the vicinity of the incident if there is a fire. No action shall be taken involving any personal risk or without suitable training. Move containers from fire area if this can be done without risk. Use water spray to keep fire-exposed containers cool.

Special protective equipment for fire-fighters : Fire-fighters should wear appropriate protective equipment and self-contained breathing apparatus (SCBA) with a full face-piece operated in positive pressure mode.

Section 6. Accidental release measures

Personal precautions, protective equipment and emergency procedures

For non-emergency personnel : No action shall be taken involving any personal risk or without suitable training. Evacuate surrounding areas. Keep unnecessary and unprotected personnel from entering. Do not touch or walk through spilled material. Shut off all ignition sources. No flares, smoking or flames in hazard area. Avoid breathing vapor or mist. Provide adequate ventilation. Wear appropriate respirator when ventilation is inadequate. Put on appropriate personal protective equipment.

For emergency responders : If specialized clothing is required to deal with the spillage, take note of any information in Section 8 on suitable and unsuitable materials. See also the information in "For non-emergency personnel".

Environmental precautions : Avoid dispersal of spilled material and runoff and contact with soil, waterways, drains and sewers. Inform the relevant authorities if the product has caused environmental pollution (sewers, waterways, soil or air).

Methods and materials for containment and cleaning up

Small spill : Stop leak if without risk. Move containers from spill area. Use spark-proof tools and explosion-proof equipment. Dilute with water and mop up if water-soluble. Alternatively, or if water-insoluble, absorb with an inert dry material and place in an appropriate waste disposal container. Dispose of via a licensed waste disposal contractor.

Large spill : Stop leak if without risk. Move containers from spill area. Use spark-proof tools and explosion-proof equipment. Approach release from upwind. Prevent entry into sewers, water courses, basements or confined areas. Wash spillages into an effluent treatment plant or proceed as follows. Contain and collect spillage with non-combustible, absorbent material e.g. sand, earth, vermiculite or diatomaceous earth and place in container for disposal according to local regulations (see Section 13). Dispose of via a licensed waste disposal contractor. Contaminated absorbent material may pose the same hazard as the spilled product. Note: see Section 1 for emergency contact information and Section 13 for waste disposal.

Section 7. Handling and storage

Precautions for safe handling

Protective measures : Put on appropriate personal protective equipment (see Section 8). Avoid exposure - obtain special instructions before use. Avoid exposure during pregnancy. Do not handle until all safety precautions have been read and understood. Do not get in eyes or on skin or clothing. Do not breathe vapor or mist. Do not swallow. Use only with adequate ventilation. Wear appropriate respirator when ventilation is inadequate. Do not enter storage areas and confined spaces unless adequately ventilated. Keep in the original container or an approved alternative made from a compatible material, kept tightly closed when not in use. Store and use away from heat, sparks, open flame or any other ignition source. Use explosion-proof electrical (ventilating, lighting and material handling) equipment. Use only non-sparking tools. Take precautionary measures against electrostatic discharges. Empty containers retain product residue and can be hazardous. Do not reuse container.

Section 7. Handling and storage

Advice on general occupational hygiene : Eating, drinking and smoking should be prohibited in areas where this material is handled, stored and processed. Workers should wash hands and face before eating, drinking and smoking. Remove contaminated clothing and protective equipment before entering eating areas. See also Section 8 for additional information on hygiene measures.

Conditions for safe storage, including any incompatibilities : Store in accordance with local regulations. Store in a segregated and approved area. Store in original container protected from direct sunlight in a dry, cool and well-ventilated area, away from incompatible materials (see Section 10) and food and drink. Store locked up. Eliminate all ignition sources. Separate from oxidizing materials. Keep container tightly closed and sealed until ready for use. Containers that have been opened must be carefully resealed and kept upright to prevent leakage. Do not store in unlabeled containers. Use appropriate containment to avoid environmental contamination. See Section 10 for incompatible materials before handling or use.

Section 8. Exposure controls/personal protection

Control parameters

Occupational exposure limits (OSHA United States)

Ingredient name	Exposure limits
Calcium Carbonate	**NIOSH REL (United States, 10/2016).** TWA: 5 mg/m³ 10 hours. Form: Respirable fraction TWA: 10 mg/m³ 10 hours. Form: Total
Xylene	**ACGIH TLV (United States, 3/2016).** TWA: 100 ppm 8 hours. TWA: 434 mg/m³ 8 hours. STEL: 150 ppm 15 minutes. STEL: 651 mg/m³ 15 minutes. **OSHA PEL (United States, 6/2016).** TWA: 100 ppm 8 hours. TWA: 435 mg/m³ 8 hours.
Titanium Dioxide	**ACGIH TLV (United States, 3/2016).** TWA: 10 mg/m³ 8 hours. **OSHA PEL (United States, 6/2016).** TWA: 15 mg/m³ 8 hours. Form: Total dust
Talc	**NIOSH REL (United States, 10/2016).** TWA: 2 mg/m³ 10 hours. Form: Respirable fraction **ACGIH TLV (United States, 3/2016).** TWA: 2 mg/m³ 8 hours. Form: Respirable fraction
1,2,4-Trimethylbenzene	**ACGIH TLV (United States, 3/2016).** TWA: 25 ppm 8 hours. TWA: 123 mg/m³ 8 hours. **NIOSH REL (United States, 10/2016).** TWA: 25 ppm 10 hours. TWA: 125 mg/m³ 10 hours.
Toluene	**OSHA PEL Z2 (United States, 2/2013).** TWA: 200 ppm 8 hours. CEIL: 300 ppm AMP: 500 ppm 10 minutes. **NIOSH REL (United States, 10/2016).** TWA: 100 ppm 10 hours. TWA: 375 mg/m³ 10 hours. STEL: 150 ppm 15 minutes. STEL: 560 mg/m³ 15 minutes. **ACGIH TLV (United States, 3/2016).**

Section 8. Exposure controls/personal protection

	TWA: 20 ppm 8 hours.
Light Aromatic Hydrocarbons	None.
Ethylbenzene	**ACGIH TLV (United States, 3/2016).** TWA: 20 ppm 8 hours. **NIOSH REL (United States, 10/2016).** TWA: 100 ppm 10 hours. TWA: 435 mg/m³ 10 hours. STEL: 125 ppm 15 minutes. STEL: 545 mg/m³ 15 minutes. **OSHA PEL (United States, 6/2016).** TWA: 100 ppm 8 hours. TWA: 435 mg/m³ 8 hours.
Cumene	**ACGIH TLV (United States, 3/2016).** TWA: 50 ppm 8 hours. **NIOSH REL (United States, 10/2016).** **Absorbed through skin.** TWA: 50 ppm 10 hours. TWA: 245 mg/m³ 10 hours. **OSHA PEL (United States, 6/2016).** **Absorbed through skin.** TWA: 50 ppm 8 hours. TWA: 245 mg/m³ 8 hours.
Crystalline Silica, respirable powder	**OSHA PEL Z3 (United States, 6/2016).** TWA: 250 mppcf / (%SiO2+5) 8 hours. Form: Respirable TWA: 10 mg/m³ / (%SiO2+2) 8 hours. Form: Respirable **OSHA PEL (United States, 6/2016).** TWA: 50 µg/m³ 8 hours. Form: Respirable dust **ACGIH TLV (United States, 3/2016).** TWA: 0.025 mg/m³ 8 hours. Form: Respirable fraction **NIOSH REL (United States, 10/2016).** TWA: 0.05 mg/m³ 10 hours. Form: respirable dust
Methyl Isobutyl Ketone	**ACGIH TLV (United States, 3/2016).** TWA: 20 ppm 8 hours. STEL: 75 ppm 15 minutes. **NIOSH REL (United States, 10/2016).** TWA: 50 ppm 10 hours. TWA: 205 mg/m³ 10 hours. STEL: 75 ppm 15 minutes. STEL: 300 mg/m³ 15 minutes. **OSHA PEL (United States, 6/2016).** TWA: 100 ppm 8 hours. TWA: 410 mg/m³ 8 hours.

Occupational exposure limits (Canada)

Ingredient name	Exposure limits
Xylene	**CA Alberta Provincial (Canada, 4/2009).** 8 hrs OEL: 100 ppm 8 hours. 15 min OEL: 651 mg/m³ 15 minutes. 15 min OEL: 150 ppm 15 minutes. 8 hrs OEL: 434 mg/m³ 8 hours. **CA British Columbia Provincial (Canada, 7/2016).**

	TWA: 100 ppm 8 hours. STEL: 150 ppm 15 minutes. **CA Québec Provincial (Canada, 1/2014).** TWAEV: 100 ppm 8 hours. TWAEV: 434 mg/m³ 8 hours. STEV: 150 ppm 15 minutes. STEV: 651 mg/m³ 15 minutes. **CA Ontario Provincial (Canada, 7/2015).** STEL: 150 ppm 15 minutes. TWA: 100 ppm 8 hours. **CA Saskatchewan Provincial (Canada, 7/2013).** STEL: 150 ppm 15 minutes. TWA: 100 ppm 8 hours.
1,2,4-Trimethylbenzene	**CA Alberta Provincial (Canada, 4/2009).** 8 hrs OEL: 123 mg/m³ 8 hours. 8 hrs OEL: 25 ppm 8 hours. **CA British Columbia Provincial (Canada, 7/2016).** TWA: 25 ppm 8 hours. **CA Québec Provincial (Canada, 1/2014).** TWAEV: 25 ppm 8 hours. TWAEV: 123 mg/m³ 8 hours. **CA Ontario Provincial (Canada, 7/2015).** TWA: 25 ppm 8 hours. **CA Saskatchewan Provincial (Canada, 7/2013).** STEL: 30 ppm 15 minutes. TWA: 25 ppm 8 hours.
toluene	**CA Alberta Provincial (Canada, 4/2009). Absorbed through skin.** 8 hrs OEL: 50 ppm 8 hours. 8 hrs OEL: 188 mg/m³ 8 hours. **CA British Columbia Provincial (Canada, 7/2016).** TWA: 20 ppm 8 hours. **CA Ontario Provincial (Canada, 7/2015).** TWA: 20 ppm 8 hours. **CA Québec Provincial (Canada, 1/2014). Absorbed through skin.** TWAEV: 50 ppm 8 hours. TWAEV: 188 mg/m³ 8 hours. **CA Saskatchewan Provincial (Canada, 7/2013). Absorbed through skin.** STEL: 60 ppm 15 minutes. TWA: 50 ppm 8 hours.
Ethylbenzene	**CA Alberta Provincial (Canada, 4/2009).** 8 hrs OEL: 100 ppm 8 hours. 8 hrs OEL: 434 mg/m³ 8 hours. 15 min OEL: 543 mg/m³ 15 minutes. 15 min OEL: 125 ppm 15 minutes. **CA British Columbia Provincial (Canada, 7/2016).** TWA: 20 ppm 8 hours. **CA Ontario Provincial (Canada, 7/2015).** TWA: 20 ppm 8 hours. **CA Québec Provincial (Canada, 1/2014).** TWAEV: 100 ppm 8 hours. TWAEV: 434 mg/m³ 8 hours.

	STEV: 125 ppm 15 minutes. STEV: 543 mg/m³ 15 minutes. **CA Saskatchewan Provincial (Canada, 7/2013).** STEL: 125 ppm 15 minutes. TWA: 100 ppm 8 hours.

Occupational exposure limits (Mexico)

Ingredient name	Exposure limits
Xylene	**NOM-010-STPS-2014 (Mexico, 4/2016).** STEL: 150 ppm 15 minutes. TWA: 100 ppm 8 hours.
1,2,4-Trimethylbenzene	**NOM-010-STPS-2014 (Mexico, 4/2016).** TWA: 25 ppm 8 hours.
toluene	**NOM-010-STPS-2014 (Mexico, 4/2016).** TWA: 20 ppm 8 hours.
Ethylbenzene	**NOM-010-STPS-2014 (Mexico, 4/2016).** TWA: 20 ppm 8 hours.

Appropriate engineering controls : Use only with adequate ventilation. Use process enclosures, local exhaust ventilation or other engineering controls to keep worker exposure to airborne contaminants below any recommended or statutory limits. The engineering controls also need to keep gas, vapor or dust concentrations below any lower explosive limits. Use explosion-proof ventilation equipment.

Environmental exposure controls : Emissions from ventilation or work process equipment should be checked to ensure they comply with the requirements of environmental protection legislation. In some cases, fume scrubbers, filters or engineering modifications to the process equipment will be necessary to reduce emissions to acceptable levels.

Individual protection measures

Hygiene measures : Wash hands, forearms and face thoroughly after handling chemical products, before eating, smoking and using the lavatory and at the end of the working period. Appropriate techniques should be used to remove potentially contaminated clothing. Wash contaminated clothing before reusing. Ensure that eyewash stations and safety showers are close to the workstation location.

Eye/face protection : Safety eyewear complying with an approved standard should be used when a risk assessment indicates this is necessary to avoid exposure to liquid splashes, mists, gases or dusts. If contact is possible, the following protection should be worn, unless the assessment indicates a higher degree of protection: chemical splash goggles.

Skin protection

Hand protection : Chemical-resistant, impervious gloves complying with an approved standard should be worn at all times when handling chemical products if a risk assessment indicates this is necessary. Considering the parameters specified by the glove manufacturer, check during use that the gloves are still retaining their protective properties. It should be noted that the time to breakthrough for any glove material may be different for different glove manufacturers. In the case of mixtures, consisting of several substances, the protection time of the gloves cannot be accurately estimated.

Body protection : Personal protective equipment for the body should be selected based on the task being performed and the risks involved and should be approved by a specialist before handling this product. When there is a risk of ignition from static electricity, wear anti-static protective clothing. For the greatest protection from static discharges, clothing should include anti-static overalls, boots and gloves.

Other skin protection : Appropriate footwear and any additional skin protection measures should be selected based on the task being performed and the risks involved and should be approved by a specialist before handling this product.

Section 8. Exposure controls/personal protection

Respiratory protection : Based on the hazard and potential for exposure, select a respirator that meets the appropriate standard or certification. Respirators must be used according to a respiratory protection program to ensure proper fitting, training, and other important aspects of use.

Section 9. Physical and chemical properties

Appearance

Physical state : Liquid.

Color : Not available.

Odor : Not available.

Odor threshold : Not available.

pH : Not available.

Melting point : Not available.

Boiling point : 105°C (221°F)

Flash point : Closed cup: 27°C (80.6°F) [Pensky-Martens Closed Cup]

Evaporation rate : 2 (butyl acetate = 1)

Flammability (solid, gas) : Not available.

Lower and upper explosive (flammable) limits : Lower: 0.7%
Upper: 7%

Vapor pressure : 2.9 kPa (22 mm Hg) [at 20°C]

Vapor density : 3.1 [Air = 1]

Relative density : 1.54

Solubility : Not available.

Partition coefficient: n-octanol/water : Not available.

Auto-ignition temperature : Not available.

Decomposition temperature : Not available.

Viscosity : Kinematic (40°C (104°F)): <0.205 cm^2/s (<20.5 cSt)

Molecular weight : Not applicable.

Aerosol product

Heat of combustion : 9.344 kJ/g

Section 10. Stability and reactivity

Reactivity : No specific test data related to reactivity available for this product or its ingredients.

Chemical stability : The product is stable.

Possibility of hazardous reactions : Under normal conditions of storage and use, hazardous reactions will not occur.

Conditions to avoid : Avoid all possible sources of ignition (spark or flame). Do not pressurize, cut, weld, braze, solder, drill, grind or expose containers to heat or sources of ignition. Do not allow vapor to accumulate in low or confined areas.

Incompatible materials : Reactive or incompatible with the following materials:
oxidizing materials

Hazardous decomposition products : Under normal conditions of storage and use, hazardous decomposition products should not be produced.

Section 11. Toxicological information

Information on toxicological effects

Acute toxicity

Product/ingredient name	Result	Species	Dose	Exposure
Calcium Carbonate	LD50 Oral	Rat	6450 mg/kg	-
Xylene	LC50 Inhalation Gas.	Rat	5000 ppm	4 hours
	LD50 Oral	Rat	4300 mg/kg	-
1,2,4-Trimethylbenzene	LC50 Inhalation Vapor	Rat	18000 mg/m³	4 hours
	LD50 Oral	Rat	5 g/kg	-
Toluene	LC50 Inhalation Vapor	Rat	49 g/m³	4 hours
	LD50 Oral	Rat	636 mg/kg	-
Light Aromatic Hydrocarbons	LD50 Oral	Rat	8400 mg/kg	-
Ethylbenzene	LD50 Dermal	Rabbit	>5000 mg/kg	-
	LD50 Oral	Rat	3500 mg/kg	-
Cumene	LC50 Inhalation Vapor	Rat	39000 mg/m³	4 hours
	LD50 Oral	Rat	1400 mg/kg	-
Methyl Isobutyl Ketone	LD50 Oral	Rat	2080 mg/kg	-

Irritation/Corrosion

Product/ingredient name	Result	Species	Score	Exposure	Observation
Calcium Carbonate	Eyes - Severe irritant	Rabbit	-	24 hours 750 Micrograms	-
	Skin - Moderate irritant	Rabbit	-	24 hours 500 milligrams	-
Xylene	Eyes - Mild irritant	Rabbit	-	87 milligrams	-
	Eyes - Severe irritant	Rabbit	-	24 hours 5 milligrams	-
	Skin - Mild irritant	Rat	-	8 hours 60 microliters	-
	Skin - Moderate irritant	Rabbit	-	24 hours 500 milligrams	-
	Skin - Moderate irritant	Rabbit	-	100 Percent	-
Titanium Dioxide	Skin - Mild irritant	Human	-	72 hours 300 Micrograms Intermittent	-
Talc	Skin - Mild irritant	Human	-	72 hours 300 Micrograms Intermittent	-
Toluene	Eyes - Mild irritant	Rabbit	-	0.5 minutes 100 milligrams	-
	Eyes - Mild irritant	Rabbit	-	870 Micrograms	-
	Eyes - Severe irritant	Rabbit	-	24 hours 2 milligrams	-
	Skin - Mild irritant	Pig	-	24 hours 250 microliters	-
	Skin - Mild irritant	Rabbit	-	435 milligrams	-
	Skin - Moderate irritant	Rabbit	-	24 hours 20 milligrams	-
	Skin - Moderate irritant	Rabbit	-	500 milligrams	-
Light Aromatic Hydrocarbons	Eyes - Mild irritant	Rabbit	-	24 hours 100 microliters	-
Ethylbenzene	Eyes - Severe irritant	Rabbit	-	500 milligrams	-
	Skin - Mild irritant	Rabbit	-	24 hours 15 milligrams	-

Cumene	Eyes - Mild irritant	Rabbit	-	24 hours 500 milligrams	-
	Eyes - Mild irritant	Rabbit	-	86 milligrams	-
	Skin - Mild irritant	Rabbit	-	24 hours 10 milligrams	-
	Skin - Moderate irritant	Rabbit	-	24 hours 100 milligrams	-
Methyl Isobutyl Ketone	Eyes - Moderate irritant	Rabbit	-	24 hours 100 microliters	-
	Eyes - Severe irritant	Rabbit	-	40 milligrams	-
	Skin - Mild irritant	Rabbit	-	24 hours 500 milligrams	-

Sensitization

Not available.

Mutagenicity

Not available.

Carcinogenicity

Not available.

Classification

Product/ingredient name	OSHA	IARC	NTP
Xylene	-	3	-
Titanium Dioxide	-	2B	-
Talc	-	3	-
Toluene	-	3	-
Ethylbenzene	-	2B	-
Cumene	-	2B	Reasonably anticipated to be a human carcinogen.
Crystalline Silica, respirable powder	-	1	Known to be a human carcinogen.
Methyl Isobutyl Ketone	-	2B	-

Reproductive toxicity

Not available.

Teratogenicity

Not available.

Specific target organ toxicity (single exposure)

Name	Category	Route of exposure	Target organs
Xylene	Category 3	Not applicable.	Respiratory tract irritation
1,2,4-Trimethylbenzene	Category 3	Not applicable.	Respiratory tract irritation
Toluene	Category 3	Not applicable.	Respiratory tract irritation and Narcotic effects
Light Aromatic Hydrocarbons	Category 3	Not applicable.	Respiratory tract irritation and Narcotic effects
Ethylbenzene	Category 3	Not applicable.	Respiratory tract irritation and Narcotic effects
Cumene	Category 3	Not applicable.	Respiratory tract irritation and Narcotic effects

Methyl Isobutyl Ketone	Category 3	Not applicable.	Respiratory tract irritation and Narcotic effects

Specific target organ toxicity (repeated exposure)

Name	Category	Route of exposure	Target organs
Xylene	Category 2	Not determined	Not determined
Talc	Category 1	Inhalation	lungs
Toluene	Category 2	Not determined	Not determined
Light Aromatic Hydrocarbons	Category 2	Not determined	Not determined
Ethylbenzene	Category 2	Not determined	Not determined
Cumene	Category 2	Not determined	Not determined
Crystalline Silica, respirable powder	Category 1	Inhalation	Not determined
Methyl Isobutyl Ketone	Category 2	Not determined	Not determined

Aspiration hazard

Name	Result
Xylene	ASPIRATION HAZARD - Category 1
1,2,4-Trimethylbenzene	ASPIRATION HAZARD - Category 1
Toluene	ASPIRATION HAZARD - Category 1
Light Aromatic Hydrocarbons	ASPIRATION HAZARD - Category 1
Ethylbenzene	ASPIRATION HAZARD - Category 1
Cumene	ASPIRATION HAZARD - Category 1

Information on the likely routes of exposure : Not available.

Potential acute health effects

Eye contact : Causes serious eye irritation.

Inhalation : May cause respiratory irritation.

Skin contact : Causes skin irritation.

Ingestion : May be fatal if swallowed and enters airways.

Symptoms related to the physical, chemical and toxicological characteristics

Eye contact : Adverse symptoms may include the following:
pain or irritation
watering
redness

Inhalation : Adverse symptoms may include the following:
respiratory tract irritation
coughing
reduced fetal weight
increase in fetal deaths
skeletal malformations

Skin contact : Adverse symptoms may include the following:
irritation
redness
reduced fetal weight
increase in fetal deaths
skeletal malformations

Ingestion : Adverse symptoms may include the following:
nausea or vomiting
reduced fetal weight
increase in fetal deaths
skeletal malformations

Delayed and immediate effects and also chronic effects from short and long term exposure

Short term exposure

Potential immediate effects : Not available.

Potential delayed effects : Not available.

Long term exposure

Potential immediate effects : Not available.

Potential delayed effects : Not available.

Potential chronic health effects

Not available.

General : Causes damage to organs through prolonged or repeated exposure.

Carcinogenicity : May cause cancer. Risk of cancer depends on duration and level of exposure.

Mutagenicity : No known significant effects or critical hazards.

Teratogenicity : Suspected of damaging the unborn child.

Developmental effects : No known significant effects or critical hazards.

Fertility effects : No known significant effects or critical hazards.

Numerical measures of toxicity

Acute toxicity estimates

Route	ATE value
Oral	10161.2 mg/kg
Dermal	8291.3 mg/kg
Inhalation (gases)	40976.4 ppm
Inhalation (vapors)	229.2 mg/l

Section 12. Ecological information

Toxicity

Product/ingredient name	Result	Species	Exposure
Calcium Carbonate	Acute LC50 >56000 ppm Fresh water	Fish - Gambusia affinis - Adult	96 hours
	Chronic NOEC 61 mg/g Fresh water	Fish - Oncorhynchus mykiss - Juvenile (Fledgling, Hatchling, Weanling)	28 days
Xylene	Acute LC50 8500 µg/l Marine water	Crustaceans - Palaemonetes pugio	48 hours
	Acute LC50 13400 µg/l Fresh water	Fish - Pimephales promelas	96 hours
Titanium Dioxide	Acute LC50 >1000000 µg/l Marine water	Fish - Fundulus heteroclitus	96 hours
1,2,4-Trimethylbenzene	Acute LC50 4910 µg/l Marine water	Crustaceans - Elasmopus pectenicrus - Adult	48 hours
	Acute LC50 7720 µg/l Fresh water	Fish - Pimephales promelas	96 hours
Toluene	Acute EC50 12500 µg/l Fresh water	Algae - Pseudokirchneriella subcapitata	72 hours
	Acute EC50 11600 µg/l Fresh water	Crustaceans - Gammarus pseudolimnaeus - Adult	48 hours
	Acute EC50 6000 µg/l Fresh water	Daphnia - Daphnia magna - Juvenile (Fledgling, Hatchling, Weanling)	48 hours
	Acute LC50 5500 µg/l Fresh water	Fish - Oncorhynchus kisutch - Fry	96 hours
	Chronic NOEC 1000 µg/l Fresh water	Daphnia - Daphnia magna	21 days
Ethylbenzene	Acute EC50 4600 µg/l Fresh water	Algae - Pseudokirchneriella subcapitata	72 hours

Section 12. Ecological information

	Acute EC50 3600 µg/l Fresh water	Algae - Pseudokirchneriella subcapitata	96 hours
	Acute EC50 6530 µg/l Fresh water	Crustaceans - Artemia sp. - Nauplii	48 hours
	Acute EC50 2930 µg/l Fresh water	Daphnia - Daphnia magna - Neonate	48 hours
	Acute LC50 4200 µg/l Fresh water	Fish - Oncorhynchus mykiss	96 hours
Cumene	Acute EC50 2600 µg/l Fresh water	Algae - Pseudokirchneriella subcapitata	72 hours
	Acute EC50 7400 µg/l Fresh water	Crustaceans - Artemia sp. - Nauplii	48 hours
	Acute EC50 10600 µg/l Fresh water	Daphnia - Daphnia magna - Neonate	48 hours
	Acute LC50 2700 µg/l Fresh water	Fish - Oncorhynchus mykiss	96 hours
Methyl Isobutyl Ketone	Acute LC50 505000 µg/l Fresh water	Fish - Pimephales promelas	96 hours
	Chronic NOEC 78 mg/l Fresh water	Daphnia - Daphnia magna	21 days
	Chronic NOEC 168 mg/l Fresh water	Fish - Pimephales promelas - Embryo	33 days

Persistence and degradability

Product/ingredient name	Aquatic half-life	Photolysis	Biodegradability
Xylene	-	-	Readily
Toluene	-	-	Readily
Light Aromatic Hydrocarbons	-	-	Readily
Ethylbenzene	-	-	Readily
Methyl Isobutyl Ketone	-	-	Readily

Bioaccumulative potential

Product/ingredient name	$LogP_{ow}$	BCF	Potential
Xylene	-	8.1 to 25.9	low
1,2,4-Trimethylbenzene	-	243	low
Toluene	-	90	low
Light Aromatic Hydrocarbons	-	10 to 2500	high
Cumene	-	35.48	low

Mobility in soil

Soil/water partition coefficient (K_{OC}) : Not available.

Other adverse effects : No known significant effects or critical hazards.

Section 13. Disposal considerations

Disposal methods : The generation of waste should be avoided or minimized wherever possible. Disposal of this product, solutions and any by-products should at all times comply with the requirements of environmental protection and waste disposal legislation and any regional local authority requirements. Dispose of surplus and non-recyclable products via a licensed waste disposal contractor. Waste should not be disposed of untreated to the sewer unless fully compliant with the requirements of all authorities with jurisdiction. Waste packaging should be recycled. Incineration or landfill should only be considered when recycling is not feasible. This material and its container must be disposed of in a safe way. Care should be taken when handling emptied containers that have not been cleaned or rinsed out. Empty containers or liners may retain some product residues. Vapor from product residues may create a highly flammable or explosive atmosphere inside the container. Do not cut, weld or grind used containers unless they have been

Section 13. Disposal considerations

cleaned thoroughly internally. Avoid dispersal of spilled material and runoff and contact with soil, waterways, drains and sewers.

Section 14. Transport information

	DOT Classification	TDG Classification	Mexico Classification	IATA	IMDG
UN number	UN1263	UN1263	UN1263	UN1263	UN1263
UN proper shipping name	PAINT	PAINT	PAINT	PAINT	PAINT
Transport hazard class(es)	3	3	3	3	3
Packing group	III	III	III	III	III
Environmental hazards	No.	No.	No.	No.	No.
Additional information	- **ERG No.** 128	Product classified as per the following sections of the Transportation of Dangerous Goods Regulations: 2. 18-2.19 (Class 3). **ERG No.** 128	- **ERG No.** 128	-	**Emergency schedules** F-E, S-E

Special precautions for user : Multi-modal shipping descriptions are provided for informational purposes and do not consider container sizes. The presence of a shipping description for a particular mode of transport (sea, air, etc.), does not indicate that the product is packaged suitably for that mode of transport. All packaging must be reviewed for suitability prior to shipment, and compliance with the applicable regulations is the sole responsibility of the person offering the product for transport. People loading and unloading dangerous goods must be trained on all of the risks deriving from the substances and on all actions in case of emergency situations.

Transport in bulk according to Annex II of MARPOL and the IBC Code : Not available.

Proper shipping name : Not available.

Ship type : Not available.

Pollution category : Not available.

Section 15. Regulatory information

SARA 313

SARA 313 (40 CFR 372.45) supplier notification can be found on the Environmental Data Sheet.

California Prop. 65

WARNING: This product contains chemicals known to the State of California to cause cancer and birth defects or other reproductive harm.

Section 16. Other information

Hazardous Material Information System (U.S.A.)

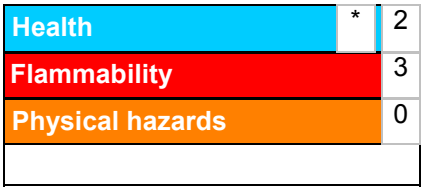

The customer is responsible for determining the PPE code for this material. For more information on HMIS® Personal Protective Equipment (PPE) codes, consult the HMIS® Implementation Manual.

Caution: HMIS® ratings are based on a 0-4 rating scale, with 0 representing minimal hazards or risks, and 4 representing significant hazards or risks. Although HMIS® ratings and the associated label are not required on SDSs or products leaving a facility under 29 CFR 1910.1200, the preparer may choose to provide them. HMIS® ratings are to be used with a fully implemented HMIS® program. HMIS® is a registered trademark and service mark of the American Coatings Association, Inc.

Procedure used to derive the classification

Classification	Justification
FLAMMABLE LIQUIDS - Category 3	On basis of test data
SKIN CORROSION/IRRITATION - Category 2	Calculation method
SERIOUS EYE DAMAGE/ EYE IRRITATION - Category 2A	Calculation method
CARCINOGENICITY - Category 1A	Calculation method
TOXIC TO REPRODUCTION (Unborn child) - Category 2	Calculation method
SPECIFIC TARGET ORGAN TOXICITY (SINGLE EXPOSURE) (Respiratory tract irritation) - Category 3	Calculation method
SPECIFIC TARGET ORGAN TOXICITY (REPEATED EXPOSURE) (lungs) - Category 1	Calculation method
ASPIRATION HAZARD - Category 1	Calculation method

History

Date of printing : 9/5/2017

Date of issue/Date of revision : 9/5/2017

Date of previous issue : 8/28/2017

Version : 8.02

Key to abbreviations : ATE = Acute Toxicity Estimate
BCF = Bioconcentration Factor
GHS = Globally Harmonized System of Classification and Labelling of Chemicals
IATA = International Air Transport Association
IBC = Intermediate Bulk Container
IMDG = International Maritime Dangerous Goods
LogPow = logarithm of the octanol/water partition coefficient
MARPOL = International Convention for the Prevention of Pollution From Ships, 1973 as modified by the Protocol of 1978. ("Marpol" = marine pollution)
UN = United Nations

Notice to reader

It is recommended that each customer or recipient of this Safety Data Sheet (SDS) study it carefully and consult resources, as necessary or appropriate, to become aware of and understand the data contained in this SDS and any hazards associated with the product. This information is provided in good faith and believed to be accurate as of the effective date herein. However, no warranty, express or implied, is given. The information presented here applies only to the product as shipped. The addition of any material can change the composition, hazards and risks of the product. Products shall not be repackaged, modified, or tinted except as specifically instructed by Sherwin-Williams, including but not limited to the incorporation of non Sherwin-Williams products or the use or addition of products in proportions not specified by Sherwin-Williams. Regulatory requirements are subject to change and may differ between various locations and jurisdictions. The customer/buyer/user is responsible to

Section 16. Other information

ensure that his activities comply with all country, federal, state, provincial or local laws. The conditions for use of the product are not under the control of the manufacturer; the customer/buyer/user is responsible to determine the conditions necessary for the safe use of this product. The customer/buyer/user should not use the product for any purpose other than the purpose shown in the applicable section of this SDS without first referring to the supplier and obtaining written handling instructions. Due to the proliferation of sources for information such as manufacturer-specific SDS, the manufacturer cannot be responsible for SDSs obtained from any other source.

SAFETY DATA SHEET

B56W311

Section 1. Identification

Product name : STEEL-MASTER™ 9500 30% Silicone Alkyd Enamel
Extra White

Product code : B56W311

Other means of identification : Not available.

Product type : Liquid.

Relevant identified uses of the substance or mixture and uses advised against

Not applicable.

Manufacturer : THE SHERWIN-WILLIAMS COMPANY
101 W. Prospect Avenue
Cleveland, OH 44115

Emergency telephone number of the company : US / Canada: (216) 566-2917
Mexico: SETIQ 01-800-00-214-00 / (52) 55-5559-1588 24 hours / 365 days a year

Product Information Telephone Number : US / Canada: (800) 524-5979
Mexico: Not Available

Regulatory Information Telephone Number : US / Canada: (216) 566-2902
Mexico: Not Available

Transportation Emergency Telephone Number : US / Canada: (800) 424-9300
Mexico: SETIQ 01-800-00-214-00 / (52) 55-5559-1588 24 hours / 365 days a year

Section 2. Hazards identification

OSHA/HCS status : This material is considered hazardous by the OSHA Hazard Communication Standard (29 CFR 1910.1200).

Classification of the substance or mixture : FLAMMABLE LIQUIDS - Category 3
SKIN CORROSION/IRRITATION - Category 2
SERIOUS EYE DAMAGE/ EYE IRRITATION - Category 2A
SKIN SENSITIZATION - Category 1
CARCINOGENICITY - Category 2
TOXIC TO REPRODUCTION (Fertility) - Category 2
TOXIC TO REPRODUCTION (Unborn child) - Category 2
SPECIFIC TARGET ORGAN TOXICITY (REPEATED EXPOSURE) - Category 2
ASPIRATION HAZARD - Category 1

Percentage of the mixture consisting of ingredient(s) of unknown oral toxicity: 21.3%
Percentage of the mixture consisting of ingredient(s) of unknown dermal toxicity: 38.4%
Percentage of the mixture consisting of ingredient(s) of unknown inhalation toxicity: 25.6%

GHS label elements

Hazard pictograms :

Signal word : Danger

Section 2. Hazards identification

Hazard statements : Flammable liquid and vapor.
Causes serious eye irritation.
Causes skin irritation.
May cause an allergic skin reaction.
Suspected of damaging fertility or the unborn child.
Suspected of causing cancer.
May be fatal if swallowed and enters airways.
May cause damage to organs through prolonged or repeated exposure.

Precautionary statements

Prevention : Obtain special instructions before use. Do not handle until all safety precautions have been read and understood. Wear protective gloves. Wear eye or face protection. Wear protective clothing. Keep away from heat, hot surfaces, sparks, open flames and other ignition sources. No smoking. Use explosion-proof electrical, ventilating, lighting and all material-handling equipment. Use only non-sparking tools. Take precautionary measures against static discharge. Keep container tightly closed. Do not breathe vapor. Wash hands thoroughly after handling. Contaminated work clothing must not be allowed out of the workplace.

Response : Get medical attention if you feel unwell. IF exposed or concerned: Get medical attention. IF SWALLOWED: Immediately call a POISON CENTER or physician. Do NOT induce vomiting. IF ON SKIN (or hair): Take off immediately all contaminated clothing. Rinse skin with water or shower. IF ON SKIN: Wash with plenty of soap and water. Wash contaminated clothing before reuse. If skin irritation or rash occurs: Get medical attention. IF IN EYES: Rinse cautiously with water for several minutes. Remove contact lenses, if present and easy to do. Continue rinsing. If eye irritation persists: Get medical attention.

Storage : Store locked up. Store in a well-ventilated place. Keep cool.

Disposal : Dispose of contents and container in accordance with all local, regional, national and international regulations.

Supplemental label elements

DELAYED EFFECTS FROM LONG TERM OVEREXPOSURE. Contains solvents which can cause permanent brain and nervous system damage. Intentional misuse by deliberately concentrating and inhaling the contents can be harmful or fatal. WARNING: This product contains chemicals known to the State of California to cause cancer and birth defects or other reproductive harm. FOR INDUSTRIAL USE ONLY.

Please refer to the SDS for additional information. Keep out of reach of children. Do not transfer contents to other containers for storage.

Hazards not otherwise classified : None known.

Section 3. Composition/information on ingredients

Substance/mixture : Mixture

Other means of identification : Not available.

CAS number/other identifiers

Ingredient name	% by weight	CAS number
Titanium Dioxide	19.25	13463-67-7
Aluminum Hydroxide	11.89	21645-51-2
1,2,4-Trimethylbenzene	7.86	95-63-6
1,3,5-Trimethylbenzene	4.91	108-67-8
Light Aromatic Hydrocarbons	4.33	64742-95-6
Mineral Spirits	2.04	64742-47-8
Xylene	1.12	1330-20-7
Cumene	0.98	98-82-8
Methyl Ethyl Ketoxime	0.42	96-29-7
Zirconium 2-Ethylhexanoate	0.38	22464-99-9
Ethylbenzene	0.33	100-41-4

Section 3. Composition/information on ingredients

Calcium 2-Ethylhexanoate	0.29	136-51-6

Any concentration shown as a range is to protect confidentiality or is due to batch variation.

There are no additional ingredients present which, within the current knowledge of the supplier and in the concentrations applicable, are classified as hazardous to health and hence require reporting in this section.

Occupational exposure limits, if available, are listed in Section 8.

Section 4. First aid measures

Description of necessary first aid measures

Eye contact : Immediately flush eyes with plenty of water, occasionally lifting the upper and lower eyelids. Check for and remove any contact lenses. Continue to rinse for at least 10 minutes. Get medical attention.

Inhalation : Remove victim to fresh air and keep at rest in a position comfortable for breathing. If not breathing, if breathing is irregular or if respiratory arrest occurs, provide artificial respiration or oxygen by trained personnel. It may be dangerous to the person providing aid to give mouth-to-mouth resuscitation. Get medical attention. If unconscious, place in recovery position and get medical attention immediately. Maintain an open airway. Loosen tight clothing such as a collar, tie, belt or waistband.

Skin contact : Wash with plenty of soap and water. Remove contaminated clothing and shoes. Wash contaminated clothing thoroughly with water before removing it, or wear gloves. Continue to rinse for at least 10 minutes. Get medical attention. In the event of any complaints or symptoms, avoid further exposure. Wash clothing before reuse. Clean shoes thoroughly before reuse.

Ingestion : Get medical attention immediately. Call a poison center or physician. Wash out mouth with water. Remove dentures if any. Remove victim to fresh air and keep at rest in a position comfortable for breathing. If material has been swallowed and the exposed person is conscious, give small quantities of water to drink. Stop if the exposed person feels sick as vomiting may be dangerous. Aspiration hazard if swallowed. Can enter lungs and cause damage. Do not induce vomiting. If vomiting occurs, the head should be kept low so that vomit does not enter the lungs. Never give anything by mouth to an unconscious person. If unconscious, place in recovery position and get medical attention immediately. Maintain an open airway. Loosen tight clothing such as a collar, tie, belt or waistband.

Most important symptoms/effects, acute and delayed

Potential acute health effects

Eye contact : Causes serious eye irritation.

Inhalation : No known significant effects or critical hazards.

Skin contact : Causes skin irritation. May cause an allergic skin reaction.

Ingestion : May be fatal if swallowed and enters airways.

Over-exposure signs/symptoms

Eye contact : Adverse symptoms may include the following:
pain or irritation
watering
redness

Inhalation : Adverse symptoms may include the following:
reduced fetal weight
increase in fetal deaths
skeletal malformations

Skin contact : Adverse symptoms may include the following:
irritation
redness
reduced fetal weight
increase in fetal deaths
skeletal malformations

Section 4. First aid measures

Ingestion : Adverse symptoms may include the following:
nausea or vomiting
reduced fetal weight
increase in fetal deaths
skeletal malformations

Indication of immediate medical attention and special treatment needed, if necessary

Notes to physician : Treat symptomatically. Contact poison treatment specialist immediately if large quantities have been ingested or inhaled.

Specific treatments : No specific treatment.

Protection of first-aiders : No action shall be taken involving any personal risk or without suitable training. It may be dangerous to the person providing aid to give mouth-to-mouth resuscitation. Wash contaminated clothing thoroughly with water before removing it, or wear gloves.

See toxicological information (Section 11)

Section 5. Fire-fighting measures

Extinguishing media

Suitable extinguishing media : Use dry chemical, CO_2, water spray (fog) or foam.

Unsuitable extinguishing media : Do not use water jet.

Specific hazards arising from the chemical : Flammable liquid and vapor. Runoff to sewer may create fire or explosion hazard. In a fire or if heated, a pressure increase will occur and the container may burst, with the risk of a subsequent explosion. The vapor/gas is heavier than air and will spread along the ground. Vapors may accumulate in low or confined areas or travel a considerable distance to a source of ignition and flash back.

Hazardous thermal decomposition products : Decomposition products may include the following materials:
carbon dioxide
carbon monoxide
metal oxide/oxides

Special protective actions for fire-fighters : Promptly isolate the scene by removing all persons from the vicinity of the incident if there is a fire. No action shall be taken involving any personal risk or without suitable training. Move containers from fire area if this can be done without risk. Use water spray to keep fire-exposed containers cool.

Special protective equipment for fire-fighters : Fire-fighters should wear appropriate protective equipment and self-contained breathing apparatus (SCBA) with a full face-piece operated in positive pressure mode.

Section 6. Accidental release measures

Personal precautions, protective equipment and emergency procedures

For non-emergency personnel : No action shall be taken involving any personal risk or without suitable training. Evacuate surrounding areas. Keep unnecessary and unprotected personnel from entering. Do not touch or walk through spilled material. Shut off all ignition sources. No flares, smoking or flames in hazard area. Avoid breathing vapor or mist. Provide adequate ventilation. Wear appropriate respirator when ventilation is inadequate. Put on appropriate personal protective equipment.

For emergency responders : If specialized clothing is required to deal with the spillage, take note of any information in Section 8 on suitable and unsuitable materials. See also the information in "For non-emergency personnel".

Environmental precautions :

Section 6. Accidental release measures

Avoid dispersal of spilled material and runoff and contact with soil, waterways, drains and sewers. Inform the relevant authorities if the product has caused environmental pollution (sewers, waterways, soil or air).

Methods and materials for containment and cleaning up

Small spill : Stop leak if without risk. Move containers from spill area. Use spark-proof tools and explosion-proof equipment. Dilute with water and mop up if water-soluble. Alternatively, or if water-insoluble, absorb with an inert dry material and place in an appropriate waste disposal container. Dispose of via a licensed waste disposal contractor.

Large spill : Stop leak if without risk. Move containers from spill area. Use spark-proof tools and explosion-proof equipment. Approach release from upwind. Prevent entry into sewers, water courses, basements or confined areas. Wash spillages into an effluent treatment plant or proceed as follows. Contain and collect spillage with non-combustible, absorbent material e.g. sand, earth, vermiculite or diatomaceous earth and place in container for disposal according to local regulations (see Section 13). Dispose of via a licensed waste disposal contractor. Contaminated absorbent material may pose the same hazard as the spilled product. Note: see Section 1 for emergency contact information and Section 13 for waste disposal.

Section 7. Handling and storage

Precautions for safe handling

Protective measures : Put on appropriate personal protective equipment (see Section 8). Persons with a history of skin sensitization problems should not be employed in any process in which this product is used. Avoid exposure - obtain special instructions before use. Avoid exposure during pregnancy. Do not handle until all safety precautions have been read and understood. Do not get in eyes or on skin or clothing. Do not breathe vapor or mist. Do not swallow. Use only with adequate ventilation. Wear appropriate respirator when ventilation is inadequate. Do not enter storage areas and confined spaces unless adequately ventilated. Keep in the original container or an approved alternative made from a compatible material, kept tightly closed when not in use. Store and use away from heat, sparks, open flame or any other ignition source. Use explosion-proof electrical (ventilating, lighting and material handling) equipment. Use only non-sparking tools. Take precautionary measures against electrostatic discharges. Empty containers retain product residue and can be hazardous. Do not reuse container.

Advice on general occupational hygiene : Eating, drinking and smoking should be prohibited in areas where this material is handled, stored and processed. Workers should wash hands and face before eating, drinking and smoking. Remove contaminated clothing and protective equipment before entering eating areas. See also Section 8 for additional information on hygiene measures.

Conditions for safe storage, including any incompatibilities : Store in accordance with local regulations. Store in a segregated and approved area. Store in original container protected from direct sunlight in a dry, cool and well-ventilated area, away from incompatible materials (see Section 10) and food and drink. Store locked up. Eliminate all ignition sources. Separate from oxidizing materials. Keep container tightly closed and sealed until ready for use. Containers that have been opened must be carefully resealed and kept upright to prevent leakage. Do not store in unlabeled containers. Use appropriate containment to avoid environmental contamination. See Section 10 for incompatible materials before handling or use.

Section 8. Exposure controls/personal protection

Control parameters

Occupational exposure limits (OSHA United States)

Section 8. Exposure controls/personal protection

Ingredient name	Exposure limits
Titanium Dioxide	**ACGIH TLV (United States, 3/2016).** TWA: 10 mg/m³ 8 hours. **OSHA PEL (United States, 6/2016).** TWA: 15 mg/m³ 8 hours. Form: Total dust
Aluminum Hydroxide	**ACGIH TLV (United States, 3/2016).** TWA: 1 mg/m³ 8 hours. Form: Respirable fraction
1,2,4-Trimethylbenzene	**ACGIH TLV (United States, 3/2016).** TWA: 25 ppm 8 hours. TWA: 123 mg/m³ 8 hours. **NIOSH REL (United States, 10/2016).** TWA: 25 ppm 10 hours. TWA: 125 mg/m³ 10 hours.
1,3,5-Trimethylbenzene	**ACGIH TLV (United States, 3/2016).** TWA: 25 ppm 8 hours. TWA: 123 mg/m³ 8 hours. **NIOSH REL (United States, 10/2016).** TWA: 25 ppm 10 hours. TWA: 125 mg/m³ 10 hours.
Light Aromatic Hydrocarbons	None.
Mineral Spirits	**OSHA PEL (United States, 6/2016).** TWA: 100 ppm 8 hours. TWA: 400 mg/m³ 8 hours.
Xylene	**ACGIH TLV (United States, 3/2016).** TWA: 100 ppm 8 hours. TWA: 434 mg/m³ 8 hours. STEL: 150 ppm 15 minutes. STEL: 651 mg/m³ 15 minutes. **OSHA PEL (United States, 6/2016).** TWA: 100 ppm 8 hours. TWA: 435 mg/m³ 8 hours.
Cumene	**ACGIH TLV (United States, 3/2016).** TWA: 50 ppm 8 hours. **NIOSH REL (United States, 10/2016).** **Absorbed through skin.** TWA: 50 ppm 10 hours. TWA: 245 mg/m³ 10 hours. **OSHA PEL (United States, 6/2016).** **Absorbed through skin.** TWA: 50 ppm 8 hours. TWA: 245 mg/m³ 8 hours.
Methyl Ethyl Ketoxime	**AIHA WEEL (United States, 10/2011). Skin sensitizer.** TWA: 10 ppm 8 hours.
Zirconium 2-Ethylhexanoate	**ACGIH TLV (United States, 3/2016).** TWA: 5 mg/m³, (as Zr) 8 hours. STEL: 10 mg/m³, (as Zr) 15 minutes. **NIOSH REL (United States, 10/2016).** TWA: 5 mg/m³, (as Zr) 10 hours. STEL: 10 mg/m³, (as Zr) 15 minutes. **OSHA PEL (United States, 6/2016).** TWA: 5 mg/m³, (as Zr) 8 hours.
Ethylbenzene	**ACGIH TLV (United States, 3/2016).** TWA: 20 ppm 8 hours. **NIOSH REL (United States, 10/2016).** TWA: 100 ppm 10 hours. TWA: 435 mg/m³ 10 hours.

	STEL: 125 ppm 15 minutes. STEL: 545 mg/m³ 15 minutes. **OSHA PEL (United States, 6/2016).** TWA: 100 ppm 8 hours. TWA: 435 mg/m³ 8 hours.
Calcium 2-Ethylhexanoate	None.

Occupational exposure limits (Canada)

Ingredient name	Exposure limits
1,2,4-Trimethylbenzene	**CA Alberta Provincial (Canada, 4/2009).** 8 hrs OEL: 123 mg/m³ 8 hours. 8 hrs OEL: 25 ppm 8 hours. **CA British Columbia Provincial (Canada, 7/2016).** TWA: 25 ppm 8 hours. **CA Québec Provincial (Canada, 1/2014).** TWAEV: 25 ppm 8 hours. TWAEV: 123 mg/m³ 8 hours. **CA Ontario Provincial (Canada, 7/2015).** TWA: 25 ppm 8 hours. **CA Saskatchewan Provincial (Canada, 7/2013).** STEL: 30 ppm 15 minutes. TWA: 25 ppm 8 hours.
1,3,5-Trimethylbenzene	**CA Alberta Provincial (Canada, 4/2009).** 8 hrs OEL: 123 mg/m³ 8 hours. 8 hrs OEL: 25 ppm 8 hours. **CA British Columbia Provincial (Canada, 7/2016).** TWA: 25 ppm 8 hours. **CA Québec Provincial (Canada, 1/2014).** TWAEV: 25 ppm 8 hours. TWAEV: 123 mg/m³ 8 hours. **CA Ontario Provincial (Canada, 7/2015).** TWA: 25 ppm 8 hours. **CA Saskatchewan Provincial (Canada, 7/2013).** STEL: 30 ppm 15 minutes. TWA: 25 ppm 8 hours.
Solvent naphtha (petroleum), medium aliph.	**CA Québec Provincial (Canada, 1/2014).** TWAEV: 400 ppm 8 hours. TWAEV: 1590 mg/m³ 8 hours. **CA Ontario Provincial (Canada, 7/2015).** TWA: 525 mg/m³ 8 hours.
Xylene	**CA Alberta Provincial (Canada, 4/2009).** 8 hrs OEL: 100 ppm 8 hours. 15 min OEL: 651 mg/m³ 15 minutes. 15 min OEL: 150 ppm 15 minutes. 8 hrs OEL: 434 mg/m³ 8 hours. **CA British Columbia Provincial (Canada, 7/2016).** TWA: 100 ppm 8 hours. STEL: 150 ppm 15 minutes. **CA Québec Provincial (Canada, 1/2014).** TWAEV: 100 ppm 8 hours. TWAEV: 434 mg/m³ 8 hours. STEV: 150 ppm 15 minutes. STEV: 651 mg/m³ 15 minutes.

	CA Ontario Provincial (Canada, 7/2015). STEL: 150 ppm 15 minutes. TWA: 100 ppm 8 hours. **CA Saskatchewan Provincial (Canada, 7/2013).** STEL: 150 ppm 15 minutes. TWA: 100 ppm 8 hours.
Methyl Ethyl Ketoxime	**AIHA WEEL (United States, 10/2011). Skin sensitizer.** TWA: 10 ppm 8 hours.
Zirconium 2-Ethylhexanoate	**CA Alberta Provincial (Canada, 4/2009).** 8 hrs OEL: 5 mg/m³, (as Zr) 8 hours. 15 min OEL: 10 mg/m³, (as Zr) 15 minutes. **CA British Columbia Provincial (Canada, 7/2016).** TWA: 5 mg/m³, (as Zr) 8 hours. STEL: 10 mg/m³, (as Zr) 15 minutes. **CA Québec Provincial (Canada, 1/2014).** TWAEV: 5 mg/m³, (as Zr) 8 hours. STEV: 10 mg/m³, (as Zr) 15 minutes. **CA Ontario Provincial (Canada, 7/2015).** STEL: 10 mg/m³, (as Zr) 15 minutes. TWA: 5 mg/m³, (as Zr) 8 hours.
Ethylbenzene	**CA Alberta Provincial (Canada, 4/2009).** 8 hrs OEL: 100 ppm 8 hours. 8 hrs OEL: 434 mg/m³ 8 hours. 15 min OEL: 543 mg/m³ 15 minutes. 15 min OEL: 125 ppm 15 minutes. **CA British Columbia Provincial (Canada, 7/2016).** TWA: 20 ppm 8 hours. **CA Ontario Provincial (Canada, 7/2015).** TWA: 20 ppm 8 hours. **CA Québec Provincial (Canada, 1/2014).** TWAEV: 100 ppm 8 hours. TWAEV: 434 mg/m³ 8 hours. STEV: 125 ppm 15 minutes. STEV: 543 mg/m³ 15 minutes. **CA Saskatchewan Provincial (Canada, 7/2013).** STEL: 125 ppm 15 minutes. TWA: 100 ppm 8 hours.

Occupational exposure limits (Mexico)

Ingredient name	Exposure limits
1,2,4-Trimethylbenzene	**NOM-010-STPS-2014 (Mexico, 4/2016).** TWA: 25 ppm 8 hours.
1,3,5-Trimethylbenzene	**NOM-010-STPS-2014 (Mexico, 4/2016).** TWA: 25 ppm 8 hours.
Xylene	**NOM-010-STPS-2014 (Mexico, 4/2016).** STEL: 150 ppm 15 minutes. TWA: 100 ppm 8 hours.
Zirconium 2-Ethylhexanoate	**NOM-010-STPS-2014 (Mexico, 4/2016).** TWA: 5 mg/m³, (as Zr) 8 hours. STEL: 10 mg/m³, (as Zr) 15 minutes.
Ethylbenzene	**NOM-010-STPS-2014 (Mexico, 4/2016).** TWA: 20 ppm 8 hours.

Section 8. Exposure controls/personal protection

Appropriate engineering controls : Use only with adequate ventilation. Use process enclosures, local exhaust ventilation or other engineering controls to keep worker exposure to airborne contaminants below any recommended or statutory limits. The engineering controls also need to keep gas, vapor or dust concentrations below any lower explosive limits. Use explosion-proof ventilation equipment.

Environmental exposure controls : Emissions from ventilation or work process equipment should be checked to ensure they comply with the requirements of environmental protection legislation. In some cases, fume scrubbers, filters or engineering modifications to the process equipment will be necessary to reduce emissions to acceptable levels.

Individual protection measures

Hygiene measures : Wash hands, forearms and face thoroughly after handling chemical products, before eating, smoking and using the lavatory and at the end of the working period. Appropriate techniques should be used to remove potentially contaminated clothing. Contaminated work clothing should not be allowed out of the workplace. Wash contaminated clothing before reusing. Ensure that eyewash stations and safety showers are close to the workstation location.

Eye/face protection : Safety eyewear complying with an approved standard should be used when a risk assessment indicates this is necessary to avoid exposure to liquid splashes, mists, gases or dusts. If contact is possible, the following protection should be worn, unless the assessment indicates a higher degree of protection: chemical splash goggles.

Skin protection

Hand protection : Chemical-resistant, impervious gloves complying with an approved standard should be worn at all times when handling chemical products if a risk assessment indicates this is necessary. Considering the parameters specified by the glove manufacturer, check during use that the gloves are still retaining their protective properties. It should be noted that the time to breakthrough for any glove material may be different for different glove manufacturers. In the case of mixtures, consisting of several substances, the protection time of the gloves cannot be accurately estimated.

Body protection : Personal protective equipment for the body should be selected based on the task being performed and the risks involved and should be approved by a specialist before handling this product. When there is a risk of ignition from static electricity, wear anti-static protective clothing. For the greatest protection from static discharges, clothing should include anti-static overalls, boots and gloves.

Other skin protection : Appropriate footwear and any additional skin protection measures should be selected based on the task being performed and the risks involved and should be approved by a specialist before handling this product.

Respiratory protection : Based on the hazard and potential for exposure, select a respirator that meets the appropriate standard or certification. Respirators must be used according to a respiratory protection program to ensure proper fitting, training, and other important aspects of use.

Section 9. Physical and chemical properties

Appearance

Physical state : Liquid.

Color : Not available.

Odor : Not available.

Odor threshold : Not available.

pH : Not available.

Melting point : Not available.

Boiling point : 138°C (280.4°F)

Flash point : Closed cup: 44°C (111.2°F) [Pensky-Martens Closed Cup]

Evaporation rate : 0.53 (butyl acetate = 1)

Section 9. Physical and chemical properties

Flammability (solid, gas) : Not available.

Lower and upper explosive (flammable) limits : Lower: 0.7%
Upper: 7%

Vapor pressure : 0.79 kPa (5.9 mm Hg) [at 20°C]

Vapor density : 3.66 [Air = 1]

Relative density : 1.3

Solubility : Not available.

Partition coefficient: n-octanol/water : Not available.

Auto-ignition temperature : Not available.

Decomposition temperature : Not available.

Viscosity : Kinematic (40°C (104°F)): <0.205 cm^2/s (<20.5 cSt)

Molecular weight : Not applicable.

Aerosol product

Heat of combustion : 9.494 kJ/g

Section 10. Stability and reactivity

Reactivity : No specific test data related to reactivity available for this product or its ingredients.

Chemical stability : The product is stable.

Possibility of hazardous reactions : Under normal conditions of storage and use, hazardous reactions will not occur.

Conditions to avoid : Avoid all possible sources of ignition (spark or flame). Do not pressurize, cut, weld, braze, solder, drill, grind or expose containers to heat or sources of ignition. Do not allow vapor to accumulate in low or confined areas.

Incompatible materials : Reactive or incompatible with the following materials:
oxidizing materials

Hazardous decomposition products : Under normal conditions of storage and use, hazardous decomposition products should not be produced.

Section 11. Toxicological information

Information on toxicological effects

Acute toxicity

Product/ingredient name	Result	Species	Dose	Exposure
1,2,4-Trimethylbenzene	LC50 Inhalation Vapor	Rat	18000 mg/m³	4 hours
	LD50 Oral	Rat	5 g/kg	-
1,3,5-Trimethylbenzene	LC50 Inhalation Vapor	Rat	24000 mg/m³	4 hours
	LD50 Oral	Rat	5000 mg/kg	-
Light Aromatic Hydrocarbons	LD50 Oral	Rat	8400 mg/kg	-
Xylene	LC50 Inhalation Gas.	Rat	5000 ppm	4 hours
	LD50 Oral	Rat	4300 mg/kg	-
Cumene	LC50 Inhalation Vapor	Rat	39000 mg/m³	4 hours
	LD50 Oral	Rat	1400 mg/kg	-
Methyl Ethyl Ketoxime	LD50 Oral	Rat	930 mg/kg	-
Zirconium 2-Ethylhexanoate	LD50 Dermal	Rabbit	>5 g/kg	-
	LD50 Oral	Rat	>5 g/kg	-
Ethylbenzene	LD50 Dermal	Rabbit	>5000 mg/kg	-

Section 11. Toxicological information

	LD50 Oral	Rat	3500 mg/kg	-

Irritation/Corrosion

Product/ingredient name	Result	Species	Score	Exposure	Observation
Titanium Dioxide	Skin - Mild irritant	Human	-	72 hours 300 Micrograms Intermittent	-
1,3,5-Trimethylbenzene	Eyes - Mild irritant	Rabbit	-	24 hours 500 milligrams	-
	Skin - Moderate irritant	Rabbit	-	24 hours 20 milligrams	-
Light Aromatic Hydrocarbons	Eyes - Mild irritant	Rabbit	-	24 hours 100 microliters	-
Xylene	Eyes - Mild irritant	Rabbit	-	87 milligrams	-
	Eyes - Severe irritant	Rabbit	-	24 hours 5 milligrams	-
	Skin - Mild irritant	Rat	-	8 hours 60 microliters	-
	Skin - Moderate irritant	Rabbit	-	24 hours 500 milligrams	-
	Skin - Moderate irritant	Rabbit	-	100 Percent	-
Cumene	Eyes - Mild irritant	Rabbit	-	24 hours 500 milligrams	-
	Eyes - Mild irritant	Rabbit	-	86 milligrams	-
	Skin - Mild irritant	Rabbit	-	24 hours 10 milligrams	-
	Skin - Moderate irritant	Rabbit	-	24 hours 100 milligrams	-
Methyl Ethyl Ketoxime	Eyes - Severe irritant	Rabbit	-	100 microliters	-
Ethylbenzene	Eyes - Severe irritant	Rabbit	-	500 milligrams	-
	Skin - Mild irritant	Rabbit	-	24 hours 15 milligrams	-

Sensitization

Not available.

Mutagenicity

Not available.

Carcinogenicity

Not available.

Classification

Product/ingredient name	OSHA	IARC	NTP
Titanium Dioxide	-	2B	-
Xylene	-	3	-
Cumene	-	2B	Reasonably anticipated to be a human carcinogen.
Ethylbenzene	-	2B	-

Reproductive toxicity

Not available.

Teratogenicity

Not available.

Specific target organ toxicity (single exposure)

Section 11. Toxicological information

Name	Category	Route of exposure	Target organs
1,2,4-Trimethylbenzene	Category 3	Not applicable.	Respiratory tract irritation
1,3,5-Trimethylbenzene	Category 3	Not applicable.	Respiratory tract irritation
Light Aromatic Hydrocarbons	Category 3	Not applicable.	Respiratory tract irritation and Narcotic effects
Mineral Spirits	Category 3	Not applicable.	Respiratory tract irritation and Narcotic effects
Xylene	Category 3	Not applicable.	Respiratory tract irritation
Cumene	Category 3	Not applicable.	Respiratory tract irritation and Narcotic effects
Ethylbenzene	Category 3	Not applicable.	Respiratory tract irritation and Narcotic effects

Specific target organ toxicity (repeated exposure)

Name	Category	Route of exposure	Target organs
Light Aromatic Hydrocarbons	Category 2	Not determined	Not determined
Mineral Spirits	Category 2	Not determined	Not determined
Xylene	Category 2	Not determined	Not determined
Cumene	Category 2	Not determined	Not determined
Ethylbenzene	Category 2	Not determined	Not determined

Aspiration hazard

Name	Result
1,2,4-Trimethylbenzene	ASPIRATION HAZARD - Category 1
1,3,5-Trimethylbenzene	ASPIRATION HAZARD - Category 1
Light Aromatic Hydrocarbons	ASPIRATION HAZARD - Category 1
Mineral Spirits	ASPIRATION HAZARD - Category 1
Xylene	ASPIRATION HAZARD - Category 1
Cumene	ASPIRATION HAZARD - Category 1
Ethylbenzene	ASPIRATION HAZARD - Category 1

Information on the likely routes of exposure : Not available.

Potential acute health effects

Eye contact : Causes serious eye irritation.

Inhalation : No known significant effects or critical hazards.

Skin contact : Causes skin irritation. May cause an allergic skin reaction.

Ingestion : May be fatal if swallowed and enters airways.

Symptoms related to the physical, chemical and toxicological characteristics

Eye contact : Adverse symptoms may include the following:
pain or irritation
watering
redness

Inhalation : Adverse symptoms may include the following:
reduced fetal weight
increase in fetal deaths
skeletal malformations

Skin contact : Adverse symptoms may include the following:
irritation
redness
reduced fetal weight
increase in fetal deaths
skeletal malformations

Ingestion : Adverse symptoms may include the following:
nausea or vomiting
reduced fetal weight
increase in fetal deaths
skeletal malformations

Delayed and immediate effects and also chronic effects from short and long term exposure

Short term exposure

Potential immediate effects : Not available.

Potential delayed effects : Not available.

Long term exposure

Potential immediate effects : Not available.

Potential delayed effects : Not available.

Potential chronic health effects

Not available.

General : May cause damage to organs through prolonged or repeated exposure. Once sensitized, a severe allergic reaction may occur when subsequently exposed to very low levels.

Carcinogenicity : Suspected of causing cancer. Risk of cancer depends on duration and level of exposure.

Mutagenicity : No known significant effects or critical hazards.

Teratogenicity : Suspected of damaging the unborn child.

Developmental effects : No known significant effects or critical hazards.

Fertility effects : Suspected of damaging fertility.

Numerical measures of toxicity

Acute toxicity estimates

Route	ATE value
Oral	27981.6 mg/kg
Dermal	60760.1 mg/kg
Inhalation (gases)	333419.5 ppm
Inhalation (vapors)	170.3 mg/l

Section 12. Ecological information

Toxicity

Product/ingredient name	Result	Species	Exposure
Titanium Dioxide	Acute LC50 >1000000 µg/l Marine water	Fish - Fundulus heteroclitus	96 hours
1,2,4-Trimethylbenzene	Acute LC50 4910 µg/l Marine water	Crustaceans - Elasmopus pectenicrus - Adult	48 hours
	Acute LC50 7720 µg/l Fresh water	Fish - Pimephales promelas	96 hours
1,3,5-Trimethylbenzene	Acute LC50 13000 µg/l Marine water	Crustaceans - Cancer magister - Zoea	48 hours
	Acute LC50 12520 µg/l Fresh water	Fish - Carassius auratus	96 hours
	Chronic NOEC 400 µg/l Fresh water	Daphnia - Daphnia magna	21 days
Xylene	Acute LC50 8500 µg/l Marine water	Crustaceans - Palaemonetes pugio	48 hours
	Acute LC50 13400 µg/l Fresh water	Fish - Pimephales promelas	96 hours
Cumene	Acute EC50 2600 µg/l Fresh water	Algae - Pseudokirchneriella subcapitata	72 hours
	Acute EC50 7400 µg/l Fresh water	Crustaceans - Artemia sp. - Nauplii	48 hours
	Acute EC50 10600 µg/l Fresh water	Daphnia - Daphnia magna - Neonate	48 hours
	Acute LC50 2700 µg/l Fresh water	Fish - Oncorhynchus mykiss	96 hours
Methyl Ethyl Ketoxime	Acute LC50 843000 µg/l Fresh water	Fish - Pimephales promelas	96 hours
Ethylbenzene	Acute EC50 4600 µg/l Fresh water	Algae - Pseudokirchneriella subcapitata	72 hours
	Acute EC50 3600 µg/l Fresh water	Algae - Pseudokirchneriella subcapitata	96 hours
	Acute EC50 6530 µg/l Fresh water	Crustaceans - Artemia sp. - Nauplii	48 hours
	Acute EC50 2930 µg/l Fresh water	Daphnia - Daphnia magna - Neonate	48 hours
	Acute LC50 4200 µg/l Fresh water	Fish - Oncorhynchus mykiss	96 hours

Persistence and degradability

Product/ingredient name	Aquatic half-life	Photolysis	Biodegradability
Light Aromatic Hydrocarbons	-	-	Readily
Xylene	-	-	Readily
Ethylbenzene	-	-	Readily

Bioaccumulative potential

Product/ingredient name	$LogP_{ow}$	BCF	Potential
1,2,4-Trimethylbenzene	-	243	low
1,3,5-Trimethylbenzene	-	161	low
Light Aromatic Hydrocarbons	-	10 to 2500	high
Xylene	-	8.1 to 25.9	low
Cumene	-	35.48	low
Methyl Ethyl Ketoxime	-	2.5 to 5.8	low
Zirconium 2-Ethylhexanoate	-	2.96	low
Calcium 2-Ethylhexanoate	-	2.96	low

Mobility in soil

Soil/water partition coefficient (K_{OC}) : Not available.

Other adverse effects : No known significant effects or critical hazards.

Section 13. Disposal considerations

Disposal methods : The generation of waste should be avoided or minimized wherever possible. Disposal of this product, solutions and any by-products should at all times comply with the requirements of environmental protection and waste disposal legislation and any regional local authority requirements. Dispose of surplus and non-recyclable products via a licensed waste disposal contractor. Waste should not be disposed of untreated to the sewer unless fully compliant with the requirements of all authorities with jurisdiction. Waste packaging should be recycled. Incineration or landfill should only be considered when recycling is not feasible. This material and its container must be disposed of in a safe way. Care should be taken when handling emptied containers that have not been cleaned or rinsed out. Empty containers or liners may retain some product residues. Vapor from product residues may create a highly flammable or explosive atmosphere inside the container. Do not cut, weld or grind used containers unless they have been cleaned thoroughly internally. Avoid dispersal of spilled material and runoff and contact with soil, waterways, drains and sewers.

Section 14. Transport information

	DOT Classification	TDG Classification	Mexico Classification	IATA	IMDG
UN number	UN1263	UN1263	UN1263	UN1263	UN1263
UN proper shipping name	PAINT	PAINT	PAINT	PAINT	PAINT
Transport hazard class(es)	3	3	3	3	3
Packing group	III	III	III	III	III
Environmental hazards	No.	No.	No.	No.	No.
Additional information	This product may be re-classified as "Combustible Liquid," unless transported by vessel or aircraft. Non-bulk packages (less than or equal to 119 gal) of combustible liquids are not regulated as hazardous materials in package sizes less than the product reportable quantity. **ERG No.** 128	Product classified as per the following sections of the Transportation of Dangerous Goods Regulations: 2. 18-2.19 (Class 3). **ERG No.** 128	- **ERG No.** 128	-	**Emergency schedules** F-E, S-E

Section 14. Transport information

Special precautions for user : Multi-modal shipping descriptions are provided for informational purposes and do not consider container sizes. The presence of a shipping description for a particular mode of transport (sea, air, etc.), does not indicate that the product is packaged suitably for that mode of transport. All packaging must be reviewed for suitability prior to shipment, and compliance with the applicable regulations is the sole responsibility of the person offering the product for transport. People loading and unloading dangerous goods must be trained on all of the risks deriving from the substances and on all actions in case of emergency situations.

Transport in bulk according to Annex II of MARPOL and the IBC Code : Not available.

Proper shipping name : Not available.

Ship type : Not available.

Pollution category : Not available.

Section 15. Regulatory information

SARA 313

SARA 313 (40 CFR 372.45) supplier notification can be found on the Environmental Data Sheet.

California Prop. 65

WARNING: This product contains chemicals known to the State of California to cause cancer and birth defects or other reproductive harm.

Section 16. Other information

Hazardous Material Information System (U.S.A.)

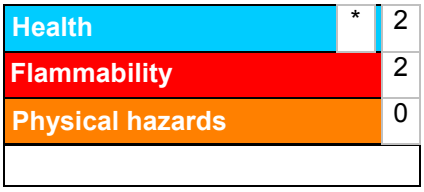

The customer is responsible for determining the PPE code for this material. For more information on HMIS® Personal Protective Equipment (PPE) codes, consult the HMIS® Implementation Manual.

Caution: HMIS® ratings are based on a 0-4 rating scale, with 0 representing minimal hazards or risks, and 4 representing significant hazards or risks. Although HMIS® ratings and the associated label are not required on SDSs or products leaving a facility under 29 CFR 1910.1200, the preparer may choose to provide them. HMIS® ratings are to be used with a fully implemented HMIS® program. HMIS® is a registered trademark and service mark of the American Coatings Association, Inc.

Procedure used to derive the classification

Classification	Justification
FLAMMABLE LIQUIDS - Category 3	On basis of test data
SKIN CORROSION/IRRITATION - Category 2	Calculation method
SERIOUS EYE DAMAGE/ EYE IRRITATION - Category 2A	Calculation method
SKIN SENSITIZATION - Category 1	Calculation method
CARCINOGENICITY - Category 2	Calculation method
TOXIC TO REPRODUCTION (Fertility) - Category 2	Calculation method
TOXIC TO REPRODUCTION (Unborn child) - Category 2	Calculation method
SPECIFIC TARGET ORGAN TOXICITY (REPEATED EXPOSURE) - Category 2	Calculation method
ASPIRATION HAZARD - Category 1	Calculation method

History

Date of printing : 9/9/2017

Date of issue/Date of revision : 9/9/2017

Section 16. Other information

Date of previous issue : 8/28/2017

Version : 10

Key to abbreviations : ATE = Acute Toxicity Estimate
BCF = Bioconcentration Factor
GHS = Globally Harmonized System of Classification and Labelling of Chemicals
IATA = International Air Transport Association
IBC = Intermediate Bulk Container
IMDG = International Maritime Dangerous Goods
LogPow = logarithm of the octanol/water partition coefficient
MARPOL = International Convention for the Prevention of Pollution From Ships, 1973 as modified by the Protocol of 1978. ("Marpol" = marine pollution)
UN = United Nations

Notice to reader

It is recommended that each customer or recipient of this Safety Data Sheet (SDS) study it carefully and consult resources, as necessary or appropriate, to become aware of and understand the data contained in this SDS and any hazards associated with the product. This information is provided in good faith and believed to be accurate as of the effective date herein. However, no warranty, express or implied, is given. The information presented here applies only to the product as shipped. The addition of any material can change the composition, hazards and risks of the product. Products shall not be repackaged, modified, or tinted except as specifically instructed by Sherwin-Williams, including but not limited to the incorporation of non Sherwin-Williams products or the use or addition of products in proportions not specified by Sherwin-Williams. Regulatory requirements are subject to change and may differ between various locations and jurisdictions. The customer/buyer/user is responsible to ensure that his activities comply with all country, federal, state, provincial or local laws. The conditions for use of the product are not under the control of the manufacturer; the customer/buyer/user is responsible to determine the conditions necessary for the safe use of this product. The customer/buyer/user should not use the product for any purpose other than the purpose shown in the applicable section of this SDS without first referring to the supplier and obtaining written handling instructions. Due to the proliferation of sources for information such as manufacturer-specific SDS, the manufacturer cannot be responsible for SDSs obtained from any other source.

DEPARTMENT OF THE ARMY
ALBUQUERQUE DISTRICT, CORPS OF ENGINEERS
ALBUQERQUE DISTRICT OFFICE
4101 JEFFERSON PLAZA NE
ALBUQUERQUE, NM 87109

SUBMITTAL REVIEW VERIFICATION SHEET

PROJECT TITLE: Kirtland BFF Mid-Plume Pump and Treat System Expansion
CONTRACT NUMBER: W912DR-12-D-0006 DM01
DATE RECEIVED: 11-28-2017
DATE REVIEWED: 11-28-2017

DESCRIPTION OF ITEMS REVIEWED:

1. Gravel Mulch Seeding- Revision 1

NO EXCEPTIONS TAKEN.	**X**
EXCEPTIONS AS NOTED ON DRAWINGS AND/OR ATTACHED SHEETS(S). RESUBMISSION NOT REQUIRED.	
EXCEPTIONS AS NOTED ON DRAWINGS AND/OR ATTACHED SHEETS(S). RESUBMISSION REQUIRED.	
RECEIPT ACKKNOWLEDGED.	

Notes:

NOTE: ITEMS REVIEWED AS TO GENERAL LAYOUT ONLY. DIMENSIONS AND QUANTITIES NOT CHECKED. REVIEW DOES NOT RELIEVE CONTRACTOR OF RESPONSIBILITIES FOR ANY ERRORS WHICH MAY EXIST AS CONTRACTOR SHALL BE RESPONSIBLE FOR DIMENSIONS AND DESIGN OF ADEQUATE CORRECTIONS, DETAILS AND SATISFACTORY CONSTRUCTION OF WORK.

SIGNATURE SANCHEZ.AMY.ELIZABETH.1454434338 Digitally signed by SANCHEZ.AMY.ELIZABETH.1454434338 DN: c=US, o=U.S. Government, ou=DoD, ou=PKI, ou=USA, cn=SANCHEZ.AMY.ELIZABETH.1454434338 Date: 2017.11.28 15:12:42 -07'00' **DATE** 11/28/17

EA Engineering, Science, and Technology, Inc., PBC

Submittal Review Sheet 1

Project Name: **Kirtland BFF Mid-Plume Pump and Treat System Expansion**			Date Received: **11/28/17**			
Project Owner: **Kirtland Air Force Base**			Checked By: **Tyler Curley**			
Contractor: **RMCI, Inc.**	Engineer: **EA Engineering, Science and Technology, Inc., PBC.**		Log Page: **NA**			
Address: **6211 Chappell Rd NE, Albuquerque, NM 87113**	Address: **320 Gold Ave. SW, Suite 1300 Albuquerque, NM 87102**		EA No.: **62599DM01**			
			Spec. Section: **32 92 19**			
			Drawing/Detail No.: **NA**			
ATTN: **Phillip Johnson**	ATTN: **Devon Jercinovic**		1st Sub		Re-Sub	
Date Transmitted: **11/28/2017**	Prev. Transmittal Date:					

Item No.	No. Copies	Description	Manufacturer	Mfg/Vendor Dwg or Detail	Action Taken*
1	1	Gravel Mulch Seeding	Caldon Seeding and Reclamation		A

The Action Designated Above is in Accordance with the Following Legend:

A – Furnish as Submitted
B – Furnish as Noted
C – Revise and Re-submit
1. Not enough information for review.
2. No reproducible submitted.
3. Copies illegible.
4. Not enough copies submitted.
5. Wrong sequence number.
6. Wrong resubmittal number.
7. Wrong Spec. Section.
8. Wrong form used.
9. See Comments.

D – Rejected
E – Engineer's Review not Required
1. Submittal not required.
2. Supplemental Information. Submittal retained for Information purposes only.
3. Information reviewed and approved on prior submittal.
4. See Comments.

Review is for general compliance with Contract Documents. No responsibility is assumed for correctness of dimensions or detail. Contractor is required to specify deviations from contract requirements. Lack of exceptions noted by Engineer does not waive Contractor's obligation to comply with Drawings and Specifications.

Comments:
Items reviewed and confirmed to meet requirements
Issues in Bold

Seed mix, application rate, fertilizer, and gravel mulch are to COA specifications.

By: _____ Date: 11/28/17

Distribution: [1] Contractor [1] Engineer [1] Owner

SUBMITTAL

granite SEED and erosion control

Tren Hagman
490 East 76th Ave.
Denver, CO 80229

tren@graniteseed.com
Phone: (720) 496-0600
Fax: (720) 496-0601

Date: November 28, 2017

To: Len Horan

Company: Caldon Seeding and Reclamation

From: Tren Hagman

Re: Seed Submittal for KAFB- Conveyance Line

These are old genus names, new names are the same as listed in COA specifications

This Letter is to serve that your company has contracted Granite Seed Company to provide the seed for the KAFB- Conveyance Line Project. The seed mix for this project can be provided as specified. The table below shows the mix we will provide for this project. A seed certification will accompany your order identifying individual species, lots, varieties, origin, and pure live seed information.

Species	PLS lbs./acre
Indian ricegrass (Achnatherum hymenoides)	5.00
Galleta grass (Pleuraphis jamesii)	1.00
Sideoats grama (Bouteloua curtipendula)	3.00
Blue grama (Bouteloua gracilis)	1.00
Sand dropseed (Sporobolus cryptandrus)	1.00
Fourwing saltbush (Atriplex canescens)	1.00
Total:	**12.00**

All seed supplied will be in compliance with State and Federal Seed noxious weed laws, with proper labeling and documentation. If you or anyone associated with this project has questions or need anything else at this time, please contact me at the number provided in the header of this document.

Tren Hagman

RICHLAWN ORGANIC 100

Richlawn 3-6-3 with Mychorrizae and Humates

Richlawn 3-6-3 is a CDOT Approved Natural, Organic Fertilizer containing a slow release Nitrogen, Organic Phosphorous, Mycorrhizae and a rich amount of Humus. Richlawn 3-6-3 restores depleted soils with essential nutrients to build a sustainable environment in which to establish vegetation quickly.

Manufactured by Richlawn Turf Food, LLC
15121 WCR 32, Platteville, CO 80651
Net Weight 50 Lbs (22.68 Kg.)

Guaranteed Analysis

Total Nitrogen(N) 3.0%
2.90% Water Insoluble Organic Nitrogen*
.010% Water Soluble Organic Nitrogen
Available Phosphate
(P_2O_5) 6.0%
Soluble Potash (K_2O) 3.0%
Calcium (Ca) 10.0%

Plant Nutrient Sources: Dried Poultry Manure, Bone Meal and Sulfate of Potash.

*2.90% Water insoluble nitrogen from dried poultry manure and bone meal.

Non-Plant Food Ingredients
Humates 14.0%
Endo Mychorrhizae 30,000
Propagules
7500 Propagules Glomus mosseae
7500 Propagules Glomus entunicatum
7500 Propagules Glomus intradices
7500 Propagules Glomus aggregatum

DISTRIBUTED BY:
TRITON ENVIRONMENTAL
5433 NEWPORT STREET
COMMERCE CITY, CO 80022
303.945.7588 (O) 303.945.7579 (F)

The Benefits of Richlawn 3-6-3

- Increases the Nutrient and water holding capacity of the exisiting soil.
- Increases Soil Porosity which promotes superior Root Establishment.
- Mychrrhizae transports nutrients from the soils and delivers them to the plants roots, greatly reducing fertilization and water need.
- Humates add organic material to the soil which increases soil microbiology and water holding capacity.

4
25FT
5
6
7
8
9
10

DEPARTMENT OF THE ARMY
ALBUQUERQUE DISTRICT, CORPS OF ENGINEERS
ALBUQERQUE DISTRICT OFFICE
4101 JEFFERSON PLAZA NE
ALBUQUERQUE, NM 87109

SUBMITTAL REVIEW VERIFICATION SHEET

PROJECT TITLE: Kirtland BFF Mid-Plume Pump and Treat System Expansion
CONTRACT NUMBER: W912DR-12-D-0006 DM01
DATE RECEIVED: 11-21-2017
DATE REVIEWED: 11-22-2017

DESCRIPTION OF ITEMS REVIEWED:

1. KAFB-106239 VFD Resubmittal

NO EXCEPTIONS TAKEN.	
EXCEPTIONS AS NOTED ON DRAWINGS AND/OR ATTACHED SHEETS(S). RESUBMISSION NOT REQUIRED.	**X**
EXCEPTIONS AS NOTED ON DRAWINGS AND/OR ATTACHED SHEETS(S). RESUBMISSION REQUIRED.	
RECEIPT ACKKNOWLEDGED.	

Notes:

Cover sheet is incorrectly labeled as "Extraction Well #7"

NOTE: ITEMS REVIEWED AS TO GENERAL LAYOUT ONLY. DIMENSIONS AND QUANTITIES NOT CHECKED. REVIEW DOES NOT RELIEVE CONTRACTOR OF RESPONSIBILITIES FOR ANY ERRORS WHICH MAY EXIST AS CONTRACTOR SHALL BE RESPONSIBLE FOR DIMENSIONS AND DESIGN OF ADEQUATE CORRECTIONS, DETAILS AND SATISFACTORY CONSTRUCTION OF WORK.

SIGNATURE SANCHEZ.AMY.ELIZABETH.1454434338 Digitally signed by SANCHEZ.AMY.ELIZABETH.1454434338 DN: c=US, o=U.S. Government, ou=DoD, ou=PKI, ou=USA, cn=SANCHEZ.AMY.ELIZABETH.1454434338 Date: 2017.11.22 12:46:29 -07'00' **DATE** 11/22/2017

EA Engineering, Science, and Technology, Inc., PBC

Submittal Review Sheet 8

Project Name: **Kirtland BFF Mid-Plume Pump and Treat System Expansion**				Date Received: **11/21/2017**	
Project Owner: **Kirtland Air Force Base**				Checked By: **Tyler Curley**	
Contractor: **Techsas Inc.**	Engineer: **EA Engineering, Science and Technology, Inc., PBC.**			Log Page: **NA**	
Address: **4819 West Bayshore Drive** **Bacliff, TX 77518**	Address: **320 Gold Ave. SW, Suite 1300** **Albuquerque, NM 87102**			EA No.: **62599DM01**	
				Spec. Section: **00 00 00**	
				Drawing/Detail No.:	
ATTN: **Ed Butler**	ATTN: **Devon Jercinovic**			1st Sub	Re-Sub
Date Transmitted: **11/21/2017**	Prev. Transmittal Date:				

Item No.	No. Copies	Description	Manufacturer	Mfg/Vendor Dwg or Detail	Action Taken*
8	1	KAFB-106239 VFD	Rockwell Automation, Inc.		**A**

The Action Designated Above is in Accordance with the Following Legend:

A – Furnish as Submitted
B – Furnish as Noted
C – Revise and Re-submit
1. Not enough information for review.
2. No reproducible submitted.
3. Copies illegible.
4. Not enough copies submitted.
5. Wrong sequence number.
6. Wrong resubmittal number.
7. Wrong Spec. Section.
8. Wrong form used.
9. See Comments.

D – Rejected
E – Engineer's Review not Required
1. Submittal not required.
2. Supplemental Information. Submittal retained for Information purposes only.
3. Information reviewed and approved on prior submittal.
4. See Comments.

Review is for general compliance with Contract Documents. No responsibility is assumed for correctness of dimensions or detail. Contractor is required to specify deviations from contract requirements. Lack of exceptions noted by Engineer does not waive Contractor's obligation to comply with Drawings and Specifications.

Comments:
VFD was preapproved. Please note that revision 1 includes the NEMA 4X enclosure and shop drawings showing the locations of cutouts for the aftermarket AC unit upgrade.

By: _____ Date: 11/21/17

Distribution: [1] Contractor [1] Engineer [1] Owner

Rockwell Automation

BSE / I & C SOLUTIONS

POWERFLEX 753, 25HP ND, 34A, 460VAC

R1USW01163 - 0001

NEMA 4X - WALLMOUNT

EXTRACTION WELL KAFB-106239

DATE	BY	APPROVAL
11/17/17	MW	DESIGN REVIEW
11/20/17	JWB	FOR MANUFACTURING
		AS SHIPPED
		AS COMMISSIONED

REV.	DATE	BY	ECN/CR. NO.

Rockwell Automation

TITLE SHEET FOR
BSE / I & C SOLUTIONS
EXTRACTION WELL #7

Drawn by: JWB | Date: 11/15/17

CONFIDENTIAL AND PROPRIETARY INFORMATION.
THIS DOCUMENT CONTAINS CONFIDENTIAL AND PROPRIETARY INFORMATION OF ROCKWELL AUTOMATION, INC. AND MAY NOT BE USED, COPIED OR DISCLOSED TO OTHERS, EXCEPT WITH THE AUTHORIZED WRITTEN PERMISSION OF ROCKWELL AUTOMATION, INC.

Sheet N1 Of Next Sh N2

Size		Ver
D	R1USW01163 – 0001	0

FILENAME	SH	DRW_DESC1	DRW_DESC2	DRW_DESC3
N0001	N1	TITLE SHEET FOR	BSE / I & C SOLUTIONS	EXTRACTION WELL #7
N0002	N2	INDEX SHEET FOR	BSE / I & C SOLUTIONS	EXTRACTION WELL #7
N0003	N3	GENERAL NOTES FOR	BSE / I & C SOLUTIONS	EXTRACTION WELL #7
N0004	N4	WIRE CLASIFICATION FOR	BSE / I & C SOLUTIONS	EXTRACTION WELL #7
N0005	N5	TORQUE VALUES FOR	BSE / I & C SOLUTIONS	EXTRACTION WELL #7
E0005	5	SCHEMATIC DRAWING FOR	POWER WIRING AND 115VAC CIRCUIT	EXTRACTION WELL #7
E0010	10	SCHEMATIC DRAWING FOR	POWERFLEX 753 POWER WIRING	EXTRACTION WELL #7
E0011	11	SCHEMATIC DRAWING FOR	24VDC I/O WIRING	EXTRACTION WELL #7
L0001	L1	LAYOUT DRAWING FOR	ENCLOSURE SIZE AND DIMENSIONS	EXTRACTION WELL #7
L0002	L2	LAYOUT DRAWING FOR	ENCLOSURE DOOR AND DEVICES	EXTRACTION WELL #7
L0003	L3	LAYOUT DRAWING FOR	PANEL AND COMPONENTS	EXTRACTION WELL #7

DATE	BY	APPROVAL
11/17/17	MW	DESIGN REVIEW
11/20/17	JWB	FOR MANUFACTURING
		AS SHIPPED
		AS COMMISSIONED

REV.	DATE	BY	ECN/CR. NO.

Rockwell Automation

INDEX SHEET FOR
BSE / I & C SOLUTIONS
EXTRACTION WELL #7

Drawn by: JWB | Date: 11/15/17

CONFIDENTIAL AND PROPRIETARY INFORMATION.
THIS DOCUMENT CONTAINS CONFIDENTIAL AND PROPRIETARY INFORMATION OF ROCKWELL AUTOMATION, INC. AND MAY NOT BE USED, COPIED OR DISCLOSED TO OTHERS, EXCEPT WITH THE AUTHORIZED WRITTEN PERMISSION OF ROCKWELL AUTOMATION, INC.

Sheet N2 Of Next Sh N3

Size D | R1USW01163 – 0001 | Ver 0

DRAWING STANDARDS:

SYMBOLS:

- REFERS TO NOTE GIVEN BELOW
- ▲ LOW POWER CONTACT
- ARROW INDICATES FUNCTION INCREASE (ALWAYS CLOCKWISE)

4 **DANGER** – THIS EQUIPMENT MAY BE AT LINE VOLTAGE EVEN WHEN NOT IN OPERATION. TO AVOID ELECTRIC SHOCK, DISCONNECT.

5 **CAUTION** – NEVER REMOVE OR INSERT ANY MODULE OR CARD WHILE THE POWER IS ON.

9 REMOVE JUMPER IF ADDITIONAL INTERLOCK IS ADDED.

13 SEPARATELY MOUNTED, SUPPLIED BY OTHERS

14 SEPARATELY MOUNTED, SUPPLIED BY ROCKWELL AUTOMATION

32 MOTOR STABILIZING FIELD, S1 AND S2, IS NOT REQUIRED FOR NORMAL OPERATION. TAPE S1 AND S2 SEPARATELY AND DO NOT USE.

33 DRIVE MOTOR CONNECTIONS AS SHOWN ARE FOR INDICATED ROTATION FACING COMMUTATOR END. FOR OPPOSITE ROTATION, INTERCHANGE A1 AND A2 CONNECTIONS IN MOTOR CONDUIT BOX.

34 TACHOMETER LEADS MUST BE CONNECTED TO GIVE THE INDICATED POLARITY.

35 IF OPPOSITE ROTATION IS DESIRED, CHANGE POLARITY OF THE COSINE SIGNAL BY INTERCHANGING THE COSINE INPUT LEADS.

36 USE TWISTED TWO - CONDUCTOR CABLE. THIS CABLE MUST BE IN A SEPARATE SIGNAL CONDUIT. IT CANNOT BE RUN WITH OTHER CONDUCTORS OR CABLES. USE RELIANCE PART NUMBER 417900-76EAD OR EQUIVALENT. REFER TO FIELD INSTALLATION AND WIRING TABLE ON NEXT SHEET FOR WIRE SPECIFICATIONS.

38 SIGNAL WIRE CABLES WITH THIS NOTE NUMBER CAN BE IN THE SAME SIGNAL CONDUIT. THEY CANNOT BE RUN WITH NON-SIGNAL WIRES. REFER TO FIELD INSTALLATION AND WIRING TABLE ON NEXT SHEET FOR WIRE SPECIFICATIONS.

38-1 REFER TO NOTE 38. THE NUMBER FOLLOWING THE NOTE 38 IDENTIFIES THE CABLES THAT MAY BE GROUPED TOGETHER IN THE SAME SIGNAL CONDUIT. FOR EXAMPLE, CABLES REFERENCED WITH NOTE 38-1 CANNOT BE RUN IN THE SAME SIGNAL CONDUIT WITH NOTE 38-2 CABLES.

40 COAXIAL CABLES WITH THIS NOTE CAN BE IN THE SAME SEPARATE SIGNAL CONDUIT. THEY CANNOT BE RUN WITH OTHER CONDUCTORS OR CABLES. FOR RECOMMENDED CABLE TYPE, REFER TO PRODUCT'S NETWORK MANUAL.

TYPE	CABLE P/N (BELDEN P/N)	CONNECTOR P/N (AMPHENOL P/N)
RG59	417900-148A (9259)	405504-74A (31-212-1005)
RG11	417900-149A (8238)	612293-B (6775)

TERMINATOR 75 OHM
RELIANCE P/N 707204-20A
AMPHENOL P/N 46650-75

41 **DANGER** – DO NOT OPEN DISCONNECT SWITCH WHILE THE MOTOR IS ENERGIZED.

47 RESOLVER WIRES: LOW LEVEL SIGNAL WIRING. MUST BE RUN IN SEPARATE SIGNAL CONDUIT OR TRAY.

	BELDEN P/N	NO. OF TWISTED PAIRS		AWG #	RECOMMENDED MAXIMUM DIST. FOR EACH RESOLVER TYPE a> X1	a> X2	a> X5
b>	9730	3		24	1000 FT.	1000 FT.	600 FT.

c>

a> DISTANCES BEYOND THOSE RECOMMENDED MAY REQUIRE ADDITIONAL TUNING. USE RELIANCE CUSTOM PANEL 0-58801

b> MAY ONLY BE RUN IN CONDUIT, PER NEC

c> NOTE: CONNECT CABLE SHIELD TO GROUND AT CABINET ONLY

48 FIBER-OPTIC CABLES WITH THIS NOTE MAY BE RUN WITH ANY LEVEL 1 SIGNAL WIRING. IF NECESSARY THESE CABLES MAY BE RUN WITH ANY LEVEL WIRING. SEE INSTALLATION MANUAL FOR RESTRICTIONS.

52 REFER TO TRANSFORMER NAMEPLATE FOR CONNECTIONS OF PRIMARY LEADS.

53 **DANGER** – TRANSFORMER IS CONNECTED TO LINE VOLTAGE EVEN WHEN THE A-C DISCONNECT IS OPEN.

DATE	BY	APPROVAL
11/17/17	MW	DESIGN REVIEW
11/20/17	JWB	FOR MANUFACTURING
		AS SHIPPED
		AS COMMISSIONED

99 USER SUPPLIED PROTECTION MUST INCLUDE A DISCONNECTING DEVICE ON THE PRIMARY SIDE OF THE TRANSFORMER. PRIMARY AND SECONDARY WIRE PROTECTION FOR THE ISOLATION TRANSFORMER MUST BE PROVIDED PER NEC.

D MOUNTED ON DOOR.

H MOUNTED ON CABINET HOOD

R MOUNTED ON CONTROL HOUSE ROOF

T MOUNTED ON CABINET TRIM

E EXISTING EQUIPMENT

USE EXAMP. LOCATION CODES	DESCRIPTION
REM_NS	REMOTE MOUNTED - NOT SUPPLIED BY ROCKWELL AUTOMATION.
REM_S	REMOTE MOUNTED - SUPPLIED BY ROCKWELL AUTOMATION.
REM	REMOTE MOUNTED.
OS_2	MTD. ON OPERATORS STATION No. 2
PB_3	MTD. ON PUSHBUTTON STATION No. 3

GENERAL NOTES:

1. FOR FURTHER DRIVE INFORMATION ON INSTRUCTION MANUALS, SEE RESPECTIVE SCHEMATIC SECTIONS.
2. ⏚ - BUILDING GROUND TO BE GROUNDED BY CUSTOMER.
   TE - SYSTEM ZERO POTENTIAL NODE
   PE - POWER EQUIPMENT GROUND
   ⏚ - PANEL (CHASSIS) GROUND
3. THE INTERNAL WIRING SELECTED MEETS OR EXCEEDS NEC, UL, AND CSA. INTERNAL POWER AND CONTROL WIRE HAS INSULATION RATED AT 105°C OR HIGHER.
4. * -INDICATES COMPONENTS SUPPLIED BY OTHERS.
5. (4) INDICATES FIELD INSTALLED WIRES AS WELL AS THE WIRING LEVEL.
   WHEN ACCOMPANIED WITH THE DESIGNATION (FWC) THE WIRES/CABLE ARE PRE-SUPPLIED AT THE SOURCE CONNECTION BY ROCKWELL FOR CUSTOMER INSTALLATION AT SITE. (FWC) INDICATES FURNISHED WITH CABINET.
6. —○— -INDICATES OUTGOING TERMINAL.
   —□— -INDICATES TERMINAL ON ELECTRONIC ASSEMBLY PRINTED CIRCUIT BOARD (1EA) ETC.
   CR —⊗— -INDICATES RELAY OR CONTACTOR WITH SUPPRESSOR.
7. COIL AND CONTACT CROSS REFERENCING - NUMBERS ADJACENT TO COIL AND UNDER CONTACT INDICATE SHEET AND LINE NUMBERS.

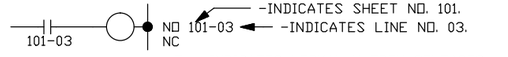

-INDICATES SHEET NO. 101.
-INDICATES LINE NO. 03.
NO - INDICATES NORMALLY OPEN CONTACTS
NC - INDICATES NORMALLY CLOSED CONTACTS

OFF-PAGE CROSS REFERENCING - NUMBERS ADJACENT TO SOURCE AND DESTINATION SYMBOLS INDICATE SHEET AND LINE NUMBERS.

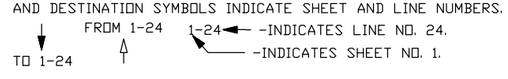

-INDICATES LINE NO. 24.
-INDICATES SHEET NO. 1.

REV DATE: 9-17-2008

8. WIRE # GENERATION
   - INDICATES WIRE NUMBER.
   - INDICATES SEQUENCE (1,2,, 3 . . . etc.).
   - INDICATES LINE NUMBER 24.
   - INDICATES SHEET NUMBER 11.

   11242

   INTERNAL WIRE NUMBERS MAY BE "FIXED" WITH A LINE AND SEQUENCE, BUT MAY SCHEMATICALLY SHOW A PREFIX.
9. TYPICAL DUAL VOLTAGE MOTOR FIELD CONNECTIONS ARE SHOWN BELOW. CONSULT THE MOTOR MANUFACTURER'S INSTRUCTIONS FOR CORRECT CONNECTIONS.

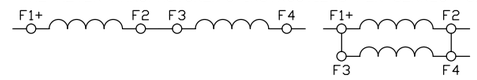

10. DC MOTOR ROTATION - CONSULT THE MOTOR MANUFACTURER'S INSTRUCTIONS FOR CORRECT CONNECTIONS.
    FOR CCW ROTATION FACING COMMUTATOR END:
    A1 IS POSITIVE
    F1 IS POSITIVE
    FOR CW ROTATION FACING COMMUTATOR END:
    A2 IS POSITIVE
    F1 IS POSITIVE
    FOR CCW ROTATION WITH SERIES FIELD:

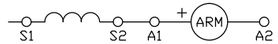

    FOR CW ROTATION WITH SERIES FIELD:

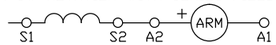

    FOR CCW ROTATION WITHOUT SERIES FIELD:

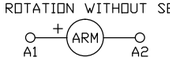

    FOR CW ROTATION WITHOUT SERIES FIELD:

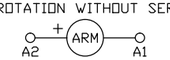

11. AC MOTOR ROTATION - CONSULT THE MOTOR MANUFACTURER'S INSTRUCTIONS FOR CORRECT CONNECTIONS.
    FOR CW ROTATION VIEWED FROM MOTOR SHAFT:
    INVERTER OUTPUT U2 TO T1 (EUROPEAN MARKING U1)
    V2 TO T2 (EUROPEAN MARKING V1)
    W2 TO T3 (EUROPEAN MARKING W1)
    FOR CCW ROTATION VIEWED FROM MOTOR SHAFT:
    INVERTER OUTPUT U2 TO T1 (EUROPEAN MARKING U1)
    V2 TO T3 (EUROPEAN MARKING W1)
    W2 TO T2 (EUROPEAN MARKING V1)

    NOTE: NOT ALL AC MOTOR SUPPLIERS COMPLY WITH THE ABOVE CONVENTIONS.

COMBINATION MOTOR CONTROLLER WITH MOTOR CIRCUIT PROTECTOR

DANGER: To maintain overcurrent, short circuit and ground fault protection, the manufacturer's instructions for selecting current elements and setting the instantaneous-trip circuit breaker must be followed.

AVERTISSEMENTPour assurer une protection continue contre les surintensités, les court-circuits et une mise à la terre accidentelle, il est essentiel de choisir les ?el?ements thermiques et de régler le disjoncteur à déclenchement instantané selon la notice technique du fabricant.

Determine motor full load current and motor design type identifier from motor nameplate.

For Design B, C an D motors adjust motor circuit protector to operate at a current setting between ten (10) and thirteen (13) times the full load current. For Design E and N motors adjust motor circuit protector to operate at a current setting between thirteen (13) and seventeen (17) times the full load current.

NOTE: Motor circuit protector is set at minimum current setting when shipped from factory.

DANGER: Tripping of the instantaneous-trip circuit breaker is an indication that a fault current has been interrupted. Current carrying components of the magnetic motor controller should be examined and replaced if damaged, to provide continued protection against a risk of fire or electric shock. If burnout of the current element of an overload relay occurs, the complete overload relay must be replaced. (Refer to NEMA Standards Publication No. ICS 2.2 titled: 'Maintenance of Motor Controllers After a Fault Condition' ñ also published as NEMA Standard Publication No. ICS 2, Part ICS 2-302.)

AVERTISSEMENTL'ouverture du disjoncteur à déclenchement instantané indique qu'un courant de défaut a été interrompu. Les composants conducteurs de la commande magnétique du moteur doivent être inspectés et remplacés s'ils ont subi des dommages, afin d'assurer une protection continue contre le risque d'incendie et de choc électrique. En cas de défaillance de l'élément thermique d'un relais de surcharge, celui-ci doit être remplacé dans sa totalité.

REV.	DATE	BY	ECN/CR. NO.

Rockwell Automation

CONFIDENTIAL AND PROPRIETARY INFORMATION.
THIS DOCUMENT CONTAINS CONFIDENTIAL AND PROPRIETARY INFORMATION OF ROCKWELL AUTOMATION, INC. AND MAY NOT BE USED, COPIED OR DISCLOSED TO OTHERS, EXCEPT WITH THE AUTHORIZED WRITTEN PERMISSION OF ROCKWELL AUTOMATION, INC.

GENERAL NOTES FOR
BSE / I & C SOLUTIONS
EXTRACTION WELL #7

Drawn by: JWB | Date: 11/15/17

Sheet N3 Of Next Sh N4

Size D | R1USW01163 – 0001 | Ver 0

FIELD INSTALLATION AND WIRING

CATEGORY	WIRING LEVEL	SUB-GROUP	SIGNAL DEFINITION	SIGNAL EXAMPLES	CABLE TYPE	MINIMUM SPACING IN INCHES BETWEEN LEVELS (STEEL CONDUIT/TRAY) 4S	4	3 3S	2 2S	1	SPACING NOTES
POWER (SEE NOTE 2-C FOR SPACING BELOW)	4	S	AC POWER (> 600VAC)	2.3KV 3 PHASE AC LINES	PER NEC AND LOCAL CODES	SEE NOTE: 7	SEE NOTE: 7	SEE NOTE: 7	SEE NOTE: 7	SEE NOTE: 7	1 2 5
			AC POWER (TO 600VAC)	480V 3 PHASE AC LINES	PER NEC AND LOCAL CODES	SEE NOTE: 7	0	3/6	3/12	3/9	
			DC POWER	DC MOTOR ARMATURE	PER NEC AND LOCAL CODES						
			DC POWER	REGULATED DC MOTOR FIELD	PER NEC AND LOCAL CODES						
CONTROL (300V MAX OR 20 AMPS)	3		115VAC/VDC LOGIC	RELAY LOGIC, PLC I/O	PER NEC AND LOCAL CODES	SEE NOTE: 7	3/6	0	3/9	1/3	
			115VAC POWER	POWER SUPPLIES, INSTRUMENTS							
		S	24VAC/VDC LOGIC	PLC I/O	PER NEC AND LOCAL CODES						
MEDIUM LEVEL SIGNAL (PROCESS)	2		ANALOG SIGNALS DC SUPPLIES	REF/FEEDBACK SIGNAL, 5 TO 24VDC SUPPLIES	SHIELDED CABLE BELDEN 8770, 9418	SEE NOTE: 7	3/12	3/9	0	1/1	2 3 4 5 6
			DIGITAL (LOW SPEED)	TTL							
		S	DIGITAL (HIGH SPEED)	RESOLVER, ENCODER/COUNTER I/O, PULSE TACH FEEDBACK	SHIELDED CABLE BELDEN 9730, 9773, 9892 (SEE USER MANUAL)						
		SHLD	ANALOG SIGNALS	REF/FEEDBACK SIGNALS	SHIELDED CABLE, TWISTED CONDUCTORS BELDEN 8760, 9729						
LOW LEVEL SIGNAL (COMM.)	1		SERIAL COMMUNICATION	RS232, 422 TO TERMINALS, PRINTERS	SHIELDED CABLE RS232-BELDEN 8770,8760 RS422-BELDEN 9729,9730	SEE NOTE: 7	3/9	1/3	1/1	0	5
		S	PLC SERIAL COMMUNICATION (> 20K BAUD)	PLC REMOTE I/O, PLC DATA HIGHWAY	TWINAXIAL CABLE BELDEN 9463 R-A 1770-CD						
		C	PLC SERIAL COMMUNICATION (> 5MB)	CONTROL NET	RG-6 QUAD SHIELD, COAX CABLE; A-B 1786-RG6 BELDEN 3092A						
		D	CAN COMMUNICATION	DEVICE - NET DRIVE - DRIVE	R-A 1485C-P1-C						
		E	ETHERNET		DEPENDS ON INSTALLATION						
		F	PLC SERIAL COMMUNICATION (> 5MB)	CONTROL-NET	FIBER OPTIC		N/A	N/A	N/A	N/A	N/A

EXAMPLE: SPACING RELATIONSHIP BETWEEN 480VAC INCOMING LEADS
a. 480VAC LEADS ARE LEVEL 4.
b. 24VDC LEADS ARE LEVEL 3.
c. FOR SEPARATE STEEL CONDUITS, THE CONDUITS ARE TO BE 3 INCHES APART.
d. IN A CABLE TRAY THE TWO GROUPS OF LEADS ARE TO BE 6 INCHES APART.

SHIELDED CABLES RECOMMENDATIONS:

BELDEN	8770	18 AWG - 3 CONDUCTOR SHIELDED
BELDEN	8760	18 AWG - 2 CONDUCTOR SHIELDED
BELDEN	9418	18 AWG - 4 CONDUCTOR SHIELDED
BELDEN	9728	24 AWG - 3 SHIELDED PAIRS (6 COND.)
BELDEN	9729	24 AWG - 2 SHIELDED PAIRS (4 COND.)
BELDEN	9730	24 AWG - 3 SHIELDED PAIRS (6 COND.)
BELDEN	9892	22 AWG - 3 SHIELDED PAIRS (6 COND.)
BELDEN	9773	18 AWG - 3 SHIELDED PAIRS (6 COND.)
BELDEN	9463	75 OHM - TWINAXIAL (2 COND.)

FIELD WIRING INSIDE ROCKWELL ENCLOSURE:

1. CONNECTIONS WILL BE ONLY TO TERMINALS PROVIDED.
2. WIRE LENGTH FROM ENTRY POINT TO TERMINAL BOARD TO BE AS SHORT AS POSSIBLE.
3. SIGNAL WIRE MUST NOT BE LACED OR RUN WITH NON-SIGNAL WIRE AFTER ENTRY INTO THE ENCLOSURE.
4. INCOMING WIRE MUST NOT BE ROUTED IN WIRE CHANNELS OR THROUGH AREAS OF POWER AND CONTROL COMPONENTS AND WIRING.
5. USE LASHING BARS WHEN PROVIDED FOR CUSTOMER CONVENIENCE.

FIELD INSTALLATION GROUNDING GUIDELINES

1. FOR DRIVES INSTALLATION, REFER TO 'WIRING AND 'GROUNDING GUIDELINES', PUBLICATION DRIVES-IN001
2. FOR PLC AND I/O INSTALLATION, REFER TO 'INDUSTRIAL AUTOMATION WIRING AND GROUNDING GUIDELINES', PUBLICATION 1770-4.1
3. NEC ARTICLE 250, GROUNDING AND BONDING
4. LOCAL CODE REQUIREMENTS

REV DATE: 9-18-2008

DATE	BY	APPROVAL
11/17/17	MW	DESIGN REVIEW
11/20/17	JWB	FOR MANUFACTURING
		AS SHIPPED
		AS COMMISSIONED

GENERAL NOTES:

1. STEEL CONDUIT IS RECOMMENDED FOR LEVELS 1 AND 2. FOR AC MOTOR CABLES, SEE NOTE 5.
   ALL CONDUITS CONNECTED TO THE CABINETS SHOULD BE PROPERLY SEALED TO MINIMIZE AIR OR WATER ENTRY INTO THE CABINETS. IF ALUMINUM CONDUIT IS USED.
   A. IT REQUIRES THE SAME MINIMUM SPACING IS USED AS THAT SHOWN FOR CABLE TRAYS.
   OR
   B. INDIVIDUAL STEEL JACKETED (STEEL MESH) CABLES ARE TO BE USED IF THE CONDUIT SPACINGS NEED BE THE SAME AS STEEL CONDUIT.
2. SPACING SHOWN BETWEEN LEVELS IS THE MINIMUM REQUIRED FOR PARALLEL RUNS ≤ 400 FEET. GREATER SPACINGS SHOULD BE USED WHERE POSSIBLE.
3. SHIELDS FOR SHIELDED CABLES MUST BE CONNECTED AT ONE END ONLY. THE OTHER END SHOULD BE CUT BACK AND INSULATED. SHIELDS FOR CABLES FROM A CABINET TO AN EXTERNAL DEVICE MUST BE CONNECTED AT CABINET END. SHIELDS FOR CABLES FROM ONE CABINET TO ANOTHER MUST BE CONNECTED AT THE SOURCE END CABINET. SPLICING OF SHIELDED CABLES, IF ABSOLUTELY NECESSARY, SHOULD BE DONE SUCH THAT SHIELD(S) REMAIN CONTINUOUS AND INSULATED FROM GROUND.
4. NO. 16 AWG WIRE IS THE MINIMUM RECOMMENDED SIZE FOR CONTROL (LEVEL 3). POWER WIRE IS SELECTED BY LOAD, USING 75 DEG C WIRE RATING (LEVELS 4 AND 4S).
5. ARMORED CABLE WITH A PVC OUTER JACKET IS REQUIRED TO PROVIDE THE NECESSARY ELECTRICAL SHIELDING FOR AC MOTOR CABLES CONNECTED TO A PWM INVERTER.
   RECOMMENDATIONS:
   METALLIC ARMOR:
   BEST PERFORMANCE: SHIELDED BELDEN CABLE PER TABLE BELOW, OR CONTINUOUS CORRUGATED ALUMINUM
   ACCEPTABLE PERFORMANCE: INTERLOCKED ALUMINUM, OR INTERLOCKED STEEL
   CONDUCTORS:
   BEST PERFORMANCE: PHASE CONDUCTORS - 3, GROUND CONDUCTORS - 3
   ACCEPTABLE PERFORMANCE: PHASE CONDUCTORS - 3, GROUND CONDUCTORS - 1
   THE CABLE CONNECTOR SELECTED MUST PROVIDE A GOOD ELECTRICAL CONNECTION BETWEEN THE ARMOR AND THE PE GROUND PLANE AT EACH END OF THE CABLE.
   SHIELDED CABLE RECOMMMENDATIONS:

BELDEN	29500	#16 AWG
BELDEN	29501	#14 AWG
BELDEN	29502	#12 AWG
BELDEN	29503	#10 AWG
BELDEN	29504	#8 AWG
BELDEN	29505	#6 AWG
BELDEN	29506	#4 AWG
BELDEN	29507	#2 AWG

   DESCRIPTION - 4 CONDUCTOR TINNED COPPER, XLPE INSULATION, 600VRMS MAX, SPECIFICALLY DESIGNED FOR IGBT DRIVE APPLICATIONS. THE SHIELD SHOULD BE CONNECTED TO THE PE GROUND PLANE
6. SEE A-B PUBLICATION AG2.2 FOR ADDITIONAL CONTROLNET COAX CABLE RECOMMENDATIONS.

SPACING NOTES:

1. BOTH OUTGOING & RETURN CURRENT CARRYING CONDUCTORS ARE TO BE PULLED IN THE SAME CONDUIT OR LAYERED ADJACENT IN CABLE TRAY.
2. ROUTE CABLES OF THE FOLLOWING LEVELS AS INDICATED:
   A. LEVELS MUST BE RUN IN SEPARATE CONDUITS OR TRAYS.
   B. INTERMIXING OF LEVELS IS NOT ALLOWED.
   C. SPECIAL LEVELS 4S AND 3S MAY EXIST THAT REQUIRE SPECIFIC WIRES TO BE GROUPED FOR SPECIAL HANDLING. NOTE: FOR LEVELS 3 AND 4, THE AMPACITY RATINGS OF CONDUCTORS IN A BUNDLE MAY NOT EXCEED THE DERATING GUIDELINES OF NEC 310.15(2), AND TABLE 310.15(B)(2)a.
   D. LEVELS 1 AND 2 MAY HAVE THEIR RESPECTIVE CIRCUITS (WITHIN A GIVEN LEVEL) PULLED IN THE SAME CONDUIT OR LAYERED ADJACENT IN THE SAME CABLE TRAY. NOTE: THE RESPECTIVE CIRCUITS IN A GIVEN BUNDLE MAY EXPERIENCE SOME AMOUNT OF EMI COUPLING. SOME CIRCUIT APPLICATIONS MAY DICTATE SEPARATE SPACING.
3. CONDUCTORS OF LEVELS 1 AND 2 MUST BE SHIELDED WHERE INDICATED PER THE RECOMMENDATIONS OR EQUIVALENT.
4. IN CABLE TRAYS, STEEL SEPARATORS ARE ADVISABLE BETWEEN THE LEVELS.
5. IF CONDUIT IS USED IT IS REQUIRED THAT IT BE CONTINUOUS AND COMPOSED OF MAGNETIC STEEL. (SEE GENERAL NOTE 1 ABOVE)
6. FOR FURTHER INFORMATION ON SPACING OF PLC COMMUNICATION CABLES TO LEVEL 4, SEE R-A PLC INSTALLATION MANUAL.
7. PER NEC ARTICLE 300-3(C)(2) , CONDUCTORS OF CIRCUITS RATED OVER 600V ARE NOT ALLOWED TO OCCUPY THE SAME CABLE, TRAY, OR CONDUIT. IT IS ACCEPTABLE FOR A TRAY TO HAVE A METAL BARRIER FOR SEPARATION.

COIL AND SOLENOID SUPPRESSION:

BEFORE UTILIZING THE CONTROL CIRCUIT POWER AVAILABLE FOR OPERATION OF CUSTOMER SUPPLIED DEVICES, THE COILS OR SOLENOIDS OF SUCH DEVICES MUST BE SUPPRESSED. THE EXTERNAL CONTROL CIRCUIT WIRING MUST BE RUN IN A SEPARATE CONDUIT THAT DOES NOT HAVE VARIABLE SIGNAL VOLTAGES OR POWER CIRCUIT VOLTAGES PRESENT. ELECTRICAL TRANSIENTS MAY CAUSE OCCASIONAL DRIVE MALFUNCTIONING.

REV.	DATE	BY	ECN/CR. NO.

Rockwell Automation

WIRE CLASIFICATION FOR
BSE / I & C SOLUTIONS
EXTRACTION WELL #7

Drawn by: JWB Date: 11/15/17

CONFIDENTIAL AND PROPRIETARY INFORMATION.
THIS DOCUMENT CONTAINS CONFIDENTIAL AND PROPRIETARY INFORMATION OF ROCKWELL AUTOMATION, INC. AND MAY NOT BE USED, COPIED OR DISCLOSED TO OTHERS, EXCEPT WITH THE AUTHORIZED WRITTEN PERMISSION OF ROCKWELL AUTOMATION, INC.

Sheet N4 OF Next Sh N5

Size D | R1USW01163 - 0001 | Ver 0

WIRE TERMINATION TORQUE VALUES

BULLETIN 1492 TERMINAL BLOCKS

PART NUMBER	TORQUE IN-LBS	TORQUE N-m	WIRE RANGE
1492-H4	7.1	0.8	30-12 AWG
1492-H5	7.1	0.8	30-12 AWG
1492-H6	7.1	0.8	30-12 AWG
1492-H7	7.1	0.8	30-12 AWG
1492-J3	4.5-7.1	0.5-0.8	22-12 AWG
1492-JD3	4.5-7.1	0.5-0.8	22-12 AWG
1492-J4	9.0	1.0	22-10 AWG
1492-JD4	4.5	0.5	26-10 AWG
1492-J6	14.2	1.6	22-8 AWG
1492-J10	20.4	2.3	18-6 AWG
1492-J16	35.0	4.0	18-6 AWG
1492-J35	51.0	5.8	12-1/0 AWG
1492-J50	31.5	3.6	10-1/0 AWG
1492-J70	87.0	9.8	6-2/0 AWG
1492-J120	141.6	16.0	4-250MCM AWG
1492-JG3	7.1	0.8	22-12 AWG
1492-JG4	9.0	1.0	22-10 AWG
1492-JG6	14.2	1.6	22-8 AWG
1492-JG10	20.4	2.3	16-6 AWG
1492-JG16	35.0	4.0	24-4 AWG
1492-JG35	51.0	5.8	12-1 AWG
1492-JG50	31.5	3.6	10-1/0 AWG
1492-JG70	87.0	9.8	6-2/0 AWG
1492-JG120	88.5	10	4-3/0 AWG

BULLETIN 1492 FUSE BLOCKS

PART NUMBER	TORQUE IN-LBS	TORQUE N-m	WIRE RANGE
1492-FB1C30 (-L)	22	2.5	18-8 AWG
1492-FB1C30 (-L)	26	2.5	6-4 AWG
1492-FB2C30 (-L)	22	2.5	18-8 AWG
1492-FB2C30 (-L)	26	2.5	6-4 AWG
1492-FB3C30 (-L)	22	2.5	18-8 AWG
1492-FB3C30 (-L)	26	2.5	6-4 AWG
1492-FB1M30 (-L)	22	2.5	18-8 AWG
1492-FB1M30 (-L)	26	2.5	6-4 AWG
1492-FB2M30 (-L)	22	2.5	18-8 AWG
1492-FB2M30 (-L)	26	2.5	6-4 AWG
1492-FB3M30 (-L)	22	2.5	18-8 AWG
1492-FB3M30 (-L)	26	2.5	6-4 AWG
1492-FB1J30 (-L)	35	4	18-1 AWG
1492-FB2J30 (-L)	35	4	18-1 AWG
1492-FB3J30 (-L)	35	4	18-1 AWG
1492-FB1J60 (-L)	35	4	14-1 AWG
1492-FB2J60 (-L)	35	4	14-1 AWG
1492-FB3J60 (-L)	35	4	14-1 AWG

BULLETIN 100 CONTACTORS

PART NUMBER	TORQUE IN-LBS	TORQUE N-m	WIRE RANGE
100-C09	13-22	1.5-2.5	(2) 16-10 AWG
100-C12	13-22	1.5-2.5	(2) 16-10 AWG
100-C16	13-22	1.5-2.5	(2) 16-10 AWG
100-C23	13-22	1.5-2.5	(2) 16-10 AWG
100-C30	22-31	2.5-3.5	14-6 AWG
100-C37	22-31	2.5-3.5	14-6 AWG
100-C43	22-31	2.5-3.5	14-6 AWG
100-C60	40-53	4.5-6.0	14-1 AWG
100-C72	40-53	4.5-6.0	14-1 AWG
100-C85	40-53	4.5-6.0	14-1 AWG
100-C97	40-53	4.5-6.0	14-1 AWG

BULLETIN 140G CIRCUIT BREAKERS

PART NUMBER	TORQUE IN-LBS	TORQUE N-m	WIRE RANGE
140G-G-TLC1_	62	7.0	(1) 14-1/0 AWG
140G-G-MTL6_	62	7.0	(6) 14-2 AWG
140G-H-TLC1_	62	7.0	(1) 14-1/0 AWG
140G-H-MTL6_	62	7.0	(6) 14-2 AWG
140G-I-TLA1_	50	5.6	(1) 14-1/0 AWG
140G-I-TLA1A_	200	22.6	(1) 4-300 MCM AWG
140G-I-TLC1_	124	14.0	(1) 10-250 MCM AWG
140G-I-MTL6_	62	7.0	(6) 12-2 AWG
140G-J-TLA1_	50	5.6	(1) 14-1/0 AWG
140G-J-TLA1A_	200	22.6	(1) 4-300 MCM AWG
140G-J-TLC1_	124	14.0	(1) 10-250 MCM AWG
140G-J-MTL6_	62	7.0	(6) 12-2 AWG
140G-K-TLA1_	380	43	(1) 250-500 MCM AWG
140G-K-TLA2_	380	43	(2) 2/0-250 MCM AWG
140G-K-TLC1_	380	43	(1) 250-500 MCM AWG
140G-K-TLC2_	380	43	(2) 2/0-250 MCM AWG
140G-K-MTL6_	62	7	(6) 6-1/0 AWG
140G-M-TLA2_	274	31	(2) 250-500 MCM AWG
140G-M-TLA3_	380	43	(3) 2/0-400 MCM AWG
140G-M-TLC2_	274	31	(2) 3/0-350 MCM AWG
140G-M-TLC3_	380	43	(3) 2/0-350 MCM AWG
140G-N-TLA4_	380	43	(4) 4/0-500 MCM AWG
140G-N-TLC4_	380	43	(4) 4/0-500 MCM AWG

'_' IS EITHER 3 OR 4 DEPENDING ON HOW MANY POLES THE BREAKER HAS

BULLETIN 194R TERMINAL LUGS

PART NUMBER	TORQUE IN-LBS	TORQUE N-m	WIRE RANGE
194R-30-MTL3	14	1.6	14-8 AWG
194R-60-MTL3	24	2.8	14-4 AWG
194R-TL1	275	31	6-300 MCM AWG
194R-TL2	275	31	6-300 MCM AWG
194R-TL3	550	62	4-600 MCM AWG
194R-TL4	550	62	4-600 MCM AWG
194R-TL5	200	22.6	6-2 AWG
194R-TL6	375	42.4	1-350 MCM AWG
194R-TL7	375	42.4	2-600 MCM AWG
194R-TL8	375	42.4	2-600 MCM AWG
194R-TL9	375	42.4	2-600 MCM AWG
194R-TL10	375	42.4	2-600 MCM AWG

BULLETIN 1489-M CIRCUIT BREAKERS

PART NUMBER	TORQUE IN-LBS	TORQUE N-m	WIRE RANGE
1489-M_	13.3	1.5	18-16 AWG
1489-M_	17.7	2	14-10 AWG
1489-M_	39.8	4.5	8-4 AWG

BULLETIN 1321 OPEN REACTORS

PART NUMBER	TORQUE IN-LBS	TORQUE N-m	WIRE RANGE
1321-3R1-A	4.5	0.51	22-14 AWG
1321-3R1-B	4.5	0.51	22-14 AWG
1321-3R1-C	4.5	0.51	22-14 AWG
1321-3R2-A	4.5	0.51	22-14 AWG
1321-3R2-B	4.5	0.51	22-14 AWG
1321-3R2-C	4.5	0.51	22-14 AWG
1321-3R4-A	4.5	0.51	22-14 AWG
1321-3R4-B	4.5	0.51	22-14 AWG
1321-3R4-C	4.5	0.51	22-14 AWG
1321-3R8-A	4.5	0.51	22-14 AWG
1321-3R8-B	4.5	0.51	22-14 AWG
1321-3R8-C	4.5	0.51	22-14 AWG
1321-3R12-A	16	1.81	22-6 AWG
1321-3R12-B	16	1.81	22-6 AWG
1321-3R12-C	16	1.81	22-6 AWG
1321-3R18-A	16	1.81	22-6 AWG
1321-3R18-B	16	1.81	22-6 AWG
1321-3R18-C	16	1.81	22-6 AWG
1321-3R25-A	16	1.81	22-6 AWG
1321-3R25-B	16	1.81	22-6 AWG
1321-3R25-C	16	1.81	22-6 AWG
1321-3R35-A	16	1.81	22-6 AWG
1321-3R35-B	16	1.81	22-6 AWG
1321-3R35-C	20	2.26	18-4 AWG
1321-3R45-A	20	2.26	18-4 AWG
1321-3R45-B	20	2.26	18-4 AWG
1321-3R45-C	20	2.26	18-4 AWG
1321-3R55-A	45	5.09	6-1/0 AWG
1321-3R55-B	45	5.09	6-1/0 AWG
1321-3R55-C	45	5.09	6-1/0 AWG
1321-3R80-A	45	5.09	6-1/0 AWG
1321-3R80-B	45	5.09	6-1/0 AWG
1321-3R80-C	45	5.09	6-1/0 AWG
1321-3R100-A	150	16.95	2-4/0 AWG
1321-3R100-B	150	16.95	2-4/0 AWG
1321-3R100-C	150	16.95	2-4/0 AWG
1321-3R130-A	150	16.95	2-4/0 AWG
1321-3R130-B	150	16.95	2-4/0 AWG
1321-3R130-C	150	16.95	2-4/0 AWG
1321-3R160-A	150	16.95	2-4/0 AWG
1321-3R160-B	150	16.95	2-4/0 AWG
1321-3R160-C	150	16.95	2-4/0 AWG

POWERFLEX 750 SERIES AC DRIVES POWER TERMINAL BLOCKS

FRAME SIZE	TORQUE IN-LBS	TORQUE N-m	WIRE RANGE
1,2	5	0.57	24-10 AWG
3	10.6	1.2	20-6 AWG
4	24	2.7	14-3 AWG
5	35	4.0	8-1 AWG
6	100	11.3	M8 x 1.25STUD
7	100	11.3	M8 x 1.25STUD

BULLETIN 1494R TERMINAL LUGS

PART NUMBER	TORQUE IN-LBS	TORQUE N-m	WIRE RANGE
1494R-N1	45	5.09	14-4 AWG
1494R-N2	150	16.95	8-1/0 AWG
1494R-N3	275	31	6-4/0 AWG
1494R-N10	325	36.72	(2) 1/0-350 AWG
1494R-N11	325	36.72	(2) 1/0-350 AWG
1494R-N12	375	42.37	1/0-500 AWG
1494R-N14	303	34.23	(2) 1/0-250 AWG
1494R-N15	415	46.89	4-500 AWG

BULLETIN 199 TERMINAL LUGS

PART NUMBER	TORQUE IN-LBS	TORQUE N-m	WIRE RANGE
199-LE1	150	16.9	8-1/0 AWG
199-LF1	275	31	6-250MCM AWG
199-LG1	375	42	4-500MCM AWG
199-LH1	275	31	1/0-350MCM AWG
199-LJ1	275	31	1/0-500MCM AWG

BULLETIN 100 TERMINAL LUGS

PART NUMBER	TORQUE IN-LBS	TORQUE N-m	WIRE RANGE
100-DL110	70-90	8.0-10	14-2/0 AWG
100-DLE110	70-90	8.0-10	8-2/0 AWG
100-DL180	90-110	10-12	6-300MCM AWG
100-DL420	375	42	4-350MCM AWG
100-DL630	400	45	2/0-500MCM AWG
100-DL860	400	45	2/0-500MCM AWG

HOFFMAN GROUND BAR

PART NUMBER	TORQUE IN-LBS	TORQUE N-m	WIRE RANGE
P-GS2K	40	4.5	- AWG
P-GS4K	40	4.5	- AWG
P-GS6K	40	4.5	- AWG

BURNDY GROUND LUGS

PART NUMBER	TORQUE IN-LBS	TORQUE N-m	WIRE RANGE
KPA8CTP	12	1.36	14-6 AWG
KA26U	120	13.6	6-2/0 AWG
KA31U	375	42.4	6-350MCM AWG
KA34U	500	56.5	4-500MCM AWG

USE COPPER, 60°C WIRE IF RATED LESS THAN 100 AMPS
OR 75°C WIRE IF RATED 100 AMPS OR MORE

DATE	BY	APPROVAL
11/17/17	MW	DESIGN REVIEW
11/20/17	JWB	FOR MANUFACTURING
		AS SHIPPED
		AS COMMISSIONED

REV.	DATE	BY	ECN/CR. NO.

Rockwell Automation

TORQUE VALUES FOR
BSE / I & C SOLUTIONS
EXTRACTION WELL #7

Drawn by: JWB | Date: 11/15/17

CONFIDENTIAL AND PROPRIETARY INFORMATION.
THIS DOCUMENT CONTAINS CONFIDENTIAL AND PROPRIETARY INFORMATION OF ROCKWELL AUTOMATION, INC. AND MAY NOT BE USED, COPIED OR DISCLOSED TO OTHERS, EXCEPT WITH THE AUTHORIZED WRITTEN PERMISSION OF ROCKWELL AUTOMATION, INC.

Sheet N5 Of Next Sh 5

Size D | R1USW01163 - 0001 | Ver 0

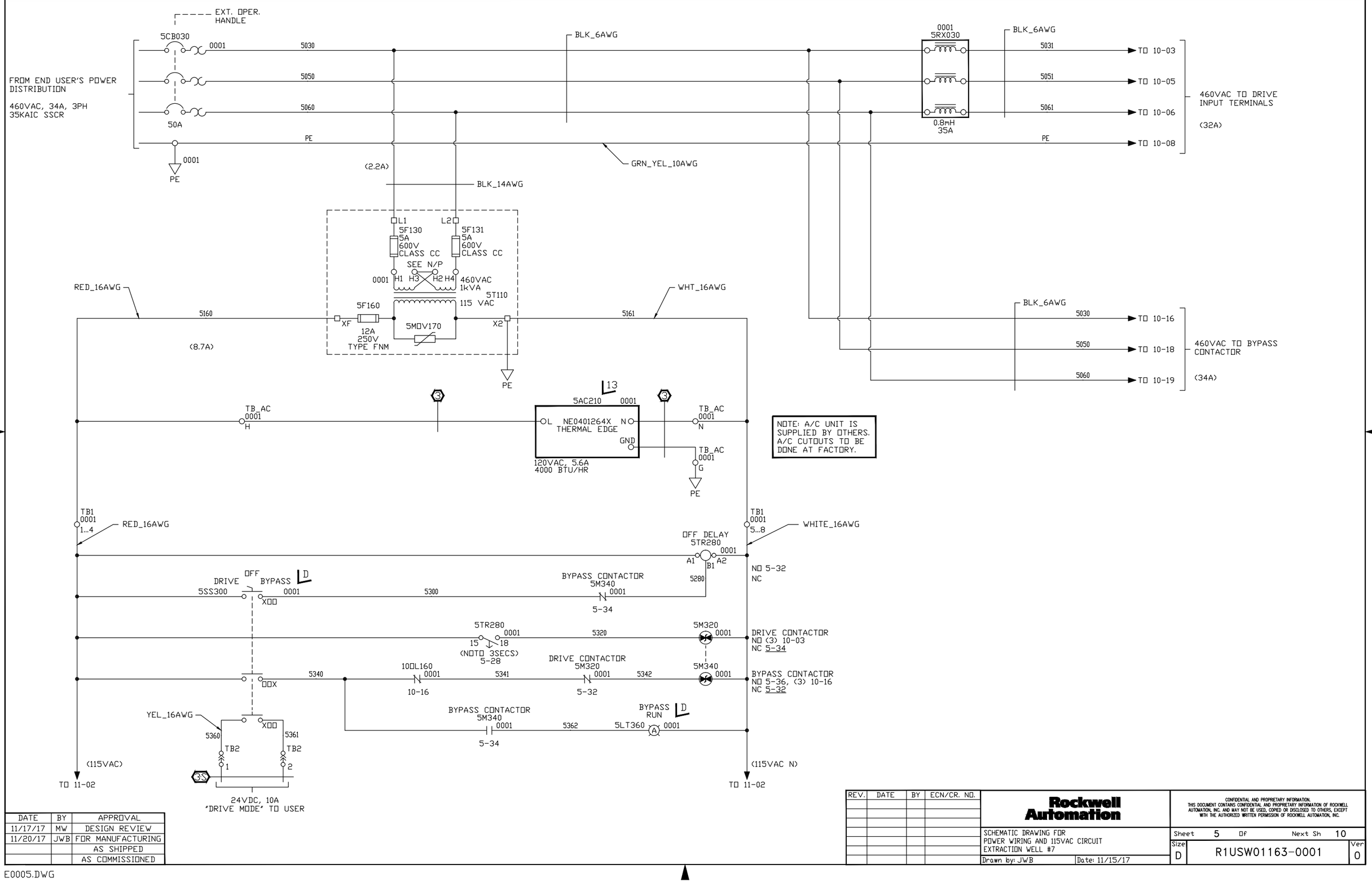

DATE	BY	APPROVAL
11/17/17	MW	DESIGN REVIEW
11/20/17	JWB	FOR MANUFACTURING
		AS SHIPPED
		AS COMMISSIONED

REV.	DATE	BY	ECN/CR. NO.

Rockwell Automation

SCHEMATIC DRAWING FOR
POWER WIRING AND 115VAC CIRCUIT
EXTRACTION WELL #7

Drawn by: JWB | Date: 11/15/17

CONFIDENTIAL AND PROPRIETARY INFORMATION.
THIS DOCUMENT CONTAINS CONFIDENTIAL AND PROPRIETARY INFORMATION OF ROCKWELL AUTOMATION, INC. AND MAY NOT BE USED, COPIED OR DISCLOSED TO OTHERS, EXCEPT WITH THE AUTHORIZED WRITTEN PERMISSION OF ROCKWELL AUTOMATION, INC.

Sheet 5 Of Next Sh 10

Size D | R1USW01163-0001 | Ver 0

E0005.DWG

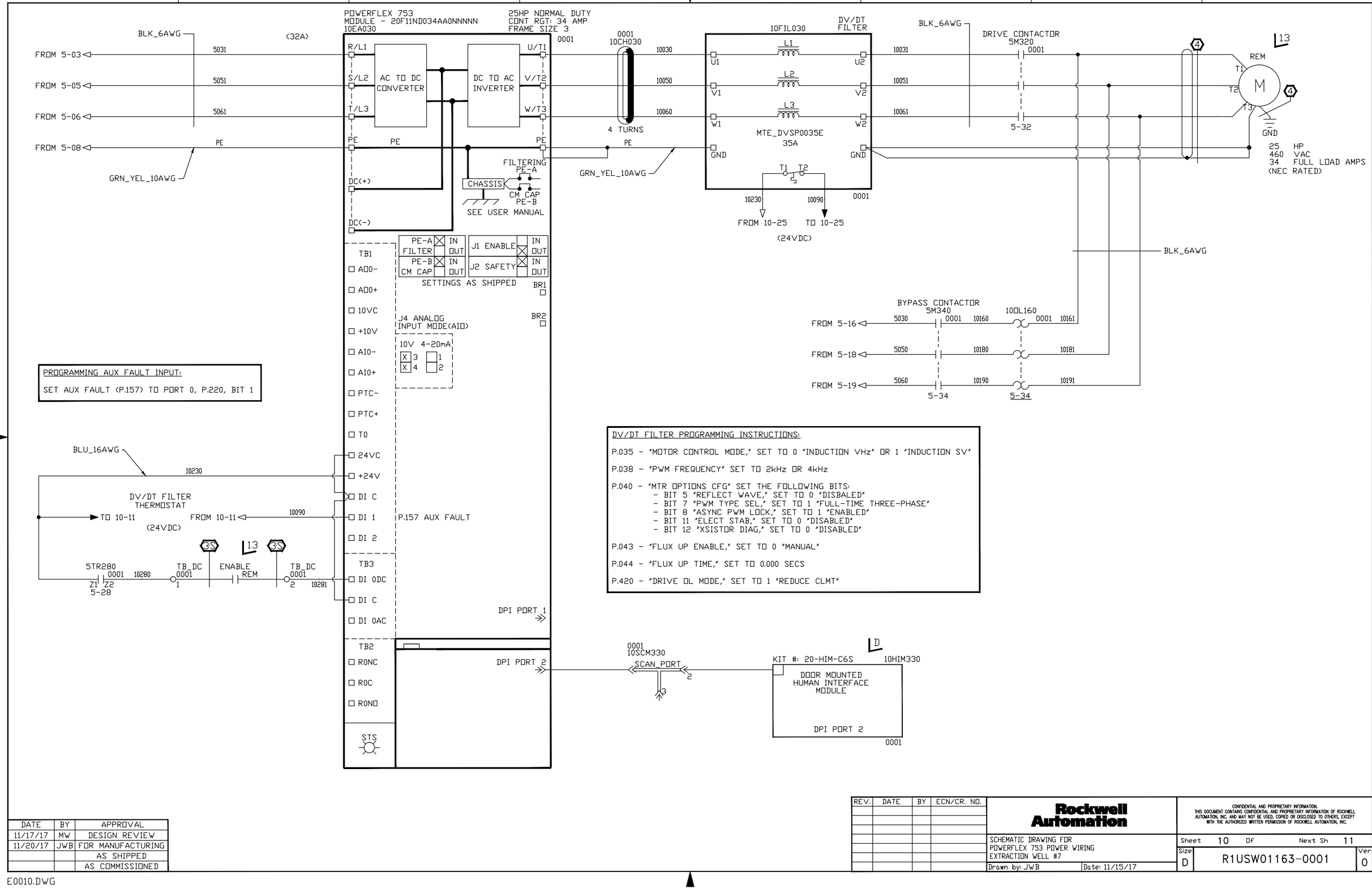

DATE	BY	APPROVAL
11/17/17	MW	DESIGN REVIEW
11/20/17	JWB	FOR MANUFACTURING
		AS SHIPPED
		AS COMMISSIONED

REV.	DATE	BY	ECN/CR. NO.

Rockwell Automation

CONFIDENTIAL AND PROPRIETARY INFORMATION.
THIS DOCUMENT CONTAINS CONFIDENTIAL AND PROPRIETARY INFORMATION OF ROCKWELL AUTOMATION, INC. AND MAY NOT BE USED, COPIED OR DISCLOSED TO OTHERS, EXCEPT WITH THE AUTHORIZED WRITTEN PERMISSION OF ROCKWELL AUTOMATION, INC.

SCHEMATIC DRAWING FOR
POWERFLEX 753 POWER WIRING
EXTRACTION WELL #7

Drawn by: JWB | Date: 11/15/17

Sheet 10 Of Next Sh 11

Size D | R1USW01163-0001 | Ver 0

E0010.DWG

H-O-A SWITCH OPERATION:
HAND MODE: DRIVE WILL START AND RECEIVE SPEED REFERENCE FROM DOOR MOUNTED HIM (PORT 2)

AUTO MODE: DRIVE WILL START ONCE REMOTE CONTACT IS CLOSED AND WILL RECEIVE SPEED REFERENCE FROM PLC THROUGH ANALOG INPUT 0 ON PORT 4

PROGRAMMING H-O-A OPERATION:
SET SPD REF A (P.545) TO PORT 2, DOOR MOUNTED HIM
SET SPD REF B (P.550) TO PORT 4, P.50 "ANLG IN0 VALUE"
SET STOP (P.158) TO PORT 4, P.1 BIT 0
SET HOA START (P.176) TO PORT 4, P.1 BIT 1
SET SPD SEL 1 (P.174) TO PORT 4, P.1 BIT 3

PROGRAMMING DIGITAL OUTPUT FUNCTIONS:
DRIVE FAULT: SET RO0 SEL (PORT 4, P.10) TO DRIVE STS 1, PORT 0, P.935 BIT 7

DRIVE RUNNING: SET RO1 SEL (PORT 4, P.20) TO DRIVE STS 1, PORT 0, P.935 BIT 16

BLU_16AWG
11050
HAND OFF AUTO
11SS070
0001
XOX
11070
FAULT 11CR090
0001
11-09
11071
11PB070
STOP
0001
11072
START
11090
11PB090
0001
11091
XOO
TB_DC 0001 3
START
REM
TB_DC 0001 4
11110
OOX
YEL_16AWG
OOX
11150
TB2 3
11151
TB2 4
3S
24VDC, 10A
"AUTO MODE" TO USER

10EA030 - PORT 4 0001
24VDC
20-750-2262C-2R
TB1 +24V
24VDC INPUTS
TB1 DI 0
P.158 STOP
TB1 DI 1
P.176 HOA START
TB1 DI 2
TB1 DI 3
P.174 SPD SEL 1
TB1 DI 4
TB1 DI 5
TB1 DI C
TB1 24VC
TB1 +10V
TB1 10VC
TB1 -10V
TB1 AI0+ ANALOG INPUT 0
TB1 AI0-
TB1 AI1+ ANALOG INPUT 1
TB1 AI1-
AI0-JMPR
CURRENT
VOLTAGE
AI1-JMPR
CURRENT
VOLTAGE
SEE PUBLICATION POWERFLEX 750 USER MANUAL
TB1 SHD
TB1 SHD

SHLD
2
SHLD
SPEED REFERENCE 4-20mA FROM PLC
TB_SIG 1
11240
TB_SIG 2
11250
TB_SIG SH1
BELDEN 8760

TB2 R0C
TB2 R0NC
TB2 R0NO
P.935 FAULTED
TB2 R1C
TB2 R1NC
TB2 R1NO
P.935 RUNNING
TB1 PTC+
TB1 PTC-
TB1 AO0+
ANALOG OUTPUT 0
TB1 AO0-
TB1 AO1+
ANALOG OUTPUT 1
TB1 AO1-

FROM 5-38 (115VAC)
5160
RED_16AWG
11060
FROM 5-38 (115VAC N)
5161
WHT_16AWG
11123

FAULT
11LT060 R 0001
11CR090 0001
FAULT NO 11-06 NC 11-06,11-07

RUNNING
11LT120 G 0001
11CR150 0001
RUNNING NO 11-12 NC 11-12

FAULT 11CR090 0001
FAULT 11CR090 0001
11-09
11-09
11061
11062
11063
YEL_16AWG
TB2 5
TB2 6
TB2 7
3S
DRIVE FAULT, 10A, 24VDC

RUNNING 11CR150 0001
RUNNING 11CR150 0001
11-15
11-15
11120
11121
11122
YEL_16AWG
TB2 8
TB2 9
TB2 10
3S
DRIVE RUNNING, 10A, 24VDC

DATE	BY	APPROVAL
11/17/17	MW	DESIGN REVIEW
11/20/17	JWB	FOR MANUFACTURING
		AS SHIPPED
		AS COMMISSIONED

REV.	DATE	BY	ECN/CR. NO.

Rockwell Automation

SCHEMATIC DRAWING FOR
24VDC I/O WIRING
EXTRACTION WELL #7
Drawn by: JWB Date: 11/15/17

CONFIDENTIAL AND PROPRIETARY INFORMATION.
THIS DOCUMENT CONTAINS CONFIDENTIAL AND PROPRIETARY INFORMATION OF ROCKWELL AUTOMATION, INC. AND MAY NOT BE USED, COPIED OR DISCLOSED TO OTHERS, EXCEPT WITH THE AUTHORIZED WRITTEN PERMISSION OF ROCKWELL AUTOMATION, INC.

Sheet 11 Of Next Sh L1
Size D
R1USW01163-0001
Ver 0

E0011.DWG

TOP VIEW

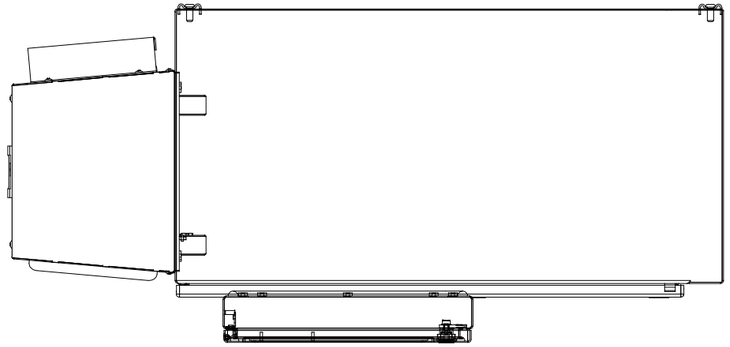

STAINLESS STEEL ENCLOSURE
HOFFMAN N4X WALLMOUNT
42"(H) X 32"(W) X 16"(D)
- NEMA STYLE DISCONNECT
- STAINLESS STEEL A/C COOLING (PROVIDED BY OTHERS)
- STAINLESS STEEL WINDOW KIT
- UV FILM PROTECTION FOR HMI
- MOUNTING BRACKETS INCLUDED

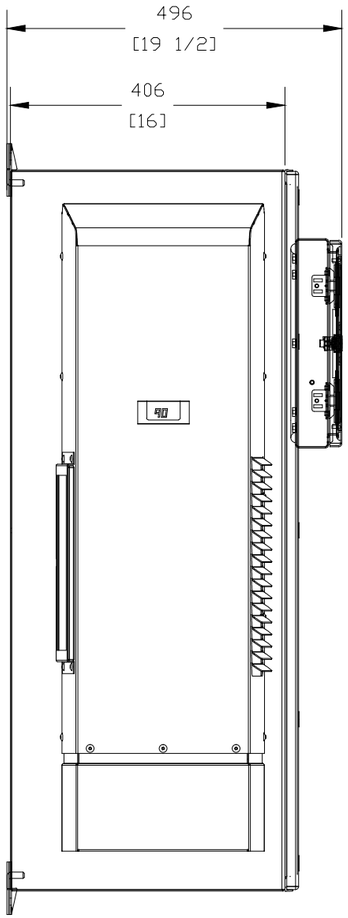

LEFT SIDE

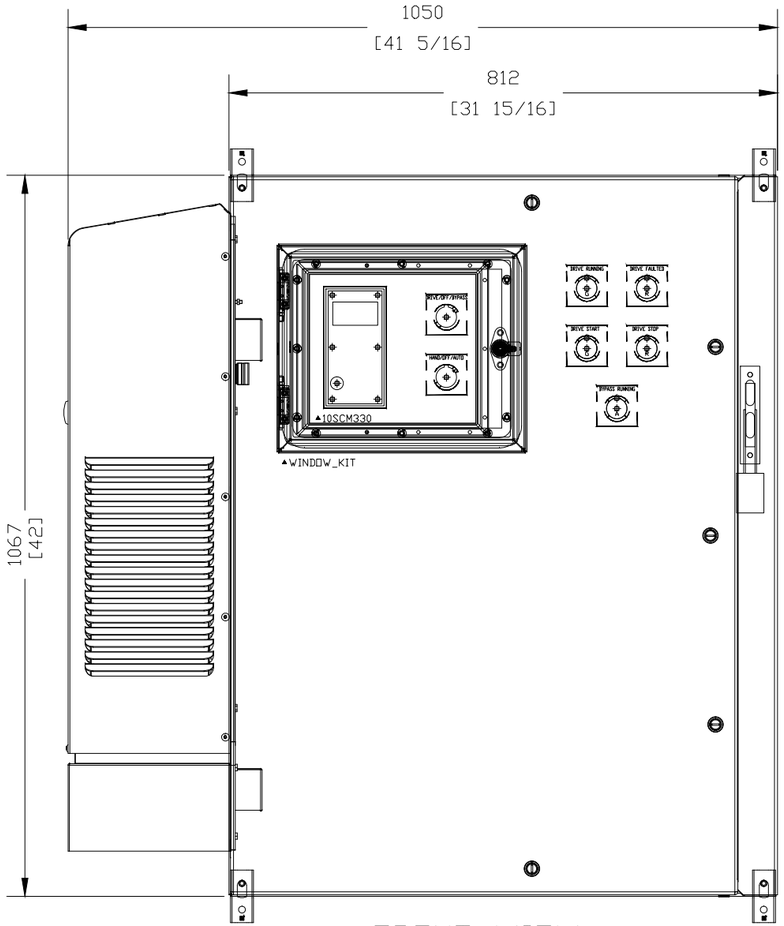

FRONT VIEW

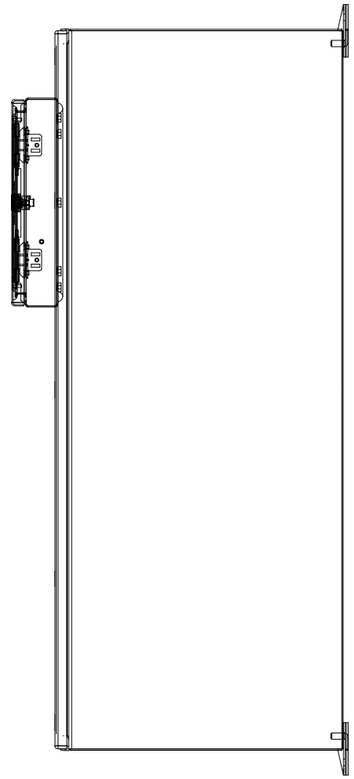

RIGHT SIDE

DATE	BY	APPROVAL
11/17/17	MW	DESIGN REVIEW
11/20/17	JWB	FOR MANUFACTURING
		AS SHIPPED
		AS COMMISSIONED

REV.	DATE	BY	ECN/CR. NO.

Rockwell Automation

LAYOUT DRAWING FOR
ENCLOSURE SIZE AND DIMENSIONS
EXTRACTION WELL #7

Drawn by: JWB | Date: 11/15/17

CONFIDENTIAL AND PROPRIETARY INFORMATION.
THIS DOCUMENT CONTAINS CONFIDENTIAL AND PROPRIETARY INFORMATION OF ROCKWELL AUTOMATION, INC. AND MAY NOT BE USED, COPIED OR DISCLOSED TO OTHERS, EXCEPT WITH THE AUTHORIZED WRITTEN PERMISSION OF ROCKWELL AUTOMATION, INC.

Sheet L1 Of Next Sh L2

Size D | R1USW01163-0001 | Ver 0

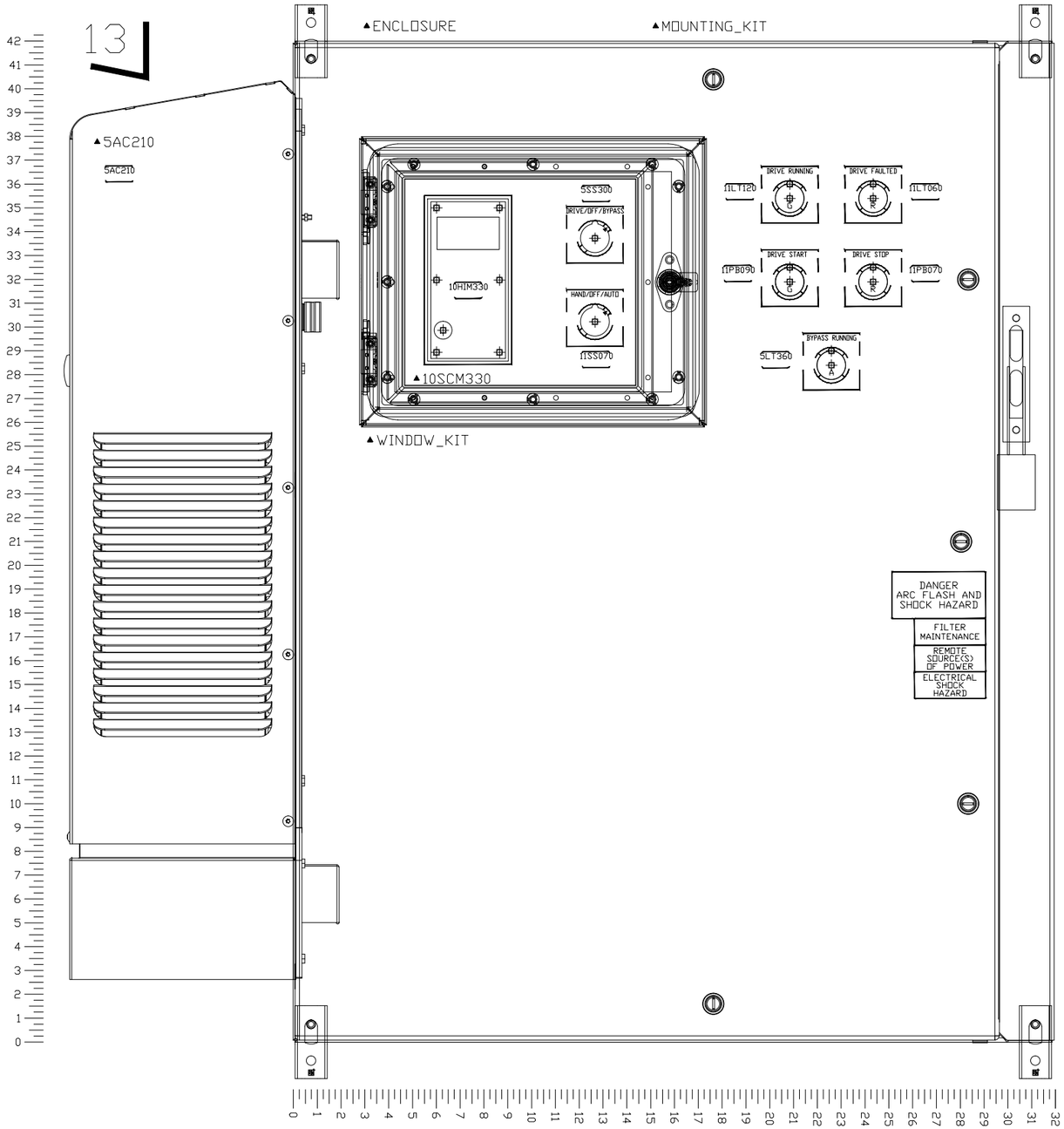

NOTES FOR MFG:
- APPLY UV FILM TO WINDOW KIT

- CUTOUTS FOR A/C UNIT

NAMEPLATE

Rockwell Automation

PROJECT#: R1USW01163 - 0001

DIAGRAM: R1USW01163-0001
INPUT 480VAC 34 AMPS 3PH 60Hz
OUTPUT 480VAC 34 AMPS
LARGEST MOTOR: 25HP, 34 AMPS
SHORT CIRCUIT CURRENT RATING:
100 KA RMS. SYMMETRICAL, 480 VOLTS MAXIMUM
ENCLOSURE RATING: TYPE 4X

Drive Systems, Golden, CO 80403 USA

VFD AC is an after-market upgrade.
Please see cutouts for location of AC unit.

DATE	BY	APPROVAL
11/17/17	MW	DESIGN REVIEW
11/20/17	JWB	FOR MANUFACTURING
		AS SHIPPED
		AS COMMISSIONED

REV.	DATE	BY	ECN/CR. NO.

Rockwell Automation

LAYOUT DRAWING FOR
ENCLOSURE DOOR AND DEVICES
EXTRACTION WELL #7

Drawn by: JWB | Date: 11/15/17

CONFIDENTIAL AND PROPRIETARY INFORMATION.
THIS DOCUMENT CONTAINS CONFIDENTIAL AND PROPRIETARY INFORMATION OF ROCKWELL AUTOMATION, INC. AND MAY NOT BE USED, COPIED OR DISCLOSED TO OTHERS, EXCEPT WITH THE AUTHORIZED WRITTEN PERMISSION OF ROCKWELL AUTOMATION, INC.

Size D | R1USW01163-0001 | Ver 0

▲PANEL

10EA030

FRAME SIZE 3

TORQUE: 10.6 LB-IN (1.2 N-M)
WIRE RANGE:6-20AWG(16-0.5MM)

PE PE- PE- R L1 S L2 T L3 BR1 BR2 + DC - DC U T1 V T2 W T3

POWER I/O

PE PE

PNL_CHAN_1.5
PNL_CHAN_1.5_CVR

ST110

5F130 5A,600V CLASS CC

N/A H1 H2 H3 H4 N/A

▲5F130
▲5F131
▲5F160

▲5M□V170

N/A X4 X2 X3 X1 N/A

5F131 5A,600V CLASS CC

5F160 12A,250V TYPE FNM

691-XG

PE

5CB030

PNL_CHAN_1.0
PNL_CHAN_1.0_CVR

TB_AC TB1 5TR280 1CR090 1CR150

691-XG

▲TB_AC ▲TB1

PNL_CHAN_1.0
PNL_CHAN_1.0_CVR

TB2 TB_DC TB_SIG

▲TB2 ▲TB_DC ▲TB_SIG

5LR030

LABEL

10CH030

5M320 5M340

▲5M320 ▲5M340

10FIL030

PRODUCT

REACTOR

10DL160

DETAIL FOR
DRIVE_CONTROL_POD

20-750-2262C-2R

I/O OPTION

6 5 4

DATE	BY	APPROVAL
11/17/17	MW	DESIGN REVIEW
11/20/17	JWB	FOR MANUFACTURING
		AS SHIPPED
		AS COMMISSIONED

REV.	DATE	BY	ECN/CR. NO.

Rockwell Automation

LAYOUT DRAWING FOR
PANEL AND COMPONENTS
EXTRACTION WELL #7

Drawn by: JWB Date: 11/15/17

CONFIDENTIAL AND PROPRIETARY INFORMATION.
THIS DOCUMENT CONTAINS CONFIDENTIAL AND PROPRIETARY INFORMATION OF ROCKWELL AUTOMATION, INC. AND MAY NOT BE USED, COPIED OR DISCLOSED TO OTHERS, EXCEPT WITH THE AUTHORIZED WRITTEN PERMISSION OF ROCKWELL AUTOMATION, INC.

Sheet L3 Of Next Sh END

Size D | R1USW01163-0001 | Ver 0

PF753 25HP ND N3R

One NEMA 3R Hoffman WeatherFlo Enclosure, approximately 47"H X 24"W X 14"D, with the following features:

☐ Qty. 1- PowerFlex 753 Drive w/ Embedded I/O, 480 VAC, 3 Phase, 34 Amps, 25 HP Normal Duty, 6 Pulse, w/DC Terminals, With Filtering/Jumper Removed, With Internal Transistor, w/o Internal Resistor

☐ Qty. 1- PF750 24V DC I/O Option Module

☐ Qty. 1- Input Circuit Breaker Disconnect (Input Thermal Magnetic breaker, 35KAIC, note does not necessarily reflect panel SCCR rating)

☐ Qty. 1- Input Line Reactor, 3%

☐ Qty. 1- dv/dt Output Filter

☐ Qty. 1- 2 Contactor Bypass (IEC style)

☐ Qty. 1- Control Power Transformer, Fused Primary/Secondary

☐ Qty. 1- Door-Mounted HIM w/ Cover

☐ Qty. 1- Door-Mounted Start Push Button (800H style, wired to drive input)

☐ Qty. 1- Door-Mounted Stop Push Button (800H style, wired to drive input)

☐ Qty. 1- Door-Mounted Run Pilot Light (Green 800H LED style.

☐ Qty. 1- Door-Mounted Fault Pilot Light (Red 800H LED style.)

☐ Qty. 1- Door-Mounted Bypass Run Pilot Light (Amber 800H LED style.)

☐ Qty. 1- Door-Mounted Hand/Off/Auto Selector Switch (800H style.)

☐ Qty. 1- Door-Mounted Drive/Off/Bypass Selector Switch (800H style.)

TRANSMITTAL DOCUMENT

Date:	**10/2/2017**	**From:**	**Ed Butler**
To:	**EA Engineering, Science, and Technology, Inc., 320 Gold Ave. SW, Suite 1300 Albuquerque, NM 87102 Devon Jercinovic**	**Job Name:**	**Kirtland AFB, NM Bulk Fuels Facility**
		Reference:	
		Transmittal Method:	**E-mail**
		Sent By:	**Ed Butler**

Submittal	Dwg. Number	Item Description
8	E-701	Well 106239 VFD

Ed Butler
TECHSAS, Inc.
4819 West Bayshore Drive
Bacliff, TX 77518

"I hereby certify that the (equipment) (material) (article) shown and marked in this submittal is that proposed to be incorporated with the Contract, is in compliance with the contract drawings and specification, can be installed in the allocated spaces, and is submitted for Contractor approval.

Certified by _____.
(Signature when applicable) Date: _____.

PowerFlex® 750-Series AC Drives

Allen-Bradley

Designed for Ease of Use, Integration and Application Flexibility

LISTEN.
THINK.
SOLVE.®

Allen-Bradley • Rockwell Software

Rockwell Automation

Technical Data

Allen-Bradley

PowerFlex 753 and PowerFlex 755 Pre-Engineered FasTrac Packaged Drives

Catalog Numbers 24F, 24G

24F1AHD248AA6NNNNN-ND-B1-C1-F0-IN-L1-L2-MN-P4 Shown

LISTEN. THINK. SOLVE.®

Table of Contents

Topic	Page
Additional Resources	4
Product Overview	4
Catalog Number Explanation	5
PowerFlex 750-Series Drives Pre-engineered FasTrac	5
Additional Catalog Number Notes	8
Specifications	9
Short Circuit Current Rating	9
Duty Cycle	10
Ambient Temperature Rating	10
Options	11
Sample Power Distribution Schemes	11
Power Disconnect	12
Control Power	12
Output Devices	12
Bypass	12
Operator Devices	13
Power Conditioning	14
Agency Certification - Codes and Standards	15
Drawings	15
Enclosure Information	15
Guidelines	15
Approximate Dimensions	15

Additional Resources

These documents contain additional information concerning related products from Rockwell Automation.

Resource	Description
PowerFlex® 750-Series AC Drives Technical Data, publication 750-TD001	Provides detailed information on: • Drive specifications • Option specifications • Fuse and circuit breaker ratings
PowerFlex 750-Series AC Drives Installation Instructions, publication 750-IN001	Provides steps for mechanical installation and for connecting incoming power, the motor, and basic I/O to the PowerFlex 750-Series Adjustable Frequency AC drive.
PowerFlex 750-Series AC Drives Programming Manual, publication 750-PM001	Provides detailed information on: • I/O, control, and feedback options • Parameters and programming • Faults, alarms, and troubleshooting
Wiring and Grounding Guidelines for Pulse Width Modulated (PWM) AC Drives, publication DRIVES-IN001	Provides basic information needed to properly wire and ground PWM AC drives.
Preventive Maintenance of Industrial Control and Drive System Equipment, publication DRIVES-TD001	Provides a guide to performing preventive maintenance.
Safety Guidelines for the Application, Installation and Maintenance of Solid State Control, publication SGI-1.1	Provides general guidelines for the application, installation, and maintenance of solid-state control.
Product Certifications website, http://www.ab.com	Provides declarations of conformity, certificates, and other certification details.

You can view or download publications at http://www.rockwellautomation.com/literature/. To order paper copies of technical documentation, contact your local Allen-Bradley distributor or Rockwell Automation sales representative.

Product Overview

Rockwell Automation PowerFlex® 753 and 755 drives are now available in a Pre-Engineered FasTrac Packaged Drive program. The Pre-engineered FasTrac Packaged Drives program provides PowerFlex 750-Series drives packaged with a much larger offering of factory mounted options than what is normally available with a standard drive product. The Pre-engineered FasTrac program lets you receive packaged PowerFlex 753 and 755 drives in as little as 20 business days.

The Pre-engineered FasTrac program is a separate, centrally managed program. It combines the capabilities of Rockwell Automation Low Voltage Drives with the Local Solution Centers. As orders are received, they are immediately released to a manufacturing location based on capacity.

Benefits:

- Proven, tested design
- Quality drives
- Quick turnaround
- Pre-engineered packages to ensure sizing, wiring, and calculations
- Meets CSA requirements
- Available in an assortment of environmental protection enclosures - NEMA 1, 12, or 3R

This document contains information related to the Rockwell Automation PowerFlex 750-Series Pre-Engineered FasTrac Packaged Drives program and is intended to provide drive catalog numbers, specifications, options and accessories, enclosures, and dimension information.

IMPORTANT While this information may be useful in specifying an application of a Pre-Engineered FasTrac Packaged PowerFlex 750-Series AC drive, be advised that this information is for Reference Only and subject to change at any time.

Catalog Number Explanation

PowerFlex 750-Series Drives Pre-engineered FasTrac

Contact your Rockwell Automation representative for product option rules.

Position

1…3	*4*	*5*	*6*	*7*	*8…10*	*11*	*12*	*13*	*14*	*15*	*16*	*17*	*18…19*
24G	**1**	**1**	**R**	**D**	**096**	**A**	**A**	**0**	**N**	**N**	**N**	**N**	**- ND**
a		*b*	*c*	*d*	*e*	*f*	*g*		*h*	*i*	*j*	*k*	*l*

a

Drive

Code	Type
24F	PF753
24G	PF755

b

Input Type

Code	Type
1	AC & DC Input with Precharge
A	AC Input w/ Precharge, no DC Terminals

c

Enclosure Type and Conformal Coating

Code	Encl. Rating	Encl. Style	Conf. Coating
R	Type 3R	Single Drive	Yes
A	Type 1	Single Drive	Yes
H	Type 12 (F&F)	Single Drive	Yes
S	Frame 1 Type 3R	Single Drive	Yes
I	Frame 1 Type 1	Single Drive	Yes
J	Frame 1 Type 12 (F&F)	Single Drive	Yes

d

Version and Voltage Rating

Code	Input Voltage	Source Type	DC Precharge
D	480 VAC	3 Phase	No
E	600 VAC	3 Phase	No

e

Output Amps, Hp Ratings @ 480V AC Input

Code	Amps	ND Hp	HD Hp	Frame Size
2P1	2.1	1	0.75	1 or 2
3P4	3.4	2	1.5	1 or 2
5P0	5	3	3	1 or 2
8P0	8	5	5	1 or 2
11	11	7.5	5	1 or 2
14	14	10	7.5	1 or 2
22	22	15	10	2
27	27	20	15	3
34	34	25	20	3
40	40	30	25	3
52	52	40	30	4
65	65	50	40	4
77	77	60	50	5
96	96	75	60	5
125	125	100	75	6
156	156	125	100	6
186	186	150	125	6
248	248	200	150	6
302	302	250	200	7
361	361	300	250	7
415	415	350	300	7

Catalog Number Explanation, Continued

e (cont'd)

Output Amps, Hp Ratings @ 600V AC Input

Code	Amps	ND Hp	HD Hp	Frame Size
1P7	1.7	1		3
2P7	2.7	2	1	3
3P9	3.9	3	2	3
6P1	6.1	5	3	3
009	9	7.5	5	3
011	11	10	7.5	3
017	17	15	10	3
022	22	20	15	3
027	27	25	20	4
032	32	30	25	4
041	41	40	30	5
052	52	50	40	5
063	63	60	50	6
077	77	75	60	6
099	99	100	75	6
125	125	125	100	6
144	144	150	125	6
192	192	200	150	7
242	242	250	200	7
289	289	300	250	7

f

Filtering and Common Mode Capacitor Configuration

Code	Filtering	Default CM Cap Connection
A	Yes	Jumper Removed
J	Yes	Jumper Installed

g

Dynamic Braking

Code	Internal Resistor	Internal Transistor
A	No	Yes
N	No	No

h

Feedback

Code	Type	Installation Location
0	None	N/A
1	Standard Encoder	I/O Card

i

I/O

Code	Type	Voltage
N	None	N/A
A	Standard	24V DC/AC
B	Standard	115V AC

j

Communication

Code	Version
N	None
D	DeviceNet
R	RIO
C	ControlNet (Coax)
F	ControlNet (Fiber)
S	RS485 DF-1
H	RS485 HVAC
P	Profibus DPV1
I	Interbus
E	Ethernet

k

HIM

Code	Version
0	No HIM - Blank Plastic Inserted (Drive Mount)
3	Full Numeric LCD HIM (Drive Mounted)
5	Programmer Only LCD HIM (Drive Mounted)
6	Door Mounted Full Numeric LCD HIM
7	Door Mounted Programmer Only LCD HIM

Catalog Number Explanation, Continued

I

Options	
Code	**Option**
-ND	Normal Duty
-HD	Heavy Duty
Input Devices	
-P3	Circuit Breaker
-P4	Drive/Bypass Mode Circuit Breaker
-P6	Fused Disconnect
-P7	Drive/Bypass Mode Fused Disconnect
Reactors	
-L1	Input Reactor, 3%
-L2	Output Reactor, 3%
-L3	Input Reactor, 5%
-L4	Output Reactor, 5%
Enclosure Options	
-H1	Lexan HIM Cover
-H2	Metallic HIM Cover (Solid Door)
-E5	Enclosure Space Heater

I (cont'd)

Options	
Code	**Option**
Bypass	
-B0	No Bypass
-B1	Manual Bypass
Control Power	
-C1	Drive Only Control Power
Power Filtering	
-F5	Transient Voltage Surge Suppressor
Operator Devices	
-S51	H/O/A Selector Switch (Start/Stop/Spd. Ref.)
-S59W	Run Pilot Light (White)
-S59G	Run Pilot Light (Green)
-S59R	Run Pilot Light (Red)
-S60R	Drive Fault Pilot Light (Red)
-S60A	Drive Fault Pilot Light (Amber)
-S68	Speed Potentiometer (1-Turn)
-S53	Control Power On Pilot Light (White)
-S54	Drive & Bypass Mode Pilot Lights (Amber)
-S66	Drive/Bypass (B1, if present) Disable Mushroom Push button

Additional Catalog Number Notes

Enclosure Types (Position 6/c)

Pre-Engineered FasTrac Packaged Drives are assembled in NEMA/UL Type 1, 3R, or 12 enclosures. Each enclosure type lends itself to a particular type of protection and environment. The enclosures detailed below do not normally protect electrical equipment from condensation, corrosion or contamination which may occur within the enclosure or enter via the conduit or unsealed openings. Users must make adequate provisions to safeguard against such conditions, and satisfy themselves that the equipment is properly protected.

NEMA/UL Type 1 enclosures are intended for indoor use primarily to provide a degree of protection against contact with the enclosed equipment in locations where unusual service conditions do not exist. The enclosures are designed to meet the rod entry and rust resistance design tests. Openings in the enclosure door or sides and/or fans on the door(s) or sides allow for free exchange of inside and outside air. Design is based upon 0...40 °C ambient temperature during operation. Refer to PowerFlex 750-Series drive specifications for storage requirements.

- A = NEMA/UL Type 1 - with fans if needed (Frames 2...7 drives)
- I = NEMA/UL Type 1 - with fans if needed (Frame 1 drive)

NEMA/UL Type 12 enclosures are intended for indoor use primarily to provide a degree of protection against dust, falling dirt and dripping non-corrosive liquids. They are designed to meet drip, dust and rust resistance tests. There may be ventilation openings on the enclosure to allow free exchange of inside and outside air. Closed loop auxiliary cooling may be required for higher horsepower ratings. Specifications calling for NEMA/UL Type 12 ventilated enclosures should be reviewed with the factory. Design is based upon 0...40 °C ambient temperature during operation. Refer to PowerFlex 750-Series drive specifications for storage requirements.

- H = NEMA/UL Type 12 Ventilated - with fans if needed (Frames 2...7 drives)
- J = NEMA/UL Type 12 Ventilated - with fans if needed (Frame 1 drive)

NEMA/UL Type 3R enclosures are intended for outdoor use primarily to provide a degree of protection against falling rain, and to reduce potential damage from the formation of ice on the enclosure(1). They are designed to meet rod entry, rain(2), external icing(3) and rust-resistance design tests. They are not intended to provide protection against conditions such as dust, internal condensation, or internal icing. Design is based upon -30...40 °C ambient temperature range with power applied and disconnect on. A cabinet space heater is supplied as standard.

- R = NEMA/UL Type 3R - with shrouded fan if required (Frames 2...7 drives)
- S = NEMA/UL Type 3R - with shrouded fan if required (Frame 1 drive)

(1) Evaluation criteria: No water has entered the enclosure during the specified test.
(2) Evaluation criteria: No water shall have reached live parts, insulation, or mechanisms.
(3) Evaluation criteria: The enclosure is undamaged after ice, which accumulates during the specified test, has melted. (Note: The drive is not required to be operable while ice-laden).

Specifications

In most cases the general specifications of a packaged drive package will match those of a standalone drive. See Additional Resources on page 4 for further information. Also, see Agency Certification - Codes and Standards on page 15.

Short Circuit Current Rating

Short Circuit Current Rating (SCCR) of the Package - the short circuit current capability of any drive package will be based upon the specific combination of the options chosen as shown in this table.

Rating		No Bypass		With Bypass	
Hp	Duty	CB ISC	Fuse D/S ISC	CB ISC	Fuse D/S ISC
1	ND	35,000	100,000	35,000	100,000
1	HD				
2	ND				
2	HD				
3	ND				
3	HD				
5	ND				
5	HD				
7.5	ND				
7.5	HD				
10	ND				
10	HD				
15	ND				
15	HD				
20	ND				
20	HD				
25	ND				
25	HD				
30	ND				
30	HD				
40	ND				

Rating		No Bypass		With Bypass	
Hp	Duty	CB ISC	Fuse D/S ISC	CB ISC	Fuse D/S ISC
40	HD	35,000	100,000	35,000	100,000
50	ND				
50	HD				
60	ND				
60	HD				
75	ND				
75	HD				
100	ND				
100	HD				
125	ND				
125	HD				
150	ND				
150	HD				
200	ND				
200	HD				
250	ND			50,000	
250	HD	50,000			
300	ND				
300	HD				
350	ND				

Duty Cycle

- ND = Normal Duty Rated.

  100% continuous current

  110% current for 1 minute

  150% for 3 seconds
- HD = Heavy Duty Rated.

  100% continuous current

  150% current for 1 minute

  180% for 3 seconds

IMPORTANT The Packaged Drive duty cycle rating is located on the drive "System" data nameplate. The standard drive is used as a component in the enclosure and may indicate ratings on its nameplate that differ from the "System" data nameplate. The packaged drive system rating may be limited by other components sized for NEC/typical motor ratings. In all cases the system nameplate data supersedes any component nameplate information. Unless otherwise stated, Normal Duty Rated packaged drives cannot be used on Heavy Duty applications.

Ambient Temperature Rating

- NEMA/UL Type 1, 12: 0...40 °C
- NEMA/UL Type 3R: -30°C...40 °C ambient temperature range with power applied and disconnect on

Maintenance

Variable speed drive equipment should be inspected periodically. Inspection intervals should be based on environmental and operating conditions and adjusted as indicated by experience. An initial inspection within three to four months after installation is suggested. See National Electrical Manufacturers Association (NEMA) Standard No. ICS 1.3, Preventive Maintenance of Industrial Control and Systems Equipment, for general guidelines for setting up a periodic maintenance program.

Inspect blowers and fans used for forced air cooling. Replace any that have bent, chipped, or missing blades, or if the shaft does not turn freely. Apply power momentarily to check operation. If unit does not operate, check and replace wiring, fuse, blower or fan motor as appropriate. Clean or change air filters as annually or more often if atmospheric conditions cause an air flow reduction of greater than 10%.

Options

Sample Power Distribution Schemes

The power distribution schemes shown below are for typical configurations. Actual specified configurations may vary with accepted design practices or code restrictions.

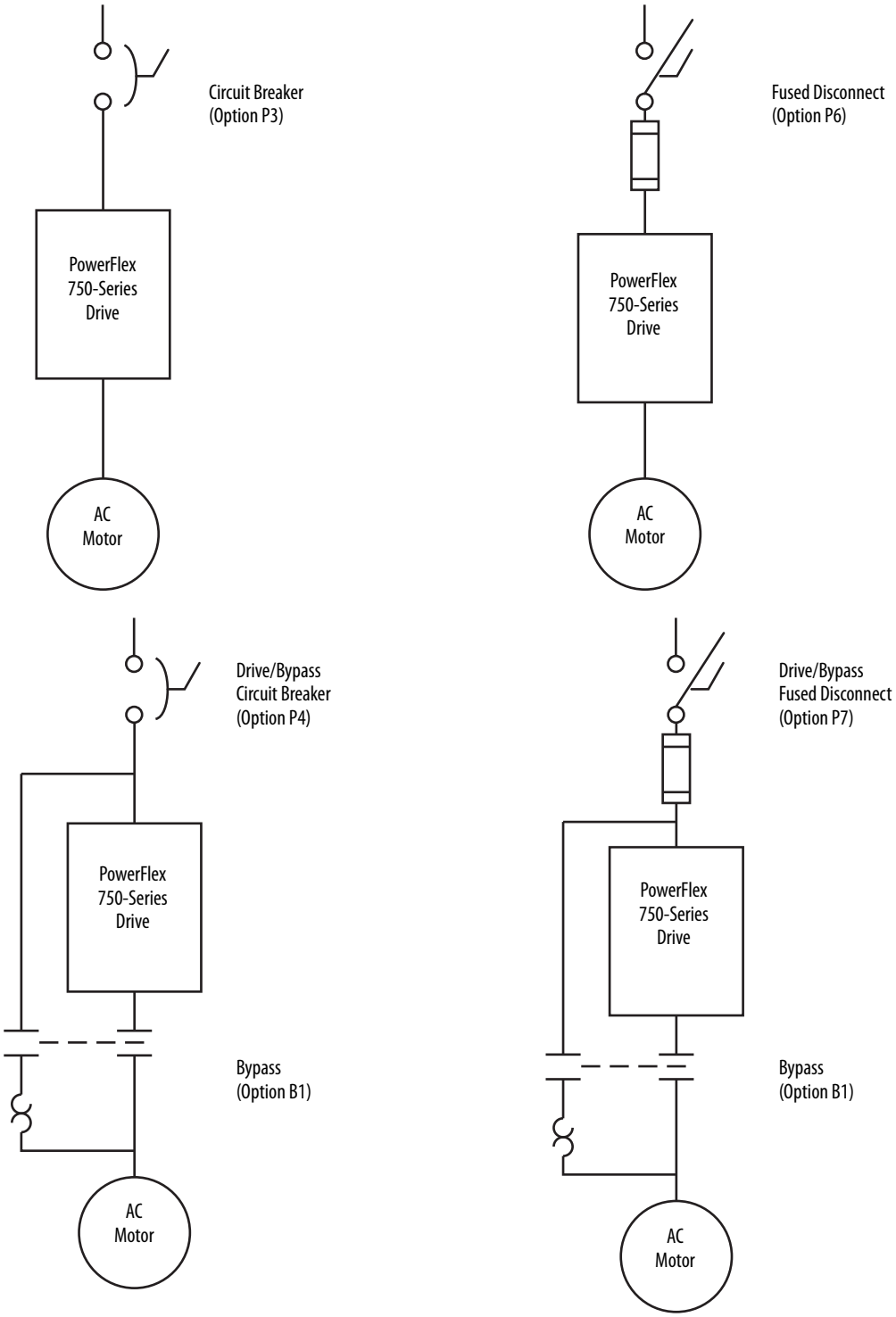

Power Disconnect

Option		Description
P3	Drive Circuit Breaker	This option is for disconnecting drive power only. All ratings use a thermal magnetic type breaker. All mechanisms are through the door and include handle operators, door interlocking and are pad-lockable.
P4	Drive/Bypass Mode Circuit Breaker	This option is for disconnecting all input power to the cabinet. Most ratings will use a thermal magnetic type breaker. All mechanisms are through the door and include handle operators, door interlocking and are pad-lockable.
P6	Drive Disconnect Switch and Fuses	This option is for disconnecting drive power only. A through the door pad lockable disconnect switch with fuses is provided.
P7	Drive/Bypass Mode Fused Disconnect Switch	This option is for disconnecting all input power to the cabinet. A through the door pad lockable disconnect switch with fuses is provided.

Control Power

Option		Description
C1	Drive Only Control Power	This option provides a fused (two primary and one secondary) control power transformer mounted and wired inside the drive enclosure. The transformer is rated for drive and options power only. There is no additional capacity for customer use.

Output Devices

Common mode output cores are provided as standard on all ratings.

Bypass

Option		Description
B0	No Bypass	–
B1	Manual Bypass(1) (2)	This option provides a means to manually switch a single motor from drive control to bypass (across the line) operation. Separate contactors are provided for drive output and bypass operation. An electronic or bimetallic motor overload is provided for motor protection while operating in the bypass mode. A door-mounted “Drive/Off/Bypass” selector switch is included.

(1) The Bypass Operation capability provided by this option is not intended for maintenance of the drive or entry into the enclosure with power applied while operating in the bypass mode.

(2) Bypass Option includes the required 120V AC control power.

Operator Devices

Code	Option	Also Requires	Description
S51	Hand/Off/Auto Selector Switch	IB	This switch will be door mounted. For NEMA 3R enclosures with optional HIM cover, it will be located under the cover to the left of the HIM. The drive will run when the switch is in the "Hand" position, and will be stopped when the switch is in "Off" position. In the "Auto" position, the drive will run/stop based upon the closure of a remote dry contact. In order for the drive to run, enable or auxiliary stop/fault reset inputs (if used) must be present. If a drive connected HIM is present, the HIM "stop" will stop the drive regardless of the selector switch position (the HIM "start" button will be non-functional). The Hand/Off/Auto selector switch also determines the origin of the speed reference. Factory default is "Hand" = HIM (unless door mounted pot option is provided) and "Auto" = remote analog reference. (this can be changed to communication option by customer)
S59W	Run Pilot Light	IB	This white pilot light will be door mounted. For NEMA 3R enclosures with optional HIM cover, it will be located outside of the cover. It will be illuminated when the drive option board relay 0 indicates drive is in run mode.
S59G	Run Pilot Light	IB	This green pilot light will be door mounted. For NEMA 3R enclosures with optional HIM cover, it will be located outside of the cover. It will be illuminated when the drive option board relay 0 indicates drive is in run mode.
S59R	Run Pilot Light	IB	This red pilot light will be door mounted. For NEMA 3R enclosures with optional HIM cover, it will be located outside of the cover. It will be illuminated when the drive option board relay 0 indicates drive is in run mode.
S60R	Fault Pilot Light	IB	This red pilot light will be door mounted. For NEMA 3R enclosures with optional HIM cover, it will be located outside of the cover. It will be illuminated when the drive option board relay r1 indicates drive is faulted.
S60A	Fault Pilot Light	IB	This amber pilot light will be door mounted. For NEMA 3R enclosures with optional HIM cover, it will be located outside of the cover. It will be illuminated when the drive option board relay r1 indicates drive is faulted.
S68	Speed Potentiometer (1 Turn)	IB, S51	This potentiometer will be door mounted. For NEMA 3R enclosures with optional HIM cover, it will be located outside of the cover. When the HOA selector switch is in the "Hand" position, this pot will provide the speed reference. (unipolar only)
S53	Control Power On Pilot Light	–	This white pilot light will be door mounted. For NEMA 3R enclosures with optional HIM cover, it will be located outside of the cover. It will be illuminated whenever control power is present.
S54	Drive & Bypass Mode Pilot Lights	B1	These amber pilot lights will be door mounted. For NEMA 3R enclosures with optional HIM cover, it will be located outside of the cover. When the Drive/Off/Bypass switch is in the "Drive" position, the "Drive" light will illuminate. When the Drive/Off/Bypass switch is in the "Bypass" position, the "Bypass" light will illuminate.
S66	Drive/Bypass Disable Mushroom Push Button	S66	This push-pull button will be door mounted. For NEMA 3R enclosures with optional HIM cover, it will be located outside of the cover. When in the depressed position, the drive enable input, drive output contactor, and bypass contactor will be disabled/opened.

Notes:

- Pilot lights are incandescent transformer type
- All devices operate at 120 VAC unless otherwise specified

Drive Parameter Settings for Operator Devices

If certain operator devices are selected, the associated drive parameters must be configured as directed in this table to be sure the drive operates correctly.

Option Code	Port	Parameter	Value	Description
S51	0 (Drive)	P163	5000100	Digital Input Run = Port 5 DIO
		P174	5000102	Digital Input Speed Sel 1 = Port 5 DIO
		P550	500050	Speed Ref B Sel = Analog 0 For Auto
		P545	872	Speed Ref A Sel = Door HIM
S68		P545	500060	Speed Ref A Sel = Potentiometer
S51, Not 3, 5, 6 or 7		P545	500050	Speed Ref A Sel = Analog 0 for Hand-held HIM
S59	5	P10	93501	Drive Active
S60		P20	93507	Drive Fault

Power Conditioning

In general, PowerFlex 750-Series drives are suitable for direct connection to a correct voltage AC line that has a minimum impedance of 0.5% relative to the rated drive input kVA. If the line has lower impedance, a line reactor or isolation transformer must be added in front of the drive to increase line impedance. If the line impedance is too low, transient voltage spikes or interruptions can create excessive current spikes that may cause nuisance input fuse blowing or damage to the drive power structure, or both.

The basic rules for determining if a line reactor or isolation type transformer is required are as follows:

- If the AC input power system is not solidly grounded (i.e. high resistive ground or ungrounded) an isolation transformer with the neutral of the secondary grounded is highly recommended. If the line-to-ground voltages on any phase can exceed 125% of the nominal line-to-line voltage, an isolation transformer with the neutral of the secondary grounded, is always required.
- If the AC line supplying the drive has power factor correction capacitors that are switched in and out, an isolation transformer is recommended between the capacitors and drive. If the capacitors are permanently connected and not switched, the general rules for impedance mismatch above apply.
- An isolation transformer or input line reactor is recommended. Line reactors can be ordered installed in the drive enclosure. Isolation transformer are typically installed external to the enclosure.

Option		Description
L1	3% Input Line Reactor	This option provides an open core drive input line reactor that mounts inside the drive enclosure. Typical impedance is 3%.
L2	3% Output Load Reactor	This option provides an open core drive output load reactor, which mounts inside the drive enclosure. Typical impedance is 3%.
L3	5% Input Reactor	This option provides an open core drive input line reactor that mounts inside the drive enclosure. Typical impedance is 5%.
L4	5% Output Reactor	This option provides an open core drive output load reactor, which mounts inside the drive enclosure. Typical impedance is 5%.

Agency Certification - Codes and Standards

Agency	Description
CSA	CSA Standards

Drawings

One set of schematics [279 x 432 mm (11 x 17 in.)] is shipped in the cabinet. PDF and AutoCAD versions are available upon request.

Enclosure Information

Guidelines

The information in this document may be useful in making some pre-installation decisions. Consideration should be given to enclosure type (environment), enclosure size (mounting area available and mounting convention), panel layouts (customer wiring connection locations and extra customer mounting area), terminal block descriptions and catalog number definition.

Approximate Dimensions

NEMA/UL Type 3R, 1 Hp Normal Duty. . . 15 Hp Normal Duty (Families 1 and 2)

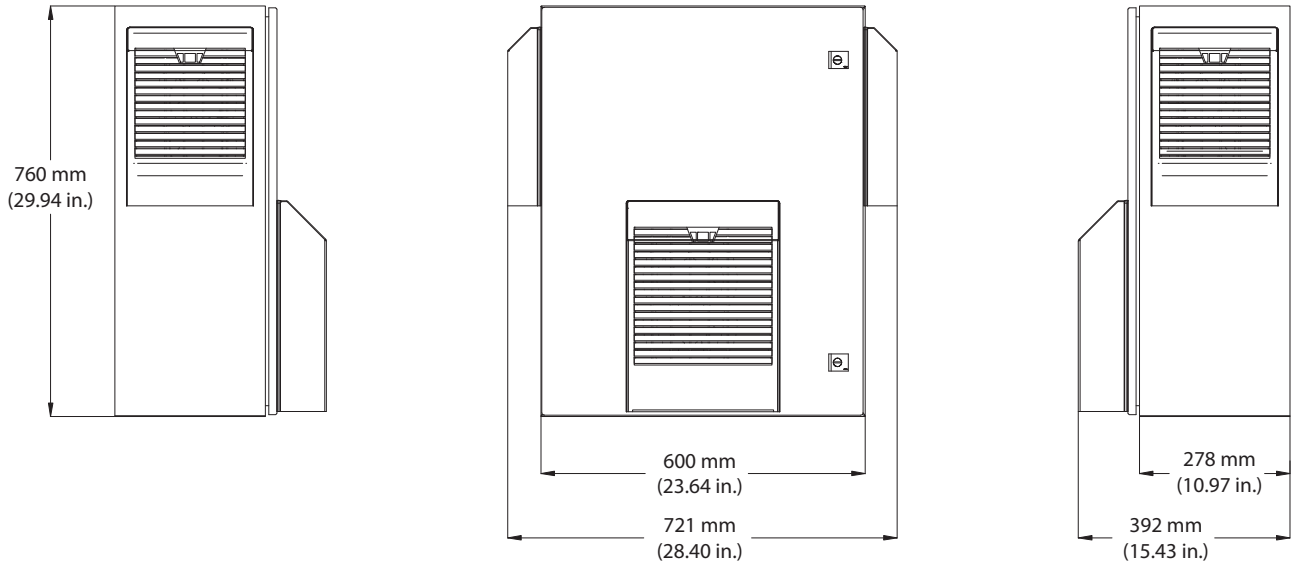

NEMA/UL Type 3R, 15 Hp Heavy Duty. . . 30 Hp Normal Duty (Family 3)

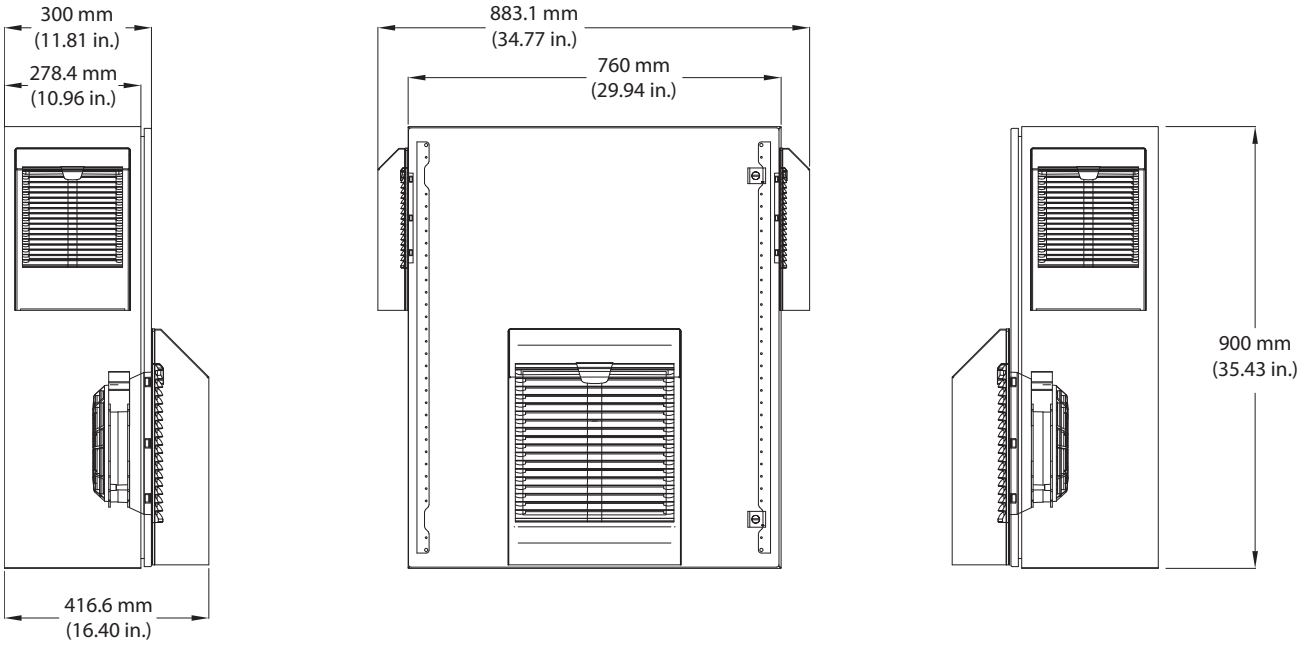

NEMA/UL Type 3R, 30 Hp Heavy Duty. . . 50 Hp Normal Duty (Family 4)

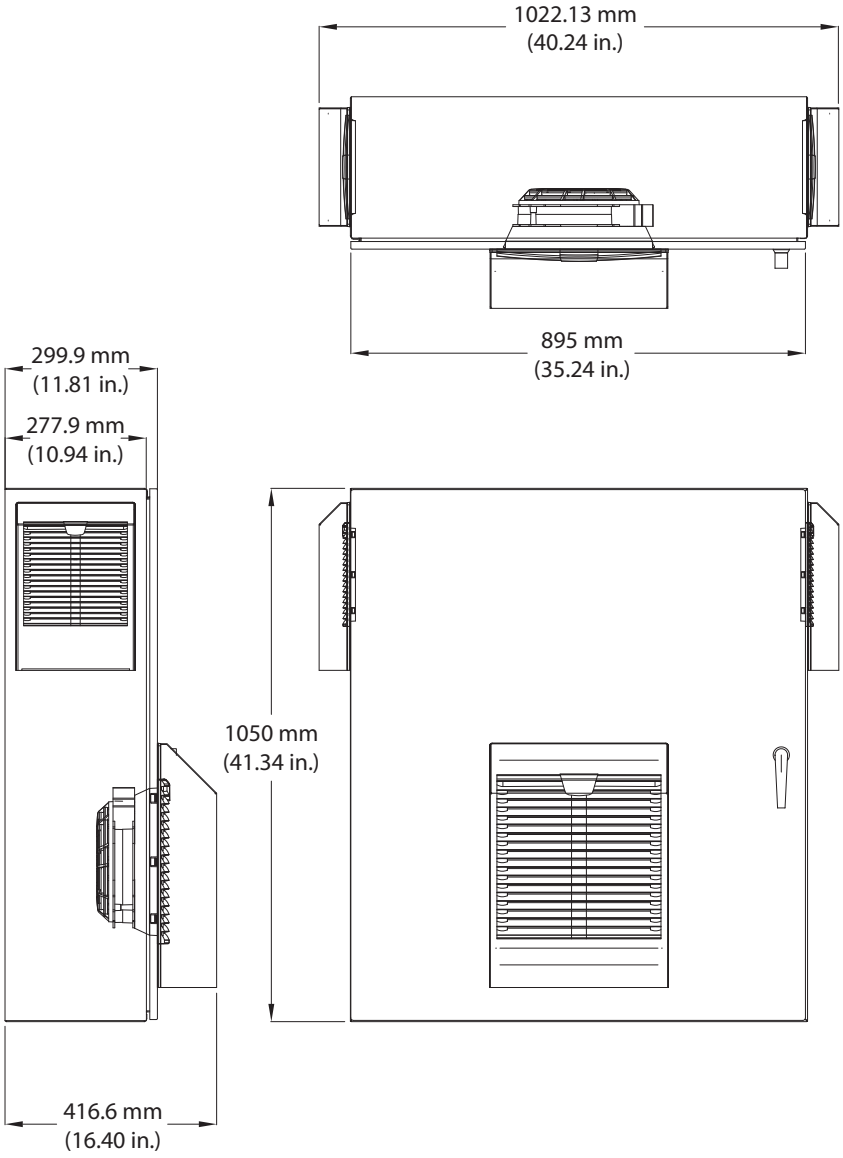

NEMA/UL Type 3R, 50 Hp Normal Duty. . .75 Hp Heavy Duty (Family 5)

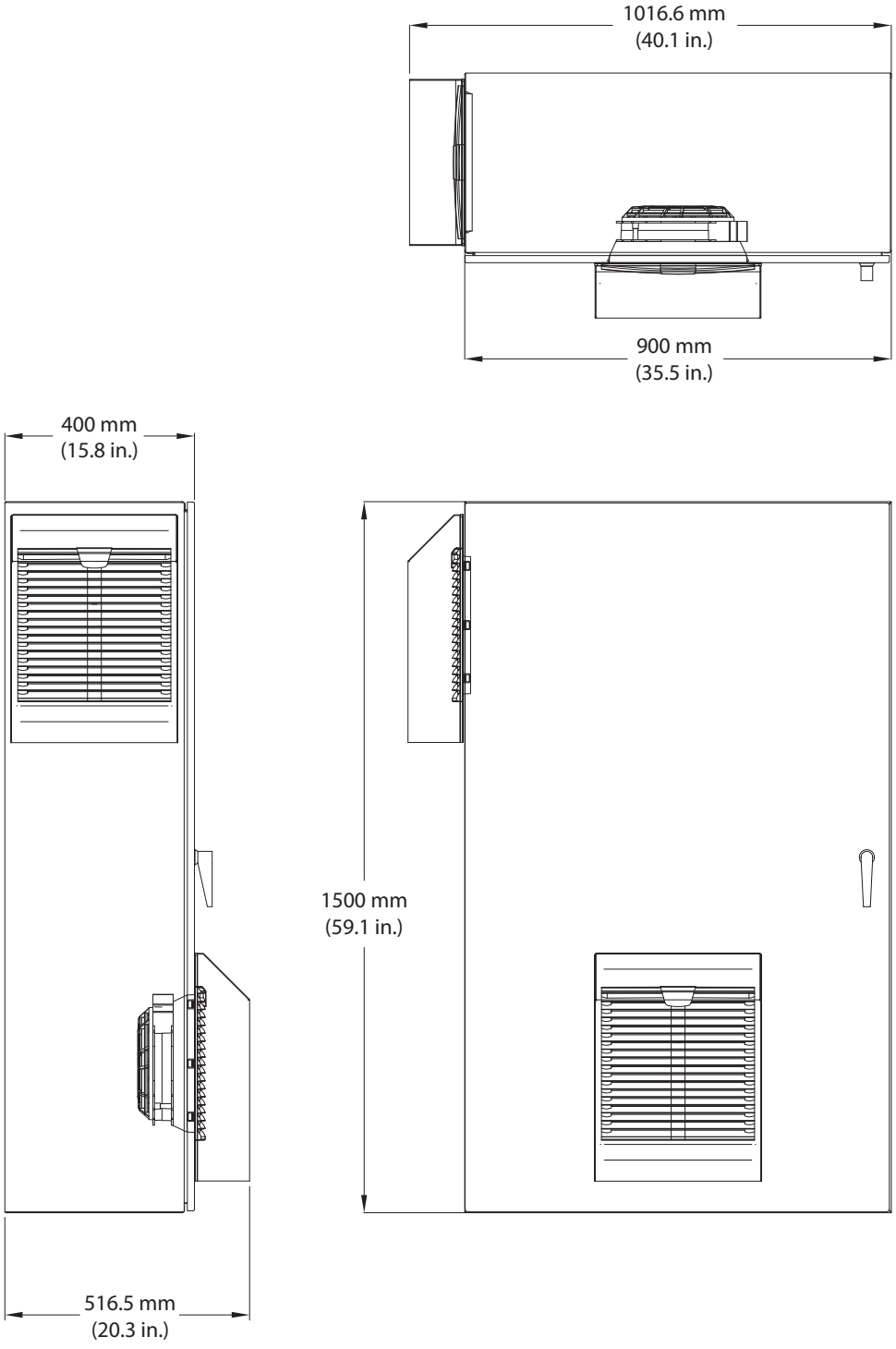

NEMA/UL Type 3R, 100 Hp Normal Duty. . . 200 Hp Normal Duty (Family 6)

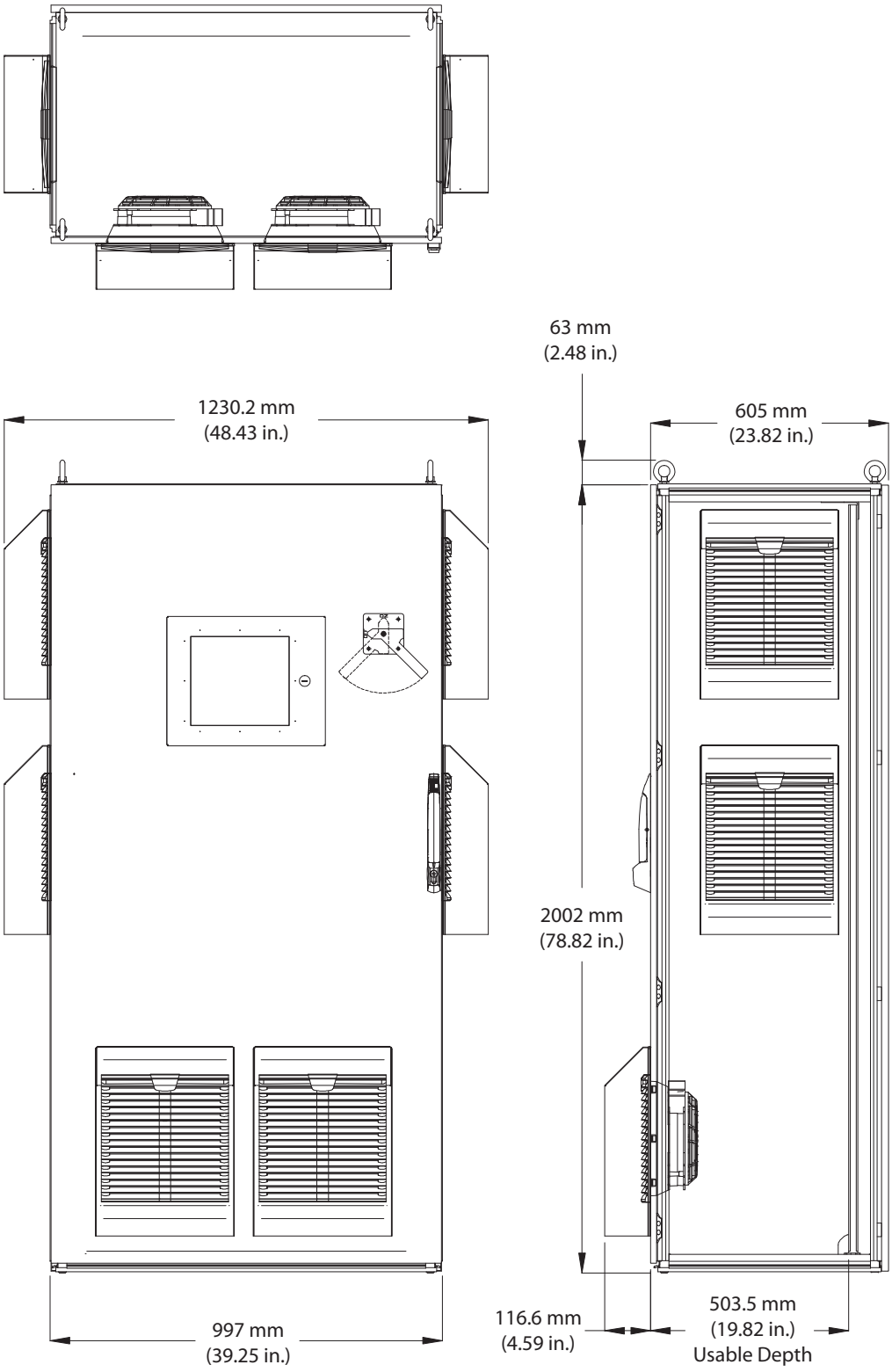

NEMA/UL Type 3R, 250 Hp Heavy Duty. . . 350 Hp Normal Duty (Family 7)

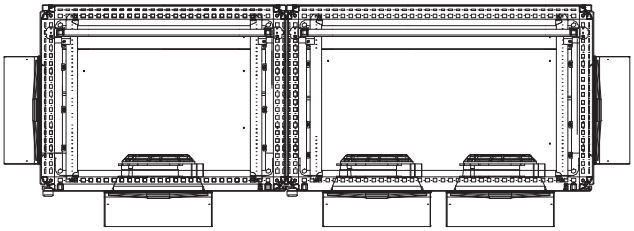

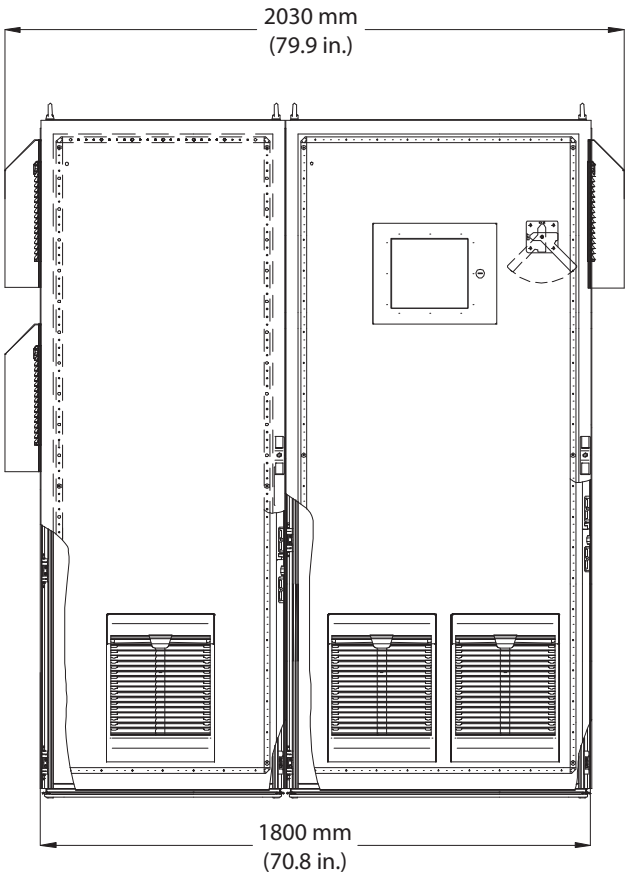

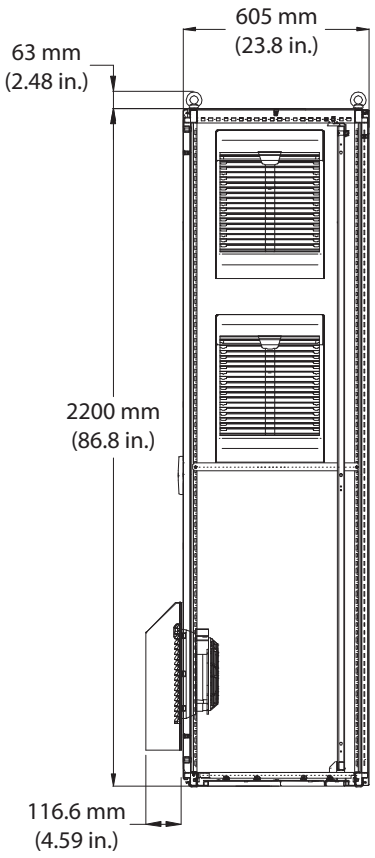

NEMA/UL Type 1 and 12, 1 Hp Normal Duty. . . 15 Hp Normal Duty (Families 1 and 2)

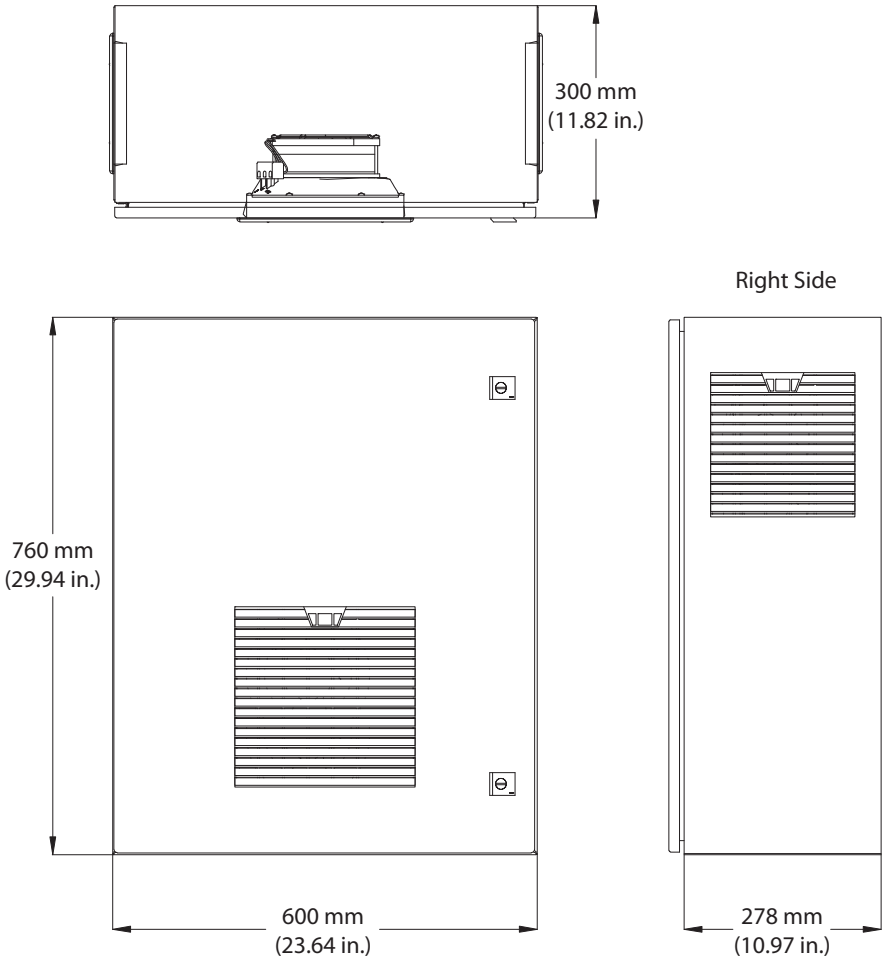

NEMA/UL Type 1 and 12, 15 Hp Heavy Duty. . .30 Hp Normal Duty (Family 3)

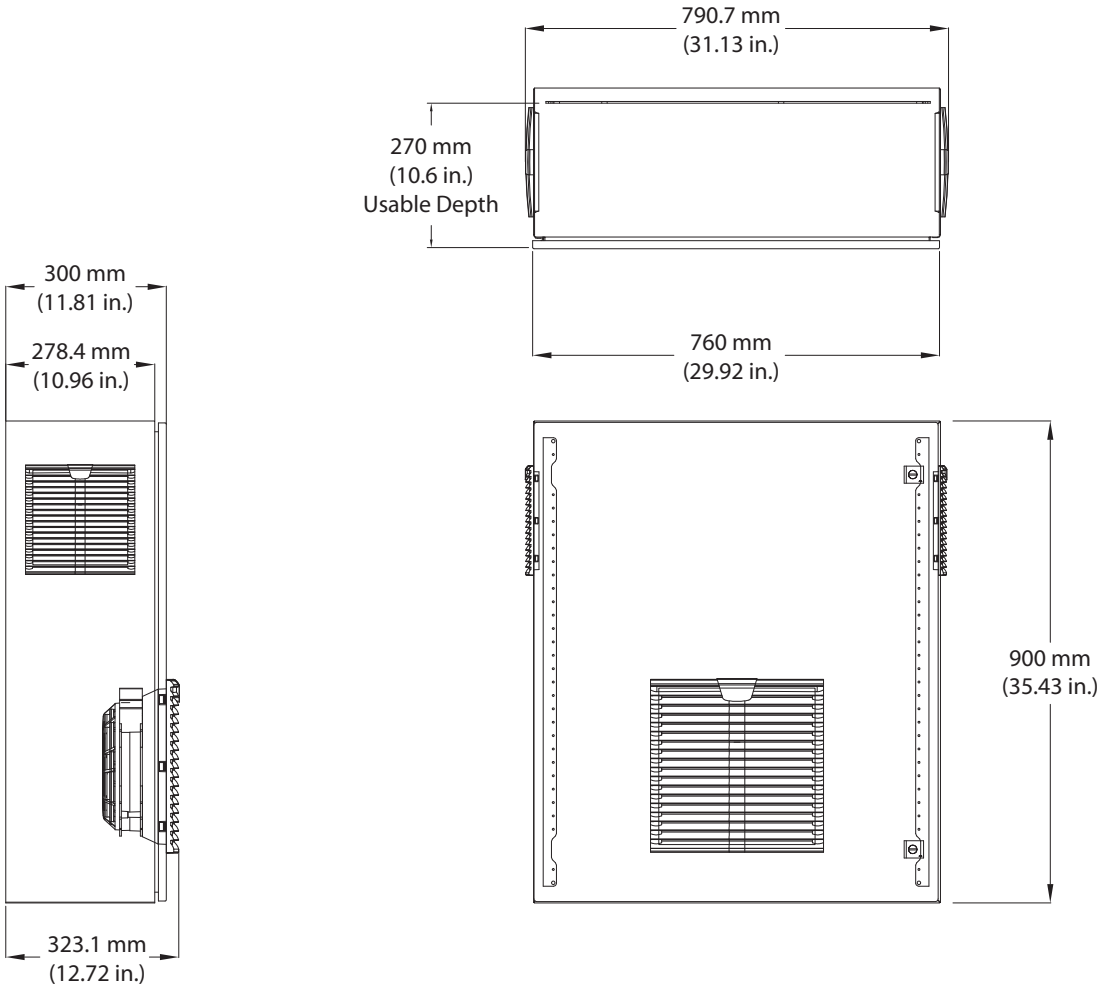

NEMA/UL Type 1 and 12, 30 Hp Heavy Duty. . . 50 Hp Normal Duty (Family 4)

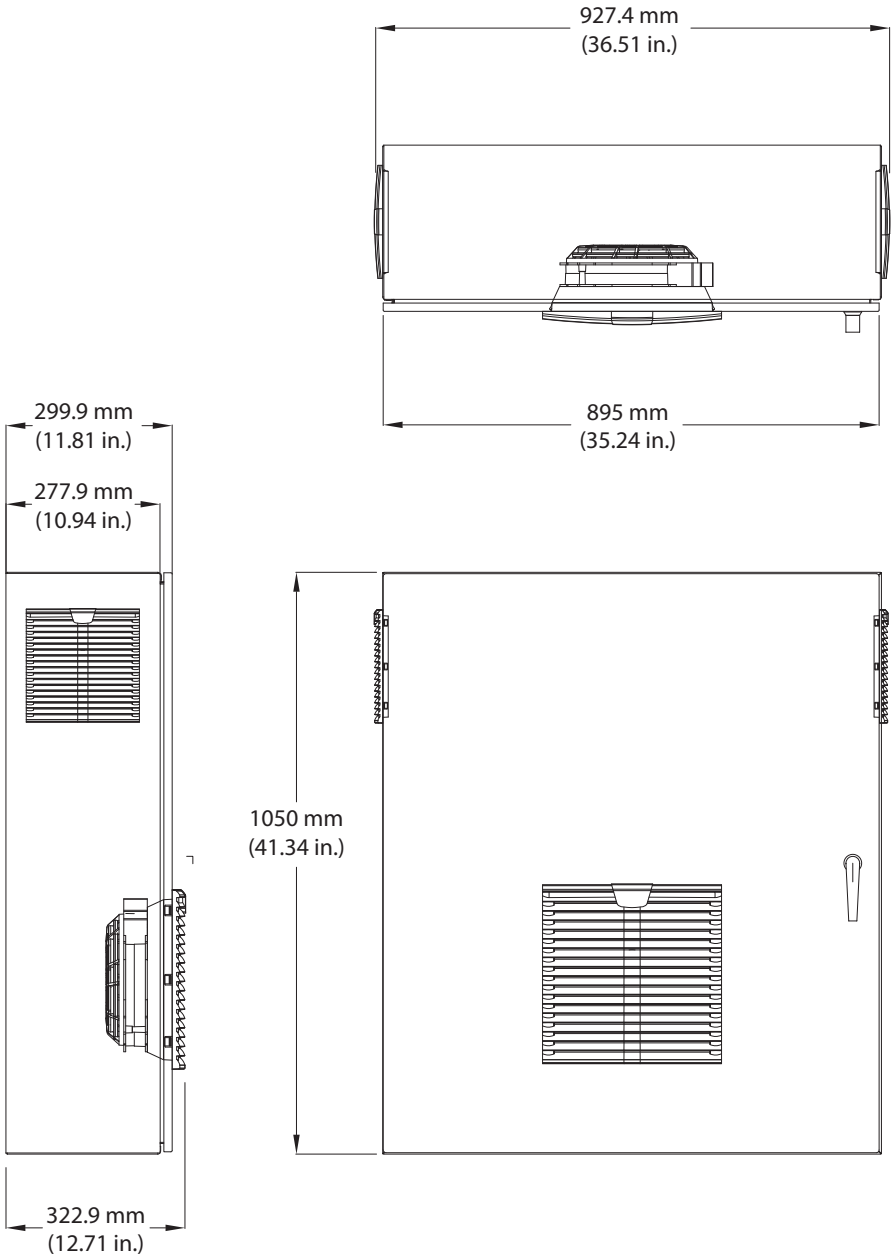

NEMA/UL Type 1 and 12, 50 Hp Normal Duty. . . 75 Hp Heavy Duty (Family 5)

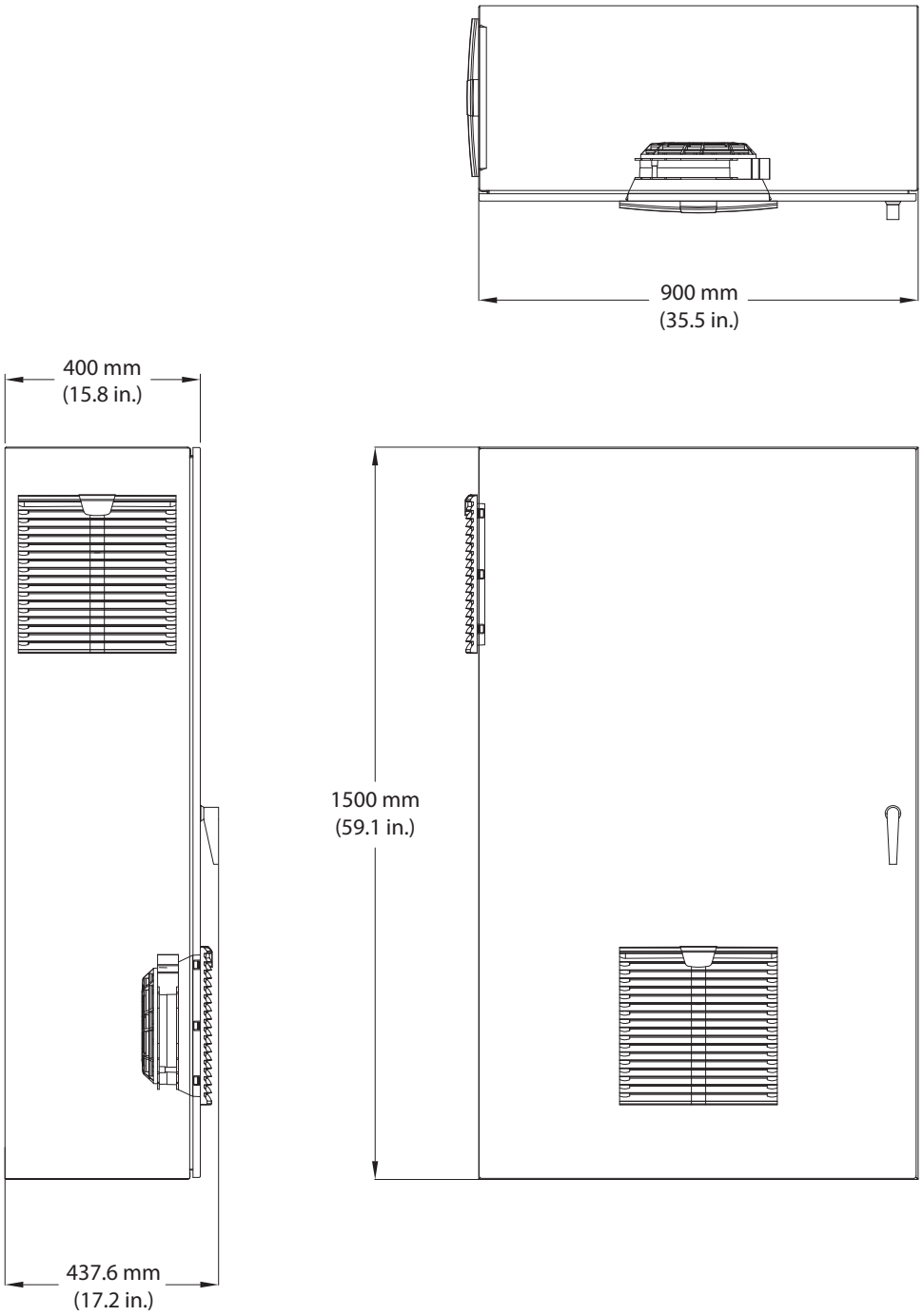

NEMA/UL Type 1 and 12, 100 Hp Normal. . .200 Hp Normal Duty (Family 6)

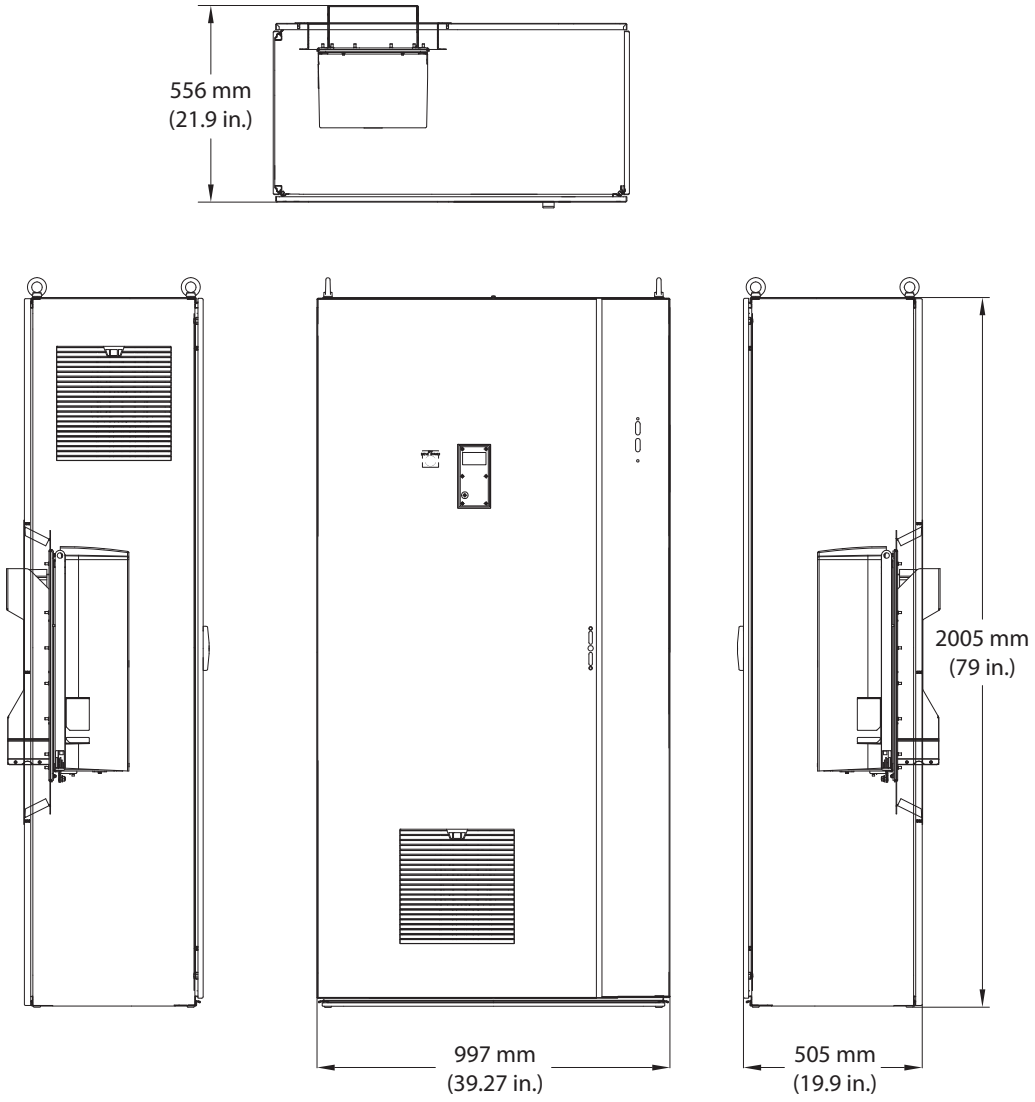

NEMA/UL Type 1 and 12, 250 Hp Heavy Duty. . . 350 Hp Normal Duty (Family 7)

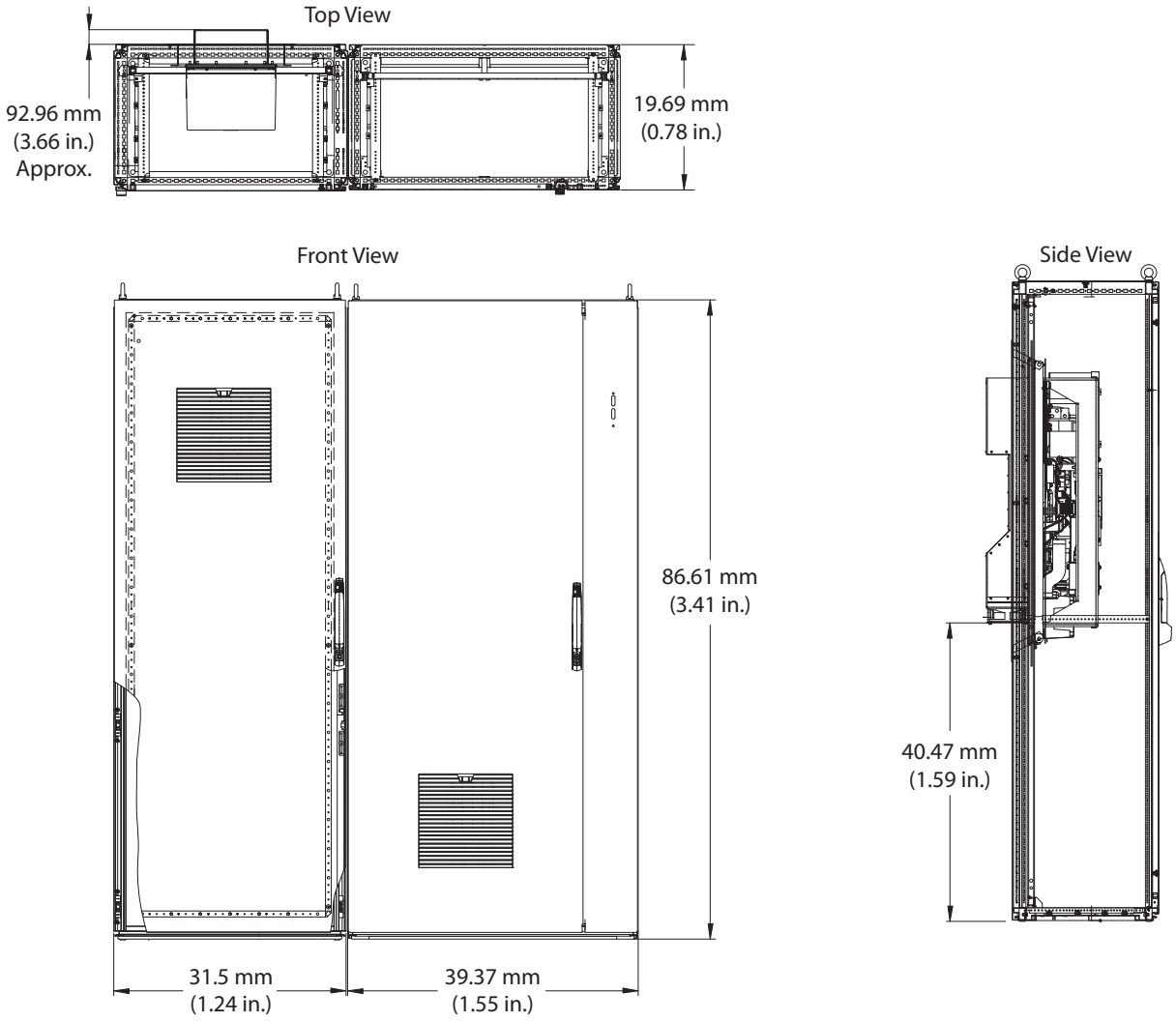

Rockwell Automation Support

Rockwell Automation provides technical information on the Web to assist you in using its products. At http://www.rockwellautomation.com/support, you can find technical manuals, technical and application notes, sample code and links to software service packs, and a MySupport feature that you can customize to make the best use of these tools. You can also visit our Knowledgebase at http://www.rockwellautomation.com/knowledgebase for FAQs, technical information, support chat and forums, software updates, and to sign up for product notification updates.

For an additional level of technical phone support for installation, configuration, and troubleshooting, we offer TechConnect^{SM} support programs. For more information, contact your local distributor or Rockwell Automation representative, or visit http://www.rockwellautomation.com/support/.

Installation Assistance

If you experience a problem within the first 24 hours of installation, review the information that is contained in this manual. You can contact Customer Support for initial help in getting your product up and running.

United States or Canada	1.440.646.3434
Outside United States or Canada	Use the Worldwide Locator at http://www.rockwellautomation.com/rockwellautomation/support/overview.page, or contact your local Rockwell Automation representative.

New Product Satisfaction Return

Rockwell Automation tests all of its products to help ensure that they are fully operational when shipped from the manufacturing facility. However, if your product is not functioning and needs to be returned, follow these procedures.

United States	Contact your distributor. You must provide a Customer Support case number (call the phone number above to obtain one) to your distributor to complete the return process.
Outside United States	Please contact your local Rockwell Automation representative for the return procedure.

Documentation Feedback

Your comments will help us serve your documentation needs better. If you have any suggestions on how to improve this document, complete this form, publication RA-DU002, available at http://www.rockwellautomation.com/literature/.

Medium Voltage Products, 135 Dundas Street, Cambridge, ON, N1R 5X1 Canada, Tel: (1) 519.740.4100, Fax: (1) 519.623.8930
Online: www.ab.com/mvb

Allen-Bradley, Rockwell Software, Rockwell Automation, and TechConnect are trademarks of Rockwell Automation, Inc.
Trademarks not belonging to Rockwell Automation are property of their respective companies.

www.rockwellautomation.com

Power, Control and Information Solutions Headquarters
Americas: Rockwell Automation, 1201 South Second Street, Milwaukee, WI 53204-2496 USA, Tel: (1) 414.382.2000, Fax: (1) 414.382.4444
Europe/Middle East/Africa: Rockwell Automation NV, Pegasus Park, De Kleetlaan 12a, 1831 Diegem, Belgium, Tel: (32) 2 663 0600, Fax: (32) 2 663 0640
Asia Pacific: Rockwell Automation, Level 14, Core F, Cyberport 3, 100 Cyberport Road, Hong Kong, Tel: (852) 2887 4788, Fax: (852) 2508 1846

Publication 750-TD002B-EN-P - February 2013
Supersedes Publication 750-TD002A-EN-P - October 2012

Copyright © 2013 Rockwell Automation, Inc. All rights reserved. Printed in Canada.

PowerFlex® 750-Series AC Drives
The Power and Control You Need

With a complete power range of 0.75 to 1500 kW (1 to 2000 Hp) and 400/480 and 600/690 volt availability, the PowerFlex 750-Series is a comprehensive drive family providing productivity-enhancing benefits to a wide range of global applications.

The PowerFlex 753 and 755 AC drives offer more selection for control, communications, safety and supporting hardware options than any other drives in their class.

The PowerFlex 750-Series of AC drives was designed with your needs in mind. Your need for flexibility, productivity and ease of use has been considered in every detail of these drives. The result is a family of AC drives that provides an exceptional user experience, from initial programming through operation.

This robust family of AC drives offers high performance for a wide variety of industrial applications. The PowerFlex 753 provides general purpose control for applications ranging up to 350 Hp/250 kW while the PowerFlex 755 provides maximum flexibility and performance up to 2000 Hp/1500 kW.

Consider these key features of the PowerFlex 750-Series drives and how they can help you maximize your productivity:

Simplified Integration with Logix – The PowerFlex 753 and 755 offer seamless integration into the Logix environment for simplified and enhanced configuration, programming, commissioning, diagnostics and maintenance. Using either Add-on Profiles or embedded instructions*, you'll be able to reduce engineering time – and related costs – while improving the configuration, control and collection of data.

Communications – The PowerFlex 750-Series supports a comprehensive range of network protocols to ease integration into your architecture. The PowerFlex 755 features an embedded EtherNet/IP™ port, allowing you to easily manage drive data over EtherNet/IP networks. In addition, a dual-port EtherNet/IP option module for the PowerFlex 750-Series provides flexible and cost-effective ways to apply EtherNet/IP, including Device Level Ring functionality.

Safe Torque-off and Safe Speed Monitor – Help protect personnel and equipment while reducing machine downtime with safety solutions up to and including PLe/SIL, Cat 3 and Cat 4. These safety options provide a choice for safety levels depending on your application requirements.

DeviceLogix™ – Controls outputs and manages status information locally within the drive, allowing you to operate the drive independently or complementary to supervisory control.

Configure for Your Application – Each drive has a slot-based hardware architecture that reduces unnecessary add-ons and gives you the flexibility to select option cards to suit your application and expand your drive for future needs. Supported hardware control options are common for the series to help reduce your inventory and spare parts requirements.

Predictive Diagnostics – Prevent unplanned downtime with predictive diagnostics and built-in protection features to help guard your investment. These settings allow the PowerFlex 750-Series to keep track of information that affects the life of the drive components. PowerFlex 755 drives 250 kW/350 Hp and larger have additional diagnostic features including built-in protection devices.

Application-matched Packaging – Gain additional flexibility with packaging options that address a range of application and environmental protection requirements.

Feedback – Options include Universal, Encoder and Dual Encoder feedback options. The Universal Feedback option includes multiple feedback interfaces to support a wide range of applications. Interfaces supported are Incremental, EnDat and Hiperface for Stegmann and Heidenhain high resolution feedback, SSI and BiSS for rotary and linear applications. The drives also provide automatic feedback loss switchover.

* PowerFlex 755 uses embedded instructions

PowerFlex 753 AC Drive

The PowerFlex 753 is ideal for general purpose applications requiring speed or torque control up to 250 kW/350 Hp. Embedded I/O along with three option slots for safety, feedback, communications, 24V power or additional I/O make the drive a flexible, cost-effective solution.

PowerFlex 755 AC Drive

PowerFlex 755 is ideal for applications requiring positioning, speed or torque control up to 1500 kW/2000 Hp. The PowerFlex 755 is easily integrated with the embedded Ethernet port and has five option slots to support additional options for feedback, I/O, safety, communications, and auxiliary 24V DC control power.

The PowerFlex 755 AC drive can be integrated with a ControlLogix® or CompactLogix™ Programmable Automation Controller (PAC) via drive instructions that are actually embedded in the PAC. This level of integration is specific to PowerFlex 755 drives on EtherNet/IP.

	PowerFlex 753	PowerFlex 755
400/480V 600V 690V	0.75 to 250 kW/1.0 to 350 Hp 1.0 to 300 Hp 7.5 to 250 kW	0.75 to 1400 kW/1.0 to 2000 Hp 1.0 to 1500 Hp 7.5 to 1500 kW
Logix Integration	• Automatic Device Configuration (with 20-750-ENETR and Studio 5000**) • Add-on Profiles	• Embedded instructions in Studio 5000** • Automatic Device Configuration (with embedded port or 20-750-ENETR, and Studio 5000**) • Add-on Profiles
DeviceLogix Control Technology	✓	✓
Safety Options: Safe Torque-Off, Safe Speed Monitor	✓	✓
Predictive Diagnostics	✓	✓
Option Slots	3	5 (3 for frame 1)
Communications	Option modules available for: • EtherNet/IP™ • Dual-port EtherNet/IP • ControlNet™ • DeviceNet™ • And a variety of industrial networks	Embedded Ethernet port standard Option modules available for: • Dual-port EtherNet/IP • ControlNet • DeviceNet • And a variety of industrial networks
I/O	Embedded I/O standard • 3 Digital Inputs, 1 Relay Output, 1 Transistor Output, 1 Analog Input, 1 Analog Output, 1 PTC Input • Option cards for additional I/O	1 Digital Input standard • Option cards for additional I/O
Motor Types	• Induction Motors • Permanent Magnet Motors (Interior)	• Induction Motors • Permanent Magnet Motors (Surface and Interior)
Positioning	• Indexing	• Indexing • PCamming • Electronic Gearing • Position/Speed Profiling
Feedback	• Incremental	• Incremental • EnDat, Hiperface, SSI and BiSS • Absolute
Application Sets	Oil Well • Pump Jack & Pump Off Fibers • PJump & Traverse	Lifting • Torqprove* Oil Well • Pump Jack & Pump Off Fibers • PJump & Traverse
Conformal Coating	✓	✓

* See publication PFLEX-BR009 for more information on crane/hoist applications.

** Also previous versions of RSLogix 5000 software.

PowerFlex 750-Series AC Drive

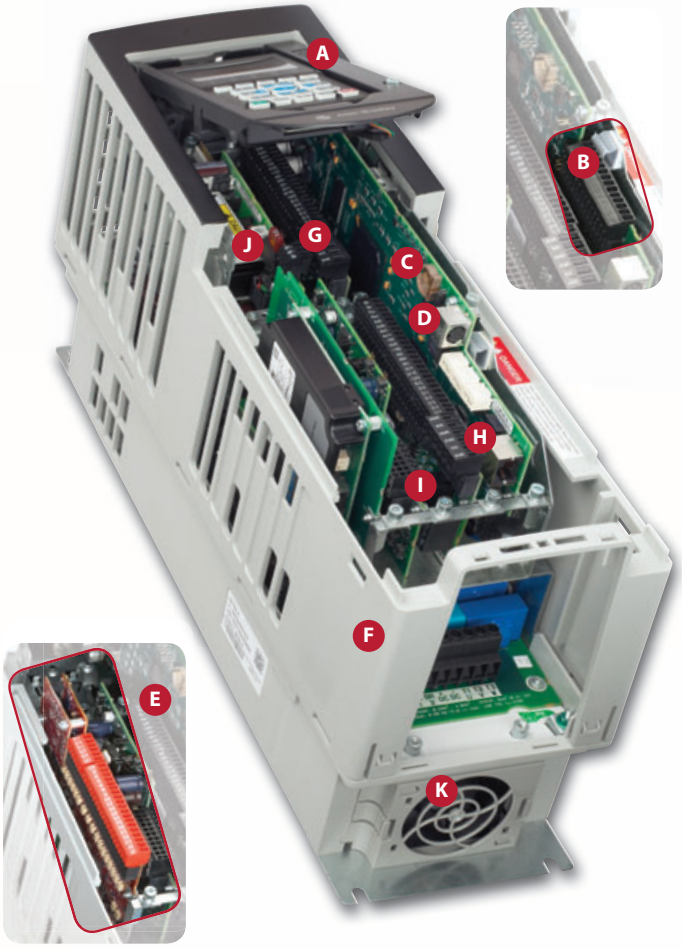

- **A** High-definition LCD display allows for six lines of text for more meaningful explanations of parameters and events.
- **B** Standard I/O on the PowerFlex 753 provides a cost-effective solution.
- **C** Real-time clock provides time-stamped events vs. run-time data.
- **D** Additional DPI for expanded programming capability.
- **E** Increase safety performance levels with the Safe Speed Monitor option card which includes an embedded safety relay.
- **F** Packaging options to meet application requirements.
- **G** DeviceLogix embedded control technology provides function block programming for stand-alone control of basic applications.
- **H** Easily configure, control and collect drive data with standard embedded Ethernet port on the PowerFlex 755.
- **I** Slot-based mechanical architecture to support additional options for I/O, feedback, safety, communications and auxiliary power supply.
- **J** Optional Auxiliary Power Supply maintains control and communications in event that main power is not present.
- **K** Easily assessable heat sink and internal fans.

e-Tools Simplify and Enhance Use of PowerFlex 750-Series Drives

Add-on Profiles

For simplified AC drive start-up and reduced development time, we've integrated Allen-Bradley® PowerFlex drive configuration with Studio 5000™ Logix Designer software (formerly RSLogix™ 5000). This single-software approach simplifies parameter and tag programming while still allowing stand-alone drive software tool use on the factory floor.

Embedded Instructions

The PowerFlex 755 AC drive can be configured with drive instructions embedded in Allen-Bradley ControlLogix and CompactLogix Programmable Automation Controllers (PAC). These are the same configuration parameters and programming instructions used by Allen-Bradley Kinetix® servo drives, providing a common, enhanced user experience.

DriveTools™ SP Software Suite

A powerful PC-based software suite, for programming, configuring and troubleshooting.

- DriveExecutive™ – for online/offline configuration and management of drives and drive peripherals
- DriveObserver™ – for real-time trending of drive information

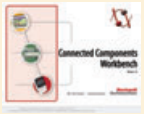

Connected Components Workbench™

Programming and configuration software supports all PowerFlex drives, Micro800™ controllers and PanelView™ component graphic terminals. This software leverages proven Rockwell Automation and Microsoft® Visual Studio® technologies for fast and easy controller programming, drive configuration and integration with the HMI editor.

PowerFlex 755 Floor Mount AC Drives

In addition to all the options and benefits available in the PowerFlex 750-Series, the PowerFlex 755 drives 250 kW/350 Hp and larger offer added benefits for maintenance and installation flexibility.

1. Control pod is common with smaller ratings providing embedded Ethernet port and 5 slots for option modules, and can be remote mounted (up to 23 m) for hassle-free access to low voltage control.
2. Roll in/out design makes the drive easy to install and service by allowing complete removal from cabinet, providing generous room for wiring behind the drive. Power wiring can stay connected while unit is rolled out.
3. Adjustable terminals provide flexibility for wiring preferences such as top or bottom entry.
4. Integrated fusing eliminates need for separately mounted drive short circuit protection. Status is reported from the drive to ease troubleshooting.
5. Replaceable surge protector reduces downtime after incoming transient voltage events. Status is reported from the drive to ease troubleshooting.
6. Integrated DC link inductor enhances protection from power system events, and reduces input harmonics.
7. Sealed cooling channel uses external air for main cooling, reducing contamination exposure for electronics.
8. Modular construction allows fast and easy replacement of parts (e.g., main blower, capacitor assembly, circuit boards), minimizing production downtime.

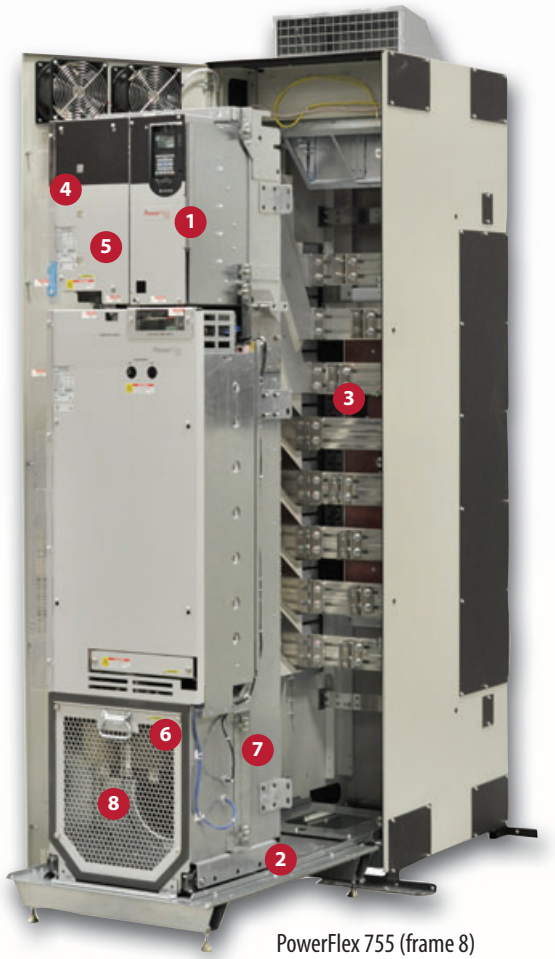

PowerFlex 755 (frame 8)
250 to 500 kW/350 to 600 Hp

PowerFlex 755 Drives with Option Bays

All PowerFlex 755 floor mount drives are available with a power option bay which provides a cost-effective solution for power disconnect and other popular power options. Based on customer specifications, components are correctly sized and optimized for the appropriate overload duty rating. By eliminating the need for accessory sizing and the possibility of installation errors, the option bay helps to reduce engineering and installation time and costs. Option Bays are available with both IP20 and IP54 environmental ratings.

View a video on the benefits of the PowerFlex 755 at:
http://ab.rockwellautomation.com/Drives/PowerFlex-755

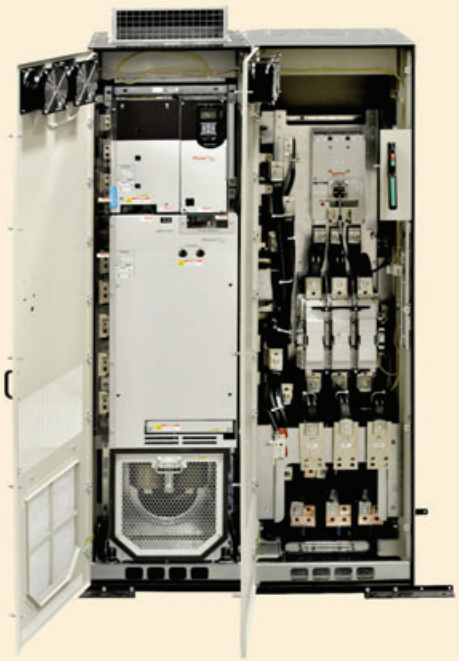

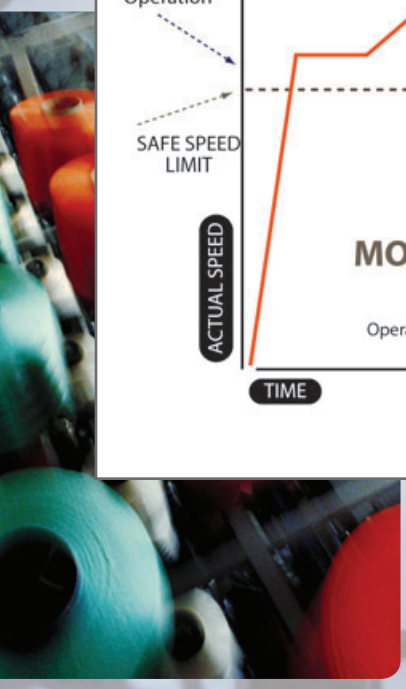

Safety

To help you protect personnel and assets while improving machine uptime, the PowerFlex 750-Series is available with two safety options:

1. Safe Torque-Off option or
2. Safe Speed Monitor option.

Safe Torque-Off is ideal for safety-related applications requiring removal of rotational power to the motor without removing power from the drive. Safe Torque-Off functionality offers the benefit of quick start-up after a demand on the safety system, helps reduce wear from repetitive start-up, and provides safety ratings up to and including SIL, PLe, and CAT 3.

The Safe Speed Monitor option provides a solution for applications that can benefit from access to a safety zone while there is limited motion. It helps you safely monitor and control the speed of your application, which allows operators to perform process or maintenance work without stopping the machine.

In addition, Safe Speed Monitor has an integrated monitoring relay to save additional panel-space installation labor. This option carries a safety rating up to and including SIL, PLe and Cat 4.

The Safe Speed Monitor option provides the following functionality:

- Safe Torque-Off
- Stop Categories 0, 1 and 2
- Safe Stop
- Safe Limited Speed
- Safe Maximum Speed
- Safe Maximum Acceleration
- Safe Direction
- Zero-Speed Monitoring
- Door Control and Monitoring
- Enabling switch input

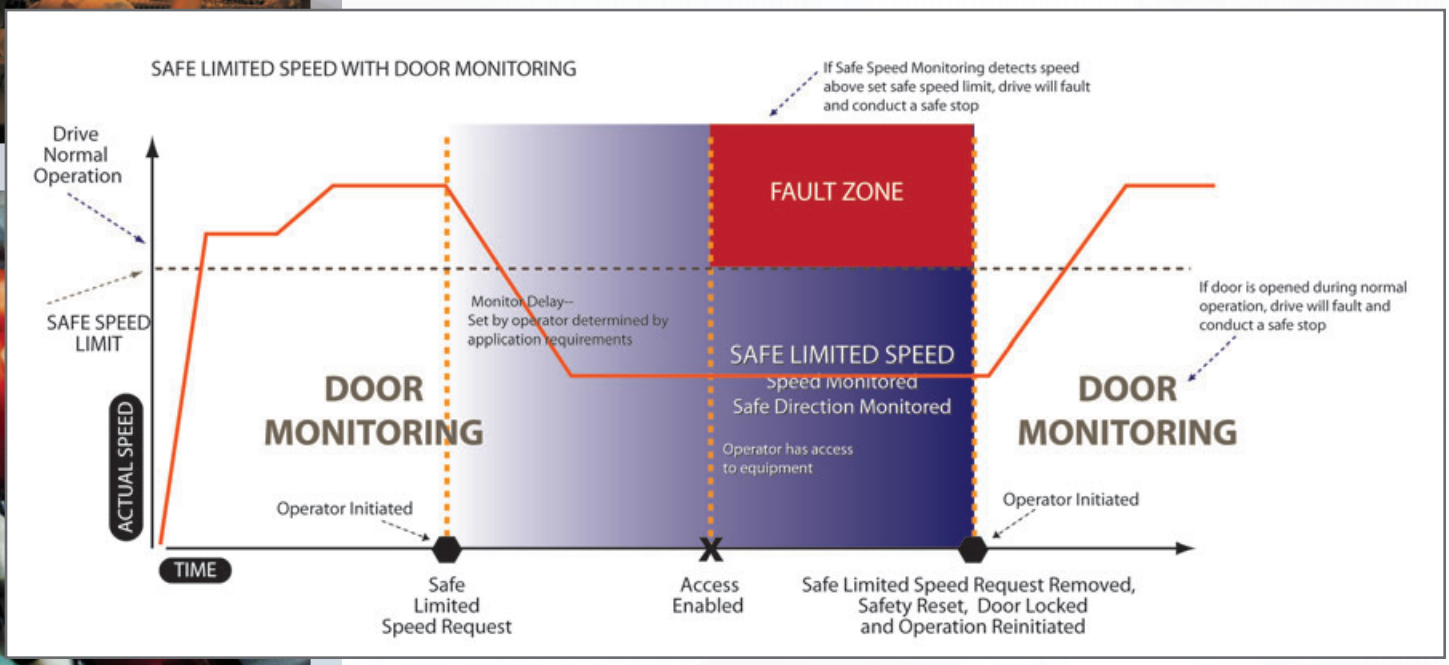

The Right Packaging for Your Application

Because application conditions and environments vary, PowerFlex 750-Series drives are available with a choice of packaging options. From highly flexible IP00 open styles to MCC-style cabinets and other features that help provide additional protection, there's a PowerFlex 750-Series drive with the right packaging to help you meet productivity goals.

PowerFlex 755 Floor Mount Drives with IP00, NEMA/UL Open Type Ratings

The PowerFlex 755 IP00, NEMA/UL Open Type drives are designed to provide packaging flexibility, including the option for either vertical or horizontal mounting orientations. This option is available in PowerFlex 755 floor mount drives with ratings up to 1500 kW/2000 Hp.

PowerFlex 750-Series Drives with IP54/UL Type 12 Ratings

For applications requiring additional protection from harsh environments, PowerFlex 753 and 755 drives are available with IP54/UL Type 12 enclosures. These enclosures help protect the drive from dust and splashing water and are appropriate for moderately harsh indoor environments.

PowerFlex 750-Series drives are available with a variety of enclosure options and ratings including IP00, IP20, IP54 (above left) and an extra protection flange mount (above right).

Enclosure	Rating	Temperature Range	PowerFlex 753	PowerFlex 755
Wall Mount	IP00, IP20, NEMA/UL Open Type	0 – 50 ˚C 32 – 122 ˚F	X	X
Extra Protection Flanged Mount	Front: IP00, IP20 & NEMA/UL Open Type Back: IP66 & NEMA/UL Type 4X	Front: 0 – 50 ˚C 32 – 122 ˚F Back: 0 – 40 ˚C 32 – 104 ˚F	X	X
Extra Protection Wall Mount	IP54 & NEMA/UL Type 12	0 – 40 ˚C 32 – 104 ˚F	X	X
NEMA 1 Kit	Converts Open Type to NEMA/UL Type	0 – 40 ˚C 32 – 104 ˚F	X	X
Floor Mount	IP20, IP54, IP00	0 – 40 ˚C 32 – 104 ˚F		X*

* Floor mount drives are available for PowerFlex 755 higher power ratings (above 250 kW/350 Hp) only.
PowerFlex 755 higher power drives (ratings above 250 kW/350 Hp) are available in IP00, IP20 and IP54 enclosure ratings.

Premier Integration Simplifies Development, Use and Maintenance

By combining the advanced capabilities of the Rockwell Automation Integrated Architecture™ and the communication capabilities of PowerFlex drives, you can achieve an exceptional level of integration between drives and controllers. The benefits of this integration range from reduced development time to simplified maintenance.

To achieve this integration, PowerFlex drives use add-on profiles in Studio 5000™ Logix Designer software (formerly RSLogix™ 5000) to streamline drive installation. Add-on profiles minimize the need to individually program the required parameters and tags. The result is simplified programming, which puts an end to the need to frequently refer back to user manuals for specific parameter and tag information. And all PowerFlex drives on EtherNet/IP are able to take advantage of these add-on profiles.

In addition, Automatic Device Configuration (ADC) support for the PowerFlex 750-Series drives – shown below – helps reduce downtime.

Easy-to-use tools help reduce development time and require no specialized knowledge – Wizards with advanced graphical interfaces walk you through drive parameter configuration.

Eliminate errors associated with using multiple software tools – Single development environment to configure and program your entire Logix drive system.

Access, edit and save drive information to the control system project with ease – Drive configuration is saved as part of the RSLogix project file (*.acd) and is also stored in the Logix controller, so there's no need to store and maintain multiple files – you only need one file.

Easily download global objects and faceplates – You can use the same tag names generated by the drive add-on profiles to utilize global objects and faceplates for a FactoryTalk® View HMI display

Easy to Maintain – Diagnostic, fault, alarm, and event information are integral to Studio 5000.

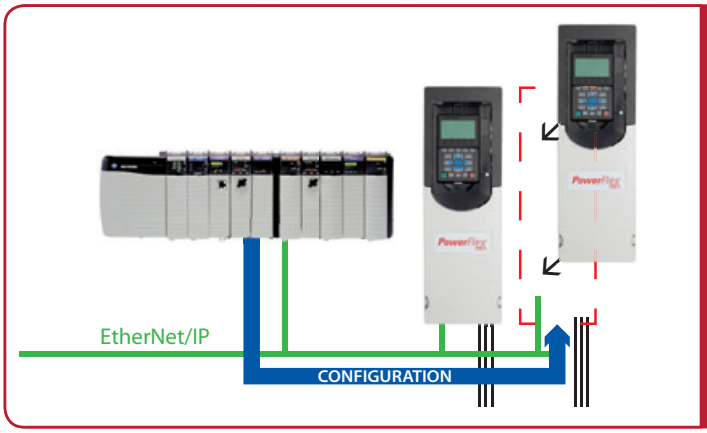

With Automatic Device Configuration (ADC), the Logix controller can automatically detect a replaced PowerFlex 753 or 755 drive and download all configuration parameters, eliminating the need for manual reconfiguration. (PowerFlex 753 AC drives require a dual-port EtherNet/IP communication card for ADC.)

DeviceLogix™ Control Technology

DeviceLogix control technology provides you with the flexibility to customize a drive to more closely match your application needs. DeviceLogix controls outputs and manages status information locally within the drive, allowing you to operate the drive independently or complementary to supervisory control, helping to improve system performance and productivity.

You can use the PowerFlex 750-Series DeviceLogix to:

- Speed reaction time by processing in the drive, which reduces dependency on network throughput
- Provide scaling, selector switches, or other data manipulations not already built into the drive
- Read inputs/write outputs and exclusively control the drive
- Provide an option for decision-making if communication is lost with main controller
- Control other PowerFlex drives via a Peer-to-Peer EtherNet/IP network

DeviceLogix is easily programmed via: RSLogix 5000 and DriveTools SP v 5.01.

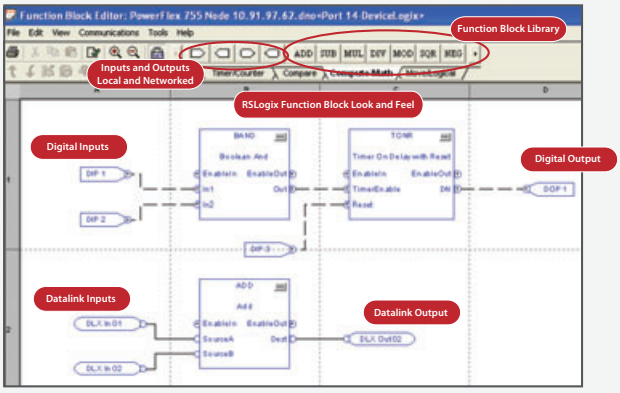

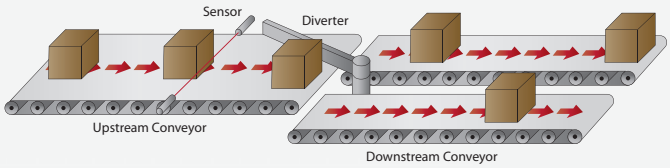

EtherNet/IP – A Single Network for Complete Machine Control

Connect Your Entire Enterprise

Benefit from the EtherNet/IP network for complete machine control that simplifies and enhances machine design.

- Low cost, high performance and easy to use as compared to a multi-network architecture
- Easily integrate any PowerFlex drive, I/O, smart actuators and any other EtherNet/IP connected device
- EtherNet/IP is an established, broadly-adopted network
- The PowerFlex 755 AC drive and Kinetix 6500 servo drive can reside on the same EtherNet/IP network and be programmed with a common set of motor control instructions available in ControlLogix and CompactLogix Programmable Automation Controllers

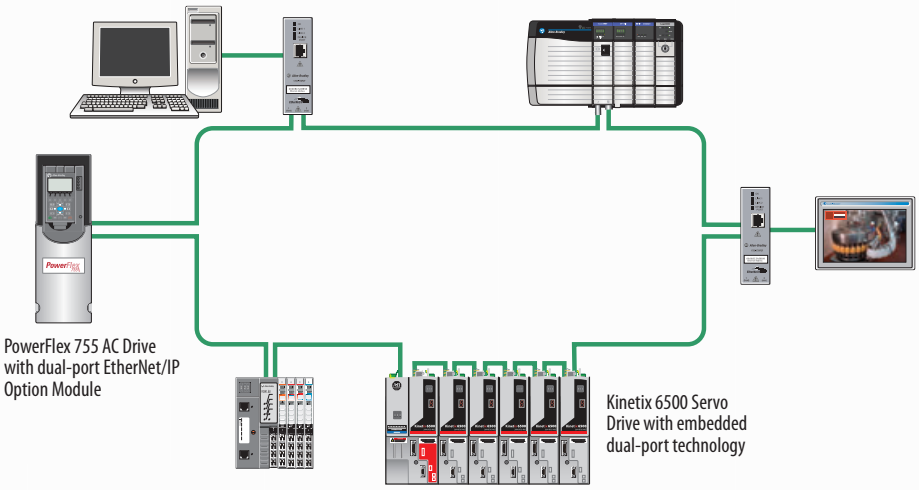

Device Level Ring (DLR) is an ODVA standard and provides fault tolerant connectivity for high drive availability. If one device on the EtherNet/IP network fails, the other devices are able to continue operation.

Dual-port EtherNet/IP Option Module for PowerFlex 750-Series AC Drives

The PowerFlex 750-Series Dual-port EtherNet/IP option module provides flexible and cost-effective ways to apply EtherNet/IP, and supports Ring, Linear and Star topologies as well as DLR functionality. DLR-based networks reduce configuration time and costs by minimizing the number of managed switches and reducing cabling needs. Users can create a single fault-tolerant DLR network that connects all components at the device level locally.

Information can be seamlessly communicated in real time to various levels of an organization, without requiring additional complexity. Getting real-time information at the right time and at the right levels of the manufacturing environment helps you enhance the agility of your business.

This solution supports optimal integration on a DLR level for the PowerFlex 755 via instructions embedded in the Logix controller, further enhancing integration into the Rockwell Automation Integrated Architecture. Only Allen-Bradley drives are able to offer optimal integration into the Integrated Architecture, providing simplified configuration, programming, commissioning, diagnostics and maintenance.

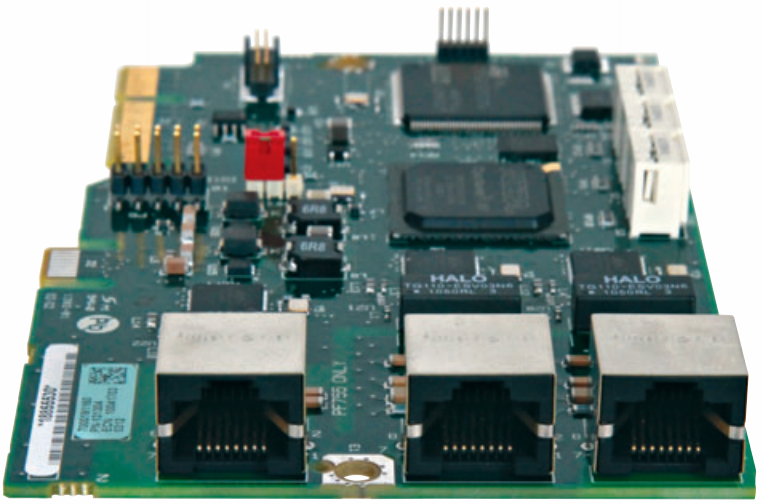

All PowerFlex 755 AC drives have a single embedded Ethernet port. This 750-Series option module provides the benefits of dual-port EtherNet/IP functionality for both the PowerFlex 753 and 755.

PowerFlex 753 and PowerFlex 755 AC Drive Specifications

Frame/Rating Cross-Reference						
	400V AC (540V DC) Input			480V AC (650V DC) Input		
Frame[1]	Amps	Normal Duty kW	Heavy Duty kW	Amps	Normal Duty Hp	Heavy Duty Hp
1	2.1	0.75	0.37	2.1	1	0.5
	3.5	1.5	0.75	3.4	2	1.5
	5	2.2	1.5	5	3	2
	8.7	4	2.2	8	5	3
	11.5	5.5	4	11	7.5	5
	15.4	7.5	5.5	14	10	7.5
2	2.1	0.75	0.75	2.1	1	1
	3.5	1.5	1.5	3.4	2	2
	5	2.2	2.2	5	3	3
	8.7	4	4	8	5	5
	11.5	5.5	5.5	11	7.5	7.5
	15.4	7.5	5.5	14	10	7.5
	22	11	7.5	22	15	10
3	30	15	11	27	20	15
	37	18.5	15	34	25	20
	43	22	18.5	40	30	25
4	60	30	22	52	40	30
	72	37	30	65	50	40
5	85	45	37	77	60	50
	104	55	45	96	75	60
6	140	75	55	125	100	75
	170	90	75	156	125	100
	205	110	90	186	150	125
	260	132	110	248	200	150
7	302	160	132	302	250	200
	367	200	160	361	300	250
	456	250	200	415	350	300

	600V AC, Three-Phase Drives				
	Output Amps[2]				
Frame	Cont.	1 Min.	3 Sec.	Normal Duty Hp	Heavy Duty Hp
3	1.7 (0.9)	1.9 (1.4)	2.6 (2.6)	1	0.5
	2.7 (1.7)	3.0 (2.6)	4.1 (4.6)	2	1
	3.9 (2.7)	4.3 (4.1)	5.9 (7.3)	3	2
	6.1 (3.9)	6.7 (5.9)	9.2 (10.5)	5	3
	9 (6.1)	9.9 (9.2)	12.1 (13.5)	7.5	5
	11 (9)	12.1 (13.5)	16.5 (24.3)	10	7.5
	17 (11)	18.7 (16.5)	25.5 (29.7)	15	10
	22 (17)	24 (26)	33 (46)	20	15
4	27 (22)	30 (33)	41 (59)	25	20
	32 (27)	35 (41)	48 (73)	30	25
5	41 (32)	45 (48)	62 (86)	40	30
	52 (41)	57 (62)	78 (111)	50	40

	600V AC Input					690V AC Input				
	Output Amps[2]			Normal Duty	Heavy Duty	Output Amps[2]			Normal Duty	Heavy Duty
Frame[1]	Cont.	1 Min.	3 Sec.	Hp	Hp	Cont.	1 Min.	3 Sec.	kW	kW
6	12 (9.1)	13.2 (13.7)	18 (18)	10	7.5	12 (9)	13.2 (13.5)	18 (18)	7.5	5.5
	18 (11.1)	19.8 (16.7)	27 (27)	15	10	15 (11.5)	16.5 (17.3)	22.5 (22.5)	11	7.5
	23 (18)	25.3 (27)	34.5 (34.5)	20	15	20 (15)	22 (22.5)	30 (30)	15	11
	24 (22)	26.4 (33)	36 (39.6)	20	20	23 (20)	25.3 (30)	34.5 (36)	18.5	15
	28 (23)	30.8 (34.5)	42 (42)	25	20	30 (23)	33 (34.5)	45 (45)	22	18.5
	33 (28)	36.3 (42)	49.5 (50.4)	30	25	34 (30)	37.4 (45)	51 (54)	30	22
	42 (33)	46.2 (49.5)	63 (63)	40	30	46 (34)	50.6 (51)	69 (69)	37	30
	53 (42)	58.3 (63)	79.5 (79.5)	50	40	50 (46)	55 (69)	75 (82.8)	45	37
	63 (52)	69.3 (78)	94.5 (94.5)	60	50	61 (50)	67.1 (75)	91.5 (91.5)	55	45
	77 (63)	84.7 (94.5)	116 (116)	75	60	82 (61)	90.2 (91.5)	123 (123)	75	55
	99 (77)	109 (116)	149 (149)	100	75	98 (82)	108 (123)	147 (148)	90	75
	125 (99)	138 (149)	188 (188)	125	100	119 (98)	131 (147)	179 (179)	110	90
	144 (125)	158 (188)	216 (225)	150	125	142 (119)	156 (179)	213 (214)	132	110
7	192 (144)	211 (216)	288 (288)	200	150	171 (142)	188 (213)	257 (257)	160	132
	242 (192)	266 (288)	363 (363)	250	200	212 (171)	233 (257)	318 (318)	200	160
	289 (242)	318 (318)	434 (436)	300	250	263 (212)	289 (289)	395 (395)	250	200

1 Frame ratings based on open type cabinet mount enclosures.
2 These drives have dual current ratings; one for normal duty applications, and one for heavy duty applications (in parenthesis). The drive may be operated at either rating.

PowerFlex 755 Floor Mount Drives*

380…400V AC, Three-phase and 540V DC Input Drives

Frame Size	Light Duty				Normal Duty				Heavy Duty			
	Output Amps				Output Amps				Output Amps			
	Cont.	1 Min.	3 Sec.	kW	Cont.	1 Min.	3 Sec.	kW	Cont.	1 Min.	3 Sec.	kW
8	540	594	NA	315	460	506	693	250	385	578	693	200
	585	644		315	540	594	821	315	456	684	821	250
	612	673		355	567	624	851	315	472	708	851	250
	750	825		400	650	715	975	355	540	810	975	315
	796	876		450	750	825	1125	400	585	878	1125	315
	832	915		450	770	847	1155	400	642	963	1155	355
9	1040	1144		560	910	1001	1365	500	750	1125	1365	400
	1090	1199		630	1040	1144	1584	560	880	1320	1584	500
	1175	1293		710	1090	1199	1638	630	910	1365	1638	500
	1465	1612		800	1175	1293	1872	710	1040	1560	1872	560
	1480	1628		850	1465	1612	2198	800	1090	1635	2198	630
	1600	1760		900	1480	1628	2220	850	1175	1763	2220	710
10	1715	1887		1000	1590	1749	2385	900	1325	1988	2385	710
	2330	2563		1400	2150	2365	3225	1250	1800	2700	3225	1000

480V AC, Three-phase and 650V DC Input Drives

Frame Size	Light Duty				Normal Duty				Heavy Duty			
	Output Amps				Output Amps				Output Amps			
	Cont.	1 Min.	3 Sec.	Hp	Cont.	1 Min.	3 Sec.	Hp	Cont.	1 Min.	3 Sec.	Hp
8	485	534	NA	400	430	473	666	350	370	555	666	300
	545	600		450	485	534	745	400	414	621	745	350
	590	649		500	545	600	818	450	454	681	818	350
	710	781		600	617	679	926	500	485	728	926	400
	765	842		650	710	781	1065	600	545	818	1065	450
	800	880		700	740	817	1110	650	617	926	1110	500
9	960	1056		800	800	880	1278	700	710	1065	1278	600
	1045	1150		900	960	1056	1440	800	795	1193	1440	700
	1135	1249		1000	1045	1150	1568	900	800	1200	1568	750
	1365	1502		1100	1135	1249	1728	1000	960	1440	1728	800
	1420	1562		1250	1365	1502	2048	1100	1045	1568	2048	900
	1540	1694		1350	1420	1562	2130	1250	1135	1703	2130	1000
10	1655	1821		1500	1525	1678	2288	1350	1270	1905	2288	1100
	2240	2464		2000	2070	2277	3105	1750	1730	2595	3105	1650

600V AC, Three-phase and 725V DC Input Drives

Frame Size	Light Duty				Normal Duty				Heavy Duty			
	Output Amps				Output Amps				Output Amps			
	Cont.	1 Min.	3 Sec.	Hp	Cont.	1 Min.	3 Sec.	Hp	Cont.	1 Min.	3 Sec.	Hp
8	355	391	NA	350	295	325	490	300	272	408	490	250
	395	435		400	355	391	533	350	295	443	533	300
	435	479		450	395	435	593	400	329	494	593	350
	460	506		500	435	479	639	450	355	533	639	350
	510	561		500	460	506	711	500	395	593	711	400
	545	600		550	510	561	765	500	425	638	765	450
9	690	759		700	595	655	918	600	510	765	918	500
	760	836		800	630	693	1071	700	595	893	1071	600
	835	919		900	760	836	1140	800	630	945	1140	700
	900	990		950	825	908	1260	900	700	1050	1260	750
	980	1078		1000	900	990	1368	950	760	1140	1368	800
	1045	1150		1100	980	1078	1470	1000	815	1223	1470	900
10	1220	1342		1200	1110	1221	1665	1100	920	1380	1665	1000
	1530	1683		1500	1430	1573	2145	1400	1190	1785	2145	1250

* A Roll-out Cart is required with Frame 8…10 drives to assist with power wiring and cabinet mounting.

PowerFlex 755 Floor Mount Drives*

690V AC, Three-phase and 932V DC Input Drives

Frame Size	Light Duty				Normal Duty				Heavy Duty			
	Output Amps				Output Amps				Output Amps			
	Cont.	1 Min.	3 Sec.	kW	Cont.	1 Min.	3 Sec.	kW	Cont.	1 Min.	3 Sec.	kW
8	330	363	NA	315	265	292	375	250	215	323	375	200
	370	407		355	330	363	473	315	265	398	473	250
	410	451		400	370	407	555	355	308	462	555	300
	460	506		450	415	457	639	400	370	555	639	355
	500	550		500	460	506	675	450	375	563	675	375
	530	583		530	500	550	750	500	413	620	750	400
9	650	715		630	590	649	885	560	460	690	885	450
	710	781		710	650	715	975	630	500	750	975	500
	790	869		800	710	781	1065	710	590	885	1065	560
	860	946		850	765	842	1170	750	650	975	1170	630
	960	1056		900	795	875	1350	800	750	1125	1350	710
	1020	1122		1000	960	1056	1440	900	795	1193	1440	800
10	1150	1265		1100	1040	1144	1560	1000	865	1298	1560	900
	1485	1634		1500	1400	1540	2100	1400	1160	1740	2100	1120

* A Roll-out Cart is required with Frame 8…10 drives to assist with power wiring and cabinet mounting.

Dimensions for PowerFlex 755 with IP00/IP20 Ratings***

Approximate Dimensions Millimeters (Inches)			
Frame	Height	Width	Depth
1	400.50 (15.77)	110 (4.33)	211 (8.31)
2	424.20 (16.7)	134.50 (5.30)	212 (8.35)
3	454 (17.87)	190 (7.48)	212 (8.35)
4	474 (18.66)	222 (8.74)	212 (8.35)
5	550 (21.65)	270 (10.63)	212 (8.35)
6	665.50 (26.20)	308 (12.13)	346.40 (13.64)
7	881.50 (34.70)	430 (16.93)	350 (13.78)
8	2453 (88.36)	600 (23.6)	600 (23.6)**
8	2453 (96.60)	600 (23.6)	800 (31.50)**
9	2453 (96.60)	1200 (47.20)	600 (23.6)**
9	2453 (96.60)	1200 (47.20)	800 (31.50)**
10	2453 (96.60)	1800 (70.90)	600 (23.60)**
10	2453 (96.60)	1800 (70.90)	800 (31.50)**

** Available in 600 mm and 800 mm depths to provide options based on cable entry and exit requirements. See publication PFLEX-SG002 or 750-TD001 for selection information.

***IP00 for frames 6 and 7

Energy Savings Calculators

See how installing a PowerFlex drive for your fan or pump applications can reduce energy costs when compared with a traditional flow control method.

Download the tools at:
http://www.rockwellenergycalc.com

Rockwell Automation, Inc. (NYSE:ROK), the world's largest company dedicated to industrial automation, makes its customers more productive and the world more sustainable. Throughout the world, our flagship Allen-Bradley® and Rockwell Software® product brands are recognized for innovation and excellence.

Follow ROKAutomation on Twitter. Connect with us on Facebook and LinkedIn.

Allen-Bradley, ControlLogix, CompactLogix, Connected Components Workbench, DeviceLogix, DriveExecutive, DriveObserver, DriveTools, FactoryTalk, Integrated Architecture, Kinetix, LISTEN. THINK. SOLVE., Micro800, PanelView, PowerFlex, Rockwell Software, RSLogix and Studio 5000 are trademarks of Rockwell Automation, Inc. Trademarks not belonging to Rockwell Automation are property of their respective companies. ControlNet, DeviceNet and EtherNet/IP are trademarks of the Open DeviceNet Vendor Association.

www.rockwellautomation.com

Power, Control and Information Solutions Headquarters

Americas: Rockwell Automation, 1201 South Second Street, Milwaukee, WI 53204-2496 USA, Tel: (1) 414.382.2000, Fax: (1) 414.382.4444
Europe/Middle East/Africa: Rockwell Automation NV, Pegasus Park, De Kleetlaan 12a, 1831 Diegem, Belgium, Tel: (32) 2 663 0600, Fax: (32) 2 663 0640
Asia Pacific: Rockwell Automation, Level 14, Core F, Cyberport 3, 100 Cyberport Road, Hong Kong, Tel: (852) 2887 4788, Fax: (852) 2508 1846

Publication 750-BR001A-EN-P – January 2013

Copyright © 2013 Rockwell Automation, Inc. All Rights Reserved. Printed in USA.

Thermal Edge Inc.™

TEMPERATURE CONTROL SOLUTIONS FOR ELECTRICAL ENCLOSURES

UL Listed Enclosure Air Conditioners

Fully Integrated Condensate Evaporation Package
Programmable Digital Controller
Thermal Expansion Valve
Narrow Design to fit onto a 12” Enclosure
Energy Efficiency - Low Running Amps

Get the Edge... Get Thermal Edge

Temperature Control Solutions for Electrical Enclosures

(972) 580-0200 or (888) 580-0202 • www.thermal-edge.com • thermalinfo@thermal-edge.com

MADE IN THE USA

Thermal Edge Inc.™

Get the Edge... Get Thermal Edge

Temperature Control Solutions for Electrical Enclosures

What Makes an Air Conditioner a Thermal Edge Air Conditioner?

There are three critical features that make a Thermal Edge Enclosure Air Conditioner different from any other line of air conditioners. **Standard on Every Unit:**

Drip-free Condensate Removal is Not Optional

Water is the by-product of every air conditioner. At Thermal Edge we understand that a puddle next to your sensitive electronic enclosure may be a problem. We eliminate this messy problem by changing the troublesome water back into a vapor and venting it out of your way. That means no puddles, stains or mess near your electrical enclosure, control system or production line. In addition, our condensate evaporation system precools the refrigerant which lowers the running amps and thus lowers your energy usage.

Condensate Evaporation Is Standard On Every Unit... **No Drain Tube is Needed**

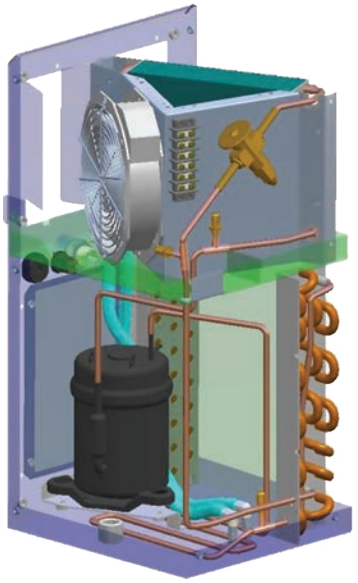

Thermal Expansion Valve Controls the Flow

Thermal Expansion Valves balance and modulate the refrigerant flow to the heat load by sensing the temperature of the refrigerant leaving the evaporator.

With Thermal Edge, You Have a Smarter Enclosure Air Conditioner

Digital, Programmable Controller:

- Fully programmable
- Built in alarms and alerts
- Will operate heating & cooling
- Standard on every air conditioner
- Ethernet, Modbus RTU and Ethernet/IP communication options
- Remote controller option places controller inside cabinet

CS Series Air Conditioners

- Smallest 2000 BTUH available
- Active Condensate Evaporation is standard
- Fits on a 7" or 10" deep enclosure
- Available in NEMA Types 12, 4, 4X
- Fully programmable digital controller with temperature and pressure monitors for a **smarter** air conditioner
- 120V, 230V

- 1000 BTUH
- 2000 BTUH

NE Series Air Conditioners

- Active Condensate Evaporation is standard
- Fits on a 12" deep enclosure
- Available in NEMA Types 12, 4, 4X and Hazardous Environment applications
- Fully programmable digital controller with temperature and pressure monitors for a **smarter** air conditioner
- 120V, 230V, 480V

- 1000 BTUH
- 1500 BTUH
- 2000 BTUH
- 3000 BTUH
- 4000 BTUH
- 5000 BTUH
- 6000 BTUH
- 8000 BTUH

TM Series Air Conditioners

- Top Mounted Enclosure Air Conditioners
- Active Condensate Evaporation is standard
- Available in NEMA Types 12, 4, 4X
- Fully programmable digital controller with temperature and pressure monitors for a **smarter** air conditioner
- 120V, 230V, 480V

- 6000 BTUH
- 8000 BTUH

HC Series Air Conditioners

- Active Condensate Evaporation is standard
- Available in NEMA Types 12, 4, 4X and Hazardous Environment applications
- Fully programmable digital controller with temperature and pressure monitors for a **smarter** air conditioner
- 120V, 230V, 480V

- 10,000 BTUH
- 12,000 BTUH
- 15,000 BTUH
- 20,000 BTUH

MADE IN THE USA

(972) 580-0200 or (888) 580-0202 • www.thermal-edge.com • thermalinfo@thermal-edge.com

Air Conditioner Product Line

Model	BTU / Hour	Voltage / Phase / Hz	Running Amps	Maximum Ambient Temp	Maximum Integrated Heat (Watts)	H x W x D	Ship Weight
NE010126	1,000	120/1/60	2.69	125°F	NA	22" x 11.8" x 8.5"	65
NE010236	1,000	230/1/60	1.99	125°F	NA	22" x 11.8" x 8.5"	67
CS011D48	1,000	48 VDC	3.7	125°F	NA	17" x 7" x 7"	43
CS011126	1,000	120/1/60	2.7	131°F	350	17" x 7" x 7"	45
NE015126	1,500	120/1/60	3.44	125°F	NA	22" x 11.8" x 8.5"	65
NE015236	1,500	230/1/60	2.67	125°F	NA	22" x 11.8" x 8.5"	67
NE020126	2,000	120/1/60	3.76	125°F	1000	32" x 11.8" x 9.5"	79
NE020236	2,000	230/1/60	3.07	125°F	1000	32" x 11.8" x 9.5"	86
NE020486	2,000	480/1/60	0.93	125°F	1000	38" x 11.8" x 9.5"	113
CS020126	2,000	120/1/60	3.36	131°F	500	20" x 10" x 10"	58
CS020236	2,000	230/1/60	2.0	131°F	500	20" x 10" x 10"	63
NE030126	3,000	120/1/60	5.15	125°F	1000	32" x 11.8" x 9.5"	80
NE030236	3,000	230/1/60	3.07	125°F	1000	32" x 11.8" x 9.5"	86
NE030486	3,000	480/1/60	1.51	125°F	1000	38" x 11.8" x 9.5"	113
NE040D48	4,000	48 VDC	22.3	131°F	NA	35.27" x 11.8" x 9.5"	120
NE040126	4,000	120/1/60	5.53	125°F	1000	32" x 11.8" x 9.5"	80
NE040236	4,000	230/1/60	3.07	125°F	1000	32" x 11.8" x 9.5"	86
NE040486	4,000	480/1/60	1.51	125°F	1000	38" x 11.8" x 9.5"	113
NE050126	5,000	120/1/60	7.26	125°F	1000	36" x 11.8" x 15.1"	111
NE050236	5,000	230/1/60	3.76	125°F	1000	36" x 11.8" x 15.1"	106
NE050486	5,000	480/1/60	1.44	125°F	1000	44.63" x 11.8" x 15.1"	150
NE060126	6,000	120/1/60	7.83	125°F	1000	36" x 11.8" x 15.1"	111
NE060236	6,000	230/1/60	4.8	125°F	1000	36" x 11.8" x 15.1"	112
NE060486	6,000	480/1/60	1.8	125°F	1000	44.63" x 11.8" x 15.1"	156
TM061126	6,000	120/1/60	10.6	131°F	1000	15.6" x 26.3" x 20.2"	163
TM061236	6,000	230/1/60	6.0	131°F	1000	15.6" x 26.3" x 20.2"	163
TM061486	6,000	480/1/60	3.0	131°F	1000	15.6" x 26.3" x 20.2"	206
NE080126	8,000	120/1/60	7.83	125°F	1000	36" x 11.8" x 15.1"	117
NE080236	8,000	230/1/60	4.8	125°F	1000	36" x 11.8" x 15.1"	118
NE080486	8,000	480/1/60	1.8	125°F	1000	44.63" x 11.8" x 15.1"	156
TM081126	8,000	120/1/60	11.2	131°F	1000	15.6" x 26.3" x 20.2"	163
TM081236	8,000	230/1/60	7.0	131°F	1000	15.6" x 26.3" x 20.2"	163
TM081486	8,000	480/1/60	3.5	131°F	1000	15.6" x 26.3" x 20.2"	206
HC101126	10,000	120/1/60	19.4	131°F	1500	48" x 15.9" x 15.1"	182
HC101236	10,000	230/1/60	8.2	131°F	1500	48" x 15.9" x 15.1"	186
HC101486	10,000	480/1/60	3.93	131°F	1500	57.6" x 15.9" x 15.1"	275
HC121126	12,000	120/1/60	19.4	131°F	1500	48" x 15.9" x 15.1"	185
HC121236	12,000	230/1/60	8.2	131°F	1500	48" x 15.9" x 15.1"	183
HC121486	12,000	480/1/60	3.93	131°F	1500	57.6" x 15.9" x 15.1"	280
HC151236	15,000	230/1/60	11.3	131°F	1500	48" x 15.9" x 15.1"	190
HC151486	15,000	480/1/60	5.41	131°F	1500	57.6" x 15.9" x 15.1"	290
HC201236	20,000	230/1/60	15.3	131°F	1500	56.1" x 23" x 15"	225
HC201486	20,000	480/1/60	7.7	131°F	1500	65.7" x 23" x 15"	380

Advantages

- Systems engineered to maintain lower running amps for higher efficiency
- Options and Accessories designed to solve critical applications such as Corrosive or Hazardous Environments
- Customer Service Reps answering your calls
- A website that is easy to navigate AND solutions that are easy to find
- Equipment tested to perform and built to last
- Units designed with our customers' applications and environments in mind

NO WATER DRIPS FROM THERMAL EDGE ENCLOSURE AIR CONDITIONERS

Thermal Edge Inc.™

Get the Edge... Get Thermal Edge

Temperature Control Solutions for Electrical Enclosures

Air Conditioner Options

- Electrostatic Coil Coating to protect from corrosion caused by a salt or chemical environment
- Integrated Heat Packages to provide total temperature control for your enclosure, not just from the heat of summer but from the cold of winter
- Dry Contact Options to allow the use of alarms, lights and notifications
- External Heat Control to support use of an externally mounted heater in the enclosure
- 316 Stainless Steel for applications where 304 is not suitable
- Hazardous Location for Class 1, Division 2 Groups B, C & D applications
- Vibration Package allows for enclosure cooling on cranes, moving vehicles or other difficult locations
- 2" Deep Extended Filter Media for applications like flour, cement or coal when a standard filter will load too quickly
- Remote Controller Option to place our digital controller inside the electrical enclosure when the environment requires more security
- Redundant System Package for critical applications, when enclosure cooler failure is not an option. This system operates two air conditioners with specially programmed controllers that toggle the two units to operate them alternately to guarantee that your enclosure always stays at its required temperature and provide automatic backup
- The Universal Mounting Plate allows mounting the Thermal Edge Enclosure Air Conditioner onto an enclosure that formerly held a different air conditioner model

At Thermal Edge, we understand your environment and the issues that your environment creates for your electrical enclosures and systems. Everything we build has been designed and tested to meet your strict requirements for quality and durability.
Food & Beverage, Paper & Pulp, Chemical, Gas, Cement or Telecom, Thermal Edge has a system to handle the problem of controlling the environment of your sensitive and important operating systems.

Thermal Edge air conditioners can be built to operate on the voltage and frequency available wherever you need them.

Use the ETM Calculator and Product Recommender to Find the Right Cooling Capacity and Products for Your Application
http://thermal-edge.com/enclosure-temperature-management-calculator

Contact us today for Temperature Control Solutions for Your Electrical Enclosures

888-580-0202
Email: ThermalInfo@Thermal-Edge.com

All information subject to change without notice.

Certified ISO 9001:2008 Company

Brochure #1
2017-06-05

Made in the USA

NE015

1500 BTUH
Indoor/Outdoor, NEMA Types 12, 4 & 4X Available

Engineered & manufactured to endure the most difficult of environments and applications. Thermal Edge air conditioners will exceed environmental requirements in applications like *Steel, Food Processing, Petro-Chemical, Cement, Paper & Pulp and Plastics.*

11.8" wide

No water drips from Thermal Edge enclosure air conditioners

Digital Temperature Controller
- *Programmable set point and temperature controls*
- *Visible Error and/or alarm messaging*
- *System status indication & keypad lockout function*

Active Condensate Evaporation System
- *Constant elimination of condensate*
- *Increases unit efficiency by pre-cooling refrigerant*

Key Design Features
- *Sloped top to allow for water runoff*
- *Designed with rigid chassis and seam welded shroud*
- *Thoughtful interior design for easy maintenance*
- *Narrow body style fits on 12" enclosure*

Unit Efficiency
- *Temperature operated blower control reduces power inrush and saves energy*
- *Highly efficient rotary compressor*
- *Fully insulated & sealed cabinet*
- *Thermal Expansion Valve to maintain cooling capacity over a broad ambient temperature range*

Compressor Protection System
- *High & Low refrigerant cutouts with fault indication*
- *Compressor anti short cycle protection*
- *Compressor run capacitors reduce power inrush, save energy and increase compressor life*

Options:
- Dry Contact Alarm Capabilities
- Open Door Kill Switch
- Corrosive Environment Package
- Low Ambient Packages
- Remote Monitoring Options

Model	BTU/ Hour	Material	Voltage/ Hz.	Running Amps	Max. Ambient Temperature	H x W x D	Weight (lbs.) Unit / Ship
NE01512612	1500	Powder coated steel	120/1/60	3.44	125°F	22" x 11.8" x 8.5"	51 / 65
NE01512604	1500	Powder coated steel	120/1/60	3.44	125°F	22" x 11.8" x 8.5"	51 / 65
NE0151264X	1500	Stainless steel	120/1/60	3.44	125°F	22" x 11.8" x 8.5"	51 / 65
NE01523612	1500	Powder coated steel	230/1/60	2.67	125°F	22" x 11.8" x 8.5"	53 / 67
NE01523604	1500	Powder coated steel	230/1/60	2.67	125°F	22" x 11.8" x 8.5"	53 / 67
NE0152364X	1500	Stainless steel	230/1/60	2.67	125°F	22" x 11.8" x 8.5"	53 / 67

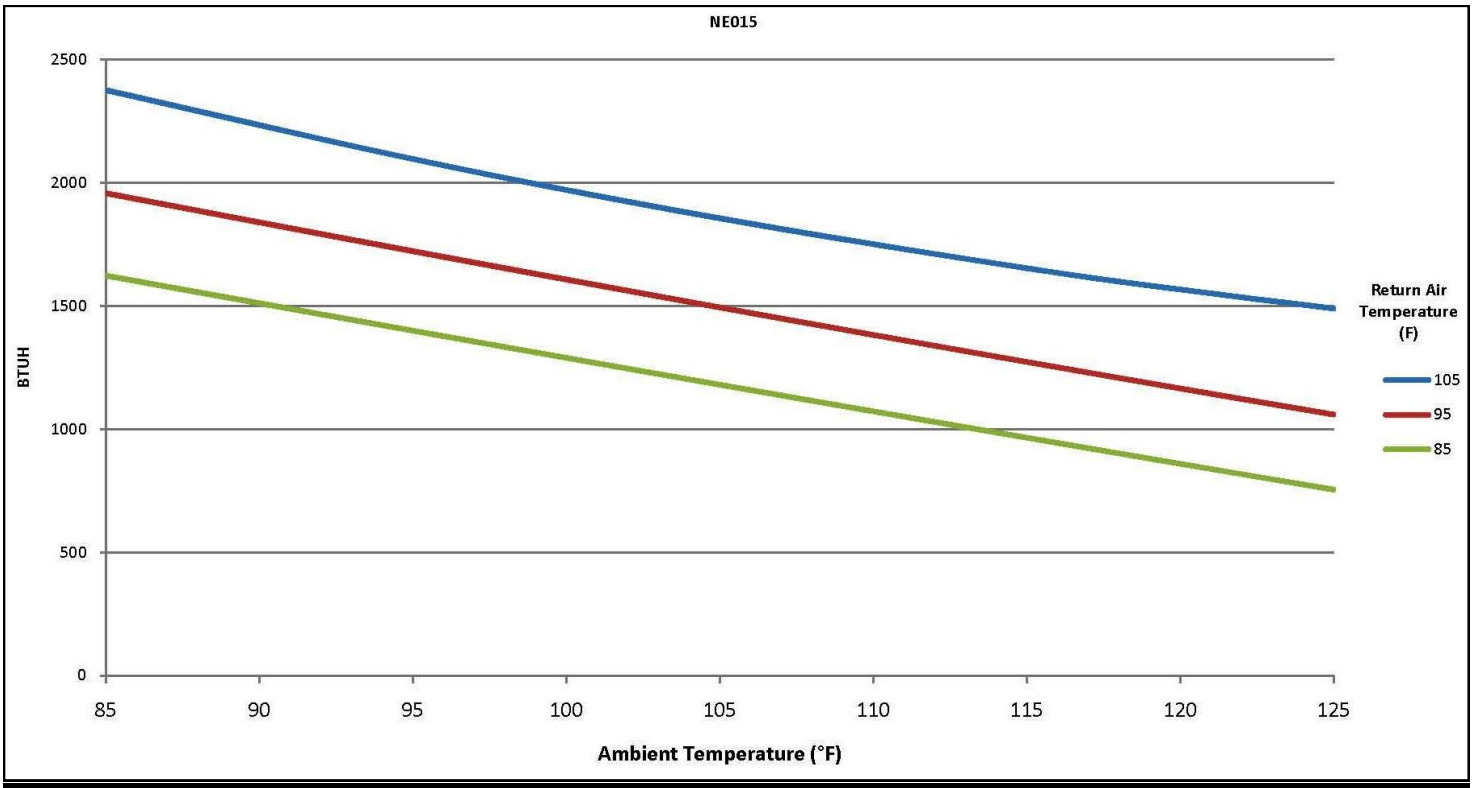

Testing done under controlled conditions. Actual performance may vary

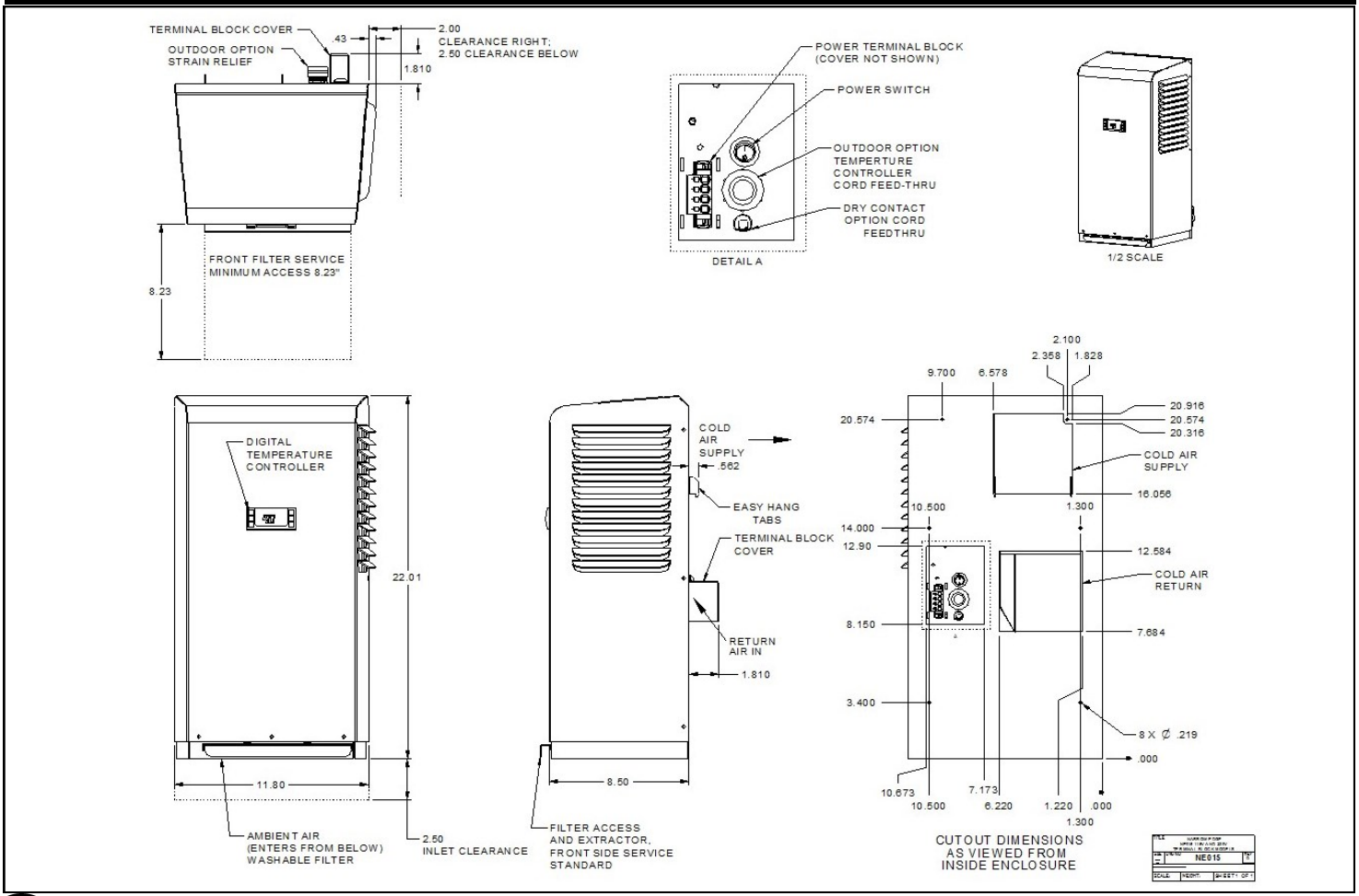

2017-05-22

ATTENTION: *If ordering a replacement for a Thermal Edge air conditioner, please include the part number and serial number of the unit being replaced in your order. This will assure that we ship a replacement that is compatible with the cutout dimensions and power connection features of the older model.*

c UL us LISTED

UL File # SA32252

All information subject to change without notice

DEPARTMENT OF THE ARMY
ALBUQUERQUE DISTRICT, CORPS OF ENGINEERS
ALBUQERQUE DISTRICT OFFICE
4101 JEFFERSON PLAZA NE
ALBUQUERQUE, NM 87109

SUBMITTAL REVIEW VERIFICATION SHEET

PROJECT TITLE: Kirtland BFF Mid-Plume Pump and Treat System Expansion
CONTRACT NUMBER: W912DR-12-D-0006 DM01
DATE RECEIVED: 10-13-2017
DATE REVIEWED: 10-17-2017

DESCRIPTION OF ITEMS REVIEWED:

1. Well #106239 PLC/ Instrumentation

NO EXCEPTIONS TAKEN.	
EXCEPTIONS AS NOTED ON DRAWINGS AND/OR ATTACHED SHEETS(S). RESUBMISSION NOT REQUIRED.	**X**
EXCEPTIONS AS NOTED ON DRAWINGS AND/OR ATTACHED SHEETS(S). RESUBMISSION REQUIRED.	
RECEIPT ACKKNOWLEDGED.	

Notes:

24VAC Actuator was selected (on page 25) Model Number: 70-24-0201H. The drawings and the other pages of submittal calls out a 120 VAC Actuator, Model Number: 70-0201H. Actuator should be 120 VAC.

Is there Instrumentation Diagram (P&ID) to show how all system components will be installed?

NOTE: ITEMS REVIEWED AS TO GENERAL LAYOUT ONLY. DIMENSIONS AND QUANTITIES NOT CHECKED. REVIEW DOES NOT RELIEVE CONTRACTOR OF RESPONSIBILITIES FOR ANY ERRORS WHICH MAY EXIST AS CONTRACTOR SHALL BE RESPONSIBLE FOR DIMENSIONS AND DESIGN OF ADEQUATE CORRECTIONS, DETAILS AND SATISFACTORY CONSTRUCTION OF WORK.

SIGNATURE SANCHEZ.AMY.ELIZABETH.1454434338 Digitally signed by SANCHEZ.AMY.ELIZABETH.1454434338 DN: c=US, o=U.S. Government, ou=DoD, ou=PKI, ou=USA, cn=SANCHEZ.AMY.ELIZABETH.1454434338 Date: 2017.10.17 15:22:11 -06'00' **DATE** 10/17/2017

EA Engineering, Science, and Technology, Inc., PBC

Submittal Review Sheet 8

Project Name: **Kirtland BFF Mid-Plume Pump and Treat System Expansion**				Date Received: **10/12/2017**	
Project Owner: **Kirtland Air Force Base**				Checked By: **Tyler Curley**	
Contractor: **Techsas Inc.**	Engineer: **EA Engineering, Science and Technology, Inc., PBC.**			Log Page: **NA**	
Address: **4819 West Bayshore Drive** **Bacliff, TX 77518**	Address: **320 Gold Ave. SW, Suite 1300** **Albuquerque, NM 87102**			EA No.: 62599DM01	
				Spec. Section: **00 00 00**	
				Drawing/Detail No.:	
ATTN: Ed Butler	ATTN: **Devon Jercinovic**			1st Sub	Re-Sub
Date Transmitted: **10/13/2017**	Prev. Transmittal Date:				

Item No.	No. Copies	Description	Manufacturer	Mfg/Vendor Dwg or Detail	Action Taken*
9	1	PLC and Instrumentation	Various	Various	**A**

The Action Designated Above is in Accordance with the Following Legend:

A – Furnish as Submitted
B – Furnish as Noted
C – Revise and Re-submit
1. Not enough information for review.
2. No reproducible submitted.
3. Copies illegible.
4. Not enough copies submitted.
5. Wrong sequence number.
6. Wrong resubmittal number.
7. Wrong Spec. Section.
8. Wrong form used.
9. See Comments.

D – Rejected
E – Engineer's Review not Required
1. Submittal not required.
2. Supplemental Information. Submittal retained for Information purposes only.
3. Information reviewed and approved on prior submittal.
4. See Comments.

Review is for general compliance with Contract Documents. No responsibility is assumed for correctness of dimensions or detail. Contractor is required to specify deviations from contract requirements. Lack of exceptions noted by Engineer does not waive Contractor's obligation to comply with Drawings and Specifications.

Comments:
The components of this submittal are consistent with the components used throughout the existing system.

By: _____ Date: 10/13/17

Distribution: [1] Contractor [1] Engineer [1] Owner

TRANSMITTAL DOCUMENT

Date:	**10/11/2017**	**From:**	**Ed Butler**
To:	**EA Engineering, Science, and Technology, Inc., 320 Gold Ave. SW, Suite 1300 Albuquerque, NM 87102 Devon Jercinovic**	**Job Name:**	**Kirtland AFB, NM Bulk Fuels Facility**
		Reference:	
		Transmittal Method:	**E-mail**
		Sent By:	**Ed Butler**

Submittal	Dwg. Number	Item Description
9	E-502	Well #106239 PLC/ Instrumentation Submittal

Submittal includes the following:
Pressure transmitter
Level Transmitter
Control Valve
Leak Switches/Relays
Magnetic Flow Meter
CP-105 Control Panel Materials

Ed Butler
TECHSAS, Inc.
4819 West Bayshore Drive
Bacliff, TX 77518

"I hereby certify that the (equipment) (material) (article) shown and marked in this submittal is that proposed to be incorporated with the Contract, is in compliance with the contract drawings and specification, can be installed in the allocated spaces, and is submitted for Contractor approval.

Certifiedby _____.
(Signature when applicable) Date: _____.

Kirtland Air Force Base
Bulk Fuels Facility
Mid Plum Pump & Treat System
Well 106239

I&C Controls Submittal

Sub Contractor: I&C Solutions
4485 Irving Blvd NW
Albuquerque, NM 87114
(505) 821-8960

Submittal includes the following

Pressure transmitter
Level Transmitter
Control Valve
Leak Switches/Relays
Magnetic Flow Meter
CP-105 Control Panel Materials

Submitted 9/30/17

© Siemens AG 2011

Tags PIT- 0

SITRANS P DS III
Technical description

Overview

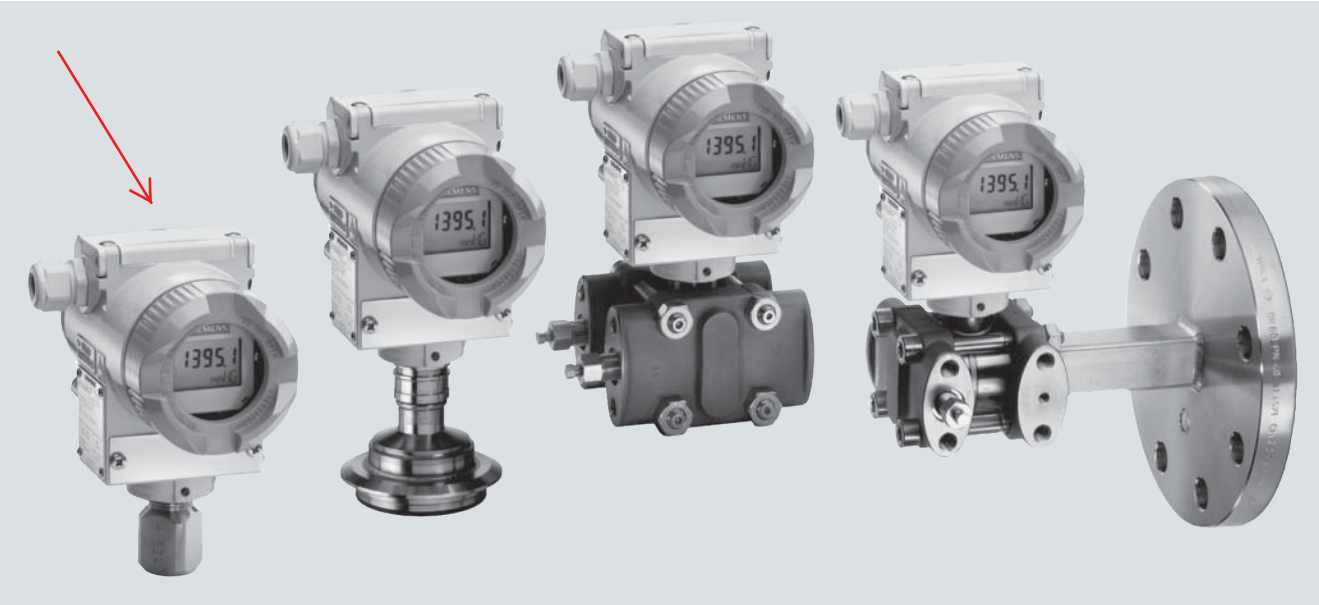

SITRANS P DS III pressure transmitters are digital pressure transmitters featuring extensive user-friendliness and high accuracy. The parameterization is performed using control keys or via HART communication, PROFIBUS-PA or FOUNDATION Fieldbus interface.

Extensive functionality enables the pressure transmitter to be precisely adapted to the plant's requirements. Operation is very simple in spite of the numerous setting options.

Transmitters with type of protection "Intrinsic safety" and "Explosion-proof" may be installed within potentially explosive atmospheres (zone 1) or in zone 0. The transmitters are provided with an EC type examination certificate and comply with the corresponding harmonized European standards (ATEX).

The transmitters can be equipped with various designs of remote seals for special applications such as the measurement of highly viscous substances.

Various versions of the DS III pressure transmitters are available for measuring:

- Gauge pressure
- Absolute pressure
- Differential pressure
- Level
- Volume level
- Mass level
- volume flow
- Mass flow

Benefits

- High quality and service life
- High reliability even under extreme chemical and mechanical loads
- For aggressive and non-aggressive gases, vapors and liquids
- Extensive diagnosis and simulation functions
- Separate replacement of measuring cell and electronics without recalibration
- Minimum conformity error
- Small long-term drift
- Wetted parts made of high-grade materials (e.g. stainless steel, Hastelloy, gold, Monel, tantalum)
- Infinitely adjustable span from 0.15 psi to 10153 psi (0.01 bar to 700 bar) for DS III with HART communication
- Nominal measuring range from 14.5 psi to 10153 psi (1 bar to 700 bar) for DS III PA (PROFIBUS PA) and FF (FOUNDATION Fieldbus)
- High measuring accuracy
- Parameterization over control keys and HART communication, PROFIBUS PA communication or FOUNDATION Fieldbus interface.

Application

The pressure transmitters of the DS III series, can be used in industrial areas with extreme chemical and mechanical loads. Electromagnetic compatibility in the range 10 kHz to 1 GHz makes the DS III pressure transmitters suitable for locations with high electromagnetic emissions.

Pressure transmitters with type of protection "Intrinsic safety" and "Explosion-proof" may be installed within potentially explosive atmospheres (zone 1) or in zone 0. The pressure transmitters are provided with an EC type examination certificate and comply with the corresponding harmonized European standards (ATEX).

Pressure transmitters with the type of protection "Intrinsic safety" for use in zone 0 may be operated with power supply units of category "ia" and "ib".

The transmitters can be equipped with various designs of remote seals for special applications such as the measurement of highly viscous substances.

The pressure transmitter can be operated locally over 3 control buttons or programmed externally over HART communication or over PROFIBUS PA or FOUNDATION Fieldbus interface.

© Siemens AG 2011

Pressure transmitter for gauge pressure

Measured variable: Gauge pressure of aggressive and non-aggressive gases, vapors and liquids.

Span (infinitely adjustable)
for DS III HART: 0.15 psi to 10153 psi (0.01 bar to 700 bar)

Nominal measuring range
for DS III PA and FF: 14.5 psi to 10153 psi (1 bar to 700 bar)

Pressure transmitters for absolute pressure

Measured variable: Absolute pressure of aggressive and non-aggressive gases, vapors and liquids.

Span (infinitely adjustable)
for DS III HART: 0.12 ... 1450 psi a (8.3 mbar a ... 100 bar a)

Nominal measuring range
for DS III PA and FF: 3.63...1450 psi a (250 mbar a...100 bar a)

There are two series:

- Gauge pressure series
- Differential pressure series

Pressure transmitters for differential pressure and flow

Measured variables:

- Differential pressure
- Small positive or negative pressure
- Flow q ~ √Δp (together with a primary differential pressure device (see Chap.ter "Flow Meters"))

Span (infinitely adjustable)
for DS III HART: 0.0145 ... 435 psi (1 mbar ... 30 bar)

Nominal measuring range
for DS III PA and FF: 0.29 ... 435 psi (20 mbar ... 30 bar)

Pressure transmitters for level

Measured variable: Level of aggressive and non-aggressive liquids in open and closed vessels.

Span (infinitely adjustable)
for DS III HART: 0.363 ... 72.5 psi (25 mbar ... 5 bar)

Nominal measuring range
for DS III PA and FF: 3.63 ... 72.5 psi (250 mbar ... 5 bar)

Nominal diameter of the mounting flange

- DN 80 or DN 100
- 3 inch or 4 inch

In the case of level measurements in open containers, the low-pressure connection of the measuring cell remains open (measurement "compared to atmospheric").

In the case of measurements in closed containers, the lower-pressure connection has to be connected to the container in order to compensate the static pressure.

The wetted parts are made from a variety of materials, depending on the degree of corrosion resistance required.

Design

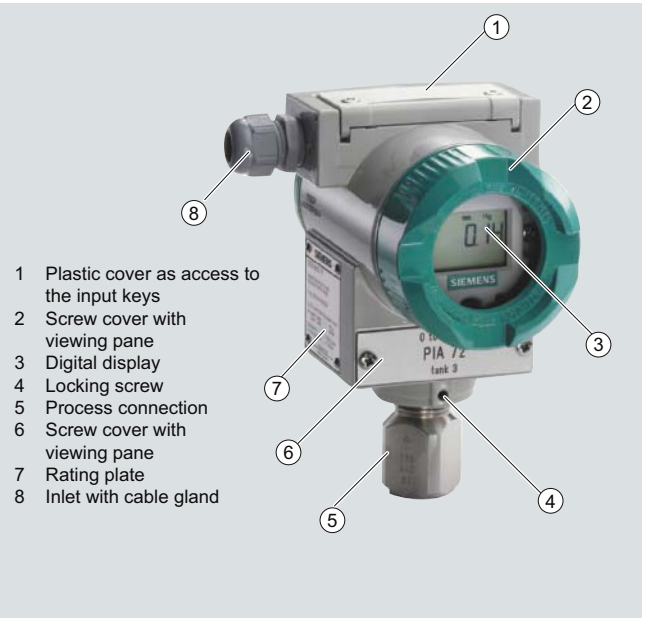

1 Plastic cover as access to the input keys
2 Screw cover with viewing pane
3 Digital display
4 Locking screw
5 Process connection
6 Screw cover with viewing pane
7 Rating plate
8 Inlet with cable gland

Front view

The transmitter consists of various components depending on the order. The possible versions are listed in the ordering information. The components described below are the same for all transmitters.

The rating plate (7, Figure "Front view") with the Order No. is located on the side of the housing. The specified number together with the ordering information provide details on the optional design details and on the possible measuring range (physical properties of built-in sensor element).

The approval label is located on the opposite side.

The housing is made of die-cast aluminium or stainless steel precision casting. A round cover (6) is screwed on at the front and rear of the housing. The front cover can be fitted with a viewing pane so that the measured values can be read directly on the digital display. The inlet (8) for the electrical connection is located either on the left or right side. The unused opening on the opposite side is sealed by a blanking plug. The protective earth connection is located on the rear of the housing.

The electrical connections for the power supply and screen are accessible by unscrewing the rear cover. The bottom part of the housing contains the measuring cell with process connection (5). The measuring cell is prevented from rotating by a locking screw (4). As the result of this modular design, the measuring cell and the electronics can be replaced separately from each other. The set parameter data are retained.

At the top of the housing is a plastic cover (1), which hides the input keys.

Example for an attached measuring point label

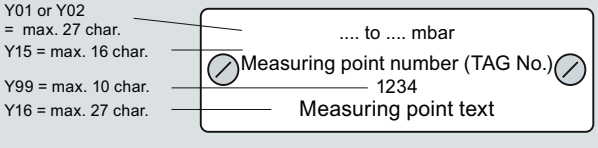

© Siemens AG 2011

2

Function

Operation of electronics with HART communication

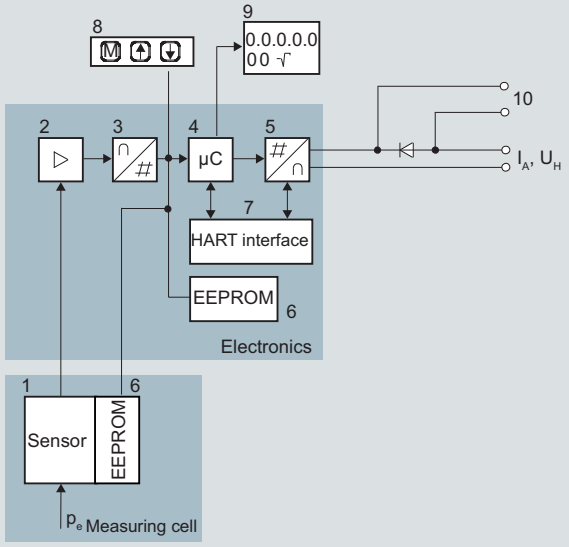

1 Measuring cell sensor
2 Instrument amplifier
3 Analog-to-digital converter
4 Microcontroller
5 Digital-to-analog converter
6 One non-volatile memory each in the measuring cell and electronics
7 HART interface
8 Three input keys (local operation)
9 Digital display
10 Diode circuit and connection for external ammeter
I_A Output current
U_H Power supply
P_e Input variable

Function diagram of electronics

The bridge output voltage created by the sensor (1, Figure "Function diagram of the electronics") is amplified by the measuring amplifier (2) and digitized in the analog-to-digital converter (3). The digital information is evaluated in a microcontroller, its linearity and temperature response corrected, and converted in a digital-to-analog converter (5) into an output current of 4 to 20 mA.

The diode circuit (10) protects against incorrect polarity.

The data specific to the measuring cell, the electronics data, and the parameter data are stored in the two non-volatile memories (6). The one memory is coupled to the measuring cell, the other to the electronics. As the result of this modular design, the electronics and the measuring cell can be replaced separately from each other.

Using the 3 input keys (8) you can parameterize the pressure transmitter directly at the measuring point. The input buttons can also be used to control the view of the results, the error messages and the operating modes on the digital display (9).

The HART modem (7) permits parameterization using a protocol according to the HART specification.

The pressure transmitters with spans ≤ 63 bar measure the input pressure compared to atmosphere, transmitters with spans ≥ 160 bar compared to vacuum.

Operation of electronics with PROFIBUS PA communication

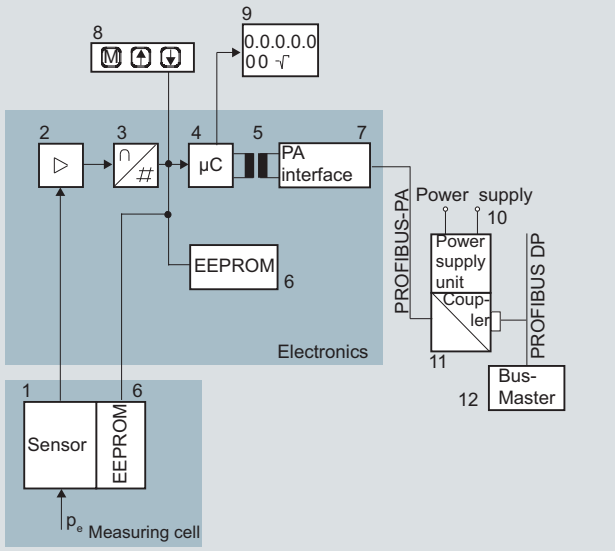

1 Measuring cell sensor
2 Instrument amplifier
3 Analog-to-digital converter
4 Microcontroller
5 Electrical isolation
6 One non-volatile memory each in the measuring cell and electronics
7 PROFIBUS-PA interface
8 Three input keys (local operation)
9 Digital display
10 Power supply
11 DP/PA coupler or link
12 Bus master
p_e Input variable

Function diagram of electronics

The bridge output voltage created by the sensor (1, Figure "Function diagram of the electronics") is amplified by the measuring amplifier (2) and digitized in the analog-to-digital converter (3). The digital information is evaluated in the microcontroller, its linearity and temperature response corrected, and provided on the PROFIBUS PA through an electrically isolated PA interface (7).

The data specific to the measuring cell, the electronics data, and the parameter data are stored in the two non-volatile memories (6). The one memory is coupled to the measuring cell, the other to the electronics. As the result of this modular design, the electronics and the measuring cell can be replaced separately from each other.

Using the three input buttons (8) you can parameterize the pressure transmitter directly at the measuring point. The input buttons can also be used to control the view of the results, the error messages and the operating modes on the digital display (9).

The results with status values and diagnostic values are transferred by cyclic data transmission on the PROFIBUS PA. Parameterization data and error messages are transferred by acyclic data transmission. Special software such as SIMATIC PDM is required for this.

© Siemens AG 2011

Operation of electronics with FOUNDATION Fieldbus communication

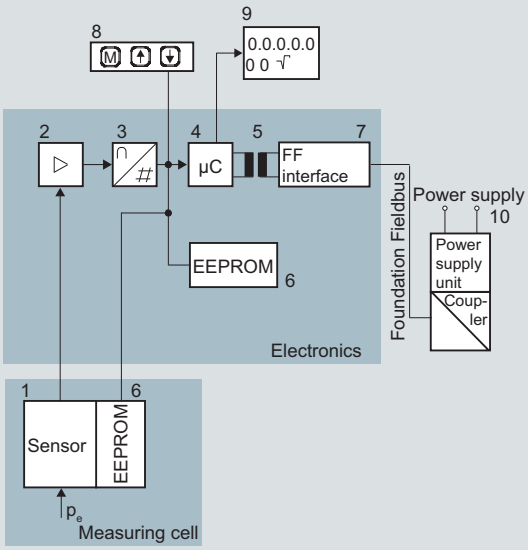

1	Measuring cell sensor	8	Three input keys (local operation)
2	Instrument amplifier	9	Digital display
3	Analog-to-digital converter	10	Power supply
4	Microcontroller		
5	Electrical isolation	p_e	Input variable
6	One non-volatile memory each in the measuring cell and electronics		
7	FF interface		

Function diagram of electronics

The bridge output voltage created by the sensor (1, Figure "Function diagram of electronics") is amplified by the measuring amplifier (2) and digitized in the analog-to-digital converter (3). The digital information is evaluated in the microcontroller, its linearity and temperature response corrected, and provided on the FOUNDATION Fieldbus through an electrically isolated FOUNDATION Fieldbus interface (7).

The data specific to the measuring cell, the electronics data, and the parameter data are stored in the two non-volatile memories (6). The one memory is coupled to the measuring cell, the other to the electronics. As a result of this modular design, the electronics and the measuring cell can be replaced separately from each other.

Using the three input buttons (8) you can parameterize the pressure transmitter directly at the measuring point. The input buttons can also be used to control the view of the results, the error messages and the operating modes on the digital display (9).

The results with status values and diagnostic values are transferred by cyclic data transmission on the FOUNDATION Fieldbus. Parameterization data and error messages are transferred by acyclic data transmission. Special software such as National Instruments Configurator is required for this.

Mode of operation of the measuring cells

Measuring cell for gauge pressure

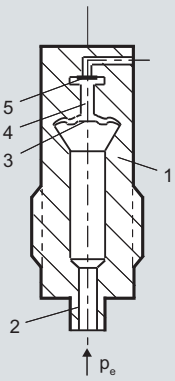

1	Measuring cell
2	Process connection
3	Seal diaphragm
4	Filling liquid
5	Silicon pressure sensor
p_e	Pressure as input variable

Measuring cell for gauge pressure, function diagram

The pressure p_e is applied through the process connection (2, Figure "Measuring cell for gauge pressure, function diagram) to the measuring cell (1). This pressure is subsequently transmitted further through the seal diaphragm (3) and the filling liquid (4) to the silicon pressure sensor (5) whose measuring diaphragm is then flexed. This changes the resistance of the four piezo-resistors fitted in the diaphragm in a bridge circuit. This change in resistance results in a bridge output voltage proportional to the absolute pressure.

Measuring cell for gauge pressure with front-flush diaphragm

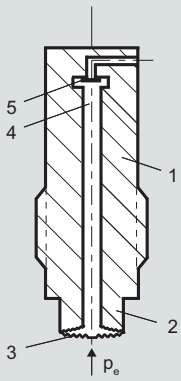

1	Measuring cell
2	Process connection
3	Seal diaphragm
4	Filling liquid
5	Silicon pressure sensor
p_e	Pressure as input variable

Measuring cell for gauge pressure, with front-flush diaphragm for paper industry, function diagram

The pressure $_p$e is applied through the process connection (2, Figure "Measuring cell for gauge pressure, with front-flush diaphragm for paper industry, function diagram") to the measuring cell (1). This pressure is subsequently transmitted further through the seal diaphragm (3) and the filling liquid (4) to the silicon pressure sensor (5) whose measuring diaphragm is then flexed. This changes the resistance of the four piezo-resistors fitted in the diaphragm in a bridge circuit. This change in resistance results in a bridge output voltage proportional to the absolute pressure.

© Siemens AG 2011

Measuring cell for absolute pressure from gauge pressure series

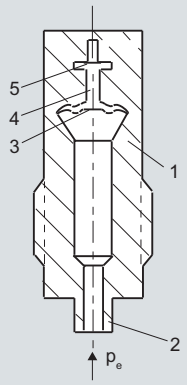

1 Measuring cell
2 Process connection
3 Seal diaphragm
4 Filling liquid
5 Silicon absolute pressure sensor
p_e Absolute pressure as input variable

Measuring cell for absolute pressure from the pressure series, function diagram

The absolute pressure $_p$e is transmitted through the seal diaphragm (3, Figure "Measuring cell for absolute pressure from pressure series, gauge pressure, function diagram ") and the filling liquid (4) to the silicon absolute pressure sensor (5) whose measuring diaphragm is then flexed. This changes the resistance of the four piezo-resistors fitted in the diaphragm in a bridge circuit. This change in resistance results in a bridge output voltage proportional to the absolute pressure.

Measuring cell for absolute pressure from differential pressure series

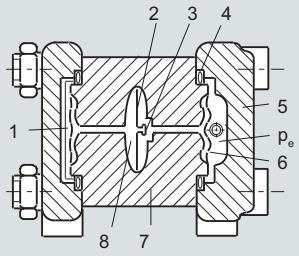

1 Reference vacuum
2 Overload diaphragm
3 Silicon pressure sensor
4 O-ring
5 Process flange
6 Seal diaphragm
7 Body of measuring cell
8 Filling liquid
p_e Absolute pressure as input variable

Measuring cell for absolute pressure from differential pressure series, function diagram

The input pressure p_e is transmitted through the seal diaphragm (6, Figure "Measuring cell for absolute pressure from differential pressure series, function diagram") and the filling liquid (8) to the silicon pressure sensor (3).

The difference in pressure between the input pressure p_e and the reference vacuum (1) on the low-pressure side of the measuring cell flexes the measuring diaphragm. This changes the resistance of the four piezo-resistors fitted in the diaphragm in a bridge circuit. This change in resistance results in a bridge output voltage proportional to the absolute pressure.

An overload diaphragm is installed to provide protection from overloads. If the measuring limits are exceeded, the overload diaphragm (2) is flexed until the seal diaphragm rests on the body of the measuring cell (7), thus protecting the silicon pressure sensor from overloads.

Measuring cell for differential pressure and flow

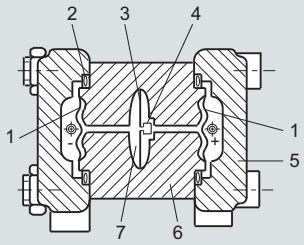

1 Seal diaphragm
2 O-ring
3 Overload diaphragm
4 Silicon pressure sensor
5 Process flange
6 Body of measuring cell
7 Filling liquid

Measuring cell for differential pressure and flow, function diagram

The differential pressure is transmitted through the seal diaphragms (1, Figure "Measuring cell for differential pressure and flow, function diagram") and the filling liquid (7) to the silicon pressure sensor (4).

The measuring diaphragm is flexed by the applied differential pressure. This changes the resistance of the four piezo-resistors fitted in the diaphragm in a bridge circuit. This change in resistance results in a bridge output voltage proportional to the absolute pressure.

An overload diaphragm is installed to provide protection from overloads. If the measuring limits are exceeded, the overload diaphragm (2) is flexed until the seal diaphragm rests on the body of the measuring cell (7), thus protecting the silicon pressure sensor from overloads.

Measuring cell for level

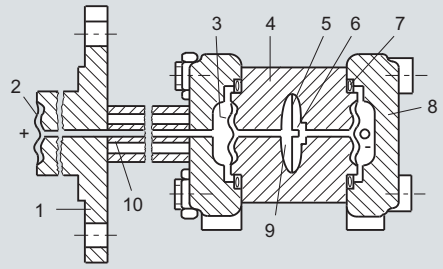

1 Flange with tube
2 Seal diaphragm on mounting flange
3 Seal diaphragm
4 Body of measuring cell
5 Overload diaphragm
6 Silicon pressure sensor
7 O-ring
8 Process flange
9 Filling liquid
10 Capillary with filling liquid of mounting flange

Measuring cell for level, function diagram

The input pressure (hydrostatic pressure) acts hydraulically on the measuring cell through the seal diaphragm on the mounting flange (2, Figure "Measuring cell for level, function diagram"). This differential pressure is subsequently transmitted further through the measuring cell (3) and the filling liquid (9) to the silicon pressure sensor (6) whose measuring diaphragm is then flexed.

This changes the resistance of the four piezo-resistors fitted in the diaphragm in a bridge circuit.

This change in resistance results in a bridge output voltage proportional to the differential pressure.

An overload diaphragm is installed to provide protection from overloads. If the measuring limits are exceeded, the overload diaphragm (2) is flexed until the seal diaphragm rests on the body of the measuring cell (7), thus protecting the silicon pressure sensor from overloads.

© Siemens AG 2011

Parameterization DS III

Depending on the version, there are a range of options for parameterizing the pressure transmitter and for setting or scanning the parameters.

Parameterization using the pushbuttons (local operation)

With the input buttons you can easily set the most important parameters without any additional equipment.

Parameterization using HART communication

Parameterization using HART communication is performed with a HART communicator or a PC.

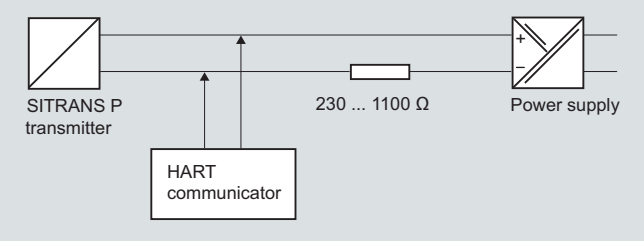

Communication between a HART communicator and a pressure transmitter

When parameterizing with the HART communicator, the connection is made directly to the 2-wire cable.

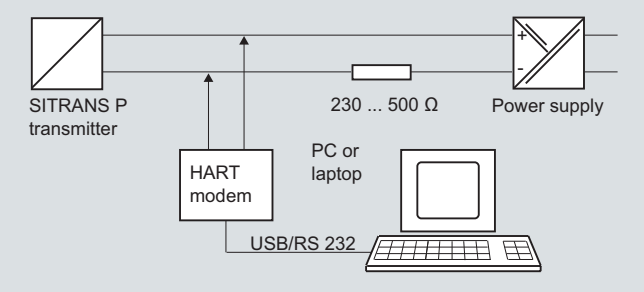

HART communication between a PC communicator and a pressure transmitter

When parameterizing with a PC, the connection is made through a HART modem.

The signals needed for communication in conformity with the HART 5.x or 6.x protocols are superimposed on the output current using the Frequency Shift Keying (FSK) method.

Adjustable parameters, DS III HART

Parameters	Pushbuttons (DS III HART)	HART communication
Start of scale	x	x
Full-scale value	x	x
Electrical damping	x	x
Start-of-scale value without application of a pressure ("Blind setting")	x	x
Full-scale value without application of a pressure ("Blind setting")	x	x
Zero adjustment	x	x
current transmitter	x	x
Fault current	x	x
Disabling of buttons, write protection	x	x[1)]
Type of dimension and actual dimension	x	x
Linear or square root output	x[2)]	x[2)]
Characterizer setup		x
Freely-programmable LCD		x
Diagnostic functions		x

[1)] Cancel apart from write protection
[2)] Only differential pressure

Diagnostic functions for DS III HART

- Zero correction for position
- Event counter
- Transmitter alarms
- Saturation alarm
- Min/Max registers
- Simulation functions
- Maintenance timer

Available physical units of display for DS III HART

Table style: Technical specifications 2

Physical variable	Physical dimensions
Pressure (setting can also be made in the factory)	Pa, MPa, kPa, bar, mbar, torr, atm, psi, g/cm^2, kg/cm^2, inH_2O, inH_2O (4 °C), mmH_2O, ftH_2O (20 °C), inHg, mmHg
Level (height data)	m, cm, mm, ft, in
Volume	m^3, dm^3, hl, yd^3, ft^3, in^3, US gallon, Imp. gallon, bushel, barrel, barrel liquid
Mass	g, kg, t, lb, Ston, Lton, oz
volume flow	m^3/d, m^3/h, m^3/s, l/min, l/s, ft^3/d, ft^3/min, ft^3/s, US gallon/min, US gallon/s
Mass flow	t/d, t/h, t/min, kg/d, kg/h, kg/min, kg/s, g/d, g/h, g/min, g/s, lb/d, lb/h, lb/min, lb/s, LTon/d, LTon/h, STon/d, STon/h, STon/min
Temperature	K, °C, °F, °R
Miscellaneous	%, mA

Parameterization through PROFIBUS PA interface

Fully digital communication through PROFIBUS PA, profile 3.0, is particularly user-friendly. The PROFIBUS puts the DS III PA is in connection with a process control system, e.g. SIMATIC PSC 7. Communication is possible even in a potentially explosive environment.

For parameterization through PROFIBUS you need suitable software, e.g. SIMATIC PDM (Process Device Manager).

Parameterization through FOUNDATION Fieldbus interface

Fully digital communication through FOUNDATION Fieldbus is particularly user-friendly. Through the FOUNDATION Fieldbus the DS III FF is connected to a process control system. Communication is possible even in a potentially explosive environment.

For parameterization through the FOUNDATION Fieldbus you need suitable software, e.g. National Instruments Configurator.

Adjustable parameters for DS III PA and FF

Parameters	Push-buttons	PROFIBUS PA and FOUNDATION Fieldbus interface
Electrical damping	x	x
Zero adjustment (correction of position)	x	x
Buttons and/or function disabling	x	x
Source of measured-value display	x	x
Physical dimension of display	x	x
Position of decimal point	x	x
Bus address	x	x
Linear or square root output	x	x
Characterizer setup		x
Freely-programmable LCD		x
Diagnostics functions		x

© Siemens AG 2011

SITRANS P DS III
Technical description

Diagnostic functions for DS III PA and FF

- Event counter
- Min/Max registers
- Maintenance timer
- Simulation functions
- Zero correction for position
- Transmitter alarms
- Saturation alarm

Physical dimensions available for the display

Physical variable	Physical dimensions
Pressure (setting can also be made in the factory)	MPa, kPa, Pa, bar, mbar, torr, atm, psi, g/cm^2, kg/cm^2, mmH_2O, mmH_2O (4 °C), inH_2O, in$H_2$0 (4 °C), ftH_2O (20 °C), mmHg, inHg
Level (height data)	m, cm, mm, ft, in, yd
Volume	m^3, dm^3, hl, yd^3, ft^3, in^3, US gallon, Imp. gallon, bushel, barrel, barrel liquid
volume flow	m^3/s, m^3/min, m^3/h, m^3/d, l/s, l/min, l/h, l/d, Ml/d, ft^3/s, ft^3/min, ft^3/h, ft^3/d, US gallon/s, US gallon/min, US gallon/h, US gallon/d, bbl/s, bbl/min, bbl/h, bbl/d
Mass flow	g/s, g/min, g/h, g/d, kg/s, kg/min, kg/h, kg/d, t/s, t/min, t/h, /t/d, lb/s, lb/min, lb/h, lb/d, STon/s, STon/min, STon/h, STon/d, LTon/s, LTon/min, LTon/h, LTon/d
Total mass flow	t, kg, g, lb, oz, LTon, STon
Temperature	K, °C, °F, °R
Miscellaneous	%

© Siemens AG 2015

Selection and Ordering data		Article No.
Pressure transmitter for gauge pressure, SITRANS P DS III with HART	↗	7MF4033 -
↗ Click on the Article No. for the online configuration in the PIA Life Cycle Portal.		
Measuring cell filling	**Measuring cell cleaning**	
Silicone oil	normal	1
Inert liquid[1]	grease-free to cleanliness level 2	3
Measuring span (min. ... max.)		
0.01 ... 1 bar	(0.15 ... 14.5 psi)	B
0.04 ... 4 bar	(0.58 ... 58 psi)	C
0.16 ... 16 bar	(2.32 ... 232 psi)	D
0.63 ... 63 bar	(9.14 ... 914 psi)	E
1.6 ... 160 bar	(23.2 ... 2320 psi)	F
4.0 ... 400 bar	(58.0 ... 5802 psi)	G
7.0 ... 700 bar	(102.0 ...10153 psi)	J
Wetted parts materials		
Seal diaphragm	Process connection	
Stainless steel	Stainless steel	A
Hastelloy	Stainless steel	B
Hastelloy	Hastelloy	C
Version as diaphragm seal [2) 3) 4) 5)]		Y
Process connection		
• Connection shank G½B to EN 837-1		0
• Female thread ½-14 NPT		1
• Stainless steel oval flange with process connection (Oval flange has no female thread)		
- Mounting thread $^{7}/_{16}$-20 UNF to IEC 61518		2
- Mounting thread M10 to DIN 19213		3
- Mounting thread M12 to DIN 19213		4
• Male thread M20 x 1.5		5
• Male thread ½ -14 NPT		6
Non-wetted parts materials		
• Housing made of die-cast aluminium		0
• Housing stainless steel precision casting[6)]		3
Version		
• Standard versions		1
• International version, English label inscriptions, documentation in 5 languages on CD (no Order code selectable)		2
Explosion protection		
• None		A
• With ATEX, Type of protection:		
- "Intrinsic safety (Ex ia)"		B
- "Explosion-proof (Ex d)"[7)]		D
- "Intrinsic safety and flameproof enclosure" (Ex ia + Ex d)"[8)]		P
- "Ex nA/ic (Zone 2)"[9)]		E
- "Intrinsic safety, explosion-proof enclosure and dust explosion protection (Ex ia + Ex d + Zone 1D/2D)"[8)10)]		R
• FM + CSA intrinsic safe (is)		F
• FM + CSA (is + ep) + Ex ia + Ex d (ATEX)[10)]		S
• With FM + CSA, Type of protection:		
- "Intrinsic Safe und Explosion Proof (is + xp)"[7)]		NC
Electrical connection / cable entry		
• Screwed gland Pg 13.5 (adapter)[11)]		A
• Screwed gland M20 x1 .5		B
• Screwed gland ½-14 NPT		C
• Han 7D plug (plastic housing) incl. mating connector[11)]		D
• M12 connectors (stainless steel)[11)12)]		F

Selection and Ordering data	Article No.
Pressure transmitter for gauge pressure, SITRANS P DS III with HART	7MF4033 -
Display	
• Without display	0
• Without visible display (display concealed, setting: mA)	1
• With visible display (setting: mA)	6
• with customer-specific display (setting as specified, Order code "Y21" or "Y22" required)	7

Power supply units see Chap. 7 "Supplementary Components".

Included in delivery of the device:
- Brief instructions (Leporello)
- CD-ROM with detailed documentation

1) For oxygen application, add Order code E10.

2) When the manufacture's certificate (calibration certificate) has to be ordered for transmitters with diaphragm seals according to IEC 60770-2, it is recommended only to order this certificate exclusively with the diaphragm seals. The measuring accuracy of the total combination is certified here.

3) If the acceptance test certificate 3.1.is ordered for the transmitter with mounted diaphragm seals this certificate must also be ordered with the respective remote seals.

4) The diaphragm seal is to be specified with a separate order number and must be included with the transmitter order number, for example 7MF403.-..Y..-.... and 7MF4900-1...-.B

5) The standard measuring cell filling of configurations with remote seals (Y) is silicone oil.

6) Not in conjunction with Electrical connection "Screwed gland Pg 13.5" and "Han7D plug".

7) Without cable gland, with blanking plug

8) With enclosed cable gland Ex ia and blanking plug

9) Configurations with HAN and M12 connectors are only available in Ex ic.

10) Only in connection with IP65.

11) Only in connection with Ex approval A, B or E.

12) M12 delivered without cable socket

Tags LT- 010

In-Situ

Innovations in Water Monitoring

Spec Sheet

Level TROLL® 400, 500 & 700 Data Loggers

Get water level data the way you want it, when you want it with industry-leading water level/pressure and temperature data loggers. By partnering with In-Situ, you receive durable Level TROLL® Data Loggers that provide years of service, accurate results, intuitive software, and real-time functionality.

Be Effective

- **Increase productivity:** Reduce training and installation time with In-Situ intuitive software platform and integrated components. Patented twist-lock connectors, included on Level TROLL Loggers and RuggedCable® Systems, ensure error-free deployments.
- **Streamline analysis and reporting:** Automate water level corrections and post-processing, graph data, and accelerate report generation with Win-Situ® Software. Easily export data to Excel,® a web-based management service, or data analysis software.
- **Set up real-time networks:** Access data 24/7 and receive event notifications when you connect data loggers to Tube and Cube systems, radios, or other third-party data collection platforms. Get decision quality data when, where, and how you need it with HydroVu Data Services. Control gates, pumps, alarms, and other equipment by using built-in Modbus/RS485, SDI-12, or 4-20 mA communication protocols.

Be Reliable

- **Deploy in all environments:** Install loggers in fresh water, saltwater, and contaminated waters. Solid titanium and sealed construction outperforms and outlasts coated data loggers.
- **Log accurate data:** Get optimal accuracy under all operating conditions. Sensors undergo NIST®-traceable factory calibration across the full pressure and temperature range. For applications requiring the highest levels of accuracy, use a vented (gauged) system.
- **Get long-lasting operation:** Reduce trips to the field with low-power loggers that typically operate for 10 years.

Be In-Situ

- Receive **free**, 24/7 technical support and online resources.
- Order data loggers and accessories from the In-Situ website.
- Get guaranteed 7-day service for maintenance (U.S.A. only).

Applications

- **Aquifer characterization: slug tests & pumping tests**
- **Coastal: tide/harbor levels & wetland/estuary research**
- **Hydrologic events: crest stage gages, storm surge monitoring, & flood control systems**
- **Long-term, real-time groundwater & surface water monitoring**
- **Mining & remediation**

CALL OR CLICK TO PURCHASE OR RENT

1-800-446-7488 (toll-free in U.S.A. and Canada)
1-970-498-1500 (U.S.A. and international)

WWW.IN-SITU.COM

Level TROLL® 400, 500 & 700 Data Loggers

Spec Sheet

General	Level TROLL 400	Level TROLL 500	Level TROLL 700	Level BaroTROLL
Temperature ranges[1]	Operational: -20-80° C (-4-176° F) Storage: -40-80° C (-40-176° F) Calibrated: -5-50° C (23-122° F)	Operational: -20-80° C (-4-176° F) Storage: -40-80° C (-40-176° F) Calibrated: -5-50° C (23-122° F)	Operational: -20-80° C (-4-176° F) Storage: -40-80° C (-40-176° F) Calibrated: -5-50° C (23-122° F)	Operational: -20-80° C (-4-176° F) Storage: -40-80° C (-40-176° F) Calibrated: -5-50° C (23-122° F)
Diameter	1.83 cm (0.72 in.)	1.83 cm (0.72 in.)	1.83 cm (0.72 in.)	1.83 cm (0.72 in.)
Length	21.6 cm (8.5 in.)	21.6 cm (8.5 in.)	21.6 cm (8.5 in.)	21.6 cm (8.5 in.)
Weight	197 g (0.43 lb)	197 g (0.43 lb)	197 g (0.43 lb)	197 g (0.43 lb)
Materials	Titanium body; Delrin® nose cone	Titanium body; Delrin nose cone	Titanium body; Delrin nose cone	Titanium body; Delrin nose cone
Output options	Modbus/RS485, SDI-12, 4-20 mA	Modbus/RS485, SDI-12, 4-20 mA	Modbus/RS485, SDI-12, 4-20 mA	Modbus/RS485, SDI-12, 4-20 mA
Battery type & life[2]	3.6V lithium; 10 years or 2M readings	3.6V lithium; 10 years or 2M readings	3.6V lithium; 10 years or 2M readings	3.6V lithium; 10 years or 2M readings
External power	8-36 VDC	8-36 VDC	8-36 VDC	8-36 VDC
Memory *Data records*[3] *Data logs*	2.0 MB 130,000 50 logs	2.0 MB 130,000 50 logs	4.0 MB 260,000 50 logs	1.0 MB 65,000 2 logs
Fastest logging rate	2 per second	2 per second	4 per second	1 per minute
Fastest output rate	Modbus: 2 per second SDI-12 & 4-20 mA: 1 per second	Modbus: 2 per second SDI-12 & 4-20 mA: 1 per second	Modbus: 2 per second SDI-12 & 4-20 mA: 1 per second	Modbus: 2 per second SDI-12 & 4-20 mA: 1 per second
Log types	Linear, Fast Linear, and Event	Linear, Fast Linear, and Event	Linear, Fast Linear, Linear Average, Event, Step Linear, True Logarithmic	Linear
Sensor Type/Material	**Piezoresistive; titanium**	**Piezoresistive; titanium**	**Piezoresistive; titanium**	**Piezoresistive; titanium**
Range	Absolute (non-vented) 30 psia: 11 m (35 ft) 100 psia: 60 m (197 ft) 300 psia: 200 m (658 ft) 500 psia: 341 m (1120 ft)	Gauged (vented) 5 psig: 3.5 m (11.5 ft) 15 psig: 11 m (35 ft) 30 psig: 21 m (69 ft) 100 psig: 70 m (231 ft) 300 psig: 210 m (692 ft) 500 psig: 351 m (1153 ft)	Absolute (non-vented) 30 psia: 11 m (35 ft) 100 psia: 60 m (197 ft) 300 psia: 200 m (658 ft) 500 psia: 341 m (1120 ft) 1000 psia: 693 m (2273 ft) Gauged (vented) 5 psig: 3.5 m (11.5 ft) 15 psig: 11 m (35 ft) 30 psig: 21 m (69 ft) 100 psig: 70 m (231 ft) 300 psig: 210 m (692 ft) 500 psig: 351 m (1153 ft)	30 psia (usable up to 16.5 psi; 1.14 bar)
Accuracy[4]	±0.05% full scale (FS) ±0.1% FS	±0.05% FS ±0.1% FS	±0.05% FS ±0.1% FS	±0.05% FS ±0.1% FS
Resolution	±0.005% FS or better	±0.005% FS or better	±0.005% FS or better	±0.005% FS or better
Units of measure	Pressure: psi, kPa, bar, mbar, mmHg, inHg, cmH20, inH20 Level: in., ft, mm, cm, m	Pressure: psi, kPa, bar, mbar, mmHg, inHg, cmH20, inH20 Level: in., ft, mm, cm, m	Pressure: psi, kPa, bar, mbar, mmHg, inHg, cmH20, inH20 Level: in., ft, mm, cm, m	Pressure: psi, kPa, bar, mbar, mmHg, inHg, cmH20, inH20
Temperature Sensor	**Silicon**	**Silicon**	**Silicon**	**Silicon**
Accuracy	±0.1° C	±0.1° C	±0.1° C	±0.1° C
Resolution	0.01° C or better	0.01° C or better	0.01° C or better	0.01° C or better
Units of measure	Celsius or Fahrenheit	Celsius or Fahrenheit	Celsius or Fahrenheit	Celsius or Fahrenheit
Warranty	**3 years**	**3 years**	**3 years**	**3 years**
Notes	[1] Temperature range for non-freezing liquids. [2] Typical battery life when used within the factory-calibrated temperature range. [3] 1 data record = date/time plus 2 parameters logged (no wrapping) from device within the factory-calibrated temperature range. [4] Across factory-calibrated pressure range. [5] Across factory-calibrated pressure and temperature ranges. [6] Up to 5-year (total) extended warranties are available for all sensors—call for details. Delrin is a registered trademark of E.I. du Pont de Nemours and Company. Specifications are subject to change without notice.			

Every Application & Budget

Use maintenance-free, non-vented systems for long-term monitoring and at flood-prone or high-humidity sites. Pair with Tube and Cube Telemtry System and HydroVu for automtatic barometric compensation.

Use high-accuracy, vented systems to conduct aquifer tests and to view barometrically compensated water level data in real time.

Forgot to set a level reference at the beginning of a deployment? Automate level corrections by using Win-Situ Software's post-level correction Wizard.

BaroTROLL® Data Logger

When using a non-vented system, collect barometric pressure and temperature data with a titanium BaroTROLL Data Logger in order to post correct data for barometric pressure fluctuations.

Calculating barometric efficiency? Use the BaroTROLL Logger with vented systems.

CE FC

CALL OR CLICK TO PURCHASE
1-800-446-7488 (toll-free in U.S.A. and Canada)
1-970-498-1500 (U.S.A. and international)
WWW.IN-SITU.COM
221 East Lincoln Avenue, Fort Collins, CO 80524 USA
Copyright © 2013 In-Situ Inc. All rights reserved. Nov. 2015 (T3; 2K)

Tags LT-9010

In-Situ Inc.

Innovations in Water Monitoring

In-Situ® RuggedCable® Systems

Durable, Direct-Read Cable

RuggedCable Systems are custom-built to endure harsh environments and to last for years. RuggedCable Systems include:

- Titanium twist-lock connectors for quick, reliable connections to instrument body, TROLL® Com Communication Device, desiccant, and other accessories (2-year warranty)
- Metal shield beneath the cable jacket to prevent electrical interferences
- Kellems® grip for secure instrument deployment
- Small desiccant for vented systems (only for storage)

Use RuggedCable Systems with:

- Aqua TROLL® 100, 200, and 400 Instruments
- BaroTROLL® Instruments
- Con TROLL® PRO System
- Level TROLL® 300, 500, and 700 Instruments
- RDO® PRO Probe (twist-lock models)
- TROLL® 9500 Water Quality Instruments
- TROLL® Link Telemetry Systems, MultiHop Radios, and TROLL® Net Hub

Customizable Cable

When ordering, consider the following options:

- **Vented or non-vented cable:** Vented cable is used with vented pressure/level sensors for gauged measurements. The cable vent tube ensures that atmospheric pressure is the reference pressure applied to the sensor diaphragm. Non-vented cable may be used with non-vented instruments for absolute measurements. Compensate absolute measurements with barometric pressure data by using a BaroTROLL® Instrument and Win-Situ® Baro Merge™ Software.
- **Jacket options:** Tefzel® (vented) or thermoplastic polyurethane (TPU; vented or non-vented)
- **Customized lengths:** Up to 1,219 m (4,000 ft) 600Ft Cable
- **Cable termination:** Twist-lock termination (female connector) on one or both cable ends. Other custom configurations are available—call for details.
- ~~**Cable reels:** Plastic or steel reel~~

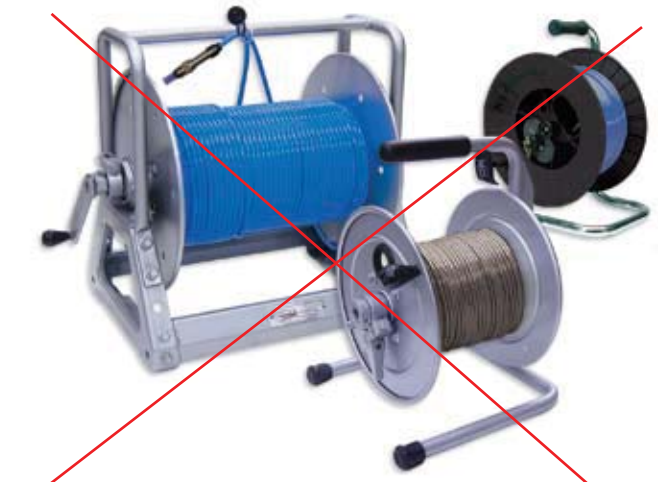

Steel and plastic reels available

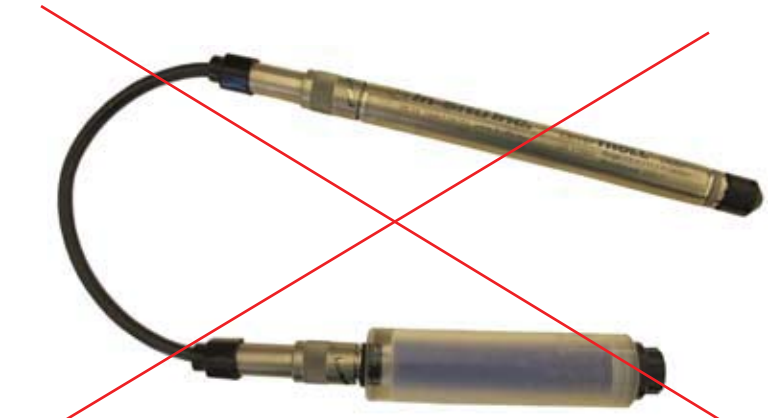

Extra large desiccant connected to RuggedCable System and Level TROLL Instrument

Titanium twist-lock connectors

In-Situ® RuggedCable® Systems

Specifications

Specifications	RuggedCable Systems
Operating temp. range	-25° to 80° C (-13° to 176° F)
Jacket options	• TPU (thermoplastic polyurethane) • Tefzel® (ETFE fluoropolymer; generic equivalent to Teflon®)
Vent options	• Non-vented (absolute) • Vented (gauged) with desiccant (used to mitigate moisture/humidity)
Conductors	6 conductors, 24 AWG, polypropylene insulation
Cable diameter	• TPU: 6.7 mm (0.265 in) • Tefzel: 6.35 mm (0.25 in)
Connector diameter	18. 5 mm (0.73 in)
Weight	• Non-vented, TPU: 16 kg/300 m (35.6 lbs/1,000 ft) • Non-vented, Tefzel: 14 kg/300 m (32 lbs/1,000 ft) • Vented, TPU: 14 kg/300 m (32 lbs/1,000 ft) • Vented, Tefzel: 14 kg/300 m (32 lbs/1,000 ft)
Minimum bend radius	2X cable diameter (13.5 mm; 0.54 in)
Break strength	127 kg (280 lbs)
Maximum cable length	1,219 m (4,000 ft) for RS485
Desiccant pack (required for vented systems)	Large and extra large desiccant packs available with titanium, ABS, or stripped-and-tinned termination.
Warranty	2 years

RuggedCable Selection Guide

Application	Jacket Type	Cable Type
Aquifer characterization	TPU or Tefzel	Vented
Crest stage gaging	TPU	Non-vented
Dewatering	TPU	Vented or non-vented
Flood and storm surge monitoring	TPU	Non-vented
Landfill monitoring	Tefzel	Non-vented
Municipal and industrial monitoring (SCADA)	TPU	Non-vented
Remediation projects	Tefzel	Vented
River, lake, and reservoir monitoring	TPU	Vented or non-vented
Saltwater/brackish water	TPU or Tefzel	Vented or non-vented
Stormwater monitoring	TPU	Vented or non-vented
Tide/harbor monitoring	TPU or Tefzel	Vented
Wetland and estuary monitoring	TPU or Tefzel	Vented or non-vented

Specifications are subject to change without notice.

Accessories

- Large desiccant for low-humidity environments or for deployments where maintenance occurs frequently.
- Extra large desiccant for high-humidity environments or for depolyments where maintenance occurs infrequently. Desiccates six times more saturated air than the large desiccant.
- Titanium cable extenders are used to join two lengths of cable without signal loss. The cable extender seals the cables, provides a weight-bearing connection, and maintains venting.
- Plastic and steel reels

Large desiccant with titanium twist-lock connector for standard deployments

Economical large plastic desiccant

Extra large desiccant with titanium twist-lock connector for high-humidity sites, remote sites, or applications that require fast sampling rates.

Outboard desiccant for use with stripped-and-tinned RuggedCable Systems

Titanium cable extender

Kellems is a registered trademark of Hubbell Incorporated.
Teflon and Tefzel are registered trademarks of E.I. Du Pont de Nemours and Co.

In-Situ Inc.

Call to purchase or rent—www.in-situ.com
221 East Lincoln Avenue, Fort Collins, Colorado, U.S.A. 80524
1-800-446-7488 (toll-free in U.S.A. and Canada)
1-970-498-1500 (U.S.A. and international)
Copyright © 2012 In-Situ Inc. All rights reserved. Sept. 2012 (web)

In-Situ Inc.

Information Sheet

Catalog No. 0053310

SHORT STRIPPED & TINNED CABLE with Male Twist-Lock Connector for Level TROLL®

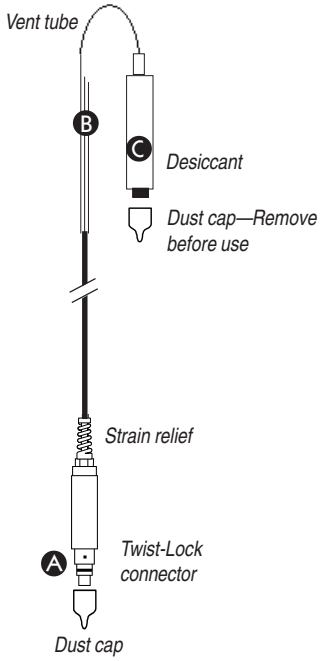

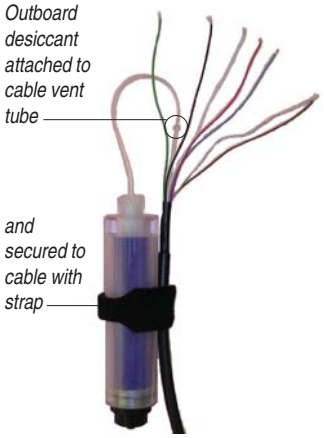

TIP: *The desiccant may be removed from the vent tube, if needed, for better access to the conductor wires. Pull the vent tube extender off the cable vent tube to remove. After connecting and trimming wires, attach desiccant vent tube to cable vent tube and secure desiccant to cable with hook-and-loop strap, as shown here.*

Connects a Level TROLL's RuggedCable™ to a controller or logger for communication via:

- Analog (4-20 mA)
- SDI-12
- RS485 Modbus
- RS232 Modbus (with a customer-supplied converter)

A Male Twist-Lock connector mates with female Twist-Lock connector on the RuggedCable

B Stripped & tinned wires on opposite end for wiring to PLC or logger

C Removable, refillable outboard desiccant protects cable vent tube from condensation in high-humidity environments

SPECIFICATIONS

Materials	PVC, titanium, nylon, Viton®
Dimensions	13.33 cm (5.25 in) long, 19 mm (0.75 in) O.D.
Environmental Rating	IP67 when connected, not designed for submersion
Cable	0.9 m (3 ft) vented TPU (Thermoplastic Polyurethane)
Conductors	6 conductors, 24 AWG, polypropylene insulation
Desiccant pack	Clear acrylic, nylon, HDPE membrane
Desiccant	approx. 22 g silica gel, type 4
Max. recommended cable lengths	SDI-12 61 m (200 ft) Modbus 1259 m (4000 ft) 4-20 mA 1259 m (4000 ft)

CONNECTIONS

Refer to wiring diagrams on back of sheet. Trim back and insulate unused wires. The shield should be wired to a chassis ground or earth ground.

Power Connections. The Red wire provides power for Modbus and SDI-12 modes. The Brown wire provides power for the 4-20 mA mode. If power is present on the Brown wire and not on the Red wire, the device enters the 4-20 mA mode automatically and stays in the 4-20 mode until power is removed from the Brown wire or is applied to the Red wire. The Red wire has priority — if power is applied to both wires at the same time, the device will operate in Modbus or SDI-12 modes but not in 4-20.

Communications. The device automatically switches between Modbus and SDI-12 modes depending on which of the two interfaces has activity. Modbus and SDI-12 cannot be used at the same time — whichever one is currently in use will block communication on the other.

To communicate with the device using Win-Situ® 5 software through a serial COM port: Disconnect the RuggedCable from the short stripped and tinned cable connector. Attach a TROLL Com to the RuggedCable. Connect the TROLL Com's DB9-pin connector to a serial port on a PC running Win-Situ 5.

(over)

SHORT STRIPPED & TINNED CABLE

Level TROLL Connections

ANALOG (4-20 mA) 2 WIRE

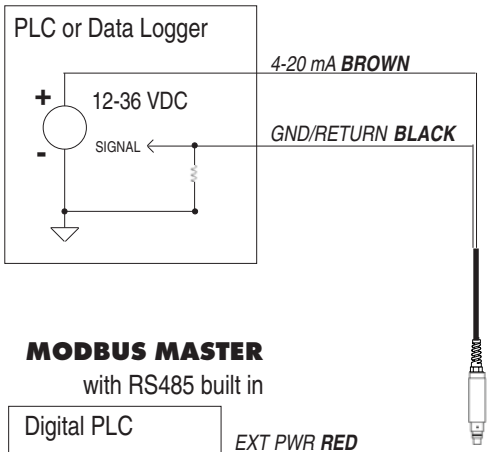

SDI-12 3 WIRE

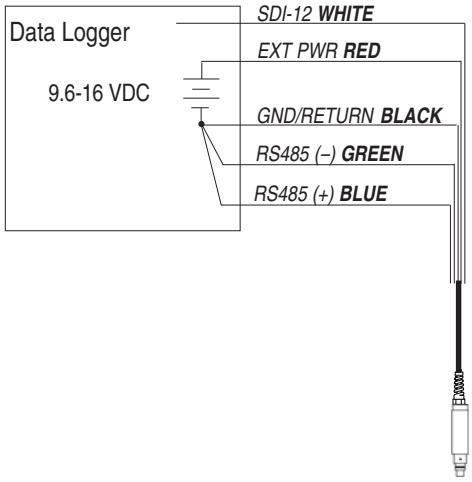

MODBUS MASTER

with RS485 built in

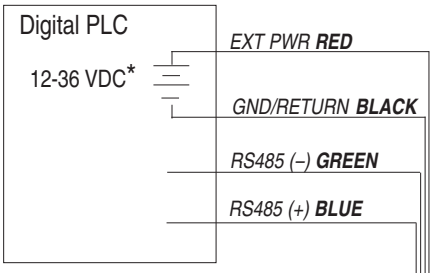

* Optional but highly recommended

MODBUS MASTER

with RS232 built in (converter required)

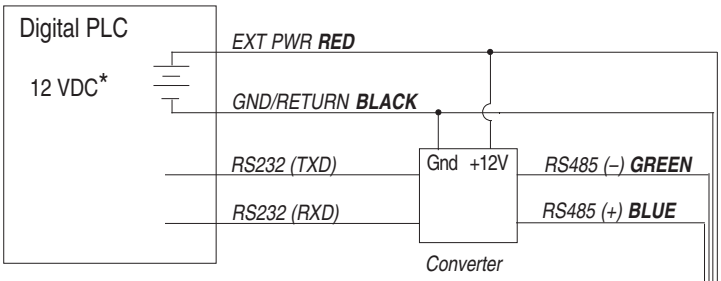

* Voltage limited by converter

Signal	Color
Gnd/Return	BLACK
Ext Power	RED
4-20 mA	BROWN
RS485(–)	GREEN
RS485(+)	BLUE
SDI-12	WHITE

CONVERTER

Port-Powered RS485 converter, such as B&B Electronics Model 485SD9TB

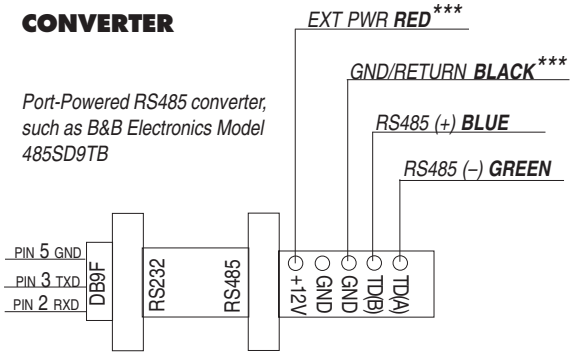

*** Required if port power is not available

1 800 446 7488
(toll-free, US and Canada) or 970 498 1500 **www.in-situ.com**

In-Situ Inc.

Due to continuing product development this information is subject to change without notice. In-Situ and the In-Situ logo, Win-Situ, TROLL, BaroTROLL, RuggedReader, RuggedCable and RDO are trademarks or registered trademarks of In-Situ Inc. Viton is a registered trademark of DuPont Dow Elastomers.
Copyright © 2005-2007 by In-Situ Inc. All rights reserved.

0053312 rev. 004 09/07

Bray COMMERCIAL

BV Series

Threaded Industrial Control Ball Valves

2 Way • 1/2"- 4"

06/30/15

The BV Series Threaded Industrial Ball Valve product line is ideally suited to high temperature and high pressure water or steam as well as a wide range of heavy commercial HVAC control applications. These valves provide exceptional characterized control, high rangeability, flow capacity and pressure drops; all with bi-directional bubble tight shut off.

Valves in this range feature investment cast 3 piece construction, Carbon Steel housings and Stainless Steel balls and stems with NPT threaded connections. Characterized V-Balls and full port versions provide multiple Cv values in each size.

Features and Benefits

- High Cycle Packing Design
  Years of trouble free service
- Bubble Tight Shut-Off with Zero Leakage
  Energy efficient
- 3-Piece Body Design
  Allows in-line servicing
- Phosphate Coated Carbon Steel Bodies
  For cost effective applications up to 1,000 psi at 225˚F
- Available Commercial Grade & NEMA 4 Actuators
  Reliable, cost effective control

Increased Linear Response

Due to the in-line design inherent with characterized control ball valves, line media flows linearly through the piping system. The direct pattern provides increased media control and rapid response times to controller commands.

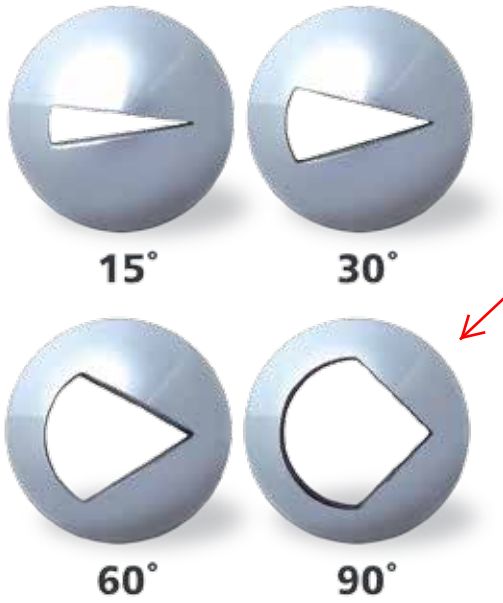

Flow Curve Chart

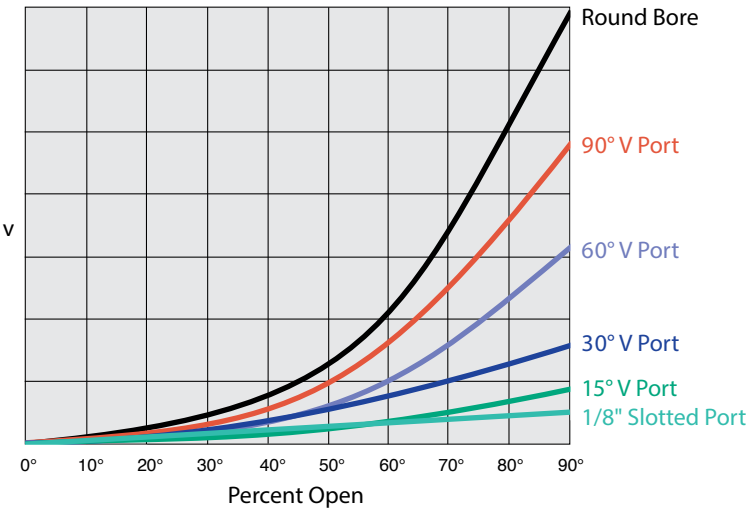

These curves of standard ports are general guidelines and are not specific to any particular valve size.

BV - Specifications

Technical Specifications - BV Threaded Industrial Ball Valve , 1/2" - 4"– 2-Way			
Carbon Steel Body		**V-Port**	**Full-Port**
Service		Chilled/Hot Water, 50/50 Glycol Solutions and Saturated Steam	
Size		1/2" to 4" Threaded Valves, 2-Way	
Maximum Fluid Temperature	Water	-20˚ to 225˚F at 1000 PSI (-28˚ to 107˚C at 6,895 kPa)	
	Steam	150 PSI (1034 kPa)	
Valve Body Pressure Rating		1000 PSI (6895 kPa)	
Maximum Close-Off Pressure		300 PSI (2,068 kPa)* For higher close-offs contact Bray.	
Maximum Recommended Pressure Drop	Water	80 PSI (551 kPa)	
	Steam	50 PSI (344 kPa)	
Flow Characteristic	V15 Port	Linear	NA
	V30 Port	Modified Equal Percentage	NA
	V60 & 90 Port	Equal Percentage	NA
Rangeability		200:1	
Leakage		Bubble Tight per API 598	
End Connections		Threaded NPT	
Ambient Operating Temperature Range		See Actuator Rating (Optional high temperature mounting kit may be required)	
Materials	Body	WCB Carbon Steel	
	Ball & Stem	316 Stainless Steel	
	Seat	Tek-Fil	RPTFE
	Stem Seal/Packing	RPTFE	
	Body Seal	TFM	
	Body Bolts	SS304	

Disclaimer - *The performance specifications are nominal and conform to acceptable industry standards. For application at conditions beyond these specifications, consult the local Bray office. Bray, Inc. shall not be liable for damages resulting from misapplication or misuse of its products.*

BV - Piping Diagram

- "V-Port valves- Note the arrow engraved on the ends which shows the flow going from the bolt head to the nut so that the V-ball is downstream.
- "Full Port valves are bi-directional.

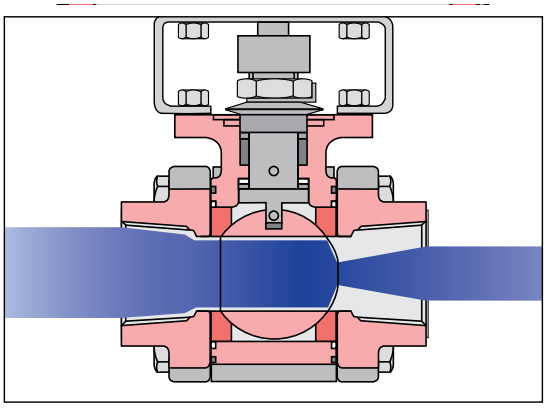

Media Flow entering valve from left. Installing the V downstream is preferred.

BV - Mode of Actuation

Typical Two-Way Ball Valve Application

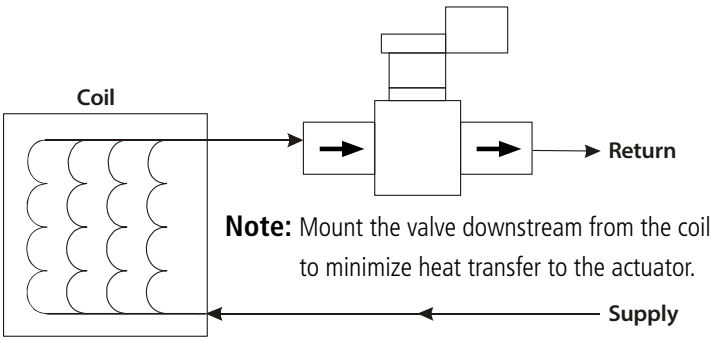

Note: Mount the valve downstream from the coil to minimize heat transfer to the actuator.

BV - For Steam Applications

Install valve with stem at 45˚ to 90˚ from vertical.

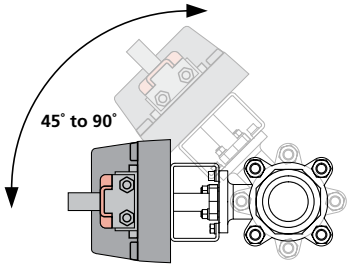

BV - Cut Away View

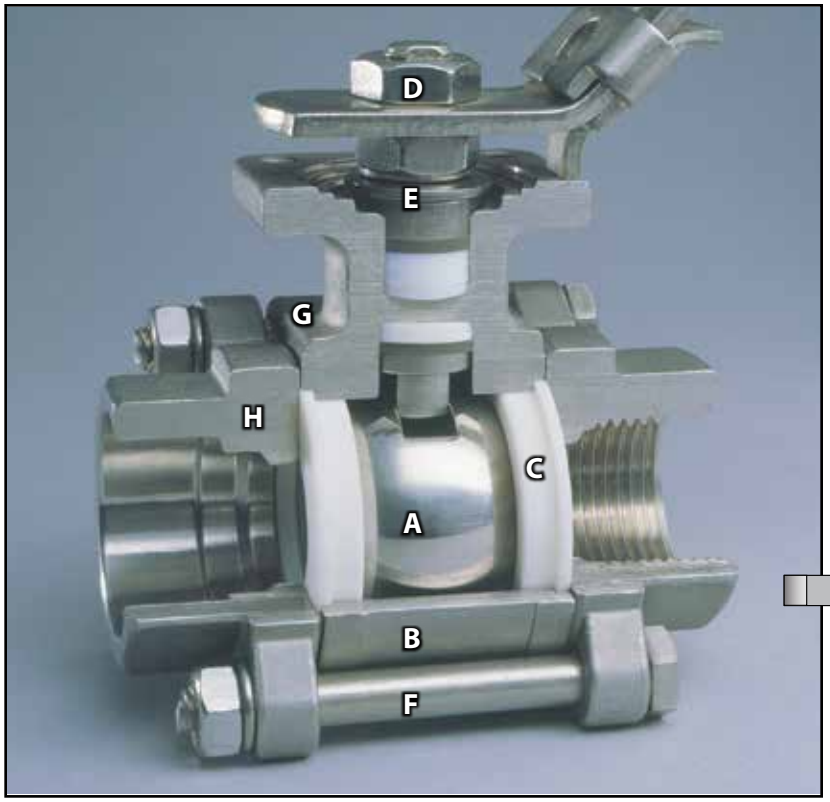

Ball (A) Is a precision machined and mirror finished for bubble-tight shut off with less operating torque. Ball edges have machined curvatures to reduce seat wear and provide a high cycle life.

Body (B) Valve bodies are investment cast and solution annealed/normalized for the highest quality and added strength. Body castings are marked with a foundry heat number for full traceability. Carbon steel bodies are phosphate coated for increased corrosion resistance.

Seat (C) The seat design ensures bi-directional, bubble-tight sealing while providing the lowest possible torque. This seat design reduces friction, minimizes seat wear and reduces operating torque.

Double Lock Nut Design (D) These double lock nuts allow handles to be easily and safely removed while the valve is under full line pressure.

Live-Loaded Stem Seals (E) The live-loaded seals considerably increase the number of cycles between maintenance adjustments.

Body Bolts (F) Standard material is 304 Stainless Steel.

Body Hinges (G) Heavy duty hinges, throughout the entire size range, provide positive alignment of body to end connection during swing-out, in-line servicing.

End Connections (H) Full range of interchangeable connections. Anti-Static Protection BV Series valves feature anti-static grounding devices as standard. These devices ensure electrical continuity between valve ball, stem and body, thus eliminating the possibility of static electrical charges creating sparks within the valve.

Smart Stem

Valve Sizes 1/2" through 2-1/2"

These Interchangeable series of valves feature strong, large diameter stems with live-loaded, self-adjusting sealing utilizing belleville washers which automatically adjust to compensate for changes in temperature and wear. Manual adjustments which can cause damage to the seal and seat are not required. The assembly is secured by a saddle-type lock washer which prevents stem nuts from un-threading in high cycle automation applications.

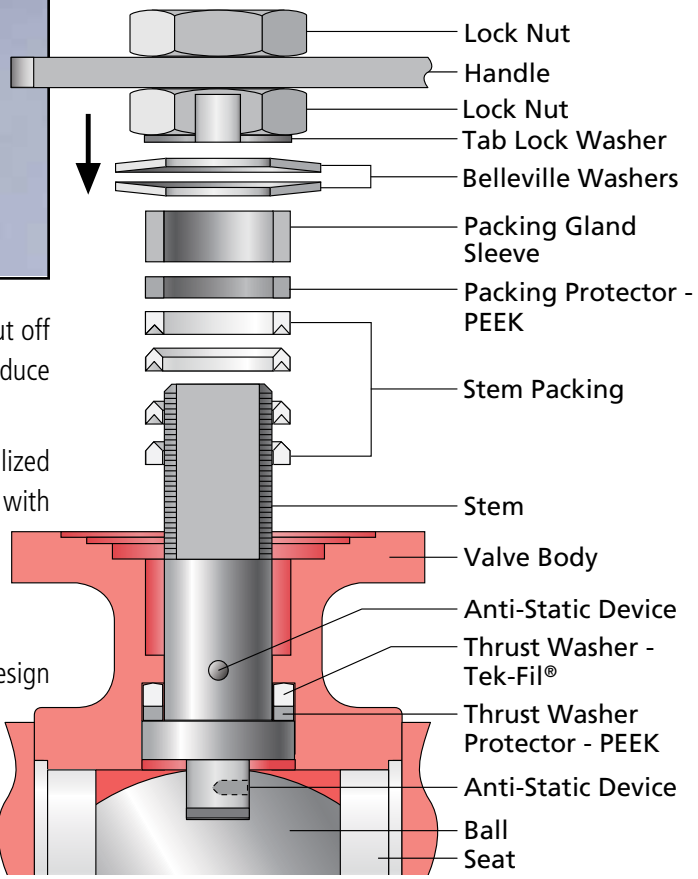

Stem Packing

An adjustable V-ring design creates a multiple seal between the stem and body. Each stem assembly is composed of three or four (dependent on valve size) rings providing a very high cycle life by resisting creep and cold flow. The Thrust Washer and the Thrust Washer Protector combine to provide a primary seal, reduce torque and prevent galling. This arrangement is a BV Series exclusive.

BV -2-Way - Threaded Ball Valve/Industrial Actuator Dimensions

2-Way Setup - Industrial Actuator

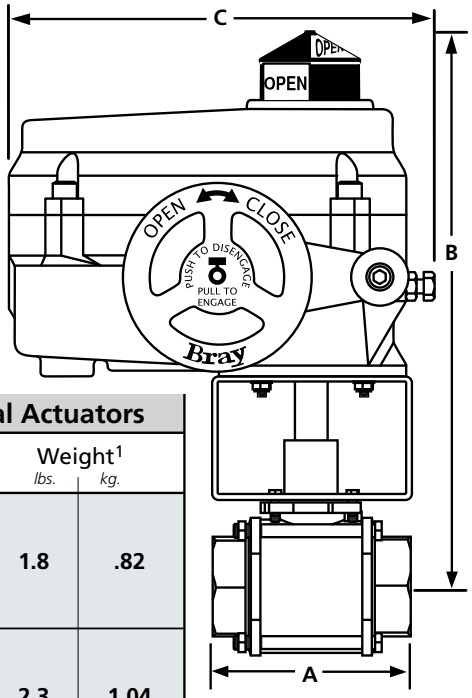

2-Way BV Dimensions, 1/2" - 4" - Threaded BV Series - with Industrial Actuators

Valve Models	Size in.	Size mm	Flow Coefficient Cv	Flow Coefficient Kv	A	B	C	Weight[1] lbs.	Weight[1] kg.
BV05-CS3-04	1/2	15	3.6	3.1	2.8 (71)	9.8 (249)	7.5 (191)	1.8	.82
BV05-CS3-05			4.7	4.0					
BV05-CS3-09			9.4	8.1					
BV05-CS3-12			11.6	10.0					
BV05-CS3-32			32.0*	27.6					
BV75-CS3-05	3/4	20	4.8	4.1	3.4 (86)	9.9 (252)	7.5 (191)	2.3	1.04
BV75-CS3-06			6.1	5.3					
BV75-CS3-12			12.4	10.7					
BV75-CS3-15			15.3	13.2					
BV75-CS3-54			54.0*	46.5					
BV1-CS3-09	1	25	8.5	7.3	3.6 (91)	10.3 (262)	7.5 (191)	3.4	1.5
BV1-CS3-13			12.8	11.1					
BV1-CS3-23			23.2	20.0					
BV1-CS3-31			31.4	27.1					
BV1-CS3-105			105.0*	90.5					
BV125-CS3-11	1.25	32	10.8	9.3	4.3 (109)	10.5 (267)	7.5 (191)	4.9	2.2
BV125-CS3-15			14.9	12.8					
BV125-CS3-33			33.4	28.8					
BV125-CS3-52			51.8	44.6					
BV125-CS3-200			200.0*	172.4					
BV150-CS3-15	1.50	40	14.9	12.8	4.8 (122)	11.2 (285)	7.5 (191)	7.6	3.4
BV150-CS3-20			20.4	17.6					
BV150-CS3-46			45.9	39.5					
BV150-CS3-71			71.2	61.3					
BV150-CS3-275			275.0*	237.1					
BV2-CS3-29	2	50	28.8	24.8	5.6 (142)	11.5 (292)	7.5 (191)	11.4	5.2
BV2-CS3-48			48.1	41.5					
BV2-CS3-104			104.2	89.8					
BV2-CS3-130			129.8	111.8					
BV2-CS3-500			500.0*	431.0					
BV250-CS3-27	2.50	65	27.2	23.5	7.3 (231)	13.4 (340)	10.1 (257)	21.8	9.9
BV250-CS3-56			56.3	48.5					
BV250-CS3-114			113.7	98.0					
BV250-CS3-177			177.3	152.8					
BV250-CS3-780			780.0*	672.4					
BV3-CS3-32	3	80	31.8	27.4	8.0 (257)	15.8 (401)	10.1 (257)	34.6	15.7
BV3-CS3-70			69.8	60.1					
BV3-CS3-150			149.9	129.2					
BV3-CS3-237			237.3	204.6					
BV3-CS3-1150			1,150.0*	991.3					
BV4-CS3-76	4	100	75.5	65.1	9.1 (353)	17.2 (437)	12.1 (307)	54.7	24.8
BV4-CS3-159			158.5	136.7					
BV4-CS3-330			329.5	284.0					
BV4-CS3-547			546.6	471.2					
BV4-CS3-2100			2,100.0*	1,810.2					

[1]- *Weights are for valve bodies only.*
- Largest Actuator dimension shown.
** Full Port Valves*
For steam applications, install valve with stem at 45° to 90° from vertical.

BV - 2-Way Industrial Actuator Selection and Close-Off Chart

2-Way BV Actuator Selection/Close-Off (PSI) - 100 PSI Steam and 300 PSI Water

On/Off & Floating					70-24-0061H	70-24-0201H	70-24-0501H	70-0061H	70-0121H	70-0201H	70-0301H
					On-Off Tri-State 24VAC	On-Off Tri-State 24VAC	On-Off Tri-State 24VAC	On-Off Tri-State 120VAC	On-Off Tri-State 120VAC	On-Off Tri-State 120VAC	On-Off Tri-State 120VAC
Modulating					70-24-0061SVH	70-24-0201SVH	70-24-0501SVH	70-0061SVH	70-0121SVH	70-0201SVH	70-0301SVH
					0-10VDC 4-20mA 24VAC	0-10VDC 4-20mA 24VAC	0-10VDC 4-20mA 24VAC	0-10VDC 4-20mA 120VAC	0-10VDC 4-20mA 120VAC	0-10VDC 4-20mA 120VAC	0-10VDC 4-20mA 120VAC
Valve Models	Size in.	Size mm	Flow Coefficient Cv	Flow Coefficient Kv	**Series 70 - 24VAC**			**Series 70 - 120VAC**			
BV05-CS3-04	1/2	15	3.6	3.1	100 PSI Steam 300 PSI Water			100 PSI Steam 300 PSI Water			
BV05-CS3-05			4.7	4.0							
BV05-CS3-09			9.4	8.1							
BV05-CS3-12			11.6	10.0							
BV05-CS3-32			32.0*	27.6							
BV75-CS3-05	3/4	20	4.8	4.1	100 PSI Steam 300 PSI Water			100 PSI Steam 300 PSI Water			
BV75-CS3-06			6.1	5.3							
BV75-CS3-12			12.4	10.7							
BV75-CS3-15			15.3	13.2							
BV75-CS3-54			54.0*	46.5							
BV1-CS3-09	1	25	8.5	7.3	100 PSI Steam 300 PSI Water			100 PSI Steam 300 PSI Water			
BV1-CS3-13			12.8	11.1							
BV1-CS3-23			23.2	20.0							
BV1-CS3-31			31.4	27.1							
BV1-CS3-105			105.0*	90.5							
BV125-CS3-11	1.25	32	10.8	9.3	100 PSI Steam 300 PSI Water			100 PSI Steam 300 PSI Water			
BV125-CS3-15			14.9	12.8							
BV125-CS3-33			33.4	28.8							
BV125-CS3-52			51.8	44.6							
BV125-CS3-200			200.0*	172.4							
BV150-CS3-15	1.50	40	14.9	12.8	100 PSI Steam 300 PSI Water			100 PSI Steam 300 PSI Water			
BV150-CS3-20			20.4	17.6							
BV150-CS3-46			45.9	39.5							
BV150-CS3-71			71.2	61.3							
BV150-CS3-275			275.0*	237.1							
BV2-CS3-29	2	50	28.8	24.8		100 PSI Steam 300 PSI Water			100 PSI Steam 300 PSI Water		
BV2-CS3-48			48.1	41.5							
BV2-CS3-104			104.2	89.8							
BV2-CS3-130			129.8	111.8							
BV2-CS3-500			500.0*	431.0							
BV250-CS3-27	2.50	65	27.2	23.5		100 PSI Steam 300 PSI Water			100 PSI Steam 300 PSI Water		
BV250-CS3-56			56.3	48.5							
BV250-CS3-114			113.7	98.0							
BV250-CS3-177			177.3	152.8							
BV250-CS3-780			780.0*	672.4							
BV3-CS3-32	3	80	31.8	27.4		100 PSI Steam 300 PSI Water			100 PSI Steam 300 PSI Water		
BV3-CS3-70			69.8	60.1							
BV3-CS3-150			149.9	129.2							
BV3-CS3-237			237.3	204.6							
BV3-CS3-1150			1,150.0*	991.3							
BV4-CS3-76	4	100	75.5	65.1			100 PSI Steam 300 PSI Water				100 PSI Steam 300 PSI Water
BV4-CS3-159			158.5	136.7							
BV4-CS3-330			329.5	284.0							
BV4-CS3-547			546.6	471.2							
BV4-CS3-2100			2,100.0*	1,810.2							

V-port ball valves are controllable between 20% and 80% of full open.
** Full Port Valves*
For steam applications, install valve with stem at 45˚ to 90˚ from vertical.

Key BV1-CS3-10 =
- BV = Industrial Ball Valve Series
- 1 = Size (in.)
- CS3 = Material, CS3 = Carbon Steel
- 10 = Cv

Series 70
Industrial Electric Actuators

The Bray Series 70 Electric Actuator provides a rugged, compact industrial actuator solution to a wide range of quarter turn applications including butterfly valves, ball valves, and dampers. Available in torque outputs from 600 to 18,000 lb. in. (68 to 2033 Nm), these actuators mount directly to Bray and other industry standard butterfly valves without the need for brackets and linkages. The manual declutchable override handwheel is standard on all Bray Series 70 actuators, providing end user convenience in installation, commissioning and service.

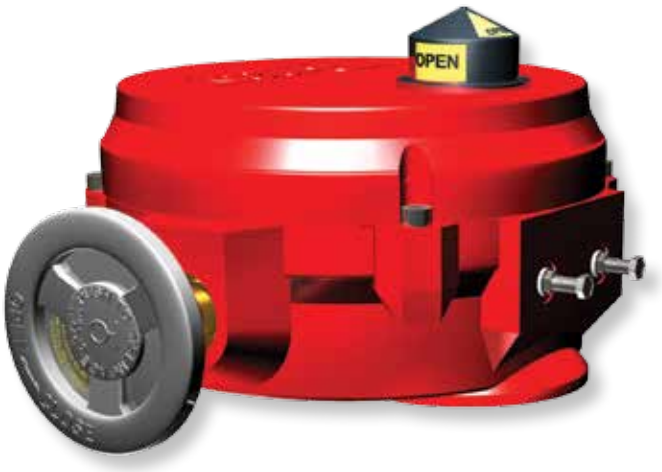

On/Off and modulating models are available in 24, 110 and 220 VAC. The standard enclosure is NEMA 4x and IP65 rated with an industrial polyester finish, making the Series 70 the ideal choice for cooling tower valves and other outdoor applications. The advanced Servo Pro modulating control card assures compatibility with virtually any analog control signal used in today's building automation and temperature control systems.

FEATURES	BENEFITS
Compact design and direct mounting	Fits in tight spaces, installs easily
UL, CSA and CE approved (most models)	Assures universal application acceptability
High visibility beacon position indicator	Assists in field operation
Internal isolation relays	Allows parallel wiring of multiple actuators from a single control output
Manual declutchable override handwheel	Allows manual positioning without disconnecting power
Advanced Servo Pro modulating option	Provides on-board diagnostics and user adjustable options including control signal type, speed controls and other features.
Optional battery backup on 24 VAC models	Assures return to a predetermined position upon loss of power supply

MODEL SELECTION

Model Number	Torque Output in/lbs.	24 VAC	120 VAC	On/Off	Modulating	Heater	Aux. Switches
70-24-0061	600	•		•			•
70-24-0061H	600	•		•		•	•
70-24-0061SV	600	•			•		•
70-24-0061SVH	600	•			•	•	•
70-0061	600		•	•			•
70-0061H	600		•	•		•	•
70-0061SV	600		•		•		•
70-0061SVH	600		•		•	•	•
70-0121	1200		•	•			•
70-0121H	1200		•	•		•	•
70-0121SV	1200		•		•		•
70-0121SVH	1200		•		•	•	•
70-24-0201	2000	•		•			•
70-24-0201H	2000	•		•		•	•
70-24-0201SV	2000	•			•		•
70-24-0201SVH	2000	•			•	•	•
70-0201	2000		•	•			•
70-0201H	2000		•	•		•	•
70-0201SV	2000		•		•		•
70-0201SVH	2000		•		•	•	•

Model Number	Torque Output in/lbs.	24 VAC	120 VAC	On/Off	Modulating	Heater	Aux. Switches
70-0301	3000		•	•			•
70-0301H	3000		•	•		•	•
70-0301SV	3000		•		•		•
70-0301SVH	3000		•		•	•	•
70-24-0501	5000	•		•			•
70-24-0501H	5000	•		•		•	•
70-24-0501SV	5000	•			•		•
70-24-0501SVH	5000	•			•	•	•
70-0501	5000		•	•			•
70-0501H	5000		•	•		•	•
70-0501SV	5000		•		•		•
70-0501SVH	5000		•		•	•	•
70-0651	6500		•	•			•
70-0651H	6500		•	•		•	•
70-0651SV	6500		•		•		•
70-0651SVH	6500		•		•	•	•
70-1300	13,000		•	•			•
70-1300H	13,000		•	•		•	•
70-1300SV	13,000		•		•		•
70-1300SVH	13,000		•		•	•	•
70-1800	18,000		•	•			•
70-1800H	18,000		•	•		•	•
70-1800SV	18,000		•		•		•
70-1800SVH	18,000		•		•	•	•

Application Note:
Use Series 70 actuators only to control equipment under normal operating conditions. Where failure or malfunction of the electric actuator could lead to personal injury or property damage to the controlled equipment or other property, additional precautions must be designed into the control system. Incorporate and maintain other devices, such as supervisory or alarm systems or safety or limit controls, intended to warn of or protect against failure or malfunction of the electric actuator.

SPECIFICATIONS

Industrial electric actuators shall include manual declutchable override handwheel and high visibility position indication. Motors shall be continuous duty. Enclosure shall be NEMA 4X, IP 65 rated. Actuator shall conform to ISO 5211 standards for direct mounting onto quarter turn valves. On/Off actuators shall be equipped with internal isolation relays to allow parallel wiring of multiple units. Modulating actuators shall be equipped with a microprocessor-based servo control with on-board diagnostics. Actuator shall be UL, CSA and CE approved. Actuators shall be Bray Series 70 or approved equal.

Model	Voltage	Torque (lb. in.)	Stroke Time	Current Draw (Amps) Full Load	Current Draw (Amps) Locked Rotor
70-24-0061	24 VAC	600	45 sec.	1.8	-
70-24-0201	24 VAC	2000	60 sec.	2.0	-
70-24-0501	24 VAC	5000	60 sec.	3.0	-
70-0061	120 VAC	600	30 sec.	1	1.4
70-0121	120 VAC	1200	30 sec.	0.78	2.1
70-0201	120 VAC	2000	30 sec.	1	2.1
70-0301	120 VAC	3000	30 sec.	1.2	3.0
70-0501	120 VAC	5000	30 sec.	1.6	3.0
70-0651	120 VAC	6500	30 sec.	2.3	3.1
70-1300	120 VAC	13000	110 sec.	2.3	3.1
70-1800	120 VAC	18000	110 sec.	2.5	3.1

Motor Duty Cycle		Continuous Duty
Aux Switches (Two SPDT)		10A (1/3 HP) @ 120 VAC 10A (1/2 HP) @ 220 VAC
Heater (Optional)	24V Models 120 V Models	5 Watt, PTC style, self regulating 5 Watt, PTC style, self regulating
Servo (Modulating Models)	Control Input Input Impedance	0 to 10 VDC, 2 to 10 VDC, 0 to 5 VDC, 4 to 20 mA Voltage: 1000K Ohms; Current: 250 Ohms
Housing		Die Cast Aluminum, Polyester Finish NEMA 4X, IP 65
Conduit Entries (2)		70-0061, 1/2" NPT All Other Models, 3/4" NPT
Terminal Strip		On/off Models, 12 to 22 AWG Modulating Models, 14 to 24 AWG
Ambient Temperature		-20 to 150F (-29 to 65C)
Agency Listings (120V)		UL, CE, CSA

The performance specifications are nominal and conform to acceptable industry standards. For application at conditions beyond these specifications, consult the nearest Bray office. Bray controls shall not be liable for damages resulting from misapplication or misuse of its products.

WIRING

Note: Use this Series 70 Electric Actuator only to control equipment under normal operating conditions. Where failure or malfunction of the electric actuator could lead to personal injury or property damage to the controlled equipment or other property, additional precautions must be designed into the control system. Incorporate and maintain other devices such as supervisory or alarm systems or safety or limit controls intended to warn of, or protect against, failure or malfunction of the electric actuator.

Note: Do not install or use the Series 70 Electric Actuator in or near environments where corrosive substances or vapors could be present. Exposure of the electric actuator to corrosive environments may damage the internal components of the device, and will void the warranty.

120 VAC ON/OFF WIRING

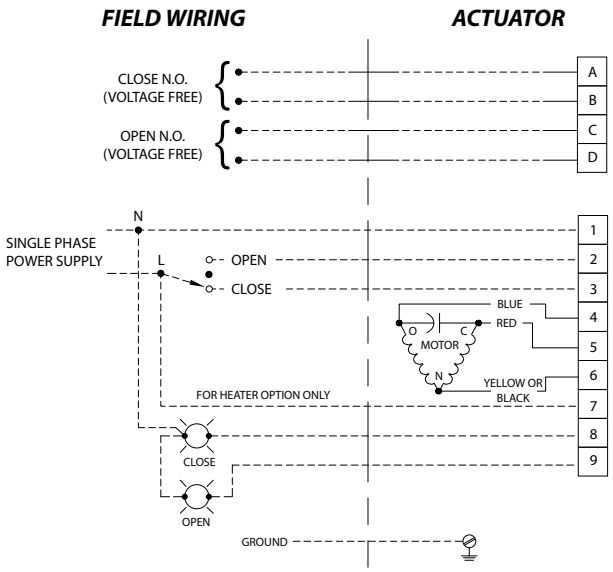

24 VAC ON/OFF WIRING

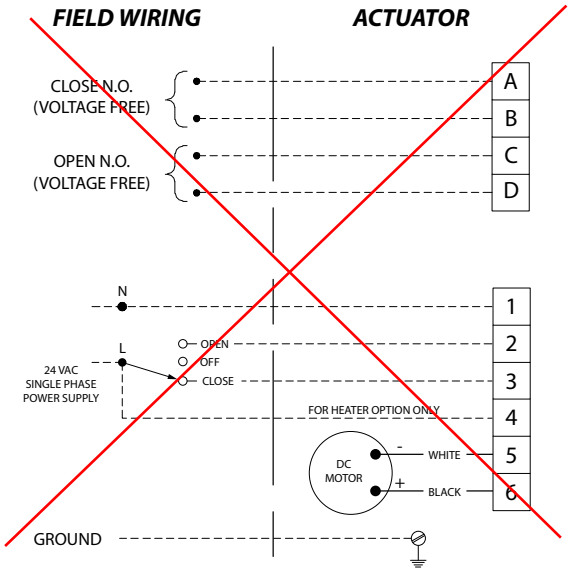

Notes:

1. Command signal and feedback wires ***MUST*** be shielded and grounded for proper servo operation.

2. The command signal input (-) terminal is internally connected to the servo neutral terminal. ***DO NOT*** connect the live to the neutral terminal on the servo.

3. Command signal and feedback signal must be isolated from each other and any other circuits. When usig 0-10VDC, 0-5VDC & 2-10VDC, The common of the command signal should NOT be ground/earth referenced.

4. Feedback loop is powered by the servo, do not supply external power.

5. Command signal & feedback signal wires should be shielded properly & shield should be grounded/earthed on one end only, preferably the controller end.

The 24 V Servo Pros (Revision J) can be wired 3 or 4 wire configured

120 VAC MODULATING WIRING

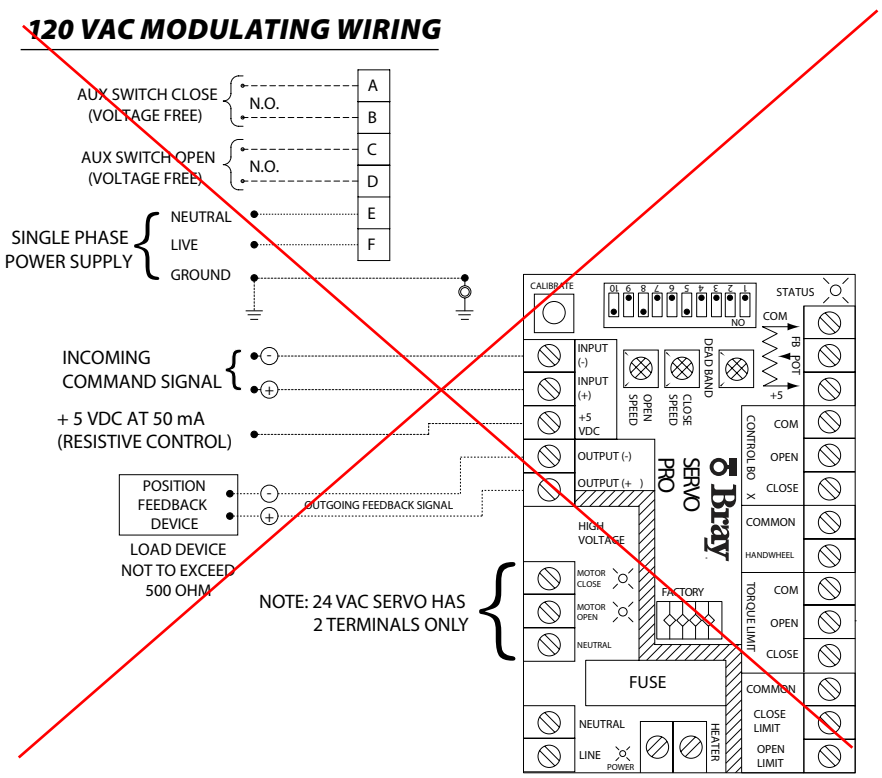

DIMENSIONS

SERIES 70 ACTUATOR DIMENSIONS

ACTUATOR MODEL NUMBER	Please reference illustration below																	
	A	B	C	D	E	F	G	H	J	K (UNC) x B.C.	M (UNC) x B.C.	N	P	Q	øR	S	T	U	Wt. lbs [kgs]
S70-0061	7.5 [191]	5.6 [142]	3.0 [76]	5.1 [130]	1.9 [48]	1.94 [49.3]	.19 [4.8]	1/2 ‡	2.0 [51]	5/16-18 x ø2.76 F07	—	.75 [19]	.51 [13]	1.75 [44]	3.5 [89]	–	–	–	12 [6]
S70-0121 S70-0201	10.1 [257]	7.8 [198]	3.7 [94]	6.5 [165]	2.5 [64]	2.69 [68.3]	.56 [14.2]	3/4 ‡	2.6 [66]	5/16-18 x ø2.76 F07	1/2-13 x ø4.92 F12	1.18 [30]	.87 [22]	2.20 [56]	8 [203]	–	–	–	28 [13]
S70-0301 S70-0501 S70-0651	12.1 [307]	9.5 [241]	5.6 [142]	7.2 [183]	2.9 [74]	3.19 [81]	.56 [14.2]	3/4 ‡	3.1 [79]	1/2-13 x ø4.92 F12	3/4-10 x ø6.50 F16	See Detail A1			12 [305]	–	–	–	48 [22]
S70-1300 S70-1800	12.1 [307]	9.5 [241]	6.0 [152]	12.5 [317]	8.1 [206]	9.2 [234]	.56 [14.2]	3/4 ‡	8.3 [211]	1/2-13 x ø4.92 F12	3/4-10 x ø6.50 F16	See Detail A2			12 [305]	6.1 [155]	12.7 [323]	8 [203]	118 [54]

Dimensions are in Inches [Millimeters in brackets]

70-0061 to 70-0651

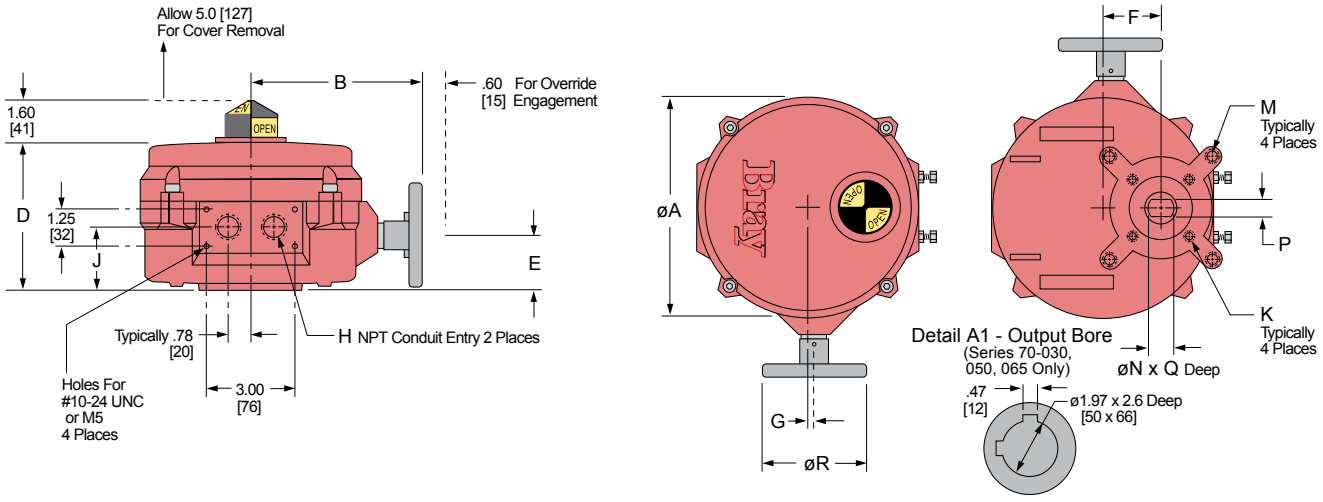

70-1300 to 70-1800

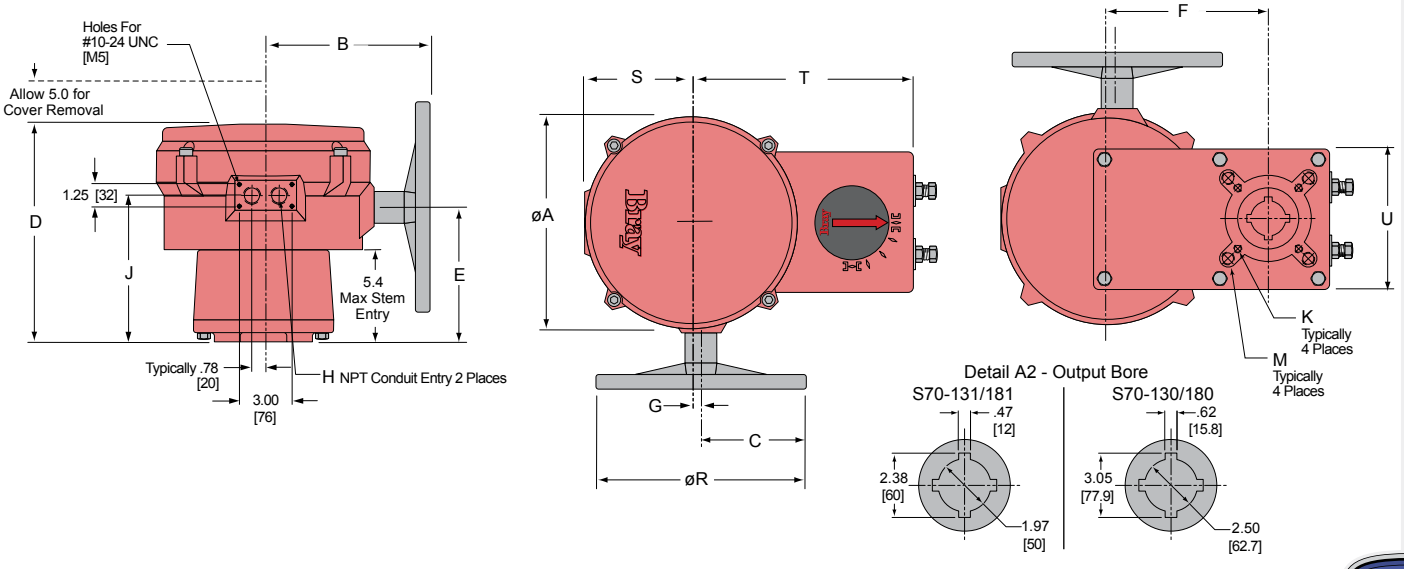

TAG: LSH-5050
LSH-5051
LSH-5060
Vault Leak/Dual Contain

Warrick

Series 16DM

Series 16DM DPDT Load Contact, Solid State Plug-In Module

Part No. 16DMB1B0
Unit Price $267
Lead Time (Days) 5

Image is of actual product

Model	16DM
Mode of Operation	Direct
Sensitivity	10 K
Control Style	Plug-In Module
Socket Style	DIN Mount
Standoff Style	N/A
Enclosure	None
Contact Design	2 Normally Open & 2 Normally Closed (non-powered)
Contact Rating	5 Amp Resistive 1/10 horse power
Secondary Voltage	12 VAC
Terminal Style	Screw Connector
Number of Channels	1
Minimum Temperature (°F)	-40
Maximum Temperature (°F)	150
Protection	Non-Intrinsically Safe
Approvals	UL 508 General Purpose
Minimum Qty (per Release)	1
Weight (Lbs)	1.1

Options

Form 164
Sheet P/N 100226-1
Rev. D

Warrick® Series 16DM Controls

Installation and Operation Bulletin

This bulletin should be used by experienced personnel as a guide to the installation of series 16DM controls. Selection or installation of equipment should always be accompanied by competent technical assistance. We encourage you to contact Gems Sensors Inc. or its representative if further information is required.

	Specifications
Control Design:	Solid-State components enclosed in clear Lexan plug-in style housing. Housing carries no NEMA rating
Contact Design:	2 SPDT (2 form C): Two Normally Open (N.O.) and two Normally Closed (N.C.), non-powered contacts
Contact Ratings:	5 A @ 120, 240 VAC resistive, 1/8 H.P. @ 120 or 240 VAC
Contact Life:	Mechanical: 5 million operations - Electrical: 100,000 operations minimum at rated load
Supply Voltage	24, 120, or 240 VAC Models - Factory Set. Plus 10%, minus 15%, 50/60 Hz
Supply Current:	120, 240, 24 VAC, Relay energized 4.4 VA
Secondary	12 VAC RMS Voltage on probes. 1.5 milli-amp Current
Circuit: **Sensitivity:**	Models operate from 0 to 1,000,000 OHM maximum specific resistance - Factory set
	-40° To 150°F Ambient
Temperature:	All connections #6-32 screw type with pressure clamps
Terminals:	Standard, 0.5 seconds on rising level.
Time Delays:	Additional time delays on rising and/or falling level available as option.
Listings:	U.L. Listing, Industrial Motor Control (508). 240 and 208 volt units are not U.L. limit control recognized.

Installation

1. Install octal socket in appropriate enclosure using two #6 or #8 metal screws.
   a) Install rail mount socket on appropriate rail (DIN mount) in appropriate enclosure, if applicable.
2. Wire control per wiring diagram, following N.E.C. and local codes.
3. Install control module in socket.

Sensitivities vs Maximum Probe Wire Distance*

Sensitivity Character	Sensitivity (K Ohms)	Distance (Ft.)
A or K	4.7	10,000
B or L	10	5,700
C or M	26	2,200
D or N	50	1,075
E or P	100	570
F or R	470	270
G or S	1,000	38

* Based on type MTW or THHN wire, #14 or #16 Awg

Dimensions

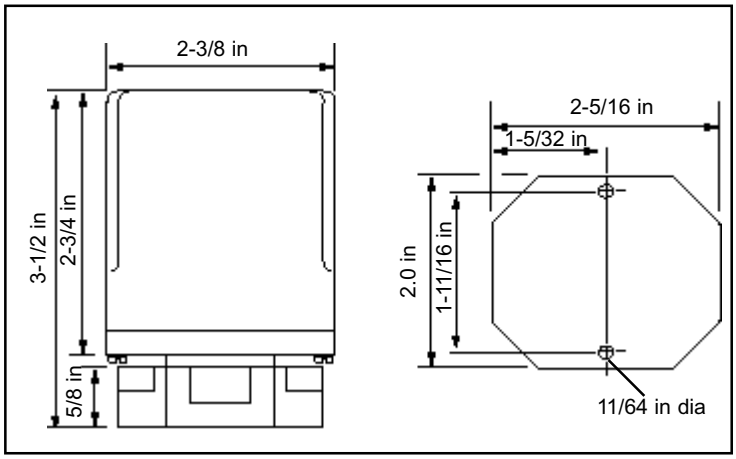

Use copper (60/70° C) wire only. Torque to 20 inch pounds.

Wiring Diagram

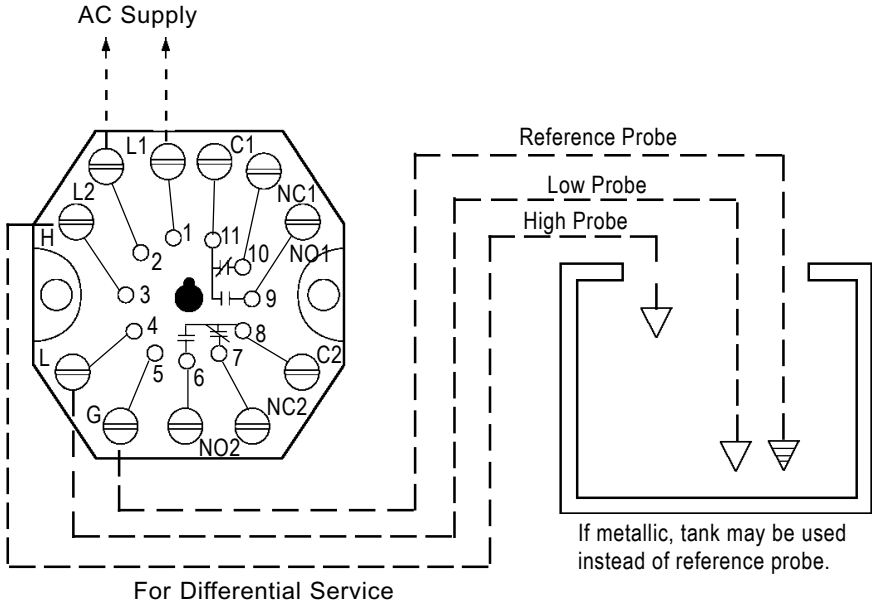

Note: For Single Level Service, use "H" and "G" Connections

Operation

Direct Mode - Single Level Service:
When the liquid rises to the electrode on terminal 3, the control energizes, changing state of the load contacts. **(LED will be lit)** The control remains energized until the liquid level recedes below electrode on terminal 3. The control then de-energizes, **(LED will not be lit)** returning load to original state.

Inverse Mode - Single Level Service:
Control energizes with power, changing state of the load contacts. **(LED will be lit)** When the liquid rises to the electrode on terminal 3, the control de-energizes, returning the load contacts to shelf state. **(LED will not be lit)** The control remains de-energized until liquid level recedes below the electrode connected to terminal 3. The control then energizes.

Direct Mode - Differential Service:
When the liquid rises to the electrode on terminal 3, the control energizes, changing state of the load contacts. **(LED will be lit)** The control remains energized until the liquid level recedes below electrode on terminal 4. The control then de-energizes, **(LED will not be lit)** returning the load contacts to original state.

Inverse Mode - Differential Service:
Control energizes with power, **(LED will be lit)** changing state of the load contacts. When the liquid rises to the electrode on terminal 3, the control de-energizes, returning load contacts to shelf state. **(LED will not be lit)** The control remains de-energized until the liquid level recedes below the electrode on terminal 4. The control then energizes.

Optional

Time Delays: With time delay on increasing level, the liquid must be in contact with the short electrode for the full duration of the time delay before control will operate. With delay on decreasing level, the liquid must be below long electrode for the full duration of the time delay before control will operate. In single level service, terminals 3 and 4 must be jumpered together to achieve time delays on both increasing and decreasing levels or just decreasing level.

16DM F 1 A 1 -*-*

- **Time Delay:** (decreasing level) 1-20 sec.
- **Time Delay:** (increasing level) 1-20 sec.
- **Enclosure:** 0-none, 1-NEMA 1, 4-NEMA 4, 7-NEMA 7, 12-NEMA 12
- **Socket Style:** A - 11 Pin Octal, B - 11 Pin DIN Mount, M - None, Module Only
- **Supply Voltage:** 1- 120 VAC, 2- 240 VAC, 3- 24 VAC, 8- 208/240 VAC*
- **Mode/Sensitivity:**
  - **Direct** A- 4.7K, B- 10K, C- 26K, D- 50K, E- 100K, F- 470K, G- 1M
  - **Inverse** K- 4.7K, L- 10K, M- 26K, N- 50K, P- 100K, R- 470K, S- 1M

*187 Vmin to 255 Vmax VAC

Gems Sensors Inc.
One Cowles Road
Plainville, CT 06062-1198
Tel: 860-793-4579
Fax: 860-793-4580

TAG: LSH-5050
LSH-5051
Vault Leak

3E	3N	3B
1" to 3" NPT	#10 Machine Screws from Underside	3/8" - 18NPT, 5/8" - 18UNF, 5/8" - 24UNEF
1 thru 7	1 thru 3	1
Series 3E fittings are cast metal, pressure-tight assemblies capable of handling 1-7 probes. Attachment to vessels is accomplished with external pipe threading. 3E Fittings require the use of 3R rigid or 3W wire suspended electrodes.	Series 3N fittings accommodate 1-3 probes operating at atmospheric pressure. The assembly mounts on a flat surface atop open tanks or closed vessels. 3N Fittings require the use of 3R rigid or 3W wire suspended electrodes.	Series 3B fittings are compact pressure tight assemblies that hold a single electrode probe for use in water and chemicals. These fittings incorporate a 1/4-20 female thread that must be combined with a Series 3R (rigid rod electrode) or Series 3W/3Y (wire suspended electrode) to make a complete assembly.
Die-cast aluminum, epoxy coated	Die-cast aluminum, epoxy coated	—
Cast iron, red brass, 316 stainless steel	PVC, red brass, 316 stainless steel	316 stainless steel
Teflon®	Teflon®	Teflon®
125 psig @ 353°F (cast iron) 250 psig @ 406°F (brass, 316 S.S.)	0 psig @ 150°F (PVC) 0 psig @ 500°F (brass, 316 S.S.)	250 psig @ 406°F 500 psig @ 75°F
U.L. File #MP2489, Vol. 1 Sec. 1; CSA	CSA File #LR11644	U.L. File #MP2489, Vol. 1 Sec. 1; CSA

	No. of Probes	Attachment to Vessel	Conduit Boss Thread Size	Terminal Housing Size (W" x D" x H")
3E	1	1" NPT	1/2" NPT	2-1/4 x 2-1/4 x 2-1/4
	2-3	2" NPT	1/2" NPT	3-1/4 x 3-1/4 x 2-3/8
	4	2-1/2" NPT	1/2" NPT	3-1/4 x 3-1/4 x 2-3/8
	5-7	3" NPT	3/4" NPT	4 x 4 x 2-1/2
3N	1-3	2-1/4" square flat pad, 1-1/2" dia. hole in top of vessel secured with #10 machine screws at the corners of a 1-1/2" square	1/2" NPT	2-1/4 x 2-1/4 x 2-1/4

3E 2 A

Series
3E

Number of Probes
1 thru **7**

Body Material
A – Cast Iron
B – Red Brass
C – 316 Stainless Steel

3N X X

Series
3N

Number of Probes
1 thru **3**

Body Material
A – PVC
B – Red Brass
C – 316 Stainless Steel

3B X B

Series
3B

Thread
1 – 3/8" - 18 NPT
2 – 5/8" - 18 UNF
3 – 5/8" - 24 UNEF

Metal Parts
B – 316 Stainless Steel

3R, 3W[1]	3R, 3W[1]	3R solid rod (up to 4') 3W[1] or 3Y[2] (greater than 4')

Custom options available. Consult factory.

TAG: LSH-5050
LSH-5051
Vault Leak

Series 3R/3T
General Purpose Probes

- Metallic Rods
- Available in Many Materials for Various Requirements
- Adaptable for Various Fittings

For general purpose use, Series 3R probes are metallic rods with threaded ends that screw into a fitting that extends vertically down into the liquid. Available in a variety of materials for different applications. 3T tapered rods are also available.

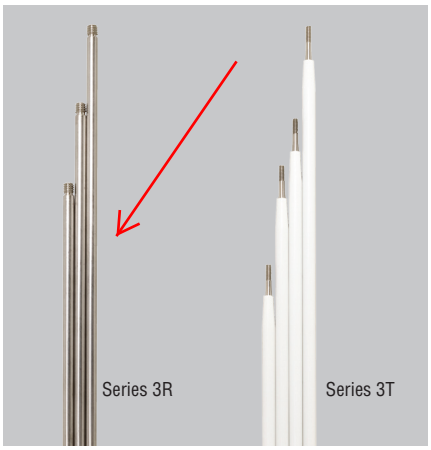

Specifications

Style	
Series 3R	1/4˝ (.64 cm) threaded rod
Series 3T	1/4˝ (.64 cm) tapered rod
Material	Brass, Hastelloy C, Monel, 316 stainless steel, titanium, Carp. 20
Sheathing (optional)	PVC heat shrink 200°F (93°C), Teflon® heat shrink 350°F (177°C)

Applications

3R: For use with Series 3E, 3F, 3G, 3B fittings

3T: For use with Series 3G and other custom configurations

How to Order

Use the **Bold** characters from the chart below to construct a product code.

3R **2** **C** **4**

Series
3R **3T**

Length (Feet)
1 – One
2 – Two
3 – Three
4 – Four
5 – Five
6 – Six
7 – Seven
8 – Eight
9 – Nine
10 – Ten

Probe Material
A – Brass
C – 316 Stainless Steel
D – Carp. 20
E – Hastelloy B
F – Hastelloy C
G – Monel
H – Titanium

Sheathing Heat Shrink
0 – None
4 – PVC
5 – Teflon®

Contact your representative for custom lengths.

Note: Long lengths can be coupled to facilitate shipping and installation. Consult factory.

Dimensions

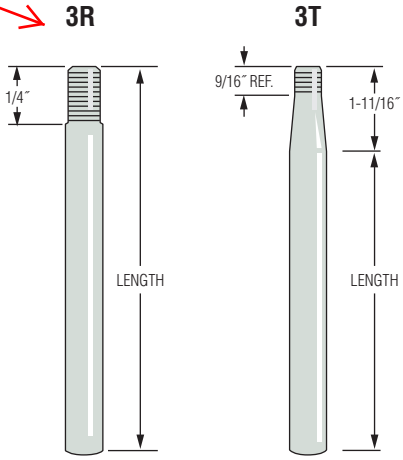

TAG: LSH-5060
Dual Containment

Series 3W – Wire Suspended Probes

- Metallic Bars
- Plastic Shield Protected
- Adaptable to Many Fittings
- Field Assembled

Series 3W probes, consisting of metallic bars within a protective plastic shield, are designed to be suspended in liquid with PVC-insulated wires. They are ideal for applications where rigid electrode rods are impractical or cumbersome, such as:

- Deep Wells
- Pump Control
- Waste Water
- Deep Tanks

7/8″ (2.22 cm) diameter x 3-3/4″ (9.52 cm) length. 3Z1A wire and 3Z1B adaptor kit required for use with 3E, 3F and 3N fittings.

Series 3W

How to Order

Select a 3W electrode, a 3Z1B adaptor and a length of 3Z1A suspension wire to form a complete suspended probe.

1. 3W Electrodes

Probe Material	Part Number
Brass	3W1
316 Stainless Steel	3W2

2. 3Z1B Adaptor Kit
For use with 3E, 3F and 3N fittings.
Part Number: 3Z1B

3. 3Z1A Suspension Wire
Order in standard or custom length.

Length (Feet)	Part Number
500	100325-500
1000	100325-1000
5000	100325-5000
Custom	3Z1A-20

Specify in one foot increments up to 5000 ft.

Components Detail

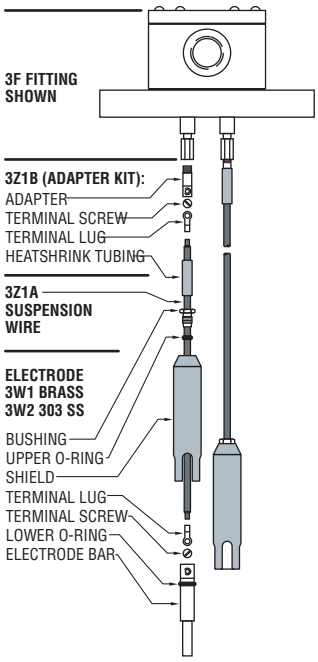

Series 3Y – Corrosion Resistant Probes

- Metallic Bars
- Corrosion Resistant
- Available in Many Materials for Various Requirements
- Adaptable for Various Fittings

Series 3Y wire suspended probes consist of metallic bars within a protective plastic shield, designed to be suspended in liquid. Series 3Y suspension wires are PVC or Teflon® insulated for use in corrosive liquid applications. 7/8″ (2.22 cm) diameter x 3-1/2″ (8.90 cm) length.

Series 3Y

Specifications

Style	Wire suspended
Tip Material	Carp. 20, Hastelloy C, 316 stainless steel
Shield Material	PVC 150°F (66°C), Teflon®

How to Order

Use the **Bold** characters from the chart below to construct a product code.

3Y X X X

Series
3Y

Shield Material
1 – PVC
3 – Teflon®

Probe Tip Material
C – 316 Stainless Steel
D – Carp. 20
F – Hastelloy C

Length of Wire
1 – 10 feet
2 – 20 feet
3 – 30 feet
etc.

Note: 3Z1B Connector is used to connect suspension wire with 3B, 3E, 3F, 3G or 3N fitting.

Applications

- General Purpose
- Wire Suspended Probes
- Corrosive Liquids, Chemicals

this sheet required for remote mount transmitters

TAG: FIT-5001

Overview

Transmitter MAG 5000/6000 compact version (left) and 19“ insert version (right)

The MAG 5000 and 6000 are transmitters engineered for high performance, easy installation, commissioning and maintenance. The transmitters evaluate the signals from the SITRANS F M sensors type MAG 1100, MAG 1100 F, MAG 3100, MAG 3100 P and MAG 5100 W.

Transmitter types:

- MAG 5000: Max. measuring error ± 0.4 % ± 1 mm/s (incl. sensor)
- MAG 6000: Max. measuring error ± 0.2 % ± 1 mm/s (incl. sensor, see also sensor specifications) and with additional features such as: "plug & play" add-on bus modules; integrated batch functions.

Benefits

- Superior signal resolution for optimum turn down ratio
- Digital signal processing with many possibilities
- Automatic reading of SENSORPROM data for easy commissioning
- User configurable operation menu with password protection.
- 3 lines, 20 characters display in 11 languages.
- Flow rate in various units
- Totalizer for forward, reverse and net flow as well as additional information available
- Multiple functional outputs for process control, minimum configuration with analogue, pulse/frequency and relay output (status, flow direction, limits)
- Comprehensive self-diagnostic for error indication and error logging (see under SITRANS F M diagnostics)
- Batch control (MAG 6000 only)
- Custody transfer approval: PTB, OIML R 117, OIML R 49, MI-001, PTB K 7.2 and OE12/C 040 for chilled water
- MAG 6000 with add-on bus modules for HART, FOUNDATION Fieldbus H1, DeviceNet, Modbus RTU/RS 485, PROFIBUS PA and DP

Application

The SITRANS F M flowmeters are suitable for measuring the flow of almost all electrically conductive liquids, pastes and slurries. The main applications can be found in:

- Water and waste water
- Chemical and pharmaceutical industries
- Food and beverage industries
- Power generation and utility

Design

The transmitter is designed as either IP67 NEMA 4X/6 enclosure for compact or wall mounting or 19" version as a 19” insert as a base to be used in:

- 19" rack systems
- Panel mounting IP20/NEMA 1 (prepared for IP65/NEMA 2 display side)
- Back of panel mounting IP20/NEMA 1
- Wall mounting IP66/NEMA 4X

Several options on 19” versions are available such as:

- Transmitters mounted in safe area for Ex ATEX approved flow sensors (incl. barriers)
- Transmitters with electrode cleaning unit on request

Function

The MAG 5000/6000 are transmitters with a build-in alphanumeric display in several languages. The transmitters evaluate the signals from the associated electromagnetic sensors and also fulfil the task of a power supply unit which provides the magnet coils with a constant current.

Further information on connection, mode of operation and installation can be found in the data sheets for the sensors.

Displays and controls

Operation of the transmitter can be carried out using:

- Control and display unit
- HART communicator
- PC/laptop and SIMATIC PDM software via HART communication
- PC/laptop and SIMATIC PDM software using PROFIBUS or Modbus communication

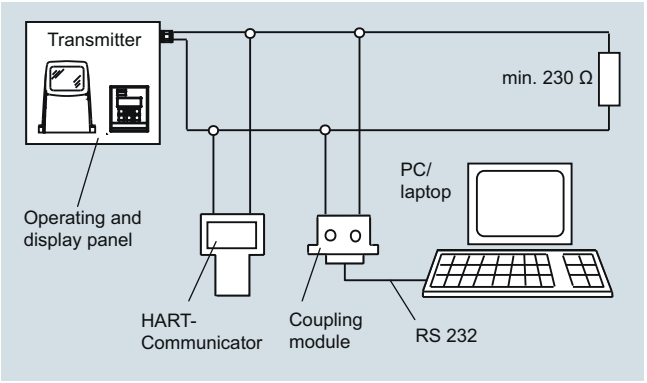

HART communication

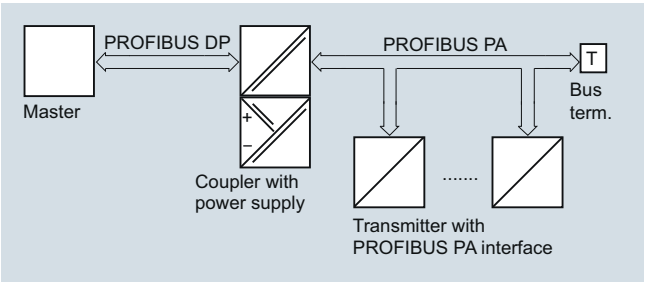

PROFIBUS PA communication

© Siemens AG 2014

3

Technical specifications

Mode of operation and design	
Measuring principle	Electromagnetic with pulsed constant field
Empty pipe	Detection of empty pipe (special cable required in remote mounted installation)
Excitation frequency	Depend on sensor size
Electrode input impedance	> 1 x 10^{14} Ω
Input	
Digital input	11 ... 30 V DC, R_i = 4.4 KΩ
• Activation time	50 ms
• Current	$I_{11\ V\ DC}$ = 2.5 mA, $I_{30\ V\ DC}$ = 7 mA
Output	
Current output	
• Signal range	0 ... 20 mA or 4 ... 20 mA
• Load	< 800 Ω
• Time constant	0.1 … 30 s, adjustable
Digital output	
• Frequency	0 ... 10 kHz, 50 % duty cycle (uni/bidirectional)
• Pulse (active)	24 V DC, 30 mA, 1 KΩ ≤ R_i ≤ 10 KΩ, short-circuit-protected (power supplied from flowmeter)
• Pulse (passive)	3 … 30 V DC, max. 110 mA, 200 Ω ≤ R_i ≤ 10 KΩ (powered from connected equipment)
• Time constant	0.1 … 30 s, adjustable
Relay output	
• Time constant	Changeover relay, same as current output
• Load	42 V AC/2 A, 24 V DC/1 A
Low flow cut off	0 ... 9.9 % of maximum flow
Galvanic isolation	All inputs and outputs are galvanically isolated.
Max. measuring error (incl. sensor and zero point)	
• MAG 5000	0.4 % ±1 mm/s
• MAG 6000	0.2 % ±1 mm/s
Rated operation conditions	
Ambient temperature	
• Operation	• Display version: -20 ... +60 °C (-4 ... +140 °F) • Blind version: -20 ... +60 °C (-4 ... +140 °F) • MI-001 version -25 ... +55 °C (-13 ... +131 °F) • Custody Transfer (CT) version -20 ... +50 °C (-4 ... +122 °F)
• Storage	-40 ... +70 °C (-40 ... +158 °F)
Mechanical load (vibration)	
Compact version	18 ... 1000 Hz, 3.17 g RMS, sinusoidal in all directions to IEC 68-2-36
19" insert	1 ... 800 Hz, 1 g, sinusoidal in all directions to IEC 68-2-36
Degree of protection	
Compact version	IP67/NEMA 4X/6 to IEC 529 and DIN 40050 (1 mH_2O 30 min.)
19" insert	IP20/NEMA 1 to IEC 529 and DIN 40050
EMC performance	IEC/EN 61326-1 (all environments) IEC/EN 61326-2-5

Display and keypad	
Totalizer	Two eight-digit counters for forward, net or reverse flow
Display	Background illumination with alphanumeric text, 3 x 20 characters to indicate flow rate, totalized values, settings and faults; Reverse flow indicated by negative sign
Time constant	Time constant as current output time constant
Design	
Enclosure material	
• Compact version	Fiber glass reinforced polyamide; stainless steel AISI 316/1.4436 (IP65)
• 19" insert	Standard 19" insert of aluminum/steel (DIN 41494), width: 21 TE, height: 3 HE
• Back of panel	IP20/NEMA 1; Aluminum
• Panel mounting	IP20/NEMA 1 (prepared for IP65/NEMA 2 display side); ABS plastic
• Wall mounting	IP66/NEMA 4X; ABS plastic
Dimensions	
Compact version	See dimensional drawings
19" insert	See dimensional drawings
Weight	
Compact version	0.75 kg (2 lb)
19" insert	See dimensional drawings
Power supply	• 115 ... 230 V AC +10 % -15 %, 50 ... 60 Hz • 11 ... 30 V DC or 11 ... 24 V AC
Power consumption	• 230 V AC: 17 VA • 24 V AC: 9 VA, I_N = 380 mA, I_{ST} = 8 A (30 ms) • 12 V DC: 11 W, I_N = 920 mA, I_{ST} = 4 A (250 ms) • 24 V DC: 8.4 VA, I_N = 350 mA, I_{ST} = 4 A (10 ms) I_{ST}= 4 A (250 ms): For solar panel please secure stable current supply
Certificates and approvals	CE, C-UL general purpose, C-tick; FM Class I, Div 2, CSA Class I, Div 2
Custody transfer approval (MAG 5000/6000 CT)	• Cold water: MI-001, PTB/OIML R 49 (pattern approval DE/DK) • Hot water: PTB and DANAK (MAG 6000 CT) • Chilled water: PTB K 7.2; OE12/C 040 • Other media than water (milk, beer etc.): PTB and DANAK OIML R 117 (pattern approval DE/DK) (MAG 6000 CT)
Communication	
Standard	
• MAG 5000	Without serial communication or HART as option
• MAG 6000	Prepared for client-mounted add-on modules
Optional (MAG 6000 only)	HART, Modbus RTU/RS 485, FOUNDATION Fieldbus H1, DeviceNet, PROFIBUS PA, PROFIBUS DP as add-on modules
• MAG 5000/6000 CT	No communication moduls approved

© Siemens AG 2014

Safety barrier (e/ia)

Application	**For use with MAG 5000/6000 19" and MAG 1100 Ex ATEX/MAG 3100 Ex ATEX**		
Ex approval	MAG 1100 Ex [EEx e ia] IIB ATEX		
	MAG 3100 Ex [EEx e ia] IIC ATEX		
Cable parameter	Group	Capacity in µF	Inductance in mH
Electrode	IIC	≤ 4.1	≤ 80
	IIB	≤ 45	≤ 87
	IIA	≤ 45	≤ 87
Ambient temperature			
• During operation	-20 ... +50 °C (-4 ... +122 °F)		
• During storage	-20 ... +70 °C (-4 ... +158 °F)		
Enclosure			
• Material	Standard 19" insert in aluminum/steel (DIN 41494)		
• Width	21 TE (4.75")		
• Height	3 HE (5.25")		
• Rating	IP20 / NEMA 1 to EN 60529		
• Mechanical load	1 g, 1 … 800 Hz sinusoidal in all directions to EN 60068-2-36		

© Siemens AG 2014

3

Selection and Ordering data

Transmitter MAG 5000

Description	Article No.	
Transmitter MAG 5000 Blind for compact and wall mounting; IP67/NEMA 4X/6, fibre glass reinforced polyamide		
• 11 ... 30 V DC/ 11 ... 24 V AC	**7ME6910-1AA30-0AA0**	
• 115 ... 230 V AC, 50/60 Hz	**7ME6910-1AA10-0AA0**	
Transmitter MAG 5000 Display for compact and wall mounting; IP67/NEMA 4X/6, fibre glass reinforced polyamide		
• 11 ... 30 V DC/ 11 ... 24 V AC	**7ME6910-1AA30-1AA0**	
• 115 ... 230 V AC, 50/60 Hz	**7ME6910-1AA10-1AA0**	
• 115 ... 230 V AC, 50/60 Hz, with HART	**7ME6910-1AA10-1BA0**	
Transmitter MAG 5000 CT for compact and wall mounting, approved for custody transfer (only with approval marks, no verification – only a complete flowmeter can be verified, i.e. sensor together with the transmitter); IP67/NEMA 4X/6, fibre glass reinforced polyamide		
• 11 ... 30 V DC/ 11 ... 24 V AC	**7ME6910-1AA30-1AB0**	
• 115 ... 230 V AC, 50/60 Hz	**7ME6910-1AA10-1AB0**	
Transmitter MAG 5000 for 19" rack and wall mounting		
• 11 ... 30 V DC/ 11 ... 24 V AC	**7ME6910-2CA30-1AA0**	
• 115 ... 230 V AC, 50/60 Hz	**7ME6910-2CA10-1AA0**	

We can offer shorter delivery times for configurations designated with the Quick Ship Symbol. For details see page 9/5 in the appendix.

Transmitter MAG 6000

Description	Article No.	
Transmitter MAG 6000 Blind for compact and wall mounting; IP67/NEMA 4X/6, fibre glass reinforced polyamide		
• 11 ... 30 V DC/ 11 ... 24 V AC	**7ME6920-1AA30-0AA0**	
• 115 ... 230 V AC, 50/60 Hz	**7ME6920-1AA10-0AA0**	
Transmitter MAG 6000 for compact and wall mounting; IP67/NEMA 4X/6, fibre glass reinforced polyamide		
• 11 ... 30 V DC/ 11 ... 24 V AC	**7ME6920-1AA30-1AA0**	
• 115 ... 230 V AC, 50/60 Hz	**7ME6920-1AA10-1AA0**	
Transmitter MAG 6000 for compact and wall mounting; IP65/NEMA 4, stainless steel AISI 316/1.4436 (only for sensor with SS terminal box) (for remote installation order SS terminal box separately)		
• 11 ... 30 V DC/ 11 ... 24 V AC	**7ME6920-1QA30-1AA0**	
• 115 ... 230 V AC, 50/60 Hz	**7ME6920-1QA10-1AA0**	
Transmitter MAG 6000 CT for compact and wall mounting, approved for custody transfer (no communication modules possible; only with approval marks, no verification – only a complete flowmeter can be verified, i.e. sensor together with the transmitter); IP67/NEMA 4X/6, fibre glass reinforced polyamide		
• 11 ... 30 V DC/ 11 ... 24 V AC	**7ME6920-1AA30-1AB0**	
• 115 ... 230 V AC, 50/60 Hz	**7ME6920-1AA10-1AB0**	
Transmitter MAG 6000 SV for compact and wall mounting; special excitation 44 Hz settings for Batch application DN ≤ 25/1" IP67/NEMA 4X/6, fibre glass reinforced polyamide		
11 ... 30 V DC/ 11 ... 24 V AC	**7ME6920-1AB30-1AA0**	
115 ... 230 V AC, 50/60 Hz	**7ME6920-1AB10-1AA0**	
Transmitter MAG 6000 for 19" rack and wall mounting		
• 11 ... 30 V DC/ 11 ... 24 V AC	**7ME6920-2CA30-1AA0**	
• 115 ... 230 V AC, 50/60 Hz	**7ME6920-2CA10-1AA0**	

© Siemens AG 2014

Description	Article No.	
Transmitter MAG 6000 SV for 19“ rack and wall mounting; special excitation 44 Hz settings for Batch application DN ≤ 25/1“		
• 11 ... 30 V DC/ 11 ... 24 V AC	**7ME6920-2CB30-1AA0**	
• 115 ... 230 V AC, 50/60 Hz	**7ME6920-2CB10-1AA0**	
MAG 6000 with IP66/NEMA 4X enclosure; 115 ... 230 V AC, 50/60 Hz; cable gland PG13.5	**7ME6920-2EA10-1AA0**	
MAG 6000 with safety barrier for Ex-approved sensors, complete mounted with IP66/NEMA 4X wall mounting enclosure, ATEX, 115 ... 230 V AC, 50/60 Hz; cable gland PG13.5		
• For ATEX 2G D sensors	**7ME6920-2MA11-1AA0**	
MAG 6000 SV, 19” insert, in IP66/NEMA 4X , ABS plastic enclosure, excitation frequency 44 Hz for Batch application DN ≤ 25/1“; cable gland PG13.5		
• 11 … 30 V DC, 11 … 24 V AC, 50/60 Hz	**7ME6920-2EB30-1AA0**	
• 115 … 230 V AC, 50/60 Hz	**7ME6920-2EB10-1AA0**	

⬟ We can offer shorter delivery times for configurations designated with the Quick Ship Symbol ⬟. For details see page 9/5 in the appendix.

Operating instructions for SITRANS F M MAG 5000/6000

Description	Article No.
For SITRANS F M MAG 5000/6000 IP67	
• English	**A5E02338368**
• German	**A5E02944982**
• Spanish	**A5E02944995**
• French	**A5E02944990**
For SITRANS F M MAG 5000/6000 19"	
• English	**A5E02082880**

This device is shipped with a Quick Start guide and a CD containing further SITRANS F literature.

All literature is also available for free at:
http://www.siemens.com/flowdocumentation

Communication modules for MAG 6000

Description	Article No.	
HART (not for MAG 6000 I) ⬟	**FDK:085U0226**	
Modbus RTU/RS 485 ⬟	**FDK:085U0234**	
PROFIBUS PA Profile 3 ⬟	**FDK:085U0236**	
PROFIBUS DP Profile 3 ⬟	**FDK:085U0237**	
DeviceNet ⬟	**FDK:085U0229**	
FOUNDATION Fieldbus H1	**A5E02054250**	

Operating instructions for SITRANS F add-on modules

Description	Article No.
HART	
• English	**A5E03089708**
PROFIBUS PA/DP	
• English	**A5E00726137**
• German	**A5E01026429**
Modbus	
• English	**A5E00753974**
• German	**A5E03089262**
• Spanish	**A5E03089278**
• French	**A5E03089265**
FOUNDATION Fieldbus	
• English	**A5E02318728**
• German	**A5E02488856**
• Spanish	**A5E02512177**
• French	**A5E02512169**
DeviceNet	
• English	**A5E03089720**

This device is shipped with a Quick Start guide and a CD containing further SITRANS F literature.

Accessories for MAG 5000 and MAG 6000

required for remote mount

Description	Article No.	
Wall mounting unit for IP67/ NEMA 4X/6 version, wall bracket, terminal box in polyamide[1]		
• 4 x M20 cable glands ⬟	**FDK:085U1018**	
• 4 x ½“ NPT cable glands ⬟	**FDK:085U1053**	
Sun lid for MAG 5000/6000 transmitter (Frame and lid)	**A5E02328485**	
Cable for standard electrode or coil, 3 x 1.5 mm² / 18 gage with shield PVC; Temperature range: -30 ... +70 °C (-22 ... +158 °F)		
• 10 m (33 ft) ⬟	**FDK:083F0121**	
• 20 m (65 ft) ⬟	**FDK:083F0210**	
• 40 m (130 ft) ⬟	**FDK:083F0211**	
• 60 m (200 ft) ⬟	**FDK:083F0212**	
• 100 m (330 ft)	**FDK:083F0213**	
• 150 m (500 ft)	**FDK:083F3052**	
• 200 m (650 ft)	**FDK:083F3053**	
• 500 m (1650 ft)	**FDK:083F3054**	

⬟ We can offer shorter delivery times for configurations designated with the Quick Ship Symbol ⬟. For details see page 9/5 in the appendix.

[1] For stainless steel wall mounting kit, order:
- M20: FDK:085U1018 and A5E00836867
- ½ NPT: FDK:085U1053 and A5E00836868

© Siemens AG 2014

Transmitter MAG 5000/6000

Description	Article No.	
Electrode cable for empty pipe or low conductivity[1], double shielded, 3 x 0.25 mm². Temperature range : -30 ... +70 °C (-22 ... +158 °F)		
• 10 m (33 ft)	**FDK:083F3020**	
• 20 m (65 ft)	**FDK:083F3095**	
• 40 m (130 ft)	**FDK:083F3094**	
• 60 m (200 ft)	**FDK:083F3093**	
• 100 m (330 ft)	**FDK:083F3092**	
• 150 m (500 ft)	**FDK:083F3056**	
• 200 m (650 ft)	**FDK:083F3057**	
• 500 m (1650 ft)	**FDK:083F3058**	
Low-noise electrode coax cable for low conductivity and high vibration levels of cables, 3 x 0.13 mm²		
	A5E02272692	
	A5E02272723	
• 10 m (33 ft)	**A5E02272730**	
Cable kit with standard coil cable[1], 3 x 1.5 mm²/18 gage with shield PVC and electrode cable double shielded, 3 x 0.25 mm² Temperature range: -30 ... +70 °C (-22 ... +158 °F)		
• 5 m (16.5 ft)	**A5E02296329**	
• 10 m (33 ft)	**A5E01181647**	
• 15 m (49 ft)	**A5E02296464**	
• 20 m (65 ft)	**A5E01181656**	
• 25 m (82 ft)	**A5E02296490**	
• 30 m (98 ft)	**A5E02296494**	
• 40 m (130 ft)	**A5E01181686**	
• 50 m (164 ft)	**A5E02296498**	
• 60 m (200 ft)	**A5E01181689**	
• 100 m (330 ft)	**A5E01181691**	
• 150 m (500 ft)	**A5E01181699**	
• 200 m (650 ft)	**A5E01181703**	
• 500 m (1650 ft)	**A5E01181705**	
Potting kit for terminal box of flow sensors for IP68/NEMA 6P	**FDK:085U0220**	
19" safety barrier (21 TE)[1] [EEx e ia] IIC for MAG 1100 Ex sensors and MAG 3100 Ex sensors 12 ... 24 V, 115 ... 230 V, incl. back plate (A5E02559810)	**FDK:083F5034**	
Panel mounting enclosure for 19" insert (21 TE); IP65/NEMA 2 enclosure in ABS plastic for front panel mounting	**FDK:083F5030**	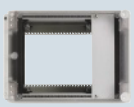
Panel mounting enclosure for 19" insert (42 TE); IP65/NEMA 2 enclosure in ABS plastic for front panel mounting	**FDK:083F5031**	

required for remote mount

Description	Article No.	
Back of panel mounting enclosure for 19" insert (21 TE); IP20/NEMA 1 enclosure in aluminum	**FDK:083F5032**	
Back of panel mounting enclosure for 19" insert (42 TE); IP20/NEMA 1 enclosure in aluminum	**FDK:083F5033**	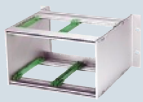
IP66/NEMA 4X, wall mounting enclosure for 19" inserts (without back plates). Use with PCB A5E02559813 or A5E02559814. Cable glands (FDK:083G0288) not included		
• 21 TE	**FDK:083F5037**	
• 42 TE	**FDK:083F5038**	
Front cover (7TE) for panel mounting enclosure	**FDK:083F4525**	
Sun shield for remote MAG 5000/6000 transmitters	**A5E01209496**	
Sun Shield for compact MAG 5000/6000 transmitters on MAG 3100 (DN 15 ... 2000 (½" ... 78") or MAG 5100 W (DN 150 ... 1200 (6" ... 48")	**A5E01209500**	

We can offer shorter delivery times for configurations designated with the Quick Ship Symbol. For details see page 9/5 in the appendix.

[1] Special cables cannot be used with 19" safety barrier

© Siemens AG 2014

Spare parts

Description	Article No.	
Connection board (for polyamide terminalbox)		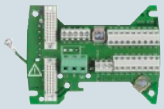
• 12 ... 24 V	**A5E02559817**	
• 115 ... 230 V	**A5E02559816**	
Connection board (for stainless steel terminal-box)		
• 12 ... 24 V	**A5E02604280**	
• 115 ... 230 V	**A5E02604272**	
19" enclosure, 12 ... 24 V, 115 ... 230 V		
• Connection board for standard 19" transmitter	**A5E02559809**	
• Connection board for transmitter ia and safety barrier	**A5E02559810**	
• Connection board for transmitter ia/ib and safety barrier (only for sensors produced before October 2007)	**A5E02559811**	
• Connection board for transmitter and cleaning unit	**FDK:083F4123**	
SENSORPROM memory unit (Sensor code and serial numbers must be specified on order)		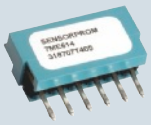
• 2 kB (for MAG 5000/6000/ MAG 6000 I)		
- 1 pc.	**FDK:085U1005**	
- 10 pcs.	**FDK:083F5052**	
• 250 B (for MAG 2500/3000)	**FDK:085U1008**	
Display unit for MAG 5000/6000		
• Black neutral front	**FDK:085U1038**	
• Siemens front	**FDK:085U1039**	
HW key	**On request**	

Description	Article No.	
Cable glands, for above cable, 4 pcs.		½" NPT M20
• M20 ⬟	**A5E00822490**	
• ½" NPT ⬟	**A5E00822501**	
• PG 13.5, 2 pcs.	**FDK:083G0228**	
Sealing screws for sensor/ transmitter, 2 pcs	**FDK:085U0221**	
Terminal box, in polyamide, inclusive lid, terminal blocks, gasket and screws		
• M20	**FDK:085U1050**	
• ½" NPT	**FDK:085U1052**	
Terminal box lid, in polyamide	**FDK:085U1003**	
Terminal box, in stainless steel, inclusive lid, terminal blocks, gasket and screws, for MAG 6000 in stainless steel and for all Ex sensors,		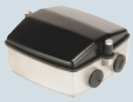
• M20	**A5E00836867**	
• ½" NPT	**A5E00836868**	
Terminal box (3A) for MAG 1100 F in polyamide, inclusive lid, terminal blocks, gasket and screws		
• M20	**A5E00822478**	
• ½" NPT	**A5E00822479**	
Wall unit enclosure IP66, 12 ... 24 V, 115 ... 230 V		
• PCB for standard transmitter	**A5E02559813**	
• PCB for transmitter ia/e and safety barrier	**A5E02559814**	
• PCB for transmitter ia/ib and safety barrier (7ME6130, 7ME6150 and 7ME6330)	**A5E02559812**	
• PCB for transmitter and cleaning unit	**A5E02559815**	

⬟ We can offer shorter delivery times for configurations designated with the Quick Ship Symbol ⬟. For details see page 9/5 in the appendix.

© Siemens AG 2014

3

Dimensional drawings

Transmitter IP67/NEMA 4X/6 compact polyamide

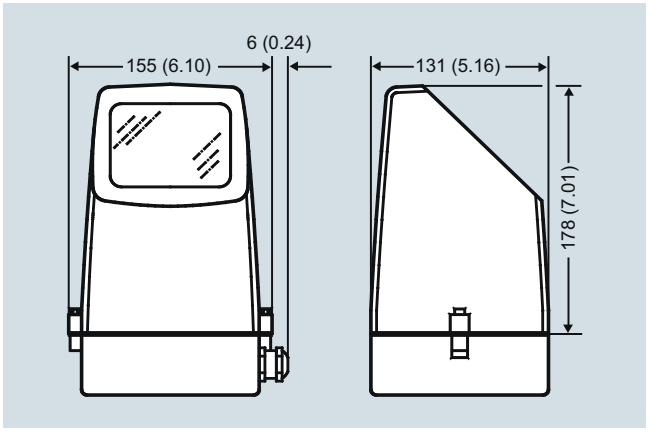

Transmitter compact mounted, dimensions in mm (inch)

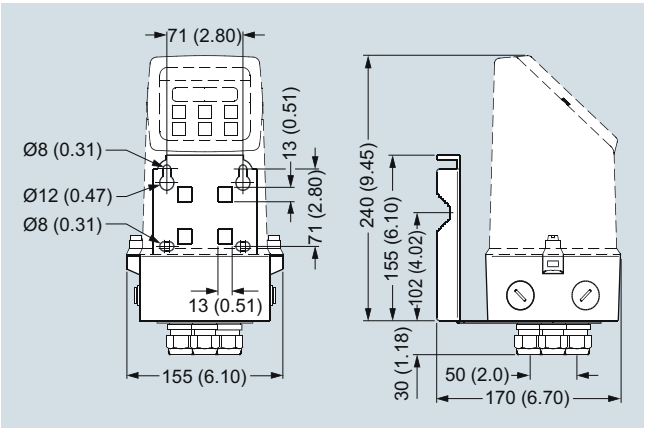

Transmitter wall mounted, dimensions in mm (inch)

Transmitter, 19" IP20/NEMA 1 standard unit

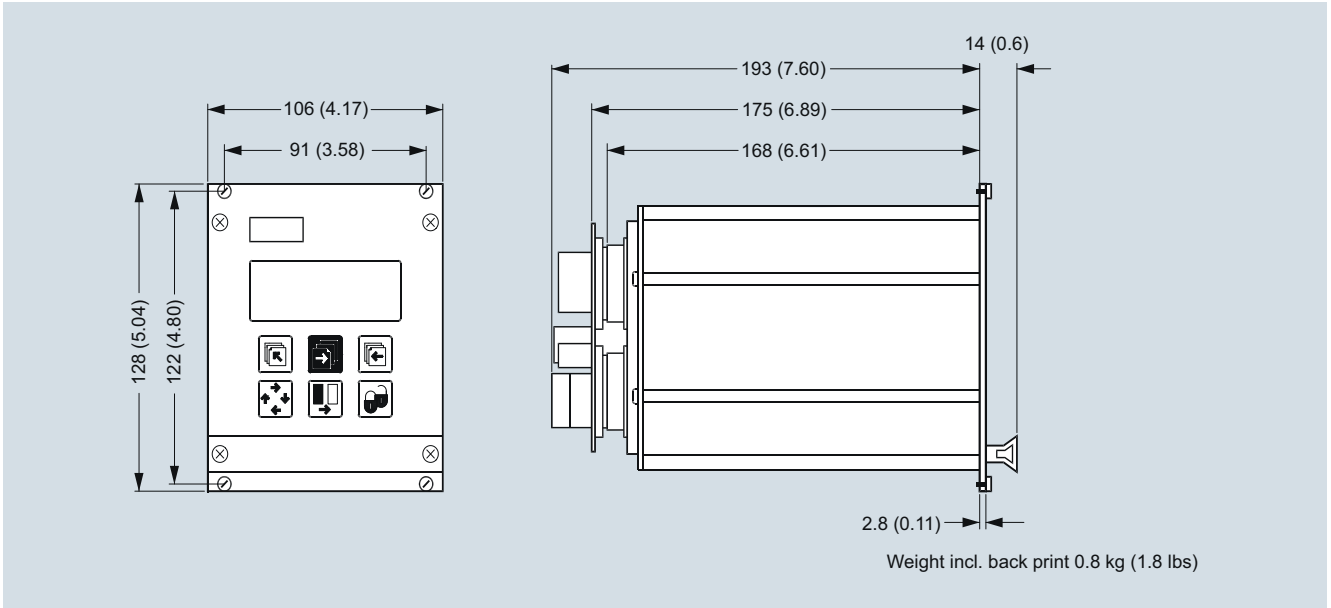

Dimensions in mm (inch)

© Siemens AG 2014

3

Schematics

Electrical connection

Grounding

PE must be connected due to safety class 1 power supply.

Mechanical counters

When mounting a mechanical counter to terminals 57 and 58 (active output), a 1000 µF capacitor must be connected to the terminals 56 and 58. Capacitor + is connected to terminal 56 and capacitor - to terminal 58.

Output cables

If the output cable length is long in noisy environment, we recommend to use shielded cable.

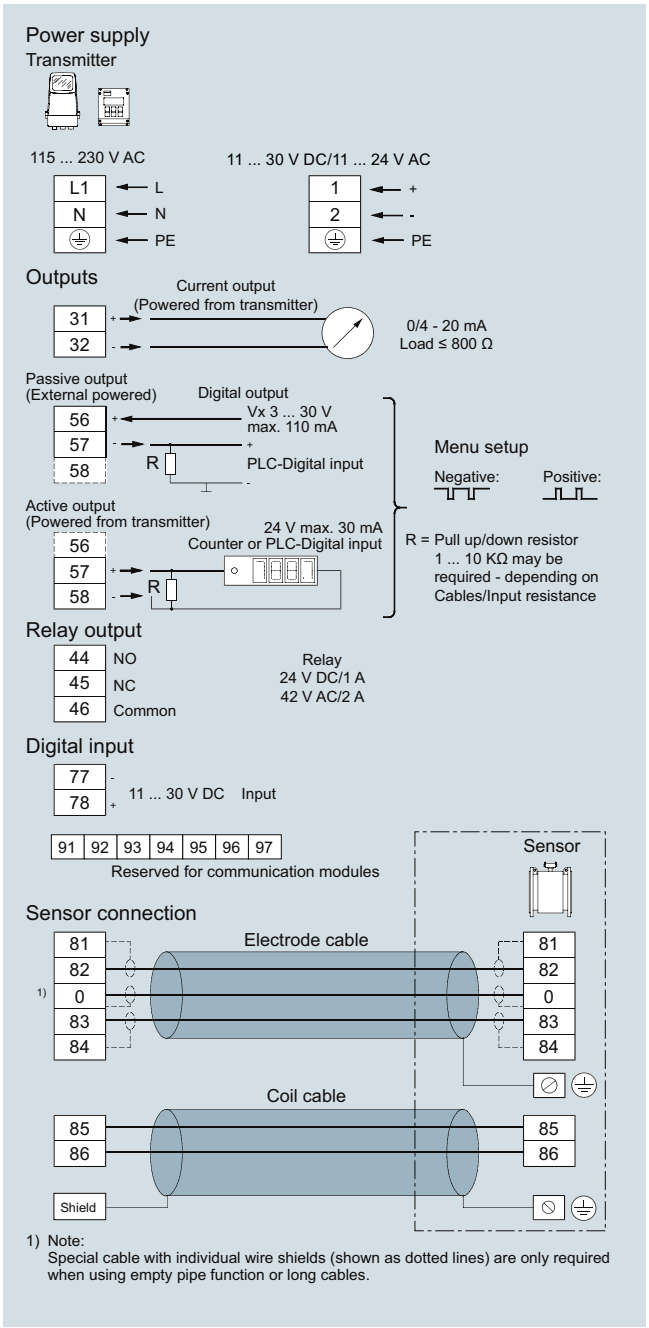

© Siemens AG 2014

Flow sensor MAG 5100 W

Overview

The SITRANS F M MAG 5100 W is an electromagnetic flow sensor designed to meet ground water, drinking water, waste water, sewage or sludge applications.

Benefits

- DN 15 to DN 1200 / 2000 (½" to 48"/78")
- Stock program of MAG 5100 W secures short delivery time
- Connection flanges EN 1092-1 (DIN 2501), ANSI, AWWA, AS and JIS.
- NBR Hard Rubber and Ebonite Hard Rubber liner for all water applications
- EPDM liner with drinking water approvals
- Hastelloy integrated grounding and measuring electrodes
- Increased low flow accuracy for water leak detection, due to coned liner design (Article No. 7ME6520, DN 15 to 300 mm (½" to 12")).
- Drinking water approvals
- Suitable for direct burial and constant flooding
- Custody transfer approvals
- Build-in length according to ISO 13359; the standard includes sizes up to DN 400.
- Easy commissioning, SENSORPROM unit automatically uploads calibration values and settings.
- Designed so patented in-situ verification can be conducted. Using SENSORPROM fingerprint.
- Custody Transfer option for water billing, with type approval after OIML R 49 and verified according to MI-001 - 0D inlet/ 0D outlet installation
  - pattern approval OIML R 49 (Denmark, Germany)
  - conforms to ISO 4064 and EN 14154 for mechanical flowmeters
  - PTB K7.2
- FM Fire Service Meter (Class Number 1044) for automatic fire protection systems
- Meets EEC directives: PED, 97/23/EC pressure directive for EN1092-1 flanges
- Simple onsite or factory upgrade to IP68/NEMA 6P of a standard sensor
- MCERTS approval for UK environmental market

Application

The main applications of the SITRANS F M electromagnetic flow sensors can be found in the following fields:

- Water abstraction
- Water treatment
- Water distribution network (leak detection management)
- Custody transfer water meters
- Irrigation
- Waste water treatment
- Filtration plant (e.g. reverse osmosis and ultra filtration)
- Industrial water applications

Mode of operation

The flow measuring principle is based on Faradays law of electromagnetic induction according to which the sensor converts the flow into an electrical voltage proportional to the velocity of the flow.

Integration

The complete flowmeter consists of a flow sensor and an associated transmitter SITRANS F M MAG 5000, MAG 6000 or MAG 6000 I.

The flexible communication concept USM II simplifies integration and update to a variety of fieldbus systems, e.g. HART, DeviceNet, PROFIBUS DP and PA, FOUNDATION Fieldbus H1 or Modbus RTU/RS 485.

© Siemens AG 2014

Technical specifications

Product characteristic	**MAG 5100 W (7ME6520)** **Mainly for the European market** **EPDM or NBR lining**	**MAG 5100 W (7ME6580)** **Mainly for the non-European market** **Ebonite lining**
Design and nominal size	Coned sensor (octagon liner): DN 15 ... 40 (½" ... 1½") Coned sensor: DN 50 ... 300 (2" ... 12") Full bore sensor: DN 350 ... 1200 (14" ... 48")	Full bore sensor: DN 25 ... 2000 (1" ... 78")
Measuring principle	Electromagnetic induction	Electromagnetic induction
Excitation frequency (Mains supply: 50/60 Hz)	DN 15 ... 65 (½" ... 2½"): 12.5 Hz/15 Hz DN 80 ... 150 (3" ... 6"): 6.25 Hz/7.5 Hz DN 200 ... 300 (8" ... 12"): 3.125 Hz/3.75 Hz DN 350 ... 1200 (14" ... 48"): 1.5625 Hz/1.875 Hz	DN 25 ... 65 (1" ... 2½"): 12.5 Hz/15 Hz DN 80 ... 150 (3" ... 6"): 6.25 Hz/7.5 Hz DN 200 ... 1200 (8" ... 48"): 3.125 Hz/3.75 Hz DN 1400 ... 2000 (54" ... 78"): 1.5625 Hz/1.875 Hz
Process connection		
Flanges[1]		
• EN 1092-1	PN 10 (145 psi) : DN 200 ... 300 (8" ... 12") Flat face PN 10 (145 psi): DN 350 ... 1200 (14" ... 48") Raised face[2] PN 16 (232 psi): DN 50 ... 300 (2" ... 12") Flat face[3] PN 16 (232 psi): DN 350 ... 1200 (14" ... 48") Raised face PN 40 (580 psi): DN 15 ... 40 (½" ... 1½") Flat face	Raised face[3] (EN 1092-1, DIN 2501 and BS 4504 have the same mating dimensions) PN 6 (87 psi): DN 1400 ... 2000 (54" ... 78") PN 10 (145 psi): DN 200 ... 2000 (8" ... 78") PN 16 (232 psi): DN 65 ... 600 (2½" ... 24") PN 40 (580 psi): DN 25 ... 50 (1" ... 2")
• ANSI B16.5	Class 150: ½" ... 12" flat face; 14" ... 24" raised face	Class 150: 1" ... 24"; raised face
• AWWA C-207	Class D: 28" ... 48", flat face	Class D: 28" ... 78", flat face
• AS4087	PN 16 (DN 50 ... 1200), (2" ... 48") 16 bar (232 psi)	PN 16 (DN 50 ... 1200), (2" ... 48") 16 bar (232 psi)
• JIS B 2220:2004	-	K10 (1" ... 24")
Rated Operation conditions		
Ambient temperature		
• Sensor	-40 ... +70 °C (-40 ... +158 °F)	-20 ... +70 °C (-4 ... +158 °F)
• With compact transmitter MAG 5000/6000[4]	-20 ... +60 °C (-4 ... +140 °F)	-20 ... +60 °C (-4 ... +140 °F)
Operating pressure (Abs) [abs. bar] (Maximum operating pressure depending on flange standard, decreases with increasing operating temperature)	DN 15 ... 40 (½" ... 1½"): 0.01 ... 40 bar (0.15 ... 580 psi) DN 50 ... 300 (2" ... 12"): 0.03 ... 20 bar (0.44 ... 290 psi) DN 350 ... 1200 (14" ... 48"): 0.01 ... 16 bar (0.15 ... 232 psi)	DN 25 ... 50 (1" ... 2"): 0.01 ... 40 bar (0.15 ... 580 psi) DN 65 ... 1200 (2½" ... 48"): 0.01 ... 16 bar (0.15 ... 232 psi) DN 1400 ... 2000 (54" ... 78"): 0.01 ... 10 bar (0.15 ... 145 psi)
Enclosure rating		
• Standard	IP67 to EN 60529/NEMA 4X/6 (1 mH_2O for 30 min)	IP67 to EN 60529/NEMA 4X/6 (1 mH_2O for 30 min)
• Option	IP68 to EN 60529/NEMA 6P (10 mH_2O continuously)	IP68 to EN 60529/NEMA 6P (10 mH_2O continuously)
Pressure drop	DN 15 and 25 (½" and 1"): Max. 20 mbar (0.29 psi) at 1 m/s (3 ft/s). DN 40 ... 300 (1½" ... 12"): Max 25 mbar (0.36 psi) at 3 m/s (10 ft/s) DN 350 ... 1200 (14" ... 48"): Insignificant	Insignificant
Test pressure	1.5 x PN (where applicable) FM Fire Service: 2 x PN	1.5 x PN (where applicable)
Mechanical load (vibration)	18 ... 1000 Hz random in x, y, z, directions for 2 hours according to EN 60068-2-36 Sensor: 3.17 g RMS Sensor with compact MAG 5000/6000 mounted transmitter: 3.17 g RMS Sensor with compact MAG 6000 I mounted transmitter: 1.14 g RMS	18 ... 1000 Hz random in x, y, z, directions for 2 hours according to EN 60068-2-36 Sensor: 3.17 g RMS Sensor with compact MAG 5000/6000 mounted transmitter: 3.17 g RMS Sensor with compact MAG 6000 I mounted transmitter: 1.14 g RMS

© Siemens AG 2014

Flow sensor MAG 5100 W

Product characteristic	Mainly for the European market (7ME6520)	Mainly for the non-European market (7ME6580)
	EPDM or NBR lining	**Ebonite lining**
Medium conditions		
Temperature of medium		
• NBR	-10 ... +70 °C (14 ... 158 °F)	-
• EPDM	-10 ... +70 °C (14 ... 158 °F)	-
• EPDM/NBR (MI-001)	0.1 ... 30 °C (32 ... 76 °F)	-
• Ebonite	-	-10 ... +70 °C (14 ... 158 °F)
EMC	2004/108/EC	2004/108/EC
Design		
Material		
• Housing and flanges	Carbon steel ASTM A 105, with corrosion-resistant two-component epoxy coating (150 µm/300 µm) Corrosivity category C4, according to ISO 12944-2	Carbon steel ASTM A 105, with corrosion-resistant two-component epoxy coating (150 µm/300 µm) Corrosivity category C4, according to ISO 12944-2
• Measuring pipe	Stainless steel AISI 304/1.4301	Stainless steel AISI 304/1.4301
• Electrode	Hastelloy C	Hastelloy C
• Grounding electrode	Hastelloy C	Hastelloy C
• Terminal box	Fibre glass reinforced polyamide	Fibre glass reinforced polyamide
Certificates and approvals		
Calibration		
• Standard production calibration (default), calibration report shipped with sensor	Zero-point, 2 x 25 % and 2 x 90 %	Zero-point, 2 x 25 % and 2 x 90 %
• Special calibration	5-point calibration: 20 %, 40 %, 60 %, 80 %, 100 % of factory Q_{max}	5-point calibration: 20 %, 40 %, 60 %, 80 %, 100 % of factory Q_{max}
	10-point calibration: ascending and descending at 20 %, 40 %, 60 %, 80 %, 100 % of factory Q_{max}	10-point calibration: ascending and descending at 20 %, 40 %, 60 %, 80 %, 100 % of factory Q_{max}
	Matched-pair calibration: default, 5-point or 10-point	Matched-pair calibration: default, 5-point or 10-point
Material certificate EN 10204 3.1	Available when ordering together with meter[5)]	Available when ordering together with meter[5)]
Custody Transfer (only together with MAG 6000 CT)	OIML R 49 pattern approval cold water (Denmark and Germany): DN 50 ... 300 (2“ ... 12")	
	MI-001 cold water (EU): DN 50 ... 300 (2“ ... 12")	
	PTB K7.2: Chilled water energy metering DN 50-300 (order as special) Certificate number: 22 76.10 02	
Drinking water approvals	EPDM liner: NSF/ANSI Standard 61[6)] (Cold water, US) WRAS (WRc, BS6920 cold water, GB) ACS (F), DVGW W270 (D) Belgaqua (B)	NSF/ANSI Standard 61[6)] (Cold water, US) WRAS (WRc, BS6920 cold water, GB)
Other approvals	MCERTS	
	PED conforming: All EN1092-1 flanges and ANSI Class 150 (< DN 300 (<12")) – 97/23/EC[7)]	PED conforming: All EN1092-1 flanges (≤ DN 600 (≤ 24") – 97/23/EC[7)]
	CRN (DN 50 - DN 1200 (2" ... 48"))	CRN
	CSA Class I, Div 2[8)]	CSA Class I, Div 2[8)]
	FM Class I, Div 2[8)]	FM Class I, Div 2[8)]
	FM Fire Service Approval according to class 1044[8)9)]	
	VdS: Extinguishing systems DN 50 ... 300	

1) DN 750, DN 1050 and DN 1100 (30", 42" and 44") not available with EN 1092-1 (PN 10 and PN 16) and AS4087 flanges
2) Type 01 (SORF)
3) DN ≤ 600 type 01 (SORF); DN > 600 type 11
4) With compact transmitter MAG 5000 CT/6000 CT -20 ... +50 °C (-4 ... +122 °F); with compact MI-001 approved transmitter -25 ... +55 °C (-13 ... +131 °F)
5) Has to be ordered with the meter. It is not possible to order the certificate afterwards.
6) Including Annex G
7) For sizes larger than 600 mm (24”) in PN 16 PED conformity is available as a cost-added option. The basic unit will carry the LVD (Low Voltage Directive) and EMC approval. All products sold outside of EU and EFTA are excluded from the directive, also products sold into certain market sectors are excluded. These include:
a) Meters used in networks for the supply, distribution and discharge of water.
b) Meters used in pipelines for the conveyance of any fluid from offshore to onshore.
c) Meters used in the extraction of petroleum or gas, including Christmas tree and manifold equipment.
d) Any meter mounted on a ship or mobile offshore platform. For further information on the PED standard and requirements see page 9/6.
8) Not for sensors with 300 µm coating.
9) DN 50, DN 80, DN 100, DN 150, DN 200, DN 250, and DN 300 (2", 3", 4", 6", 8", 10", and 12") with ANSI B16.5 Class 150 flanges

© Siemens AG 2014

MAG 5100 W (7ME6520) with MAG 6000 CT (Revenue program) MI-001

MAG 5100 W CT program is type approved according to international water meter standard OIML R 49. Since the first November 2006 the MI-001 water meter directive is in force, which means that all water meters can be sold across the EU borders if the water meters contain a MI-001 label.

The MAG 5100 W MI-001 verified and labeled products are a Class II approval according to Directive 2004/22/EC of the European Parliament and Council of March 31, 2004 on measuring instruments (MID), Annex MI-001 in the sizes from DN 50 to DN 300 (Article No. 7ME6520).

The MID certification is obtained as a modul B + D module approval according to the above mentioned directive.

Module B : Type approval according to OIML R 49

Module D : Quality insurance approval of production

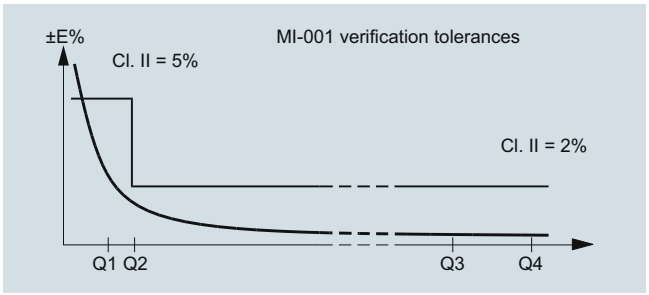

MAG 5100 W (7ME6520) with MAG 5000/MAG 6000 or MAG 6000 CT for Fire Service applications

MAG 5100 W (7ME6520) is FM Fire Service approved for automatic fire protection systems. The approval is applicable for the sizes DN 50, DN 80, DN 100, DN 150, DN 200, DN 250 and DN 300 (2", 3", 4", 6", 8", 10" and 12") with ANSI B16.5 Class 150 flanges. The FM Fire Service approved product can be ordered via the Z-options P20, P21 and P22.

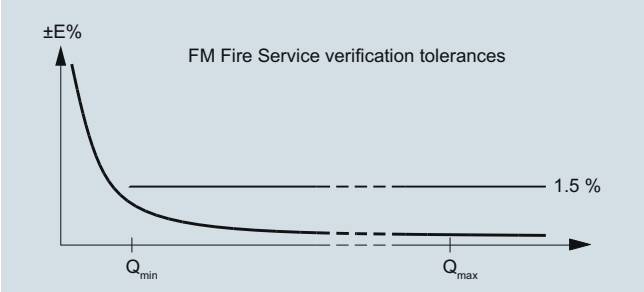

© Siemens AG 2014

Flow sensor MAG 5100 W

MAG 5100 W (7ME6520) MI-001 verified and labeled products at a given Q3 and Q3/Q4 = 1.25 and Q2/Q1 = 1.6 measuring ranges see table below:

Order code: P11	**DN 50 (2“)**	**DN 65 (2½“)**	**DN 80 (3“)**	**DN 100 (4“)**	**DN 125 (5“)**	**DN 150 (6“)**	**DN 200 (8“)**	**DN 250 (10“)**	**DN 300 (12“)**
„R“ Q3/Q1	25	25	25	25	25	25	25	25	25
Q4 [m^3/h]	20	31.25	50	78.75	125	200	312.5	500	787.5
Q3 [m^3/h]	**16**	**25**	**40**	**63**	**100**	**160**	**250**	**400**	**630**
Q2 [m^3/h]	1.02	1.6	2.6	4.03	6.4	10.24	16	25.6	40.32
Q1 [m^3/h]	0.64	1.00	1.60	2.52	4.0	6.4	10.0	16.0	25.2

Order code: P12	**DN 50 (2“)**	**DN 65 (2½“)**	**DN 80 (3“)**	**DN 100 (4“)**	**DN 125 (5“)**	**DN 150 (6“)**	**DN 200 (8“)**	**DN 250 (10“)**	**DN 300 (12“)**
„R“ Q3/Q1	63	63	63	63	63	63	63	63	63
Q4 [m^3/h]	20	31.25	50	78.75	125	200	312.5	500	787.5
Q3 [m^3/h]	**16**	**25**	**40**	**63**	**100**	**160**	**250**	**400**	**630**
Q2 [m^3/h]	0.41	0.63	1.02	1.6	2.54	4.06	6.35	10.2	16.0
Q1 [m^3/h]	0.25	0.40	0.63	1.00	1.59	2.54	3.97	6.35	10.0

Order code: P13	**DN 50 (2“)**	**DN 65 (2½“)**	**DN 80 (3“)**	**DN 100 (4“)**	**DN 125 (5“)**	**DN 150 (6“)**	**DN 200 (8“)**	**DN 250 (10“)**	**DN 300 (12“)**
„R“ Q3/Q1	80	80	80	80	80	80	80	80	80
Q4 [m^3/h]	20	31.25	50	78.75	125	200	312.5	500	787.5
Q3 [m^3/h]	**16**	**25**	**40**	**63**	**100**	**160**	**250**	**400**	**630**
Q2 [m^3/h]	0.32	0.50	0.80	1.20	2.00	3.20	5.0	8.0	12.6
Q1 [m^3/h]	0.20	0.31	0.50	0.75	1.25	2.00	3.13	5.0	7.90

Order code: P16	**DN 50 (2“)**	**DN 65 (2½“)**	**DN 80 (3“)**	**DN 100 (4“)**	**DN 125 (5“)**	**DN 150 (6“)**	**DN 200 (8“)**	**DN 250 (10“)**	**DN 300 (12“)**
„R“ Q3/Q1	160	160	160	160	160	160	160	160	160
Q4 [m^3/h]	50	78.75	125	200	312.5	500	787.5	1250	2000
Q3 [m^3/h]	**40**	**63**	**100**	**160**	**250**	**400**	**630**	**1000**	**1600**
Q2 [m^3/h]	0.40	0.63	1.00	1.60	2.50	4.00	6.3	10.0	16.0
Q1 [m^3/h]	0.25	0.39	0.63	1.00	1.56	2.50	3.94	6.3	10.0

Order code: P17	**DN 50 (2“)**	**DN 65 (2½“)**	**DN 80 (3“)**	**DN 100 (4“)**	**DN 125 (5“)**	**DN 150 (6“)**	**DN 200 (8“)**	**DN 250 (10“)**	**DN 300 (12“)**
„R“ Q3/Q1	200	200	200	200	200	200	200	200	200
Q4 [m^3/h]	50	78.75	125	200	312.5	500	787.5	1250	2000
Q3 [m^3/h]	**40**	**63**	**100**	**160**	**250**	**400**	**630**	**1000**	**1600**
Q2 [m^3/h]	0.32	0.50	0.80	1.28	2.00	3.20	5.0	8.0	12.8
Q1 [m^3/h]	0.20	0.32	0.50	0.80	1.25	2.00	3.15	5.0	8.0

Order code: P18	**DN 50 (2“)**	**DN 65 (2½“)**	**DN 80 (3“)**	**DN 100 (4“)**	**DN 125 (5“)**	**DN 150 (6“)**	**DN 200 (8“)**	**DN 250 (10“)**	**DN 300 (12“)**
„R“ Q3/Q1	250	250	250	250	250	250	250	250	250
Q4 [m^3/h]	50	78.75	125	200	312.5	500	787.5	1250	2000
Q3 [m^3/h]	**40**	**63**	**100**	**160**	**250**	**400**	**630**	**1000**	**1600**
Q2 [m^3/h]	0.26	0.40	0.64	1.02	1.60	2.56	4.0	6.4	10.24
Q1 [m^3/h]	0.16	0.25	0.40	0.64	1.00	1.60	2.52	4.0	6.4

The Label is placed on the side of the encapsulation. An example of the product label is shown below:

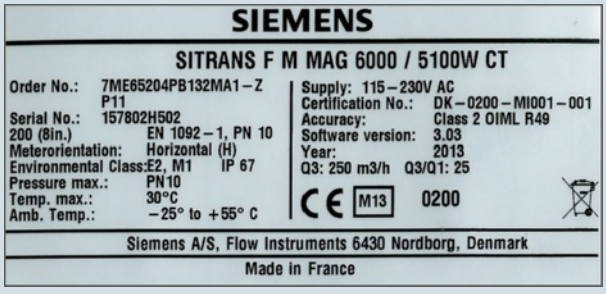

OIML R 49/MI-001 approvals valid for:

- DN 50 to 300 mm (2" to 12")
- Horizontal installation
- Compact or remote with max. 3 m cable
- Power supply 115/230 V AC

Other restrictions may apply (see certificate).

Special OIML / MI-001 settings:

- Unit: m^3
- Qmax: Q3
- Digital output: Frequency

For other factory settings, see Operating Instructions.

© Siemens AG 2014

Selection and Ordering data		Article No.
Sensor SITRANS F M MAG 5100 W	↗	7ME6520-
Hastelloy electrodes, carbon steel flanges, EU water markets and low flow applications		-2
↗ Click on the Article No. for the online configuration in the PIA Life Cycle Portal.		
Diameter		
DN 15 (½")	⬟	1V
DN 25 (1")	⬟	2D
DN 40 (1½")	⬟	2R
DN 50 (2")	⬟	2Y
DN 65 (2½")	⬟	3F
DN 80 (3")	⬟	3M
DN 100 (4")	⬟	3T
DN 125 (5")	⬟	4B
DN 150 (6")	⬟	4H
DN 200 (8")	⬟	4P
DN 250 (10")	⬟	4V
DN 300 (12")	⬟	5D
DN 350 (14")		5K
DN 400 (16")		5R
DN 450 (18")		5Y
DN 500 (20")		6F
DN 600 (24")		6P
DN 700 (28")		6Y
DN 750 (30")		7D
DN 800 (32")		7H
DN 900 (36")		7M
DN 1000 (40")		7R
(42")		7U
(44")		7V
DN 1200 (48")		8B
Flange norm and pressure rating		
to EN 1092-1		
PN 10 (DN 200 ... 1200/8" ... 48")	⬟	B
PN 16 (DN 50 ... 1200/2" ... 48")	⬟	C
PN 16, non PED (DN 700 ... 1200/28" ... 48")		D
PN 40 (DN 15 ... 40/½" ... 1½")	⬟	F
to ANSI B16.5		
class 150 (½" ... 24")	⬟	J
to AWWA C-207		
Class D (28" ... 48")		L
to AS 4087		
PN 16 (DN 50 ... 1200/2" ... 48")		N
Flange material and coating		
Carbon steel flanges ASTM A 105, 150 µm coating	⬟	1
Carbon steel flanges ASTM A 105, 300 µm coating		4
Liner material		
EPDM	⬟	2
NBR Hard Rubber	⬟	3
Transmitter		
Sensor for remote transmitter (Order transmitter separately)	⬟	A
MAG 6000 I, Aluminum, 18 ... 90 V DC, 115 ... 230 V AC	⬟	C
MAG 6000, Polyamid, 11 ... 30 V DC/11 ... 24 V AC	⬟	H
MAG 6000, Polyamid, 115 ... 230 V AC	⬟	J
MAG 5000, Polyamid, 11 ... 30 V DC/11 ... 24 V AC	⬟	K
MAG 5000, Polyamid, 115 ... 230 V AC	⬟	L
MAG 6000 CT, Polyamid, 115 ... 230 V AC		M

Selection and Ordering data		Article No.
Sensor SITRANS F M MAG 5100 W		7ME6520-
Hastelloy electrodes, carbon steel flanges, EU water markets and low flow applications		-2
Communication		
None	⬟	A
HART	⬟	B
PROFIBUS PA Profile 3 (only MAG 6000/MAG 6000 I)	⬟	F
PROFIBUS DP Profile 3 (only MAG 6000/MAG 6000 I)	⬟	G
Modbus RTU/RS 485 (only MAG 6000/MAG 6000 I)	⬟	E
FOUNDATION Fieldbus H1 (only MAG 6000/ MAG 6000 I)	⬟	J
Cable glands/terminal box		
Metric/Polyamid terminal box or 6000 I compact	⬟	1
½" NPT/Polyamid terminal box or 6000 I compact	⬟	2

⬟ We can offer shorter delivery times for configurations designated with the Quick Ship Symbol ⬟. For details see page 9/5 in the appendix.

© Siemens AG 2014

3

Selection and Ordering data	Order code
Additional information	
Please add **"-Z"** to Article No. and specify Order code(s) and plain text.	
Material certificate according to EN 10204-3.1	**C12**
Factory certificate according to EN 10204-2.2	**C14**
Factory certificate according to EN 10204-2.1	**C15**
FP2E marking (only France)	**C17**
Special calibration	
• 5-point calibration for DN 15 ... DN 200[1)]	**D01**
• 5-point calibration for DN 250 ... DN 600[1)]	**D02**
• 5-point calibration for DN 700 ... DN 1200[1)]	**D03**
• 10-point calibration for DN 15 ... DN 200[2)]	**D06**
• 10-point calibration for DN 250 ... DN 600[2)]	**D07**
• 10-point calibration for DN 700 ... DN 1200[2)]	**D08**
• Default (2 x 25 % and 2 x 90 %) match-pair calibration for DN 15 ... DN 200	**D11**
• Default (2 x 25 % and 2 x 90 %) match-pair calibration for DN 250 ... DN 600	**D12**
• Default (2 x 25 % and 2 x 90 %) match-pair calibration for DN 700 ... DN 1200	**D13**
• 5-point, matched-pair calibration for DN 15 ... DN 200[1)]	**D15**
• 5-point, matched-pair calibration for DN 250 ... DN 600[1)]	**D16**
• 5-point, matched-pair calibration for DN 700 ... DN 1200[1)]	**D17**
• 10-point, matched-pair calibration for DN 15 ... DN 200[2)]	**D18**
• 10-point, matched-pair calibration for DN 250 ... DN 600[2)]	**D19**
• 10-point, matched-pair calibration for DN 700 ... DN 1200[2)]	**D20**
Approval/Verification[3)] (MI-001 : DN 50 ... 300 (compact only), EN 1092-1 PN10 and PN16 flanges with MAG 6000 CT)[4)]	
• Without verification according to OIML R 49	**P10**
• MI-001 Q3/Q1 = 25	**P11**
• MI-001 Q3/Q1 = 63	**P12**
• MI-001 Q3/Q1 = 80	**P13**
• MI-001 Q3/Q1 = 160	**P16**
• MI-001 Q3/Q1 = 200	**P17**
• MI-001 Q3/Q1 = 250	**P18**
FM Fire Service Approval (with ANSI B16.5 Class 150 flanges)	
• DN 50, DN 80 and DN 100 (2", 3" and 4")	**P20**
• DN 150 and DN 200 (6" and 8")	**P21**
• DN 250 and DN 300 (10" and 12")	**P22**
Tag name plate, stainless steel fixed with SS wire (add plain text)	**Y17**
Tag name plate, plastic (self-adhesive)	**Y18**
Customer-specific converter setup	**Y20**
Sensor cables wired (specify cable Article No.)	**Y40**
Sensor for remote transmitter's junction box potted to IP68 with wired cable (specify cable Article No.)	**Y41**
Other postproduction requirements (add desired text)	**Y99**

Selection and Ordering data	Order code
Additional Calibrations	
Accredited Siemens Flow Instruments matched pair Calibration acc. to ISO/IEC 17025:2005	**On request[5)]**
Customer-witnessed calibration Any of above calibration	**On request[5)]**

1) 20 %, 40 %, 60 %, 80 %, 100 % of factory Q_{max}

2) Ascending and descending at 20 %, 40 %, 60 %, 80 %, 100 % of factory Q_{max}

3) For more details and references of the ranges please see the tables on page 3/96.

4) For remote version submit Product Variation Request.

5) Ordering On request as dedicated information from the customer on the individual sensors is required. Please fill in the calibration form found on http://pi.khe.siemens.de/index.aspx?Nr=17460 and send together with the order. (Size dependent restriction on maximum flow rates may apply)

Operating instructions for SITRANS F M MAG 5100 W

Description	Article No.
• English	**A5E03063678**
• German	**A5E03376527**
• Spanish	**A5E00376529**
• French	**A5E03376521**
• Chinese	**A5E03376501**

This device is shipped with a Quick Start guide and a CD containing further SITRANS F literature.

All literature is also available for free at:
http://www.siemens.com/flowdocumentation

Accessories

Description	Article No.	
Potting kit for terminal box of flow sensors for IP68/NEMA 6P ⬟	**FDK:085U0220**	

⬟ We can offer shorter delivery times for configurations designated with the Quick Ship Symbol ⬟. For details see page 9/5 in the appendix.

MAG 5000/6000 transmitters and sensors are packed in separate boxes, the final assembly takes place during installation at the customer's place. MAG 6000 I transmitters and sensors are delivered compact mounted from factory.
Communication module will be pre-mounted in the transmitter.

Please use online Product selector to get latest updates.

Product selector link:
www.pia-selector.automation.siemens.com

© Siemens AG 2014

Flow sensor MAG 5100 W

Selection and Ordering data	Order code
Additional information	
Please add **"-Z"** to Article No. and specify Order code(s) and plain text.	
Material certificate according to EN 10204-3.1	**C12**[1]
Factory certificate according to EN 10204-2.2	**C14**
Factory certificate according to EN 10204-2.1	**C15**
Special calibration	
• 5-point calibration for DN 15 ... DN 200[2]	**D01**
• 5-point calibration for DN 250 ... DN 600[2]	**D02**
• 5-point calibration for DN 700 ... DN 1200[2]	**D03**
• 10-point calibration for DN 15 ... DN 200[3]	**D06**
• 10-point calibration for DN 250 ... DN 600[3]	**D07**
• 10-point calibration for DN 700 ... DN 1200[3]	**D08**
• Default (2 x 25 % and 2 x 90 %) match-pair calibration for DN 15 ... DN 200	**D11**
• Default (2 x 25 % and 2 x 90 %) match-pair calibration for DN 250 ... DN 600	**D12**
• Default (2 x 25 % and 2 x 90 %) match-pair calibration for DN 700 ... DN 1200	**D13**
• 5-point, matched-pair calibration for DN 15 ... DN 200[2]	**D15**
• 5-point, matched-pair calibration for DN 250 ... DN 600[2]	**D16**
• 5-point, matched-pair calibration for DN 700 ... DN 1200[2]	**D17**
• 10-point, matched-pair calibration for DN 15 ... DN 200[3]	**D18**
• 10-point, matched-pair calibration for DN 250 ... DN 600[3]	**D19**
• 10-point, matched-pair calibration for DN 700 ... DN 1200[3]	**D20**
Tag name plate, stainless steel fixed with SS wire	**Y17**
Tag name plate, plastic (self-adhesive)	**Y18**
Customer-specific converter setup	**Y20**
Sensor cables wired (specify cable Article No.)	**Y40**
Sensor for remote transmitter's junction box potted to IP68 with wired cable (specify cable Article No.)	**Y41**
Other postproduction requirements (add desired text)	**Y99**

[1] Under preparation

[2] 20 %, 40 %, 60 %, 80 %, 100 % of factory Q_{max}

[3] Ascending and descending at 20 %, 40 %, 60 %, 80 %, 100 % of factory Q_{max}

⬟ We can offer shorter delivery times for configurations designated with the Quick Ship Symbol ⬟. For details see page 9/5 in the appendix.

Operating instructions for SITRANS F M MAG 5100 W

Description	Article No.
• German	**A5E03376527**
• English	**A5E03063678**
• French	**A5E03376521**
• Spanish	**A5E03376529**
• Chinese	**A5E03376501**

This device is shipped with a Quick Start guide and a CD containing further SITRANS F literature.

All literature is also available for free at:
http://www.siemens.com/flowdocumentation

Accessories

Description	Article No.	
Potting kit for terminal box of flow sensors for IP68/NEMA 6P ⬟	**FDK:085U0220**	

⬟ We can offer shorter delivery times for configurations designated with the Quick Ship Symbol ⬟. For details see page 9/5 in the appendix.

MAG 5000/6000 transmitters and sensors are packed in separate boxes, the final assembly takes place during installation at the customer's place.
Communication module will be pre-mounted in the transmitter.
Please use online Product selector to get latest updates.
Product selector link: www.pia-selector.automation.siemens.com

© Siemens AG 2014

Dimensional drawings

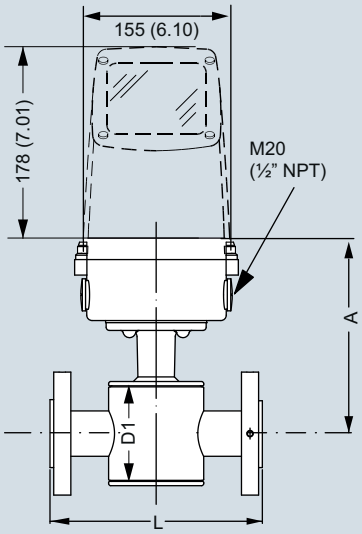

7ME6520: DN 15 ... 40 (½" ... 1½")

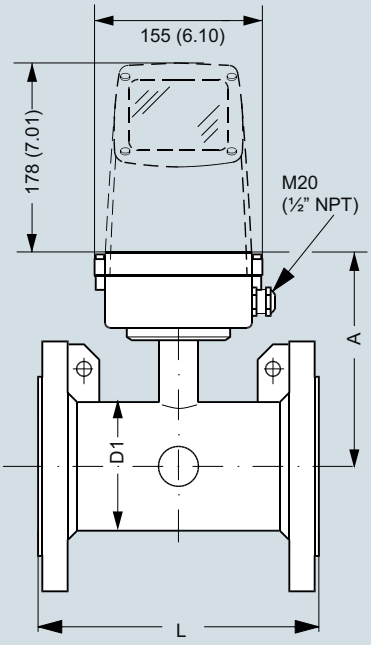

7ME6520: DN 50 ... 300 (2" ... 12")

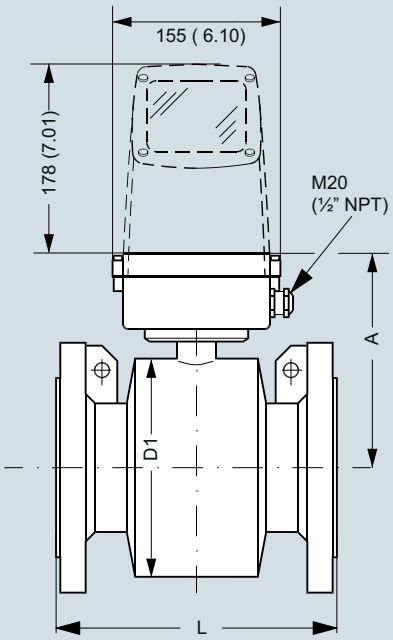

7ME6520: DN 350 ... 1200 (14" ... 48")
7ME6580: DN 25 ... 2000 (1" ... 78")

7ME6520 NBR or EPDM liner						7ME6580 Ebonite liner					
Nominal size		A		D1		A		D1		L	
[mm]	[inch]	[mm]	[inch]	[mm]	[inch]	[mm]	[inch]	[mm]	[inch]	[mm]	[inch]
15	½	177	7.0	77	3.0	-	-	-	-	200	7.9
25	1	187	7.4	96	3.8	187	7.4	104	4.09	200	7.9
40	1½	202	8.0	127	5.0	197	7.8	124	4.88	200	7.9
50	2	188	7.4	76	3.0	205	8.1	139	5.47	200	7.9
65	2½	194	7.6	89	3.5	212	8.3	154	6.06	200	7.9
80	3	200	7.9	102	4.0	222	8.7	174	6.85	200	7.9
100	4	207	8.1	114	4.5	242	9.5	214	8.43	250	9.8
125	5	217	8.5	140	5.5	255	10.0	239	9.41	250	9.8
150	6	232	9.1	168	6.6	276	10.9	282	11.1	300	11.8
200	8	257	10.1	219	8.6	304	12.0	338	13.31	350	13.8
250	10	284	11.2	273	10.8	332	13.1	393	15.47	450	17.7
300	12	310	12.2	324	12.8	357	14.1	444	17.48	500	19.7
350	14	382	15.0	451	17.8	362	14.3	451	17.76	550	21.7
400	16	407	16.0	502	19.8	387	15.2	502	19.76	600	23.6
450	18	438	17.2	563	22.2	418	16.5	563	22.16	600	23.6
500	20	463	18.2	614	24.2	443	17.4	614	24.17	600	23.6
600	24	514	20.2	715	28.2	494	19.4	715	28.15	600	23.6
700	28	564	22.2	816	32.1	544	21.4	816	32.13	700	27.6
750	30	591	23.3	869	34.2	571	22.5	869	34.21	750	29.5
800	32	616	24.3	927	36.5	606	23.9	927	36.5	800	31.5
900	36	663	26.1	1032	40.6	653	25.7	1032	40.63	900	35.4
1000	40	714	28.1	1136	44.7	704	27.7	1136	44.72	1000	39.4
	42	714	28.1	1136	44.7	704	27.7	1136	44.72	1000	39.4
	44	765	30.1	1238	48.7	755	29.7	1238	48.74	1100	43.3
1200	48	820	32.3	1348	53.1	810	31.9	1348	53.07	1200	47.2
1400	54	-	-	-	-	925	36.4	1574	65.94	1400	55.1
1500	60	-	-	-	-	972	38.2	1672	65.83	1500	59.1
1600	66	-	-	-	-	1025	40.4	1774	75.39	1600	63
1800	72	-	-	-	-	1123	44.2	1974	77.72	1800	70.9
2000	78	-	-	-	-	1223	48.1	2174	85.59	2000	78.7

- not available

© Siemens AG 2014

Flow sensor MAG 5100 W

MAG 5100 W/6000 I Compact

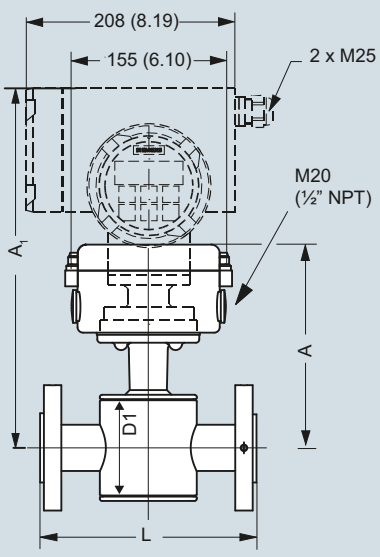

7ME6520: DN 15 ... 40 (½" ... 1½")

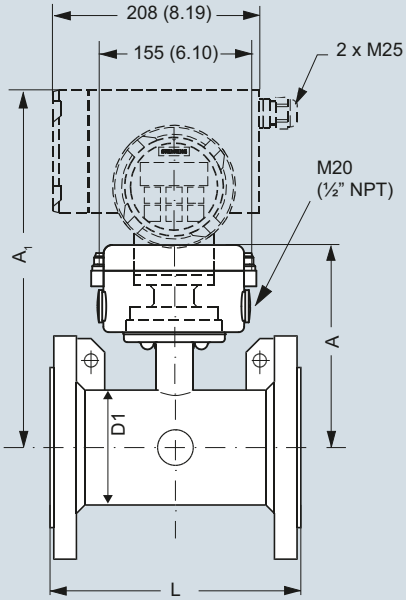

7ME6520: DN 50 ... 300 (2" ... 12")

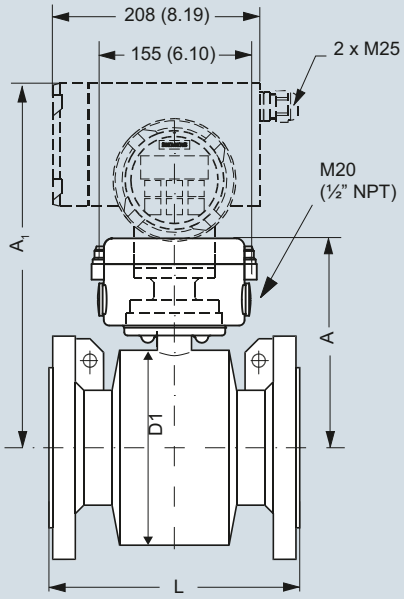

7ME6520: DN 350 ... 2000 (14" ... 78")
7ME6580: DN 25 ... 2000 (1" ... 78")

		7ME6520 NBR or EPDM liner						7ME6580 Ebonite liner							
Nominal size		A		A1		D1		A		A1		D1		L	
[mm]	[inch]	[mm]	[inch]	[mm]	[inch]	[mm]	[inch]	[mm]	[inch]	[mm]	[inch]	[mm]	[inch]	[mm]	[inch]
15	½	177	7.0	331	13.0	77	3.0	187	7.4	-	-	-	-	200	7.9
25	1	187	7.4	341	13.4	96	3.8	187	7.4	341	13.4	104	4.09	200	7.9
40	1½	202	8.0	356	14.0	127	5.0	197	7.8	351	13.8	124	4.88	200	7.9
50	2	188	7.4	342	13.5	76	3.0	205	8.1	359	14.1	139	5.47	200	7.9
65	2½	194	7.6	348	13.7	89	3.5	212	8.3	366	14.4	154	6.06	200	7.9
80	3	200	7.9	354	14.0	102	4.0	222	8.7	376	14.8	174	6.85	200	7.9
100	4	207	8.1	361	14.2	114	4.5	242	9.5	396	15.6	214	8.43	250	9.8
125	5	217	8.5	371	14.6	140	5.5	255	10.0	409	16.1	239	9.41	250	9.8
150	6	232	9.1	386	15.2	168	6.6	276	10.9	430	16.9	282	11.1	300	11.8
200	8	257	10.1	411	16.2	219	8.6	304	12.0	458	18.0	338	13.31	350	13.8
250	10	284	11.2	438	17.2	273	10.8	332	13.1	486	19.1	393	15.47	450	17.7
300	12	310	12.2	464	18.3	324	12.8	357	14.1	511	20.1	444	17.48	500	19.7
350	14	382	15.0	536	21.1	451	17.8	362	14.3	516	20.3	451	17.76	550	21.7
400	16	407	16.0	561	22.1	502	19.8	387	15.2	541	21.3	502	19.76	600	23.6
450	18	438	17.2	592	23.3	563	22.2	418	16.5	572	22.5	563	22.16	600	23.6
500	20	463	18.2	617	24.3	614	24.2	443	17.4	597	23.5	614	24.17	600	23.6
600	24	514	20.2	668	26.3	715	28.2	494	19.4	648	25.5	715	28.15	600	23.6
700	28	564	22.2	718	28.3	816	32.1	544	21.4	698	27.5	816	32.13	700	27.6
750	30	591	23.3	745	29.3	869	34.2	571	22.5	725	28.5	869	34.21	750	29.5
800	32	616	24.3	770	30.3	927	36.5	606	23.9	760	29.9	927	36.5	800	31.5
900	36	663	26.1	817	32.2	1032	40.6	653	25.7	807	31.8	1032	40.63	900	35.4
1000	40	714	28.1	868	34.2	1136	44.7	704	27.7	858	33.8	1136	44.72	1000	39.4
	42	714	28.1	868	34.2	1136	44.7	704	27.7	858	33.8	1136	44.72	1000	39.4
	44	765	30.1	919	36.2	1238	48.7	755	29.7	904	35.6	1238	48.74	1100	43.3
1200	48	820	32.3	974	38.3	1348	53.1	810	31.9	964	38.0	1348	53.07	1200	47.2
1400	54	-	-	-	-	-	-	925	36.4	1079	42.5	1574	61.97	1400	55.1
1500	60	-	-	-	-	-	-	972	38.2	1126	44.3	1672	65.83	1500	59.1
1600	66	-	-	-	-	-	-	1025	40.4	1179	46.4	1774	69.84	1600	63.0
1800	72	-	-	-	-	-	-	1123	44.2	1277	50.3	1974	77.72	1800	70.9
2000	78	-	-	-	-	-	-	1223	48.1	1377	54.2	2174	85.59	2000	78.7

- not available

© Siemens AG 2014

Weight

		7ME6520 NBR or EPDM liner										7ME6580 Ebonite liner	
Nominal size		**PN 10**		**PN 16**		**PN 40**		**Class 150/AWWA**		**AS**		**PN 16**	
[mm]	**[inch]**	**[kg]**	**[lb]**	**[kg]**	**[lb]**	**[kg]**	**[lb]**	**[kg]**	**[lb]**	**[kg]**	**[lb]**	**[kg]**	**[lb]**
15	½	-	-	-	-	4	9	4	9	4	9	5	11
25	1	-	-	-	-	6	12	5	11	4	9	5	11
40	1½	-	-	-	-	8	18	7	15	7	15	8	17
50	2	-	-	9	20	-	-	8	20	9	20	9	20
65	2½	-	-	10.7	24	-	-	11	24	10.7	24	11	24
80	3	-	-	11.6	26	-	-	13	28	11.6	26	12	26
100	4	-	-	15.2	33	-	-	19	41	15.2	33	16	35
125	5	-	-	20.4	45	-	-	24	52	-	-	19	42
150	6	-	-	26	57	-	-	29	64	26	57	27	60
200	8	48	106	48	106	-	-	56	124	48	106	40	88
250	10	64	141	69	152	-	-	79	174	69	152	60	132
300	12	76	167	86	189	-	-	110	243	86	189	80	176
350	14	104	229	125	274	-	-	139	307	115	254	110	242
400	16	119	263	143	314	-	-	159	351	125	277	125	275
450	18	136	299	173	381	-	-	182	400	141	311	175	385
500	20	163	359	223	491	-	-	225	495	189	418	200	440
600	24	236	519	338	744	-	-	320	704	301	664	287	633
700	28	270	595	314	692	-	-	273	602	320	704	330	728
750	30	-	-	-	-	-	-	329	725	-	-	360	794
800	32	346	763	396	873	-	-	365	804	428	944	450	992
900	36	432	951	474	1043	-	-	495	1089	619	1362	530	1168
1000	40	513	1130	600	1321	-	-	583	1282	636	1399	660	1455
	42	-	-	-	-	-	-	687	1512	-	-	-	-
	44	-	-	-	-	-	-	763	1680	-	-	1140	2513
1200	48	643	1415	885	1948	-	-	861	1896	813	1789	1180	2601
1400	54	1592	3510	-	-	-	-	-	-	-	-	1600	3528
1500	60	-	-	-	-	-	-	-	-	-	-	2460	5423
1600	66	2110	4652	-	-	-	-	-	-	-	-	2525	5566
1800	72	2560	5644	-	-	-	-	-	-	-	-	2930	6460
2000	78	3640	8025	-	-	-	-	-	-	-	-	3665	8080

- not available

With transmitter MAG 5000 and MAG 6000 compact, weight is increased by approximately 0.8 kg (1.8 lb), with MAG 6000 I, weight is increased by 5.5 kg (12.1 lb).

Panel Materials for CP-p00

CONTINUOUS HINGE WITH CLAMPS, TYPE 12

INDUSTRY STANDARDS

UL 508A Listed; Type 12, 13; File No. E61997
cUL Listed per CSA C22.2 No. 94; Type 12, 13; File No. E61997

NEMA/EEMAC Type 12 and 13
CSA, File No. 42186: Type 12
IEC 60529, IP65

APPLICATION

For applications requiring a bright white interior to increase control visibility, this enclosure includes a padlocking hasp and staple for security and screw-down clamps for secure closure.

SPECIFICATIONS

- Enclosure bodies are 14 or 16 gauge steel. Doors are 14 gauge steel.
- Seams continuously welded and ground smooth
- External wall-mounting brackets
- Formed external return flanges around all sides of enclosure opening
- Screw-down door clamps
- Removable heavy-gauge continuous hinge pin
- Hasp and staple for padlocking
- Data pocket is high-impact thermoplastic
- Collar studs provided for mounting optional panels
- Bonding provision on door

FINISH

White inside with ANSI 61 gray finish outside.

ACCESSORIES

See also Accessories.
Drip Shield Kit for Type 12 Enclosures
Electric Heater
Fast-Operating Clamp Assembly
Compact Cooling Fans
Steel and Stainless Steel Window Kits

MODIFICATION AND CUSTOMIZATION

Hoffman excels at modifying and customizing products to your specifications. Contact your local Hoffman sales office or distributor for complete information.

BULLETIN: A12

Standard Product

Catalog Number	AxBxC in./mm	Body Gauge	Panel	Conductive Panel	Panel Size D x E in./mm	F in./mm	Number of Clamps	Data Pocket
A122406LP	12.00 x 24.00 x 6.00 305 x 610 x 152	16	A12P24	A12P24G	9.00 x 21.00 229 x 533	3.00 76	2	Small
A161206LP	16.00 x 12.00 x 6.00 406 x 305 x 152	16	A16P12	A16P12G	13.00 x 9.00 330 x 229	1.25 32	2	Small
A161606LP	16.00 x 16.00 x 6.00 406 x 406 x 152	16	A16P16	A16P16G	13.00 x 13.00 330 x 330	3.00 76	2	Small
A162006LP	16.00 x 20.00 x 6.00 406 x 508 x 152	16	A20P16	A20P16G	17.00 x 13.00 432 x 330	3.00 76	2	Small
A201206LP	20.00 x 12.00 x 6.00 508 x 305 x 152	16	A20P12	A20P12G	17.00 x 9.00 432 x 229	1.25 32	2	Small
A201606LP	20.00 x 16.00 x 6.00 508 x 406 x 152	16	A20P16	A20P16G	17.00 x 13.00 432 x 330	3.00 76	2	Small
A202006LP	20.00 x 20.00 x 6.00 508 x 508 x 152	16	A20P20	A20P20G	17.00 x 17.00 432 x 432	3.00 76	2	Small
A202406LP	20.00 x 24.00 x 6.00 508 x 610 x 152	16	A24P20	A24P20G	21.00 x 17.00 533 x 432	3.00 76	2	Small
A241206LP	24.00 x 12.00 x 6.00 610 x 305 x 152	16	A12P24	A12P24G	9.00 x 21.00 229 x 533	1.25 32	2	Small
A241606LP	24.00 x 16.00 x 6.00 610 x 406 x 152	16	A24P16	A24P16G	21.00 x 13.00 533 x 330	3.00 76	2	Small
A242006LP	24.00 x 20.00 x 6.00 610 x 508 x 152	16	A24P20	A24P20G	21.00 x 17.00 533 x 432	3.00 76	2	Small
A242406LP	24.00 x 24.00 x 6.00 610 x 610 x 152	16	A24P24	A24P24G	21.00 x 21.00 533 x 533	3.00 76	2	Small
A301606LP	30.00 x 16.00 x 6.00 762 x 406 x 152	14	A30P16	A30P16G	27.00 x 13.00 686 x 330	3.00 76	2	Small
A302006LP	30.00 x 20.00 x 6.00 762 x 508 x 152	14	A30P20	A30P20G	27.00 x 17.00 686 x 432	3.00 76	2	Small
A302406LP	30.00 x 24.00 x 6.00 762 x 610 x 152	14	A30P24	A30P24G	27.00 x 21.00 686 x 533	3.00 76	2	Large
A362406LP	36.00 x 24.00 x 6.00 914 x 610 x 152	14	A36P24	A36P24G	33.00 x 21.00 838 x 533	3.00 76	2	Large
A363006LP	36.00 x 30.00 x 6.00 914 x 762 x 152	14	A36P30	A36P30G	33.00 x 27.00 838 x 686	3.00 76	2	Large
A122408LP	12.00 x 24.00 x 8.00 305 x 610 x 203	16	A12P24	A12P24G	9.00 x 21.00 229 x 533	3.00 76	2	Small
A161208LP	16.00 x 12.00 x 8.00 406 x 305 x 203	16	A16P12	A16P12G	13.00 x 9.00 330 x 229	1.25 32	2	Small
A161608LP	16.00 x 16.00 x 8.00 406 x 406 x 203	16	A16P16	A16P16G	13.00 x 13.00 330 x 330	3.00 76	2	Small

Catalog Number	AxBxC in./mm	Body Gauge	Panel	Conductive Panel	Panel Size D x E in./mm	F in./mm	Number of Clamps	Data Pocket
A201612LP	20.00 x 16.00 x 12.00 508 x 406 x 305	14	A20P16	A20P16G	17.00 x 13.00 432 x 330	3.00 76	2	Small
A242012LP	24.00 x 20.00 x 12.00 610 x 508 x 305	14	A24P20	A24P20G	21.00 x 17.00 533 x 432	3.00 76	2	Small
A242412LP	24.00 x 24.00 x 12.00 610 x 610 x 305	14	A24P24	A24P24G	21.00 x 21.00 533 x 533	3.00 76	2	Small
A302412LP	30.00 x 24.00 x 12.00 762 x 610 x 305	14	A30P24	A30P24G	27.00 x 21.00 686 x 533	3.00 76	2	Large
A303012LP	30.00 x 30.00 x 12.00 762 x 762 x 305	14	A30P30	A30P30G	27.00 x 27.00 686 x 686	3.00 76	2	Large
A362412LP	36.00 x 24.00 x 12.00 914 x 610 x 305	14	A36P24	A36P24G	33.00 x 21.00 838 x 533	3.00 76	2	Large
A363012LP	36.00 x 30.00 x 12.00 914 x 762 x 305	14	A36P30	A36P30G	33.00 x 27.00 838 x 686	3.00 76	2	Large
A363612LP	36.00 x 36.00 x 12.00 914 x 914 x 305	14	A36P36	A36P36G	33.00 x 33.00 838 x 838	3.00 76	2	Large
A423012LP	42.00 x 30.00 x 12.00 1067 x 762 x 305	14	A42P30	A42P30G	39.00 x 27.00 991 x 686	3.00 76	2	Small
A423612LP	42.00 x 36.00 x 12.00 1067 x 914 x 305	14	A42P36	A42P36G	39.00 x 33.00 991 x 838	3.00 76	2	Large
A483612LP	48.00 x 36.00 x 12.00 1219 x 914 x 305	14	A48P36	A48P36G	45.00 x 33.00 1143 x 838	3.00 76	3	Large
A603612LP	60.00 x 36.00 x 12.00 1524 x 914 x 305	14	A60P36	A60P36G	57.00 x 33.00 1448 x 838	3.00 76	3	Large
A723612LP	72.00 x 36.00 x 12.00 1829 x 914 x 305	14	A72P36	A72P36G	69.00 x 33.00 1753 x 838	3.00 76	3	Large
A242016LP	24.00 x 20.00 x 16.00 610 x 508 x 406	14	A24P20	A24P20G	21.00 x 17.00 533 x 432	3.00 76	2	Small
A242416LP	24.00 x 24.00 x 16.00 610 x 610 x 406	14	A24P24	A24P24G	21.00 x 21.00 533 x 533	3.00 76	2	Small
A302416LP	30.00 x 24.00 x 16.00 762 x 610 x 406	14	A30P24	A30P24G	27.00 x 21.00 686 x 533	3.00 76	2	Large
A363016LP	36.00 x 30.00 x 16.00 914 x 762 x 406	14	A36P30	A36P30G	33.00 x 27.00 838 x 686	3.00 76	2	Large
A423616LP	42.00 x 36.00 x 16.00 1067 x 914 x 406	14	A42P36	A42P36G	39.00 x 33.00 991 x 838	3.00 76	2	Large
A483616LP	48.00 x 36.00 x 16.00 1219 x 914 x 406	14	A48P36	A48P36G	45.00 x 33.00 1143 x 838	3.00 76	3	Large
A603616LP	60.00 x 36.00 x 16.00 1524 x 914 x 406	14	A60P36	A60P36G	57.00 x 33.00 1448 x 838	3.00 76	3	Large
A302420LP	30.00 x 24.00 x 20.00 762 x 610 x 508	14	A30P24	A30P24G	27.00 x 21.00 686 x 533	3.00 76	2	Large
A363020LP	36.00 x 30.00 x 20.00 914 x 762 x 508	14	A36P30	A36P30G	33.00 x 27.00 838 x 686	3.00 76	2	Large
A483620LP	48.00 x 36.00 x 20.00 1219 x 914 x 508	14	A48P36	A48P36G	45.00 x 33.00 1143 x 838	3.00 76	3	Large
A603620LP	60.00 x 36.00 x 20.00 1524 x 914 x 508	14	A60P36	A60P36G	57.00 x 33.00 1448 x 838	3.00 76	3	Large
A302424LP	30.00 x 24.00 x 24.00 762 x 610 x 610	14	A30P24	A30P24G	27.00 x 21.00 686 x 533	3.00 76	2	Large

Purchase panels separately. Optional stainless steel, conductive, composite and aluminum panels are available for most sizes.

Small Data Pocket is 6.00 in. x 6.00 in. Large Data Pocket is 12.00 in. x 12.00 in.

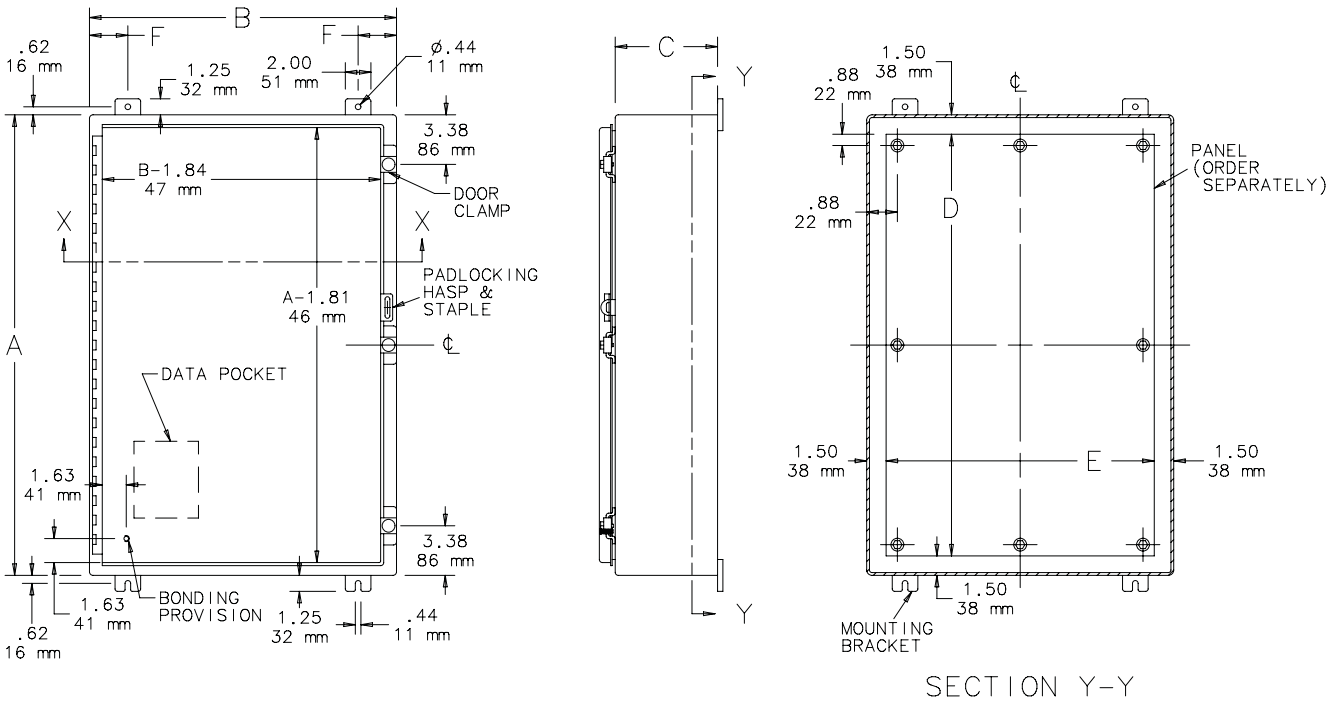
B
F
F
.62
16 mm
1.25
32 mm
2.00
51 mm
ø.44
11 mm
3.38
86 mm
B-1.84
47 mm
DOOR
CLAMP
X
X
PADLOCKING
HASP &
STAPLE
A-1.81
46 mm
A
DATA POCKET
1.63
41 mm
3.38
86 mm
1.63
41 mm
BONDING
PROVISION
1.25
32 mm
.44
11 mm
.62
16 mm
C
Y
Y
1.50
38 mm
.88
22 mm
PANEL
(ORDER
SEPARATELY)
.88
22 mm
D
1.50
38 mm
E
1.50
38 mm
1.50
38 mm
MOUNTING
BRACKET
SECTION Y-Y

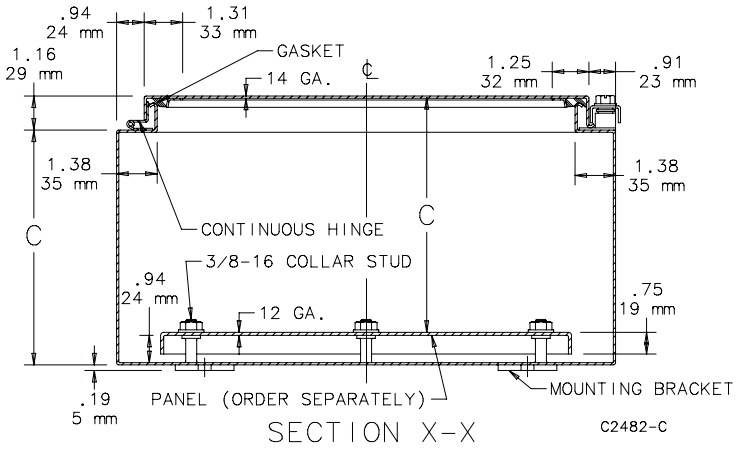
.94
24 mm
1.31
33 mm
1.16
29 mm
GASKET
14 GA.
1.25
32 mm
.91
23 mm
1.38
35 mm
1.38
35 mm
C
CONTINUOUS HINGE
C
3/8-16 COLLAR STUD
.94
24 mm
12 GA.
.75
19 mm
.19
5 mm
PANEL (ORDER SEPARATELY)
MOUNTING BRACKET
SECTION X-X
C2482-C

BOM #3

800T/H 30.5 mm Trigger Action E-Stops

Allen-Bradley

Product Summary

800T Type 4/13 Metal

Non-Illuminated
- 45 mm plastic head
- 60 mm plastic head
- 63 mm metal head

Illuminated
- 45 mm plastic head
- 60 mm plastic head

Key Release
- 45 mm plastic head

800H Type 4/4X/13 Plastic

Non-Illuminated
- 45 mm plastic head
- 60 mm plastic head

Illuminated
- 45 mm plastic head
- 60 mm plastic head

30.5 mm E-Stops in a state-of-the-art, tamper-resistant design

Time-Tested, Industry Proven

The Allen-Bradley® 800T/H push button product lines are designed and constructed to perform consistently in the most demanding industrial environments. This legacy of leadership continues with the introduction of the innovative 800T/H Trigger Action E-Stop devices.

Global Acceptance

Trigger action functionality provided in a 30.5 mm form factor delivers E-Stop operators that meet global requirements and are more than up to the task for installation in heavy duty applications. The twist release design conforms to functional safety guidelines where intentional action is required to reset the E-Stop device.

Tamper Resistance

Tamper resistance is provided by front-of-panel mounting. The mounting nut installs from back of panel, and is inaccessible when the control cabinet door is closed during normal machine operation. Additionally, the 800T/H Trigger Action E-Stop mushroom caps are factory installed and non-removable, further increasing tamper resistance.

State-of-the-Art Illumination

LED illumination is standard for illuminated devices, using state-of-the-art super bright LED technology. Full voltage or transformer type input is available. Full voltage devices employ the new Universal LED technology, accepting a wide range of 12...130V AC/DC input supply voltage.

LISTEN. THINK. SOLVE.®

Trigger Action E-Stop Units, Non-Illuminated

Trigger Action E-Stop Units, Illuminated

Trigger Action E-Stop Units, Key Release

Features and Benefits

Trigger Action Function

- Contacts can't be teased without latching of operator
- Complies with EN ISO 13850 and EN 60947-5-5
- Positive opening with direct drive contact blocks
- Allows use of standard contact blocks such as 800T-XA (1-NO, 1-NC)

Fixed Mushroom Cap

- Safety red color
- 45 mm, 60 mm and 63 mm (metal) options
- Non-removable for tamper resistance
- Integral "E-STOP" legend available as an option

Twist Release Function

- Conforms to functional safety guidelines
- Intentional action required for E-Stop resetting

Front-of-Panel Mounting

- Operator installs from front of panel and is secured with back-of-panel mounting nut
- E-Stop operator cannot be tampered with during normal machine operation with control cabinet closed

Yellow Bushing

- 800H bushing molded from yellow plastic material further enhances compliance for yellow background of installations

Reliable Contact Block Latching

- Tool-less installation of latch mechanism – snaps onto operator
- Contact block mounting screws secure latch mechanism to operator – latch cannot be removed while contact blocks are installed

Trigger Action E-Stop Units, Non-Illuminated

- 2-position
- Twist Release
- Red mushroom head

Add Required 5/5 NO/NC contacts

Head Type	Contact Configuration	Type 4/13 Metal Catalog Number ⌗	Type 4/4X/13 Plastic Catalog Number ⌗
45 mm Plastic	No Contacts	800T-TFXT6	800H-TFRXT6
	1-NO, 1-NC	800T-TFXT6A	800H-TFRXT6A
	1-SMCB ↗	800TC-TFXT6D4S	800HC-TFRXT6D4S
60 mm Plastic ✪	No Contacts	800T-TFXJT6	800H-TFRXJT6
	1-NO, 1-NC	800T-TFXJT6A	800H-TFRXJT6A
	1-SMCB ↗	800TC-TFXJT6D4S	800HC-TFRXJT6D4S
63 mm Anodized Aluminum ✧	No Contacts	800T-TFXLT6	–
	1-NO, 1-NC	800T-TFXLT6A	–
	1-SMCB ↗	800TC-TFXLT6D4S	–

Trigger Action E-Stop Units, Illuminated

- 2-position
- Twist Release
- Red mushroom head
- LED illumination

Head Type	Contact Configuration	Type	Voltage	Type 4/13 Metal Catalog Number ⌗	Type 4/4X/13 Plastic Catalog Number ⌗
45 mm Plastic	No Contacts	Operator Only		800T-TFXTS00R	800H-TFRXTS00R
	1-NO, 1-NC	Universal	12...130V AC/DC	800T-TFXTQH2RA	800H-TFRXTQH2RA
	1-SMCB ↗			800TC-TFXTQH2RD4S	800HC-TFRXTQH2RD4S
	1-NO, 1-NC	Transformer	120V AC	800T-TFXTPH16RA	800H-TFRXTPH16RA
	1-SMCB ↗			800TC-TFXTPH16RD4S	800HC-TFRXTPH16RD4S
60 mm Plastic ✪	No Contacts	Operator Only		800T-TFXJTS00R	800H-TFRXJTS00R
	1-NO, 1-NC	Universal	12...130V AC/DC	800T-TFXJTQH2RA	800H-TFRXJTQH2RA
	1-SMCB ↗			800TC-TFXJTQH2RD4S	800HC-TFRXJTQH2RD4S
	1-NO, 1-NC	Transformer	120V AC	800T-TFXJTPH16RA	800H-TFRXJTPH16RA
	1-SMCB ↗			800TC-TFXJTPH16RD4S	800HC-TFRXJTPH16RD4S

Trigger Action E-Stop Units, Key Release

- 2-position
- Familiar DO18 key
- Red mushroom head

Head Type	Contact Configuration	Type 4/13 Metal Catalog Number ⌗
45 mm Plastic	No Contacts	800T-TFXK6
	1-NO, 1-NC	800T-TFXK6A
	1-SMCB ↗	800TC-TFXK6D4S

⌗ For finger-safe contact block terminals, order 800TC or 800HC
✪ To order a device with "E-STOP" printed on the cap add the letter "E" after "J"; for example: 800T-TFXJET6
✧ To order a device with "E-STOP" engraved on the cap add the letter "E" after "L"; for example: 800T-TFXLET6
↗ Self-Monitoring Contact Block

BOM #6

Product: 1492-REC15G

Description: 1492 DIN Rail Receptacle

Representative Photo Only
(actual product may vary based on configuration selections)

DIN Rail Receptacle	
Current Rating	15A
Options	Ground Fault Current Interrupt

CERTIFICATIONS AND APPROVALS	
cULus	UL 508A (file# E54866)
For UL Certifications Directory:	http://database.ul.com/cgi-bin/XYV/template/LISEXT/1FRAME/index.htm

SDN-P DIN Rail Series

The SDN DIN Rail power supplies provide industry leading performance. Sag Immunity, transient suppression and noise tolerant, the SDN series ensures compatibility in demanding applications. Power factor correction to meet European directives, hazardous location approvals and optional redundant accessories allow the SDN series to be used in a wide variety of applications. Wide operation temperature range, high tolerance to shock and vibration and reliable design make the SDN series the preferred choice of users.

E61379 E137632 E234790

Applications

- Industrial/Machine Control
- Process Control
- Conveying Equipment
- Material Handling
- Vending Machines
- Packaging Equipment
- DeviceNet™
- Amusement Park Equipment
- Semiconductor Fabrication Equipment

Features

- Power Factor Correction (per EN61000-3-2)
- Auto Select 115/230 Vac, 50/60 Hz Input
- Improved metal mounting clip
- DC OK Signal
- Adjustable Voltage
- Parallel Capability standard on all units
- Industrial grade design
  - -10°C to 60°C operation without derating. Indefinite short circuit, overvoltage and overtemperature protection.
  - Powers high inrush loads without shutdown or foldback
  - Rugged metal case and DIN connector
- Narrow width on rail for space critical applications
- User-friendly front panel
  - Large, rugged, accessible, multiple connection screw terminations
  - Easy installation
- 12 Vdc and 48 Vdc single phase models available
- Highly efficient >90% switching technology
- High MTBF and reliability

Accessories

- Chassis Mount Bracket (SDN-PMBRK2)

Certifications and Compliances *

All Models

- c UL us Listed, Ind. Control Equipment, E61379
  - UL 508, CSA C22.2 No. 107.1
- c UL us UL Recognized Component, ITE, E137632
  - UL 60950-1/CSA C22.2 No. 60950-1, 2nd Edition
- c UL us UL Recognized Component, Haz. Loc., E234790
  - ISA 12.12.01, CSA C22.2 No. 213
  - Class I, Division 2, Groups A, B, C, D
- CE - Low Voltage Directive
  - IEC/EN60950-1, 2nd Edition
- Sag Immunity: SEMI F47
- RoHS Compliant

Models SDN 2.5-24-100P, SDN 4-24-100LP

- Class 2 per UL 1310, CSA C22.2 No. 223

Models SDN 2.5-24-100P, SDN 4-24-100LP, SDN 5-24-100P, SDN 10-24-100P

- Ex ATEX Directive
  - EN50021, Ex II 3 G, Ex nC IIC Gc

Related Products

- SDP™ Series
- SCP Series
- SCL Series
- SDU UPS

* Refer to user manual for installation requirements when used in hazardous locations.

SDN-P Specifications (Single Phase), 24 Vdc Output

Description	Catalog Number			
	SDN 2.5–24–100P	SDN 4–24–100LP	SDN 5–24–100P	SDN 10–24–100P
Input				
Nominal Voltage	115/230 Vac, Auto select			
–AC Range	85-264 Vac	85-132/176-264 Vac		
–DC Range [1]	90 - 375 Vdc	210 - 375 Vdc		
–Frequency	47 - 63 Hz			
Nominal Current [2]	1.3 / 0.7 A	2.1 / 1.0 A	2.2 / 1.0 A	5 / 2 A typ.
–Inrush current max.	typ. < 25 A	typ. < 20 A		typ. < 40 A
Efficiency (Losses [3])	> 87.5% typ. (8.6 W)	> 88% typ. (13.1 W)	> 88% typ. (16.4 W)	> 88% typ. (32.7 W)
Power Factor Correction	Units Fulfill EN61000-3-2			
Output				
Nominal Voltage	24 Vdc (22.5 - 28.5 Vdc adj.)	24 Vdc (22.5 - 28.5 Vdc adj.)	24 Vdc (22.5 - 28.5 Vdc adj.)	
–Tolerance	< ±2% overall (combination Line, load, time and temperature related changes)			
–Ripple [4]	< 50 mVpp			
Overvoltage Protection	< 33 Vdc	< 27 Vdc	< 33 Vdc	
Nominal Current	2.5 A (60 W)	3.8 A (92 W)	5 A (120 W)	10 A (240 W)
–Current Limit	Fold Forward (Current rises, voltage drops to maintain constant power during overload up to max peak current)			
Holdup Time [5]	> 20 ms @ full load			
Parallel Operation	Single or Parallel use is selectable via Front Panel Switch (SDN 2.5, 4 should not be used in parallel as Class 2 rating would be violated.)			
General				
EMC: –Emissions	EN61000-6-3, -4; Class B EN55011, EN55022 Radiated and Conducted including Annex A. EN61000-3-2			
–Immunity	EN61000-6-1, -2; EN61000-4-2 Level 4, EN61000-4-3 Level 3; EN61000-4-6 Level 3; EN61000-4-4 Level 4 input and Level 3 output; EN61000-4-5 Isolation Class 4, EN61000-4-11;			
Temperature	Storage: -25°C...+85°C Operation. -10°-60°C full power with operation to 70°C possible with a linear derating to half power from 60°C to 70°C (Convection cooling, no forced air required). Operation up to 50% load permissible with sideways or front side up mounting orientation.			
Humidity	The relative humidity is < 90% RH, noncondensing; IEC 68-2-2, 68-2-3.			
MTBF:	> 820,000 hours	> 640,000 hours		> 600,000 hours
– Standard	Bellcore Issue 6 Method 1 Case 3 @ 40°C			
Warranty	5 year limited warranty			
General Protection/Safety	Protected against continuous short-circuit, overload, open-circuit. Protection Class 1 (IEC536), degree of protection IP20 (IEC 529) Safe low voltage: SELV (acc. EN60950)			
Status Indicators	Green LED and DC OK signal (N.O. Solid State Contact rated 200 mA / 60 Vdc)			
Installation				
Fusing –Input	Internally fused. External 10 A slow acting fusing for the input is recommended to protect input wiring.			
–Output	Outputs are capable of providing high currents for short periods of time for inductive load startup or switching. Fusing may be required for wire/loads if 2x Nominal O/P current rating cannot be tolerated. Continuous current overload allows for reliable fuse tripping.			
Mounting	Simple snap-on system for DIN Rail TS35/7.5 or TS35/15 or chassis-mounted (optional screw mounting set SDN-PMBRK2 required).			
Connections	Input: IP20-rated screw terminals, connector size range: 16-10 AWG (1.5-6 mm²) for solid conductors. 16-12 AWG (0.5-4 mm²) for flexible conductors. Output: Two connectors per output, connector size range: 16-10 AWG (1.5 - 6 mm²) for solid conductors.			
Case	Fully enclosed metal housing with fine ventilation grid to keep out small parts.			
–Free Space	25 mm above and below, 25 mm left and right, 10 mm in front		25 mm above and below, 25 mm left and right, 15 mm in front	70 mm above and below, 25 mm left and right, 15 mm in front
H x W x D inches (mm)	4.88. x 1.97 x 4.55 (124.0 x 50.0 x 116.0)	4.88 x 2.56 x 4.55 (124.0 x 65.0 x 116.0)		4.88 x 3.26 x 4.55 (124.0 x 83.0 x 116.0)
Weight lbs (kg)	1.6 (.73)	2.4 (1.10)		3.3 (1.50)

1. Not UL listed for DC input.
2. Input current ratings are conservatively specified with low input, worst case efficiency and power factor.
3. Losses are heat dissipation in watts at full load, nominal input line.
4. Ripple/noise is stated as typical values when measured with a 20 MHz, bandwidth scope and 50 Ohm resistor.
5. Full load, 100 Vac Input @ T_{amb} = +25°C

Contact **Technical Services** at **(800) 377-4384** with any questions.
Visit our website at www.solahd.com.

SDN-P Series Dimensions

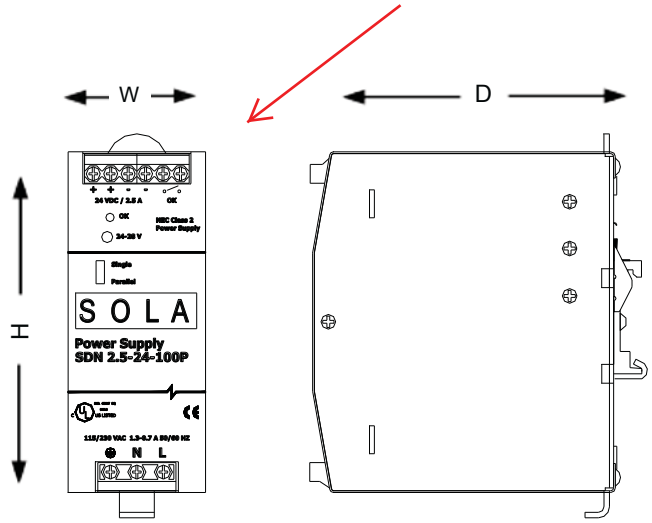

Catalog Number	Dimensions – inches (mm)		
	H	W	D
12 Vdc			
SDN 9–12–100P	4.88 (124.0)	2.56 (65.0)	4.55 (116.0)
SDN 16–12–100P	4.88 (124.0)	3.23 (83.0)	4.55 (116.0)
24 Vdc			
SDN 2.5–24–100P	4.88 (124.0)	1.97 (50.0)	4.55 (116.0)
SDN 4–24–100LP	4.88 (124.0)	2.56 (65.0)	4.55 (116.0)
SDN 5–24–100P	4.88 (124.0)	2.56 (65.0)	4.55 (116.0)
SDN 10–24–100P	4.88 (124.0)	3.26 (83.0)	4.55 (116.0)
48 Vdc			
SDN 5–48–100P	4.88 (124.0)	3.23 (83.0)	4.55 (116.0)

Contact **Technical Services** at **(800) 377-4384** with any questions.
Visit our website at www.solahd.com.

SDN-P Series Mounting

DIN Rail Mounting

Snap on the DIN Rail:

1. Tilt unit slightly backwards
2. Put it onto the DIN Rail
3. Push downwards until stopped
4. Push at the lower front edge to lock
5. Shake the unit slightly to ensure that the retainer has locked

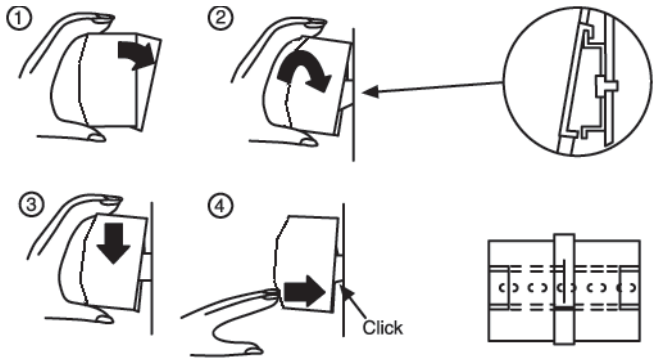

Alternative Panel Mount: Using the optional SDN-PMBRK2 accessory, the unit can be screw mounted to a panel.

Detachment from DIN Rail:

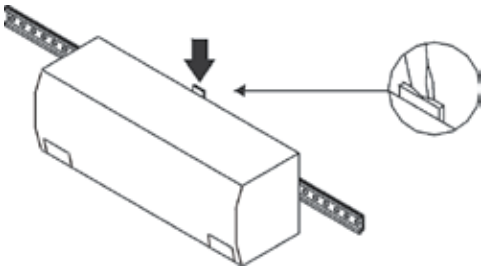

Chassis Mounting

Instead of snapping a SolaHD SDN™ unit on the DIN Rail, you can also attach it using the screw mounting set SDN-PMBRK2.

This set consists of two metal brackets, which replace the existing two aluminum profiles.

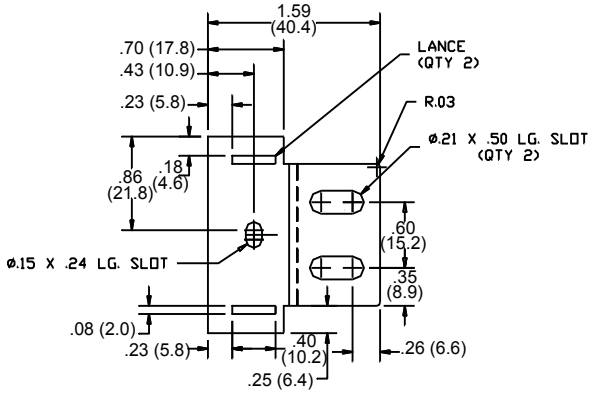

Dimensions - in. (mm)

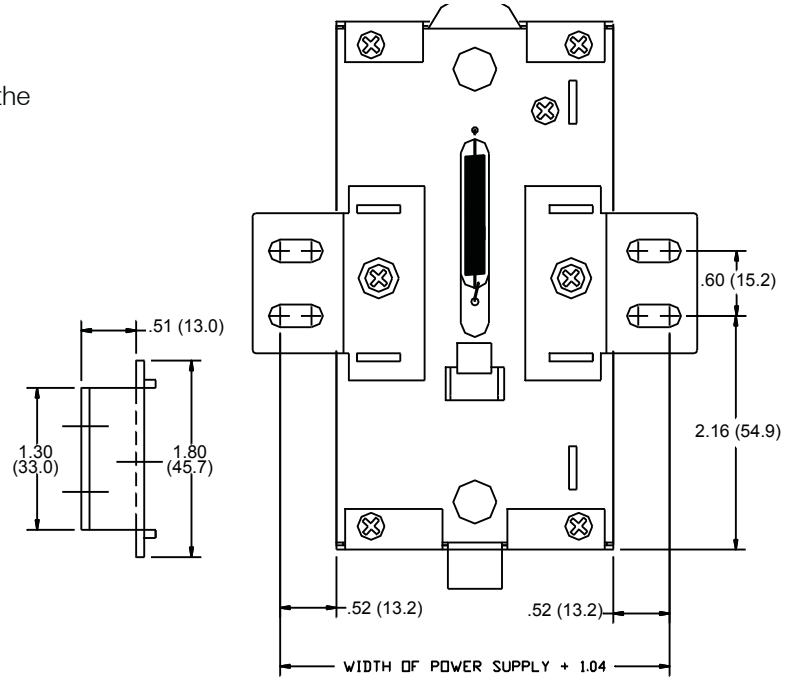

BOM #8

Product: 1492-H5

Description: 1492-H Finger-Safe Terminal Blocks

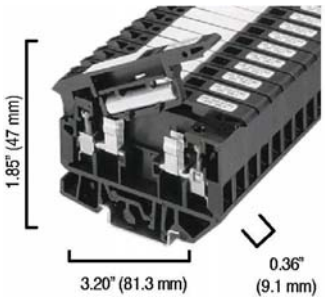

Representative Photo Only (actual product may vary based on configuration selections)

BASE DATA

Electrical Standards	UL
Type of Device	Finger-Safe Terminal Block
Base Block Type	Single Circuit Fuse Block

DETAIL DATA

Features	LED Blown Fuse Indicator
Wire Range	#30 - #12 AWG
Color	Black (Standard)
Bulk Pack	No Bulk Pack (Single Block)

CERTIFICATIONS AND APPROVALS

UR	UL 486E, UL 1059; Reference File: E40735
CSA	CSA C22.2 No. 65, No. 158; On Website, Name: Rockwell, Keyword Search: 1492
IEC	EN 60947-1, EN 60947-7-1(Feed-Through), -2(Ground), -3(Fuse)
Short Circuit Current Rating	This terminal block carries a minimum of 10kA SCCR rating for all protection methods. Please see the table for other possible elevated ratings.
For CSA Certifications:	http://directories.csa-international.org/directorymain.asp
For UL Certifications Directory:	http://database.ul.com/cgi-bin/XYV/template/LISEXT/1FRAME/index.htm

BOM #9

Product: 1492-J3

Description: 1492 IEC Screw Terminal Blocks

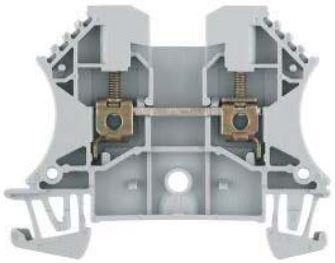

Representative Photo Only (actual product may vary based on configuration selections)

BLOCK STYLE	
Base Block Style	Standard Feed-Through Blocks
BASE DATA	
Base Block Type	One-Circuit Feed-Through Block
DETAIL DATA	
Features	Standard Feedthrough
Maximum Wire Size & Rating	UL: 30-12 AWG (25A @600V AC/DC)\nCSA: 26-12 AWG (20A @600V AC/DC)\nIEC: 2.5mm² (24A @800V AC/DC)\nEEx e II: 2.5mm²/20-14 AWG (21A @ 550V AC/DC)
Color	Gray (Standard)
CERTIFICATIONS AND APPROVALS	
UR	UL 486E, UL 1059; Reference File: E40735, E187022
CSA	CSA C22.2 No. 65, No. 158; On Website, Name: Rockwell, Keyword Search: 1492
IEC	EN 60947-1, EN 60947-7-1(Feed-Through), -2(Ground), -3(Fuse)
ATEX	http://www.rockwellautomation.com/products/certification/ex/excert.html
Short Circuit Current Rating	This terminal block carries a minimum of 10kA SCCR rating for all protection methods. Please see the table for other possible elevated ratings.
For CSA Certifications:	http://directories.csa-international.org/directorymain.asp
For UL Certifications Directory:	http://database.ul.com/cgi-bin/XYV/template/LISEXT/1FRAME/index.htm

BOM #11

Selection Guide

Allen-Bradley

CompactLogix System

Catalog Numbers 1769-L16ER-BB1B, 1769-L18ER-BB1B, 1769-L18ERM-BB1B, 1769-L24ER-QB1B, 1769-L24ER-QBFC1B, 1769-L27ERM-QBFC1B, 1769-L30ER, 1769-L30ER-NSE, 1769-L30ERM, 1769-L33ER, 1769-L33ERM, 1769-L36ERM, 1769-AENTR, 1768-L43, 1768-L43S, 1768-L45, 1768-L45S

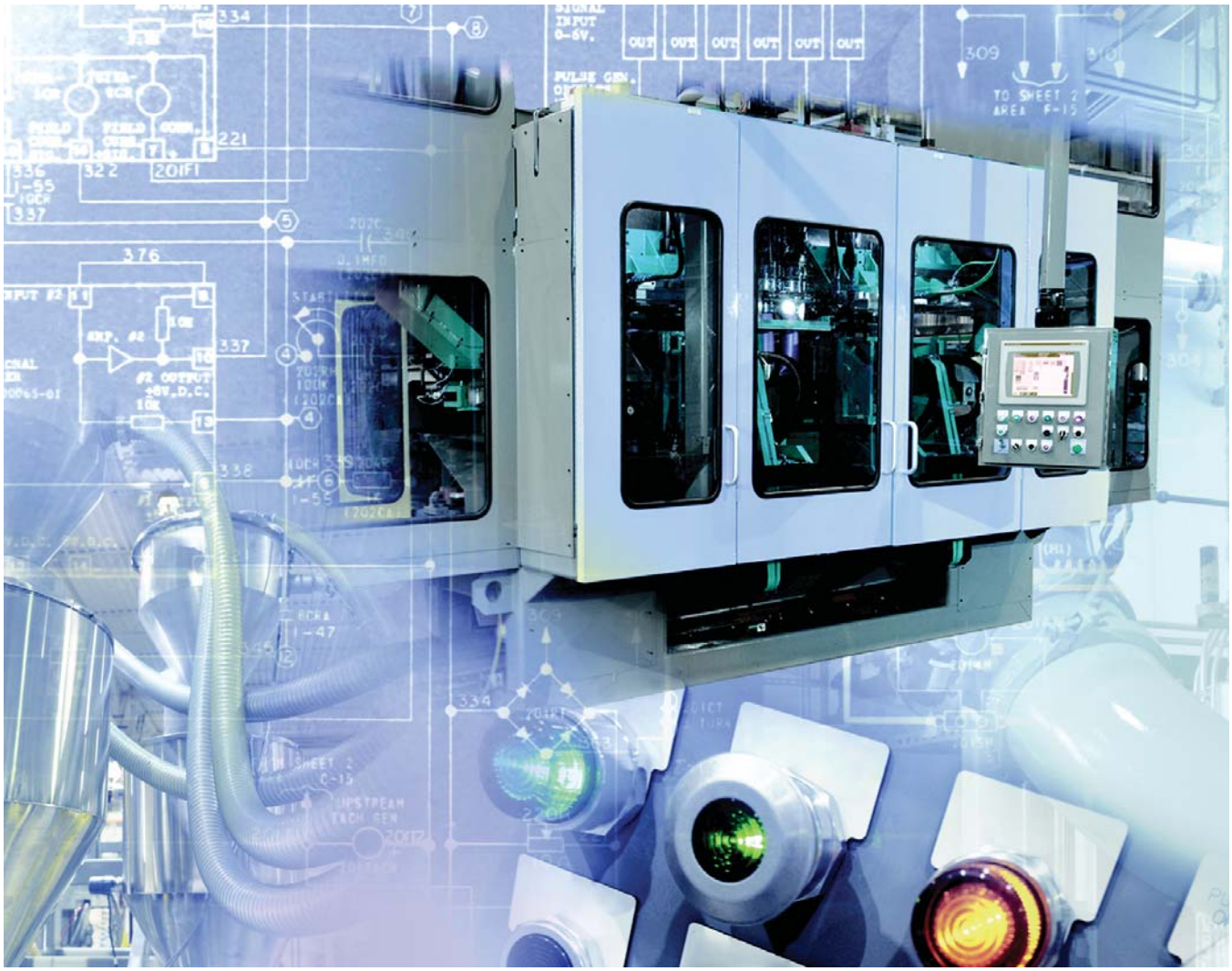

1734 POINT I/O Modules
1769 Compact I/O Modules
1768 Integrated Motion Modules
1768 and 1769 Communication Modules
1768 and 1769 CompactLogix Controllers
1768 and 1769 Compact Power Supplies

LISTEN. THINK. SOLVE.®

Logix Controllers Comparison

Characteristic	**ControlLogix** 1756-71, 1756-L72, 1756-L73, 1756-L73XT, 1756-L74, 1756-L75 **GuardLogix** 1756-L72S, 1756-L73S, 1756-L73SXT	**CompactLogix** 1769-L30ER, 1769-L30ER-NSE, 1769-L30ERM, 1769-L33ER, 1769-L33ERM, 1769-L36ERM	**CompactLogix** 1769-L24ER-BB1B, 1769-L24ER-QBFC1B, 1769-L27ERM-QBFC1B	**CompactLogix** 1769-L16ER-BB1B, 1769-L18ER-BB1B, 1769-L18ERM-BB1B	**CompactLogix** 1768-L43, 1768-L45 **Compact GuardLogix** 1768-L43S, 1768-L45S	**SoftLogix 5800™** 1789-L10, 1789-L30, 1789-L60
Controller tasks: • Continuous • Periodic • Event	32; 100 programs/task	32; 100 programs/task	32; 100 programs/task	32; 100 programs/task	• 1768-L43: 16; 32 programs/task • 1768-L45: 30; 32 programs/task	32; 100 programs/task
Event tasks	All event triggers	All event triggers	All event triggers	All event triggers, plus embedded inputs	All event triggers	All event triggers, plus outbound and Windows events
User memory	• 1756-L71: 2 MB • 1756-L72: 4 MB • 1756-L72S: 4 MB + 2 MB safety • 1756-L73, 1756-L73SXT, 1756-L73XT: 8 MB • 1756-L73S: 8 MB + 4 MB safety • 1756-L74: 16 MB • 1756-L75: 32 MB	• 1769-L30ER, 1769-L30ER-NSE, 1769-L30ERM: 1MB • 1769-L33ER, 1769-L33ERM: 2 MB • 1769-L36ERM: 3 MB	• 1769-L24ER: 750 KB • 1769-L27ERM: 1 MB	• 1769-L16ER: 384 KB • 1769-L18ER, 1769-L18ERM: 512 KB	• 1768-L43: 2 MB • 1768-L43S: 2 MB + 0.5 MB safety • 1768-L45: 3 MB • 1768-L45S: 3 MB + 1 MB safety	• 1789-L10: 2 MB; 1 controller; no motion • 1789-L30: 64 MB; 3 controllers • 1789-L60: 64 MB; 6 controllers
Memory card	Secure Digital	Secure Digital	Secure Digital	Secure Digital	CompactFlash	None
Built-in ports	1 USB	2 EtherNet/IP 1 USB	2 EtherNet/IP 1 USB	2 EtherNet/IP 1 USB	1 RS-232	Depends on personal computer
Communication options	• EtherNet/IP (standard and safety) • ControlNet (standard and safety) • DeviceNet (standard and safety) • DH+ • Remote I/O • SynchLink	• Dual-port EtherNet/IP(1) • DeviceNet	• Dual-port EtherNet/IP(1) • DeviceNet	• Dual-port EtherNet/IP(1)	• EtherNet/IP (standard and safety) • ControlNet (standard and safety) • DeviceNet (standard)	• EtherNet/IP • ControlNet • DeviceNet
Controller connections	500	256	256	256	250	250
Network connections	Per module: • 128 ControlNet (CN2/B) • 40 ControlNet (CNB) • 256 EtherNet/IP; 128 TCP (EN2*x*) • 128 EtherNet/IP; 64 TCP (ENBT)	• 1769-L30ER, 1769-L30ER-NSE, 1769-L30ERM: 256 EtherNet/IP; 120 TCP • 1769-L33ER, 1769-L33ERM: 256 EtherNet/IP; 120 TCP • 1769-L36ERM: 256 EtherNet/IP; 120 TCP	• 1769-L24ER: 256 EtherNet/IP; 120 TCP • 1769-L27ERM: 256 EtherNet/IP; 120 TCP	• 1769-L16ER: 256 EtherNet/IP; 120 TCP • 1769-L18ER, 1769-L18ERM: 256 EtherNet/IP; 120 TCP	Per module: • 48 ControlNet • 128 EtherNet/IP; 64 TCP	Per module: • 48 ControlNet • 128 EtherNet/IP; 64 TCP
EtherNet/IP nodes in a single Logix Designer application, max	N/A	• 1769-L30ER, 1769-L30ER-NSE, 1769-L30ERM: 16 • 1769-L33ER, 1769-L33ERM: 32 • 1769-L36ERM: 48	• 1769-L24ER: 8 • 1769-L27ERM: 16	• 1769-L16ER: 4 • 1769-L18ER, 1769-L18ERM: 8	N/A	N/A
Controller redundancy	Full support	Backup via DeviceNet	Backup via DeviceNet	—	Backup via DeviceNet	—
Integrated motion	• Integrated motion on an EtherNet/IP network • SERCOS interface • Analog options	Integrated motion on an EtherNet/IP network	Integrated motion on an EtherNet/IP network	Integrated motion on an EtherNet/IP network	SERCOS interface	• SERCOS interface • Analog encoder input
Programming languages	• Standard task: all languages • Safety task: relay ladder, safety application instructions	• Relay ladder • Structured text • Function block • SFC	• Relay ladder • Structured text • Function block • SFC	• Relay ladder • Structured text • Function block • SFC	• Standard task: all languages • Safety task: relay ladder, safety application instructions	• Relay ladder • Structured text • Function block • SFC • External routines (C/C++)

(1) CompactLogix™ 5370 controllers have two EtherNet/IP ports to connect to an EtherNet/IP network. The ports carry the same network traffic as part of the controller's embedded switch. The controller uses only one IP address.

Select a CompactLogix System

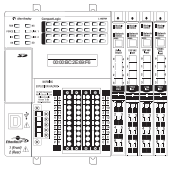

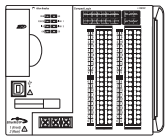

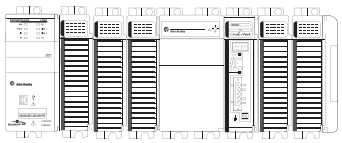

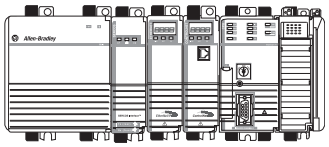

1 CompactLogix Controllers — Page 7

Select:
- A controller with sufficient memory
- A memory card

2 CompactLogix Communication Options — Page 13

Select:
- Networks
- Communication interfaces
- Associated cables and network equipment

3 CompactLogix Integrated Motion — Page 16

Select:
- A CompactLogix 5370 controller for integrated motion on an EtherNet/IP network
- A 1768 CompactLogix controller for SERCOS motion
- Drives, motors, and accessories (use the Motion Analyzer tool)

4 Compact GuardLogix Integrated Safety — Page 20

Select:
- A 1768 Compact GuardLogix® controller for integrated safety

5 Additional Local I/O Modules — Page 24

Select:
- 1734 POINT I/O™ or 1769 Compact I/O™ modules
- Associated cables and accessories

6 CompactLogix Power Supplies — Page 30

Select:
- One 1769 power supply for each CompactLogix 5370 L3 controller
- One 1768 power supply for each 1768 CompactLogix controller
- Additional 1769 power supplies as needed

Optional

Programming Software — Page 31

CompactLogix Controllers Overview

The CompactLogix system is designed to provide a Logix solution for small and mid-size applications. Typically, these applications are machine-level control applications. A simple system can consist of a standalone controller with a single bank of I/O modules and DeviceNet communication. In a more complex system, add other networks, motion control, and safety control. As part of the Integrated Architecture™ system, the CompactLogix controllers use the same programming software, network protocol, and information capabilities as all Logix controllers, providing a common development environment for all control disciplines.

- The CompactLogix 5370 L3 controllers deliver scalable, affordable control ideal for applications from small standalone equipment to high-performance indexing tables, process skids, case packers and erectors, and packaging. The CompactLogix 5370 L3 controllers also provide a truly integrated motion solution.
- The CompactLogix 5370 L2 controllers combine the power of the Logix architecture with the flexibility of Compact I/O modules. From small standalone equipment to higher performance applications, these controllers are ideal for assembly machines, hoisting systems, process skids, indexing tables, and packaging.
- The CompactLogix 5370 L1 controllers combine the power of the Logix architecture with the flexibility of POINT I/O. Ideal for small to mid-size machines, these controllers offer value to customers looking for the benefits of Integrated Architecture in a lower cost system.

CompactLogix 5370 System on an EtherNet/IP Network

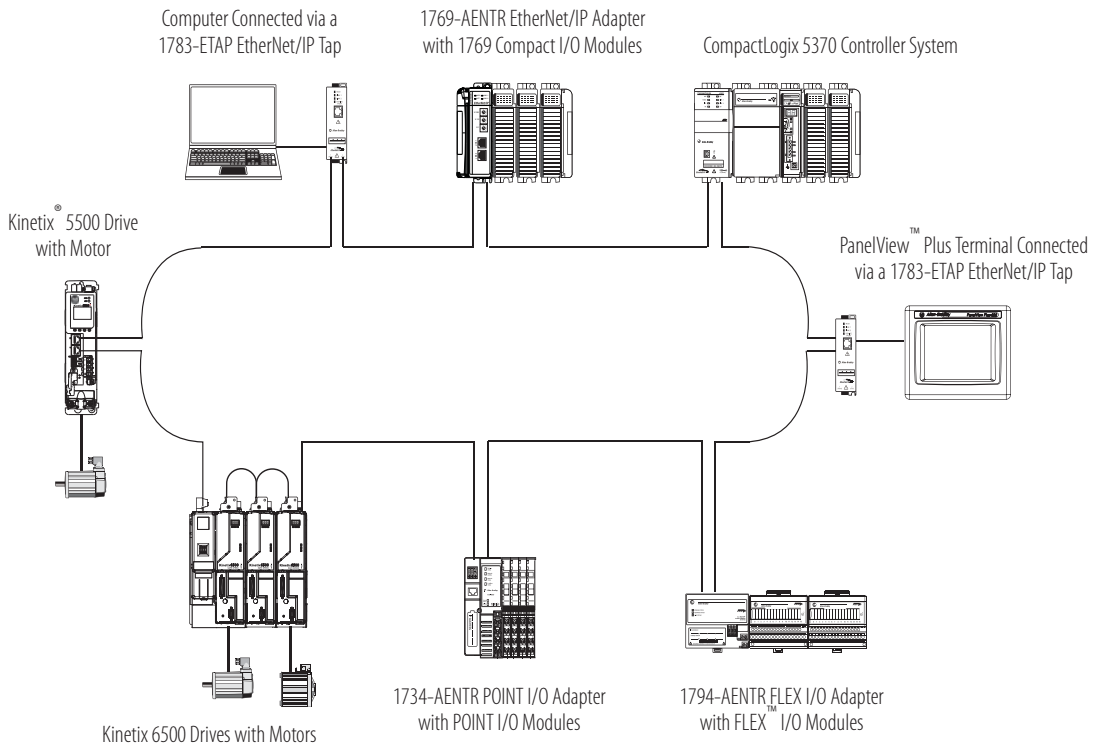

The CompactLogix 5370 L2 and L3 controllers support DeviceNet connectivity.

CompactLogix 5370 System on an DeviceNet Network

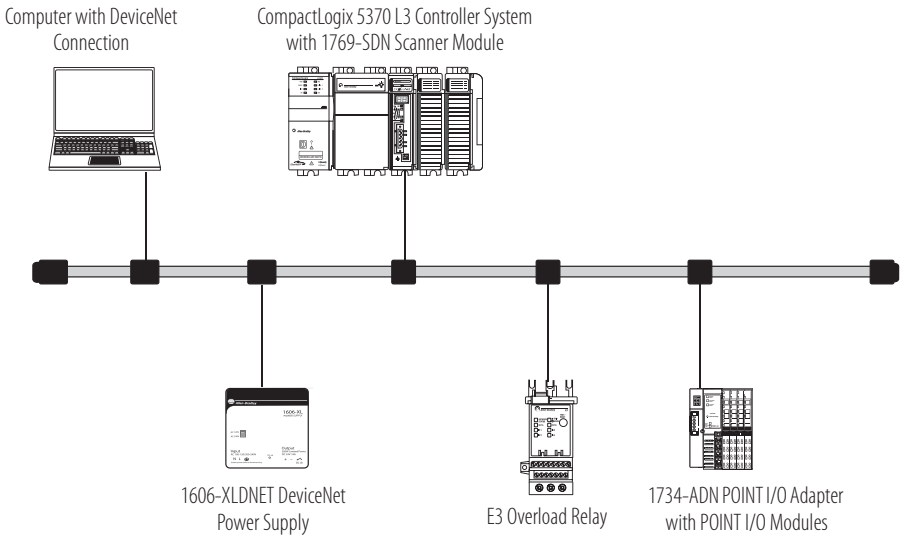

1768 CompactLogix System

The 1768 CompactLogix system combines a 1768 backplane for communication and motion support and a 1769 backplane for I/O support. The 1768 controller is designed for integrated motion, integrated safety, and more complex communication requirements than the other CompactLogix controllers. The 1768 controller has one serial port. Add 1768 modules for motion control, EtherNet/IP communication, and ControlNet communication.

1768 CompactLogix System on an EtherNet/IP Network

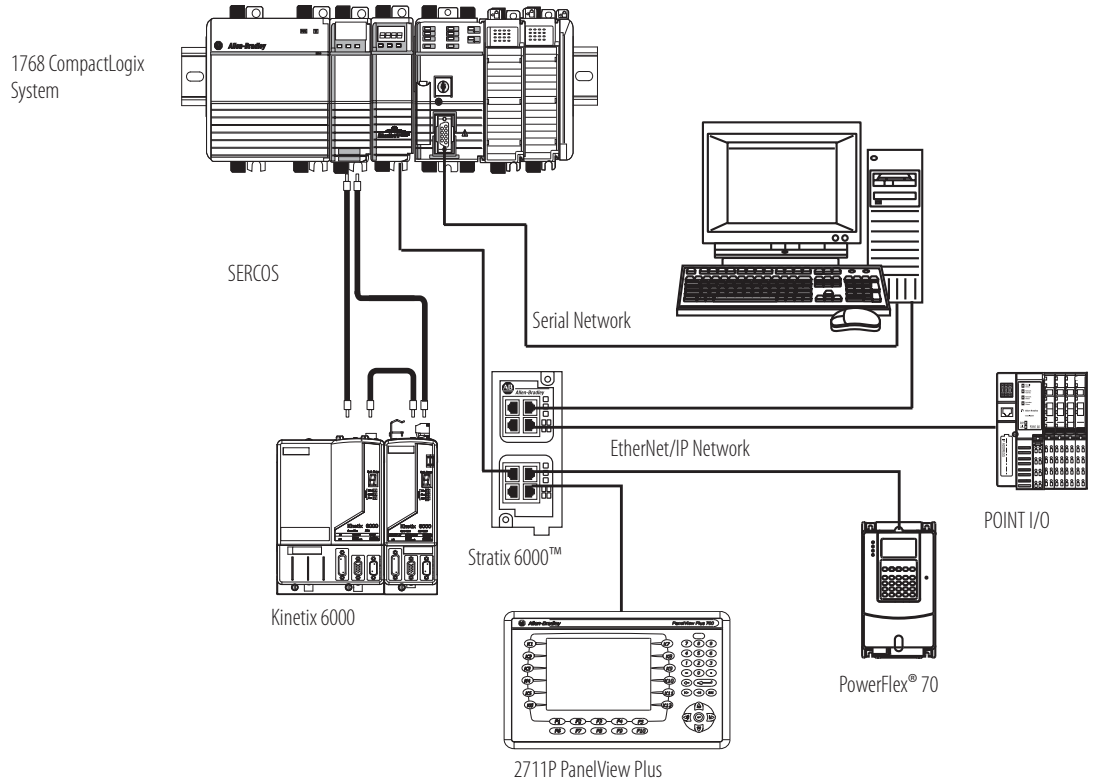

1768 Compact GuardLogix Safety System

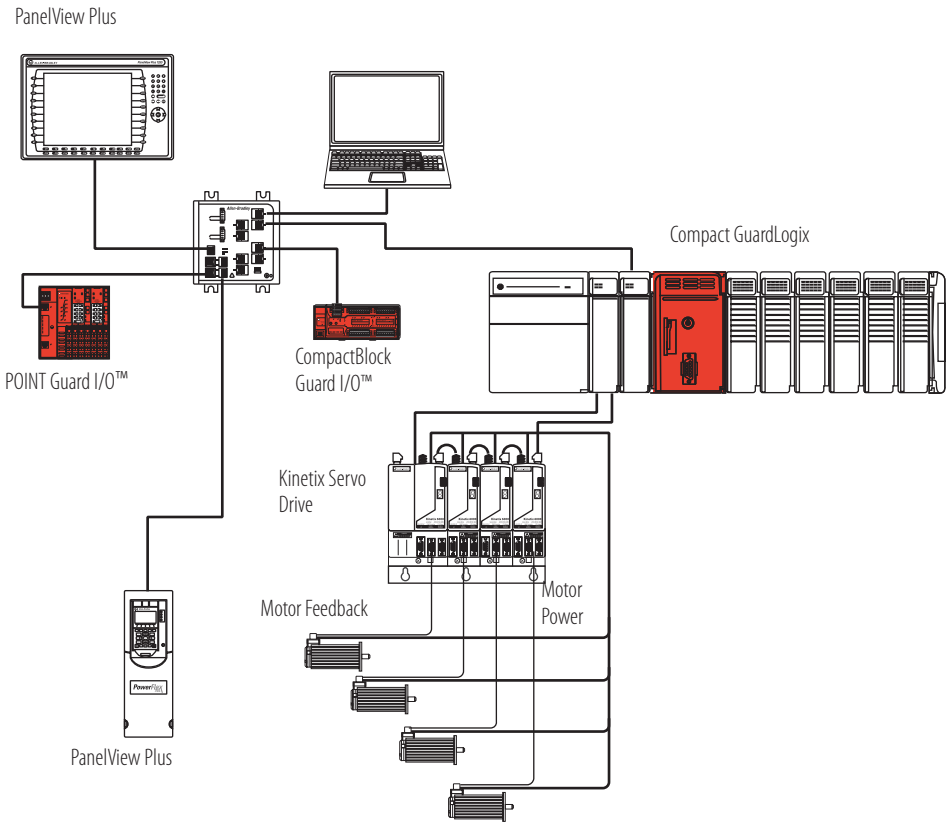

CompactLogix Controllers

The CompactLogix platform brings together the benefits of the Logix platform— common programming environment, common networks, common control engine—in a small footprint with high performance. Combined with Compact I/O modules, the CompactLogix platform is perfect for tackling smaller, machine-level control applications, with or without simple motion, with unprecedented power and scalability. A CompactLogix platform is ideal for systems that require standalone and system-connected control over EtherNet/IP, ControlNet, or DeviceNet networks.

For detailed specifications, see CompactLogix Controllers Specifications Technical Data, publication 1769-TD005.

Characteristic	CompactLogix 5370 L1 Controllers	CompactLogix 5370 L2 Controllers	CompactLogix 5370 L3 Controllers	1768 Controllers
Controller application	Small applications Embedded 1734 I/O modules	Small applications Embedded 1769 I/O modules	General purpose	Integrated safety Integrated SERCOS motion
Controller tasks	32; 100 programs/task	32; 100 programs/task	32; 100 programs/task	• 1768-L43: 16; 32 programs/task • 1768-L45: 30; 32 programs/task
Event tasks	Consumed tag, EVENT instruction, embedded inputs, remote I/O, axis, and motion event triggers	Consumed tag, EVENT instruction, remote I/O, axis, and motion event triggers	Consumed tag, EVENT instruction, remote I/O, axis, and motion event triggers	Consumed tag, EVENT instruction, remote I/O, axis, and motion event triggers
User memory	• 1769-L16ER-BB1B: 384 KB • 1769-L18ER-BB1B, 1769-L18ERM-BB1B: 512 KB	• 1769-L24ER-QB1B, 1769-L24ER-QBFC1B: 750 KB • 1769-L27ERM-QBFC1B: 1 MB	• 1769-L30ER, 1769-L30ERM, 1769-L30ER-NSE: 1MB • 1769-L33ER, 1769-L33ERM: 2 MB • 1769-L36ERM: 3 MB	• 1768-L43: 2 MB • 1768-L43S: 2 MB + 0.5 MB safety • 1768-L45: 3 MB • 1768-L45S: 3 MB + 1 MB safety
Built-in ports	• 2 EtherNet/IP(1) • 1 USB	• 2 EtherNet/IP(1) • 1 USB	• 2 EtherNet/IP(1) • 1 USB	• 1 port RS- 232 serial (DF1 or ASCII)
Communication options	• Dual-port EtherNet/IP	• Dual-port EtherNet/IP • DeviceNet	• Dual-port EtherNet/IP • DeviceNet	• EtherNet/IP (standard and safety) • ControlNet (standard and safety) • DeviceNet (standard)

(1) CompactLogix 5370 controllers have two EtherNet/IP ports to connect to an EtherNet/IP network. The ports carry the same network traffic as part of the controller's embedded switch. The controller uses only one IP address.

For information on estimating memory requirements for you application, see Logix5000 Controllers Execution Time and Memory Use Reference Manual, publication 1756-RM087.

CompactLogix 5370 L3 Controllers

In a CompactLogix 5370 L3 controller system, the 1769 I/O modules can be placed to the left and the right of the power supply. As many as eight modules can be placed on each side of the power supply. The CompactLogix 5370 L3 controller comes with:

- dual EtherNet/IP ports for ring topologies.
- USB port for firmware download and programming.

Characteristic	1769-L30ER	1769-L30ERM	1769-L30ER-NSE	1769-L33ER	1769-L33ERM	1769-L36ERM
Available user memory	1 MB	1 MB	1 MB No capacitor	2 MB	2 MB	3 MB
Memory card	1784-SD1 (1 GB), shipped with controller 1784-SD2 (2 GB)					
Communication ports	• 2 EtherNet/IP • 1 USB					
EtherNet/IP connections	• 256 EtherNet/IP • 120 TCP	• 256 EtherNet/IP • 120 TCP	• 256 EtherNet/IP • 120 TCP	• 256 EtherNet/IP • 120 TCP	• 256 EtherNet/IP • 120 TCP	• 256 EtherNet/IP • 120 TCP
EtherNet/IP nodes in a single Logix Designer application, max	16			32		48
Integrated motion on an EtherNet/IP network	—	Supports up to 4 axes	—	—	Supports up to 8 axes	Supports up to 16 axes
Module expansion capacity	8 1769 modules 1 bank of modules			16 1769 modules 2 banks of modules		30 1769 modules 3 banks of modules
Battery	None					
Power supply distance rating	4 modules			4 modules		4 modules
Programming software support	• RSLogix 5000 software, version 20 - For controllers that use firmware revision 20.*xxx*. • Logix Designer application, version 21 or later - For controllers that use firmware revision 21.*xxx* or later.					

These controllers replace previous catalog numbers.

New Controller[1]	Replaces Previous Controller[2]	Differences
1769-L30ER 1769-L30ERM 1769-L30ER-NSE	1769-L31 1769-L32C[3] 1769-L32E	• Additional memory • Integrated motion on EtherNet/IP support (1769-L30ERM, 1769-L33ERM, 1769-L36ERM) • USB port instead of RS-232 port • Dual-port EtherNet/IP support • SD card instead of CompactFlash card
1769-L33ER 1769-L33ERM	1769-L35CR[3] 1769-L35E	
1769-L36ERM	Any previous 1769-L3*x* controller	

(1) IMPORTANT: Typically, you can use any of the new controllers listed in each row as replacements for any of the previous controllers listed in the corresponding cell to the right. For example, you can replace a 1769-L32E with a 1769-L30ER, 1769-L30ERM, or 1769-L30ER-NSE controller.
In some rare cases, system configuration prevents controller replacement as shown above. For example, if your system uses a 1769-L32E controller with 12 expansion modules, you cannot replace that controller with a 1769-L30ER, 1769-L30ERM, or 1769-L30ER-NSE controller. Those controllers support no more than 8 expansion modules. You must replace the 1769-L32E controller with a 1769-L33ER, 1769-L33ERM, or 1769-L36ERM controller.
We recommend that before you upgrade your controllers, consider your application requirements to verify that the replacements listed above apply.

(2) These catalog numbers are still available for sale, see page 12 for details. Please contact your local Rockwell Automation sales office for ordering information.

(3) Requires converting from ControlNet connections to EtherNet/IP connections.

CompactLogix Communication Options

You can configure your system for information exchange between a range of devices and computing platforms and operating systems. Select a CompactLogix controller with integrated communication or the appropriate communication module.

For detailed specifications, see:

- CompactLogix Controllers Specifications Technical Data, publication 1769-TD005.
- CompactLogix Communication Modules Specifications Technical Data, publication 1769-TD007.

EtherNet/IP Communication Options

The Ethernet Industrial network protocol (EtherNet/IP) is an open industrial-networking standard that supports both real-time I/O messaging and message exchange. The EtherNet/IP network uses off-the-shelf Ethernet communication chips and physical media.

Dual-port EtherNet/IP support embeds switch technology directly in the controller to so the controller can operate on star, linear, or ring EtherNet/IP topologies.

Cat. No.	Description	Communication Rate	Logix Resources[1]	TCP/IP Connections
1769-L16ER-BB1B,	CompactLogix 5370 L1 controller with integrated EtherNet/IP dual-port, POINT I/O form factor	10/100 Mbps	4 nodes 256 EtherNet/IP connections	120
1769-L18ER-BB1B, 1769-L18ERM-BB1B			8 nodes 256 EtherNet/IP connections	
1769-L24ER-BB1B, 1769-L24ER-QBFC1B	CompactLogix 5370 L2 controller with integrated EtherNet/IP dual-port, Compact I/O form factor	10/100 Mbps	8 nodes 256 EtherNet/IP connections	120
1769-L27ERM-QBFC1B		10/100 Mbps	16 nodes 256 EtherNet/IP connections	
1769-L30ER, 1769-L30ERM	CompactLogix 5370 L3 controller with integrated EtherNet/IP dual-port	10/100 Mbps	16 nodes 256 EtherNet/IP connections	120
1769-L33ER, 1769-L33ERM			32 nodes 256 EtherNet/IP connections	
1769-L36ERM			48 nodes 256 EtherNet/IP connections	
1769-AENTR	1769 EtherNet/IP adapter	10/100 Mbps	128 EtherNet/IP connections	96
1768-ENBT	1768 EtherNet/IP communication bridge module	10/100 Mbps	128 EtherNet/IP connections	64
1768-EWEB	1768 Ethernet web server module	10/100 Mbps	128 EtherNet/IP connections	64

(1) The number of nodes listed for CompactLogix 5370 controllers represents the maximum number of EtherNet/IP nodes you can include in a Logix Designer application project for those controller. For example, in a Logix Designer application project that uses a 1769-L18ERM-BB1B controller, you can add as many as 8 EtherNet/IP nodes to the project.

Serial Communication Options

These CompactLogix controllers support serial communication.

Cat. No.	Serial Options
1769-L16ER-BB1B, 1769-L18ER-BB1B, 1769-L18ERM-BB1B	1734-232ASC module for an RS-232 serial interface 1734-485 ASC module for an RS-422 and RS-485 serial device
1769-L24ER-BB1B, 1769-L24ER-QBFC1B	1769-ASCII module for an ASCII interface to RS-232, RS-422, and RS-485 devices 1769-SM2 module for a Modbus RTU interface
1769-L27ERM-QBFC1B	
1769-L30ER, 1769-L30ERM	
1769-L33ER, 1769-L33ERM	
1769-L36ERM	
1768-L43, 1768-L43S, 1768-L45, 1768-L45S	Built-in serial port 1769-ASCII module for an ASCII interface to RS-232, RS-422, and RS-485 devices 1769-SM2 module for a Modbus RTU interface

Modbus Support

To access a Modbus TCP network, connect through the embedded Ethernet port of the CompactLogix 5370 controllers and execute a specific ladder-logic routine. For more information, see Knowledgebase document 470365 at http://www.rockwellautomation.com/knowledgebase/.

To access a Modbus RTU network, connect through the serial port (if available) and execute a specific ladder-logic routine. For more information, see Using Logix5000 Controllers as Masters or Slaves on Modbus Application Solution, publication CIG-AP129.

1734 Specialty I/O Modules

Cat. No.	Description	Wiring Base	POINTBus Current
1734-232ASC 1734-485ASC	The 1734-232ASC and 1734-485ASC serial interface modules offer a serial-link communication interface solution for peripheral products with RS-232 (only 1734-232ASC), RS-485, and RS-422 ports (only 1734-485ASC.)	1734-TB, 1734-TBS	75 mA
1734-ARM	The 1734-ARM address reserve module reserves address and slot numbers to maintain a numbering scheme of an existing system. The 1734-ARM has no module configuration and does not communicate I/O data.	1734-TB, 1734-TBS	75 mA
1734-CTM 1734-VTM	The common terminal module (1734-CTM) and voltage term66inal module (1734-VTM) expand the termination capabilities of POINT I/O modules. Install the modules to provide support for higher density (8 channel) POINT I/O modules.	1734-TB, 1734-TBS, 1734-TOP, 1734-TOPS	75 mA
1734-SSI	The 1734-SSI module collects serial data from absolute-position, encoding sensors that use standard Synchronous Serial Interface (SSI) protocol.	1734-TB, 1734-TBS	110 mA

1769 Compact I/O Modules

The 1769 Compact I/O modules can be installed on the CompactLogix 5370 L2 and L3 controllers and 1768 CompactLogix controllers. The modules mechanically lock together by means of a tongue-and-groove design and have an integrated communication bus that is connected from module to module by a moveable bus connector.

Each I/O module includes a built-in removable terminal block with finger-safe cover for connections to I/O sensors and actuators. The terminal block is behind a door at the front of the module. I/O wiring can be routed from beneath the module to the I/O terminals.

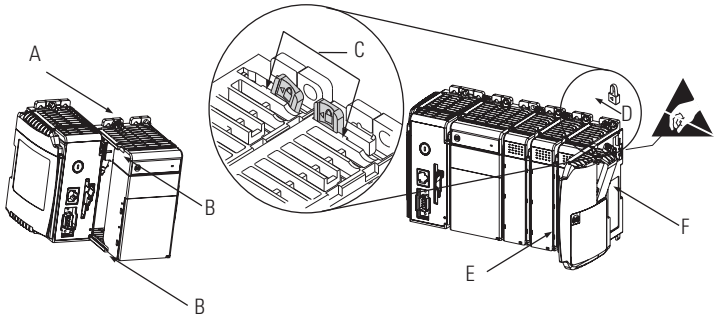

For detailed specifications, see 1769 Compact I/O Modules Specifications Technical Data, publication 1769-TD006.

Power Supply Distance Ratings

Check each module's specification table for the power supply distance rating. This indicates how many slot positions the module can be from the power supply.

1769 AC Digital Modules

Cat. No.	Inputs/Outputs	Voltage Category	Operating Voltage Range	Backplane Current	Power Supply Distance Rating
1769-IA8I	8 inputs, individually isolated	100/120V AC	79…132V AC, 47…63 Hz	90 mA @ 5.1V(1)	8
1769-IA16	16 inputs	100/120V AC	79…132V AC, 47…63 Hz	115 mA @ 5.1V	8
1769-IM12	12 inputs	200/240V AC	159…265V AC, 47…63 Hz	100 mA @ 5.1V	8
1769-OA8	8 outputs	100/240V AC	85…265V AC 47…63 Hz	145 mA @ 5.1V	8
1769-OA16	16 outputs	100/240V AC	85…265V AC 47…63 Hz	225 mA @ 5.1V	8

(1) Maximum is 190 mA.

1769 DC Digital Modules

Cat. No.	Inputs/Outputs	Voltage Category	Operating Voltage Range	Backplane Current	Power Supply Distance Rating
1769-IG16	16 inputs	5V DC TTL	4.5…5.5V DC	120 mA @ 5.1V	8
1769-IQ16	16 inputs	24V DC sink/source	10…30V DC @ 30 °C (86 °F) 10…26.4V DC @ 60 °C (140 °F)	115 mA @ 5.1V	8
1769-IQ16F	16 inputs, high-speed	24V DC sink/source	10…30V DC @ 30 °C (86 °F) 10…26.4V DC @ 60 °C (140 °F)	100 mA @ 5.1V	8
1769-IQ32	32 inputs	24V DC sink/source	10…30V DC @ 30 °C (86 °F) 10…26.4V DC @ 60 °C (140 °F)	170 mA @ 5.1V	8
1769-IQ32T	32 inputs	24V DC sink/source	20.4…26.4V DC @ 60 °C (140 °F)	170 mA @ 5.1V	8
1769-IQ6XOW4	6 inputs 4 outputs	24V DC sink/source input AC/DC normally open relay contact outputs	10…30V DC @ 30 °C (86 °F) 10…26.4V DC @ 60 °C (140 °F)	105 mA @ 5.1V 50 mA @ 24V	8
1769-OB8	8 outputs	24V DC source	20.4…26.4V DC	145 mA @ 5.1V	8
1769-OB16	16 outputs	24V DC source	20.4…26.4V DC	200 mA @ 5.1V	8
1769-OB16P	16 outputs, protected	24V DC source	20.4…26.4V DC	160 mA @ 5.1V	8
1769-OB32	32 outputs	24V DC source	20.4…26.4V DC	300 mA @ 5.1V	6
1769-OB32T	32 outputs	24V DC source	10.2…26.4V DC	220 mA @ 5.1V	8
1769-OG16	16 outputs	5V DC TTL	4.5…5.5V DC	200 mA @ 5.1V	8
1769-OV16	16 outputs	24V DC sink	20.4…26.4V DC	200 mA @ 5.1V	8
1769-OV32T	32 outputs	24V DC sink	10.2…26.4V DC	300 mA @ 5.1V	8

1769 Contact Output Modules

Cat. No.	Inputs/Outputs	Operating Voltage Range	Backplane Current	Power Supply Distance Rating
1769-OW8	8 outputs	5…265V AC 5…125V DC	125 mA @ 5.1V 100 mA @ 24V	8
1769-OW8I	8 outputs, individually isolated	5…265V AC 5…125V DC	125 mA @ 5.1V 100 mA @ 24V	8
1769-OW16	16 outputs	5…265V AC 5…125V DC	205 mA @ 5.1V 180 mA @ 24V	8

1769 Analog Modules

Cat. No.	Inputs/Outputs	Range	Resolution	Backplane Current	Power Supply Distance Rating
1769-IF4	4 inputs, differential or single-ended	±10V, 0…10V, 0…5V, 1…5V 0…20 mA, 4…20 mA	14 bits (unipolar) 14 bits plus sign (bipolar)	120 mA @ 5.1V 60 mA @ 24V	8
1769-IF4I	4 inputs, differential or single-ended, individually isolated	±10V, 0…10V, 0…5V, 1…5V 0…20 mA, 4…20 mA	16 bits (unipolar) 15 bits plus sign (bipolar)	145 mA @ 5.1V 125 mA @ 24V	8
1769-IF8	8 inputs, differential or single-ended	±10V, 0…10V, 0…5V, 1…5V 0…20 mA, 4…20 mA	16 bits (unipolar) 15 bits plus sign (bipolar)	120 mA @ 5.1V 70 mA @ 24V	8
1769-IF16C	16 inputs, single-ended	0…20 mA, 4…20 mA	16 bits (unipolar) 15 bits plus sign (bipolar)	190 mA @ 5.1V 70 mA @ 24V	8
1769-IF16V	16 inputs, differential	±10V, 0…10V, 0…5V, 1…5V	16 bits (unipolar) 15 bits plus sign (bipolar)	190 mA @ 5.1V 70 mA @ 24V	8
1769-IF4XOF2	4 differential or single-ended inputs 2 single-ended outputs	0…10V 0…20 mA	Input: 8 bits plus sign Output: 8 bits plus sign	120 mA @ 5.1V 160 mA @ 24V	8
1769-IF4FXOF2F	4 fast differential or single-ended inputs 2 fast single-ended outputs	±10V, 0…10V, 0…5V, 1…5V 0…20 mA, 4…20 mA	Input: 14 bits (unipolar) 14 bits plus sign (bipolar) Output: 13 bits (unipolar) 13 bits plus sign (bipolar)	220 mA @ 5.1V 120 mA @ 24V	8
1769-OF2	2 outputs, single-ended	±10V, 0…10V, 0…5V, 1…5V 0…20 mA, 4…20 mA	14 bits (unipolar) 14 bits plus sign (bipolar)	120 mA @ 5.1V 120 mA @ 24V	8
1769-OF4	4 outputs, single-ended	±10V, 0…10V, 0…5V, 1…5V 0…20 mA, 4…20 mA	15 bits plus sign unipolar and bipolar	120 mA @ 5.1V 170 mA @ 24V	8
1769-OF4CI	4 outputs, differential, individually isolated	0…20 mA 4…20 mA	16 bits (unipolar)	140 mA @ 5.1V 145 mA @ 24V	8
1769-OF4VI	4 outputs, differential, individually isolated	±10V 0…10V 0…5V 1…5V	15 bits plus sign (bipolar)	145 mA @ 5.1V 75 mA @ 24V	8
1769-OF8C	8 outputs, single-ended	0…20 mA 4…20 mA	16 bits (unipolar)	140 mA @ 5.1V 145 mA @ 24V	8
1769-OF8V	8 outputs, single-ended	±10V 0…10V 0…5V 1…5V	16 bits plus sign (bipolar)	145 mA @ 5.1V 125 mA @ 24V	8

1769 Expansion Cables

If you divide 1769 modules into multiple banks, make sure:

- each bank needs its own power supply.
- use expansion cables to connect the banks.
- the last I/O bank requires an end cap.

Vertical

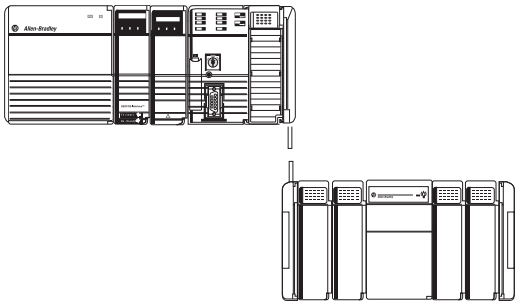

Horizontal

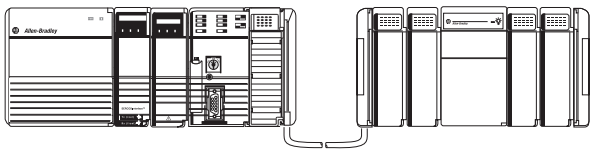

How you orient I/O banks determines the expansion cables you need to connect the I/O banks.

If you add a	And connect the chassis	Use this cable[1]
Second bank	Right to left	1769-CRL*x*
	Right to right	1769-CRR*x*
Third bank	Right to left	1769-CRL*x*
	Right to right	1769-CRR*x*
	Left to left	1769-CLL*x*

(1) Where *x* = 1 for 1 ft (305 mm) or 3 for 3.28 ft (1 m).

1769 End Caps

The final 1769 Compact I/O bank requires an end cap on the end without the expansion cable. The CompactLogix 5370 L2 controller comes with a right-end cap, so you do not need to order one separately.

- Right end cap, catalog number 1769-ECR
- Left end cap, catalog number 1769-ECL

1769 Wiring Systems

As an alternative to buying removable terminal blocks (RTBs) and connecting the wires yourself, you can buy a wiring system of:

- interface modules (IFMs) that provide the output terminal blocks for digital I/O modules. Use the pre-wired cables that match the I/O module to the IFM.
- analog interface modules (AIFMs) that provide the output terminal blocks for analog I/O modules. Use the pre-wired cables that match the I/O module to the AIFM.
- I/O module-ready cables. One end of the cable assembly is an RTB that plugs into the front of the I/O module. The other end has individually color-coded conductors that connect to a standard terminal block.

Removable Terminal Kits

You can order removable terminal kits with the CompactLogix 5370 L1 and L2 controllers separately. The kits are used to connect wiring to the controllers. describes the kits.

Cat. Nos.	Controllers Supported	Description
1769-RTB45	CompactLogix 5370 L1	• Four 10-pin connectors used to connect wiring to the controllers' embedded digital I/O module. • One 5-pin connector used to connect an external 24V DC power source to the controller.
1769-RTB40DIO	CompactLogix 5370 L2	Four 10-pin connectors used to connect wiring to the controllers' embedded digital I/O module.
1769-RTB40AIO	1769-L24ER-QBFC1B and 1769-L27ERM-QBFC1B	Four 10-pin connectors used to connect wiring to the controllers' embedded analog I/O module.

CompactLogix Power Supplies

Select power supplies based on the controller and the number of additional I/O banks.

For a	Select
CompactLogix 5370 L3 controller	• One 1769 power supply for the controller and local I/O modules • One 1769 power supply for each additional bank of I/O modules
CompactLogix 5370 L2 controller	No power supply as it is integral to the controller package
CompactLogix 5370 L1 controller	No power supply as it is integral to the controller package
1768 CompactLogix controller	• One 1768 power supply for the controller and 1768 modules • One 1769 power supply for each additional bank of I/O modules

Power Supplies

Cat. No.	Description	Voltage Category	Operating Voltage Range
1769-PA2	1769 Compact I/O expansion power supply	120V/220V AC	85...265V AC
1769-PB2		24V DC	19.2...31.2V DC
1769-PA4		120V/220V AC	85...265V AC or 170...265V AC (switch selectable) 47...63 Hz
1769-PB4		24V DC	19.2...31.2V DC
1768-PA3	1768 CompactLogix power supply	120V/220V AC	85...265V AC or 108...132V DC
1768-PB3		24V DC	16.8...31.2V DC

For detailed specifications, see Compact Power Supplies Specifications Technical Data, publication 1769-TD008.

Allen-Bradley, Compact GuardLogix, Compact I/O, CompactBlock Guard I/O, CompactLogix, ControlLogix, FactoryTalk, GuardLogix, Integrated Architecture, Kinetix, Logix5000, PanelView, POINT Guard I/O, POINT I/O, POINTBus, PowerFlex, Rockwell Software, Rockwell Automation, RSLinx, RSLogix, RSNetWorx, SCANport, SoftLogix, Stratix 6000, Stratix 8000, Studio 5000, Studio 5000 Logix Designer, and Ultra are trademarks of Rockwell Automation, Inc.

Trademarks not belonging to Rockwell Automation are property of their respective companies.

www.rockwellautomation.com

Power, Control and Information Solutions Headquarters

Americas: Rockwell Automation, 1201 South Second Street, Milwaukee, WI 53204-2496 USA, Tel: (1) 414.382.2000, Fax: (1) 414.382.4444
Europe/Middle East/Africa: Rockwell Automation NV, Pegasus Park, De Kleetlaan 12a, 1831 Diegem, Belgium, Tel: (32) 2 663 0600, Fax: (32) 2 663 0640
Asia Pacific: Rockwell Automation, Level 14, Core F, Cyberport 3, 100 Cyberport Road, Hong Kong, Tel: (852) 2887 4788, Fax: (852) 2508 1846

Publication 1769-SG001P-EN-P - January 2014
Supersedes Publication 1769-SG001O-EN-P - January 2013

Copyright © 2014 Rockwell Automation, Inc. All rights reserved. Printed in the U.S.A.

CompactLogix Power Supplies Specifications

1768 CompactLogix Power Supplies Catalog Numbers 1768-PA3, 1768-PB3

1769 Compact I/O Power Supplies Catalog Numbers 1769-PA2, 1769-PB2, 1769-PA4, 1769-PB4

Topic	Page
1768 CompactLogix Power Supplies	3
1769 Compact I/O Power Supplies	7

Environmental Specifications - 1768 and 1769 Power Supplies

Attribute	1768-PA3, 1769-PB3 1769-PA2, 1769-PB2, 1769-PA4, 1769-PB4
Temperature, operating IEC 60068-2-1 (Test Ad, Operating Cold), IEC 60068-2-2 (Test Bd, Operating Dry Heat), IEC 60068-2-14 (Test Nb, Operating Thermal Shock)	0…60 °C (32…140 °F)
Temperature, storage IEC 60068-2-1 (Test Ab, Unpackaged Nonoperating Cold), IEC 60068-2-2 (Test Bb, Unpackaged Nonoperating Dry Heat), IEC 60068-2-14 (Test Na, Unpackaged Nonoperating Thermal Shock)	-40…85 °C (-40…185 °F)
Relative humidity IEC 60068-2-30 (Test Db, Unpackaged Nonoperating Damp Heat)	5…95% noncondensing
Vibration IEC 60068-2-6 (Test Fc, Operating)	5 g @ 10…500 Hz
Shock, operating IEC 60068-2-27 (Test Ea, Unpackaged Shock)	30 g
Shock, nonoperating IEC 60068-2-27 (Test Ea, Unpackaged Shock)	50 g

Important User Information

Solid state equipment has operational characteristics differing from those of electromechanical equipment. Safety Guidelines for the Application, Installation and Maintenance of Solid State Controls (publication SGI-1.1 available from your local Rockwell Automation sales office or online at http://www.rockwellautomation.com/literature/) describes some important differences between solid state equipment and hard-wired electromechanical devices. Because of this difference, and also because of the wide variety of uses for solid state equipment, all persons responsible for applying this equipment must satisfy themselves that each intended application of this equipment is acceptable.

In no event will Rockwell Automation, Inc. be responsible or liable for indirect or consequential damages resulting from the use or application of this equipment.

The examples and diagrams in this manual are included solely for illustrative purposes. Because of the many variables and requirements associated with any particular installation, Rockwell Automation, Inc. cannot assume responsibility or liability for actual use based on the examples and diagrams.

No patent liability is assumed by Rockwell Automation, Inc. with respect to use of information, circuits, equipment, or software described in this manual.

Reproduction of the contents of this manual, in whole or in part, without written permission of Rockwell Automation, Inc., is prohibited.

Throughout this manual, when necessary, we use notes to make you aware of safety considerations.

WARNING	Identifies information about practices or circumstances that can cause an explosion in a hazardous environment, which may lead to personal injury or death, property damage, or economic loss.
IMPORTANT	Identifies information that is critical for successful application and understanding of the product.
ATTENTION	Identifies information about practices or circumstances that can lead to personal injury or death, property damage, or economic loss. Attentions help you identify a hazard, avoid a hazard, and recognize the consequence
SHOCK HAZARD	Labels may be on or inside the equipment, for example, a drive or motor, to alert people that dangerous voltage may be present.
BURN HAZARD	Labels may be on or inside the equipment, for example, a drive or motor, to alert people that surfaces may reach dangerous temperatures.

Rockwell Automation, Rockwell Software, Allen-Bradley, TechConnect, Compact I/O, and CompactLogix are trademarks of Rockwell Automation, Inc.

Trademarks not belonging to Rockwell Automation are property of their respective companies.

1768 CompactLogix Power Supplies

The 1768 backplane requires one 1768 power supply. The power supply is a dual input supply that operates in multiple ranges. The power supply also offers a 24V dc external power source. The power supply sends 24V dc to the controller in slot 0.

- The controller converts the 24V dc to 5V dc and 24V dc and distributes it as needed.
  - 5V and 24V power to 1769 I/O modules on the right side of the controller
  - 24V power to 1768 modules on the left side of the controller

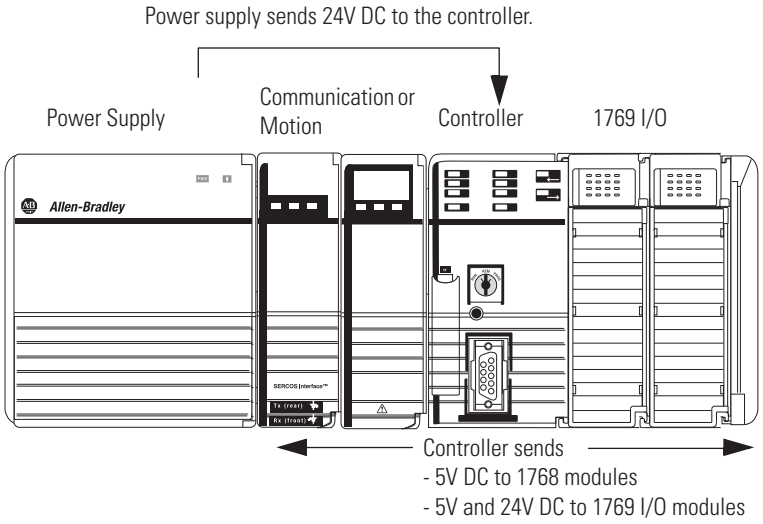

The 1768 modules do not have a distance rating to the 1768 power supply. For the 1769 I/O modules in the 1768 system, the distance rating is from the controller and not the 1768 power supply.

Technical Specifications - 1768 CompactLogix Power Supplies

Attribute	1768-PA3	1768-PB3
Input voltage range	85…265V AC 108…132V DC	16.8...31.2V DC
Input voltage, nom	120V/220V AC	24V DC
Input frequency range	47…63 Hz	DC
Input power, max	120VA/120 W	112 W
Output power, max	90 W 24V DC to backplane: 3.5 24V DC to user-accessible terminal block: 0.25 A	
Output power, min	6 W 24V DC to backplane: 0.25 A 24V DC to user-accessible terminal block: 0.0 A	
Power dissipation	30 W	22 W
Inrush current, max	50 A @ 85…132V AC 80 A @ 195…265V AC	50 A @ 16.8...31.2V DC(1)

Technical Specifications - 1768 CompactLogix Power Supplies

Attribute	1768-PA3	1768-PB3
Isolation voltage	250V, reinforced insulation type, input to system and 24V DC AUX Tested at 4250V DC for 60 s 150V, basic insulation type, 24V DC AUX to system Tested at 2200V dc for 60 s	
Internal overcurrent protection	Non-replaceable fuse is soldered in place	
Recommended external overcurrent protection	4…6 A @ 28.5…36.7 A^2S	8...12 A @ 166...250 A^2S
Overcurrent protection	15 A, user supplied	
Weight, approx.	0.98 kg (2.15 lb)	1.01 kg (2.22 lb)
Dimensions (HxWxD), approx.	131.25 x 132.75 x 105.50 mm (5.17 x 5.23 x 4.15 in.)	
Module location	DIN rail or panel mount	
Mounting screw torque	1.16 N•m (10 lb•in) - use M4 or #8 screws	
Wire category	1 - on power ports[2]	
Wire size, input power terminal	14 AWG (2.5 mm^2) solid or stranded copper wire rated at 75 °C (167 °F) or greater, 1.2 mm (3/64 in.) insulation maximum	
Wire size, output power terminal	14 AWG (2.5 mm^2)…22 AWG (0.25 mm^2) solid or stranded copper wire rated at 75 °C (167 °C) or greater, 1.2 mm (3/64 in.) insulation max	
Conductor screw torque	0.6 N•m (5 lb•in)	
North American temperature code	T4	
Output #1: 24V DC to backplane		
Ride-through interval time, min	25 ms @ 90 W	5 ms @ 90 W
Full power hold-up interval	5 ms @ 90 W	
Extended hold-up interval	8...12 s @ 1.25 W	
Output #2: 24V DC to front panel terminal block		
Voltage	18...27.60V @ front panel	
Output disable	Disable output during hold-up periods	
Enclosure type rating	None (open-style)	

(1) Does not include X-capacitor charging current.

(2) Use this conductor category information for planning conductor routing as described in the system level installation manual. See the Industrial Automation Wiring and Grounding Guidelines, publication 1770-4.1.

Certifications - 1768 CompactLogix Power Supplies

Certification[1]	1768-PA3, 1768-PB3
c-UL-us	UL Listed Industrial Control Equipment, certified for US and Canada. See UL File E65584. UL Listed for Class I, Division 2 Group A,B,C,D Hazardous Locations, certified for U.S. and Canada. See UL File E194810.
CE	European Union 89/336 EEC EMC Directive, compliant with: • EN 50082-2; Industrial Immunity • EN 61326-1; Meas./Control/Lab., Industrial Requirements • EN 61000-6-2; Industrial Immunity • EN 61000-6-4; Industrial Emissions • EN 61131-2; Programmable Controllers (Clause 8, Zone A & B) European Union 73/23/EEC LVD Directive, compliant with: • EN 1010-1; Meas./Control/Lab
C-Tick	Australian Radiocommunications Act, compliant with: AS/NZS CISPR 11; Industrial Emissions

(1) When marked. See the Product Certification link at http://www.ab.com for Declarations of Conformity, Certificates, and other certification details.

Power Requirements and Transformer Sizing - 1768 CompactLogix Power Supplies

1768-PA3 Power Dissipation

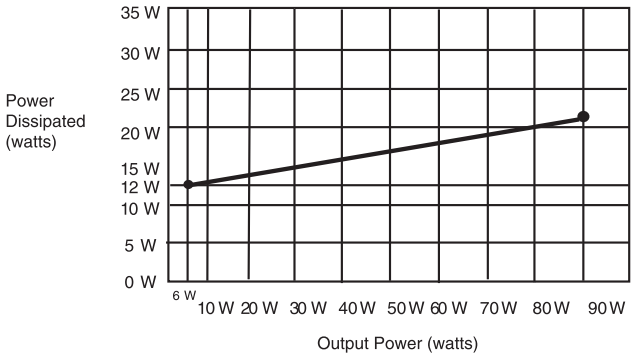

1768-PA3 Input Power Requirements

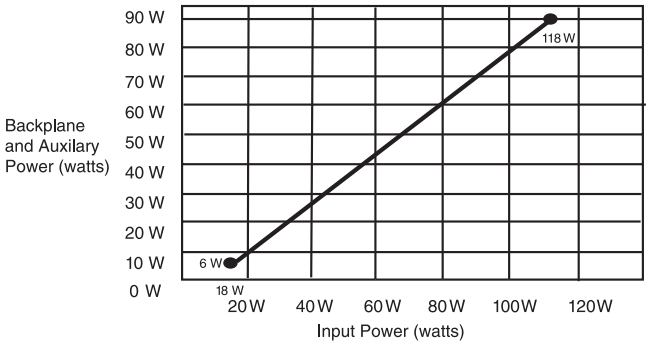

1768-PB3 Power Dissipation

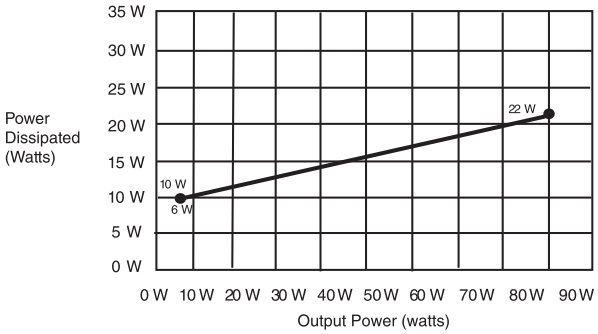

1768-PB3 Input Power Requirements

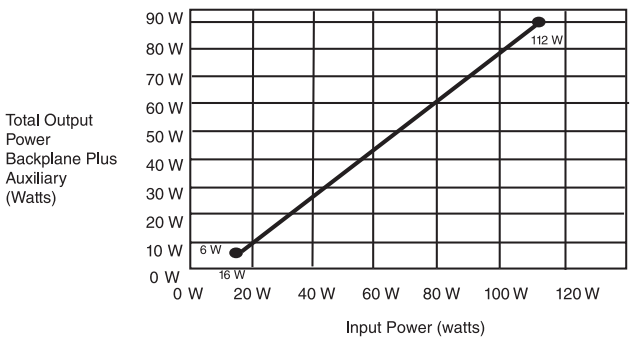

Mounting Dimensions - 1768 CompactLogix Power Supplies

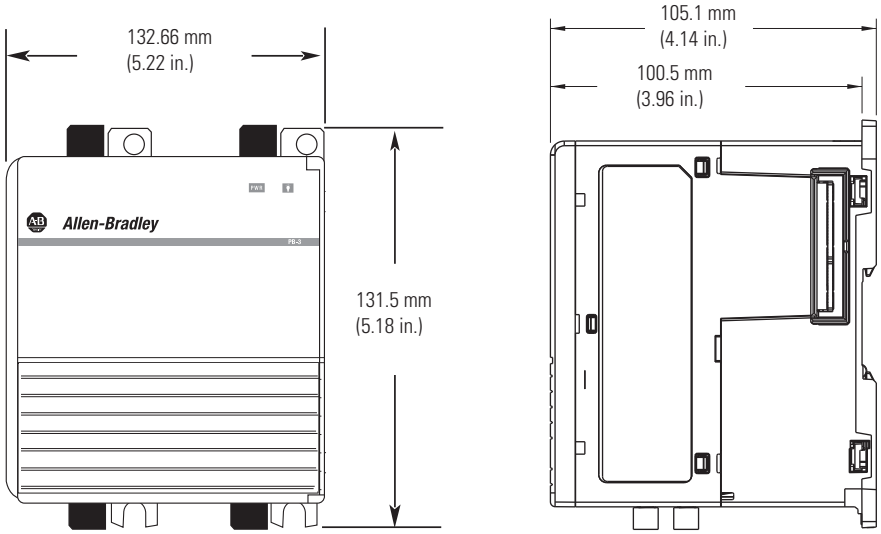

1769 Compact I/O Power Supplies

Each 1769-L3*x* controller and additional bank of I/O modules requires a 1769 power supply. Place 1769 I/O modules to the left or right of the 1769 power supply. As many as eight I/O modules can be placed on each side of the power supply.

Each 1769 module also has a power supply distance rating (the number of modules from the power supply). Each module must be located within its distance rating. See the specifications for the module to determine its distance rating.

Technical Specifications - 1769 Compact I/O Power Supplies

Attribute	1769-PA2	1769-PB2	1769-PA4	1769-PB4
Input voltage range	85…265V AC	19.2...31.2V DC	85…265V AC or 170...265V AC, switch selectable	19.2...31.2V DC
Input voltage, nom	120V/220V AC	24V DC	120V/220V AC	24V DC
Power consumption	100 VA @ 120V AC 130 VA @ 240V AC	50 VA @ 24V DC	200 VA @ 120V AC 240 VA @ 240V AC	100 VA @ 24V DC
Power dissipation	8 W @ 60° C (140° F)	7.5 W @ 60° C (140° F)	18 W @ 60° C (140° F)	14.5 W @ 60° C (140° F)
Current capacity @ 5V	2.0 A	2.0 A	4.0 A	4.0 A
Current capacity @ 24V	0.8 A	0.8 A	2.0 A	2.0 A
Inrush current, max	25 A @ 132V AC	30 A @ 31.2V DC	25 A @ 132V AC	30 A @ 31.2V DC
Isolation voltage	265V (continuous), reinforced insulation type (IEC Class 1 grounding required) Routine tested @ 2596V DC for 1 s, AC power input to system and AC power input to 24V DC user power	75V (continuous), reinforced insulation type (IEC Class 1 grounding required) Routine tested at 1697V DC for 1 s, DC power input to system	265V (continuous), reinforced insulation type (IEC Class 1 grounding required) Routine tested at 2596V DC for 1 s, AC power input to system	75V (continuous), reinforced insulation type (IEC Class 1 grounding required) Routine tested at 1697V DC for 1 s, DC power input to system
Fuse type	Wickmann 19195-3.15A Littelfuse 02183.15MXP	Wickmann 19193-6.3A Littelfuse 021706.3MXP	Wickmann 19195-3.15A Littelfuse 02183.15MXP	Wickmann 19193-6.3A Littelfuse 021706.3MXP
Weight, approx.	525 g (1.16 lb)		630 g (1.39 lb)	
Dimensions (HxWxD), approx.	118 x 70 x 87 mm (4.65 x 2.76 x 3.43 in.)			
Module location	DIN rail or panel mount			
Mounting screw torque	1.16 N•m (10 lb•in) - use M4 or #8 screws			
Power supply distance rating	8 8 I/O modules can be connected on either side of the power supply for a maximum of 16 modules			
Wire category[1]	1 - on power ports	2 - on power ports	1 - on power ports	2 - on power ports
Wire size	14 AWG (2.5 mm^2) solid copper wire rated at 90 °C (194 °F) or greater, 1.2 mm (3/64 in.) insulation max			
North American temperature code	T3C			
IEC temperature code	—	T4	—	T4
Enclosure type rating	None (open-style)			

[1] Use this conductor category information for planning conductor routing as described in the system level installation manual. See the Industrial Automation Wiring and Grounding Guidelines, publication 1770-4.1.

Certifications - 1769 Compact Power Supplies

Certification[1]	1769-PA2, 1769-PA4	1769-PB2, 1769-PB4
c-UL-us	UL Listed for Class 1, Division 2 Group A,B,C,D Hazardous Locations, certified for U.S. and Canada. See UL File E10314	
CE	European Union 2004/108/EC EMC Directive, compliant with: • EN 61000-6-2; Industrial Immunity • EN 61000-6-4; Industrial Emissions	
C-Tick	Australian Radiocommunications Act, compliant with: AS/NZS CISPR 11; Industrial Emissions	
	—	European Union 94/9/EC ATEX Directive, compliant with: • EN 60079-15; Potentially Explosive Atmospheres, Protection "n" (Zone 2) • EN 60079-0; General Requirements (Zone 2)

(1) When marked. See the Product Certification link at http://www.ab.com for Declarations of Conformity, Certificates, and other certification details.

Power Requirements and Transformer Sizing - 1769 CompactLogix Power Supplies

1769-PA2 Output Derating

User +24V Current Draw at 0 A

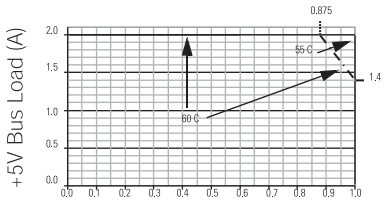

User +24V Current Draw at 0.2 A

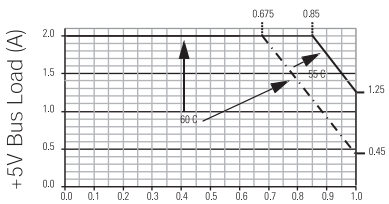

User +24V Current Draw at 0.25 A

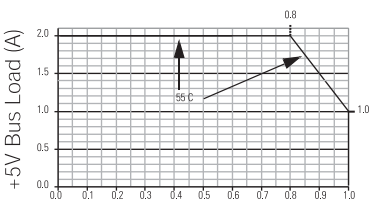

1769-PA2 Power Disspation

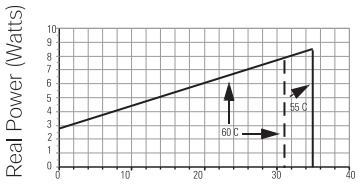

Bus +5V, +24V, and User Load (Watts)

1769-PB2 Output Derating

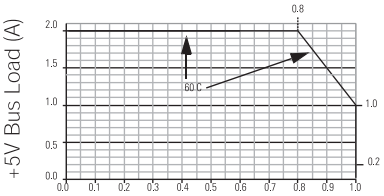

1769-PB2 Power Dissipation

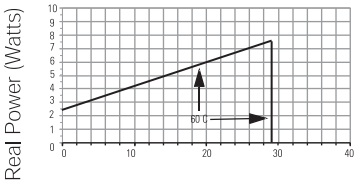

Bus +5V, +24V, and User Load (Watts)

1769-PA4 Output Derating

Total Output: 68 W @ 55 °C (131 °F) or below
61 W @ 60 °C (140 °F) or below

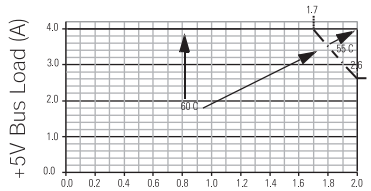

1769-PB4 Output Derating

Total Output: 68 W @ 55 °C (131 °F) or below
61 W @ 60 °C (140 °F) or below

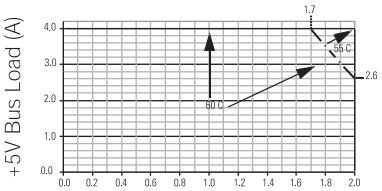

1769-PA4 Power Disspation

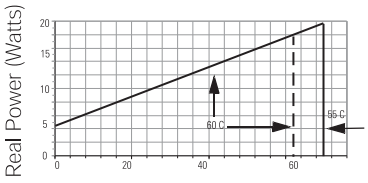

Bus +5V, +24V, and User Load (Watts)

1769-PB4 Power Disspation

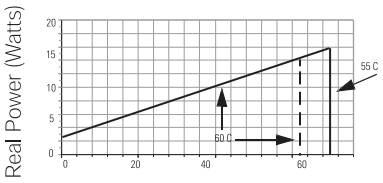

Bus +5V, +24V, and User Load (Watts)

Mounting Dimensions - 1769 CompactLogix Power Supplies

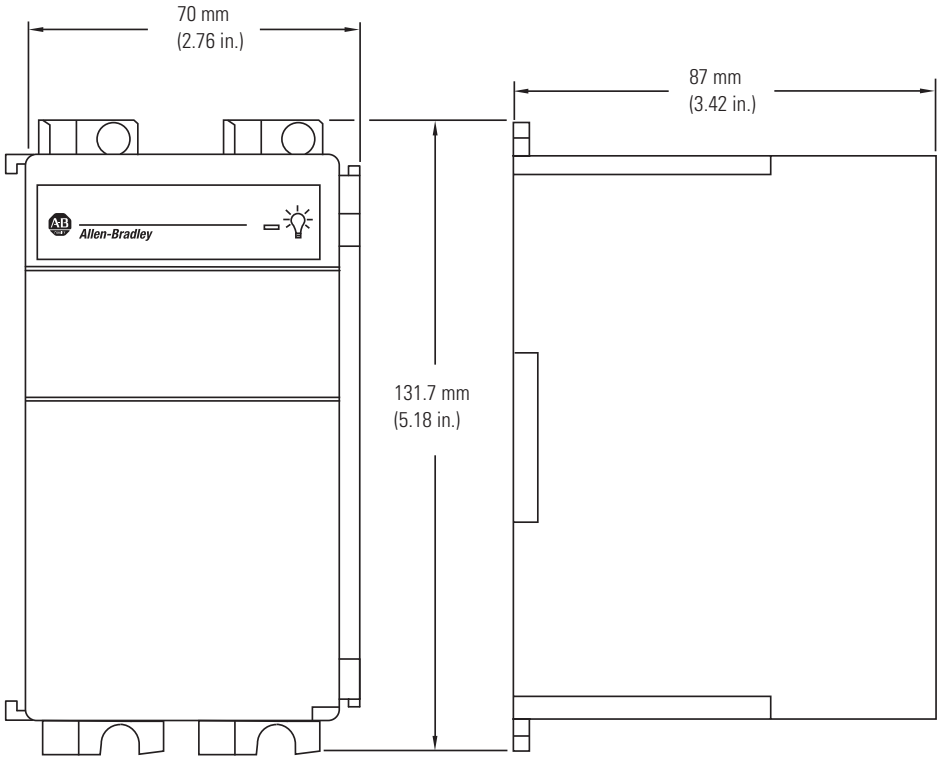

Notes:

Rockwell Automation Support

Rockwell Automation provides technical information on the Web to assist you in using its products. At http://www.rockwellautomation.com/support/, you can find technical manuals, a knowledge base of FAQs, technical and application notes, sample code and links to software service packs, and a MySupport feature that you can customize to make the best use of these tools.

For an additional level of technical phone support for installation, configuration, and troubleshooting, we offer TechConnect support programs. For more information, contact your local distributor or Rockwell Automation representative, or visit http://www.rockwellautomation.com/support/.

Installation Assistance

If you experience an anomoly within the first 24 hours of installation, review the information that is contained in this manual. You can contact Customer Support for initial help in getting your product up and running.

United States or Canada	1.440.646.3434
Outside United States or Canada	Use the Worldwide Locator at http://www.rockwellautomation.com/support/americas/phone_en.html, or contact your local Rockwell Automation representative.

New Product Satisfaction Return

Rockwell Automation tests all of its products to ensure that they are fully operational when shipped from the manufacturing facility. However, if your product is not functioning and needs to be returned, follow these procedures.

United States	Contact your distributor. You must provide a Customer Support case number (call the phone number above to obtain one) to your distributor to complete the return process.
Outside United States	Please contact your local Rockwell Automation representative for the return procedure.

Documentation Feedback

Your comments will help us serve your documentation needs better. If you have any suggestions on how to improve this document, complete this form, publication RA-DU002, available at http://www.rockwellautomation.com/literature/.

www.rockwellautomation.com

Power, Control and Information Solutions Headquarters

Americas: Rockwell Automation, 1201 South Second Street, Milwaukee, WI 53204 USA, Tel: (1) 414.382.2000, Fax: (1) 414.382.4444
Europe/Middle East/Africa: Rockwell Automation, Vorstlaan/Boulevard du Souverain 36, 1170 Brussels, Belgium, Tel: (32) 2 663 0600, Fax: (32) 2 663 0640
Asia Pacific: Rockwell Automation, Level 14, Core F, Cyberport 3, 100 Cyberport Road, Hong Kong, Tel: (852) 2887 4788, Fax: (852) 2508 1846

Publication 1769-TD008A-EN-P - January 2010

Copyright © 2010 Rockwell Automation, Inc. All rights reserved. Printed in the U.S.A.

BOM #12

Product: 1492-GS1G200

Description: 1492-GS High Density Mini Circuit Breakers (Toggle Style)

Representative Photo Only (actual product may vary based on configuration selections)

MINIATURE CIRCUIT BREAKER DATA	
Electrical Standards	UL
Number of Poles	1 pole
Magnetic Trip Range	G-Trip Characteristics - Inductive Loads (AC)
Amp Rating	20.0 A
Optional Auxiliary Contact	No Contact

CERTIFICATIONS AND APPROVALS	
UL	1077, Guide No. QVNU2, File No. E65138
CSA	22.2 NO. 235
EN	60934
CE	Marked
For UL Certifications Directory:	http://database.ul.com/cgi-bin/XYV/template/LISEXT/1FRAME/index.htm

Specifications ❶

Cat. No.	1492-GS																	
Description	High-density circuit breaker (supplementary protector) with universal mounting foot for Allen-Bradley and DIN rail mounting																	
Maximum Voltage Ratings	277/480V AC 50/60 Hz 65V DC																	
Standard Current Ratings Internal Resistance per Pole	**A** **Ω**	0.2 26	0.5 4.2	0.8 1.6	1.0 1.1	1.5 0.47	2.0 0.25	2.5 0.20	3.0 0.13	4.0 0.08	5.0 0.06	6.0 0.05	8.0 0.01	10.0 0.01	12.0 0.01	15.0 0.01	16.0 0.01	20.0 0.005	25.0 0.004
Dielectric Strength	1960V AC																	
Shock and Vibration Specifications	Shock: 25 G, 11 ms duration Vibration: 5 G (10…500 Hz)																	
Insulation Resistance	Greater than 100 MΩ @ 500V DC																	
Current Capacity of Auxiliary Contacts (N.O., N.C.)	1.0 A AC or DC (resistive load)																	
Voltage Rating of Auxiliary Contacts	277V AC 65V DC																	
Operating Life	6000 cycles @ rated current (UL 1077)																	
Temperature Range	–40…+149°F (–40…+65°C)																	
Wire Size	#22…#10 AWG (0.5…6 mm^2)																	
Recommended Wire Strip Length	0.51" (13.0 mm) for Mail Terminals 0.41" (10.4 mm) for Auxiliary Terminals																	
Recommended Tightening Torque	5 lb-in. (0.565 Nm)																	

❶ Performance Data — See page Important-2.

Approvals

- UL 1077
- CSA 22.2 NO. 235
- VDE 0631 (IEC 60934)

In North America, the Cat. No. 1492-GS circuit breaker is rated as a Supplementary Protector with a short-circuit current rating. Internationally, it is rated by IEC as a Circuit Breaker for Equipment with an interrupt rating

Electrical Characteristics

Poles	Rated Current (A)	Voltage Rating		Short-Circuit Current Rating ❶ Interrupt Rating *I*cn (IEC only)
		AC	DC	
UL 1077 Supplementary Protector Rating				
1	0.2…5	277	—	0.4 kA, U2
1	6…25	277	—	0.7 kA, U2
2, 3	0.2…5	277/480	—	0.4 kA, U2
2, 3	6…25	277/480	—	0.5 kA, U2
1, 2, 3	0.2…5	—	65	0.4 kA, U2
1, 2, 3	6…25	—	65	0.8 kA, U2
1	0.2…16	277	—	5 kA, C1
1	18…25	277	—	2 kA, C1
2, 3	0.2…16	277/480	—	5 kA, C1
2, 3	18…25	277/480	—	2 kA, C1
1	0.2…25	—	65	2 kA, C1
CSA 22.2 #235 Supplementary Protector Ratings				
1	0.2…16	277	—	5 kA, C1
1	18…25	277	—	2 kA, C1
2, 3	0.2…16	277/480	—	5 kA, C1
2, 3	18…25	277/480	—	2 kA, C1
1	0.2…25	—	65	2 kA, C1
IEC 60934 Circuit Breaker for Equipment Ratings				
1	0.2…5	250	—	0.4 kA
1	6…25	250	—	0.8 kA
2, 3	0.2…5	240/415	—	0.4 kA
2, 3	6…25	240/415	—	0.8 kA
1	0.2…5	—	65	0.4 kA
1	6…25	—	65	0.8 kA

❶ The short-circuit current rating is followed by a letter and number designating the test conditions and any calibrations and dielectric tests following the short-circuit test. These designations are defined as follows (see ❷ also):
C — Indicates that the short-circuit test was conducted with series overcurrent protection
U — Indicates that the short-circuit test was conducted without series overcurrent protection
1 — Indicates that a recalibration and dielectric test was not conducted as part of the short-circuit test
2 — Indicates that a recalibration and dielectric test was conducted as part of the short-circuit test

❷ These alphanumeric designations were established by UL. CSA has not yet adopted them; however, the test conditions are equivalent to UL and the coding is appropriate.

http://raise.rockwellautomation.com/raconfig/rtcache/jpg/1492gs.jpg[10/7/2015 4:09:21 PM]

BOM #13

Compact Modular Fuse Holders

COOPER Bussmann

DIN-Rail Mount Fuse Holders Protect Your Electrical System and Simplify Installation

- Colour coded for simple visual identification: yellow for **PV (1000Vdc)**, red for **IEC (690Vac)** and **black** for **UL (600Vac/dc)** applications.
- CHPV Models, with 1000Vdc rating for use with solar gPV fuse links, are suitable for photovoltaic applications of any size.
- Tested to a wide range of standards: IEC, cULus, CCC, CSA and UR, allowing for use across global applications.
- World class space-saving footprint - smaller than any other Modular Fuse Holder, reducing required installation space.
- Toolless DIN-Rail mounting improves ease of use and reduces installation time and costs.
- Rated for use with 75ºC or 90ºC wire, fine stranded wire, spade terminals and with comb-bus bars. Use any higher temperature rated wire with appropriate derating.

PV IEC UL

For more information visit www.cooperbussmann.com/ModularFuseHolders

Modular Fuse Holder Selection Table (10 x 38, Photovoltaic and Class CC)

Series & Size	Catalogue Number		Rated Voltage & Rated Current	Agency Markings	Number of Poles	Terminal Rating	Rated Breaking Capactiy	Cooper Bussmann Fuse Links
	With Indicator	Without Indicator						
CHM 10x38 and Midget	CHM1DIU	CHM1DU	IEC 690Vac/32A UL 600Vac/30A;	IEC 60269-2 UR; CSA; CCC	1	IEC: 1 to 25mm² 70°C PVC/Copper Cable Solid, Stranded, Fine Stranded, Spade Lug, Comb Bus Bar; Single and Dual	IEC 120kA rms sym UL 200kA rms sym CCC 100kA rms sym	IEC: C10 Series UL: FNQ, KLM, FNM, KTK, BAF, FWA, PVM, AGU, BAN, FWC.
	CHM2DIU	CHM2DU			2			
	CHM3DIU	CHM3DU			3			
	CHM4DIU	CHM4DU			4			
	CHM1DNIU	CHM1DNU		IEC 60269-2	1-pole + 1 neutral			
	CHM3DNIU	CHM3DNU			3-pole + 1 neutral			
	CHM1DI-48U	N/A	IEC 48Vdc/32A UL 48Vdc/30A;	IEC 60269-2; UR; CSA; CCC	1			
	N/A	CHM1DNXU	IEC 690Vac/32A	IEC 60269-2	1 neutral		N/A	N/A
CHPV Photovoltaic	CHPV1IU	CHPV1U	IEC 1000Vdc/32A UL 1000Vdc/30A;	IEC 60269-1 UR; CSA; CCC UL4248-18	1		33kA	Solar PV series, PVM, PV-xxA10F
	CHPV2IU	CHPV2U			2			
CHCC Class CC	CHCC1DIU	CHCC1DU	UL 600Vac/dc 30A	UL; CSA; CCC	1	Cable 75°C and 90°C Cu cable	200kA rms sym	LP-CC, FNQ-R, KTK-R
	CHCC2DIU	CHCC2DU			2			
	CHCC3DIU	CHCC3DU			3			
	N/A	CHCC1DI-48U	UL 48Vdc/30A		1			

Features

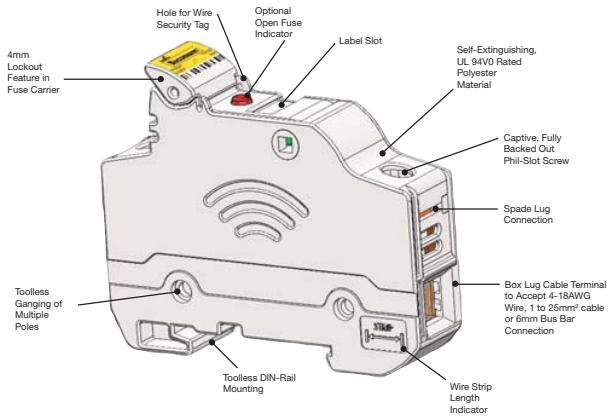

Specifications

Temperature Operating Range:
-20°C to +120°C (non-indicating)
-20°C to +90°C (indicating)
Flammability: Self-extinguishable UL 94V0 rated

Comb Bus Bar & Power Feed Accessories Make Installation Easier

- Distributes power in single- or three-phase configurations
- Cut-to-length solution does not compromise finger-safe protection
- Single-phase bus bars rated to 1000Vdc and 100A in end-fed configuration (200A for center-fed configuration)
- Three-phase bus bars rated to 600Vac/dc and 100A in end-fed configuration (200A for center-fed configuration)
- Power feed terminals for single-phase and three-phase service

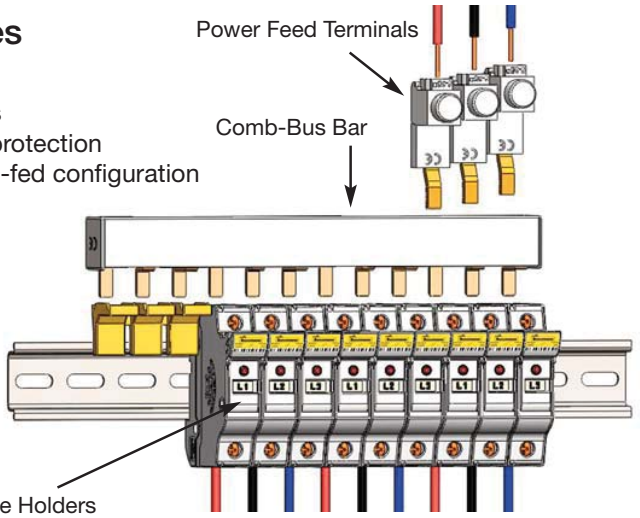

© 2012 Cooper Bussmann
www.cooperbussmann.com

COOPER Bussmann

Time-Current Characteristic Curves–Average Melt

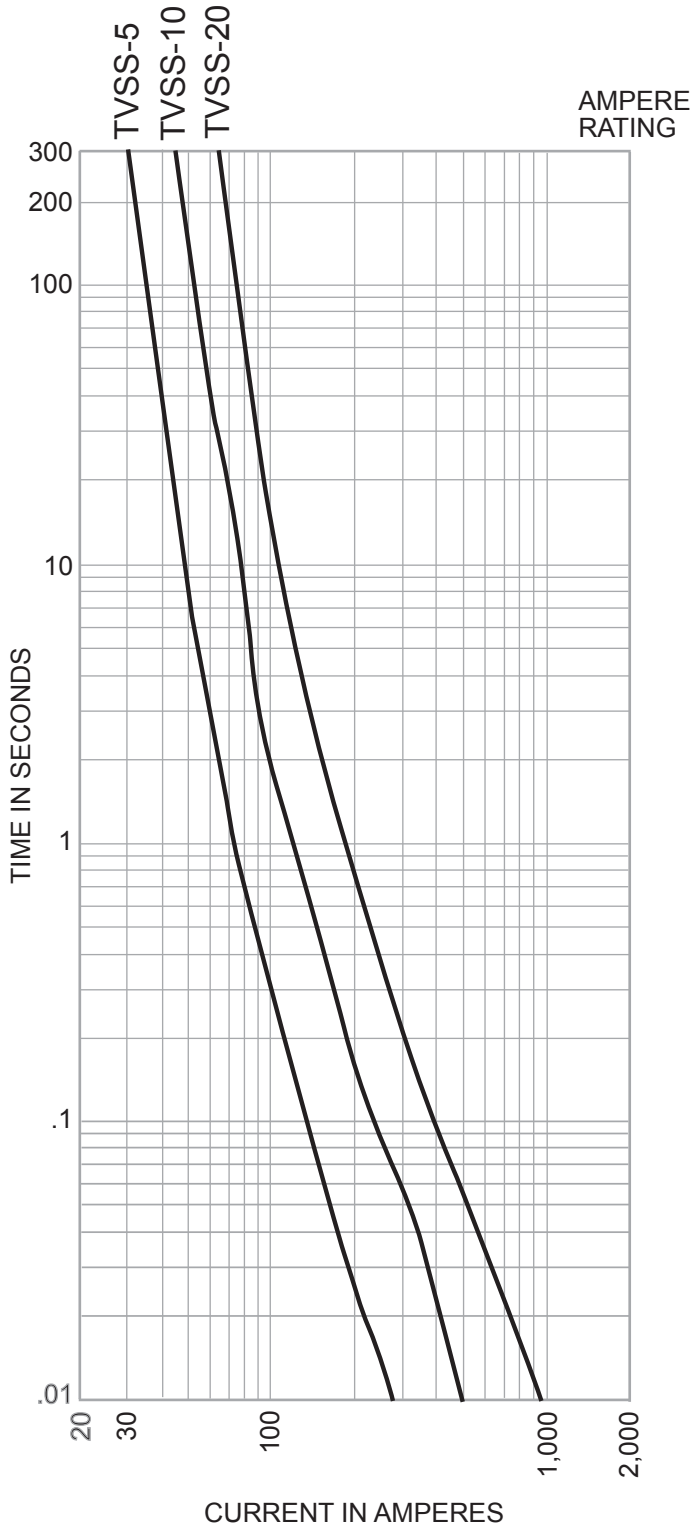

Time-Current Characteristic Curves–Peak Let-Through

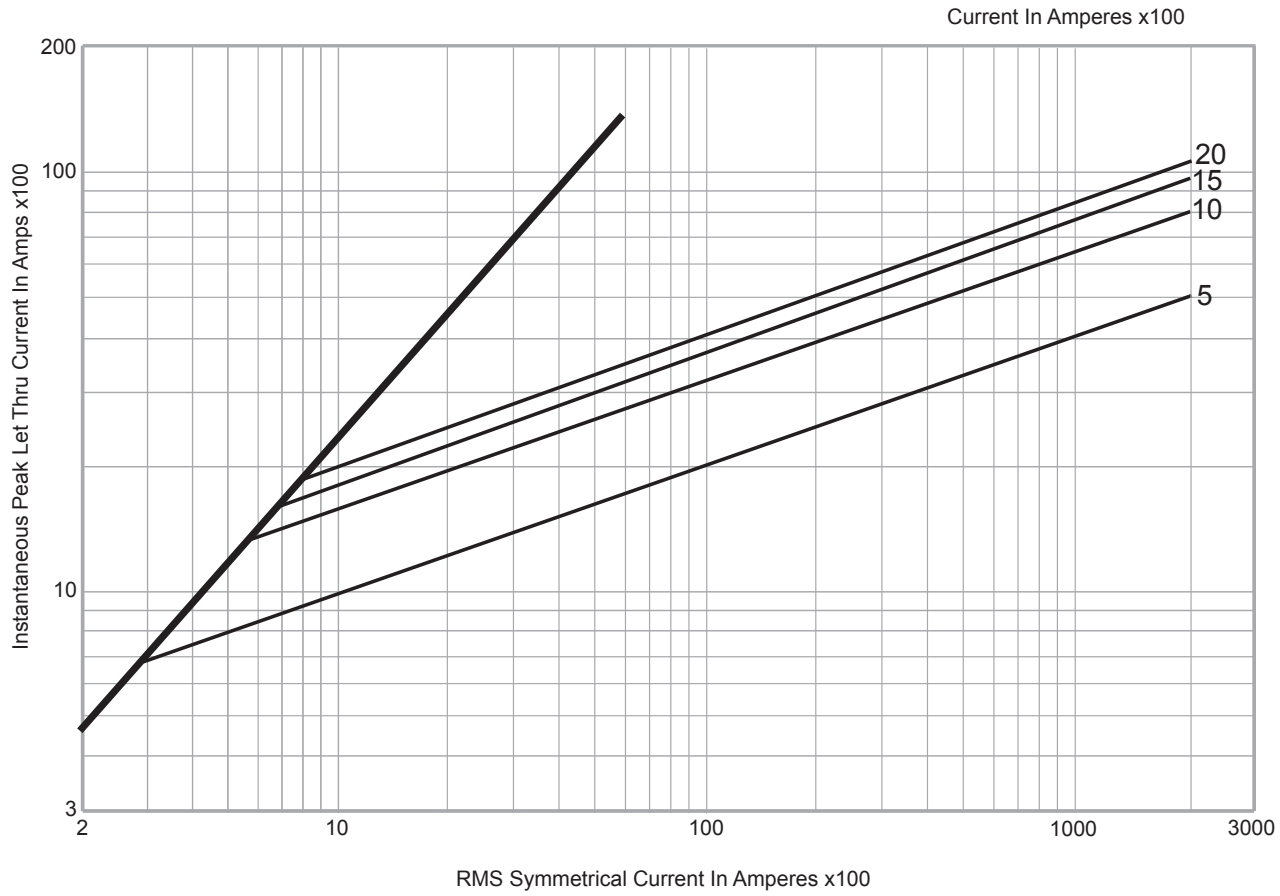

The only controlled copy of this Data Sheet is the electronic read-only version located on the Bussmann Network Drive. All other copies of this document are by definition uncontrolled. This bulletin is intended to clearly present comprehensive product data and provide technical information that will help the end user with design applications. Bussmann reserves the right, without notice, to change design or construction of any products and to discontinue or limit distribution of any products. Bussmann also reserves the right to change or update, without notice, any technical information contained in this bulletin. Once a product has been selected, it should be tested by the user in all possible applications.

DIN-Rail TVS Series

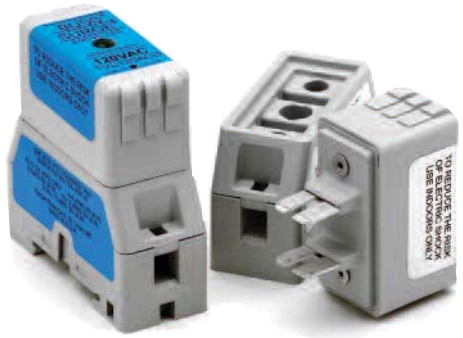

Status LED

OFF - Suppressor Non-Operational (power may be on)
GREEN - Suppressor Operational (power on)

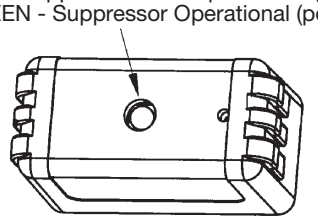

Specifications

Description: DIN-Rail mount voltage surge protection system for AC or DC voltage using diode or MOV technology.

Construction:

Suppressor: Case: 20% glass filled PES (Polyethersulfone)
Terminals: 110 Copper
Terminal Plating: Electroless tin

Holder: Case: 15% glass filled PBT (Polybutylene Terephthalate)
Interface Clips: CDA 7025
Interface Clip Plating: Electroless tin
Contact Lubricant: Fluoroether grease
Box Lug: Copper
DIN-Rail Springs: Stainless steel

Ratings*:

Volts: — 12Vdc (2kA surge current)
— 24Vdc (2kA surge current)
— 48Vdc (2kA surge current)
— 120Vac (7kA-18kA surge current)
— 240Vac (7kA-18kA surge current)

* See Catalog Numbers table for all specifications pertaining to specific voltage ratings.

Agency Information: UL Recognized (UL 1449) for AC products, (UL 497B) for DC products, CSA Approved.

Dimensions -in

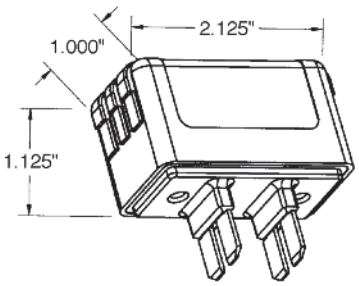

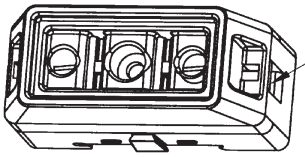

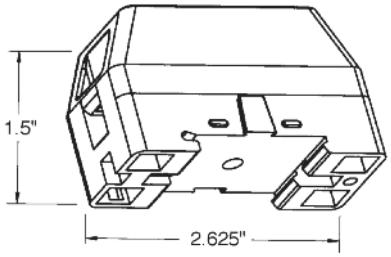

Product Specifications:

1. All TVS devices have non-polarized electrical connections as shown.
2. Suppressor voltage characteristics per chart.
3. Suppressor to provide non-interrupted service.
4. Enclosure material is 94V0 flame and explosion resistant.
5. Product markings show manufacturer, part number and safety warnings as required.
6. Mechanical dimensions as noted.
7. Suppressor Status LED as shown.
8. AC units operate on either 50 or 60Hz.

Catalog Numbers

Catalog Numbers	Voltage Application	MCOV	Technology	SVR 500A, 8x20μs	Surge Current Rating	Agency Information	Label Color
TVS12DCD	12Vdc	14Vdc	SASD	36Vdc	2kA	UL 497B	Red
TVS24DCD	24Vdc	28Vdc	SASD	58Vdc	2kA	UL 497B	White
TVS48DCD	48Vdc	57Vdc	SASD	90Vdc	2kA	UL 497B	Black
TVS120ACD	120Vac	140Vac	SASD	330Vac	7kA	UL 1449	Blue
TVS120ACM	120Vac	140Vac	MOV	500Vac	18kA	UL 1449	Grey
TVS240ACD	240Vac	280Vac	SASD	600Vac	7kA	UL 1449	Blue
TVS240ACM	240Vac	280Vac	MOV	800Vac	18kA	UL 1449	Grey

Data Sheet: 9006

BOM #15

Product: 1492-GH100

Description: 1492-GH High Density Mini Circuit Breakers (Push to Set)

Representative Photo Only (actual product may vary based on configuration selections)

MINIATURE CIRCUIT BREAKER DATA	
Electrical Standards	UL
Amp Rating	10.0 A

CERTIFICATIONS AND APPROVALS	
UL	1077, Guide No. QVNU2, File No. E65138
CSA	22.2 NO. 235
VDE	0631 (EN 60934)
CE	Marked
For UL Certifications Directory:	http://database.ul.com/cgi-bin/XYV/template/LISEXT/1FRAME/index.htm

BOM #16

SOLAHD

Dry Contact Relay Kit

RELAYCARD-SDU

Instruction Manual

While every precaution has been taken to ensure accuracy and completeness in this manual, SolaHD assumes no responsibility, and disclaims all liability for damages resulting from use of this information or for any errors or omissions.

©2009 SolaHD. All rights reserved throughout the world. Specifications are subject to change without notice.

®SolaHD name and logo are registered trademarks of EGS Electrical Group, LLC. All names referred to are trademarks or registered trademarks of their respective owners.

Table of Contents

What's Included 4

Installation 4

Product Description 5–6

Notes 7

What's Included

- One dry contact relay box
- One interface cable (DB-9 connector)
- One 12 V dc power interconnection cable
- Four M3 mounting screws

Installation

⚠ DANGER **Only qualified personnel should install or service this system. Electrical safety precautions must be followed when installing or servicing this equipment. To prevent risk of electrical shock, turn off and lock out all power sources to the unit before making electrical connections.**

1. Using the four M3 screws provided, mount the dry relay box on the right side of the SDU UPS. If mounting on a separate chassis, the hole diameter for the relay box is 0.378 in. (3.5 mm).

2. Plug the 12 V dc power interconnection cable into the 12 V dc input of the relay box. Plug the other end of the power interconnection cable into the aux dc output (or Vout) of the SDU UPS.

3. Plug the DB-9 connector cable into the RS232 communication port of the SDU UPS. Plug the other end of the connector into the remote port of the dry contact relay.

Product Description

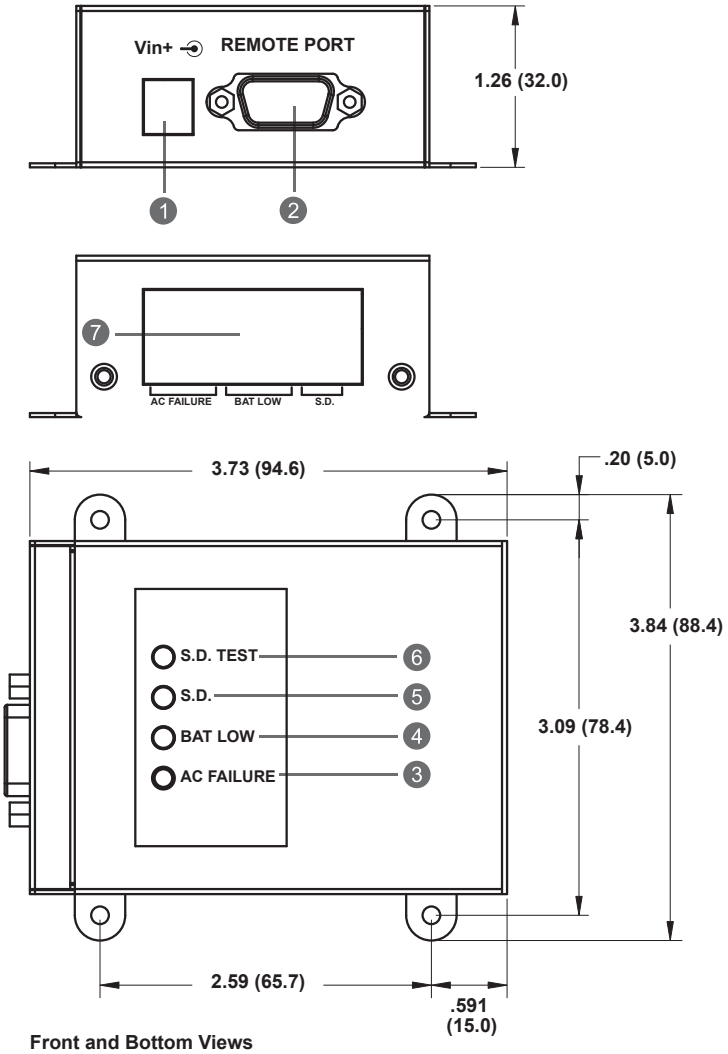

Front and Bottom Views
All dimensions are in inches (mm)

1. **Vin:** Input connector used to provide the dry contact relay with 12 V dc input power.
2. **Remote Port:** This communication port is used for linking to the SDU UPS.

   NOTE: The provided connection cable is used only for this dry contact relay.
3. **Ac Failure Indicator:** This yellow LED is illuminated when ac voltage is abnormal.
4. **Battery Low Indicator:** This green LED is illuminated when battery capacity is low.
5. **Shut Down Indicator (S.D.):** When the dry contact relay receives the shut down signal for 1 second, the red LED is illuminated and the SDU UPS goes into shut down mode.

Product Description continued from page 5

6. Shut Down Test Button (S.D. Test): Provides the dry contact relay a shut down signal to test the shut down function when the UPS is operating in the battery mode. Push this button for 1 second and the red LED is illuminated. The SDU UPS goes into shut down mode after 3 minutes.

7. 8 Pole Terminal Blocks

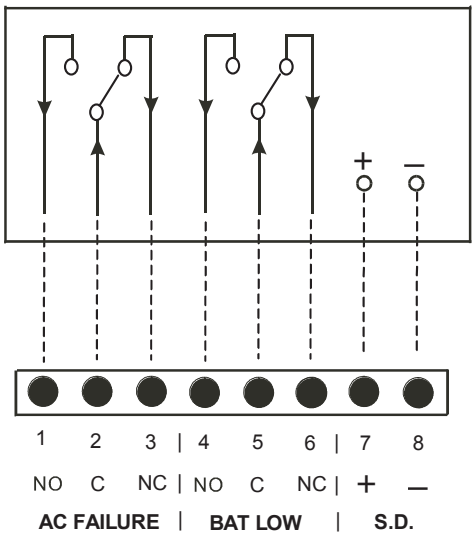

Table 1: Terminal Blocks—Layout and Operation

+UPS State		External Input	DCB LED Display			Terminal Blocks			
O = Occur X = Does not occur		O = Enable X = Disable	O = LED On X = LED Off			O = Close X = Open			
Ac Failure	BAT Low	S.D.	Yellow	Green	Red	Pin 1–2	Pin 2–3	Pin 4–5	Pin 5–6
X	X	X	X	X	X	X	O	X	O
O	X	X	O	X	X	O	X	X	O
O	O	X	X	O	X	O	X	O	X
O	X	O	X	X	O	X	O	X	O

Notes

1. Suitable electric wire = AWG 22–12 (IEC 2.5 mm).

2. Contact maximum current = 1.0 A @ 250 V ac.

3. Shut down input signal (range = +5 V to +12 V) can be provided by enabling terminals 7 and 8 for remote shut down control, assured by an external remote device.

SOLAHD

Technical Support
U.S.: (800) 377-4384
International: (847) 268-6000
E-mail: www.tech@solahd.com
Web site: www.solahd.com

EMERSON™
Industrial Automation

Part Number: A272-081 Rev 7
May 20, 2009

SDU Series, DIN Rail AC UPS

The SDU DIN Rail UPS combines an industry leading compact design with a wide operation temperature range and unique installation options. The SDU series provides economical protection from damaging impulses and power interruptions. These units include easy to wire screw terminations for critical devices needing battery back up such as computer based control systems.

E179213

Applications

- Programmable Logic Controllers
- Factory Automation
- Robotics
- Conveying Equipment
- Computer-based Control Systems

Features

- Lightweight, compact industrial design
- Wide operation temperature range (0ºC to 50ºC)
- Cold start capability
- Phone/dataline surge protection
- Software and cable included for easy installation
- Simulated sinewave output
- RS232 communication port
- USB communication port (optional)
- Form C dry contact relay (optional)
- Panel/wall mounting brackets (optional)
- Remote turn-on and shut-off capabilities
- Two year limited warranty

Certifications and Compliances

120V Models

- c UL us UL Recognized Component, UPS Equipment
  - UL 60950-1/CSA C22.2 No. 60950-1
  - Suitable for UL 508, CSA C22.2 No. 107.1 Ind. Control Equipment Applications with no derating
    - Overvoltage Cat III, Pollution Degree III

230V Models

- CE
  - EN62040-1-1

Related Products

- Portable MCR Power Conditioners
- STV Surge Protective Devices
- SDN DIN Rail Power Supplies
- STFV Plus Active Tracking® Filters

Selection Table

Capacity (VA/W)	Catalog Number	Volts, Frequency In/Out	Typical Back–up Time (minutes) *	Input/Output Connections	Approx. Ship Weight – lbs (kg)
500/300	**SDU 500**	120 Vac, 50/60 Hz	4	IP20 touch proof, screw terminals. Wire range: 10 ~ 24 AWG.	10.7 (4.70)
850/510	**SDU 850**		2		11.4 (5.00)
500/300	**SDU 500–5**	230 Vac, 50/60 Hz	4		11.5 (5.20)
850/510	**SDU 850–5**		2		11.9 (5.40)

* At full load.

SDU Accessories

Catalog Number	Description	Approx. Ship Weight – lbs (kg)
RELAYCARD–SDU	Dry contact I/O relay box, IP20 touch proof screw terminals, wire size range 12~22 AWG (IEC 2.5mm); N.O./N.C. form "C" contact. Relay contact signal for "On Battery", "Low Battery" and "UPS Shutdown".	1.0 (0.45)
UPSMON–USB	RS232 to USB adapter cable	1.0 (0.45)
SDU–PMBRK	Mounting brackets to secure UPS to wall, back of panel or enclosure.	1.0 (0.45)

Specifications

Catalog Number	SDU 500	SDU 850	SDU 500–5	SDU 850–5
Capacity (VA/Watts)	500/300	850/510	500/300	850/510
Load Power Factor	0.6			
Dimensions – inches (mm)				
Unit (H x W x D) – in. (mm)	4.88 x 11.1 x 4.55 (124.0 x 281.0 x 116.0)			
Weight – lbs (kg)	10.7 (4.70)	11.4 (5.00)	11.5 (5.20)	11.9 (5.40)
Input Parameters				
Voltage	120 V (+10%, -20%)		230 V (+/- 20%)	
Frequency	50 +/- 5 Hz or 60 Hz +/- 6 Hz (auto sensing)			
Output AC Parameters				
Voltage (Battery Mode)	Step sinewave			
	+/- 5%			
Frequency (On Battery)	50 or 60 Hz			
	+/- 0.3 Hz			
Overload Protection	UPS automatic shutdown if overload exceeds 105% of nominal at 20 seconds, 120% at 10 seconds, 130% at 3 seconds			
Short Circuit	UPS output cut off immediately			
Battery Parameters				
Battery Type	Sealed, non-spillable, maintenance-free lead acid batteries			
Transfer Time	4 - 6 ms typical			
Back–up Time * (minutes)	4.5/18	2.5/10	4.5/18	2.5/10
Recharge Time	8 hours to 90% capacity after full discharge			
Environmental				
Operating Temperature	0°C to 50°C			
Storage Temperature	-15°C to 60°C			
Relative Humidity	1% to 95%, non-condensing			
Ambient Operation	1-95% humidity non-condensing, 0-50°C up to 5,000 ft. (1500m)			
Audible Noise	< 40dBA (1 meter from surface)			
Standards				
EMC	FCC Part 15, Subpart B, Class A; EMC: EN50091-2, EN61000-3-2, EN61000-3-3, IEC60801-2, IEC60801-3, IEC60801-4, IEC61000-2-2			
Elevation	5000 ft. without derating			
Shock & Vibration	According to the International Safe Transit Association standard ISTA 2A.			
Mounting	To be mounted on DIN TS35/7.5 or TS35/15 rail system. Chassis mounting permissible via optional brackets. Unit handles normal shock and vibration of industrial use and transportation without coming off rail.			

* At full load/half load.

BOM #19
TAGS: LSHY-4001
LSHY-4002
LSHY-5001
LSHY-5002
LSHY-6001
LSHY-7001
LSHY-7002

Warrick

Series 16DM

Series 16DM DPDT Load Contact, Solid State Plug-In Module

Part No. 16DMB1B0
Unit Price $267
Lead Time (Days) 5

Image is of actual product

Model	16DM
Mode of Operation	Direct
Sensitivity	10 K
Control Style	Plug-In Module
Socket Style	DIN Mount
Standoff Style	N/A
Enclosure	None
Contact Design	2 Normally Open & 2 Normally Closed (non-powered)
Contact Rating	5 Amp Resistive 1/10 horse power
Secondary Voltage	12 VAC
Terminal Style	Screw Connector
Number of Channels	1
Minimum Temperature (°F)	-40
Maximum Temperature (°F)	150
Protection	Non-Intrinsically Safe
Approvals	UL 508 General Purpose
Minimum Qty (per Release)	1
Weight (Lbs)	1.1

Options

Warrick® Series 16DM Controls

Installation and Operation Bulletin

This bulletin should be used by experienced personnel as a guide to the installation of series 16DM controls. Selection or installation of equipment should always be accompanied by competent technical assistance. We encourage you to contact Gems Sensors Inc. or its representative if further information is required.

	Specifications
Control Design:	Solid-State components enclosed in clear Lexan plug-in style housing. Housing carries no NEMA rating
Contact Design:	2 SPDT (2 form C): Two Normally Open (N.O.) and two Normally Closed (N.C.), non-powered contacts
Contact Ratings:	5 A @ 120, 240 VAC resistive, 1/8 H.P. @ 120 or 240 VAC
Contact Life:	Mechanical: 5 million operations - Electrical: 100,000 operations minimum at rated load
Supply Voltage	24, 120, or 240 VAC Models - Factory Set. Plus 10%, minus 15%, 50/60 Hz
Supply Current:	120, 240, 24 VAC, Relay energized 4.4 VA
Secondary	12 VAC RMS Voltage on probes. 1.5 milli-amp Current
Circuit:	Models operate from 0 to 1,000,000 OHM maximum
Sensitivity:	specific resistance - Factory set
	-40° To 150°F Ambient
Temperature:	All connections #6-32 screw type with pressure clamps
Terminals:	Standard, 0.5 seconds on rising level.
Time Delays:	Additional time delays on rising and/or falling level available as option.
Listings:	U.L. Listing, Industrial Motor Control (508). 240 and 208 volt units are not U.L. limit control recognized.

Installation

1. Install octal socket in appropriate enclosure using two #6 or #8 metal screws.
   a) Install rail mount socket on appropriate rail (DIN mount) in appropriate enclosure, if applicable.
2. Wire control per wiring diagram, following N.E.C. and local codes.
3. Install control module in socket.

Sensitivities vs Maximum Probe Wire Distance*

Sensitivity Character	Sensitivity (K Ohms)	Distance (Ft.)
A or K	4.7	10,000
B or L	10	5,700
C or M	26	2,200
D or N	50	1,075
E or P	100	570
F or R	470	270
G or S	1,000	38

* Based on type MTW or THHN wire, #14 or #16 Awg

Dimensions

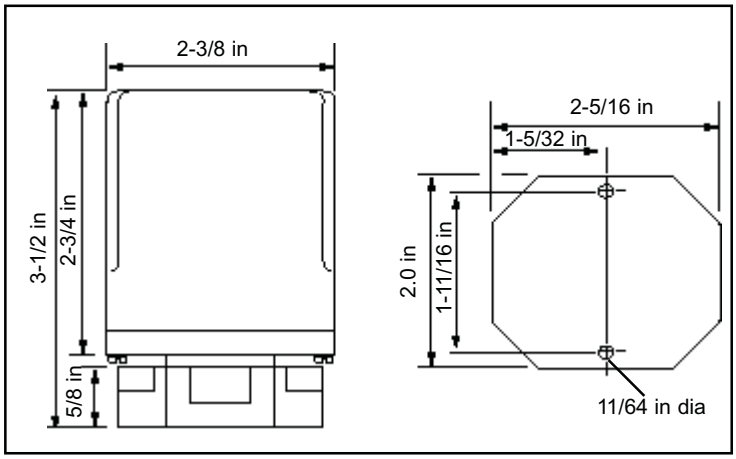

Use copper (60/70° C) wire only. Torque to 20 inch pounds.

Wiring Diagram

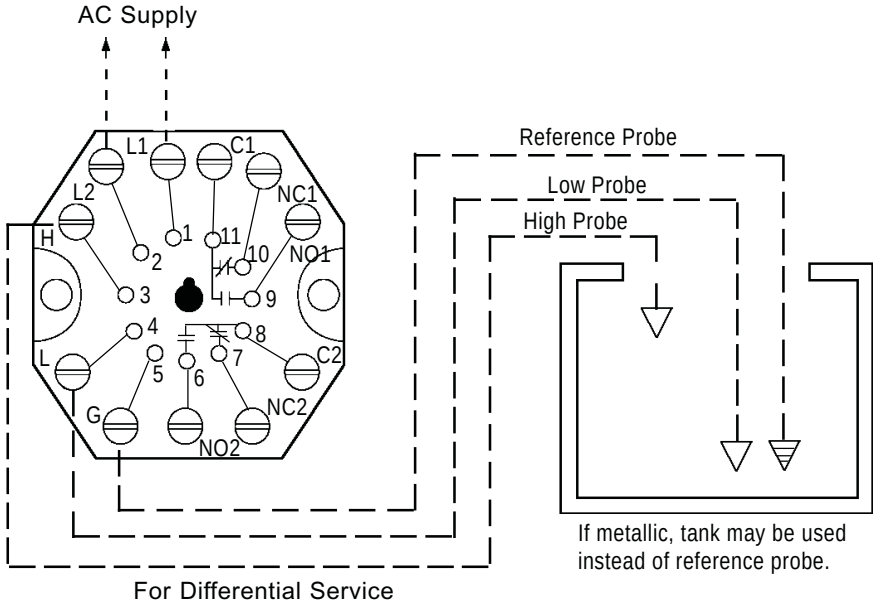

Note: For Single Level Service, use "H" and "G" Connections

Operation

Direct Mode - Single Level Service:
When the liquid rises to the electrode on terminal 3, the control energizes, changing state of the load contacts. **(LED will be lit)** The control remains energized until the liquid level recedes below electrode on terminal 3. The control then de-energizes, **(LED will not be lit)** returning load to original state.

Inverse Mode - Single Level Service:
Control energizes with power, changing state of the load contacts. **(LED will be lit)** When the liquid rises to the electrode on terminal 3, the control de-energizes, returning the load contacts to shelf state. **(LED will not be lit)** The control remains de-energized until liquid level recedes below the electrode connected to terminal 3. The control then energizes.

Direct Mode - Differential Service:
When the liquid rises to the electrode on terminal 3, the control energizes, changing state of the load contacts. **(LED will be lit)** The control remains energized until the liquid level recedes below electrode on terminal 4. The control then de-energizes, **(LED will not be lit)** returning the load contacts to original state.

Inverse Mode - Differential Service:
Control energizes with power, **(LED will be lit)** changing state of the load contacts. When the liquid rises to the electrode on terminal 3, the control de-energizes, returning load contacts to shelf state. **(LED will not be lit)** The control remains de-energized until the liquid level recedes below the electrode on terminal 4. The control then energizes.

Optional

Time Delays: With time delay on increasing level, the liquid must be in contact with the short electrode for the full duration of the time delay before control will operate. With delay on decreasing level, the liquid must be below long electrode for the full duration of the time delay before control will operate. In single level service, terminals 3 and 4 must be jumpered together to achieve time delays on both increasing and decreasing levels or just decreasing level.

16DM B 1 B -XX-XX

Time Delay: (decreasing level) 1-20 sec.
Time Delay: (increasing level) 1-20 sec.
Enclosure: 0-none, 1-NEMA 1, 4-NEMA 4, 7-NEMA 7, 12-NEMA 12
Socket Style: A - 11 Pin Octal, B - 11 Pin DIN Mount, M - None, Module Only
Supply Voltage: 1- 120 VAC, 2- 240 VAC, 3- 24 VAC, 8- 208/240 VAC*
Mode/Sensitivity:
Direct A- 4.7K, B- 10K, C- 26K, D- 50K, E- 100K, F- 470K, G- 1M
Inverse K- 4.7K, L- 10K, M- 26K, N- 50K, P- 100K, R- 470K, S- 1M

*187 Vmin to 255 Vmax VAC

Gems Sensors Inc.
One Cowles Road
Plainville, CT 06062-1198
Tel: 860-793-4579
Fax: 860-793-4580

Product: 700-HK32A1

BOM #21

Description: 700-HK General Purpose Slim Line Relay

Representative Photo Only
(actual product may vary based on configuration selections)

CONTROL RELAY DATA

Contact Rating	8 Amp Contact (Slim Line Relay)
Contact Configuration	DPDT Contact Arrangement
Coil Voltage	120V 50/60Hz
Relay Option	No Additional Options

CERTIFICATIONS AND APPROVALS

CE	Marked
UL	Listed with socket, Guide No. NLDX, File No. E3125
UR	Recognized, Guide No. NLDX2, File No. E3125
CSA	
For UL Certifications Directory:	http://database.ul.com/cgi-bin/XYV/template/LISEXT/1FRAME/index.htm

		Cat. No. 700-HK...			
Electrical Ratings					
Rated Thermal Current (I^{th})		1-Pole, 1 CO, SPDT — 16 A		2-Pole, 2 CO, DPDT — 8 A	
Rated Insulation Voltage (U_i)		250V IEC, 300V UL/CSA			
Contacts	Inductive V AC	120V AC	AC-15, 6.2 A B300 Pilot Duty, 3 A A300 (700-HKM_) 1/3 Hp (0.24 kW) 1-phase	120V AC	AC-15, 2.9 A B300 Pilot Duty, 3.0 A 1/4 Hp (0.18 kW), 1-phase
		240V AC	AC-15, 3.1 A B300 Pilot Duty, 1.5 A A300 (700-HKM_) 3/4 Hp (0.55 kW), 1-phase	240V AC	AC-15, 1.4 A B300 Pilot Duty, 1.5 A 1/2 Hp (0.37 kW), 1-phase
		230V AC	0.55 kW, 1-phase	230V AC	0.37 kW, 1-phase
	Inductive V DC	24V DC	DC-13, 5.0 A	24V DC	DC-13, 3.0 A
		125V DC	DC-13, 0.2 A R300 Pilot Duty, 0.22 A	125V DC	DC-13, 0.2 A R300 Pilot Duty, 0.22 A
		250V DC	DC-13, 0.1 A R300 Pilot Duty, 0.11 A	5 A, 250V AC	DC-13, 0.1 A R300 Pilot Duty, 0.11 A
	Resisitive	230V AC	AC-1, 16 A	230V AC	AC-1, 8 A
		277V AC	16 A, General Use	277V AC	8 A, General Use
	Make, Break & Continuous	30V DC	DC-1, 12 A 10 A, Resistive	30V DC	DC-1, 6 A 6 A, Resistive
Min. Permissible Contact Ratings		300 mW (5V/60 mA or 60V/5 mA) for AgNi Contacts (700-HK3_) 50 mW (5V/10 mA or 25V/2 mA) for AgNi + Gold Contacts (700-HKX_) 500 mW (100V/5 mA or 5V/100 mA) for $AgSnO_2$ Contacts (700-HKM_)			
Permissible Coil Voltage Variation	Pickup: holding Voltage: Must Dropout Voltage:	80...110% of Nominal Voltage at 50/60 Hz, 73...110% of Nominal Voltage at DC 80% of Nominal V AC at 50/60 Hz, 40% of Nominal V DC 20% of Nominal V AC at 50/60 Hz, 10% Nominal V DC			
Power Consumption		1.2V A (V AC Coils), 0.5 W (V DC Coils)			
Coil Voltages		See Overview/Product Selection			
Design Specification/Test Requirements					
Dielectric Withstand Voltage	Between Open Contacts (VRMS)	1000V AC			
	Contact to Coil (VRMS)	1600V AC			
Mechanical					
Degree of Protection		IP 20 (guarded terminal sockets), RT II — Flux-proof (Relay)			
Mechanical Life Operations		10 x 10^6			
Electrical Life Cycles		230V AC, 16 A Resistive: 100 000 min. 277V AC, 16 A Resistive: 30 000 min. 30V DC, 10 A Resisitive: 30 000 min. B300, R300, Hp (kW): 6000 min. A300 (700-HKM_): 100,000 min.		230V AC, 8 A Resistive: 100 000 min. 277V AC, 8 A Resistive: 30 000 min. 30V DC, 6 A Resistive: 30 000 min. B300, R300, Hp (kW): 6000 min.	
Switching Frequency		Mechanical: 18,000 cycles/hr. Electrical: 900 cycles/hr.			
Operating Time at Nominal Voltage at 20 °C (ms)	Pickup	15 ms max.			
	Dropout	5 ms max.			
Vibration	Operational	10...2000 Hz, 0.76 mm (0.03 in.) 2.5 G			
	Non-Operational	10...2000 Hz, 0.76 mm (0.03 in.) 5.0 G			
Shock	Operational	15 G			
	Non-Operational	50 G			
Environmental					
Temperature	Operating	–40...+70 °C (–40...+158 °F)			
	Storage	–40...+85 °C (–40...+185 °F)			
Altitude		2000 m (6560 ft)			
Construction					
Insulating Material		Molded High Dielectric Material			
Enclosure		Transparent Dust Cover			
Contact Material		700-HK3_: Silver nickel (AgNi); 700-HKX_: Silver Nickel + Gold Plating (AgNi + Au); 700-HKM_: Silver Tin Oxide ($AgSnO_2$)			
Terminal Markings on Socket		In accordance with EN 50005			
Sockets		**1-Pole**		**2-Pole**	
	Screw Terminal	700-HN121 (10 A @ 70 °C) 700-HN221 (16 A @ 50 °C, 12 A @ 70 °C)		700-HN122 (2 x 5 A @ 70 °C) 700-HN222 (2 x 8 A @ 70 °C)	
	Spring Clamp (Available September 2006)	700-HN223 (15 A @ 40 °C with 2 conductors per terminal) (10 A @ 70 °C with 1 conductor per terminal)		700-HN224 (2 x 8 A@ 70 °C)	
Approvals					
Certifications		CSA Certified, File 75088, UL Recognized, File E3125 Guide NLDX2/NLCX8, cULus Listed with Allen-Bradley sockets (File No. 3125 Guide NLDX/NLDX7), CE Marked			
Standards		EN61810-1, CSA 22.2 No. 14, UL 508			

http://raise.rockwellautomation.com/raconfig/rtcache/jpg/700-hk%20specs.jpg[10/7/2015 4:14:36 PM]

BOM #22 and 23

Spring-Clamp Connection Terminal Blocks

Plug-in Style Blocks (Cat. Nos. 1492-L3P, -LDG3P) and Analog Loop Control Block (Cat. No. 1492-LDAG3)

	1492-L3P			1492-LDG3P			1492-LDAG3		
Dimensions are not intended to be used for manufacturing purposes. **Note:** Height dimension is measured from top of rail to top of terminal block.	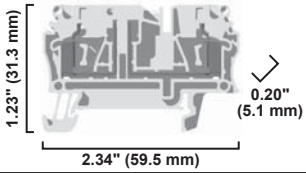			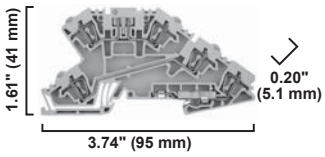			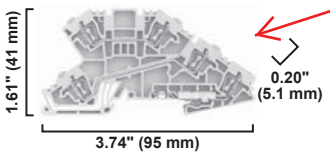		
Specifications	*Single Circuit Plug-In Component Block for a Variety of Components*			*Terminal Block with slot for Plug-In Component, Feed-Through Circuit and 1 Ground Connection*			*Analog Loop Control Terminal Block with 2 Feed-Through Circuits and 1 Ground Connection*		
Certifications	cULus	CSA	IEC	cULus	CSA	IEC	cULus	CSA	IEC
Voltage Rating	600V AC/DC		500V AC/DC	300V AC/DC		250V AC/DC	300V AC/DC		250V AC/DC
Maximum Current	20 A		24 A	10 A		20 A	10 A		24 A
Wire Range (Rated Cross Section)	#30…12 AWG		4 mm²	#26…12 AWG		2.5 mm²	#26…12 AWG		2.5 mm²
Wire Strip Length	0.39 in. (10 mm)			0.31 in. (8 mm)			0.31 in. (8 mm)		
Density	59 pcs/f (/196 pcs/m)			59 pcs/ft (196 pcs/m)			59 pcs/ft (196 pcs/m)		
Housing Temperature Range	–58…+248 °F (–50…+120 °C)			–58…+248 °F (–50…+120 °C)			–58…+248 °F (–50…+120 °C)		
Terminal Blocks	**Cat. No.**		**Pkg Qty.**	**Cat. No.**		**Pkg Qty.**	**Cat. No.**		**Pkg Qty.**
Color Grey	**1492-L3P**		25	**1492-LDG3P**		25	**1492-LDAG3**		25
Accessories	**Cat. No.**		**Pkg Qty.**	**Cat. No.**		**Pkg Qty.**	**Cat. No.**		**Pkg Qty.**
Mounting Rails 1 m Symmetrical DIN (Steel)	**199-DR1**		10	**199-DR1**		10	**199-DR1**		10
1 m Symmetrical DIN (Aluminum)	**1492-DR5**		10	**1492-DR5**		10	**1492-DR5**		10
1 m Hi-Rise Symmetrical DIN (Aluminum)	**1492-DR6**		2	**1492-DR6**		2	**1492-DR6**		2
1 m Angled Hi-Rise Sym. DIN (Steel)	**1492-DR7**		2	**1492-DR7**		2	**1492-DR7**		2
End Barrier	**1492-EBL3**		50	**1492-EBLDAG3**		20	**1492-EBLDAG3**		20
End Anchors and Retainers Screwless End Retainer	**1492-ERL35**		20	**1492-ERL35**		20	**1492-ERL35**		20
DIN Rail — Normal Duty	**1492-EAJ35**		100	**1492-EAJ35**		100	**1492-EAJ35**		100
DIN Rail — Heavy Duty	**1492-EAHJ35**		50	**1492-EAHJ35**		50	**1492-EAHJ35**		50
Jumpers Plug-In Center Jumper — 50-pole	**1492-CJK5-50**		10	**1492-CJLJ5-50**		10	**1492-CJLJ5-50**		10
Plug-In Center Jumper — 10-pole	**1492-CJK5-10**		20	**1492-CJLJ5-10**		20	**1492-CJLJ5-10**		20
Plug-In Center Jumper — 9-pole	**1492-CJK5-9**		20	**1492-CJLJ5-9**		20	**1492-CJLJ5-9**		20
Plug-In Center Jumper — 8-pole	**1492-CJK5-8**		20	**1492-CJLJ5-8**		20	**1492-CJLJ5-8**		20
Plug-In Center Jumper — 7-pole	**1492-CJK5-7**		20	**1492-CJLJ5-7**		20	**1492-CJLJ5-7**		20
Plug-In Center Jumper — 6-pole	**1492-CJK5-6**		20	**1492-CJLJ5-6**		20	**1492-CJLJ5-6**		20
Plug-In Center Jumper — 5-pole	**1492-CJK5-5**		20	**1492-CJLJ5-5**		20	**1492-CJLJ5-5**		20
Plug-In Center Jumper — 4-pole	**1492-CJK5-4**		60	**1492-CJLJ5-4**		60	**1492-CJLJ5-4**		60
Plug-In Center Jumper — 3-pole	**1492-CJK5-3**		60	**1492-CJLJ5-3**		60	**1492-CJLJ5-3**		60
Plug-In Center Jumper — 2-pole	**1492-CJK5-2**		60	**1492-CJLJ5-2**		60	**1492-CJLJ5-2**		60
Other Accessories Disconnect Plug	**1492-DPL**		50	**1492-DPL**		50	—		—
Component Plug	**1492-CPL**		50	**1492-CPL**		50	—		—
Fuse Plug Without Blown Fuse Indicator	**1492-FPK2**		20	**1492-FPK2**		20	—		—
10…36V Blown Fuse Indicator	**1492-FPK224**		20	**1492-FPK224**		20	—		—
35…70V Blown Fuse Indicator	**1492-FPK248**		20	**1492-FPK248**		20	—		—
60…150V Blown Fuse Indicator	**1492-FPK2120**		20	**1492-FPK2120**		20	—		—
140…250V Blown Fuse Indicator	**1492-FPK2250**		20	**1492-FPK2250**		20	—		—
Reducing Sleeves 28…24 AWG (0.13…0.2 mm²) White	1492-PSL3-2		100	—		—	—		—
Reducing Sleeves 22…20 AWG (0.25…0.5 mm²) Grey	**1492-PSL3-5**		100	—		—	—		—
Reducing Sleeves 18 AWG (0.75…1.0 mm²) Dark Grey	**1492-PSL3-10**		100	—		—	—		—
Test Plug	**1492-TPL5**		25	**1492-TP23**		20	—		—
Electrical Warning Plate	**1492-EWPL5**		20	—		—	—		—
Group Marking Carrier	**1492-GM35**		25	**1492-GM35**		25	**1492-GM35**		25
Marking Systems Snap-In Marker Cards	**1492-M5X10** (144/card)		5	**1492-M5X10** (144/card)		5	**1492-M5X10** (144/card)		5
Snap-In Marker Cards	**1492-M5X5** (200/card)		5	**1492-M5X5** (200/card)		5	**1492-M5X5** (200/card)		5

Panduct® Type F Narrow Slot Wiring Duct

- Narrow slot/finger design provides more slots to fit the spacing of high-density terminal blocks and other hardware
- Material: Lead-free PVC
- UL recognized continuous use temperature: 122°F (50°C)
- UL 94 flammability rating of V-0
- Conforms with NFPA 79-2007 section 13.3.1 requirement for flame retardant material
- Provided with mounting holes
- Base and cover length is 6 feet

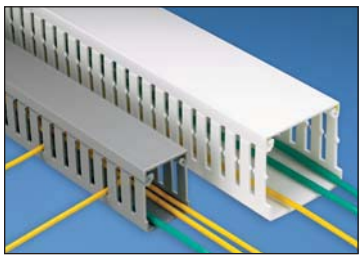

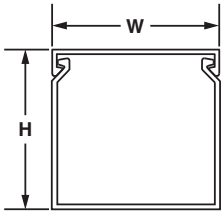

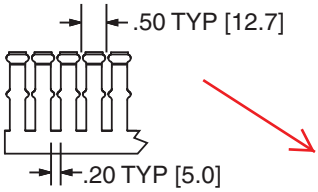

Multiple slot restrictors present with 2" and greater duct wall height.

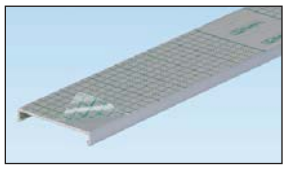

To order cover with protective film add "-F" to part number. 6" cover not available with film.

NEW!

Base Part Number	Duct Size (W x H)* In.	Duct Size (W x H)* mm	Slot Width In.	Slot Width mm	Cover Part Number	Std. Pkg. Qty.	Base Ctn. Qty.	Cover Ctn. Qty.
F.5X.5LG6	0.69 x 0.60	17.5 x 15.2	0.20	5.0	C.5LG6	6	120	120
F.5X1LG6	0.69 x 1.06	17.5 x 26.9	0.20	5.0	C.5LG6	6	120	120
F.75X.75LG6	0.93 x 0.82	23.6 x 20.9	0.20	5.0	C.75LG6	6	120	120
F.75X1.5LG6	0.93 x 1.57	23.6 x 39.9	0.20	5.0	C.75LG6	6	120	120
F1X1LG6	1.26 x 1.13	32.0 x 28.7	0.20	5.0	C1LG6	6	120	120
F1X1.5LG6	1.26 x 1.62	32.0 x 41.1	0.20	5.0	C1LG6	6	120	120
F1X2LG6	1.26 x 2.12	32.0 x 53.8	0.20	5.0	C1LG6	6	120	120
F1X3LG6	1.26 x 3.12	32.0 x 79.2	0.20	5.0	C1LG6	6	120	120
F1X4LG6	1.26 x 4.10	32.0 x 104.1	0.20	5.0	C1LG6	6	60	120
F1.5X1LG6	1.75 x 1.12	44.5 x 28.4	0.20	5.0	C1.5LG6	6	120	120
F1.5X1.5LG6	1.75 x 1.62	44.5 x 41.1	0.20	5.0	C1.5LG6	6	120	120
F1.5X2LG6	1.75 x 2.12	44.5 x 53.8	0.20	5.0	C1.5LG6	6	120	120
F1.5X3LG6	1.75 x 3.12	44.5 x 79.2	0.20	5.0	C1.5LG6	6	120	120
F1.5X4LG6	1.75 x 4.10	44.5 x 104.1	0.20	5.0	C1.5LG6	6	60	120
F2X1LG6	2.25 x 1.12	57.2 x 28.4	0.20	5.0	C2LG6	6	120	120
F2X1.5LG6	2.25 x 1.62	57.2 x 41.1	0.20	5.0	C2LG6	6	120	120
F2X2LG6	2.25 x 2.12	57.2 x 53.8	0.20	5.0	C2LG6	6	120	120
F2X3LG6	2.25 x 3.12	57.2 x 79.2	0.20	5.0	C2LG6	6	60	120
F2X4LG6	2.25 x 4.10	57.2 x 104.1	0.20	5.0	C2LG6	6	60	120
F2X5LG6	2.25 x 5.10	57.2 x 129.5	0.20	5.0	C2LG6	6	60	120
F2.5X3LG6	2.75 x 3.12	69.9 x 79.2	0.20	5.0	C2.5LG6	6	120	120
F3X1LG6	3.25 x 1.12	82.6 x 28.4	0.20	5.0	C3LG6	6	120	120
F3X2LG6	3.25 x 2.12	82.6 x 53.8	0.20	5.0	C3LG6	6	120	120
F3X3LG6	3.25 x 3.12	82.6 x 79.2	0.20	5.0	C3LG6	6	60	120
F3X4LG6	3.25 x 4.10	82.6 x 104.1	0.20	5.0	C3LG6	6	60	120
F3X5LG6	3.25 x 5.10	82.6 x 129.5	0.20	5.0	C3LG6	6	60	120
F4X2LG6	4.25 x 2.12	108.0 x 53.8	0.20	5.0	C4LG6	6	60	120
F4X3LG6	4.25 x 3.12	108.0 x 79.2	0.20	5.0	C4LG6	6	60	120
F4X4LG6	4.25 x 4.10	108.0 x 104.1	0.20	5.0	C4LG6	6	60	120
F4X5LG6	4.25 x 5.10	108.0 x 129.5	0.20	5.0	C4LG6	6	60	120
F6X4LG6	6.25 x 4.15	158.8 x 105.4	0.20	5.0	C6LG6	6	60	120

Part number shown for LG (Light Gray). For other color availability see color selection guide, page C1.48.
Base and cover sold separately.
*"H" dimension includes duct and cover.

THIS COPY IS PROVIDED ON A RESTRICTED BASIS AND IS NOT TO BE USED IN ANY WAY DETRIMENTAL TO THE INTERESTS OF PANDUIT CORP.

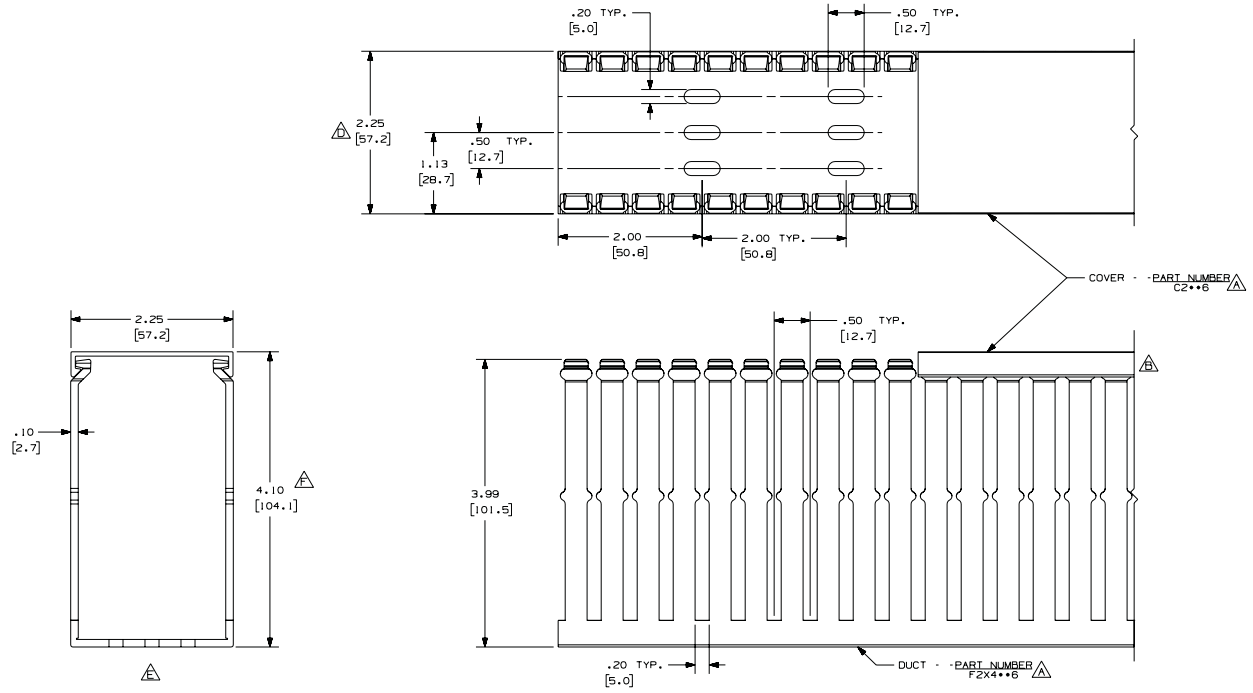

NOTES:

1. ALL DIMENSIONS ARE REFERENCE ONLY.
2. DIMENSIONS IN PARENTHESIS ARE METRIC.
3. THE ** DENOTE COLOR.
4. DUCT AND COVER AREA AVAILABLE IN 6 FT [1828.8] LENGTHS

REV	DATE	BY	CHK	DESCRIPTION
--	.....	...	...	G. ADDED LENGTH NOTE F. CORRECTED DIMENSION
2	7-23-07	JCST	MKBE	E. DELETED DIMENSION D. ADDED DIMENSION
--	.....	...	...	C. CHANGED DRAWING SIZE
1	9-24-04	JCST	MKBE	B. CHANGED VIEW A. ADDED TOP VIEW, NOTES, AND LABELS
R	3-20-03	JCST	JGG	DRAWING RELEASED

CAD FILENAME/LAYERS: D11000CL_DC/00C

PANDUIT CORP. TINLEY PARK, ILLINOIS

WIRING DUCT - TYPE F DUCT WITH COVER
2 X 4
MARKETING DRAWING

DRAWN BY	MAT'L:	SCALE
JCST	PVC	FULL
DATE: 3-20-03		DRAWING NO. 36897-774
CHECKED BY: JGG		SIZE C

BOM #25

Mounting rails allow many blocks to be fastened in a panel with only a few screws to anchor the rail to the panel. Mounting rails allow easy installation and removal of a block in a row.

Cat. No.	Description	Pkg Qty.	Dimensions*
199-DR1	Symmetrical Rail 35 mm x 7.5 mm 3.28 ft (1 m) long Zinc-Plated Clear Chromated Steel EN60715 **DIN #3**	10	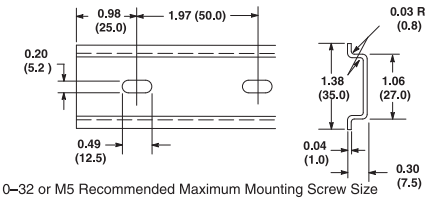 #10–32 or M5 Recommended Maximum Mounting Screw Size
199-DR2	Same as Cat. No. 199-DR1, but length = 2 m	20	
199-DR4	Heavy Duty Symmetrical Rail 35 mm x 15 mm 3.28 ft (1 m) long Zinc-Plated Clear Chromated Steel EN60715 **DIN #3**	5	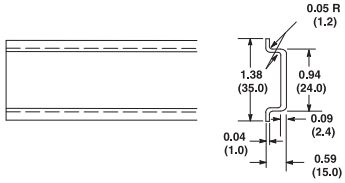
1492-DR3	Mini 15 mm x 5.5 mm Rail 3.28 ft (1 m) long Zinc-Plated Clear Chromated Steel EN60715 **DIN #2**	5	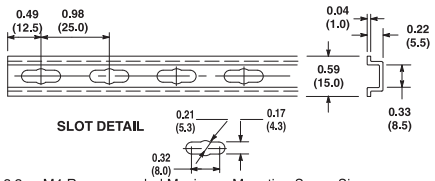 #8-3 2 or M4 Recommended Maximum Mounting Screw Size
1492-DR5	Symmetrical Rail 35 mm x 7.5 mm 3.28 ft (1 m) long Copper-Free Aluminum EN60715 For Bul. 1492 Terminal Blocks Only **DIN #3**	10	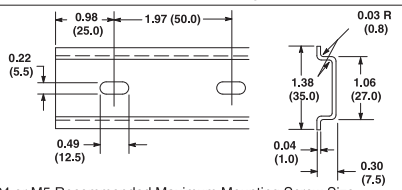 #12–24 or M5 Recommended Maximum Mounting Screw Size
❄ **1492-DR6**	Symmetrical Rail 35 mm x 7.5 mm 2.26 in. (57.4 mm) high 3.28 ft (1 m) long Copper-Free Aluminum For Bul. 1492 Terminal Blocks Only **DIN #3**	2	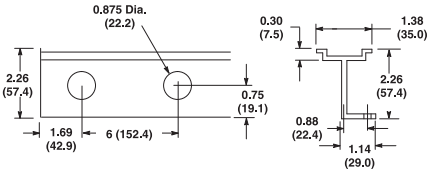 Wire insulator plug for wire access through rail — use Heyco UB875
❄ **1492-DR7**	Symmetrical Rail 35 mm x 7.5 mm 2.80 in. (71.0 mm) high 3.28 ft (1 m) long Angled 30° Zinc-Plated, Chromated Steel **DIN #3**	2	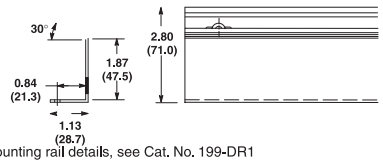 For mounting rail details, see Cat. No. 199-DR1
1492-DR8	Symmetrical Rail 35 mm x 15 mm 3.28 ft (1 m) long Copper EN60715 **DIN #3**	5	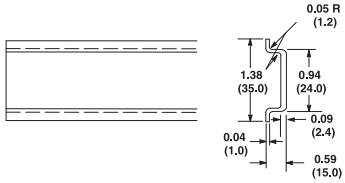
‡ **1492-DR9**	Symmetrical Rail 35 mm x 15 mm 3.28 ft (1 m) long Zinc-Plated Clear Chromated Steel EN60715 **DIN #3**	5	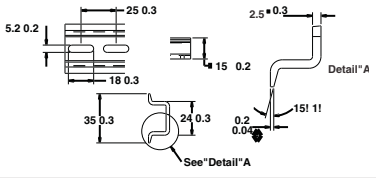

* Dimensions shown in inches (millimeters). Dimensions are not intended to be used for manufacturing purposes.
❄ 0.218 x 0.50 in. (5.5 x 12.7 mm) slotted mounting holes every 3 in. (76.2 mm) starting 1.69 in. (42.9 mm) from end.
‡ Dimensions in millimeters.

12

BOM #26

ELECTRIC HEATERS

115/230 Volt
100/200 Watt

115/230 Volt
400/800 Watt

115/230 Volt
1300 Watt

INDUSTRY STANDARDS

UL 508A Component Recognized; File No. E61997

CSA Certified, CSA File No. LR42186
CE

APPLICATION

Protect mechanical, electrical and electronic equipment from low temperatures, condensation and corrosion with this thermostatically controlled, fan-driven heater that maintains a stable enclosure temperature.
Fan draws cool air from the bottom of the enclosure and passes this air across the thermostat and heating element before being released into enclosure cavity. Heated air is discharged through the top of the heater unit.

SPECIFICATIONS

- Aluminum housing
- Thermostat range adjustable from 0 F to 100 F (-18 C to 38 C)
- Four 10-32 x self-tapping screws are included with each heater
- Ball bearing fan
- Terminal strip with clamp connector that accepts both solid and stranded wire

FINISH

- Brushed aluminum

⚠ CAUTION

These electric heaters are not designed for use in dusty, dirty, corrosive, or hazardous locations. Portions of the heater can get hot. Adequate protection must be taken to protect people from potential burns, and to protect other components from this heat. Pentair Technical Products recommends this heater only be installed in a totally-enclosed metal enclosure.

DO NOT INSTALL HEATERS ON WOOD PANELS. Heat sensitive components should not be placed near the heater discharge area since this air can be quite warm. The clearance range defines the space that must be kept free of these components for proper and safe operation of the heater.

Performance Data **100 and 200 Watt Heaters**

CATALOG NUMBERS	DAH1001A	DAH1002A	DAH2001A	DAH2002A
ELECTRICAL DATA				
Rated Voltage	**115**	**230**	**115**	**230**
Frequency (Hz)	50/60	50/60	50/60	50/60
Power Consumption (Watts)	100	100	200	200
Nominal Current (Amps)	0.98	0.49	1.89	0.95
HEATING PERFORMANCE				
Watts	**100**	**100**	**200**	**200**
UNIT CONSTRUCTION				
Weight (lb./kg)	1.6/0.73	1.6/0.73	1.6/0.73	1.6/0.73
X (in./mm)	4.00/102	4.00/102	6.00/152	6.00/152

Performance Data **400 and 800 Watt Heaters**

CATALOG NUMBERS	DAH4001B	DAH4002B	DAH8001B	DAH8002B
ELECTRICAL DATA				
Rated Voltage	**115**	**230**	**115**	**230**
Frequency (Hz)	50/60	50/60	50/60	50/60
Power Consumption (Watts)	400	400	800	800
Nominal Current (Amps)	3.72	1.86	7.37	3.69
HEATING PERFORMANCE				
Watts	**400**	**400**	**800**	**800**
UNIT CONSTRUCTION				
Weight (lb./kg)	2.2/1.00	2.2/1.00	2.2/1.00	2.2/1.00
X (in./mm)	6.00/152	6.00/152	8.00/203	8.00/203

Performance Data **1300 Watt Heaters**

CATALOG NUMBERS	DAH13001C	DAH13002C
ELECTRICAL DATA		
Rated Voltage	**115**	**230**
Frequency (Hz)	50/60	50/60
Power Consumption (Watts)	1300	1300
Nominal Current (Amps)	11.5	5.7
HEATING PERFORMANCE		
Watts	**1300**	**1300**
UNIT CONSTRUCTION		
Weight (lb./kg)	3.4/1.54	3.4/1.54
X (in./mm)	8.00/203	8.00/203

Dimensions and Clearance Range Drawing for DAH1001A, -2A and DAH2001A, -2A

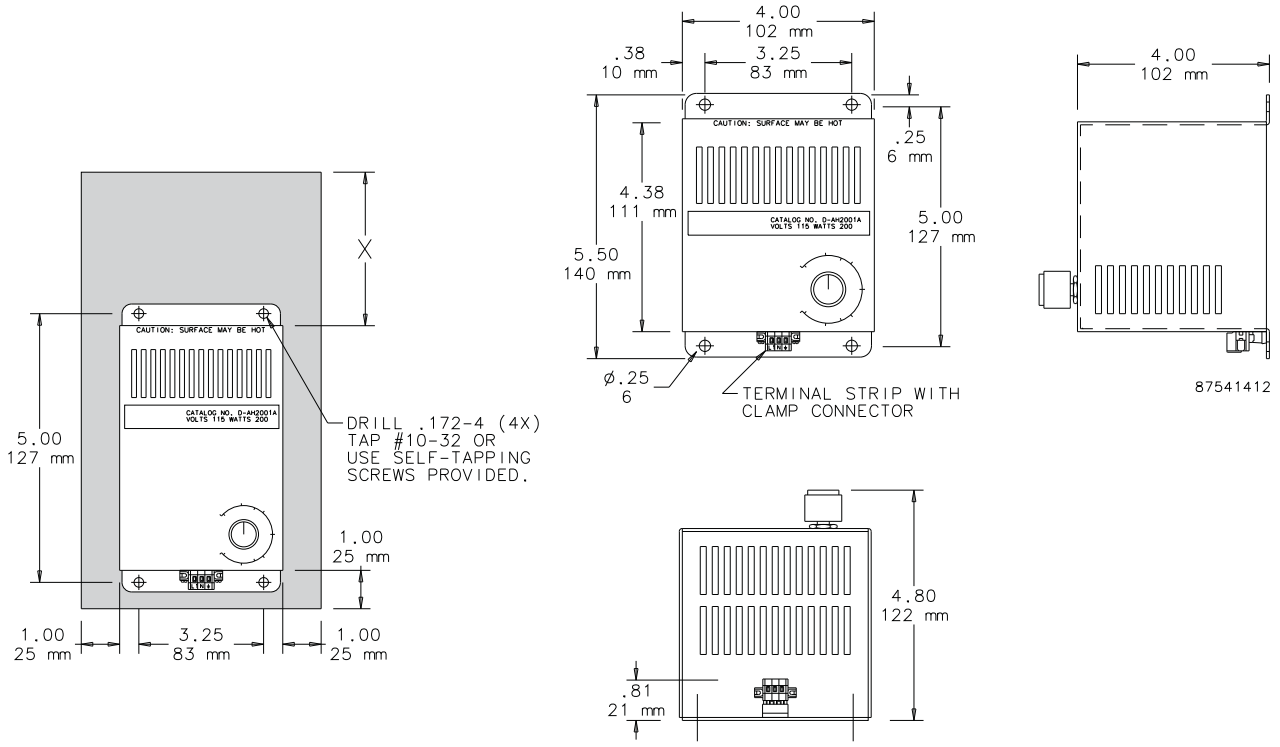

Dimensions and Clearance Range Drawing for DAH4001B, -2B and DAH8001B, -2B

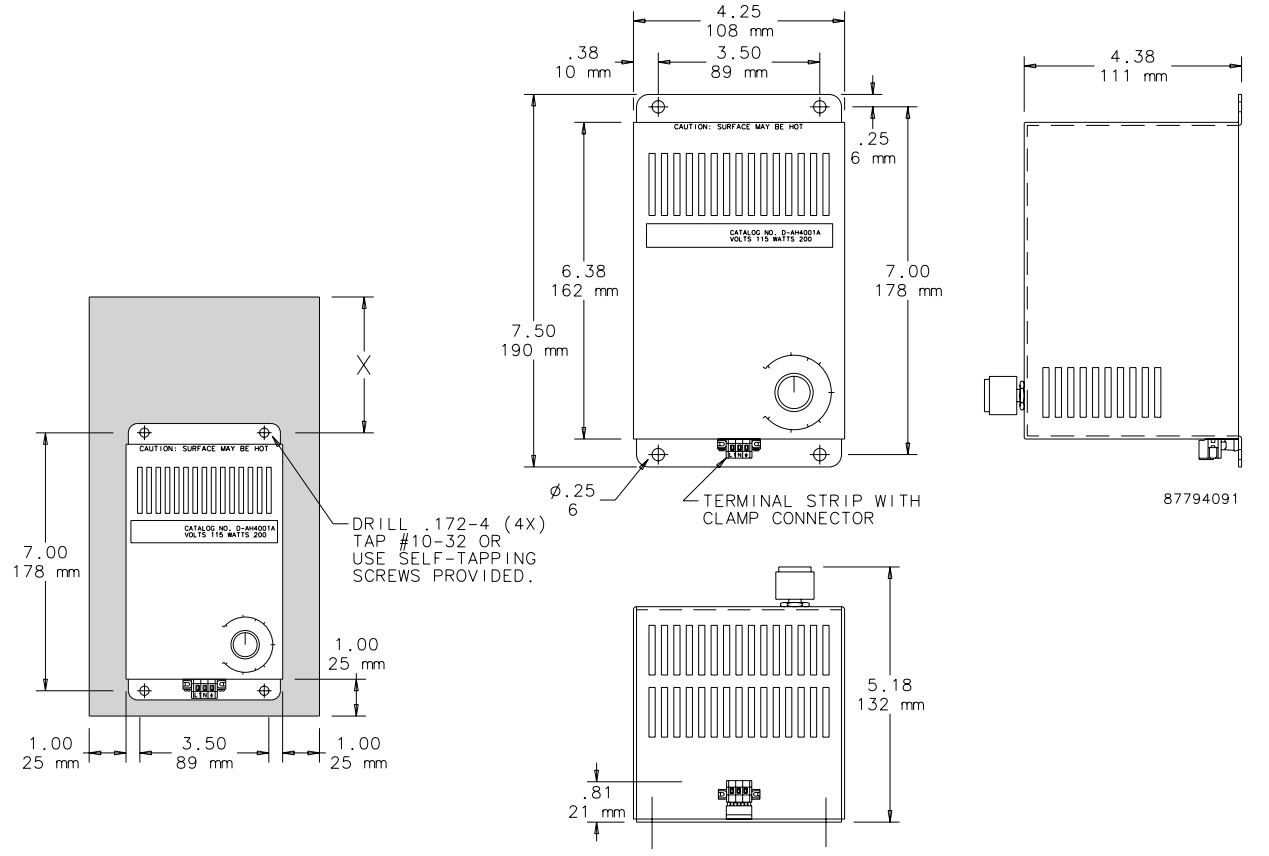

Dimensions and Clearance Range Drawing for DAH13001C and DAH13002C

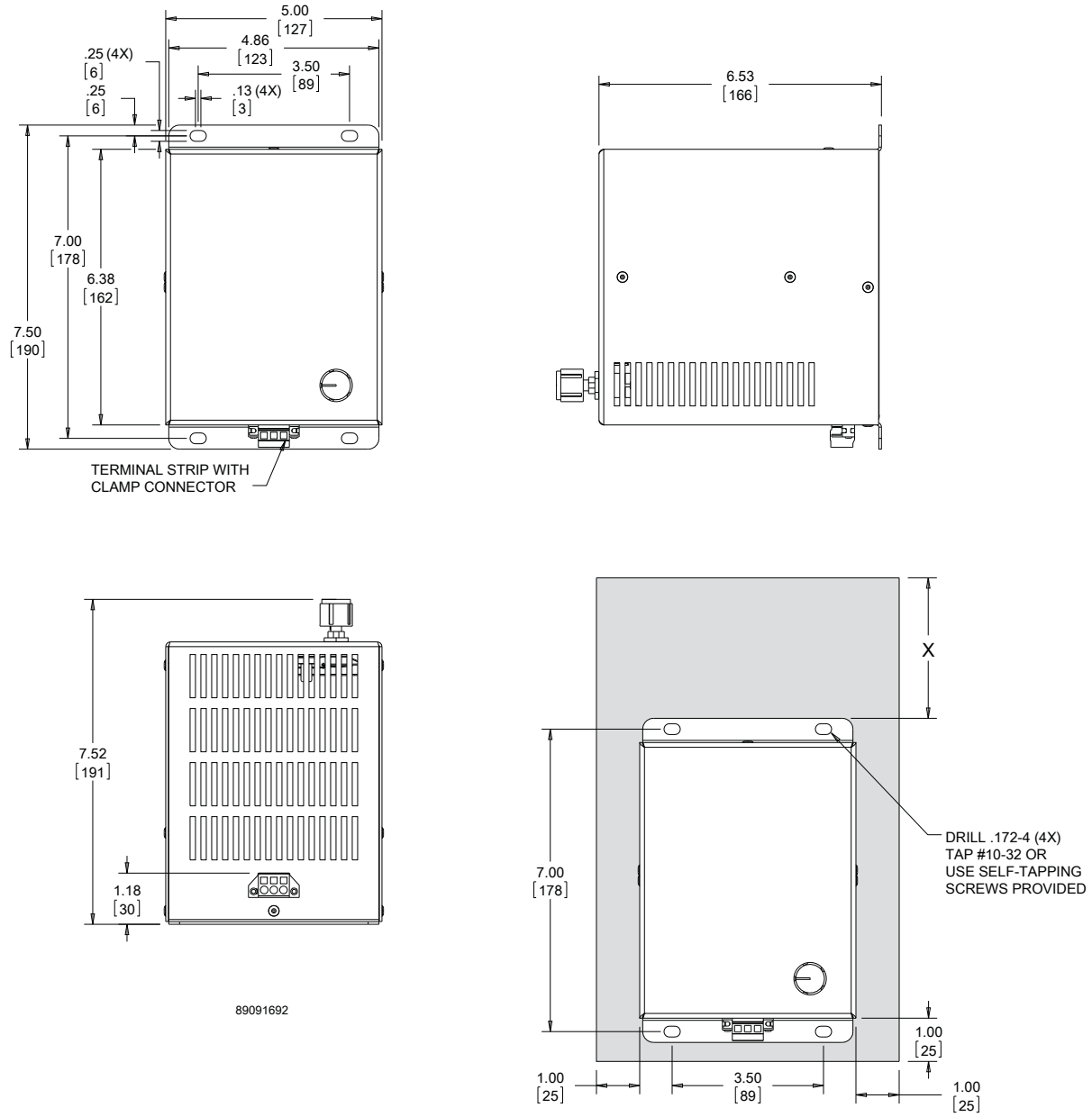

DEPARTMENT OF THE ARMY
ALBUQUERQUE DISTRICT, CORPS OF ENGINEERS
ALBUQERQUE DISTRICT OFFICE
4101 JEFFERSON PLAZA NE
ALBUQUERQUE, NM 87109

SUBMITTAL REVIEW VERIFICATION SHEET

PROJECT TITLE: Kirtland BFF Mid-Plume Pump and Treat System Expansion
CONTRACT NUMBER: W912DR-12-D-0006 DM01
DATE RECEIVED: 11-29-2017
DATE REVIEWED: 11-29-2017

DESCRIPTION OF ITEMS REVIEWED:

1. Submittal 10 Rev. #2 Well Pump and Components associated with KAFB-106239.

NO EXCEPTIONS TAKEN.	**X**
EXCEPTIONS AS NOTED ON DRAWINGS AND/OR ATTACHED SHEETS(S). RESUBMISSION NOT REQUIRED.	
EXCEPTIONS AS NOTED ON DRAWINGS AND/OR ATTACHED SHEETS(S). RESUBMISSION REQUIRED.	
RECEIPT ACKKNOWLEDGED.	

Notes: This revision is for the stainless steel pump end and motor that will be installed in place of those originally submitted.

NOTE: ITEMS REVIEWED AS TO GENERAL LAYOUT ONLY. DIMENSIONS AND QUANTITIES NOT CHECKED. REVIEW DOES NOT RELIEVE CONTRACTOR OF RESPONSIBILITIES FOR ANY ERRORS WHICH MAY EXIST AS CONTRACTOR SHALL BE RESPONSIBLE FOR DIMENSIONS AND DESIGN OF ADEQUATE CORRECTIONS, DETAILS AND SATISFACTORY CONSTRUCTION OF WORK.

SIGNATURE SALAZAR.CARLOS.F.IV.1232198555 Digitally signed by SALAZAR.CARLOS.F.IV.1232198555 DN: c=US, o=U.S. Government, ou=DoD, ou=PKI, ou=USA, cn=SALAZAR.CARLOS.F.IV.1232198555 Date: 2017.11.29 12:51:55 -07'00' **DATE** 11/29/2017

EA Engineering, Science, and Technology, Inc., PBC

Submittal Review Sheet 8

Project Name: **Kirtland BFF Mid-Plume Pump and Treat System Expansion**				Date Received: **11/29/2017**			
Project Owner: **Kirtland Air Force Base**				Checked By: **Tyler Curley**			
Contractor: **Techsas Inc.**	Engineer: **EA Engineering, Science and Technology, Inc., PBC.**			Log Page: **NA**			
Address: **4819 West Bayshore Drive** **Bacliff, TX 77518**	Address: **320 Gold Ave. SW, Suite 1300** **Albuquerque, NM 87102**			EA No.: **62599DM01**			
				Spec. Section: **00 00 00**			
				Drawing/Detail No.:			
ATTN: **Ed Butler**	ATTN: **Devon Jercinovic**			1st Sub		Re-Sub	
Date Transmitted: **11/29/2017**	Prev. Transmittal Date:						

Item No.	No. Copies	Description	Manufacturer	Mfg/Vendor Dwg or Detail	Action Taken*
10	1	Well Pump and Components	Various		**A**

The Action Designated Above is in Accordance with the Following Legend:

A – Furnish as Submitted
B – Furnish as Noted
C – Revise and Re-submit
1. Not enough information for review.
2. No reproducible submitted.
3. Copies illegible.
4. Not enough copies submitted.
5. Wrong sequence number.
6. Wrong resubmittal number.
7. Wrong Spec. Section.
8. Wrong form used.
9. See Comments.

D – Rejected
E – Engineer's Review not Required
1. Submittal not required.
2. Supplemental Information. Submittal retained for Information purposes only.
3. Information reviewed and approved on prior submittal.
4. See Comments.

Review is for general compliance with Contract Documents. No responsibility is assumed for correctness of dimensions or detail. Contractor is required to specify deviations from contract requirements. Lack of exceptions noted by Engineer does not waive Contractor's obligation to comply with Drawings and Specifications.

Comments:
Revision 2 – Updated submittal with 304 stainless steel pump end and pump motor.

By: _____ Date: 11/29/17

Distribution: [1] Contractor [1] Engineer [1] Owner

TRANSMITTAL DOCUMENT

Date:	**10/13/2017**	**From:**	**Ed Butler**
To:	**EA Engineering, Science, and Technology, Inc., 320 Gold Ave. SW, Suite 1300 Albuquerque, NM 87102 Devon Jercinovic**	**Job Name:**	**Kirtland AFB, NM Bulk Fuels Facility**
		Reference:	
		Transmittal Method:	**E-mail**
		Sent By:	**Ed Butler**

Submittal	Dwg. Number	Item Description
10 Rev #1	KAFB-106239 Extraction Well	Well Pump and Components
	Figure	

Revised by EA on 29NOV17

Ed Butler
TECHSAS, Inc.
4819 West Bayshore Drive
Bacliff, TX 77518

"I hereby certify that the (equipment) (material) (article) shown and marked in this submittal is that proposed to be incorporated with the Contract, is in compliance with the contract drawings and specification, can be installed in the allocated spaces, and is submitted for Contractor approval.

Certified by _____.
(Signature when applicable) Date: _____.

3-inch Galvanized Pipe

Standard Pipe

Wheatland Tube
A DIVISION OF ZEKELMAN INDUSTRIES

Standard Pipe: SureThread™ and ERW

Setting the standard in the standard pipe industry

With a tradition of service and quality that's 80-plus years strong, Wheatland Tube is the only domestic, full-line producer of continuous weld (CW) and electric resistance weld (ERW) ¼–18 NPS pipe today. Wheatland is also a worldwide leader in hot-dip galvanization technology.

¼–18 nominal sizes produced and stocked in a variety of ASTM standards

Standard hot-dip galvanization to ASTM A53 requirements

350 combinations of finish, end treatments and lengths

All Wheatland black and galvanized pipe (½–6 NPS) is approved for drinking water usage

A Full Line of Pipe Products for Any Application

Wheatland produces and stocks pipe of ¼–18 nominal sizes in a variety of ASTM standards. SureThread (ASTM A53) and ERW are used for mechanical and pressure applications, and for ordinary uses in steam, water, gas and air lines.

More than 350 different combinations of finish, end treatments and lengths are available on standard pipe. Our standard process is hot-dip galvanization to ASTM A53 requirements.

Surface finishes include black, passivate, galvanized, uncoated, pickled, pickled and oiled, bare and soluble oil. End finishes include plain end, roll groove, cut groove, threaded and coupled, and threads only (one or both ends).

Documented Quality Assurance

Wheatland facilities have quality systems in place and are ISO certified for Quality Management Systems. Strategically located in the U.S., we carry a large inventory and can ship quickly to meet your tight delivery schedules.

MADE IN THE USA

A53 Electric Resistance Weld Pipe, Type E, Grade B

Suitable for welding, threading and grooving

Finish options:
Black and hot-dip galvanized

Sizes:
Schedule 40, 2–18 NPS

Produced to ASTM A53/A53M, federal specification WW-P404 and ASME B36.10M

ASTM A53, TYPE E, WEIGHTS AND DIMENSIONS

TRADE SIZE	OD	NOMINAL WALL THICKNESS	WEIGHT
	in.	in.	lbs./ft.
2	2.375	0.154	3.66
2½	2.875	0.203	5.80
3	3.500	0.216	7.58
4	4.500	0.237	10.80
5	5.563	0.258	14.63
6	6.625	0.280	18.99
8	8.625	0.322	28.58
10	10.750	0.365	40.52
12	12.750	0.375	49.61
14	14.000	0.375	54.62
16	16.000	0.375	62.64
18	18.000	0.375	70.65

HYDROSTATIC AND NON-DESTRUCTIVE ELECTRIC TESTING

Hydrostatic inspection test pressures for plain-end pipe are listed in Table X 2.2 of the A53/A53M industry specification. Test pressures are maintained for a minimum of five seconds. Non-destructive electric testing of the weld seam is required on each length of ERW pipe NPS 2 and larger.

TENSILE REQUIREMENTS

TENSILE STRENGTH, MIN.	YIELD STRENGTH, MIN.
60,000 psi	35,000 psi

BENDING TEST (COLD)

DEGREE OF BEND	DIAMETER OF MANDREL
90°	12x pipe OD

A53 Continuous Weld Pipe, Type F, Grade A

The continuous weld process creates a uniform grain structure to make bending, cutting and threading easier

Ideal for applications with frequent threading, grooving and bending requirements

Finish options:
Black, passivate, bare, pickled and oiled, and hot-dip galvanized

Sizes:
¼–4 NPS

Standard and extra heavy

Produced to ASTM A53/A53M, federal specification WW-P404 and ASME B36.10M

TEST PRESSURES (GRADE A)

NOMINAL SIZE	TEST PRESSURE (psi)
¼	700
½	700
¾	700
1	700
1¼	1,200
1½	1,200
2	2,300
2½	2,500
3	2,220
3½	2,030
4	1,900

ASTM A53, TYPE F, WEIGHTS AND DIMENSIONS

TRADE SIZE	OD	SCHEDULE 40		SCHEDULE 80	
	in.	Wall (in.)	Weight (lbs./ft.)	Wall (in.)	Weight (lbs./ft.)
¼	0.54	0.088	0.43	0.119	0.54
⅜	0.675	0.091	0.57	0.126	0.74
½	0.84	0.109	0.85	0.147	1.09
¾	1.05	0.113	1.13	0.154	1.48
1	1.315	0.133	1.68	0.179	2.17
1¼	1.66	0.14	2.27	0.191	3
1½	1.900	0.145	2.72	0.2	3.63
2	2.375	0.154	3.66	0.218	5.03
2½	2.875	0.203	5.8	0.276	7.67
3	3.5	0.216	7.58	0.3	10.26
3½	4	0.226	9.12	0.318	12.52
4	4.5	0.237	10.8	0.337	15

TENSILE REQUIREMENTS

TENSILE STRENGTH, MIN.	YIELD STRENGTH, MIN.	ELONGATION IN 2
48,000 psi	30,000 psi	Refer to A53 table X 4.1, latest revisions—ASTM A53/A53M

BENDING TEST (LESS THAN NPS 2)

	DEGREE OF BEND	DIAMETER OF MANDREL
Standard	90°	12x pipe OD
Close Coiling	90°	8x pipe OD

FLATTENING TEST (NPS 2 AND GREATER)

To test the quality of the weld, we position the weld at 90° from the direction of force and flatten until the OD is ¾ of the original outside diameter. No cracks should occur along the inside or outside surface of the weld.

STANDARD PIPE SCHEDULE 40 — ASTM A53 GRADES A AND B

TRADE SIZE	DN DESIGNATOR	OD		ID		WALL THICKNESS		NOMINAL WEIGHT (MASS) PER UNIT LENGTH			
		in.	mm	in.	mm	in.	mm	Plain End (lbs./ft.)	Plain End (kg/m)	Threads & Couplings (lbs./ft.)	Threads & Couplings (kg/m)
¼	8	0.540	13.7	0.364	9.2	0.088	2.24	0.43	0.63	0.43	0.63
⅜	10	0.675	17.1	0.493	12.5	0.091	2.31	0.57	0.84	0.57	0.84
½	15	0.840	21.3	0.622	15.8	0.109	2.77	0.85	1.27	0.86	1.27
¾	20	1.050	26.7	0.824	20.9	0.113	2.87	1.13	1.69	1.14	1.69
1	25	1.315	33.4	1.049	26.6	0.133	3.38	1.68	2.50	1.69	2.50
1¼	32	1.660	42.2	1.380	35.1	0.140	3.56	2.27	3.39	2.28	3.40
1½	40	1.900	48.3	1.610	40.9	0.145	3.68	2.72	4.05	2.74	4.04
2	50	2.375	60.3	2.067	52.5	0.154	3.91	3.66	5.44	3.68	5.46
2½	65	2.875	73.0	2.469	62.7	0.203	5.16	5.80	8.63	5.85	8.67
3	80	3.500	88.9	3.068	77.9	0.216	5.49	7.58	11.29	7.68	11.35
3½	90	4.000	101.6	3.548	90.1	0.226	5.74	9.12	13.57	9.27	13.71
4	100	4.500	114.3	4.026	102.3	0.237	6.02	10.80	16.07	10.92	16.23
5	125	5.563	141.3	5.047	158.2	0.258	6.55	14.63	21.77	14.90	22.07
6	150	6.625	168.3	6.065	154.1	0.280	7.11	18.99	28.26	19.34	28.58
8	200	8.625	219.1	7.981	202.7	0.322	8.18	28.58	42.55	29.35	43.73
10	250	10.750	273.0	10.020	254.5	0.365	9.27	40.52	60.29	41.49	63.36
12	300	12.750	323.0	12.000	304.8	0.375	9.52	49.61	73.78	51.28	76.21
14	350	14.000	355.6	13.250	336.5	0.375	9.52	54.62	81.25	–	–
16	400	16.000	406.4	15.250	387.5	0.375	9.52	62.64	93.17	–	–
18	450	18.000	457.0	17.250	438.1	0.375	9.52	70.65	105.10	–	–

Black and galvanized Schedule 40 A53 ERW Grade B trade sizes ¼–8 are FM Approved.

FM APPROVED

EXTRA-HEAVY PIPE SCHEDULE 80 — ASTM A53, TYPE F, GRADE A

TRADE SIZE	DN DESIGNATOR	OD		ID		WALL THICKNESS		NOMINAL WEIGHT (MASS) PER UNIT LENGTH			
		in.	mm	in.	mm	in.	mm	Plain End (lbs./ft.)	Plain End (kg/m)	Threads & Couplings (lbs./ft.)	Threads & Couplings (kg/m)
¼	8	0.540	13.7	0.302	7.7	0.119	3.02	0.54	0.80	0.54	0.80
⅜	10	0.675	17.1	0.423	10.7	0.126	3.20	0.74	1.10	0.74	1.10
½	15	0.840	21.3	0.549	13.9	0.147	3.73	1.09	1.62	1.09	1.62
¾	20	1.050	26.7	0.742	18.8	0.154	3.91	1.48	2.20	1.48	2.21
1	25	1.315	33.4	0.957	24.3	0.179	4.55	2.17	3.24	2.19	3.25
1¼	32	1.660	42.2	1.278	32.5	0.191	4.85	3.00	4.47	3.03	4.49
1½	40	1.900	48.3	1.500	38.1	0.200	5.08	3.63	5.41	3.65	5.39
2	50	2.375	60.3	1.939	49.3	0.218	5.54	5.03	7.48	5.08	7.55
2½	65	2.875	73.0	2.323	59.0	0.276	7.01	7.67	11.41	7.75	11.52
3	80	3.500	88.9	2.900	73.7	0.300	7.62	10.26	15.27	10.35	15.39
3½	90	4.000	101.6	3.364	85.4	0.318	8.08	12.52	18.63	12.67	18.82
4	100	4.500	114.3	3.826	97.2	0.337	8.56	15.00	22.32	15.20	22.60

PERMISSIBLE VARIATIONS — ASTM A53 GRADES A AND B PIPE

	OD	OVER	UNDER
Outside Diameter	NPS ⅛ to 1½; DN 6 to 40	1/64 (0.4 mm)	1/64 (0.4 mm)
	NPS 2 and up; DN 50 and up	1%	1%
Wall Thickness at Any Point	—	—	12.5%
Weight	—	10%	10%

Mechanical Properties:
Grade A: Yield — 30,000 psi [205 MPa] minimum; Tensile — 48,000 psi [330 MPa] minimum.
Grade B: Yield — 35,000 psi [240 MPa] minimum; Tensile — 60,000 psi [415 MPa] minimum.

Wheatland Tube
A DIVISION OF ZEKELMAN INDUSTRIES

700 South Dock Street
Sharon, PA 16146

800.257.8182
info@wheatland.com
wheatland.com

Zekelman Industries

Corporate Office
227 West Monroe Street
Suite 2600
Chicago, IL 60606

312.275.1600
info@zekelman.com
zekelman.com

About Wheatland Tube Standard Pipe

Wheatland produces a full line of standard pipe—SureThread™ and ERW pipe—in a broad range of sizes. We're the industry leader in hot-dip galvanized pipe, and we offer more than 350 different combinations of finish, end treatments and lengths on our standard pipe.

All Wheatland manufacturing locations' quality management systems are certified to ISO requirements.

For more information, contact Wheatland Tube at:
800.257.8182 or **info@wheatland.com**
Or, visit our website at wheatland.com

Follow us on:

twitter.com/WheatlandTube
linkedin.com/company/zekelman-industries
youtube.com/ZekelmanIndustries
wheatland.com/blog

SPECIFICATIONS FOR STEEL PIPE

3-inch Glavanized Drop Pipe

Published pipe standards serve three functions.

1. They dictate manufacturing and testing requirements and prescribed methods of measuring the required mechanical and physical properties.

2. Without specifications, it would be difficult for the pipe buyer to establish a common ground of understanding with the producer as to product requirements.

3. When the pipe producer marks a specification on this product they warrant that the pipe is made from prime quality steel and meets all the requirements of the specification.

Standard pipe is manufactured and tested as prescribed by ASTM (formerly American Society for Testing Materials), an international, non-profit technical and Scientific organization formed for "the consensus development of standards on characteristics and performance of materials, products, systems and services." The society operates through more than 127 main technical committees. These committees function under regulations that ensure balanced representation among producers, users and general interest groups. The published standards, therefore, represent the consensus viewpoint of all involved. Line pipe and Oil Country products are manufactured and tested as prescribed by the American Petroleum Institute (API). The API operates similarly to the ASTM except that producers, consumers, and associations with primary interests in oil or gas are involved.

GRADE

Grade refers to divisions within different types of seamless and ERW pipe and designates mechanical properties such as minimum yield and tensile strengths. Grade B has higher tensile and yield strength than Grade A. It is manufactured to higher carbon content steel. Grade A, being a softer steel, is easier to bend and is recommended for use in close coiling and cold bending. Grade B has higher stress values and is better suited for machining operations. Grade C, which is available in ASTM-106, has higher tensile and yield strength than Grades A & B.

DIMENSIONS

Many changes have been made to ASTM specifications over the years. One of the more recent has been to make the specifications fit with metric, and more correctly, with the measurements of pipe and the related fittings.

To change the pipe outside diameter (OD) and wall thickness, simply multiply the SI dimensions by the appropriate factor to convert to metric. However, an inch is not a real inch. Nowhere on pipe 12" and smaller is there a corresponding measurement because this size has no real numerical value.

To solve this problem and still retain the intent of the size designation, the inch mark was removed from the column showing the size, and the term NPS was added as were the following words: The dimensionless designator NPS (nominal pipe size) has been substituted in this standard for such traditional terms as “nominal diameter,” “size,” and “nominal size.” They are now stated as NPS 1, NPS 2, NPS 6, NPS 12, NPS 14, etc.

WARNING

Most pipe specifications are restricted by tolerances for outside diameter, wall thickness, and weight. Pipe must meet all three criteria or material could be rejected. Please refer to the applicable specifications.

DIGEST OF COMMON - PIPE SPECIFICATIONS

Specification and Size Range Where Indicated	Scope	Type	Grades	Chemistry
A-120 (has been withdrawn) NPS 1/8 - 16	Blk & Galv Welded & SMLS pipe for ordinary use - not Intended for close coiling bending or high temperature service	CW ERW SMLS	None Specified	None Specified
A-53 NPS 1/8 - 26	Blk & Galv Welded & SMLS pipe suitable for welding and forming operations CW not intended for flanging. Grade B not intended for close coiling or severe cold forming. Pipe required for close coiling should be specified on order.	CW - Type F ERW - Type E SMLS - Type S	CW - Type F ERW & SMLS Grade A & B	**Composition, max %** **C Mg P S** **Type S (seamless pipe)** Open-health, electric-furnace or basic-oxygen: Grade A 0.25 .095 0.05 0.045 Grade B 0.30 1.20 0.05 0.045 **Type E (electric resistance welded)** Open-health, electric-furnace or basic-oxygen: Grade A 0.25 .095 0.05 0.045 Grade B 0.30 1.20 0.05 0.045 **Type F (furnace welded pipe)** Open-health, electric-furnace or basic-oxygen: 0.30 1.20 0.05 0.045 Ladle and Check Limits
A-106 NPS 1/8 - 26	SMLS for high temperature service. Suitable for bending, flanging, and similar forming operations.	SMLS Only	Grades A, B & C	**Composition, max %** **Element* Grade A Grade B Grade C** Chrome 0.40 0.40 0.40 Copper 0.40 0.40 0.40 Molybdenum 0.15 0.15 0.15 Nickel 0.40 0.40 0.40 Vanadium 0.08 0.08 0.08 *These five elements combined shall not exceed 1%.
A-135 NPS 2-30	Electric resistance welded for conveying fluid, gas or vapor.	ERW Only	Grades A & B	**% max** **Element Grade A Grade B** Carbon 0.25 0.30 Manganese 0.95 1.20 Phosphorus 0.035 0.035 Sulfur 0.035 0.035 Ladle and check limits
A-252 NPS 6 - 24	ERW or SMLS for Pipe Piles	ERW SMLS DSAW	Grades 1, 2, 3	All grades .05 Max. % Phos. Ladle & check limits
A-333	SMLS & Welded Carbon & Alloy Steel pipe for low temperature service	SMLS ERW	1, 3, 4, 6, 7, 8, 9	**% max** **GR C MN P S Si Ni CR CU** 1 .30 .40 - 1.05 .025 3 .19 .31 - .64 .025 .025 .18 - .37 3.18 -3.82 4 .12 .50 - 1.05 .025 .025 .08 - .37 .47 - .96 .44 - 1.01 .40 - .75 .04 - .30 6 .30 .29 - 1.06 .025 .025 .10min 7 .10 .90 max. .025 .025 .13 - .32 2.03 -2.57 8 .13 .90 max. .025 .025 .13 - .32 8.40 - 9.60 9 .20 .40 - 1.05 .025 .025 1.80 -2.24 .75 - 1.25 10 .20 1.15 -1.50 .035 .018 .10 - .36 .25 max. .15 max. .15 max. .06 max. 11 .10 0.90 max. .025 .025 0.36 max. 35.0 -37.0 .50 max.
A-335 NPS 1/8 - 26	SMLS Alloy Steel Pipe for high temperature service	SMLS Only	P1, P2, P5, P5b, P5c, P9, P11, P12, P15, P21, P22, P91	**Grade UNS Des. C Mg P max S max Si Cr Mo** P1 K11522 .10-20 .30-80 .025 .025 .10-50 .44-65 P2 K11547 .10-20 .30-61 .025 .025 .10-30 .5-.81 .44-65 P5 K41545 .15max .30-80 .025 .025 .50max 4-6 .45-65 P5b K51545 .15max .30-80 .025 .025 1.00-2.00 4-6 .45-65 P5c K41246 .12max .30-80 .025 .025 .50max 4-6 .45-65 P9 S50400 .15max .30-80 .025 .025 .25-1.00 8-10 .80-1.10 P11 K11507 .05-.15 .30-80 .025 .025 .50-1.00 1-1.5 .44-65 P12 K11582 .05-.15 .30-80 .025 .025 .50max .80-1.25 .44-65 P15 K11578 .05-.15 .30-80 .025 .025 1.15-1.65 .44-65 P21 K31545 .05-.15 .30-80 .025 .025 .50max 2.65-3.35 .80-1.06 P22 K21590 .05-.15 .30-80 .025 .025 .50max 1.9-2.5. .87-1.13 P91 K91580 .08-.12 .30-80 .020 .010 .20-.50 8-9.5 .85-1.05 a. New designation established in accordance with Practice E-527 and SAE J1086. Practice for Numbering Metals and Alloys (UNS). b. Grade P5c shall have a titanium content of not less than 4 times the carbon content and not more than 0.70% or a columbium content of 8 to 10 times the carbon content.
A-501 Square & Rectangular 1" - 10" Round 1" - 24"	Hot Formed Welded & SMLS Round, Square & Rectangular Tubing	SMLS Welded	None Specified	**Composition %** **Element Heat Analysis Product Analysis** Carbon, max. 0.26 0.30 Phosphorus, max. 0.035 0.045 Sulfur, max. 0.035 0.045 Copper, min.* 0.20 0.18 *When copper steel is specified
A-587 NPS 1/2" - 10"	EW Pipe for process lines suitable for severe forming involving flanging and close bending	ERW Only	None Specified	**% MAX. % MIN.** **C MN P S AL** .15 .27-.63 .035 .035 .02-.11
A-589 Type 1 NPS 6-16	SMLS & Welded Water Pipe Type 1 Drive Pipe	Type 1 SMLS or Welded	Type 1 A or B	**% MAX.** **P S** .050 .060

CONTINUED

DIGEST OF COMMON - PIPE SPECIFICATIONS

CONTINUED

Specification and Size Range Where Indicated	Tensiles	Hydrostatic	Tests Bend	Flattening	Wall Tolerance	OD Tolerance
A-120 (has been withdrawn) NPS 1/8 - 16	None Specified	yes	None Specified	None Specified	Min. wall shall not be more than 12.5% under nominal wall	1/2" - 1-1/2" + 1/64" -1/32" 2" & over- +/- 1% of OD
A-53 NPS 1/8 - 26	MIN. P.S.I. Grade / Yield / Tensile CW 25,000 45,000 GR-A 30,000 48,000 GR-B 35,000 60,000	yes	yes - 2" & under Std. & XHY 90° to 12 times nom. diameter. Close coiling 180° to 8 times nom. dia.	yes - over 2" nom. XHY & lighter. CW 90° to 75% ODv	Min. wall shall not be more than 12.5% under nominal wall	1/2" - 1-1/2" + 1/64" -1/32" 2" & over- +/- 1% of OD
A-106 NPS 1/8 - 26	MIN. P.S.I. Grade / Yield / Tensile A 30,000 48,000 B 35,000 60,000 C 40,000 70,000	yes	Not req'd over 2" diameter. 90° to 12 times dia. Close coiling 180° to 8 times diameter	yes - over 2" dia.	Min. wall shall not be more than 12.5% under nominal wall	1/8" - 1-1/2" + 1/64" -1/32" 2" - 4" +/- 1/32" 5" - 8" + 1/16" -1/32" 10" - 18" + 3/32" -1/32" 18" & over- 1/8" -1/32"
A-135 NPS 2-30	MIN. P.S.I. Grade / Yield / Tensile A 30,000 48,000 B 35,000 60,000	yes	None Specified	yes - for all sizes to 2/3 OD	Min. wall shall not be more than 12.5% under nominal wall	For all sizes +/- 1% of OD
A-252 NPS 6 - 24	MIN. P.S.I. Grade / Yield / Tensile 1 30,000 50,000 2 35,000 60,000 3 40,000 66,000	None Specified	None Specified	None Specified	Min. wall shall not be more than 12.5% under nominal wall. Surface defects no more than 25% deep	+/- 1% of OD
A-333	MIN. P.S.I. Grade / Yield / Tensile 1 30,000 50,000 2 35,000 65,000 3 35,000 60,000 6 35,000 60,000 7 35,000 65,000 8 75,000 100,000 9 46,000 63,000 10 65,000 80,000 11 35,000 65,000	yes	None Specified	yes - for all sizes	Min. wall shall not be more than 12.5% under nominal wall	2" - 4" +/- 1/32" 5" - 8" + 1/16" - 1/32" 10" - 18" + 3/32" - 1/32" 18" & + 1/8" Over - 1/32"
A-335 NPS 1/8 - 26	MIN. P.S.I. Grade / Yield / Tensile P1 30,000 55,000 P2 30,000 55,000 P-91 60,000 85,000 All Others 30,000 60,000	yes	yes	yes	Min. wall shall not be more than 12.5% under nominal wall	1/8" - 1-1/2" + 1/64" -1/32" 2" - 4" +/- 1/32" 4" - 8" + 1/16" - 1/32" 10" - 18" + 3/32" - 1/32" 20" - 26" + 1/8" -1/32"
A-501 Square & Rectangular 1" - 10" Round 1" - 24"	MIN. P.S.I. Yield / Tensile 36,000 58,000	None Specified	Round None Shapes Yes	None Specified	None Specified Weight shall not be less than specified by more than 3.5%. Surface defect no more than 15%	Round: 1-1/2" & under + 1/65" - 1/32" 2" & over +/- 1% of OD Shapes: 2-1/2" & under +/- .020 2-1/2" - 3-1/2" +/- .025 3-1/2" - 5-1/2" +/- .030 5-1/2" & over +/- 1%
A-587 NPS 1/2" - 10"	MIN. P.S.I. Yield / Tensile 30,000 48,000	None Specified Nondestructive test shall be made	None Specified A flange test shall be made	yes - for all sizes	Refer to table 4 ASTM Standards for A-587	Refer to table 4 ASTM Standards for A-587
A-589 Type 1 NPS 6-16	MIN. P.S.I. Grade / Yield / Tensile CW 25,000 45,000 A 30,000 48,000 B 35,000 60,000	yes	None Specified	None Specified	Min. wall shall not be more than 12.5% nominal wall	1-1/2" & under + 1/64" - 1/32" 2" & over +/- 1% of OD

DIGEST OF COMMON - PIPE SPECIFICATIONS (cont.)

Specification and Size Range Where Indicated	Scope	Type	Grades	Chemistry
Type II NPS 1-12	Type II Water well reamed and drifted	Type II SMLS, ERW or CW	Type II A or CW	% MAX. P .050 S .060
Type III NPS 1-2	Type III Driven well pipe	Type III SMLS, ERW or CW	Type III A or CW	
Type IV NPS 3-8	Type IV Water well casing	Type IV SMLS, ERW or CW	Type IV A or CW	
API 5L	Welded and SMLS Line pipe	CW, ERW, SMLS DSAW	CW Grade 25 DSAW ERW & SMLS Grades A & B	Ladle % Max GR C MN P S A-25 .21 .60 .08 .06 SMLS A .22 .90 .04 .05 B .27 1.15 .04 .05 ERW A .21 .90 .04 .05 B .26 1.15 .04 .05
API 5LX	Welded and SMLS High test line pipe	ERW & SMLS DSAW	X-42 X-46 X-52 X-60 X-65 X-70 X-80	Ladle % Max % Min GR C MN P S CB V SMLS X-42 .29 1.25 .04 .05 X-46 .31 1.35 .04 .05 X-52 .31 1.35 .04 .05 X-60 .26 1.35 .04 .05 .02 ERW X-42 .28 1.25 .04 .05 X-46 .30 1.35 .04 .05 X-52 .30 1.35 .04 .05 X-60 .26 1.35 .04 .05 .005
Federal WWP-406	Comparable to A-120 (has been withdrawn)			
Federal WWP-404	Comparable to A-53			

CONTINUED

ASTM & API SPECIFICATIONS WITH COMPARABLE ANSI DESIGNATIONS

ASTM OR API DESIGNATIONS	ANSI DESIGNATIONS		TITLE
	CURRENT	REPLACED	
ASTM A-53	B-125.1	B-36.1	Welded & Seamless pipe
ASTM A-106	B-125.30	B-36.3	Seamless carbon steel pipe for high temperature service
ASTM A-120*	B-125-2	B-36.20	Black & galvanized and seamless steel pipe for ordinary uses
ASTM A-134	B-125.55	B-36.4	Electric-fusion (Arc) welded steel plate pipe (sizes 16" & over)
ASTM A-135	B-125.3	B-36.5	Electric resistance welded pipe
ASTM A-139	B-125.31	B-36.9	Electric-fusion (Arc) welded steel plate pipe (sizes 4" & over)
ASTM A-155	B-125.4	B-36.11	Electric fusion welded steel pipe for high temperature service
ASTM A-211	B-125.56	B-36.16	"Insert discontinued 1994"
ASTM A-312	B-125.16	B-36.26	Seamless and welded austenitic stainless steel pipe
ASTM A-333	B-125.17	B-36.40	Seamless and welded steel pipe for low temperature service
ASTM A-335	B-124.24	B-36.42	Seamless ferritic alloy steel pipe for high temperature service

* has been withdrawn

DIGEST OF COMMON - PIPE SPECIFICATIONS

CONTINUED

Specification and Size Range Where Indicated	Tensiles	Hydrostatic	Tests Bend	Flattening	Wall Tolerance	OD Tolerance
Type II NPS 1-12	MIN. P.S.I. Grade / Yield / Tensile CW / 25,000 / 45,000 A / 30,000 / 48,000 B / 35,000 / 60,000	yes	None Specified	None Specified	Min. wall shall not be more than 12.5% under nominal wall	1-1/2" & under + 1/64" - 1/32" 2" & over- +/- 1% of OD
Type III NPS 1-2 Type IV NPS 3-8 API 5L	MIN. P.S.I. Grade / Yield / Tensile A-25 / 25,000 / 45,000 A / 30,000 / 48,000 B / 35,000 / 60,000	yes	yes-for A-25 pipe 2-3/8 & smaller	yes	2-7/8" & smaller + 20% - 12.5% 3-1/2" OD + 18% - 12.5% 4" - 18" + 15% - 12.5% 20" & larger + 17.5% - 10%	 1.900 & under + .016" - .031" 2-38" - 4" OD +/- 1% 4-1/2" & over +/- .75%
API 5LX	MIN. P.S.I. Grade / Yield / Tensile X-42 / 42,000 / 60,000 X-46 / 46,000 / 63,000 X-52 / 52,000 / 66,000 X-60 / 60,000 / 75,000	yes	None Specified	yes - for ERW	+ 15% - 12.5%	+/- .75%
Federal WWP-406	Comparable to A-120					
Federal WWP-404	Comparable to A-53					

ASTM & API SPECIFICATIONS WITH COMPARABLE ANSI DESIGNATIONS

ASTM A-358	B-125.57	B-36.47	Electric fusion welded austenitic chromium-nickel alloy steel pipe for high temperature service
ASTM A-369	B-125.77	B-36.48	Carbon & ferritic alloy steel forged and bored pipe for high temperature service
ASTM A-376	B-125-25	B-36.43	Seamless austenitic steel pipe for high temperature temperature central station service
ASTM A-381	B-125.25	B-36.49	Metal arc welded steel pipe for high pressure transmission systems
ASTM A-405	B-125.26	B-36.44	Seamless ferritic alloy steel pipe specially heat treated for high temperature service
ASTM A-523	G-62.5		Plain end seamless & ERW steel pipe for high pressure pipe type cable circuits
ASTM A-524	B-125.37	B-36.56	Seamless C.S. pipe for process piping
ASTM A-530	B-125.20	B-36.57	General requirements for specialized carbon and alloy steel pipe
API 5L			Line pipe
API 5LX			High test line pipe
API 5LS			Spiral weld line pipe

FEDERAL

WWP-404c is similar to ASTM A-53 except that Government inspection and continuous identification marking of electric weld and seamless is mandatory. It covers black and galvanized welded and seamless pipe for flanging, bending, and coiling and for use with fresh water, oil, steam, air, and gas on shore plus a limited number of shipboard uses. Sizes 1/8 inch through 24 inch. WWP-406c is a federal specification comparable to ASTM A-120 (withdrawn 1988). Mills can certify that A-120 pipe in a distributor's stock meets all the requirements of WWP-406c.

A.W.W.A.

C-200 covers black welded and seamless pipe intended for the conveyance of water in sizes 6 inch and larger. Specification prescribes hydrostatic test pressures for sizes of pipe covered. Tensile, flattening, and bending tests are required.

ASME

B31.1 Code for pressure piping. Prescribes minimum requirements for design, manufacture, test, and installations of power piping systems for steam generating plants, central heating plants, and industrial plants.

B31.2 Fuel Gas Piping.

B31.3 Petroleum Refinery Piping.

B31.4 Liquid Petroleum Transportation Piping Systems.

B31.5 Refrigeration Piping.

B31.7 Nuclear Power Piping

B31.8 Gas Transmission and Distributing Piping Systems. Covers design, fabrication, installation, inspection, testing, and the safety aspects of operation and maintenance of gas transmission and distribution systems.

ANSI (ASME)

B36.10 American Standard for Wrought-Steel and Wrought-Iron pipe. Designates dimensions, weights, and schedule numbers for welded and seamless pipe. Schedules 10 through Schedules Double Extra Heavy (DXH/XXH).

B36.19 American Standard for Stainless Steel Pipe. Designates dimensions, weights, and schedule numbers for welded and seamless Stainless Steel Pipe, Schedules 5 through Schedules 80.

A.A.R.

M-111 covers black and galvanized welded and seamless pipe intended for coiling, bending, flanging, and other special purposes; and is suitable for welding. Purpose for which pipe is intended should be stated on orders. M-111 is comparable in most requirements to ASTM A-53.

M-130 covers black and galvanized welded and seamless pipe for ordinary uses in steam, water, gas, and air lines. Sizes 1/8 inch through 12 inch. Pipe to this specification is not intended for close coiling, bending, or high temperature service. M-130 is comparable in most requirements to ASTM A-120.

Wheatland Tube
A DIVISION OF ZEKELMAN INDUSTRIES

Zekelman Industries
Wheatland Tube Division, USA
700 Dock St. Sharon, PA 16146 USA

MTR By Run
Requested by KELLY PIPE COMPANY-AD

CERTIFIED MATERIAL TEST REPORT

Type 3.1/3.1.B in accordance with EN 10204/ISO 10204/EN 10474/ISO 10474/DIN50049

Heat Analysis

Run/Sample	Date	Item Description	C	Mn	P	S	CU	Ni	Cr	Mo	V	Si	Al	T/S	Y/S	El
6246/5	11/14/2011	3 STD GALV A53 PIPE PE W/2.0 ZINC	0.12	0.45	.011	.014	0.02	.010	.030	.004	.003	.008	.048	54729	33280	43

COMMENTS

This is to certify the product described herein was Made in the USA by the Wheatland Tube Division, USA* and sampled, tested and/or inspected in accordance with the latest revision, at the time of manufacture, of the specification listed above and fulfills the requirements in such respects. All the required mechanical, physical, hydrostatic, non-destructive, flattening, and bend tests have been successfully completed. The product(s) described above meet(s) one of the following specifications:

- Continuous Butt Weld (CW) Steel Pipe SureThread™ meeting the requirements of ASTM A53/A53M 2012/ASME SA53 2013 Type F, Grade A.
- Electric Resistance Welded (ERW) Steel Pipe meeting the requirements of ASTM A53/A53M 2012/ASME SA53 2013, Type E, Grade B.
- Electric Resistance Welded (ERW) Steel Pipe meeting the requirements of ASTM A135/A135M 2014, Type E, Grade A.
- Electric Resistance Welded (ERW) Steel Pipe meeting the requirements of ASTM A795/A795M 2013, Type E, Grade A.
- Steel Fence Pipe meeting the requirements of ASTM F1083 2013.
- Steel Coupling Stock meeting the requirements of ASTM A865/A865M 2012.
- API Line pipe meeting the requirements of ANSI/API Specification 5L 45th Edition or ANSI/API Specification 5CT 9th Edition.

*Note: 8 inch Schedule 10 ASTM A135 Black and Galvanized pipe is made in Canada (JMC Steel Group) and finished in the USA.
*Note: 8 inch through 16 inch ASTM A53 ERW Grade B pipe can be made in Canada (JMC Steel Group) and finished in the USA.
*Note: 18 inch ASTM A53 ERW Grade B pipe is made in the USA.

Michael S Ryan
Manager Technical Services

304 Threaded Stainless Drop Pipe

outokumpu Pipe Program

high performance stainless steel

Outokumpu Stainless Pipe
Tel: 800 731 7473
Fax: 800 416 7473
pipesales@outokumpu.com
outokumpu.com/pipe

Made in USA

Items shown are produced regularly for quick delivery from stock or within competitive industry lead-times. Please call an Outokumpu representative for availability.
Our Wildwood facility is ISO 9001 approved.

Stainless Steel Pipe Sizes and Weights

		SCH 5S		SCH 10S		SCH 40S		SCH 80S		SCH 10		SCH 20		SCH 30		SCH 40		SCH 60		SCH 80		SCH 100		SCH 120		SCH 140		SCH 160		Up to	
Nominal Pipe Size In.	Outside Dia. In.	Wall In.	Wt/Ft lbs	Wall In.	Wt/Ft lbs	Wall In.	Wt/Ft lbs	Wall In.	Wt/Ft lbs	Wall In.	Wt/Ft lbs	Wall In.	Wt/Ft lbs	Wall In.	Wt/Ft lbs	Wall In.	Wt/Ft lbs	Wall In.	Wt/Ft lbs	Wall In.	Wt/Ft lbs	Wall In.	Wt/Ft lbs	Wall In.	Wt/Ft lbs	Wall In.	Wt/Ft lbs	Wall In.	Wt/Ft lbs	Wall In.	Wt/Ft lbs
1/2	.840	.065	.5431	.083	.6773	.109	.8590	.147	1.098	—	—	—	—	—	—	.109	.8590	—	—	0.147	1.098	—	—	—	—	—	—	0.188	1.321	—	—
3/4	1.050	.065	.6902	.083	.8652	.113	1.141	.154	1.487	—	—	—	—	—	—	.113	1.141	—	—	0.154	1.487	—	—	—	—	—	—	0.219	1.962	—	—
1	1.315	.065	.8759	.109	1.417	.133	1.695	.179	2.192	—	—	—	—	—	—	.133	1.695	—	—	0.179	2.192	—	—	—	—	—	—	0.250	2.870	—	—
1 1/4	1.660	.065	1.118	.109	1.822	.140	2.294	.191	3.025	—	—	—	—	—	—	.140	2.294	—	—	0.191	3.025	—	—	—	—	—	—	0.250	3.800	—	—
1 1/2	1.900	.065	1.286	.109	2.104	.145	2.743	.200	3.665	—	—	—	—	—	—	.145	2.743	—	—	0.200	3.665	—	—	—	—	—	—	0.281	4.904	—	—
2	2.375	.065	1.619	.109	2.663	.154	3.687	.218	5.069	—	—	—	—	—	—	.154	3.687	—	—	0.218	5.069	—	—	—	—	—	—	0.344	7.532	—	—
2 1/2	2.875	.083	2.498	.120	3.564	.203	5.847	.276	7.733	—	—	—	—	—	—	.203	5.847	—	—	0.276	7.733	—	—	—	—	—	—	0.375	10.106	—	—
3	3.500	.083	3.057	.120	4.372	.216	7.647	.300	10.348	—	—	—	—	—	—	.216	7.647	—	—	0.300	10.348	—	—	—	—	—	—	0.438	14.458	—	—
3 1/2	4.000	.083	3.505	.120	5.019	.226	9.194	.318	12.622	—	—	—	—	—	—	.226	9.194	—	—	0.318	12.622	—	—	—	—	—	—	—	—	—	—
4	4.500	.083	3.952	.120	5.666	.237	10.891	.337	15.124	—	—	—	—	—	—	.237	10.891	—	—	0.337	15.124	—	—	0.438	19.179	—	—	0.531	22.719	—	—
5	5.563	.109	6.409	.134	7.842	.258	14.754	.375	20.972	—	—	—	—	—	—	.258	14.754	—	—	0.375	20.972	—	—	0.500	27.290	—	—	0.625	33.27	—	—
6	6.625	.109	7.656	.134	9.376	.280	19.152	.432	28.841	—	—	—	—	—	—	.280	19.152	—	—	0.432	28.841	—	—	0.562	36.73	—	—	0.719	45.78	—	—
8	8.625	.109	10.01	.148	13.52	.322	28.82	.500	43.79	—	—	.250	22.57	.277	24.93	.322	28.82	0.406	35.97	0.500	43.790	0.594	51.43	0.719	61.28	0.812	68.39	0.906	75.39	—	—
10	10.750	.134	15.33	.165	18.83	.365	40.86	.500	55.25	—	—	.250	28.30	.307	34.56	.365	40.86	0.500	55.25	0.594	65.030	0.719	77.75	0.844	90.13	1.000	105.11	1.125	116.73	—	—
12	12.750	.156	21.18	.180	24.39	.375	50.03	.500	66.03	—	—	.250	33.69	.330	44.18	.406	54.03	0.562	73.84	0.688	89.460	0.844	108.32	1.000	126.67	1.125	140.98	1.312	161.77	—	—
14	14.000	.156	23.28	.188	27.99	.375	55.08	.500	72.77	.250	37.06	.312	46.04	.375	55.08	.438	64.03	0.594	85.84	0.750	107.130	0.938	132.08	1.094	152.20	1.250	171.81	1.406	190.88	—	—
16	16.000	.165	28.17	.188	32.05	.375	63.16	.500	83.55	.250	42.45	.312	52.76	.375	63.16	.500	83.55	0.656	108.51	0.844	137.890	1.031	166.37	1.219	194.23	1.438	225.73	1.594	247.54	—	—
18	18.000	.165	31.72	.188	36.10	.375	71.25	.500	94.33	.250	47.84	.312	59.49	.438	82.92	.562	105.65	0.750	139.47	0.938	172.520	1.156	209.90	1.375	246.42	1.562	276.79	1.781	311.39	—	—
20	20.000	.188	40.15	.218	46.49	.375	79.33	.500	105.11	.250	53.23	.375	79.33	.500	105.11	.594	124.26	0.812	167.96	1.031	210.820	1.281	258.49	1.500	299.15	1.750	344.29	1.969	382.72	—	—
22	22.000	.188	44.21	.218	51.19	.375	87.42	.500	115.89	.250	58.62	.375	87.42	.500	115.89	—	—	0.875	199.26	1.125	253.160	1.375	305.71	1.625	356.92	1.875	406.78	2.125	455.29	—	—
24	24.000	.218	55.98	.250	64.01	.375	95.50	.500	126.67	.250	64.01	.375	95.50	.562	142.00	.688	172.90	0.969	240.58	1.219	299.360	1.531	370.83	1.812	433.41	2.062	487.65	2.344	547.21	3.000	679.14
26	26.000	—	—	—	—	—	—	—	—	.312	86.40	.500	137.45	—	—	—	—	—	—	—	—	—	—	—	—	—	—	—	—	3.000	743.82
28	28.000	—	—	—	—	—	—	—	—	.312	93.12	.500	148.23	.625	184.44	—	—	—	—	—	—	—	—	—	—	—	—	—	—	3.000	808.50
30	30.000	.250	80.18	.312	99.85	—	—	—	—	.312	99.85	.500	159.01	.625	197.91	—	—	—	—	—	—	—	—	—	—	—	—	—	—	3.000	873.18
32	32.000	.250	85.57	—	—	—	—	—	—	—	—	—	—	—	—	—	—	—	—	—	—	—	—	—	—	—	—	—	—	3.000	937.86

Items shown in gray are not part of our standard manufacturing capabilities. For most 300 series stainless steels computed weights based on: wt/ft = 10.78 (OD-Wall) Wall.

In addition to standard specification requirements Outokumpu can offer the following VALUE ADDED SERVICES:

Eddy Current
Hydrostatic Testing
Radiographic Testing - Film and Real Time Radiography
Penetrant Testing
Positive Material Identification - X-ray fluorescence, and optical emission (Carbon)
Mechanical Test Laboratory: • Mechanical Testing - Tensile, bend testing, etc. • Corrosion testing
Beveling, end caps, girth welding, special line marking
Export packing
Fast track program for one week lead time on small orders
Up to 60 foot lengths

Grades

Core range for corrosive environments	304/4301, 304L/4307, 321/4541, 347/4550
Supra range for highly corrosive environments	316/4401, 316L/4404
Forta range for duplex and other high strength	DX 2205 Code Plus Two®, LDX 2101, Zeron 100, SDX 2507
Ultra range for extremely corrosive environments	904L, 254 SMO, 317, 317L, 317LM, 317LMN
Therma range for high service temperatures	253 MA, 310S/4845, 304H/4948, 321H/4878, 347H/4550, 153 MA, 316H, 309S/4833, 309H
Nickel alloys	C276, 600, 601, 622, 625, 800, 800H, 800HT, 825, Alloy 20
Hastelloy®	B-2, B-3, G-30, C-4, C-22, C-276, C-2000
ASTM	A312, A358, A778, A790, A928
*Applicable ASTM A & B and ASME SA & SB specifications	

Additional grades available upon request.

				SCH 10 through 36.00" OD				SCH 20 through 36.00" OD				SCH 40 for 36.00" OD																	
Nominal Pipe	Outside	Wall	Wt/Ft	Wall	Wt/Ft	Wall	Wt/Ft	Wall	Wt/Ft	Wall	Wt/Ft	Wall	Wt/Ft	Wall	Wt/Ft	Wall	Wt/Ft	Wall	Wt/Ft	Wall	Wt/Ft	Wall	Wt/Ft	Wall	Wt/Ft	Wall	Wt/Ft	Cont.	Wall	Wt/Ft
Size	Dia. in.	in.	lbs	in.	lbs	in.	lbs	in.	lbs	in.	lbs	in.	lbs	in.	lbs	in.	lbs	in.	lbs	in.	lbs	in.	lbs	in.	lbs	in.	lbs		in.	lbs
32	32.000	.250	85.57	.312	106.58	.375	127.84	.500	169.79	.650	219.67	.750	252.66	.825	277.25	1.000	334.18	1.125	374.44	1.375	453.94	1.500	493.19	1.750	570.67	→	3.000	937.86
34	34.000	.250	90.96	.312	113.30	.375	135.93	.500	180.57	.650	233.68	.750	268.83	.825	295.04	1.000	355.74	1.125	398.69	1.375	483.58	1.500	525.53	1.750	608.40	→	3.000	1002.54
36	36.000	.250	96.35	.312	120.03	.375	144.01	.500	191.35	.650	247.70	.750	285.00	.825	312.83	1.000	377.30	1.125	422.95	1.375	513.23	1.500	557.87	1.750	646.13	→	3.000	1067.22
38	38.000	.250	101.74	.312	126.76	.375	152.10	.500	202.13	.650	261.71	.750	301.17	.825	330.62	1.000	398.86	1.125	447.20	1.375	542.87	1.500	590.21	1.750	683.86	→	3.000	1131.90
40	40.000	.250	107.13	.312	133.49	.375	160.18	.500	212.91	.650	275.73	.750	317.34	.825	348.40	1.000	420.42	1.125	471.46	1.375	572.52	1.500	622.55	1.750	721.59	→	3.000	1196.58
42	42.000	.250	112.52	.312	140.21	.375	168.27	.500	223.69	.650	289.74	.750	333.51	.825	366.19	1.000	441.98	1.125	495.71	1.375	602.16	1.500	654.89	1.750	759.32	→	3.000	1261.26
44	44.000	.250	117.91	.312	146.94	.375	176.35	.500	234.47	.650	303.75	.750	349.68	.825	383.98	1.000	463.54	1.125	519.97	1.375	631.81	1.500	687.23	1.750	797.05	→	3.000	1325.94
46	46.000	.250	123.30	.312	153.67	.375	184.44	.500	245.25	.650	317.77	.750	365.85	.825	401.76	1.000	485.10	1.125	544.22	1.375	661.45	1.500	719.57	1.750	834.78	→	3.000	1390.62
48	48.000	.250	128.69	.312	160.39	.375	192.52	.500	256.03	.650	331.78	.750	382.02	.825	419.55	1.000	506.66	1.125	568.48	1.375	691.10	1.500	751.91	1.750	872.51	→	3.000	1455.30
50	50.000	.250	134.08	.312	167.12	.375	200.61	.500	266.81	.650	345.80	.750	398.19	.825	437.34	1.000	528.22	1.125	592.73	1.375	720.74	1.500	784.25	1.750	910.24	→	3.000	1519.98
52	52.000	.250	139.47	.312	173.85	.375	208.69	.500	277.59	.650	359.81	.750	414.36	.825	455.12	1.000	549.78	1.125	616.99	1.375	750.39	1.500	816.59	1.750	947.97	→	3.000	1584.66
54	54.000	.250	144.86	.312	180.57	.375	216.78	.500	288.37	.650	373.82	.750	430.53	.825	472.91	1.000	571.34	1.125	641.24	1.375	780.03	1.500	848.93	1.750	985.70	→	3.000	1649.34
56	56.000	.250	150.25	.312	187.30	.375	224.86	.500	299.15	.650	387.84	.750	446.70	.825	490.70	1.000	592.90	1.125	665.50	1.375	809.68	1.500	881.27	1.750	1023.43	→	3.000	1714.02
58	58.000	.250	155.64	.312	194.03	.375	232.95	.500	309.93	.650	401.85	.750	462.87	.825	508.49	1.000	614.46	1.125	689.75	1.375	839.32	1.500	913.61	1.750	1061.16	→	3.000	1778.70
60	60.000	.250	161.03	.312	200.75	.375	241.03	.500	320.71	.650	415.87	.750	479.04	.825	526.27	1.000	636.02	1.125	714.01	1.375	868.97	1.500	945.95	1.750	1098.89	→	3.000	1843.38
62	62.000	.250	166.42	.312	207.48	.375	249.12	.500	331.49	.650	429.88	.750	495.21	.825	544.06	1.000	657.58	1.125	738.26	1.375	898.61	1.500	978.29	1.750	1136.62	→	3.000	1908.06
64	64.000	.250	171.81	.312	214.21	.375	257.20	.500	342.27	.650	443.89	.750	511.38	.825	561.85	1.000	679.14	1.125	762.52	1.375	928.26	1.500	1010.63	1.750	1174.35	→	3.000	1972.74
66	66.000	.250	177.20	.312	220.93	.375	265.29	.500	353.05	.650	457.91	.750	527.55	.825	579.63	1.000	700.70	1.125	786.77	1.375	957.90	1.500	1042.97	1.750	1212.08	→	3.000	2037.42
68	68.000	.250	182.59	.312	227.66	.375	273.37	.500	363.83	.650	471.92	.750	543.72	.825	597.42	1.000	722.26	1.125	811.03	1.375	987.55	1.500	1075.31	1.750	1249.81	→	3.000	2102.10
↓	↓	↓	↓	↓	↓	↓	↓	↓	↓	↓	↓	↓	↓	↓	↓	↓	↓	↓	↓	↓	↓	↓	↓	↓	↓		↓	↓
120	120.000	.250	322.73	.312	402.55	.375	483.58	.500	644.11	.650	836.29	.750	964.14	.825	1059.88	1.000	1282.82	1.125	1441.66	1.375	1758.32	1.500	1916.15	1.750	2230.79	→	3.000	3783.78

outokumpu
high performance stainless steel

Outokumpu Stainless Pipe
Tel: 800 731 7473
Fax: 800 416 7473
pipesales@outokumpu.com
outokumpu.com/pipe

Information given in this brochure may be subject to alterations without notice. Care has been taken to ensure that the contents of this publication are accurate but Outokumpu and its affiliated companies do not accept responsibility for errors or for information which is found to be misleading. Suggestions for or descriptions of the end use or application of products or methods of working are for information only and Outokumpu and its affiliated companies accept no liability in respect thereof. Before using products supplied or manufactured by the company the customer should satisfy himself of their suitability.
LDX 2101® is a trademark of Outokumpu Stainless.
254 SMO® is a trademark of Outokumpu Stainless.
2205 Code Plus Two® is a trademark of Outokumpu Stainless, Inc.

Ductile Iron Check Valve — Model 80DI-VFD

FLOMATIC®
Flomatic Corporation

Sizes 3" thru 8" / 75mm thru 200mm

NSF/ANSI 61 IAPMO R&T ™ | LOW-LEAD IAPMO R&T ™ NSF/ANSI 372 | #1 Pb Lead-Free

Materials

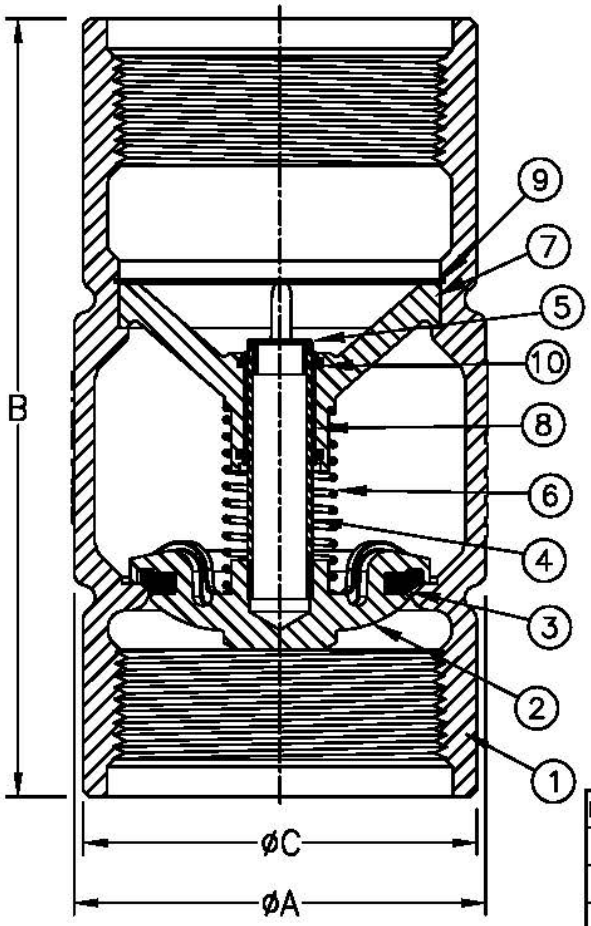

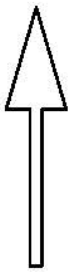

Max Temp 180°F (82°C)
Max Pressure 600psi (42bar)
Optional Female 8 round Threads

Item #	Qty	Description	Material	ASTM
1	1	Body (Epoxy Coated)	Ductile Iron	65-45-12
2	1	Poppet (Epoxy Coated)	Ductile Iron	65-45-12
3	1	Seat Disc	Buna-N	N-5007*
4	1	Stem	Stainless Steel	316
5	1	Stem Cap	Engineered Composite	Polyethelyne
6	1	Spring	Stainless Steel	302
7	1	Stem Guide (Epoxy Coated)	Ductile Iron	65-45-12
8	1	Bushing	Engineered Composite	----
9	1	Retaining Ring	Stainless Steel	302
10	2	Wiper	Engineered Composite	Molythane

*8" uses N-6010

Dimensions (FNPT x FNPT)

Size		Part #	A		B		C		Weight	
Inch	mm		Inch	mm	Inch	mm	Inch	mm	lbs	kg
3	75	7938VFD	4-3/8	111	8-37/64	218	4-13/64	107	12	5.5
4	100	7939VFD	5-3/4	146	11-1/4	286	5-1/2	140	27	12
5	125	4088VFD	6-29/32	175	13-5/8	346	6-19/32	167	40	18
6	150	4089VFD	8	203	15-9/64	385	7-21/32	194	63	29
8	200	4090VFD	9-11/16	246	15-27/32	402	9-11/16	246	87	40

Flomatic Corporation can accept no responsibility for possible errors in catalogues, brochures and other printed material. Flomatic Corporation reserves the right to alter its products without notices. This also applies to product already agreed. All trademarks in this material are property of the respective companies. All right reserved. ©2016 Flomatic Corporation. The drawings & information on this drawing sheet are the sole & exclusive property of Flomatic Corporation. Any reproduction, distribution, display or use of these drawings or information in whole or in part without written authorization of Flomatic Corporation is strictly prohibited.

FLOMATIC® VALVES

November 21, 2011
Dwg No: S7939DI-VFD Rev: F (8/16)

FLOMATIC CORPORATION
GLENS FALLS, N.Y. 12801
PHONE (518) 761-9797
FAX (518) 761-9798

WELD ON PITLESS ADAPTERS

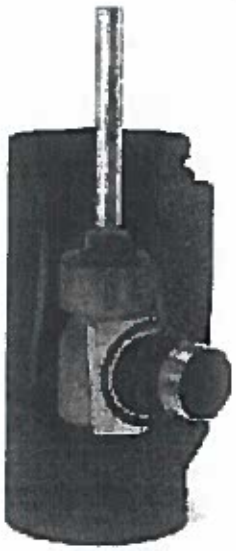

WELD ON PITLESS ADAPTER FOR 8", 10" & 12" WELLS

FEATURES

- Durable fabricated steel housing - brass elbow, stainless steel discharge, large drain hole in the pull pipe port, 3" FIP pull pipe, 3" FIP drop pipe, 3" stainless steel MIP discharge and large o-ring seal.
- Designed to be welded onto 8", 10" and 12" I.D. steel casing.
- Designed for shallow or deep settings and high working pressures up to 300 PSI.
- Durable steel housing with tear drop design for EZ bottom welding.
- Water contacts only 304 stainless steel and brass elbow for long term corrosion protection.
- No obstruction in the casing I.D. when the brass elbow is removed.
- Stainless steel 10° tapered slip fitting design on the elbow for easy installation and removal at time of servicing.
- Large O-Ring neoprene seal.
- Large drain hole in the 3" FIP pull pipe port.
- Designed for 10,000 lbs. load.
- Also available factory welded to casing.

WELD ON PITLESS ADAPTER

Order No.	Well Size	Drop Pipe Size	Discharge Size	Weight (lbs)
8123BEZ	8", 10" & 12" I.D.	3" Female NPT	3" Male NPT	27
83BEZ	Kit for 8" x 18" L.	3" Female NPT	3" Male NPT	75
83BEZ6	Kit for 6"	3" Female NPT	3" Male NPT	90
103BEZ	Kit for 10" x 18" L.	3" Female NPT	3" Male NPT	95
123BEZ	Kit for 12" x 18" L	3" Female NPT	3" Male NPT	115
8123BEZ6	8"-12" w/nipple 6" L.	3" Female NPT	3" Male NPT	30

MS6000C

6” Submersible Motors

be
think
innovate

GRUNDFOS

A closer look at the MS6000C

THRUST BEARING
High capacity thrust bearings provide long life durability even on the toughest conditions.

HP	Pound-Force (lbf)
7.5	1,686
10	1,686
15	6,070
20	6,070
25	6,070
30	6,070
40	6,070

ROBUST STAINLESS STEEL
Engineered design with robust and proven corrosion resistant 304 Stainless Steel motor exterior as standard, 904L Stainless Steel is optional for highly aggressive water applications.

EN Rating	AISI Rating
1.4301	304
1.4539	904L

INCREASED TEMPERATURE RATING
T40 rating indicates the increased ambient water temperature rating to 104°F (40°C) that withstands higher temp rating which provides durability and longer life of the motor in lower flow, closed loop, and warmer water applications. Use of FDA food grade approved SML-3 motor fluid provides frost and corrosion protection. T40 is standard, T60 is optional.

Temp Rating	Max. Temp	Min. Temp
T40	104°F (40°C)	-4°F (-20°C)
T60	140°F (60°C)	-4°F (-20°C)

CAST STAINLESS STEEL ENDBELL
Cast 304 Stainless Steel endbell with NEMA Standard for a solid frame mount of the flange.

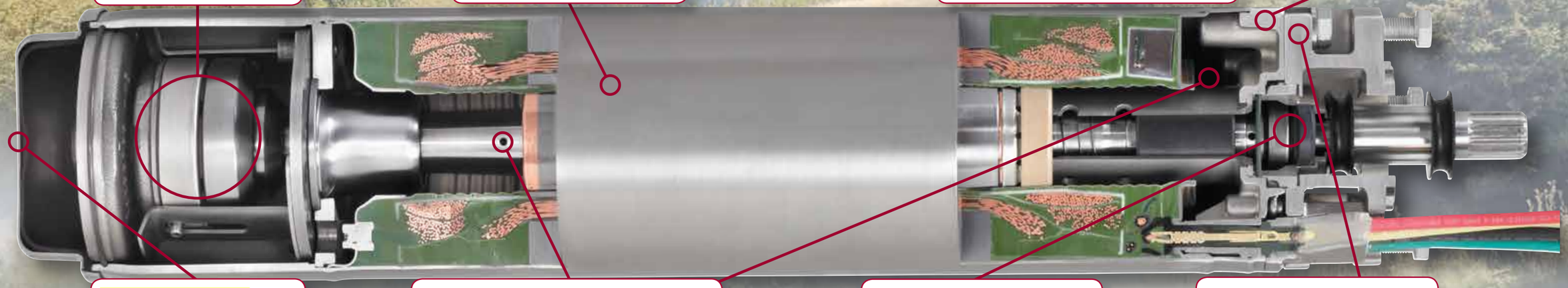

RUGGED SLIM DIAMETER
Stainless Steel endbell gives rugged protection going down the well while smaller diameter motor is easier to install.

COOLING AND CIRCULATION
Excellent cooling and circulation characteristics include hollow shaft, flow friendly internal design, and large internal capacity allows better cooling and longer motor life.

SHAFT SEAL
Shaft seals are with a durable Silicon / Silicon seal faces and use NBR rubber to standup to abrasive materials making for a long seal life.

FLANGE
Robust cast 304 Stainless Steel NEMA Standard flange added to top of motor to assure motor replacements in the field will mount onto any pump in the industry pulled from the well.

MS6000C

The MS6000C series cover a range of water supply applications that require power from 7.5 to 40 HP, 3-phase.

All external surfaces of Grundfos MS motors in contact with water are made of stainless steel DIN W. Nr. 1.4301 (AISI 304) unless otherwise specified R-versions made from DIN W. Nr. 1.4539 (AISI 904 L) are also available for aggressive water. MS motors are fitted with a built-in Tempcon sensor to prevent overheaing – a solution which together with a Grundfos MP 204 eliminates the need for external temperature sensors.

CABLE CONNECTION SEAL

1. Two bolt stainless steel connection frame for absolute solid mounting and protection
2. Primary compression lip seals the lead and motor from external fluids
3. Pliable secondary seal contains 3-Wire connections to motor for reliable, long lasting seal
4. Ground Tab bolts to flange on motor for premium grounding
5. 3-Wire plus ground wire all fully potted in connection body for a complete and reliable seal

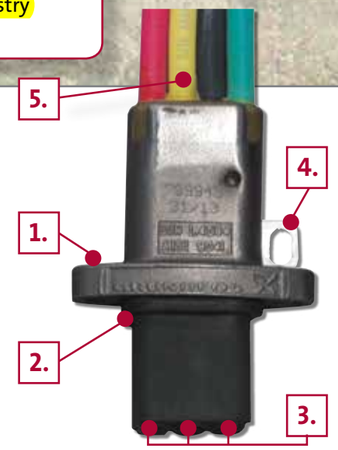

MS6

MS6000C

Phase	Voltage	HP	SS #	Seal	Rubber	MS6 Material #	MS6000C Material #
3	208-230	7.5	304	Sic/Sic	NBR	96168783	96166181
3	208-230	10	304	Sic/Sic	NBR	96168784	96166182
3	208-230	15	304	Sic/Sic	NBR	96168786	96166184
3	208-230	20	304	Sic/Sic	NBR	96168788	96166186
3	208-230	25	304	Sic/Sic	NBR	96168789	96166187
3	208-230	30	304	Sic/Sic	NBR	96168790	96166188
3	440-460	7.5	304	Sic/Sic	NBR	96168763	96166161
3	440-460	10	304	Sic/Sic	NBR	96168764	96166162
3	440-460	15	304	Sic/Sic	NBR	96168766	96166164
3	440-460	20	304	Sic/Sic	NBR	96168768	96166166
3	440-460	25	304	Sic/Sic	NBR	96168769	96166167
3	440-460	30	304	Sic/Sic	NBR	96168770	96166168
3	440-460	40	304	Sic/Sic	NBR	96168772	96166170

Comparison from MS6 to MS6000C	
MS6	MS6000C
Temperature	
T30	T40
86° F / 30° C	104° F / 40° C
Shaft Seal	
SiC / SiC	SiC / SiC
NBR	NBR
Embedding Material	
Sand added to Epoxy	Aluminum Oxide added to Epoxy
Thrust Bearing	
7.5 and 10 HP	
7.5 kN / 1,686 ft. lbs.	7.5 kN / 1,686 ft. lbs.
15, 20, 25, 30 and 40 HP	
27.5 kN / 6182 ft. lbs.	27 kN / 6,070 ft. lbs.
Pump Mount	
NEMA	NEMA with Flange
Stainless Steel	
304 Standard	304 Standard
904L Optional	904L Optional
Cable Connection	
3-Wire Plus Ground	3-Wire Plus Ground
Premium Quality	Premium Quality
Included with Motor	Included with Motor
Available Separately	Available Separately
Diameter	
5.63 in. / 143 mm	5.49 in. / 139.5 mm
Agency Approval	
cCSAus	cCSAus
Pricing	
Feb. 1st 2014 List Price	Feb. 1st 2014 List Price

L-MS-SL-002 Rev.7/14 (US)

GRUNDFOS Kansas City
17100 West 118th Terrace
Olathe, Kansas 66061
Phone: (913) 227-3400
Fax: (913) 227-3500

www.grundfos.us

GRUNDFOS Canada
2941 Brighton Road
Oakville, Ontario
L6H 6C9
Phone: (905) 829-9533
Fax: (905) 829-9512

www.grundfos.ca

GRUNDFOS Mexico
Boulevard TLC No. 15
Parque Industrial Stiva Aeropuerto
C.P. 66600 Apodaca, N.L. Mexico
Phone: 011-52-81-8144 4000
Fax: 011-52-81-8144 4010

www.grundfos.mx

The name Grundfos, the Grundfos logo, and be think innovate are registered trademarks owned by Grundfos Holding A/S or Grundfos A/S, Denmark. All rights reserved worldwide.

GRUNDFOS

WELL SEALS

PACIFIC HYDRO™ STEEL SANITARY WELL SEALS

MADE in the USA

Features:

- Made from high strength steel
- Steel plates powder coated for durable finish
- Utilizes soft poly-vinyl packers
- Unique packer design allows for wide range of casing sizes
- Bolts and washers zinc plated
- 1" threaded wire drop hole standard on most well seals
- 1-1/4" threaded wire drop holes standard on 10" and larger seals
- Vent opening 1/2" on 4" to 7" well seals
- Vent opening 3/4" on 8" well seals and larger

An additional 1.25-inch access hole will be installed into the selected well seal. The seal will have 2-1.25-inch port, 1-1-inch electrical port, and one .75-inch vent hole.

Part Number	Model Number	Size Casing I.D. I.D. X Drop Pipe	Top Plate Thickness	Working Load (Lbs.)	Weight (Lbs.)	List Price Each
954010	WS41	4" to 4 -/4" x 1"	3/16"	2,141	1.80	
954011	WS41.25	4" to 4-1/4" x 1-1/4"	3/16"	2,141	1.76	
954012	WS41.5	4" to 4-1/4" x 1-1/2"	3/16"	2,141	1.65	
954013	WS42	4" to 4-1/4" x 2"	3/16"	2,141	1.55	
954004	WS5OD1	4-1/2" to 4-3/4" x 1"	3/16"	1,520	2.65	
954005	WS5OD1.25	4-1/2" to 4-3/4" x 1-1/4"	3/16"	1,520	2.35	
954006	WS6OD1	5-3/16" to 5-7/16" x 1"	3/16"	1,520	2.90	
954007	WS6OD1.25	5-3/16" to 5-7/16" x 1-1/4"	3/16"	1,520	2.90	
954015	WS51	5" to 5-1/4" x 1"	3/16"	1,450	2.70	
954016	WS51.25	5" to 5-1/4" x 1-1/4"	3/16"	1,450	2.40	
954017	WS51.5	5" to 5-1/4" x 1-1/2"	3/16"	1,450	2.55	
954018	WS52	5" to 5-1/4" x 2"	3/16"	1,450	2.85	
954020	WS61	5-3/4" to 6-1/4" x 1"	3/16"	1,100	3.60	
954021	WS61.25	5-3/4" to 6-1/4" x 1-1/4"	3/16"	1,100	3.60	
954022	WS61.5	5-3/4" to 6-1/4" x 1-1/2"	3/16"	1,100	3.35	
954023	WS62	5-3/4" to 6-1/4" x 2"	3/16"	1,100	3.35	
954024	WS62.5	5-3/4" to 6-1/4" x 2-1/2"	3/8"	9,170	4.70	
954025	WS63	5-3/4" to 6-1/4" x 3"	3/8"	9,170	5.00	
954026	WS6 1/4 x 1	5-3/4" to 6-1/4" x 1"	3/16"	1,150	3.60	
954027	WS6 1/4 x 1.25	5 -/4" to 6-1/4" x 1-1/4"	3/16"	1,150	3.60	
954029	WS6 1/4 x 2	5-3/4" to 6-1/4" x 2"	3/16"	1,150	3.35	
954030	WS71	6-5/8" to 7-1/4" x 1"	1/4"	2,000	5.45	
954031	WS71.25	6-5/8" to 7-1/4" x 1-1/4"	1/4"	2,000	5.65	
954032	WS71.5	6-5/8" to 7-1/4" x 1-1/2"	1/4"	2,000	5.40	
954033	WS72	6-5/8" to 7-1/4" x 2"	1/4"	2,000	5.30	
954036	WS81	7-3/4" to 8-1/4" x 1"	1/4"	1,650	7.45	
954037	WS81.25	7-3/4" to 8-1/4" x 1-1/4"	1/4"	1,650	7.30	
954038	WS81.5	7-3/4" to 8-1/4" x 1-1/2"	1/4"	1,650	6.75	
954039	WS82	7-3/4" to 8-1/4" x 2"	1/4"	1,650	6.90	
954040	WS8.25	7-3/4" to 8-1/4" x 2-1/2"	3/8"	6,900	8.35	
954041	WS83	7-3/4" to 8-1/4" x 3"	1/2"	9,000	7.50	
954042	WS84	7-3/4" to 8-1/4" x 4"	5/8"	22,500	9.60	
954045	WS101	9-3/4" to 10-1/4" x 1"	3/8"	3,700	11.75	
954046	WS101.25	9-3/4" to 10-1/4" x 1-1/4"	3/8"	3,700	11.95	
954047	WS101.5	9-3/4" to 10-1/4" x 1-1/2"	3/8"	3,700	15.05	
954048	WS102	9-3/4" to 10-1/4" x 2"	3/8"	3,700	14.70	
954049	WS102.5	9-3/4" to 10-1/4" x 2-1/2"	1/2"	8,600	17.15	
954050	WS103	9-3/4" to 10-1/4" x 3"	5/8"	16,200	19.55	
954051	WS104	9-3/4" to 10-1/4" x 4"	5/8"	16,200	17.65	
954052	WS105	9-3/4" to 10-1/4" x 5"	3/4"	30,000	17.50	
954053	WS106	9-3/4" to 10-1/4" x 6"	3/4"	30,000	15.10	
954054	WS121	11-3/4" to 12-1/4" x 1"	1/4"	885	26.00	
954055	WS121.25	11-3/4" to 12-1/4" x 1-1/4"	3/8"	2,870	26.00	
954056	WS121.5	11-3/4" to 12-1/4" x 1-1/2"	3/8"	2,870	26.00	
954057	WS122	11-3/4" to 12-1/4" x 2"	1/2"	6,600	26.00	
954058	WS122.5	11-3/4" to 12-1/4" x 2-1/2"	1/2"	6,600	26.00	
954059	WS123	11-3/4" to 12-1/4" x 3"	5/8"	12,000	26.00	
954060	WS124	11-3/4" to 12-1/4" x 4"	5/8"	12,000	26.00	
954061	WS125	11-3/4" to 12-1/4" x 5"	3/4"	20,500	26.00	
954062	WS126	11-3/4" to 12-1/4" x 6"	3/4"	21,000	26.00	
954070	WS141.25	13 1/4" to 14" x 1 1/4"	3/8"	2,280	40	
954071	WS141.5	13 1/4" to 14" x 1 1/2"	1/2"	4,850	49	
954072	WS142	13 1/4" to 14" x 2"	1/2"	4,850	48	
954073	WS142.5	13 1/4" to 14" x 2 1/2"	1/2"	4,850	47	
954074	WS143	13 1/4" to 14" x 3"	5/8"	9,450	54	
954075	WS144	13 1/4" to 14" x 4"	3/4"	16,000	59	
954076	WS145	13 1/4" to 14" x 5"	3/4"	16,000	67	
954077	WS146	13 1/4" to 14" x 6"	1"	38,000	67	
954080	WS164	15 1/4" to 16" x 4"	3/4"	12,500	80	
954081	WS166	15 1/4" to 16" x 6"	1"	30,000	91	

See separate price list

- **NOTE:**
- **Custom sizes available. Contact factory for quotation.**
- **Also available manufactured from stainless steel.**

PUMP CABLE

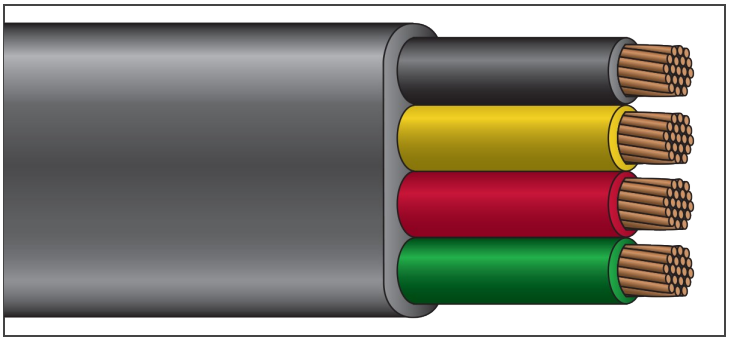

THW or RHW-2/FLAT BLACK

Submersible Pump Cable

600 Volt Copper, Heavy Duty Flat

Description:

Stranded copper conductors are insulated with color coded PVC *(type THW or RHW-2)* and configured flat and parallel with green insulated ground and overall PVC jacket applied directly over the conductors with a non-penetrating web.

Application:

Suitable for use within the well casing to supply power to the submersible pump and where extra mechanical protection and flexibility during installation and operation are required.

Standards:

UL Standard 83 *(UL 44/854 on 250 Kcmil and larger)*
Temperature Rated at 75°C Wet/Dry *(90°C Wet/Dry on 250 Kcmil and larger)*
Color Code: Black, Red, Yellow, Green *(ground),*
Printed Number and Color *(1/0 AWG and larger)*
Acid, Alkali, Oil, Grease, Abrasion and Crush Resistant
Direct Burial[1] *(250 Kcmil and larger)*
Weather, Ozone and Sunlight Resistant Jacket
RoHS Compliant

[1] *#12 AWG through 4/0 AWG Direct Burial available upon request.*

Part Number	Conductor Size *Power* (AWG or Kcmil)	Conductor Size *Ground* (AWG or Kcmil)	Dimensions Insulation (in.)	Dimensions Jacket (in.)	Dimensions O.D. (in.)	Standard Packaging (500')	Standard Packaging (1,000')	Standard Packaging (bulk)	Ampacity NEC§	Weight (lb./1000')
PFB14/2GG	14/2 (7 str)	14 (7 str)	0.045	0.045	0.25 x 0.58			X	15	114
PFB12/2GG	12/2 (19 str)	12 (19 str)	0.045	0.045	0.27 x 0.64	X	X		20	154
PFB10/2GG	10/2 (19 str)	10 (19 str)	0.045	0.045	0.30 x 0.71	X	X		30	212
PFB8/2GG	8/2 (19 str)	10 (19 str)	0.060	0.045	0.35 x 0.82	X	X		50	278
PFB14/3GG	14/3 (7 str)	14 (7 str)	0.045	0.045	0.25 x 0.74	X	X		15	147
PFB12/3GG	12/3 (19 str)	12 (19 str)	0.045	0.045	0.27 x 0.82	X	X		20	192
PFB10/3GG	10/3 (19 str)	10 (19 str)	0.045	0.045	0.30 x 0.91	X	X		30	258
PFB8/3GG	8/3 (19 str)	10 (19 str)	0.060	0.045	0.35 x 1.08	X	X		50	376
PFB6/3GG	6/3 (19 str)	8 (19 str)	0.060	0.045	0.39 x 1.26	X	X		65	528
PFB4/3GG	4/3 (19 str)	8 (19 str)	0.060	0.045	0.44 x 1.40	X	X		85	726
PFB2/3GG	2/3 (19 str)	6 (19 str)	0.060	0.045	0.49 x 1.60	X	X		115	1,049
PFB1/03GG	1/03 (19 str)	6 (7 str)	0.080	0.060	0.64 x 1.97			X	150	1,632
PFB2/03GG	2/03 (19 str)	6 (7 str)	0.080	0.060	0.68 x 2.11			X	175	1,958
PFB3/03GG	3/03 (19 str)	4 (7 str)	0.080	0.060	0.73 x 2.30			X	200	2,410
PFB4/03GG	4/03 (19 str)	4 (7 str)	0.080	0.060	0.79 x 2.48			X	230	2,917
PFB250/3GG	250/3 (37 str)	4 (7 str)	0.095	0.080	0.92 x 2.80			X	255	3,529
PFB350/3GG	350/3 (37 str)	3 (7 str)	0.095	0.080	1.03 x 3.13			X	310	4,701
PFB500/3GG	500/3 (37 str)	2 (7 str)	0.095	0.080	1.15 x 3.52			X	380	6,394

§Per NEC Table 310.15 (B)(16). NOTE: The data shown is approximate and subject to standard industry tolerances.

SUBMERSIBLE PUMPS

6" STAINLESS STEEL SR SERIES

FPS

FEATURES

- Stainless steel impellers and diffusers to resist corrosion
- Heavy-duty stainless steel shell assures permanent alignment of all components to increase longevity and enables higher pressures than strap designs
- PTFE floating wear ring, ceramic bearing journal, and Nitrile rubber fluted bearing ensure durability against wear for long-lasting performance and reliability
- Suited to operate in horizontal position
- Built-in check valve to protect the pump against water hammer
- Energy-efficient hydraulic design for cost effective operation

SPECIFICATIONS

- Capacities of 70–150 gpm
- Maximum operating temperature of 140 °F/60 °C for 304 stainless steel and 194 °F/90 °C for 316 stainless steel

APPLICATIONS

- Industrial
- Agricultural
- Irrigation
- Commercial

Franklin Electric

SUBMERSIBLE PUMPS

6" STAINLESS STEEL SR SERIES

PERFORMANCE

100 GPM

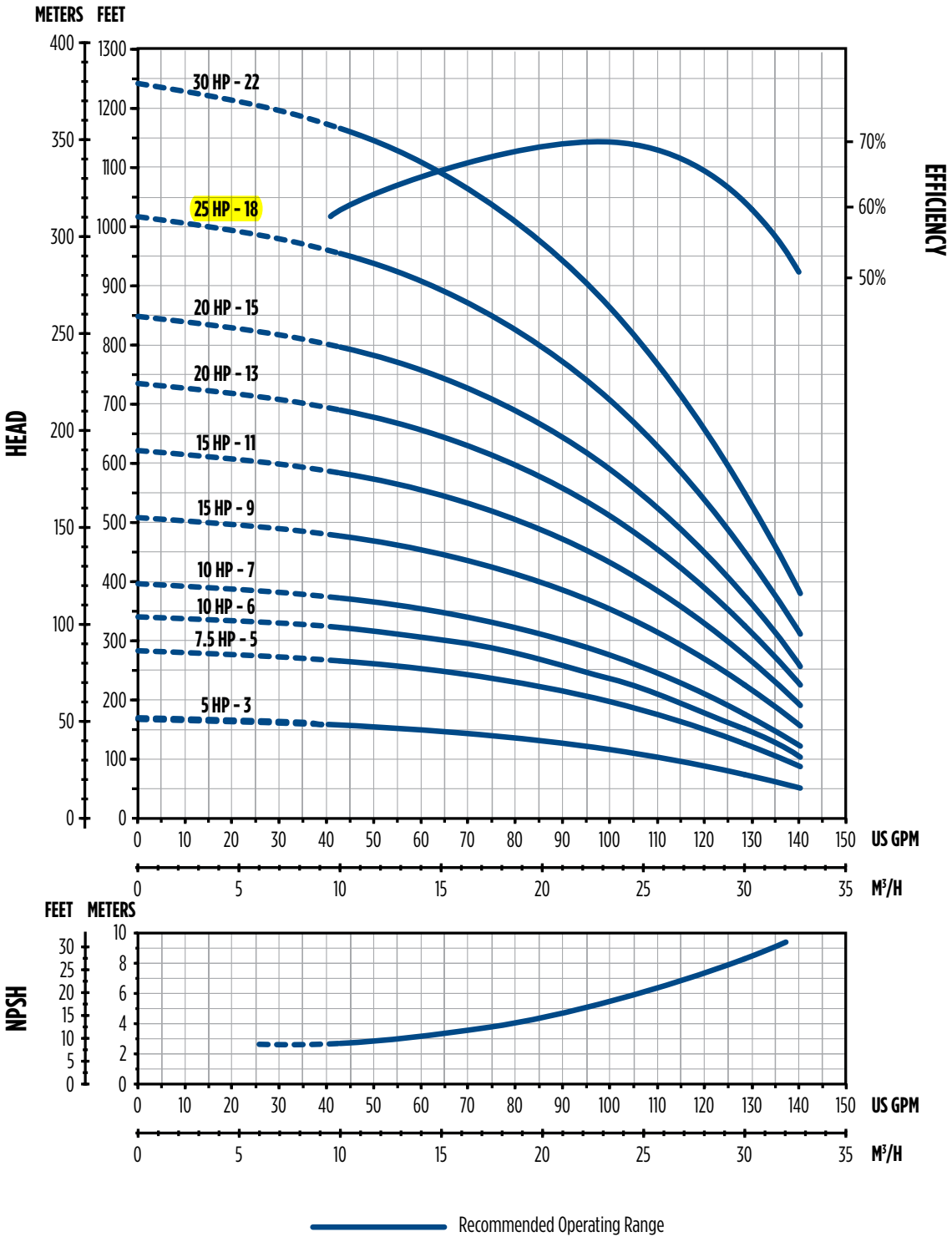

SUBMERSIBLE PUMPS

6" STAINLESS STEEL SR SERIES

DIMENSIONS — 70 GPM

HP	Stages	D [in]	Motor Size [in]	Diameter w/Cable Guard [in]	L [in]	Weight [lbs]
5	5	3 NPT	6	5.63	15.00	23.4
7.5	8				18.54	30.9
10	11				22.09	35.3
15	13				24.45	38.6
15	15				26.73	42.1
15	17				29.17	45.2
20	19				31.54	48.5
20	22				35.08	52.9
25	24				37.44	56.2
25	28				42.17	64.4
30	32				46.79	70.8
40	37			* 5.71	52.70	78.5
40	42				58.60	86.2

NOTE: D = Discharge, L = Pump Length

** Denotes larger diameter with cable guard due to high pressure model.*

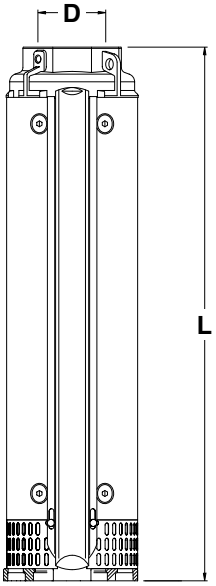

DIMENSIONS — 100 GPM

HP	Stages	D [in]	Motor Size [in]	Diameter w/Cable Guard [in]	L [in]	Weight [lbs]
5	3	3 NPT	6	5.63	16.79	22.1
7.5	5				19.74	26.5
10	6				21.22	27.6
10	7				22.69	29.8
15	9				25.64	33.1
15	11				28.60	37.5
20	13				31.55	40.8
20	15				34.50	44.1
25	18				38.92	49.6
30	22				44.82	57.3
40	26				50.72	63.9
40	28				53.67	68.3
50	32			* 5.71	59.58	75.0
50	36				65.48	81.6
60	39				69.90	88.2
60	42				74.33	94.8

NOTE: D = Discharge, L = Pump Length

** Denotes larger diameter with cable guard due to high pressure model.*

DIMENSIONS — 150 GPM

HP	Stages	D [in]	Motor Size [in]	Diameter w/Cable Guard [in]	L [in]	Weight [lbs]
7.5	3	3 NPT	6	5.63	17.01	25.4
10	4				18.84	27.6
15	5				20.67	29.8
15	7				24.33	34.2
20	9				27.99	38.6
25	11				31.65	43.0
30	14				37.15	49.6
40	19				46.30	59.5
50	23				53.62	68.3
60	26				59.09	75.0
60	28				62.76	79.4

NOTE: D = Discharge, L = Pump Length

SUBMERSIBLE PUMPS

6" STAINLESS STEEL SR SERIES

ORDER INFORMATION — 100 GPM

GPM	Stages	HP	Motor Size [in]	304 SS		316 SS	
				Order No.	Description	Order No.	Description
100	3	5	6	97160100003	100SR5F66-0363	97161100003	100SR5S66-0363
	5	7.5		97160100005	100SR7F66-0563	97161100005	100SR7S66-0563
	6	10		97160100006	100SR10F66-0663	97161100006	100SR10S66-0663
	7	10		97160100007	100SR10F66-0763	97161100007	100SR10S66-0763
	9	15		97160100009	100SR15F66-0963	97161100009	100SR15S66-0963
	11	15		97160100011	100SR15F66-1163	97161100011	100SR15S66-1163
	13	20		97160100013	100SR20F66-1363	97161100013	100SR20S66-1363
	15	20		97160100015	100SR20F66-1563	97161100015	100SR20S66-1563
	18	25		97160100018	100SR25F66-1863	97161100018	100SR25S66-1863
	22	30		97160100022	100SR30F66-2263	97161100022	100SR30S66-2263
	26	40		97160100026	100SR40F66-2663	97161100026	100SR40S66-2663
	28	40		97160100028	100SR40F66-2863	97161100028	100SR40S66-2863
	32	50		97160100032	100SR50F66-3263	97161100032	100SR50S66-3263
	36	50		97160100036	100SR50F66-3663	97161100036	100SR50S66-3663
	39	60		97160100039	100SR60F66-3963	97161100039	100SR60S66-3963
	42	60		97160100042	100SR60F66-4263	97161100042	100SR60S66-4263

NOTE: 4" Motor Adapter Kit (Order No. 305473001) available for 10 hp models and below.

ORDER INFORMATION — 150 GPM

GPM	Stages	HP	Motor Size [in]	304 SS		316 SS	
				Order No.	Description	Order No.	Description
150	3	7.5	6	97160150003	150SR7F66-0363	97161150003	150SR7S66-0363
	4	10		97160150004	150SR10F66-0463	97161150004	150SR10S66-0463
	5	15		97160150005	150SR15F66-0563	97161150005	150SR15S66-0563
	7	15		97160150007	150SR15F66-0763	97161150007	150SR15S66-0763
	9	20		97160150009	150SR20F66-0963	97161150009	150SR20S66-0963
	11	25		97160150011	150SR25F66-1163	97161150011	150SR25S66-1163
	14	30		97160150014	150SR30F66-1463	97161150014	150SR30S66-1463
	19	40		97160150019	150SR40F66-1963	97161150019	150SR40S66-1963
	23	50		97160150023	150SR50F66-2363	97161150023	150SR50S66-2363
	26	60		97160150026	150SR60F66-2663	97161150026	150SR60S66-2663
	28	60		97160150028	150SR60F66-2863	97161150028	150SR60S66-2863

NOTE: 4" Motor Adapter Kit (Order No. 305473001) available for 10 hp models and below.

SUBMERSIBLE PUMPS

6" STAINLESS STEEL SR SERIES

MATERIALS

Parts Description	Type	304 SS		316 SS	
		AISI	DIN / EN	AISI	DIN / EN
Discharge Head	Stainless steel	304	1.430	316	1.440
Valve	Stainless steel	316	1.440	316	1.440
Sealing O-ring	Nitrile rubber (NBR)	-	-	-	-
Outer Case Locking Nuts	Stainless steel	316	1.440	316	1.440
Outer Case	Stainless steel	304	1.430	316	1.440
Suction Strainer	Stainless steel	316	1.440	316	1.440
Cable Guard	Stainless steel	316	1.440	316	1.440
Initial Spacer	Stainless steel	304	1.430	316	1.440
Flange and Screws	Stainless steel	304	1.430	316	1.440
Motor Adapter	Stainless steel	304	1.430	316	1.440
Pump Shaft	Stainless steel	431	1.406	316/329	1.4401 / 1.4460
Coupling	Stainless steel	431 / 329	1.4057 / 1.4460	316/329	1.4401 / 1.4460
Upper / Lower Upthrust Washer	Stainless steel	316	1.440	316	1.440
Upper Journal Sleeve	Stainless steel w/ tungsten carbide (WIDIA)	316	1.440	316	1.440
Screw and Washer	Stainless steel	316	1.440	316	1.440
Upthrust Ring	PTFE	-	-	-	-
Lower Spacer	Stainless steel	316	1.440	316	1.440
Diffuser	Stainless steel	304	1.430	316	1.440
Secondary Bearing Bushing	Nitrile rubber (NBR)	-	-	-	-
Floating Neck Ring	PTFE	-	-	-	-
Flange Clamping Neck Ring	Stainless steel	304	1.430	316	1.440
Bearing Bushing	Nitrile rubber (NBR)	-	-	-	-
Last / Intermediate Diffuser	Stainless steel	316	1.440	316	1.440
First Stage	Stainless steel	316	1.440	316	1.440
Impeller / Wear Ring	Stainless steel	304	1.430	316	1.440
Split Cone / Secondary Journal Sleeve	Stainless steel	316	1.440	316	1.440
Split Cone Nut / Intermediate Cone Nut	Stainless steel	316	1.440	316	1.440
Upthrust Split Cone Nut	Stainless steel	316	1.440	316	1.440

DEPARTMENT OF THE ARMY
ALBUQUERQUE DISTRICT, CORPS OF ENGINEERS
ALBUQERQUE DISTRICT OFFICE
4101 JEFFERSON PLAZA NE
ALBUQUERQUE, NM 87109

SUBMITTAL REVIEW VERIFICATION SHEET

PROJECT TITLE: Kirtland BFF Mid-Plume Pump and Treat System Expansion
CONTRACT NUMBER: W912DR-12-D-0006 DM01
DATE RECEIVED: 12-05-2017
DATE REVIEWED: 12-07-2017

DESCRIPTION OF ITEMS REVIEWED:

1. Butterfly Valve

NO EXCEPTIONS TAKEN.	**X**
EXCEPTIONS AS NOTED ON DRAWINGS AND/OR ATTACHED SHEETS(S). RESUBMISSION NOT REQUIRED.	
EXCEPTIONS AS NOTED ON DRAWINGS AND/OR ATTACHED SHEETS(S). RESUBMISSION REQUIRED.	
RECEIPT ACKKNOWLEDGED.	

Notes:

NOTE: ITEMS REVIEWED AS TO GENERAL LAYOUT ONLY. DIMENSIONS AND QUANTITIES NOT CHECKED. REVIEW DOES NOT RELIEVE CONTRACTOR OF RESPONSIBILITIES FOR ANY ERRORS WHICH MAY EXIST AS CONTRACTOR SHALL BE RESPONSIBLE FOR DIMENSIONS AND DESIGN OF ADEQUATE CORRECTIONS, DETAILS AND SATISFACTORY CONSTRUCTION OF WORK.

SIGNATURE SANCHEZ.AMY.ELIZABETH.1454434338 Digitally signed by SANCHEZ.AMY.ELIZABETH.1454434338 DN: c=US, o=U.S. Government, ou=DoD, ou=PKI, ou=USA, cn=SANCHEZ.AMY.ELIZABETH.1454434338 Date: 2017.12.07 09:11:09 -07'00' **DATE** 12/7/2017

EA Engineering, Science, and Technology, Inc., PBC

Submittal Review Sheet 8

Project Name: **Kirtland BFF Mid-Plume Pump and Treat System Expansion**				Date Received: **12/5/2017**	
Project Owner: **Kirtland Air Force Base**				Checked By: **Tyler Curley**	
Contractor: **Techsas Inc.**	Engineer: **EA Engineering, Science and Technology, Inc., PBC.**			Log Page: **NA**	
Address: **4819 West Bayshore Drive** **Bacliff, TX 77518**	Address: **320 Gold Ave. SW, Suite 1300** **Albuquerque, NM 87102**			EA No.: 62599DM01	
				Spec. Section: **00 00 00**	
				Drawing/Detail No.:	
ATTN: Ed Butler	ATTN: **Devon Jercinovic**			1st Sub	Re-Sub
Date Transmitted: **12/5/2017**	Prev. Transmittal Date: **10/13/17**				

Item No.	No. Copies	Description	Manufacturer	Mfg/Vendor Dwg or Detail	Action Taken*
11	1	Butterfly Valve	Various	Various	**A**

The Action Designated Above is in Accordance with the Following Legend:

A – Furnish as Submitted
B – Furnish as Noted
C – Revise and Re-submit
1. Not enough information for review.
2. No reproducible submitted.
3. Copies illegible.
4. Not enough copies submitted.
5. Wrong sequence number.
6. Wrong resubmittal number.
7. Wrong Spec. Section.
8. Wrong form used.
9. See Comments.

D – Rejected
E – Engineer's Review not Required
1. Submittal not required.
2. Supplemental Information. Submittal retained for Information purposes only.
3. Information reviewed and approved on prior submittal.
4. See Comments.

Review is for general compliance with Contract Documents. No responsibility is assumed for correctness of dimensions or detail. Contractor is required to specify deviations from contract requirements. Lack of exceptions noted by Engineer does not waive Contractor's obligation to comply with Drawings and Specifications.

Comments:
ARV is consistent with existing ARVs. The butterfly valves are rated at an appropriate pressure (200 psi) and will utilize BUNA-N (nitrile) hydrocarbon compatible materials. The double strap service saddles are consistent with existing saddles.

By: _____ Date: 12/5/17

Distribution: [1] Contractor [1] Engineer [1] Owner

200 PSI Butterfly Valves

Ductile Iron Body • Extended Neck • Geometric Drive
Molded-in Seat Liner • Lug and Wafer Style

Sizes 2" through 12"

Install between Std. ASME Class 125/150 Flanges
Lug Style 200 PSI bi-directional dead end service rating without a downstream flange required.

DESIGNED TO MEET MSS SP-67 STANDARD
U.S. COAST GUARD "CATEGORY A"

WD 2100
Wafer Style
Buna-N Liner
and Aluminum
Bronze Disc

LD 2100
Lug Style
Buna-N Liner
and Aluminum
Bronze Disc

MATERIAL LIST

	PART	SPECIFICATION
1.	Stem	Stainless Steel ASTM A582 Type 416
2.	Collar Bushing	Brass ASTM B16
3.	Stem Seal	Buna-N Rubber Nitrile
4.	Body Seal	Buna-N Rubber Nitrile
5.	Nameplate	Aluminum
6.	Upper Bushing	Copper CDA 122
7.	Liner	Buna-N Rubber Nitrile
8.	Disc	Alum. Brz. ASTM B148 Alloy 954/955
9.	Lower Bushing	Copper CDA 122
10.	Body Wafer	Ductile Iron ASTM A536
11.	Body Lug	Ductile Iron ASTM A536

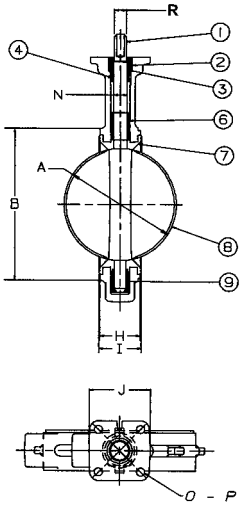

DIMENSIONS — WEIGHTS

Size In.	Size mm.	A	B	C	D	E	F	G Flat	Metal H	Rubber I	J Square	N Dia.
2	50	2.53	4.00	1.25	5.38	2.88	.38	.312	1.688	1.812	3.25	.500
2½	65	2.90	4.69	1.25	5.88	3.27	.38	.370	1.812	1.938	3.25	.562
3	80	3.15	5.12	1.25	6.12	3.40	.38	.370	1.812	1.938	3.25	.562
4	100	4.09	6.12	1.25	6.88	4.00	.38	.403	2.062	2.188	3.25	.625
5	125	5.13	7.25	1.25	7.38	4.75	.38	.496	2.188	2.312	3.25	.750
6	150	6.13	8.25	1.25	8.00	5.29	.38	.496	2.188	2.312	3.25	.750
8	200	8.13	10.41	1.25	9.25	6.50	.50	.560	2.375	2.500	3.25	.875
10	250	10.13	12.52	1.25	10.50	8.00	.50	.686	2.688	2.812	4.75	1.125
12	300	12.13	15.00	1.25	12.00	9.25	.50	.748	3.000	3.125	4.75	1.250

Size In.	Size mm.	O B.C.	P Dia.	R Dia.	Capscrew/Stud Data K No.	L Dia.	Wafer Length	Lug Length	M B.C.	Lug Weight Lbs.	Lug Weight Kg.	Wafer Weight Lbs.	Wafer Weight Kg.
2	50	3.25	.437	.437	4	⅝-11unc	Refer to butterfly valve technical information for bolt lengths		4¾	7	3.2	5.5	2.5
2½	65	3.25	.437	.500	4	⅝-11unc			5½	9	4.1	7.5	3.4
3	80	3.25	.437	.500	4	⅝-11unc			6	9.5	4.3	8	3.6
4	100	3.25	.437	.562	8	⅝-11unc			7½	15	6.8	11	5.0
5	125	3.25	.437	.656	8	¾-10unc			8½	21	9.5	15	6.8
6	150	3.25	.437	.656	8	¾-10unc			9½	24	10.9	18	8.2
8	200	3.25	.437	.781	8	¾-10unc			11¾	34	15.4	28	12.7
10	250	5.00	.562	1.000	12	⅞-9unc			14¼	62	28.1	45.5	20.7
12	300	5.00	.562	1.062	12	⅞-9unc			17	90	40.9	70	31.8

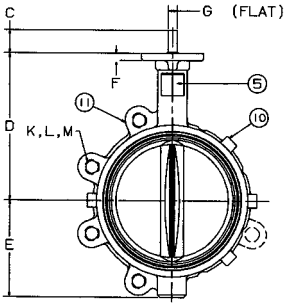

For actuated service where a lower torque is required use NIBCO Fig. No. WDLXXX-0 or LDLXXX-0 series, sizes 2" thru 12" only. Maximum pressure rating of 100 PSI for wet application and 50 PSI for dry application

NOT RECOMMENDED
FOR STEAM SERVICE

NIBCO INC. WORLD HEADQUARTERS • 1516 MIDDLEBURY ST. • ELKHART, IN 46516-4740 • USA • PH: 1.800.234.0227
TECH SERVICES PH: 1.888.446.4226 • FAX: 1.888.234.0557 • INTERNATIONAL OFFICE PH: +1.574.295.3327 • FAX: +1.574.295.3455
www.nibco.com

DEPARTMENT OF THE ARMY
ALBUQUERQUE DISTRICT, CORPS OF ENGINEERS
ALBUQERQUE DISTRICT OFFICE
4101 JEFFERSON PLAZA NE
ALBUQUERQUE, NM 87109

SUBMITTAL REVIEW VERIFICATION SHEET

PROJECT TITLE: Kirtland BFF Mid-Plume Pump and Treat System Expansion
CONTRACT NUMBER: W912DR-12-D-0006 DM01
DATE RECEIVED: 10-13-2017
DATE REVIEWED: 10-17-2017

DESCRIPTION OF ITEMS REVIEWED:

1. Recovery Well Vault Components

NO EXCEPTIONS TAKEN.	**X**
EXCEPTIONS AS NOTED ON DRAWINGS AND/OR ATTACHED SHEETS(S). RESUBMISSION NOT REQUIRED.	
EXCEPTIONS AS NOTED ON DRAWINGS AND/OR ATTACHED SHEETS(S). RESUBMISSION REQUIRED.	
RECEIPT ACKKNOWLEDGED.	

Notes:

NOTE: ITEMS REVIEWED AS TO GENERAL LAYOUT ONLY. DIMENSIONS AND QUANTITIES NOT CHECKED. REVIEW DOES NOT RELIEVE CONTRACTOR OF RESPONSIBILITIES FOR ANY ERRORS WHICH MAY EXIST AS CONTRACTOR SHALL BE RESPONSIBLE FOR DIMENSIONS AND DESIGN OF ADEQUATE CORRECTIONS, DETAILS AND SATISFACTORY CONSTRUCTION OF WORK.

SIGNATURE SANCHEZ.AMY.ELIZABETH.1454434338 Digitally signed by SANCHEZ.AMY.ELIZABETH.1454434338 DN: c=US, o=U.S. Government, ou=DoD, ou=PKI, ou=USA, cn=SANCHEZ.AMY.ELIZABETH.1454434338 Date: 2017.10.17 14:26:22 -06'00' **DATE** 10/17/2017

EA Engineering, Science, and Technology, Inc., PBC

Submittal Review Sheet 8

Project Name: **Kirtland BFF Mid-Plume Pump and Treat System Expansion**				Date Received: **10/12/2017**	
Project Owner: **Kirtland Air Force Base**				Checked By: **Tyler Curley**	
Contractor: **Techsas Inc.**	Engineer: **EA Engineering, Science and Technology, Inc., PBC.**			Log Page: **NA**	
Address: **4819 West Bayshore Drive** **Bacliff, TX 77518**	Address: **320 Gold Ave. SW, Suite 1300** **Albuquerque, NM 87102**			EA No.: 62599DM01	
				Spec. Section: **00 00 00**	
				Drawing/Detail No.:	
ATTN: Ed Butler	ATTN: **Devon Jercinovic**			1st Sub	Re-Sub
Date Transmitted: **10/13/2017**	Prev. Transmittal Date:				

Item No.	No. Copies	Description	Manufacturer	Mfg/Vendor Dwg or Detail	Action Taken*
11	1	Recovery Well Components	Various	Various	**A**

The Action Designated Above is in Accordance with the Following Legend:

A – Furnish as Submitted
B – Furnish as Noted
C – Revise and Re-submit
1. Not enough information for review.
2. No reproducible submitted.
3. Copies illegible.
4. Not enough copies submitted.
5. Wrong sequence number.
6. Wrong resubmittal number.
7. Wrong Spec. Section.
8. Wrong form used.
9. See Comments.

D – Rejected
E – Engineer's Review not Required
1. Submittal not required.
2. Supplemental Information. Submittal retained for Information purposes only.
3. Information reviewed and approved on prior submittal.
4. See Comments.

Review is for general compliance with Contract Documents. No responsibility is assumed for correctness of dimensions or detail. Contractor is required to specify deviations from contract requirements. Lack of exceptions noted by Engineer does not waive Contractor's obligation to comply with Drawings and Specifications.

Comments:
ARV is consistent with existing ARVs. The butterfly valves are rated at an appropriate pressure (200 psi) and will utilize BUNA-N (nitrile) hydrocarbon compatible materials. The double strap service saddles are consistent with existing saddles.

By: _____ Date: 10/13/17

Distribution: [1] Contractor [1] Engineer [1] Owner

TRANSMITTAL DOCUMENT

Date:	**10/11/2017**	**From:**	**Ed Butler**
To:	**EA Engineering, Science, and Technology, Inc., 320 Gold Ave. SW, Suite 1300 Albuquerque, NM 87102 Devon Jercinovic**	**Job Name:**	**Kirtland AFB, NM Bulk Fuels Facility**
		Reference:	
		Transmittal Method:	**E-mail**
		Sent By:	**Ed Butler**

Submittal	Dwg. Number	Item Description
11	C-302	Recovery Well Vault Components

Ed Butler
TECHSAS, Inc.
4819 West Bayshore Drive
Bacliff, TX 77518

"I hereby certify that the (equipment) (material) (article) shown and marked in this submittal is that proposed to be incorporated with the Contract, is in compliance with the contract drawings and specification, can be installed in the allocated spaces, and is submitted for Contractor approval.

Certified by _____.
(Signature when applicable) Date: _____.

VAL-MATIC®

Protection
airValve
Efficiency

Bulletin 1500

AIR VALVES

PROVIDING SYSTEM EFFICIENCY AND PROTECTION

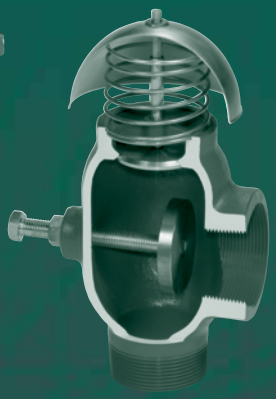

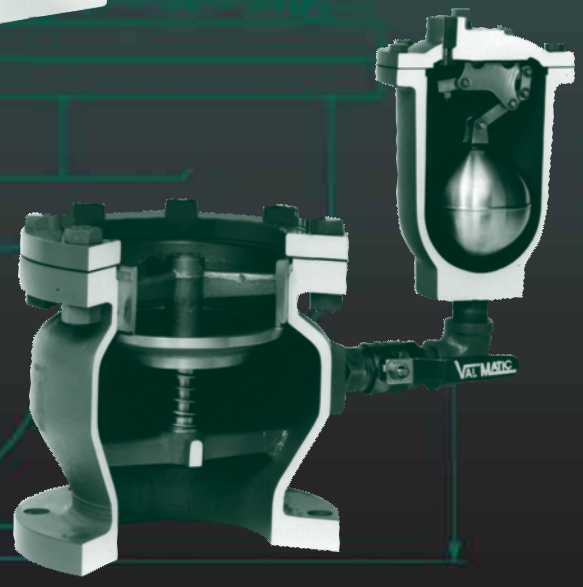

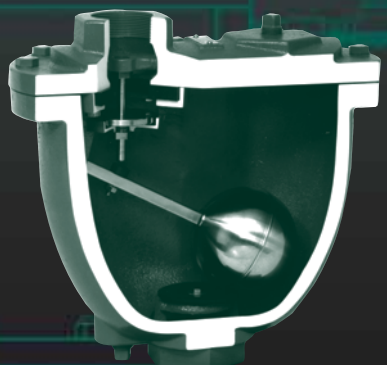

CLASSIFIED UL® WATER QUALITY

NSF/ANSI 61 Certified

Combination Air Valves
Installation Dimensions

WATER COMBINATION AIR VALVES (SINGLE BODY)						
Inlet Size	Outlet Size	Model Number	CWP PSI	Orifice Size	Dimensions	
					A	B
1" NPT	1" NPT	201C.2	300	5/64"	11 3/8"	10 1/2"
2" NPT	2" NPT	202C.2	300	3/32"	14"	13"
3" NPT	3" NPT	203C.2	300	3/32"	16"	15"
3" 125lb Flg	3" NPT	203C.14	150	3/32"	16"	16 3/4"
3" 250lb Flg	3" NPT	203C.15	300	3/32"	16"	17 1/4"
4" NPT	4" NPT	204C.2	300	3/32"	18 1/2"	17"
4" 125lb Flg	4" NPT	204C.14	150	3/32"	18 1/2"	19 3/4"
4" 250lb Flg	4" NPT	204C.15	300	3/32"	18 1/2"	20 1/4"
6" 125lb Flg	6" NPT	206C	150	3/8"	21"	20 1/4"
6" 250lb Flg	6" NPT	256C	300	7/32"	21"	20 1/4"
8" 125lb Flg	8" NPT	208C	150	3/8"	25"	23 1/2"
8" 250lb Flg	8" NPT	258C	300	7/32"	25"	23 1/2"

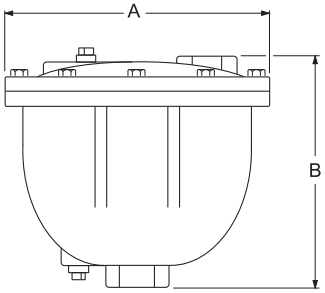

201C.2 - 204C.15
Single Body Combination
Air Valves

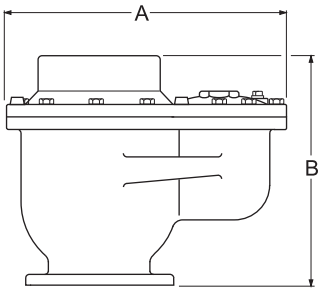

206C - 258C
Single Body
Combination Air Valves

WASTEWATER COMBINATION AIR VALVES (SINGLE BODY)						
Inlet Size	Outlet Size	Model Number	CWP PSI	Orifice Size	Dimensions	
					A	B
2" NPT	1" NPT	801A	150	1/8"	7"	14 15/16"
2" NPT	2" NPT	802A	150	9/64"	9 1/2"	18 1/16"
3" NPT	3" NPT	803A	150	11/64"	11"	23 1/2"
4" NPT	4" NPT	804	150	11/64"	11"	23 1/2"

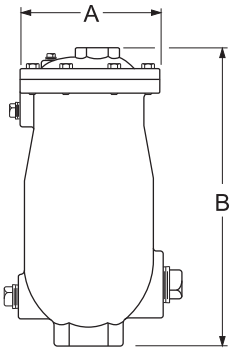

801A - 804
Wastewater
Single Body Combination
Air Valves

Surge-Suppression Air Valves and Isolation Valves in a pump discharge application.

200 PSI Flanged End Butterfly Valves

Polyamide Coated Cast Iron Body • Extended Neck • Cold Form Stem Drive • Elastomer Encapsulated Disc • Flanged Ends • Max. Temp. 200°F with EPDM only • ASME B16.10 Face-to-face dimensions

Patent Pending

Sizes 2" through 12"

DESIGNED TO MEET MSS SP-67 STANDARD

FC-27*5-0

*Optional disc
EPDM (6)
or BUNA (7)

MATERIAL LIST

	PART	SPECIFICATION
1.	Upper Stem	Stainless Steel, ASTM A582 Type 416
2.	Upper Bushing	PTFE over Porous Bronze, Steel Backed
3.	O-Ring	EPDM or BUNA-N
4.	Body	Cast Iron ASTM A126 Class B with Polyamide Coating
5.	Disc	Ductile Iron ASTM A395 with EPDM or BUNA-N Encapsulation
6.	Lower Bushing	PTFE over Porous Bronze, Steel Backed
7.	Lower Stem	Stainless Steel, ASTM A582 Type 416
8.	Dust Plug	PVC
9.	Nameplate	Aluminum

Class 125 flange ends

Polyamide coating has NSF certification

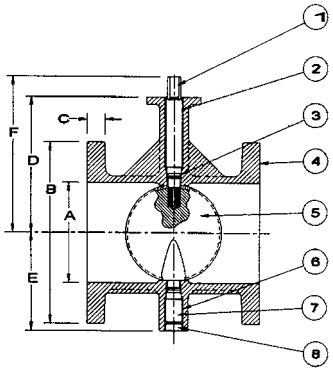

DIMENSIONS — WEIGHTS

Size In.	Size mm.	A	B	C	D	E	F	G	J
2	50	2.11	6.0	0.62	5.69	3.16	6.94	7.00	0.437
2½	6	2.59	7.0	0.69	5.78	3.25	7.03	7.50	0.437
3	80	3.07	7.5	0.75	5.99	3.54	7.24	8.00	0.437
4	100	4.03	9.0	0.94	6.99	4.35	8.24	9.00	0.437
5	125	5.05	10.0	0.94	7.47	4.85	8.72	10.00	0.437
6	150	6.07	11.0	1.00	8.28	5.94	9.53	10.50	0.437
8	200	7.98	13.5	1.12	9.25	6.87	10.50	11.50	0.437
10	250	10.02	16.0	1.19	11.03	9.18	12.28	13.00	0.562
12	300	12.00	19.0	1.25	12.01	10.16	13.26	14.00	0.562

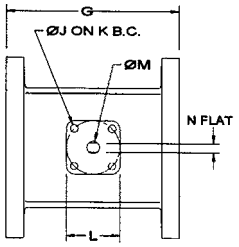

Size In.	Size mm.	K	L	M	N	P	Q	R	Weight Lbs.	Weight Kg.
2	50	3.25	3.25	0.50	0.37	0.75	4.75	4	16.5	7.5
2½	65	3.25	3.25	0.50	0.37	0.75	5.50	4	24	10.9
3	80	3.25	3.25	0.50	0.37	0.75	6.00	4	28	12.7
4	100	3.25	3.25	0.66	0.50	0.75	7.50	8	44	20.0
5	125	3.25	3.25	0.66	0.50	0.88	8.50	8	53	24.1
6	150	3.25	3.25	0.78	0.56	0.88	9.50	8	65	30.0
8	200	3.25	3.25	0.78	0.56	0.88	11.75	8	94	42.7
10	250	5.00	4.75	1.06	0.75	1.00	14.25	12	155	70.4
12	300	5.00	4.75	1.06	0.75	1.00	17.00	12	214	97.6

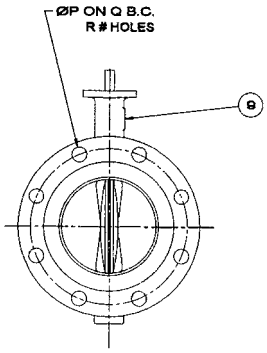

NOT RECOMMENDED
FOR STEAM SERVICE

NIBCO INC. WORLD HEADQUARTERS • 1516 MIDDLEBURY ST. • ELKHART, IN 46516-4740 • USA • PH: 1.800.234.0227
TECH SERVICES PH: 1.888.446.4226 • FAX: 1.888.234.0557 • INTERNATIONAL OFFICE PH: +1.574.295.3327 • FAX: +1.574.295.3455
www.nibco.com

JCM Service Saddles

JCM Service Saddles provide a quick, dependable means of tapping pipe for branch connections of 1/2" through 2-1/2". Use of economical JCM Service Saddles eliminate problems common to direct taps, such as leaking threads or split pipe, and reinforces the critical connection.

JCM Service Saddles are designed for maximum safety and performance. The wrap around design, wide skirt and wide straps support and reinforce the pipe while providing excellent stability to the saddle. The heavy duty design of these saddles provides strength and mass for long term service.

High pressure performance is assured by the broad, pressure activated gasket. Permanently set in a retaining cavity, the contoured gasket produces a positive initial seal which increases with increase in line pressure.

The JCM 402, 404, 406, 408 saddles, with their wide bodies and large sealed outlet areas, provide an excellent means of repairing holes, pin holes and leaking 3/4" and 1" direct taps.

DESIGNED FOR SAFETY AND PERFORMANCE

HEAVY THREADED OUTLET - with IPS or CC threads reinforces the critical connection.

BROAD PRESSURE ACTIVATED GASKET - for low and high pressure performance.

CORROSION RESISTANT COATING - for long-term service.

WIDE STRAPS - increase the load bearing area of the straps.

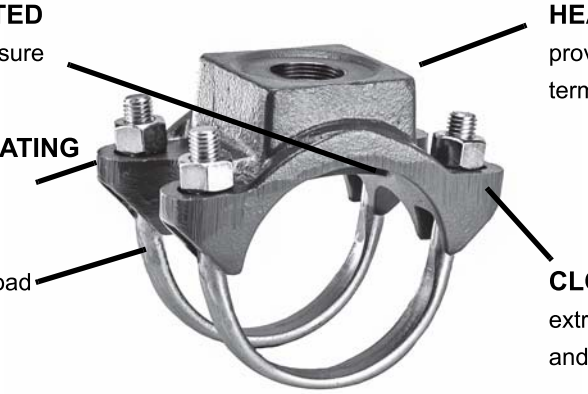

HEAVY DUTY DESIGN - provides strength and mass for long term service.

CLOSED CANTED EARS - for extra protection against electrolysis and maximum strap bearing.

WIDE BODY WRAP AROUND DESIGN - support and reinforce the pipe and provide excellent stability.

MATERIAL SPECIFICATIONS - JCM SERVICE SADDLES

Body:	Ductile Iron ASTM A536
Straps:	**Models 401, 402, 407, 408** - Electro Galvanized Steel **Models 403, 404, 405, 406** - Bands, Bolts, Nuts and Washers are 18-8 Type 304 Stainless Steel.
Gasket:	Nitrile Butadiene Rubber (NBR, Buna-N) per ASTM D2000. Molded virgin rubber with a pressure activated hydromechanical design. Gasket is bonded into a cavity for internal and external retention. Gasket temperature range -40°F to 212°F (-40°C - 100°C) Gasket suitable for water, salt solutions, mild acids, bases, and sewage. Optional EPDM gasket available.
Finish:	**Models 401, 402, 403, 404** - Standard Shop Coat Primer: Heavy coat of corrosion resistant metal primer. **Models 405, 406, 407, 408** - Fusion Plastic Coating: fusion bonded, high density blue plastic coating, 12 mils minimum thickness with a dielectric strength of over 12,000 volts.

JCM Service Saddles - Double Strap
JCM 402 Double Strap Service Saddle
JCM 404 Service Saddle with Double Stainless Steel Straps

The JCM 402 and 404 utilize the heavy duty double strap saddle body with corrosion resistant shop coat primer. The 402 is furnished with two electro galvanized straps sizes 2" -12", on sizes 15.20 and larger, the 402 incorporates two fabricated, wide electro galvanized steel straps. The 404 is furnished with two wide stainless steel straps.

NSF Certified to NSF/ANSI 61

NOM. PIPE SIZE (IN.)	PIPE O.D. RANGE (IN.)	WT. EA. LBS.	CTN. QTY.	JCM 402 SERVICE SADDLE BASE CATALOG NUMBE402-R X ADD TAP CODE	JCM 404 SERVICE SADDLE BASE CATALOG NUMBER X ADD TAP CODE
2	2.35 - 2.63	4	6	*402-0238 X --	*404-0238 X --
2-1/2	2.70 - 3.13	5	6	*402-0288 X --	*404-0288 X --
3	3.25 - 3.50	7	6	**402-0350 X --	**404-0350 X --
3 - 4	3.80 - 4.13	7	6	**402-0413 X --	**404-0413 X --
4	4.25 - 4.50	10	4	402-0450 X --	404-0450 X --
4	4.50 - 4.80	10	4	402-0480 X --	404-0480 X --
4	4.74 - 5.45	10	4	402-0545 X --	404-0545 X --
5	5.50 - 5.56	10	4	402-0556 X --	404-0556 X --
6	6.50 - 6.63	10	4	402-0663 X --	404-0663 X --
6	6.63 - 6.90	10	4	402-0690 X --	404-0690 X --
6	6.84 - 7.60	10	4	402-0745 X --	404-0745 X --
8	8.50 - 8.63	12	4	402-0863 X --	404-0863 X --
8	8.63 - 9.05	13	4	402-0905 X --	404-0905 X --
8	8.99 - 9.79	13	4	402-0963 X --	404-0963 X --
10	10.60 - 10.75	14	3	402-1075 X --	404-1075 X --
10	10.75 - 11.10	14	3	402-1110 X --	404-1110 X --
10	11.10 - 11.40	14	3	402-1140 X --	404-1140 X --
10	11.00 - 12.25	14	3	402-1225 X --	404-1225 X --
12	12.75 - 13.20	16	3	402-1320 X --	404-1320 X --
12	12.75 - 13.50	16	3	402-1350 X --	404-1350 X --
12	13.10 - 14.38	16	2	402-1426 X --	404-1426 X --
12 - 14	14.00 - 15.20	15	1	402-1520 X --	404-1520 X --
14	C-905 15.30	15	1	402-1530 X --	404-1530 X --
14 - 16	15.20 - 16.60	15	1	402-1660 X --	404-1660 X --
16	C-905 17.40	16	1	402-1740 X --	404-1740 X --
16 - 18	17.30 - 18.88	16	1	402-1888 X --	404-1888 X --
18	C-905 19.50	18	1	402-1950 X --	404-1950 X --
18 - 20	19.00 - 20.50	18	1	402-2050 X --	404-2050 X --
18 - 20	20.50 - 21.50	18	1	402-2125 X --	404-2125 X --
20	C-905 21.60	20	1	402-2160 X --	404-2160 X --
20	21.35 - 22.60	20	1	402-2260 X --	404-2260 X --
20	22.50 - 23.70	20	1	402-2370 X --	404-2370 X --
24	23.75 - 25.25	20	1	402-2525 X --	404-2525 X --
24	C-905 25.80	20	1	402-2580 X --	404-2580 X --
24	25.50 - 26.50	20	1	402-2650 X --	404-2650 X --

OUTLET SIZES	TAP CODES IP	TAP CODES CC
1/2"	04	--
3/4"	06	07
1"	08	09
1-1/4"	10	11
1-1/2"	12	13
2"	14	15
2-1/2"	16	--

*Outlets Not available in 1-1/4", 1-1/2", 2" or 2-1/2"
**Outlets Not available in 2" CC or 2-1/2" IP

HOW TO ORDER

1. Determine O.D. of pipe, outlet size and thread type.
2. Select desired saddle type and tap order code.
3. Look under saddle listing to determine order number. Add tap code after base catalog number.
   Example: For 6" C.I. Pipe with O.D. of 6.90 with 1" IP thread, order: 402-0745 x 08IP.
   For stainless steel straps, order: 404-0745 x08IP

DEPARTMENT OF THE ARMY
ALBUQUERQUE DISTRICT, CORPS OF ENGINEERS
ALBUQERQUE DISTRICT OFFICE
4101 JEFFERSON PLAZA NE
ALBUQUERQUE, NM 87109

SUBMITTAL REVIEW VERIFICATION SHEET

PROJECT TITLE: Kirtland BFF Mid-Plume Pump and Treat System Expansion
CONTRACT NUMBER: W912DR-12-D-0006 DM01
DATE RECEIVED: 8-14-2017
DATE REVIEWED: 8-14-2017

DESCRIPTION OF ITEMS REVIEWED:

1. Electrical Metering

NO EXCEPTIONS TAKEN.	**X**
EXCEPTIONS AS NOTED ON DRAWINGS AND/OR ATTACHED SHEETS(S). RESUBMISSION NOT REQUIRED.	
EXCEPTIONS AS NOTED ON DRAWINGS AND/OR ATTACHED SHEETS(S). RESUBMISSION REQUIRED.	
RECEIPT ACKKNOWLEDGED.	

Notes:

NOTE: ITEMS REVIEWED AS TO GENERAL LAYOUT ONLY. DIMENSIONS AND QUANTITIES NOT CHECKED. REVIEW DOES NOT RELIEVE CONTRACTOR OF RESPONSIBILITIES FOR ANY ERRORS WHICH MAY EXIST AS CONTRACTOR SHALL BE RESPONSIBLE FOR DIMENSIONS AND DESIGN OF ADEQUATE CORRECTIONS, DETAILS AND SATISFACTORY CONSTRUCTION OF WORK.

SIGNATURE SANCHEZ.AMY.ELIZABETH.1454434338 Digitally signed by SANCHEZ.AMY.ELIZABETH.1454434338 DN: c=US, o=U.S. Government, ou=DoD, ou=PKI, ou=USA, cn=SANCHEZ.AMY.ELIZABETH.1454434338 Date: 2017.08.14 11:53:25 -06'00' **DATE** 8/14/2017

EA Engineering, Science, and Technology, Inc., PBC

Submittal Review Sheet 1

Project Name: **Kirtland BFF Mid-Plume Pump and Treat System Expansion**				Date Received: **8/7/2017**	
Project Owner: **Kirtland Air Force Base**				Checked By: **Tyler Curley**	
Contractor: **Wilson Electric**	Engineer: **EA Engineering, Science and Technology, Inc., PBC.**			Log Page: **NA**	
Address: **501 General Somervell SE # B** **Albuquerque, NM 87123**	Address: **320 Gold Ave. SW, Suite 1300** **Albuquerque, NM 87102**			EA No.: 62599DM01	
				Spec. Section: **NA**	
				Drawing/Detail No.: **E-000/E-001**	
ATTN: Matthew Walstrom	ATTN: **Devon Jercinovic**			1st Sub	Re-Sub
Date Transmitted: **8/7/2017**	Prev. Transmittal Date:				

Item No.	No. Copies	Description	Manufacturer	Mfg/Vendor Dwg or Detail	Action Taken*
1	1	Electrical Metering	Elester		**A**

The Action Designated Above is in Accordance with the Following Legend:

A – Furnish as Submitted
B – Furnish as Noted
C – Revise and Re-submit
1. Not enough information for review.
2. No reproducible submitted.
3. Copies illegible.
4. Not enough copies submitted.
5. Wrong sequence number.
6. Wrong resubmittal number.
7. Wrong Spec. Section.
8. Wrong form used.
9. See Comments.

D – Rejected
E – Engineer's Review not Required
1. Submittal not required.
2. Supplemental Information. Submittal retained for Information purposes only.
3. Information reviewed and approved on prior submittal.
4. See Comments.

Review is for general compliance with Contract Documents. No responsibility is assumed for correctness of dimensions or detail. Contractor is required to specify deviations from contract requirements. Lack of exceptions noted by Engineer does not waive Contractor's obligation to comply with Drawings and Specifications.

Comments:
Items reviewed and confirmed to meet requirements
(Reviewed Material in Parentheses)
Issues in Bold

Material Conforms to electrical drawings.

By: _____ Date: 8/8//17

Distribution: [1] Contractor [1] Engineer [1] Owner

A3 ALPHA® Meter with EA_NIC

Available in single phase and polyphase meter forms, the A3 ALPHA meter with EA_NIC is an ideal solution for commercial, industrial, and high-end residential AMI metering.

Advanced electricity metering

As a component of the EnergyAxis System, the A3 ALPHA meter with the internal EnergyAxis® network interface card (EA_NIC) brings advanced metering infrastructure capabilities to commercial and industrial metering applications and high end residential applications where real and reactive energy measurements are desired. Customers can obtain interval data, real and reactive energy metering, critical tier, and time-of-use (TOU) data through the EnergyAxis network.

To function as an EnergyAxis System component, the A3 ALPHA meter is supplied with an internal network interface card with two-way 900 MHz communications capability. The EA_NIC mounts under the cover of the A3 ALPHA meter, allowing network deployment to be as simple as installing a meter. No special equipment is necessary because the EA_NIC automatically establishes two qualified communication paths to the gatekeeper. If network conditions change, the EA_NIC automatically and immediately uses the secondary qualified communication pathway to the gatekeeper.

www.byramlabs.com

The data you need

The A3 ALPHA meter is a highly accurate revenue meter with an ANSI C12.20 accuracy Class of 0.2. Current ALPHA meter users will find the basic A3 ALPHA meter types familiar. The A3D delivers basic real energy and demand, and the A3T provides real energy and demand where TOU rates are implemented. The A3R, A3K, and A3Q are used where real and reactive or bidirectional metering are required. Each measured quantity is stored in nonvolatile memory and includes energy, demand, TOU data, and interval recording.

As an element in the EnergyAxis network, the A3 ALPHA meter's EA_NIC reports meter readings, statuses, warning messages, and interval data to the gatekeeper that is then read by the EnergyAxis Management System (EA_MS).

Depending on the meter type and programming, the electricity meter readings reported through the network can include:

- Total and 4-tier energy for two energy quantities, real or reactive

BYRAM LABS
AN ENERGY TECHNOLOGY COMPANY

elster

Built on the strengths of the patented ALPHA meter design, the A3 ALPHA meter with EA_NIC provides highly accurate bidirectional real and reactive AMI metering functionality.

- 4-tier demand for two demand quantities, real or reactive. Each demand reading has an associated date and timestamp to indicate the time of the maximum demand.
- 4-tier coincident demand for two coincident demand quantities, real or reactive
- Per phase voltage
- 2 channels of interval data for any metered quantity in 5-, 15-, 30-, or 60-minute interval lengths

Additionally the A3 ALPHA meter can be configured to report whenever a programmable demand threshold has been exceeded.

Network functionality

The electricity meter data is communicated through the EnergyAxis local area network (EA_LAN) to the local area gatekeeper, where it is stored for retrieval by EA_MS.

In addition, all electricity meter data is available to the utility on request directly from the endpoint, allowing the highest level of customer support and billing accuracy.

All A3 ALPHA meters equipped with an EA_NIC in the EnergyAxis System are uniquely identified by a factory programmed ID. This ID links the meter data to a specific consumer account for accurate billing and enhanced customer support.

Outage and restoration functionality

The A3 ALPHA meter with EA_NIC provides support for utility outage and restoration management. This enables the utility to more quickly identify the scope of outages and to receive positive restoration messages to validate that power has been restored to every endpoint.

Technical specifications

- FHSS RF technology in the unlicensed 902 MHz to 928 MHz band
- Compliant with FCC Rules, Part 15 and Industry Canada RSS-210
- Temperature range of -40 °C to +85 °C
- Humidity range of 0 % to 100 %
- Operating voltage range 96 V to 528 V
- ANSI C12.20 accuracy Class 0.2
- ANSI standards compliance C12.1, C12.10, C12.18, C12.19, C12.20, C12.21

The A3 ALPHA Meter Technical Manual and the A3 ALPHA Meter Data Sheet list additional meter specifications for the A3 ALPHA meter.

The EnergyAxis Network Interface Card is available on all A3 ALPHA meter types and meter forms for both single phase and polyphase services.

About Byram Laboratories

Byram, a global leader in smart metering and smart grid solutions, has delivered smart metering devices worldwide for over 100 years. Byram smart metering system solutions provide energy conservation capabilities via demand response programs, smart grid applications, and operational efficiencies resulting in significant value creation across the customer enterprise.

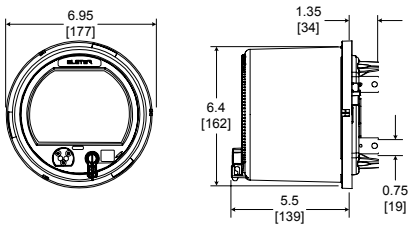

Dimensions in inches [millimeters]. For reference only. Do not use for construction.

Byram Laboratories Inc.
1 Columbia Road
Branchburg, NJ 08876

United States

T +1.800.766.1212 (US toll free)
F +1.908.252.0822

www.byramlabs.com

© 2011 by Elster and Byram Labs. All rights reserved.

Information contained herein is subject to change without notice. Product specifications may change. Contact your Byram representative for the most current product information. Printed in the United States.

ALPHA and EnergyAxis are registered trademarks of Elster. Used by permission.

DS42-1007A

METER SOCKETS
TRANSFORMER RATED • RINGLESS & RING • 5, 6, 8, & 13 TERMINAL

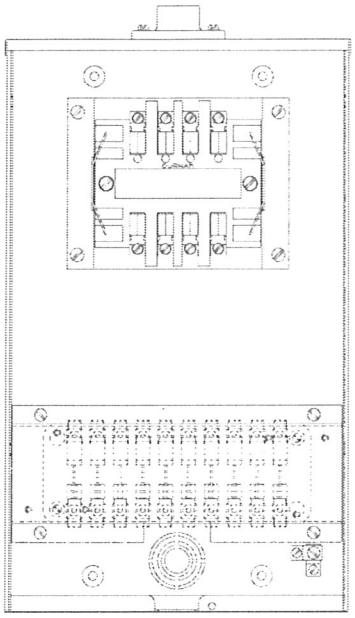

STL8-1K

Note:
Provision for
Test Switch

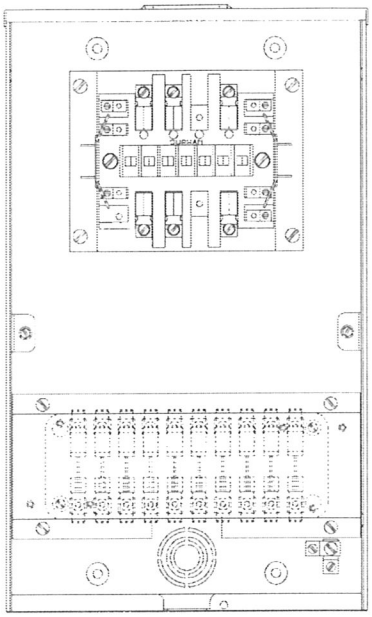

STL13-2B

CATALOG NUMBER		# OF	CABINET DIMENSIONS			KNOCKOUT	1-PIECE	2-PIECE
RINGLESS	RING	JAWS	HEIGHT	WIDTH	DEPTH	CONFIGURATION	COVER	COVER
ST(**)5-1(*)		5	20	12	4 23/64	Fig. 21	X	
ST(**)6-1(*)		6	20	12	4 23/64	Fig. 21	X	
ST(**)8-1(*)		8	20	12	4 23/64	Fig. 21	X	
ST(**)13-1(*)		13	20	12	4 23/64	Fig. 21	X	
ST(**)5-2(*)	RST(**)5-2(*)	5	20	12	4 23/64	Fig. 21		X
ST(**)6-2(*)	RST(**)6-2(*)	6	20	12	4 23/64	Fig. 21		X
ST(**)8-2(*)	RST(**)8-2(*)	8	20	12	4 23/64	Fig. 21		X
ST(**)13-2(*)	RST(**)13-2(*)	13	20	12	4 23/64	Fig. 21		X

(*) Select desired bolt-on hub or top configuration from HUB SELECTION CHART and add the appropriate suffix to the catalog number.

Voltage rating of all units is 600 Volts AC RMS.

Ground wire connector supplied (#14-#2 CU/AL).

A universal test switch mounting plate is supplied without a test switch.

Ring style units are supplied with snap-type sealing rings.

UL (Underwriters Laboratories) label available.

(**) Units are supplied with either a low test switch bridge or standard test switch bridge. Please use the appropriate prefix, L or S, to designate. (Example: for low test switch bridge, ST(L)13-2(*), for standard test switch bridge, ST(S)13-2(*).

Contact factory or your local manufacturer's agent to specify test switches, diagrams, and other special features or prewired options.

HUB SELECTION CHART	
HUB OR TOP CONFIGURATION	CATALOG SUFFIX
SOLID	A
FOR HUB	B
HCP	C
1"	K
1 1/4"	L
1 1/2"	M

Instrument transformers

Type CMV
Indoor or outdoor current transformers

Product features
– 600 volt indoor or outdoor, 10 kV BIL, 25 through 60 hertz
– Primary amperes: CMV 100-4000
– 3.5" x 4.5" (88.9 mm x 114.3 mm) oval window
– Designed for pad-mounted distribution transformer metering

Application
The CMV transformer is designed for pad-mounted distribution
transformer metering. It is available in tapered bottom with removable bus bar adapters, for adaptability to a variety of
mounting arrangements. The CMV transformer can be mounted directly over the LV terminals of pad mounted distribution transformers.

Core and coils
The CMV transformer has an oval shaped ring-type core and
fully distributed winding assembled around a glass-filled polypropylene window liner.

Insulation
Thermoplastic rubber insulating material is permanently molded to the core and coil assembly on both designs, resulting in a compact unit with excellent mechanical, thermal, and dielectric characteristics.

Secondary terminals and cover
The CMV transformers are supplied with large compression-type secondary terminals, a short circuit device, and a clear, rectangular snap-on cover suitable for locking with a meter seal. This clear plastic cover allows a visual check of connections and is keyed to a short circuit device to ensure proper installation. Terminals can also serve as a post-type
connector by looping wire under the screw head.

Primary
The CMV has an oval primary opening suited to fit over the secondary spade in pad-mounted transformers.

Primary
The CMV has an oval primary opening suited to fit over the secondary spade in pad-mounted transformers.

Bus bar adapters
Bus bar adapters for attachment to the terminal spade are shipped with tapered bottom transformers. The CMV transformer may be secured to a wall panel or bracket by inserting bolts through the pair of mounting holes in the transformer body.

Tapered bottom
The tapered bottom CMV adds clearance to locate three
transformers (one unit upside down) over close, triangularly
spaced, pad-mounted transformer terminals.

Test reports
IEEE test reports are stored electronically in various formats and can be e-mailed at time of shipment.

Standards
This unit meets all applicable IEEE and NEMA standards.

Power and productivity
for a better world™

Unit dimensions

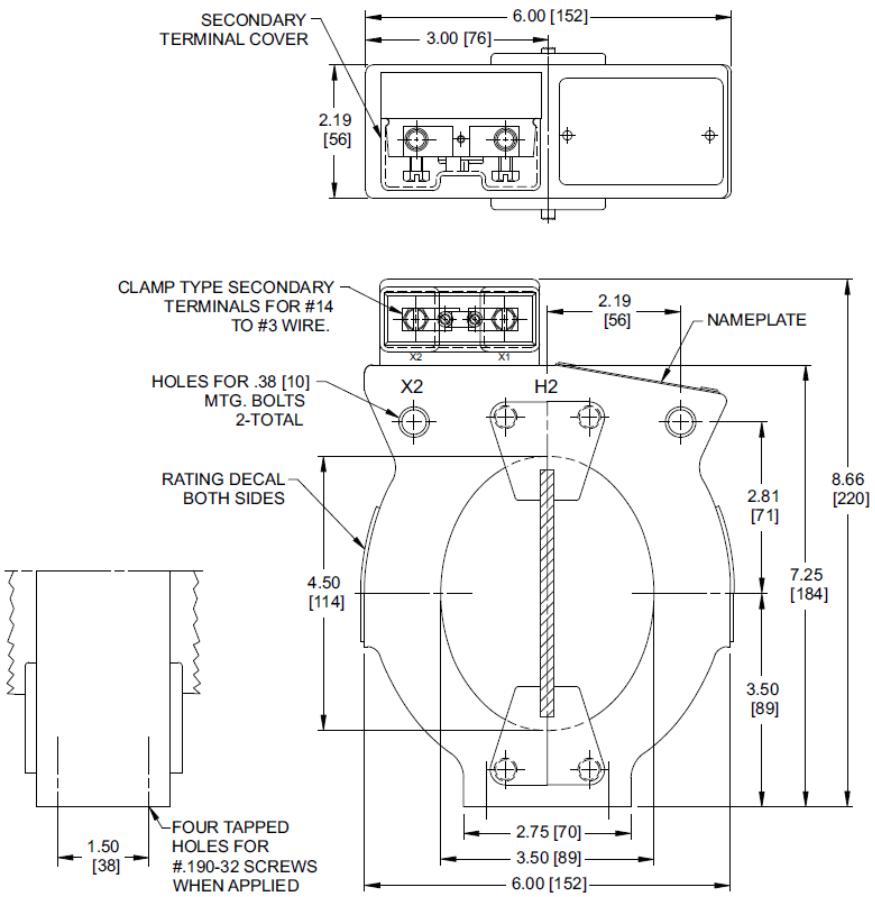

Tapered bottom

Approximate weight is 6 lbs.

Primary Ampere Rating	Rating Factor 30°C	Rating Factor 55°C	IEEE Metering Accu-	IEEE Relaying Accuracy	Part Number
100	4.0	3.0	1.2B-0.1	-	1C3746
200	4.0	3.0	0.3B-0.1	C20	1B6958
300	4.0	3.0	0.3B-0.2	C20	1B6959
400	4.0	3.0	0.3B-0.2	C20	1B6960
500	3.0	2.2	0.3B-0.5	C20	1B6969
600	3.0	2.2	0.3B-0.5	C20	1B6961
800	3.0	2.2	0.3B-0.5	C20	1B6962
1000	2.0	1.5	0.3B-0.5	C30	1B6963
1200	2.0	1.5	0.3B-0.9	C40	1B6964
1500	2.0	1.5	0.3B-0.9	C50	1B6965
2000	1.5	1.2	0.3B-1.8	C50	1B6966
3000	1.3	1.0	0.3B-1.8	C30	1B6967
4000	1.0	0.75	0.3B-1.8	C20	1B6968

tikatmp™
Transformer Metering Package

submittaldocs
Submittal Documentation & Cut-Sheets

Tika's Transformer Metering Package, or TMP™ is the most efficient and economical way to provide metering for single and three phase padmount transformer metering applications.

Our out-of-the-box, bundled package ships equipped with all the necessary components required to provide a professional and accurate installation as quickly and easily as possible.

Documentation for:

TMP HARDWARE KIT

Transformer Metering Package (TMP) Hardware Kit, consisting of:

(Qty. 5) 49 feet (5ft per color: White, black, blue, purple, yellow, orange & red) of #12 Insulated copper wire.
(Qty. 1) Littelfuse ACS 600V, 30A, 3 pole Midget Fuse block (Item# L60030M-3SQDIN).
(Qty. 3) Littelfuse 250 VAC fuses to protect potentials (Item# BLN1).
(Qty. 3) Littelfuse Deadfront Fuse Cover Puller (Item# SPL001)
(Qty. 1) Full-color wiring diagram.
(Qty. 1) Mounting template.
(Qty. 4) Mounting bolts, nuts, washers & zip ties.
(Qty. 1) Closed nipple connector with sealing rings.

tika energy management
tika EnergyManagement

1472 South 600 West
Bountiful, Utah 84010
800-972-8452 toll free
801-294-0066 local
801-294-0077 fax

sales@tikaenergy.com
www.tikaenergy.com

BLN Series Fibre Body Fast-acting Midget / 5AG Size Fuse

Description

Fibertube, 250 V BLN Fuses provide low-cost protection for military applications and control circuits.

Electrical Characteristics for Series

% of Ampere Rating	Ampere Rating	Opening Time
100%	0-30	Until temp stabilizes
135%	0–30	1 hours, Maximum
200%	0-30	2 minutes, Maximum

Agency Approvals

Agency	Agency File Number	Ampere Range
UL	E10480	1.0 - 30A
CSA	LR2 9862	1.0 - 30A
PSE	NBK170305-E10480A-D	1.0 - 30A

Electrical Specifications by Item

Ordering Number	Amp Rating (A)	Max Voltage Rating (V)	Interrupting Rating	Nominal Cold Resistance (Ohms)	Agency Approvals		
					UL	CSA	PSE
BLN 001	1	250	10,000 amperes at 250 VAC.	.395	x	x	x
BLN 01.5	1.5			.222	x	x	x
BLN 002	2			.125	x	x	x
BLN 003	3			.0645	x	x	x
BLN 004	4			.0432	x	x	x
BLN 005	5			.0413	x	x	x
BLN 006.	6			.0284	x	x	x
BLN 008	8			.0166	x	x	x
BLN 010	10			.011	x	x	x
BLN 012	12			.00920	x	x	x
BLN 015	15			.00684	x	x	x
BLN 020	20			.0036	x	x	x
BLN 025	25			.00360	x	x	x
BLN 030	30			.00270	x	x	x

©2009 Littelfuse, Inc.
Specifications are subject to change without notice.
Please refer to www.littelfuse.com/series/BLN.html for current information.

Temperature Rerating Curve

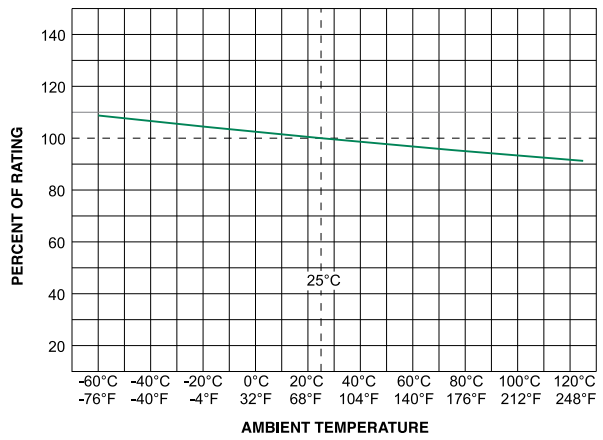

Dimensions

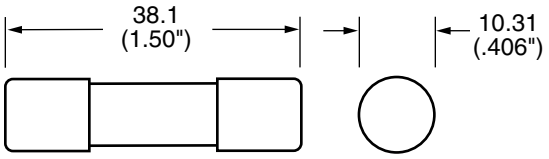

Average Time Current Curves

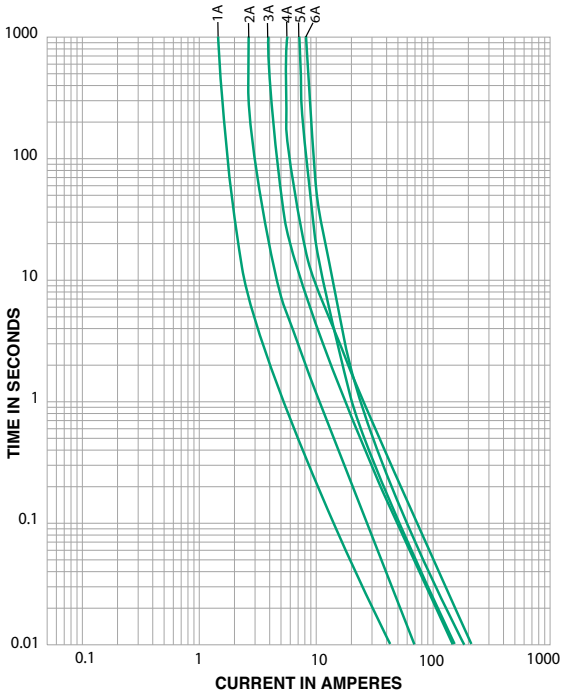

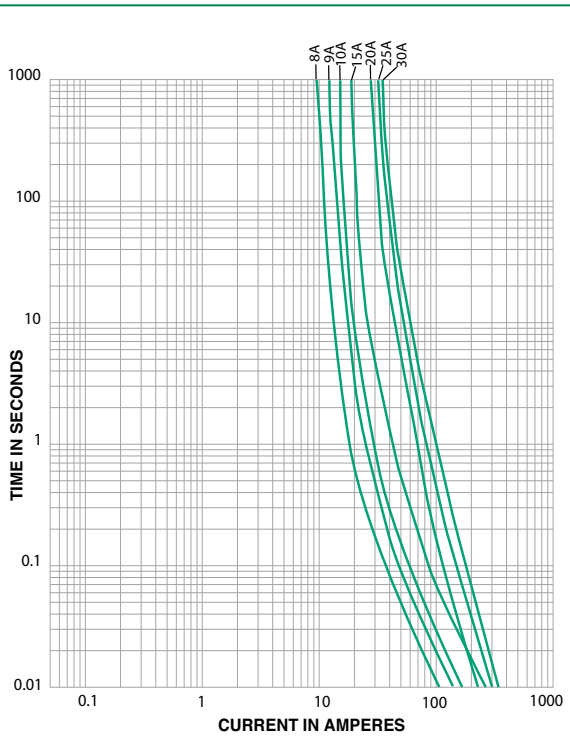

©2009 Littelfuse, Inc.
Specifications are subject to change without notice.
Please refer to www.littelfuse.com/series/BLN.html for current information.

DIN Releasable Class CC, G and Midget Fuse Block

Littelfuse Class CC, G and Midget fuse blocks have integral DIN rail mounting capabilities that allow secure mounting to 35mm "hat" type DIN rails. New releasable mechanism allows installation and removal of block without removing adjacent components on DIN rail. Electrical panel builders and machine builders no longer need to use mounting adapters, saving assembly time and related costs.

Standard Features

- Spring-free mechanism allows for easy installation and removal.
- Integral DIN rail mounting reduces assembly time.
- Quick-Connect terminals accommodate side or top connection.
- Class CC and G versions ensure branch circuit protection compliance.
- Finger safe cover (Class CC and Midget) available – SPL001.

Specifications

Voltage Rating:	Class CC, Midget:	600V AC/DC
	Class G:	480V AC
Ampere Rating:	Class CC, Midget:	30 Amperes Max.
	Class G:	25-30 Amperes
SCCR Rating:	Class CC:	200,000 amperes
	Class G:	100,000 amperes
	Midget:	10,000 amperes
Terminals:	SQ - Screw & Quick Connect (Q.C.) PQ - Pressure Plate & Screw / Q.C. C - Box Lug	
Clip/Terminals:	Tin-plated copper alloy	
Screw Terminals:	Zinc-plated steel	
Box Lug:	Tin-plated copper	
Molded Base:	Black thermoplastic	
Molded Latch:	Red thermoplastic	
Flammability Rating:	UL 94V0	
Approvals:	Class CC, Class G:	UL Listed (File E14721)
	Midget:	UL Recognized (File E14721)
	All:	CSA Certified (File LR7316)

Ordering Information*

Class	Number of Poles	Catalog Number	Connector Type	Maximum Wire Size
Midget	3	L60030M-3CDINR	Box Lug	#6 CU
		L60030M-3PQDINR	Pressure plate with Q.C. Terminal	#10 CU
		L60030M-3SQDINR	Screw/Q.C. Terminal	#10 CU
CC	3	L60030C-3CDINR	Box Lug	#6 CU
		L60030C-3PQDINR	Pressure plate with Q.C. Terminal	#10 CU
		L60030C-3SQDINR	Screw/Q.C. Terminal	#10 CU
G	3	L60030G-3CDINR	Box Lug	#6 CU
		L60030G-3PQDINR	Pressure plate with Q.C. Terminal	#10 CU
		L60030G-3SQDINR	Screw/Q.C. Terminal	#10 CU

1-pole and 2-pole configurations will be available soon. Please consult factory.

© 2008 Littelfuse • POWR-GARD™ Products

Dimensions of Class CC, Class G, and Midget Fuse Block

Dimensions: mm [in]

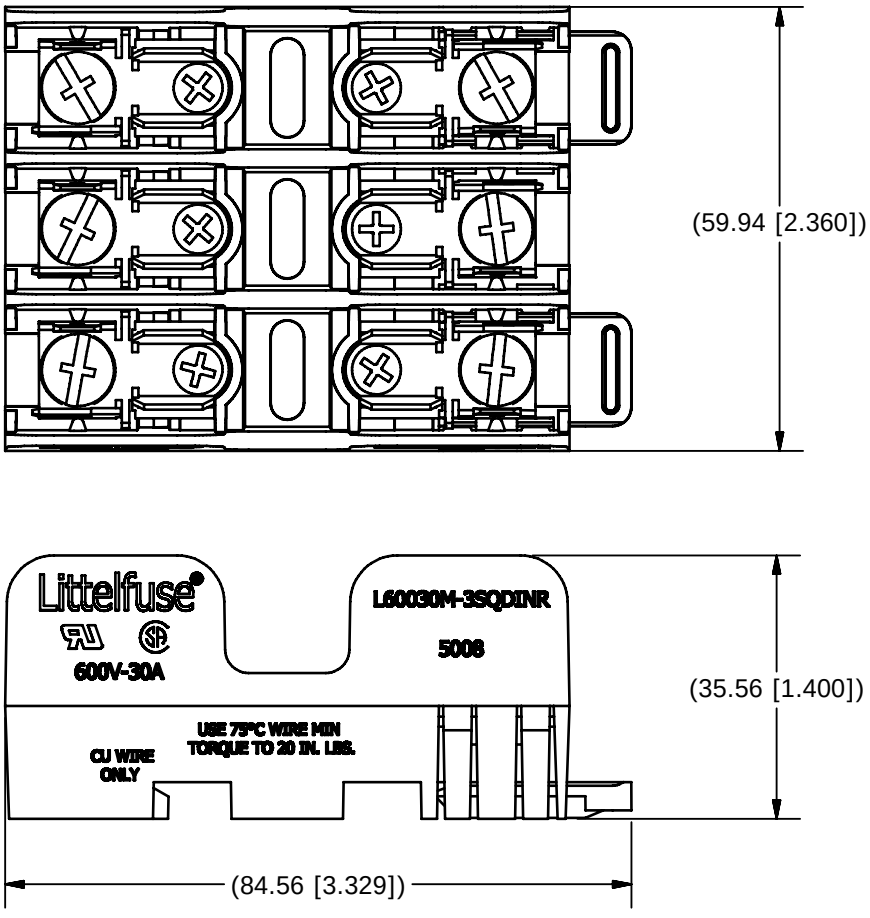

Recommended Fuses

Class CC: CCMR, KLDR, KLKR
Midget: BLF, BLN, BLS, FLA, FLM, FLQ, FLU, KLK, KLKD, KLQ, LA600-2
Class G: SLC 25, SLC 30

© 2008 Littelfuse • POWR-GARD™ Products

CLASS CC AND MIDGET FUSEBLOCK ACCESSORIES

FBDIN1 Rail Adapter

Features/Benefits

- DIN Rail adaptor for 30 A Midget, Class CC and Class G fuseblocks
- Patented design with no tools necessary for installation
- Permits snap-mounting of Class CC, Class G and Midget 30 A fuseblocks to standard and low profile 35 mm symmetrical DIN rails and 32 mm asymmetrical DIN rails
- Easy removal via disconnect tab

Web Resources

For additional technical information visit:
www.littelfuse.com/fbdin1

Dimensions in inches

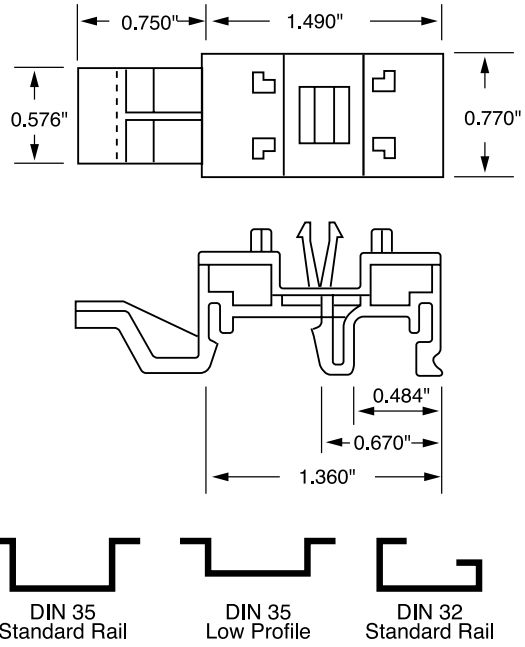

Recommended Fuseblocks

Midget-Style and Class CC
Class G

SPL001 Cover Puller

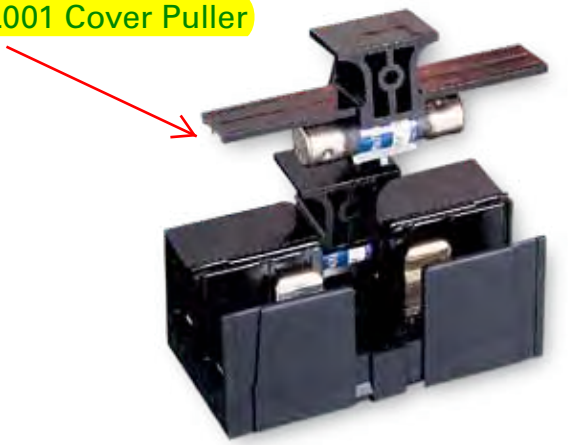

Features/Benefits

- 600 V ⅒-30 A Class CC and Midget fuse cover puller that offers increased protection when removing fuses
- Simple removal without the need for a separate puller
- Meets Dead Front requirements
- Easily gangable with 5⁄16" diameter wire
- For use with all 600 V Class CC and Midget ⅒-30 A fuses
- Label provided for easy fuse identification

Dimensions in inches

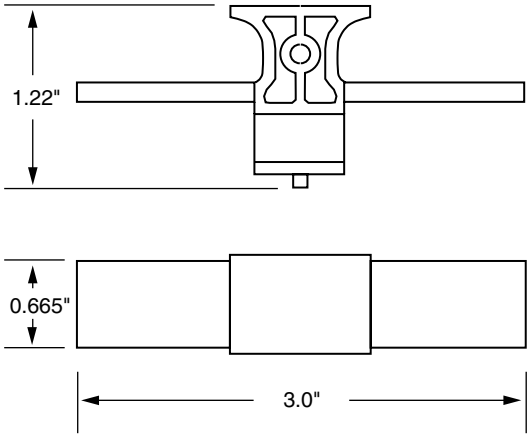

Recommended Fuseblocks

L60030C
L60030M

Web Resources

For additional technical information visit:
www.littelfuse.com/spl001

© JUNE 2011 Littelfuse POWR-GARD Products

Rigid Threaded Nipples

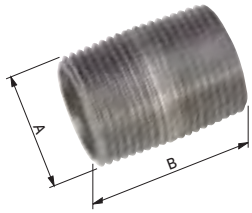

Use:
Threaded nipples are used to extend a length of threaded Rigid or IMC Conduit according to the pipe size and length desired. May also be used to connect two steel outlet boxes or metal enclosures together.

RIGID CONDUIT

Catalog Number	UPC No 0-31857	Trade Size	Nominal Dimensions A	B	C	Pcs/ Unit	Ctn/Case Qty/Qty	Case Wt.
44360	44360-3	1/2"xCL	1/2"	CL-1 1/8"		2	10	2.7
44370	44370-2	1/2"x2"	1/2"	2"		2	20	4.9
54251	54251-1	1/2"x1 1/2"	1/2"	1 1/2"		1	25	2.4
44361	44361-0	3/4"xCL	3/4"	CL-1 3/8"		2	20	3.9
44371	44371-9	3/4"x2"	3/4"	2"		2	20	6.3

Certification / Certificación :
LR57925

Conduit Locknuts

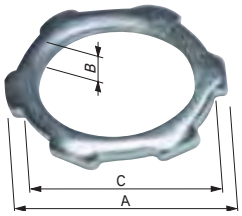

Use:
Conduit locknuts are used for securing Rigid and IMC Conduits and other threaded connectors to a steel outlet box or metal enclosure.

Materials / Materiales :
- Steel / Acero

Finish / Final :
- Zinc Plated / Cinc Plateado

RIGID CONDUIT

Catalog Number	UPC No 0-31857	Trade Size	Nominal Dimensions A	B	C	Pcs/ Unit	Ctn/Case Qty/Qty	Case Wt.
45101	45101-1	1/2"	1.12	0.09	1.00	20	20	4.3
47101	47101-9	1/2"	1.12	0.09	1.00	3	50	1.9
49101	49101-7	1/2"	1.12	0.09	1.00	2	100	2.5
45102	45102-8	3/4"	1.37	0.10	1.25	20	20	6.3
48102	48102-5	3/4"	1.37	0.10	1.25	2	50	1.8
49102	49102-4	3/4"	1.37	0.10	1.25	2	100	3.5

Certification / Certificación :
E155411 LR57925

Standards / Estándares :
UL 514B CSA C22.2 NEMA FB-1 NEC Article 345 & 346

tika ENERGY MANAGEMENT
This Documentation is Provided as a Courtesy for our Customers

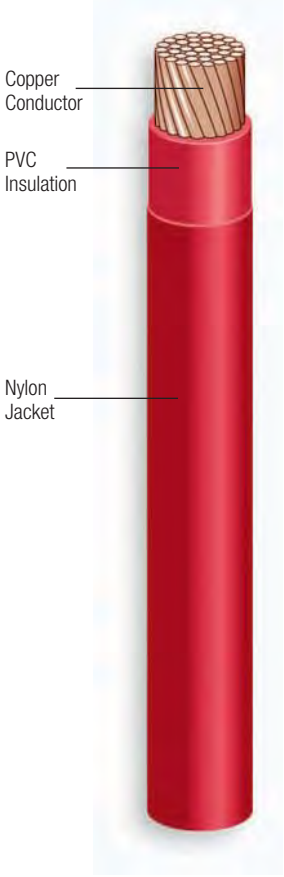

ENGINEERING SPECIFICATIONS:

Listed Solid E-123774
Stranded E-156879

Standards:

Underwriters Laboratories Standards UL-83, UL-1063, UL-758
AWM Spec 1316, 1317, 1318, 1319, 1320, 1321
ASTM Stranding Class B3, B8, B787
Federal Specification A-A-59544
Canadian Standards Association C22.2 No. 75
NEMA WC70/ICEA S-95-658
Institute of Electrical and Electronics Engineers
ARRA 2009; Section 1605 "Buy American" Compliant

CONSTRUCTION:

Conductors:

Solid, uncoated copper conductors per ASTM-B3
Stranded, uncoated copper conductors per ASTM-B3, ASTM-B787 and ASTM-B8

Insulation:

Color-coded Polyvinyl Chloride (PVC), heat and moisture-resistant, flame-retardant compound per UL-1063 and UL-83

Applications:

Type THHN/THWN-2 building wire is intended for general purpose applications as defined by the National Electrical Code (NEC). Type THHN/THWN-2 is permitted for new construction or rewiring for 600-volt applications. Applications requiring Type THHN or THWN-2: the conductor is appropriate for use in wet or dry locations at temperatures not to exceed 90°C or not to exceed 75°C in oil or coolants. Applications requiring Type MTW: the conductor is appropriate for use in dry locations at 90°C, or not to exceed 60°C in wet locations or where exposed to oils or coolants. Applications requiring Type AWM: the conductor is appropriate for use at temperatures to not exceed 105°C in dry locations.

Features:

Slick, Nylon outer jacket for easy pulling. VW-1 rated 14 AWG - 8 AWG. All sizes are rated gasoline and oil-resistant II.

Jacket:

A tough, polyamide, Nylon outer covering per UL-1063 and UL-83.

THHN/MTW/THWN-2/T90 Copper Conductor 600V

Size (AWG or KCMIL)	Number of Strands	Cross Sect. Area (mm²)	PVC Insulation Thickness (Conductor)		Nylon Jacket Thickness		Outside Diameter		Approximate Net Weight		Allowable Ampacity (Amps)*			Standard Packaging (ft)
			(mm)	(in)	(mm)	(in)	(mm)	(in)	(kg/km)	(lbs/1000 ft)	60°C	75°C	90°C	
14	Solid	2.08	0.380	0.015	0.100	0.004	2.57	0.101	22	15	15	15	15	2000 carton (4x500), 2500' reels
12	Solid	3.31	0.380	0.015	0.100	0.004	3.05	0.120	34	23	20	20	20	2000 carton (4x500), 2500' reels
10	Solid	5.26	0.510	0.020	0.100	0.004	3.78	0.149	55	37	30	30	30	1000 carton (2x500), 2500' reels
14	19	2.08	0.380	0.015	0.100	0.004	2.77	0.109	25	16	15	15	15	2000 carton (4x500), 2500' reels
12	19	3.31	0.380	0.015	0.100	0.004	3.23	0.127	36	23	20	20	20	2000 carton (4x500), 2500' reels
10	19	5.26	0.510	0.020	0.100	0.004	4.07	0.160	57	38	30	30	30	1000 carton (2x500), 2500' reels
8	19	8.37	0.760	0.030	0.130	0.005	5.39	0.212	94	62	40	50	55	500' 1000' 2500' 5000' reels

*Allowable ampacity shown above is per the National Electrical Code. The above data is approximate and subject to normal manufacturing tolerances.

PRINT LEGEND:

SOLID CONDUCTOR SIZES 14 AWG THROUGH 10 AWG: ENCORE WIRE CORPORATION (SIZE) AWG TYPE THHN OR THWN-2 GR II VW-1 600 VOLTS (UL) OR AWM OR C-(UL) TYPE T90 NYLON OR TWN 75 FT1. DATE/TIME/OPER/QC

STRANDED CONDUCTOR SIZES 14 AWG THROUGH 8 AWG: ENCORE WIRE CORPORATION (SIZE) AWG TYPE MTW OR THHN OR THWN-2 GR II VW-1 600 VOLTS (UL) OR AWM OR C-(UL) TYPE T90 NYLON OR TWN 75 FT1 DATE/TIME/OPER/QC

5 feet of each of the following colors:
- Black
- Red
- Blue
- White
- Yellow
- Orange
- Purple

DEPARTMENT OF THE ARMY
ALBUQUERQUE DISTRICT, CORPS OF ENGINEERS
ALBUQERQUE DISTRICT OFFICE
4101 JEFFERSON PLAZA NE
ALBUQUERQUE, NM 87109

SUBMITTAL REVIEW VERIFICATION SHEET

PROJECT TITLE: Kirtland BFF Mid-Plume Pump and Treat System Expansion
CONTRACT NUMBER: W912DR-12-D-0006 DM01
DATE RECEIVED: 12-07-2017
DATE REVIEWED: 12-07-2017

DESCRIPTION OF ITEMS REVIEWED:

1. MV Cable

NO EXCEPTIONS TAKEN.	**X**
EXCEPTIONS AS NOTED ON DRAWINGS AND/OR ATTACHED SHEETS(S). RESUBMISSION NOT REQUIRED.	
EXCEPTIONS AS NOTED ON DRAWINGS AND/OR ATTACHED SHEETS(S). RESUBMISSION REQUIRED.	
RECEIPT ACKKNOWLEDGED.	

Notes:

NOTE: ITEMS REVIEWED AS TO GENERAL LAYOUT ONLY. DIMENSIONS AND QUANTITIES NOT CHECKED. REVIEW DOES NOT RELIEVE CONTRACTOR OF RESPONSIBILITIES FOR ANY ERRORS WHICH MAY EXIST AS CONTRACTOR SHALL BE RESPONSIBLE FOR DIMENSIONS AND DESIGN OF ADEQUATE CORRECTIONS, DETAILS AND SATISFACTORY CONSTRUCTION OF WORK.

SIGNATURE SANCHEZ.AMY.ELIZABETH.1454434338 Digitally signed by SANCHEZ.AMY.ELIZABETH.1454434338 DN: c=US, o=U.S. Government, ou=DoD, ou=PKI, ou=USA, cn=SANCHEZ.AMY.ELIZABETH.1454434338 Date: 2017.12.07 13:43:13 -07'00' **DATE** 12/7/2017

EA Engineering, Science, and Technology, Inc., PBC

Submittal Review Sheet 1

Project Name: **Kirtland BFF Mid-Plume Pump and Treat System Expansion**			Date Received: **12/7/2017**
Project Owner: **Kirtland Air Force Base**			Checked By: **Tyler Curley**
Contractor: **Wilson Electric**	Engineer: **EA Engineering, Science and Technology, Inc., PBC.**		Log Page: **NA**
Address: **501 General Somervell SE # B** **Albuquerque, NM 87123**	Address: **320 Gold Ave. SW, Suite 1300** **Albuquerque, NM 87102**		EA No.: **62599DM01**
			Spec. Section: **NA**
			Drawing/Detail No.: **E-000/E-001/E-501**
ATTN: **Matthew Walstrom**	ATTN: **Devon Jercinovic**	1st Sub	Re-Sub
Date Transmitted: **12/7/2017**	Prev. Transmittal Date:		

Item No.	No. Copies	Description	Manufacturer	Mfg/Vendor Dwg or Detail	Action Taken*
1	1	MV Cable	The Okonite Co.		**A**

The Action Designated Above is in Accordance with the Following Legend:

A – Furnish as Submitted
B – Furnish as Noted
C – Revise and Re-submit
1. Not enough information for review.
2. No reproducible submitted.
3. Copies illegible.
4. Not enough copies submitted.
5. Wrong sequence number.
6. Wrong resubmittal number.
7. Wrong Spec. Section.
8. Wrong form used.
9. See Comments.

D – Rejected
E – Engineer's Review not Required
1. Submittal not required.
2. Supplemental Information. Submittal retained for Information purposes only.
3. Information reviewed and approved on prior submittal.
4. See Comments.

Review is for general compliance with Contract Documents. No responsibility is assumed for correctness of dimensions or detail. Contractor is required to specify deviations from contract requirements. Lack of exceptions noted by Engineer does not waive Contractor's obligation to comply with Drawings and Specifications.

Comments:
Items reviewed and confirmed to meet requirements
(Reviewed Material in Parentheses)
Issues in Bold

Material conforms to electrical drawings and are equivalent with the previous submittal. Revision to this submittal was performed as schedule and availability issues would ensue with the previous submitted material.

By: _____ Date: 12/7//17

Distribution: [1] Contractor [1] Engineer [1] Owner

Okoguard® URO-J

15kV Underground Primary Distribution Cable-Jacketed

Red Identification Stripes

Filled Strand Aluminum Conductor/105°C Rating
100% and 133% Insulation Levels

A Conductor - Stranded Aluminum with Filled Strand - Water Swellable Power
B Strand Screen - Extruded Semi-conducting EPR
C Insulation - Okoguard EPR
D Insulation Screen - Extruded Semi-conducting EPR
E Concentric Conductor-Bare Copper Wires
F Encapsulating Jacket-Okolene with Extruded ID Stripes & NESC lightning bolt

Insulation

Okoguard is Okonite's registered trade name for its exclusive ethylene-propylene rubber (EPR) based, thermosetting compound, whose optimum balance of electrical and physical properties is unequaled in other solid dielectrics. Okoguard insulation, with the distinctive red color and a totally integrated EPR system, provides the optimum balance of electrical and physical properties for long, problem free service.

The triple tandem extrusion of the screens with the insulation provides optimum electrical characteristics.

The compressed conductors are filled with a water swellable agent. This construction slows the migration of water through the strands in the event of a mechanical dig-in followed by external exposure to water.

An insulation screen of ethylene-propylene rubber is extruded over the insulation. The copper concentric wires are uniformly spaced around the insulation screen. The overall polyethylene jacket provides protection against mechanical damage and corrosion.

Product identification is provided through the use of three red stripes placed 120° apart in the black jacket, with an NESC lightning bolt.

Applications

Okoguard URO-J cables provide maximum circuit longevity in underground residential distribution systems. They can be buried directly or installed in underground ducts or conduits.

Specifications

Central Conductor: Aluminum per ASTM B-609, Class B stranded per B-231.

Filled Strand: Water swellable powder meets or exceeds ICEA T-31-610 water penetration resistance and ANSI/NEMA class A connectorability requirements.

Conductor Screen: Extruded semiconucting ethylene-propylene rubber meets or exceeds the requirements of ICEA S-94-649 and AEIC CS8.

Insulation: Extruded Okoguard meets or exceeds the requirements of ICEA S-94-649 and AEIC CS8.

Insulation Screen: Extruded semiconducting ethylene-propylene rubber meets or exceeds the requirements of ICEA S-94-649 and AEIC CS8.

Concentric Conductor: Bare copper wires.

Jacket: Black Okolene with red extruded stripes meets or exceeds the requirements of ICEA S-94-649 for polyethylene jackets.

Product Features

- Triple tandem extruded, all EPR system.
- Okoguard cables meet or exceed ICEA standards.
- Meets RUS 1728.204 for cables with filled strand or solid conductor and 133% insulation level.
- 105°C continuous operating temperature.
- 140°C emergency rating.
- 250°C short circuit rating.
- Excellent corona resistance.
- Low dielectric constant and power factor.
- Screens are clean stripping.
- Exceptional resistance to “treeing”.
- Filled strand conductor.
- Moisture resistant.
- Overall jacket provides extended life.
- Excellent resistance to most chemicals.
- Can be listed by UL as Type MV-90 on Special Orders.
- Cable listed by CSA to C68.5 on special orders.
- Design Options:
  Additional conductor sizes
  Copper central conductor
  Copper flat strap concentric neutral
  Product identification via colored jackets.
  Semiconducting jackets.
- Improved Temperature Rating.
Okoguard insulation system has been tested and qualified for operation at 105°C continuous and 140°C emergency operating temperature.
- Minimum installation temperature of -40°C.

Okoguard URO-J

15kV Underground Primary Distribution Cable-Jacketed
Red Identification Stripes
Filled Strand Aluminum Conductor/105°C Rating
100% Insulation Level

Okoguard Insulation: 175 mils 100% Insulation Level

Catalog Number	Conductor Size AWG|kcmil	Nominal Dia. over Insulation (in.)	Nominal Dia. over Insulation Screen (in.)	Copper Neutral, No. x AWG (1)	Nominal O.D. (in.)	Aprox. Net Weight lbs./1000'	Aprox. Ship Weight lbs./1000'	90°C Ampacity Direct Burial (2)	90°C Ampacity Duct (2)	105°C Ampacity Direct Burial (2)	105°C Ampacity Duct (2)
FULL NEUTRAL											
163-23-2060	2(7x)	0.68	0.76	10 x 14	1.00	536	626	170	125	185	135
163-23-2066	1(19x)	0.72	0.80	13 x 14	1.03	608	698	195	145	210	155
**163-23-2072	1/0(19x)	0.76	0.84	16 x 14	1.07	688	778	220	160	235	175
163-23-2075	2/0(19x)	0.81	0.88	13 x 12	1.15	820	910	250	185	270	205
163-23-2078	3/0(19x)	0.86	0.93	16 x 12	1.20	939	1029	285	210	310	230
163-23-2081	4/0(19x)	0.91	0.99	13 x 10	1.30	1138	1238	320	240	350	260
163-23-2084	250(37x)	0.97	1.04	16 x 10	1.36	1302	1418	350	270	380	295
163-23-2090	350(37x)	1.07	1.17	20 x 10	1.49	1615	1793	425	310	460	340
1/3 NEUTRAL											
162-23-2060	2(7x)	0.68	0.76	6 x 14	1.00	489	579	150	120	165	135
162-23-2066	1(19x)	0.72	0.80	6 x 14	1.03	527	617	175	140	185	150
162-23-2072	1/0(19x)	0.76	0.84	6 x 14	1.07	572	662	195	155	215	170
162-23-2075	2/0(19x)	0.81	0.88	7 x 14	1.12	636	726	225	180	240	195
162-23-2078	3/0(19x)	0.86	0.93	9 x 14	1.17	722	889	255	200	275	220
162-23-2081	4/0(19x)	0.91	0.99	11 x 14	1.23	822	922	285	235	310	255
162-23-2084	250(37x)	0.97	1.04	13 x 14	1.28	918	1018	305	250	330	275
162-23-2090	350(37x)	1.07	1.17	18 x 14	1.41	1166	1315	375	310	405	335
162-23-2093	500(37x)	1.20	1.30	16 x 12	1.57	1513	1691	450	370	490	405
162-23-2096	750(61x)	1.39	1.49	15 x 10	1.87	2152	2402	545	460	595	505
162-23-2099	1000(61x)	1.54	1.68	18 x *(A)	2.06	2711	3059	620	520	675	570

* - Special Conductor Size (A) Wire O.D. =0.1052"
** Stocked as unfilled strand as 161-23-2072, see Sec 2, Sheet 35.
(1) Individual wire size and count may vary. The resulting combination meets the 1/3 or full neutral, size requirement.

Okonite's web site, www.okonite.com contains the most up to date information.

Ampacities

(2) Full neutral, single phase ampacities are based on ICEA P-117-734 for 90°C or 105°C conductor temperature, 25°C ambient temperature, 100% load factor, and earth thermal resistivity of RHO 90.
One third neutral ampacities are based on triplexed or triangular configuration for the same conditions stated above.

Okoguard URO-J

15kV Underground Primary Distribution Cable-Jacketed
Red Identification Stripes
Filled Strand Aluminum Conductor/105°C Rating
133% Insulation Level

Okoguard Insulation: 220 mils 133% Insulation Level

Catalog Number	Conductor Size AWG|kcmil	Nominal Dia. over Insulation (in.)	Nominal Dia. over Insulation Screen (in.)	Copper Neutral, No. x AWG (1)	Nominal O.D. (in.)	Aprox. Net Weight lbs./1000'	Aprox. Ship Weight lbs./1000'	90°C Ampacity Direct Burial (2)	90°C Ampacity Duct (2)	105°C Ampacity Direct Burial (2)	105°C Ampacity Duct (2)
FULL NEUTRAL											
▲ 163-23-3060	2(7x)	0.77	0.85	10 x 14	1.08	602	669	170	125	185	135
163-23-3066	1(19x)	0.82	0.90	13 x 14	1.14	694	766	195	145	210	155
▲ 163-23-3072	1/0(19x)	0.84	0.92	16 x 14	1.15	753	820	220	160	235	175
163-23-3075	2/0(19x)	0.91	0.98	13 x 12	1.25	916	996	250	185	270	205
163-23-3078	3/0(19x)	0.96	1.04	16 x 12	1.31	1045	1125	285	210	310	230
163-23-3081	4/0(19x)	1.02	1.09	13 x 10	1.41	1252	1347	320	240	350	260
163-23-3084	250(37x)	1.07	1.17	16 x 10	1.48	1456	1606	350	270	380	295
163-23-3090	350(37x)	1.18	1.28	20 x 10	1.59	1762	1912	425	310	460	340
1/3 NEUTRAL											
162-23-3060	2(7x)	0.78	0.85	6 x 14	1.09	562	627	150	120	165	135
162-23-3066	1(19x)	0.82	0.90	6 x 14	1.14	612	684	175	140	185	150
162-23-3072	1/0(19x)	0.86	0.94	6 x 14	1.18	661	733	195	155	215	170
162-23-3075	2/0(19x)	0.91	0.98	7 x 14	1.22	730	810	225	180	240	195
162-23-3078	3/0(19x)	0.96	1.04	9 x 14	1.27	825	905	255	200	275	220
▲ 162-23-3081	4/0(19x)	0.99	1.06	11 x 14	1.30	891	1005	285	235	310	255
162-23-3084	250(37x)	1.07	1.17	13 x 14	1.41	1069	1164	305	250	330	275
▲ 162-23-3090	350(37x)	1.16	1.26	18 x 14	1.50	1254	1425	375	310	405	335
▲ 162-23-3093	500(37x)	1.29	1.39	16 x 12	1.72	1666	1853	450	370	490	405
▲ 162-23-3096	750(61x)	1.48	1.58	15 x 10	1.95	2244	2468	545	460	595	505
▲ 162-23-3099	1000(61x)	1.63	1.77	18 x *(A)	2.15	2808	3093	620	520	675	570

* - Special Conductor Size (A) Wire O.D. =0.1052"

(1) Individual wire size and count may vary. The resulting combination meets the 1/3 or full neutral, size requirement.

Okonite's web site, www.okonite.com contains the most up to date information.

▲ **Authorized Stock Item** - Available from Customer Service centers.

Ampacities

(2) Full neutral, single phase ampacities are based on ICEA P-117-734 for 90°C or 105°C conductor temperature, 25°C ambient temperature, 100% load factor, and earth thermal resistivity of RHO 90.
One third neutral ampacities are based on triplexed or triangular configuration for the same conditions stated above.

THE OKONITE COMPANY
Ramsey, New Jersey 07446

DEPARTMENT OF THE ARMY
ALBUQUERQUE DISTRICT, CORPS OF ENGINEERS
ALBUQERQUE DISTRICT OFFICE
4101 JEFFERSON PLAZA NE
ALBUQUERQUE, NM 87109

SUBMITTAL REVIEW VERIFICATION SHEET

PROJECT TITLE: Kirtland BFF Mid-Plume Pump and Treat System Expansion
CONTRACT NUMBER: W912DR-12-D-0006 DM01
DATE RECEIVED: 8-14-2017
DATE REVIEWED: 8-14-2017

DESCRIPTION OF ITEMS REVIEWED:

1. MV Terminations

NO EXCEPTIONS TAKEN.	**X**
EXCEPTIONS AS NOTED ON DRAWINGS AND/OR ATTACHED SHEETS(S). RESUBMISSION NOT REQUIRED.	
EXCEPTIONS AS NOTED ON DRAWINGS AND/OR ATTACHED SHEETS(S). RESUBMISSION REQUIRED.	
RECEIPT ACKKNOWLEDGED.	

Notes:

NOTE: ITEMS REVIEWED AS TO GENERAL LAYOUT ONLY. DIMENSIONS AND QUANTITIES NOT CHECKED. REVIEW DOES NOT RELIEVE CONTRACTOR OF RESPONSIBILITIES FOR ANY ERRORS WHICH MAY EXIST AS CONTRACTOR SHALL BE RESPONSIBLE FOR DIMENSIONS AND DESIGN OF ADEQUATE CORRECTIONS, DETAILS AND SATISFACTORY CONSTRUCTION OF WORK.

SIGNATURE SANCHEZ.AMY.ELIZABETH.1454434338 Digitally signed by SANCHEZ.AMY.ELIZABETH.1454434338 DN: c=US, o=U.S. Government, ou=DoD, ou=PKI, ou=USA, cn=SANCHEZ.AMY.ELIZABETH.1454434338 Date: 2017.08.14 11:38:12 -06'00' **DATE** 8/14/2017

EA Engineering, Science, and Technology, Inc., PBC

Submittal Review Sheet 1

Project Name: **Kirtland BFF Mid-Plume Pump and Treat System Expansion**				Date Received: **8/7/2017**		
Project Owner: **Kirtland Air Force Base**				Checked By: **Tyler Curley**		
Contractor: **Wilson Electric**	Engineer: **EA Engineering, Science and Technology, Inc., PBC.**			Log Page: **NA**		
Address: **501 General Somervell SE # B** **Albuquerque, NM 87123**	Address: **320 Gold Ave. SW, Suite 1300** **Albuquerque, NM 87102**			EA No.: 62599DM01		
				Spec. Section: **NA**		
				Drawing/Detail No.: **E-000/E-001**		
ATTN: Matthew Walstrom	ATTN: **Devon Jercinovic**			1st Sub		Re-Sub
Date Transmitted: **8/7/2017**	Prev. Transmittal Date:					

Item No.	No. Copies	Description	Manufacturer	Mfg/Vendor Dwg or Detail	Action Taken*
1	1	MV Terminations	Cooper Power Systems		**A**

The Action Designated Above is in Accordance with the Following Legend:

A – Furnish as Submitted
B – Furnish as Noted
C – Revise and Re-submit
1. Not enough information for review.
2. No reproducible submitted.
3. Copies illegible.
4. Not enough copies submitted.
5. Wrong sequence number.
6. Wrong resubmittal number.
7. Wrong Spec. Section.
8. Wrong form used.
9. See Comments.

D – Rejected
E – Engineer's Review not Required
1. Submittal not required.
2. Supplemental Information. Submittal retained for Information purposes only.
3. Information reviewed and approved on prior submittal.
4. See Comments.

Review is for general compliance with Contract Documents. No responsibility is assumed for correctness of dimensions or detail. Contractor is required to specify deviations from contract requirements. Lack of exceptions noted by Engineer does not waive Contractor's obligation to comply with Drawings and Specifications.

Comments:
Items reviewed and confirmed to meet requirements
(Reviewed Material in Parentheses)
Issues in Bold

Material Conforms to electrical drawings.

By: Date: 8/8//17

Distribution: [1] Contractor [1] Engineer [1] Owner

Catalog Data
CA650003EN

Effective January 2015
Supersedes 600-30 July 2014,
600-10 February 2010

COOPER POWER SERIES

600 A 15/25 kV class BOL-T™ deadbreak connector

COOPER Power Systems - 600A 15kV 500mcm Deadbreak T-Body Kit with Test Point & Shield Adapter Kit (Complete Kit for Shielded Cable)

COOPER Power Systems - 600A 15kV #2 Deadbreak T-Body Kit with Test Point & Shield Adapter Kit (Complete Kit for Shielded Cable)

General

Eaton's Cooper Power™ series 600 A, 15/25 kV Class BOL-T™ deadbreak connector is used to terminate high-voltage underground cable on deadfront apparatus such as transformers, switches and switchgear. It is fully shielded, submersible and meets the requirements of IEEE Std 386™-2006 standard – "Separable Insulated Connector Systems".

The capacitive test point on the insulating plug provides a means of testing the circuit without disturbing the bolted connection.

In addition to the capacitive test point feature on the insulating plug, Eaton's Cooper Power series offers an optional capacitive test point similar to the test points on Eaton's Cooper Power series 200 A Elbows. This allows the use of the Type "TPR" series fault indicators, and provides a hotstick operable means of determining circuit condition when used with high impedance voltage sensing devices designed for test points.

BOL-T connectors are designed for use on solid dielectric cable (XLPE or EPR) with extruded semi-conductive shields and concentric neutral, with or without a jacket.

Installation on jacketed concentric neutral cable may require additional sealing material. Cold shrinkable adapters are available for tape shield, linear corrugated and drain wire cable adaptation for use with deadbreak connectors.

900 AMP rating

The BOL-T connector is rated for 900 A continuous when used with a coppertop compression connector, copper insulating plug, copper stud and copper bushing or junction. If a 900 A rating is desired, specify a "C" as the 9th digit when determining your part number. See Step 3, page 5.

Interchangeability

All Eaton's Cooper Power series 600 A deadbreak connectors conform to the electrical, mechanical and dimensional requirements of IEEE Std 386™-2006 standard. The connectors can be used on any comparably rated bushing interface that also meets the requirements of this standard. In addition all cable adapters, insulating plugs, compression connectors and other component parts are designed to be interchangeable with those currently available from other major manufacturers that also comply with IEEE Std 386™-2006 standard.

Installation

A torque wrench and one-inch socket are used to tighten the insulating plug through the compression or shear bolt connector within the T-body onto a de-energized 600 A bushing interface. Refer to *Service Information S600-10-2 600 A 15/25 kV Class BOL-T and Separable Splice Connector Assembly Installation Instructions* for details.

Production tests

Tests conducted in accordance with IEEE Std 386™-2006 standard:

- ac 60 Hz 1 Minute Withstand
  - 40 kV
- Minimum Partial Discharge Extinction Voltage
  - 19 kV

Tests conducted in accordance with Eaton's Cooper Power series requirements:

- Physical Inspection
- Periodic Dissection
- Periodic X-ray Analysis

Table 1. Voltage Ratings and Characteristics

Description	kV
Standard Voltage Class	25
Maximum Rating Phase-to-Ground	15.2
ac 60 Hz 1 Minute Withstand	40
dc 15 Minute Withstand	78
BIL and Full Wave Crest	125
Minimum Partial Discharge Extinction Voltage	19

Voltage ratings and characteristics are in accordance with IEEE Std 386™-2006 standard.

Table 2. Current Ratings and Characteristics

Description	Amperes
Continuous	600 A rms
4 Hour Overload	900 A rms
Short Time	40,000 A rms symmetrical for 0.17 s 27,000 A rms symmetrical for 4.0 s

Current ratings and characteristics are in accordance with IEEE Std 386™-2006 standard.

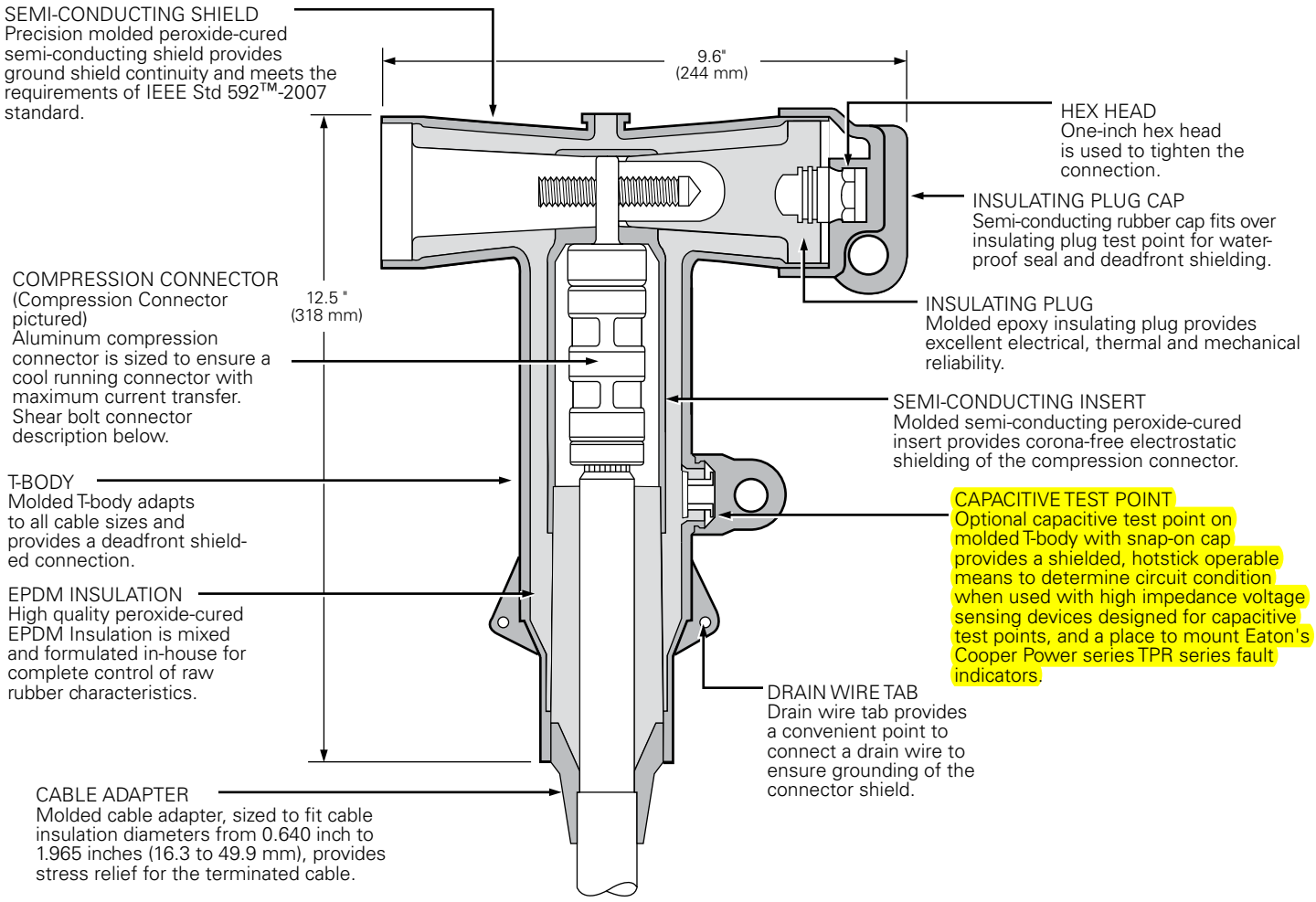

Figure 1. BOL-T Cutaway illustrates design features.

Note: Dimensions given are for reference only.

Optional features

Coppertop compression connectors

Coppertop compression connectors (aluminum sleeve welded to a copper spade) provide a high conductivity material in a bolted connection and are compatible with aluminum or copper conductors.

All copper current path

Full copper current carrying path and 900 A rating can be obtained by specifying a coppertop compression connector, copper stud and copper insulating plug.

Shear bolt connector (optional)

Bolted cable lug is fitted with stepless bolts, which shear off when optimum contact force has been reached. Provides electrical continuity for copper and aluminum conductors while eliminating need for dies and compression tools.

Figure 2. Shear bolt connector.

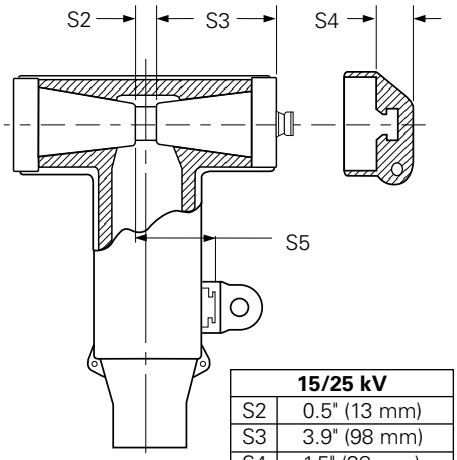

15/25 kV	
S2	0.5" (13 mm)
S3	3.9" (98 mm)
S4	1.5" (38 mm)
S5	2.4" (61 mm)

Figure 3. BOL-T stacking dimensions.

Ordering information

Each BOL-T Connector Kit contains:

- Molded Rubber T-body
- Insulating Plug
- Insulating Plug Cap
- Compression or Shear Bolt Connector
- Cable Adapter
- Silicone Lubricant
- Installation Instruction Sheet

To order a 15/25 kV Class BOL-T Connector Kit, see following Steps 1-5 to build the catalog number.

BOL-T connector kit – catalog numbering system

Build the 12 digit catalog number for a BOL-T Kit by following the steps given below. The first 5 digits are "BT625", so only digits 6 through 12 need to be selected.

1	2	3	4	5	6	7	8	9	10	11	12
B	T	6	2	5							

Catalog number digits:

1 & 2 = "BT", BOL-T Connector System

3 = "6", 600 A System

4 & 5 = "25", 25 kV Class Bushing Interface

Step 1 – Select digits 6 and 7 cable adapter range code

Determine the cable's diameter over the electrical insulation as shown in Figure 4 (including tolerances).

Then identify a cable range from Table 3 that covers the minimum and maximum insulation diameters.

Select the correct CABLE RANGE CODE from Table 3.

Table 3. Cable Diameter Range

Cable Diameter Range

Inches	mm	Code
0.610-0.970	15.5-24.6	**AB**
0.750-1.080	19.1-27.4	**CC**
0.970-1.310	24.6-33.3	**DD**
1.090-1.470	27.7-37.3	**EE**
1.260-1.640	32.0-41.7	**FF**
1.360-1.710	34.5-43.4	**GG**
1.510-1.850	38.4-47.0	**HH**
1.700-1.970	43.2-50.0	**JJ**

Step 2 – Select digits 8 and 9 conductor code

Identify the conductor size and type in Table 4 and select the CONDUCTOR CODE from the appropriate (compression or shear bolt) column.

Step 3 – Select digit 10

Determine whether Aluminum or Copper is required for the compression connector, stud, and deadbreak insulating plug. Shear bolt connector is only available as a 600 A aluminum connector.

"A" = Aluminum (Shear Bolt or Compression Connector)

"C" = Copper (Coppertop for the connector) **Required to achieve 900 A rating, compression connector only.**

Step 4 – Select digit 11

Determine if a stud should be included in the kit.

"1" = Stud Included

"2" = Stud Not Included

Step 5 – Select digit 12

Determine if the T-body should have a test point.

T = Test Point on T-body

If no test point is required, do not include an 12th digit.

EXAMPLE: Select a BOL-T Kit for 250 kcmil compressed cable with a nominal insulation diameter of 1.160" ± 0.030". The kit should have aluminum current-carrying parts and should have a stud included. The T- Body should have a test point.

Step 1 – Select digits 6 and 7

Nominal diameter over insulation is 1.160" ± 0.030".

Minimum diameter = 1.160" - 0.030" = 1.130".

Maximum diameter = 1.160" + 0.030" = 1.190".

From Table 3, identify the cable range that covers 1.130" - 1.190" and select the "EE" cable range code.

Step 2 – Select digits 8 and 9

The conductor size is 250 kcmil compressed. From Table 4, under the column "Concentric or Compressed," identify 250 kcmil and select the "17" conductor code.

Step 3 – Select digit 10

The kit should have aluminum current-carrying parts. Select an "A" for digit 10.

Step 4 – Select digit 11

The kit should include a stud, so select 1 for digit 11.

Step 5 – Select digit 12

A test point is needed, so use a "T" for digit 12.

The complete catalog number is:

BT625EE17A1T

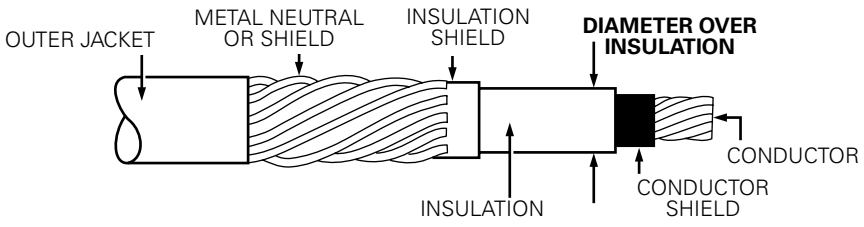

Figure 4. Illustration showing typical construction of medium voltage underground cable.

Table 4. Conductor Size and Type

Compression Connector					Shear Bolt Connector						
Concentric or Compressed		Compact or Solid			AWG or Kcmil			mm^2 Stranded & Compressed			
AWG or kcmil	mm^2	AWG or kcmil	mm^2	Compression Conductor Code	Concentric	Compressed	Compact	min	max	Shear Bolt Conductor Code	Catalog Number
No Connector				**0**	3/0	3/0	3/0	95	150	**S1**	CDT630SB150
#2	35	1	-	**11**	4/0	4/0	4/0				
#1	-	1/0	50	**12**	250	250	250				
1/0	50	2/0	70	**13**	-	-	350				
2/0	70	3/0	-	**14**	350	350	-	185	300	**S3**	CDT630SB300
3/0	-	4/0	95	**15**	500	500	500				
4/0	95	250	120	**16**	600	600	600				
250	120	300	-	**17**	-	-	700				
300	-	350	-	**18**	700	700	-	400		**S4**	CDT630SB400
350	-	400	185	**19**	750	750	750				
400	185	450	-	**20**	-	800	800				
450	-	500	240	**21**	-	-	900				
500	240	600	300	**22**							
600	300	700	-	**23**							
650	-	750	-	**24**							
750	-	900	-	**25**							
900	-	1000	500	**26**							
1000	500	-	-	**27**							
1250	630	-	-	**28**							

Accessories

Cable adapters, compression connectors, and other accessories that can be used with BOL-T connectors are described in Section 600-46, "Deadbreak Accessories, Tools, and Replacement Parts."

Table 5. Replacement Parts

Description	Catalog Number
T-body without Test Point	DT625
T-body with Test Point	DT625T
T-body without Test Point With Aluminum Stud	DT625SA
T-body without Test Point With Copper Stud	DT625SC
T-body with Test Point With Aluminum Stud	DT625TSA
T-body with Test Point With Copper Stud	DT625TSC
Insulating Plug Cap	DIPCAP
Aluminum Insulating Plug with Cap (No Stud)	DIP625A
Copper Insulating Plug with Cap (No Stud)	DIP625C
Aluminum Insulating Plug with Cap and Aluminum Stud	DIP625AS
Copper Insulating Plug with Cap and Copper Stud	DIP625CS
5/8" – 11 UNC 2A Aluminum Threaded Stud	STUD-A
5/8" – 11 UNC 2A Copper Threaded Stud	STUD-C

Shield Adapter Kit

SA Series Cold Shrinkable Metallic Shield Adapter Kit

The SA Series Cold Shrinkable Metallic Shield Adapter Kits make it simple and easy to seal and ground metallic shielded cable when terminating 200 A loadbreak and deadbreak elbows, 600 A deadbreak T-connectors, and splices. The SA Series Shield Adapters can be installed on tape shield, drain wire or UniShield® cables.

Sealing and grounding metallic shielded cable is simple and easy

Features:

Wide Range Taking. The cold shrinkable metallic shield adapter allows the customer to cover a wide cable range, using only four shield adapter part numbers.

Easy Installation. The cold shrinkable metallic shield adapters offer a number of installation benefits:

- Minimal installation force required
- No special tools, soldering or open flame required
- No additional cable stripping (uses standard stripbacks)
- No handling sharp copper leaves or crimping operations
- No cumbersome coiled spring to break or misplace
- No messy grease
- Elbow drain wire built into the flexible ground strap

Stocking flexibility. The cold shrinkable metallic shield adapter allows distributors and customers to reduce the number of stocking kits. The same kit can ground and seal tape shield, drain wire or UniShield® cable.

Shield Adapter Kit Catalog Number	Cable Jacket OD (Inches)
SA1	0.590 - 1.050
SA2	0.830 - 1.640
SA3	1.270 - 2.170
SA4	1.600 - 2.600

How to Order:

The SA Series Cold Shrinkable Metallic Shield Adapter Kits are sized using the cable jacket outside diameter (OD). Refer to Table below.

Note: To include the SA series Cold Shrinkable metallic Shield Adapters with any Cooper Power Systems termination kit, (Elbow, T-body or Splice): Add appropriate Suffix “SA1”, “SA2”, “SA3” or “SA4” to the end of the termination catalog number.

Each kit contains:

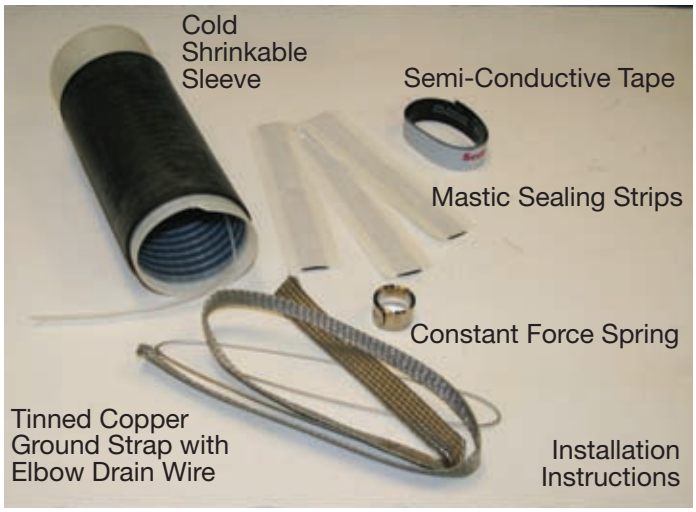

Cooper Power Systems
2300 Badger Drive
Waukesha, WI 53188
P: 877.CPS.INFO

COOPER Power Systems

www.cooperpower.com

B500-00095 • December 2009 Supersedes 00095 12/00

Cooper Power Systems is a valuable trademark of Cooper Industries in the U.S. and other countries.
You are not permitted to use the Cooper Trademarks without the prior written consent of Cooper Industries.
UniShield® is a registered trademark of Unitech, LLC.
©2009 Cooper Industries. All Rights Reserved

Cold Shrink

QT-III Indoor and Outdoor Terminations

3M™ Cold Shrink Silicone Rubber QT-III terminations are designed for faster installation and higher reliability.

Cold Shrink QT-III Indoor Termination 1

Cold Shrink QT-III Outdoor Termination 2

3M Cold Shrink QT-III terminations offer easy installation and reliable performance when terminating indoor and outdoor medium voltage cable. The built-in Hi-K stress controlling compound along with the built in sealing compound means simpler installation on all types of cables. These factory applied compounds make field installation easier and reduce installation errors. Plus its high-K stress design delivers excellent BIL performance and lower surface stress resulting in a more compact termination. Through superior engineering, 3M Cold Shrink QT-III terminations deliver maximum performance.

QT-III Inverted applications

Terminations that are inverted inside of equipment (switchgear, transformers, etc.) can be made using the QT-III indoor tubular design. However, for outdoor applications skirted terminations are recommended. The standard skirts of most terminations are oriented to shed water when installed in the upright direction. The skirts could collect moisture and contamination when inverted. This could lead to tracking problems. 3M has designed the 7600-S-INV series inverted kits to eliminate this problem. These inverted kits are recommended for all outdoor inverted applications.

Cold Shrink technology; over 30 years of field-proven reliability

Over thirty years ago, 3M pioneered Cold Shrink technology. Since then, field use and laboratory analysis have repeatedly proven its merits and reliability. Through constant innovation, we have refined Cold Shrink products making them better than ever. They're easier to apply and built to withstand even the most punishing environmental conditions. Enhanced performance at a lower installed cost continue to make 3M the preferred choice for Cold Shrink solutions.

QT-III Termination Features

Improved long term reliability
- Hydrophobic silicone body
- Superior track and erosion resistance
- Optimum high-K stress control
- Built-in sealing and stress controlling compounds
- Outstanding UV stability
- Designed to meet IEEE 48, CENELEC 0278 and IEC 502 standards
- Easier installation
- Installation requires no silicone tape or grease
- Shorter installed length

Cold Shrink Benefits

Lower Installed Cost
- Minimal training required
- All materials included in the kit
- Easy cable preparation
- Compact to fit into smaller equipment

High Reliability
- No heat, flames or special tools needed
- Simple, straight forward installation
- Built-in stress relief
- 30 years of proven field experience

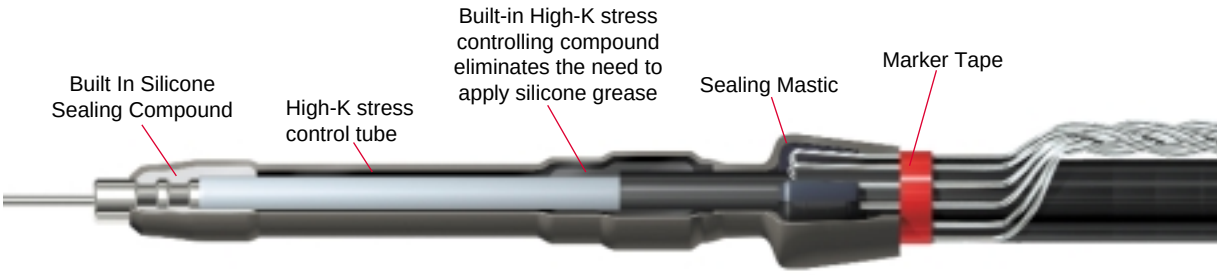

Cold Shrink QT-III Indoor Termination

Kit number	Bil	Cable insulation O.D. range in. (mm)	Conductor size range AWG and kcmil (mm²) 5kV	8.7kV	15kV	25/28kV	★35kV
Shielded Cable Kits (Each Shielded Cable Kit makes three terminations.)							
7620-T-95	95kV	0.32-0.59 (8,2-15,0)	8-4	8-6	—	—	
7621-T-95	95kV	0.44-0.89 (11,2-22,7)	2-3/0	4-2/0	—	—	
7622-T-110	110kV	0.64-1,08 (16,3-27,4)	4/0-400	3/0-300	2-4/0 (35-120)	—	
7624-T-110	110kV	0.83-1.53 (21,1-38,9)	500-750	350-700	4/0-500 (120-240)	—	
7625-T-110	110kV	1.05-1.80 (26,7-45,7)	700-1500	600-1250	500-1000 (240-500)	—	
7626-T-110	110kV	1.53-2.32 (38,9-58,9)	1750-2000	1500-2000	1250-2000 (500-1000)	—	
7693-T-150	150kV	0.72-1.29 (18,3-32,8)	300-500	250-500	2/0-300 (70-150)	2-4/0 (35-120)	2-2/0 (35-70)
7695-T-150	150kV	1.05-1.80 (26,7-45,7)	700-1500	600-1250	500-1000 (240-500)	250-800 (150-400)	3/0-600 (95-325)
7696-T-150	150kV	1.53-2.32 (38,9-58,9)	1750-2000	1500-2000	1250-2000 (500-1000)	900-1750 (500-800)	700-1500 (400-725)
Concentric and Jacketed Concentric Cable Kits (Each Concentric and Jacketed Concentric Cable Kit makes one termination.)							
7642-T-110	110kV	0.64-1.08 (16,3-27,4)	4/0-400	3/0-300	2-4/0 (35-120)	—	
7644-T-110	110kV	0.83-1.53 (21,1-38,9)	500-750	350-700	4/0-500 (120-240)	—	
7645-T-110	110kV	1.05-1.80 (26,7-45,7)	700-1500	600-1250	500-1000 (240-500)	—	
7646-T-110	110kV	1.53-2.32 (38,9-58,9)	1750-2000	1500-2000	1250-2000 (500-1000)	—	
7653-T-150	150kV	0.72-1.29 (18,3-32,8)	300 -500	250 - 500	2/0-300 (70-150)	2-4/0 (35-120)	2-2/0 (35-70)
7655-T-150	150kV	1.05-1.80 (26,7-45,7)	700-1500	600-1250	500-1000 (240-500)	250-800 (150-400)	3/0-600 (95-325)
7656-T-150	150kV	1.53-2.32 (38,9-58,9)	1750-2000	1500-2000	1250-2000 (500-1000)	900-1750 (500-800)	700-1500 (400-725)
High Fault Current Cable Kits (Each High Fault Current Cable Kit makes one termination.)							
7642-T-HSG-110	110kV	0.64-1.08 (16,3-27,4)	4/0-400	3/0-300	2-4/0 (35-120)	—	
7644-T-HSG-110	110kV	0.83-1.53 (21,1-38,9)	500-750	350-700	4/0-500 (120-240)	—	
7645-T-HSG-110	110kV	1.05-1.80 (26,7-45,7)	700-1500	600-1250	500-1000 (240-500)	—	
7646-T-HSG-110	110kV	1.53-2.32 (38,9-58,9)	1750-2000	1500-2000	1250-2000 (500-1000)	—	
7653-T-HSG-150	150kV	0.72-1.29 (18,3-32,8)	300 -500	250 - 500	2/0-300 (70-150)	2-4/0 (35-120)	2-2/0 (35-70)
7655-T-HSG-150	150kV	1.05-1.80 (26,7-45,7)	700-1500	600-1250	500-1000 (240-500)	250-800 (150-400)	3/0-600 (95-325)
7656-T-HSG-150	150kV	1.53-2.32 (38,9-58,9)	1750-2000	1500-2000	1250-2000 (500-1000)	900-1750 (500-800)	700-1500 (400-725)

★ 150kV impulse level meets the impulse requirements for 35.0kV class equipment where indoor terminations are used.

Please contact your local 3M representative for more information.

Continued from page Recent Additions 7

NEW FEATURE!
NOW LISTED FOR GROUNDING, BONDING & DIRECT BURIAL APPLICATIONS

2 HOLE NEMA SPACING

Catalog Number	Copper Cond. Range†	Wire Dia. (in) ‡	Stud Size	Approximate Dimensions (in inches) E	W	D	L	Die Color Code	Crimping Tool Reference+++ Penn-Union PUC Dies	Pressure Setting TDY-1	Pressure Setting TDY-U	Alt. Tooling Burndy Index No.	Alt. Tooling T&B Die
BBLU-6DN	6 Str.	.184	1/2	1 3/4	13/16	3	4 11/32	Blue	T-7*/374*			B-7	24
BBLU-4D1	4 Str.	.232	1/2	1 3/4	15/16	2 7/8	4 15/64	Gray	T-8*/346*			B-8	29
BBLU-2D6	2 Str.	.292	1/2	1 3/4	13/16	3	4 33/64	Brown	T-10			B-10	33
BBLU-1D2	1 Str.	.332	1/2	1 3/4	25/32	3	4 5/8	Green	T-11/375	2		B-11	37
BBLU-1/0D-2NTC38 BBLU-1/0D3	1/0 Str.	.375	3/8 1/2	1 3/4 1 3/4	3/4 13/16	2 5/8 2 7/8	4 5/16 4 9/16	Pink	T-12/348			B-12	42
BBLU-2/0D	2/0 Str.	.419	1/2	1 3/4	13/16	3	4 13/16	Black	T-13			B-13	45
BBLU-3/0D	3/0 Str.	.470	1/2	1 3/4	29/32	3	4 7/8	Orange	T-14			B-14	50
BBLU-4/0D	4/0 Str.	.528	1/2	1 3/4	1	3	5 1/16	Purple	T-15	5	5	B-15	54
BBLU-025D	250 MCM	.575	1/2	1 3/4	1 1/8	3	5 1/8	Yellow	T-16			B-16	62
BBLU-030D	300 MCM	.634	1/2	1 3/4	3/16	3	5 9/16	White	T-17*			B-17	66H/66
BBLU-035D	350 MCM	.682	1/2	1 3/4	5/16	3	5 5/8	Red	T-18/ T-324	7	7	B-18	71H/71
BBLU-040D	400 MCM	.728	1/2	1 3/4	1 13/32	3	5 13/16	Blue	T-19*/470*			B-19	76H/76
BBLU-050D	500 MCM	.815	1/2	1 3/4	1 17/32	3	6	Brown	T-20/T-299			B-20	87
BBLU-060D	600 MCM	.893	1/2	1 3/4	1 23/32	3	6 9/16	Green	T-22/472	9	9	B-22	94H/94
BBLU-065D	650 MCM	.930	1/2	1 3/4	1 25/32	3	6 11/16	Pink	–			B-300	99
BBLU-075D	750 MCM	.999	1/2	1 3/4	1 29/32	3	6 13/16	Black	T-24*/473			B-24	106H/106
BBLU-080D	800 MCM	1.031	1/2	1 3/4	1 31/32	3	7	Orange	–			B-25	107H/107
BBLU-100D1	1000 MCM	1.153	1/2	1 3/4	2 3/16	3	7 1/8	White	–	9***	9***	B-27	125
BBLU-150D1	1500 MCM	1.412	1/2	1 3/4	2 11/16	3	7 7/16	Green	–			B-31	–
BBLU-200D1	2000 MCM	1.632	1/2	1 3/4	3 5/64	3	7 3/4	Brown	–			B-34	–

2 HOLE ASSORTED LUGS

BBLU-6D-2TC14	6 Str.	.184	1/4	5/8	13/32	1 9/32	2 21/32	Blue	T-7*/374*			B-7	24
BBLU-4D-2TC14	4 Str	.232	1/4	5/8	1/2	1 9/32	2 11/16	Gray	T-8*/346*			B-8	29
BBLU-3D	3 Str.	.260	5/16	7/8	17/32	1 5/8	3 1/32	White	T-9*			B-9	–
BBLU-2D	2 Str.	.292	5/16	3/4	5/8	1 15/32	3 7/32	Brown	T-10	2		B-10	33
BBLU-1D	1 Str	.332	5/16	7/8	11/16	1 5/8	3 3/8	Green	T-11/375			B-11	37
BBLU-1/0D	1/0 Str.	.375	5/16	7/8	3/4	1 19/32	3 5/16	Pink	T-12/348			B-12	42
BBLU-100D	1000 MCM	1.153	1/2	1 1/4	2 3/16	2 3/8	6 1/2	White	–	9***	9***	B-27	125
BBLU-150D	1500 MCM	1.412	1/2	1 3/8	2 11/16	2 1/2	6 15/16	Green	–			B-31	–
BBLU-200D	2000 MCM	1.632	1/2	1 1/2	3 5/64	3	7 3/8	Brown	–			B-34	–

+ Concentric, compressed and compact stranding.
++ For conversion to metric range see Master Catalog
+++ For additional tool references see Master Catalog
* Consult factory for availability of dies not available at this time.
*** CUAD-1000

Loadbreak Apparatus Connectors

COOPER Power Systems

COOPER Power Systems - 200A 15kV #2 Loadbreak Elbow Kit with Test Point & Shield Adapter Kit (Complete Kit for Shielded Cable)

200 A 15 kV Class Loadbreak Elbow Connector with Optional Integral Jacket Seal

500-10-7

GENERAL

The Cooper Power Systems Loadbreak Elbow Connector is a fully-shielded and insulated plug-in termination for connecting underground cable to transformers, switching cabinets and junctions equipped with loadbreak bushings. The elbow connector and bushing insert comprise the essential components of all loadbreak connections. The Cooper Elbow Connector is a fully rated 200 A switching device, designed in accordance to IEEE Std 386™ standard - latest revision.

Cooper Loadbreak Elbows are molded using high quality peroxide-cured insulating and semi-conducting EPDM rubber. Standard features include a coppertop connector, tin-plated copper loadbreak probe with an ablative arc-follower tip and stainless steel reinforced pulling-eye. An optional capacitive test point, made of corrosion resistant plastic, is available for use with fault indicators (see Catalog Section 320-40 and 320-42).

Cable ranges are designed to accept a wide range of cable conductor and insulation sizes with just three elbows and accommodate cable manufactured to either **AEIC** or **ICEA** standards.

The coppertop compression connector is a standard item to transition from the cable to the loadbreak probe. An aluminum crimp barrel is inertia-welded to a copper lug. The aluminum barrel makes the connector easy to crimp and the copper lug ensures a reliable, tight, cool operating connection with the loadbreak probe.

OPTIONAL INTEGRAL JACKET SEAL

The optional integral jacket seal provides a quick and easy means to sealing the cable jacket to prevent moisture ingress. Our jacket seal is molded to the loadbreak elbow eliminating the need for separate cable sealing products. It's available with braided ground strap/ bleeder wire for terminating Tape shielded cable. (See Figure 5.)

Figure 1

Figure 1A

Figure 1.
Loadbreak Elbow Connector with optional integral jacket seal and without test point shown.
Figure 1A (right)
Loadbreak Elbow without jacket seal and with test point.

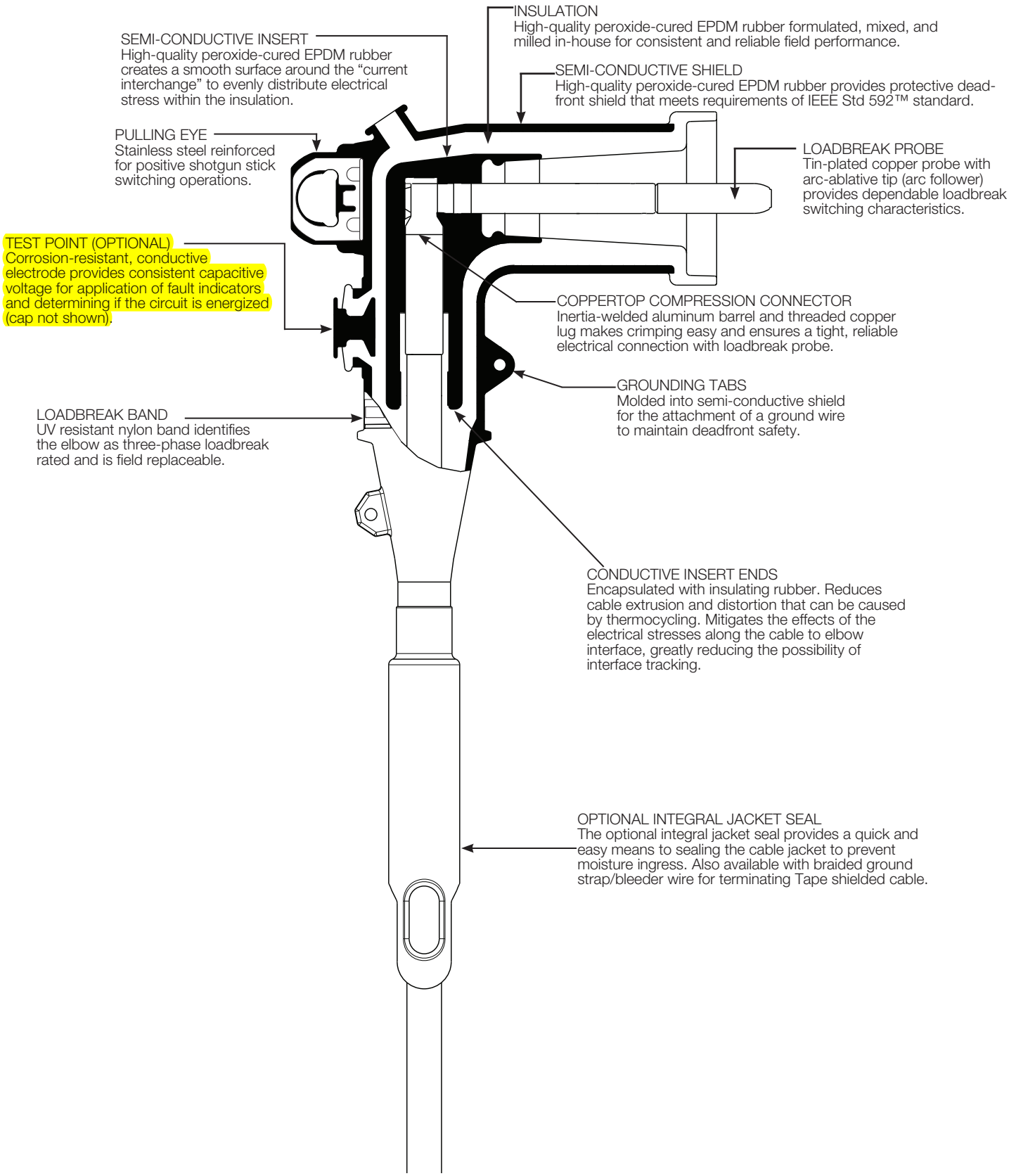

Figure 2.
Cutaway drawing shows design detail.

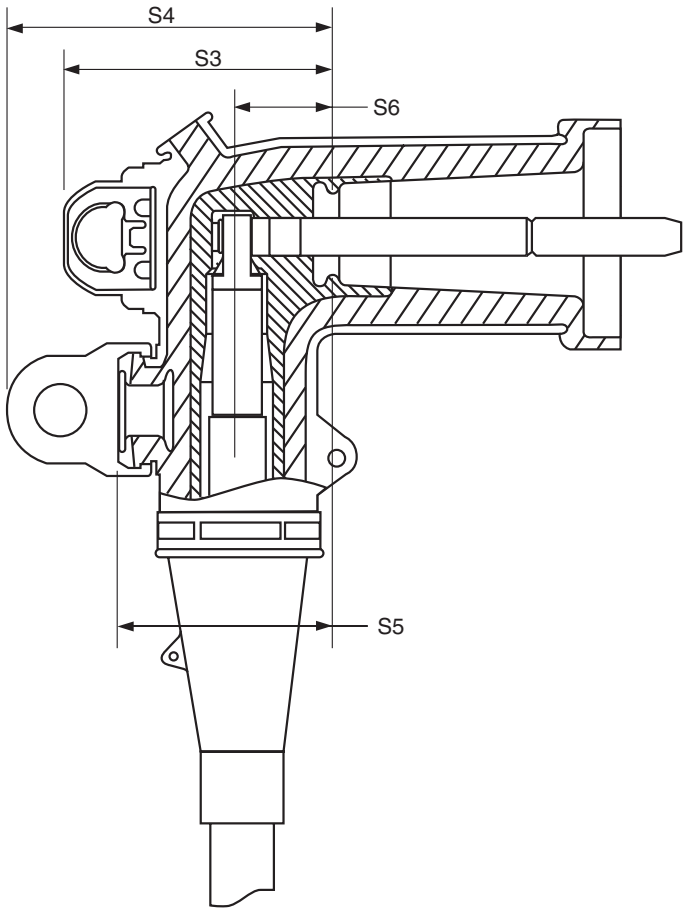

S Dim.	15 kV
S3	3.4” (86 mm)
S4	4.2” (106 mm)
S5	2.7” (68 mm)
S6	1.2” (30 mm)

NOTE: Dimensions given are for reference only.

Figure 3.
Elbow profile and stacking dimensions as referenced in IEEE Std 386™ standard.

INSTALLATION

Cable stripping and scoring tools, available from various tool manufacturers, are recommended for use when installing loadbreak elbows. After preparing the cable, the elbow housing is pushed onto the cable. The loadbreak probe is threaded into the coppertop connector using the supplied installation tool or an approved equivalent. Use a shotgun stick to perform loadmake and loadbreak operations. Refer to Installation Sheet S500-10-7 for details.

PRODUCTION TESTS

Tests conducted in accordance with IEEE Std 386™ standard:
- AC 60 Hz 1 Minute Withstand — 34 kV
- Minimum Corona Voltage Level — 11 kV
- Test Point Voltage Test

Tests conducted in accordance with Cooper Power Systems requirements:
- Physical Inspection
- Periodic Dissection
- Periodic X-ray Analysis

TABLE 1
Voltage Ratings and Characteristics

Description	kV
Standard Voltage Class	15
Maximum Rating Phase-to-Phase	14.4
Maximum Rating Phase-to-Ground	8.3
AC 60 Hz 1 Minute Withstand	34
DC 15 Minute Withstand	53
BIL and Full Wave Crest	95
Minimum Corona Voltage Level	11

Voltage ratings and characteristics are in accordance with IEEE Std 386™ standard.

TABLE 2
Current Ratings and Characteristics

Description	Amperes
Continuous	200 A rms
Switching	10 operations at 200 A rms at 14.4 kV
Fault Closure	10,000 A rms symmetrical at 14.4 kV for 0.17 s after 10 switching operations
Short Time	10,000 A rms symmetrical for 0.17 s
	3,500 A rms symmetrical for 3.0 s

Current ratings and characteristics are in accordance with IEEE Std 386™ standard.

ORDERING INFORMATION

The Elbow kits are packaged in a heavy duty polyethylene bag. There are 20 bagged kits to a carton. Individual boxed kits are also available by special part number. To order a 15 kV Class Loadbreak Elbow Kit follow the easy steps below.

Each kit contains:

- Standard Elbow Body or Elbow Body with Jacket Seal
- Coppertop Compression Connector
- Loadbreak Probe
- Probe Installation Tool
- Silicone Lubricant
- Mastic Strips (**Jacket Seal Elbow Only**)
- Installation Instruction Sheet

STEP 1: Determine the cable's diameter over the electrical insulation as shown in Figure 4 (including tolerances) from cable manufacturer. Then identify a cable range from Table 3 that brackets the minimum and maximum insulation diameters. Select the CABLE RANGE CODE from the far right column.

STEP 2: Identify the conductor size and type in Table 4 and select the CONDUCTOR CODE from the far right column.

STEP 3: For an elbow kit with a capacitive test point order:

LE215	CABLE RANGE CODE	CONDUCTOR CODE	T

For an integral jacket seal elbow kit with a capacitive test point order:

LEJ215	CABLE RANGE CODE	CONDUCTOR CODE	T

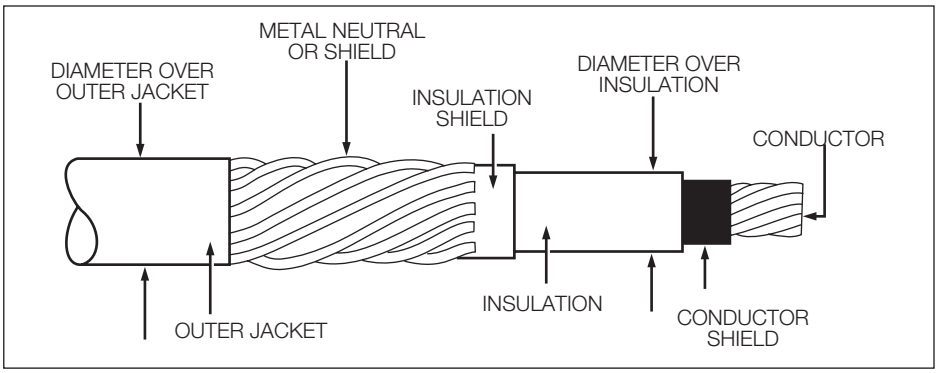

Figure 4.
Illustration showing typical construction of high voltage underground cable.

For an elbow kit without a capacitive test point order:

LE215	CABLE RANGE CODE	CONDUCTOR CODE

For an integral jacket seal elbow kit without a capacitive test point order:

LEJ215	CABLE RANGE CODE	CONDUCTOR CODE

For an elbow kit without a compression connector, use "**00**" for the conductor code.

For an elbow kit with a hold down bail assembly included, insert a "**B**" after the test point option code.

STEP 4: For optional braided ground strap/bleeder wire for terminating tape shielded cable, insert "**GS**" after test point and/or bail option code. (**Integral Jacket Seal Elbow Only**)

STEP 5: (Optional) For an elbow kit individually packaged in a corrugated cardboard box, insert an "**X**" as the last character in the part number.

Table 3
Cable Range for Loadbreak Elbow

Inches	Millimeters	Cable Range Code
0.495" - 0.585"	12.6 - 14.9	CCA*
0.575" - 0.685"	14.6 - 17.4	CCB*
0.610" - 0.970"	15.5 - 24.6	AB
0.750" - 1.080"	19.1 - 27.4	CC
0.890" - 1.220"	22.6 - 30.0	DD

* Uses 5 kV cable adapter.
(For use with "CC" range elbow only.)

TABLE 4
Conductor Size and Type

Class B Stranded or Compressed		Compact or Solid		CONDUCTOR CODE
AWG	mm^2	AWG	mm^2	
No Connector				**00**
#6	16	#4	—	**01**
#4	—	#3	25	**02**
#3	25	#2	35	**03**
#2	35	#1	—	**04**
#1	—	1/0	50	**05**
1/0	50	2/0	70	**06**
2/0	70	3/0	—	**07**
3/0	—	4/0	95	**08**
4/0	95	250	120	**09**
250*	120	300	—	**10**

*Compressed stranding only.

EXAMPLE: Select an integral jacket seal elbow kit with a capacitive test point for use on a #1 compact cable with a minimum insulation diameter of 0.770" and a maximum diameter of 0.830".

STEP 1: From Table 3, identify the cable range 0.610"—0.970" and select the "**AB**" CABLE RANGE CODE.

STEP 2: The conductor size is a #1 and the type is compact.

From Table 4, under the column "Compact or Solid" identify #1 and select the "**04**" conductor code.

STEP 3: Order catalog number.

LEJ215AB04T

TABLE 5
Replacement 2.88" Long Coppertop Connectors

Conductor Size				Catalog Number
Concentric or Compressed		Compact or Solid		
AWG	mm^2	AWG	mm^2	
#6	16	#4	—	CC2C01T
#4	—	#3	25	CC2C02T
#3	25	#2	35	CC2C03T
#2	35	#1	—	CC2C04T
#1	—	1/0	50	CC2C05T
1/0	50	2/0	70	CC2C06T
2/0	70	3/0	—	CC2C07T
3/0	—	4/0	95	CC2C08T
4/0	96	250	120	CC2C09T
250*	120	300	—	CC2C10T

* Compressed stranding only.
Note: Coppertop compression connector may be used on both aluminum and copper cable conductors.

TABLE 6
Replacement Parts

Description	Catalog Number
Hold Down Bail Assembly	2638351C01B
5 kV Cable Adapter (for use with "C" Elbow size only), .495" — .585" .575" — .685"	 CA225A CA225B
Loadbreak Band (package of 25)	2639139B01B
Probe Kit (includes Probe, Installation Tool, Silicone Lubricant, Installation Instruction Sheet)	PK215
Loadbreak Probe Installation Tool	2602733A01
Loadbreak Probe Only	2637552C03
Silicone Grease 0.175 oz tube (5 grams) 5.3 oz tube (150 grams)	 2603393A03 2605670A02M
Includes Ground Braid, Constant Force Spring and Mastic	GRDBRAIDKIT

ACCESSORIES

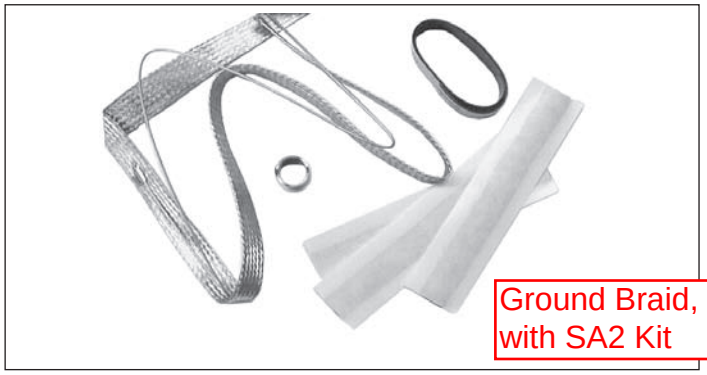

Figure 5.
Braided Ground Strap Accessories (see Table 6).

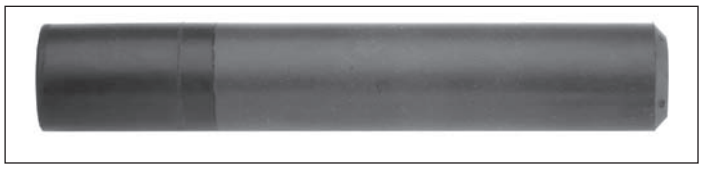

Figure 6.
5 kV Cable Adapter (see Table 6).

Figure 7.
Optional Bail Assembly (see Table 6).

Shield Adapter Kit

SA Series Cold Shrinkable Metallic Shield Adapter Kit

The SA Series Cold Shrinkable Metallic Shield Adapter Kits make it simple and easy to seal and ground metallic shielded cable when terminating 200 A loadbreak and deadbreak elbows, 600 A deadbreak T-connectors, and splices. The SA Series Shield Adapters can be installed on tape shield, drain wire or UniShield® cables.

Sealing and grounding metallic shielded cable is simple and easy

Features:

Wide Range Taking. The cold shrinkable metallic shield adapter allows the customer to cover a wide cable range, using only four shield adapter part numbers.

Easy Installation. The cold shrinkable metallic shield adapters offer a number of installation benefits:

- Minimal installation force required
- No special tools, soldering or open flame required
- No additional cable stripping (uses standard stripbacks)
- No handling sharp copper leaves or crimping operations
- No cumbersome coiled spring to break or misplace
- No messy grease
- Elbow drain wire built into the flexible ground strap

Stocking flexibility. The cold shrinkable metallic shield adapter allows distributors and customers to reduce the number of stocking kits. The same kit can ground and seal tape shield, drain wire or UniShield® cable.

Shield Adapter Kit Catalog Number	Cable Jacket OD (Inches)
SA1	0.590 - 1.050
SA2	0.830 - 1.640
SA3	1.270 - 2.170
SA4	1.600 - 2.600

How to Order:

The SA Series Cold Shrinkable Metallic Shield Adapter Kits are sized using the cable jacket outside diameter (OD). Refer to Table below.

Note: To include the SA series Cold Shrinkable metallic Shield Adapters with any Cooper Power Systems termination kit, (Elbow, T-body or Splice): Add appropriate Suffix “SA1”, “SA2”, “SA3” or “SA4” to the end of the termination catalog number.

Each kit contains:

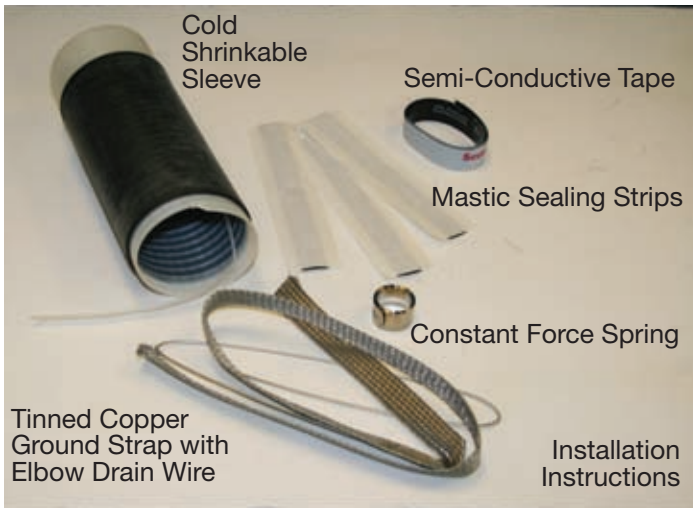

Cooper Power Systems
2300 Badger Drive
Waukesha, WI 53188
P: 877.CPS.INFO

COOPER Power Systems

www.cooperpower.com

B500-00095 • December 2009 Supersedes 00095 12/00

Cooper Power Systems is a valuable trademark of Cooper Industries in the U.S. and other countries.
You are not permitted to use the Cooper Trademarks without the prior written consent of Cooper Industries.
UniShield® is a registered trademark of Unitech, LLC.
©2009 Cooper Industries. All Rights Reserved

DEPARTMENT OF THE ARMY
ALBUQUERQUE DISTRICT, CORPS OF ENGINEERS
ALBUQERQUE DISTRICT OFFICE
4101 JEFFERSON PLAZA NE
ALBUQUERQUE, NM 87109

SUBMITTAL REVIEW VERIFICATION SHEET

PROJECT TITLE: Kirtland BFF Mid-Plume Pump and Treat System Expansion
CONTRACT NUMBER: W912DR-12-D-0006 DM01
DATE RECEIVED: 8-16-2017
DATE REVIEWED: 8-21-2017

DESCRIPTION OF ITEMS REVIEWED:

1. Breaker and Junction Boxes

NO EXCEPTIONS TAKEN.	
EXCEPTIONS AS NOTED ON DRAWINGS AND/OR ATTACHED SHEETS(S). RESUBMISSION NOT REQUIRED.	**X**
EXCEPTIONS AS NOTED ON DRAWINGS AND/OR ATTACHED SHEETS(S). RESUBMISSION REQUIRED.	
RECEIPT ACKKNOWLEDGED.	

Notes:

See attached comments.

NOTE: ITEMS REVIEWED AS TO GENERAL LAYOUT ONLY. DIMENSIONS AND QUANTITIES NOT CHECKED. REVIEW DOES NOT RELIEVE CONTRACTOR OF RESPONSIBILITIES FOR ANY ERRORS WHICH MAY EXIST AS CONTRACTOR SHALL BE RESPONSIBLE FOR DIMENSIONS AND DESIGN OF ADEQUATE CORRECTIONS, DETAILS AND SATISFACTORY CONSTRUCTION OF WORK.

SIGNATURE SANCHEZ.AMY.ELIZABETH.1454434338 Digitally signed by SANCHEZ.AMY.ELIZABETH.1454434338 DN: c=US, o=U.S. Government, ou=DoD, ou=PKI, ou=USA, cn=SANCHEZ.AMY.ELIZABETH.1454434338 Date: 2017.08.21 13:33:38 -06'00' **DATE** 8/21/2017

EA Engineering, Science, and Technology, Inc., PBC

Submittal Review Sheet 1

Project Name: **Kirtland BFF Mid-Plume Pump and Treat System Expansion**			Date Received: **8/15/2017**	
Project Owner: **Kirtland Air Force Base**			Checked By: **Tyler Curley**	
Contractor: **Wilson Electric**	Engineer: **EA Engineering, Science and Technology, Inc., PBC.**		Log Page: **NA**	
Address: **501 General Somervell SE # B** **Albuquerque, NM 87123**	Address: **320 Gold Ave. SW, Suite 1300** **Albuquerque, NM 87102**		EA No.: 62599DM01	
			Spec. Section: **NA**	
			Drawing/Detail No.: **E-000/E-001**	
ATTN: Matthew Walstrom	ATTN: **Devon Jercinovic**		1st Sub	Re-Sub
Date Transmitted: **8/15/2017**	Prev. Transmittal Date:			

Item No.	No. Copies	Description	Manufacturer	Mfg/Vendor Dwg or Detail	Action Taken*
1	1	Breaker and Junction Boxes	Siemens		**A**

The Action Designated Above is in Accordance with the Following Legend:

A – Furnish as Submitted
B – Furnish as Noted
C – Revise and Re-submit
1. Not enough information for review.
2. No reproducible submitted.
3. Copies illegible.
4. Not enough copies submitted.
5. Wrong sequence number.
6. Wrong resubmittal number.
7. Wrong Spec. Section.
8. Wrong form used.
9. See Comments.

D – Rejected
E – Engineer's Review not Required
1. Submittal not required.
2. Supplemental Information. Submittal retained for Information purposes only.
3. Information reviewed and approved on prior submittal.
4. See Comments.

Review is for general compliance with Contract Documents. No responsibility is assumed for correctness of dimensions or detail. Contractor is required to specify deviations from contract requirements. Lack of exceptions noted by Engineer does not waive Contractor's obligation to comply with Drawings and Specifications.

Comments:
Items reviewed and confirmed to meet requirements
(Reviewed Material in Parentheses)
Issues in Bold

Electric components conform to drawings.

By: _____ Date: 8/16//17

Distribution: [1] Contractor [1] Engineer [1] Owner

Submittal

BULK FUELS FACILITY

Type:	**Gear**
Electrical Contractor:	**Wilson Electric**
Distributor:	**CED** **701A Comanche N.E.** **Albuquerque, NM 87107**
Date:	**8/15/2017**

SIEMENS Bill of Material

Date: 8/15/2017

To: CONSOLIDATED ELECTRICAL DISTRIBUTORS INC
701 COMANCHE RD NE
ALBUQUERQUE, NM 87107
USA

From:
USA

Job Name:	BULK FUELS FACILITY
Quote Name:	BULK FUELS FACILITY
Quote Number:	clinwx00c_08101701_00_00_M00
Distributor:	CONSOLIDATED ELECTRICAL DISTRIBUTORS INC

Line No.	Quantity	Description
20000	1	TYZ:SAFETY_SWITCH--HF364NR Heavy Duty (600 V max), Fusible, Number of Poles:3, Voltage AC Max:600V, Voltage DC Max:250, Max Ampere Rating:200A, With Neutral, Type 3R, Fuse Class- Standard Mounting:CLASS H, K, Fuse Class - Move Load Base:CLASS J, Fuse Class- Need Mounting Kit:CLASS R, T. 1 - HF364NR 1 - HDSS FUS 3P 4W 600V 200A TYPE3R
1000	1	PP-301--SENTRON PWR CTR 1P 10KVA BOLT-ON RP1 Sentron Power Centers, 1 Phase, 10 KVA, 480 Primary Voltage, 240/120 Secondary Voltage, Transformer Core: Aluminum-Wound, 2-5% FCBN Taps, 115C, Encapsulated, Bolt-in Brk. for Pwr. Ctr.(JA), Primary Cir Breaker provided: ED42B035L, Sec Main Cir Breaker Provided: B250H (50A), Max Rating - Sec Branch MCCB: 40 A, Max Sec Ckts 120V 1 IN Wide: (16) 1 POLE, Max Sec Ckts 240v 2 IN Wide: (8) 2 POLE. Catalog No.: US2:1LPC010JA
10	6	Standard Product--BREAKER 20A 1P 120V 10K BL Catalog No.: B120
11	3	Standard Product--BREAKER 15A 1P 120V 10K BL Catalog No.: B115
12	1	Standard Product--SPD2 12 EXT 277/480V 300KA 4XSS SC Catalog No.: US2:TPS3E1230SX02
Non-Siemens Products:		
13	1	20" X 16" X 6" JUNCTION BOX-20166RHC

SIEMENS

Project Name: BULK FUELS FACILITY
Quote #: clinwx00c_08101701_00_00_M00

CONTENTS: HF364NR HDSS FUS 3P 4W 600V 200A TYPE3R

Drawings are for: Approval ☑ Record ☐

Engineer:
Contractor:
Distributor: CONSOLIDATED ELECTRICAL DISTRIBUTORS INC
Date:

Submitted By:
Tel. No.:
Fax No.:

SIEMENS

HF364NR

HDSS FUS 3P 4W 600V 200A TYPE3R

Documents

1.Cut Sheet ,Installation and MTC guide

General Specification

Brand Name	SIEMENS
Type	ENCLOSED/SAFETY SWITCH
Standard	UL
Voltage Rating	600V
Amperage Rating	200A
Wattage	4W

Technical Specification

Number Of Poles	3P
Frequency Rating	60Hz
Action	SINGLE THROW
Material	304SS
Enclosure	TYPE 3R
Mounting	2 OR 3 POINT MOUNTING HOLES
Insulation	NO
Operating Cycles	8000
Operating Temperature	(-20F-120F) AMBIENT TEMPERATURE
Environmental Conditions	OUTDOOR

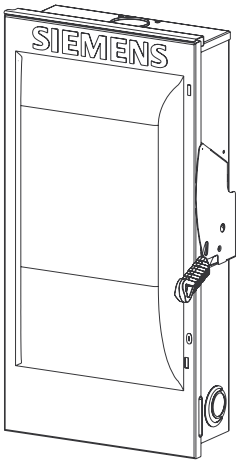

Heavy Duty Safety Switch

Type VBII, 200 Amp, Type 3R (Outdoor)

Standards and Ratings
- UL Listed under file #E4776
- Meets UL98 for switches and UL 50 for enclosures
- Meets NEMA Standard KS-1 for enclosed switches
- Meets NEC wire bending space requirements
- Rated 10,000 AIC with Class H fuses or 200,000 AIC with Class R, T and J fuses
- Rated 100,000 AIC at 600Vdc with Class R or J fuses
- I^2t rated (Amps^2 x Seconds = 2,000,000)
- 12X overload current rating exceeds 10X industry standard
- Suitable for use as service entrance equipment

Features
- Quick-make and break switching action
- Double break visible blade design
- Highly visible ON/OFF indication
- Rugged installer friendly enclosure design
- Modular design allows quick and easy replacement of parts
- Front removable lugs which can easily be converted to copper body or compression type lugs
- Defeatable dual cover interlock

General Information

Catalog Number	Volts	Description	Shipping Weight (lbs.)
HF224NR [1]	240	2 Pole, 3 Wire, Fusible	48
HF324NR	240	3 Pole, 4 Wire, Fusible	50
HF364R	600	3 Pole, 3 Wire, Fusible	49
HF364NR	600	3 Pole, 4 Wire, Fusible	50
HNF364R	600	3 Pole, 3 Wire, Non-Fusible	47

Horsepower Ratings [2 3] - 240 Volts

Catalog Number	1 Phase, 240V AC		3 Phase, 240V AC		250V DC
	Std	Max	Std	Max	
HF224NR	15	—	25	60	40
HF324NR	15	—	25	60	40

Horsepower Ratings [2 3] - 600 Volts

Catalog Number	3 Phase, 480V AC		3 Phase, 600V AC		600V DC
	Std	Max	Std	Max	
HF364R	50	125	60	150	50
HF364NR	50	125	60	150	50
HNF364NR [4]	—	125	—	150	50

Mechanical Lug Wire Ranges (75°C, Cu/Al)

Description	Wire Range
Line, Load, Neutral	#6 AWG - 300 Kcmil
200% and Standard Neutral Ground	#14-1/0AWG
Ground Lug Kit	#14-4 AWG
200% Neutral	(2) #6 AWG - 300 Kcmil

1 These switches are UL Listed for application on grounded B phase systems.
2 Dual horsepower ratings:
Std - applies when non-time delay fuses are installed.
Max - applies when time-delay fuses are installed.
3 Horsepower ratings listed also apply to Design E motors with no derating.
4 Also rated 60 HP on 3phase, 240V AC systems.

Product Specification Sheet HD200.3

Answers for industry.

SIEMENS

Product Specification Sheet #HD200.3 (page 2 of 3)

Accessories

Catalog Number	Description
HA161234	One Normally Open and Closed Auxiliary Switches
HA261234	Two Normally Open and Closed Auxiliary Switches
HA361234	Low Voltage Auxiliary Switch
HG61234	Equipment Ground Lug Kit
HG261234	Isolated Equipment Ground Lug Kit
HN64	Neutral Kit
HN264	200% Neutral Kit
HT24	240 Volt Class T Fuse Clip Kit (1-Pole per kit) (HF224NR, HF324NR)
HT64	600 Volt Class T Fuse Clip Kit (1-Pole per kit) (HF364R, HF364NR)
HR64	Class R Fuse Clip Kit (3 fuse clips per kit) (HF224NR, HF324NR HF364R, HF364NR)
HLC64	Copper Lug Kit (9 lugs per kit)
ECHS200	2.00" Type "HS" Outdoor Hub
ECHS250	2.50" Type "HS" Outdoor Hub

Replacement Parts

Catalog Number	Description
HFB64	Fusible Line Side Replacement Base (HF224NR, HF324NR, HF364R, HF364NR)
HBB64	Fusible Load Side Replacement Base (HF224NR, HF324NR, HF364R, HF364NR)
HNB64	Non-Fusible Replacement Base (HNF364R)
HH64	Replacement Handle/Handle Guard
HL64	Replacement Lugs (3 lugs per kit)
HM64	Replacement Mechanism
[1]	Replacement Door

Compression Lugs

Wire Size	Burndy		Thomas-Betts		Ilsco	
	CU ONLY	CU/AL	CU ONLY	CU/AL	CU ONLY	CU/AL
#2	YA2C-L Box YA2C	YA2CA1	54142-TB	60117	CRB-2 CRB-2L	IACL-2 ACN-2
#1	YA1C-L Box YA1C	YA1CA1	54147 54947BE	60123	CRA-1-38 CRA-1L	ACN-1
1/0	YA25-L Box YA25	YA25A1	54153-TB 54949BE	60129 61130	CRA-0 CRA-1/0L	IACL-1/0 ACN-1/0
2/0	YA26-L3 YA26	YA26A6	54158 256-30695-1229 54910BE	60135 61136	CRA-2/0 CRA-2/0L	ACL-2/0 IACL-2/0
3/0	YA27-L3 YA27	YA27A1	54163-TB	60141 61142	CRC-3/0 CRB-3/0L	IACL-3/0 ACL-3/0
4/0	YA28-L3 YA28-TC38	YA28A1	54168 256-30695-1253	61148 60147	CRC-4/0 CRB-4/0L	IACL-4/0 ACL-4/0
250 Kcmil	YA29-L7		54173 54913BE	61156	CRA-250 CRA-250L	IACL-250
300 Kcmil				61162		

[1] Place "Door" at the end of the switch catalog number.

Product Specification Sheet #HD200.3 (page 3 of 3)

Dimension Drawing

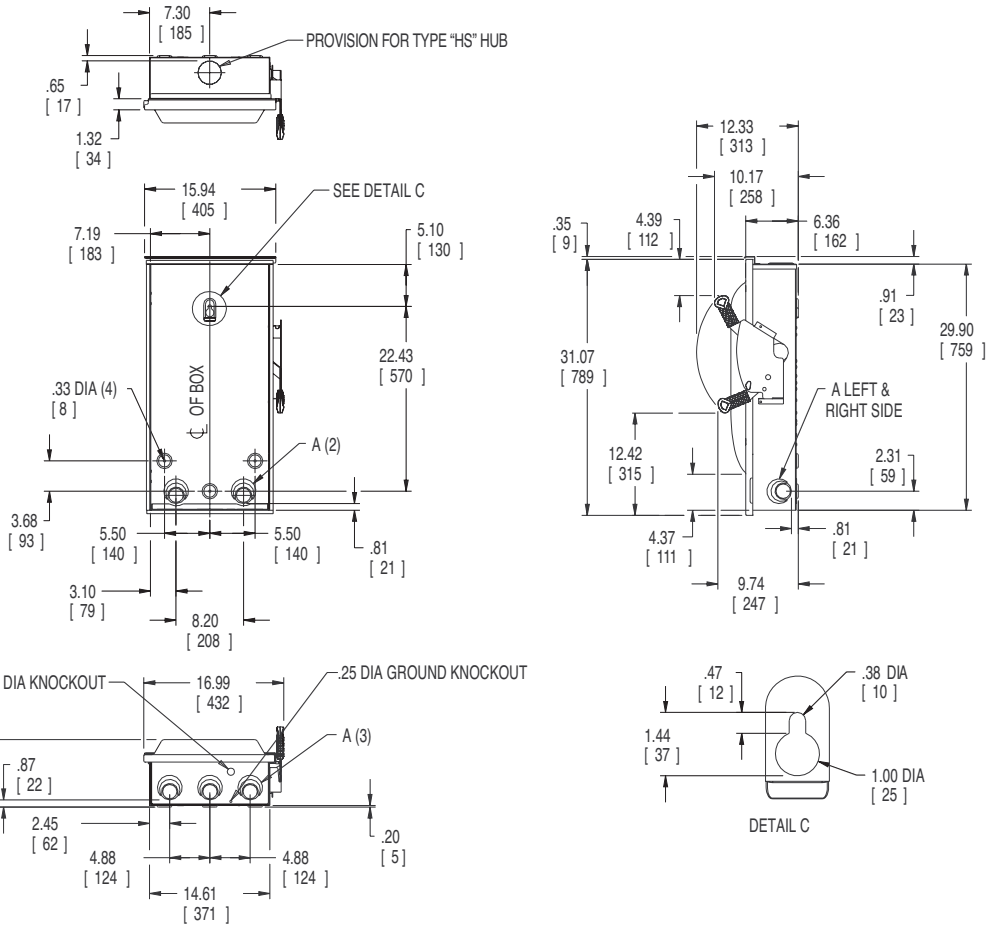

Dimensions shown in inches and millimeters ( ).
Dimension shown accurate to ± ⅛ inch.

KNOCKOUT CODE	CONDUIT SIZE			
A (Tangential)	1.25	1.50	2.00	2.50

	LINE SIDE WIRE BEND	LOAD SIDE WIRE BEND
240V Fused	7.87 (200)	10.34 (263)
600V Fused	7.87 (200)	7.84 (199)
Non-Fused	7.87 (200)	15.84 (402)

Enclosure: Galvanized Steel
.054 (17 Gauge)
Finish: ANSI Grey #61 Paint

Siemens Industry, Inc.
Building Technologies Division
5400 Triangle Parkway
Norcross, GA 30092
1-800-964-4114

Subject to change without prior notice
All rights reserved
Printed in USA
© 2009 Siemens Industry, Inc.

Siemens is a registered trademark of Siemens AG. Product names mentioned may be trademarks or registered trademarks of their respective copanies. Specifications subject to change without notice.

www.usa.siemens.com/switches

SIEMENS

Project Name: BULK FUELS FACILITY
Quote #: clinwx00c_08101701_00_00_M00

CONTENTS: US2:1LPC010JA SENTRON PWR CTR 1P 10KVA BOLT-ON RP1

Drawings are for: Approval ☑ Record ☐

Engineer:
Contractor:
Distributor: CONSOLIDATED ELECTRICAL DISTRIBUTORS INC
Date:

Submitted By:
Tel. No.:
Fax No.:

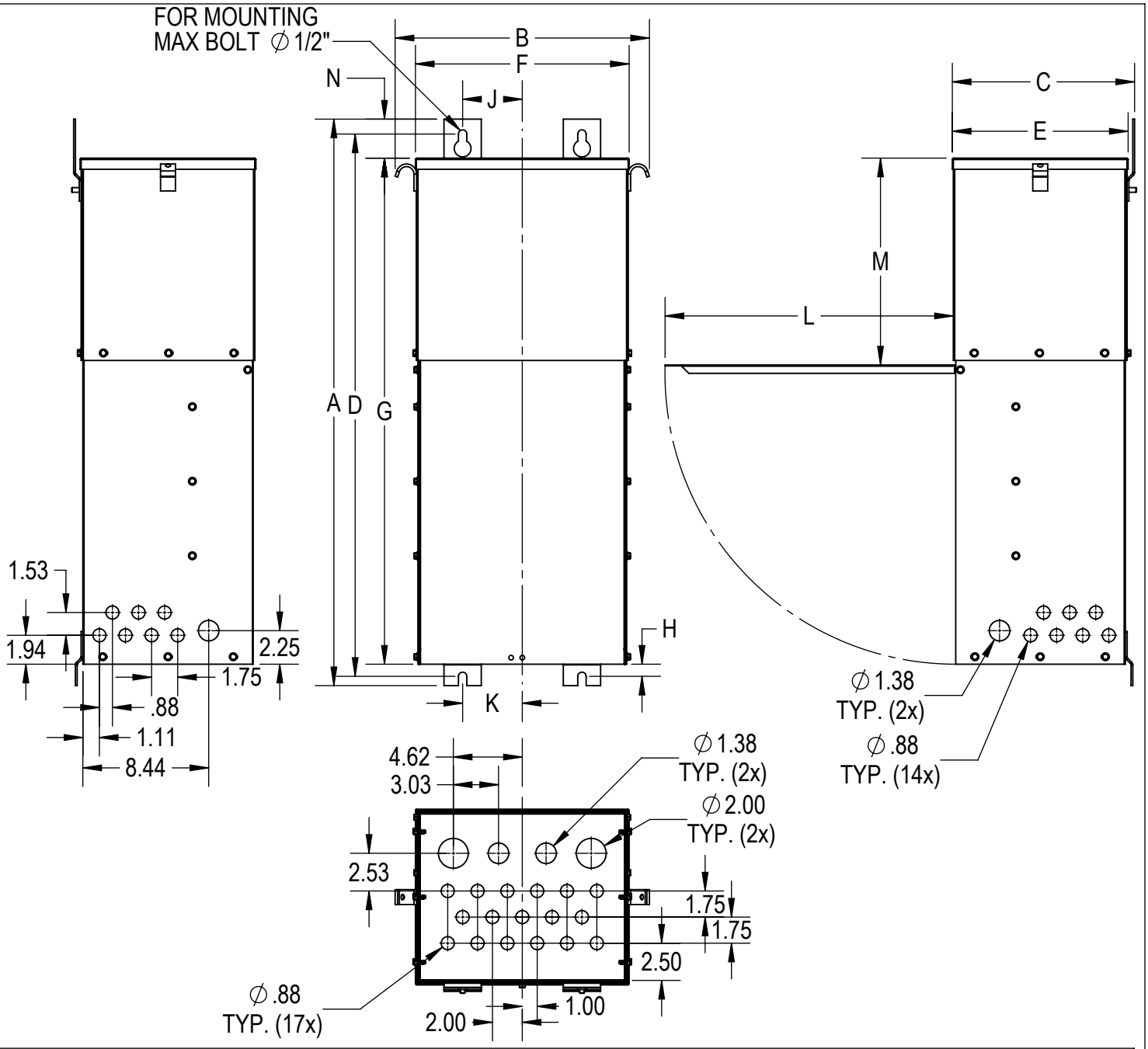

DIMENSION IN INCHES														
KVA	**A MAX**	**B MAX**	**C MAX**	**D**	**E**	**F**	**G**	**H**	**J**	**K**	**L MIN**	**M**	**N**	**WT.**
10	38.00	17.13	12.38	36.38	10.68	14.18	34.00	1.50	4.00	4.00	19.32	13.69	2.63	240

KVA	**PRIMARY MAIN BREAKER**	**SECONDARY MAIN BREAKER**	**VOLTAGE**		**TAPS**
			PRIMARY	**SECONDARY**	
10	35 AMP	50 AMP	480V	240/120	2 x 5% BNFC

	NAME	DATE
DRAWN	AJP	5-9-16
CHECKED	AJP	5-9-16
ENG APPR.	AJP	5-9-16

Confidential - Property of
Siemens Industry, Inc.

A	N/A	5-9-16
REV	**C.N.**	**DATE**

UNLESS OTHERWISE SPECIFIED:
TOLERANCES:
IN
X.XXX ± .005
X.XX ± .02
ANGULAR: ± 2°
DO NOT SCALE DRAWING

SCALE: 1:12

SHEET 1 OF 1

TITLE: SIEMENS
Sentron Power Center
Single Phase 10kVA

SIZE	DWG. NO.	REV
A	1LPC010JA	A

SIEMENS

Project Name: BULK FUELS FACILITY
Quote #: clinwx00c_08101701_00_00_M00

CONTENTS: B120 BREAKER 20A 1P 120V 10K BL

Drawings are for: Approval ☑ Record ☐

Engineer:
Contractor:
Distributor: CONSOLIDATED ELECTRICAL DISTRIBUTORS INC
Date:

Submitted By:
Tel. No.:
Fax No.:

SIEMENS

B120

BREAKER 20A 1P 120V 10K BL

General Specification

Brand Name	SIEMENS
Type	BL
Application	Electrical Distribution
Standard	UL 489

Technical Specification

Voltage Rating	120V
Amperage Rating	20A
Trip Range	Thermal Magnetic
Interrupt Rating	10K AIC
Number Of Poles	1P
Connection	BOLT-ON
Length	3
Width	3
Height	1

SIEMENS

Project Name: BULK FUELS FACILITY
Quote #: clinwx00c_08101701_00_00_M00

CONTENTS: B115 BREAKER 15A 1P 120V 10K BL

Drawings are for: Approval ☑ Record ☐

Engineer:
Contractor:
Distributor: CONSOLIDATED ELECTRICAL DISTRIBUTORS INC
Date:

Submitted By:
Tel. No.:
Fax No.:

SIEMENS

B115

BREAKER 15A 1P 120V 10K BL

General Specification

Brand Name	SIEMENS
Type	BL
Application	Electrical Distribution
Standard	UL 489

Technical Specification

Voltage Rating	120V
Amperage Rating	15A
Trip Range	Thermal Magnetic
Interrupt Rating	10K AIC
Number Of Poles	1P
Connection	BOLT-ON
Length	3
Width	3
Height	1

SIEMENS

Project Name: BULK FUELS FACILITY
Quote #: clinwx00c_08101701_00_00_M00

CONTENTS: US2:TPS3E1230SX02 SPD2 12 EXT 277/480V 300KA 4XSS SC

Drawings are for: Approval ☑ Record ☐

Engineer:
Contractor:
Distributor: CONSOLIDATED ELECTRICAL DISTRIBUTORS INC
Date:

Submitted By:
Tel. No.:
Fax No.:

TPS3 12 and TPS3 L12 (True or Discrete 10-Mode)

TPS3 12 and TPS3 L12 are UL 1449-4 Type 2 and Optional UL 1449 4th Edition surge protective device with a per phase surge current capacity that can be increased to 500 kA (TPS3 L12 up to 450 kA). For mission critical or high profile applications, the TPS3 L12 is our "True" or "Discrete" 10-mode style SPD providing the "Just in Case" assurance of directly connected L-L MOVs.

Both TPS3 12 and TPS3 L12 are UL 1283 Listed incorporating EMI/RFI or Sine Wave tracking filtering designed to condition low energy L-N coupled noise. When installed at the electrical service entrance, it can be used for UL 96A compliance (@ 20 kA In).

Standard monitoring includes protection status indication LEDs, audible alarm, and dry contacts. Complete protection is intact when the status indicators are illuminated. When protection is lost, the status indicator will extinguish, the red service light will illuminate, and the dry contacts will change state. An optional surge counter is available.

A new diagnostic feature integrated within the TPS3 12 and TPS3 L12 is Ground Integrity Monitoring or (GIM) diagnostic indication circuit. Ground Integrity Monitoring or (GIM) diagnostics monitors the health of the electrical system's neutral to ground bond. If voltage is seen across neutral and ground, the phase indicators will remain illuminated, while the red service light begins to flash alerting the end user that the electrical system grounding needs to be checked and serviced. This feature can be remotely monitored via the dry contact outputs. Siemens TPS3s are one of the first in the industry to offer this power quality safety and performance indication.

TPS3 12 and TPS3 L12 Key Features

- UL 1449-4 Type 2 SPD and UL 1283 Listed
  - Optional UL 1449 4th Edition Listed Type 1
- Type 1 / Type 2 SPD
- TPS3 12: 100 – 500 kA Per Phase Surge Current
- TPS3 L12: 150, 300, 450 kA Phase Surge Current
- 20 kA I_n (Most models)
- 200 kA SCCR (Most models)
- UL 96A Lightning Protection Master Labeling compliant (@ 20 kA)
- Every MOV is monitored, including N-G
- Mounts external to electrical distribution equipment
  - Recommended for line side or load side applications
- Standard NEMA 1/12/3R/04 ANSI 61 steel enclosure
- TPS3 12 Modes of Protection – L-N, L-G, N-G, and L-L
- TPS3 L12 Modes of Protection – L-N, L-G, N-G, and L-L (directly connected L-L elements)
- Standard Monitoring:
  - LED Indicators
  - Ground Integrity Monitoring diagnostics
  - Dry Contacts
  - Audible alarm with silence switch and test button
- Wire size: #8 AWG to 1/0
- Dimensions: 12" x 12" x 7" (305 mm x 305 mm x 178 mm)③
- Weight: 20 lb. (9.07 kg)③
- 10 Year Product Warranty

Available Options:

- Internal rotary disconnect
- Thru-door disconnect

TPS3 12

Ordering Information

Catalog # TPS3 ☐ 12 ☐☐ ☐ ☐☐☐

Voltage Code

A = 120/240 V, 1Ø, 3W
B = 120/240 V, 3Ø, 4W
C = 120/208 V, 3Ø, 4W
D = 240 V, 3Ø, 3W①
E = 277/480 V, 3Ø, 4W
F = 480 V, 3Ø, 3W①
G = 600 V, 3Ø, 3W②
K = 380/220 V, 3Ø, 4W
L = 600/347 V, 3Ø, 4W
S = 400/230 V, 3Ø, 4W

Surge Current (kA)

10 = 100 kA per phase
15 = 150 kA per phase
20 = 200 kA per phase
25 = 250 kA per phase
30 = 300 kA per phase
40 = 400 kA per phase
50 = 500 kA per phase

Enclosure

0 = Standard NEMA 1/12/3R/4 Steel
V = NEMA 4X non-metallic
S = NEMA 4X stainless steel
F = NEMA 1 flush mount
P = NEMA 1 screwcover pullbox with extended display on 6ft cable for line side mounting in SWBD/SWGR

Options

2 = Type 2 SPD (Default) Includes UL 1283 EMI/RFI Filters
0 = Type 1 SD (Consult Factory Prior to Ordering)
D = Internal rotary disconnect
T = Thru-door disconnect
X = Surge Counter (Standard)

Example: **TPS3C12100XD2** = Type 2 SPD (Default) for a 208/120V application with a surge current capacity of 100kA per phase, in a standard NEMA 1/12/3R/4 enclosure with a surge counter and internal rotary disconnect option.

When option **X**, **T**, or **D** are NOT selected, include a **zero** (**0**) in the field.

Available Accessories: Ordered Separately

RMSIE = Remote monitor
① Not available in 500 kA
② Available in 100 kA, 150 kA, 200 kA & 250 kA only

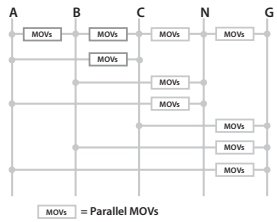

"True" or "Discrete" 10-Mode SPD

TPS3 L12

Ordering Information

Catalog # TPS3 ☐ L12 ☐☐ ☐ ☐☐☐

Voltage Code

A = 120/240 V, 1Ø, 3W
B = 120/240 V, 3Ø, 4W
C = 120/208 V, 3Ø, 4W
E = 277/480 V, 3Ø, 4W
K = 380/220 V, 3Ø, 4W
S = 400/230 V, 3Ø, 4W

Surge Current (kA)

15 = 150 kA per phase
30 = 300 kA per phase
45 = 450 kA per phase

Enclosure

0 = Standard NEMA 1/12/3R/4 Steel
V = NEMA 4X non-metallic
S = NEMA 4X stainless steel
F = NEMA 1 flush mount
P = NEMA 1 screwcover pullbox with extended display on 6ft cable for line side mounting in SWBD/SWGR

Options

2 = Type 2 SPD (Default) Includes UL 1283 EMI/RFI Filters
0 = Type 1 SD (Consult Factory Prior to Ordering)
D = Internal rotary disconnect
T = Thru-door disconnect
X = Surge Counter (Standard)

Example: **TPS3CL12150XD2** = 10 Mode, Type 2 SPD (Default) for a 208/120V application with a surge current capacity of 150kA per phase, in a standard NEMA 1/12/3R/4 enclosure with a surge counter and internal rotary disconnect option.

When an option is NOT selected, include a **zero** (**0**) in the field.

Available Accessories: Ordered Separately

RMSIE = Remote monitor

③ Internal disconnect options and other NEMA ratings may increase enclosure size and weight

JUNCTION BOX

Panel Enclosures
Type 3R Large Continuous Hinge Cover
Data Sheet and Catalog Number

Application
- Used as wiring boxes, junction and pull boxes
- Protects against falling rain, sleet and external ice formation

Standards
- UL 50 listed, Type 3R
- CSA C22.2 No. 40 certified, Type 3R
- Conforms to NEMA standard for Type 3R

Construction
- Enclosure and door are fabricated from code gauge galvaneal steel, (see below)
- Enclosure standard without knockouts
- Door is secured to the body with a continuous hinge and stainless steel pin on one side and captive screws on the opposite side
- Door has padlock hasp with sealing hole provision
- .375-16 collar studs are furnished for mounting optional panel
- External mounting feet are provided for secure wall mounting
- Ground stud provided on door

Finish
- Wash and phosphate undercoat
- ANSI 61 gray polyester powder finish

Accessories
- Panels
- Touch-up paint
- See Accessories section

Discount Schedule: A2

Subclass: AU0

Enclosure	Enclosure Size Height x Width x Depth A x B x C		D			Panel	Panel Size	
Catalog Number	in.	mm	in.	mm	Gauge	Catalog Number	Height x Width in.	mm
16126RHC	16.00 x 12.00 x 6.00	406 x 305 x 152	5.00	127	16	N1612P	13.00 x 9.00	330 x 229
16166RHC	16.00 x 16.00 x 6.00	406 x 406 x 152	9.00	229	16	N1616P	13.00 x 13.00	330 x 330
18186RHC	18.00 x 18.00 x 6.00	457 x 457 x 152	13.00	330	16	N1818P	15.00 x 15.00	381 x 381
181810RHC	18.00 x 18.00 x 10.00	457 x 457 x 254	13.00	330	16	N1818P	15.00 x 15.00	381 x 381
20166RHC	20.00 x 16.00 x 6.00	508 x 406 x 152	9.00	229	16	N2016P	17.00 x 13.00	432 x 330
20208RHC	20.00 x 20.00 x 8.00	508 x 508 x 203	13.00	330	16	N2020P	17.00 x 17.00	432 x 432
24208RHC	24.00 x 20.00 x 8.00	610 x 508 x 203	13.00	330	16	N2420P	20.87 x 16.87	530 x 428
24248RHC	24.00 x 24.00 x 8.00	610 x 610 x 203	17.00	432	14	N2424P	20.87 x 20.87	530 x 530
242410RHC	24.00 x 24.00 x 10.00	610 x 610 x 254	17.00	432	14	N2424P	20.87 x 20.87	530 x 530
30248RHC	30.00 x 24.00 x 8.00	762 x 610 x 203	17.00	432	14	N3024P	26.87 x 20.87	682 x 530
302410RHC	30.00 x 24.00 x 10.00	762 x 610 x 254	17.00	432	14	N3024P	26.87 x 20.87	682 x 530
30308RHC	30.00 x 30.00 x 8.00	762 x 762 x 203	17.00	432	14	N3030P	26.87 x 26.87	682 x 682
303012RHC	30.00 x 30.00 x 12.00	762 x 762 x 305	27.00	432	14	N3030P	26.87 x 26.87	682 x 682
303016RHC	30.00 x 30.00 x 16.00	762 x 762 x 406	27.00	432	14	N3030P	26.87 x 26.87	682 x 682
362412RHC	36.00 x 24.00 x 12.00	914 x 610 x 305	17.00	432	14	N3624P	32.87 x 20.87	835 x 530
363012RHC	36.00 x 30.00 x 12.00	914 x 762 x 305	27.00	432	14	N3630P	32.87 x 26.87	835 x 682
363610RHC	36.00 x 36.00 x 10.00	914 x 914 x 254	27.00	432	14	N3636P	32.87 x 32.87	835 x 835
363612RHC	36.00 x 36.00 x 12.00	914 x 914 x 305	27.00	432	14	N3636P	32.87 x 32.87	835 x 835
423012RHC	42.00 x 30.00 x 12.00	1067 x 762 x 305	27.00	432	14	N4230P	38.87 x 26.87	987 x 682
423612RHC	42.00 x 36.00 x 12.00	1067 x 914 x 305	27.00	432	14	N4236P	38.87 x 32.87	987 x 835
483612RHC	48.00 x 36.00 x 12.00	1219 x 914 x 305	27.00	432	14	N4836P	44.87 x 32.87	1140 x 835
483616RHC	48.00 x 36.00 x 16.00	1219 x 914 x 406	27.00	432	14	N4836P	44.87 x 32.87	1140 x 835
603612RHC	60.00 x 36.00 x 12.00	1524 x 914 x 305	27.00	432	14	N6036P	56.87 x 32.87	1444 x 835

Notes: We can provide special sizes, finishes and other modifications. Consult the factory for your special requirements. Dimensions are in inches. Millimeters shown are for reference only. Data subject to change without notice.

Panel Enclosures
Type 3R Large Continuous Hinge Cover
Illustration Sheet

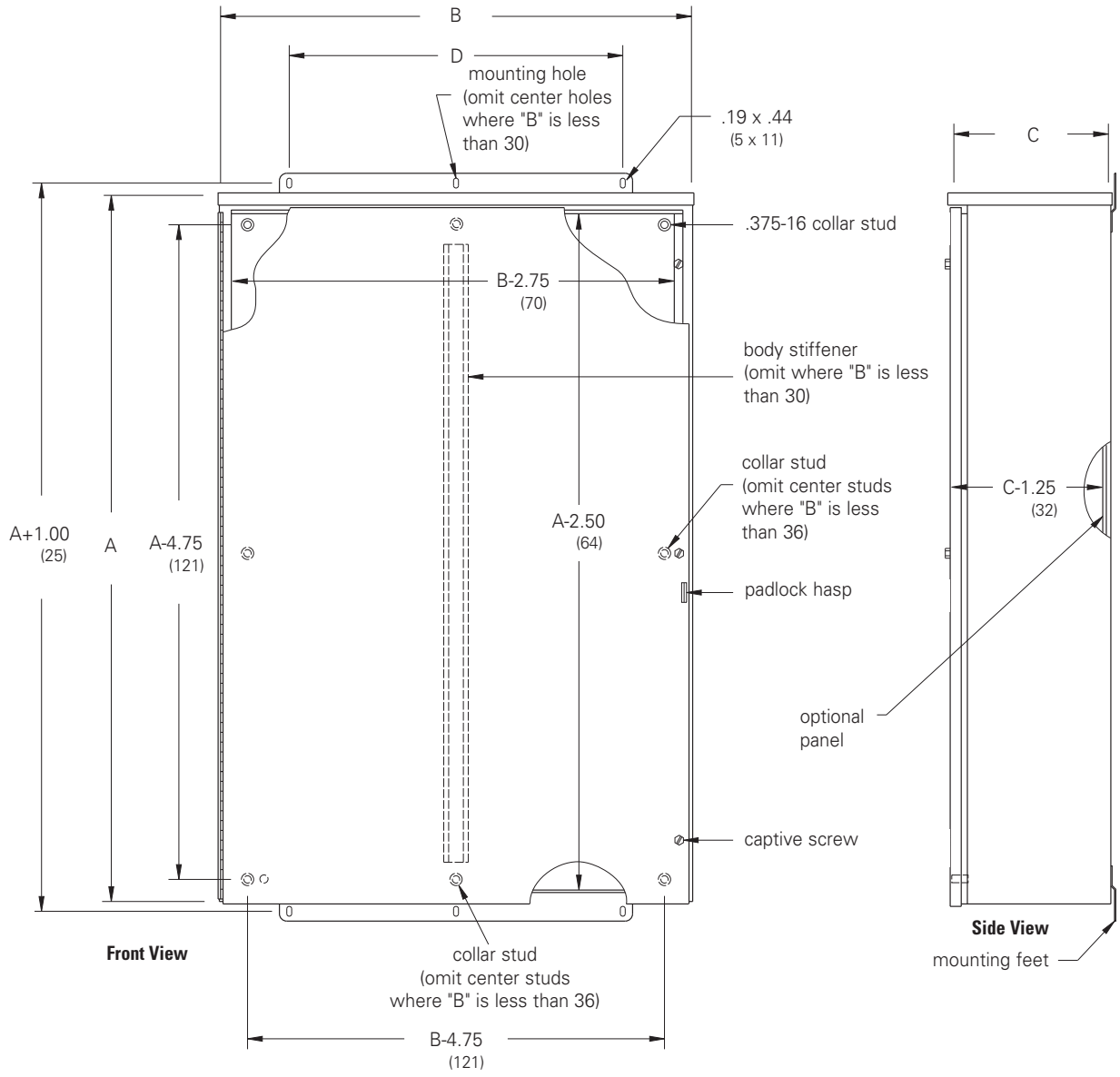

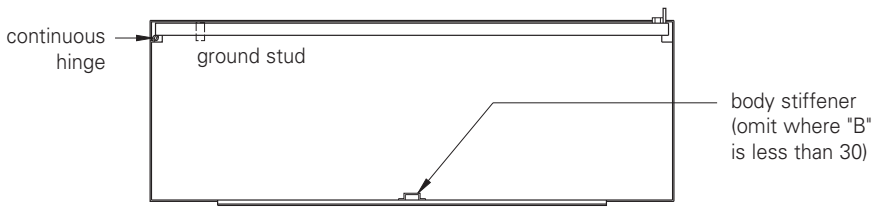

Bottom View

Notes: Dimensions are in inches. Millimeters shown are for reference only. Data subject to change without notice.

DEPARTMENT OF THE ARMY
ALBUQUERQUE DISTRICT, CORPS OF ENGINEERS
ALBUQERQUE DISTRICT OFFICE
4101 JEFFERSON PLAZA NE
ALBUQUERQUE, NM 87109

SUBMITTAL REVIEW VERIFICATION SHEET

PROJECT TITLE: Kirtland BFF Mid-Plume Pump and Treat System Expansion
CONTRACT NUMBER: W912DR-12-D-0006 DM01
DATE RECEIVED: 10-09-2017
DATE REVIEWED: 10-10-2017

DESCRIPTION OF ITEMS REVIEWED:

1. EATON Cooper Transformer

NO EXCEPTIONS TAKEN.	**X**
EXCEPTIONS AS NOTED ON DRAWINGS AND/OR ATTACHED SHEETS(S). RESUBMISSION NOT REQUIRED.	
EXCEPTIONS AS NOTED ON DRAWINGS AND/OR ATTACHED SHEETS(S). RESUBMISSION REQUIRED.	
RECEIPT ACKKNOWLEDGED.	

Notes:

(EA submittal review sheet lists transformer manufacturer as Siemens)

NOTE: ITEMS REVIEWED AS TO GENERAL LAYOUT ONLY. DIMENSIONS AND QUANTITIES NOT CHECKED. REVIEW DOES NOT RELIEVE CONTRACTOR OF RESPONSIBILITIES FOR ANY ERRORS WHICH MAY EXIST AS CONTRACTOR SHALL BE RESPONSIBLE FOR DIMENSIONS AND DESIGN OF ADEQUATE CORRECTIONS, DETAILS AND SATISFACTORY CONSTRUCTION OF WORK.

SIGNATURE SANCHEZ.AMY.ELIZABETH.1454434338 Digitally signed by SANCHEZ.AMY.ELIZABETH.1454434338 DN: c=US, o=U.S. Government, ou=DoD, ou=PKI, ou=USA, cn=SANCHEZ.AMY.ELIZABETH.1454434338 Date: 2017.10.10 14:41:15 -06'00' **DATE** 10/10/2017

EA Engineering, Science, and Technology, Inc., PBC

Submittal Review Sheet 1

Project Name: **Kirtland BFF Mid-Plume Pump and Treat System Expansion**			Date Received: **10/9/2017**
Project Owner: **Kirtland Air Force Base**			Checked By: **Tyler Curley**
Contractor: **Wilson Electric**	Engineer: **EA Engineering, Science and Technology, Inc., PBC.**		Log Page: **NA**
Address: **501 General Somervell SE # B** **Albuquerque, NM 87123**	Address: **320 Gold Ave. SW, Suite 1300** **Albuquerque, NM 87102**		EA No.: 62599DM01
			Spec. Section: **NA**
			Drawing/Detail No.: **E-000/E-001**
ATTN: Matthew Walstrom	ATTN: **Devon Jercinovic**	1st Sub	Re-Sub
Date Transmitted: **10/9/2017**	Prev. Transmittal Date: **08/15/17**		

Item No.	No. Copies	Description	Manufacturer	Mfg/Vendor Dwg or Detail	Action Taken*
1	1	Transformer	Siemens		**A**

The Action Designated Above is in Accordance with the Following Legend:

A – Furnish as Submitted
B – Furnish as Noted
C – Revise and Re-submit
1. Not enough information for review.
2. No reproducible submitted.
3. Copies illegible.
4. Not enough copies submitted.
5. Wrong sequence number.
6. Wrong resubmittal number.
7. Wrong Spec. Section.
8. Wrong form used.
9. See Comments.

D – Rejected
E – Engineer's Review not Required
1. Submittal not required.
2. Supplemental Information. Submittal retained for Information purposes only.
3. Information reviewed and approved on prior submittal.
4. See Comments.

Review is for general compliance with Contract Documents. No responsibility is assumed for correctness of dimensions or detail. Contractor is required to specify deviations from contract requirements. Lack of exceptions noted by Engineer does not waive Contractor's obligation to comply with Drawings and Specifications.

Comments:
Items reviewed and confirmed to meet requirements
(Reviewed Material in Parentheses)
Issues in Bold

Please see transformer specifications.

By: _____ Date: 10/9//17

Distribution: [1] Contractor [1] Engineer [1] Owner

ITE	DESCRIPTION
1	Bolted Cover w/ Handhole w/ Nutguard
2	Cooper Bayonet Fusing w/ Dripshield
3	Current Limiting Backup Fuses (Internal)
4	Drain Valve with Sampler
5	Ground Nut .50-13 Tap
6	Ground Strap and Nut
7	9.0kV (7.65kV MCOV) Elbow Arrester (boxed)
8	High Security Cabinet w/ Pentahead Door Bolts
9	35kV 200 Amp HV Bushing Well w/ 15kV Insert
10	Lifting Lug
11	Liquid Temperature Gauge
12	1.2kV LV Bushing w/4 Hole Spade
13	Magnetic Oil Level Gauge
14	Nameplate
15	One Inch Upper Press. Conn. and Fill Plug
16	Two Position Loadbreak Switch
17	Parking Stand
18	Pressure Relief Valve
19	Pressure Vacuum Gauge
20	Schrader Valve
21	Tank Base w/ Jacking and Rolling Facilities
22	5-Position Tap Changer
23	X0 Bushing

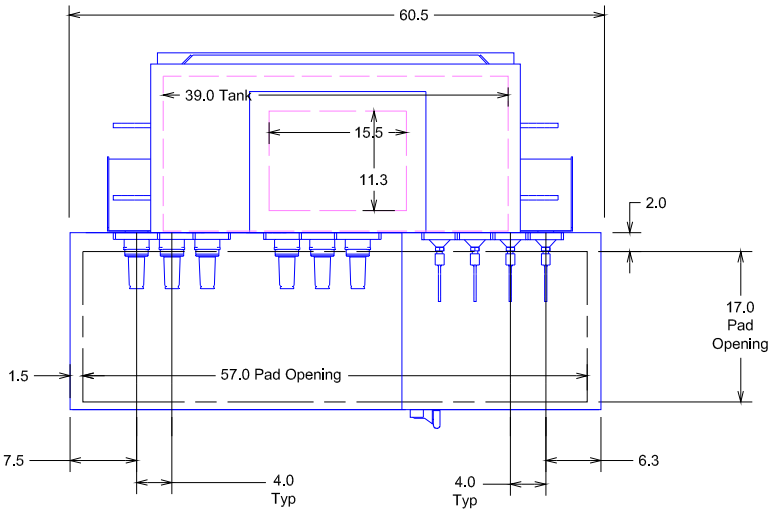

Cabinet Removed

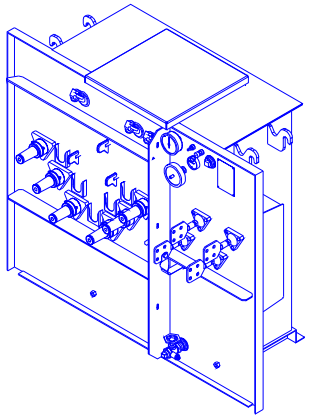

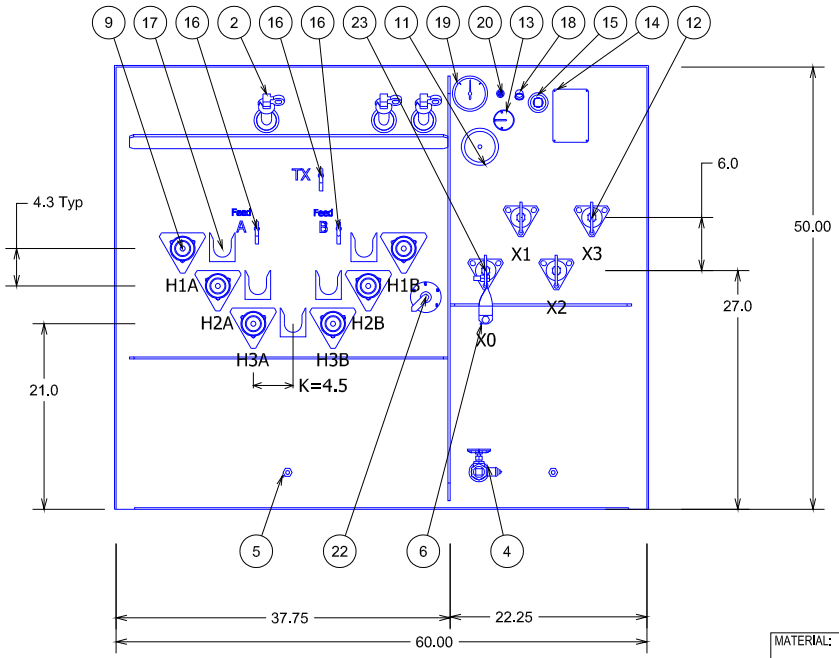

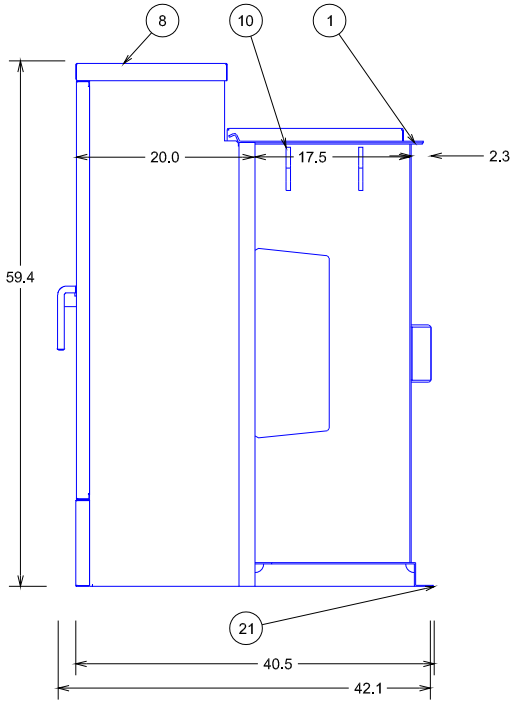

3PH Padmount Transformer 60Hz
75.0 kVA KNAN 65 AWR FR3
HV 12470D 95 kV BIL
LV 480Y/277 30 kV BIL
3.89 %IZ
Special Topcoat Sherwin Williams Sand Dollar #6099
Mild Steel Construction
UL Listed

2ND NamePlate Outside LV Door

SO	212171077
PO	5501547574
Customer Name	BORDER STATES ELECTRIC SUPPLY ALB
Project Name	KAFB

MATERIAL:

ALL DIMENSIONS ARE IN INCHES [MM]

THE INFORMATION ON THIS DOCUMENT WAS CREATED BY EATON. IT WAS DISCLOSED IN CONFIDENCE AND IS ONLY TO BE USED FOR THE PURPOSE IN WHICH IT WAS SUPPLIED.

THIS DRAWING HAS BEEN GENERATED FROM A 3D MODEL.

EATON
Powering Business Worldwide

TITLE: Distribution Transformer Outline Drawing

DESC: **COOPER POWER SERIES** THREE-PHASE PAD-MOUNTED COMPARTMENTAL TYPE

DWG:	DATE:	REF:	SHEET #:	SCALE:	REV:
PTP	10/4/2017	P3D V03R08M06	1 OF 1		00

00028P06XRXA

00028P06XRXA
REVISIONS

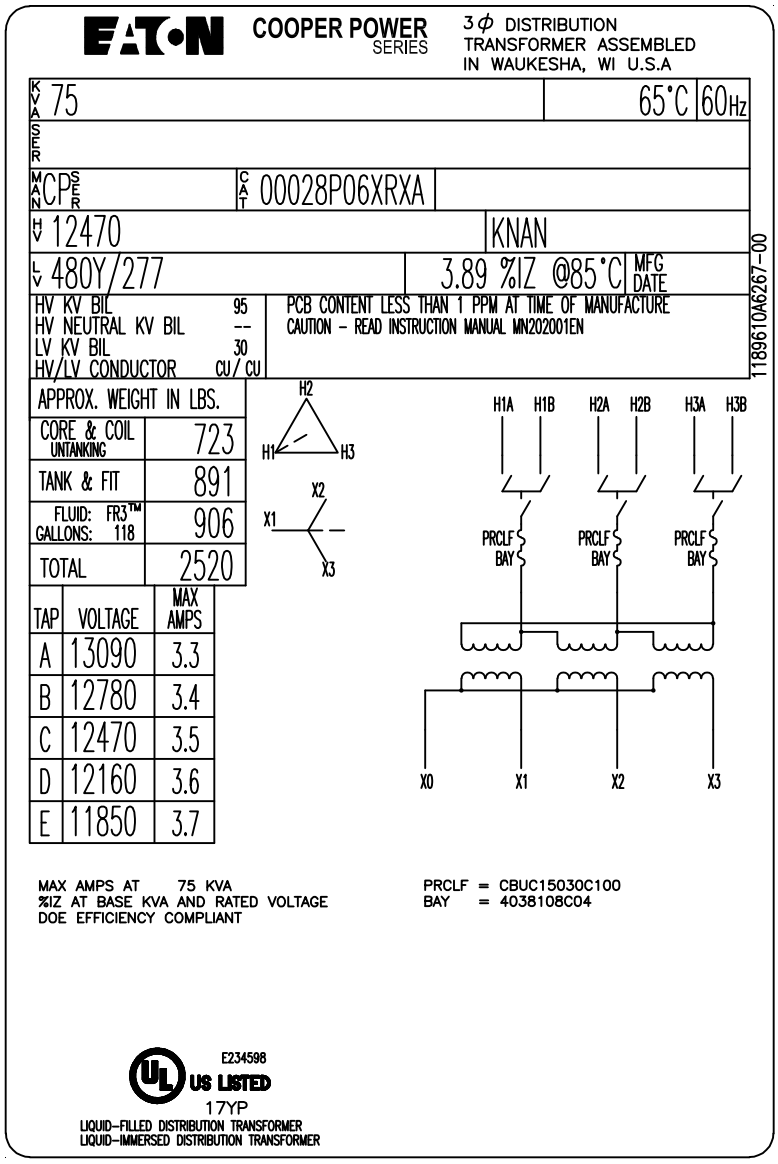

NOTES: **1) ACTUAL PLATE IS A NEGATIVE OF THE ABOVE DRAWING.**
2) ACTUAL %IZ TO BE STAMPED IN AFTER TESTING.

NAMEPLATE MATERIAL: ALUMINUM

212171077,11

1189610A6267 REVISIONS

MATERIAL:

ALL DIMENSIONS ARE IN INCHES [MM]

THE INFORMATION ON THIS DOCUMENT WAS CREATED BY EATON. IT WAS DISCLOSED IN CONFIDENCE AND IS ONLY TO BE USED FOR THE PURPOSE IN WHICH IT WAS SUPPLIED.

Powering Business Worldwide

TITLE: LASER NAMEPLATE

DESC: **COOPER POWER SERIES** 00028P06XRXA

DWG:	DATE:	REF:	SHEET #:	SCALE:	REV:
PTP	10/6/2017		1 of 1	1=1	00

1189610A6267

Three-phase pad-mounted compartmental type transformer

General

At Eaton, we are constantly striving to introduce new innovations to the transformer industry, bringing you the highest quality, most reliable transformers. Eaton's Cooper Power series Transformer Products are ISO 9001 compliant, emphasizing process improvement in all phases of design, manufacture, and testing. In order to drive this innovation, we have invested both time and money in the Thomas A. Edison Technical Center, our premier research facility in Franksville, Wisconsin. Such revolutionary products as distribution-class UltraSIL™ Polymer-Housed Evolution™ surge arresters and Envirotemp™ FR3™ fluid have been developed at our Franksville lab.

With transformer sizes ranging from 45 kVA to 12 MVA and high voltages ranging from 2400 V to 46 kV, Eaton has you covered. From fabrication of the tanks and cabinets to winding of the cores and coils, to production of arresters, switches, tap changers, expulsion fuses, current limit fuses, bushings (live and dead) and molded rubber goods, Eaton does it all. Eaton's Cooper Power series transformers are available with electrical grade mineral oil or Envirotemp™ FR3™ fluid, a less-flammable and bio-degradable fluid. Electrical codes recognize the advantages of using Envirotemp™ FR3™ fluid both indoors and outdoors for fire sensitive applications. The bio-based fluid meets Occupational Safety and Health Administration (OSHA) and Section 450.23 NEC Requirements.

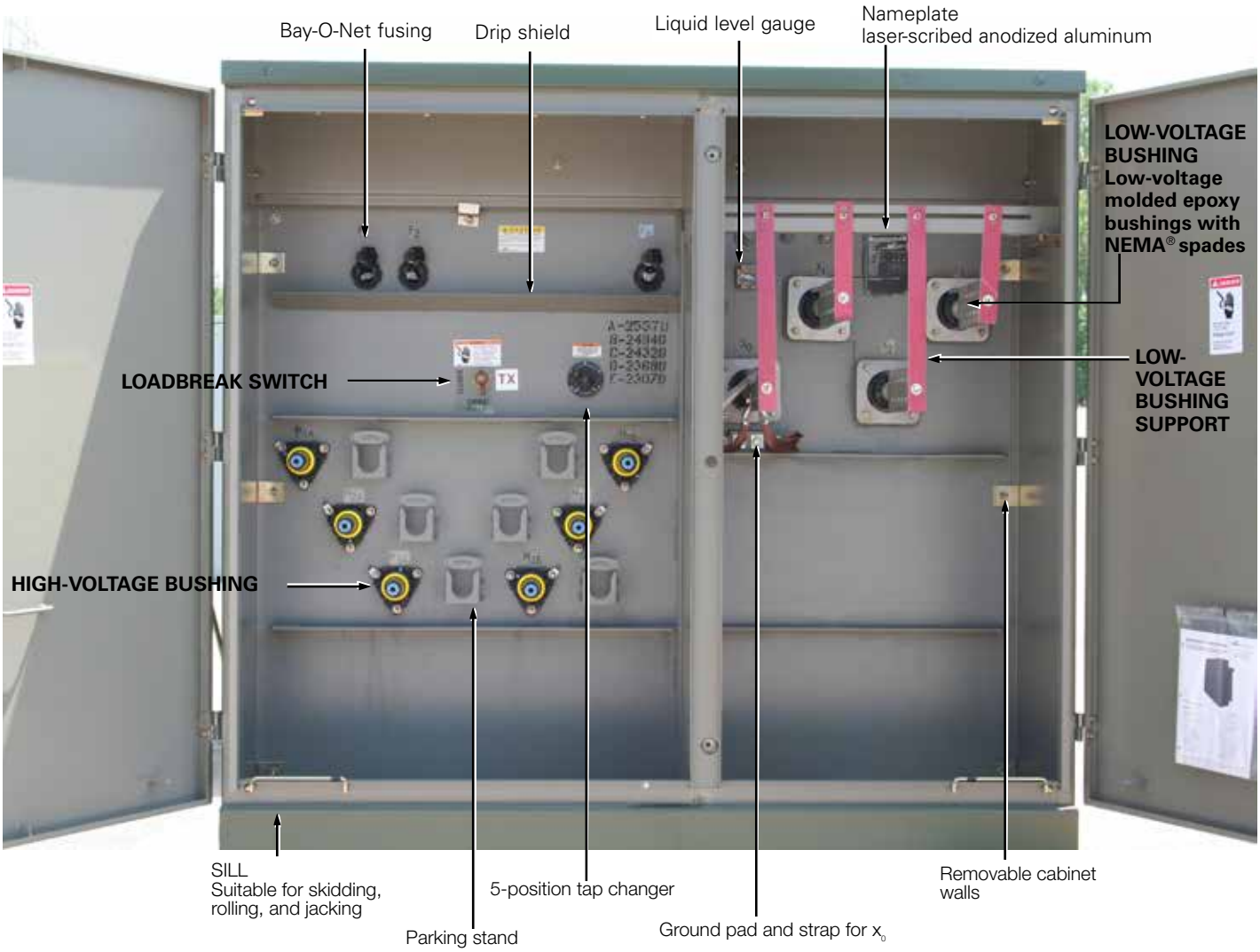

Figure 1. Three-phase pad-mounted compartmental type transformer.

Table 1. Product Scope

Type	Three Phase, 50 or 60 Hz, 65 °C Rise (55 °C, 55/65 °C), 65/75 °C, 75 °C
Fluid Type	Mineral oil or Envirotemp™ FR3™ fluid
Coil Configuration	2-winding or 4-winding or 3-winding (Low-High-Low), 3-winding (Low-Low-High)
Size	45 – 10,000 kVA
Primary Voltage	2,400 – 46,000 V
Secondary Voltage	208Y/120 V to 14,400 V
Specialty Designs	Inverter/Rectifier Bridge
	K-Factor (up to K-19)
	Vacuum Fault Interrupter (VFI)
	UL® Listed & Labeled and Classified
	Factory Mutual (FM) Approved®
	Solar/Wind Designs
	Differential Protection
	Seismic Applications (including OSHPD)
	Hardened Data Center

Table 2. Three-Phase Ratings

Three-Phase 50 or 60 Hz
kVA Available[1]:
45, 75, 112.5, 150, 225, 300, 500, 750, 1000, 1500, 2000, 2500, 3000, 3750, 5000, 7500, 10000

[1]Transformers are available in the standard ratings and configurations shown or can be customized to meet specific needs.

Table 3. Impedance Voltage

	Low-voltage rating		
Rating (kVA)	**≤ 600 V**	**2400 Δ through 4800 Δ**	**6900 Δ through 13800GY/7970 or 13800 Δ**
45-75	2.70-5.75	2.70-5.75	2.70-5.75
112.5-300	3.10-5.75	3.10-5.75	3.10-5.75
500	4.35-5.75	4.35-5.75	4.35-5.75
750-2500	5.75	5.75	5.75
3750	5.75	5.75	6.00
5000		6.00	6.50

Note: The standard tolerance is ± 7.5%

Table 4. Audible Sound Levels

	NEMA® TR-1 Average
Self-Cooled, Two Winding kVA Rating	**Decibels (dB)**
45-500	56
501-700	57
701-1000	58
1001-1500	60
1501-2000	61
2001-2500	62
2501-3000	63
3001-4000	64
4001-5000	65
5001-6000	66
6001-7500	67
7501-10000	68

Table 5. Insulation Test Levels

KV Class	Induced Test 180 or 400 Hz 7200 Cycle	kV BIL Distribution	Applied Test 60 Hz (kV)
1.2	Twice Rated Voltage	30	10
2.5		45	15
5		60	19
8.7		75	26
15		95	34
25		125	40
34.5		150	50

Table 6. Temperature Rise Ratings 0-3300 Feet (0-1000 meters)

	Standard	Optional
Unit Rating (Temperature Rise Winding)	65 °C	55 °C, 55/65 °C, 75 °C
Ambient Temperature Max	40 °C	50 °C
Ambient Temperature 24 Hour Average	30 °C	40 °C
Temperature Rise Hotspot	80 °C	65 °C

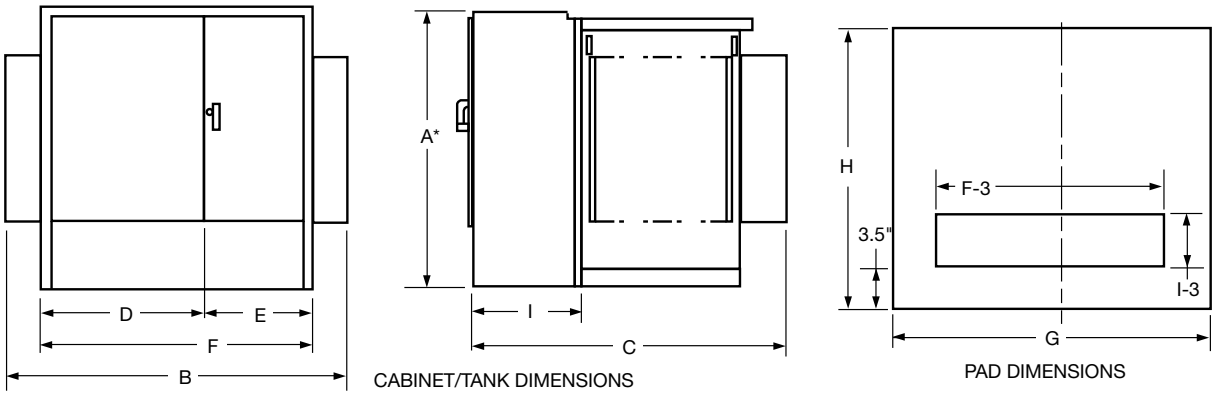

Figure 2. Transformer and pad dimensions.

* Add 9" for Bay-O-Net fusing.

Table 7. Fluid-filled—aluminum windings 55/65 °C Rise[1]

65° Rise	DEAD-FRONT—LOOP OR RADIAL FEED—BAY-O-NET FUSING OIL FILLED—ALUMINUM WINDINGS										
	OUTLINE DIMENSIONS (in.)									Gallons of Fluid	Approx. Total Weight (lbs.)
kVA Rating	A*	B	C	D	E	F	G	H	I		
45	50	68	39	42	26	68	72	43	20	110	2,100
75	50	68	39	42	26	68	72	43	20	115	2,250
112.5	50	68	49	42	26	68	72	53	20	120	2,350
150	50	68	49	42	26	68	72	53	20	125	2,700
225	50	72	51	42	30	72	76	55	20	140	3,150
300	50	72	51	42	30	72	76	55	20	160	3,650
500	50	89	53	42	30	72	93	57	20	190	4,650
750	64	89	57	42	30	72	93	61	20	270	6,500
1000	64	89	59	42	30	72	93	63	20	350	8,200
1500	73	89	86	42	30	72	93	90	24	410	10,300
2000	73	72	87	42	30	72	76	91	24	490	12,500
2500	73	72	99	42	30	72	76	103	24	530	14,500
3000	73	84	99	46	37	84	88	103	24	620	16,700
3750	84	85	108	47	38	85	88	112	24	660	19,300
5000	84	96	108	48	48	96	100	112	24	930	25,000
7500	94	102	122	54	48	102	100	126	24	1,580	41,900

1 Weights, gallons of fluid, and dimensions are for reference only and not for construction. Please contact Eaton for exact dimensions.

* Add 9" for Bay-O-Net fusing.

Table 8. Fluid-Filled—Copper Windings 55/65 °C Rise[1]

65° Rise	DEAD-FRONT—LOOP OR RADIAL FEED—BAY-O-NET FUSING OIL FILLED—COPPER WINDINGS										
	OUTLINE DIMENSIONS (in.)									Gallons of Fluid	Approx. Total Weight (lbs.)
kVA Rating	A*	B	C	D	E	F	G	H	I		
45	50	64	39	34	30	64	69	43	20	110	2,100
75	50	64	39	34	30	64	69	43	20	115	2,350
112.5	50	64	49	34	30	64	69	53	20	115	2,500
150	50	64	49	34	30	64	69	53	20	120	2,700
225	50	64	51	34	30	64	73	55	20	140	3,250
300	50	64	51	34	30	64	75	55	20	160	3,800
500	50	81	53	34	30	64	85	57	20	200	4,800
750	64	89	57	42	30	72	93	61	20	255	6,500
1000	64	89	59	42	30	72	93	63	20	300	7,800
1500	73	89	86	42	30	72	93	90	24	410	10,300
2000	73	72	87	42	30	72	76	91	24	420	11,600
2500	73	72	99	42	30	72	76	103	24	500	14,000
3000	73	84	99	46	37	84	88	103	24	720	18,700
3750	84	85	108	47	38	85	88	112	24	800	20,500
5000	84	96	108	48	48	96	100	112	24	850	25,000
7500	94	102	122	54	48	102	100	126	24	1,620	46,900

[1] Weights, gallons of fluid, and dimensions are for reference only and not for construction. Please contact Eaton for exact dimensions.

* Add 9" for Bay-O-Net fusing.

Standard features

Connections and neutral configurations

- Delta - Wye: Low voltage neutral shall be a fully insulated X0 bushing with removable ground strap.
- Grounded Wye-Wye: High voltage neutral shall be internally tied to the low voltage neutral and brought out as the H0X0 bushing in the secondary compartment with a removable ground strap.
- Delta-Delta: Transformer shall be provided without a neutral bushing.
- Wye-Wye: High voltage neutral shall be brought out as the H0 bushing in the primary compartment and the low voltage neutral shall be brought as the X0- bushing in the secondary compartment.
- Wye-Delta: High voltage neutral shall be brought out as the H0 bushing in the primary compartment. No ground strap shall be provided (line to line rated fusing is required).

High and low voltage bushings

- 200 A bushing wells (15, 25, and 35 kV)
- 200 A, 35 kV Large Interface
- 600 A (15, 25, and 35 kV) Integral bushings (dead-front)
- Electrical-grade wet-process porcelain bushings (live-front)

Tank/cabinet features

- Bolted cover for tank access (45-2500 kVA)
- Welded cover with hand hole (>2500 kVA)
- Three-point latching door for security
- Removable sill for easy installation
- Lifting lugs (4)
- Stainless steel cabinet hinges and mounting studs
- Steel divider between HV and LV compartment
- 20" Deep cabinet (45-1000 kVA)
- 24" Deep cabinet (1500-7500 kVA)
- 30" Deep cabinet (34.5/19.92 kV)
- Pentahead captive bolt
- Stainless steel 1-hole ground pads (45-500 kVA)
- Stainless steel 2-hole ground pads (750-10,000 kVA)
- Parking Stands (dead-front)

Valves/plugs

- One-inch upper filling plug
- One-inch drain plug (45-500 kVA)
- One-inch combination drain valve with sampling device in low voltage compartment (750-10,000 kVA)
- Automatic pressure relief valve

Nameplate

- Laser-scribed anodized aluminum nameplate

Figure 3. Drain valve with sampler.

Figure 4. Automatic Pressure relief valve.

Figure 5. Liquid level gauge.

Figure 6. External Gauges.

Figure 7. External visible break with gauges.

Optional features

High and low voltage bushings

- 200 A (15, 25 kV) bushing inserts
- 200 A (15, 25 kV) feed thru inserts
- 200 A (15, 25 kV) (HTN) bushing wells with removable studs
- High-voltage 600 A (15, 25, 35 kV) deadbreak one-piece bushings
- Low voltage 6-, 8-holes spade
- Low voltage 12-, 16-, 20-holes spade (750-2500 kVA)
- Low voltage bushing supports

Tank/cabinet features

- Stainless steel tank base and cabinet
- Stainless steel tank base, cabinet sides and sill
- 100% stainless steel unit
- Service entrance (2 inch) in sill or cabinet side
- Touch-up paint (domestic)
- Copper ground bus bar
- Kirk-Key provisions
- Nitrogen blanket
- Bus duct cutout

Special designs

- Factory Mutual (FM)
- UL® Classified
- Triplex
- High altitude
- K-Factors
- Step-up
- Critical application
- Modulation transformers
- Seismic applications (including OSHPD)

Switches

- One, two, or three On/Off loadbreak switches
- 4-position loadbreak V-blade switch or T-blade switch
- Delta-wye switch
- 3-position V-Blade selector switch
- 100 A, 150 A, 300 A tap changers
- Dual voltage switch
- Visible break with VFI interrupter interlock
- External visible break (15, 25, and 35 kV, up to 3 MVA)
- External visible break with gauges (15, 25, and 35 kV, up to 3 MVA)

Gauges and devices

- Liquid level gauge (optional contacts)
- Pressure vacuum gauge (optional contacts and bleeder)
- Dial-type thermometer (optional alarm contacts)
- Cover mounted pressure relief device (optional alarm contacts)
- Ground connectors
- Hexhead captive bolt
- Molded case circuit breaker mounting provisions
- External gauges in padlockable box

Overcurrent protection

- Bay-O-Net fusing (Current sensing, dual sensing, dual element, high amperage overload)
- Bay-O-Net expulsion fuse in series with a partial range under-oil ELSP current limiting fuse (below 23 kV)
- Cartridge fusing in series with a partial range under-oil ELSP current limiting fuse (above 23 kV)
- MagneX™ interrupter with ELSP current-limiting fuse
- Vacuum Fault Interrupter (VFI)
- Visible break window
- Fuse/switch interlock

Valves/plugs

- Drain/sampling valve in high-voltage compartment
- Globe type upper fill valve

Overvoltage protection

- Distribution-, intermediate-, or station-class surge arresters
- Elbow arresters (for dead-front connections)

Metering/fan/control

- Full metering package
- Current Transformers (CTs)
- Metering Socket
- NEMA® 4 control box (optional stainless steel)
- NEMA® 7 control box (explosion proof)
- Fan Packages

Testing

- Customer test witness
- Customer final inspection
- Zero Sequence Impedance Test
- Heat Run Test
- ANSI® Impulse Test
- Audible Sound Level Test
- RIV (Corona) Test
- Dissolved Gas Analysis (DGA) Test
- 8- or 24-Hour Leak Test

Coatings (paint)

- ANSI® Bell Green
- ANSI® #61 Light Gray
- ANSI® #70 Sky Gray
- Special paint available per request

Nameplate

- Stainless steel nameplate

Decals and labels

- High voltage warning signs
- Mr. Ouch
- Bi-lingual warning
- DOE compliant
- Customer stock code
- Customer stenciling
- Shock and arc flash warning decal
- Non-PCB decal

Construction

Core

The three-legged, step-lap mitered core construction is manufactured using a high-quality cutting machine. For maximum efficiency, cores are precisely stacked, virtually eliminating gaps in the corner joints.

Five-legged wound core or shell-type triplex designs are used for wye-wye connected transformers, and other special transformer designs.

Cores are manufactured with precision cut, burr-free, grain-oriented silicon steel. Many grades of core steel are available for optimizing core loss efficiency.

Coils

Pad-mounted transformers feature a rectangular coil configuration with wire-wound, high-voltage primaries and sheet-wound secondaries. The design minimizes axial stress developed by short circuits and provides for magnetic balancing of tap connections.

Coils are wound using the highest quality winding machines providing exacting tension control and conductor placement for superior short-circuit strength and maximum efficiency.

Extra mechanical strength is provided by diamond pattern, epoxy-coated paper insulation, used throughout the coil, with additional epoxy at heavy stress points. The diamond pattern distribution of the epoxy and carefully arranged ducts, provide a network of passages through which cooling fluid can freely circulate.

Coil assemblies are heat-cured under calculated hydraulic pressure to ensure performance against short-circuit forces.

Core and coil assemblies

Pad-mounted transformer core and coil assemblies are braced with heavy steel ends to prevent the rectangular coil from distorting under short-circuit conditions. Plates are clamped in place using presses, and welded or bolted to form a solid core and coil assembly. Core and coil assemblies exceed ANSI® and IEEE® requirements for short-circuit performance. Due to the rigidity of the design, impedance shift after short-circuit is comparable to that of circular wound assemblies.

Tanks

Transformer tanks are designed for high strength and ease of handling, installation, and maintenance. Tanks are welded using precision-cut, hot rolled, pickled and oiled steel. They are sealed to protect the insulating fluid and other internal components.

Transformer tanks are pressure-tested to withstand 7 psig without permanent distortion and 15 psig without rupture.

Tank finish

An advanced multi-stage finishing process exceeds IEEE Std C57.12.28™-2014 standards. The eight-stage pre-treatment process assures coating adhesion and retards corrosion. It converts tank surfaces to a nonmetallic, water insoluble iron phosphate coating.

The paint method consists of two distinct layers of paint. The first is an epoxy primer (E-coat) layer which provides a barrier against moisture, salt and corrosives. The two-component urethane final coat seals and adds ultraviolet protection.

Vacuum processing

Transformers are dried and filled with filtered insulating fluid under vacuum, while secondary windings are energized. Coils are heated to drive out moisture, ensuring maximum penetration of fluid into the coil insulation system.

Insulating fluid

Eaton's Cooper Power series transformers are available with electrical-grade mineral insulating oil or Envirotemp™ FR3™ fluid. The highly refined fluids are tested and degassed to assure a chemically inert product with minimal acid ions. Special additives minimize oxygen absorption and inhibit oxidation. To ensure high dielectric strength, the fluid is re-tested for dryness and dielectric strength, refiltered, heated, dried, and stored under vacuum before being added to the completed transformer.

Eaton's Cooper Power series transformers filled with Envirotemp™ FR3™ fluid enjoy unique fire safety, environmental, electrical, and chemical advantages, including insulation life extending properties.

A bio-based, sustainable, natural ester dielectric coolant, Envirotemp™ FR3™ fluid quickly and thoroughly biodegrades in the environment and is non-toxic per acute aquatic and oral toxicity tests.

Building for Environmental and Economic Sustainability (BEES) total life cycle assessment software, utilized by the US Dept. of Commerce, reports its overall environmental performance impact score at 1/4th that reported for mineral oil. Envirotemp™ FR3™ fluid has also earned the EPA Environmental Technology Verification of transformer materials.

With a fire point of 360 °C, Envirotemp™ FR3™ fluid is FM Approved® and Underwriters Laboratories (UL®) Classified "Less-Flammable" per NEC® Article 450-23, fitting the definition of a Listed Product per NEC®.

Figure 8. VFI transformer with visible break.

Pad-mounted VFI transformer

Eaton's Cooper Power series VFI transformer combines a conventional distribution transformer with the proven Vacuum Fault Interrupter (VFI). This combination provides both voltage transformation and transformer over current protection in one space saving and money saving package. The pad-mounted VFI transformer protects the transformer and provides proper coordination with upstream protective devices. When a transformer fault or overload condition occurs, the VFI breaker trips and isolates the transformer.

The three-phase VFI breaker has independent single-phase initiation, but is three-phase mechanically gang-tripped. A trip signal on any phase will open all three phases. This feature eliminates single-phasing of three phase loads. It also enables the VFI breaker to be used as a three-phase load break switch.

Due to the resettable characteristics of the VFI breaker, restoring three-phase service is faster and easier.

The sealed visible break window and switch is an option that can be installed to provide visible break contact. This feature provides enhanced safety and allows an operator to see if the loadbreak switch contacts are in an open or closed position before performing maintenance.

Envirotran™ FM Approved special protection transformer

Eaton's Cooper Power series Envirotran™ transformer is FM Approved and suitable for indoor locations. Factory Mutual Research Corporation's (FMRC) approval of the Envirotran transformer line makes it easy to comply with and verify compliance with Section 450.23, 2008 NEC, Less-Flammable Liquid-Filled Transformer Requirements for both indoor and outdoor locations.

Envirotran FM Approved transformers offer the user the benefit of a transformer that can be easily specified to comply with NEC, and makes FM Safety Data Sheet compliance simpler, while also providing maximum safety and flexibility for both indoor and outdoor installations.

Because the "FM Approved" logo is readily visible on the transformer and its nameplate, NEC compliance is now easily verifiable by the inspector.

Envirotran FM Approved transformers are manufactured under strict compliance with FMRC Standard 3990 and are filled with FM Approved Envirotemp™ FR3™ fluid, a fire-resistant dielectric coolant.

FM
APPROVED

Special application transformers

Data Center transformer

With focus rapidly shifting from simply maximizing uptime and supporting demand to improving energy utilization, the data center industry is continually looking for methods to increase its energy efficiency and reliability. Utilizing cutting edge technology, Eaton's Cooper Power series Hardened Data Center (HDC) transformers are the solution. Designed with special attention given to surge protection, HDC liquid-filled transformers provide superior performance under the harshest electrical environments. Contrary to traditional dry-type units, HDC transformers provide unsurpassed reliability, overloadability, operational life, efficiency, thermal loading and installed footprint. These units have reliably served more than 100 MW of critical data center capacity for a total of more than 6,000,000 hours without any reported downtime caused by a thermal or short-circuit coil failure.

The top priority in data center operations is uninterrupted service. Envirotran HDC transformers from Eaton, having substantially higher levels of insulation, are less susceptible to voltage surges. Eaton has experienced zero failures due to switching transients. The ANSI® and IEEE® standard impulse withstand ratings are higher for liquid-filled transformers, making them less susceptible to insulation failure. The Envirotran HDC transformer provides ultimate protection by increasing the BIL rating one level higher than standard liquid-filled transformer ratings. The cooling system of liquid-filled transformers provides better protection from severe overloads—overloads that can lead to significant loss of life or failure.

Data center design typically includes multiple layers of redundancy, ensuring maximum uptime for the critical IT load. When best in class transformer manufacturing lead times are typically weeks, not days, an unexpected transformer failure will adversely affect the facility's reliability and profitability. Therefore, the ability to determine the electrical and mechanical health of a transformer can reduce the probability of costly, unplanned downtime. Routine diagnostic tests, including key fluid properties and dissolved gas analysis (DGA), can help determine the health of a liquid-filled transformer. Although sampling is not required for safe operation, it will provide the user with valuable information, leading to scheduled repair or replacement, and minimizing the duration and expense of an outage. With a dry-type transformer, there is no reliable way to measure the health or likelihood of an impending failure.

Solar transformer

As a result of the increasing number of states that are adopting aggressive Renewable & Alternative Energy Portfolio Standards, the solar energy market is growing—nearly doubling year over year. Eaton, a key innovator and supplier in this expanding market, is proud to offer its Cooper Power series Envirotran transformers specifically designed for Solar Photovoltaic medium-voltage applications. Eaton is working with top solar photovoltaic developers, integrators and inverter manufacturers to evolve the industry and change the way we distribute power.

In accordance with this progressive stance, every Envirotran Solar transformer is filled with non-toxic, biodegradable Envirotemp™ FR3™ dielectric fluid, made from renewable seed oils. On top of its biodegradability, Envirotemp™ FR3™ fluid substantially extends the life of the transformer insulation, saving valuable resources. What better way to distribute green power than to use a green transformer. In fact, delaying conversion to Envirotran transformers places the burden of today's environmental issues onto tomorrow's generations. Eaton can help you create a customized transformer, based on site specific characteristics including: temperature profile, site altitude, solar profile and required system life. Some of the benefits gained from this custom rating include:

- Reduction in core losses
- Improved payback on investment
- Reduction in footprint
- Improved fire safety
- Reduced environmental impact

For the solar photovoltaic industry, Eaton is offering standard step up transformers and dual secondary designs, including 4-winding, 3-winding (Low-High-Low) and 3-winding (Low-Low-High) designs.

Wind transformer

Eaton is offering custom designs for renewable energy power generation. Eaton manufactures its Cooper Power series Generator Step-Up (GSU) transformers for installation at the base of every wind turbine. Additionally, grounding transformers are available for wind power generation.

DOE efficiency

The United States Department of Energy (DOE) has mandated efficiency values for most liquid type, medium voltage transformers. As a result, all applicable Eaton's Cooper Power series transformers 2500 kVA and below conform to efficiency levels as specified in the DOE ruling "10 CFR Part 431 Energy Conservation Program".

Underwriters Laboratories® (UL®) Listed and Labeled/ Classified

The Envirotran transformer from Eaton can be specified as UL® Listed & Labeled, and/or UL® Classified. Underwriters Laboratories (UL®) listing is a verification of the design and construction of the transformer to the ANSI® and IEEE® standards. UL® listing generally is the most efficient, cost-effective solution for complying with relevant state and local electrical codes. UL® Combination Classification/Listing is another way in which to comply with Section 450.23, 2008 NEC® requirements. This combines the UL® listed transformer with a UL® Classified Less-Flammable Liquid and complies with the use restrictions found within the liquid Classification.

c UL US
LISTED

K-Factor transformer

With a drastic increase in the use of ferromagnetic devices, arcing devices, and electric power converters, higher frequency loads have increased significantly. This harmonic loading has the potential to generate higher heat levels within a transformer's windings and leads by as much as 300%. Harmonic loading has the potential to induce premature failure in standard-design distribution transformers.

In addition to standard UL® "K-Factor" ratings, transformers can be designed to customer-provided specifications detailing precise loading scenarios. Onsite measurements of magnitude and frequency, alongside harmonic analysis of the connected load can be performed by Eaton engineers or a third party consultant. These field measurements are used to determine exact customer needs and outline the transformer specifications.

Eaton will design harmonic-resistant transformers that will be subjected to the unique harmonic loads. These units are designed to maintain normal temperature rise under harmonic, full-load conditions. Standard UL® "K-Factor" designs can result in unnecessary costs when the "next-highest" K-Factor must be selected for a calculated design factor. To save the customer these unnecessary costs, Eaton can design the transformer to the specific harmonic spectrum used in the application. Eaton's Cooper Power series K-factor transformers are filled with mineral oil or Envirotemp™ FR3™ fluid and enjoy the added benefits of dielectric cooling such as higher efficiencies than dry-type transformers.

Modulation transformer

Bundled with an Outboard Modulation Unit (OMU) and a Control and Receiving Unit (CRU), a Modulation Transformer Unit (MTU) is designed to remotely achieve two way communication.

The use of an MTU reduces travel time and expense versus traditional meter reading performed by high voltage electricians. Additionally, with MTU it is possible to manage and evaluate energy consumption data, providing reduced metering costs and fewer tenant complaints.

An MTU utilizes existing utility infrastructure, therefore eliminating the need to engineer and construct a dedicated communication network.

Figure 9. Modular transformer.

Inverter/rectifier bridge

Eaton complements its range of applications for transformers by offering dual winding designs. These designs are intended for connection to 12-pulse rectifier bridges.

Product attributes

To set us apart from other transformer manufactures, Eaton includes the following guarantees with every three-phase pad-mounted transformer.

Engineered to order (ETO)

Providing the customer with a well developed, cost-effective solution is the number one priority at Eaton. Using customer specifications, Eaton will work with the customer from the beginning to the end to develop a solution to fit their needs. Whether it is application specific, site specific, or a uniquely specified unit, Eaton will provide transformers with the best in class value and performance, saving the customer time and money.

Made in the U.S.A.

Eaton's three-phase pad-mounted transformers are produced right here in the United States of America. Our manufacturing facilities are positioned strategically for rapid shipment of products. Furthermore, should the need arise, Eaton has a broad network of authorized service repair shops throughout the United States.

Superior paint performance

Protecting transformers from nature's elements worldwide, Eaton's E-coat system provides unrivaled transformer paint life, and exceeds IEEE Std C57.12.28™-2014 and IEEE Std C57.12.29™-2005 standards. In addition to the outside of the unit, each transformer receives a gray E-coat covering in the interior of the tank and cabinet, providing superior rust resistance and greater visibility during service.

If the wide range of standard paint selections does not suit the customer's needs, Eaton will customize the paint color to meet their requirements.

Rectangular coil design

Eaton utilizes a rectangular coil design. This winding technique results in a smaller overall unit footprint as well as reducing the transformer weight. The smaller unit size does not hinder the transformer performance in the least. Units have proven short circuit withstand capabilities up to 10 MVA.

Testing

Eaton performs routing testing on each transformer manufactured including the following tests:

- Insulation Power Factor: This test verifies that vacuum processing has thoroughly dried the insulation system to required limits.
- Ratio, Polarity, and Phase Relation: Assures correct winding ratios and tap voltages; checks insulation of HV and LV circuits. Checks entire insulation system to verify all live-to-ground clearances.
- Resistance: This test verifies the integrity of internal high-voltage and low-voltage connections; provides data for loss upgrade calculations.
- Routine Impulse Tests: The most severe test, simulating a lightning surge. Applies one reduced wave and one full wave to verify the BIL rating.
- Applied Potential: Applied to both high-voltage and low-voltage windings, this test stresses the entire insulation system to verify all live-to-ground clearances.
- Induced Potential: 3.46 times normal plus 1000 volts for reduced neutral designs.
- Loss Test: These design verification tests are conducted to assure that guaranteed loss values are met and that test values are

within design tolerances. Tests include no-load loss and excitation current along with impedance voltage and load loss.

- Leak Test: Pressurizing the tank to 7 psig assures a complete seal, with no weld or gasket leaks, to eliminate the possibility of moisture infiltration or fluid oxidation.

Design performance tests

The design performance tests include the following:

- Temperature Rise: Our automated heat run facility ensures that any design changes meet ANSI® and IEEE® temperature rise criteria.
- Audible Sound Level: Ensures compliance with NEMA® requirements.
- Lightning Impulse: To assure superior dielectric performance, this test consists of one reduced wave, two chopped waves and one full wave in sequence, precisely simulating the harshest conditions.

Thomas A Edison Research and Test Facility

We are constantly striving to introduce new innovations to the transformer industry, bringing you the highest quality transformer for the lowest cost. Eaton's Cooper Power series Transformer Products are ISO 9001 compliant, emphasizing process improvement in all phases of design, manufacture, and testing. We have invested millions of dollars in the Thomas A. Edison Technical Center, our premier research facility in Franksville, Wisconsin affirming our dedication to introducing new innovations and technologies to the transformer industry. This research facility is fully available for use by our customers to utilize our advanced electrical and chemical testing labs.

Three-phase pad-mounted compartmental type transformer

Eaton
1000 Eaton Boulevard
Cleveland, OH 44122
United States
Eaton.com

Eaton's Cooper Power Systems Division
2300 Badger Drive
Waukesha, WI 53188
United States
Eaton.com/cooperpowerseries

© 2015 Eaton
All Rights Reserved
Printed in USA
Publication No. CA202003EN

Eaton, Cooper Power, MagneX, UltraSIL, Evolution, and Envirotran are valuable trademarks of Eaton in the U.S. and other countries. You are not permitted to use these trademarks without the prior written consent of Eaton.
IEEE Std C57.12.28™-2005 and Std C57.12.29™-2005 standards are trademarks of the Institute of Electrical and Electronics Engineers, Inc., (IEEE). This publication is not endorsed or approved by the IEEE.
IEEE® is a registered trademark of the Institute of Electrical and Electronics Engineers, Inc.
ANSI® is a registered trademark of American National Standards Institute.
National Electrical Code® and NEC® are registered trademarks of the National Fire Protection Association, Inc., Quincy, MA.
Underwriters Laboratories® and UL® are registered trademarks of UL LLC.
FM Approved®, FMRC, and Factory Mutual Research Corporation are trademarks of FM Global.
Envirotemp™ and FR3™ are licensed trademarks of Cargill, Incorporated.

For Eaton's Cooper Power series three-phase transformer product information call 1-877-277-4636 or visit: www.eaton.com/cooperpowerseries.

Powering Business Worldwide

DEPARTMENT OF THE ARMY
ALBUQUERQUE DISTRICT, CORPS OF ENGINEERS
ALBUQERQUE DISTRICT OFFICE
4101 JEFFERSON PLAZA NE
ALBUQUERQUE, NM 87109

SUBMITTAL REVIEW VERIFICATION SHEET

PROJECT TITLE: Kirtland BFF Mid-Plume Pump and Treat System Expansion
CONTRACT NUMBER: W912DR-12-D-0006 DM01
DATE RECEIVED: 8-17-2017
DATE REVIEWED: 8-24-2017

DESCRIPTION OF ITEMS REVIEWED:

1. Pull Box and Cover (PG4848BA48 and PG4848HA0017)

NO EXCEPTIONS TAKEN.	**X**
EXCEPTIONS AS NOTED ON DRAWINGS AND/OR ATTACHED SHEETS(S). RESUBMISSION NOT REQUIRED.	
EXCEPTIONS AS NOTED ON DRAWINGS AND/OR ATTACHED SHEETS(S). RESUBMISSION REQUIRED.	
RECEIPT ACKKNOWLEDGED.	

Notes:

NOTE: ITEMS REVIEWED AS TO GENERAL LAYOUT ONLY. DIMENSIONS AND QUANTITIES NOT CHECKED. REVIEW DOES NOT RELIEVE CONTRACTOR OF RESPONSIBILITIES FOR ANY ERRORS WHICH MAY EXIST AS CONTRACTOR SHALL BE RESPONSIBLE FOR DIMENSIONS AND DESIGN OF ADEQUATE CORRECTIONS, DETAILS AND SATISFACTORY CONSTRUCTION OF WORK.

SIGNATURE SANCHEZ.AMY.ELIZABETH.1454434338 Digitally signed by SANCHEZ.AMY.ELIZABETH.1454434338 DN: c=US, o=U.S. Government, ou=DoD, ou=PKI, ou=USA, cn=SANCHEZ.AMY.ELIZABETH.1454434338 Date: 2017.08.24 12:02:43 -06'00' **DATE** 8/24/2017

EA Engineering, Science, and Technology, Inc., PBC

Submittal Review Sheet 1

Project Name: **Kirtland BFF Mid-Plume Pump and Treat System Expansion**			Date Received: **8/16/2017**
Project Owner: **Kirtland Air Force Base**			Checked By: **Tyler Curley**
Contractor: **Wilson Electric**	Engineer: **EA Engineering, Science and Technology, Inc., PBC.**		Log Page: **NA**
Address: **501 General Somervell SE # B** **Albuquerque, NM 87123**	Address: **320 Gold Ave. SW, Suite 1300** **Albuquerque, NM 87102**		EA No.: 62599DM01
			Spec. Section: **NA**
			Drawing/Detail No.: **E-000/E-001**
ATTN: Matthew Walstrom	ATTN: **Devon Jercinovic**	1st Sub	Re-Sub
Date Transmitted: **8/17/2017**	Prev. Transmittal Date:		

Item No.	No. Copies	Description	Manufacturer	Mfg/Vendor Dwg or Detail	Action Taken*
1	1	Pull Boxes	Quazite		**A**

The Action Designated Above is in Accordance with the Following Legend:

A – Furnish as Submitted
B – Furnish as Noted
C – Revise and Re-submit
1. Not enough information for review.
2. No reproducible submitted.
3. Copies illegible.
4. Not enough copies submitted.
5. Wrong sequence number.
6. Wrong resubmittal number.
7. Wrong Spec. Section.
8. Wrong form used.
9. See Comments.

D – Rejected
E – Engineer's Review not Required
1. Submittal not required.
2. Supplemental Information. Submittal retained for Information purposes only.
3. Information reviewed and approved on prior submittal.
4. See Comments.

Review is for general compliance with Contract Documents. No responsibility is assumed for correctness of dimensions or detail. Contractor is required to specify deviations from contract requirements. Lack of exceptions noted by Engineer does not waive Contractor's obligation to comply with Drawings and Specifications.

Comments:
Items reviewed and confirmed to meet requirements
(Reviewed Material in Parentheses)
Issues in Bold

Pull boxes conform to the electrical drawings.

By: _____ Date: 8/17//17

Distribution: [1] Contractor [1] Engineer [1] Owner

Quazite®

SPECIFICATIONS/DATA

48" x 48" PG Style (Stackable) Assembly

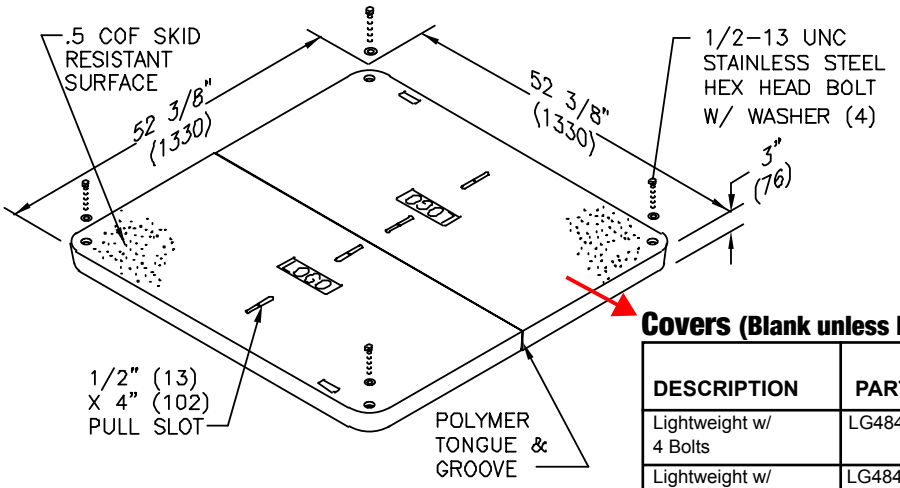

COVER

Lid to say "Electric"

Covers (Blank unless logo is specified)

DESCRIPTION	PART NO.	WEIGHT #	DESIGN/TEST LOAD #	ANSI TIER*
Lightweight w/ 4 Bolts	LG4848CA00	286 (130.0 kg)	5,000 / 7,500	5
Lightweight w/ No Bolts	LG4848WA00	286 (130.0 kg)	5,000 / 7,500	5
Heavy Duty w/W6 x 12 Wide Flange Beam w/4 Bolts*	PG4848HA00	364 (165.1 kg)	15,000 / 22,500	15
Extra Heavy Duty w/ 6 x 4 Tubing w/ 4 Bolts*	PG4848HH00	596 (270.0 kg)	22,500 / 33,750	22
Round 39" Opening	PG4848C500	377 (171 kg)	5,000 / 7,500	5

• Covers with meter lids available upon request. See page 12 or page 56 for meter lid cover load rating explanation.
* Total weight for 48" x 48" HA beam is 51 lbs (23 kg). Total weight for 48" x 48" HH tubing is 95 lbs (43 kg).

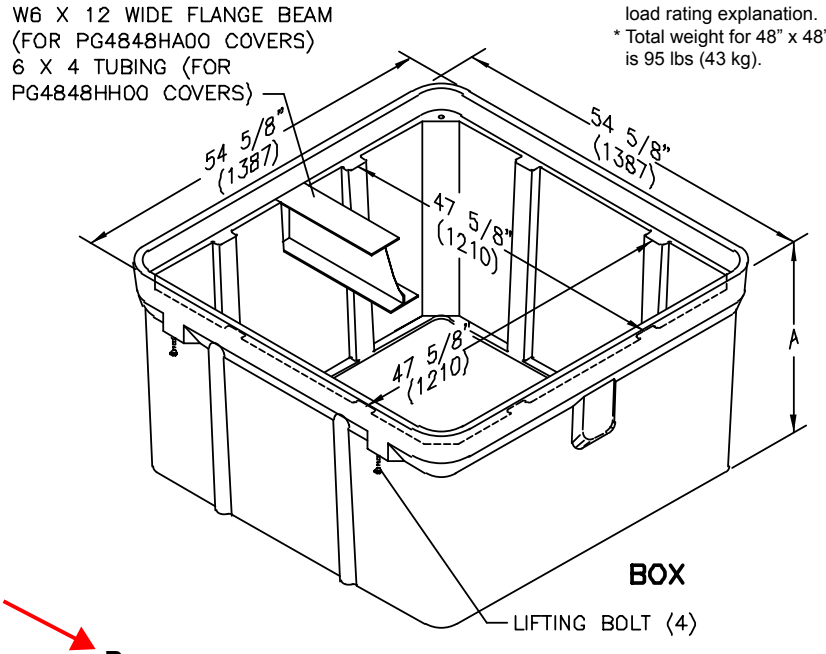

BOX

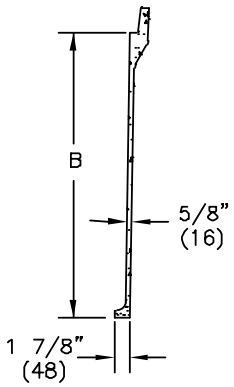

Boxes (Stackable with self-aligning, replaceable EZ-Nut)

DESCRIPTION	PART NO.	WEIGHT #	DIMENSION A	DIMENSION B	DESIGN/TEST LOAD #	ANSI TIER*
Open bottom	PG4848BA36	629 (285.0 kg)	36" (914 mm)	33" (838 mm)	22,500 / 33,750	22
	PG4848BA48	866 (393.0 kg)	48" (1219 mm)	45" (1143 mm)	22,500 / 33,750	22
Solid Bottom	PG4848DA36	663 (301.0 kg)	36 1/2" (927 mm)	33" (838 mm)	22,500 / 33,750	22
	PG4848DA48	940 (426.0 kg)	48 1/2" (1232 mm)	45" (1143 mm)	22,500 / 33,750	22

Dimensions & weights in parentheses are metric equivalent.
* Loadings comply with ANSI/SCTE 77 (see page 9).

ENCLOSURE DRAWINGS

DEPARTMENT OF THE ARMY
ALBUQUERQUE DISTRICT, CORPS OF ENGINEERS
ALBUQERQUE DISTRICT OFFICE
4101 JEFFERSON PLAZA NE
ALBUQUERQUE, NM 87109

SUBMITTAL REVIEW VERIFICATION SHEET

PROJECT TITLE: Kirtland BFF Mid-Plume Pump and Treat System Expansion
CONTRACT NUMBER: W912DR-12-D-0006 DM01
DATE RECEIVED: 09-06-2017
DATE REVIEWED: 09-12-2017

DESCRIPTION OF ITEMS REVIEWED:

1. Fiber Optic Data Transmittal System- Resubmittal

NO EXCEPTIONS TAKEN.	**X**
EXCEPTIONS AS NOTED ON DRAWINGS AND/OR ATTACHED SHEETS(S). RESUBMISSION NOT REQUIRED.	
EXCEPTIONS AS NOTED ON DRAWINGS AND/OR ATTACHED SHEETS(S). RESUBMISSION REQUIRED.	
RECEIPT ACKKNOWLEDGED.	

Notes:

NOTE: ITEMS REVIEWED AS TO GENERAL LAYOUT ONLY. DIMENSIONS AND QUANTITIES NOT CHECKED. REVIEW DOES NOT RELIEVE CONTRACTOR OF RESPONSIBILITIES FOR ANY ERRORS WHICH MAY EXIST AS CONTRACTOR SHALL BE RESPONSIBLE FOR DIMENSIONS AND DESIGN OF ADEQUATE CORRECTIONS, DETAILS AND SATISFACTORY CONSTRUCTION OF WORK.

SIGNATURE SANCHEZ.AMY.ELIZABETH.1454434338 Digitally signed by SANCHEZ.AMY.ELIZABETH.1454434338 DN: c=US, o=U.S. Government, ou=DoD, ou=PKI, ou=USA, cn=SANCHEZ.AMY.ELIZABETH.1454434338 Date: 2017.09.12 06:54:24 -06'00' **DATE** 9/12/2017

EA Engineering, Science, and Technology, Inc., PBC

Submittal Review Sheet 1

Project Name: **Kirtland BFF Mid-Plume Pump and Treat System Expansion**				Date Received: **9/5/2017**		
Project Owner: **Kirtland Air Force Base**				Checked By: **Tyler Curley**		
Contractor: **Wilson Electric**	Engineer: **EA Engineering, Science and Technology, Inc., PBC.**			Log Page: **NA**		
Address: **501 General Somervell SE # B** **Albuquerque, NM 87123**	Address: **320 Gold Ave. SW, Suite 1300** **Albuquerque, NM 87102**			EA No.: 62599DM01		
				Spec. Section: **NA**		
				Drawing/Detail No.: **NA**		
ATTN: Matthew Walstrom	ATTN: **Devon Jercinovic**			1st Sub		Re-Sub
Date Transmitted: **9/6/2017**	Prev. Transmittal Date: **8/25/2017**					

Item No.	No. Copies	Description	Manufacturer	Mfg/Vendor Dwg or Detail	Action Taken*
1	1	Fiber Optic Data Transmittal System	AFL/Corning/Hitachi		**A**

The Action Designated Above is in Accordance with the Following Legend:

A – Furnish as Submitted
B – Furnish as Noted
C – Revise and Re-submit
1. Not enough information for review.
2. No reproducible submitted.
3. Copies illegible.
4. Not enough copies submitted.
5. Wrong sequence number.
6. Wrong resubmittal number.
7. Wrong Spec. Section.
8. Wrong form used.
9. See Comments.

D – Rejected
E – Engineer's Review not Required
1. Submittal not required.
2. Supplemental Information. Submittal retained for Information purposes only.
3. Information reviewed and approved on prior submittal.
4. See Comments.

Review is for general compliance with Contract Documents. No responsibility is assumed for correctness of dimensions or detail. Contractor is required to specify deviations from contract requirements. Lack of exceptions noted by Engineer does not waive Contractor's obligation to comply with Drawings and Specifications.

Comments:
Items reviewed and confirmed to meet requirements
(Reviewed Material in Parentheses)
Issues in Bold

Meets specification, issues have been resolved.

By: _____ Date: 9/6//17

Distribution: [1] Contractor [1] Engineer [1] Owner

DEPARTMENT OF THE ARMY
ALBUQUERQUE DISTRICT, CORPS OF ENGINEERS
ALBUQERQUE DISTRICT OFFICE
4101 JEFFERSON PLAZA NE
ALBUQUERQUE, NM 87109

SUBMITTAL REVIEW VERIFICATION SHEET

PROJECT TITLE: Kirtland BFF Mid-Plume Pump and Treat System Expansion
CONTRACT NUMBER: W912DR-12-D-0006 DM01
DATE RECEIVED: 08-25-2017
DATE REVIEWED: 08-29-2017

DESCRIPTION OF ITEMS REVIEWED:

1. Fiber Optic Data Transmittal System

NO EXCEPTIONS TAKEN.	
EXCEPTIONS AS NOTED ON DRAWINGS AND/OR ATTACHED SHEETS(S). RESUBMISSION NOT REQUIRED.	
EXCEPTIONS AS NOTED ON DRAWINGS AND/OR ATTACHED SHEETS(S). RESUBMISSION REQUIRED.	**X**
RECEIPT ACKKNOWLEDGED.	

Notes:

Page 3- NETSIAN Part I: Product Data: The part number listed (61646-12) for the Indoor/Outdoor Tight Buffered OM2 12 Fiber is not listed in the table on page 84. Should the part number be 61464-12? Yes, please see REV. A submittal with the correct part number.

The Buffer Tube Fan-Out Kits on Page 2 of the CORNING the Design table lists the cable type to be cable with 250UM. Will this be compatible with the 50UM fiber? Yes, this fan out kit is compatible with the fiber specified. The 250UM is the coating around the fiber core and cladding, the 50UM is the core size of the fiber.

See attached

NOTE: ITEMS REVIEWED AS TO GENERAL LAYOUT ONLY. DIMENSIONS AND QUANTITIES NOT CHECKED. REVIEW DOES NOT RELIEVE CONTRACTOR OF RESPONSIBILITIES FOR ANY ERRORS WHICH MAY EXIST AS CONTRACTOR SHALL BE RESPONSIBLE FOR DIMENSIONS AND DESIGN OF ADEQUATE CORRECTIONS, DETAILS AND SATISFACTORY CONSTRUCTION OF WORK.

SIGNATURE _____ **DATE** 8/30/2017

Kirtland Air Force Base
BFF Conveyance Line

Kirtland Air Force Base
Albuquerque, New Mexico

Product Data Submittals
Fiber Optic Data Transmission System REV. A

Provided By:
NETSIAN TECHNOLOGIES GROUP
501 General Somervell St. SE, Suite B,
Albuquerque, NM 87123-3222
(505) 237-3205
(505) 271-0246
http://www.netsian.net
September 5, 2017

PROJECT MANAGER:
Joe Martinez, RCDD

COA Project #586082

NETSIAN TECHNOLOGIES GROUP

JOB NAME: Kirtland Air Force Base BFF Conveyance Line
COA JOB NO: 586082
PROJECT MANAGER: Joe Martinez, RCDD

Special System: Fiber Optic Data Transmission System

Table of Contents

Part I: Product Data

Part II: Test Reports - **Will be submitted at closeout**

Part III: Certificates

Part IV: Operation and Maintenance Data - **Will be submitted at closeout**

501 General Somervell St. SE Suite B ▪ Albuquerque, New Mexico 87123 ▪ Phone: 505.237.3201 ▪ Fax: 505.271.0246
EE98 #88792
www.netsian.net

JOB NAME: Kirtland Air Force Base BFF Conveyance Line
COA JOB NO: 586082
PROJECT MANAGER: Joe Martinez, RCDD

Special System: Fiber Optic Data Transmission System

Part I: Product Data

Manufacture	Part #	Description
Hitachi	61464-12	Indoor/Outdoor Tight Buffered OM2 12 Fiber
AFL	WME02E	Wall Mount Interconnect Enclosure
AFL	FM003072	Black Blank Fiber Adapter Panel
AFL	FM003112	Lightlink Adapter Plate LC Duplex 12 Fiber
AFL	CS000321	LC Anaerobic Connectors, Multimode
Corning	FAN-BT25-12	Buffer Tube Fan-Out Kits, Indoor

Tight Buffered

2 through 144 fibers

HITACHI
Inspire the Next

Product Highlights

- REACH & RoHS 2 compliant.
- Made in USA.
- All multimode, and singlemode cables (except OM1) utilize bend-insensitive optical fibers.
- UV and fungus resistent jacket.
- Tight buffered construction.
- Easy to strip and terminate.
- Each fiber is color coded for easy identification.
- Dry, super absorbent polymers (SAPs) eliminate water migration in cable interstices.
- Suitable for lashed aerial, duct, underground conduit and indoor plenum applications.
- 900 um buffered design recommended for easy termination.
- Cables with more than 24 fibers have fibers segregated into 12-fiber sub-units.

Options

- OM4 optical fibers with extended 10 gigabit Ethernet distances are available.
- OS2 optical fibers with enhanced bend-insensitive performance are available.
- Wideband multimode fiber is available.

Applications

- Applications include 10, 40 & 100 gigabit Ethernet, Fibre Channel, Video, Security, Automation.

Standards

- TIA/EIA-568-C.3
- ISO/IEC 11801, 2nd edition
- Telcordia GR-409-CORE

Indoor/Outdoor Tight Buffered (Plenum)

(UL) OFNP c(UL) OFNP FT6

PART NUMBERS BY FIBER COUNT

FIBERS	FIBERS/ TUBE	62.5 UM OM1	50 UM OM2	50 UM OM3	50 UM OM4	50 UM OM5	8.3 UM OS2
2	2	61460-2	61464-2	61468-2	61894-2	62769-2	61459-2
4	4	61460-4	61464-4	61468-4	61894-4	62769-4	61459-4
6	6	61460-6	61464-6	61468-6	61894-6	62769-6	61459-6
8	8	61460-8	61464-8	61468-8	61894-8	62769-8	61459-8
10	10	61460-10	61464-10	61468-10	61894-10	62769-10	61459-10
12	12	61460-12	61464-12	61468-12	61894-12	62769-12	61459-12
24	24	61460-24	61464-24	61468-24	61894-24	62769-24	61459-24
36	6	62178-36	62179-36	62180-36	62181-36	62770-36	62066-36
48	12	61979-48	61956-48	61959-48	61980-48	62771-48	61480-48
72	12	61979-72	61956-72	61959-72	61980-72	62771-72	61480-72
96	12	61979-96	61956-96	61959-96	61980-96	62771-96	61480-96
144	12	61979-144	61956-144	61959-144	61980-144	62771-144	61480-144

SPECIFICATIONS BY FIBER COUNT

					RECOMMENDED MAXIMUM LOADS					
FIBERS	FIBERS/ TUBE	TUBE LAYOUT	CABLE O.D.		INSTALL		OPERATION		CABLE WEIGHT	
			in.	mm	lbs-f	N	lbs-f	N	lbs/1000 ft	kg/1000m
2	2	x	.190	4.83	128	570	38	171	12.6	18.8
4	4	x	.190	4.83	128	570	38	171	13.9	20.7
6	6	x	.190	4.83	128	570	38	171	15.1	22.5
8	8	x	.230	5.84	160	712	48	214	20.0	29.8
10	10	x	.230	5.84	160	712	48	214	21.3	31.7
12	12	x	.230	5.84	160	712	48	214	22.5	33.5
24	24	x	.330	8.38	288	1282	86	385	50.2	74.8
36	6	6xCSM	.639	16.2	600	2670	200	890	159.2	236.9
48	12	4xCSM	.627	15.9	640	2849	192	855	135.1	201.1
72	12	6xCSM	.756	19.2	960	4273	288	1282	226.6	337.2
96	12	8xCSM	.941	23.9	1280	5696	384	1709	367.9	547.6
144	12	9x3xCSM	1.072	27.2	1920	8546	576	2564	396.8	590.5

Cable Characteristics

Note: Part number rows in upper table directly correspond to cable characteristic rows in the same location of the lower table.

Multimode and Singlemode

Tight Buffered

Indoor/Outdoor Tight Buffered (Plenum)

(UL) OFNP c(UL) OFNP FT6

Optical Specifications

TIA/EIA-568-C.3 | ISO/IEC 11801, 2nd edition | Telcordia GR-409-CORE

Fiber type	Max. Attenuation		Min OFL Bandwidth		Min EMBc Bandwidth		Gb Ethernet distance		10 Gb Ethernet distance	
	(dB/km)		(MHz-km)		(MHz-km)		(m)		(m)	
	850nm (MM)	1300nm (MM)	850nm (MM)	1300nm (MM)	850nm (MM)	1300nm (MM)	850nm (MM)	1300nm (MM)	850nm (MM)	1300nm (MM)
OM1	3.5	1.0	200	500	220	N/A	300	550	33	N/A
OM2	3.0	1.0	700	500	950	N/A	750	550	150	N/A
OM3	3.0	1.0	1500	500	2000	N/A	1000	550	300	N/A
OM4	3.0	1.0	3500	500	4700	N/A	1100	550	550	N/A
OM5*	3.0	1.0	3500	500	4700	N/A	1100	550	550	N/A
	1310nm (SM)	1550nm (SM)	1310nm (SM)	1550nm (SM)	1310nm (SM)	1550nm (SM)	1310nm (SM)	1550nm (SM)	1310nm (SM)	1550nm (SM)
OS2	0.5	0.5	N/A	N/A	N/A	N/A	> 25,000	> 40,000	10,000 - 25,000	40,000

Hitachi Cable America reserves the right to revise any specifications.

*OM5 optical fiber tested by glass manufacturer and exceeds the requirements of all applicable industry standards.

Cable Temperature Ranges

Storage: -40° to 70°C (-40° to 158°F)
Installation: 0°C to 60°C (32° to 140°F)
Operating: -40° to 70°C (-40° to 158°F)

Features

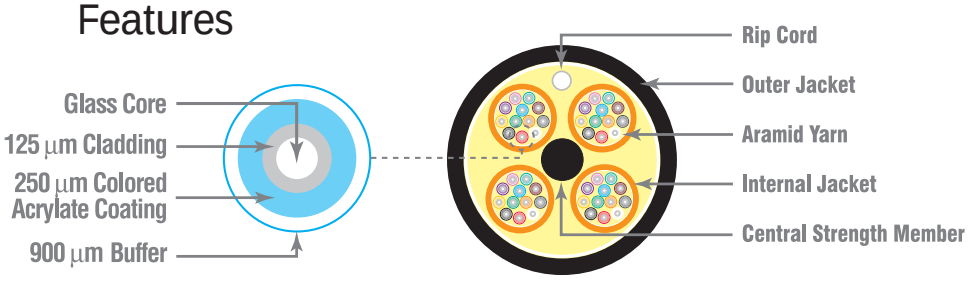

DIELECTRIC MATERIALS

Overall Jacket — PLENUM — Flame-retardant thermoplastic

Diagram scale approx. 3:1

Mechanical Specifications

- Bend radius, no load = 10x cable overall diameter
- Bend radius, load = 20x cable overall diameter

plus CORNING® ClearCurve® Optical Fiber

Photo is for representation purposes only.

WME-02

WME-02 shown empty

WME-02 shown fully loaded

Wall Mount Interconnect Enclosure (WME) with Two LGX® Mounting Positions

AFL's wall mount interconnect enclosure (WME02) provides a convenient convergence point for interconnecting and/or splicing in wall mount applications. Provisioned for up to two LGX compatible adapter plates or optical modules, the enclosure features a well-engineered solution for fiber and cable management on both the ingress and egress openings of the enclosure. Robust steel construction ensures the highest level of protection for sensitive components while integrated roll-formed hinges eliminate possible fiber pinch points while deploying or servicing components within. The WME02 features discrete access doors for provider and customer access which are independently lockable with a common pad-lock or tube-style keyed lock.

Features

- Fits comfortably into new and existing interconnect, cross-connect and co-location environments
- U-shaped cable entry eliminates the need to feed preconnectorized cables through an inconvenient access port
- Modular design fully compatible with Poli-MOD® products and XFM optical cassettes
- Dual doors with separate locking options for flexibility and security
- Available empty, with adapters, or with adapters, splice trays and pigtails pre-installed
- LGX 118 compatible
- Optional splice tray and holder (ordered separately)
- All major connector types are supported

Applications

- Co-Location sites
- Customer premise
- Hub/OTN sites
- Telecommunication closets
- Campus/enterprise environments

Specifications

- Solid steel construction
- Powder coat black textured finish
- Top or bottom cable entry with dust resistant grommets
- Dual-hasp locking/security system
- 12 to 24 fiber patch and splice density
- Two LGX mounting positions
- Physical dimensions: 12.0"H x 14.0"W x 2.5"D
- Empty version weight: 10.65 lbs.

LGX is a registered trademark of Furukawa Electric North America, Inc.

© 2010, AFL, all rights reserved. PP-2-00107, Revision 3, 1.11.16
Specifications are subject to change without notice.

Wall Mount Interconnect Enclosure (WME) with Two LGX® Mounting Positions

Ordering Information

EMPTY	
DESCRIPTION	AFL NO.
WME02 Empty	WME02E

HALF LOADED: WME WITH ADAPTER PLATES AND ADAPTERS ONLY				
CONNECTOR TYPE	FIBER COUNT	AFL NO.		
		UPC SM (BLUE)	APC SM (GREEN)	PC MM (BEIGE)
SC	6	WME02AS-USCSM-006000	WME02AS-ASCSM-006000	WME02AS-PSCM6-006000
	12	WME02AS-USCSM-012000	WME02AS-ASCSM-012000	WME02AS-PSCM6-012000
	24	WME02AH-USFSM-024000	WME02AH-ASFSM-024000	WME02AH-PSFM6-024000
LC	6	WME02AS-UDLSM-006000	WME02AS-ADLSM-006000	WME02AS-PDLM6-006000
	12	WME02AS-UDLSM-012000	WME02AS-ADLSM-012000	WME02AS-PDLM6-012000
	24	WME02AH-UDLSM-024000	WME02AH-ADLSM-024000	WME02AH-PDLM6-024000
ST	6	WME02AS-USTSM-006000	—	WME02AS-PSTM6-006000
	12	WME02AS-USTSM-012000	—	WME02AS-PSTM6-012000
	24	WME02AH-USTSM-024000	—	WME02AH-PSTM6-024000
FC	6	WME02AS-UFCSM-006000	WME02AS-AFCSM-006000	WME02AS-PFCM5-006000
	12	WME02AS-UFCSM-012000	WME02AS-AFCSM-012000	WME02AS-PFCM5-012000
	24	WME02AH-UFCSM-024000	WME02AH-AFCSM-024000	WME02AH-PFCM5-024000

Connector/Adapter Key

TYPE	DESCRIPTION
ASC	Angle Polish SC (ZR) sleeve-SM
ASF	Angle Polish SC Duplex (ZR) sleeve-SM
PSC	Physical Polish SC (PB) sleeve-MM
PSF	Physical Polish SC Duplex (PB) sleeve-MM
USC	Ultra Polish SC with (ZR) sleeve-SM
USF	Ultra Polish SC Duplex (ZR) sleeve-SM
PST	Physical Polish ST (PB) sleeve-MM
UST	Ultra Polish ST (ZR) sleeve-SM
AFC	Angle Polish FC (ZR) sleeve-SM
PFC	Physical Polish FC (PB) sleeve-MM
UFC	Ultra Polish FC (ZR) sleeve-SM
ADL	Angle Polish LC Duplex (ZR) sleeve-SM
PDL	Physical Polish LC Duplex (PB) sleeve-MM
PLC	Physical Polish LC (PB) sleeve-MM
UDL	Ultra Polish LC Duplex (ZR) sleeve-SM
ULC	Ultra Polish LC (ZR) sleeve-SM

LOADED: WME WITH ADAPTER PLATES/ADAPTERS/SPLICE TRAYS/PIGTAIL (900 µm TIGHT BUFFERED FIBERS 3 METERS IN LENGTH)					
CONNECTOR TYPE	FIBER COUNT	AFL NO.			
		UPC SM (BLUE)	APC SM (GREEN)	PC MM 62.5 µm (BEIGE)	PC MM 50 µm (BLACK)
SC	6	WME02FS-USCSM-006110	WME02FS-ASCSM-006110	WME02FS-PSCM6-006110	WME02FS-PSCM5-006110
	12	WME02FS-USCSM-012110	WME02FS-ASCSM-012110	WME02FS-PSCM6-012110	WME02FS-PSCM5-012110
	24	WME02FH-USFSM-024120	WME02FH-ASFSM-024120	WME02FH-PSFM6-024120	WME02FH-PSFM5-024120
LC	6	WME02FS-UDLSM-006110	WME02FS-ADLSM-006110	WME02FS-PDLM6-006110	WME02FS-PDLM5-006110
	12	WME02FS-UDLSM-012110	WME02FS-ADLSM-012110	WME02FS-PDLM6-012110	WME02FS-PDLM5-012110
	24	WME02FH-UDLSM-024120	WME02FH-ADLSM-024120	WME02FH-PDLM6-024120	WME02FH-PDLM5-024120
ST	6	WME02FS-USTSM-006110	—	WME02FS-PSTM6-006110	WME02FS-PSTM5-006110
	12	WME02FS-USTSM-012110	—	WME02FS-PSTM6-012110	WME02FS-PSTM5-012110
	24	WME02FH-USTSM-024120	—	WME02FH-PSTM6-024120	WME02FH-PSTM5-024120
FC	6	WME02FS-UFCSM-006110	WME02FS-AFCSM-006110	WME02FS-PFCM6-006110	WME02FS-PFCM5-006110
	12	WME02FS-UFCSM-012110	WME02FS-AFCSM-012110	WME02FS-PFCM6-012110	WME02FS-PFCM5-012110
	24	WME02FH-UFCSM-024120	WME02FH-AFCSM-024120	WME02FH-PFCM6-024120	WME02FH-PFCM5-024120

ACCESSORIES	
DESCRIPTION	AFL NO.
Splice Tray Kit: Single Fusion 12F, 2RU, WME02, WME04, 1 Splice Tray	FM002827-1
Splice Tray Kit: Single Fusion 12F, 2RU, WME02, WME04, 2 Splice Trays	FM002827-2

LGX is a registered trademark of Furukawa Electric North America, Inc.

© 2010, AFL, all rights reserved. PP-2-00107, Revision 3, 1.11.16
Specifications are subject to change without notice.

LightLink Adapter Plates

LightLink Adapter Plates add versatility to AFL's panel product line. Adapter plates are compatible with industry standard platforms allowing for easy upgrades to existing panels. Adapter Plates come preloaded with adapters and are available in 6, 8, 12 and 24 pack versions for single-fiber adapters. Higher fiber counts are achievable with multi-fiber adapters. Blank plates are also available for unused space in panels.

Features

- Metal Plate with Nylatches
- Polyurethane powder coated (white or black)
- LGX® compatible

Specifications

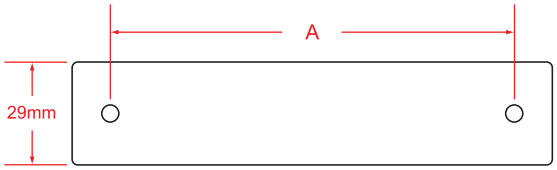

DIMENSION A
118 mm LGX®
170 mm LGX®

Ordering Information

AFL NO.	ADAPTER TYPE	SIMPLEX/DUPLEX/ QUAD	ADAPTER COLOR	FIBER COUNT	PLATE HEIGHT	PLATE COLOR
BLANK						
FM003072	BLANK	BLANK	NA	0	LGX (118)	BLACK
FM003462	BLANK	BLANK	NA	0	LGX (118)	WHITE
FM000343	BLANK	BLANK	NA	0	LGX (118)	SMOOTH BLACK
FM003434	BLANK	BLANK	NA	0	LGX (170)	BLACK
FM003433	BLANK	BLANK	NA	0	LGX (170)	WHITE
SC						
FM003295	SC	DUPLEX	AQUA	12F	LGX (118)	BLACK
FM002272	SC	DUPLEX	AQUA	12F	LGX (118)	WHITE
FM003293	SC	DUPLEX	BEIGE	12F	LGX (118)	BLACK
FM002273	SC	DUPLEX	BEIGE	12F	LGX (118)	WHITE
FM003301	SC	DUPLEX	BLACK	12F	LGX (118)	BLACK
FM003297	SC	DUPLEX	BLUE	12F	LGX (118)	BLACK
FM002271	SC	DUPLEX	BLUE	12F	LGX (118)	WHITE
FM002633	SC	DUPLEX	GREEN	12F	LGX (118)	BLACK
FM002634	SC	DUPLEX	GREEN	12F	LGX (118)	WHITE
FM000149	SC	DUPLEX	BEIGE	12F	LGX (170)	WHITE
FM000148	SC	DUPLEX	BEIGE	12F	LGX (170)	BLACK
FM000144	SC	DUPLEX	BLUE	12F	LGX (170)	BLACK
FM000145	SC	DUPLEX	BLUE	12F	LGX (170)	WHITE
FM000152	SC	DUPLEX	GREEN	12F	LGX (170)	BLACK
FM000153	SC	DUPLEX	GREEN	12F	LGX (170)	WHITE
FM003287	SC	DUPLEX	AQUA	6F	LGX (118)	BLACK
FM003285	SC	DUPLEX	BEIGE	6F	LGX (118)	BLACK
FM003398	SC	DUPLEX	BEIGE	6F	LGX (118)	WHITE
FM003299	SC	DUPLEX	BLACK	6F	LGX (118)	BLACK
FM003289	SC	DUPLEX	BLUE	6F	LGX (118)	BLACK
FM003458	SC	DUPLEX	BLUE	6F	LGX (118)	WHITE
FM003283	SC	DUPLEX	GREEN	6F	LGX (118)	BLACK
FM000115	SC	DUPLEX	GREEN	6F	LGX (118)	WHITE

LGX is a registered trademark of Furukawa Electric North America, Inc.

© 2010, AFL, all rights reserved. PP-2-00169, Revision 7, 2.22.17
Specifications are subject to change without notice.

LightLink Adapter Plates

Ordering Information (cont.)

AFL NO.	ADAPTER TYPE	SIMPLEX/DUPLEX/ QUAD	ADAPTER COLOR	FIBER COUNT	PLATE HEIGHT	PLATE COLOR
SC						
FM003120	SC	SIMPLEX	AQUA	12F	LGX (118)	BLACK
FM003118	SC	SIMPLEX	BEIGE	12F	LGX (118)	BLACK
FM003242	SC	SIMPLEX	BLACK	12F	LGX (118)	BLACK
FM003122	SC	SIMPLEX	BLUE	12F	LGX (118)	BLACK
FM002842-TW	SC	SIMPLEX	BLUE	12F	LGX (118)	WHITE
FM003116	SC	SIMPLEX	GREEN	12F	LGX (118)	BLACK
FM000800-TW	SC	SIMPLEX	GREEN	12F	LGX (118)	WHITE
FM003411	SC	SIMPLEX	BEIGE	12F	LGX (170)	WHITE
FM003409	SC	SIMPLEX	BLUE	12F	LGX (170)	BLACK
FM003407	SC	SIMPLEX	BLUE	12F	LGX (170)	WHITE
FM003414	SC	SIMPLEX	GREEN	12F	LGX (170)	BLACK
FM003455	SC	SIMPLEX	GREEN	12F	LGX (170)	WHITE
FM003098	SC	SIMPLEX	AQUA	6F	LGX (118)	BLACK
FM003096	SC	SIMPLEX	BEIGE	6F	LGX (118)	BLACK
FM003403	SC	SIMPLEX	BEIGE	6F	LGX (118)	WHITE
FM003238	SC	SIMPLEX	BLACK	6F	LGX (118)	BLACK
FM003100	SC	SIMPLEX	BLUE	6F	LGX (118)	BLACK
FM003467	SC	SIMPLEX	BLUE	6F	LGX (118)	WHITE
FM003094	SC	SIMPLEX	GREEN	6F	LGX (118)	BLACK
FM000480	SC	SIMPLEX	GREEN	6F	LGX (118)	WHITE
FM000156	SC	SIMPLEX	BLUE	8F	LGX (118)	BLACK
FM003435	SC	SIMPLEX	BLUE	8F	LGX (118)	WHITE
FM002841	SC	SIMPLEX	GREEN	8F	LGX (118)	BLACK
FM000158	SC	SIMPLEX	GREEN	8F	LGX (118)	WHITE
LC						
FM001004	LC	DUPLEX	GREEN	12F	LGX (118)	WHITE
FM001303	LC	DUPLEX	AQUA	12F	LGX (118)	WHITE
FM003108	LC	DUPLEX	GREEN	12F	LGX (118)	BLACK
FM003110	LC	DUPLEX	BEIGE	12F	LGX (118)	BLACK
FM003112	LC	DUPLEX	AQUA	12F	LGX (118)	BLACK
FM001185	LC	QUAD	AQUA	12F	LGX (118)	BLACK
FM000297	LC	DUPLEX	BLUE	12F	LGX (170)	WHITE
FM000298	LC	DUPLEX	BLUE	12F	LGX (170)	BLACK
FM000301	LC	DUPLEX	GREEN	12F	LGX (170)	WHITE
FM000302	LC	DUPLEX	GREEN	12F	LGX (170)	BLACK
FM000838	LC	DUPLEX	BLUE	24F	LGX (118)	WHITE
FM000851	LC	DUPLEX	BEIGE	24F	LGX (118)	WHITE
FM000853	LC	DUPLEX	AQUA	24F	LGX (118)	WHITE
FM003069	LC	DUPLEX	GREEN	24F	LGX (118)	WHITE
FM001184	LC	QUAD	AQUA	24F	LGX (118)	BLACK
FM000129	LC	DUPLEX	BLUE	24F	LGX (170)	WHITE
FM000130	LC	DUPLEX	BLUE	24F	LGX (170)	BLACK
FM000338	LC	DUPLEX	GREEN	24F	LGX (170)	WHITE
FM000339	LC	DUPLEX	GREEN	24F	LGX (170)	BLACK
FM000348	LC	DUPLEX	BEIGE	24F	LGX (170)	WHITE
FM000349	LC	DUPLEX	BEIGE	24F	LGX (170)	BLACK
FM000289	LC	DUPLEX	BLUE	6F	LGX (118)	WHITE
FM000293	LC	DUPLEX	GREEN	6F	LGX (118)	WHITE
FM000294	LC	DUPLEX	GREEN	6F	LGX (118)	BLACK
FM003092	LC	DUPLEX	BLUE	6F	LGX (118)	BLACK

© 2010, AFL, all rights reserved. PP-2-00169, Revision 7, 2.22.17
Specifications are subject to change without notice.

LightLink Adapter Plates

Ordering Information (cont.)

AFL NO.	ADAPTER TYPE	SIMPLEX/DUPLEX/ QUAD	ADAPTER COLOR	FIBER COUNT	PLATE HEIGHT	PLATE COLOR
LC						
FM003240	LC	DUPLEX	BLACK	12F	LGX (118)	BLACK
FM003425	LC	DUPLEX	BLUE	12F	LGX (118)	WHITE
FM003465	LC	DUPLEX	BLUE	12F	LGX (118)	BLACK
FM003202	LC	DUPLEX	GREEN	24F	LGX (118)	BLACK
FM003204	LC	DUPLEX	BEIGE	24F	LGX (118)	BLACK
FM003206	LC	DUPLEX	AQUA	24F	LGX (118)	BLACK
FM003208	LC	DUPLEX	BLUE	24F	LGX (118)	BLACK
FM003244	LC	DUPLEX	BLACK	24F	LGX (118)	BLACK
FM003429	LC	DUPLEX	BEIGE	6F	LGX (118)	WHITE
ST						
FM003126	ST	SIMPLEX	METAL SM/MM	12F	LGX (118)	BLACK
FM003456	ST	SIMPLEX	METAL SM/MM	12F	LGX (118)	WHITE
FM000286	ST	SIMPLEX	METAL SM/MM	12F	LGX (170)	BLACK
FM000285	ST	SIMPLEX	METAL SM/MM	12F	LGX (170)	WHITE
FM003104	ST	SIMPLEX	METAL SM/MM	6F	LGX (118)	BLACK
FM003422	ST	SIMPLEX	METAL SM/MM	6F	LGX (118)	WHITE
FM003102	ST	SIMPLEX	METAL SM/MM	6F	LGX (118)	BLACK
FM003441	ST	SIMPLEX	METAL SM/MM	8F	LGX (118)	BLACK
FM003439	ST	SIMPLEX	METAL SM/MM	8F	LGX (118)	WHITE
FC						
FM000284	FC	SIMPLEX	METAL	12F	LGX (118)	BLACK
FM000283	FC	SIMPLEX	METAL	12F	LGX (118)	WHITE
FM003447	FC	SIMPLEX	METAL	12F	LGX (170)	BLACK
FM003446	FC	SIMPLEX	METAL	12F	LGX (170)	WHITE
FM003420	FC	SIMPLEX	METAL, GREEN DUST CAP	6F	LGX (118)	BLACK
FM003419	FC	SIMPLEX	METAL, GREEN DUST CAP	6F	LGX (118)	WHITE
FM003443	FC	SIMPLEX	METAL	8F	LGX (118)	BLACK
FM003442	FC	SIMPLEX	METAL	8F	LGX (118)	WHITE
MISC						
FM003210	HEYCO	SIMPLEX	BLACK	12F	LGX (118)	BLACK
FM003430	MTP	SIMPLEX	BLACK	36F	LGX (118)	BLACK
FM003212	HEYCO	SIMPLEX	BLACK	6F	LGX (118)	BLACK
FM003437	SC-ST HYBRID	SIMPLEX	BLUE-METAL	6F	LGX (118)	WHITE
FM001606	MTP	SIMPLEX	BLACK	72F	LGX (118)	BLACK
FM003005	MTP	SIMPLEX	BLACK	96F	LGX (118)	BLACK

© 2010, AFL, all rights reserved. PP-2-00169, Revision 7, 2.22.17
Specifications are subject to change without notice.

Field Master® Field-Installable Connectors

Field Master Connectors, for field-termination of fiber optics, feature high-precision, high-reliability and low-applied connector cost. Durable metal components, industry-standard connector designs, and proven crimp technology give the customer peace-of-mind that their installed network is steady and reliable. Field Master Tool Kits come complete with all necessary tools and consumables for the professional installation of Field Master Connectors.

Features

- High-precision ceramic ferrules ensure fiber alignment and repeatable performance
- Rugged metal connector bodies provide sturdy cable terminations
- Industry standard interfaces allow interoperability with media equipment
- Meets EIA/TIA 568B performance requirements
- Field proven crimp technology improves connector/cable tensile performance

Applications

- Premise environments
- Desk for LAN environments
- Patch panels
- Direct equipment termination
- Fiber to the Subscriber (FTTx) applications
- Repair / replacement requirements

Ordering Information

CONNECTOR	FIBER TYPE	BOOT COLOR	AFL NO.*
SC Field Master Connector (900 µm boot)	Multimode	Black	CS000308
SC Field Master Connector (3.0 mm boot)	Multimode	Beige	CS000309
SC Field Master Connector (900 µm & 3.0 mm boot)	Multimode	Black /Beige	CS005144
SC Field Master Connector (900 µm boot)	Single-mode	Blue	CS000310
SC Field Master Connector (3.0 mm boot)	Single-mode	Blue	CS000311
SC Field Master Connector (900 µm & 3.0 mm boot)	Single-mode	Blue	CS005145
ST Field Master Connector (900 µm boot)	Multimode	Black	CS000316
ST Field Master Connector (3.0 mm boot)	Multimode	Black	CS000317
ST Field Master Connector (900 µm & 3.0 mm boot)	Multimode	Black	CS005147
ST Field Master Connector (900 µm boot)	Single-mode	Blue	CS000318
ST Field Master Connector (3.0 mm boot)	Single-mode	Blue	CS000319
ST Field Master Connector (900 µm & 3.0 mm boot)	Single-mode	Blue	CS005148
LC Field Master Connector (900 µm boot)	Multimode	White	CS000320
LC Field Master Connector (2.0 mm boot)	Multimode	White	CS000321
LC Field Master Connector (900 µm boot)	Single-mode	Blue	CS000322
LC Field Master Connector (2.0 mm boot)	Single-mode	Blue	CS000323
LC Duplex Field Master Connector (2.0 mm boot)	Multimode	White	CS000467
LC Duplex Field Master Connector (2.0 mm boot)	Single-mode	Blue	CS000466

* Packaged 100 pieces per bag.

© 2002, AFL, all rights reserved. PP-2-00054, Revision 2.1, 5.17.11
Specifications are subject to change without notice.

Buffer Tube Fan-Out Kits, Indoor

12 F, 25-in legs

CORNING

Corning Cable Systems Indoor Buffer Tube Fan-Out Kits are specifically designed for the termination of 6- and 12-fiber buffer tubes. These buffer tube fan-out kits provide the ultimate solution for those users who want to field-install connectors on 250 µm coated fibers. The kits provide the most compact, easy-to-install fan-out solution requiring no additional hardware or space than that required for terminating tight-buffered cables. Indoor Kits feature a 900 µm Fan-Out Assembly that is color-coded to match the fiber color scheme. The Fan-Out Assembly is available with 6- or 12-fiber units in lengths of 0.6 m (25-in) or 1.2 m (47-in). These different lengths provide the installer the flexibility needed for a variety of hardware options.

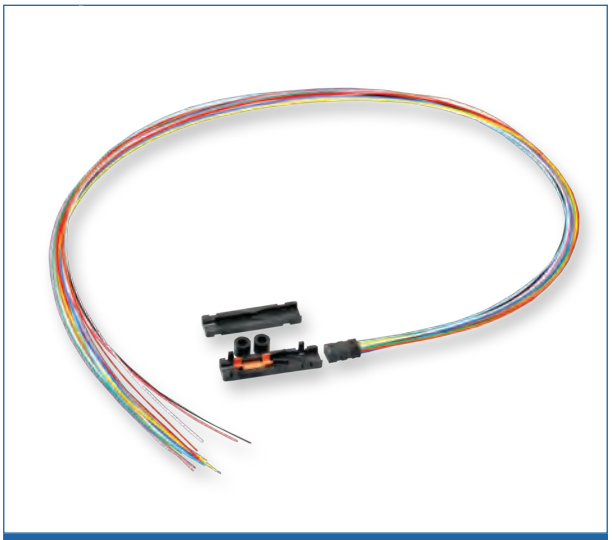

Part Number: FAN-BT25-12

Features and Benefits

Snap-together furcation
Eliminates epoxy for indoor kits

Fiber routing capabilities
Better fiber management

Compensation for wide temperature fluctuation
Outdoor use

Specifications

General Specifications	
Environment	Indoor
Fanout Type	Buffer Tube
Product Type	Fan-Out Kits

Temperature Range	
Operation	0 °C to 70 °C (32 °F to 158 °F)

CORNING

Buffer Tube Fan-Out Kits, Indoor

12 F, 25-in legs

CORNING

Design	
Cable Type	Cable with 250 µm fiber
Fiber Count	12
Fan-Out Tubing Color	Blue, Orange, Green, Brown, Slate, White, Red, Black, Yellow, Violet, Rose, Aqua

Mechanical Specifications - Fan-Out Kit	
Furcation Length	44.5 mm (1.75 in)
Tubing Length	635 mm (25 in)
Tubing Outer Diameter	0.9 mm

Chemical Characteristics	
RoHS	Free of hazardous substances according to RoHS 2002/95/EG

Ordering Information

Part Number	FAN-BT25-12
Product Description	Buffer Tube Fan-Out Kit, indoor, 12 F, 25-in legs

Shipping Information

Units per Delivery	1/1
Package Contents	Fan-out top, fan-out bottom, insert with fan-out tubing

RoHS COMPLIANT

Corning Cable Systems LLC • PO Box 489 • Hickory, NC 28603-0489 USA
800-743-2675 • FAX: 828-325-5060 • International: +1-828-901-5000 • www.corning.com/cablesystems
A complete listing of the trademarks of Corning Cable Systems is available at www.corning.com/cablesystems/trademarks.
Corning Cable Systems is ISO 9001 certified. © 2012 Corning Cable Systems. All rights reserved.

JOB NAME: Kirtland Air Force Base BFF Conveyance Line
COA JOB NO: 586082
PROJECT MANAGER: Joe Martinez, RCDD

Special System: Fiber Optic Data Transmission System

Part III: Certificates

1. Telecom Contractor
2. Key Personnel

STATE OF NEW MEXICO

CONSTRUCTION INDUSTRIES DIVISION

WILSON ELECTRIC SERVICES CORP

LICENSE NUMBER

88792

Qualifying Party(S)

MC CLURE WES

EXPIRES

06/30/2018

CLASSIFICATION(S)

EE98

DIRECTOR

This card is the property of the CID and shall be surrendered upon demand

Building Industry Consulting Service International

THE PROFESSIONAL DESIGNATION OF

REGISTERED COMMUNICATIONS DISTRIBUTION DESIGNER®

IS AWARDED TO

Joe M Martinez

by BICSI in recognition of having successfully completed BICSI's registration and examination requirements.

Designation Number: 183097R

Registration Start Date: 12/31/2015

Registration End Date: 12/31/2018

Bicsi RCDD

Since

8/5/2006

Chair, Registrations & Credentials Supervision Committee

Director of Credentialing

Building Industry Consulting Service International

THE PROFESSIONAL DESIGNATION OF

BICSI TECHNICIAN

IS AWARDED TO

Christopher W Davis

by BICSI in recognition of having successfully completed BICSI's registration and examination requirements.

Designation Number: 181398T

Registration Start Date: 8/1/2015

Registration End Date: 8/1/2018

Bicsi TECHNICIAN

Since
8/1/2015

Chair, Registrations & Credentials Supervision Committee

Director of Credentialing

Curley, Tyler

From: Jercinovic, Devon
Sent: Wednesday, September 27, 2017 3:22 PM
To: Simpler, Trent SPA (Trent.Simpler@usace.army.mil); Amy Sanchez; carlos.f.salazar@usace.army.mil; Linda Dreeland; mark.j.phaneuf@usace.army.mil
Cc: Curley, Tyler; McKeage, Kevin
Subject: FW: KAFB 106239 Conveyance Line (COA Proj. No. 586082)

USACE TEAM,

Just catching you up on the email trail between George Nemeth (EOR with Smith Engineering our sub) and COA DRC.

Good news is as-builts will cover field change, not formal change needed with COA DRC approval.

RMCI (EA sub) is evaluating the options. I will hopefully have answer tomorrow and assume they will chose HDD….but we will see.

Devon E. Jercinovic, PG, PMP
EA Engineering, Science, and Technology, Inc., PBC
Program Manager II
320 Gold Ave. SW, Suite 1300
Albuquerque, NM 87102
Cell: 505.401.1181
Office: 505.715.4248
Email: djercinovic@eaest.com
www.eaest.com

From: Wolfenbarger, Jeanne [mailto:jwolfenbarger@cabq.gov]
Sent: Wednesday, September 27, 2017 3:16 PM
To: 'George Nemeth' <georgen@smithengineering.pro>; Cynova Tim <TCynova@abcwua.org>
Cc: Jercinovic, Devon <djercinovic@eaest.com>; Ortega J. Reuben <rjortega@abcwua.org>
Subject: RE: KAFB 106239 Conveyance Line (COA Proj. No. 586082)

Let us know what your plan is based on Tim's comments. Mark it on the drawing. Thanks!

Jeanne Wolfenbarger, P.E.
Manager for Design Review & Construction
City of Albuquerque
(505)924-3993

From: George Nemeth [mailto:georgen@smithengineering.pro]
Sent: Wednesday, September 27, 2017 3:13 PM
To: Cynova Tim; Wolfenbarger, Jeanne
Cc: Jercinovic, Devon; Ortega J. Reuben
Subject: RE: KAFB 106239 Conveyance Line (COA Proj. No. 586082)

Thanks for the feedback Tim. We'll keep you posted on the actual installation and it will certainly be as-built.

George Nemeth, P.E.

Vice President / Project Manager
georgen@smithengineering.pro
Smith Engineering Company
Solutions for Today... Vision for Tomorrow
www.smithengineering.pro
Office: 505.884.0700 Direct: 505.314.5593
2201 San Pedro Drive NE, Bldg 4 Suite 200, Albuquerque, NM 87110

From: Cynova, Tim F. [mailto:tcynova@abcwua.org]
Sent: Wednesday, September 27, 2017 3:06 PM
To: Wolfenbarger, Jeanne <jwolfenbarger@cabq.gov>; 'George Nemeth' <georgen@smithengineering.pro>
Cc: Jercinovic, Devon <djercinovic@eaest.com>; Ortega, Reuben J. <rjortega@abcwua.org>
Subject: RE: KAFB 106239 Conveyance Line (COA Proj. No. 586082)

George, good to see you are busy.

For going over the SAS with a flexible pipe material flow fill will need to be used see Drw. 2381 The flow fill would distribute the point load across the SAS line.
For going under and excavating around the SAS line usually an encasement works to keep any sag from poor backfill, (Drw 2140), But if sometimes if the trench is narrow flow fill will
work as long as it is under the line filling the void supporting against natural ground.
For directional drilling under, as long as the void is filled with mud.

Let me know if you have questions.

Tim Cynova, PE
Senior Engineer
Utility Development Section
Albuquerque Bernalillo County Water Utility Authority
600 2nd St. NW
Albuquerque, NM 87103s used under thes uesd under
Office: (505) 289-3040

From: Wolfenbarger, Jeanne [mailto:jwolfenbarger@cabq.gov]
Sent: Wednesday, September 27, 2017 2:38 PM
To: 'George Nemeth' <georgen@smithengineering.pro>
Cc: Jercinovic, Devon <djercinovic@eaest.com>; Cynova, Tim F. <tcynova@abcwua.org>
Subject: RE: KAFB 106239 Conveyance Line (COA Proj. No. 586082)

I will let Tim Cynova weigh in on this. Thanks.

Jeanne Wolfenbarger, P.E.
Manager for Design Review & Construction
City of Albuquerque
(505)924-3993

From: George Nemeth [mailto:georgen@smithengineering.pro]
Sent: Wednesday, September 27, 2017 2:22 PM
To: Wolfenbarger, Jeanne
Cc: Jercinovic, Devon; Cynova Tim
Subject: RE: KAFB 106239 Conveyance Line (COA Proj. No. 586082)

Jeanne – Thanks for the feedback. RMCI had contacted Reuben Ortega with ABCWUA and Reuben contacted me.

The proposed installation would only have a couple of inches between the top of the existing SAS and the bottom of encasement. That would put us at absolute minimum cover.

Right now, regarding the sewer line crossing at about Sta 5+35, the contractor is weighing the pros and cons of three installation options.

1. installing per plan and going under the existing SAS and supporting the SAS across the trench,
2. realigning vertically to go over the SAS,
3. or performing a short directional drill to go under the SAS and avoid an open trench where the SAS would need to be supported.

I'll keep you posted on a final decision.

Thanks again.

George Nemeth, P.E.
Vice President / Project Manager
georgen@smithengineering.pro
Smith Engineering Company
Solutions for Today... Vision for Tomorrow
www.smithengineering.pro
Office: 505.884.0700 Direct: 505.314.5593
2201 San Pedro Drive NE, Bldg 4 Suite 200, Albuquerque, NM 87110

From: Wolfenbarger, Jeanne [mailto:jwolfenbarger@cabq.gov]
Sent: Wednesday, September 27, 2017 1:44 PM
To: 'George Nemeth' <georgen@smithengineering.pro>
Cc: 'Jercinovic, Devon' <djercinovic@eaest.com>; Cynova Tim <TCynova@abcwua.org>
Subject: FW: KAFB 106239 Conveyance Line (COA Proj. No. 586082)

George

Mostly, I have no issue with the changes, and they can be handled by as-built. I am ccing Tim Cynova of the ABCWUA to review the alignment changes based on discussion below.

Who at the ABCWUA asked for the full encasement on the SAS? (We don't typically place a line directly on top of an encasement so some type of clearance might be requested. Are you right at minimum cover?)

Jeanne Wolfenbarger, P.E.
Manager for Design Review & Construction
City of Albuquerque
(505)924-3993

From: George Nemeth [mailto:georgen@smithengineering.pro]
Sent: Tuesday, September 26, 2017 1:27 PM
To: Wolfenbarger, Jeanne
Cc: Jercinovic, Devon; Curley, Tyler; McKeage, Kevin
Subject: KAFB 106239 Conveyance Line (COA Proj. No. 586082)

Jeanne – Per our phone conversation earlier today, I am sending you the attached documents.

The first 4 sheets (C-201, C-202, C-205, C-206) show the changes in vertical and horizontal alignment of the pipeline as well as additional lengths of direction drill installation instead of open trench installation.

Also, as shown on sheet C-202, ABCWUA has required a full encasement of the existing SAS line for 10 feet to each side of the crossing point. The encasement detail is included as the 5th sheet in the attachment.

Please let me know if we need to make a formal submittal to DRC and obtain formal DRC approval of these changes or if we can just as-built the changes.

Thanks.

George Nemeth, P.E.
Vice President / Project Manager
georgen@smithengineering.pro
Smith Engineering Company
Solutions for Today... Vision for Tomorrow
www.smithengineering.pro
Office: 505.884.0700 Direct: 505.314.5593
2201 San Pedro Drive NE, Bldg 4 Suite 200, Albuquerque, NM 87110

Curley, Tyler

From: Curley, Tyler
Sent: Friday, September 29, 2017 12:09 PM
To: 'Phillip Johnson'
Cc: Ed Hyde; Jerry Patton; Jercinovic, Devon; McKeage, Kevin
Subject: RE: KAFB Conveyance Line; Vertical Alignment Change

Phillip,

EA acknowledges that the trench depth will be adjusted in field to maintain slope while preventing asphalt damage as well as low spots in the line resulting from HDD under the road.

Thank you,
Tyler

From: Phillip Johnson [mailto:pjohnson@rmciinc.com]
Sent: Thursday, September 28, 2017 3:49 PM
To: Curley, Tyler <tcurley@eaest.com>
Cc: Ed Hyde <ehyde@rmciinc.com>; Jerry Patton <jpatton@rmciinc.com>
Subject: KAFB Conveyance Line; Vertical Alignment Change

Tyler,

This email is to document that vertical alignment changes are going to occur in the field to reduce the impact on the asphalt replacement on City Right-of-Way. RMCI and EA Engineering will work together in the field to determine the best vertical alignment to suit the needs of the project. These vertical alignment changes are to prevent large amounts of asphalt replacement in the City of Albuquerque Right-of-Way and to prevent having deeper excavations near the roadway. By making these field changes, RMCI and EA will prevent excessive asphalt replacement, larger amounts of import materials and prevent any additional safety concerns with large excavations so close to the roadway. Please note by making these field changes, that there will be the potential for low spots (although these will be tried to be mitigated) along the pipeline and for the directional drilling locations. RMCI and EA will make field determinations to mitigate these low points as much as possible. RMCI will as-built these changes at the end of the project for project record. RMCI and EA will also coordinate to make sure the minimum bury requirements are met as well.

Please respond to this email documenting that this is correct. After receipt of the response, RMCI will document this through a formal RFI.

Thanks,

Phillip Johnson
Project Manager
RMCI, Inc.
505-345-0008 (office)
505-345-0111 (fax)

505-235-1850 (cell)

Curley, Tyler

From: SANCHEZ, AMY ELIZABETH CIV USARMY CESPA (US) <Amy.E.Sanchez@usace.army.mil>
Sent: Wednesday, October 18, 2017 10:09 AM
To: McKeage, Kevin
Cc: Jercinovic, Devon; Curley, Tyler; Simpler, Trent W CIV USARMY CESPA (US); Salazar, Carlos F CIV USARMY CESPA (US); Dreeland, Linda E CIV USARMY CESPA (US); Phaneuf, Mark J CIV USARMY CESPA (US)
Subject: RE: Kirtland BFF - Field Change: KAFB-106228 Conduit Reroute

Kevin,

Wilson Electric's attached plan to reroute the conduit is approved.

Thanks,

Amy Sanchez, COR
USACE Albuquerque District
505-342-3234

-----Original Message-----
From: McKeage, Kevin [mailto:kmckeage@eaest.com]
Sent: Wednesday, October 18, 2017 8:57 AM
To: Simpler, Trent W CIV USARMY CESPA (US) <Trent.Simpler@usace.army.mil>; SANCHEZ, AMY ELIZABETH CIV USARMY CESPA (US) <Amy.E.Sanchez@usace.army.mil>; Salazar, Carlos F CIV USARMY CESPA (US) <Carlos.F.Salazar@usace.army.mil>; Dreeland, Linda E CIV USARMY CESPA (US) <Linda.E.Dreeland@usace.army.mil>; Phaneuf, Mark J CIV USARMY CESPA (US) <Mark.J.Phaneuf@usace.army.mil>
Cc: Jercinovic, Devon <djercinovic@eaest.com>; Curley, Tyler <tcurley@eaest.com>
Subject: [EXTERNAL] Kirtland BFF - Field Change: KAFB-106228 Conduit Reroute

USACE Team,

During potholing EA discovered that the electric and controls conduit for KAFB-106228 is located on top of the existing dual wall conveyance line. As a result EA's KAFB-106239 conveyance line installation subcontractors will not be able to maneuver equipment in and around the existing line to tie into the existing conveyance line without rerouting the conduit. EA has reviewed Wilson Electric's plan to reroute the conduit (attached) and would like to obtain USACE approval prior to conducting this field change. Please let us know if you have any questions.

Thank you,

Kevin McKeage, E.I.

Engineer

Cell: (316) 765-1486

Office: (505) 933-6417

kmckeage@eaest.com

EA Engineering, Science, and Technology, Inc., PBC

320 Gold Ave, Suite. 1300

Albuquerque, NM 87102

Blockedwww.eaest.com

BULK FUELS FACILITY
GROUNDWATER TREATMENT SYSTEM 5460 SAND FILTER DESIGN*

KIRTLAND AIR FORCE BASE
ALBUQUERQUE, NEW MEXICO
CONTRACT No. W912DR-12-D-0006
DELIVERY ORDER DM01

FINAL ASBUILTS 6-MAR-2018

ALL CONSTRUCTION IS PER PLAN UNLESS OTHERWISE NOTED

DRAWING INDEX:

CIVIL

DRAWING NO.	DRAWING TITLE
C-001	COVER SHEET AND DRAWING INDEX

PIPING

DRAWING NO.	DRAWING TITLE
P-001	EQUIPMENT NOTES AND SCHEDULES
P-101	EQUIPMENT PLAN
P-201	EQUIPMENT SECTIONS

ELECTRICAL

DRAWING NO.	DRAWING TITLE
E001	SAND FILTER ELECTRICAL SERVICE
E101	CP-100 CONTROL PANEL COMMUNICATION DIAGRAM

***NOTE**

THE ORIGINAL DESIGN DRAWINGS AND SPECIFICATIONS FOR THE KIRTLAND BULK FUELS FACILITY (BFF) GROUND WATER TREATMENT SYSTEM (GWTS) WERE PREPARED BY CHICAGO BRIDGE & IRON COMPANY (CB&I). THE ORIGINAL DRAWINGS ARE TITLED "PHASE IV MID-PLUME PUMP & TREAT SYSTEM", CONTRACT NO. W912DY-10-D-0014 DATED 01/09/15. DRAWINGS FOR GWTS SAND FILTER DESIGN THAT SHOW EQUIPMENT TO BE INSTALLED HAVE BEEN CARRIED FORWARD AND ARE PROVIDED HERE FOR CONSTRUCTION. FOR TECHNICAL SPECIFICATIONS, SEE CB&I KIRTLAND AIR FORCE BASE PHASE IV (TREATMENT PLANT) MID PLUME PUMP AND TREAT SYSTEM TECHNICAL SPECIFICATIONS DATED 03/13/15.

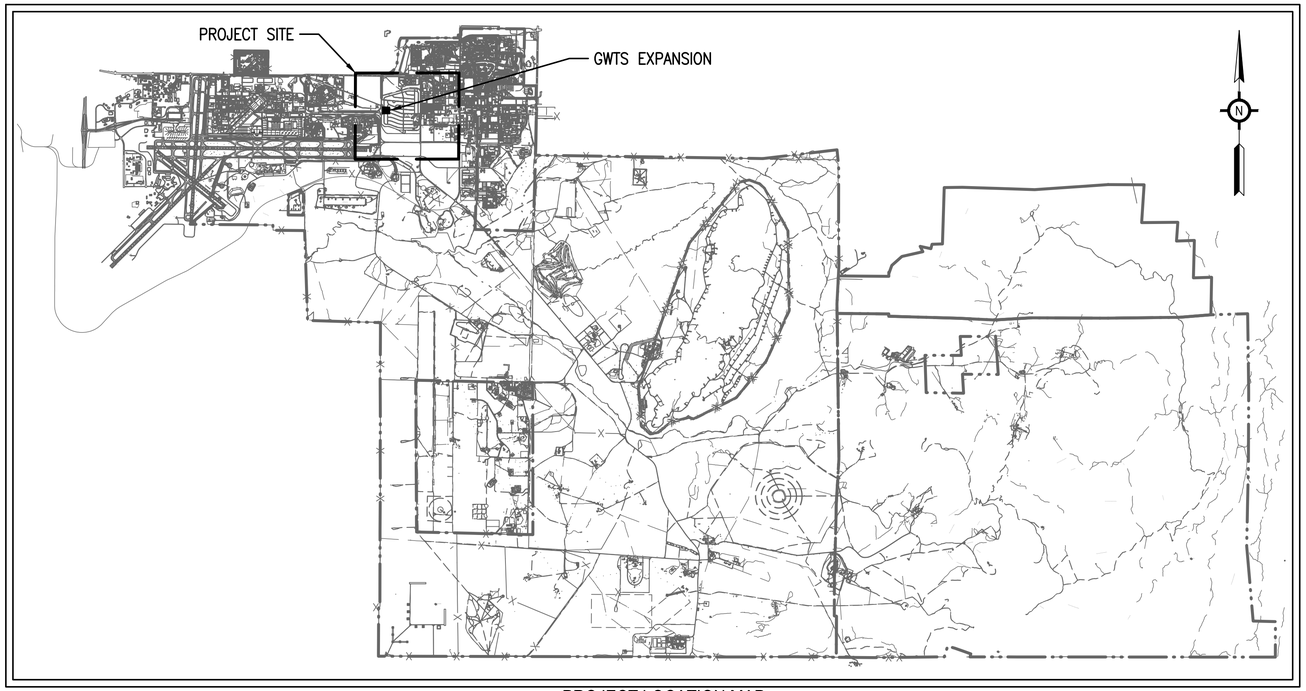

PROJECT LOCATION MAP

REVISIONS

NO.	DATE	BY	DESCRIPTION

DESIGN INFORMATION

DESIGNED BY:	DRAWN BY:	CHECKED BY:	PROJECT MANAGER:
HLB	ML	LLR	DEJ

SEAL

PROFESSIONAL CERTIFICATION. I HEREBY CERTIFY THAT THESE DOCUMENTS WERE PREPARED OR APPROVED BY ME, AND THAT I AM A DULY LICENSED PROFESSIONAL ENGINEER UNDER THE LAWS OF THE STATE OF NEW MEXICO, LICENSE NO. LICENSE_NUMBER EXPIRATION DATE: EXPIRATION_DATE

HERBERT L. BECKER — NEW MEXICO — 21117 — PROFESSIONAL ENGINEER

BULK FUELS FACILITY
GROUNDWATER TREATMENT SYSTEM 5460 SAND FILTER DESIGN
BERNALILLO COUNTY, NEW MEXICO

COVER SHEET AND DRAWING INDEX

EA Engineering, Science, and Technology, Inc., PBC.
221 Sun Valley Boulevard; Suite D
Lincoln, NE 68528
(402) 476-3766

DATE: DECEMBER 2016

PROJECT NUMBER: 62599DM01

C-001

SHEET: 1 OF 6

FILE PATH: F:\FEDERAL\DOD\AFCEC\PROJECTS\62599DM01 - KIRTLAND BFF\CADD\FIGURES\5460\62599DM01-C-001 COVER-SAND FILTER.DWG [LAYOUT] 10/6/16 mlueh

SPECIFICATIONS:

MECHANICAL GENERAL NOTES

PART 1 GENERAL

1.1 SCOPE OF WORK

A. FURNISH ALL LABOR, INSTALL ALL MATERIALS AND EQUIPMENT SERVICES AND INCIDENTIALS TO THE PROPER INSTALLATION OF WORK DETAILS.
B. GUARANTEE WORK TO BE FREE OF DEFECTS OF MATERIAL AND WORKMANSHIP FOR A PERIOD OF ONE YEAR AFTER DATE OF FINAL ACCEPTANCE OR AS REQUIRED BY SPECIFICATION AS APPLICABLE.
C. OBTAIN AND PAY FOR ALL REQUIRED PERMITS, FEES, AND INSPECTIONS, COORDINATE WITH ALL OTHER TRADES, APPLICABLE SPECIFICATIONS, DRAWINGS AND OWNER'S DIRECTIONS.

1.2 GENERAL CONDITIONS

A. SURVEY THE JOB SITE TO OBTAIN A FULL UNDERSTANDING OF THE WORK INVOLVED. ADDITIONAL FEES WILL NOT BE PAID FOR MISSED OR OVERLOOKED CONDITIONS REQUIRING ADDITIONAL WORK IF DETERMINED BY THE ENGINEER THAT SAID CONDITIONS COULD HAVE BEEN REASONABLY DETECTED DURING THE JOB SURVEY.
B. THE MECHANICAL DRAWINGS SHOW THE RELATIONSHIP BETWEEN EQUIPMENT AND SITE CONDITIONS. DO NOT SCALE THE DRAWINGS FOR EXACT SIZE OR LOCATIONS. FABRICATION AND/OR INSTALLATION DETAILS ARE MORE SPECIFIC AND SHOULD BE CLOSELY FOLLOWED.
C. THE MECHANICAL COMPONENTS SHALL BE INSTALLED IN ACCORDANCE WITH MANUFACTURER'S RECOMMENDATIONS, THE LOCAL / STATE BUILDING AND RELATED CONSTRUCTION CODES.

1.3 SYSTEM DESCRIPTION

A. EQUIPMENT SELECTIONS AS REPRESENTED ON DRAWINGS ARE FOR DESIGN PURPOSES ONLY. EQUIPMENT TYPE, PHYSICAL SIZE, WEIGHT, CAPACITIES AND PERFORMANCE CHARACTERISTICS SHALL BE GOVERNING FACTORS IN SUBMITTING "OR EQUALS" FOR REVIEW AND APPROVAL.
B. SUPPORT SYSTEMS HAVE BEEN DESIGNED FOR THE COMPONENTS AND PIPING SYSTEMS WITH SPECIFIED SPANS AND COMPONENT SUPPLIER RECOMMENDATIONS FOR SUPPORT / ANCHORING. THE ABSENCE OF SUPPORT DETAILS ON THE CONTRACT DRAWINGS DOES NOT RELIEVE THE CONTRACTOR OF THE RESPONSIBILITY FOR PROVIDING SUPPORTS / ANCHORS.

1.4 SUBMITTALS AND ACCEPTANCE

A. CONTRACTOR SHALL REPAIR, REPLACE, OR REPAINT TO MATCH ANY SURFACES OR COMPONENTS DAMAGED BY THE CONTRACTOR DURING THE INSTALLATION OF EQUIPMENT AND SYSTEMS.
B. CONTRACTOR SHALL REMOVE FROM THE JOB SITE ANY MATERIALS THAT ARE NOT USED OR NOT ECONOMICALLY RECOVERABLE.
C. EQUIPMENT SHOP DRAWINGS AND SUPPORT SYSTEM DETAIL DRAWINGS WILL SHOW PIPING SYSTEMS AND APPURTENANCES, SUCH AS MECHANICAL JOINTS, VALVES, LOCAL INSTRUMENTATION AND PIPE SUPPORTS. AS-BUILT DRAWINGS WILL SHOW PIPE SUPPORTS, AND LAYOUT OF PIPING SYSTEMS RELATIVE TO OTHER PARTS OF THE WORK INCLUDING CLEARANCES FOR MAINTENANCE AND OPERATION.
D. THE NAMES OF ALL QUALIFIED WELDERS, THEIR IDENTIFYING SYMBOLS, AND THE QUALIFYING PROCEDURES FOR EACH WELDER INCLUDING SUPPORT DATA SUCH AS TEST PROCEDURES USED, STANDARDS TESTED TO, ETC.
E. THE METHOD PROPOSED FOR DISPOSAL OF WASTE WATER FROM HYDROSTATIC TESTS AND ALL REQUIRED PERMITS, PRIOR TO PERFORMING HYDROSTATIC TESTS.
F. A SIGNED STATEMENT CERTIFYING THAT THE INSTALLATION IS SATISFACTORY AND IN ACCORDANCE WITH THE CONTRACT DRAWINGS, SPECIFICATIONS, AND THE MANUFACTURER'S PRESCRIBED PROCEDURES AND TECHNIQUES, UPON COMPLETION OF THE PROJECT AND BEFORE FINAL ACCEPTANCE.
G. THE MANUFACTURER'S INSTALLATION RECOMMENDATIONS OR INSTRUCTIONS FOR EACH MATERIAL OR PROCEDURE TO BE UTILIZED, INCLUDING MATERIALS PREPARATION.
H. A LIST OF ANY SPECIAL TOOLS NECESSARY FOR EACH PIPING SYSTEM AND APPURTENANCES FURNISHED FOR ADJUSTMENT, OPERATION, MAINTENANCE AND DISASSEMBLY OF THE SYSTEM.
I. HYDROSTATIC TEST REPORT.

1.5 DESIGN REQUIREMENTS

A. SUPPORT SYSTEMS SHALL BE SELECTED AND DESIGNED IN ACCORDANCE WITH MSS SP-58 AND MSS SP-69 WITHIN THE SPECIFIED SPANS AND COMPONENT REQUIREMENTS. THE ABSENCE OF PIPE SUPPORTS AND DETAILS ON THE CONTRACT DRAWINGS DOES NOT RELIEVE THE CONTRACTOR OF RESPONSIBILITY FOR SIZING AND PROVIDING SUPPORTS THROUGHOUT FACILITY.
B. ABOVE GRADE PIPING SYSTEMS SHALL BE SUITABLE FOR DESIGN CONDITIONS, CONSIDERING THE PIPING BOTH WITH AND WITHOUT INTERNAL PRESSURE, AND INSTALLATION FACTORS SUCH AS INSULATION, SUPPORT SPANS, AND AMBIENT TEMPERATURES. CONSIDERATION SHALL BE GIVEN TO ALL OPERATING AND SERVICE CONDITIONS BOTH INTERNAL AND EXTERNAL TO THE PIPING SYSTEMS. WALL PENETRATIONS SHALL BE VERIFIED AND THE SIZE AND LOCATION COORDINATED WITH THE OWNER PRIOR TO CONSTRUCTION.

1.6 REFERENCES

A. AMERICAN NATIONAL STANDARDS INSTITUTE (ANSI)
B. AMERICAN SOCIETY OF MECHANICAL ENGINEERS (ASME)
C. AMERICAN SOCIETY FOR TESTING AND MATERIALS (ASTM)
D. CODE OF FEDERAL REGULATIONS (CFR)
E. MANUFACTURER'S STANDARDIZATION SOCIETY (MSS)
F. SPECIFICATION: CB&I PHASE IV MID-PLUME PUMP & TREAT SYSTEM EXPANSION DRAWINGS – MISCELLANEOUS METAL FABRICATIONS (PIPE SUPPORTS)
G. SPECIFICATION: CB&I PHASE IV MID-PLUME PUMP & TREAT SYSTEM EXPANSION DRAWINGS – PIPELINES, LIQUID PROCESS PIPING
H. SPECIFICATION: CB&I PHASE IV MID-PLUME PUMP & TREAT SYSTEM EXPANSION DRAWINGS – WELDING PROCESS PIPING
I. SPECIFICATION: CB&I PHASE IV MID-PLUME PUMP & TREAT SYSTEM EXPANSION DRAWINGS – PAINTS AND COATINGS (EQUIPMENT, PROCESS PIPING, AND METALS)

1.7 DELIVERY, STORAGE, AND HANDLING

A. MATERIALS DELIVERED AND PLACED IN STORAGE SHALL BE STORED WITH PROTECTION FROM THE WEATHER, EXCESSIVE HUMIDITY VARIATION, EXCESSIVE TEMPERATURE VARIATION, DIRT, DUST AND/OR OTHER CONTAMINANTS. PROPER PROTECTION AND CARE OF MATERIAL BEFORE, DURING AND AFTER INSTALLATION IS THE CONTRACTOR'S RESPONSIBILITY. ANY MATERIAL FOUND TO BE DAMAGED SHALL BE REPLACED AT THE CONTRACTOR'S EXPENSE. DURING INSTALLATION, PIPING SHALL BE CAPPED TO KEEP OUT DIRT AND OTHER FOREIGN MATTER.

PART 2 PRODUCTS

2.1 MATERIALS, EQUIPMENT AND STANDARD PRODUCTS

A. PROVIDE PIPING MATERIALS AND APPURTENANCES AS SPECIFIED AND AS SHOWN ON THE DRAWINGS, AND SUITABLE FOR THE SERVICE INTENDED. PIPING MATERIALS, APPURTENANCES, AND EQUIPMENT SUPPLIED AS PART OF THIS CONTRACT SHALL BE OF EQUAL MATERIAL AND RATINGS AS THE CONNECTING PIPE, NEW AND UNUSED EXCEPT FOR TESTING EQUIPMENT. COMPONENTS THAT SERVE THE SAME FUNCTION AND ARE THE SAME SIZE SHALL BE IDENTICAL PRODUCTS OF THE SAME MANUFACTURER. THE GENERAL MATERIALS TO BE USED FOR THE PIPING SYSTEMS SHALL BE IN ACCORDANCE WITH THE PROCESS AND INSTRUMENTATION DIAGRAMS (P&ID'S) (SEE CB&I PHASE IV MID-PLUME PUMP & TREAT SYSTEM EXPANSION DRAWINGS) AND MECHANICAL PIPING DRAWINGS. PIPE FITTINGS SHALL BE COMPATIBLE WITH THE APPLICABLE PIPE MATERIALS.
B. PROVIDE MATERIAL AND EQUIPMENT WHICH ARE THE STANDARD PRODUCTS OF A MANUFACTURER REGULARLY ENGAGED IN THE MANUFACTURING OF THE PRODUCTS AND THAT ESSENTIALLY DUPLICATE ITEMS THAT HAVE BEEN IN SATISFACTORY USE FOR AT LEAST 2 YEARS PRIOR TO BID OPENING. NOMINAL SIZES FOR STANDARDIZED PRODUCTS SHALL BE USED. PIPE, VALVES, FITTINGS AND APPURTENANCES SHALL BE SUPPORTED BY A SERVICE ORGANIZATION THAT IS, IN THE OPINION OF THE CONTRACTING OFFICER, REASONABLY CONVENIENT TO THE SITE.

2.2 CARBON STEEL PIPING SYSTEM

A. ALL PIPING AND FITTINGS SHALL CONFORM TO THE FOLLOWING, UNLESS OTHERWISE INDICATED ON MECHANICAL PIPING DRAWINGS. CARBON STEEL PIPE SHALL MEET THE REQUIREMENTS OF ASTM A 53/A 53M SEAMLESS, GRADE B, SCHEDULE 40.
B. CARBON STEEL PIPING SHALL BE JOINED BY WELDING. DIELECTRIC FITTINGS OR ISOLATION JOINTS SHALL BE PROVIDED BETWEEN ALL DISSIMILAR METALS.
C. FITTINGS SHALL BE CARBON STEEL.
D. WELDING FITTINGS SHALL BE BUTT-WELDING. WELDING FITTINGS SHALL BE FORGED STEEL, CLASS 150 LOW-CARBON STEEL, ASTM A 234/ A 234 M SEAMLESS CONFORMING TO ASME B16.9.
E. THE INTERNAL DIAMETER BORES OF FLANGES AND FLANGED FITTINGS SHALL BE THE SAME AS THAT OF THE ASSOCIATED PIPE. THE FLANGES SHALL BE SLIP-ON TYPE. FLANGES AND FLANGED FITTINGS SHALL BE FORGED STEEL, ASTM A 105/A 105M OR WROUGHT CARBON STEEL, ASTM A 234/A234M, FACED AND DRILLED TO ASME B16.5 CLASS 150 WITH A 0.0625 INCH RAISED FACE. CAST STEEL BACKING FLANGES, ASTM A 216/A 216M GRADE WCA BOLTING SHALL BE ALLOY-STEEL ASTM A 193/A 193M GRADE B5 HEX HEAD BOLTS AND ASTM A 194/A 194M GRADE 8 HEX HEAD NUTS. WHEN MATING FLANGE ON VALVES OR EQUIPMENT IS CAST IRON, ASTM A 193/A 193M GRADE B8 CLASS 1BOLTS AND ASTM A 194/A 194M GRADE 8 HEAVY HEX HEAD NUTS SHALL BE USED. BOLTS SHALL BE PROVIDED WITH WASHERS OF THE SAME MATERIAL AS THE BOLTS. GASKETS SHALL MEET THE REQUIREMENTS OF ASME B16.5. NONMETALLIC GASKETS SHALL CONFORM TO ASME B16.21 AND BE A 0.125 INCH THICK CHLOROPRENE RUBBER, DUROMETER HARDNESS NO.80; 1,500 PSI MINIMUM TENSILE STRENGTH; 125 PERCENT MINIMUM ELONGATIONS AND FLAT RING TYPE FOR USE WITH RAISED FACE FLANGES.
F. IN CASES WHERE THE MATING FLANGES FOR EQUIPMENT, VALVES, AND SPECIALTY ITEMS ARE FLAT-FACED FLANGES, A SUBSTITUTE SLIP-ON TYPE FLAT-FACED FLANGE ON THE PIPING END SHOULD BE USED. FILLER FLANGES ARE ACCEPTABLE WITH PROPER GASKETS AND PRIOR APPROVAL FROM ENGINEERING.

2.3 VALVES

A. ALL VALVES SHALL CONFORM TO THE FOLLOWING UNLESS OTHERWISE SPECIFIED ON THE MECHANICAL PIPING DRAWINGS.
B. VALVES SHALL INCLUDE OPERATOR, ACTUATOR, HAND WHEEL, CHAIN WHEEL, EXTENSION STEM, FLOOR STAND, WORM AND GEAR OPERATOR, OPERATING NUT, CHAIN, WRENCH, AND ALL OTHER ACCESSORIES REQUIRED FOR A COMPLETE OPERATION. THE VALVES SHALL BE SUITABLE FOR THE INTENDED SERVICE. VALVES SHALL BE THE SAME SIZE AS ADJOINING PIPE UNLESS OTHERWISE INDICATED ON DRAWINGS. VALVE ENDS SHALL BE COMPATIBLE WITH ADJACENT PIPING SYSTEM. VALVES SHALL HAVE THE ABILITY TO EXCEPT LOCKS FOR LOCKOUT TAG, OUT REQUIREMENTS.
C. BALL VALVES, 2-INCH AND SMALLER, SHALL BE END ENTRY TYPE WITH BRONZE BODIES AND THREADED ENDS. VALVES SHALL HAVE POLYTETRAFLUOROETHYLENE (PTFE) PACKING AND SEATS, A STAINLESS STEEL BALL, REGULAR PORTS, AND HAND LEVER OPERATORS. VALVES SHALL BE RATED FOR 150 PSIG SERVICE AT 150 DEGREES F.
D. BUTTERFLY VALVES, 2- INCH AND LARGER, SHALL HAVE DUCTILE IRON BODIES; LUGGED STYLE. VALVES SHALL CONFORM TO AWWA C504 CLASS 125. DISCS SHALL BE CONTOURED AND NYLON COATED. THE VALVE SHAFTS SHALL BE STAINLESS STEEL WITH SELF-LUBRICATING, CORROSION-RESISTANT SLEEVE TYPE BEARINGS. VALVE SEATS SHALL BE ATTACHED TO EITHER THE VALVE BODY OR THE DISC AND SHALL BE CONSTRUCTED OF EPDM. VALVES 4-INCHES AND SMALLER SHALL HAVE MANUAL, LOCKING HAND LEVER OPERATORS. VALVES LARGER THAN 4-INCHES SHALL HAVE HAND WHEEL WITH GEAR OPERATORS.
E. GLOBE VALVES 3 INCH AND SMALLER, SHALL HAVE CARBON STEEL BODIES AND BONNETS, WITH STAINLESS STEEL TRIM. VALVES SHALL CONFORM TO ASME B16.34 CLASS 150, THREADED END CONNECTIONS. VALVES SHALL INCLUDE BONNETS, INSIDE SCREWS, RISING STEMS, CONVENTIONAL DISCS AND RINGS. VALVES SHALL BE RATED FOR 150 PSIG SERVICE AT 150 DEGREES F.

2.4 PIPING COMPONENTS

A. ALL PIPELINE LOW POINTS SHALL BE DRAINED. DRAIN VALVES SHALL BE LOCATED AS SHOWN ON MECHANICAL DRAWINGS.
B. PROCESS INTERCONNECTING PIPE SHALL BE CAPABLE OF BEING SAMPLED. SAMPLE VALVE SHALL BE LOCATED AS SHOWN ON MECHANICAL DRAWINGS.
C. COMBINATION AIR RELEASE VALVES SHALL BE INSTALLED AS NEEDED IN THE PIPELINE TO PREVENT UNCONTROLLED TRANSFER OF WATER BETWEEN VESSELS AND / OR THE BUILDING INFLUENT OR EFFLUENT CONNECTIONS. COMBINATION AIR RELEASE VALVES SHALL BE INSTALLED AS SHOWN ON MECHANICAL DRAWINGS.
D. BACKFLOW PREVENTERS SHALL BE INSTALLED AS SHOWN ON MECHANICAL DRAWINGS.

2.5 PIPE SUPPORTS AND PENETRATIONS

A. PROVIDE AUXILIARY STEEL WHERE THE SUPPORT OF PIPING SYSTEMS AND EQUIPMENT IS REQUIRED BETWEEN BUILDING STRUCTURAL ELEMENTS. REFER TO STRUCTURAL DRAWINGS (SEE CB&I PHASE IV MID-PLUME PUMP & TREAT SYSTEM EXPANSION DRAWINGS) FOR SPECIFIC DETAILS AND SUPPORT CONFIGURATIONS.
B. PIPE SUPPORTS SHALL CONFORM TO THE REQUIREMENTS OF MSS SP-69, AND MSS SP-58. WHERE PIPE SUPPORTS CONTACT BARE PIPING OR IN-LINE DEVICES, PROVIDE SUPPORTS OF COMPATIBLE MATERIAL SO THAT NEITHER SHALL HAVE A DETERIORATING ACTION ON THE OTHER.
C. REFER TO EQUIPMENT SECTIONS DRAWING FOR LOCATION OF WALL PENETRATION.

PART 3 EXECUTION

3.1 EXAMINATION AND PREPARATION

A. AFTER BECOMING FAMILIAR WITH ALL DETAILS OF THE WORK, VERIFY ALL DIMENSIONS IN THE FIELD, AND ADVISE THE CONTRACTING OFFICER OF ANY DISCREPANCY BEFORE PERFORMING THE WORK.
B. PIPE AND EQUIPMENT OPENINGS SHALL BE CLOSED WITH CAPS OR PLUGS DURING INSTALLATION. EQUIPMENT SHALL BE PROTECTED FROM DIRT, WATER, AND CHEMICAL OR MECHANICAL DAMAGE.
C. NOTIFY THE CONTRACTING OFFICER AT LEAST 2 WEEKS PRIOR TO THE FIELD FABRICATION OF PIPE OR FITTINGS AND AT LEAST 3 DAYS PRIOR TO THE START OF ANY SURFACE PREPARATION OR COATING APPLICATION WORK. WELDING ELECTRODES SHALL BE PROVIDED IN ACCORDANCE WITH THE APPLICABLE BASE METALS AND WELDING PROCESS. FABRICATION OF FITTINGS SHALL BE PERFORMED IN ACCORDANCE WITH THE MANUFACTURER'S INSTRUCTIONS.

3.2 EXPOSED PIPING INSTALLATION

A. EXPOSED PIPING SHALL BE RUN AS STRAIGHT AS PRACTICAL ALONG THE ALIGNMENT SHOWN ON THE CONTRACT DRAWINGS AND WITH A MINIMUM OF JOINTS. PIPING AND APPURTENANCES SHALL BE INSTALLED IN CONFORMANCE WITH REVIEWED SHOP DRAWINGS, MANUFACTURER'S INSTRUCTIONS AND ASME B31.3. PIPING SHALL BE INSTALLED WITHOUT SPRINGING OR FORCING THE PIPE.
B. PIPES SHALL BE THOROUGHLY CLEANED OF OIL, SCALE, RUST, AND DIRT IN ORDER TO PROVIDE A CLEAN SEAT FOR GASKETS. GASKETS SHALL BE WIPED CLEAN PRIOR TO INSTALLATION. FLEXIBLE COUPLINGS AND FLANGED COUPLING ADAPTER GASKETS SHALL BE LUBRICATED WITH THE MANUFACTURER'S STANDARD LUBRICANT BEFORE INSTALLATION ON THE PIPE ENDS. COUPLINGS, SERVICE SADDLES, AND ANCHOR STUDS SHALL BE INSTALLED IN ACCORDANCE WITH MANUFACTURER'S INSTRUCTIONS. BOLTS SHALL BE TIGHTENED PROGRESSIVELY, DRAWING UP BOLTS ON OPPOSITE SIDES A LITTLE AT A TIME UNTIL ALL BOLTS HAVE A UNIFORM TIGHTNESS. TORQUE-LIMITING WRENCHES SHALL BE USED TO TIGHTEN BOLTS.
C. PIPE FLANGES SHALL BE SET LEVEL, PLUMB, AND ALIGNED. FLANGED FITTINGS SHALL BE INSTALLED TRUE AND PERPENDICULAR TO THE AXIS OF THE PIPE. THE BOLT HOLES SHALL BE CONCENTRIC TO THE CENTERLINE OF THE PIPE.
D. VALVES SHALL BE LOCATED IN ACCORDANCE WITH THE CONTRACT DRAWINGS WHERE ACTUATORS ARE SHOWN. WHERE ACTUATORS ARE NOT SHOWN, VALVES SHALL BE LOCATED AND ORIENTED TO PERMIT EASY ACCESS TO THE VALVE OPERATOR, AND TO AVOID INTERFERENCES.

3.3 VALVE INSTALLATION

A. FLANGED VALVE BOLT HOLES SHALL BE INSTALLED SO AS TO STRADDLE THE VERTICAL CENTERLINE OF PIPE. FLANGED FACES SHALL BE CLEANED PRIOR TO INSERTING THE GASKET AND BOLTS, AND THEN THE NUTS SHALL BE TIGHTENED PROGRESSIVELY AND UNIFORMLY. THREADED ENDS SHALL HAVE THE THREADS CLEANED BY WIRE BRUSHING OR SWABBING PRIOR TO INSTALLATION.
B. THE OPERATING STEM OF A MANUAL VALVE SHALL BE INSTALLED IN A VERTICAL POSITION WHEN THE VALVE IS INSTALLED IN HORIZONTAL RUNS OF PIPE HAVING CENTERLINE ELEVATIONS 4.5 FEET OR LESS ABOVE FINISHED FLOOR, UNLESS OTHERWISE SHOWN ON MECHANICAL PIPING DRAWINGS. THE OPERATING STEM OF A MANUAL VALVE SHALL BE INSTALLED IN A HORIZONTAL POSITION IN HORIZONTAL RUNS OF PIPE HAVING CENTERLINE ELEVATIONS BETWEEN 4.5 FEET AND 6.75 FEET ABOVE FINISH FLOOR, UNLESS OTHERWISE SHOWN ON MECHANICAL PIPING DRAWINGS. AUTOMATIC VALVES SHALL BE INSTALLED IN ACCORDANCE WITH THE MANUFACTURER'S INSTRUCTIONS.

3.4 PIPING SUPPORT SYSTEMS INSTALLATION

A. THE ABSENCE OF PIPE SUPPORTS AND DETAILS ON THE MECHANICAL PIPING DRAWINGS SHALL NOT RELIEVE THE CONTRACTOR OF RESPONSIBILITY FOR SIZING AND PROVIDING SUPPORTS THROUGHOUT PLANT.
B. PIPE SUPPORT SYSTEMS SHALL MEET THE REQUIREMENTS OF MSS SP-58. CONTRACTOR-DESIGNED AND SELECTED SUPPORT SYSTEMS SHALL BE INSTALLED IN ACCORDANCE WITH MSS SP-69, AND AS SPECIFIED HEREIN. PIPING CONNECTIONS TO EQUIPMENT SHALL BE SUPPORTED BY PIPE SUPPORTS AND NOT OFF THE EQUIPMENT. LARGE OR HEAVY VALVES, FITTINGS, AND/OR EQUIPMENT SHALL BE SUPPORTED INDEPENDENTLY OF ASSOCIATED PIPING. PIPES SHALL NOT BE SUPPORTED OFF OTHER PIPES. SUPPORTS SHALL BE PROVIDED AT PIPING CHANGES IN DIRECTION OR IN ELEVATION, ADJACENT TO FLEXIBLE JOINTS AND COUPLINGS, AND WHERE OTHERWISE SHOWN ON THE CONTRACT DRAWINGS. PIPE SUPPORTS AND HANGERS SHALL NOT BE INSTALLED IN EQUIPMENT ACCESS AREAS OR BRIDGE CRANE RUNS. HANGING PIPES SHALL BE BRACED AGAINST HORIZONTAL MOVEMENT BY BOTH LONGITUDINAL AND LATERAL SWAY BRACING. AT EACH CHANNEL TYPE SUPPORT, EVERY PIPE SHALL BE PROVIDED WITH AN INTERMEDIATE PIPE GUIDE, EXCEPT WHERE PIPE ANCHORS ARE REQUIRED. EXISTING SUPPORT SYSTEMS MAY BE USED TO SUPPORT ADDITIONAL NEW PIPING ONLY IF THE CONTRACTOR CAN DEMONSTRATE THAT THE EXISTING SUPPORT SYSTEMS ARE ADEQUATE FOR THE ADDITIONAL LOADS, OR IF THE EXISTING SYSTEMS ARE STRENGTHENED TO SUPPORT THE ADDITIONAL LOADS. PEDESTAL TYPE PIPE SUPPORTS SHALL BE PROVIDED UNDER BASE FLANGES ADJACENT TO ROTATING EQUIPMENT AND WHERE REQUIRED TO ISOLATE VIBRATION. PIPING 2.5 INCH IN DIAMETER AND LARGER SHALL BE BRACED FOR SEISMIC FORCES. LATERAL SUPPORTS FOR SEISMIC LOADS SHALL BE INSTALLED AT ALL CHANGES IN DIRECTION.

3.5 PIPE PAINTING, COLOR CODING AND IDENTIFICATION

A. PAINT AND COLOR CODING REQUIREMENTS FOR EXPOSED PIPING SHALL BE IN ACCORDANCE WITH SECTION 099000 – PAINTS AND COATINGS (CB&I PHASE IV MID-PLUME PUMP & TREAT SYSTEM EXPANSION SPECIFICATIONS).

3.6 FIELD QUALITY CONTROL

A. HYDROSTATIC TESTING SHALL BE CONDUCTED IN ACCORDANCE WITH ASME B31.3. PIPING SYSTEMS SHALL BE TESTED UNDER NORMAL SERVICE CONDITIONS (AS INDICATED IN THE PIPE SCHEDULE IN THE CONTRACT DRAWINGS) TO DEMONSTRATE COMPLIANCE. THE TEST PRESSURE SHALL NOT BE LESS THAN 1.5 TIMES THE DESIGN PRESSURE. WATER SHALL BE USED AS THE HYDROSTATIC TEST FLUID. PROVIDE CLEAN TEST WATER OF SUCH QUALITY TO PREVENT CORROSION OF THE PIPING SYSTEM MATERIALS. AIR RELEASE VENTS SHALL BE OPENED AT ALL HIGH POINTS OF THE PIPING SYSTEM IN ORDER TO PURGE AIR POCKETS WHILE THE PIPING SYSTEM IS FILLING.
B. FOR RIGID PIPING HYDROSTATIC TESTING, THE MAXIMUM TEST PRESSURE SHALL BE CALCULATED ACCORDING TO ASME B31.3, BUT SHALL NOT EXCEED THE YIELD STRENGTH OF THE PIPING SYSTEM. THE MAXIMUM VELOCITY DURING FILLING SHALL BE IN ACCORDANCE WITH THE MANUFACTURER'S INSTRUCTIONS. VENTING DURING FILLING MAY ALSO BE PROVIDED BY LOOSENING FLANGES WITH A MINIMUM OF FOUR BOLTS OR BY THE USE OF EQUIPMENT VENTS. TEST ALL PARTS OF THE PIPING SYSTEM. THE HYDROSTATIC TEST PRESSURE SHALL BE MAINTAINED CONTINUOUSLY FOR 30 MINUTES MINIMUM AND FOR SUCH ADDITIONAL TIME AS NECESSARY TO CONDUCT EXAMINATIONS FOR LEAKAGE. ALL JOINTS AND CONNECTIONS SHALL BE EXAMINED FOR LEAKAGE. THE PIPING SYSTEM, EXCLUSIVE OF POSSIBLE LOCALIZED INSTANCES AT PUMP OR VALVE PACKING, SHALL SHOW NO VISUAL EVIDENCE OF LEAKING. CORRECT VISIBLE LEAKAGE AND RETEST. UNLESS OTHERWISE DIRECTED BY THE CONTRACTING OFFICER, THE PIPING SYSTEM SHALL BE LEFT FULL OF WATER AFTER LEAKS ARE REPAIRED.
C. FOR NON-RIGID, NON-METALLIC PIPING HYDROSTATIC TESTING, THE MAXIMUM TEST PRESSURE SHALL BE CALCULATED ACCORDING TO ASME B31.3, BUT SHALL NOT EXCEED 1.5 TIMES THE MAXIMUM PRESSURE RATING OF THE LOWEST RATED COMPONENT IN THE PIPING SYSTEM. THE MAXIMUM VELOCITY DURING FILLING SHALL BE IN ACCORDANCE WITH THE MANUFACTURER'S INSTRUCTIONS. THE SYSTEM SHALL BE INITIALLY PRESSURIZED TO 50 PERCENT OF THE NORMAL SERVICE CONDITIONS AND INSPECTED. ANY LEAKS SHALL BE REPAIRED BY THE CONTRACTOR. THE SYSTEM SHALL THEN BE PRESSURIZED TO THE TEST PRESSURE. SMALL AMOUNTS OF WATER SHALL BE ADDED AS REQUIRED ON A HOURLY BASIS FOR A MAXIMUM OF 3 HOURS IN ORDER TO MAINTAIN THE TEST PRESSURE. AFTER 4 HOURS, THE TEST PRESSURE SHALL BE LOWERED BY 10.0 PSI. IF THE HYDROSTATIC PRESSURE REMAINS STEADY FOR 1 HOUR, THEN NO LEAKAGE IS INDICATED. INSPECT FOR LEAKS, REPAIR AND RETEST IF NECESSARY. THE PIPING SYSTEM SHALL BE ALLOWED TO RELAX FOR 8 HOURS BEFORE RETESTING.
D. TESTS FOR ABOVE GROUND PRESSURE PIPING SHALL BE CONDUCTED AFTER THE PIPING HAS BEEN COMPLETELY INSTALLED, INCLUDING ALL SUPPORTS, HANGERS, AND ANCHORS, AND INSPECTED FOR PROPER INSTALLATION BUT PRIOR TO INSTALLATION OF INSULATION.
E. VALVES MAY EITHER BE TESTED WHILE TESTING PIPELINES, OR AS A SEPARATE STEP. IT SHALL BE DEMONSTRATED THAT VALVES OPEN AND CLOSE SMOOTHLY WITH OPERATING PRESSURE ON ONE SIDE AND ATMOSPHERIC PRESSURE ON THE OTHER, AND IN BOTH DIRECTIONS FOR TWO-WAY VALVE APPLICATIONS. COUNT AND RECORD THE NUMBER OF TURNS REQUIRED TO OPEN AND CLOSE EACH VALVE, AND ACCOUNT FOR ANY DISCREPANCIES WITH MANUFACTURER'S DATA. AIR AND VACUUM RELIEF VALVES SHALL BE EXAMINED AS THE ASSOCIATED PIPE IS BEING FILLED TO VERIFY VENTING AND SEATING IS FULLY FUNCTIONAL. SET, VERIFY, AND RECORD SET PRESSURES FOR ALL RELIEF AND REGULATING VALVES. SELF-CONTAINED AUTOMATIC VALVES SHALL BE TESTED AT BOTH MAXIMUM AND MINIMUM OPERATING RANGES, AND RESET UPON COMPLETION OF TEST TO THE DESIGN VALUE. [AUTOMATIC VALVES THAT ARE NOT SELF-CONTAINED SHALL BE TESTED IN CONJUNCTION WITH CONTROL SYSTEM TESTING.]

3.7 INTERIM / FINAL CLEANING

A. PREVENT THE ACCUMULATION OF WELD ROD, WELD SPATTER, PIPE CUTTINGS AND FILINGS, GRAVEL, CLEANING RAGS, AND OTHER FOREIGN MATERIAL WITHIN PIPING SECTIONS DURING FABRICATION. THE PIPING SHALL BE EXAMINED TO ASSURE REMOVAL OF THESE AND OTHER FOREIGN OBJECTS PRIOR TO ASSEMBLY AND INSTALLATION.

PROCESS EQUIPMENT SCHEDULE - TREATMENT PLANT EXPANSION

IDENT.	EQUIPMENT TYPE	DESCRIPTION	SUPPLIED BY	INSTALLED BY	REMARKS
SF-101	SAND FILTER	SAND FILTER UNIT MODEL MM 5460-2A (160-477 GPM) AS PRETREATMENT FOR BIOLOGIC FOULING AND IRON AND MANGANESE REMOVAL OF TREATMENT TRAIN #1	YARDNEY	CONTRACTOR	1, 2, 3
SF-102	SAND FILTER	SAND FILTER UNIT MODEL MM 5460-2A (160-477 GPM) AS PRETREATMENT FOR BIOLOGIC FOULING AND IRON AND MANGANESE REMOVAL OF TREATMENT TRAIN #2	YARDNEY	CONTRACTOR	1, 2, 3
CI-101	CHLORINE INJECTOR	SODIUM HYPOCHLORITE INJECTION SYSTEM, GRUNDFOS DOSING TANK STATION (DTS) WITH DDC 7-9 SMART DIGITAL PUMP	GRUNDFOS	CONTRACTOR	2
CI-102	CHLORINE INJECTOR	SODIUM HYPOCHLORITE INJECTION SYSTEM, GRUNDFOS DOSING TANK STATION (DTS) WITH DDC 7-9 SMART DIGITAL PUMP	GRUNDFOS	CONTRACTOR	2
TK-301	SETTLING/CLARIFIER TANK	ROLL-OFF SETTLING-CLARIFIER TANK, 8,000 GAL CAPACITY	GWTT, INC.	CONTRACTOR	4
P-112A/B	Pump	REPLACE EXISITNG 5.375 INCH IMPELLER WITH 6.062 INCH IMPELLER	ITT GOULDS	CONTRACTOR	5
P-212A/B	Pump	REPLACE EXISITNG 5.375 INCH IMPELLER WITH 6.062 INCH IMPELLER	ITT GOULDS	CONTRACTOR	5

REMARKS:
1. SAND FILTERS WILL BE SHIPPED ON INTEGRAL SKID. CONTRACTOR SHALL INSTALL SKIDS PER DRAWINGS. ANY SHIP-LOOSE ITEMS SHALL BE INSTALLED BE
2. EQUIPMENT SHALL BE INSTALLED PER MANUFACTURER'S RECOMMENDATIONS AND/OR AS SHOWN ON DRAWINGS.
3. LIFTING AND RIGGING OF EQUIPMENT SHALL BE IN ACCORDANCE WITH SPECIFIED PROCEDURES.
4. ROLL-OFF TO ACCOMMODATE PICKUP WITH HEIL LOWLIFT™ EQUIPPED TRUCK.
5. ITT GOULDS PUMP MODEL 3196STI 2X3-6

INFLUENT DISTRIBUTION VALVE OPERATION

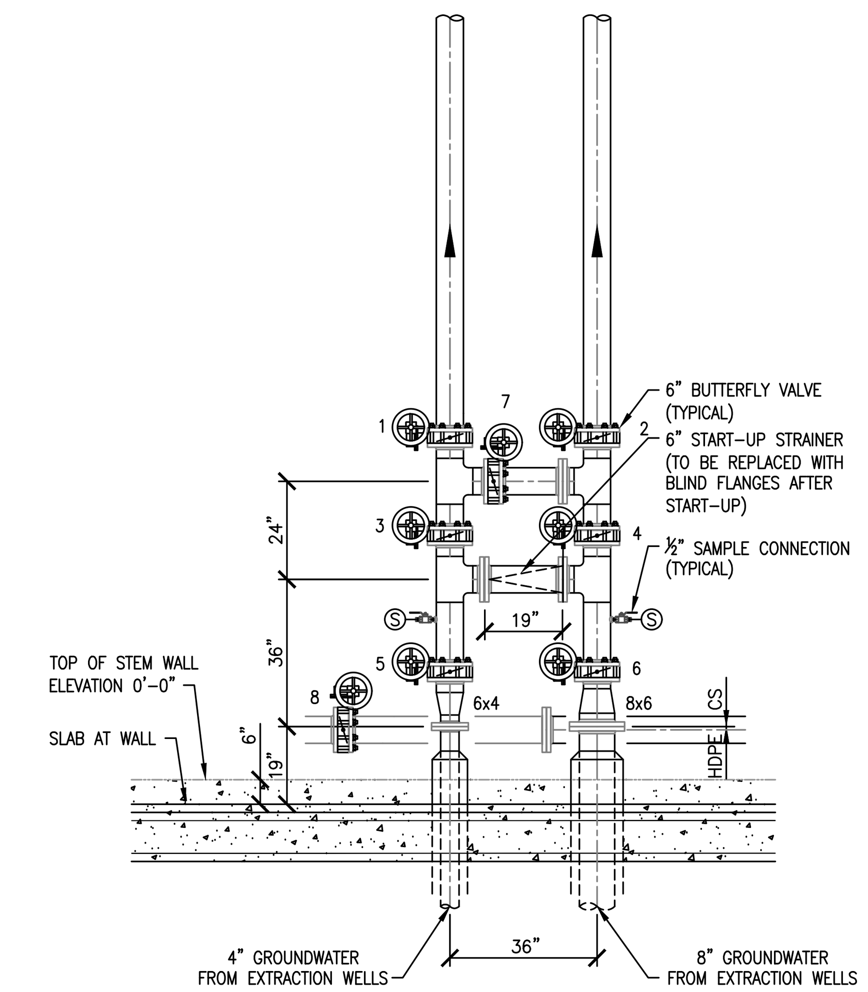

FIGURE 1

INFLUENT FROM THE EXTRACTION WELLS ENTERS THE TREATMENT PLANT VIA EITHER A 4 INCH OR 8 INCH GROUNDWATER INFLUENT LINE CONNECTED TO THE DISTRIBUTION MANIFOLD. THIS MANIFOLD PRESENTLY HAS 6 BUTTERFLY VALVES NUMBERED 1-6 AND ONE STRAINER AS SHOWN IN FIGURE 1. THE 4 INCH LINE, HAVING BUTTERFLY VALVES 1, 3, AND 5 IS CONNECTED TO THE EXPANSION TREATMENT TRAIN (TANK, FEED PUMPS, BAG FILTERS, GAC, AND TREATED WATER TANK). THE 8 INCH LINE, HAVING BUTTERFLY VALVES 2, 4, AND 6, IS CONNECTED TO THE INITIAL TREATMENT TRAIN (TANK, FEED PUMPS, BAG FILTERS, GAC, AND TREATED WATER TANK). WATER FROM THE MANIFOLD FLOWS UNDER PRESSURE FROM THE EXTRACTION WELLS THROUGH THE DISTRIBUTION MANIFOLD TO THE FEED TANKS. UPON ENTERING THE FEED TANKS INTERNAL PRESSURE GOES TO ATMOSPHERIC. THE SUCTION LINE FROM THE INITIAL FEED TANK CONNECTS TO THE INITIAL SKID FEED PUMPS. THE SUCTION LINE FROM THE EXPANSION FEED TANK CONNECTS TO THE EXPANSION SKID FEED PUMPS. IN ADDITION THESE TWO SUCTION LINES ARE CONNECTED UNDER SYSTEM EXPANSION.

THE ADDITION OF ONE BUTTERFLY VALVE SHOWN AS VALVE 7 IN FIGURE 1, REMOVAL OF THE STRAINER WITH PLACEMENT OF BLIND FLANGES, AND THE ADDITION OF ONE BUTTERFLY VALVE SHOWN AS VALVE 8 IN THE SUCTION LINE CONNECTING BOTH FEED TANKS WAS INCLUDED TO PROVIDE ADDITIONAL SYSTEM OPERATION FLEXIBILITY FOR MIXING OR SEPARATING FLOW TO THE INDIVIDUAL TREATMENT TRAINS. DESCRIPTIONS OF THE POSSIBLE FLOW FEED OPTIONS TO THE TREATMENT TRAINS THAT CAN BE ACHIEVED BY OPENING/CLOSING THE VARIOUS VALVES ARE DESCRIBED AS FOLLOWS:

CONDITION 1 – INFLUENT COMBINED AND DIRECTED TO BOTH TREATMENT TRAINS

1. WITH ALL VALVES (1-8) OPEN:
   a. FLOW WILL BE DIRECTED TO BOTH FEED TANKS AND WILL EQUALIZE WATER LEVELS IN BOTH TANKS AT SAME ELEVATION INDEPENDENT OF INFLUENT PUMPING OR FEED PUMPING RATES.
   b. CONTROL OF WATER LEVELS IN THE TWO FEED TANKS WILL BE MAINTAINED THROUGH ADJUSTMENT OF THE INFLUENT AND FEED PUMP PUMPING RATES.
   c. FEED PUMP RATES TO EITHER TREATMENT TRAIN CAN BE THE SAME (E.G., COMBINED PUMPING UP TO 400 GPM EACH SKID UNIT) OR DIFFERENT (E.G. 125 GPM ONE SKID UNIT AND UP TO 400 GPM THE SECOND UNIT).

CONDITION 2 – INFLUENT SEPARATED AND DIRECTED TO SEPARATE TREATMENT TRAINS

1. WITH VALVES 1, 3, AND 5 ON THE 4 INCH LINE OPEN, VALVES 2, 4, AND 6 OPEN ON THE 8 INCH LINE VALVE 7 ON THE HORIZONTAL CROSS TIE OF THE MANIFOLD CLOSED, AND VALVE 8 ON SUCTION LINE BETWEEN THE TWO FEED TANKS CLOSED:
   a. FLOW FROM THE 4 INCH LINE WILL BE DIRECTED TO THE EXPANSION TREATMENT TRAIN (TANK, FEED PUMPS, BAG FILTERS, GAC, AND TREATED WATER TANK).
   b. FLOW FROM THE 8 INCH LINE WILL BE DIRECTED TO THE INITIAL TREATMENT TRAIN (TANK, FEED PUMPS, BAG FILTERS, GAC, AND TREATED WATER TANK).
   c. CONTROL OF WATER LEVELS IN THE EXPANSION FEED TANK WILL BE MAINTAINED THROUGH ADJUSTMENT OF THE INFLUENT AND FEED PUMP PUMPING RATES.
   d. CONTROL OF WATER LEVELS IN THE INITIAL FEED TANK WILL BE MAINTAINED THROUGH ADJUSTMENT OF THE INFLUENT AND FEED PUMP PUMPING RATES.
   e. FEED PUMP RATES TO EITHER TREATMENT TRAIN CAN BE THE SAME (E.G., COMBINED PUMPING UP TO 400 GPM EACH SKID UNIT) OR DIFFERENT (E.G. 125 GPM ONE SKID UNIT AND UP TO 400 GPM THE SECOND UNIT).

CONDITION 3 – INFLUENT COMBINED AND TREATMENT TRAIN BYPASS FOR GAC CHANGE OUT

1. FLOW FROM THE 4 INCH AND 8 INCH INFLUENT LINES CAN BE DIRECTED TO THE INITIAL TREATMENT TRAIN BY:
   a. VALVE 1 CLOSED AND VALVES 3 AND 5 OPEN ON THE 4 INCH SIDE OF THE MANIFOLD
   b. VALVES 2, 4, AND 6 OPEN ON THE 8 INCH SIDE OF THE MANIFOLD
   c. VALVE 7 OPEN ON THE HORIZONTAL CROSS TIE OF THE MANIFOLD
   d. VALVE 8 CLOSED ON THE SUCTION LINE BETWEEN TWO FEED TANKS
   e. COMBINED INFLUENT LIMITED TO 400 GPM MAXIMUM.
   f. CONTROL OF WATER LEVELS IN THE INITIAL FEED TANK WILL BE MAINTAINED THROUGH ADJUSTMENT OF THE INFLUENT AND FEED PUMP PUMPING RATES.
2. FLOW FROM THE 4 INCH AND 8 INCH INFLUENT LINES CAN BE DIRECTED TO THE EXPANSION TREATMENT TRAIN BY:
   a. THE VALVE 2 CLOSED AND VALVES 4 AND 6 OPEN ON THE 8 INCH SIDE OF THE MANIFOLD
   b. VALVES 3, 5, AND VALVE 1 OPEN ON THE 4 INCH SIDE OF THE MANIFOLD
   c. VALVE 7 OPEN ON THE HORIZONTAL CROSS TIE OF THE MANIFOLD
   d. VALVE 8 CLOSED ON THE SUCTION LINE BETWEEN TWO FEED TANKS
   e. COMBINED INFLUENT LIMITED TO 400 GPM MAXIMUM.
   f. CONTROL OF WATER LEVELS IN THE EXPANSION FEED TANK WILL BE MAINTAINED THROUGH ADJUSTMENT OF THE INFLUENT AND FEED PUMP PUMPING RATES.

CONDITION 4 – INFLUENT SEPARATED AND TREATMENT TRAIN BYPASS FOR GAC CHANGE OUT

1. FLOW FROM THE 4 INCH INFLUENT LINE CAN BE DIRECTED TO THE INITIAL TREATMENT TRAIN BY:
   a. VALVE 1 CLOSED AND VALVES 3 AND 5 OPEN ON THE 4 INCH SIDE OF THE MANIFOLD
   b. VALVE 2 OPEN AND VALVES 4 AND 6 CLOSED ON THE 8 INCH SIDE OF THE MANIFOLD
   c. VALVE 7 OPEN ON THE HORIZONTAL CROSS TIE OF THE MANIFOLD
   d. VALVE 8 CLOSED ON THE SUCTION LINE BETWEEN TWO FEED TANKS
   e. CONTROL OF WATER LEVELS IN THE INITIAL FEED TANK WILL BE MAINTAINED THROUGH ADJUSTMENT OF THE INFLUENT AND FEED PUMP PUMPING RATES.
2. FLOW FROM THE 8 INCH INFLUENT LINE CAN BE DIRECTED TO THE EXPANSION TREATMENT TRAIN BY:
   a. THE VALVE 2 CLOSED AND VALVES 4 AND 6 OPEN ON THE 8 INCH SIDE OF THE MANIFOLD
   b. VALVES 3 AND 5 CLOSED AND VALVE 1 OPEN ON THE 4 INCH SIDE OF THE MANIFOLD
   c. VALVE 7 OPEN ON THE HORIZONTAL CROSS TIE OF THE MANIFOLD
   d. VALVE 8 CLOSED ON THE SUCTION LINE BETWEEN TWO FEED TANKS CONTROL OF WATER LEVELS IN THE EXPANSION FEED TANK WILL BE MAINTAINED THROUGH ADJUSTMENT OF THE INFLUENT AND FEED PUMP PUMPING RATES.

REVISIONS: NO. | DATE | BY | DESCRIPTION

DESIGN INFORMATION: DESIGNED BY: HLB | DRAWN BY: ML | CHECKED BY: LLR | PROJECT MANAGER: DEJ

PROFESSIONAL CERTIFICATION. I HEREBY CERTIFY THAT THESE DOCUMENTS WERE PREPARED OR APPROVED BY ME, AND THAT I AM A DULY LICENSED PROFESSIONAL ENGINEER UNDER THE LAWS OF THE STATE OF NEW MEXICO, LICENSE NO. LICENSE_NUMBER EXPIRATION DATE: EXPIRATION_DATE

SEAL

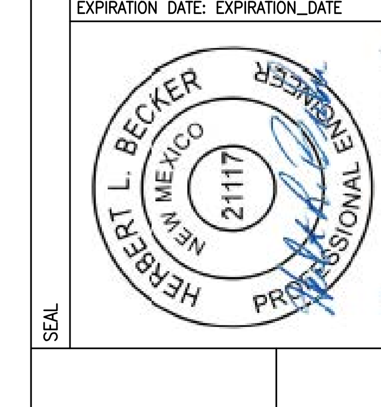

BULK FUELS FACILITY
GROUNDWATER TREATMENT SYSTEM 5460 SAND FILTER DESIGN
BERNALILLO COUNTY, NEW MEXICO

EQUIPMENT NOTES AND SCHEDULES

EA Engineering, Science, and Technology, Inc., PBC.
221 Sun Valley Boulevard; Suite D
Lincoln, NE 68528
(402) 476-3766

DATE: DECEMBER 2016

PROJECT NUMBER: 62599DM01

P-001

SHEET: 2 OF 6

FILE PATH: F:\FEDERAL\DOD\AFCEC\PROJECTS\62599DM01 – KIRTLAND BFF\CADD\FIGURES\5460\62599DM01-P-001 NOTES-SAND FILTER.DWG [LAYOUT] 10/6/16 mush

NOTES:

1. EXISTING EQUIPMENT IS SHOWN HATCHED:
2. EXISTING PIPING IS SHOWN DASHED:
3. ALL EQUIPMENT SHALL BE INSTALLED AND ANCHORED PER CB&I PHASE IV MID-PLUME PUMP AND TREAT SYSTEM STRUCTURAL DRAWINGS AND MANUFACTURER'S RECOMMENDATIONS.
4. LOCATE BACKWASH LINE AT MIDPOINT BETWEEN BAR JOISTS. FIELD VERIFY.

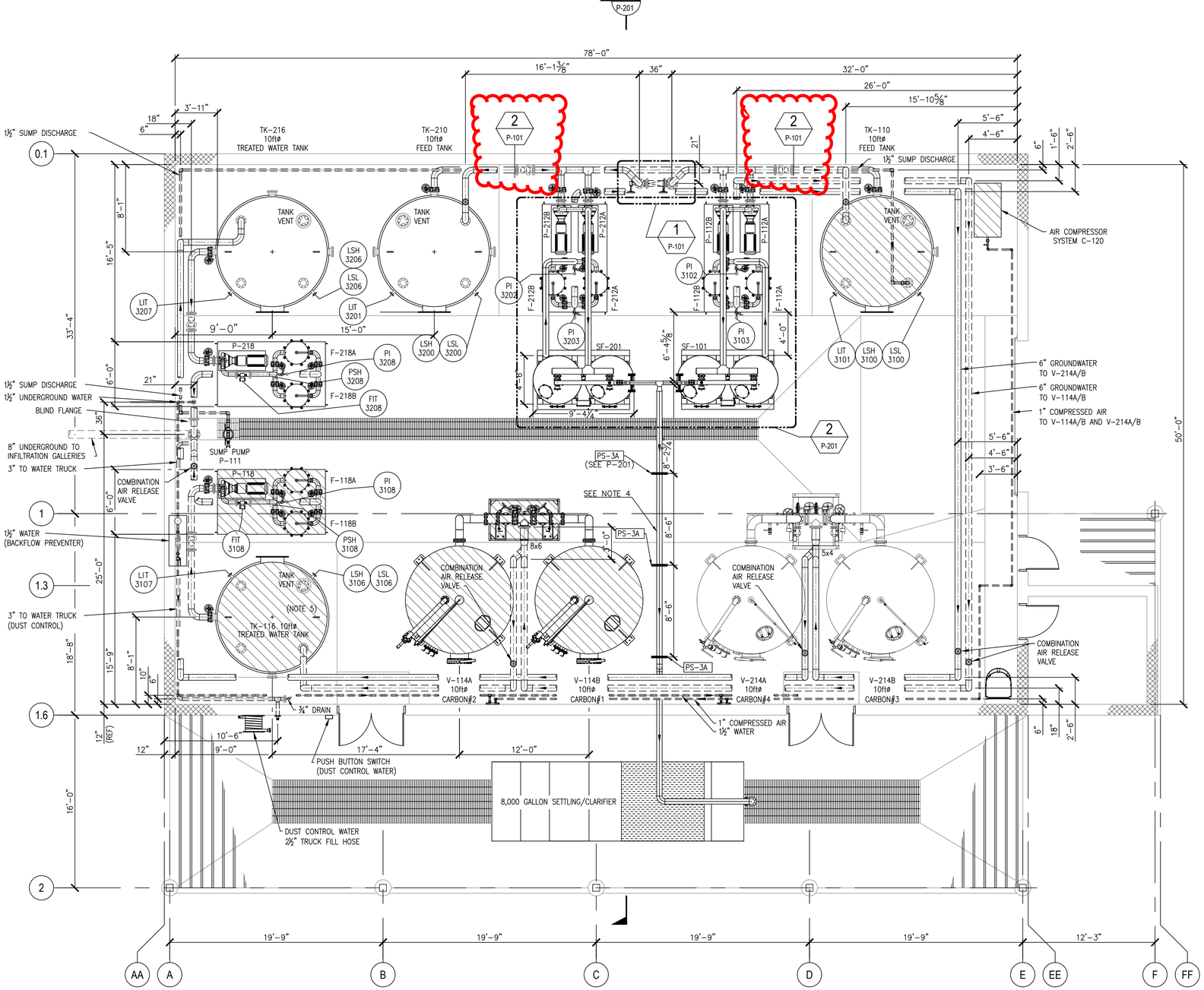

MECHANICAL EQUIPMENT PLAN

SCALE: 3/16" = 1'-0"

1 0 2 4 6 8 10 12ft

ORIGINAL SCALE 3/16"=1'-0"

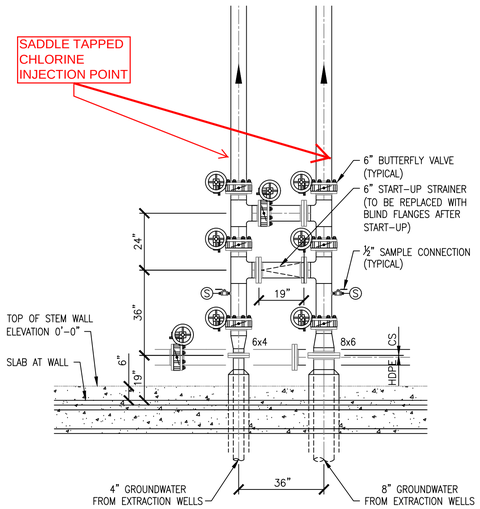

DETAIL 1 / P-101

.5 0 1 2 3 4 5 6ft

ORIGINAL SCALE 3/8"=1'-0"

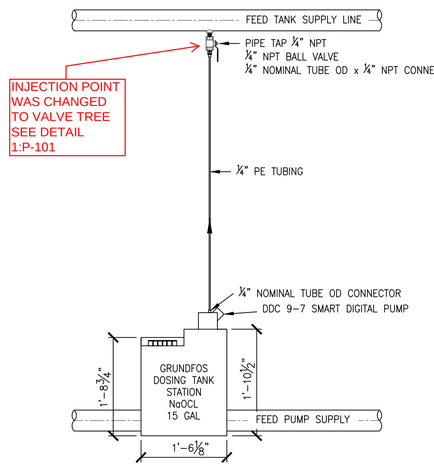

CHLORINE INJECTOR DETAIL CI-101/CI-102 2 / P-101

.5 0 1 2 3ft

ORIGINAL SCALE 3/4"=1'-0"

REVISIONS

NO.	DATE	BY	DESCRIPTION

DESIGN INFORMATION: DESIGNED BY: HLB | DRAWN BY: ML | CHECKED BY: LLR | PROJECT MANAGER: DEJ

PROFESSIONAL CERTIFICATION. I HEREBY CERTIFY THAT THESE DOCUMENTS WERE PREPARED OR APPROVED BY ME, AND THAT I AM A DULY LICENSED PROFESSIONAL ENGINEER UNDER THE LAWS OF THE STATE OF NEW MEXICO, LICENSE NO. LICENSE_NUMBER EXPIRATION DATE: EXPIRATION_DATE

SEAL: HERBERT L. BECKER — NEW MEXICO — 21117 — PROFESSIONAL ENGINEER

BULK FUELS FACILITY
GROUNDWATER TREATMENT SYSTEM 5460 SAND FILTER DESIGN
KIRTLAND AFB, NEW MEXICO

EQUIPMENT PLAN

EA Engineering, Science, and Technology, Inc., PBC.
221 Sun Valley Boulevard; Suite D
Lincoln, NE 68528
(402) 476-3766

DATE: DECEMBER 2016

PROJECT NUMBER: 62599DM01

P-101

SHEET: 3 OF 6

FILE PATH: F:\FEDERAL\OOD\AFCEC\PROJECTS\62599DM01 - KIRTLAND BFT\CADD\FIGURES\5460\62599DM01-P-101 EQUIPMENT PLAN-SAND FILTER3-2.DWG [LAYOUT] 10/6/16 mlash

NOTES:

1. WELD L4 x 4 x 3/8 x 2'-0" BETWEEN 2 PS-3A PIPE SUPPORTS.

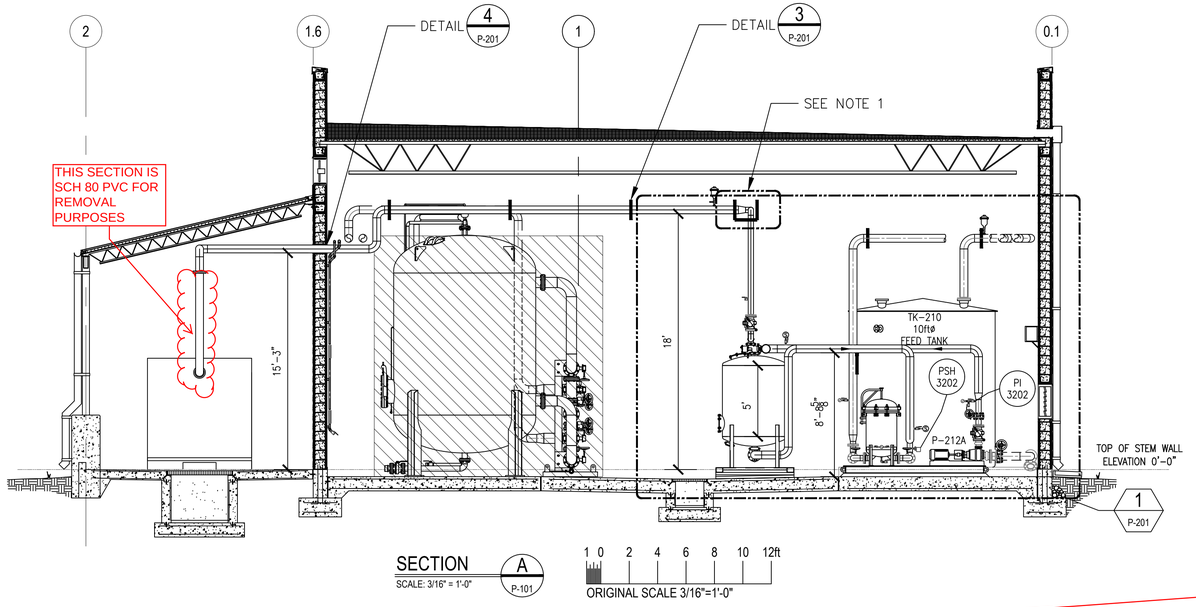

SECTION A P-101
SCALE: 3/16" = 1'-0"

1 0 2 4 6 8 10 12ft
ORIGINAL SCALE 3/16"=1'-0"

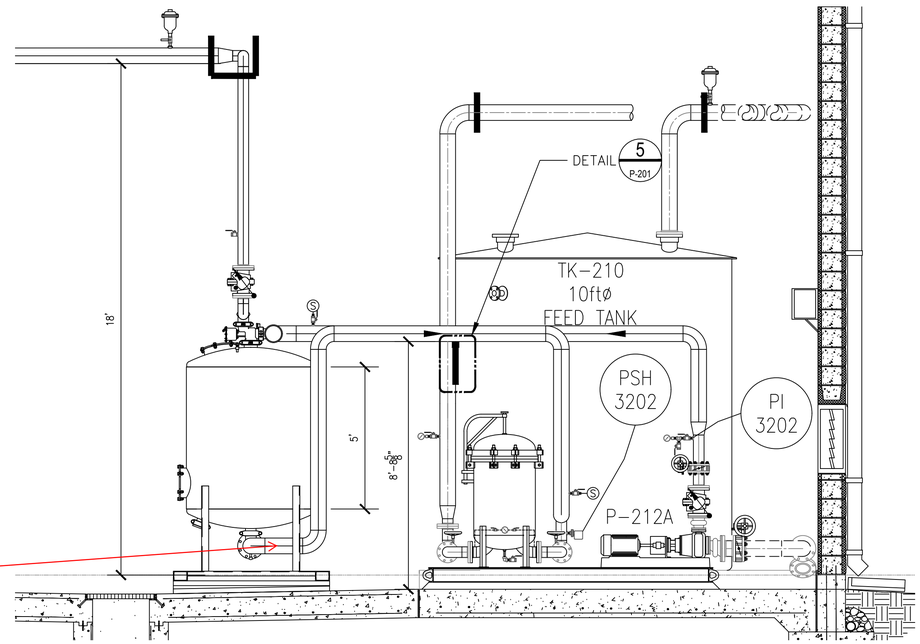

SAND FILTER PROFILE DETAIL 1 P-201

.5 0 1 2 3 4 5 6ft
ORIGINAL SCALE 3/8"=1'-0"

ADDED NELSON IRRGATION 800 SERIES CONTROL VALVE TYP

P212 PUMP CONNECTION IS OFFSET SLIGHTLY DUE TO EXISTING EQUIPMENT CONFIGURATION

PIPING FROM PUMPS TO SANDFILTERS AND FROM SANDFILTERS TO SOCKFILTERS IS 4"TYP

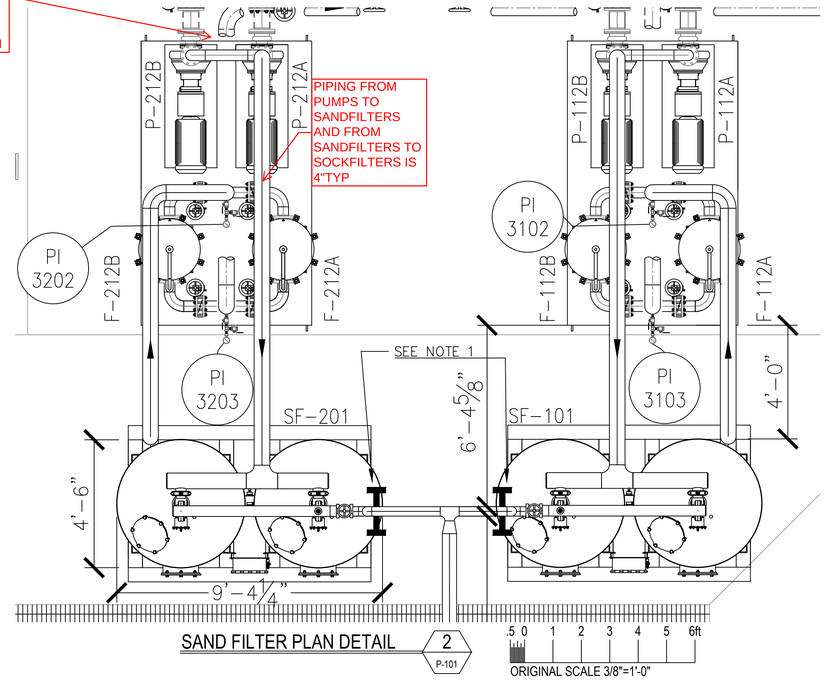

SAND FILTER PLAN DETAIL 2 P-101

.5 0 1 2 3 4 5 6ft
ORIGINAL SCALE 3/8"=1'-0"

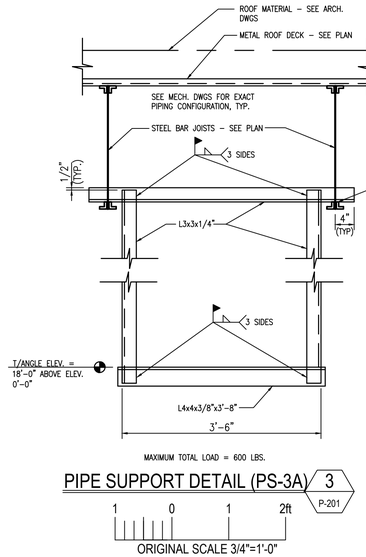

PIPE SUPPORT DETAIL (PS-3A) 3 P-201

1 0 1 2ft
ORIGINAL SCALE 3/4"=1'-0"

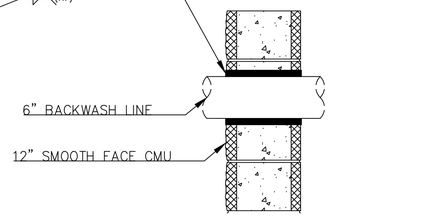

WALL PENETRATION DETAIL 4 P-201

1ft 0 1 2ft
ORIGINAL SCALE 1"=1'-0"

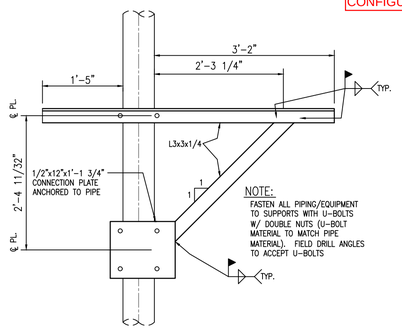

PIPE SUPPORT DETAIL (PS-2B) 5 P-201

1 0 1 2ft
ORIGINAL SCALE 3/4"=1'-0"

REVISIONS			
NO.	DATE	BY	DESCRIPTION

DESIGN INFORMATION
DESIGNED BY: HLB
DRAWN BY: ML
CHECKED BY: LLR
PROJECT MANAGER: DEJ

PROFESSIONAL CERTIFICATION. I HEREBY CERTIFY THAT THESE DOCUMENTS WERE PREPARED OR APPROVED BY ME, AND THAT I AM A DULY LICENSED PROFESSIONAL ENGINEER UNDER THE LAWS OF THE STATE OF NEW MEXICO, LICENSE NO. LICENSE_NUMBER EXPIRATION DATE: EXPIRATION_DATE

SEAL

HERBERT L. BECKER NEW MEXICO 21117 PROFESSIONAL ENGINEER

BULK FUELS FACILITY
GROUNDWATER TREATMENT SYSTEM 5460 SAND FILTER DESIGN
BERNALILLO COUNTY, NEW MEXICO

EQUIPMENT SECTIONS SHEET

EA Engineering, Science, and Technology, Inc., PBC.
221 Sun Valley Boulevard; Suite D
Lincoln, NE 68528
(402) 476-3766

DATE: DECEMBER 2016

PROJECT NUMBER: 62599DM01

P-201

SHEET: 4 OF 6

FILE PATH: F:\FEDERAL\DOD\AFCEC\PROJECTS\62599DM01 - KIRTLAND BFF\CADD\FIGURES\5460\62599DM01-P-403 SUPPORTS SECTIONS 3-SAND FILTER ALT PIPE-2.DWG [LAYOUT] 10/9/16 mlush

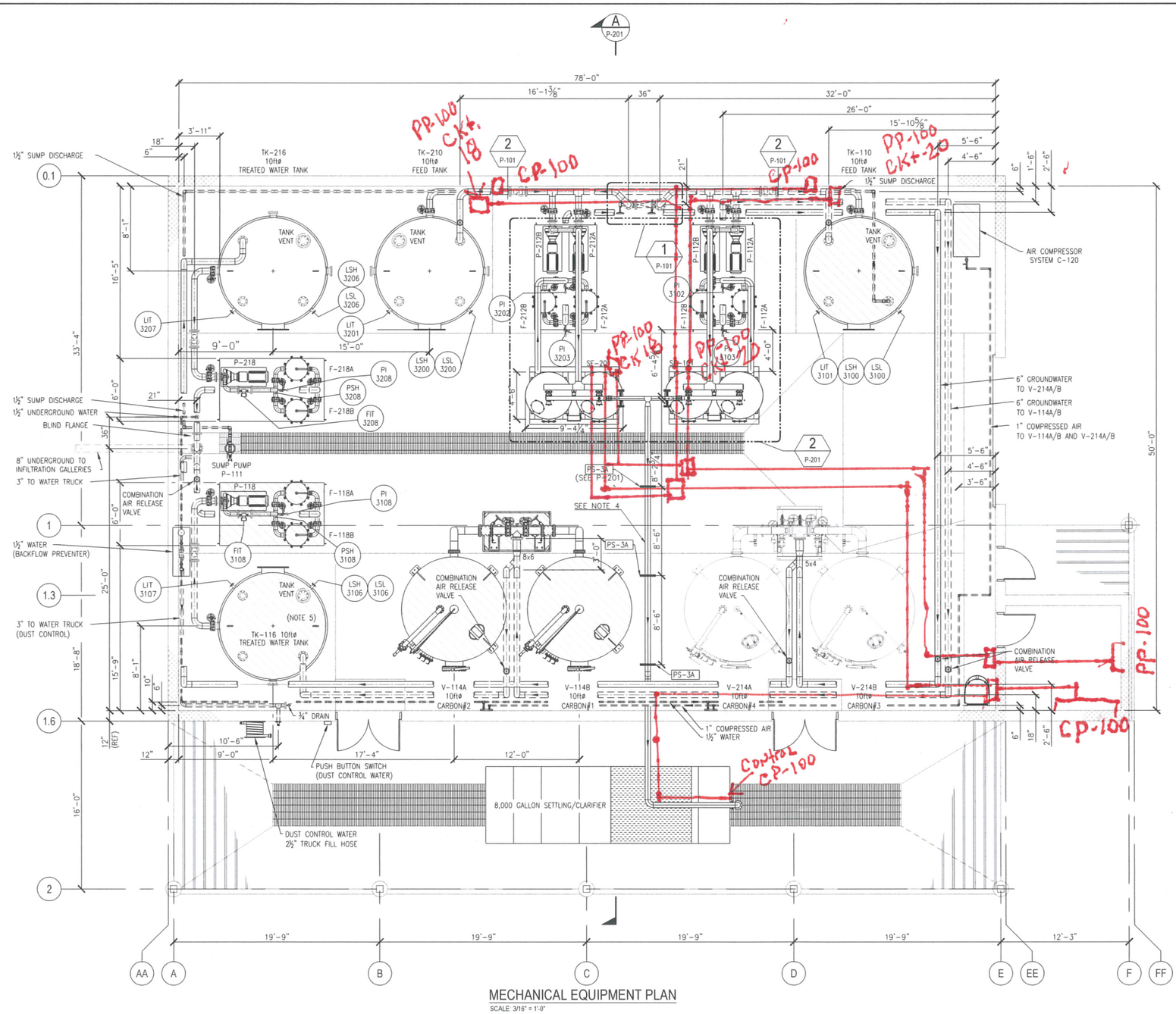

MECHANICAL EQUIPMENT PLAN

SCALE: 3/16" = 1'-0"

1 0 2 4 6 8 10 12ft

ORIGINAL SCALE 3/16"=1'-0"

NOTES:

1. EXISTING EQUIPMENT IS SHOWN HATCHED:
2. EXISTING PIPING IS SHOWN DASHED:
3. ALL EQUIPMENT SHALL BE INSTALLED AND ANCHORED PER CB&I PHASE IV MID-PLUME PUMP AND TREAT SYSTEM STRUCTURAL DRAWINGS AND MANUFACTURER'S RECOMMENDATIONS.
4. LOCATE BACKWASH LINE AT MIDPOINT BETWEEN BAR JOISTS. FIELD VERIFY.

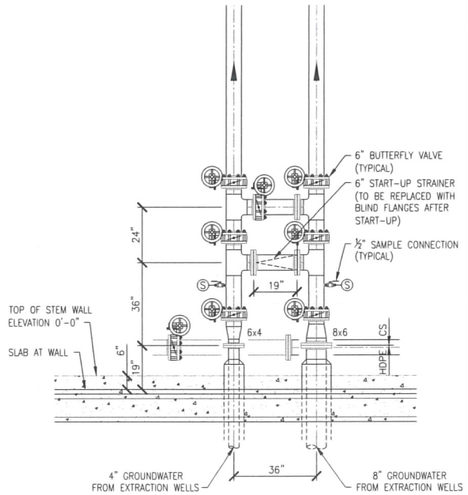

DETAIL 1 / P-101

.5 0 1 2 3 4 5 6ft

ORIGINAL SCALE 3/8"=1'-0"

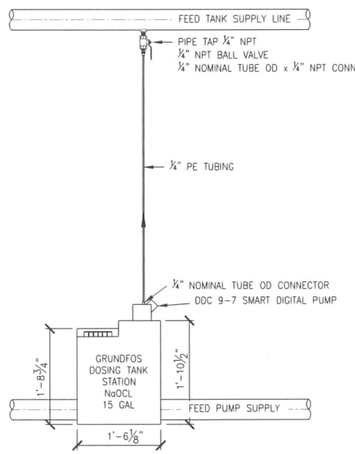

CHLORINE INJECTOR DETAIL CI-101/CI-102 2 / P-101

.5 0 1 2 3ft

ORIGINAL SCALE 3/4"=1'-0"

NO.	DATE	BY	DESCRIPTION
			REVISIONS

DESIGN INFORMATION
DESIGNED BY: HLB
DRAWN BY: ML
CHECKED BY: LLR
PROJECT MANAGER: DEJ

PROFESSIONAL CERTIFICATION. I HEREBY CERTIFY THAT THESE DOCUMENTS WERE PREPARED OR APPROVED BY ME, AND THAT I AM A DULY LICENSED PROFESSIONAL ENGINEER UNDER THE LAWS OF THE STATE OF NEW MEXICO, LICENSE NO. LICENSE_NUMBER EXPIRATION DATE: EXPIRATION_DATE

SEAL: HERBERT L. BECKER NEW MEXICO 21117 PROFESSIONAL ENGINEER — December 6, 2016

BULK FUELS FACILITY
GROUNDWATER TREATMENT SYSTEM 5460 SAND FILTER DESIGN
KIRTLAND AFB, NEW MEXICO

EQUIPMENT PLAN

EA Engineering, Science, and Technology, Inc., PBC
221 Sun Valley Boulevard; Suite D
Lincoln, NE 68528
(402) 476-3766

DATE: DECEMBER 2016

PROJECT NUMBER: 62599DM01

P-101

SHEET: 3 OF 6

FILE PATH: F:\FEDERAL\DOD\AFCEC\PROJECTS\62599DM01 - KIRTLAND BFT\CADD\FIGURES\5460\625998M01-P-101 EQUIPMENT PLAN-SAND FILTER3-2.DWG [LAYOUT] 10/6/16 mlush

ELECTRICAL NOTES

GENERAL ELECTRICAL NOTES

1. ALL WORK SHALL BE PERFORMED IN ACCORDANCE WITH THE FOLLOWING REQUIREMENTS AND THE DETAILS WHETHER OR NOT THEY ARE REFERENCED ON THE DRAWINGS.
2. CONDUIT AND WIRING DIAGRAMS, QUANTITIES, AND SIZE OF WIRES AND CONDUITS REPRESENT A SUGGESTED ARRANGEMENT BASED UPON SELECTED STANDARD COMPONENTS OF ELECTRICAL EQUIPMENT. MODIFICATIONS ACCEPTABLE TO THE ENGINEER MAY BE MADE BY THE CONTRACTOR TO ACCOMMODATE EQUIPMENT PURCHASED OR FOR A MORE APPROPRIATE INSTALLATION AS DETERMINED IN THE FIELD. THE SEQUENCE AND METHOD OF CONTROL MUST BE MAINTAINED AS INDICATED ON THE DRAWINGS AND SPECIFICATIONS.
3. THE ELECTRICAL CONTRACTOR SHALL VISIT THE SITE PRIOR TO BIDDING THE PROJECT TO VERIFY THE SCOPE OF WORK WITH FIELD CONDITIONS.
4. USE MANUFACTURER-APPROVED CABLE PULLING COMPOUND OR LUBRICANT WHERE NECESSARY; COMPOUND USED MUST NOT DETERIORATE CONDUCTOR OR INSULATION. DO NOT EXCEED MANUFACTURER' S RECOMMENDED MAXIMUM PULLING TENSIONS AND SIDEWALL PRESSURE VALUES. USE PULLING MEANS, INCLUDING FISH TAPE, CABLE, ROPE, AND BASKET-WEAVE WIRE/CABLE GRIPS THAT WILL NOT DAMAGE CABLES OR RACEWAY.
5. DO NOT INSTALL BRUISED, KINKED, SCORED, DEFORMED, OR ABRADED CABLE. DO NOT SPLICE CABLE BETWEEN TERMINATION, TAP, OR JUNCTION POINTS. REMOVE AND DISCARD CABLE IF DAMAGED DURING INSTALLATION AND REPLACE IT WITH NEW CABLE.
6. COLD-WEATHER INSTALLATION: BRING CABLE TO ROOM TEMPERATURE BEFORE DE-REELING. DO NOT USE HEAT LAMPS FOR HEATING.
7. FASTEN CABLES IN PLACE WITH HARDWARE SPECIFICALLY DESIGNED FOR THAT PURPOSE WITHOUT DAMAGING CABLES.
8. REMOVE ABANDONED CONDUCTORS AND CABLES. ABANDONED CONDUCTORS AND CABLES ARE THOSE INSTALLED THAT ARE NOT TERMINATED AT EQUIPMENT AND ARE NOT IDENTIFIED FOR FUTURE USE WITH A TAG.
9. WHEREVER CONTACT WITH CONCRETE OR DISSIMILAR METALS CAN PRODUCE GALVANIC CORROSION OF EQUIPMENT, SUITABLE INSULATING MEANS SHALL BE PROVIDED TO PREVENT SUCH CORROSION.
10. CONDUCTORS, EQUIPMENT, AND ACCESSORIES THAT ARE SIMILAR IN APPLICATION (E.G. LOW-VOLTAGE CABLES, CIRCUIT BREAKERS, OR MOUNTING EQUIPMENT) SHALL BE OBTAINED THROUGH ONE SOURCE FROM A SINGLE MANUFACTURER.

CONDUIT

1. CONDUITS, TUBING, AND FITTINGS SHALL BE LISTED AND LABELED AS DEFINED IN NFPA 70, BY A QUALIFIED TESTING AGENCY, AND MARKED FOR INTENDED LOCATION AND APPLICATION.
2. UNLESS NOTED OTHERWISE ON DRAWINGS OR DETAILS, EXPOSED CONDUIT ABOVEGROUND SHALL BE RIGID GALVANIZED STEEL EXCEPT FOR CONNECTIONS BETWEEN RIGID CONDUIT AND MOTOR TERMINAL BOXES OR SIMILAR EQUIPMENT SUBJECT TO VIBRATION, WHICH SHALL BE FLEXIBLE LIQUID-TIGHT CONDUIT. EXPOSED CONDUIT UNDERGROUND SHALL BE PVC.
3. CONDUIT SHALL BE TERMINATED SO AS TO PERMIT NEAT CONNECTION TO MOTORS AND OTHER EQUIPMENT.

LOW VOLTAGE CONDUCTORS AND CABLES

1. CONDUCTORS ARE TO COMPLY WITH NEMA WC 70/ICEA S-95-658.
2. CONDUCTORS SHALL BE COPPER AND RATED FOR 600 VAC. ALUMINUM CONDUCTORS ARE NOT PERMITTED UNLESS INDICATED OTHERWISE ON PROJECT DRAWINGS.
3. INSULATION SHALL BEAR THE UL LABEL, MANUFACTURER'S TRADEMARK, INSULATION TYPE, VOLTAGE, AND CONDUCTOR SIZE.
4. WHERE POSSIBLE, CONCEAL CABLES IN FINISHED WALLS, CEILINGS, AND FLOORS UNLESS OTHERWISE INDICATED.
5. CONDUCTORS SHALL BE RUN CONTINUOUSLY FROM POINT-TO-POINT WITHOUT SPLICES.
6. CONDUCTORS SHALL NOT BE PULLED INTO RACEWAY UNTIL IT HAS BEEN CLEARED OF MOISTURE AND DEBRIS.
7. FEEDER CIRCUITS SHALL BE COPPER, STRANDED AND A MINIMUM #12 AWG. FEEDERS INDOORS IN DRY ENVIRONMENT SHALL BE TYPE THWN/THHN, SINGLE CONDUCTORS IN RACEWAY. FEEDERS OUTDOORS OR IN WET ENVIRONMENT SHALL BE TYPE THWN-2 OR XHHW-2, SINGLE CONDUCTORS IN RACEWAY. FEEDERS CONCEALED IN CONCRETE, BELOW SLABS-ON-GRADE, AND UNDERGROUND SHALL BE TYPE XHHW-2, SINGLE CONDUCTORS IN RACEWAY.
8. CLASS 1 REMOTE CONTROL AND SIGNAL CIRCUITS SHALL BE STRANDED COPPER, TYPE THHN/THWN, MINIMUM CONDUCTOR SIZE OF #14 AWG, IN RACEWAY, COMPLYING WITH UL 83.
9. CLASS 2 LOW ENERGY, REMOTE CONTROL AND SIGNAL CIRCUITS SHALL BE STRANDED COPPER, TYPE THHN/THWN, MINIMUM CONDUCTOR SIZE OF #16 AWG, IN RACEWAY, COMPLYING WITH UL 83.
10. CLASS 3 LOW ENERGY, REMOTE CONTROL, ALARM AND SIGNAL CIRCUITS SHALL BE STRANDED COPPER, TYPE THHN/THWN, TW, OR TF. MINIMUM CONDUCTOR SIZE OF #12 AWG, IN RACEWAY, COMPLYING WITH UL 83.
11. TERMINATE ALL LOW VOLTAGE CONTROL CONDUCTORS; NO CABLE SHALL CONTAIN UN-TERMINATED ELEMENTS. MAKE TERMINATIONS ONLY AT INDICATED OUTLETS, TERMINALS, AND CROSS-CONNECT AND PATCH PANELS. UTILIZE SPARE TERMINALS AS NECESSARY FOR TERMINATION OF SPARE CONDUCTORS.
12. SHIELDED INSTRUMENTATION CABLES SHALL BE GROUNDED ONLY ON THE CONTROL PANEL OR PLC SIDE OF A 4-20 MA CIRCUIT.
13. SECURE AND SUPPORT CABLES AT INTERVALS NOT EXCEEDING 30 INCHES AND NOT MORE THAN 6 INCHES FROM CABINETS, BOXES, FITTINGS, OUTLETS, RACKS, FRAMES, AND TERMINALS.
14. BUNDLE, LACE, AND TRAIN CONDUCTORS TO TERMINAL POINTS WITHOUT EXCEEDING MANUFACTURER'S LIMITATIONS ON BENDING RADII.

PANEL SCHEDULE PP-100

FEED SOURCE: MDP-100
FEED SIZE: 2C, #4 AWG, #6G
LOCATION: GWTP CONTROL ROOM
REF. DRAWING: 140705-001-EL-20-400001

VOLTAGE: 480V INPUT 120/240V OUTPUT
NUMBER OF CIRCUITS: 42 (1P) OR 21 (2P) BOLT ON BREAKERS

25KVA TRANSFORMER
100A AMP PRIMARY CIRCUIT BREAKER
125A SECONDARY CIRCUIT BREAKER
18KAIC INTERRUPTING RATING

2-5% FULL CAPACITY BELOW NORMAL TAPS
ENCLOSURE: NEMA 3R, SURFACE MOUNTED

[X] 100% NEUTRAL
[X] EQUIPMENT GROUND BAR

OTHER:
* ISOLATED GROUND CIRCUIT
** GROUND FAULT CIRCUIT INTERRUPTER
(L) PROVIDE LOCKING TAB

BREAKER CKT	BREAKER AMP	BREAKER POLE	IDENTIFICATION	LOAD VA	LOAD AMPS	CABLE NO. OR WIRE SIZE
1	20	1	SIC-3108	180	1.5	2/C, #12, #12G
3	20**	1	RECEPTACLES (CONTROL ROOM)	540	4.5	2/C, #12, #12G
5	20	1	EXHAUST FAN/LOUVER (EF-2) (NOTE 2)	1661	13.84	2/C, #12, #12G
7	25	1	GWTP AREA LIGHTING ZONE 1	2094	17.45	2/C, #10, #12G
9	20	1	GWTP AREA LIGHTING ZONE 2	1794	14.95	2/C, #12, #12G
11	25	1	FIRE ALARM PANEL FP-100	2400	20	2/C, #10, #12G
13	20**	1	RECEPTACLES (GWTP AREA)	1620	13.5	2/C, #12, #12G
15	20	1	EXHAUST FAN/LOUVER (EF-1) (NOTE 2)	1661	13.84	2/C, #12, #12G
17A 17B	20	2	OUTDOOR LIGHTING SOUTH ROLL UP DOOR OUTDOOR LIGHTING EAST	1920	8	2/C, #12, #12G
21			SPACE			
23	25	1	COMPRESSOR SF-101	101	0.84	2/C, #12, #12G
25	25	1	COMPRESSOR SF-102	101	0.84	2/C, #12, #12G
27	10	1	CHLORINE INJECTOR/ANALYZER CI-101	120	1.00	2/C, #12, #12G
29	10	1	CHLORINE INJECTOR/ANALYZER CI-102	120	1.00	2/C, #12, #12G
31			SPACE			
33			SPACE			
35			SPACE			
37			SPACE			
39			SPACE			
41			SPACE			

PHASE A: 87.61A

CABLE NO. OR WIRE SIZE	LOAD VA	LOAD AMPS	IDENTIFICATION	BREAKER AMP	BREAKER POLE	BREAKER CKT
2/C, #12, #12G	1620	6.75	CONTROL ROOM HVAC-1	20	2	2
2/C, #10, #12G	2400	20	CONTROL PANEL CP-100	25	1	6
2/C, #12, #12G	1661	13.84	EXHAUST FAN/LOUVER (EF-3) (NOTE 2)	20	1	8
2/C, #12, #12G	224	1.87	CONTROL ROOM LIGHTS, EXIT SIGNS, EMERGENCY LIGHTS	20	1	10
2/C, #10, #12G	864	7.2	GWTP SUMP PUMP P-111 RECEPTACLE	20	1	12
2/C, #12, #12G	180	1.5	SIC-3102A	20	1	14
2/C, #12, #12G	180	1.5	SIC-3102B	30	1	16
2/C, #12, #12G	244	2.03	SF-101 & CI-101	20	1	18
2/C, #12, #12G	244	2.03	SF-102 & CI-102	20	1	20
			SPACE			22
2/C, #12, #12G	120	1.00	CONTROLLER SF-101	20	1	24
2/C, #12, #12G	120	1.00	CONTROLLER SF-102	20	1	26
			SPACE			28
			SPACE			30
			SPACE			32
			SPACE			34
			SPACE			36
			SPACE			38
			SPACE			40
			SPACE			42

PHASE B: 97.11A

GROUNDWATER TREATMENT PLANT POWER PANEL PP-100

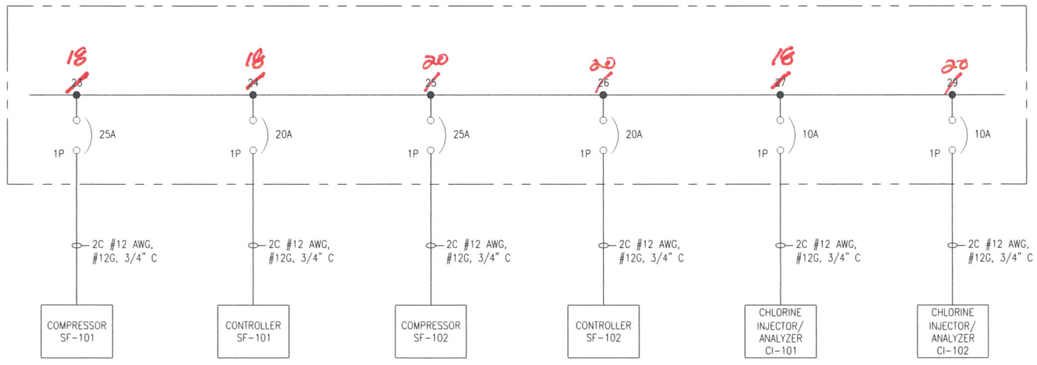

REVISIONS

NO.	DATE	BY	DESCRIPTION

DESIGN INFORMATION
DESIGNED BY: HLB
DRAWN BY: ML
CHECKED BY: LLR
PROJECT MANAGER: DEJ

SEAL

PROFESSIONAL CERTIFICATION. I HEREBY CERTIFY THAT THESE DOCUMENTS WERE PREPARED OR APPROVED BY ME, AND THAT I AM A DULY LICENSED PROFESSIONAL ENGINEER UNDER THE LAWS OF THE STATE OF NEW MEXICO, LICENSE NO. LICENSE_NUMBER EXPIRATION DATE: EXPIRATION_DATE

HERBERT L. BECKER — NEW MEXICO — 21117 — PROFESSIONAL ENGINEER
December 8, 2016

BULK FUELS FACILITY
GROUNDWATER TREATMENT SYSTEM 5460 SAND FILTER DESIGN
BERNALILLO COUNTY, NEW MEXICO

SAND FILTER ELECTRICAL SERVICE

EA Engineering, Science, and Technology, Inc., PBC.
221 Sun Valley Boulevard; Suite D
Lincoln, NE 68528
(402) 476-3766

DATE: DECEMBER 2016
PROJECT NUMBER: 62599DM01

E-001
SHEET: 5 OF 6

FILE PATH: F:\FEDERAL\DOD\AFCEC\PROJECTS\62599DM01 - KIRTLAND BFF\CADD\FIGURES\5460\62599DM01-E-001 ELECTRICAL SERVICE -SAND FILTER.DWG [LAYOUT] 11/10/16 mtuah

LEGEND

- CONTROL PANEL CP-100 TERMINATION
- EXTERNAL WIRING
- INTERNAL WIRING
- EXISTING EQUIPMENT

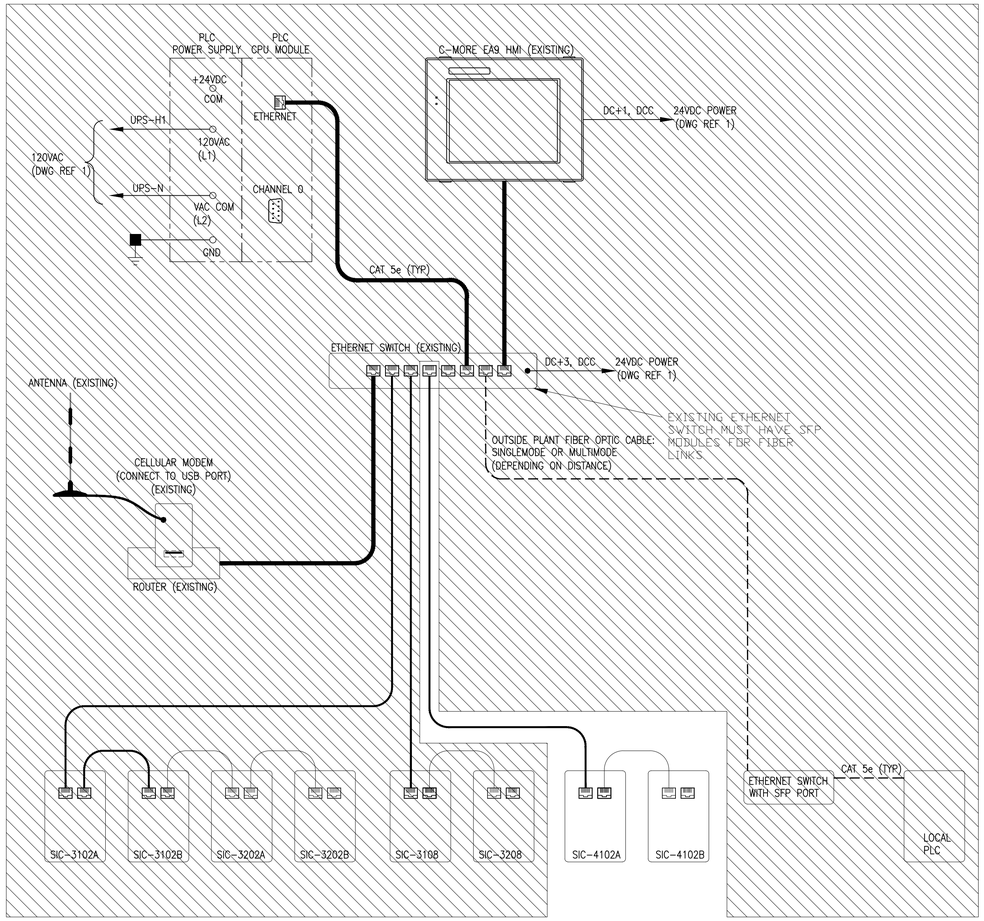

REVISIONS			
NO.	DATE	BY	DESCRIPTION

DESIGN INFORMATION				
DESIGNED BY: HLB	DRAWN BY: ML	CHECKED BY: LLR	PROJECT MANAGER: DEJ	

SEAL

PROFESSIONAL CERTIFICATION. I HEREBY CERTIFY THAT THESE DOCUMENTS WERE PREPARED OR APPROVED BY ME, AND THAT I AM A DULY LICENSED PROFESSIONAL ENGINEER UNDER THE LAWS OF THE STATE OF NEW MEXICO, LICENSE NO. LICENSE_NUMBER EXPIRATION DATE: EXPIRATION_DATE

HERBERT L. BECKER
NEW MEXICO
21117
PROFESSIONAL ENGINEER

DESIGN

BULK FUELS FACILITY
GROUNDWATER TREATMENT SYSTEM 5460 SAND FILTER DESIGN
BERNALILLO COUNTY, NEW MEXICO

CP-100 CONTROL PANEL COMMUNICATION DIAGRAM

EA Engineering, Science, and Technology, Inc., PBC.
221 Sun Valley Boulevard; Suite D
Lincoln, NE 68528
(402) 476-3766

DATE: DECEMBER 2016

PROJECT NUMBER: 62599DM01

E-101

SHEET: 6 OF 6

FILE PATH: F:\FEDERAL\DOD\AFCEC\PROJECTS\62599DM01 - KIRTLAND BFT\CADD\FIGURES\5460\62599DM01-E-101 CONTROL COMMUNICATION-SAND FILTER.DWG [D3] 11/9/16 mlueh

Data Base Version: SDSFIE 3.1

WATER

- Excavation Limits
- Fire Hydrant
- Anode
- Anode Test Point
- Bond Junction
- Rectifier
- NA, TBD, Other
- Well
- Pump
- Pump Station
- Backflow Preventer
- Gate
- Post Indicator
- Blow Off
- Regulating
- Check
- Angle
- Ball
- Drain
- Flow Control
- TBD
- Storage Tank
- Influent/Effluent Lines
- Distribution Main
- Transmission Main
- NA, Other, TBD
- Abandoned in Place
- Domestic
- Fire Protection
- Irrigation
- NA, Other, TBD
- Abandoned in Place

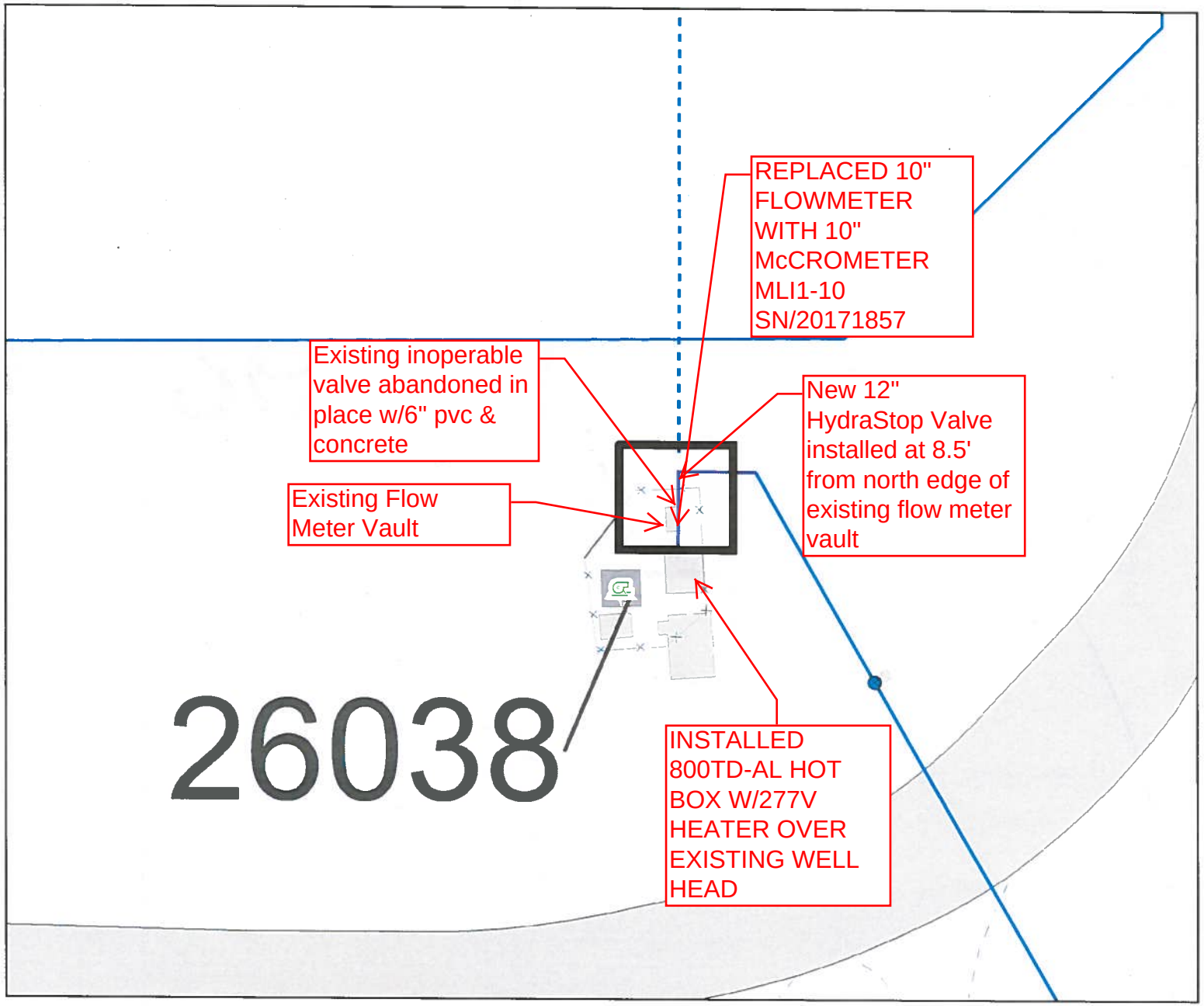

CE KIRTLAND AFB, NM

Permit #1802-010E

Date: 2/13/2018

DEPARTMENT of the AIR FORCE
Digging Permit Attachment
AIR FORCE GLOBAL STRIKE COMMAD
KIRTLAND AIR FORCE BASE
ALBUQUERQUE NEW MEXICO

Document Path: T:\GIS-Mapping Files - kafbap05ce\Dig Permits\1802-010E.mxd

Sand Filter
Design Calculations

Kirtland Air Force Base Bulk Fuel Facility
Groundwater Treatment System

U.S. Army Corps of Engineers
Albuquerque District
Contract No. W912DR-12-D-0006

Prepared by

EA Engineering, Science, and Technology, Inc., PBC
320 Gold Ave. SW, Suite 1210
Albuquerque, NM 87102
505-224-9013

Revision: 2

CONTENTS

Section **Page**

1.0 INTRODUCTION 1
1.1 Background 1
1.2 Objectives 1
2.0 INPUTS AND ASSUMPTIONS 2
2.1 Calculation Methodology 2
2.2 Inputs 2
2.3 Assumptions 3
3.0 RESULTS AND CONCLUSIONS 4
3.1 Results 4
3.2 Conclusions 6
4.0 REFERENCES 7

ATTACHMENT 1 DESIGN CALCULATIONS FOR SAND FILTER SELECTION
ATTACHMENT 2 YARDNEY INDUSTRIAL SAND FILTER SPECIFICATIONS
ATTACHMENT 3 DESIGN CALCULATIONS FOR CHLORINE INJECTION
ATTACHMENT 4 CLARIFIER EQUIPMENT SPECIFICATION
ATTACHMENT 5 HYDRAULIC ANALYSIS
ATTACHMENT 6 PUMP SELECTION

1.0 INTRODUCTION

1.1 Background

The mid-plume pump and treat system is part of an interim remedial measure for the Bulk Fuels Facility (BFF) groundwater plume at Kirtland AFB. The mid-plume groundwater is currently contaminated with ethylene dibromide (EDB) at concentrations above the maximum contaminant level (MCL) of 0.05 µg/L. The mid-plume pump and treat system will eventually consist of several extraction wells that are expected to produce up to 800 gpm of groundwater. Currently three groundwater extraction wells and one groundwater treatment (GWT) system designed for 400 gpm of groundwater are in operations. A second GWT system also designed for 400 gallons per minute (gpm) of groundwater is currently under construction.

Groundwater from the extraction wells is pumped from the wells through buried pipelines into the GWT system feed tanks, one for each GWT system. Groundwater is then pumped from the feed tank through bag-filters for pretreatment, and activated carbon adsorbers which remove the EDB. The treated water from the carbon adsorbers is collected in a discharge tank and then pumped to either the golf course irrigation pond or an injection well for disposal.

Shortly after startup of the first GWT system downhole a corrosion and biofouling issue in the extraction network was identified. Subsequently the biofouling issue made its way to the bag-filters and lead GAC of the first treatment system. An additional pre-treatment system consisting of sand filters installed prior to the existing bag-filters has been proposed to address the biofouling issue.

In addition to addressing biofouling, removal of dissolved iron and manganese may be necessary in the future. Monitoring well results indicate that elevated concentrations of dissolved iron and manganese in the influent water delivered to the GWT system may be expected as additional extraction wells are brought on line.

The sand filters will be pre-fabricated skid mounted units installed with each GWT system. Each unit having flow capacity of 400 gpm will consist of two or more sand filters and include provisions for backwashing of the individual sand filter. Backwash water will be pumped to a Baker-type clarifier tank located outside of the GWT system building. Piping and valves for connection of the additional pre-treatment system to existing pumps and bag filters will be included in the design modifications. Piping and valves necessary to facilitate conveyance of backwash between the outside tanks and both GAC and sand filter units will also be included in the design modifications.

1.2 Objectives

The objectives for these calculations are to determine the appropriate sand filter, pipe sizing and to determine alterations of the existing feed pumps necessary to provide a maximum flow rate from the feed tank, pre-treatment (both sand filters and bag-filters) and GAC to the treated water tank of 400 gpm for each GWT system.

2.0 INPUTS AND ASSUMPTIONS

2.1 Calculation Methodology

Sand filters sizing is based on a loading rate expressed as gpm applied per square foot (ft^2) of filter surface area, i.e., gpm/ft^2. For high pressure rapid sand filters loading rates range from approximately 3 gpm/ ft^2 to 13 gpm/ft^2. The diameter of the sand filter bed has to be large enough so that the pressure drop through the bed is reasonable but not so large that the groundwater flow is too low. As a general practice lower loading rates are used to remove inorganic suspended solids. For the removal of organic material such as biofouling products higher loading rates are acceptable.

The feed pumps for the pre-filters and carbon beds of each GWT system are two identical centrifugal pumps sized for 200 gpm each. The flow from the pumps is controlled by a variable frequency drive (VFD) controlling the speed of the pumps. The system process piping for each GWT was designed by CB&I Federal Services LLC (CB&I) based on a flow rate of 400 gpm. Design Flow Solutions (DFS), a pipeline modeling software program (Reference 1), was used to calculate the frictional head loss within the process piping. The frictional head loss from the piping and components, equipment head loss, and elevation changes are summed to a resultant head loss for process system. This information was in turn used to size the pumps. This software program can be used to calculate the additional frictional head loss within the process piping with the addition of planned sand filter units. The resultant head loss can be used to determine modifications to the existing pumps to maintain the required flow rate for each GWT system.

2.2 Inputs

Inputs include:

- The groundwater design (maximum) feed rate is 400 gpm to each GWT system. Existing feed pumps consist of two pumps for each GWT system, 200 gpm each pump and operating at total head of 104 ft.
- Groundwater inlet temperature from the extraction wells will be between 55 and 60°F.
- Concentrations of dissolved metals, iron and manganese, are expected to increase.
- Monitor pressure and flow through sand filter units.
- Bed expansion of at least 20 percent at 239 gpm during backwash with duration of four minutes minimum for single media system.
- One sand filter at a time will be backwashed while continuing to process water until the entire unit is clean.
- Backwash water to be directed to Baker-type roll-off container located outside the GWT system building. Effluent from tank returned to sump in building and pumped to Feed Tank 110.

2.3 Assumptions

- Removal of organic biofouling products of primary importance. Removal of inorganic suspended solids of lessor importance with bag-filters following sand filter units. Based on manufacture's recommendation the sand filter units will be designed at maximum loading rate of 13 gpm/ft^2.
- Operation including backwash of each sand filter unit independent from the other.
- Controller PLC for the sand filters to be based on Allen Bradley logic and have Ethernet capability.
- Backwash can be initiated manually, via timer, or when observed pressure is ≤10 psi differential pressure from that of clean filter operation.
- Air activated valves switch operation filter to backwash mode. Air provided by small compressor mounted with each sand filter unit.
- Backwash will be initiated when observed pressure is 10 psi greater than from clean filter operation.
- Backwash rate based on manufacture's recommendations.
- Flow rate of feed pumps will be reduced to match backwash rate when backwash of sand filter units is required.
- Flow to GAC units suspended during backwash cycle.
- Provide oxidation and filtration for removal of dissolved iron and manganese

3.0 RESULTS AND CONCLUSIONS

3.1 Results

At the design flow rate of 400 gpm of groundwater and a design loading rate of 13 gpm/ft^2 filter surface area of 30.8 ft^2 is required (Attachment 1). Two 54-inch diameter filter vessels equal 31.8 ft^2 (Attachment 2). A 60-inch vertical side shell depth multi-media filter is recommended for removal of biofouling products as well as dissolved iron and manganese (Attachment 2).

High levels of dissolved iron and manganese greater than 10 mg/l can be treated by chemical oxidation, using an oxidizing chemical such as chlorine, followed by a sand trap filter to remove the precipitated material. DMI-65, a specialty media manufactured in Australia acts as an oxidation catalyst with immediate oxidation and filtration of the precipitates that has been certified to the US Standard of NSF/ANSI 61 for Drinking Water System Components. DMI-65 is an extremely powerful silica sand based catalytic action water filtration media that is designed for the removal of iron and manganese without the use of potassium permanganate through an Advanced Oxidation Process. The DMI-65 media has been shown to efficiently remove dissolved iron to the almost undetectable levels as low as 0.001 ppm and manganese to 0.001 ppm. Qualitative information about how this media works, its capabilities and limitations are included in Attachment 2. Yardney's IMA-65 Specialty Media is the United States equivalent of the DMI-65 media.

Continuous injection of sodium hypochlorite (liquid bleach) to maintain a 0.1 to 0.3 parts per million (ppm) residual level of chlorine (Attachment 2) promotes the oxidation process. Calculations supporting the design for the injection of sodium hypochlorite solution are included in Attachment 3. Based on these calculations injection of 3 gallons per day of household bleach would be required to maintain chlorine residual of 0.3 ppm.

Frequency of backwash is dependent on the production of biofouling products. At the backwash rate of 239 gpm for Yardney Model IL 5424-2A (Attachment 2) each backwash cycle will expand the filter bed 22 percent (Attachment1) and produce nearly 1,000 gallons of water during four minute backwash cycle. The same backwash rate applies to the Yardney Model IL 5460-2A (Attachment 2). One sand filter at a time will be backwashed while continuing to process water until the entire unit is clean (Attachment 3). Backwash effluent from each sand filter unit is conveyed by 4-inch diameter pipe and join with 6-inch diameter pipe to exit the building and discharge to Baker-style settling/clarifier (Attachment 4).

The 120V Allen Bradley Micrologix 1400 PLC Controller (Ethernet compatible) integrated with either Yardney model sand filter requires 120V/<1 A service. The Yardney IL 5424-2A and IL 5460-2A Filter Units each include a 1HP 3 gallon oil lube air compressor to control backwash valve operation and require 120V/15A service.

The groundwater treatment feed pump units for each GWT system will be required to pump 200 gpm each (400 gpm total). Based on modeling the hydraulic performance of the process piping system with dirty sand filters, dirty bag filters, and allowing for fouling/blinding across carbon vessels, a worst case condition, the required head is 120.59 ft wg. With a 20% design margin, per UFC 3-280-01A (Reference 2), the required head is 144.71 ft wg (Attachment 5). Currently each feed pump unit has two Gould model 3196 2x3-6 pumps with impeller diameter of 5.375 inches. The existing pumps will not achieve 200 gpm pumping at head of 144.71 ft wg.

Changing impeller diameter of this pump to 6.062 inches can achieve 200 gpm at total head of 148.9 ft wg. (Attachment 6).

3.2 Conclusions

Two 54 inch diameter sand filter units having 24 inch vertical sides meets the design criteria for removing biofouling products. Two 54 inch diameter multi-media sand filter units having 60 inch vertical sides with crushed gravel, garnet, and IMA-65 media meets the design criteria for removing biofouling products and dissolved iron and manganese. Small chorine injection units as used for residential purposes will provide the required sodium hypochlorite injection rates. Units selected should provide solution storage of at least 15 gallons (5 day capacity). Example systems are included in Attachment 3.

A 40 cubic yard roll-off settling/clarifier has capacity of 8,000 gallons, i.e., eight backwash cycles (Attachment 4).

Changing the impellers of the existing pumps to 6.062 inch diameter will exceed the 20% design margin criteria per UFC 3-280-01A.

4.0 REFERENCES

1. DF DesigNet® Version 4. Design Flow Solutions Software, ABZ, Incorporated
2. UFC 3-280-01A, Unified Facilities Criteria, Guidance for Ground Water/Fuel Extraction and Ground Water Injection Systems

Attachment 1

Design Calculations for Sand Filter Selection

Project KIRTLAND AFB BULK FUELS FACILITY Project No. 0912DK-12-D0006
Subject SAND FILTER DESIGN Sheet No. 1 of 2
Drawing No. 1033
Computed by H. Lee Beeka Date 10/24/2012 Checked by _____ Date _____

- LOADING RATE HIGH PRESSURE SAND FILTER 2.9-13 gpm/ft²
- SAND FILTERS FOLLOWED BY BAG FILTER → PARTICULATE REMOVAL NOT SIGNIFICANT REQUIREMENT AS THROUGH PUT
  USE UPPER LIMIT OF RECOMMENDED RANGE → 13 gpm/ft²
- FILTER AREA REQUIRED = $\frac{400 \text{ gpm}}{13 \text{ gpm/ft}^2} = 30.8 \text{ ft}^2$
- SPACE LIMITATIONS - 2 FILTER/UNIT

- YARDNEY SAND MEDIA FILTERS SPECIFICATION MODEL IL-5424-2A
  FILTRATION SURFACE AREA = 31.8 ft² > REQUIRED. OK

Engineering (Hydraulic) Data

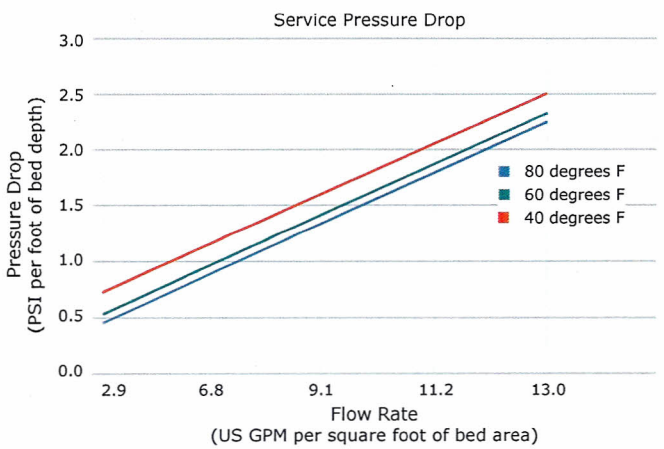

MODEL IL-5424-2A BED DEPTH ⇒ 2.0 ft

SELECT PRESSURE DROP/ft @ $\frac{400 \text{ gpm}}{31.8 \text{ gpm/ft}^2} = 2.25 \text{ psi/ft}$

PRESSURE DROP = 2.25 psi/ft (2 ft) = 4.5 psi

Project KIRTLAND AFB BULK FUELS FACILITY Project No. W912DK-12-D-0006 1033
Subject SAND FILTER DESIGN Sheet No. 2 of 2
Drawing No.
Computed by H. Lee Berka Date 10/24/2016 Checked by Date

MODEL IL 5460-2A BED DEPTH ⇒ 5.0 ft

SERVICE PRESSURE DROP/ft @ $\frac{400 \text{ gpm}}{31.8 \text{ gpm/ft}} = 2.25 \text{ psi/ft}$

PRESSURE DROP = 2.25 psi/ft (5.0 ft) = 11.25 psi

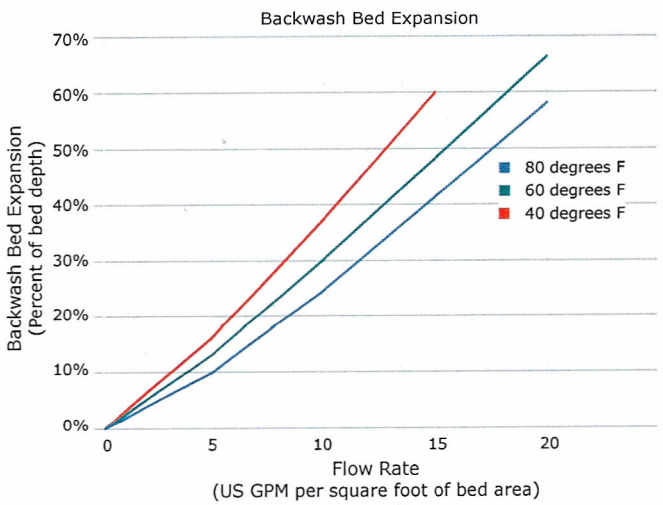

BACKWASH BED EXPANSION

YARDNEY SAND FILTER SPECIFICATION BACKWASH RATE

MODEL IL 5424-2A ⇒ 239 gpm

$\text{gpm/ft}^2 = \frac{239}{31.8} = 7.5 \text{ gpm/ft}^2$

FROM GRAPH ABOVE @ 7.5 gpm/ft² BED EXPANSION % Bed Dp = 22%

MODEL IL 5460-2A BACKWASH RATE = 239 gpm

$\text{gpm/ft}^2 = \frac{239}{31.8} = 7.5 \text{ gpm/ft}^2$

FLOW GRAPH ABOVE @ gpm/ft² BED EXPANSION % Bed Dpt = 22%

Attachment 2

Yardney Industrial Sand Filter Specifications

yardney
WATER FILTRATION SYSTEMS

Sand Media Filters

Removal of Solids Down to 20 Microns

Yardney Sand Media filters are designed for the most challenging dirty water conditions with a high performance solution for water filtration down to 20 microns. These durable carbon steel filters utilize a 24" vertical side shell depth for removal of organic and inorganic suspended solids for filtering large volumes of water with very little pressure drop and a long-term value. All Yardney industrial media filters utilize our simple backwash system for ease of operation and consistent water quality. The Yardney automatically controlled filter systems operate for extended periods of time prior to a short backwash cycle.

Applications

- Removal of organic and/or inorganic suspended solids down to 20 microns
- Storm water runoff, industrial process water, incoming plant water, waste water clean-up, industrial water for plant reuse
- Pre-filtration in applications such as granular activated carbon, reverse osmosis, cartridge or bag filtration and deionized water
- 80 psi standard operating pressure (high pressure systems available)
- Flow ranges from 10 gpm and up

Advantages

- State of the art fabrication provides added strength under pressure and long system life
- ASME code shaped head construction for durability and safety
- Stainless steel wedgewire underdrain
  - ➤ Ensures structural integrity in the harshest conditions
  - ➤ Hydraulically balanced to increase effectiveness of backwash while reducing flush frequency and waste of water
  - ➤ High strength stainless steel wedgewire will withstand a collapse pressure in excess of 600 psi
- Standard carbon steel products - 3/16" thick material
- Backwash automatically initiated by elapsed time or pressure differential
- Yardney easy-entry lid closure with weld tabs for operator safety
- Available in welded carbon steel
- 3M Scotchkote® 134 fusion bonded epoxy coating on interior surfaces
- Made in USA

Sand Media Filters

Specifications

SPECIFICATIONS | INDUSTRIAL | SAND MEDIA FILTERS													
Model	Number of Tanks in System	Standard Flow Range				Filtration Surface Area (total sq ft)	Backwash Flow Rate (per tank)		Media Requirements (cubic feet)		Maximum Pressure	Inlet/ Outlet Pipe Size	Backwash Line Pipe Size
		Minimum		Maximum									
		gpm	m^3/hr	gpm	m^3/hr		gpm	m^3/hr	Gravel 1/2" - 3/4"	Media			
IL-1824-1A	1	18	4	26	6	1.75	26	6	1	3	100 psi	2"	2"
IL-2424-1A	1	32	7	47	11	3.15	47	11	2	5	100 psi	2"	2"
IL-1824-2A	2	35	8	53	12	3.50	26	6	2	5	100 psi	3"	2"
IL-3024-1A	1	49	11	74	17	4.91	74	17	3	7	100 psi	3"	3"
IL-1824-3A	3	53	12	79	18	5.25	26	6	3	8	100 psi	3"	2"
IL-2424-2A	2	63	14	95	22	6.30	47	11	3	9	100 psi	3"	2"
IL-3624-1A	1	71	16	107	24	7.10	107	24	4	10	100 psi	3"	3"
IL-2424-3A	3	95	22	142	32	9.45	47	11	5	14	100 psi	3"	2"
IL-3024-2A	2	98	22	147	33	9.82	74	17	5	14	100 psi	4"	2"
IL-4824-1A	1	126	29	189	43	12.60	189	43	7	21	80 psi	4"	4"
IL-3624-2A	2	142	32	213	48	14.20	107	24	8	20	100 psi	4"	4"
IL-3024-3A	3	147	33	221	50	14.73	74	17	8	21	100 psi	4"	2"
IL-5424-1A	1	159	36	238	54	15.90	239	54	10	23	80 psi	4"	4"
IL-3624-3A	3	213	48	320	73	21.30	107	24	12	30	100 psi	4"	4"
IL-4824-2A	2	252	57	378	86	25.20	189	43	14	42	80 psi	6"	4"
IL-5424-2A	2	318	72	476	108	31.80	239	54	19	46	80 psi	6"	4"
IL-4824-3A	3	378	86	567	129	37.80	189	43	21	63	80 psi	6"	4"
IL-5424-3A	3	477	108	714	162	47.70	239	54	29	69	80 psi	6"	4"
IL-4824-4A	4	504	115	756	172	50.40	189	43	28	84	80 psi	8"	4"
IL-4824-5A	5	630	143	945	215	63.00	189	43	35	105	80 psi	10"	4"
IL-4824-6A	6	756	172	1134	258	75.60	189	43	42	126	80 psi	10"	4"
IL-5424-4A	4	636	145	952	216	63.60	239	54	38	92	80 psi	8"	4"
IL-5424-5A	5	795	181	1190	270	79.50	239	54	48	115	80 psi	10"	4"
IL-5424-6A	6	954	217	1428	325	95.40	239	54	57	138	80 psi	10"	4"

Standard product includes:

- Completely assembled for easy installation
- Skid mounted tanks
- Yardney easy-entry lid closure with side manway
- Valves
- Inlet/outlet and backwash manifolds
- Controller, solenoids, electrical wire, tubing
- Removable underdrain
- 3M Scotchkote® 134 fusion bonded epoxy coating on interior surfaces

Available options:

- ASME code
- High pressure
- Solar package
- PLC controller
- Custom filter station layout piping
- Air scour

Made in USA

Phone: 951.656.6716
Toll-Free: 800.854.4788
Fax: 951.656.3867
info@yardneyfilters.com

yardney WATER FILTRATION SYSTEMS

www.yardneyfilters.com

© 2013 Yardney Water Management Systems, Inc. | 6666 Box Springs Blvd. | Riverside, CA 92507

MULTIPLE TANK FILTRATION PROCESS | SAND MEDIA

Media filtration is the most effective method for removal of suspended organic and inorganic solids from water down to 20 microns. Yardney media filters operate on the same basic principle as nature's own ground water filtering process. Contaminated, unfiltered water enters the system through the inlet in the top of the filter and flows, with gravity and under pressure, through the media bed where solid particulates are entrapped. This occurs until the filtration system initiates an automatic backwash to expel all contaminates entrapped within the media bed. Yardney media filters are known for their capacity to extract and hold large amounts of water-borne particulate while continuing to deliver the rated flow of clean water.

FILTRATION PROCESS

- The contaminated water enters the tank through the inlet manifold, transitioning to the Yardney 3-way valve and into the top inlet of each tank
- The Yardney two-stage deflector creates a uniform distribution for laminar flow across the media bed while avoiding channeling of the media bed
- Particulate is trapped and retained within the media bed resulting in clean process water flowing out through the stainless steel wedgewire underdrain, to the outlet of each filter tank and to the outlet manifold for end use

In addition to the Yardney filter's ability to filter large volumes of water with very little pressure drop, one of the outstanding features is the simple backwash operation. This backwashing process is possible due to the highly efficient and hydraulically balanced underdrain systems utilized in Yardney media filters.

BACKWASH PROCESS

- Backwash sequence is initiated by either elapsed time of the Yardney controller or pressure differential between the inlet and outlet manifolds
- Water or air pressure opens the Yardney 3-way valve causing the reverse flow of a portion of filtered water up through the stainless steel underdrain to hydraulically and uniformly lift the media bed
- The use of a hydraulically balanced underdrain in conjunction with a gravel pack creates a proper and uniform lift of the media bed while avoiding a turbulent backwash
- Entrapped particulates are released during the backwash event, exhausted through the backwash manifold and routed to a convenient location
- One tank at a time is backwashed while continuing to process water for use until the entire system is clean
- Once completed with the backwash, filtration continues until the next backwash event is called for

© 2013 Yardney Water Management Systems, Inc. | 6666 Box Springs Blvd. | Riverside, CA 92507

IL 5424-2A

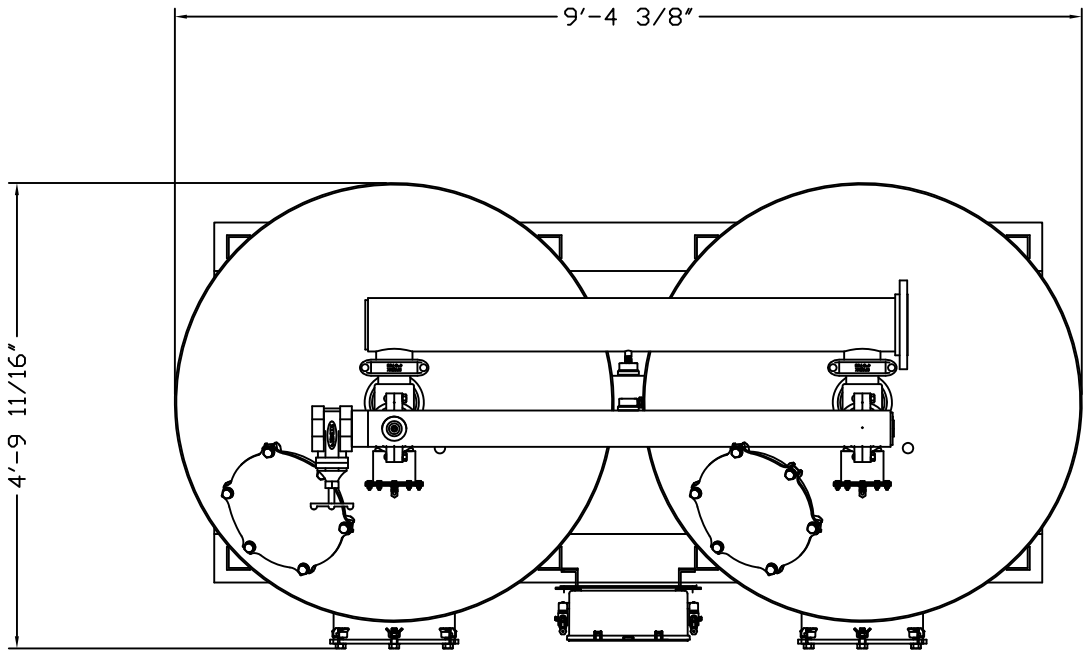

NOTES:

1. DESIGN FLOW RATE: 318-477 GPM.
   BACKWASH RATE: 15 GPM/FT^2.
2. MAXIMUM OPERATING PRESSURE: 80 PSI.
3. ELECTRICAL REQUIREMENTS:
   CONTROLLER 120V;
   SOLENOIDS 24VAC; FACTORY WIRED
4. AIR SUPPLY REQUIRED: 2 CFM @ 70 PSIG (MIN.).
5. MEDIA REQUIREMENT PER TANK:
   A. 1/2"x3/4" CRUSHED ROCK: 9.5 CU. FT. .
   B. 0.47mm CRUSHED SILICA SAND: 23.0 CU. FT. .
6. WEIGHT: (APPROX.)
   A. SHIPPING: 3,630 LBS (WITH MEDIA)
   B. OPERATING: 9,560 LBS
7. EXTERIOR PAINT COLOR: STANDARD BLUE, RAL 5010.

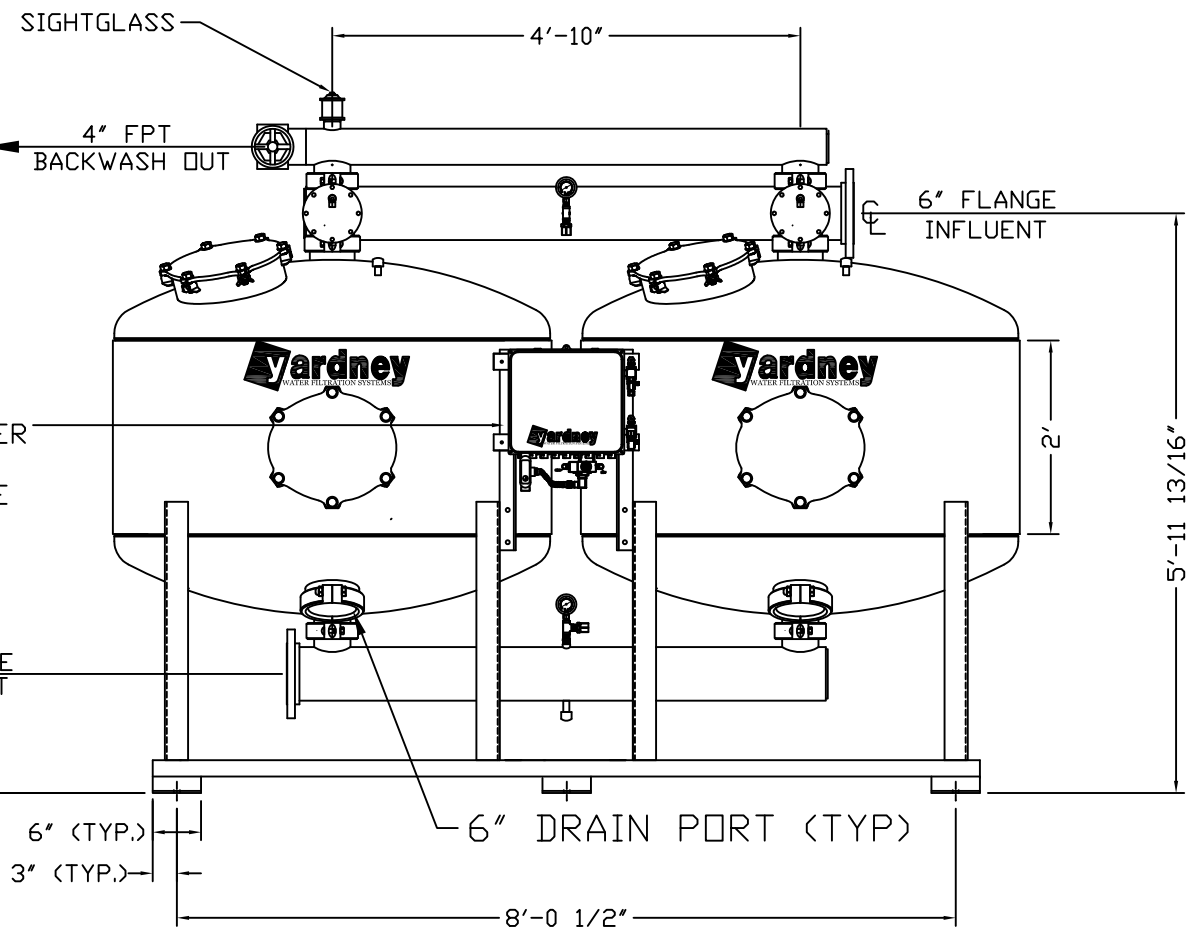

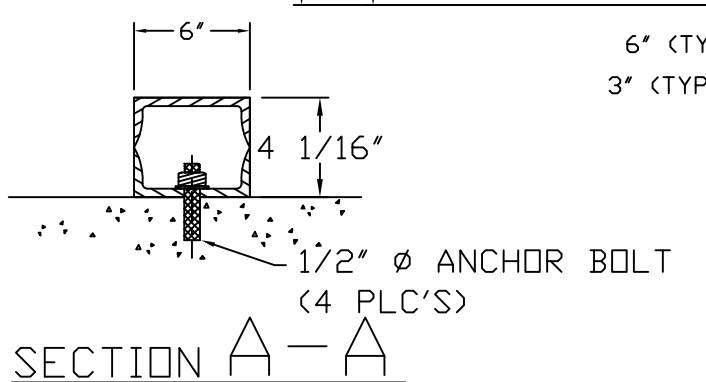

SECTION A—A

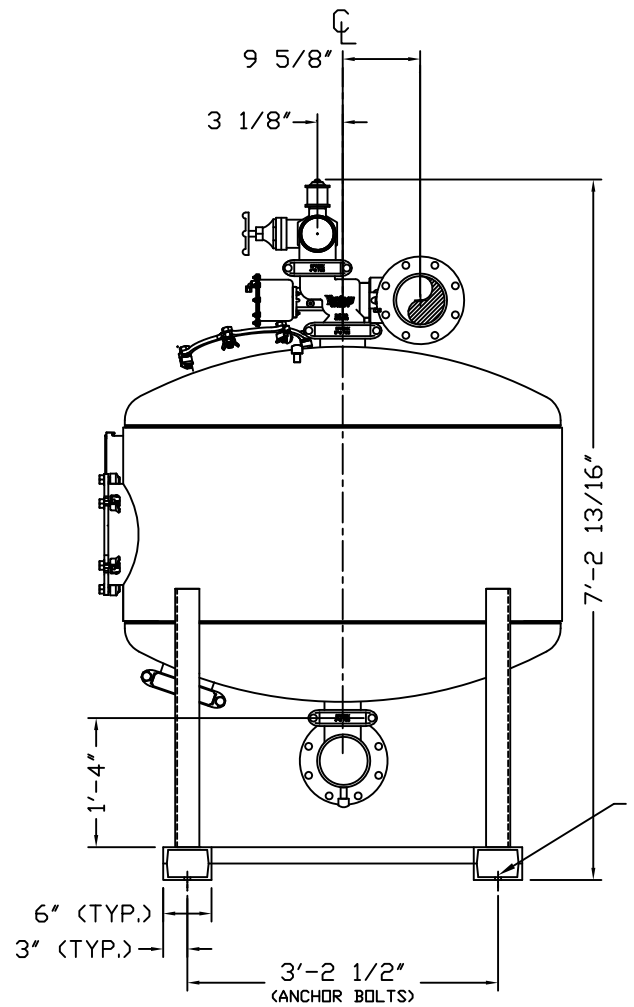

3/4" DIA. HOLE CENTERED ON BOTTOM PAD, 4 PLCS. (FOR 1/2" ANCHOR BOLTS)

THIS DRAWING, INCLUDING THE INFORMATION IT CONTAINS, IS CONFIDENTIAL, PROPRIETARY, AND IS THE PROPERTY OF YARDNEY WATER MANAGEMENT, INC. IT IS SUBMITTED ONLY IN CONNECTION WITH THE TRANSACTION TO WHICH IT PERTAINS AND MUST NOT BE USED IN ANY OTHER MANNER DETRIMENTAL TO THE INTERESTS OF YARDNEY WATER MANAGEMENT. THE DRAWING IS NOT TO BE COPIED AND MUST BE RETURNED UPON REQUEST. COPYRIGHT YARDNEY WATER MANAGEMENT SYSTEMS, 1993.

SYM	REVISIONS	BY	DATE	APP
F	REPLACE HEAD 104018954 w/104018955	DTC	8-16	APP
E	4" DRAIN PORT CHANGED TO 6"	DTC	5-15	APP
D	UPDATED YARDNEY LOGO	DTC	1-13	APP
C	WELD TABS ON MANWAY RINGS	DTC	11-12	APP
B	ADDED 4" DRAIN PORT	DTC	11-09	APP
A	DESIGNED WITH NEMA 4 ENCLOSURE	DTC	9-06	APP

yardney WATER FILTRATION SYSTEMS
RIVERSIDE, CALIFORNIA

APPROVALS	DATE
DRAWN BY: DTC	1/22/06
CHECKED BY:	
APPROVED BY:	
ARCHITECTURAL SCALE:	
USED ON:	

IL 5424-2A
FILTER SYSTEM

SIZE	DRAWING NO:	REV:
D	9500542402	F

SCALE: | ACAD #: SYSTEMS\IL | SHEET 1 OF 1

yardney
WATER FILTRATION SYSTEMS

Multi-Media Filters

Removal of Solids Down to 5 Microns

Yardney Multi-Media filters are designed for enhanced water quality filtration for the removal of organic and inorganic suspended solids down to 5 microns. Multi-Media filters may be used as a stand-alone system or in conjunction with or as a pretreatment for other filtration technologies. The Multi-Media Filtration Systems utilize a vertical side shell depth of 60" with accompanied reverse stacked medias for progressive filtration through the filtration system. All Yardney industrial media filters utilize our simple backwash system for ease of operation and consistent water quality.

Applications

- Removal of organic and/or inorganic suspended solids down to 5 microns with enhanced solids capacity vs. single media sand filtration
- Storm water runoff, industrial process water, incoming plant water, waste water clean-up, industrial water for plant reuse
- Pre-filtration in applications such as granular activated carbon, reverse osmosis, cartridge or bag filtration and deionized water
- 80 psi standard operating pressure (high pressure systems available)
- Flow ranges from 10 gpm

Advantages

- State of the art fabrication provides added strength under pressure and long system life
- ASME code shaped head construction for durability and safety
- Stainless steel wedgewire underdrain
  - ➤ Ensures structural integrity in the harshest conditions
  - ➤ Hydraulically balanced to increase effectiveness of backwash while reducing flush frequency and waste of water
  - ➤ High strength stainless steel wedgewire will withstand a collapse pressure in excess of 600 psi
- Standard carbon steel products, 3/16" thick material
- Backwash automatically initiated by elapsed time or pressure differential
- Yardney easy-entry lid closure with weld tabs for operator safety
- Available in welded carbon steel or stainless steel
- 3M Scotchkote® 134 fusion bonded epoxy coating on interior surfaces
- Made in USA

Multi-Media Filters

Specifications

SPECIFICATIONS | INDUSTRIAL | MULTI-MEDIA FILTERS															
Model	Number of Tanks in System	Standard Flow Range				Filtration Surface Area (total sq ft)	Backwash Flow Rate (per tank)		Media Requirements (cubic feet per tank)				Maximum Pressure	Inlet/ Outlet Pipe Size	Backwash Line Pipe Size
		Minimum		Maximum											
		gpm	m^3/hr	gpm	m^3/hr		gpm	m^3/hr	Gravel 1/2" - 3/4"	Garnet 1.45 mm	Garnet 0.35 mm	Anthracite 0.75 mm			
MM-1860-1A	1	9	2	26	6	1.77	27	6	1	1	2.5	2.5	100 psi	2"	2"
MM-2460-1A	1	16	4	47	11	3.15	47	11	2	2	5	5	100 psi	2"	2"
MM-1860-2A	2	18	4	53	12	3.54	27	6	1	1	2.5	2.5	100 psi	2"	2"
MM-3060-1A	1	25	6	74	17	4.91	74	17	3	3	8	8	100 psi	3"	3"
MM-1860-3A	3	27	6	79	18	5.31	27	6	1	1	2.5	2.5	100 psi	3"	2"
MM-2460-2A	2	32	7	95	22	6.30	47	11	2	2	5	5	100 psi	3"	2"
MM-3660-1A	1	35	8	107	24	7.10	107	24	4	4	11	11	100 psi	3"	3"
MM-2460-3A	3	48	11	142	32	9.45	47	11	2	2	5	5	100 psi	3"	2"
MM-3060-2A	2	50	11	147	33	9.82	74	17	3	3	8	8	100 psi	4"	2"
MM-4860-1A	1	63	14	189	43	12.60	189	43	7	7	19	19	80 psi	4"	4"
MM-3660-2A	2	70	16	213	48	14.20	107	24	4	4	11	11	100 psi	4"	4"
MM-3060-3A	3	75	17	221	50	14.73	74	17	3	3	8	8	100 psi	4"	2"
MM-5460-1A	1	80	18	239	54	15.91	239	54	10	8	24	24	80 psi	4"	4"
MM-3660-3A	3	105	24	320	73	21.30	107	24	4	4	11	11	100 psi	4"	4"
MM-4860-2A	2	126	29	378	86	25.20	189	43	7	7	19	19	80 psi	6"	4"
MM-5460-2A	2	160	36	477	108	31.82	239	54	10	8	24	24	80 psi	6"	4"
MM-4860-3A	3	189	43	567	129	37.80	189	43	7	7	19	19	80 psi	6"	4"
MM-5460-3A	3	240	55	716	163	47.73	239	54	10	8	24	24	80 psi	6"	4"
MM-4860-4A	4	252	57	756	172	50.40	189	43	7	7	19	19	80 psi	8"	4"
MM-4860-5A	5	315	72	945	215	63.00	189	43	7	7	19	19	80 psi	10"	4"
MM-5460-4A	4	320	73	955	217	63.64	239	54	10	8	24	24	80 psi	8"	4"
MM-4860-6A	6	378	86	1134	258	75.60	189	43	7	7	19	19	80 psi	10"	4"
MM-5460-5A	5	400	91	1193	271	79.55	239	54	10	8	24	24	80 psi	10"	4"
MM-5460-6A	6	480	109	1432	325	95.46	239	54	10	8	24	24	80 psi	10"	4"

Standard product includes:

- Completely assembled for easy installation
- Skid mounted tanks
- Yardney easy-entry lid closure with side manway
- Valves
- Inlet/outlet and backwash manifolds
- Controller, solenoids, electrical wire, tubing
- Removable underdrain
- 3M Scotchkote® 134 fusion bonded epoxy coating on interior surfaces

Available options:

- ASME code
- High pressure
- Solar package
- PLC controller
- Custom filter station layout piping
- Air scour
- Continuous flow
- Rinse to waste

Made in USA

Phone: 951.656.6716
Toll-Free: 800.854.4788
Fax: 951.656.3867
info@yardneyfilters.com

yardney WATER FILTRATION SYSTEMS

www.yardneyfilters.com

© 2015 Yardney Water Management Systems, Inc. | 6666 Box Springs Blvd. | Riverside, CA 92507

MULTIPLE TANK FILTRATION PROCESS | MULTI-MEDIA

Multi-media filtration is a more effective method for removal of suspended organic and inorganic solids from water down to 5 microns. Yardney Multi-Media filters operate on a similar principle to the sand media but utilize multiple levels of coarse to fine media to achieve progressive filtration through the entire filter media bed. The coarse media within the top section of the tank filters the largest particulates while the finer media beds filter the fine particulates. This occurs until the filtration system initiates an automatic backwash to expel all contaminants entrapped within the media bed. Yardney Multi-Media filters are known for their capacity to extract and hold large amounts of water-borne particulate while continuing to deliver the rated flow of clean water.

FILTRATION PROCESS

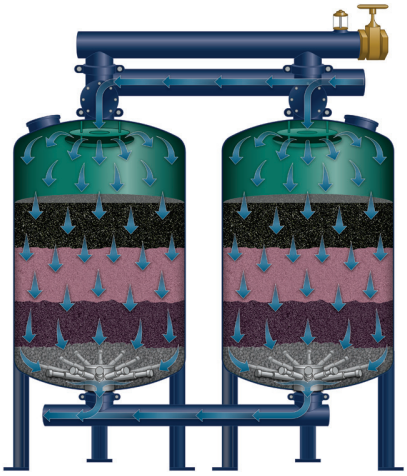

- The contaminated water enters the tank through the inlet manifold, transitioning to the Yardney 3-way valve and into the top inlet of each tank
- The Yardney two-stage deflector creates a uniform distribution for laminar flow across the media bed while avoiding channeling of the media bed
- Particulate is trapped and retained within the media bed resulting in clean process water flowing out through the stainless steel wedgewire underdrain, to the outlet of each filter tank and to the outlet manifold for end use

In addition to the Yardney filter's ability to filter large volumes of water with very little pressure drop, one of the outstanding features is the simple backwash operation. This backwashing process is possible due to the highly efficient and hydraulically balanced underdrain systems utilized in Yardney Multi-Media filters. Yardney Multi-Media filters are hydraulically designed not to commingle the multiple levels of media during a backwash cycle due to the specific gravity of each media.

BACKWASH PROCESS

- Backwash sequence is initiated by either elapsed time of the Yardney controller or pressure differential between the inlet and outlet manifolds
- Water or air pressure opens the Yardney 3-way valve causing the reverse flow of a portion of filtered water up through the stainless steel underdrain to hydraulically and uniformly lift the media bed
- The use of a hydraulically balanced underdrain in conjunction with a gravel pack creates a proper and uniform lift of the media bed while avoiding a turbulent backwash
- Entrapped particulates are released during the backwash event, exhausted through the backwash manifold and routed to a convenient location
- One tank at a time is backwashed while continuing to process water for use until the entire system is clean
- Once completed with the backwash, filtration continues until the next backwash event is called for

© 2013 Yardney Water Management Systems, Inc.

+61 1300 303 281
info@dmi65.com

HOW DMI-65 WORKS

Introduction

The purpose of this paper is to provide users of DMI-65 catalytic water filtration media with qualitative information about how the material works, its capabilities and limitations and enable them to apply the material to water treatment processes in the appropriate manner and with confidence. The paper avoids the detailed complexity of solid surface electrochemical layers and colloidal science, quantitative physical and chemical processes and reactions. For readers having already significant knowledge in this area the paper brings more understanding of what DMI-65 is and its intended use. Newcomers to this area are provided with the bases, and perhaps motivation, for directing their more in depth studies as they might wish.

History

In the early days of water treating, naturally occurring zeolites (such as glauconite greensand) were used to soften and remove the iron and manganese from boiler make-up and process waters. As the demand for higher quality water increased (due in part to higher pressure class boilers) the water treating industry largely moved away from these products for softening to the newly developed synthetic ion exchange resins.

However, in the case of iron and manganese removal this move was much slower and the result was that the use of glauconite greensand (greensand) filtration media continues until the present time. Greensand was and is often used as a pretreatment step prior to ion exchange processes since the iron in a feed water can and does foul the cation resin. Other processes include aeration and oxidation-filtration with standard media filters or proprietary types of media and/or filters

While there have been other iron/manganese removal products and processes developed since greensand was introduced the use of greensand continued even though there were several issues that made it a less than ideal media. It required periodic regeneration with potassium permanganate, could not be used in lower pH waters (<6.2), had a relatively low operating temperature (80°F), and tended to soften through time resulting in pressure drop issues at higher flow rates. Additionally, the supply could occasionally become restricted due to environmental concerns with the processing facilities along the Eastern coast of the United States.

Because of these issues in the 1970s water treating companies and end-users began to express an interest in “something else” to replace the greensand. In response to their requests, scientists and researchers in Japan began to look for ways to infuse oxidizing agents to different matrix materials. It was felt that a commercially produced product could be made more powerful, have better physical properties and be more subject to improvements and/or modifications than any naturally occurring media.

Decades of further research and development of the Japanese Infusion Technology have resulted in the uniquely Australian made product, DMI-65 a granular catalytic media used to boost the advanced reduction/oxidation (redox) processes in water. The media is part of a broad category of products deriving their physical and chemical action from the interaction of their metal oxide surface with the water molecules and ions in solution. This product is revolutionary due to proprietary infusion technology that penetrates the micro pours substrate of the matrix material, allowing for a greater catalytic surface area and of a tight particle size distribution. DMI-65 has low level of fines, a tolerance to wider pH range and chemically infused catalytic surface that won’t be consumed or diminished under normal operating conditions. Last 5 – 10 years of continuous use.

Background information

DMI-65 is an extremely powerful catalytic water filtration media that is designed for the removal of iron and manganese in aqueous solutions (water) without the need for potassium permanganate or chemical regeneration. The unique microporous structure of DMI-65 efficiently removes dissolve iron to the almost undetectable levels as low as 0.001 ppm and manganese to 0.001 ppm. DMI-65 acts as an oxidation catalyst with immediate oxidation and filtration of the insoluble precipitates derived from this oxidation reaction. DMI-65 can also remove Arsenic, Aluminium and other heavy metals and Hydrogen Sulfide under certain conditions.

The material is part of the broad category of products deriving their physical and chemical action from the interaction of their metal oxide surface with the water molecules and ions in solution.

Solid surface interaction with water distinguishes between adsorption as the weak van der Waal forces that hold a hydrophobic molecule in a rigid core media such as activated carbon and absorption as the weak van der Waal forces that hold a hydrophobic molecule in a swellable matrix (such as benzene) in a polymer of T-butyl styrene or absorption by liquid-liquid extraction. Ion exchange resins utilize absorption processes while interaction of DMI-65 with water molecules and ions in solution is initiated through adsorption.

Non catalytic type adsorbent materials retain target ions from water until either sites available for adsorption reach a maximum density and saturation or concentration of target ions in the treated water attain maximum acceptable concentration. At this point, the adsorbent material has to be regenerated to remove or replace the contaminant ions, or the used material is replaced with new material that is loaded in the treatment container. When the process works by swapping one type of ion for target ions from water the process is called ion exchange. This category of adsorbent and some partly absorbent materials remove the target ions from water. The larger the surface per volume of material the larger the amount of contaminant target ions which could be retained from the water.

Purely catalytic materials adsorb the reactant ions from solution bringing them in the proximity of chemical bonding. Then the reaction product moves away from the surface of catalyst. Strictly speaking catalysts facilitate chemical reactions; they do not implicitly remove anything. If the reaction product is a solid precipitate, often the product is retained in the catalytic bed, hence removed by filtration.

Many materials act in a mixed mode; with both ion exchange and catalytic action taking place. For those materials used primarily for their catalytic action, ion exchange resulting in dissolution of the catalytic layer leads to the need for periodic regeneration or reactivation to correct the matrix of ions at their active surface.

DMI-65 – Advanced Oxidation Catalytic Media

DMI-65 is a granular material of dark brown to black colour. This colour is produced by the manganese oxide in the outer layers of the granules. DMI-65 is a catalytic media in the true meaning of the word and facilitates oxidation – precipitation - filtration and does not get consumed in the reactions. Strictly speaking, the media facilitates chemical reactions and does not explicitly remove anything. Once oxidized, the depth filtration aspect of the media removes the solids that are then periodically backwashed out of the filter vessels.

The media does not need regeneration or reactivation and does not display a decaying capacity to do its catalytic work. Over 5 to 10 years period, through many backwashing operations of the bed to remove retained solids, the media is degraded by contact between particles and mechanical abrasion. Then the material has to be replaced.

BASIC OPERATION:

The processes that take place in a bed of DMI-65 involve reduction/oxidation (redox). Redox reactions involve a transfer of electrons between species. Reduction is the gain of electrons or a decrease in the oxidation state of a molecule, atom or ion. Oxidation is the loss of electrons or an increase in the oxidation state of a molecule, atom or ion. Redox reactions occur simultaneously whereby there cannot be a reduction reaction without an oxidation reaction. The media "helps" chemical reactions to occur by interacting with the reaction without being permanently altered. An in depth discussion about redox chemistry is outside the scope of this paper, it will only deal with how the redox process applies in the removal of iron and manganese using DMI-65. The individual redox equations will be covered in the following iron and manganese removal sections.

In order to begin the process of oxidation of the ions in solution and to ensure that the oxidative layer is not compromised the media is designed to operate in the presence of chlorine or other oxidant. In this process the oxidant removes electrons and is consumed in the process. The operator needs to ensure that there is a 0.1 – 0.3 ppm free chlorine residual in the effluent water.

Chlorine, fed as sodium hypochlorite (NaOCl) or bleach (12.5% NaOCl), is the preferred oxidant since it is relatively inexpensive, readily available around the world and it is effective. Other oxidants such as hydrogen peroxide (H_2O_2), chlorine oxide (ClO_2) or ozone can also be used so long as a residual can be measured and maintained.

Another function of the chlorine is that it keeps the media free from bacterial or slime growth. The manganese oxide catalytic surface has to remain clean so that the ions in the water can come in contact with it. At the same time, the chlorine is a source of oxygen more reactive than molecular oxygen. The following chart indicates safe levels for other water constituents that could interfere with the surface interaction.

Unlike ion exchange resins where higher regenerant dosages will increase the ion exchange capacity, chlorine residuals or concentrations higher than required to oxidize the Fe and Mn do not increase the oxidative properties of the media. Additionally, since the media is often used to pretreat waters prior to an Reverse Osmosis (RO) system a higher free chlorine residual would require more extensive post treatment to reduce the residual to protect the membranes from chlorine attack.

The DMI-65 must be activated prior to being placed into service for the first time. This activation requires a higher dosage of chlorine than used during normal operation but only has to be performed once during the initial start up. The dosage rate is 10 fluid ounces of 12.5% chlorine per cubic foot (ft^3) of the media. The activation only requires a soak of several hours but an overnight soak is preferred.

Once activated, the vessel(s) must be backwashed to remove the excess NaOCl and any fines. Since manganese oxide is one of the constituents used in the manufacture of the media an extended rinse is required at start up to remove any trace free manganese oxide residual left over from the

manufacturing process. Once the Mn level in the backwash water reaches values of 0.05 to 0.15 ppm and the free chlorine residual is set the filter is ready to be placed into service.

Media replacement due to the decreased physical filtration properties of the Media due to physical abrasion will occur before complete degradation of the catalytic layer takes place. Under normal operating conditions media life is estimated at 5 – 10 years.

Iron (Fe) precipitation and removal using DMI 65

Iron (Fe) is the fourth most common element found in the earth's crust and exists in a wide range of oxidation states from -2 to +6 although the most common states are ferrous (+2) and ferric (+3).

Ferrous salts are readily soluble. Before the ferrous iron, a dissolved solid commonly found as ferrous bicarbonate, can be removed by filtration it must be oxidized, become ferric hydroxide and in neutral pH waters precipitate out in the media bed. The catalytic surface of DMI-65 contains manganese oxide or exposes manganese and oxygen sites for adsorption of [Fe] ions that are in the water. The reaction of ferrous bicarbonate and NaOCl is almost instantaneous and the ferrous bicarbonate oxidizes (gives up an OH^-) to become the insoluble ferric hydroxide which is then removed through filtration in the catalytic surface of the media. The following redox reaction equation explains the process.

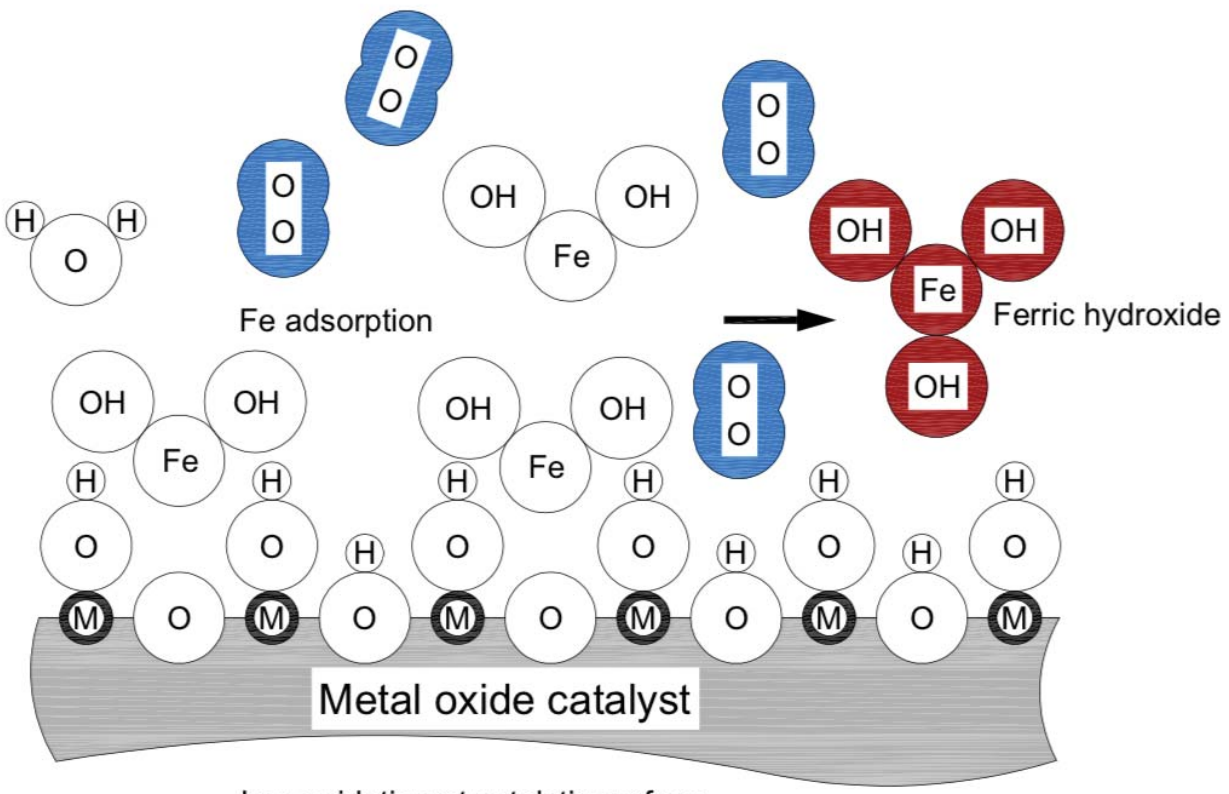

Iron oxidation at catalytic surface.

$$2Fe(HCO_3)_2 + NaOCl + H_2O \rightarrow 2Fe(OH)_2 + 2CO_2 + NaCl$$

In the above figure the catalytic surface is presented in a simplified smooth form. Letter "M" was used to represent a generic metal ion in the lattice of this surface. Letter "O", in the centre of circles, represents an oxygen atom. Various ion size and oxygen molecule (blue) are represented at true relative scale. Except the oxygen molecule, bonded irons are shown as tangent circles. The interpretation for letters and ions in the figure "Ion oxidation at catalytic surface" is:

M: generic metal ion in the catalytic surface lattice (Mn+); n = 1, 2…

O: oxygen atom or ion (O-)

Fe: iron atom or ion (Fe2+, Fe3+)

H: hydrogen atom or ion (H+)

OH: hydroxide, or hydroxyl anion (OH-)

H2O, water molecule shown as tangent circles

Fe (OH)2, ferrous hydroxide is shown as tangent circles

Fe (OH)3, ferric hydroxide, shown as tangent circles, brown colour

O2, oxygen molecule, atoms shown at covalent bonding distance, blue colour

Dissolved ferrous bicarbonate is attracted with the Fe end towards the lattice oxygen of the catalytic material. This brings the Fe in the proximity of covalent bonding with the hydroxide ion of a neighbouring site and the ferrous bicarbonate changes into insoluble ferric hydroxide which precipitates in crystalline form aggregates of size from 3 nanometre and larger. The aggregates coagulate in larger flocks and are retained in the catalytic bed.

As the ferrous bicarbonate is converted into ferric hydroxide, its concentration at the catalytic surface decreases. In the bulk of the water, away from the catalytic surface, the concentration of ferrous bicarbonate is higher resulting in it diffusing towards the lower concentration according to diffusion law. Diffusion flux is linearly dependent with concentration gradient over distance.

Dissolved oxygen contributes to production of hydroxide ions through direct oxidation of hydrogen in combination with Fe splitting the water molecule and by reacting with the hydrogen at the catalytic surface

It is important to note that although a source of oxygen is needed oxidation and precipitation of Fe is driven by the hydroxide ion. Even under relatively acidic conditions hydroxide ions (a very strong anion) are easier available for binding to Fe than oxygen. Thus, Fe is not very difficult to oxidise and precipitate around neutral pH condition. In addition, concentration of hydroxyl ions increases with pH value exponentially and so does the rate of oxidation and precipitation of Fe.

Chlorine (usually in the form of NaOCl) is a source of oxygen more reactive than molecular oxygen. The ideal residual to be maintained downstream of the catalytic filter is 0.2 mg/l (0.1 to 0.3) free chlorine. A higher residual of free chlorine and therefore higher sodium hypochlorite level in the catalytic filter does not always help. It could have an adverse effect due to venting of chlorine and an increase of competing sodium ions, Na+. The catalytic surface has to be clean so that ions in water could come in contact with it so the chlorine injected also prevents bacteria growth and blinding of the catalytic surface with slime.

+61 1300 303 281
info@dmi65.com

Manganese, Mn precipitation and removal using DMI 65

DMI-65 is a catalytic material specifically tailored to the oxidation and removal of manganese. The catalytic surface contains manganese oxide for brining into proximity of covalent bonding manganese and oxygen atoms from water. However, oxidation and removal of manganese (Mn) is vastly different from that of Fe. A major difference is caused by the solubility of manganese oxyhydroxide, $MnO(OH)_2$.

$$Mn(HCO_3)_2 + NaOCl \rightarrow MnO(OH)_2 + NaCl + 2CO_2$$

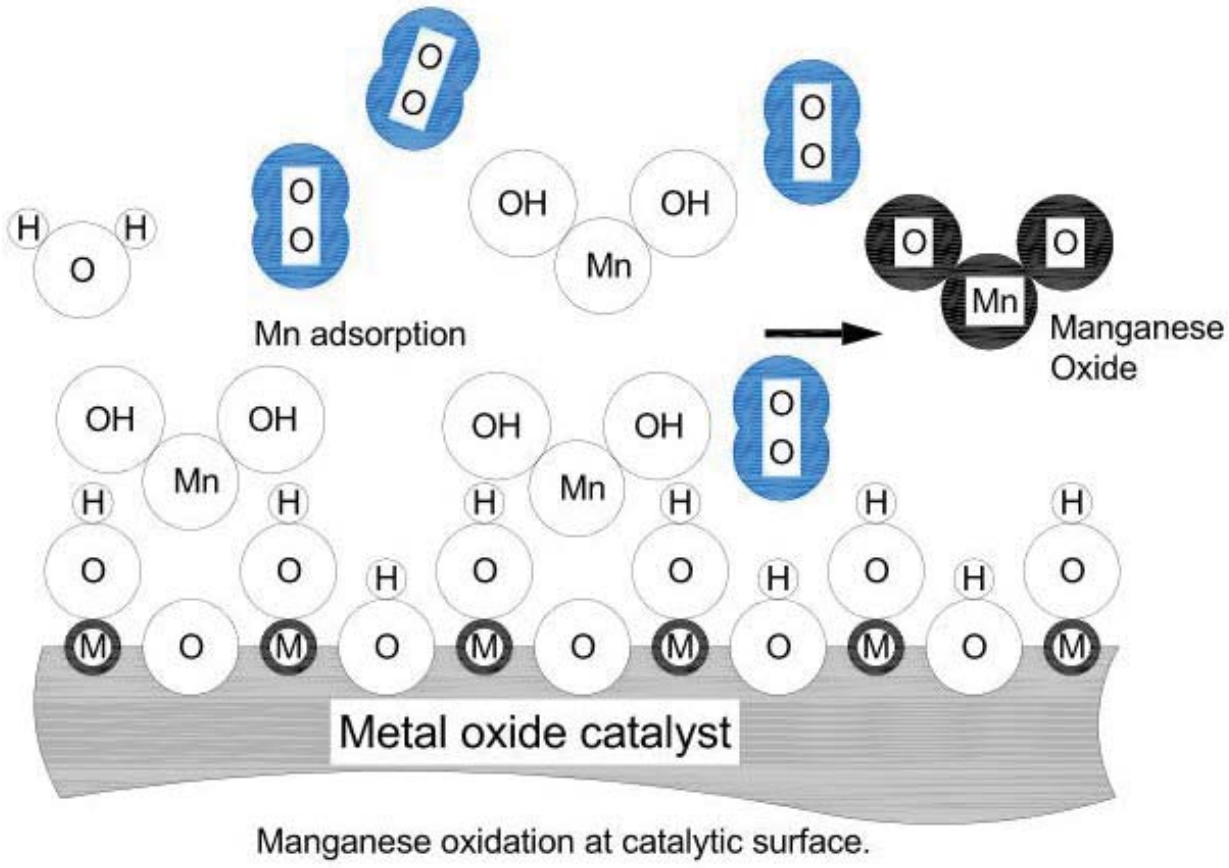

Manganese oxidation at catalytic surface.

Manganese does not precipitate as oxyhydroxide but as oxide, MnO_2 and higher valency oxides. Presence and concentration of hydroxide anions does not help much in the precipitation and removal of manganese. Manganese hydroxide will be attracted with the manganese end to the oxygen in catalytic lattice surface. An Oxygen molecule has to be available in the proximity for facilitating oxidation through the oxygen from lattice and swapping to the lattice with molecular oxygen. Conditions for this to happen are statistically less probable and reaction is of much slower rate than the oxidation of Fe via hydroxide.

While increases in pH to alkaline levels facilitates oxidation and removal of manganese, under these conditions the oxidised manganese could also dissolve back into the water. Consequently, regardless of the target contaminant to be removed, anoxic conditions have always to be avoided to protect the catalytic layer against leaching into water. When oxidising manganese the recommended pH is close to 8.

Manganese oxide has good autocatalytic effect. When backwashing it is better to stop the process before the water becomes very clear. Manganese oxide residue in the filter bed will enhance manganese oxidation.

+61 1300 303 281
info@dmi65.com

Key DMI-65 operating conditions

Treatment processes have to be conducted in such manner so that the catalytic surface of the material is kept clean and available to ion from water to contact.

Water with a large amount of suspended solids has to be clarified before passing it through the catalytic filter with DMI-65. Acceptable levels of suspended solids depends on their nature. A larger amount of mineral suspended solids than organic suspended solids could be handled.

Bacteria could grow and deposit slime on DMI-65. Thus disinfectant and oxidation conditions have to be maintained.

Water containing clays and large organic molecules may result in deposition of such material on the surface of DMI 65 and blinding of the catalytic surface. Treatment for removal of such contaminant before the catalytic filter is needed.

Polymer flocculent could also stick to the DMI-65 and blind catalytic surface.

Hard, unstable groundwater could cause scale deposition in the catalytic filter and blind the material in a solid mono bloc. In such case the DMI-65 material in the bed is lost and would have to be replaced. Treatment for stabilizing the water to prevent scale formation in the catalytic filter has to be carried out.

Both low acidic pH and anoxic conditions could cause dissolution of manganese from catalytic layer of DMI-65 and loss of its capacity. Excessively high pH means excessive concentration of hydroxyl ions (corrosive to metals) and could also cause dissolution of manganese from the catalytic layer.

Do not use demineralized water, distilled water or water known to be strongly corrosive to metals for initial soaking and activation of DMI-65.

yardney
WATER FILTRATION SYSTEMS

IMA-65 Specialty Media

Iron and Manganese Removal

IMA-65 Specialty Media is a revolutionary silica sand based filtration media designed for the removal of iron and manganese without the use of potassium permanganate. The unique micro porous structure of IMA-65 efficiently removes dissolved iron to as low as 0.005 ppm and manganese to 0.001 ppm. After initial activation, the IMA-65 acts as an oxidation catalyst with immediate oxidation and filtration of the insoluble precipitates. The media has been used extensively in a wide variety of applications in Japan for over 30 years. IMA-65 has been tested and certified by the Water Quality Association in accordance with NSF/ANSI 61.

Advantages

- **Eliminates Potassium Permanganate.** Operates with continuous injection of sodium hypochlorite at low residual levels (0.1 to 0.3 ppm).
- **Wide pH range.** Stable and satisfactory performance at pH 5.8 to 8.6.
- **High Flow Rates.** IMA-65 can operate at linear filtration velocities up to twice that of conventional media with a corresponding reduction in capital equipment costs.
- **Higher Operating Temperatures.** Maximum operating temperature of 113 °F (45 °C).
- **Long Life.** IMA-65 is not consumed in the process, providing considerable advantages over other processes or media.
- **Regeneration Not Required.** After initial activation, only sodium hypochlorite feed is required.
- **System Compatibility.** Physical properties are similar to that of competitive media, allowing conversion to IMA-65 without major hardware modifications.
- **Arsenic Removal.** IMA-65 has been shown to be effective in the removal of arsenic associated with iron-containing influent. If necessary, ferric chloride can be introduced to treat waters with low influent iron levels or to enhance removal when treating waters with high levels of arsenic.

SPECIFICATIONS | IMA-65 SPECIALTY MEDIA			
Physical Properties		Operating Conditions	
Color	Brown to black	pH range	5.8 – 8.6
Bulk density	92.0 lbs./cu. ft.	Maximum water temp	113 °F (45 °C)
Specific gravity	2.7	Minimum bed depth	24 inches (600 mm)
Effective size	0.48	Freeboard	40% minimum
Uniformity coefficient	<1.8	Service flow rate	2 – 12 gpm per sq. ft.
Mesh size	20 – 45	Backwash flow rate	10 – 20 gpm per sq. ft.
Annual attrition	1-5%	Backwash expansion	15 – 50%

Engineering (Hydraulic) Data

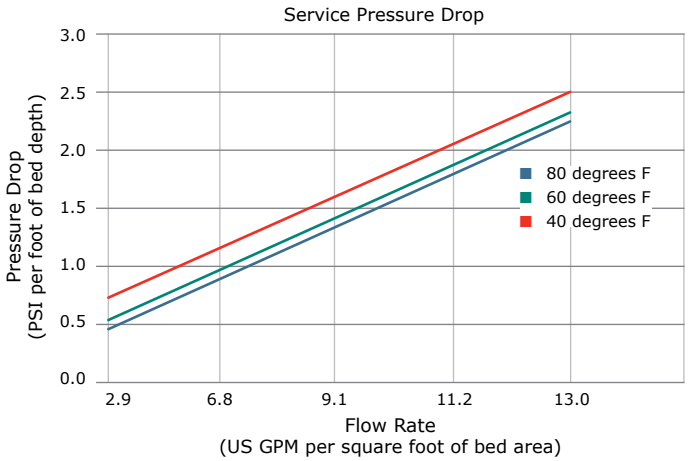

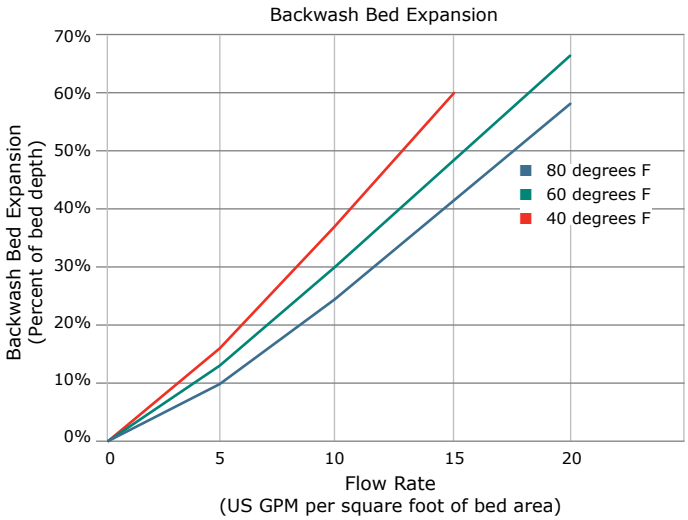

Phone: 951.656.6716
Toll-Free: 800.854.4788
Fax: 951.656.3867
info@yardneyfilters.com

www.yardneyfilters.com

© 2016 Yardney Water Management Systems, Inc. | 6666 Box Springs Blvd. | Riverside, CA 92507

MODEL MM 5460-2A

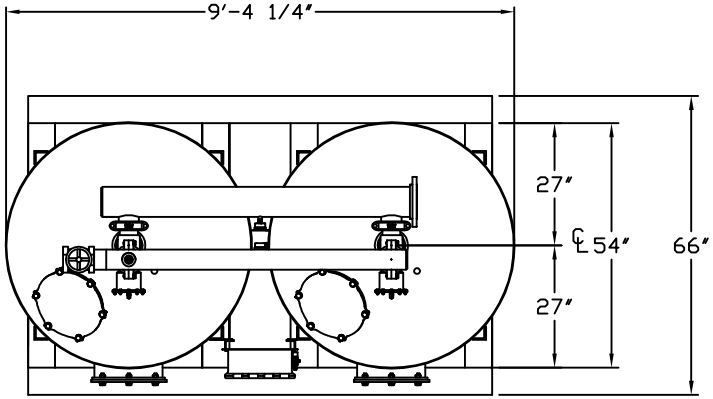

NOTES:

1. FLOW RATE DESIGN: 160-477 GPM; MAX TO 636 GPM
2. MAXIMUM WORKING PRESSURE: 80 PSI.
3. ELECTRICAL REQUIREMENTS:
   CONTROLLER 120V;
   SOLENOIDS 24VAC; FACTORY WIRED
4. AIR SUPPLY REQUIRED: 2 CFM @ 70 PSIG (MIN.).
5. MEDIA REQUIREMENT PER TANK:
   A. 1/2"x3/4" CRUSHED ROCK: 9.5 CU. FT. ,
   B. 1.45mm GARNET: 8.0 CU. FT. ,
   C. 0.35mm GARNET: 24.0 CU. FT. ,
   D. 0.75mm ANTHRACITE: 24.0 CU. FT. ,
6. WEIGHTS: (APPROX.)
   EQUIPMENT: 2,710 LBS (LESS MEDIA)
   MEDIA: 12,746 LBS
   OPERATION: 22,850 LBS

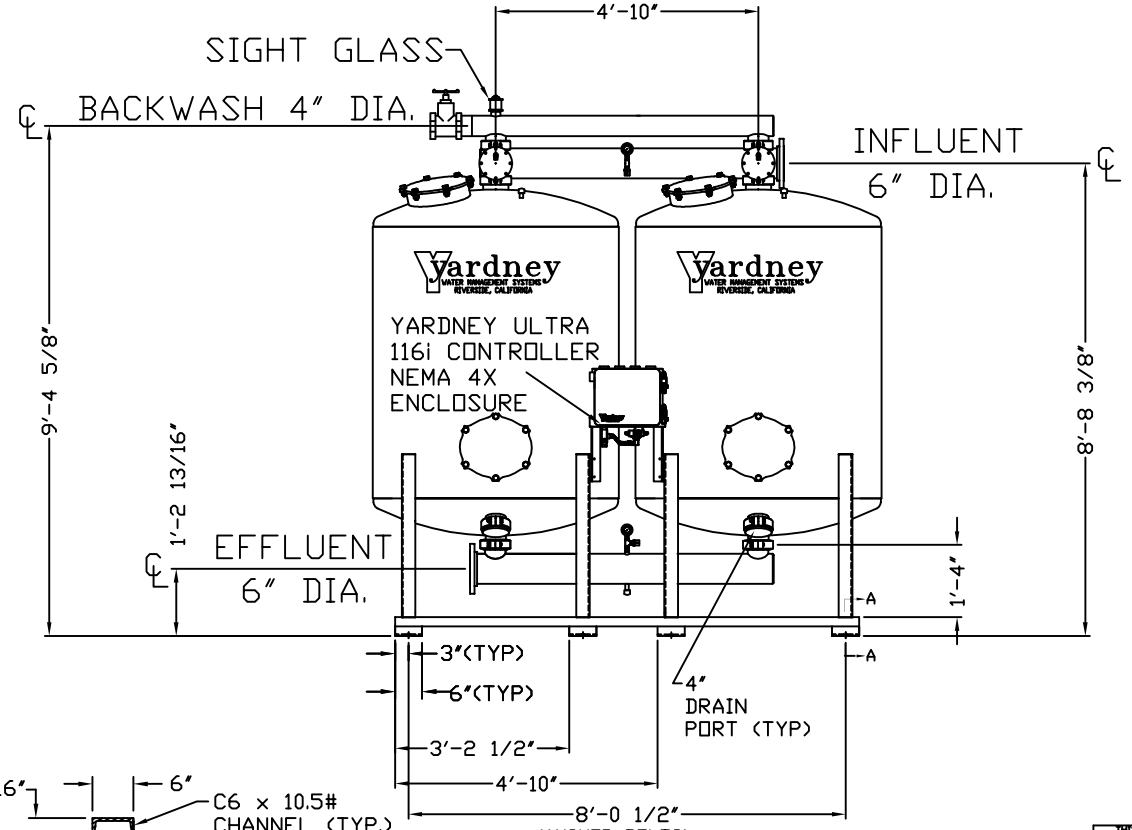

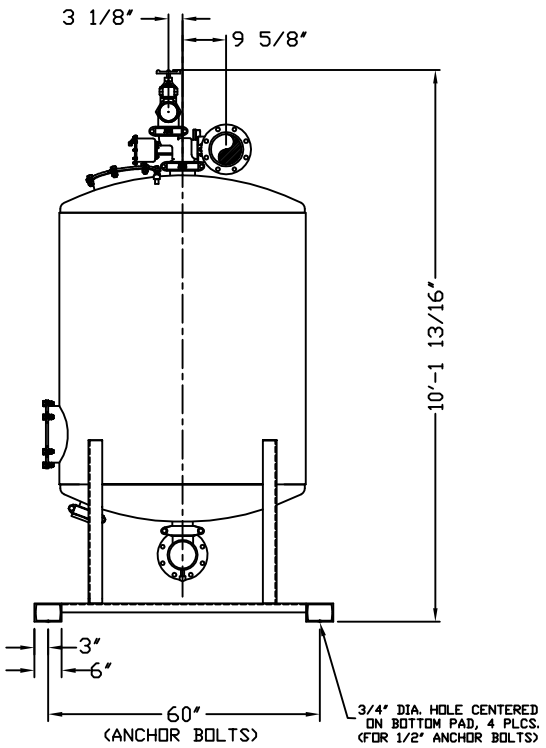

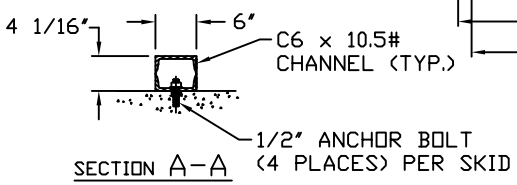

SECTION A-A

THIS DRAWING, INCLUDING THE INFORMATION IT CONTAINS, IS CONFIDENTIAL, PROPRIETARY AND IS THE PROPERTY OF YARDNEY WATER MANAGEMENT, INC. IT IS SUBMITTED ONLY IN CONNECTION WITH THE TRANSACTION TO WHICH IT PERTAINS AND MUST NOT BE USED IN ANY OTHER MANNER DETRIMENTAL TO THE INTERESTS OF YARDNEY WATER MANAGEMENT. THE DRAWING IS NOT TO BE COPIED AND MUST BE RETURNED UPON REQUEST. COPYRIGHT YARDNEY WATER MANAGEMENT SYSTEMS, 1994

DO NOT SCALE DWG

Yardney WATER MANAGEMENT SYSTEMS RIVERSIDE, CALIFORNIA

SYM	REVISIONS	BY	DATE	APP
E	ADDED 4" DRAIN PORT	DTC	11-09	APP
D	ADDED SIGHTGLASS	DTC	8-07	APP
C	REVISED SKID TO STANDARD	DTC	11-06	APP
B	CORRECTED GPM FLOW RATES	DTC	10-05	APP
A	STANDARDIZED NOTES	DTC	9-05	APP

APPROVALS DATE
DRAWN BY K.A.T. 6/17/94
CHECKED BY
APPROVED BY
ARCHITECTURAL SCALE:
USED ON

MODEL MM 5460-2A

SIZE D | DRAWING NO: 9500546002 | REV: E

SCALE: | DWG SIZE SYSTEM\MM | SHEET 1 OF 1

Attachment 3

Design Calculations for Chlorine Injection

Configurable Dosing Tank Station

Storing and dosing liquid chemicals

General

Dosing is precision work and one of the main tasks in chemical and process engineering as well as water treatment. Thus dosing requires precise adjustment of the pump and its accessories to the process parameters of the respective application. DIGITAL DOSING™ pumps are delivering an optimal performance in these application fields.

As they are easy to install, DTS dosing tank stations are the first choice in the matter of economic efficiency when adding liquids such as coagulants, disinfectants or neutralising agents to a process in a precise and controlled way.

DTS dosing tank stations are intended for storing and dosing liquids. Many different configurations can be selected flexibly to fulfil various dosing tasks. Due to the use of high-quality materials, DTS dosing tank stations can be employed for diverse dosing liquids. The selection of materials can be adapted via the configuration.

Components and features

- Chemically resistant tank made of UV-stabilised, semitransparent or black polyethylene, in 6 sizes from 60 to 1000 litres, with embossed litre scale and PE screw cover
- PE collecting tray
- Handheld mixer or electric stirrer (230 V, 50 Hz) with level switch for dry-running protection
- Rigid suction lance or foot valve made of PE, with 2-step level switch for dry-running protection, suction line to the dosing pump
- PVC or PP injection unit with G 1/2 process connection
- PE or PVC discharge line (10 m)
- Drain valve
- Filling armature with ball valve (for all tank sizes) or dissolving hopper (from 200 l)
- Multi-function valve
- Prepared for the installation of a dosing pump DDA, DDC, DDE, DMX 221 or DDI 60-10 including necessary assembly material (connectors, click-plate and screws depending on pump type)

Note:
Dosing pumps are not comprised in a standard delivery. They have to be ordered separately.

Applications

- Dosing of biocides and inhibitors into cooling water
- Dosing of lyes and acids for pH regulation
- Dosing of coagulants, such as ferric(II)chloride or ferric(III) chloride, for waste water treatment
- Dosing of hypochlorite
- Dosing of cleaning agents and disinfectants (CIP, cleaning machines)

Type key

Example	DTS	100	T	1	0	3	4	RE	E	4	A	1	H

Product type
DTS Dosing Tank Station

Tank size
60 60 litres
100 100 litres
200 200 litres
300 300 litres
500 500 litres
1000 1000 litres

Tank colour
T Transparent
B Black

Collecting tray
0 Without
1 Collecting tray

Screw cover
0 Black screw cover without lock

Mixer or stirrer
0 Without
1 Handheld mixer, PE
2 Electric stirrer, stainless steel
3 Electric stirrer, PP, with sealing flange

Preparation for dosing pump
0 Without
1 Preparation for DMX 221 up to 50 l/h
3 Preparation for DDI 60-10
4 Preparation for SMART Digital DDA, DDC, DDE

Suction line
WO Without
RV Rigid suction lance PE/V
RE Rigid suction lance PE/E
RT Rigid suction lance PE/T
FV Foot valve with flexible suction line PE/V
FE Foot valve with flexible suction line PE/E
FT Foot valve with flexible suction line PE/T

Discharge line
A Without
B 10 m of PE hose 4/6 mm (up to 7.5 l/h)
C 10 m of braided PVC hose 6/12 mm (up to 30 l/h)
D 10 m of PE hose 9/12 mm (up to 60 l/h)
E 10 m of PE hose 6/9 mm (up to 30 l/h)

Injection unit (G 1/2 process connection)
0 Without
1 Injection unit PVC/V/C
2 Injection unit PP/V/C
3 Injection unit PVC/E/C
4 Injection unit PP/E/C
5 Injection unit PVC/T/C

Drain valve (not with collecting tray)
A Without
B Drain valve PVC/E

Filling device
0 Without
1 Filling armature PVC/E with ball valve
2 Dissolving hopper

Multi-function valve
A Without
G Multi-function valve PV/V
H Multi-function valve PV/E
I Multi-function valve PV/T

Components overview

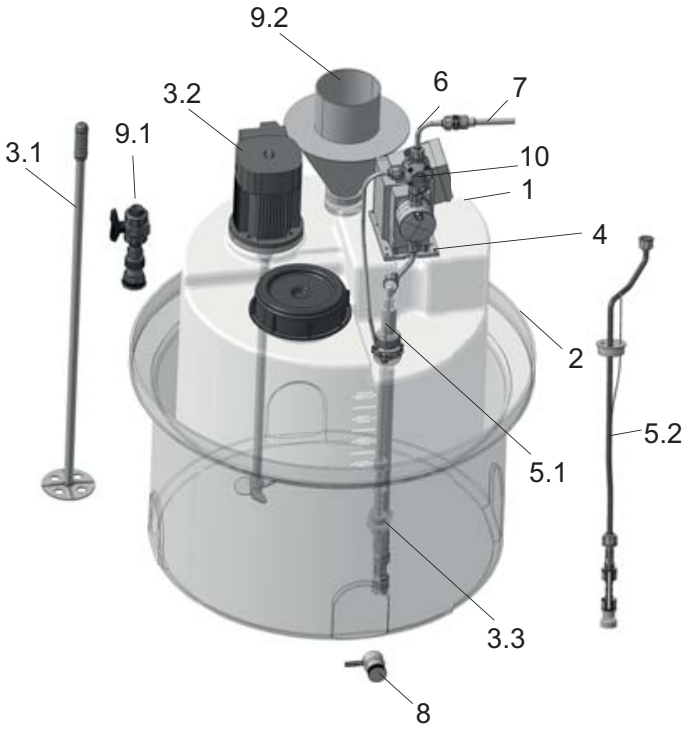

1 Tank
2 Collecting tray
3.1 Handheld mixer
3.2 Electric stirrer
3.3 Level switch for electric stirrer
4 Installation material
5.1 Rigid suction lance with connection to the pump
5.2 Foot valve with flexible suction line
6 Discharge line
7 Injection unit
8 Drain valve
9.1 Filling armature with ball valve
9.2 Dissolving hopper
10 Multi-function valve

95715959 0914 ECM: 1139925

The name Grundfos, the Grundfos logo, and be think innovate are registered trademarks owned by Grundfos Holding A/S or Grundfos A/S, Denmark. All rights reserved worldwide.

GRUNDFOS Holding A/S
Poul Due Jensens Vej 7
DK-8850 Bjerringbro
Tel: +45 87 50 14 00
www.grundfos.com

GRUNDFOS

FROM THE INVENTOR OF DIGITAL DOSING™

SMART Digital
DDA – DDC – DDE
Modular. Simple. Intelligent.

be
think
innovate

GRUNDFOS

SMART Digital

Now it’s time to break the barriers of conventional dosing

A new era of dosing technology

Chemistry in water treatment, water and wastewater recycling and disinfection has experienced a huge development during the last years, and this poses a challenge for today’s dosing technology. More and more complex applications require intelligent dosing pumps with new drives or new control and adjustment mechanisms to simplify the operators’ job.

SMART Digital dosing pumps meet these challenges. They offer state-of-the-art drive technology, new dimensions of user-comfort and intelligent flow control. These features ensure extremely reliable, cost-effective and high-precision processes at an optimum price-performance ratio.

Reliable processes ✓
Unique user-friendliness ✓
Simple Plug’n’Play ✓

Designed to save costs and to protect the environment

In general, the investment for a dosing pump installation is low compared to its life cycle costs. Low operation costs and longer maintenance intervals combined with an extremely high dosing accuracy make SMART Digital the perfect partner for:

- Saving chemicals with high dosing accuracy and FlowControll
- Saving energy with latest drive technology and improved electronics
- Saving maintenance costs thanks to the universal chemical resistance of the full-PTFE diaphragm and Digital DosingTM
- Saving natural resources with new composite materials and sustainable production processes

Optimal cost control ✓
Environment-friendly ✓

Processes

SMART Digital can be used in a wide range of processes...

- Disinfection
- pH-adjustment
- Chemical dosing
- Cleaning-in-place
- Biocides
- Coagulation
- Precipitation/Flocculation
- Filtration
- Reverse osmosis

Application areas

... within a vast field of application areas:

- Ground water
- Surface water
- Drinking water
- Process water
- Recreational water
- Recycle & reuse

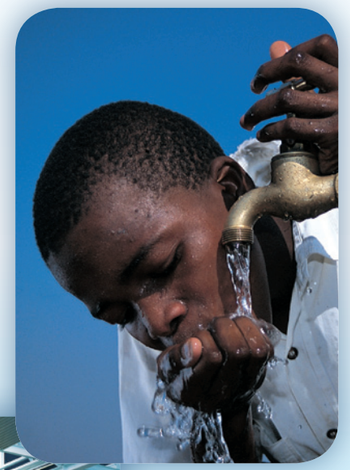

SMART Digital
The perfect system

Simplicity

Precise and easy setup. Intuitive user interface. Simple handling and perfect overview and control even from the distance – it's always easy to handle our SMART Digital!

- Intuitive and self-explanatory menu
- Click wheel (turn-and-push knob)
- Big graphical LCD with four colour "traffic light" concept
- More than 25 languages

Intelligent and intuitive handling saves time and cost – ensuring a seamless integration in all workflows ✓

Modularity

Requirements change, demands grow, and capacities vary – **SMART Digital fits into every environment and situation!**

- Turn-down ratio up to 1:3000 with a dosing spectrum of 0.0025 – 30 l per hour
- Click-stop mounting plate for quick and variable installation
- Control cube can be positioned in three ways (left, right, front)
- Using switch-mode power supply, the SMART Digital model DDA is independent from regional voltages

Highest performance in all operating conditions and a flexible concept you can always rely on ✓

MODULARITY
SIMPLICITY
FLOW INTELLIGENCE

SMART Digital
High performance is our standard

Flow Intelligence

Full control under all conditions. Highest process reliability – at any time with SMART Digital!

- FlowControl with selective fault diagnosis
- Pressure monitoring
- Flow measurement
- AutoFlowAdapt

Groundbreaking flow intelligence guarantees highest process reliability ✓

Digital Dosing™

The SMART Digital generation DDA, DDC and DDE with powerful variable-speed stepper motors brings state-of-the-art technology to perfection.

Combined expert knowledge and the new patented solutions set future standards. Traditional technologies such as stroke length/stroke frequency adjustment with synchronous motor or solenoid drive become a thing of the past.

- Powerful variable-speed stepper motor
- Internal stroke speed control
- Turn-down ratio up to 1:3000
- Always full stroke length – even at small flow rates
- Smooth, continuous dosing
- Optimal for degassing liquids
- SlowMode function for high-viscosity liquids

New patented solutions set future standards ✓

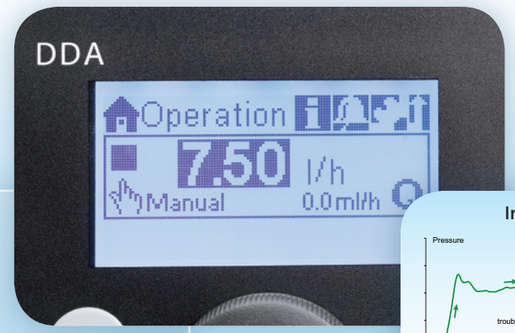

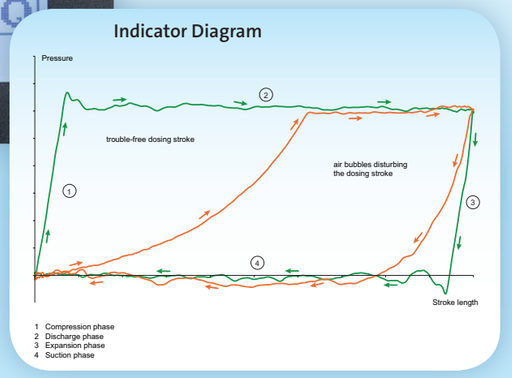

MODULARITY
SIMPLICITY
FLOW INTELLIGENCE

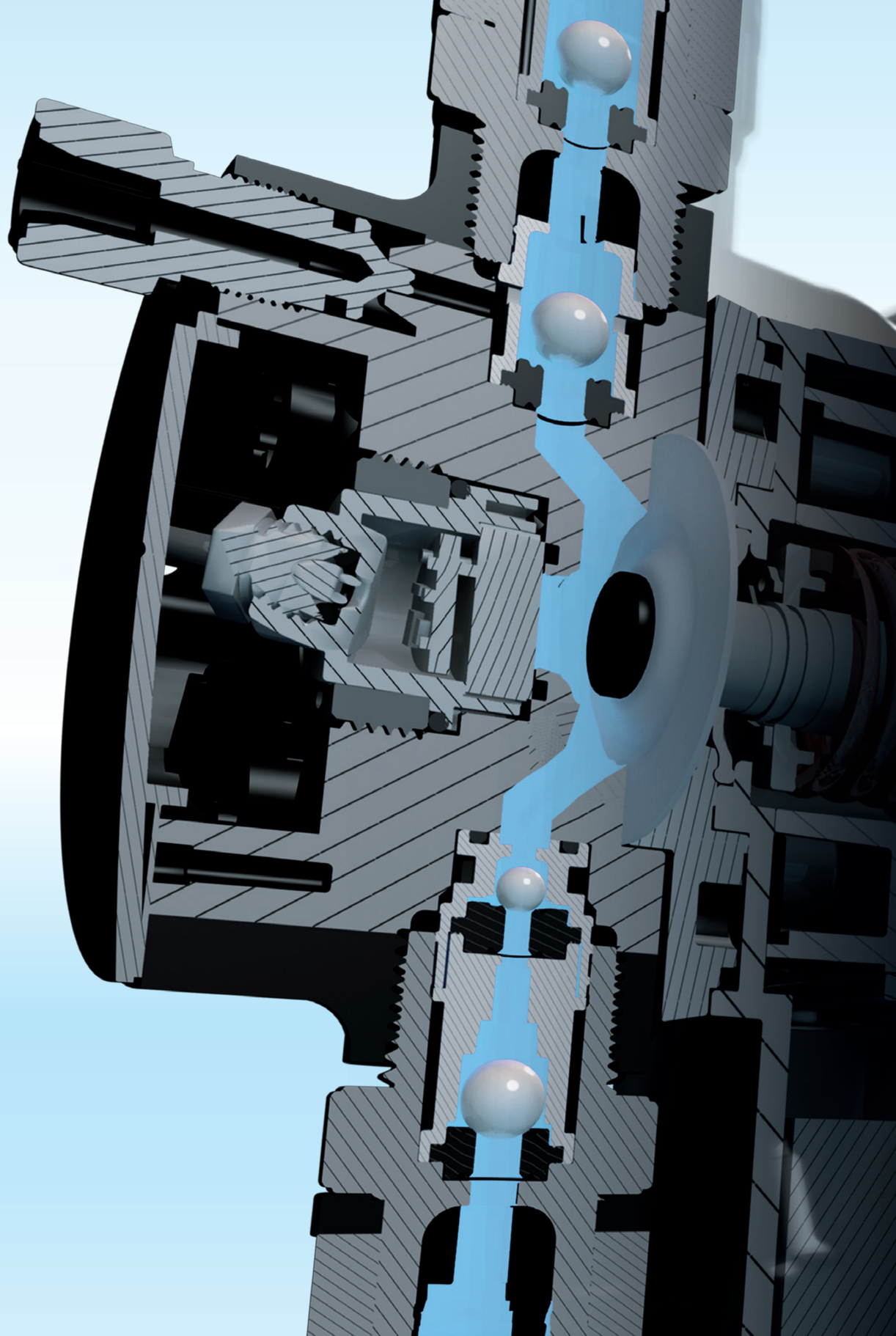

SMART Digital DDA, DDC, DDE

Perfect solutions for vast market segments

DDA

This high-end DDA pump range is designed for complex and demanding applications. Whether degassing liquids, flow rates down to 2.5 ml/h or advanced process control are required, this pump offers the perfect solution:

- Max. 30 l/h and 16 bar
- Turn-down ratio 1:3000 (7.5-16) or 1:1000
- FlowControl with selective fault diagnosis
- Integrated flow measurement
- AutoFlowAdapt
- Auto deaeration also during pump standby
- Batch modes (timer- or pulse-based)
- Optional E-box for Profibus DP integration

Please see next page for further details.

DDC

The DDC pump range is the optimum solution for common applications. The easy-to-use interface with the click wheel makes the setup and operation as easy as your car radio system:

- Max. 15 l/h and 10 bar
- Turn-down ratio 1:1000
- Graphical LC display backlit in different colours
- More than 25 languages
- Standard operation modes, e.g. pulse and analog
- SlowMode for high viscosity liquids
- 2 integrated relay outputs

Please see next page for further details.

DDE

The DDE offers Digital Dosing with basic functions even for a low budget for easier applications. Now just 2 pump models cover a range where 12 or more were needed in the past:

- Max. 15 l/h and 10 bar
- Turn-down ratio 1:1000
- Smooth continuous dosing
- Always 100 % suction stroke
- Capacity setting 0.1-100 %
- Simple pulse operation mode
- External stop and empty tank alarm

Please see next page for further details.

Performance range

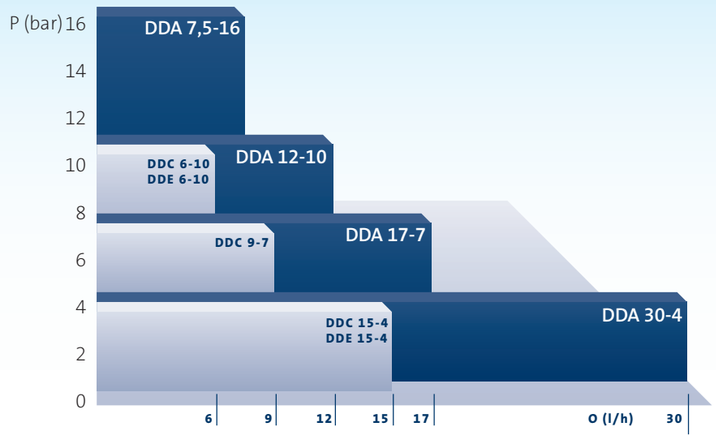

Overview of functions

Control variant:	DDA FCM	DDA FC	DDA AR	DDC AR	DDC A	DDE PR	DDE P	DDE B
General								
Digital Dosing: Internal stroke speed and frequency control	●	●	●	●	●	●	●	●
Mounting plate (basic / wall mounting)	●	●	●	●	●	●	●	●
Supply voltage 100-240 V, 50-60 Hz	●	●	●	●	●	●	●	●
Enclosure class IP 65, Nema 4X	●	●	●	●	●	●	●	●
Control panel								
Control cube mountable in three positions: front, left, right	●	●	●	●	●			
Control panel position: front-fitted						●	●	●
Transparent protective cover for control elements	●	●	●	●	●			
Capacity setting in millilitres, litres or US-gallons	●	●	●	●	●			
Graphical display with background light in four colours for status indication: white, green, yellow, red	●	●	●	●	●			
Plain-text menu in different languages	●	●	●	●	●			
Turn-and-push knob (click wheel) for easy navigation	●	●	●	●	●			
Capacity adjustment knob (0.1 - 100 %)						●	●	●
Start / Stop key	●	●	●	●	●			
100 % key (deaeration)	●	●	●	●	●	●	●	
Operation mode switch (manual / pulse)						●	●	
Operation modes								
Manual speed control	●	●	●	●	●	●	●	●
Pulse control in ml/pulse	●	●	●	●	●			
Pulse control (1:n)						●	●	
Analog control 0/4-20 mA	●	●	●	●				
Batch control (pulse-based)	●	●	●					
Dosing timer cycle	●	●	●					
Dosing timer week	●	●	●					
Fieldbus control	●	●	●					
Functions								
Auto deaeration also during pump standby	●	●	●					
FlowControl system with selective fault diagnosis	●	●						
Pressure monitoring (min / max)	●	●						
Flow measurement	●							
AutoFlowAdapt	●							
SlowMode (anti-cavitation)	●	●	●	●	●			
Calibration mode	●	●	●	●	●			
Scaling of analog input	●	●	●					
Service information display	●	●	●	●	●			
Relay setting: alarm, warning, stroke signal, pump dosing	●	●	●	●		●		
Relay setting (additionally): timer cycle, timer week	●	●	●					
Inputs/outputs								
Input for external stop	●	●	●	●	●	●	●	
Input for pulse control	●	●	●	●	●	●	●	
Input for analog 0/4-20 mA control	●	●	●	●				
Input for low-level signal	●	●	●	●	●	●	●	
Input for empty tank signal	●	●	●	●	●	●	●	
Output relay (2 relays)	●	●	●	●		●		
Output analog 0/4-20 mA	●	●	●					
Input / Output for GeniBus	●	●	●					
Input / Output for E-box (Profibus DP or additional alarm relays)	●	●	●					

SMART Digital
Accessories and Service

E-Box Profibus DP

With the additional E-Box module, the pump can be easily integrated in a Profibus DP network. This enables remote monitoring and setting via the fieldbus system. Just click the E-box in between the DDA pump and the mounting plate. With the plug and play solution, DDA pumps can also be easily retrofitted.

General pump accessories

A wide range of accessories is available for the SMART DIGITAL pump range, among others:

- Installation kit including foot valve, injection unit and hose
- Multi-function valve (PVDF)
- Rigid suction lance (PE, PVDF) with low level and empty tank signal
- Foot valve for flexible suction line (PE, PVDF, stainless steel)
- Injection unit (PP, PVC, PVDF, stainless steel) in different designs
- Hose in PVC, PE, ETFE in different sizes
- Signal cables for all inputs and outputs
- Dosing tanks in different sizes

All components have been especially designed for and adjusted to the new SMART Digital pumps.

Only original SMART accessories can guarantee optimum dosing results.

Service

The following service kits are obtainable (for PP, PVC, PVDF and stainless steel):

- Complete dosing head kit
- Valves and diaphragm kit
- Valve kit
- Diaphragm kit

Please see service catalogue for further service kits and details.

SMART Digital pumps have outstandingly long maintenance intervals.

Wear and tear parts which have been in contact with the media only have to be replaced after 8000 operating hours (or after two years at the latest).

Shorter intervals might be necessary for highly-abrasive media.

ALL THE INFORMATION YOU NEED IS ONLINE

Grundfos WebCAPS is an online product selection tool, but it offers much more than that. The site compiles all the product-related information you could ever need.

What you can find in WebCAPS

Catalogue – includes all products available in your region, complete with technical information, drawings, descriptions, performance curves, etc.

Literature – find everything from data booklets through installation & operating instructions to product brochures.

Service – the place to find service instructions (including video tutorials), service parts lists, assembly drawings, etc.

Sizing – enter your system requirements for instant recommendations. Includes Life Cycle Cost calculations.

Replacement – enter the make and model of your old pump for an instant replacement recommendation.

CAD drawings – download DXF and DWG files as required.

For offline use, WinCAPS is a CD-ROM version of WebCAPS. Contact Grundfos to order.

GRUNDFOS **WEBCAPS** GRUNDFOS **WINCAPS**

Our new SMART Digital pump family can be flexibly installed in various positions due to its modular construction. With its user-friendly display and menu-structure, the pump is easy to operate. The integrated flow intelligence assures safe and continuous processes, making it an absolutely reliable pump.

On top of that, you save TIME and MONEY when opting for SMART Digital.

You save TIME:

- Easy commissioning and service due to the click-stop mounting plate
- Self-explanatory user-interface, comparable to a car-radio system
- Plain-text display for failure indication: no need
- for time-consuming fault analysis
- Quick commissioning without reading the I/O
- Easy process control thanks to the intelligent flow management functions

You save MONEY:

- No additional installation parts needed due to the click-stop mounting plate
- High accuracy saves chemicals
- The required target flow is always achieved due to the AutoFlowAdapt, FlowControl and flow measurement functions; additional monitoring and control devices are made redundant
- Intelligent flow management prevents expensive process breakdowns

95726831/0812

The name Grundfos, the Grundfos logo, and be think innovate are registered trademarks owned by Grundfos Holding A/S or Grundfos A/S, Denmark. All rights reserved worldwide.

GRUNDFOS Holding A/S
Poul Due Jensens Vej 7
DK-8850 Bjerringbro
Tel: +45 87 50 14 00
www.grundfos.com

GRUNDFOS WATER TREATMENT GMBH
Reetzstr. 85
D-76327 Pfinztal
Tel: +49 7240 61 0
wt.grundfos.com

The name Grundfos, the Grundfos logo, and the payoff Be–Think–Innovate are registrated trademarks owned by Grundfos Management A/S or Grundfos A/S, Denmark. All rights reserved worldwide.

GRUNDFOS

Attachment 4

Clarifier Equipment Specification

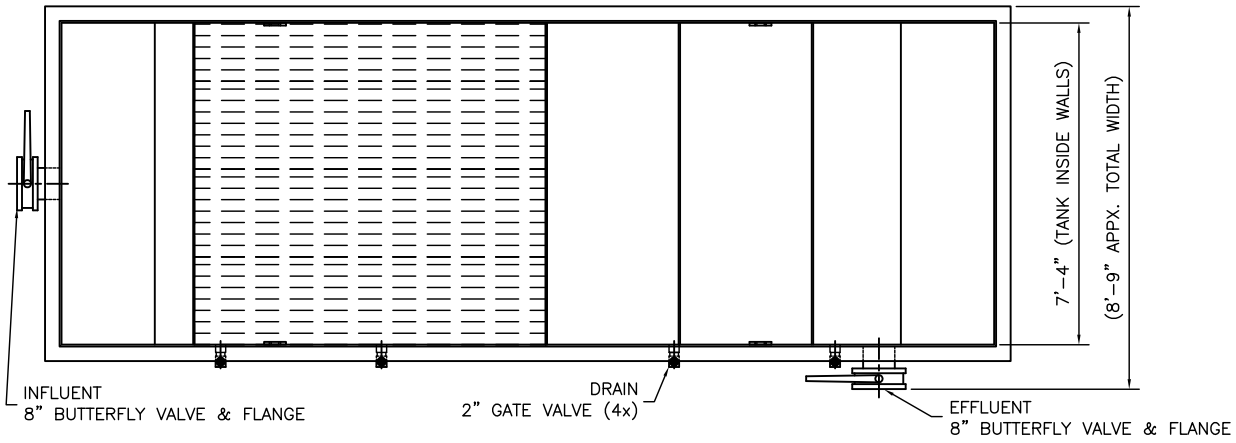

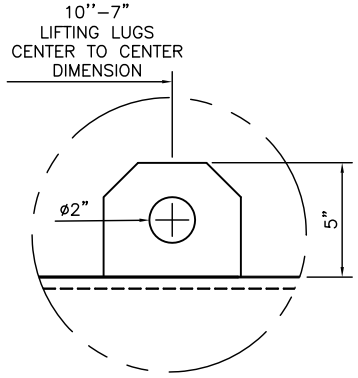

LIFTING LUG
DETAIL (TYP.)

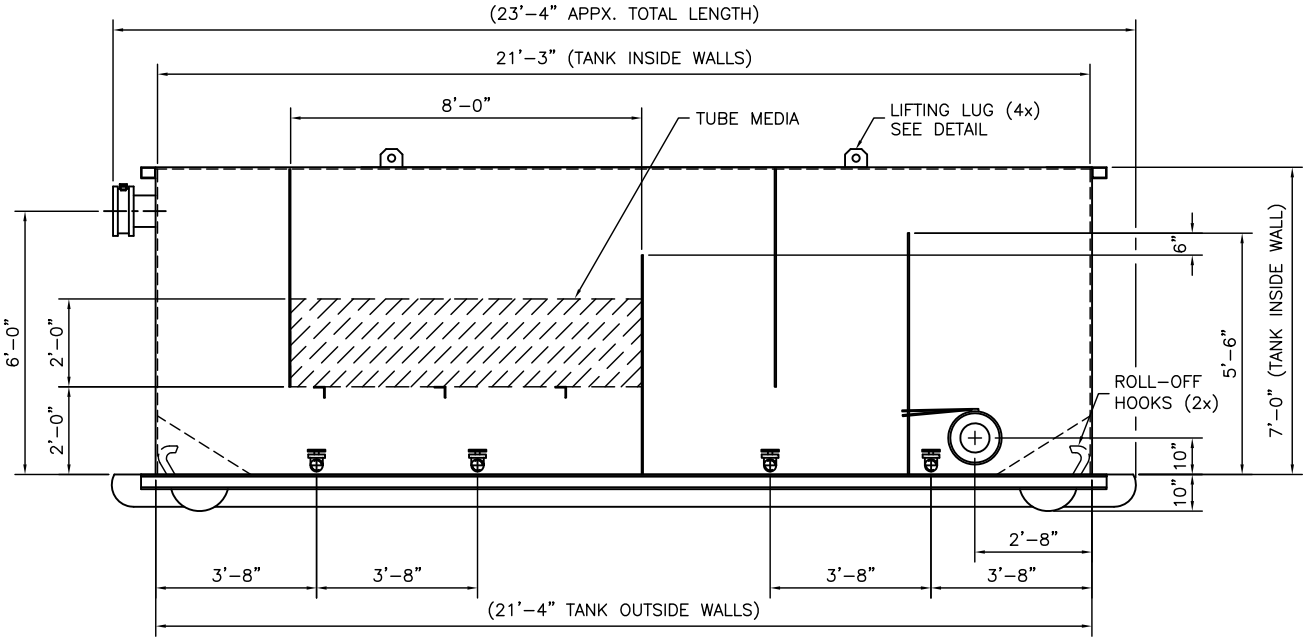

40 YARD ROLL-OFF SETTLING TANK SPECIFICATIONS

– NOMINAL VOLUME:	8,000 GALLONS
– OPERATING VOLUME:	6,250 GALLONS
– DESIGN FLOW RATE:	300 GPM
– TANK CONSTRUCTION:	A-36 CARBON STEEL
– INLET CONNECTION:	8" FLANGE
– OUTLET CONNECTION:	8" FLANGE
– DRAINS (4x):	2" GATE VALVES
– APPX. TANK WEIGHT (EMPTY):	20,000 Lbs.
– APPX. TANK WEIGHT (OPERATING):	75,000 Lbs.
– TUBE SETTLERS:	ACCU-PAC IFR-6024

NO.	REVISIONS	DATE
A	TYPICAL	02/24/09

40 YARD ROLL-OFF SETTLING/CLARIFIER STANDARD EQUIPMENT SPECIFICATION

SCALE: NTS	APPROVED BY: JB	DRAWN BY: AAV	
DATE: 02/24/09			

GROUND/WATER TREATMENT & TECHNOLOGY
P.O. BOX 1174
DENVILLE, NJ 07834

THIS DRAWING IS THE PROPERTY OF
GROUND/WATER TREATMENT & TECHNOLOGY, INC

DWG SIZE: A	SHEET: 1 OF 1	DRAWING NUMBER: ST-0067-SPC	A

T:\Cad Files\Rentals - STANDARD DRAWINGS\EQUIPMENT SPECIFICATION\TANKS\ST-0067-SPC Rev-A 40 Yard Roll-off Settling-Clarifier Tank.dwg

Attachment 5

Hydraulic Analysis

Sand Filter Addition – Differential Pressure Model Outputs

The following is a presentation of a differential pressure model of the groundwater treatment system (GWTS) located at Kirtland Air Force Base, New Mexico. The model assumes a flow rate on 400 gallons per minute (gpm) on each individual treatment train. Each individual treatment train are modelled individually and are assumed to be of the same piping make up (lengths of pipe, number of valves, etc.). Table 1 shows the model outputs for an individual treatment train's head loss due to piping and equipment. Equipment refers to the flow meter, sand filter(s), bag filter(s), and granular activated carbon (GAC) vessels. The following is a list of important assumptions:

1. The model assumes that 200 gpm will pass through the parallel sand filters and bag filters uniformly.
2. All piping is assumed to be carrying 400 gpm and the separated sections of 200 gpm pipe are modeled as containing 400 gpm flow (yielding a more conservative estimate) except for the piping in the pump skid branch. The pump skid branch (branch 2) was modeled assuming a flowrate of 200 gpm as this branch does not contain large sections of 400 gpm piping but does contain reducers and enlargers that are largely influenced by flowrate. See Table 1 for the corresponding difference between the 400 and 200 gpm models.

Table 1. Head Loss Totals

	Piping Head Loss at 400 gpm from Influent to Effluent Tanks and 200 gpm from Influent to Clarifier[a] (psi)	Influent Skid Head Loss at 200 gpm from Influent to Effluent Tanks and 100 gpm from Influent to Clarifier[b] (psi)	Equipment Head Loss[c] (psi)	Total Head Loss[d] (psi)	Total Head Loss (ft)
Influent Tank to Effluent Tank	13.5	1.78	37	62.74	144.71
Influent Tank to Clarifier	4.7	0.45	20	30.18	69.61

[a] Piping head loss differs from the model calculations in that the model includes a 3" to 2" nominal reducer (accounting for 10.495 psid at 400 gpm) in branch 2 which is actually incorporated in the pump. Thus the reducer is included in the pump efficiency and has been removed from the piping head loss pressure shown above.
[b] Along the influent skid there is a section where the flow diverges into two separate flows of 200 gpm when the train is operating at a 400 gpm total and 100gpm at a 200 gpm total. The difference in headloss between the 400/200 and 200/100 gpm models are provided above and used to calculate total head loss.
[c] Assumes differential pressure at 400 gpm for the Sand Filter is 10 psi, Bag filter is 15 psi, flow meter is 2 psi, and GAC vessels are 10 psi (totaled for both vessels). When operating in sand filter backwash at 200 gpm, the sand filters account for a total of 20 psi (10 psi each).
[d] Total head loss includes additional 20% safety factor. " = inch(es)
% = percent ft = foot/feet
gpm = gallons per minute
psi = pounds per square inch

Attachment 6

Pump Selection

Model: 3196	Size: 2X3-6	Group: 3196STI	60Hz	RPM: 3500	Stages: 1

Job/Inq.No. :
Purchaser : Kirtland AFB BFF
End User:
Issued by :
Item/Equip.No. : ITEM 001
Quotation No. : FEED PUMPS W/SAND FILTER
Date : 10/29/2016
Service :
Order No. :
Rev. : 0

Operating Conditions

Liquid:	Water	Published Efficiency:	64.5 %	Suction Specific Speed:	8,473 gpm(US) ft
Temp.:	70.0 deg F	Rated Pump Efficiency:	64.5 %	Min. Hydraulic Flow:	40.0 gpm
S.G./Visc.:	1.000/1.000 cp	Rated Total Power:	11.7 hp	Min. Thermal Flow:	N/A
Flow:	200.0 gpm	Non-Overloading Power:	17.0 hp		
TDH:	135.0 ft	Imp. Dia. First 1 Stg(s):	6.0620 in		
NPSHa:		NPSHr:	9.5 ft		
Solid size:		Shut off Head:	158.3 ft		
% Susp. Solids (by wtg):		Vapor Press:		Max. Solids Size:	0.3750 in

Pump Performance

Notes: 1.The Mechanical seal increased drag effect on power and efficiency is not included, unless the correction is shown in the appropriate field above. 2. Magnetic drive eddy current and viscous effect on power and efficiency is not included. 3. Elevated temperature effects on performance are not included. 4. Non Overloading power does not reflect v-belt/gear losses.

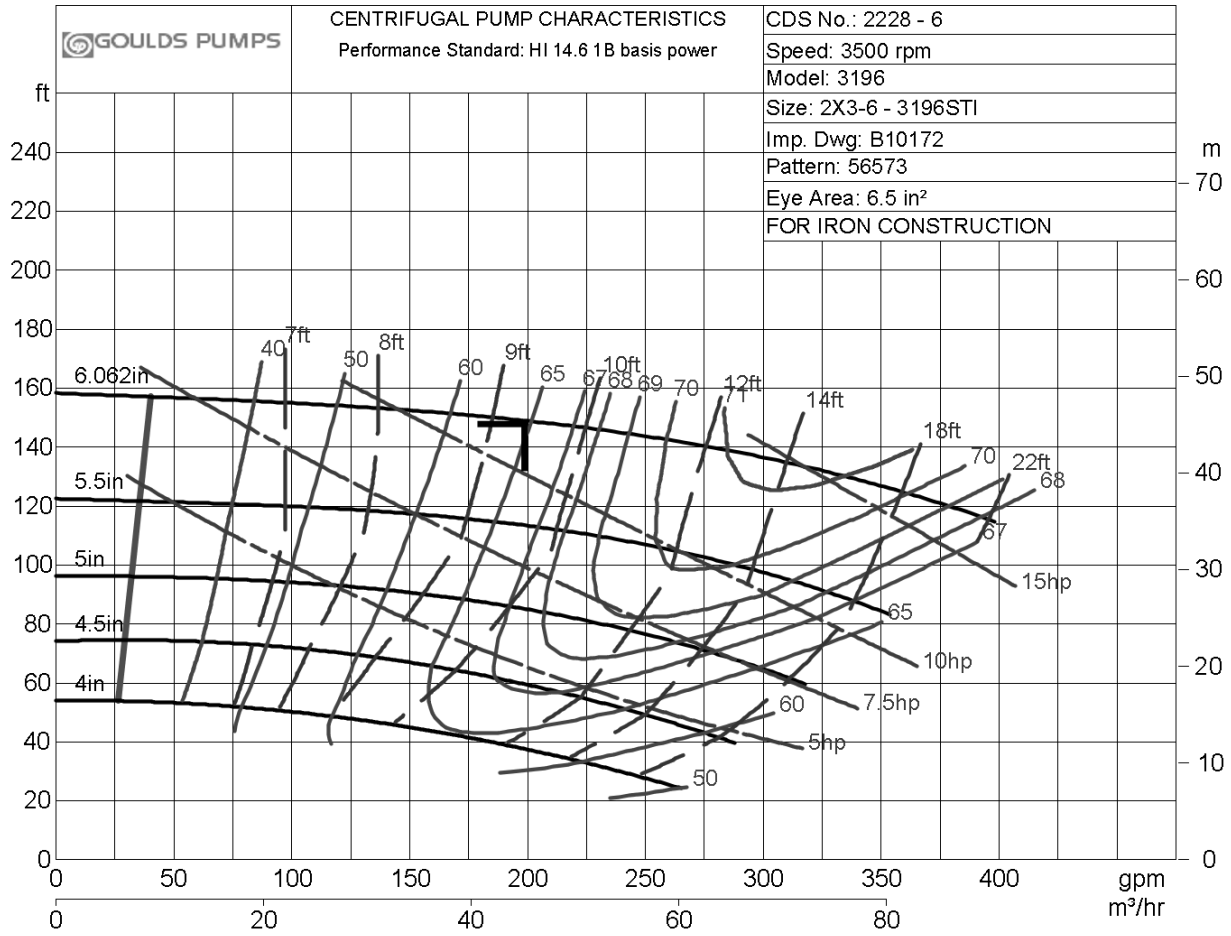

ITT

Model: 3196	Size: 2X3-6	Group: 3196STI	60Hz	RPM: 3500	Stages: 1

Job/Inq.No. :
Purchaser : Kirtland AFB BFF
End User : Issued by : Rev. : 0
Item/Equip.No. : ITEM 001 Quotation No. : FEED PUMPS W/SAND FILTER Date : 10/29/2016
Service :
Order No. :

Operating Conditions

Liquid:	Water	Published Efficiency:	64.5 %	Suction Specific Speed:	8,473 gpm(US) ft
Temp.:	70.0 deg F	Rated Pump Efficiency:	64.5 %	Min. Hydraulic Flow:	40.0 gpm
S.G./Visc.:	1.000/1.000 cp	Rated Total Power:	11.7 hp	Min. Thermal Flow:	N/A
Flow:	200.0 gpm	Non-Overloading Power:	17.0 hp		
TDH:	135.0 ft	Imp. Dia. First 1 Stg(s):	6.0620 in		
NPSHa:		NPSHr:	9.5 ft	Shut off Head:	158.3 ft
Solid size:		Max. Solids Size:	0.3750 in	% Susp. Solids (by wtg):	

Pump Performance

Vapor Press:

Notes: 1. The Mechanical seal increased drag effect on power and efficiency is not included, unless the correction is shown in the appropriate field above. 2. Magnetic drive eddy current on power and efficiency is not included. 3. Elevated temperature effects on performance are not included. 4. Non Overloading power does not reflect v-belt/gear losses.

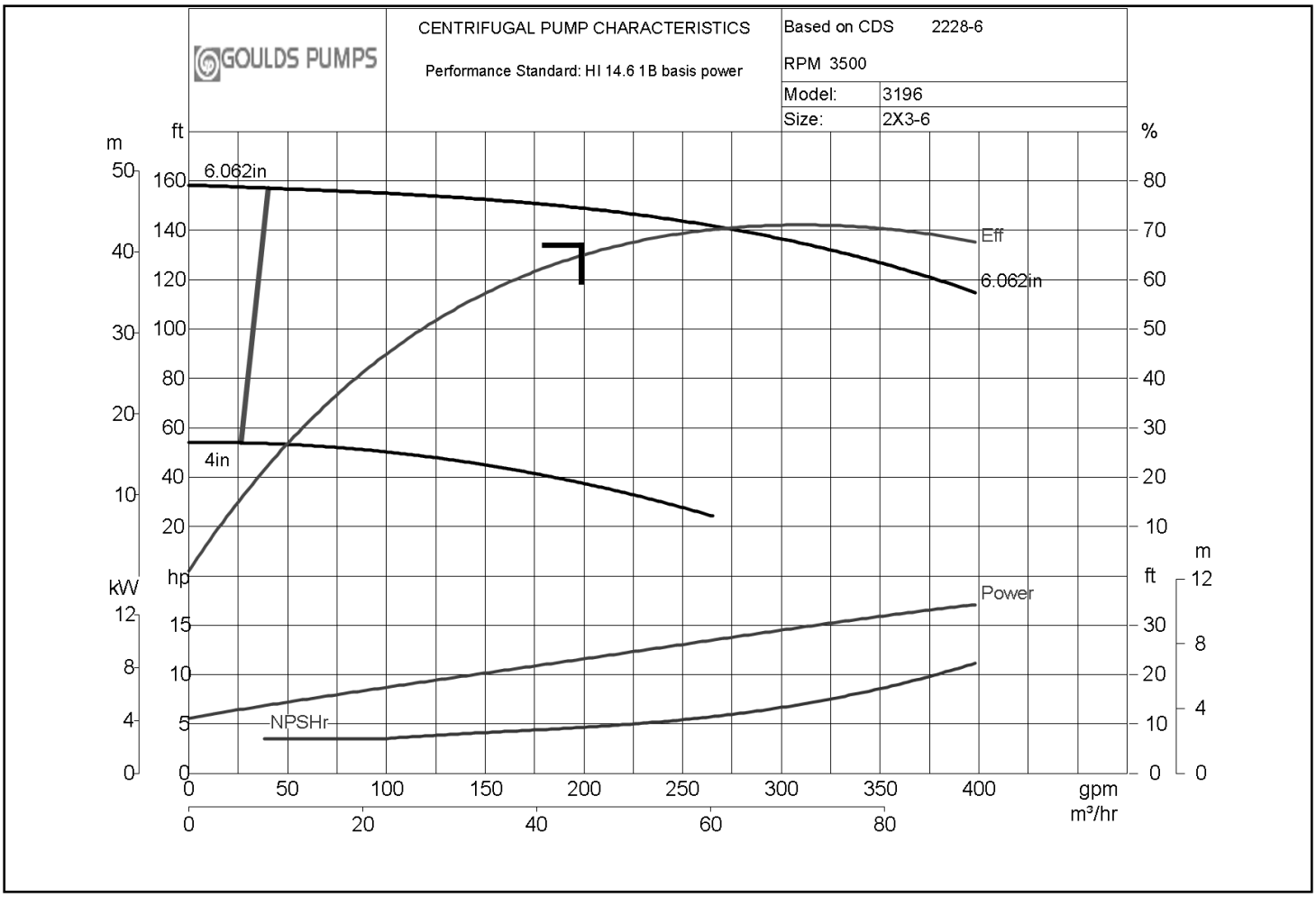

Viscosity corrections have been performed in accordance with HI 9.6.7-2015

Model: 3196	Size: 2X3-6	Group: 3196STI	60Hz	RPM Variable	Stages: 1

Job/Inq.No. :
Purchaser : Kirtland AFB BFF
End User :
Item/Equip.No. : ITEM 001
Service :
Order No. :

Issued by :
Quotation No. : FEED PUMPS W/SAND FILTER
Date : 10/29/2016
Rev. : 0

Operating Conditions

Liquid:	Water
Temp.:	70.0 deg F
S.G./Visc.:	1.000/1.000 cp
Flow:	200.0 gpm
TDH:	135.0 ft
NPSHa:	
Solid size:	
% Susp. Solids (by wtg):	
Max. Solids Size:	0.3750 in

Pump Performance @ 3500 RPM

Published Efficiency:	64.5 %	Suction Specific Speed:	8,473 gpm(US) ft
Rated Pump Efficiency:	64.5 %	Min. Hydraulic Flow:	40.0 gpm
Rated Total Power:	11.7 hp	Min. Thermal Flow:	N/A
Non-Overloading Power:	17.0 hp		
Imp. Dia. First 1 Stg(s):	6.0620 in		
NPSHr:	9.5 ft		
Shut off Head:	158.3 ft		
Vapor Press:			

Notes: 1. The Mechanical seal increased drag effect on power and efficiency is not included, unless the correction is shown in the appropriate field above. 2. Magnetic drive eddy current on power and efficiency is not included. 3. Elevated temperature effects on performance are not included. 4. Non Overloading power does not reflect v-belt/gear losses.

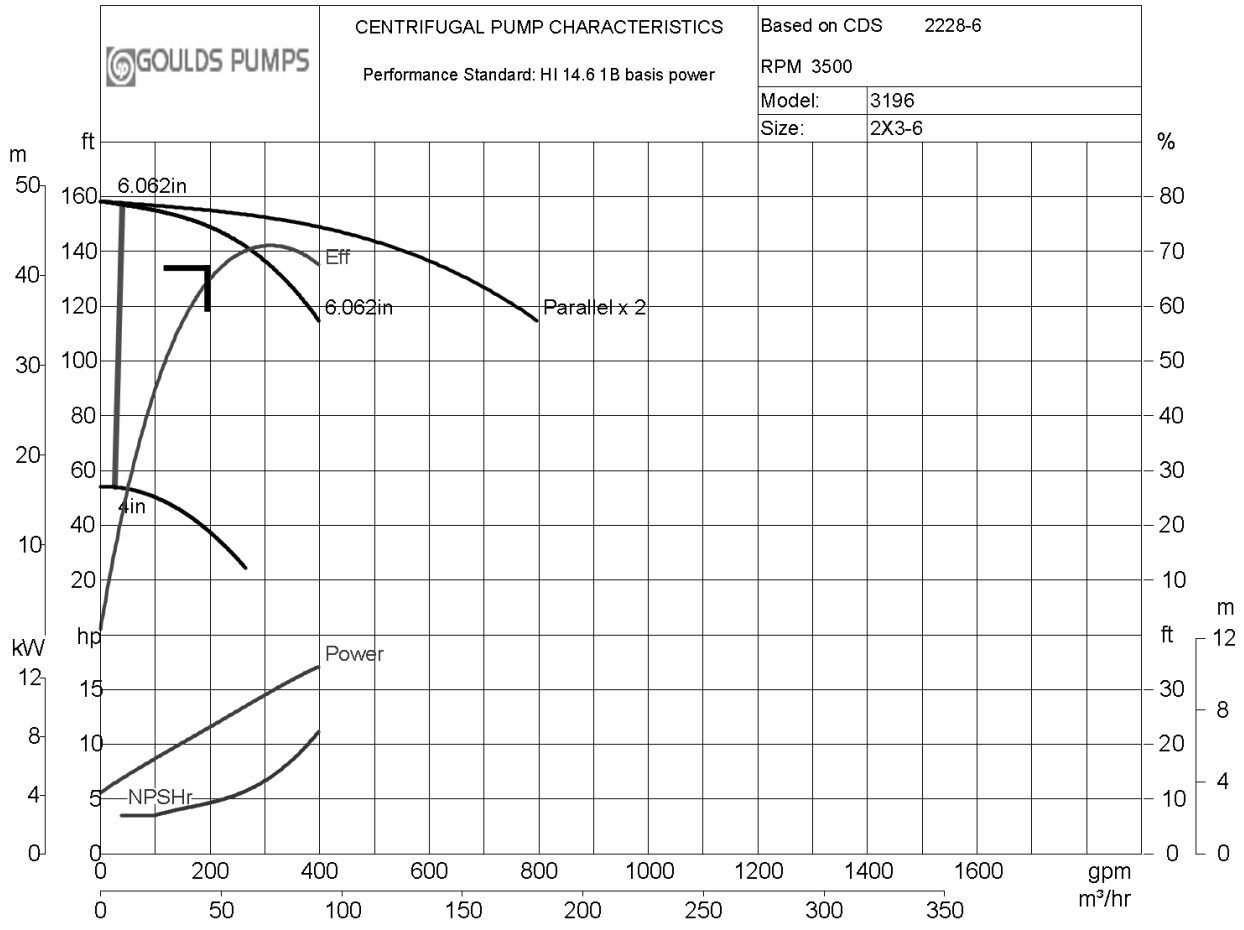

ITT

Model: 3196	Size: 2X3-6	Group: 3196STI	60Hz	RPM Variable	Stages: 1

Job/Inq.No. :
Purchaser : Kirtland AFB BFF
End User :
Item/Equip.No. : ITEM 001
Service :
Order No. :

Issued by :
Quotation No. : FEED PUMPS W/SAND FILTER
Date : 10/29/2016
Rev. : 0

Operating Conditions

Liquid:	Water
Temp.:	70.0 deg F
S.G./Visc.:	1.000/1.000 cp
Flow:	200.0 gpm
TDH:	135.0 ft
NPSHa:	
Solid size:	
% Susp. Solids (by wtg):	
Max. Solids Size:	0.3750 in

Pump Performance @ 3500 RPM

Published Efficiency:	64.5 %	Suction Specific Speed:	8,473 gpm(US) ft
Rated Pump Efficiency:	64.5 %	Min. Hydraulic Flow:	40.0 gpm
Rated Total Power:	11.7 hp	Min. Thermal Flow:	N/A
Non-Overloading Power:	17.0 hp		
Imp. Dia. First 1 Stg(s):	6.0620 in		
NPSHr:	9.5 ft		
Shut off Head:	158.3 ft		
Vapor Press:			

Notes: 1. The Mechanical seal increased drag effect on power and efficiency is not included, unless the correction is shown in the appropriate field above. 2. Magnetic drive eddy current and viscous effect on power and efficiency is not included. 3. Elevated temperature effects on performance are not included. 4. Non Overloading power does not reflect v-belt/gear losses.

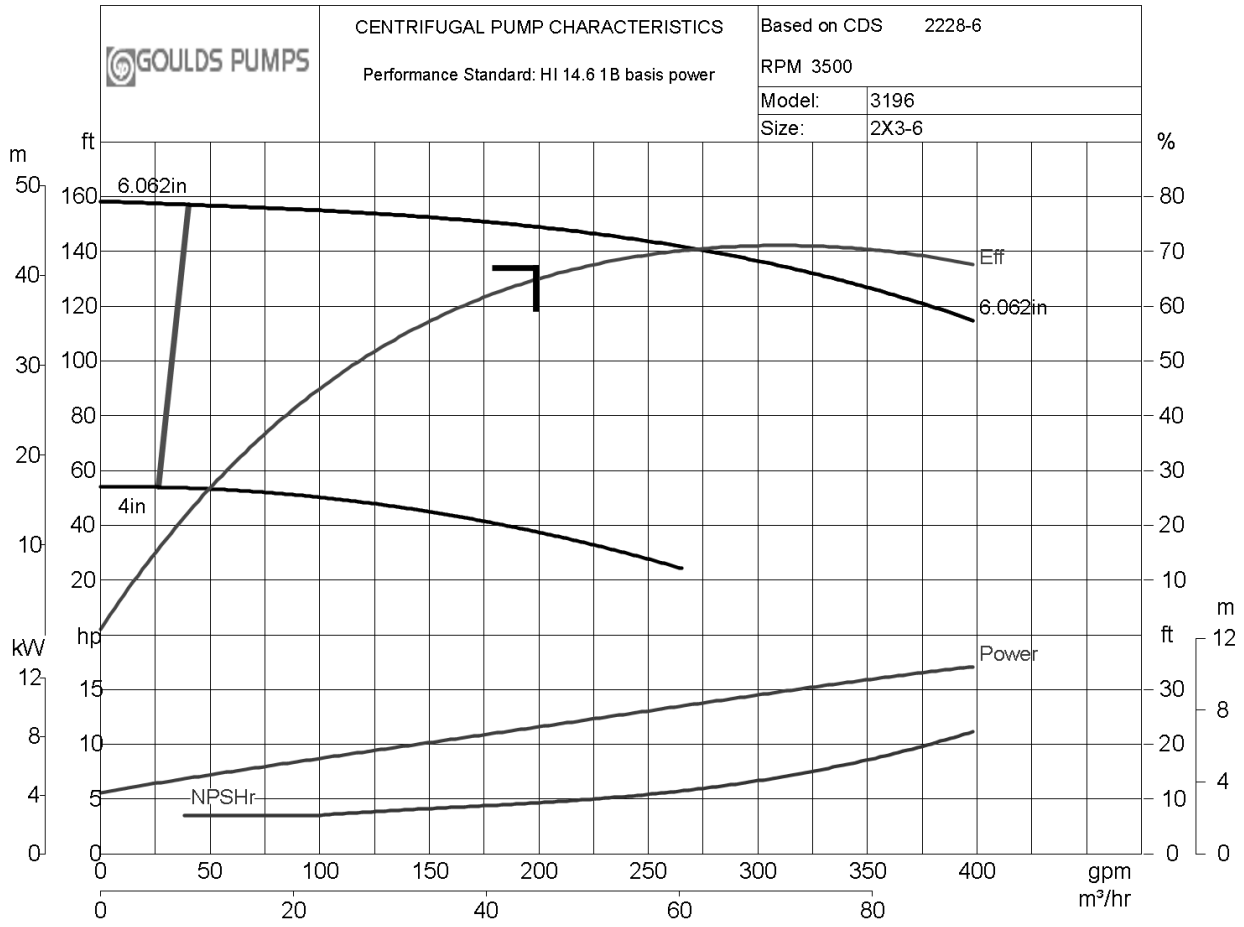

ITT

APPENDIX J

Manufacturers' Literature

KAFB-106228 Manufacturer's Literature

TAG: FIT-3001

© Siemens AG 2009

SITRANS P measuring instruments for pressure

Transmitters for gauge, absolute and differential pressure, flow and level

DS III, DS III PA and DS III FF series
Technical description

VERIFY MEETS BUY AMERICA

Overview

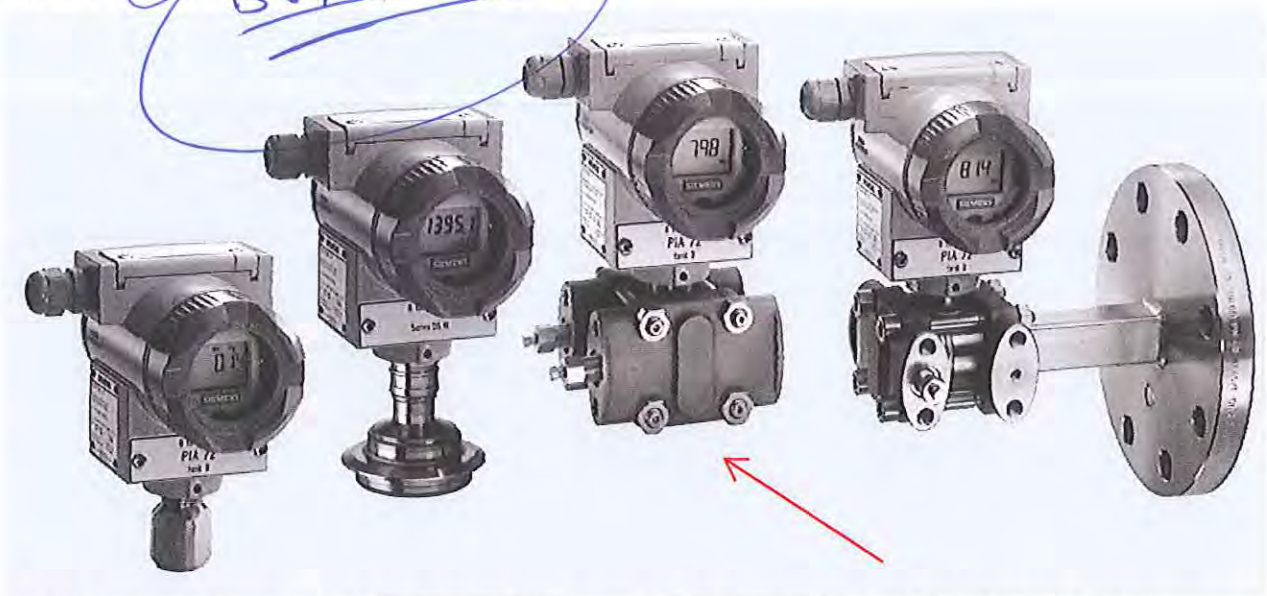

SITRANS P pressure transmitters, DS III series, are digital pressure transmitters featuring extensive user-friendliness and high accuracy. The parameterization is performed using control keys, over HART communication, PROFIBUS-PA or FOUNDATION Fieldbus interface.

Extensive functionality enables the pressure transmitter to be precisely adapted to the plant's requirements. Operation is very simple in spite of the numerous setting options.

Transmitters with type of protection "Intrinsic safety" and "Explosion-proof" may be installed within potentially explosive atmospheres (zone 1) or in zone 0. The transmitters are provided with an EC type examination certificate and comply with the corresponding harmonized European standards (ATEX).

The transmitters can be equipped with various designs of remote seals for special applications such as the measurement of highly viscous substances.

Various versions of the DS III pressure transmitters are available for measuring:

- Gauge pressure
- Absolute pressure
- For differential pressure transmitters
- Filling level
- Mass level
- Volume level
- Volume flow
- Mass flow

Benefits

- High quality and long life
- High reliability even under extreme chemical and mechanical loads
- For aggressive and non-aggressive gases, vapors and liquids
- Extensive diagnosis and simulation functions
- Separate replacement of measuring cell and electronics without recalibration
- Minimum conformity error
- Small long-term drift
- Wetted parts made of high-grade materials (e.g. stainless steel, Hastelloy, gold, Monel, tantalum)
- Infinitely adjustable span from 0.01 bar to 700 bar (0.15 psi to 10153 psi) for DS III with HART communication
- Nominal measuring range from 1 bar to 700 bar (14.5 psi to 10153 psi) for DS III PA (PROFIBUS PA) and FF (FOUNDATION Fieldbus)
- High measuring accuracy
- Parameterization over control keys and HART communication, PROFIBUS PA communication or FOUNDATION Fieldbus interface.

Application

The pressure transmitters of the DS III series, can be used in industrial areas with extreme chemical and mechanical loads. Electromagnetic compatibility in the range 10 kHz to 1 GHz makes the DS III pressure transmitters suitable for locations with high electromagnetic emissions.

Pressure transmitters with type of protection "Intrinsic safety" and "Explosion-proof" may be installed within potentially explosive atmospheres (zone 1) or in zone 0. The pressure transmitters are provided with an EC type examination certificate and comply with the corresponding harmonized European standards (ATEX).

Pressure transmitters with the type of protection "Intrinsic safety" for use in zone 0 may be operated with power supply units of category "ia" and "ib".

The transmitters can be equipped with various designs of remote seals for special applications such as the measurement of highly viscous substances.

The pressure transmitter can be operated locally over 3 control keys or programmed externally over HART communication or over PROFIBUS PA or FOUNDATION Fieldbus interface.

© Siemens AG 2009

SITRANS P, DS III series, for differential pressure and flow		
	HART	**PROFIBUS PA or FOUNDATION Fieldbus**
• Square-root characteristic (flow 25 ... 50%)		≤ 0,2 %
- $r \leq 10$	≤ 0,2 %	-
- $10 < r \leq 30$	≤ 0,4 %	-
Long-term drift (temperature change ± 30 °C (± 54 °F))	≤ (0.25 · r) % every 5 years static pressure max. 70 bar g (1015 psi g)	≤ (0.25 % every 5 years static pressure max. 70 bar g (1015 psi g)
• 20 mbar (0.29 psi)-measuring cell	≤ (0.2 · r) per year	≤ 0.2 per year
Influence of ambient temperature		
• at -10 ... +60 °C (14 ... 140 °F)	≤ (0.08 · r + 0.1) %	≤ 0,3 %
• at -40 ... -10 °C and +60 ... +85 °C (-40 ... +14 °F and 140 ... 185 °F)	≤ (0.1 · r + 0.15) %/10 K (Twice the value with 20-mbar (0.29 psi) measuring cell)	≤ 0.25 %/10 K
Influence of static pressure		
• on the zero point	≤ (0.15 · r) % per 100 bar (1450 psi)	≤ 0.15 % je 100 bar (1450 psi)
- 20 mbar (0.29 psi)-measuring cell	≤ (0.15 · r) % per 32 bar (464 psi)	≤ 0.15 % je 32 bar (464 psi)
• on the span	≤ 0.2 % je 100 bar (1450 psi)	-
- 20 mbar (0.29 psi)-measuring cell	≤ 0.2 % je 32 bar (464 psi)	-
Measured Value Resolution	-	$3 \cdot 10^{-5}$ of nominal measuring range
Rated operating conditions		
Degree of protection (to EN 60529)	IP65	
Process temperature		
• Measuring cell with silicone oil filling	-40 ... +100 °C (-40 ... +212 °F)	
• Measuring cell with inert filling liquid	-20 ... +100 °C (-4 ... +212 °F)	
• In conjunction with dust explosion protection	-20 ... +60 °C (-4 ... +140 °F)	
Ambient conditions		
• Ambient temperature		
- Digital indicators	-30 ... +85 °C (-22 ... +185 °F)	
• Storage temperature	-50 ... +85 °C (-58 ... +185 °F)	
• Climatic class		
- Condensation	Permissible	
• Electromagnetic compatibility		
- Emitted interference and interference immunity	To EN 61326 and NAMUR NE 21	
Material of the mounting bracket		
• Steel	Sheet steel, Mat. No. 1.0330, chrome-plated	
• Stainless steel	Stainless steel, Mat. No. 1.4301 (SS304)	
Design		
Weight (without options)	≈ 4.5 kg (≈ 9.9 lb)	
Housing material	Poor in copper die-cast aluminium, GD-AlSi12 or stainless steel precision casting, mat. No. 1.4408	
Wetted parts materials		
• Seal diaphragm	Stainless steel, mat. No. 1.4404/316L or Hastelloy C276, mat. No. 2.4819, Monel, mat. No. 2.4360, tantalum or gold	
Measuring cell filling	Silicone oil or inert filling liquid (max. 160 bar (2320 psi g) with oxygen measurement)	
Process connection	Female thread ¼-18 NPT and flange connection with mounting thread M10 to DIN 19213 or $^{7}/_{16}$-20 UNF to EN 61518	
Power supply U_H		Supplied through bus
Terminal voltage on transmitter	10.5 ... 45 V DC 10.5 ... 30 V DC in intrinsically-safe mode	-
Separate 24 V power supply necessary	-	No
Bus voltage		
• Not Ex	-	9 ...32 V
• With intrinsically-safe operation	-	9 ...24 V

© Siemens AG 2009

2

SITRANS P, DS III series, for differential pressure and flow		
	HART	**PROFIBUS PA or FOUNDATION Fieldbus**
Power supply U_H		
Current consumption		
• Basic current (max.)	-	12.5 mA
• Startup current ≤ basic current	-	Yes
• Max. current in event of fault	-	15.5 mA
Fault disconnection electronics (FDE) avail.	-	Yes
Certificate and approvals		
Classification according to pressure equipment directive (DRGL 97/23/EC)		
PN 32/160 (MWP 464/2320 psi)	For gases of fluid group 1 and liquids of fluid group 1; complies with requirements of Article 3, paragraph 3 (sound engineering practice)	
PN 420 (MWP 6092 psi)	For gases of fluid group 1 and liquids of fluid group 1; complies with basic safety requirements of Article 3, paragraph 1 (appendix 1); assigned to category III, conformity evaluation module H by the TÜV Nord.	
Explosion protection		
• Intrinsic safety "i"	PTB 99 ATEX 2122	
- Identification	Ex II 1/2 G EEx ia/ib IIB/IIC T6	
- Permissible ambient temperature	-40 ... +85 °C (-40 ... +185 °F) temperature class T4; -40 ... +70 °C (-40 ... +158 °F) temperature class T5; -40 ... +60 °C (-40 ... +140 °F) temperature class T6	
- Connection	To certified intrinsically-safe circuits with maximum values: U_i = 30 V, I_i = 100 mA, P_i = 750 mW; R_i = 300 Ω	FISCO supply unit: U_o = 17.5 V, I_o = 380 mA, P_o = 5.32 W Linear barrier: U_o = 24 V, I_o = 250 mA, P_o = 1.2 W
- Effective internal inductance/capacitance	L_i = 0.4 mH, C_i = 6 nF	L_i = 7 µH, C_i = 1.1 nF
• Explosion-proof "d"	PTB 99 ATEX 1160	
- Identification	Ex II 1/2 G EEx d IIC T4/T6	
- Permissible ambient temperature	-40 ... +85 °C (-40 ... +185 °F) temperature class T4; -40 ... +60 °C (-40 ... +140 °F) temperature class T6	
- Connection	To circuits with values: U_H = 10.5 ... 45 V DC	To circuits with values: U_H = 9 ... 32 V DC
• Dust explosion protection for zone 20	PTB 01 ATEX 2055	
- Identification	Ex II 1 D IP65 T 120 °C Ex II 1/2 D IP65 T 120 °C	
- Permissible ambient temperature	-40 ... +85 °C (-40 ... +185 °F)	
- Max.surface temperature	120 °C (248 °F)	
- Connection	To certified intrinsically-safe circuits with maximum values: U_i = 30 V, I_i = 100 mA, P_i = 750 mW, R_i = 300 Ω	FISCO supply unit: U_o = 17.5 V, I_o = 380 mA, P_o = 5.32 W Linear barrier: U_o = 24 V, I_o = 250 mA, P_o = 1.2 W
- Effective internal inductance/capacitance	L_i = 0.4 mH, C_i = 6 nF	L_i = 7 µH, C_i = 1.1 nF
• Dust explosion protection for zone 21/22	PTB 01 ATEX 2055	
- Identification	Ex II 2 D IP65 T 120 °C	
- Connection	To circuits with values: U_H = 10.5 ... 45 V DC; P_{max} = 1.2 W	To circuits with values: U_H = 9 ... 32 V DC; P_{max} = 1.2 W
• Type of protection "n" (zone 2)	TÜV 01 ATEX 1696 X	Planned
- Identification	Ex II 3 G EEx nA L IIC T4/T5/T6	-
• Explosion protection to FM	Certificate of Compliance 3008490	
- Identification (XP/DIP) or (IS); (NI)	CL I, DIV 1, GP ABCD T4...T6; CL II, DIV 1, GP EFG; CL III; CL I, ZN 0/1 AEx ia IIC T4...T6; CL I, DIV 2, GP ABCD T4...T6; CL II, DIV 2, GP FG; CL III	
• Explosion protection to CSA	Certificate of Compliance 1153651	
- Identification (XP/DIP) or (IS)	CL I, DIV 1, GP ABCD T4...T6; CL II, DIV 1, GP EFG; CL III; Ex ia IIC T4...T6; CL I, DIV 2, GP ABCD T4...T6; CL II, DIV 2, GP FG; CL III	

© Siemens AG 2009

HART communication	
HART communication	230 ... 1100 Ω
Protocol	HART Version 5.x
Software for computer	SIMATIC PDM
PROFIBUS PA communication	
Simultaneous communication with master class 2 (max.)	4
The address can be set using	Configuration tool or local operation (standard setting address 126)
Cyclic data usage	
• Output byte	5 (one measuring value) or 10 (two measuring values)
• Input byte	0, 1, or 2 (register operating mode and reset function for metering)
Internal preprocessing	
Device profile	PROFIBUS PA Profile for Process Control Devices Version 3.0, Class B
Function blocks	2
• Analog input	
- Adaptation to customer-specific process variables	Yes, linearly rising or falling characteristic
- Electrical damping T_{63}, adjustable	0 ... 100 s
- Simulation function	Input /Output
- Failure mode	Can be parameterized (last good value, substitute value, incorrect value)
- Limit monitoring	Yes, one upper and lower warning limit and one alarm limit respectively
• Register (totalizer)	Can be reset, preset, optional direction of counting, simulation function of register output
- Failure mode	Can be parameterized (summation with last good value, continuous summation, summation with incorrect value)
- Limit monitoring	One upper and lower warning limit and one alarm limit respectively
• Physical block	1
Transducer blocks	2
• Pressure transducer block	
- Can be calibrated by applying two pressures	Yes
- Monitoring of sensor limits	Yes
- Specification of a container characteristic with	Max. 30 nodes
- Square-rooted characteristic for flow measurement	Yes
- Gradual volume suppression and implementation point of square-root extraction	Parameterizable
- Simulation function for measured pressure value and sensor temperature	Constant value or over parameterizable ramp function

Communication FOUNDATION Fieldbus	
Function blocks	3 function blocks analog input, 1 function block PID
• Analog input	
- Adaptation to customer-specific process variables	Yes, linearly rising or falling characteristic
- Electrical damping T_{63}, adjustable	0 ... 100 s
- Simulation function	Output/input (can be locked within the device with a bridge)
- Failure mode	Can be parameterized (last good value, substitute value, incorrect value)
- Limit monitoring	Yes, one upper and lower warning limit and one alarm limit respectively
- Square-rooted characteristic for flow measurement	Yes
• PID	Standard FF function block
• Physical block	1 Resource block
Transducer blocks	1 transducer block Pressure with calibration, 1 transducer block LCD
• Pressure transducer block	
- Can be calibrated by applying two pressures	Yes
- Monitoring of sensor limits	Yes
- Simulation function: Measured pressure value, sensor temperature and electronics temperature	Constant value or over parameterizable ramp function

© Siemens AG 2009

DS III series for differential pressure and flow

2

Selection and Ordering data			Order No.
SITRANS P pressure transmitters for differential pressure and flow, Series DS III HART PN 32/160 (MWP 464/2320 psi)			**7MF4433 -** ■■■■■ - ■■■■
Measuring cell filling	**Measuring cell cleaning**		
Silicone oil	Standard	▶	1
Inert liquid[1]	Grease-free		3
Span			
PN 32 (MWP 464 psi)			
1 ... 20 mbar[2]	(0.4015 ... 8.03 inH_2O)	▶	B
PN 160 (MWP 2320 psi)			
1 ... 60 mbar	(0.4015 ... 24.09 inH_2O)	▶	C
2.5 ... 250 mbar	(1.004 ... 100.4 inH_2O)	▶	D
6 ... 600 mbar	(2.409 ... 240.9 inH_2O)	▶	E
16 ... 1600 mbar	(6.424 ... 642.4 inH_2O)	▶	F
50 ... 5000 mbar	(20.08 ... 2008 inH_2O)	▶	G
0.3 ... 30 bar	(4.35 ... 435 psi)	▶	H
Wetted parts materials			
(stainless steel process flanges)			
Seal diaphragm	Parts of measuring cell		
Stainless steel	Stainless steel	▶	A
Hastelloy	Stainless steel		B
Hastelloy	Hastelloy		C
Tantalum[3]	Tantalum		E
Monel[3]	Monel		H
Gold[3]	Gold		L
Version for diaphragm seal[4] [5]			Y
Process connection			
Female thread ¼-18 NPT with flange connection			
• Sealing screw opposite process connection			
- Mounting thread $^7/_{16}$-20 UNF to EN 61518			2
- Mounting thread M10 to DIN 19213 (only for replacement needs)		▶	0
• Vent on side of process flange[2]			
- Mounting thread $^7/_{16}$-20 UNF to EN 61518			6
- Mounting thread M10 to DIN 19213 (only for replacement needs)			4
Non-wetted parts materials			
Process flange screws	Electronics housing		
Stainless steel	Die-cast aluminium	▶	2
Stainless steel	Stainless steel precision casting[6]		3
Version			
• Standard version			1
• International version, English label inscriptions, documentation in 5 languages on CD		▶	2
Explosion protection			
• Without			A
• With ATEX, Type of protection:			
- "Intrinsic safety (EEx ia)"			B
- "Explosion-proof (EEx d)"[7]			D
- "Intrinsic safety and explosion-proof enclosure (EEx ia + EEx d)"[8]			P
- "Ex nA/nL (zone 2)"			E
- "Intrinsic safety, explosion-proof enclosure and dust explosion protection (EEx ia + EEx d + Zone 1D/2D)"[8]		▶	R
• With FM + CSA, Type of protection:			
- "Intrinsic safety and explosion-proof (is + xp)"[7]			NC
Electrical connection / cable entry			
• Screwed gland Pg 13.5[9]			A
• Screwed gland M20x1.5		▶	B
• Screwed gland ½-14 NPT			C
• Han 7D plug (plastic housing) incl. mating connector[10]			D
• M12 connectors (metal)[10]			F

Selection and Ordering data	Order No.
SITRANS P pressure transmitters for differential pressure and flow, Series DS III HART PN 32/160 (MWP 464/2320 psi)	**7MF4433 -** ■■■■■ - ■■■■
Display	
• Without indicator	0
• Without visible digital indicator (digital indicator hidden, setting: mA) ▶	1
• With visible digital indication	6
• With customer-specific digital indicator (setting as specified, Order code "Y21" or „Y22" required)	7

▶ Available ex stock

Power supply units see "SITRANS I power supply units and isolation amplifiers".

Factory-mounting of shut-off valves and valve manifolds see page 2/147.

Included in delivery of the device:
- Brief instructions (Leporello)
- CD-ROM with detailed documentation
- Sealing plug(s) or sealing screw(s) for the process flanges(s)

1) For oxygen application, add Order code E10.
2) Not suitable for connection of remote seal. Position of the top vent valve in the process flanges (see dimensional drawing).
3) Not together with max. span 20 and 60 mbar (8.03 and 24.09 inH_2O)
4) When the manufacture's certificate M (calibration certificate) has to be ordered for transmitters with diaphragm seals, it is recommended only to order this certificate exclusively with the diaphragm seals. The measuring accuracy of the total combination is certified here.
5) Whe the acceptance test certificate 3.1 for transmitters with direct-connected diaphragm seals is ordered, this certificate must also be ordered with the corresponding seals.
6) Not together with Electrical connection „Screwed gland Pg 13.5" and „Han7D plug".
7) Without cable gland, with blanking plug
8) With enclosed cable gland EEx ia and blanking plug
9) Not together with type of protection "Explosion-proof" and and type of protection "Ex nA".
10) M12 delivered without cable socket.

© Siemens AG 2009

DS III series for differential pressure and flow

Selection and Ordering data	Order code	HART	PA	FF
Further designs Add "-Z" to Order No. and specify Order code.				
Pressure transmitter with mounting bracket made of:				
• Steel	A01	✓	✓	✓
• Stainless steel	A02	✓	✓	✓
O-rings for process flanges (instead of FPM (Viton))				
• PTFE (Teflon)	A20	✓	✓	✓
• FEP (with silicone core, approved for food)	A21	✓	✓	✓
• FFPM (Kalrez, compound 4079)	A22	✓	✓	✓
• NBR (Buna N)	A23	✓	✓	✓
Plug				
• Han 7D (metal, gray)	A30	✓		
• Han 8U (instead of Han 7D)	A31	✓		
Sealing screws ¼-18 NPT, with vent valve in mat. of process flanges	A40	✓	✓	✓
Cable sockets for M12 connectors (metal)	A50	✓	✓	✓
Rating plate inscription (instead of German)				
• English	B11	✓	✓	✓
• French	B12	✓	✓	✓
• Spanish	B13	✓	✓	✓
• Italian	B14	✓	✓	✓
English rating plate (calibration certificate) Pressure units in inH_2O or psi	B21	✓	✓	✓
Quality inspection certificate (Factory calibration) to IEC 60770-2 [1]	C11	✓	✓	✓
Acceptance test certificate[2] To EN 10 204-3.1	C12	✓	✓	✓
Factory certificate To EN 10 204-2.2	C14	✓	✓	✓
"Functional Safety (SIL)" certificate	C20	✓		
"PROFIsafe" certificate and protocol	C21		✓	
Setting of upper limit of output signal to 22.0 mA	D05	✓		
Manufacturer's declaration acc. to NACE (only together with seal diaphragm made of Hastelloy and stainless steel)	D07	✓	✓	✓
Type of protection IP68 (only for M20x1.5 and ½-14 NPT)	D12	✓	✓	✓
Digital indicator alongside the input keys (only together with the devices 7MF4433-....2-.A.6 or -.A.7-Z, Y21 or Y22 + Y01)	D27	✓	✓	✓
Process flange screws made of Monel (max. nominal pressure PN20)	D34	✓	✓	✓
Supplied with oval flange set (2 items), PTFE packings and stainles steel screws in thread of process flanges	D37	✓	✓	✓
Use in or on zone 1D/2D (only together with type of protection "Intrinsic safety (EEx ia)")	E01	✓	✓	✓
Use on zone 0 (only together with type of protection "Intrinsic safety (EEx ia)")	E02	✓	✓	✓
TÜV approval to AD/TRD (only together with type of protection "Intrinsic safety (EEx ia)")	E06	✓		
Overfilling safety device for flammable and non-flammable liquids (max. PN 32 (MVWP 464 psi), basic device with type of protection "Intrinsic safety (EEx ia)", to WHG and VbF, not together with measuring cell filling "inert liquid")	E08	✓	✓	✓

Selection and Ordering data	Order code	HART	PA	FF
Further designs Add "-Z" to Order No. and specify Order code.				
Oxygen application (max. 120 bar (1740 psi) at 60°C (140 °F) with oxygen measurement and inert liquid)	E10	✓	✓	✓
Explosion-proof "Intrinsic safety" to INMETRO (Brazil) (only for transmitter 7MF4...-.....-.B..)	E25	✓	✓	✓
Explosion-proof "Intrinsic safety" to NEPSI (China) (only for transmitter 7MF4...-.....-.B..)	E55	✓	✓	✓
Explosion protection "Explosion-proof" to NEPSI (China) (only for transmitter 7MF4...-.....-.D..)	E56	✓	✓	✓
Explosion-proof "Zone 2" to NEPSI (China) (only for transmitter 7MF4...-.....-.E..)	E57	✓	✓	✓
Interchanging of process connection side	H01	✓	✓	✓
Vent on side for gas measurements	H02	✓	✓	✓
Stainless steel process flanges for vertical differential pressure lines (not together with K01, K02 and K04)[3]	H03	✓	✓	✓
Process flange				
• Hastelloy	K01	✓	✓	✓
• Monel	K02	✓	✓	✓
• Stainless steel with PVDF insert max. PN 10 (MWP 145 psi), max. temperature of medium 90 °C (194 °F) For ½-14 NPT inner process connection on the side in the middle of the process flange, vent valve not possible	K04	✓	✓	✓

✓ = available

1) When the manufacture's certificate M (calibration certificate) has to be ordered for transmitters with diaphragm seals, it is recommended only to order this certificate exclusively with the diaphragm seals. The measuring accuracy of the total combination is certified here.

2) Whe the acceptance test certificate 3.1 for transmitters with direct-connected diaphragm seals is ordered, this certificate must also be ordered with the corresponding seals.

3) Not suitable for connection of remote seal

© Siemens AG 2009

Selection and Ordering data	Order code	HART	PA	FF
Additional data Add "-Z" to Order No. and specify Order code.				
Measuring range to be set Specify in plain text: • With linear characteristic (max. 5 digits): Y01: ... up to ... mbar, bar, kPa, MPa, psi	**Y01**	✓		
• With square-rooted characteristic (max. 5 digits): Y02: ... up to ... mbar, bar, kPa, MPa, psi	**Y02**	✓		
Measuring point number (TAG No.) Max. 16 char., specify in plain text: Y15:	**Y15**	✓	✓	✓
Measuring point text Max. 27 char., specify in plain text: Y16:	**Y16**	✓	✓	✓
Entry of HART address (TAG) Max. 8 char., specify in plain text: Y17:	**Y17**	✓		
Setting of pressure indicator in pressure units Specify in plain text (standard setting: mA): Y21: mbar, bar, kPa, MPa, psi, ... Note: The following pressure units can be selected: bar, mbar, mm H_2O*), inH_2O*), ftH_2O*), mmHG, inHG, psi, Pa, kPa, MPa, g/cm^2, kg/cm^2, Torr, ATM oder % *) ref. temperature 20 °C	**Y21**	✓	✓	✓
Setting of pressure indicator in non-pressure units[1] Specify in plain text: Y22: ..... up to ..... l/min, m^3/h, m, USgpm, ... (specification of measuring range in pressure units "Y01" or "Y02" is essential, unit with max. 5 characters)	**Y22**[2] **+ Y01** *or* **Y02**	✓		
Preset bus address (possible between 1 and 126) Specify in plain text: Y25:	**Y25**		✓	

Only "Y01", "Y21", "Y22", "Y25" and "D05" can be factory preset

✓ = available

1) Preset values can only be modified over SIMATIC PDM.
2) Not together with over-filling safety device for flammable and non-flammable liquids (Order code "E08")

© Siemens AG 2009

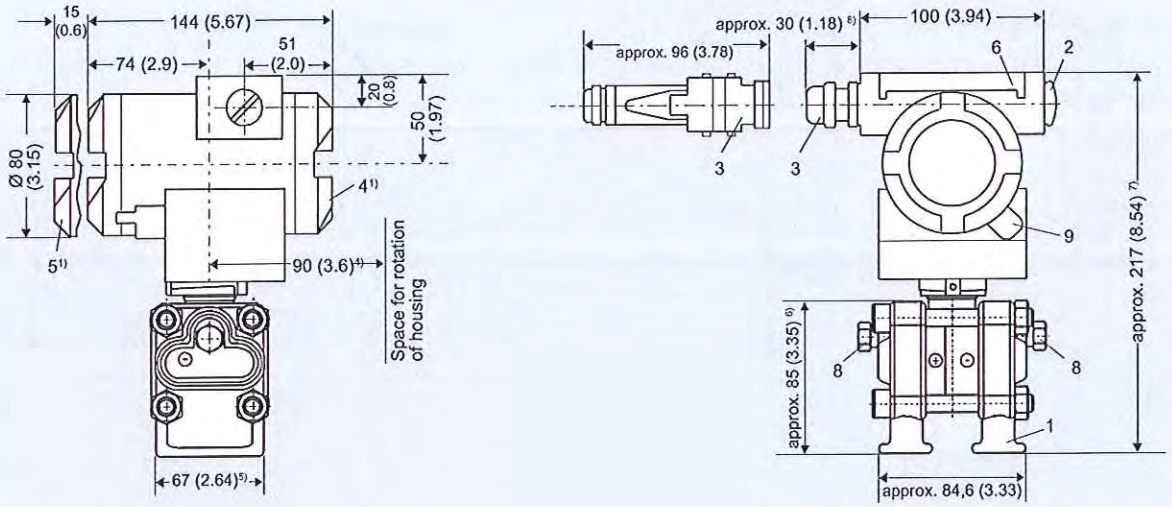

1 Process connection: ¼-18 NPT (EN 61518)
2 Blanking plug
3 Electrical connection:
- screwed gland Pg 13,5 (adapter) [2) 3)],
- screwed gland M20x1,5 [3)],
- screwed gland ½-14 NPT or
- Han 7D/ Han 8U plug [2) 3)]
4 Terminal side
5 Electronics side, digital display (longer overall length for cover with window)
6 Protective cover over keys
7 Mounting bracket (option)
8 Sealing screw (optionally with vent valve)
9 Screw cover - safety bracket (only for type of protection "Explosion-proof enclosure", not shown in the drawing)

1) Allow approx. 20 mm (0.79 inch) thread length to permit unscrewing
2) Not with type of protection "explosion-proof enclosure"
3) Not with type of protection "FM + CSA [is + xp]"
4) 92 mm (3.6 inch) for minimum distance to permit rotation with indicator
5) 74 mm (2.9 inch) for PN ≤ 420 (MWP ≤ 6092 psi)
6) 91 mm (3.6 inch) for PN ≤ 420 (MWP ≤ 6092 psi)
7) 219 mm (8.62 inch) for PN ≤ 420 (MWP ≤ 6092 psi)
8) 45 mm (1.8 inch) for Pg 13,5 with adapter

SITRANS P pressure transmitters, DS III HART series for differential pressure and flow, with process covers for vertical differential pressure lines, option „H03", dimensions in mm (inch)

© Siemens AG 2009

2

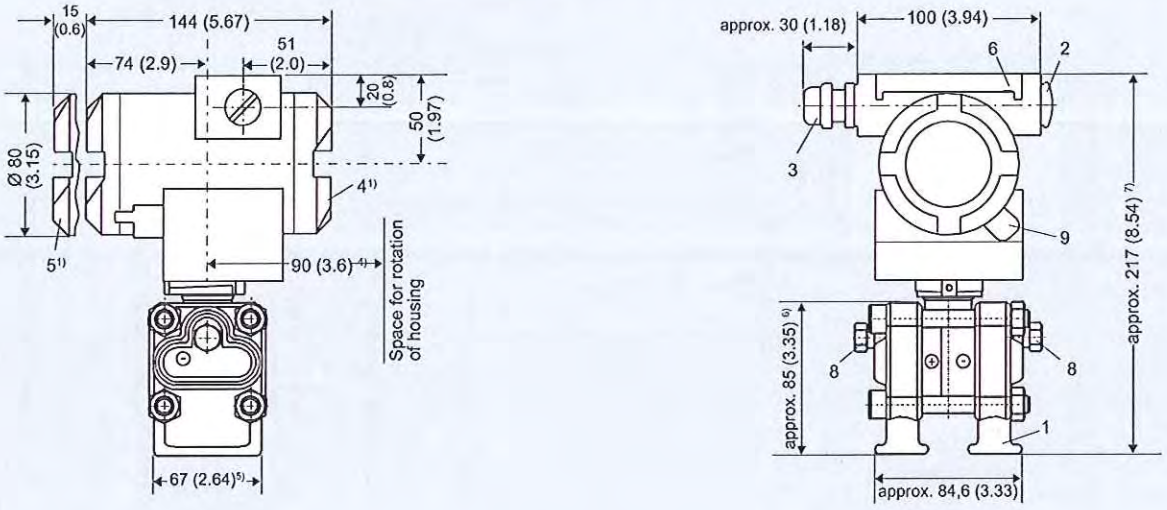

1 Process connection ¼-18 NPT (EN 61 518)
2 Blanking plug
3 Electrical connection:
- screwed gland M20x1.5 [3],
- screwed gland ½-14 NPT or
- PROFIBUS plug M12 [2) 3)]
4 Terminal side
5 Electronics side, digital display (longer overall length for cover with window)
6 Protective cover over keys
7 Mounting bracket (option)
8 Sealing screw (optionally with vent valve)
9 Screw cover safety bracket (only for explosion-proof enclosure, not shown in the drawing)

1) Allow approx. 20 mm (0.79 inch) thread length to permit unscrewing
2) Not with type of protection "explosion-proof enclosure"
3) Not with type of protection "FM + CSA [is + xp]"
4) 92 mm (3.6 inch) for minimum distance to permit rotation with indicator
5) 74 mm (2.9 inch) for PN ≤ 420 (MWP ≤ 6092 psi)
6) 91 mm (3.6 inch) for PN ≤ 420 (MWP ≤ 6092 psi)
7) 219 mm (8.62 inch) for PN ≤ 420 (MWP ≤ 6092 psi)

SITRANS P pressure transmitters, DS III PA and FF series for differential pressure and flow, with process covers for vertical differential pressure lines, option „H03", dimensions in mm (inch)

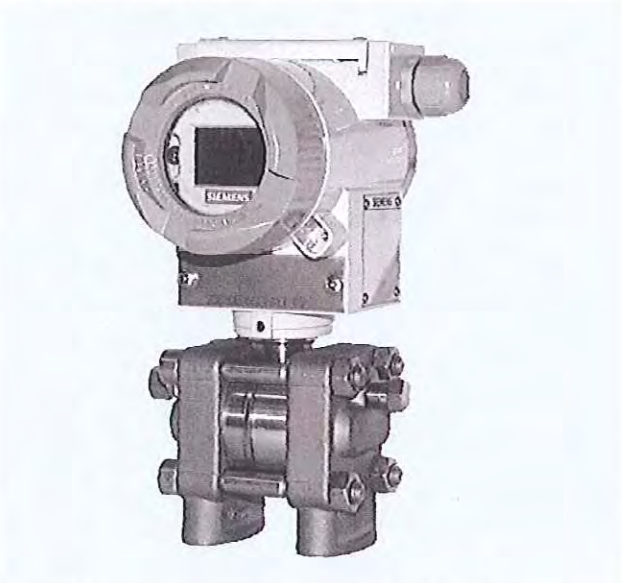

SITRANS P pressure transmitters, DS III series for differential pressure and flow, with process covers for vertical differential pressure lines

Instruction

MI IDP10-T
August 2006

I/A Series® Pressure Transmitters

IDP10 Differential Pressure with HART Communication

Installation, Operation, Calibration, Configuration, and Maintenance

FIT-3001 - Flow Transmitter for KAFB-106228

invensys®
FOXBORO®

Contents

Figures ..... **v**

Tables ..... **vii**

1. Introduction **1**
General Description 1
Reference Documents 1
Transmitter Identification 3
Standard Specifications 5
Product Safety Specifications 10

2. Installation **13**
Transmitter Mounting 13
Process Mounting 13
Manifold Mounted Transmitter 14
Transmitter Mounted on a Coplanar‰ Manifold 15
Pipe or Surface Mounting 15
Standard Mounting Bracket 15
Universal Mounting Bracket 17
Venting and Draining 20
Traditional Structure 20
LP1 Low Profile Structure 20
LP2 Low Profile Structure 21
Installation of Flow Measurement Piping 21
Filling System with Seal Liquid 23
Positioning the Housing 24
Positioning the Display 24
Setting the Write Protect Jumper 24
Cover Locks 24
Wiring 25
Accessing Transmitter Field Terminals 25
Wiring the Transmitter to a Control Loop 26
Multidrop Communication 29
Connecting the Transmitter to an I/A Series System 30
Putting a Differential Pressure Transmitter Into Operation 30
Taking a Differential Pressure Transmitter Out of Operation 30

3. Operation Via Local Display **31**
Entering Numerical Values 33
Reranging 33
Viewing the Database 33
Viewing the Pressure Range 34
Testing the Display 34
Error Messages 35

4. Calibration **37**
General Calibration Notes 37

Calibration Setup 39
Setup of Electronic Equipment 39
Field Calibration Setup 39
Bench Calibration Setup 40
Calibration Using a PC20 41
Calibration Using a PC50 41
Calibration Using a HART Communicator 41
Calibration Using the Optional Local Display 41
Zero Adjustment Using External Zero Button 45
Error Messages 47

5. Configuration 49
Configurable Parameters 49
Configuration Using a PC20 50
Configuration Using a PC50 50
Configuration Using a HART Communicator 50
Configuration Using the Optional Local Display 50
Character Lists 58
Error Messages 59

6. Maintenance 61
Error Messages 61
Parts Replacement 61
Replacing the Terminal Block Assembly 61
Replacing the Electronics Module Assembly 61
Removing and Reinstalling a Housing Assembly 63
Adding the Optional Display 63
Replacing the Sensor Assembly 63
Rotating Process Covers for Venting 64

Index 67

Figures

1	Transmitter Identification	3
2	Top Level Structure Diagram (Version 4 Firmware)	4
3	Top Level Structure Diagram (Version 5 Firmware)	4
4	Minimum Allowable Absolute Pressure vs. Process Temperature with Fluorinert Fill Fluid	7
5	Typical Mounting of an IDP10 Transmitter Supported by Process Piping	13
6	Typical Mounting of an IDP10 Transmitter Supported by a Bypass Manifold	14
7	Typical Mounting of BM-M4A and BM-M4T Manifold with -AM Bracket	14
8	Typical Mounting of MB3VIS-4 or MB5VIS-4 Manifold with Z-Shaped and -UB Bracket	15
9	Typical Mounting of IDP10 Transmitter on Coplanar Manifold	15
10	Pipe or Surface Mounted Transmitter Using a Standard Bracket	16
11	Examples of Mounting With a Standard Bracket	16
12	Details of a Universal Bracket	17
13	Mounting a Transmitter with Traditional Structure Using a Universal Bracket	17
14	Vertical Pipe Mounting a Transmitter with LP2 Structure Using a Universal Bracket	18
15	Horizontal Mounting a Transmitter with LP2 Structure Using a Universal Bracket	19
16	Vertical Mounting - Cavity Draining	20
17	Vertical Mounting - Cavity Venting	20
18	Horizontal Mounting - Cavity Venting	20
19	Vertical Mounting - Cavity Venting	21
20	Horizontal Mounting - Cavity Venting and Draining	21
21	Cavity Venting and Draining	21
22	Example of Horizontal Process Line Installation	22
23	Example of Vertical Process Line Installation	23
24	Housing Set Screw Location	24
25	Cover Lock Location	25
26	Accessing Field Terminals	25
27	Identification of Field Terminals	26
28	Supply Voltage and Loop Load	27
29	Loop Wiring Transmitters	28
30	Wiring Several Transmitters to a Common Power Supply	29
31	Typical Multidrop Network	29
32	Local Display Module	31
33	Top Level Structure Diagram (Version 4 Firmware)	32
34	Top Level Structure Diagram (Version 5 Firmware)	32
35	Display Test Segment Patterns	34
36	4 to 20 mA Output Calibration Setup of Electronic Equipment	39
37	Field Calibration Setup	40
38	Bench Calibration Setup	41
39	Calibration Structure Diagram	43
40	Calibration Structure Diagram (Continued)	44
41	Configuration Structure Diagram	52
42	Configuration Structure Diagram (Continued)	53
43	Configuration Structure Diagram (Continued)	54
44	Replacing the Electronics Module Assembly and Display	62
45	Replacing the Sensor Assembly	64
46	Replacing the Sensor Assembly (pvdf Inserts)	64
47	Sensor Cavity Venting and Draining	65

Tables

1	Reference Documents	1
2	Minimum Loop Load and Supply Voltage Requirements	8
3	Electrical Safety Specifications	11
4	Operation Error Messages	35
5	Calibration Menu	42
6	Calibration Error Messages	47
7	IDP10-T Configurable Parameters	49
8	Configuration Menu	50
9	Alphanumeric Character List	58
10	Numeric Character List	58
11	Configuration Error Messages	59

1. Introduction

General Description

The IDP10-T intelligent differential pressure transmitters measure the difference between two pressures applied to opposite sides of a silicon strain gauge microsensor within the sensor assembly. This microsensor converts differential pressure to a change in resistance. The resistance change is then converted to a 4 to 20 mA or digital signal proportional to differential pressure or to the square root of differential pressure. This measurement signal is transmitted to remote receivers over the same two wires that supply power to the transmitter electronics. These wires also carry two-way data signals between the transmitter and remote communication devices.

The transmitter allows direct analog connection to common receivers while still providing full Intelligent Transmitter Digital Communications using a HART Communicator.

The transmitter is often used for measuring fluid flow rates across a primary device such as an orifice plate, but can also be used for other types of differential pressure measurements such as liquid level, interface level, or density measurements. The IDP10 can also be supplied with direct connected or remote pressure seals to isolate the measuring element from corrosive or viscous fluids.

For more detailed information on the principle of operation of the transmitter, refer to document TI 037-096, available from Invensys Foxboro.

Reference Documents

Table 1. Reference Documents

Document	Description
Dimensional Prints	
DP 020-342	Dimensional Print – PSFLT Pressure Seals
DP 020-343	Dimensional Print – PSFPS and PSFES Pressure Seals
DP 020-345	Dimensional Print – PSFAR Pressure Seals
DP 020-347	Dimensional Print – PSTAR Pressure Seals
DP 020-349	Dimensional Print – PSISR Pressure Seals
DP 020-351	Dimensional Print – PSSCR Pressure Seals
DP 020-353	Dimensional Print – PSSCT Pressure Seals
DP 020-354	Dimensional Print – PSSSR Pressure Seals
DP 020-355	Dimensional Print – PSSST Pressure Seals
DP 020-446	Dimensional Print – IDP10, IDP25, and IDP50 Differential Pressure Transmitters
DP 022-335	Dimensional Print – Model CO Compact Orifice
Parts Lists	
PL 006-172	Parts List – Model CO Compact Orifice

Table 1. Reference Documents (Continued)

Document	Description
PL 009-005	Parts List – IDP10 Differential Pressure Transmitter
Instructions	
MI 020-328	Instruction – Bubble Type Installation for Liquid Level
MI 020-329	Instruction – High Accuracy Flow Measurement
MI 020-366	Instruction – I/A Series Intelligent Pressure Transmitters Operation, Configuration, and Calibration Using a HART Communicator
MI 020-369	Instruction – Pressure Seals
MI 020-427	Instruction – Intrinsic Safety Connection Diagrams and Nonincendive Circuits
MI 020-495	Instruction – PC20 Intelligent Transmitter Configurator
MI 020-501	Instruction – PC50 Intelligent Field Device Tool (Installation and Parts List)
MI 020-505	Instruction – PC50 Intelligent Field Device Tool (Operation Using HART Protocol)
MI 022-137	Instruction – Bypass Manifolds - Installation and Maintenance
MI 022-335	Instruction – Model CO Compact Orifice
Technical Information	
TI 1-50a	Technical Information – Liquid Density Measurement
TI 001-051	Technical Information – Liquid Interface Measurement
TI 001-052	Technical Information – Liquid Level Measurement
TI 37-75b	Technical Information – Transmitter Material Selection Guide
TI 037-096	Technical Information – I/A Series Pressure Transmitters

Transmitter Identification

See Figure 1 for transmitter data plate contents. For a complete explanation of the Model Number code, see the parts list. The firmware version is identified on the top line of the display when **VIEW DB** (View Database) is selected in the top level structure (see Figures 2 or 3).

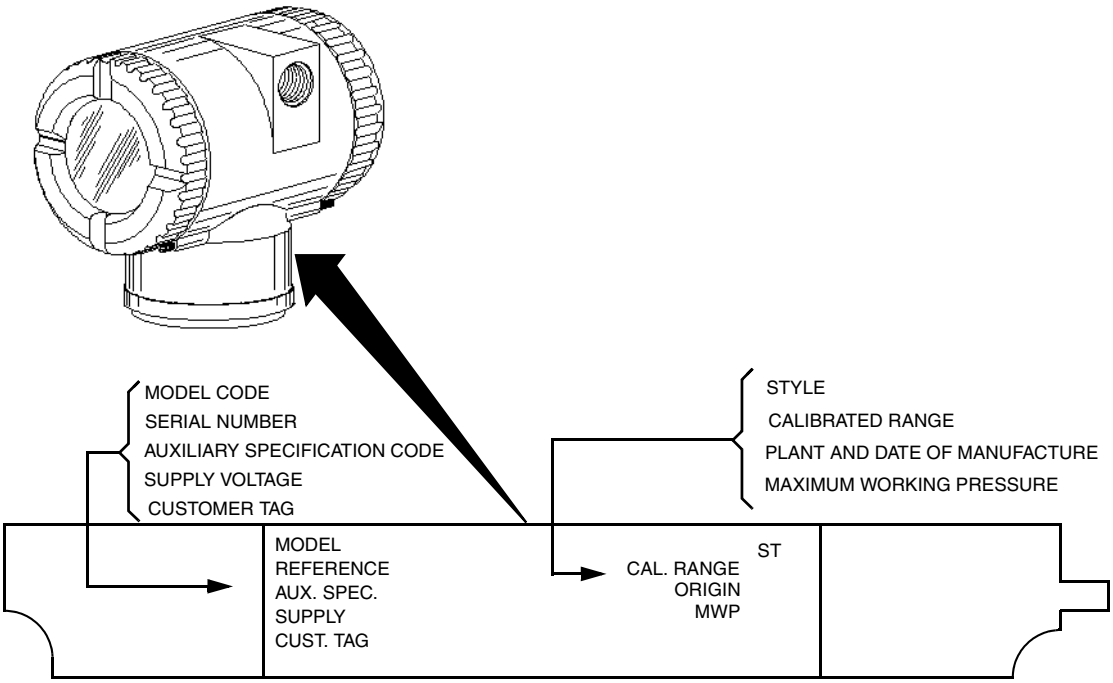

Figure 1. Transmitter Identification

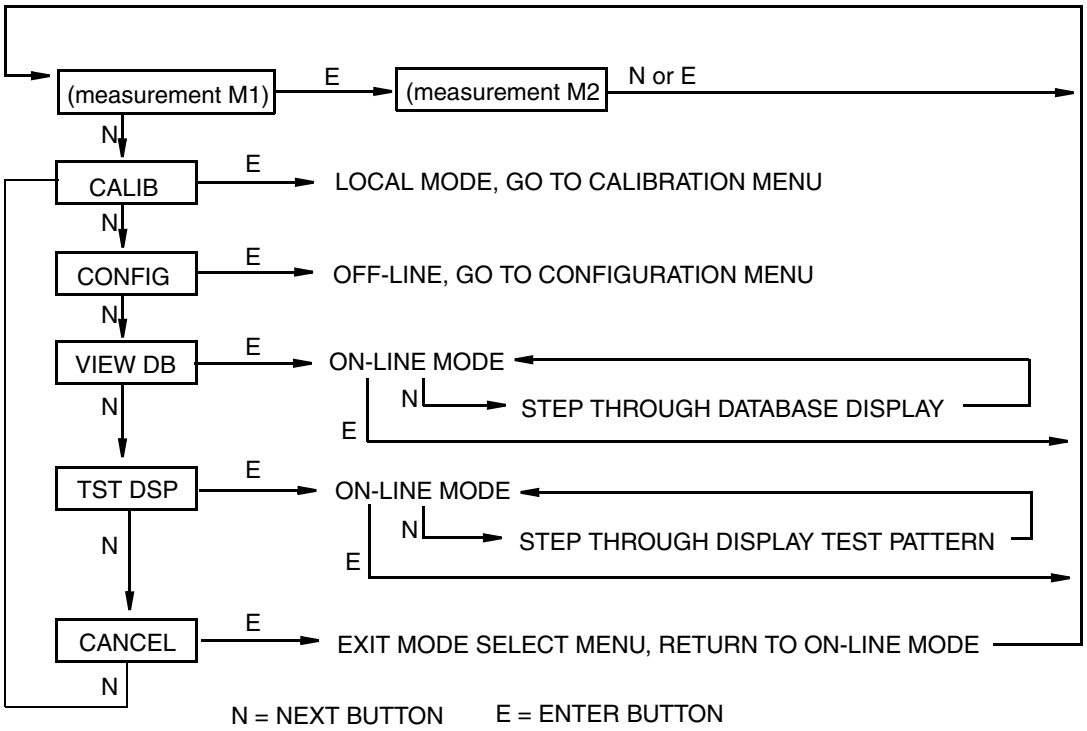

Figure 2. Top Level Structure Diagram (Version 4 Firmware)

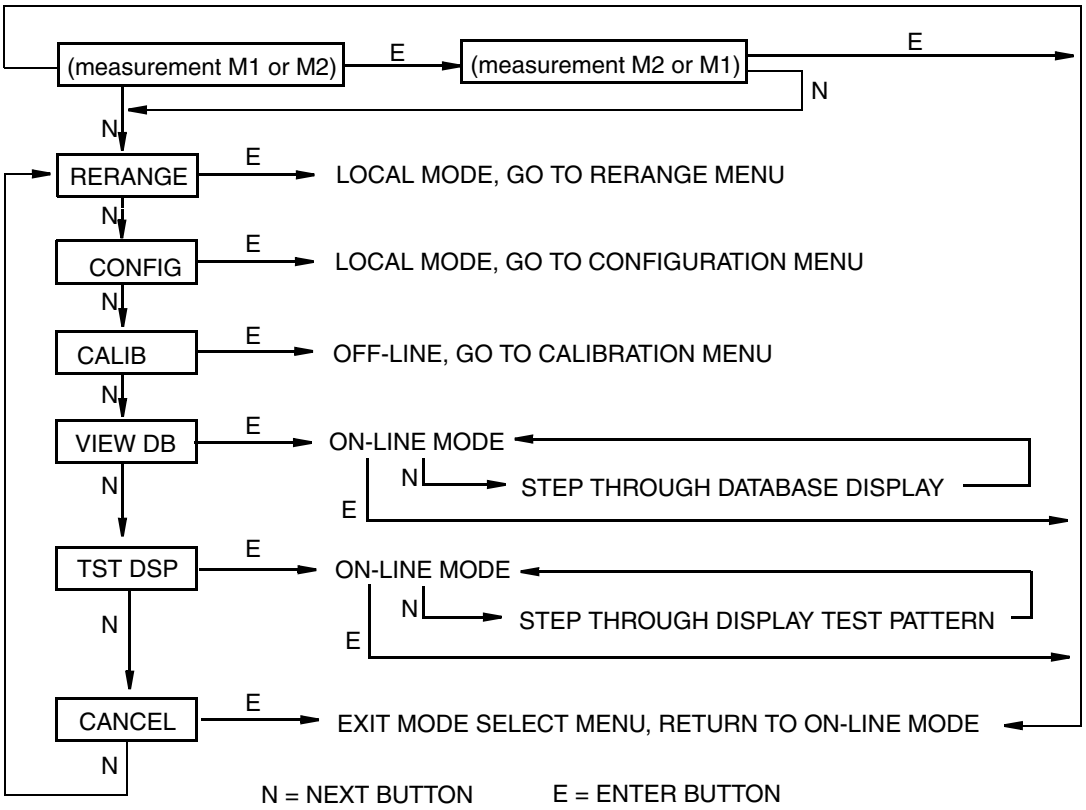

Figure 3. Top Level Structure Diagram (Version 5 Firmware)

Standard Specifications

Operative Limits

Influence	Operative Limits
Sensor Body Temperature[a] Silicone Fill Fluid Fluorinert Fill Fluid Neobee Fill Fluid pvdf Inserts	 -46 and +121°C (-50 and +250°F) -29 and +121°C (-20 and +250°F) -18 and +121°C (0 and 250°F) -7 and +82°C (20 and 180°F)
Electronics Temperature With LCD Display	-40 and +85°C (-40 and +185°F) -40 and +85°C (-40 and +185°F)[b]
Relative Humidity	0 and 100%
Supply Voltage	11.5 and 42 V dc
Output Load[c]	0 and 1450 ohms
Mounting Position	No Limit
Vibration	6.3 mm (0.25 in) double amplitude from 5 to 15 Hz with aluminum housing and from 5 to 9 Hz with 316 ss housing. 0 to 30 m/s (0 to 3 “g”) from 15 to 500 Hz with aluminum housing and 0 to 10 m/s (0 to 1 “g”) from 9 to 500 Hz with 316 ss housing.

(a) Refer to MI 020-369 for temperature limits with pressure seals.

(b) Display updates are slowed and readability decreased at temperatures below -20°C (-4°F).

(c) 250 Ω minimum load is required for communication with a HART Communicator.

Span and Range Limits

Span Limit Code	Span Limits ΔP	Range Limits ΔP [a]
A[b]	0.12 and 7.5 kPa 0.5 and 30 inH_20 12 and 750 mmH_20	-7.5 and +7.5 kPa -30 and +30 inH_20 -750 and +750 mmH_20
B	0.87 and 50 kPa 3.5 and 200 inH_20 87 and 5000 mmH_20	-50 and +50 kPa -200 and +200 inH_20 -5000 and +5000 mmH_20
C	7.0 and 210 kPa 28 and 840 inH_20 2.3 and 69 ftH_20	-210 and +210 kPa -840 and +840 inH_20 -69 and +69 ftH_20
D	0.07 and 2.1 MPa 10 and 300 psi 23 and 690 ftH_20	-0.21 and +2.1 MPa -30 and +300 psi -69 and +690 ftH_20
E	0.7 and 21 MPa 100 and 3000 psi	-0.21 and +21 MPa -30 and +3000 psi

(a) Negative values of differential pressure indicate a higher pressure on the **low side** of the sensor. Positive values indicate a higher pressure on the **high side** of the sensor.

(b) Span Limit Code “A” not available with pressure seals.

Maximum Static, Overrange, and Proof Pressure

Transmitter Configuration (Bolting Material)[c]	Maximum Static and Overrange Pressure Rating[a,e,f]		Proof Pressure Rating[b]	
	MPa	Psi	MPa	Psi
Standard (B7 steel), Option “-B2” (17-4 PH ss), Option “-D3” or “-D7”	25	3625	100	14500
Option “B1” (316 ss) or Option “-D5”	15	2175	60	8700
Option “B3” (B7M)	20	2900	70	11150
Option “-D1”	16	2320	64	9280
Option “-D2”, “-D4”, “-D6”, or “-D8”[d]	10	1500	40	6000
Option “-D9” (17-4 PH ss)	40	5800	100	14500

(a) Either side can be at higher pressure during overrange.

(b) Meets ANSI/ISA Standard S82.03-1988.

(c) -D1 = DIN Single ended process cover with M10 B7 bolting.
-D2 = DIN Double ended process cover with M10 B7 bolting
-D3 = DIN Single ended process cover with 7/16 in B7 bolting.
-D4 = DIN Double ended process cover with 7/16 in B7 bolting.
-D5 = DIN Single ended process cover with 7/16 in 316 ss bolting.
-D6 = DIN Double ended process cover with 7/16 in 316 ss bolting.
-D7 = DIN Single ended process cover with 7/16 in 17-4 ss bolting.
-D8 = DIN Double ended process cover with 7/16 in 17-4 ss bolting
-D9 = DIN Single ended process cover with 7/16 in 17-4 ss bolting.

(d) Limited to operating temperatures ranging from 0 to 60°C (32 to 140°F).

(e) When Structure Codes 78/79 are used (pvdf inserts in the Hi and Lo side process covers), the maximum overrange is 2.1 MPa (300 psi) and temperature limits are -7 and +82°C (20 and 180°F).

(f) Static pressure rating of 40 MPa (5800 psi) with Option Code -Y.

NOTE

Static pressure zero shift for all calibrated spans can be eliminated by readjusting the zero output at nominal operating static pressure.

CAUTION

1. Exceeding the maximum overrange pressure can cause damage to the transmitter degrading its performance.
2. The transmitter could be nonfunctional after application of the proof pressure.

Elevated Zero and Suppressed Zero

For applications requiring an elevated or suppressed zero, the maximum span and the upper and lower range limits of the transmitter can not be exceeded.

Sensor Fill Fluid

Silicone Oil (DC 200) or Fluorinert (FC-43)

Minimum Allowable Absolute Pressure vs. Process Temperature

With Silicone Fill Fluid: At full vacuum: Up to 121°C (250°F)
With Fluorinert Fill Fluid: Refer to Figure 2.

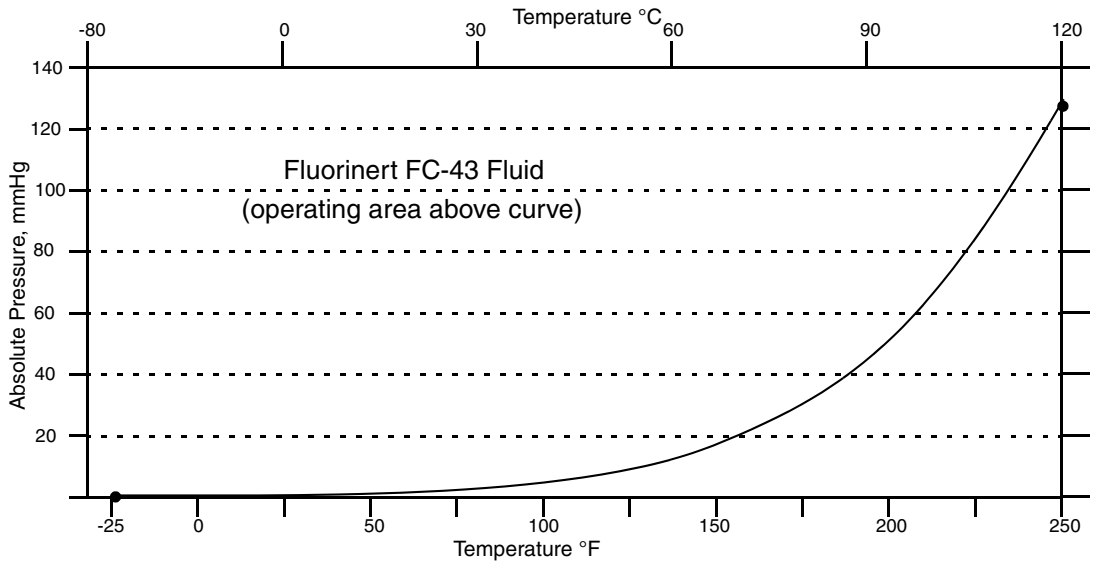

Figure 4. Minimum Allowable Absolute Pressure vs. Process Temperature with Fluorinert Fill Fluid

Mounting Position

The transmitter can be mounted in any orientation. It can be supported by the process piping. It can also be mounted directly to a vertical or horizontal pipe or surface mounted using an optional mounting bracket. The housing can be rotated up to one full turn to any desired position for access to adjustments, display, or conduit connections. See “Positioning the Housing” on page 24. The display (if present) can also be rotated in the housing to any of four different positions at 90° increments. See “Positioning the Display” on page 24.

NOTE

Position effect zero shift for all calibrated spans can be eliminated by readjusting zero output after installation.

Approximate Mass

Without Process Connectors	3.5 kg (7.8 lb)
With Process Connectors	4.2 kg (9.2 lb)
With Optional 316 ss Housing	Add 1.1 kg (2.4 lb)
With Pressure Seals	Varies with seal used

Process Connections

IDP10 transmitters are connected to the process via a 1/4 NPT thread or any one of a number of optional process connectors.

Process Wetted Materials

Diaphragm: 316L ss, Co-Ni-Cr, Hastelloy C, Monel, gold plated 316L ss, or tantalum
Covers and Process Connections: 316 ss, carbon steel, Hastelloy C, Monel, or pvdf inserts
Pressure Seals: Refer to MI 020-369

Process Pressure and Temperature Limits for Pressure Seals

Refer to MI 020-369

Electrical Connections

Field wires enter through 1/2 NPT, PG 13.5, or M20 threaded entrances on either side of the electronics housing. Leads terminate under screw terminals and washers on the terminal block in the field terminal compartment. To maintain RFI/EMI, environmental, and explosionproof ratings, unused conduit connection must be plugged with metal plug (provided), inserted to five full turns.

Field Wiring Reversal

Accidental reversal of field wiring will not damage the transmitter, provided the current is limited to 1 A or less by active current limiting or loop resistance. Sustained currents of 1 A will not damage the electronics module or sensor but could damage the terminal block assembly and external instruments in the loop.

Adjustable Damping

The transmitter response time is normally 1.0 second or the electronically adjustable setting of 0.00 (none), 0.25, 0.50, 1, 2, 4, 8, 16, or 32 seconds, whichever is greater, for a 90% recovery from an 80% input step as defined in ANSI/ISA S51.1.

Output Signal

4 to 20 mA dc linear or 4 to 20 mA dc square root; software selectable. The output is remotely configurable from the HART Communicator and locally configurable with the pushbuttons on the display.

NOTE

Only 4 to 20 mA linear output on absolute pressure, gauge pressure, and flange level transmitters.

Zero and Span Adjustments

Zero and span are adjustable from the HART Communicator. They are also adjustable at the transmitter using the display. An optional external self-contained moisture sealed pushbutton assembly allows local resetting of zero without removing the housing cover.

Power-up Time

Less than 2.0 seconds for output to reach the first valid measurement, then at the electronic damping rate to reach the final measured variable value.

Supply Voltage

Power supply must be capable of providing 22 mA when the transmitter is configured for 4 to 20 mA output. Ripple of up to 2 V pp (50/60/100/120 Hz) is tolerable, but instantaneous voltage must remain within specified range.

The supply voltage and loop load must be within specified limits. This is explained in detail in “Wiring” on page 25. A summary of the minimum requirements is listed in Table 2.

Table 2. Minimum Loop Load and Supply Voltage Requirements

	HART Communication	No HART Communication
Minimum Resistance	250 Ω	0
Minimum Supply Voltage	17 V	11.5 V

Electrical Ground Connections

The transmitter is equipped with an internal ground connection within the field wiring compartment and an external ground connection at the base of the electronics housing. To minimize galvanic corrosion, place the wire lead or contact between the captive washer and loose washer on the external ground screw. If shielded cable is used, earth (ground) the shield at the field enclosure **only**. Do **not** ground the shield at the transmitter.

HART Communicator Connection Points

The HART Communicator can be connected in the loop as shown in “Wiring” on page 25. It can also be connected directly to the transmitter at the two upper banana plug receptacles.

Test Points

The two lower banana plug receptacles (designated **CAL**) can be used to check transmitter output when configured for 4 to 20 mA. Measurements should be 100-500 mV dc for 0-100% transmitter output.

Remote Communications

The transmitter communicates bidirectionally over the 2-wire field wiring to a HART Communicator. The information that can be continuously displayed is:

- Process Measurement (expressed in one or two types of units)
- Transmitter Temperature (sensor and electronics)
- mA Output (equivalent)

The information that can be remotely displayed and reconfigured includes:

- Output in Percent Flow (square root) or Pressure Units (linear). Percent Display in Linear mode on local display is also supported.
- Zero and Span, including reranging
- Zero Elevation or Suppression
- Linear Output or Square Root Output (in some models)
- Pressure or Flow Units (from list provided)
- Temperature Sensor Failure Strategy
- Electronic Damping
- Poll Address (Multidrop mode)
- External Zero (Enable or Disable)
- Failsafe Direction
- Tag, Description, and Message
- Date of Last Calibration

Communications Format

Communication is based upon the FSK (Frequency Shift Keying) technique. The frequencies are superimposed on the transmitter power/signal leads.

4 to 20 mA Output

The transmitter sends its differential pressure measurement to the loop as a continuous 4 to 20 mA dc signal. It also communicates digitally with the HART Communicator at distances up to 3000 m (10 000 ft). Communication between the remote configurator and the transmitter does not disturb the 4 to 20 mA output signal. Other specifications are:

Data Transmission Rate:	1200 Baud
4 - 20 mA Update Rate:	30 times/second
Output when Fail Low:	3.60 mA
Output when Fail High:	21.00 mA
Output when Underrange	3.80 mA
Output when Overrange	20.50 mA
Output when Offline:	User configurable between 4 and 20 mA

Product Safety Specifications

DANGER

To prevent possible explosions and to maintain explosionproof, dust-ignitionproof protection, observe applicable wiring practices. Plug unused conduit opening with the provided metal pipe plug, which engages a minimum of five full threads.

WARNING

To maintain IEC IP66 and NEMA Type 4X protection, the unused conduit opening must be plugged. In addition, the threaded housing covers must be installed. Turn covers to seat the O-ring into the housing and then continue to hand tighten until the cover contacts the housing metal-to-metal.

NOTE

1. These transmitters have been designed to meet the electrical safety description listed in Table 3. For detailed information or status of testing laboratory approvals/certifications, contact Invensys Foxboro.
2. Wiring restrictions required to maintain electrical certification of the transmitter are provided in “Wiring” on page 25.

Table 3. Electrical Safety Specifications

Testing Laboratory, Types of Protection, and Area Classification	Application Conditions	Electrical Safety Design Code
ATEX flameproof: II 2 GD EEx d IIC, Zone 1.	Temperature Class T6 at 85°C (185°F) maximum ambient with Version 4 electronic module. Temperature Class T6, T85°C, Ta = -40 to +85°C with Version 5 electronic module.	D
ATEX intrinsically safe: II 1 GD EEx ia IIC, Zone 0.	Temperature Class T4 at 80°C (176°F), T5 at 40°C (104°F), and T6 at 40°C (104°F) maximum ambient with Version 4 electronic module. Temperature Class T4, T103°C, Ta = -40 to +80°C with Version 5 electronic module.	E
ATEX protection n: II 3 GD EEx nL IIC, Zone 2.	Temperature Class T4 at 80°C (176°F), T5 at 40°C (104°F), and T6 at 40°C (104°F) maximum ambient with Version 4 electronic module. Temperature Class T4, T85°C, Ta = -40 to +80°C with Version 5 electronic module.	N
ATEX multiple certifications, ia & ib and n. Refer to Codes E and N for details.	Applies to Codes D, E, and N.[a]	M
CSA intrinsically safe for Class I, Division 1, Groups A, B, C, and D; Class II, Division 1, Groups E, F, and G; Class III, Division 1. Also, Zone certified intrinsically safe Ex ia IIC and energy limited Ex nA II.	Connect per MI 020-427. Temperature Class T4A at 40°C (104°F) and T3C at 85°C (185°F) maximum ambient. Temperature Class T4 at 40°C (104°F), and T3 at 85°C (185°F) max. ambient.	C
CSA explosionproof for Class I, Division 1, Groups B, C, and D; dust-ignitionproof for Class II, Division 1, Groups E, F, and G; Class III, Division 1.	Maximum Ambient Temperature 85°C (185°F).	
CSA for Class I, Division 2, Groups A, B, C, and D; Class II, Division 2, Groups F and G; Class III, Division 2.	Temperature Class T4A at 40°C (104°F) and T3C at 85°C (185°F) maximum ambient.	
CSA field device zone certified flameproof Ex d IIC. Also, all certifications of Code C above.	Maximum Ambient Temperature 85°C (185°F).	B

Table 3. Electrical Safety Specifications (Continued)

Testing Laboratory, Types of Protection, and Area Classification	Application Conditions	Electrical Safety Design Code
FM intrinsically safe for Class I, Division 1, Groups A, B, C, and D; Class II, Division 1, Groups E, F, and G; Class III, Division 1. Also, Zone certified intrinsically safe AEx ia IIC.	Connect per MI 020-427. Temperature Class T4A at 40°C (104°F) and T4 at 85°C (185°F) maximum ambient. Temperature Class T4 at 85°C (185°F) maximum ambient.	F
FM explosionproof for Class I, Division 1, Groups B, C, and D; dust-ignitionproof for Class II, Division 1, Groups E, F, and G; Class III, Division 1.	Temperature Class T6 at 80°C (176°F) and T5 at 85°C (185°F) maximum ambient.	
FM nonincendive for Class I, Division 2, Groups A, B, C, and D; Class II, Division 2, Groups F and G; Class III, Division 2.	Temperature Class T4A at 40°C (104°F) and T4 at 85°C (185°F) maximum ambient.	
FM field device zone certified flameproof AEx d IIC. Also, all certifications of Code F above.	Temperature Class T6 at 75°C (167°F) maximum ambient.	G
SAA Ex, ia, IIC, intrinsically safe, Gas Group IIC, Zone 0.	Temperature Class T4 at 85°C (185°F) maximum ambient.	H
SAA EX, d, IIC, flameproof, Gas Group IIC, Zone 1.	Temperature Class T5 at 60°C (140°F) maximum ambient.	A
SAA Ex n, IIC, nonincendive, Gas Group IIC, Zone 2.	Temperature Class T6.	K
IECEx intrinsically safe: Ex ia IIC.	Applies to Version 5 electronic module. Temperature Class T4, Ta = -40 to +80°C.	T
IECEx protection n: Ex nL IIC	Applies to Version 5 electronic module. Temperature Class T4, Ta = -40 to +80°C.	U
IECEx flameproof: Ex d IIC	Applies to Version 5 electronic module. Temperature Class T6, Ta = -40 to +75°C.	V

(a) User must permanently mark (check off in rectangular block on data plate) one type of protection only (ia and ib, d, or n). This mark cannot be changed once it is applied.

2. Installation

CAUTION

To avoid damage to the transmitter sensor, do not use any impact devices, such as an impact wrench or stamping device, on the transmitter.

NOTE

1. The transmitter should be mounted so that any moisture condensing or draining into the field wiring compartment can exit through one of the two threaded conduit connections.
2. Use a suitable thread sealant on all connections.

Transmitter Mounting

The IDP Series differential pressure transmitter can be supported by the process piping or mounted to a vertical or horizontal pipe or surface using the optional mounting bracket. See figures below. For dimensional information, refer to DP 020-446.

NOTE

1. If the transmitter is not installed in the vertical position, readjust the zero output to eliminate the position zero effect.
2. When structure codes 78/79 are used (pvdf inserts) with the IDP10 transmitters, the process connection must be made directly to the pvdf inserts in the high and low side process covers.

Process Mounting

With process mounting, the transmitter mounted to and supported by the process piping.

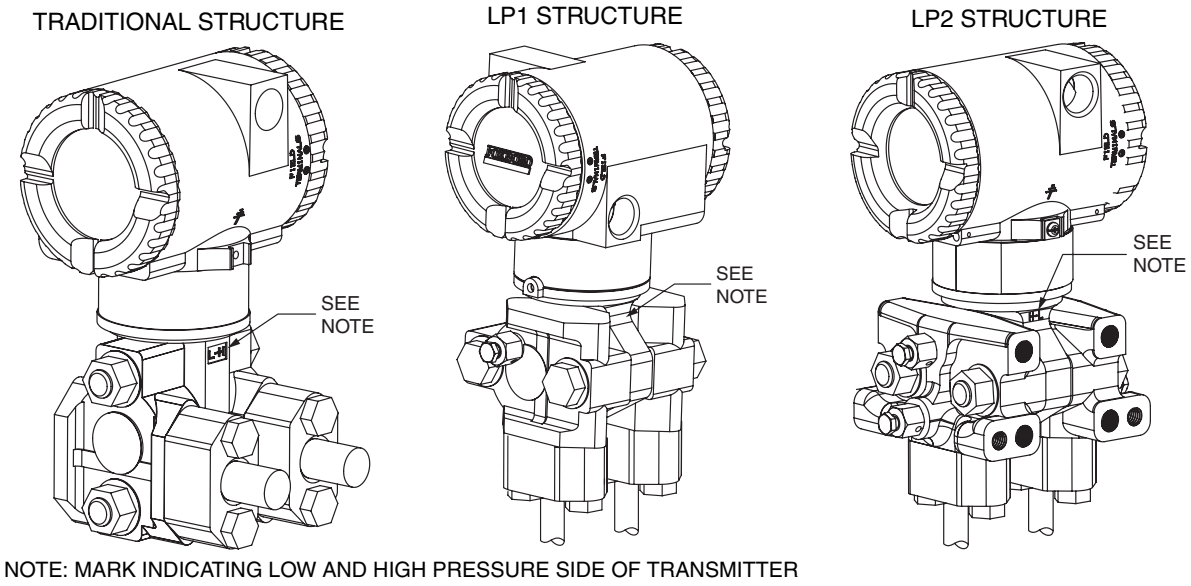

Figure 5. Typical Mounting of an IDP10 Transmitter Supported by Process Piping

Manifold Mounted Transmitter

With manifold mounting, the transmitter is mounted to and supported by a bypass manifold. The bypass manifold can be mounted to a DN50 or 2 inch pipe with an optional mounting bracket.

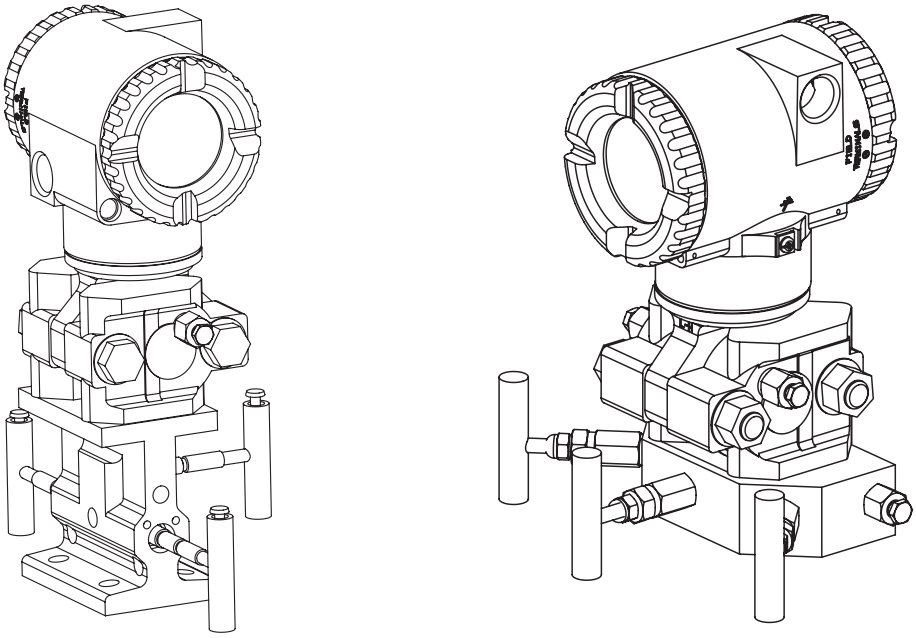

BM-M4A MANIFOLD MB3VIS-4 MANIFOLD

Figure 6. Typical Mounting of an IDP10 Transmitter Supported by a Bypass Manifold

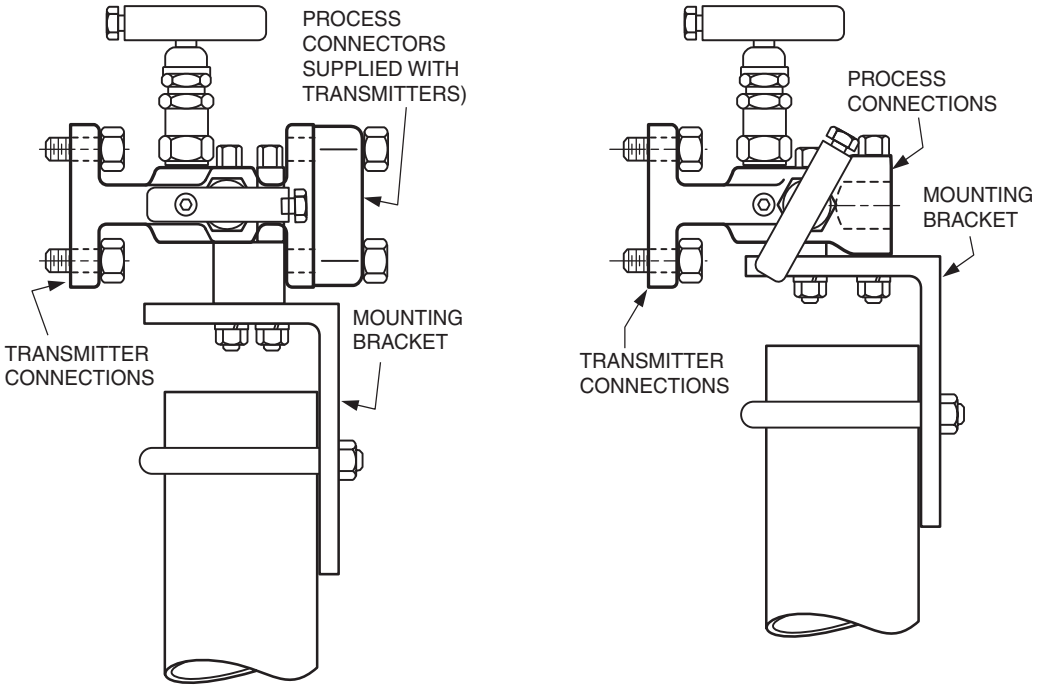

BM-M4A BM-M4T

Figure 7. Typical Mounting of BM-M4A and BM-M4T Manifold with -AM Bracket

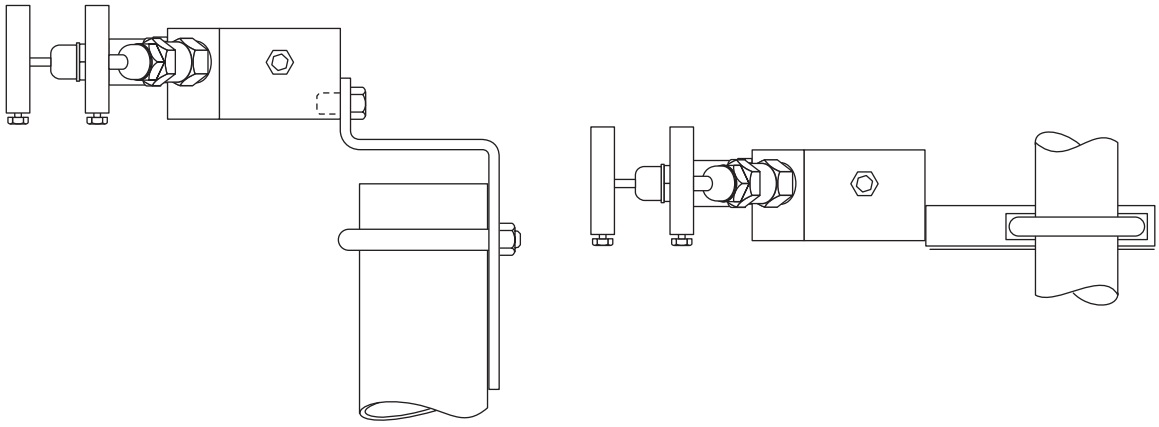

Figure 8. Typical Mounting of MB3VIS-4 or MB5VIS-4 Manifold with Z-Shaped and -UB Bracket

Transmitter Mounted on a Coplanar™ Manifold

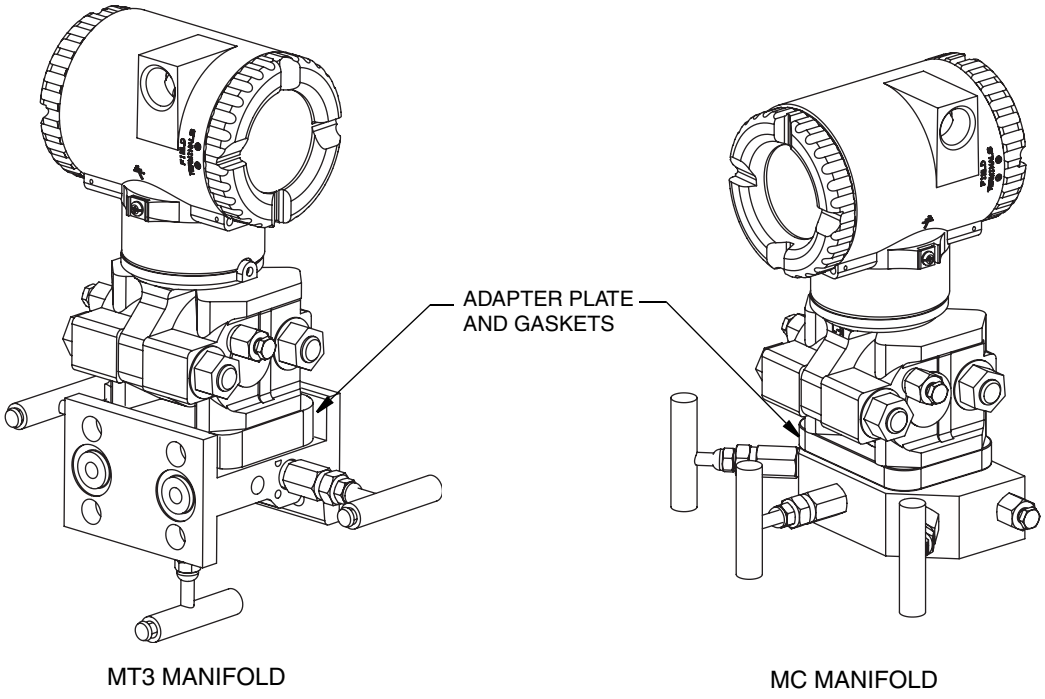

Figure 9. Typical Mounting of IDP10 Transmitter on Coplanar Manifold

Pipe or Surface Mounting

To mount the transmitter to a pipe or surface, use the Standard Mounting Bracket Set (Model Code Option -M1 or M2) or Universal Bracket Mounting Set (Model Code Option -M3).

Standard Mounting Bracket

The transmitter (with either traditional or LP2 low-profile structures) can be mounted to a vertical or horizontal, DN 50 or 2-in pipe using a standard bracket. See Figures 10 and 11 for details of a standard bracket and examples of different mounting situations. Secure the mounting bracket to the transmitter using the four screws provided. Mount the bracket to the pipe. To mount to a horizontal pipe, turn the

U-bolt 90° from the position shown. The mounting bracket can also be used for wall mounting by securing the bracket to a wall using the U-bolt mounting holes.

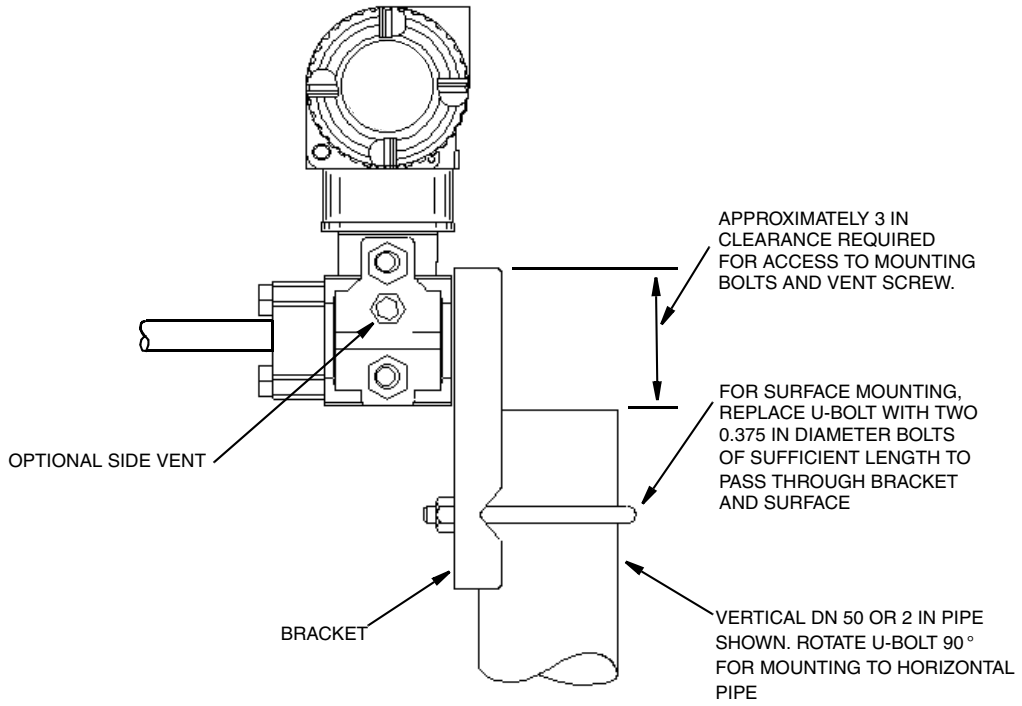

Figure 10. Pipe or Surface Mounted Transmitter Using a Standard Bracket

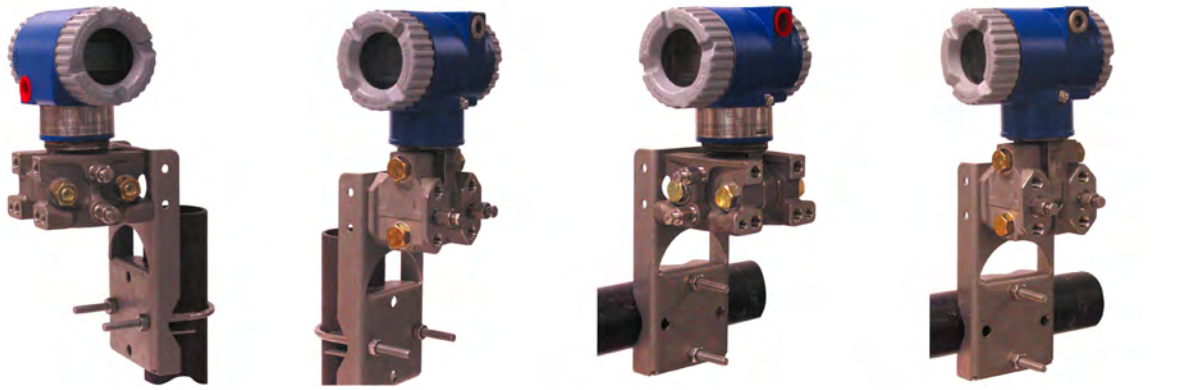

Figure 11. Examples of Mounting With a Standard Bracket

Universal Mounting Bracket

The transmitter (with either traditional or LP2 low-profile structure) can be mounted in a myriad of positions to a vertical or horizontal, DN 50 or 2-in pipe using a universal bracket. See the following figures for details of a universal bracket and examples of different mounting situations. Secure the mounting bracket to the transmitter using the two long or four short screws provided. Mount the bracket to the pipe. The mounting bracket can also be used for wall mounting by securing the bracket to a wall using the U-bolt mounting holes.

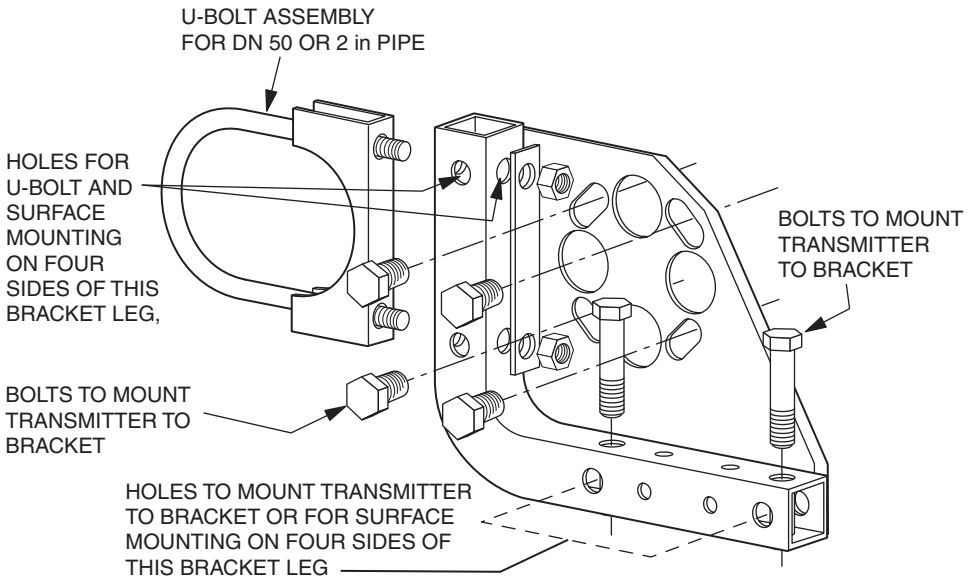

Figure 12. Details of a Universal Bracket

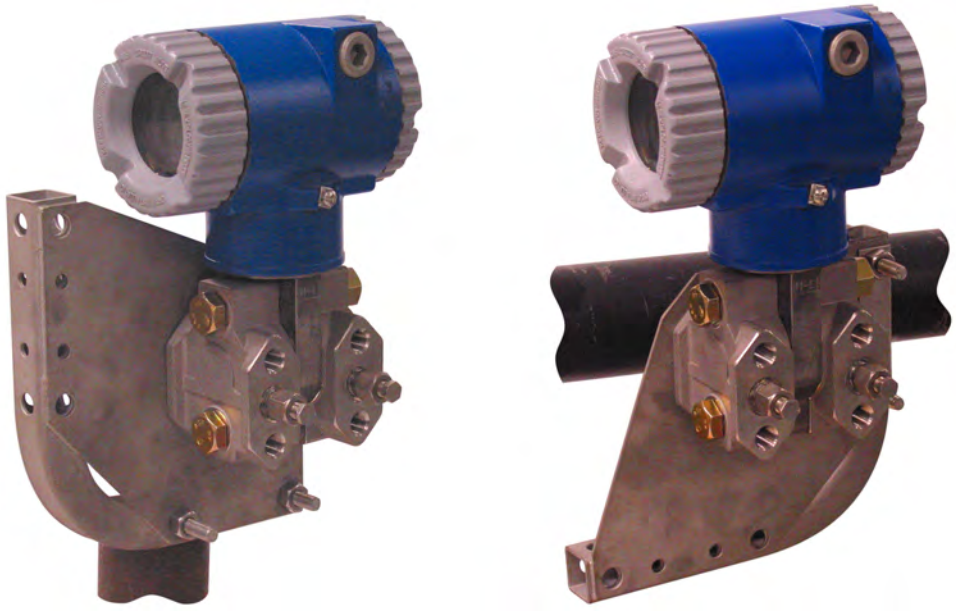

Figure 13. Mounting a Transmitter with Traditional Structure Using a Universal Bracket

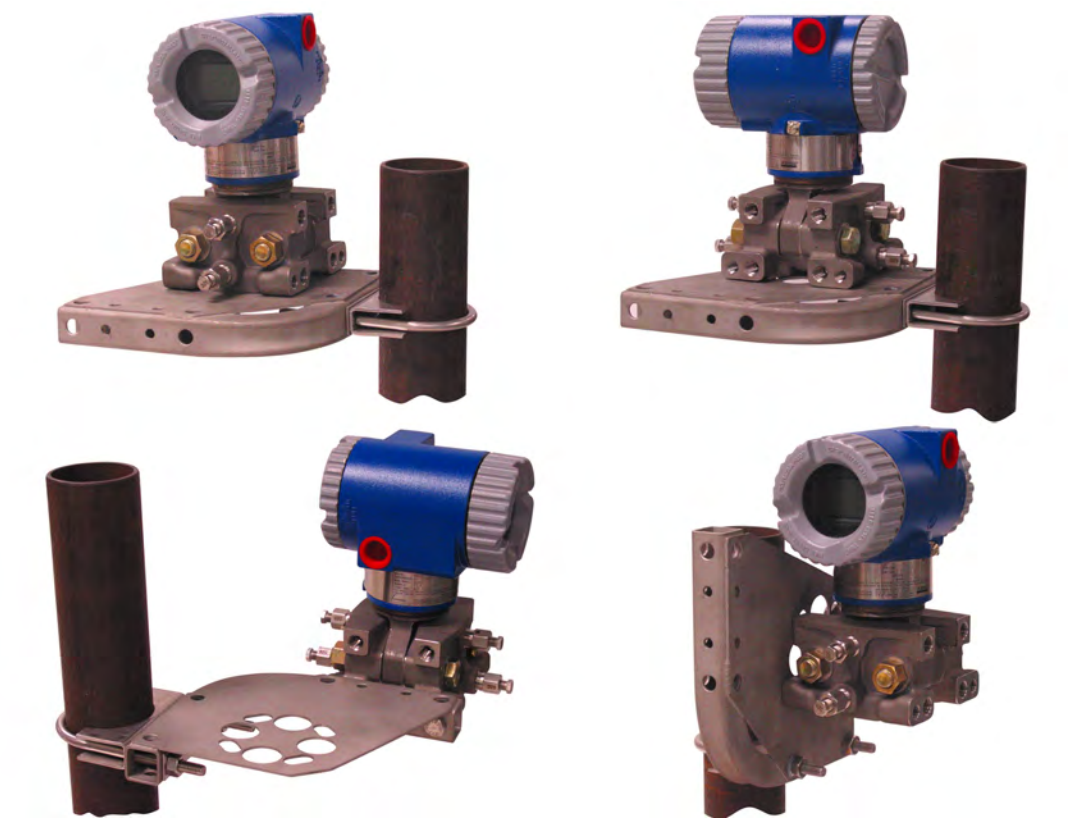

Figure 14. Vertical Pipe Mounting a Transmitter with LP2 Structure Using a Universal Bracket

Figure 15. Horizontal Mounting a Transmitter with LP2 Structure Using a Universal Bracket

Venting and Draining

Traditional Structure

Sensor cavity venting and draining is provided for both vertical and horizontal mounting. For vertical mounted units, draining is via a drain screw and venting is possible with side vents (Option Code -V). For horizontal mounted units, the unit is self draining and venting is via a vent screw.

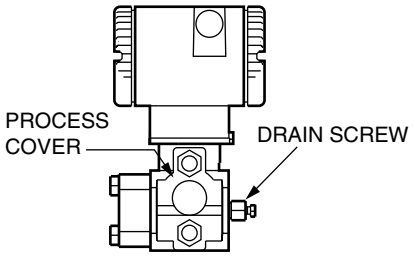

Figure 16. Vertical Mounting - Cavity Draining

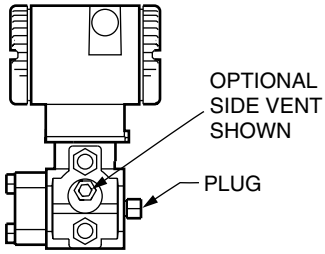

Figure 17. Vertical Mounting - Cavity Venting

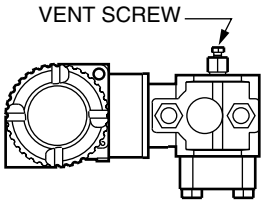

Figure 18. Horizontal Mounting - Cavity Venting

LP1 Low Profile Structure

Sensor cavity venting and draining is provided for both vertical and horizontal mounting. For vertical mounted units, the transmitter is self draining and venting is via a vent screw. For horizontal mounted units, the transmitter can simply be ‘turned over’ (rotated 180 degrees) to orient the high and low pressure sides in the preferred locations. There is no need to unbolt the process covers. If the transmitter is connected with a length of impulse piping, such piping should slope up to the transmitter for gas applications and down for liquid applications.

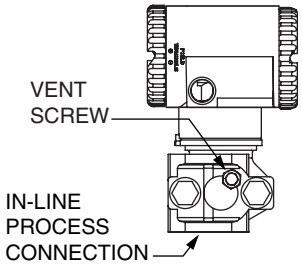

Figure 19. Vertical Mounting - Cavity Venting

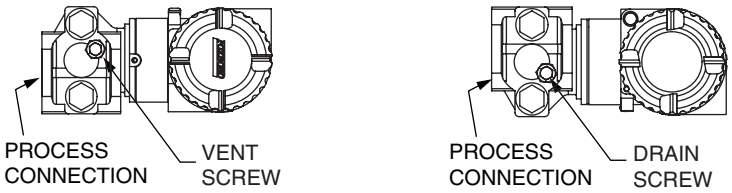

Figure 20. Horizontal Mounting - Cavity Venting and Draining

LP2 Low Profile Structure

The transmitter with LP2 low profile structure had a full-featured vent and drain design with separate vent and drain screws positioned in each cover for complete venting and draining from the sensor cavity.

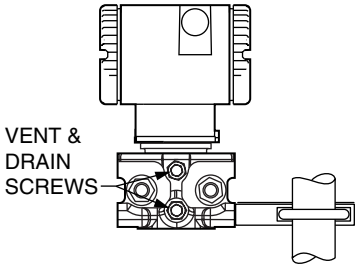

Figure 21. Cavity Venting and Draining

Installation of Flow Measurement Piping

Figures 22 and 23 show typical installations with horizontal and vertical process pipes.

The transmitters are shown below the level of the pressure connections at the pipe (usual arrangement, except for gas flow without a seal liquid), and with filling tees in the lines to the transmitter (for a seal liquid).

If the process fluid being measured must not come in contact with the transmitter, the transmitter lines must be filled with a suitable seal liquid (see procedure in next section). In such a case, the transmitter must be mounted below the level of the pressure connections at the pipe. With steam flow, the lines are filled with water to protect the transmitter from the hot steam. The seal liquid (or water) is added to the lines through the filling tees. To prevent unequal heads on the transmitter, the tees must be at the

same elevation and the transmitter must be mounted vertically (as shown). If a seal liquid is not required, elbows can be used in place of the tees.

Tighten drain plugs and optional vent screws to 20 N·m (15 lb·ft). Tighten the four process connector bolts to a torque of 61 N·m (45 lb·ft).

Note that the low and high pressure sides of the transmitter are identified by an L-H marking on the side of the sensor above the warning label.

With medium viscosity seal liquids and/or long transmitter lines, larger valve sizes should be used.

NOTE

1. With a **horizontal** line, pressure connections at the pipe should be at the side of the line. However, with gas flow without a seal liquid, connections should be at top of line.
2. With a **vertical** line, flow should be upwards.
3. For **liquid** or **steam** flow, the transmitter should be mounted **lower** than the pressure connections at the pipe.
4. For **gas** flow **without** a seal liquid, the transmitter should be mounted **above** the pressure connections at the pipe; for **gas** flow **with** a seal liquid, the transmitter should be mounted **below** the pressure connections.
5. Invensys Foxboro recommends the use of snubbers in installations prone to high levels of fluid pulsations.

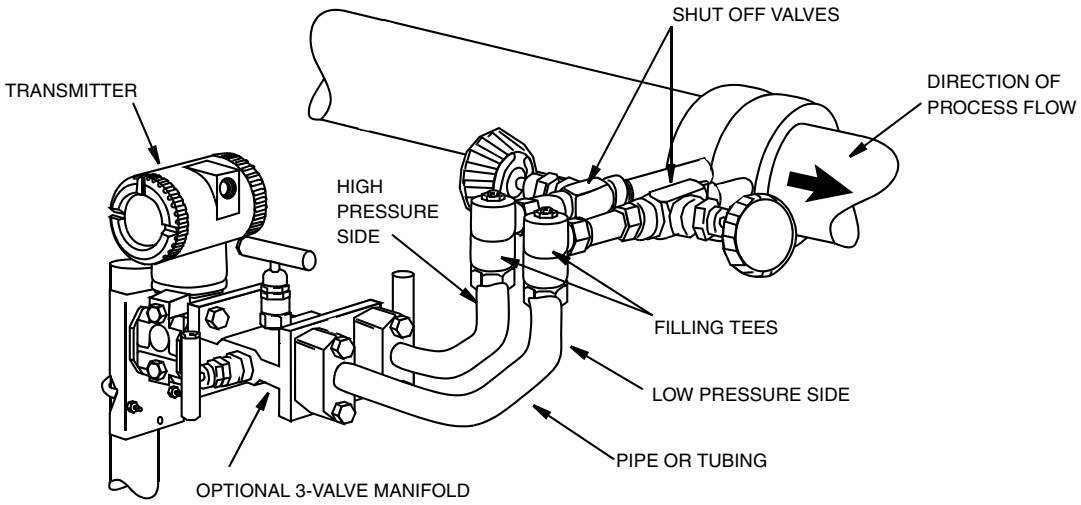

Figure 22. Example of Horizontal Process Line Installation

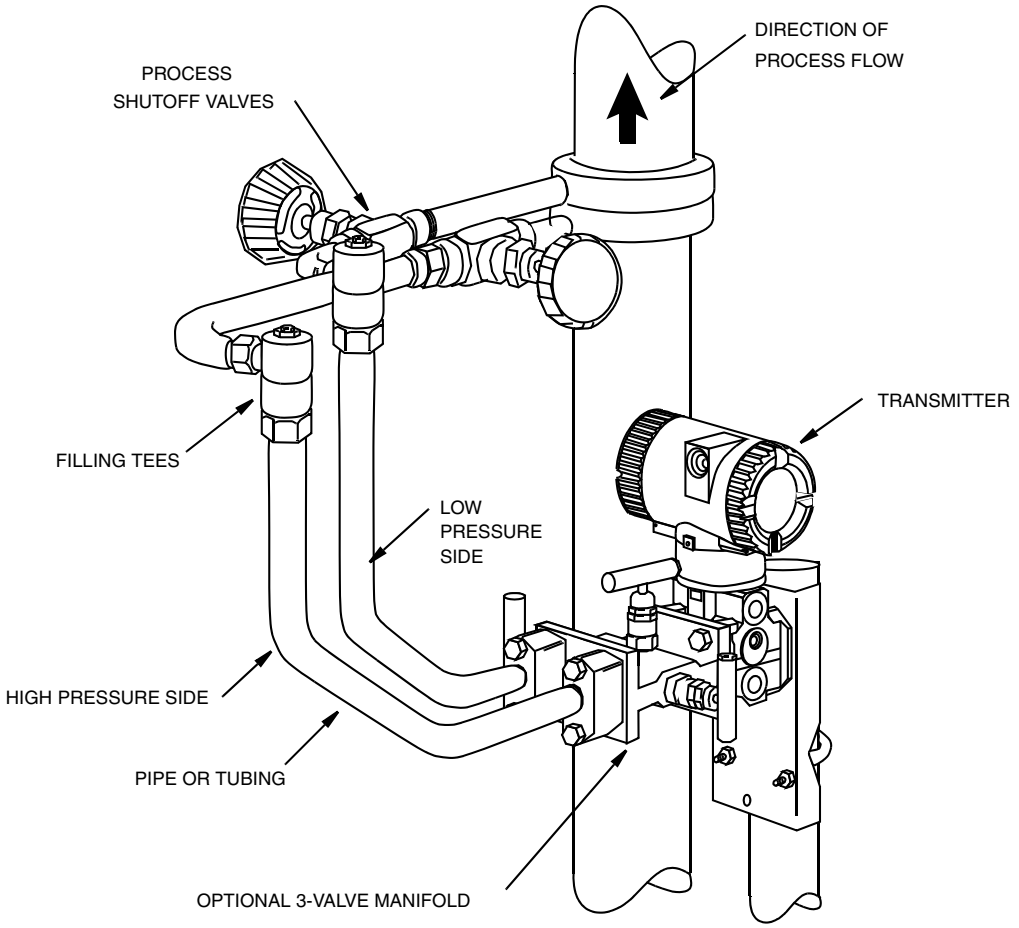

Figure 23. Example of Vertical Process Line Installation

Filling System with Seal Liquid

If the process fluid being measured must not come in contact with the transmitter, the transmitter lines must be filled with a suitable seal liquid. The procedure to do this is as follows:

1. If the transmitter is in service, follow the procedure for “Taking a Differential Pressure Transmitter Out of Operation” on page 30.
2. Close both process shutoff valves.
3. Open all three valves on the 3-valve manifold.
4. Partially open the vent screws on the transmitter until all air has been forced out of the transmitter body and lines. Close the vent screws.
5. Refill the tee connections. Replace the plugs and close the bypass valve. Check for leaks.
6. Follow the procedure for “Putting a Differential Pressure Transmitter Into Operation” on page 30.

CAUTION

To prevent loss of seal liquid and contamination of process fluid, never open both process shutoff valves and manifold shutoff valves if the bypass valve is open.

Positioning the Housing

The transmitter housing (topworks) can be rotated up to one full turn in the counterclockwise direction when viewed from above for optimum access to adjustments, display, or conduit connections.

WARNING

If the electronics housing is removed for any reason, it must be hand tightened fully. Then engage the set screw until it bottoms out and back it off 1/8th turn. Fill the set screw recess with red lacquer (Foxboro Part number X0180GS or equivalent). The housing then may be rotated up to one full turn in a counterclockwise direction for optimum access to adjustments.

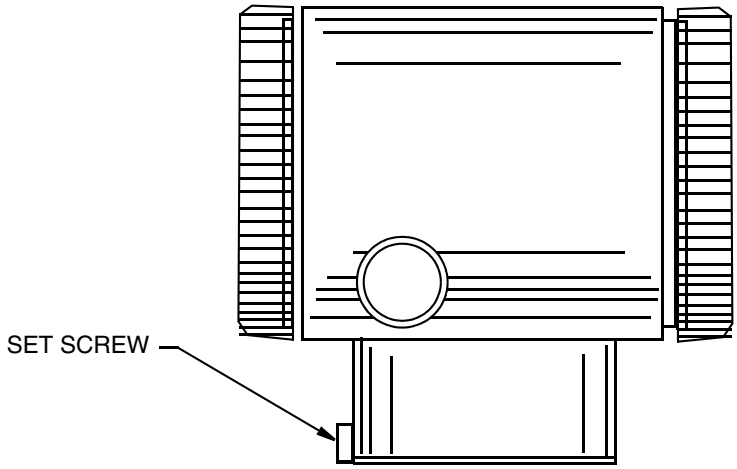

Figure 24. Housing Set Screw Location

Positioning the Display

The display (optional in some models) can be rotated within the housing to any of four positions at 90° increments. To do this, grasp the two tabs on the display and rotate it about 10° in a counterclockwise direction. Pull out the display. Ensure that the O-ring is fully seated in its groove in the display housing. Turn the display to the desired position, reinsert it in the electronics module, aligning the tabs on the sides of the assembly, and twist it in the clockwise direction.

CAUTION

Do **not** turn the display more than 180° in any direction. Doing so could damage its connecting cable.

Setting the Write Protect Jumper

Your transmitter has write protection capability. This means that the external zero, local display, and remote communications can be prevented from writing to the electronics. Write protection is set by moving a jumper that is located in the electronics compartment behind the optional display. To activate write protection, remove the display as described in the previous section, then remove the jumper or move it to the lower position as shown on the exposed label. Replace the display.

Cover Locks

Electronic housing cover locks, shown in Figure 25, are provided as standard with certain agency certifications and as part of the Custody Transfer Lock and Seal option. To lock the covers, unscrew the locking pin until approximately 6 mm (0.25 in) shows, lining up the hole in the pin with the hole in the

housing. Insert the seal wire through the two holes, slide the seal onto the wire ends and crimp the seal

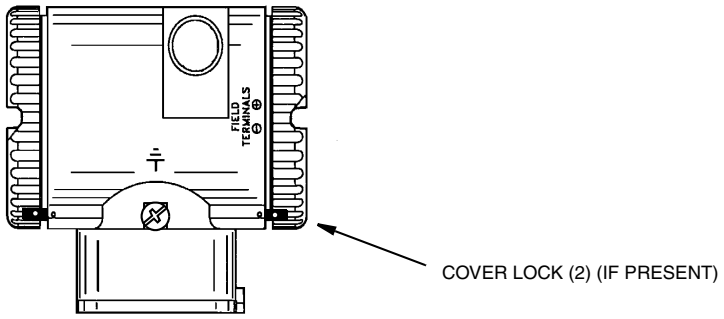

Figure 25. Cover Lock Location

Wiring

The installation and wiring of your transmitter must conform to local code requirements.

WARNING

ATEX requires that when the equipment is intended to be used in an explosive atmosphere caused by the presence of combustible dust, cable entry devices and blanking elements shall provide a degree of ingress protection of at least IP6X. They shall be suitable for the conditions of use and correctly installed.

NOTE

Invensys Foxboro recommends the use of transient/surge protection in installations prone to high levels of electrical transients and surges.

Accessing Transmitter Field Terminals

For access to the field terminals, thread the cover lock (if present) into the housing to clear the threaded cover and remove the cover from the field terminals compartment as shown in Figure 26. Note that the embossed letters **FIELD TERMINALS** identify the proper compartment.

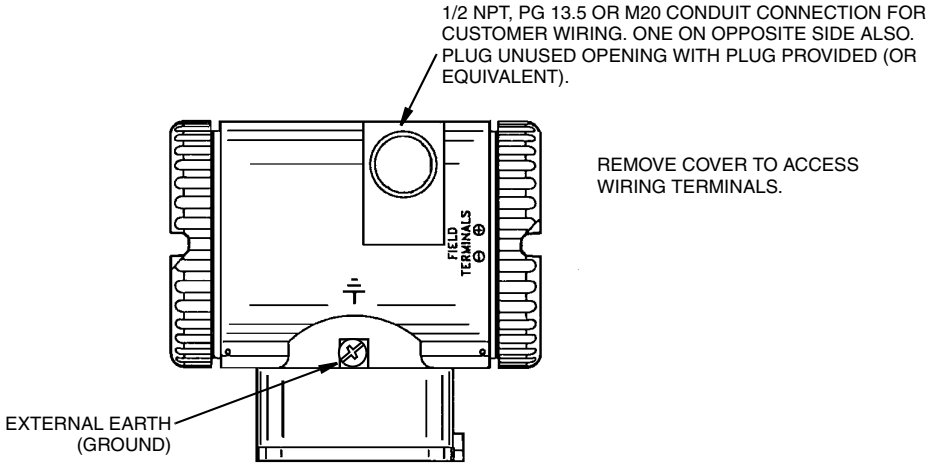

Figure 26. Accessing Field Terminals

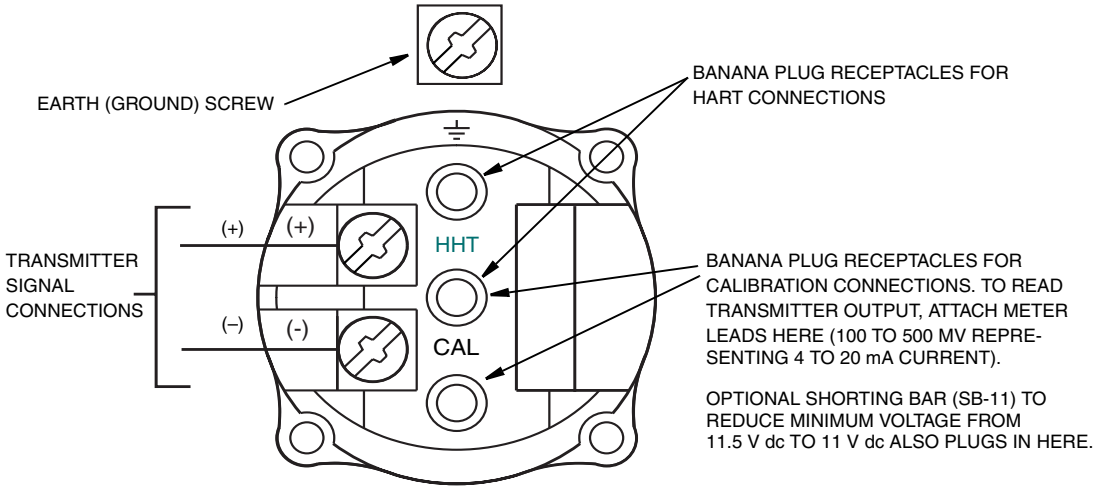

Figure 27. Identification of Field Terminals

Wiring the Transmitter to a Control Loop

When wiring the transmitter, the supply voltage and loop load must be within specified limits. The supply output load vs. voltage relationship is:

R_{MAX} = 47.5 (V - 11.5) and is shown in Figure 28.

NOTE

The relationship when the optional shorting bar is used is:

R_{MAX} = 46.8 (V - 11).

Any combination of supply voltage and loop load resistance in the shaded area can be used. To determine the loop load resistance (transmitter output load), add the series resistance of each component in the loop, excluding the transmitter. The power supply must be capable of supplying 22 mA of loop current.

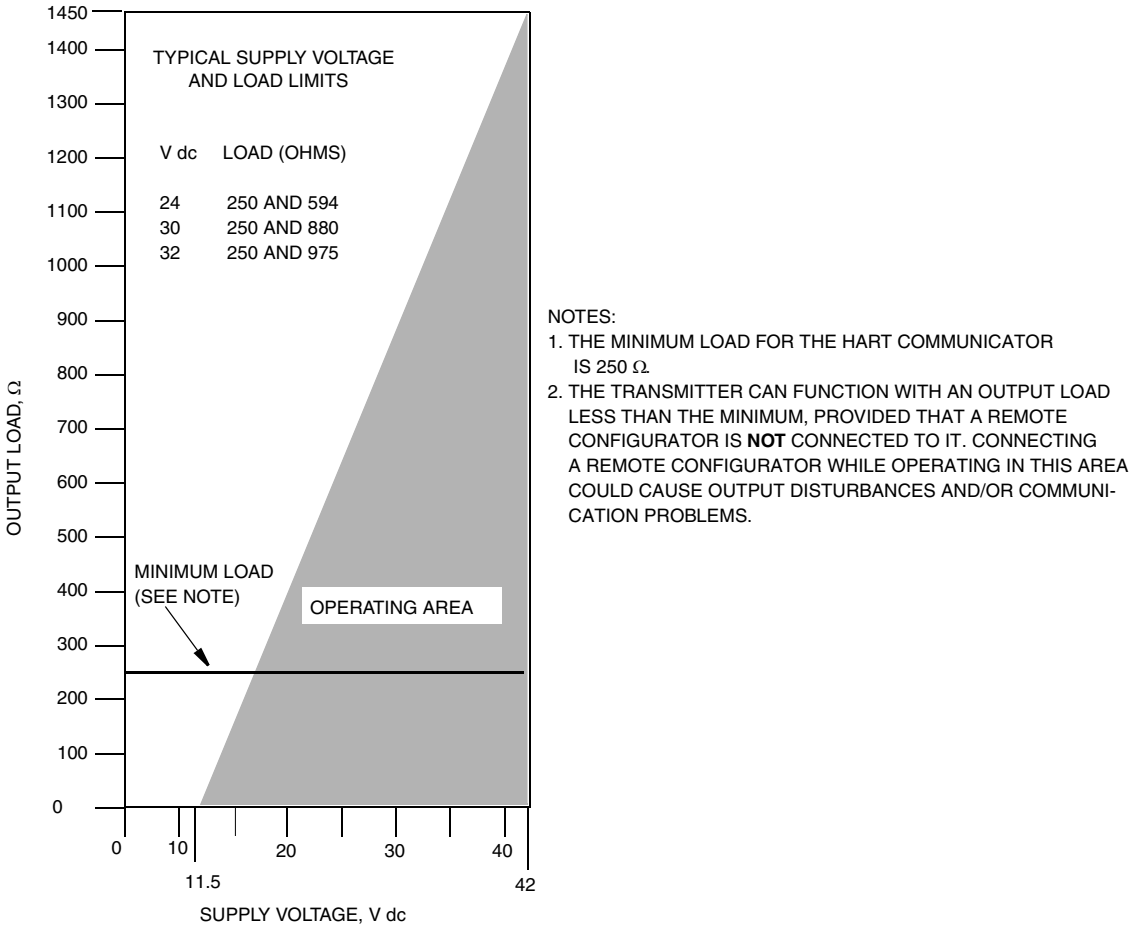

Figure 28. Supply Voltage and Loop Load

Examples:

1. For a loop load resistance of 880 Ω, the supply voltage can be any value from 30 to 42 V dc.
2. For a supply voltage of 24 V dc, the loop load resistance can be any value from 250 to 594 Ω (zero to 594 Ω without a HART Communicator connected to the transmitter).

To wire one or more transmitters to a power supply, proceed with the following steps.

1. Remove the cover from the transmitter field terminals compartment.

2. Run signal wires (0.50 mm^2 or 20 AWG, typical) through one of the transmitter conduit connections. Use twisted single pair to protect the 4 to 20 mA output and/or remote communications from electrical noise. Maximum recommended length for signal wires is:

- 3050 m (10,000 ft) **using single pair cable** and adhering to requirements of HART physical layer implementation defined in HART Document HCF_SPEC-53. Use CN=1 when calculating max. lengths.
- 1525 m (5000 ft) in a multidrop (15 devices maximum) mode. Screened (shielded) cable could be required in some locations.

— NOTE

Do not run transmitter wires in same conduit as mains (ac power) wires.

3. If shielded cable is used, earth (ground) the shield at the power supply **only**. Do not ground the shield at the transmitter.

4. Plug unused conduit connection with the 1/2 NPT, PG 13.5 or M20 metal plug provided (or equivalent). To maintain specified explosionproof and dust-ignitionproof protection, plug must engage a **minimum** of five full threads.
5. Connect an earth (ground) wire to the earth terminal in accordance with local practice.

CAUTION

If the signal circuit must be earthed (grounded), it is preferable to do so at the negative terminal of the dc power supply. To avoid errors resulting from earth loops or the possibility of short-circuiting groups of instruments in a loop, there should be only one earth in a loop.

6. Connect the power supply and receiver loop wires to the "+" and "–" terminal connections.
7. Connect receivers (such as controllers, recorders, indicators) in series with power supply and transmitter as shown in Figure 29.
8. Reinstall the cover onto the housing by rotating it clockwise to seat the O-ring into the housing and then continue to hand tighten until the cover contacts the housing metal-to-metal. If cover locks are present, lock the cover per the procedure described in "Cover Locks" on page 24.
9. If wiring additional transmitters to the same power supply, repeat Steps 1 through 8 for each additional transmitter. The setup with multiple transmitters connected to a single power supply is shown in Figure 30.
10. A HART Communicator or PC-Based Configurator can be connected in the loop between the transmitter and the power supply as shown in Figures 29 and 30. Note that a minimum of 250 Ω must separate the power supply from the HART Communicator or PC-Based Configurator.

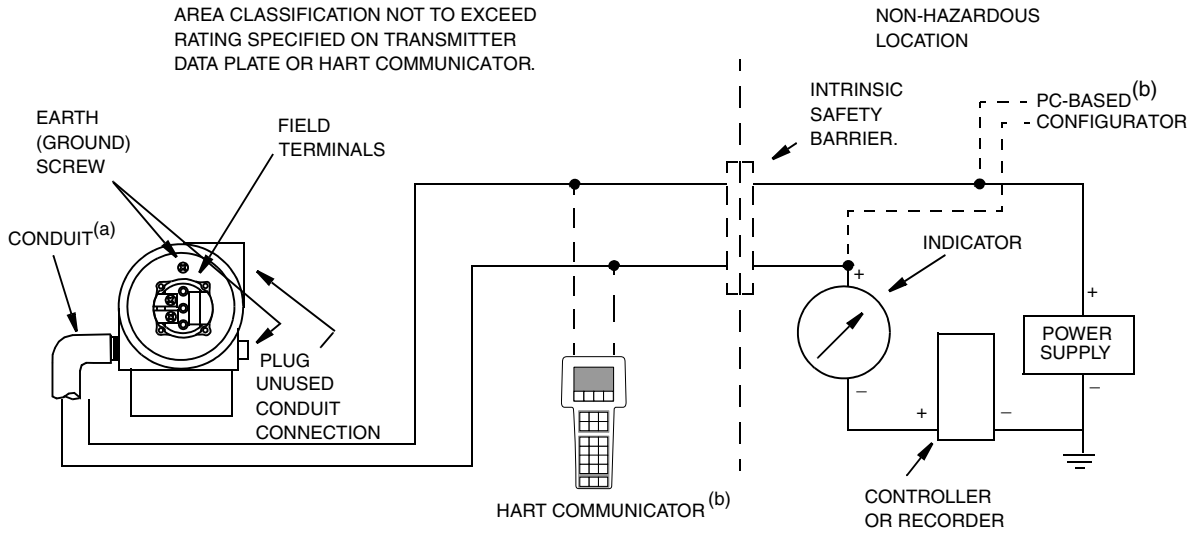

(a) RUN CONDUIT DOWN TO AVOID MOISTURE BUILDUP IN TERMINALS COMPARTMENT.
(b) THERE MUST BE AT LEAST 250 Ω TOTAL RESISTANCE BETWEEN THE HART COMMUNICATOR OR PC-BASED CONFIGURATOR AND THE POWER SUPPLY.

Figure 29. Loop Wiring Transmitters

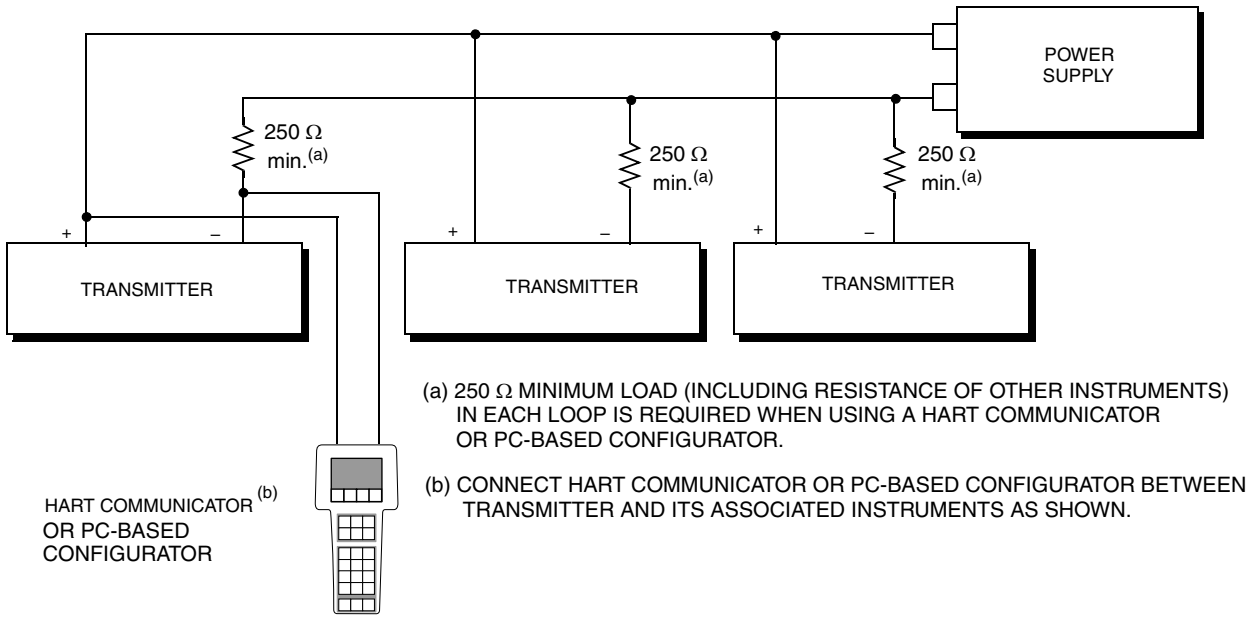

Figure 30. Wiring Several Transmitters to a Common Power Supply

Multidrop Communication

"Multidropping" refers to the connection of several transmitters to a single communications transmission line. Communications between the host computer and the transmitters takes place digitally with the analog output of the transmitter deactivated. With the HART communications protocol, up to 15 transmitters can be connected on a single twisted pair of wires or over leased telephone lines.

The application of a multidrop installation requires consideration of the update rate necessary from each transmitter, the combination of transmitter models, and the length of the transmission line. Multidrop installations are not recommended where Intrinsic Safety is a requirement. Communication with the transmitters can be accomplished with any HART compatible modem and a host implementing the HART protocol. Each transmitter is identified by a unique address (1-15) and responds to the commands defined in the HART protocol.

Figure 31 shows a typical multidrop network. Do not use this figure as an installation diagram. Contact the HART Communications Foundation, (512) 794-0369, with specific requirements for multidrop applications.

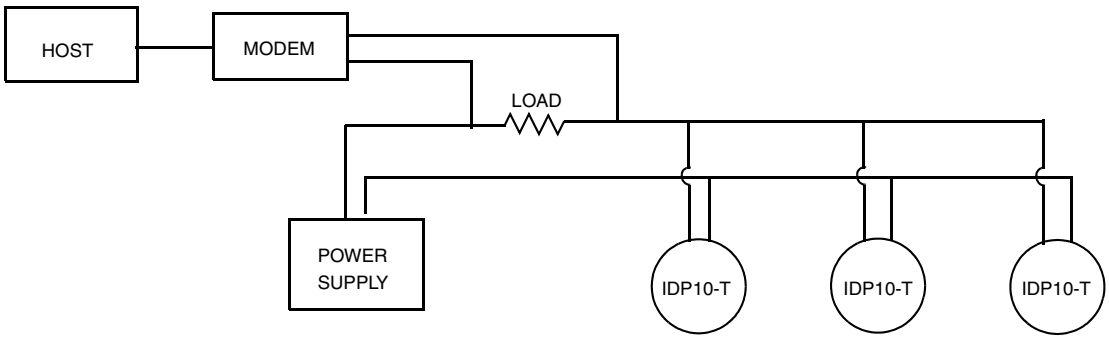

Figure 31. Typical Multidrop Network

The HART Communicator can operate, configure, and calibrate IASPT transmitters with HART communication protocol in the same way as it can in a standard point-to-point installation.

NOTE

IASPT transmitters with HART communication protocol are set to poll address 0 (**POLLADR 0**) at the factory, allowing them to operate in the standard point-to-point manner with a 4 to 20 mA output signal. To activate multidrop communication, the transmitter address must be changed to a number from 1 to 15. Each transmitter must be assigned a unique number on each multidrop network. This change deactivates the 4 to 20 mA analog output.

Connecting the Transmitter to an I/A Series System

The transmitter can also send its measurement to an I/A Series system as a digital signal via an FBM214/215. Wiring terminations at the transmitter are the same as described above. For other system wiring details, refer to the installation instructions provided with the I/A Series system.

Putting a Differential Pressure Transmitter Into Operation

The following procedure explains how to sequence the valves in your flow measurement piping or optional bypass manifold to ensure that your transmitter is not overranged and that seal liquid is not lost. Refer to Figures 22 and 23.

NOTE

This procedure assumes that the process shutoff valves are open.

1. Make sure that both upstream and downstream manifold valves are closed.
2. Make sure that the bypass valve is open.
3. Slowly open the upstream manifold valve.
4. Close the bypass valve.
5. Slowly open the downstream manifold valve.

Taking a Differential Pressure Transmitter Out of Operation

The following procedure explains how to sequence the valves in your flow measurement piping or optional bypass manifold to ensure that your transmitter is not overranged and that seal liquid is not lost. Refer to the Figures 22 and 23.

NOTE

This procedure assumes that the process shutoff valves are open.

1. Close the downstream manifold valve.
2. Close the upstream manifold valve.
3. Open the bypass valve.
4. Carefully open the vent screw to release any residual pressure before disconnecting lines.

WARNING

When venting pressure from the transmitter, wear suitable protective equipment to prevent possible injury from process material, temperature, or pressure.

3. Operation Via Local Display

A local display, as shown in Figure 32, has two lines of information. The upper line is a 5-digit numeric display (4-digit when a minus sign is needed); the lower line is a 7-digit alphanumeric display. The display provides local indication of measurement information.

With Version 4 firmware, the primary (M1) measurement is normally displayed. To view the secondary (M2) measurement, press the **Enter** button while in normal operating mode. Press the **Next** or **Enter** button to return to the primary measurement. If left in M2 display, an M2 message blinks in the lower right of the display. If power to the transmitter is interrupted, the display reverts to the M1 display.

With Version 5 firmware, the display can be configured to meet your specific needs. If configured **Show 1**, M1 is displayed. If configured **Show 2**, M2 is displayed. To temporarily view the alternate measurement, press the **Enter** button. After showing this measurement for a brief period, the display reverts to the configured display. If configured **Toggle**, the display toggles between M1 and M2. When M2 is displayed, an M2 message blinks in the lower right of the display.

The display also provides a means for reranging, calibration, and configuration, viewing the database, testing the display, and reranging the transmitter via the 2-button keypad. You can access these operations by means of a multi-level menu system. Entry to the Mode Select menu is made (from normal operating mode) by pressing the **Next** button. You can exit this menu, restore your prior calibration or configuration, and return to the normal operating mode at any time by going to **Cancel** and pressing the **Enter** button.

The top level structure diagrams for Version 4 and 5 firmware are shown in Figures 33 and 34 respectively.

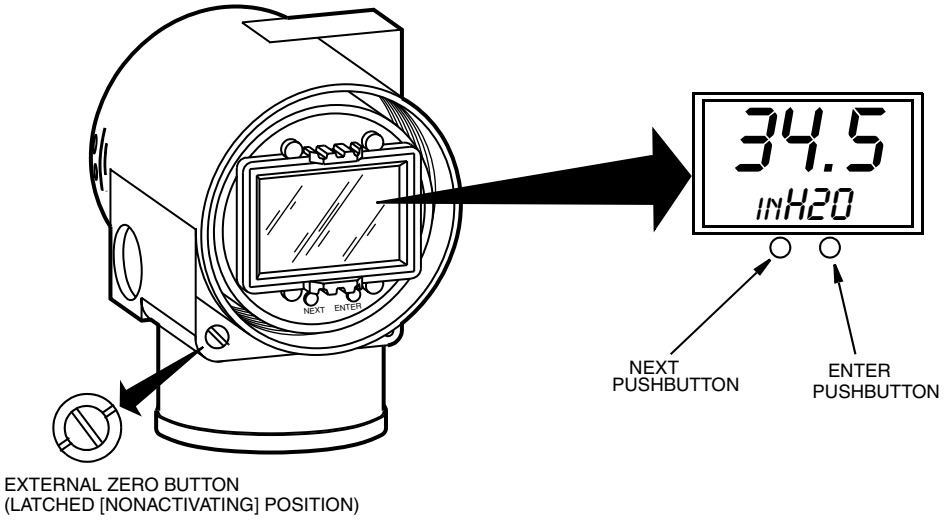

Figure 32. Local Display Module

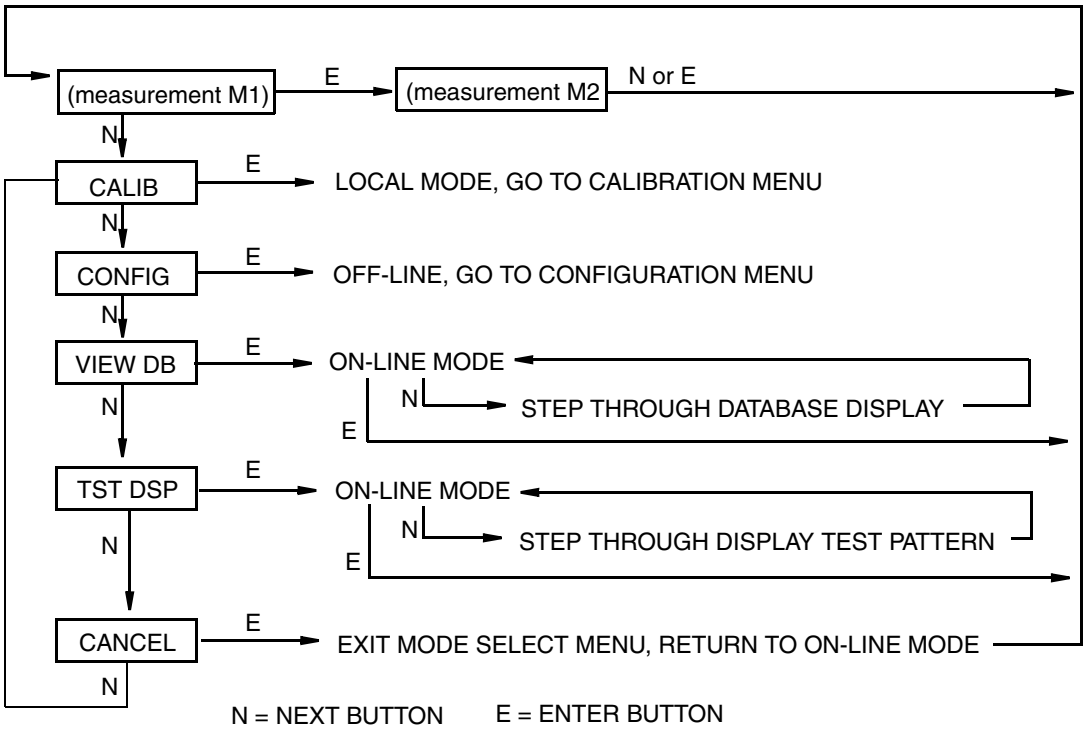

Figure 33. Top Level Structure Diagram (Version 4 Firmware)

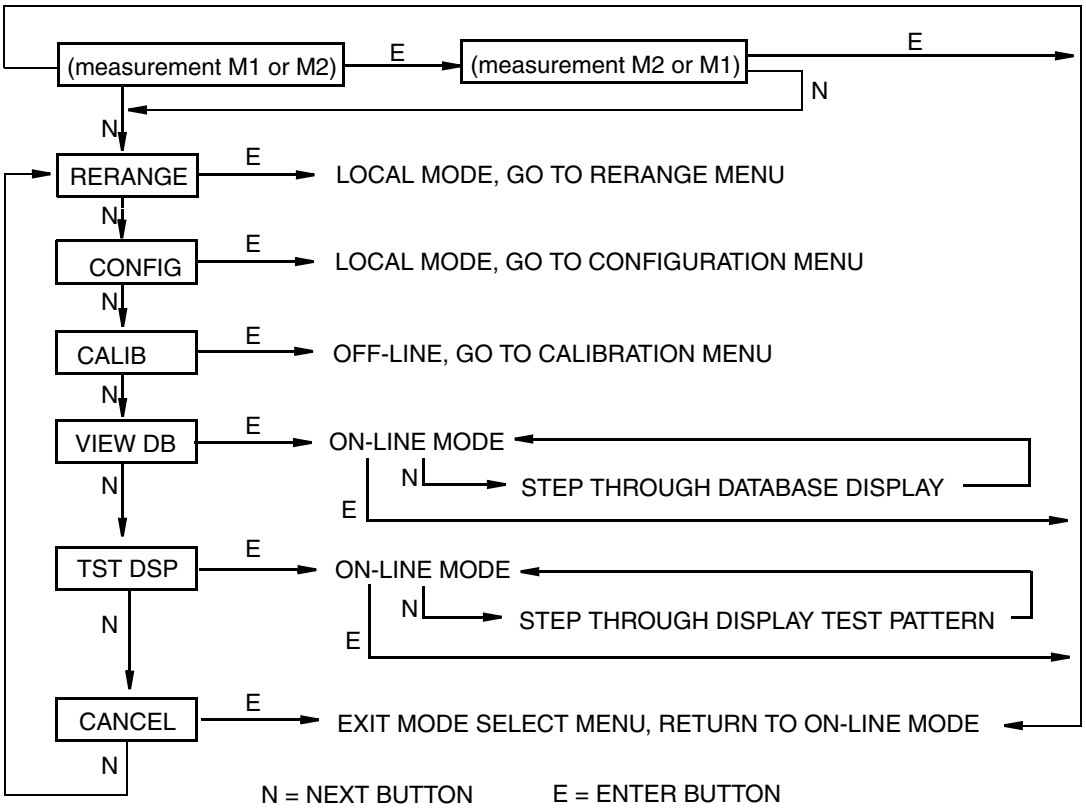

Figure 34. Top Level Structure Diagram (Version 5 Firmware)

Entering Numerical Values

The general procedure for entering numerical values in Calibration and Configuration is as follows:

1. At the appropriate prompt, press the **Enter** button. The display shows the last (or default) value with the first digit flashing.
2. Use the **Next** button to select the desired first digit, then press the **Enter** button. Your selection is entered and the second digit flashes.
3. Repeat Step 2 until you have created your new value. If the number has less than five characters, use leading or trailing zeros for the remaining spaces. When you have configured the fifth space, the display prompts you to place the decimal point.
4. Move the decimal point with the **Next** button until it is where you want it and press the **Enter** button.

— NOTE

1. The decimal point may not be placed directly after the first digit. For example, you can not enter a value as 1.2300; you must enter it as 01.230.
2. The decimal position is identified by flashing except at the position after the fifth digit. At that position (representing a whole number), the decimal point is assumed.

5. The display advances to the next menu item.

Reranging

With Version 4 Firmware, reranging can be done in either Calibration mode (see “RERANGE:” on page 44) or Configuration mode (see “RERANGE:” on page 56).

With Version 5 Firmware, you can access the Rerange mode in the top level menu (see Figure 34). Entry to the Mode Select menu is made (from normal operating mode) by pressing the **Next** button. The display reads **RERANGE**. You can then adjust **M1 URV** and/or **M1 LRV** in the following two submenus.

— NOTE

If **M1 MODE** is in a square root mode, regardless of engineering units selected, **RERANGE** is automatically done in the following “default” pressure units:
- **inH2O**, if **M2 MODE** is a type of square root.
- **M2 EGU** units, if **M2 MODE** is linear.

The bottom line of the display indicates the “default units” during **RERANGE**. Following **RERANGE**, the display automatically switches back to the configured engineering units.

M1 URV:

To edit the upper range value, press **Enter** at the prompt **M1 URV**. Use the procedure “Entering Numerical Values” on page 33 section to edit this parameter.

M1 LRV:

Similar to **M1URV** immediately above.

— NOTE

M1 LRV is bypassed if **M1 MODE** is configured as square root since **M1 LRV** must be zero.

Viewing the Database

You can access the View Database mode by the multi-level menu system described above. Entry to the Mode Select menu is made (from normal operating mode) by pressing the **Next** button. The display reads **CALIB** (with Version 4 firmware) and **RERANGE** (with Version 5 firmware). Use the **Next** button to get to **VIEW DB**. Acknowledge your choice of this selection by pressing the **Enter** button. The display shows the first item in the database. You can step through the database display by

repeated use of the **Next** button. You can abort this procedure at any time by pressing the **Enter** button.

Viewing the Pressure Range

The values of M1LRV and M1 URV can be viewed in VIEW DB as described above.

Testing the Display

You can access the Test Display mode by the same multi-level menu system that was used to enter Reranging, Calibration, Configuration, and View Database mode. Entry to the Mode Select menu is made (from normal operating mode) by pressing the **Next** button. The display reads **CALIB** (with Version 4 firmware) and **RERANGE** (with Version 5 firmware). Use the **Next** button to get to **TST DSP**. Acknowledge your choice of this selection by pressing the **Enter** button. The display shows the first test segment pattern. You can step through the five patterns by repeated use of the **Next** button. You can abort the test at any time by pressing the **Enter** button. The five patterns are shown in Figure 35.

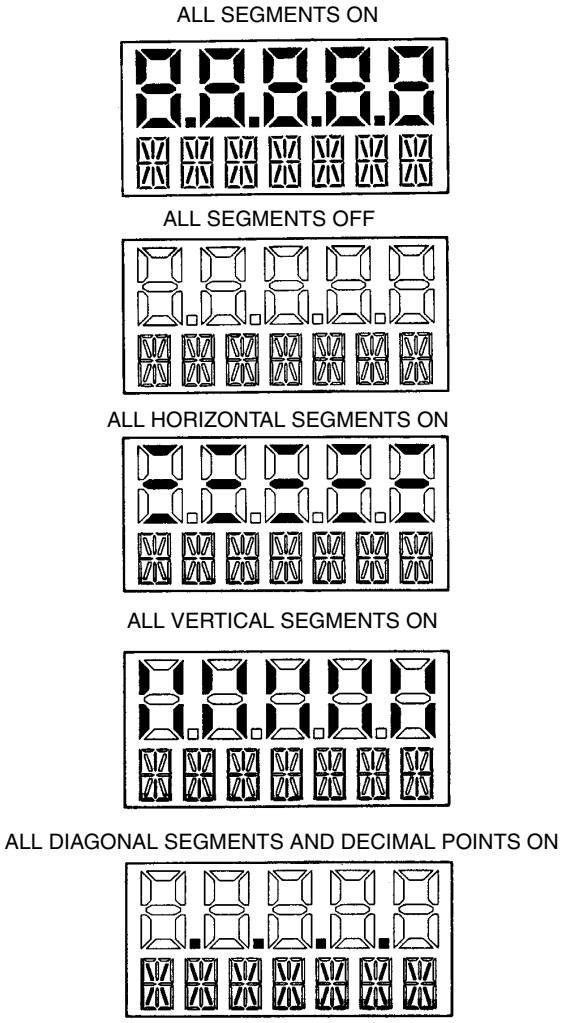

Figure 35. Display Test Segment Patterns

Error Messages

Table 4. Operation Error Messages

Parameter	Condition Tested	Error Message	Action
Normal Operation	Write Protection Enabled	WR PROT	Displays periodically to notify user that unit is in Write Protect.
	Any non-On-line Condition	OFFLINE	Notifies user of a non-On-line condition.
Startup	Database OK or corrupted	INITERR	User should perform SET GDB procedure. See “SET GDB:” on page 58.

4. Calibration

NOTE

1. For best results in applications where high accuracy is required, rezero the transmitter output once it has stabilized at the final operating temperature.

2. Zero shifts resulting from position effects and/or static pressure effects can be eliminated by rezeroing the transmitter output.

3. When checking the zero reading of a transmitter operating in the square root mode, return the output to the linear mode. This eliminates an apparent instability in the output signal. Return the transmitter output to the square root mode after the zero check is complete.

4. After calibrating transmitters operating with a 4 to 20 mA (or 1 to 5 V dc) output signal, check the underrange and overrange output values to ensure that they extend beyond 4 and 20 mA (or 1 and 5 V dc) respectively.

General Calibration Notes

1. Each transmitter is factory characterized over its full rated pressure range. One benefit of this process is that every transmitter can measure any applied differential pressure within its range limits regardless of the calibrated range. The applied differential pressure is measured and converted into an internal digital value of differential pressure. This digital value of differential pressure is always available whether the transmitter is calibrated or not. Calibration assures that the transmitter rated accuracy is achieved over the calibrated range.
2. The internal digital value of differential pressure can be displayed on the optional local display, transmitted digitally, and converted to a 4 to 20 mA analog output signal.
3. Each transmitter is factory calibrated to either a specified or a default calibrated range. This calibration optimizes the accuracy of the internal digital value of differential pressure over that range. If no range is specified, the default range is zero to the sensor upper range limit (URL).
4. The transmitter database has configurable values for both Lower Range Value (LRV) and upper range value (URV). These values are used for two functions.
   a. Defining the Calibrated Range When Using Local Pushbuttons for Calibration:
      - When either **CAL LRV** or **CAL URV** is initiated from the local pushbuttons, the transmitter expects that the differential pressure applied at the time the button is pressed is equal to the LRV or URV value respectively.
      - This function trims the internal digital value of differential pressure; that is, it performs a calibration based on the application of accurate differential pressures equal to the values entered for LRV and URV in the transmitter database.
      - This function also sets the 4 and 20 mA output points; that is, the 4 and 20 mA points correspond to the values of LRV and URV in the database.
      - The value of LRV can be larger than the value of URV.
   b. Reranging Without the Application of Pressure:
      - Since the transmitter continually determines an internal digital value of the measured differential pressure from the lower range limit (LRL) to the upper range limit (URL), the 4 and 20 mA output points can be assigned to any differential pressure values (within the span and range limits) without application of pressure.
      - The reranging function is accomplished by entering new database values for LRV and URV.

- Reranging does not affect the calibration of the transmitter; that is, it does not affect the optimization of the internal digital value of differential pressure over a specific calibrated range.
- If the reranged LRV and URV are not within the calibrated range, the measured values may not be as accurate as when they are within the calibrated range.

If the transmitter is in square root mode for flow rate measurement, the URV in the database is displayed as the flow rate URV when the view database (**VIEW DB**) function is used. However, the LRV and URV in pressure units can be displayed by selecting the reranging (**RERANGE**) function. LRV is always zero when the transmitter is configured for square root mode.

5. When the optional local display is used, the internal digital value of differential pressure is sent directly to the indicator.

- The display can show any measured differential pressure in selected units regardless of the calibrated range and the values of LRV and URV (within the limits of the transmitter and display).
- If the measured differential pressure is outside the range established by the LRV and URV values in the database, the display shows the measurement but also continually blinks to indicate that the measurement is out of range. The mA current signal is saturated at either the low or high overrange limit respectively but the display continually shows the pressure.

6. When configured for 4 to 20 mA output, the internal digital value of differential pressure is converted to an analog current signal.

- The transmitter sets the output at 4 mA for the LRV and 20 mA for the URV.
- There is an independent trim on the digital-to-analog conversion stage. This trim allows for slight adjustment of the 4 and 20 mA outputs. This compensates for any slight difference that exists between the transmitter mA output and an external reference device which is measuring the current.
- The mA trim does not affect the calibration or the reranging of the transmitter and does not affect the internal digital value of differential pressure or the transmission or display of measured pressure.
- The mA trim can be done with or without pressure applied to the transmitter.

7. Zeroing from the local display does not affect the span.

When the transmitter is zeroed to compensate for installed position effect, the transmitter can have either LRV differential pressure applied (**CAL LRV**) or zero differential pressure applied (**CAL AT0**). If using a zero-based range, either method produces the same result. However, if the range is not zero-based, it is advantageous to have both methods available.

For example, consider a differential pressure transmitter having a range of 50 to 100 psig. If it is not feasible to vent the transmitter to atmosphere for zeroing (or to bypass the high and low sides for zeroing), it can be zeroed while the LRV differential pressure of 50 psi is applied by using the **CAL LRV** function. On the other hand, if the transmitter has been installed but there is no pressure in the process line yet (or the high and low sides can be connected by a bypass valve), it can be zeroed while open to atmosphere (or bypassed) by using the **CAL AT0** function.

a. Zeroing with LRV Pressure Applied (**CAL LRV**):

- Before using this zeroing function, apply a differential pressure to the transmitter equal to the value of LRV stored in the transmitter database.
- When you zero the transmitter, the internal digital value of differential pressure is trimmed to be equal to the value of LRV stored in the database and the mA output set to 4 mA.

- If zeroing is done when the applied differential pressure is different from the LRV value in the database, the internal digital value of differential pressure is biased by the difference in the values but the output is still set at 4 mA.
- The **CAL LRV** and **CAL URV** function should be used when calibrating a transmitter for a specific range with known input differential pressures applied for the LRV and URV.

b. Zeroing with Zero Pressure Applied (**CAL AT0**):

- Make sure that the applied differential pressure is at zero. This means venting the transmitter to atmosphere or opening a bypass valve to connect high and low sides.

- When you zero the transmitter, the internal digital value of the differential pressure is trimmed to be equal to zero and the mA output set to an appropriate value such that the mA output is a nominal 4 mA when the LRV pressure is applied later.

Calibration Setup

The following sections show setups for field or bench calibration. Use test equipment that is at least three times as accurate as the desired accuracy of the transmitter.

NOTE

It is not necessary to set up calibration equipment to rerange the transmitter to a different range. The transmitter can be accurately reranged by simply changing the lower range value and the upper range value, which are stored in the transmitter database.

Setup of Electronic Equipment

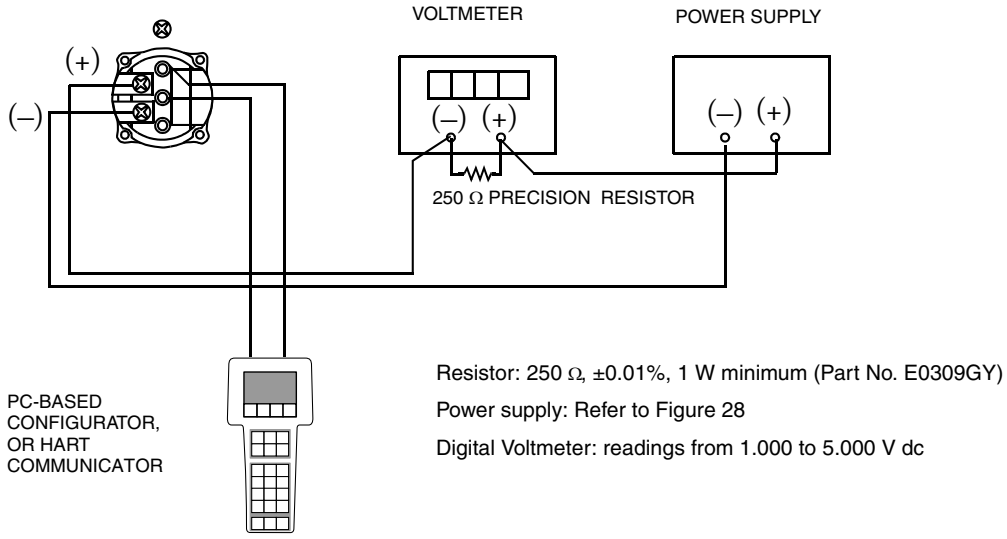

Figure 36. 4 to 20 mA Output Calibration Setup of Electronic Equipment

Field Calibration Setup

Field calibration is performed without disconnecting the process piping. In order to do this, you must have a bypass and shutoff valves between the process and the transmitter and one of the following:

- Access to the process connections on the nonprocess side of the transmitter
- The optional vent screw in the side of the process covers.

If the transmitter is to be removed from the process for calibration, refer to the "Bench Calibration" procedure.

For field calibration, an adjustable air supply and a pressure measuring device are required. For example, a dead weight tester or an adjustable clean air supply and pressure gauge can be used. The pressure source can be connected to the transmitter process connection with pipe fittings or it can be connected to the vent screw assembly using a calibration screw. The calibration screw has a Polyflo fitting and can be used for pressures up to 700 kPa (100 psi). It is available from Invensys Foxboro as Part Number F0101ES.

To set up the equipment, refer to Figure 37 and use the following procedure.

1. If the transmitter is in operation, follow the “Taking a Differential Pressure Transmitter Out of Operation” on page 30.

CAUTION

With liquid service, drain both sides of transmitter to avoid calibration errors.

2. If a calibration screw **is** being used, remove the vent screw and replace it with the calibration screw. Connect the pressure source to the calibration screw using 6 x 1 mm or 0.250 inch tubing.
   If a calibration screw is **not** being used, remove the entire vent screw assembly or drain plug (as applicable) from the high pressure side of the transmitter. Connect calibration tubing using a suitable thread sealant.
3. Close the bypass valve opened in Step 1.
4. Complete the setup shown in Figure 37.

NOTE

For vacuum applications, connect the calibrating pressure source to the low pressure side of the transmitter.

5. If calibrating the output signal, also connect equipment as shown in Figure 36.

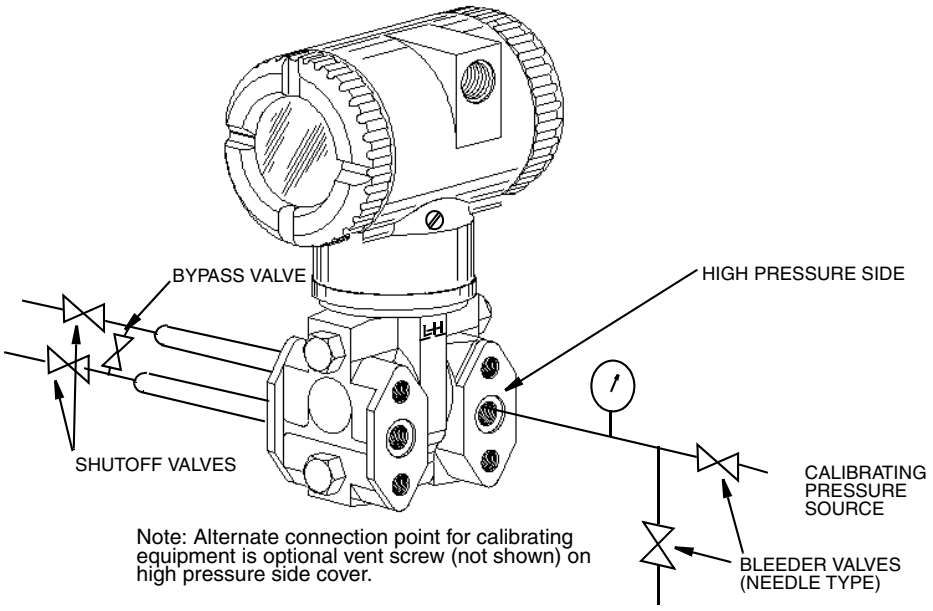

Figure 37. Field Calibration Setup

Bench Calibration Setup

The bench calibration setup requires disconnecting the process piping. For calibration setup without disconnecting the process piping, refer to the "Field Calibration" procedure.

The bench calibration setup is shown in Figure 38. Connect the input piping to the high pressure side of the transmitter as shown. Vent the low pressure side of the transmitter.

NOTE

For vacuum applications, connect the calibrating pressure source to the low pressure side of the transmitter.

If calibrating the output signal, also connect equipment as shown in Figure 36.

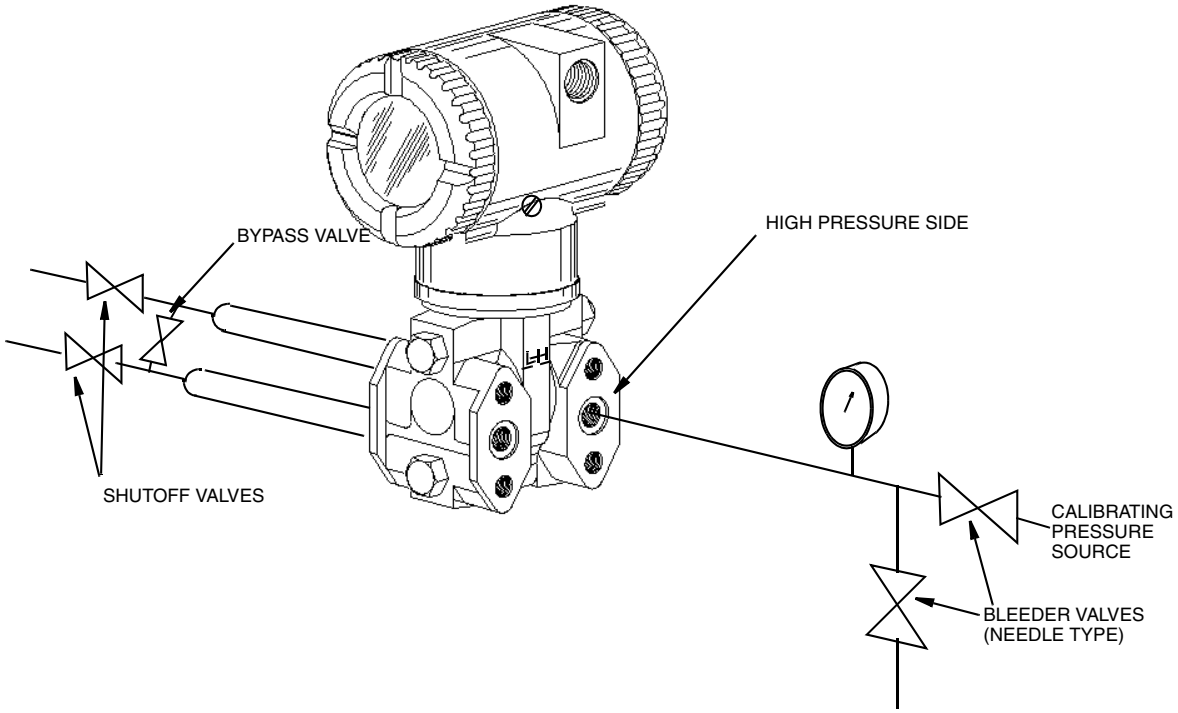

Figure 38. Bench Calibration Setup

Calibration Using a PC20

To calibrate the transmitter using a PC20 Configurator, follow the procedure in MI 020-495.

Calibration Using a PC50

To calibrate the transmitter using a PC50 Configurator, follow the procedure in MI 020-501 and MI 020-505.

Calibration Using a HART Communicator

To calibrate the transmitter using a HART Communicator, follow the procedure in MI 020-366.

Calibration Using the Optional Local Display

To access the Calibration mode (from normal operating mode), press the **Next** button. The display reads **CALIB**, the first item on the menu. Acknowledge your choice of this selection by pressing the **Enter** button. The display shows the first item in the Calibration menu.

NOTE

1. During calibration, a single change could affect several parameters. For this reason, if an entry is entered in error, re-examine the entire database or use the **Cancel** feature to restore the transmitter to its starting configuration and begin again.

2. During adjustment of 4 and 20 mA in the Calibration menu, the milliampere output does not reflect live measurement values.

Table 5. Calibration Menu

Item	Description
CAL AT0	Calibrate at zero pressure.
CAL LRV	Calibrate with pressure at 0% of transmitter range (LRV).
CAL URV	Calibrate with pressure at 100% of transmitter range (URV).
ADJ 4mA	Adjust nominal 4 mA output.
ADJ20mA	Adjust nominal 20 mA output.
RERANGE(a)	Adjust primary upper and lower range values (Version 4 firmware only).
CALDATE	Enter the calibration date.
ADJ 4mA causes the following four submenus.	
A 4mAΔΔ	Increase 4 mA output by large step.
A 4mA∇∇	Decrease 4 mA output by large step.
A 4mAΔ	Increase 4 mA output by small step.
A 4mA∇	Decrease 4 mA output by small step.
ADJ 20mA causes the following four submenus.	
A 20mAΔΔ	Increase 20 mA output by large step.
A 20mA∇∇	Decrease 20 mA output by large step.
A 20mAΔ	Increase 20 mA output by small step.
A 20mA∇	Decrease 20 mA output by small step.
RERANGE causes the following two submenus.	
M1 URV	Adjust upper range value.
M1 LRV	Adjust lower range value.

(a) Rerange with Version 5 firmware is done in the top level menu.

NOTE

It is not necessary to use the **ADJ4mA** or **ADJ20mA** menu selections (commonly known as mA Trim) unless there is a plant requirement to make the 4 and 20 mA output values exactly match readings on certain plant calibration equipment and the calibration operations done result in a small but unacceptable difference between the transmitter mA output and the test equipment mA readout values.

Proceed to calibrate your transmitter by using the **Next** key to select your item and the **Enter** key to specify your selection per Figures 39 and 40. At any point in the calibration you can **Cancel**, restore your prior calibration and return to the on-line mode or **Save** your new calibration.

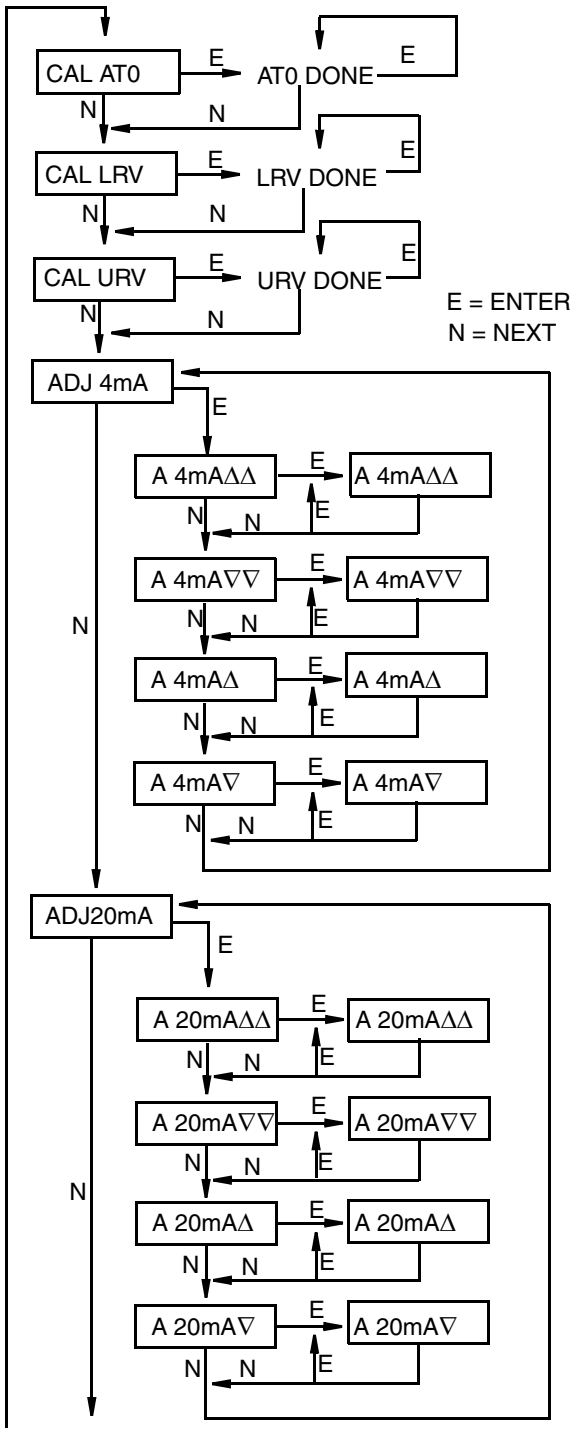

(continued on next figure)

CAL AT0: To set or reset the zero point at zero pressure, apply zero differential pressure to the transmitter and, at display of **CAL AT0**, press **Enter**. This can be done whether LRV is zero or not. Completion is indicated by the display **AT0 Done**.

CAL LRV: To set or reset 0% of range input, apply differential pressure to the transmitter equal to the lower range value (LRV) in the transmitter database and, at display of **CAL LRV**, press **Enter**. Completion is indicated by the display **LRV Done**.

CAL URV: To set or reset 100% of range input, apply differential pressure to the transmitter equal to the upper range value (URV) in the transmitter database and, at display of **CAL URV**, press **Enter**. Completion is indicated by the display **URV Done**.

ADJ4mA: If you configured your transmitter operating mode as 4 to 20 mA, you can adjust the 4 mA output by going to **ADJ4mA** using the **Next** button and press **Enter**. This menu item is bypassed if you configured your transmitter for multidrop mode (poll address other than zero).

To increase the 4 mA output by a large (0.025 mA) step, press **Enter** at the display **A 4mA**ΔΔ. To decrease it by a large step, go to the display **A 4mA**∇∇ by pressing the **Next** button and then **Enter**. To increase it by a small (0.001 mA) step, go to the display **A 4mA**Δ with the **Next** button and then press **Enter**. To decrease it by a small step, go to the display **A 4mA**∇ with the **Next** button and then press **Enter**.

ADJ20mA: Similar to **ADJ4mA**.

Figure 39. Calibration Structure Diagram

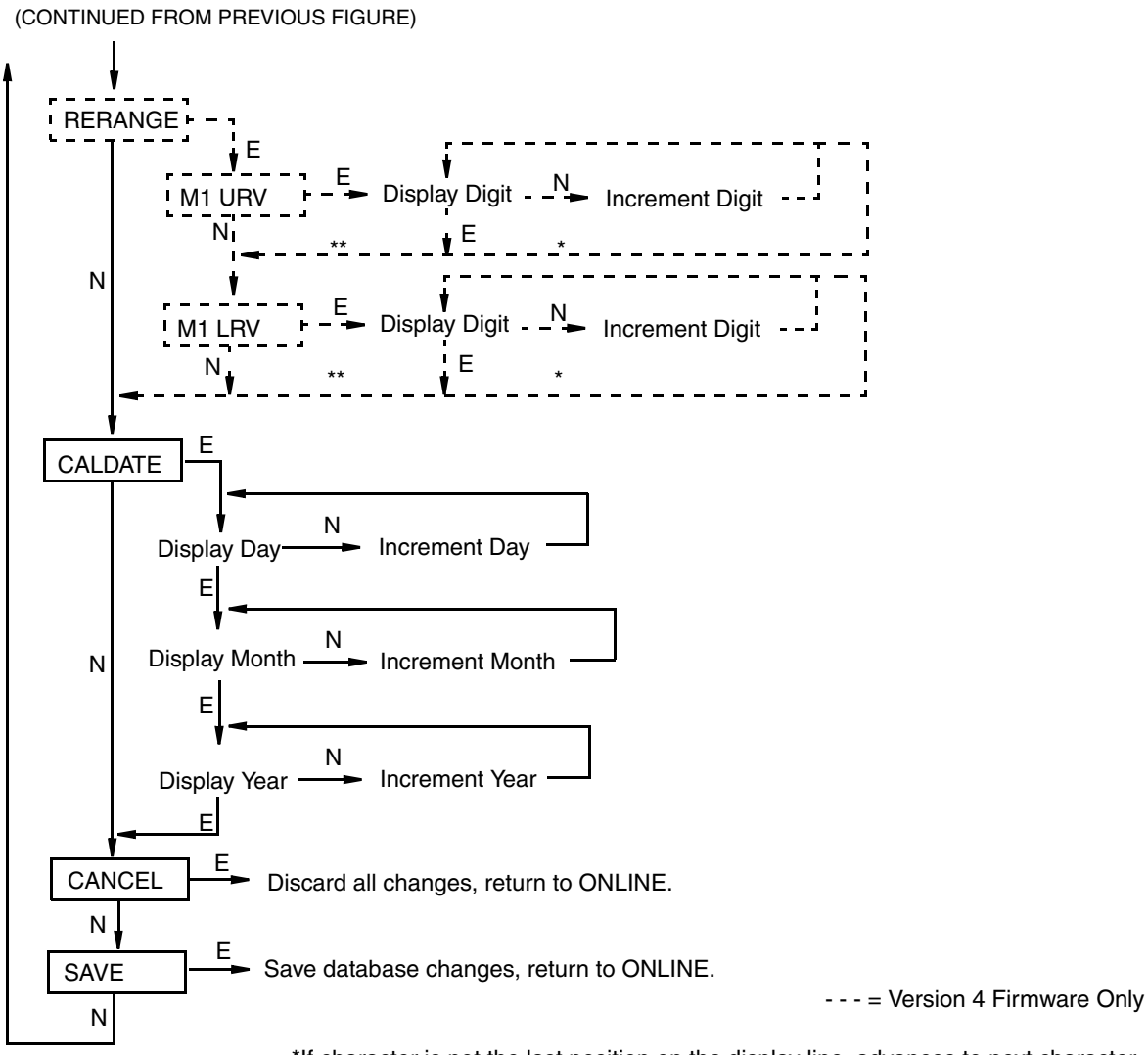

*If character is not the last position on the display line, advances to next character.
**If character is the last position on the display line, advances to next menu item.

NOTE: Commentary about this diagram immediately follows.

Figure 40. Calibration Structure Diagram (Continued)

Commentary on Figure 40

RERANGE:

With Version 5 Firmware: To adjust 100% and 0% range limits, go to **RERANGE** in the top level menu (see “Reranging” on page 33). You can then adjust **M1 URV** and/or **M1 LRV**.

With Version 4 Firmware: To adjust 100% and 0% range values, go to **Rerange** with the **Next** button and press **Enter**. You can then adjust **M1 URV** and/or **M1 LRV** in the following two submenus.

NOTE

If M1 is in square root mode, regardless of engineering units selected, **RERANGE** must be done in “default” pressure units. The “default” pressure units are:

- In **inH2O**, if M2 is a type of square root or **OFF**.
- In **M2 EGU** units, if M2 is linear.

The bottom line of the display indicates the “default" units during **RERANGE**. Following **RERANGE**, the display automatically switches back to the configured engineering units.

M1 URV:

To edit the upper range value, press **Enter** at the prompt **M1 URV**.

M1 LRV:

Similar to **M1URV** immediately above.

NOTE

M1 LRV is bypassed if **M1 MODE** is configured as square root since **M1 LRV** must be zero.

CALDATE:

This is not a required entry but can be used for recordkeeping or plant maintenance purposes. To edit the calibration date, go to **CALDATE** with the **Next** button and press **Enter**. You then can change the day, month, and year. The display shows the last date with the day flashing. Use the **Next** button to step through the menu of digits to select the desired day, then press **Enter**. Repeat this process for the month and year.

Zero Adjustment Using External Zero Button

An optional external zero adjustment mechanism in the electronics housing allows calibration at zero differential pressure (the **CAL AT0** function) or at the lower range value differential pressure (the **CAL LRV** function) without removing the electronics compartment cover. The mechanism is magnetically activated through the housing wall to prevent moisture from entering the enclosure.

NOTE

Do **not** use CAL AT0 if pressure seals are used that are at different elevations from the transmitter.

To use this feature:

1. Unlatch the external zero button by turning it 90° in a counterclockwise direction so that the screwdriver slot lines up with the two holes in the face of the adjacent part. Do **not** push the button in with the screwdriver while doing this.
2. To set or reset the zero point at zero differential pressure, apply zero differential pressure to the transmitter or use a bypass valve to equalize pressure on both sides of the transmitter. Press the external zero button until the display reads **CAL AT0**. Release the button. The display reads **CAL WAIT** and then **RESET** (calibration is complete).

   To set or reset the 0% of range input, apply the lower range value (LRV) differential pressure to the transmitter and press and hold the external zero button until the display reads **CAL LRV** (it reads **CAL AT0** first). Release the button. The display reads **CAL WAIT** and then **RESET** (calibration is complete).

NOTE

If the optional display is not present, the same functions can be accomplished by depending on the length of time the external zero button is depressed. Press and hold the button for 1 to 3 seconds for **CAL AT0** or for 5 or more seconds for **CAL LRV**. Therefore, if your LRV is zero, just depress the button for a few seconds. However, if your LRV is not zero, use **caution** when using the external zero button without the optional display because you must rely strictly on the length of time the button is depressed to differentiate between **CAL AT0** and **CAL LRV**.

Other possible messages are:
DISABLD if **EX ZERO** is configured **EXZ DIS**
IGNORED if the transmitter is not in the on-line mode.
WP ENAB if write protection jumper is in write protect position.

If additional rezeroing is required after Steps 1 and 2 have been accomplished, repeat Step 2.

3. Relatch the external zero button by turning it 90° in a clockwise direction to prevent accidental pressing of the button. Do **not** push the button in with the screwdriver while doing this.

Error Messages

Table 6. Calibration Error Messages

Parameter	Condition Tested	Error Message	User Action
Password Protection	Password	BAD PWD	Bad password entered, use another.
Write Protection	Write protection enabled	REJECT	Displays when user attempts an action that is write protected.
ZERO	Internal offset too large	BADZERO	Check applied pressure, configured **M1 LRV** and configured **M1 EOFF**.
SPAN	Slope too large or too small	BADSPAN	Check applied pressure, configured **M1 LRV** and configured **M1 EFAC**.
M1 URV	M1URV > max pressure in EGU	URV>FMX	Entered pressure is greater than maximum rated pressure of transmitter. Check entry. Verify EGUs.
	M1URV < min pressure in EGU	URV<FMN	Entered pressure is less than minimum rated pressure of transmitter. Check entry. Verify EGUs.
	M1 URV = M1 LRV	LRV=URV	Cannot set span to 0. Check entry. Check **M1 LRV**.
	M1 turndown exceeds limit	BADTDWN	Check entry. Check **M1 LRV**.
	URV < 0 with M1 or M2 SqRt	URV<LRV	Square root mode with nonzero LRV is not valid. Change LRV to 0.
M1 LRV	M1LRV > max pressure in EGU	LRV>FMX	Entered pressure is greater than maximum rated pressure of transmitter. Check entry. Verify EGUs.
	M1LRV < min pressure in EGU	LRV<FMN	Entered pressure is less than minimum rated pressure of transmitter. Check entry. Verify EGUs.
	M1 URV = M1 LRV	LRV=URV	Cannot set span to 0. check entry. Check **M1 URV**.
	M1 turndown exceeds limit	BADTDWN	Check entry. Check **M1 URV**.

5. Configuration

Configurable Parameters

Table 7 lists all the configurable parameters and the factory default for the IDP10-T Transmitters. The factory default values have been customized if the transmitter was ordered with optional feature -C2. The table also shows which parameters are configurable with the integral vs. remote configurators.

Table 7. IDP10-T Configurable Parameters

Parameter	Capability	Factory Default	Configurable with		Application Requirement
			Integ. Indic.	Remote Config.	
Descriptors					
Tag Number	8 characters max	Tag Number	No	Yes	
Descriptor	16 characters max	Tag Name	No	Yes	
Message	32 characters max	Inst Location	No	Yes	
Input					
Calibrated Range	LRV to URV in units listed in (a) below	See (b) below when not specified per S.O.	Yes	Yes	
Output					
Measurement #1 Output (PV)	4 to 20 mA or Fixed Current. Specify Poll Address (1-15) for Fixed Current.	4 to 20 mA	Yes	Yes	
Measurement #1 Mode	Linear or type of square root in (d) below	Linear	Yes	Yes	
Measurement #1 EGUs	If linear, select from units listed in (a) below; If Sq.Rt., select from units listed in (c) below	Units of Calibrated Range	Yes	Yes	
Measurement #2 Mode (SV)	Linear or type of square root in (d) below	Linear	Yes	Yes	
Measurement #2 EGUs	If linear, select from units listed in (a) below; If Sq.Rt., select from units listed in (c) below	Units of Calibrated Range	Yes	Yes	
Temp. Sensor Fail Strategy	Normal oper. or failsafe	Fail-safe	Yes		
Fail-safe	High or Low	High	Yes	Yes	
External Zero	Enabled or Disabled	Enabled	Yes	Yes	
Damping	0 to 32 seconds.	None	Yes	Yes	
Poll Address	0 - 15	0	Yes	Yes	
LCD Indicator (e)	Meas #1 EGU or % Lin	Meas #1 EGU	Yes	No	

(a) psi, inHg, ftH$_2$O, inH$_2$O, atm, bar, mbar, MPa, kPa, Pa, kg/cm^2, g/cm^2, mmHg, torr, mmH$_2$O.

(b) Span Code A: 0 to 30 inH$_2$O; Span Code B: 0 to 200 inH$_2$O; Span Code C: 0 to 30 psi; Span Code D: 0 to 300 psi; Span Code E: 0 to 3000 psi.

(c) gal/s, gal/m, gal/h, gal/d, Mgal/d, ft^3/s, ft^3/m, ft^3/h, ft^3/d, lgal/s, lgal/m, lgal/h, lgal/d, l/s, l/m, l/h, Ml/d, m^3/s, m^3/m, m^3/h, m^3/d, bbl/s, bbl/m, bbl/h, bbl/d, %flow.

(d) Square root with cutoff below 1% of calibrated pressure range or with linear below 4% of calibrated pressure range.

(e) Measurement #2 can be displayed at any time by pressing the **Enter** button regardless of the local display configuration. This reverts to Measurement #1 or % Lin (as configured) when power is cycled off and on.

Configuration Using a PC20

To configure the transmitter using a PC20 Configurator, follow the procedure in MI 020-495.

Configuration Using a PC50

To configure the transmitter using a PC50 Configurator, follow the procedure in MI 020-501 and MI 020-505.

Configuration Using a HART Communicator

To configure the transmitter using a HART Communicator, follow the procedure in MI 020-366.

Configuration Using the Optional Local Display

You can access the Configuration mode by the same multi-level menu system that was used to enter Calibration mode. Entry to the Mode Select menu is made (from normal operating mode) by pressing the **Next** button. The display reads **CALIB**, the first item on the menu. Press the **Next** button again to get to the second item on the menu, **CONFIG**. Acknowledge your choice of this selection by pressing the **Enter** button. The display shows the first item in the Configuration menu. You can then configure items shown in Table 8. The standard factory default configuration is also given in this table.

The standard factory default configuration is not used if custom configuration option -C2 has been specified. Option -C2 is a full factory configuration of all parameters to the user's specifications.

NOTE

1. You can configure most parameters using the local display. However, for more complete configuration capability, use a HART Communicator or PC-Based configurator.
2. During configuration, a single change can affect several parameters. For this reason, if an entry is entered in error, re-examine the entire database or use the **Cancel** feature to restore the transmitter to its starting configuration and begin again.

Table 8. Configuration Menu

Item	Description	Initial Factory Configuration
POLLADR	Poll Address: 0 - 15	0
EX ZERO[a]	External Zero: enable or disable	Enable
S2 FAIL	Temperature Sensor Failure Strategy: S2FATAL or S2NOFTL	S2FATAL
OUT DIR	4 to 20 mA Output: forward or reverse	Forward
OUTFAIL	4 to 20 mA Output: fail mode output - low or high	High
OFFL MA	4 to 20 mA Output in offline mode - last or user set	USER MA
DAMPING	Damping: none, 1/4, 1/2, 1, 2, 4, 8, 16, or 32 seconds	None
M1 MODE	Output: linear or type of square root[b]	Linear
M1DISP	Local Indicator Display in linear mode: in percent or engineering units	M1EGU
M1 EGU	User-Defined Engineering Units	inH_2O or psi
RERANGE[c]	Adjustment of 100% and 0% range values	- - -
M1 URV	Primary Upper Range Value	URL
M1 LRV	Primary Lower Range Value	0
M2 MODE	Output: linear or type of square root	Linear
M2 EGU	User-Defined Engineering Units	Same as M1 EGU
DISPLAY[d]	Display M1, M2, or Toggle between M1 and M2	M1

Table 8. Configuration Menu (Continued)

Item	Description	Initial Factory Configuration
CALDATE	Calibration Date	- - -
ENA PWD	Enable password; no password, configuration only, or configuration and calibration	NO PWD
CFG PWD	User set configuration password (six characters)	- - -
CAL PWD	User set calibration password (six characters)	- - -
SET GDB	Rewrite all calibration and configuration values with default values	- - -

(a) Applies only if transmitter contains External Zero option.

(b) Square root is not applicable to absolute pressure, gauge pressure, and flange level measurement.

(c) Version 4 firmware only. Rerange with Version 5 firmware is done in the top level menu.

(d) Version 5 firmware only.

Proceed to configure your transmitter by using the **Next** button to select your item and the **Enter** button to specify your selection per the following three figures. At any point in the configuration you can **Cancel** your changes and return to the on-line mode, or **Save** your changes.

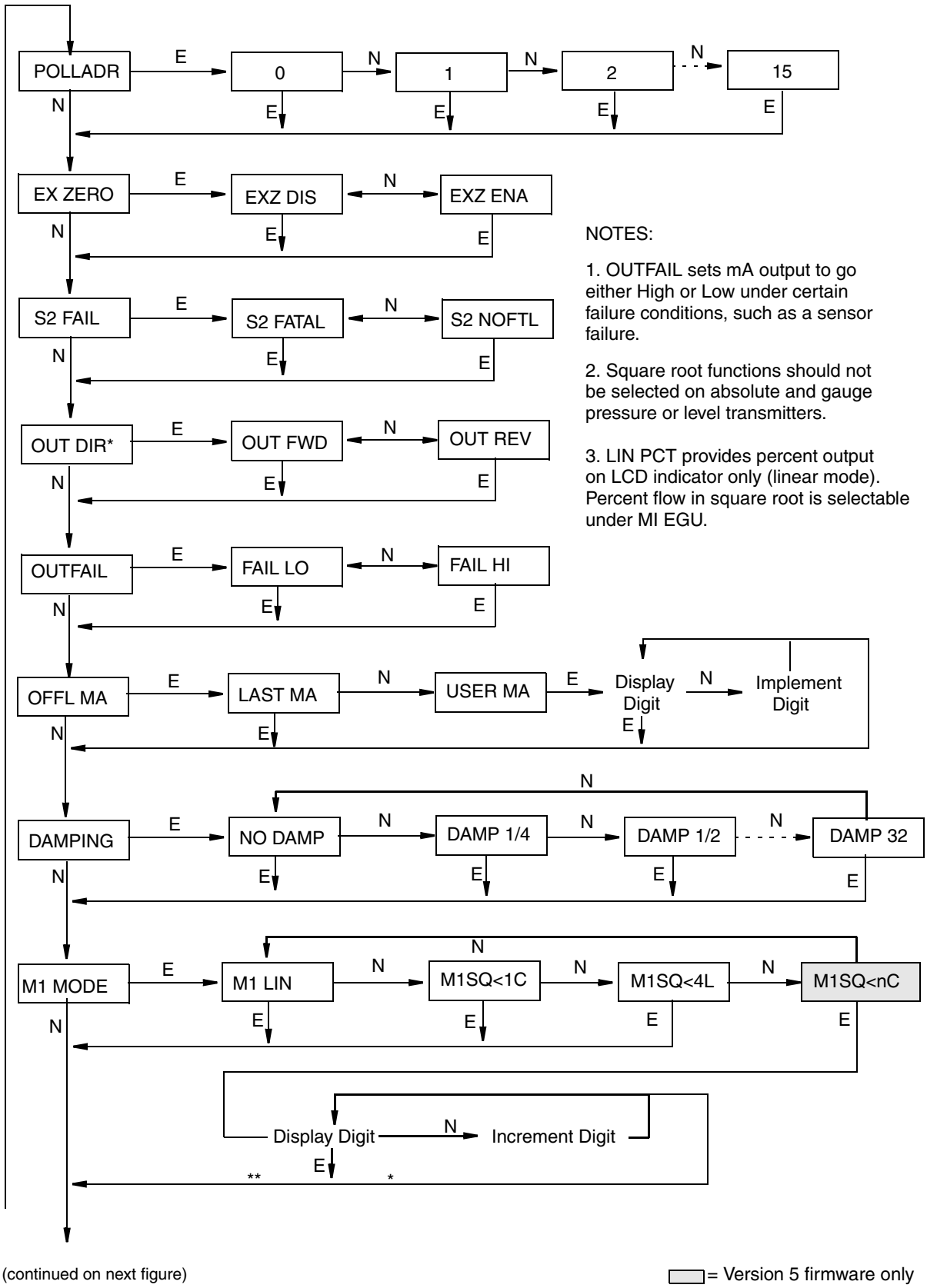

Figure 41. Configuration Structure Diagram

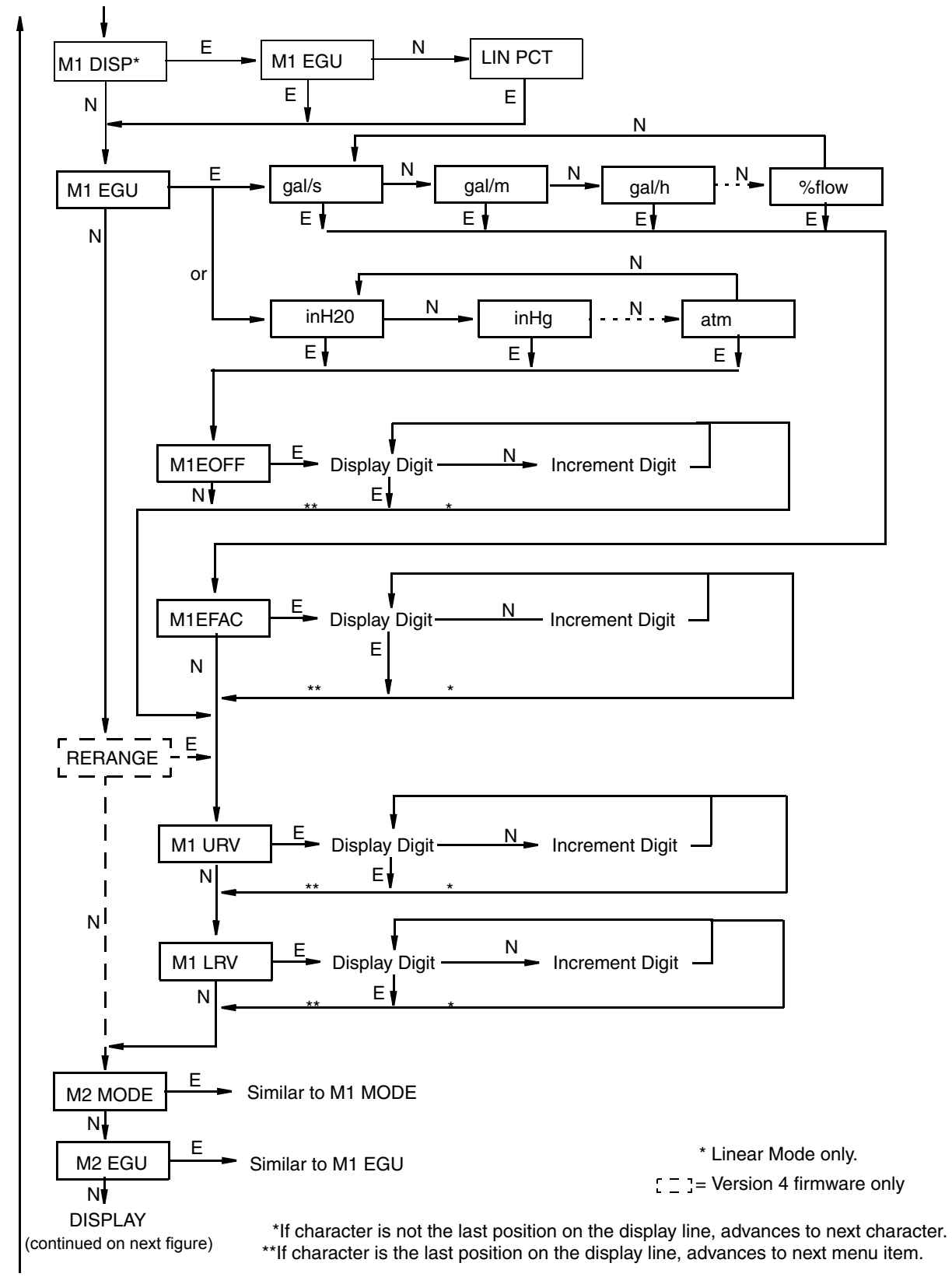

Figure 42. Configuration Structure Diagram (Continued)

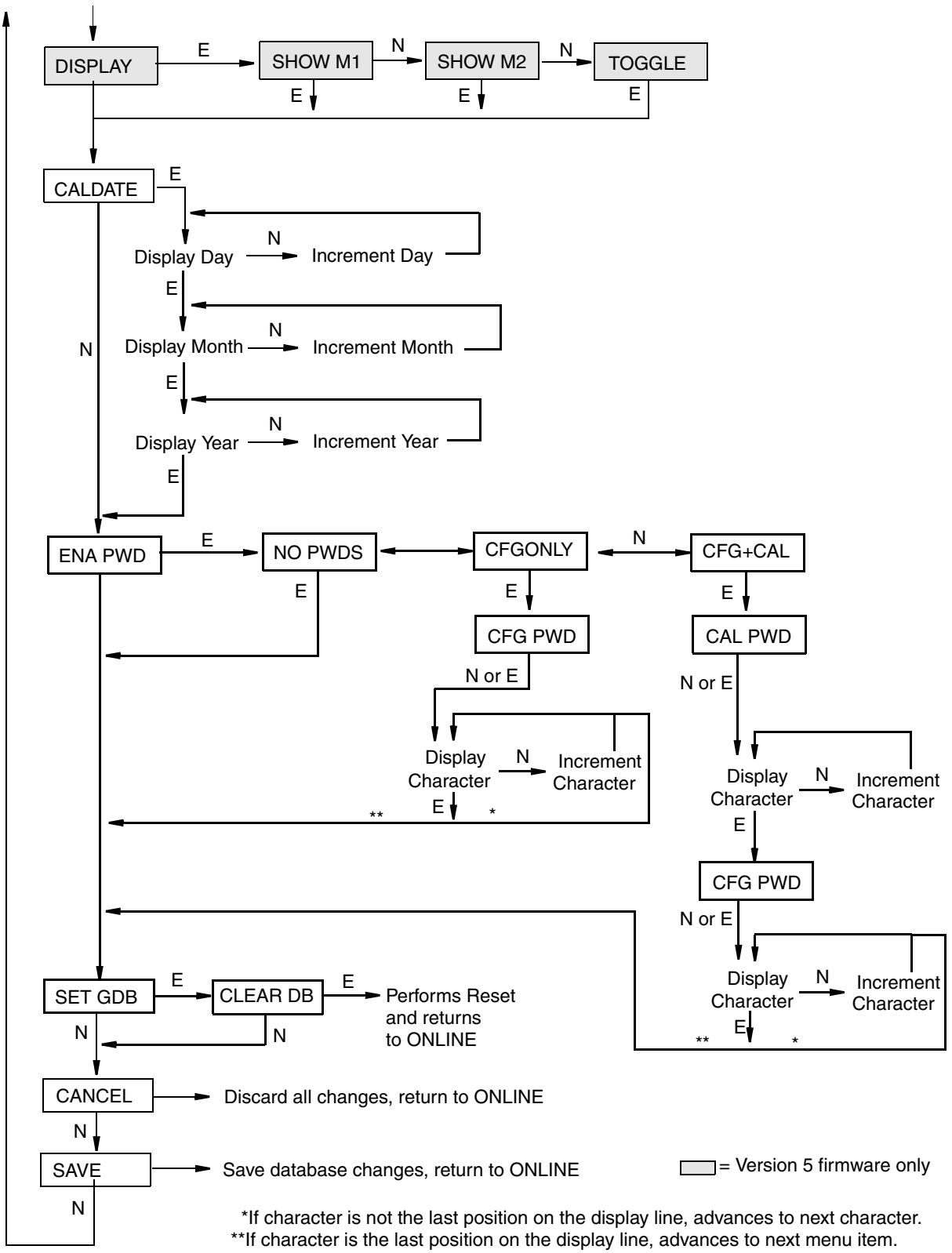

Figure 43. Configuration Structure Diagram (Continued)

Commentary on Configuration Structure Diagram

In general, use the **Next** button to select your item and the **Enter** button to specify your selection.

POLLADR:

To configure the transmitter poll address, press **Enter**. Use the **Next** button to select an address of **0** through **15**, then press **Enter**. An address of 1 through 15 is used for multidrop mode with a fixed mA output.

EX ZERO:

The External Zero feature allows the optional external zero pushbutton to be disabled for additional security. To configure this feature, go to **EX ZERO** with the **Next** button and press **Enter**. Use the **Next** button to select **EXZ DIS** or **EXZ ENA** and press **Enter**.

S2 FAIL:

The temperature sensor compensates for changes in temperature in the transmitter electronics. Failure of this sensor can cause a 4 to 20 mA accuracy change of up to 0.25%. The **S2 FAIL** feature allows you to specify action (or no action) if such a failure occurs. To configure this feature, go to **S2 FAIL** with the **Next** button and press **Enter**. Use the **Next** button to select **S2 FATAL** (to have the output go to that configured in **OUTFAIL**) or **S2 NOFTL** (to continue operation with a temperature sensor failure). This parameter is bypassed if **POLLADR** is configured any number from **1** through **15**.

OUT DIR:

To configure the Output Direction, go to **OUT DIR** with the **Next** button and press **Enter**. Use the **Next** button to select **OUT FWD** (4 - 20 mA) or **OUT REV** (20 - 4 mA) and press **Enter**. This parameter is bypassed if **POLLADR** is configured any number from **1** through **15** or if **M1 MODE** or **M2 MODE** is configured as square root.

OUTFAIL:

The Outfail feature provides high or low output with certain malfunctions. To configure the fail mode output, go to **OUTFAIL** with the **Next** button and press **Enter**. Use the **Next** button to select **FAIL LO** or **FAIL HI** and press **Enter**. This parameter is bypassed if **POLLADR** is configured any number from **1** through **15**.

OFFL MA:

The Off-line mA feature enables you to set the output to a specified value or to the last value if the transmitter goes off-line. To configure the off-line output, go to **OFFL MA** with the **Next** button and press **Enter**. Use the **Next** button to select **LAST MA** or **USER MA** and press **Enter**. If you selected **USER MA**, press **Enter** again at the display of digits. Then use the **Next** button to step through the library of digits to select the desired first digit, then press **Enter**. Your selection is entered and the second character flashes. Repeat this procedure until you have entered the last digit. Then use the **Next** button to move the decimal point to its desired location and press **Enter**. The display advances to the next menu item.

DAMPING:

To configure additional damping, go to **DAMPING** with the **Next** button and press **Enter**. Use the **NEXT** button to select **NO DAMP**, **DAMP 1/4**, **DAMP 1/2**, **DAMP 1**, **DAMP 2**, **DAMP 4**, **DAMP 8**, **DAMP 16**, or **DAMP 32** and press **Enter**.

M1 MODE:

To configure the mode of the primary output (PV), go to **M1 MODE** with the **Next** button and press **Enter**. Use the **Next** button to select **M1 LIN** (linear), **M1SQ<1C** (square root with cutoff below 1% dp (M1 URV in linear units of dp), **M1SQ<4L** (square root with linear below 4% of dp (M1 URV in linear units of dp), or (with Version 5 firmware) **M1SQ<nC** (square root with user configured cutoff specified between 0 and 20% of the flow upper range value, M1 EFAC) and press **Enter**. You cannot configure this parameter as square root if **OUT DIR** was configured as **OUT REV** or if M1LRV is not zero.

— NOTE

Cutoff in **M1SQ<1C** and **M1SQ<4L** is in percent of differential pressure but cutoff in **M1SQ<nC** is in percent of flow rate.

M1 DISP:

To configure the optional local indicator for percent in linear mode, go to **M1 DISP** with the **Next** button and press **Enter**. Use the **Next** button to select **M1 EGU** or **LIN PCT** and press **Enter**. **LIN PCT** only provides percent readings on the local display. **M1EGU** is used for remote communication of Measurement #1, even if **LIN PCT** is selected.

M1 EGU:

To configure pressure or flow engineering units for your display and transmission, go to **M1 EGU** with the **Next** button and press **Enter**. If **M1 MODE** is configured as **M1 LIN**, you are asked to specify one of the following pressure labels: **psi**, **inHg**, **ftH$_2$O**, **inH$_2$O**, **atm**, **bar**, **mbar**, **MPa**, **Pa**, **kPa**, **kg/cm^2**, **g/cm^2**, **mmHg**, **torr**, **mmH$_2$O, mH$_2$O**. or **hW60** (inH2O at 60°F). Your transmitter then automatically adjusts **M1EFAC** (engineering factor), **M1 URV** (upper range value), and **M1 LRV** (lower range value). **M1EOFF** is set to zero.

If **M1 MODE** is configured as **M1 SQ<1C, M1SQ<4L, or M1 SQ<nC**, you are asked to specify one of the following flow labels: **%flow, gal/s**, **gal/m**, **gal/h**, **gal/d**, **Mgal/d**, **ft^3/s**, **ft^3/m**, **ft^3/h**, **ft^3/d**, **lgal/s**, **lgal/m**, **lgal/h**, **lgal/d**, **l/s**, **l/m**, **l/h**, **Ml/d**, **m^3/s**, **m^3/m**, **m^3/h**, **m^3/d**, **bbl/s**, **bbl/m**, **bbl/h**, **bbl/d**. Also **T/h**, **lb/h**, **kg/h**, **Nm^3/h** (normal m^3/h), **Sm^3/h** (standard m^3/h), **Am^3/h** (actual m^3/h), or **MMSCFD** (million scfd) with Version 5 firmware. Check the **M1EFAC** (engineering factor) and, if necessary, adjust it as follows:

M1EFAC:

This parameter is used to input the numerical relationship between the measured span in pressure units and the displayed (and transmitted) span in flow units. It is the displayed URV in flow units (which is also the span in flow units since flow ranges must be zero-based).

Example:

For a 200 inH$_2$O transmitter with a measured range of 0 to 100 inH$_2$O and displayed range of 0 to 500 gal/m, **M1EFAC** = 500.

To edit the span in your configured flow units, press **Enter** at the prompt **M1EFAC**. Use the procedure “Entering Numerical Values” on page 33 to edit this parameter.

RERANGE:

With Version 5 Firmware: To adjust 100% and 0% range values, go to **RERANGE** in the top level menu (see “Reranging” on page 33).. You can then adjust **M1 URV** and/or **M1 LRV**.

With Version 4 Firmware: To adjust 100% and 0% range limits, go to **RERANGE** with the **Next** button and press **Enter**. You can then adjust **M1 URV** and/or **M1 LRV** in the following two submenus.

— NOTE

If **M1 MODE** is in a square root mode, regardless of engineering units selected, **RERANGE** is automatically done in the following “default” pressure units:
- **inH2O**, if **M2 MODE** is a type of square root.
- **M2 EGU** units, if **M2 MODE** is linear.

The bottom line of the display indicates the “default units” during **RERANGE**. Following **RERANGE**, the display automatically switches back to the configured engineering units.

M1 URV:

To edit the upper range value, press **Enter** at the prompt **M1 URV**. Use the procedure “Entering Numerical Values” on page 33 section to edit this parameter.

M1 LRV:

Similar to **M1URV** immediately above.

NOTE

M1 LRV is bypassed if **M1 MODE** is configured as square root since **M1 LRV** must be zero.

M2 MODE:

M2 is a secondary measurement (SV) that is read by the HART Communicator and can be displayed on the optional display. You might use this feature to display M1 in flow units and M2 in comparable pressure units. To configure this parameter, go to **M2 MODE** with the **Next** button and press **Enter**. Use the **Next** button to select **M2 LIN** (linear), **M2SQ<1C** (square root with cutoff below 1% dp (M2 URV in linear units of dp), **M2SQ<4L** (square root with linear below 4% of dp (M2 URV in linear units of dp), or (with Version 5 firmware) **M2SQ<nC** (square root with cutoff specified between 0 and 20% of the flow upper range value, M2 EFAC) and press **Enter**.

M2 EGU:

Similar to **M1 EGU**.

DISPLAY:

With Version 5 Firmware: To display M1, M2, or to toggle between M1 and M2, go to **DISPLAY** with the **Next** button and press **Enter**. Use the **Next** button to select **SHOW M1**, **SHOW M2**, or **TOGGLE** and press **Enter**.

CALDATE:

This is not a required entry but can be used for record-keeping or plant maintenance purposes. To edit the calibration date, go to **CALDATE** with the **Next** button and press **Enter**. You then can change the day, month, and year. The display shows the last date with the day flashing. Use the **Next** button to step through the library of digits to select the desired day, then press **Enter**. Repeat this process for the month and year.

ENA PWD:

To enable or disable the password feature, go to **ENA PWD** with the **Next** button and press **Enter**. Use the **Next** button to select **NO PWDS** (password feature disabled), **CFGONLY** (password required to configure only), or **CFG+CAL** (password required to both configure and calibrate) and press **Enter**.

If you selected **CFG ONLY**, the display changes to **CFG PWD**. Press either the **Next** or **Enter** button. Use the **Next** button to step through the library of characters to select the desired first character, then press **Enter**. Your selection is entered and the second character flashes. Repeat this procedure until you have created your password. If the password has less than six characters, use blanks for the remaining spaces. When you have configured the sixth space, the display advances to the next menu item.

If you selected **CFG+CAL**, the display changes to **CAL PWD**. To create the Calibration password, press either the **Next** or **Enter** button. Use the **Next** button to step through the library of characters to select the desired first character, then press **Enter**. Your selection is entered and the second character flashes. Repeat this procedure until you have created your password. If the password has less than six characters, use blanks for the remaining spaces. When you have configured the sixth space, the display advances to **CFG PWD**. Use the same procedure to create the configuration password.

CAUTION

Record your new password before saving changes to the database.

SET GDB:

If your transmitter database becomes corrupted and you receive an **INITERR** message upon startup, this function enables you to rewrite all calibration and configuration values with default values.

CAUTION

Any calibration and configuration values that you have entered will be lost. Therefore, **SET GDB** should **not** be selected if your transmitter is functioning normally.

Character Lists

Table 9. Alphanumeric Character List

Character List*	
@	‘
, (comma)	(
A-Z (uppercase)	)
[	*
\	+
]	-
^	.
_ (underscore)	/
space	0-9
!	:
“	;
#	<
$	>
%	=
&	?

*List only applies to Model 275 HART Communicator not to optional local display.

Table 10. Numeric Character List

Character List
–
. (decimal point)
0 through 9

Error Messages

Table 11. Configuration Error Messages

Parameter	Condition Tested	Error Message	User Action
Password Protection	Password	BAD PWD	Bad password entered, use another.
Write Protection	Write Protection Enabled	REJECT	Displays when user attempts an action that is write protected.
M1 MODE (being changed to square root)	M1 LRV ≠ 0	LRVnot0	Square root mode with nonzero LRV is not valid. Change **M1 LRV** to 0.
	M1 URV < 0	URV<LRV	Square root mode with negative URV is not valid. Change **M1 URV** to positive value.
	OUT DIR is OUT REV	URV<LRV	Square root mode with URV < LRV is not valid. Change **M1 LRV** to 0 and **M1 URV** to positive value.
	M1EFAC < 0	-M1EFAC	Negative **M1 EFAC** is not valid. Change **M1 EFAC** to positive value.
	M2EFAC < 0	-M2EFAC	Negative **M2 EFAC** is not valid. Change **M2 EFAC** to positive value.
	M1EFAC = 0	0M1EFAC	**M1 EFAC** = 0 is not valid. Change **M1 EFAC** to positive value.
	M2EFAC = 0	0M2EFAC	**M2 EFAC** = 0 is not valid. Change **M2 EFAC** to positive value.
	M1EOFF ≠ 0 or M2EOFF ≠ 0	BADEOFF	Square root mode with nonzero **M1 EOFF** and **M2 EOFF** is not valid. Change **M1 EOFF** and **M2 EOFF** to 0.
M1EFAC	M1EFAC < 0	-M1EFAC	Negative **M1 EFAC** is not valid. Change **M1 EFAC** to positive value.
	M1EFAC = 0	0M1EFAC	**M1 EFAC** = 0 is not valid. Change **M1 EFAC** to positive value.
M1 URV	M1URV > max pressure in EGU	URV>FMX	Entered pressure is greater than maximum rated pressure of transmitter. Check entry. Verify EGUs.
	M1URV < min pressure in EGU	URV<FMN	Entered pressure is less than minimum rated pressure of transmitter. Check entry. Verify EGUs.
	M1 URV = M1 LRV	LRV=URV	Cannot set span to 0. Check entry. Check **M1 LRV**.
	M1 turndown exceeds limit	BADTDWN	Check entry. Check **M1 LRV**.
	URV <0 with M1 or M2 SqRt	URV<LRV	Square root mode with nonzero LRV is not valid. Change **M1 LRV** to 0.

Table 11. Configuration Error Messages (Continued)

Parameter	Condition Tested	Error Message	User Action
M1 LRV	M1LRV > max pressure in EGU	LRV>FMX	Entered pressure is greater than maximum rated pressure of transmitter. Check entry. Verify EGUs.
	M1LRV < min pressure in EGU	LRV<FMN	Entered pressure is less than minimum rated pressure of transmitter. Check entry. Verify EGUs.
	M1 URV = M1 LRV	LRV=URV	Cannot set span to 0. Check entry. Check **M1 URV**.
	M1 turndown exceeds limit	BADTDWN	Check entry. Check **M1 URV**.
M2 MODE (being changed to square root)	M1 LRV ≠ 0	LRVnot0	Square root mode with nonzero LRV is not valid. Change **M1 LRV** to 0.
	M1 URV < 0	URV<LRV	Square root mode with negative URV is not valid. Change **M1 URV** to positive value.
	OUT DIR is OUT REV	URV<LRV	Square root mode with URV < LRV is not valid. Change **M1 LRV** to 0 and **M1 URV** to positive value.
	M1EFAC < 0	-M1EFAC	Negative **M1 EFAC** is not valid. Change **M1 EFAC** to positive value.
	M2EFAC < 0	-M2EFAC	Negative **M2 EFAC** is not valid. Change **M2 EFAC** to positive value.
	M1EFAC = 0	0M1EFAC	**M1 EFAC** = 0 is not valid. Change **M1 EFAC** to positive value.
	M2EFAC = 0	0M2EFAC	**M2 EFAC** = 0 is not valid. Change **M2 EFAC** to positive value.
	M1EOFF ≠ 0 or M2EOFF ≠ 0	BADEOFF	Square root mode with nonzero **M1 EOFF** and **M2 EOFF** is not valid. Change **M1 EOFF** and **M2 EOFF** to 0.
M2EFAC	M2EFAC < 0	-M2EFAC	Negative **M2 EFAC** is not valid. Change **M2 EFAC** to positive value.
	M2EFAC = 0	0M2EFAC	**M2 EFAC** = 0 is not valid. Change **M2 EFAC** to positive value.

6. Maintenance

DANGER

For nonintrinsically safe installations, to prevent a potential explosion in a Division 1 hazardous area, de-energize transmitters before you remove threaded housing covers. Failure to comply with this warning could result in an explosion resulting in severe injury or death.

Error Messages

For error messages displayed on the HART Communicator refer to MI 020-366.

Parts Replacement

Parts replacement is generally limited to the electronics module assembly, housing assembly, sensor assembly, terminal block assembly, cover O-rings, and optional display. For part numbers relating to the transmitter and its options, see PL 009-005.

Replacing the Terminal Block Assembly

1. Turn off transmitter power source.
2. Remove the Field Terminals and the Electronics compartment covers by rotating them counterclockwise. Screw in cover lock if applicable.
3. Remove the digital display (if applicable) as follows: grasp the two tabs on the display and rotate it about 10° in a counterclockwise direction.
4. Remove the electronics module from the housing by loosening the two captive screws that secure it to the housing. Then pull the module out of the housing far enough to gain access to the cable connectors on the rear of the module.
5. Remove the four socket head screws securing the terminal block.
6. Disconnect the terminal block cable connector from the electronics module.
7. Remove the terminal block and the gasket under it.
8. Connect the new terminal block cable connector to the electronics module.
9. Install the new terminal block and new gasket and reinstall the four screws to 0.67 N·m (6 in·lb) in several even increments.
10. Reinstall the electronics module (and digital display if applicable).
11. Reinstall the covers onto the housing by rotating them clockwise to seat the O-ring into the housing and then continue to hand tighten until the each cover contacts the housing metal-to-metal. If cover locks are present, lock the cover per the procedure described in “Cover Locks” on page 24.
12. Turn on transmitter power source.

Replacing the Electronics Module Assembly

To replace the electronics module assembly, refer to Figure 44 and proceed as follows:

1. Turn off transmitter power source.
2. Remove the electronics compartment cover by rotating it counterclockwise. Screw in cover lock if applicable.
3. Remove the digital display (if applicable) as follows: grasp the two tabs on the display and rotate it about 10° in a counterclockwise direction. Pull out the display and disconnect its cable.

4. Remove the electronics module from the housing by loosening the two captive screws that secure it to the housing. Then pull the module out of the housing far enough to gain access to the cable connectors on the rear of the module.

CAUTION

The electronics module is “one assembly” at this point and is electrically and mechanically connected to topworks with a flexible ribbon signal cable, a 2-wire power cable, and in some cases, a cable for an external zero pushbutton. Do **not** exceed the slack available in these cables when removing the assembled module.

5. Unplug all cable connectors from the rear of the electronics module and place the module on a clean surface.
6. Predetermine connector orientation, then insert the cable connectors into the replacement module. Replace the module in the housing using care not to pinch the cables between the module and the housing. Tighten the two screws that secure the module to the housing.
7. Connect the cable from the digital display to the electronics module. Ensure that the O-ring is fully seated in the display housing. Then, holding the digital display by the tabs at the sides of the display, insert it into the housing. Secure the display to the housing by aligning the tabs on the sides of the assembly and rotating it about 10° in a clockwise direction.
8. Reinstall the cover onto the housing by rotating it clockwise to seat the O-ring into the housing and then continue to hand tighten until the cover contacts the housing metal-to-metal. If cover locks are present, lock the cover per the procedure described in “Cover Locks” on page 24.
9. Turn on transmitter power source.

The module replacement procedure is now complete.

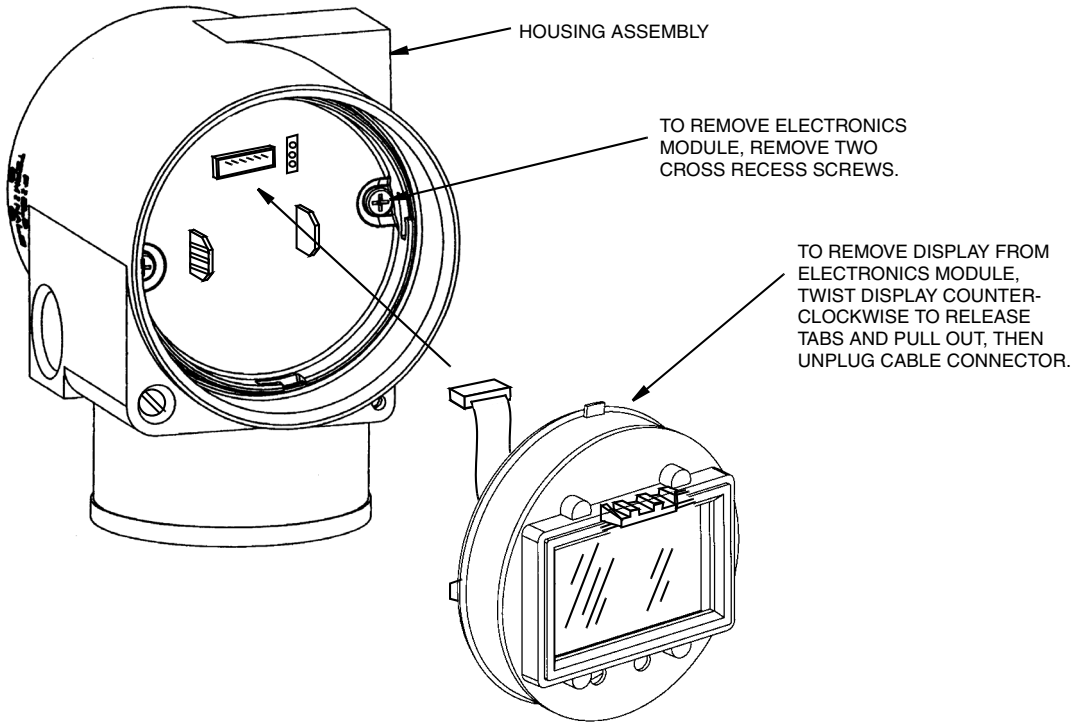

Figure 44. Replacing the Electronics Module Assembly and Display

Removing and Reinstalling a Housing Assembly

To remove and reinstall a housing assembly, refer to Figure 44 and proceed as follows:

1. Remove the electronics module per Steps 1 through 5 in the previous procedure.
2. Remove the housing by rotating it counterclockwise (when viewed from the top) using caution to avoid damaging the ribbon cables.
3. Inspect the sensor O-ring and lubricate if necessary with silicone lubricant (Part Number 0048130 or equivalent).
4. Reinstall the housing by reversing Step 2.
5. Reinstall the electronics module per Steps 6 through 9 in the previous procedure.

Adding the Optional Display

To add the optional display, refer to Figure 44 and proceed as follows:

1. Turn off transmitter power source.
2. Remove the electronics compartment cover by rotating it counterclockwise. Screw in cover lock if applicable.
3. Plug the display into the receptacle at the top of the electronics assembly.
4. Ensure that the O-ring is seated in its groove in the display housing. Then insert the display into the electronics compartment by grasping the two tabs on the display and rotating it about 10° in a clockwise direction.
5. Install the new cover (with a window) onto the housing by rotating it clockwise to seat the O-ring into the housing and then continue to hand tighten until the cover contacts the housing metal-to-metal. If cover locks are present, lock the cover per the procedure described in “Cover Locks” on page 24.
6. Turn on transmitter power source.

Replacing the Sensor Assembly

To replace the sensor assembly, refer to Figures 45 and 46 and proceed as follows:

1. Remove the electronics module as described above.
2. Remove the housing as described above.
3. Remove the process covers from sensor by removing two hex head bolts.
4. Replace the gaskets in the process covers.
5. Install the process covers and housing on the new sensor. Torque cover bolts to 100 N·m (75 lb·ft) in several even increments. Torque values are 68 N·m (50 lb·ft) when 316 ss bolts are specified; 75 N·m (55 lb·ft) when B7M bolts are specified.
6. Reinstall electronics module.
7. Pressure test the sensor and process cover assembly by applying a hydrostatic pressure of 150% of the maximum static and overrange pressure rating to both sides of the process cover/sensor assembly simultaneously through the process connections. Hold pressure for one minute. There should be no leakage of the test fluid through the gaskets. If leakage occurs, retighten the cover bolts per Step 5 (or replace the gaskets) and retest.

CAUTION

Perform hydrostatic test with a liquid and follow proper hydrostatic test procedures.

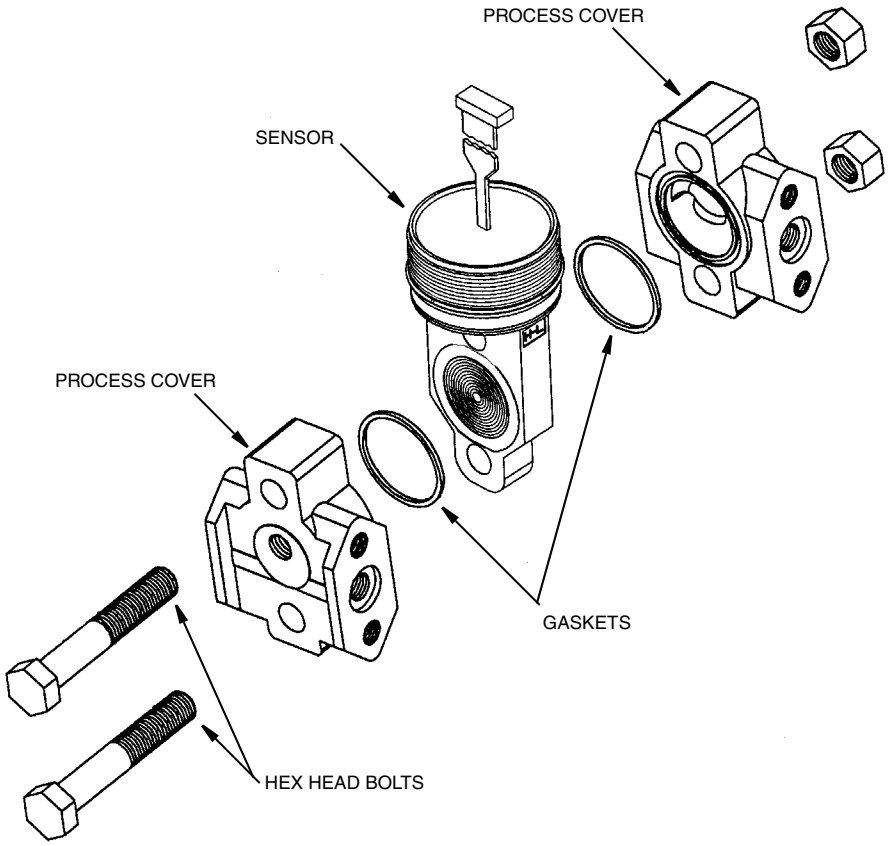

Figure 45. Replacing the Sensor Assembly

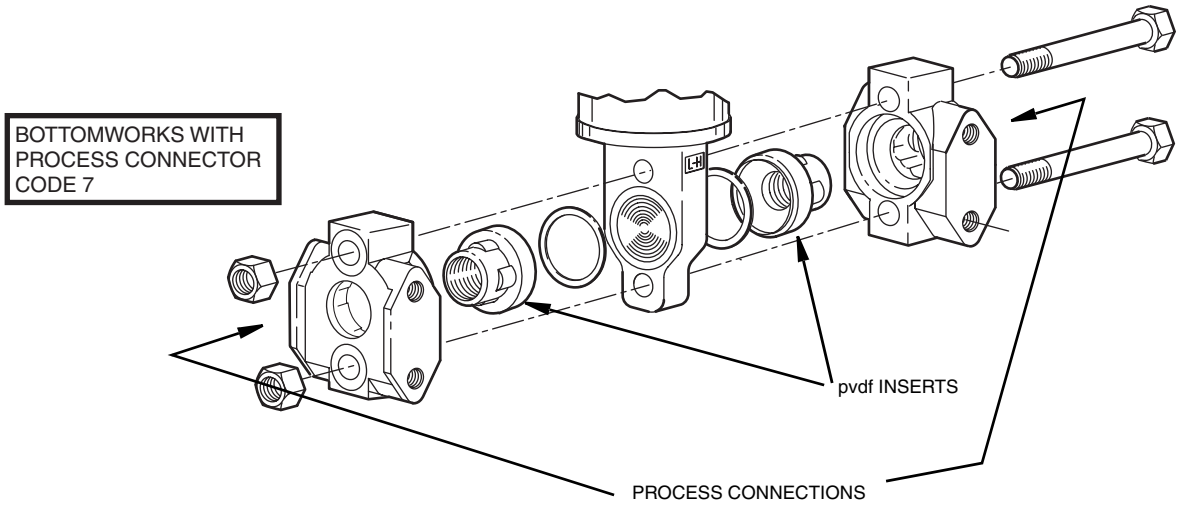

Figure 46. Replacing the Sensor Assembly (pvdf Inserts)

Rotating Process Covers for Venting

As received, your IASPT Transmitter provides sensor cavity draining without the need for side drain connections, regardless of whether the transmitter is mounted vertically or horizontally. Sensor cavity venting is provided by mounting the transmitter horizontally or with the optional vent screw (-V). How-

ever, if you did not specify this option, you can still achieve venting (instead of draining) with vertical mounting by rotating the process covers. See Figure 47.

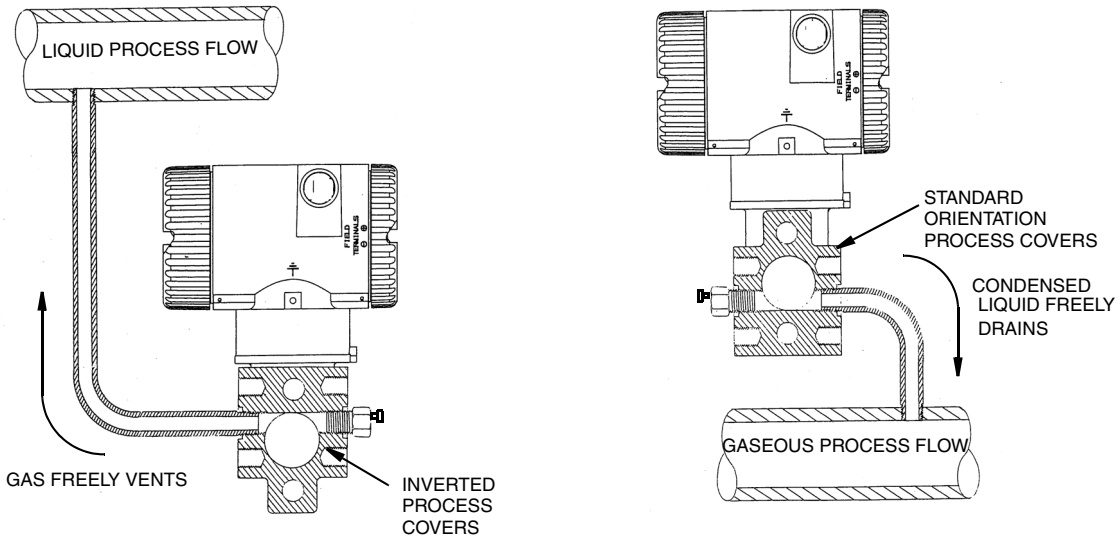

Figure 47. Sensor Cavity Venting and Draining

To rotate the process covers, refer to Figure 45 and proceed as follows:

1. Turn off the transmitter power source and remove the transmitter from the process.
2. Remove the process covers from sensor by removing two hex head bolts.
3. Replace gaskets in process covers.
4. Rotate the process covers so that the longer tab is at the bottom.
5. Reinstall process covers and bolts. Torque cover bolts to 100 N·m (75 lb·ft) in several even increments. Torque values are 68 N·m (50 lb·ft) when 316 ss bolts are specified; 75 N·m (55 lb·ft) when B7M bolts are specified.
6. Pressure test the sensor and process cover assembly by applying a hydrostatic pressure of 150% of the maximum static and overrange pressure (see “Standard Specifications” on page 5) to both sides of the process cover/sensor assembly simultaneously through the process connections. Hold pressure for one minute. There should be no leakage of the test fluid through the gaskets. If leakage occurs, retighten the cover bolts per Step 4 or replace the gaskets and retest.

CAUTION

Perform hydrostatic test with a liquid and follow proper hydrostatic test procedures.

Index

C
Calibration 37
Using a HART Communicator 41
Using a PC20 41
Using a PC50 Configurator 41
Using the Local Display 41
Calibration Notes 37
Calibration Setup 39
Configuration 49
Using a HART Communicator 50
Using a PC20 Configurator 50
Using a PC50 Configurator 50
Using the Local Display 50
Cover Locks 24

D
Display, Positioning the 24

E
Error Messages
Calibration 47
Configuration 59
Operation 35

H
Housing, Positioning the 24

I
Identification 3
Installation 13

M
Maintenance 61
Mounting 13

O
Operation Via Local Display 31

P
Parts Replacement 61
Piping, Installation of Flow Measurement 21

R
Reference Documents 1
Reranging 33

S
Seal Liquid, Filling the System with 23
Specifications

Product Safety 10
Standard 5

W
Wiring 25
Write Protect Jumper, Setting the 24

Z
Zero Adjustment Using External Zero Button 45

ISSUE DATES
DEC 2001
OCT 2003
APR 2004
FEB 2005
JUN 2005
FEB 2006
AUG 2006
Vertical lines to right of text or illustrations indicate areas changed at last issue date.

33 Commercial Street
Foxboro, MA 02035-2099
United States of America
http://www.foxboro.com
Inside U.S.: 1-866-746-6477
Outside U.S.: 1-508-549-2424 or contact your local Foxboro Representative.
Facsimile: (508) 549-4999

Invensys, Foxboro, and I/A Series are trademarks of Invensys plc, its subsidiaries, and affiliates. All other brand names may be trademarks of their respective owners.

Copyright 2001-2006 Invensys Systems, Inc.
All rights reserved

Printed in U.S.A. 0806

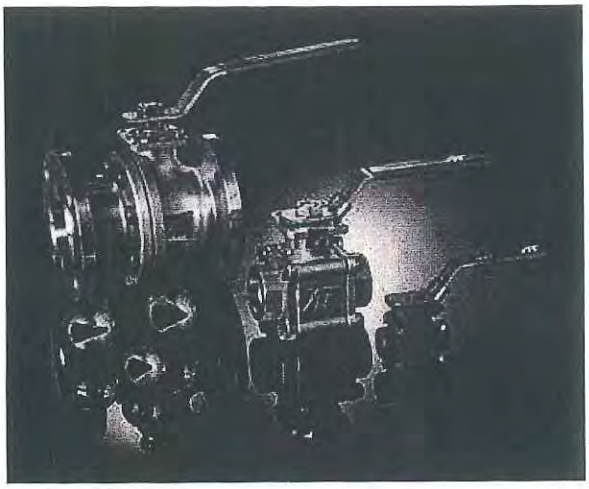

Triac "V" Series Ball Valves are ideal for achieving more precise control with the simplicity and sealing features of a ball valve. We offer them 1/2" – 4" in a 3-piece design and 1/2"– 6" flanged. The standard "V" notch options are 30, 60 & 90. While they are available as manual valves, we specialize in automating them to suit your particular control requirements.

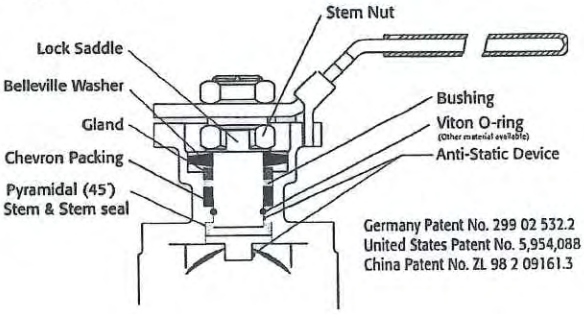

Easy to Automate!

See automated data sheets for pre-sized assemblies

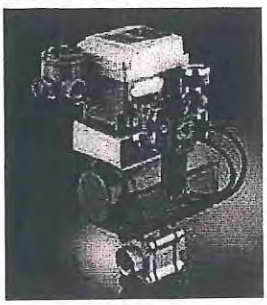

Pneumatic

Electric

TRIAC CONTROLS

"V" Series Control Port Ball Valves

Sizes 1/2" – 6"

3 Piece and 150# Flanged

316SS or WCB

30, 60 & 90 "V" Notch Standard
Others on Request

TA-Luft 2002, Sec.5.3.6.4
TA-Luft Certified for Low Emissions
VDI 2440 Nov.2000, Sec.3.3.1.3

HOW TO ORDER MANUAL VALVES

SAMPLE PART #

V8C-TH-0200-XXX

- V Port
- Valve Series
- Carbon Steel
- Threaded Ends
- Valve Size
- Seat Material
- Special Designation
- Additional Special Designation (V30, V60 or V90)

See part number matrix for itemized options

"V" Series Control Port Ball Valves

A-T Controls, Inc.
9955 International Blvd.
Cincinnati, Ohio 45246
www.atcontrols.com
PHONE (513) 247-5465
FAX (513) 247-5462
sales@atcontrols.com

VM-(A)-20130430
Copyright 2013 A-T Controls, Inc.

"V" Series

Triac "V" port control valves are available with 30V, 60V & 90V notch. V port valves offer better and more consistent control than traditional round ported ball valves. We offer this valve with the control port cast and machined into the ball, not in the seat. This allows for much better flow characteristics and eliminates the need to replace seats. The 30 option allows for finer tapered control throughout the valve rotation and the 60 & 90 offers a larger Cv in addition to controlled flow.

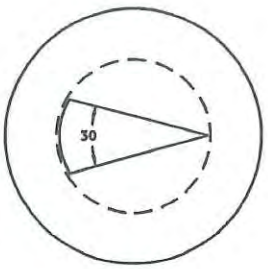

30 V-Port

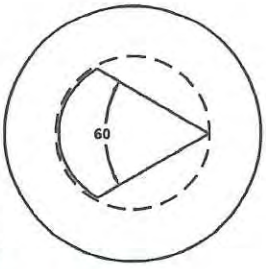

60 V-Port

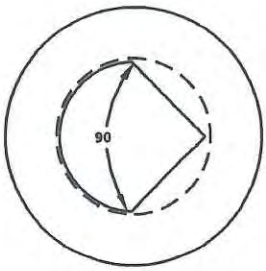

90 V-Port

The 50/50 seat is standard with all V port valves. The 50% SST powder and 50% PTFE offers both strength and superior sealing properties.

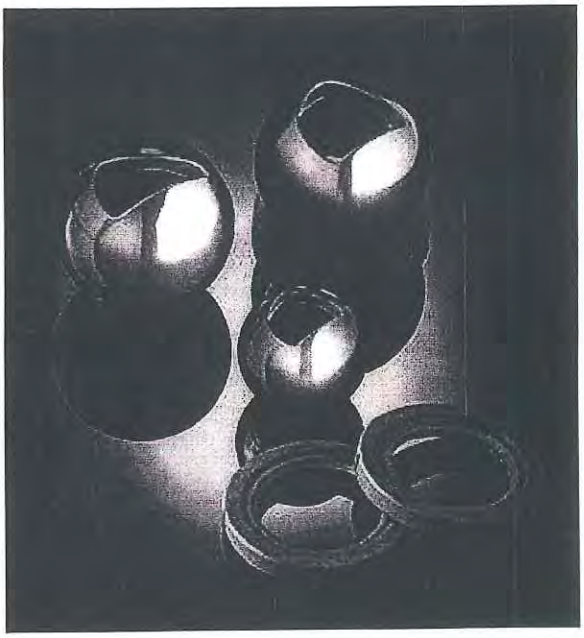

"V" Series

"V" Series Flow Coefficients- Cv Chart

Valve Size	Ball Angle	0%	15%	20%	30%	40%	50%	60%	70%	80%	90%	100%
1/2"	30	0	0.1	0.1	0.2	0.3	0.5	0.8	1.1	1.6	2.2	2.6
	60	0	0.1	0.1	0.3	0.5	0.9	1.4	2	3.3	4.4	6
	90	0	0.1	0.2	0.4	0.6	0.9	1.5	2.2	3.8	5.4	6.9
3/4"	30	0	0.1	0.2	0.5	0.7	1.1	1.8	2.4	3.3	4.5	5.4
	60	0	0.1	0.2	0.7	1	1.7	2.8	4	6.5	9	12
	90	0	0.2	0.4	0.8	1.2	2	3.1	4.6	8	11.3	14
1"	30	0	0.1	0.3	0.8	1.3	2.3	3.5	5.1	9.8	8.5	10
	60	0	0.2	0.4	1.1	1.8	3.4	5.3	7.9	12.3	15.3	21
	90	0	0.2	0.6	1.8	3.4	5.1	8.1	11.4	16	21	29
1 1/4"	30	0	0.2	0.4	1.1	2	3.7	5.5	8	10	13	15
	60	0	0.2	0.6	1.8	3	5.5	9.5	12.8	19	26	39
	90	0	0.3	0.8	2	5	8	14	19	28	39	55
1 1/2"	30	0	0.3	0.6	1.6	3	5	7.5	11	14	17	20
	60	0	0.4	0.8	2.5	4	8	13	19	27	40	52
	90	0	0.4	0.9	3.5	7	13	20	31	42	63	78
2"	**30**	**0**	**0.4**	**1.2**	**3.8**	**6**	**10**	**15**	**23**	**31**	**43**	**60**
	60	0	0.4	1.5	4.6	9	16.5	27	39	55	83	110
	90	0	0.5	2	6	12	22	35	45	70	105	135
2 1/2"	30	0	0.4	1	4	8	12	18	28	37	62	75
	60	0	0.4	1.5	5	10	21	34	53	75	103	150
	90	0	0.5	1.7	7	14	28	48	70	106	160	218
3"	30	0	0.5	1.2	4	8	14	23	33	46	65	82
	60	0	0.5	2.5	6	14	25	40	65	91	128	165
	90	0	0.7	3.5	8	18	35	60	90	135	205	310
4"	30	0	0.6	2	6	15	29	48	71	100	130	159
	60	**0**	**0.7**	**3**	**11**	**25**	**40**	**59**	**90**	**141**	**212**	**356**
	90	0	1	3.5	16	40	75	125	190	295	442	670
6"	30	0	0.9	3.2	14	33	60	103	155	220	280	350
	60	0	2	5	22	60	110	190	285	416	586	800
	90	0	3	8	35	90	160	280	425	650	970	1480
FL		0	0.96	0.95	0.94	0.93	0.92	0.9	0.88	0.86	0.82	0.75
Xt		0	0.98	0.77	0.71	0.67	0.64	0.63	0.62	0.55	0.43	0.4

AM 5/28/15

Pressure vs. Temperature Charts 1"– 6"

150# Flanged Design

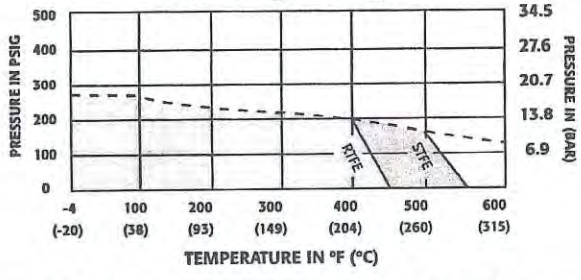

NOTE: Dotted line shows the rating for valve body. Solid line shows the rating for valve seat. Both ratings need to be consulted when determining the limitation of the valve for specific application.

Consult factory for other seat material.

3-piece Design

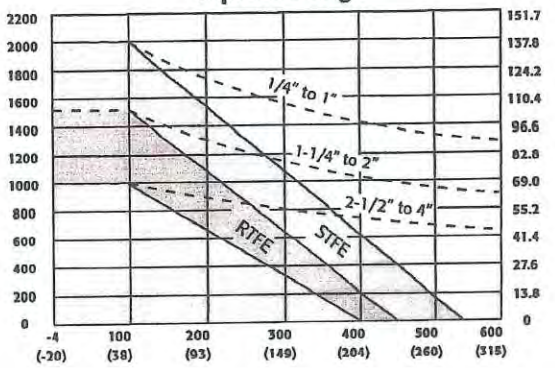

"V" Series
3 Piece

88 Series
V-Port
Control Valve

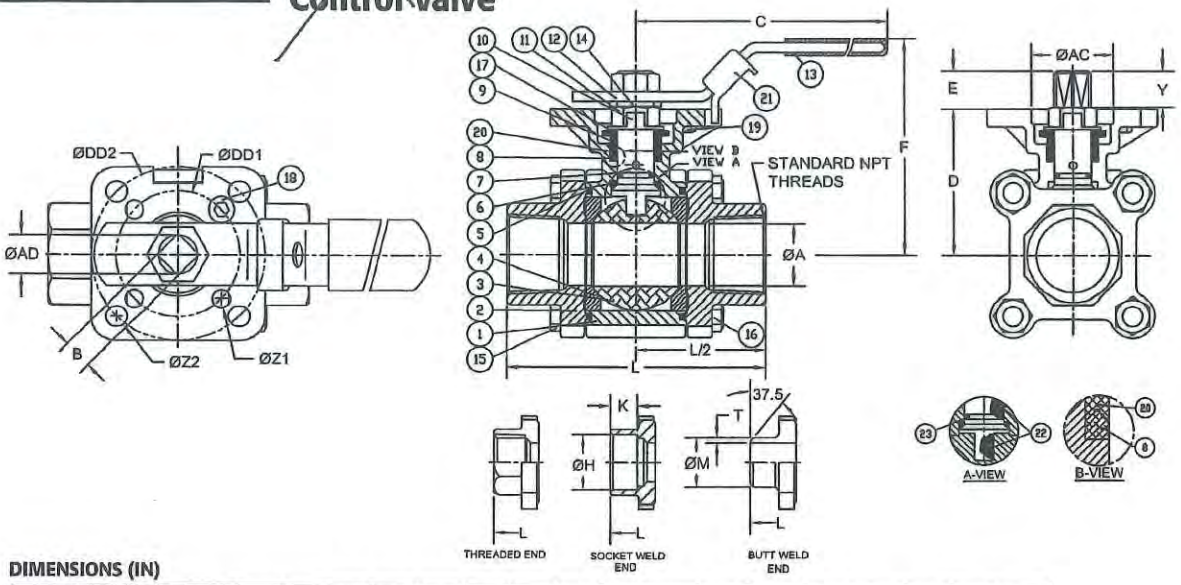

DIMENSIONS (IN)

SIZE	ØA	B	C	D	E	F	H	K	L	M	T	Y	AC	AD	DD1	DD2	ØZ2	ØZ1	(LBS)	ISO5211
1/2"	0.59	0.354	5.47	1.66	0.25	3.00	0.85	0.39	2.85	0.85	0.06	0.25	1.07	0.44	1.654	1.969	0.28	0.28	2.0	F04/F05
3/4"	0.79	0.354	5.47	1.83	0.33	3.20	1.07	0.51	3.36	1.07	0.06	0.33	1.07	0.44	1.969	2.756	0.34	0.28	3.0	F05/F07
1"	0.98	0.433	6.50	2.31	0.41	3.86	1.34	0.51	4.15	1.34	0.06	0.41	1.34	0.56	1.969	2.756	0.34	0.28	4.5	F05/F07
1-1/4"	1.26	0.433	6.50	2.46	0.41	4.00	1.69	0.51	4.37	1.68	0.06	0.41	1.34	0.56	1.969	2.756	0.34	0.28	6.0	F05/F07
1-1/2"	1.50	0.551	8.46	3.11	0.53	5.04	1.92	0.51	5.01	1.91	0.06	0.53	1.54	0.74	1.969	2.756	0.34	0.28	10.0	F05/F07
2"	1.97	0.551	8.46	3.42	0.53	5.35	2.40	0.63	5.62	2.38	0.06	0.53	1.54	0.74	1.969	2.756	0.35	0.30	13.0	F05/F07
2-1/2"	2.56	0.748	10.31	4.28	0.66	6.60	2.89	0.63	7.28	3.00	N/A	0.66	2.09	0.94	2.756	4.016	0.47	0.39	26.0	F07/F10
3"	3.15	0.748	10.31	4.63	0.70	6.96	3.54	0.63	8.07	3.54	N/A	0.70	2.09	0.94	2.756	4.016	0.47	0.39	34.0	F07/F10
4"	3.94	0.748	12.28	5.26	0.66	7.59	4.54	0.79	9.45	4.57	N/A	0.66	2.09	0.94	2.756	4.016	0.47	0.39	52.0	F07/F10

"V" Series
Flanged

90 Series
V-Port
Control Valve
Flanged

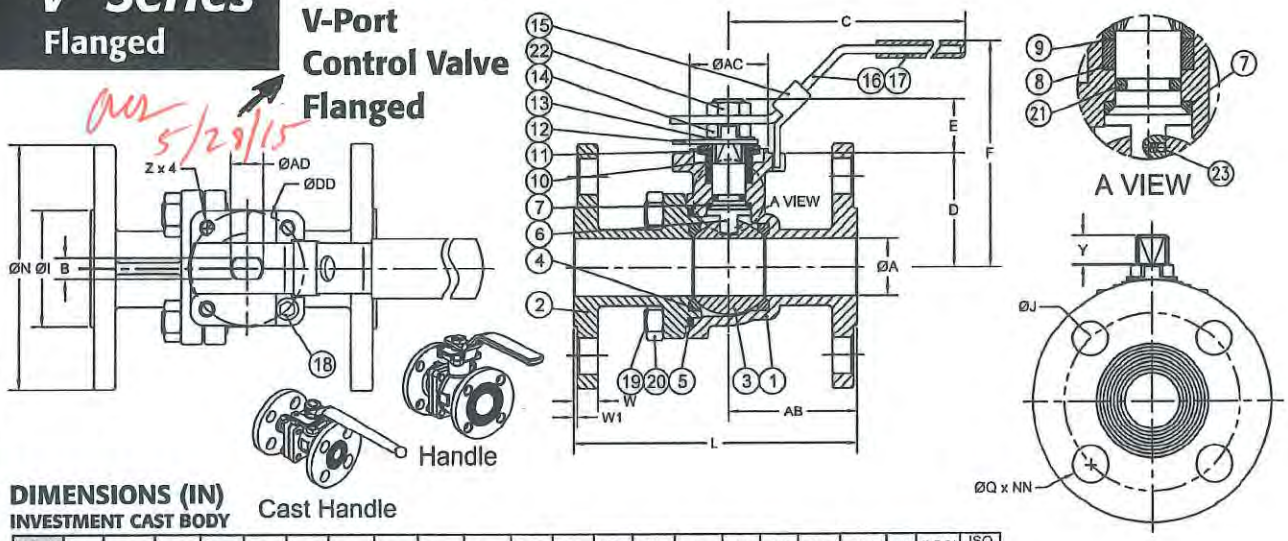

DIMENSIONS (IN)
INVESTMENT CAST BODY

SIZE	A	B	C	D	E	F	I	J	L	N	Q	W	W1	Y	Z	AB	AC	AD	DD	NN	(LBS)	ISO 5211
1/2"	0.59	0.315	6.69	1.34	0.92	3.15	1.47	2.38	4.26	3.50	0.63	0.44	0.06	0.36	M5	1.82	1.17	0.43	1.654	4	3.7	F04
3/4"	0.79	0.315	6.69	1.65	0.94	3.43	1.82	2.75	4.62	3.88	0.63	0.44	0.06	0.40	M5	2.17	1.17	0.43	1.654	4	4.6	F04
1"	0.98	0.382	8.05	1.95	0.94	3.85	2.08	3.13	5.00	4.26	0.63	0.44	0.06	0.32	M6	2.20	1.37	0.56	1.969	4	6.8	F05
1-1/2"	1.50	0.472	10.28	3.08	1.37	6.02	2.88	3.88	6.50	5.00	0.63	0.56	0.06	0.58	M8	2.81	2.17	0.75	2.756	4	13.6	F07
2"	1.97	0.472	10.28	3.40	1.37	6.38	3.62	4.75	7.02	6.00	0.75	0.63	0.06	0.58	M8	3.38	2.17	0.75	2.756	4	19.2	F07
2-1/2"	2.56	0.472	10.28	3.83	1.37	6.81	4.12	5.50	7.49	7.00	0.75	0.69	0.06	0.58	M8	3.02	2.17	0.75	2.756	4	30.0	F07
3"	3.15	0.591	13.94	4.23	1.81	6.95	5.00	6.00	8.01	7.50	0.75	0.75	0.06	0.93	M10	4.01	2.76	0.94	4.016	4	41.0	F10
4"	3.94	0.591	13.94	4.82	1.79	7.52	6.19	7.50	9.04	9.00	0.75	0.94	0.06	0.93	M10	4.06	2.76	0.94	4.016	8	65.0	F10

For 6" valve dimensions please see D9 brochure.

Viton® is a registered trademark of E.I. DuPont de Nemours.

A-T Controls reserves the right to change product designs and technical/dimensional specifications without notice.

A-T Controls, Inc.

9955 International Blvd. Cincinnati, Ohio 45246 www.atcontrols.com

PHONE (513) 247-5465 FAX (513) 247-5462 sales@atcontrols.com

TRIAC CONTROLS

WE/XE Series

WE NEMA 4, 4X & 6

XE NEMA 4, 4X, 6 & 7

SE NEMA 4, 4X, 6 & 9 IP68

Acutator Model	Output Torque	90° Cycle Time (sec)	Motor Size	Full Load Amps					Locked Rotor Amps					Handwheel Turns	Weight
				AC/DC	1 Phase		3 Phase		AC/DC	1 Phase		3 Phase			
WE / XE	In-Lbs.	60 / 50 Hz	Watts	24V	110V/60Hz	220V/60Hz	380V	440V	24V	110V/60Hz	220V/60Hz	380V	440V	N	Lbs.
-690	690	13 / 16	15	5	1.2	0.6	N/A	N/A	12.8	1.4	0.7	N/A	N/A	10	16.4
-1350	1350	21 / 25	40	6	2	1	0.28	0.36	16.9	2.5	1.2	0.75	0.66	11	36.7
-1700	1700	21 / 25	40	7.4	2.3	1.1	0.28	0.36	16.9	2.5	1.2	0.75	0.66	11	36.7
-2640	2640	26 / 31	40	8.9	2.3	1.3	0.27	0.34	30.8	2.9	1.4	1	0.87	13.5	48.6
-4400	4400	26 / 31	90	N/A	4.5	1.9	0.42	0.47	N/A	5	2.4	1.73	1.5	13.5	50.8
-5200	5200	26 / 31	90	N/A	4.5	2	0.42	0.47	N/A	5	2.4	1.73	1.5	13.5	50.8
-6900	6900	31 / 37	180	N/A	5.1	2.4	0.61	0.67	N/A	7.3	3.8	2.73	2.38	16.5	64
-10500	10500	31 / 37	180	N/A	5.4	3.4	0.61	0.67	N/A	7.3	3.8	2.73	2.38	16.5	64
-17500	17500	95 / 112	180	N/A	5.8	2.4	0.61	0.67	N/A	7.3	3.8	2.73	2.38	49.5	167
-25900	25900	95 / 112	180	N/A	6.3	3.4	0.61	0.67	N/A	7.3	3.8	2.73	2.38	49.5	167

Rev.20130924

Standard Specifications

Enclosure.....Weatherproof enclosure, IP67, TYPE 4, 4X, 6
AWWA.....Conforms to AWWA C540-93 requirements
Power supply.....110/220V AC 1PH, 220/380/440/460/480VAC, 3 Phase, 50/60Hz, ±10%
Control power supply.....110/220V AC 1PH, 50/60Hz, ±10%
Duty cycle(on-off).....70% Max 1800 start/hour
Duty cycle(modulating).....70% Max 1800 start/hour
Motor.....Class F Reversible Induction motor
Limit switches.....Open / Close, SPDT, 16A 1/2HP 125/250VAC, 0.6A 125VDC, 0.3A 250VDC
Additional limit switches.....Open / Close, SPDT, 16A 1/2HP 125/250VAC, 0.6A 125VDC, 0.3A 250VDC
Torque switches.....Open / Close, SPDT, 16A 1/2HP 125/250VAC, 0.6A 125VDC, 0.3A 250VDC (except WE/XE-690)
Stall protection.....Built-in thermal protection, Open 302°F (150°C) / Close 207°F (97°C)
Travel angle.....90° ± 10°
Indicator.....Continuous position indicator
Manual override.....Declutching mechanism
Self locking.....Provided by double worm gearing
Mechanical stopper.....Open / Close (external adjustable screws)
Space heater.....7-10W (110/220V AC) Anti-condensation
Cable Conduit.....Two 3/4" NPT
Lubrication.....Grease moly (EP type)
Terminal block.....Spring loaded lever push type
Materials.....Steel, Aluminium alloy, Al bronze, Polycarbonate
Ambient temperature.....-4°F —158°F (optional -40° Low Temp Kit)
Ambient humidity.....90% RH Max. (non-condensing)
External coating.....Anodizing treatment before Dry powder, Polyester, Munsell no. 5R 3.5/12

Options Specifications

ATEX II 2 G
EEx d IIB T4

Explosion-Proof enclosure II 2 G, E Ex d IIB T4, IP67	ATEX certification
Designed to comply with NEMA 7 Explosion Proof	
Watertight enclosure (IP68 10M 72HR)	SE/XE Series
Potentiometer unit (1K ~10K)	WE/XE Series
Proportional control unit (input, output 0~10V DC, 4~20mA DC)	WE/XE Series
Semi-Integral control unit (Local/Remote Selector Switches)	except WE/XE-690
Intelligent Digital control unit (Local/Remote Selector Switches)	except WE/XE-690
Current position transmitter (output 4-20mA DC)	WE/XE Series
Extension 120°, 180°, 270° turn	except WE/XE-17500, 25900
Duty Cycle 70% max (in Ambient temperature)	except WE/XE-690
DC motor (24V DC)	WE/XE-690C—WE/XE-2640C
AC/DC 24V control	WE/XE-690A—WE/XE-2640A
Lever plate actuator	except WE/XE-690
Signal lamp unit (red-close, green-open, yellow-over torque)	
Fire Proofing Actuator 1050 ±5°C/50 min	Consult factory
Fire Proofing Actuator 250 ±5°C/150 min	Consult factory

Explosion Proof Enclosure
- ATEX Certification
- Designed to comply with NEMA 7 Explosion Proof

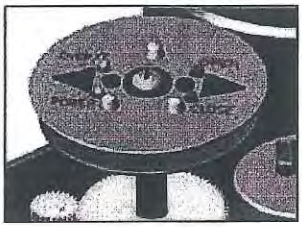

Signal LED Unit
Large indicator with monitoring lamps (Over torque, open and close)

Fire Proofing Acuator

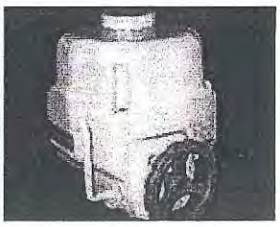

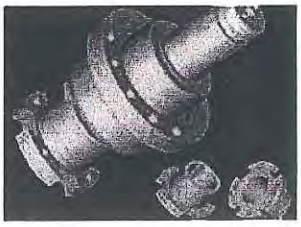

Removable Drive Bushing

High Speed Electric Actuators

Model	Output Torque	Speed (60Hz)	Torque Switch Setting
WE-690*HS2	290 In-Lbs	4.5 seconds	N/A
WE-690*HS1	400 In-Lbs	7.0 seconds	N/A
WE-1350*HS2	840 In-Lbs	7.0 seconds	1,350 In-Lbs
WE-1350*HS1	1,200 In-Lbs	10.5 seconds	1,350 In-Lbs
WE-2640*HS2	1,390 In-Lbs	8.5 seconds	2,640 In-Lbs
WE-2640*HS1	2,050 In-Lbs	13.0 seconds	2,640 In-Lbs
WE-4400*HS2	2,350 In-Lbs	8.5 seconds	4,400 In-Lbs
WE-4400*HS1	3,500 In-Lbs	13.0 seconds	4,400 In-Lbs
WE-6900*HS2	4,500 In-Lbs	10.5 seconds	6,900 In-Lbs
WE-10500*HS1	6,700 In-Lbs	15.5 seconds	10,500 In-Lbs
WE-17500*HS2	12,000 In-Lbs	31.0 seconds	17,500 In-Lbs
WE-25900*HS1	18,000 In-Lbs	47.0 seconds	25,900 In-Lbs

Motor specifications remain the same.
*Must specify voltage - see part number matrix on back cover.

TRIAC CONTROLS

Modulating Options for WE-500-25900

AS 5/28/15

Modulating Cards

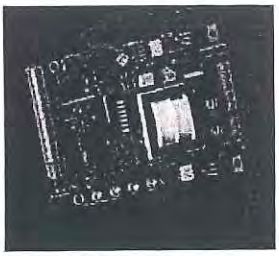

TMC3 Electronic Modulating Card

- Auto Calibration for Easy Setup
- 10 Bit Microprocessor controller for precise positioning and control
- 4-20mA, 1-5mA, 0-10 VDC, 1-5 VDC, 0-135 Ohm or Command Signal Potentiometer
- TMC3 Can be programmed to Fall in Place, Fail CW, or Fail CCW on loss of command signal
- Characterized Control-Linear, quick opening (Square root), or Equal Percentage (Square)
- OnBoard 4-20 mA transmitter (standard)

TDC Electronic Modulating Card

- 450 Point Resolution, 16 Bit Micro Processor
- Auto Calibration
- Adaptive Control Feature (continuously adjusts for load and actuator conditions and positions to ±0.1°)
- Dynamic Breaking
- 4-20mA, 1-5V, 0-5V, 0-10V
- Programmed to Fail in place, Fail CW, or Fail CCW on loss of command signal
- 4-20mA Feedback Transmitter (Optional)

EPC Electronic AS-i Network Card

- AS-i Version 2.1
- 120 VAC or 24VDC Power
- Emergency Override-Normal Operation is overridden when actuator is driven to either Ch or CCh position on command
- Built in Emergency Position Command (EPC) overrides normal operation and automatically operates the valve into either the open or closed position (normally this is the closed position) as defined in the user specifications
- Signal Sentinel continuously monitors the EPC system offering additional failsafe backup in the event of an unexpected local event

Boiler Feedwater Application

- Control signal 4-20mA, specify these parts: LRC-100, POT-102 & Extended Bracket.
- Control signal 0-135 ohm, specify these parts: TDC-100, XMA-108, POT-102 & Extended Bracket

Other Network Cards Available Upon Request

TRIAC CONTROLS

Dimensional Drawing

WE/XE-690, 1350, 1700, 2640, 4400, 5200, 6900, 10500

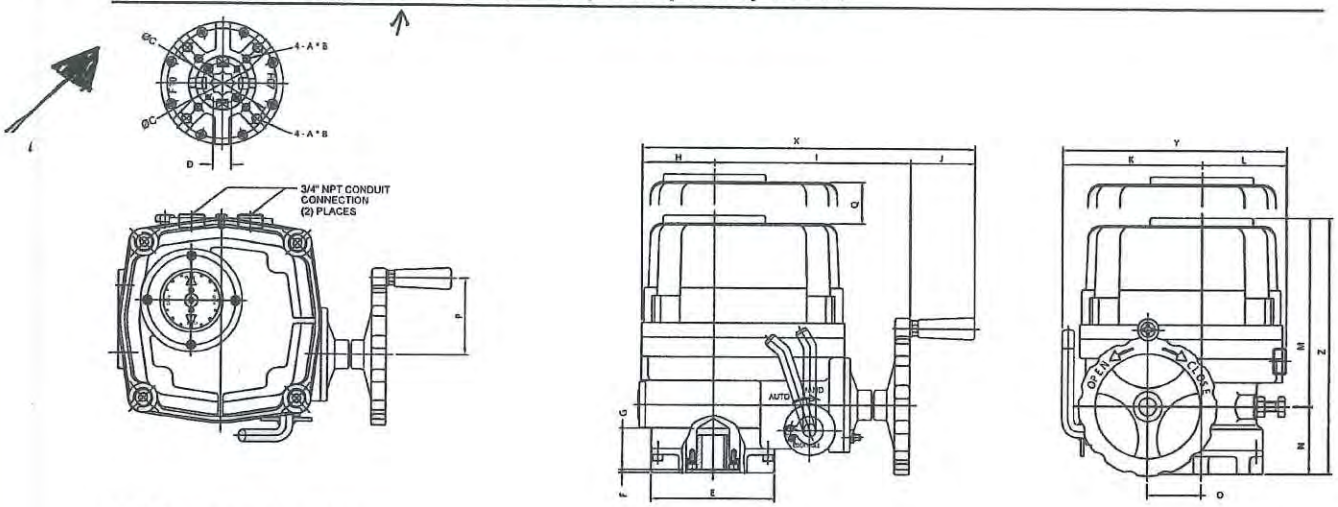

WE/XE-17500, 25900

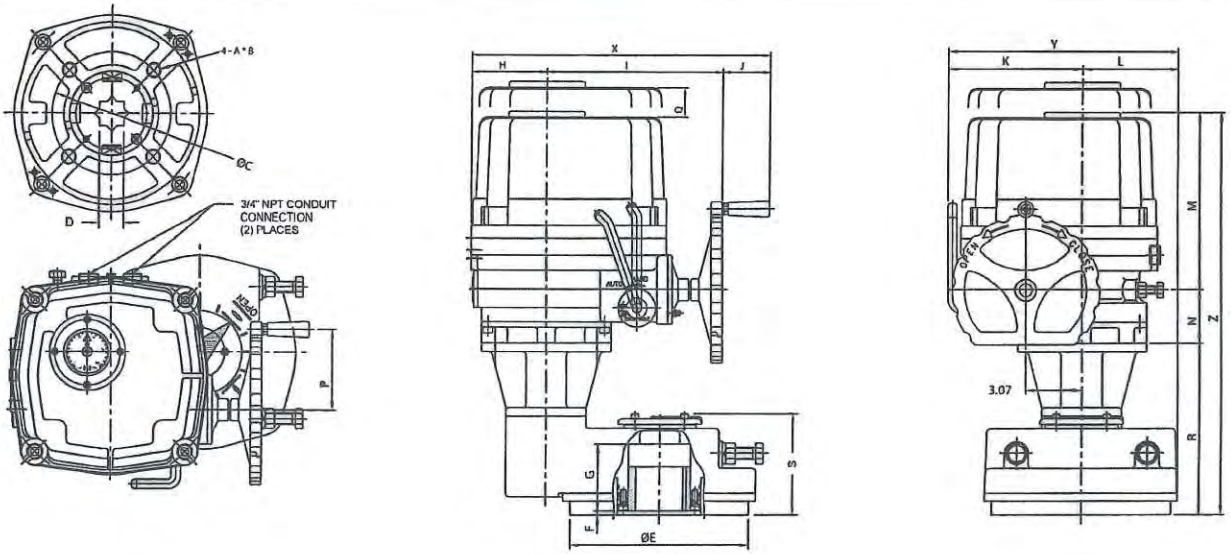

Dimensions

Units (inches)

Model WE/XE	ISO 5211	A	B	C	D sq	E	F	G	H	I	J	K	L	M	N	O	P	Q	R	S	X	Y	Z
-690	F07	M8	0.47	2.756	0.669	3.46	0.12	1.26	1.97	6.18	2.01	3.94	2.76	6.57	2.09	1.57	2.36	4.72	-	-	10.16	6.69	9.25
-1350	F07/F10	M8/M10	0.47/0.59	2.756/4.016	0.748	4.92	0.12	1.65	2.87	7.87	2.56	5.59	3.43	7.56	2.68	2.13	3.07	6.30	-	-	13.31	9.02	10.55
-1700	F07/F10	M8/M10	0.47/0.59	2.756/4.016	0.748	4.92	0.12	1.65	2.87	7.87	2.56	5.59	3.43	7.56	2.68	2.13	3.07	6.30	-	-	13.31	9.02	10.55
-2640	F10/F12	M10/M12	0.59/0.71	4.016/4.921	1.063	5.83	0.12	1.93	3.23	8.70	2.56	6.30	3.90	8.70	2.72	2.56	3.07	7.09	-	-	14.49	10.20	11.42
-4400	F10/F12	M10/M12	0.59/0.71	4.016/4.921	1.063	5.83	0.12	1.93	3.23	8.70	2.56	6.30	3.90	8.70	2.72	2.56	3.07	7.09	-	-	14.49	10.20	11.97
-5200	F10/F12	M10/M12	0.59/0.71	4.016/4.921	1.063	5.83	0.12	1.93	3.23	8.70	2.56	6.30	3.90	8.70	2.72	2.56	3.07	7.09	-	-	14.49	10.20	11.97
-6900	F14	M16	0.95	5.512	1.417	7.01	0.12	2.24	4.06	9.53	2.56	7.32	4.37	9.49	2.91	3.07	4.33	8.27	-	-	16.14	11.69	12.99
-10500	F14	M16	0.95	5.512	1.417	7.01	0.12	2.24	4.06	9.53	2.56	7.32	4.37	9.49	2.91	3.07	4.33	8.27	-	-	16.14	11.69	12.99
-17500	F16	M20	1.18	6.496	1.417	9.65	0.20	3.54	4.06	9.53	2.56	7.32	5.24	9.49	2.91	3.07	4.33	8.27	9.17	5.24	16.14	12.56	22.17
-25900	F16	M20	1.18	6.496	1.417	9.65	0.20	3.54	4.06	9.53	2.56	7.32	5.24	9.49	2.91	3.07	4.33	8.27	9.17	5.24	16.14	12.56	22.17

Wiring Connection

WE/XE-1350 thru 25900 *Two Position 115 VAC/1 Ph* SE 1080

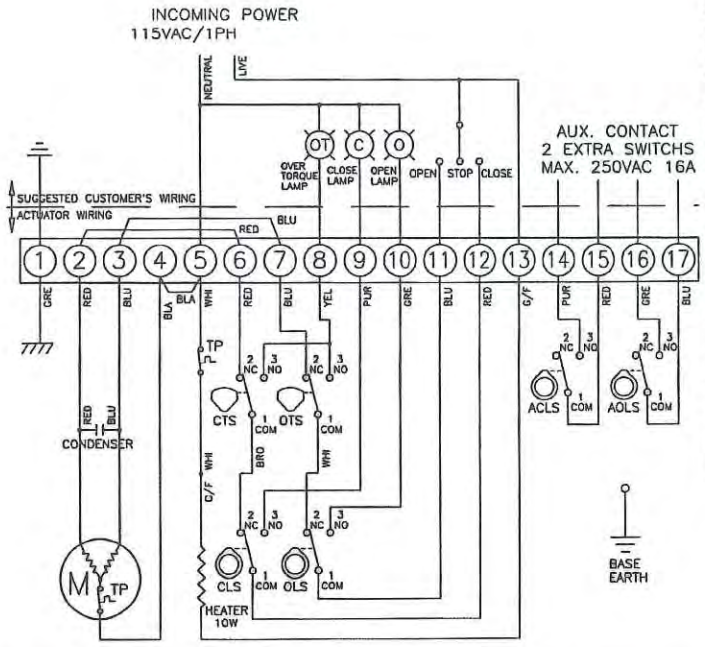

TORQUE AND LIMIT SWITCH OPERATION			
SWITCH	CLOSE ←	INTERMEDIATE	→ OPEN
CLS 1–2			
CLS 1–3			
OLS 1–2			
OLS 1–3			
ACLS 1–2			
ACLS 1–3			
AOLS 1–2			
AOLS 1–3			
CTS 1–3	* CLOSING TORQUE SWITCH INTERRUPTS CONTROL IF MECHANICAL OVERLOAD OCCURS DURING CLOSING CYCLE		
OTS 1–3	* OPENING TORQUE SWITCH INTERRUPTS CONTROL IF MECHANICAL OVERLOAD OCCURS DURING OPENING CYCLE		

SYMBOL	DESCRIPTION	RATING
CLS	CLOSE LIMIT SWITCH	250VAC 10A
OLS	OPEN LIMIT SWITCH	250VAC 10A
CTS	CLOSE TORQUE SWITCH	250VAC 10A
OTS	OPEN TORQUE SWITCH	250VAC 10A
ACLS	AUX. CLOSE LIMIT SWITCH	250VAC 16A
AOLS	AUX. OPEN LIMIT SWITCH	250VAC 16A
TP	THERMAL PROTECTOR	250VAC 15A

*EACH ACTUATOR SHOULD BE POWERED THROUGH IT'S OWN INDIVIDUAL SWITCH OR RELAY CONTACTS TO PREVENT CROSS FEED BETWEEN TWO OR MORE ACTUATORS.

WEM/XEM-1350 thru 25900 *Proportional 115 VAC/1 Ph* SE 1052

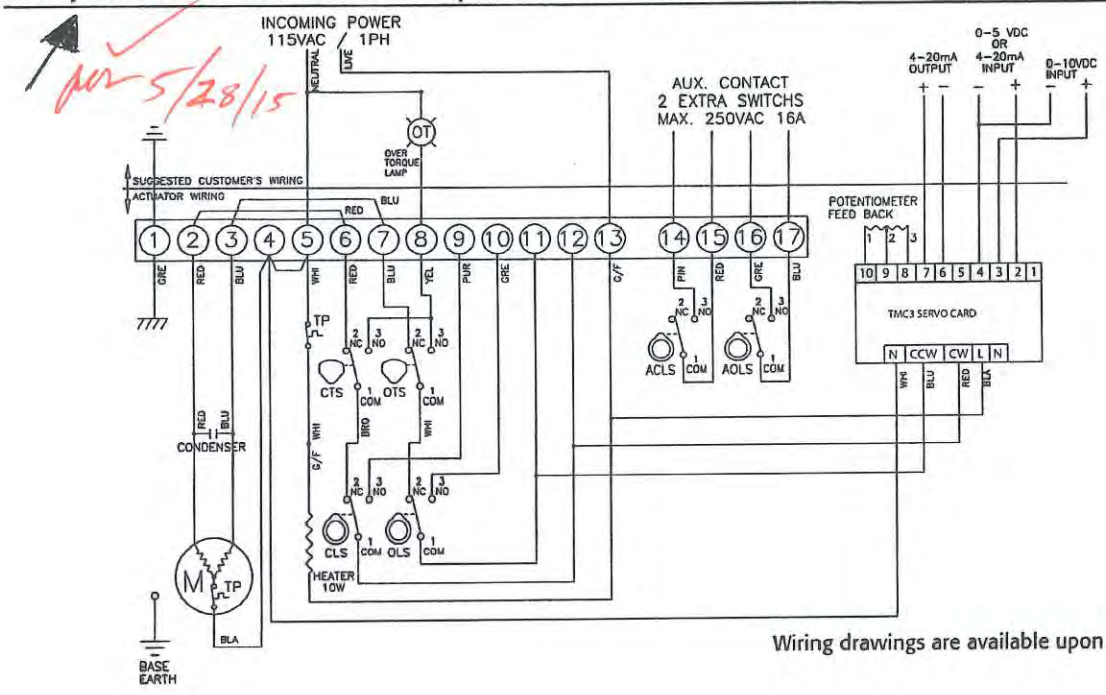

Wiring drawings are available upon request.

TRIAC CONTROLS

Triac WE / XE Series Part Number Reference

WEM-1700 XX

5/28/15

Model	
WE	Weather Proof, IP67, TYPE 4, 4X, 6
XE	Explosion Proof Design, ATEX & IECEx Ex d IIB T4, IP67
FE	Fire Proof Unit (1050°F for 50 Min)
SE	Submersible unit (IP68, 10 meters for 72 Hours)

Control	
Blank	(2) Position Control (Open / Close)
M	Standard Modulating Control Card (TMC3)
D	TDC-100 Modulating Card (Provides 450 points of resolution)
P	Profibus DP
R	Modbus (RS485)
L	Boiler Feed (4-20mA)
S	Boiler Feed (0-135ohm)

Actuator Size	
-350	350 In-Lbs
-350HS	270 In-Lbs
-500	500 In-Lbs
-690	690 In-Lbs
-1350	1350 In-Lbs
-1700	1700 In-Lbs
-2640	2640 In-Lbs
-4400	4400 In-Lbs
-5200	5200 In-Lbs
-6900	6900 In-Lbs
-10500	10500 In-Lbs
-17500	17500 In-Lbs
-25900	25900 In-Lbs
-53000	53000 In-Lbs
-80000	80000 In-Lbs

Motor		
X	115VAC/1PH	Place holder only - Omit when at end of part number
A	24V AC/DC	(N/A 4400 - 25900)
B	12VDC	
C	24VDC*	(N/A 4400 - 25900)
	*Requires additional relays for customer supplied wiring	
D	24VAC/1PH	(N/A 4400 - 25900)
E	220VAC/1PH	
F	220VAC/3PH	(N/A 500, 690)
G	380VAC/3PH	(N/A 500, 690)
H	440VAC/3PH	(N/A 500, 690)
J	460VAC/3PH	(N/A 500, 690)
K	480VAC/3PH	(N/A 500, 690)

Options		
X	No options	Place holder only - Omit when at end of part number
2	ADM-100 Control Board - 24 VDC On/Off	
B	Semi-integral Control Unit	(N/A 500, 690)
C	Intelligent Digital Control Unit	(N/A 500, 690)
D	Local / Remote Control Switches	(Only 500, 690)
E	Electronic Speed Control Module - 115 VAC only	
F	2 Wire Control & Speed Control - 115 VAC only	
G	End of travel time delay (same in both directions)	
HS1/HS2	See High Speed Options	
R	2 Wire Control, Relay - 115 VAC control voltage	
S	2 Wire Control, Relay - 24 VAC control voltage	
T	2 Wire Control, Relay - 24 VDC control voltage	

Miscellaneous Options Note: Add all miscellaneous options to end of part number		
Blank	No options	
T	4-20mA Transmitter	
N	1000 Ohm Potentiometer	
O	5000 Ohm Potentiometer	
P	10K Ohm Potentiometer	
X	120° Operation	(N/A 17500 or 25900)
Y	180° Operation	(N/A 17500 or 25900)
Z	270° Operation	(N/A 17500 or 25900)
L	-40° Low Temp Kit	
I	Position Indicator Lamps (Open, Close, Torque)	(N/A 500, 690)
S	(2) additional limit switches (6 total)	(N/A 500, 690)
	Floor Drive Mounting Configuration - See Floor Drive Catalog	

A-T Controls, Inc.

9955 International Blvd. PHONE (513) 247-5465
Cincinnati, Ohio 45246 FAX (513) 247-5462
www.atcontrols.com sales@atcontrols.com

WE-20150508
Copyright 2013 A-T Controls, Inc.
LIT0021

Examples

WEM-1350
(Weather Proof Housing, Modulating Control, model size 1350, 115VAC / 1PH)

WEM-1350XXT
(Weather Proof Housing, Modulating Control, model size 1350, 115VAC / 1PH, 4-20mA Transmitter)

AT Controls reserves the right to change product designs and technical/dimensional specifications without notice.

CERTIFIED LEAD FREE Ductile Iron Check Valve

NSF/ANSI 372

- ASTM A536 Ductile iron body. • Silicon bronze poppet.
- Stainless steel spring and nut. • Non-toxic polyester powder coat paint.

Standard Stemmed Poppet Check Valve

Stemmed Part No.	Size	Wt.Ea. lbs.	Ctn Qty
653SB	1	1.3	1
654SB	1-1/4	1.7	1
655SB	1-1/2	2.1	1
680SB	2	3.5	1
669SB	2-1/2	15.3	1
670SB	3	11.7	1
681SB	3*	13.1	1
671SB	4	21.5	1
674SB	5	33.7	1
672SB	6	44.5	1
683SB	6*	60.2	1
673SB	8	63.7	1
689SB	10	110.0	1

* High Flow Design

Stemless Poppet Check Valve

Stemless Part No.	Size	Wt.Ea. lbs.	Ctn Qty
2653SB	1	1.3	1
2654SB	1-1/4	1.7	1
2655SB	1-1/2	2.1	1
2680SB	2	3.5	1
-	2-1/2	15.3	1
-	3	11.7	1
2681SB	3*	13.1	1
2671SB	4	21.5	1
2674SB	5	33.7	1
-	6	44.5	1
2683SB	6*	60.2	1
-	8	63.7	1
-	10	110.0	1

* High Flow Design

CERTIFIED LEAD FREE Ductile Iron Check Valve with Break-off Plug

NSF/ANSI 372

- 1/2" Break-off plug standard. • 3/8" Break-off plug optional.

Check Valve (with Break-off Plug)

Stemmed Part No.	Size	Wt.Ea. lbs.	Ctn Qty
668SB	2-1/2	15.3	1
675SB	3	12.3	1
685SB	3*	13.4	1
676SB	4	21.3	1
679SB	5	34.0	1
677SB	6	44.7	1
687SB	6*	60.4	1
678SB	8	64.0	1
690SB	10	110.3	1

* High Flow Design

Stemless Check Valve (with Break-off Plug)

Stemless Part No.	Size	Wt.Ea. lbs.	Ctn Qty
-	2-1/2	15.3	1
-	3	12.3	1
2685SB	3*	13.4	1
2676SB	4	21.3	1
2679SB	5	34.0	1
-	6	44.7	1
2687SB	6*	60.4	1
-	8	64.0	1
-	10	110.3	1

* High Flow Design

CERTIFIED LEAD FREE Break-off Plug Only

- 303 Stainless steel.
- The break-off plug, when manually broken, allows water to drain from drop pipe before removal of pump.

Part No.	Size	Total Length	Wt.Ea. lbs.	Carton Quantity
4061	1/2	3.12	.5	1
4068	3/8	3.0	.4	1
4069**	1/2	6.0	.8	1

** For 8 & 10" Valves

*Silicon bronze components contain less than .05% (1/20 of 1%) Lead.

Check Valves furnished with Buna-N O-Ring, stainless steel spring, stainless steel washer, and stainless steel locknut. All valves 3/4" through 1-1/2" have a working pressure of 400 psi. All valves 2" and larger have a working pressure of 600 psi.

MADE IN U.S.A.

ASHCROFT®
Trust the shield.™

CI Series Bimetal Thermometers

TI 3001 Dial Thermometer

FEATURES

- *1% full span accuracy ASME B40.200 (ASME B40.3 Grade A)*
- *Maximum ambient temp. is 200°F (94°C)*
- *Hermetically sealed case to prevent entry of moisture, interior corrosion and coil freeze-up.*
- *Tamper resistant.*
- *Maxivison® dial allows readability from any angle without parallax error.*
- *Silicone coil dampening (up to 400°F) provides vibration dampening and improves response time.*
- *All-welded stainless steel construction*
- *Heavy-Duty glass lens*
- *Protection IP 65*
- *Five year limited warranty*

MADE IN THE USA

RoHS 2002/95/EC Compliant

SPECIFICATIONS

Ashcroft® Series:	CI
Dial Sizes:	2,″ 3,″ 5″
Stem Length:	2½″-24″ (1)
Case & Stem:	304 stainless steel, hermetically sealed
Stem Dia:	.250″
Window:	Heavy-duty glass, plastic or shatter-proof glass optional
Dial:	Maxivision®, black figures on white background
Pointer:	Black
Connection:	Plain, pointed plain, ¼ NPT, ½ NPT
Connection Location:	Lower, Rear
Ranges:	–80/120°F-200/1000°F –50/50°C-100/500°C

Options:

Code	Description
C4	Individual calibration cert.
XCS	Dual scale (2)
XDM	Dial marking
XNH	Stainless steel tag
XNN	Paper tag
XPD	Plastic window
XSG	Shatter proof glass
X3B	⅜″ stem dia. with ½ NPT
X02	¼ NPT when ½ NPT is standard (3)
XS1	Silicone free

(1) Special or longer length available, consult factory
(2) Dual scale avilable with 3″ and 5″ case only
(3) Only available on rear connection

Thermowells must be used on all pressure or velocity applications, to protect the stem of thermometer from corrosion and physical damage, and to facilitate removal of the thermometer without disturbing the process. Maximum ambient temperature is 200°F (95°C).

as 5/7/15

Ashcroft Part Number:
30CI60R 025 0/250F

HOW TO ORDER

30	CI	60	R	040	0/250°F	XNH

Dial Size: 3″ Code 30
Case Style: CI
Stem Connection: ½ NPT Code 60
Stem Location: Rear Code R
Stem Length: 4″ Code 040
Range: Code 0/250°F
Options: Stainless steel tag

ISO 9001
REGISTERED FIRM
BULLETIN BM-CI

All specifications are subject to change without notice.
All sales subject to standard terms and conditions.
© 2014 Ashcroft Inc. Rev. 07/14

Ashcroft Inc., 250 East Main Street, Stratford, CT 06614 USA
Tel: 203-378-8281 • Fax: 203-385-0408
email: info@ashcroft.com • www.ashcroft.com

ASHCROFT®
Trust the shield.™

CI Series Bimetal Thermometers

CI Series selection table

Case	Size		Stem			Stem Lengths Available			Temperature Range					
Dial	Code	Style Code	Conn.	Code	Location	Code	"S" Length (inches)	Code	°F* Fahrenheit	°/Div.	Fig. Inter.	°C Celsius	°/Div.	Fig. Inter.
2″	20	CI	Plain	40	Rear	R	2½	025	−80/120	2	20	−50/50	1	10
			Pointed	50					−20/120††			−20/120	2	20
			¼ NPT	60					30/130††	1	10	0/50††	1	5
3″	30		½ NPT	60	Rear	R	4	040	0/200	2	20	0/100	1	10
							6	060						
					Lower	L	9	090	0/250		50	10/150	2	20
							12	120	50/300			0/200		
5″	50		½ NPT	60	Rear	R	15	150	50/400	5	50	0/300††	5	50
							18	180	50/550			50/450**†		
							24	240	200/700†			100/500**†		
					Lower	L			100/800†					
									200/1000**†	10	100			

CI Dimensions

Case Series	Dial Size	Connection Location	A	B	C	D	E	S	NPT	Hex	Weight in ounces[3] S − 2½″
CI	2″	Rear (Plain)	2 3/32 (53)	3/8 (10)	3/8 (8)	–	–	–[2]	–	11/16	4½
CI	2″	Rear (Plain, pointed stem)	2 3/32 (53)	3/8 (10)	5/16 (8)	–	–	–[2]	–	11/16	4½
CI	2″	Rear (Threaded)	2 3/32 (53)	3/8 (10)	3/8 (8)	–	–	–[2]	¼	11/16	4½
CI	3″	Rear	3 3/32 (80)	19/32 (15)	3/8 (8)	–	–	–[2]	½	⅞	7
CI	3″	Lower	3 3/32 (80)	1 27/32 (47)	–	2⅝ (67)	¼ (6)	–[2]	½	⅞	11
CI	5″	Rear	5 1/32 (128)	23/32 (18)	3/8 (8)	–	–	–[2]	½	⅞	16
CI	5″	Lower	5 1/32 (128)	1 15/16 (49)	–	3⅝ (92)	¼ (6)	–[2]	½	⅞	26

NOTES:
1. Figures in parenthesis ( ) are in millimeters. All other dimensions are in inches.
2. Standard "S" dimensions are 2½, 4, 6, 9, 12, 15, 18 and 24 inches. Standard stem diameter is ¼ inch.
3. Add 1 oz. for every 2 inches of stem length.

CI Series dual scale ranges

Dual scales are available in 3″ and 5″ dial sizes in the following ranges:

Inner		Outer
−80/120°F	and	−60/50°C
−40/120°F	and	−40/50°C
−40/160°F	and	−40/70°C
−20/120°F	and	−30/50°C††
0/200°F	and	−20/90°C
0/250°F	and	−20/120°C
30/130°F	and	0/55°C††
50/300°F	and	10/150°C
50/400°F	and	10/200°C
50/550°F	and	10/290°C
100/800°F	and	50/400°C†
200/700°F	and	100/370°C†
200/1000°F	and	100/550°C**†

Overtemperature limits

Top of Range °F	Maximum Over Temperature
up to 250	100% of span
251/550	50% of span
551/1000	800°F **

*Dual scale ranges available for all standard °F ranges (3″ and 5″ case only)
**Satisfactory for continuous service up to 800°F or 425°C. Can be used for intermittent service from 800 to 1000°F, or 425 to 500°C. Use Ashcroft Duratemp® thermometers for ranges above and below those listed above.
†Minimum stem length for these ranges is 4″.
††Minimum stem length for lower connection is 4″.

DIMENSIONS

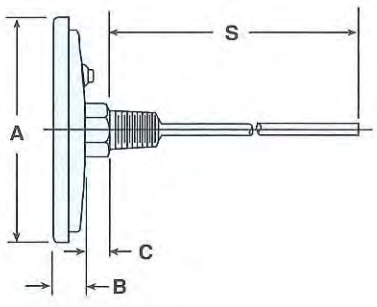

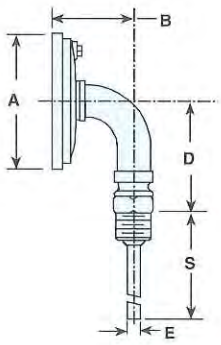

ISO 9001
REGISTERED FIRM
BULLETIN BM-CI

All specifications are subject to change without notice.
All sales subject to standard terms and conditions.
© 2014 Ashcroft Inc. Rev. 07/14

Ashcroft Inc., 250 East Main Street, Stratford, CT 06614 USA
Tel: 203-378-8281 • Fax: 203-385-0408
email: info@ashcroft.com • www.ashcroft.com

Mechanical Pressure Measurement

Bourdon Tube Pressure Gauges Stainless Steel Series

Type 232.53 - Dry Case

Type 233.53 - Liquid-filled Case

0-160 psi RANGE

WIKA Datasheet 23X.53

Part #: 52495728 (233.53 2 100PSI 1/4 B)

Applications

- With liquid filled case for applications with high dynamic pressure pulsations or vibration
- Suitable for corrosive environments and gaseous or liquid media that will not obstruct the pressure system
- Process industry: chemical/petrochemical, power stations, mining, on and offshore, environmental technology, mechanical engineering and plant construction

Special features

- Excellent load-cycle stability and shock resistance
- All stainless steel construction
- Positive pressure ranges to 15,000 psi

Bourdon Tube Pressure Gauge Model 232.53

Standard Features

Design
ASME B40.100 & EN 837-1

Sizes
2", 2½" & 4" (50, 63 and 100 mm)

Accuracy class
2" & 2½": ± 2/1/2% of span (ASME B40.100 Grade A)
4": ± 1.0% of span (ASME B40.100 Grade 1A)

Ranges
Vacuum / compound to 200 psi
Pressure from 15 psi to 15,000 psi 0-160 psi
or other equivalent units of pressure or vacuum

Working pressure

2" & 2½":	Steady:	3/4 scale value
	Fluctuating:	2/3 full scale value
	Short time:	full scale value
4 ":	Steady:	full scale value
	Fluctuating:	0.9 x full scale value
	Short time:	1.3 x full scale value

Operating temperature
Ambient: -40°F to +140°F (-40°C to +60°C) - dry
-4°F to +140°F (-20°C to +60°C) - glycerine filled
-40°F to +140°F (-40°C to +60°C) - silicone filled
Medium: +212°F (+100°C) maximum

Temperature error
Additional error when temperature changes from reference temperature of 68°F (20°C) ±0.4% for every 18°F (10°C) rising or falling. Percentage of span.

Weather protection
Weather tight (NEMA 4X / IP65)

Pressure connection
Material: 316L stainless steel
Lower mount (LM) or center back mount (CBM)
Lower back mount (LBM) for 4" size
1/8" NPT, 1/4" NPT or 1/2" NPT limited to wrench flat area

Bourdon tube
Material: 316L stainless steel

2" & 2½":	≤ 1,000 PSI: C-type,
	≥ 1,500 PSI: helical type
4":	≤ 1,500 PSI: C-type,
	≥ 2,000 PSI: helical type

Movement
Stainless steel

Dial
White aluminum with black lettering, 2" and 2½" with stop pin

WIKA®
Part of your business

Pointer
Black aluminum

Case
304 stainless steel with vent plug and SS crimp ring
Welded case / socket connection

Window
Polycarbonate

Liquid filling
Glycerine 99.7% - Type 233.53

Optional extras

- SS restrictor
- SS front flange
- SS rear flange (2½" and 4" only)
- Zinc-plated steel or SS u-clamp bracket (field installable - see note)
- Cleaned for oxygen service
- Red drag pointer or mark pointer (2½" and 4" only)
- External zero adjustment (4" size only)
- Other pressure connections
- Silicone or Fluorolube case filling
- Other pressure scales available: bar, kPa, MPa, kg/cm² and dual scales

Note: U-clamp bracket for 2" must be ordered with gauge

Dimensions

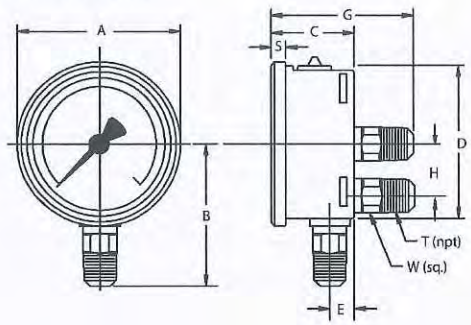

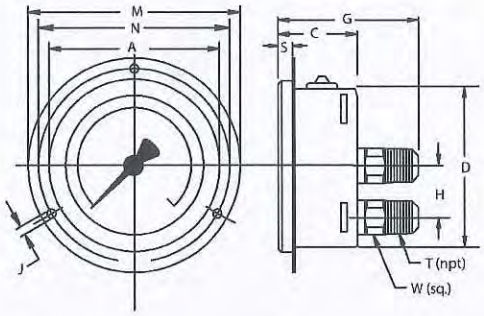

front flange

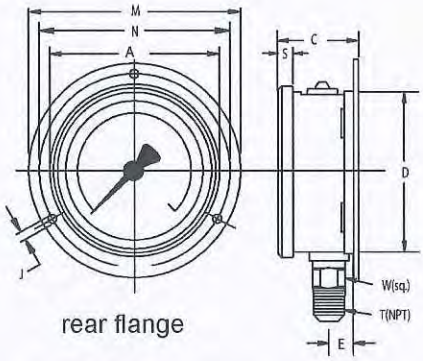

rear flange

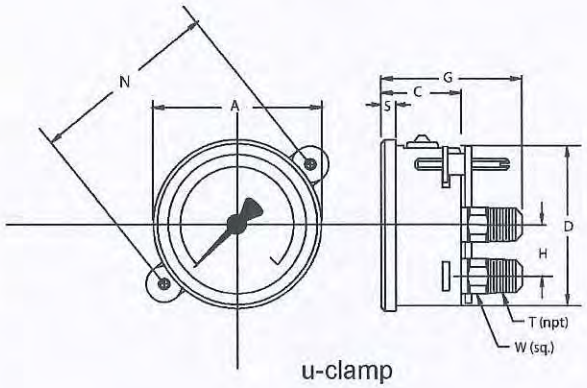

u-clamp

Size		A	B	C	D	E	G	H	J	M	N	S	T	W	Weight
2"	mm	55	48	30	50	12	53	-	3.6	71	60	5.5		14	0.27 lb. dry
	in	2.17	1.89	1.18	1.97	0.47	2.09	-	0.14	2.80	2.36	0.22	1/4"	0.55	0.33 lb. filled
2.5"	mm	69	54	32	62	13	54	-	3.6	88.1	75	6.5		14	0.36 lb. dry
	in	2.69	2.13	1.26	2.45	0.51	2.13	-	0.14	3.47	2.95	0.26	1/4"	0.55	0.44 lb. filled
4"	mm	107	87	48	100	15.5	79.5	30	4.8	132	116	8		22	1.10 lb. dry
	in	4.21	3.43	1.89	3.91	0.61	3.13	1.18	0.19	5.20	4.57	0.31	1/2"	0.87	1.76 lb. filled

Recommended panel cutout is dimension D + 1 mm

WIKA Datasheet 23X.53 05/2009

Ordering information
Pressure gauge model / Nominal size / Scale range / Size of connection / Optional extras required
Specifications and dimensions given in this leaflet represent the state of engineering at the time of printing.
Modifications may take place and materials specified may be replaced by others without prior notice.

WIKA Instrument Corporation
1000 Wiegand Boulevard
Lawrenceville, GA 30043
Tel (770) 513-8200 Toll-free 1-888-WIKA-USA
Fax (770) 338-5118
E-Mail info@wika.com
www.wika.com

ARV Numerous air vacuum relief valves

ar 5/6/15

COMBINATION AIR VALVES (SINGLE BODY TYPE)

MODEL NOS. 201C.2 - 202C.2 - 203C.2 - 204C.2

STANDARD MATERIALS OF CONSTRUCTION

PART NO.	PART NAME	MATERIAL
1	BODY	CAST IRON ASTM A126, CLASS B
2	COVER	CAST IRON ASTM A126, CLASS B
3	BAFFLE	CAST IRON ASTM A126, CLASS B
4	SEAT	BUNA-N
5	FLOAT	STAINLESS STEEL T316, ASTM A240
6	GASKET	COMPRESSED NON-ASBESTOS FIBER
7	COVER BOLT	ALLOY STEEL SAE, GRADE 5
8	RETAINING SCREWS	STAINLESS STEEL T316, ASTM F593
9	GUIDE BUSHING	STAINLESS STEEL T316, ASTM A240
10	FLOAT ARM	STAINLESS STEEL T316, ASTM A240
11	ORIFICE BUTTON	STAINLESS STEEL & BUNA-N
12	PIVOT PIN	STAINLESS STEEL T316, ASTM A276
13	RETAINING RING	STAINLESS STEEL PH 15-7 MO
14	PIPE PLUG	STEEL
15	CUSHION	BUNA-N
16	PLUG	STAINLESS STEEL T316, ASTM A276
17	FLOAT RETAINER	STAINLESS STEEL T316, ASTM F880
18	LOCK NUT	STAINLESS STEEL T316, ASTM F594
29	CUSHION RETAINER	STAINLESS STEEL T316, ASTM F593
30	WASHER	STAINLESS STEEL T316, ASTM A240
34	LOCK WASHER	STAINLESS STEEL T316, ASTM A240

NOTE: ALL SPECIFICATIONS AS LAST REVISED.

Revised 1-29-03

MATERIALS OF CONSTRUCTION	DATE 2/2/69
VAL-MATIC® VALVE AND MANUFACTURING CORP.	DRWG. NO. VM-201C-M

ABL 5/6/15

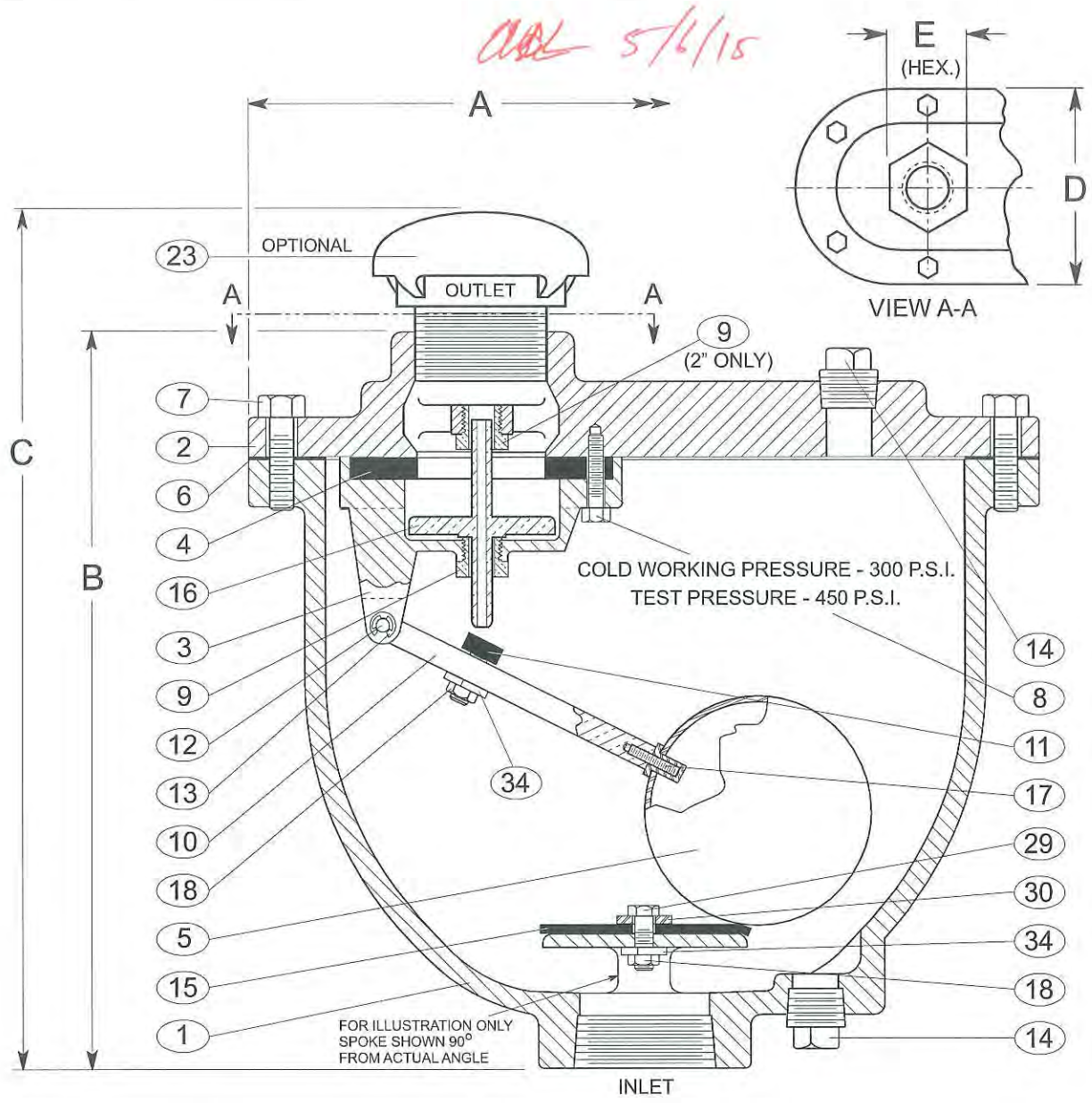

1	BODY	5	FLOAT	9	BUSHING	13	RETAINING RING	18	LOCK NUT
2	COVER	6	GASKET	10	FLOAT ARM	14	PIPE PLUG	23	SCREENED HOOD
3	BAFFLE	7	COVER BOLTS	11	ORIFICE BUTTON	15	CUSHION	29	CUSHION RETAINER
4	SEAT	8	RETAINING SCREWS	12	PIVOT PIN	16	PLUG	30	WASHER
						17	FLOAT RETAINER	34	LOCK WASHER

SEE DRAWING NO. VM-201C-M FOR STANDARD MATERIALS OF CONSTRUCTION.

VALVE SIZE	MODEL NO.*	A	B	C	D	E	INLET SIZE	OUTLET SIZE	ORIFICE SIZE
1"	201C.2	11 3/8"	10 1/2"	12 5/8"	6 3/8"	2"	1" N.P.T.	1" N.P.T.	5/64"
2"	202C.2	14"	13"	15 7/8"	8 1/4"	3 1/4"	2" N.P.T.	2" N.P.T.	3/32"

*Add "H" to Model No. for optional screened hood SPK-1H.

Revised 1-9-06

COMBINATION AIR VALVE (SINGLE BODY TYPE)

DATE 2-2-69

VAL-MATIC® VALVE AND MANUFACTURING CORP.

DRWG. NO. VM-201C

P -101, Well pump
for KAFB-106228

4/30/15

13B63616 150S300-16 60 Hz

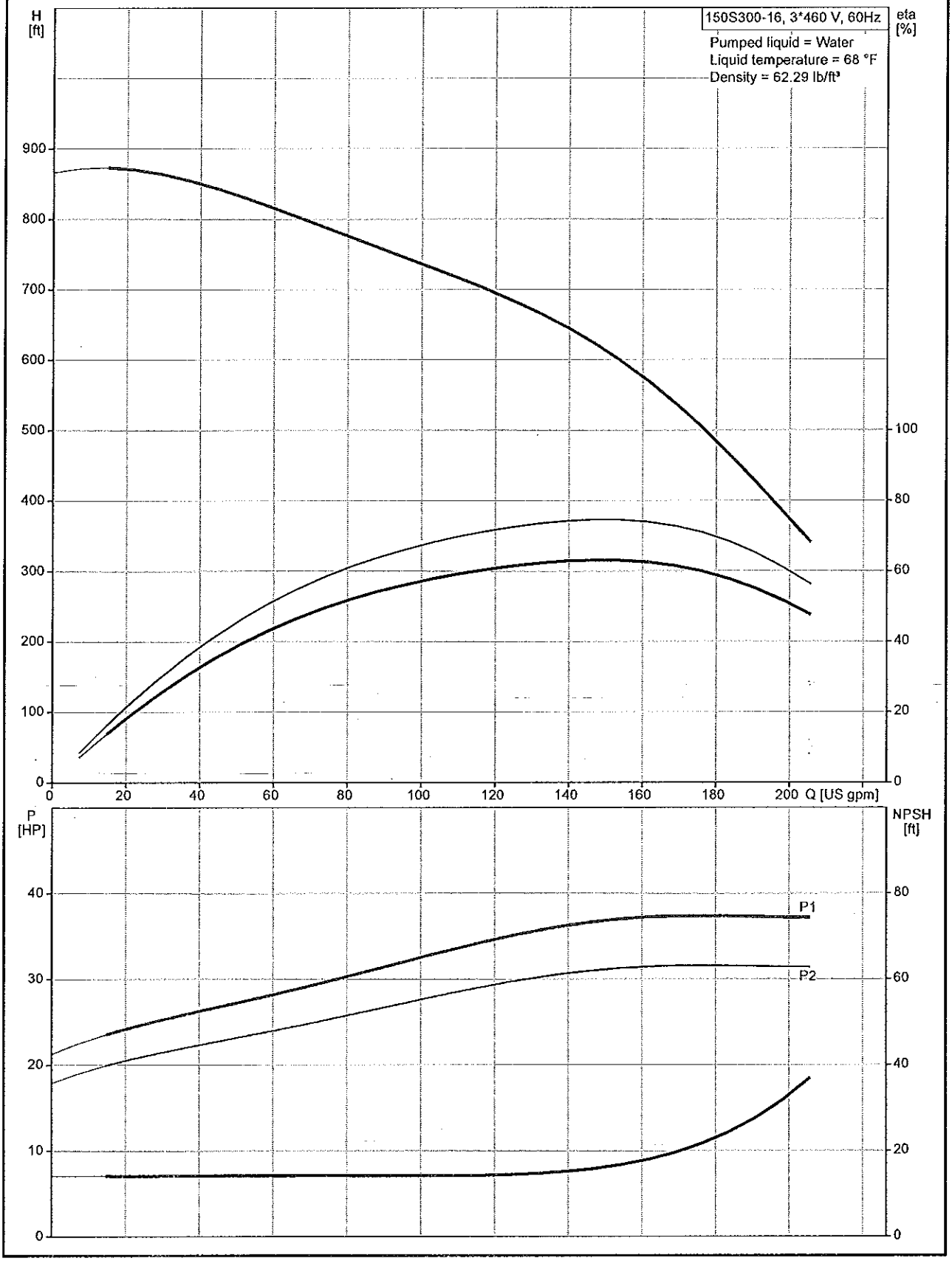

ACK 4/30/15

Description	Value
General information:	
Product name:	150S300-16
Position	
Product No.:	13B63616
EAN:	5700391427961
Price:	$ 0.00
Technical:	
Speed for pump data:	3450 rpm
Rated flow:	159 US gpm
Flow range:	20 .. 206 US gpm
Max flow:	206 US gpm
Rated head:	568 ft
Shaft seal for motor:	SIC/SICNBR
Curve tolerance:	ISO9906:2012 3B
Stages:	16
Model:	A
Valve:	pump with built-in non-return valve
Materials:	
Pump:	Stainless steel
	DIN W.-Nr. 1.4301
	AISI 304
Impeller:	Stainless steel
	DIN W.-Nr. 1.4301
	AISI 304
Motor:	Stainless steel
	DIN W.-Nr. 1.4301
	AISI 304
Installation:	
Maximum ambient pressure:	870 psi
Pump outlet:	3"NPT
Motor diameter:	6 inch
Liquid:	
Max liquid temperature at 0.15 m/sec:	116.6 °F
Electrical data:	
Motor type:	MS6000
Rated power - P2:	30 HP
KVA code:	J
Main frequency:	60 Hz
Rated voltage:	3 x 440-460-480 V
Start. method:	direct-on-line
Starter:	2 1/2
Service factor:	1.15
Rated current:	48.0-46.0-45.0 A
Starting current:	237 A
Cos phi - power factor:	0.87-0.85-0.83
Rated speed:	3450-3470-3480 rpm
Axial load max:	6170 lb
Motor efficiency at full load:	85,0 %
Enclosure class (IEC 34-5):	IP68
Insulation class (IEC 85):	F
Motor protection:	NONE
Thermal protec:	external
Built-in temperature transmitter:	yes
Motor Number:	96166168
Motor to order:	96166168
Cable number:	96163476
Controls:	
Heather:	K76
Others:	

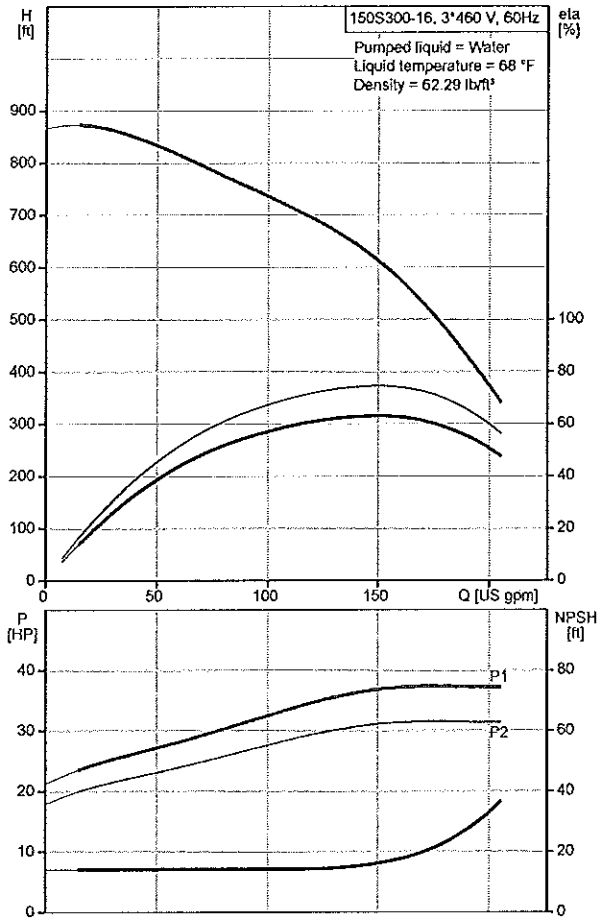

GM 7/30/15

Description	Value
Net weight:	234 lb
Gross weight:	313 lb
Sales region:	Namreg

Acc 4/30/15

13B63616 150S300-16 60 Hz

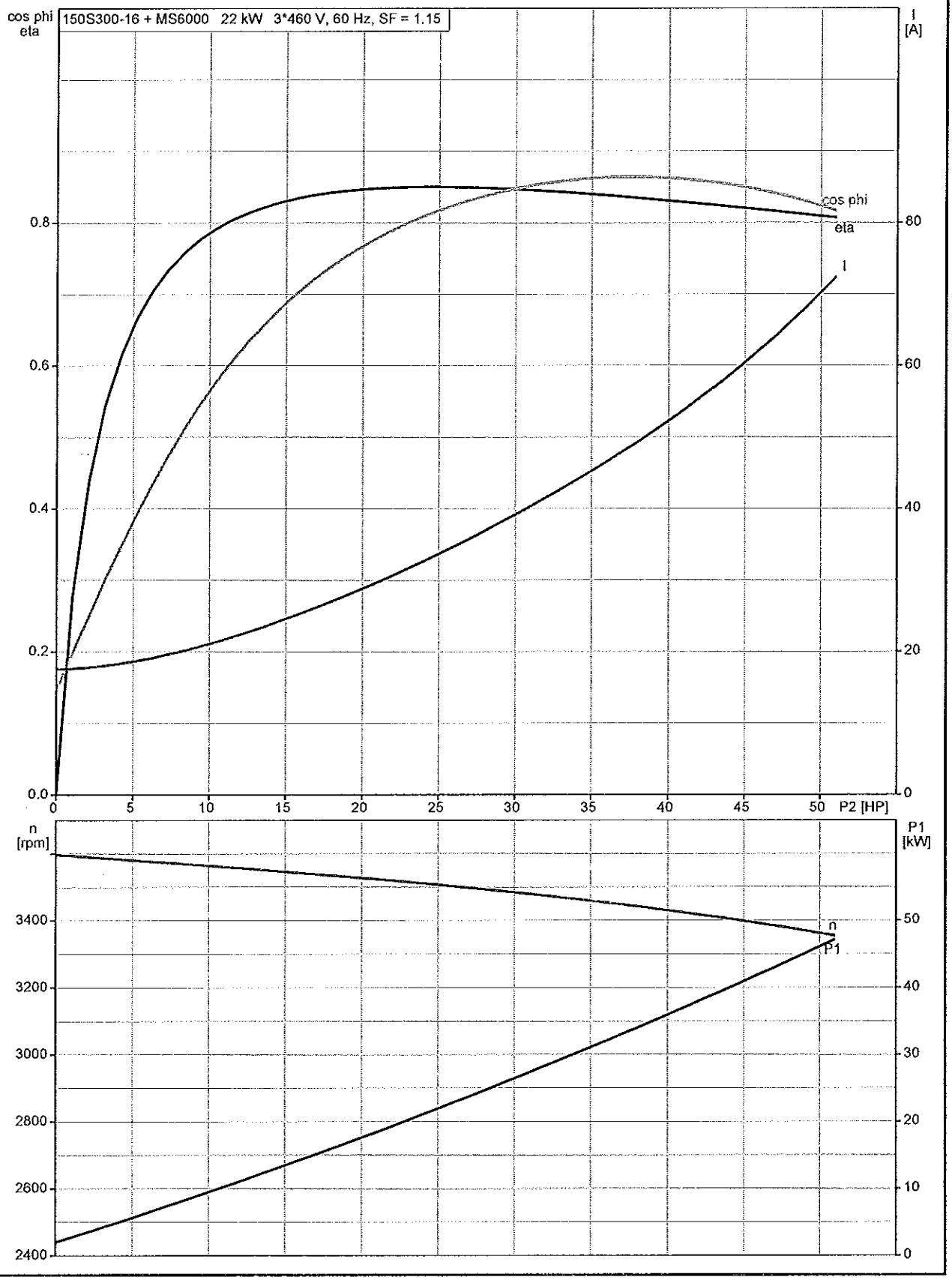

Des 4/30/15

13B63616 150S300-16 60 Hz

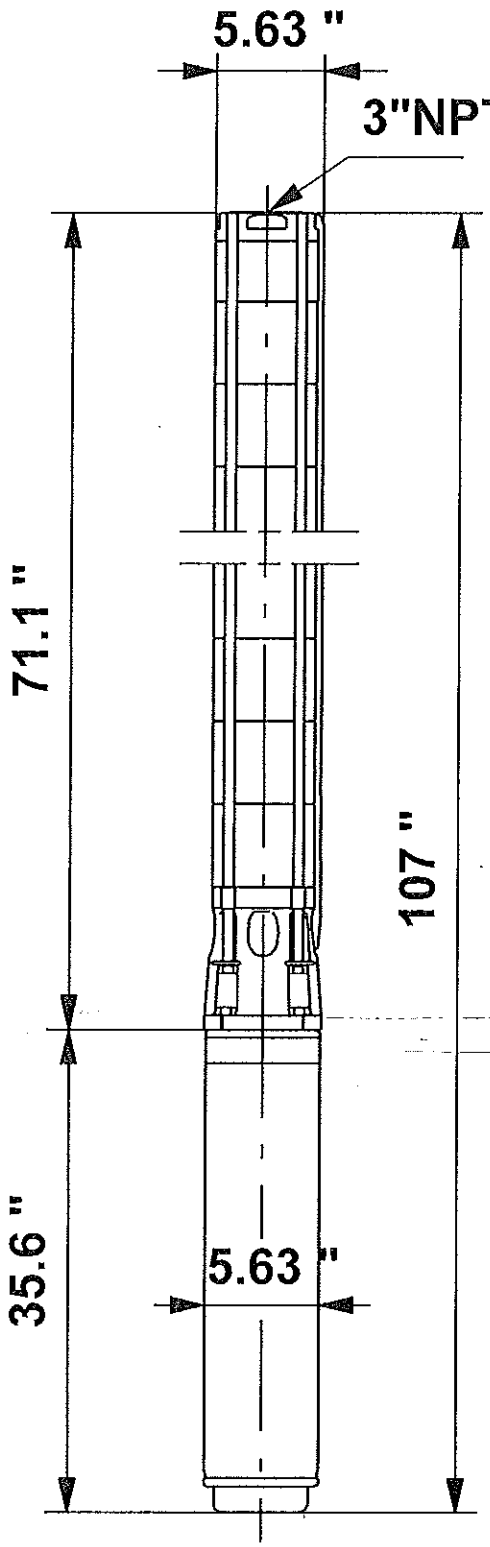

Note! All units are in [mm] unless otherwise stated.
Disclaimer: This simplified dimensional drawing does not show all details.

9/30/15

13B63616 150S300-16 60 Hz

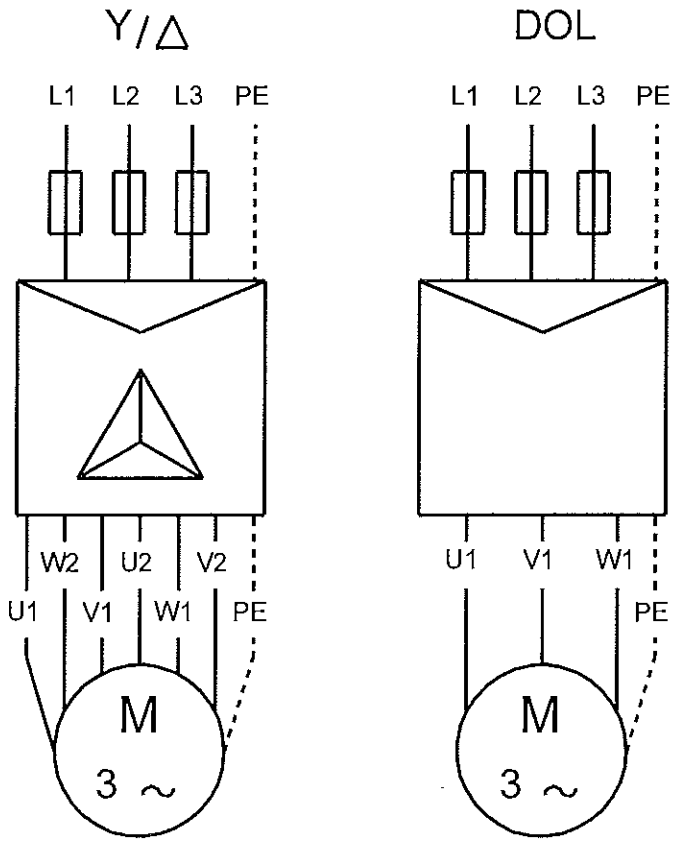

U1, W2	Brown
V1, U2	Black
W1, V2	Grey

All units are [mm] unless otherwise presented.

4/30/15

LIMITED WARRANTY

Products manufactured by GRUNDFOS PUMPS CORPORATION (GRUNDFOS) are warranted to the original user only to be free of defects in material and workmanship for a period of 24 months from date of installation, but not more than 30 months from date of manufacture. GRUNDFOS' liability under this warranty shall be limited to repairing or replacing at GRUNDFOS' option, without charge, F.O.B. GRUNDFOS' factory or authorized service station, any product of GRUNDFOS' manufacture. GRUNDFOS will not be liable for any costs of removal, installation, transportation, or any other charges which may arise in connection with a warranty claim. Products which are sold but not manufactured by GRUNDFOS are subject to the warranty provided by the manufacturer of said products and not by GRUNDFOS' warranty. GRUNDFOS will not be liable for damage or wear to products caused by abnormal operating conditions, accident, abuse, misuse, unauthorized alteration or repair, or if the product was not installed in accordance with GRUNDFOS' printed installation and operating instructions.

To obtain service under this warranty, the defective product must be returned to the distributor or dealer of GRUNDFOS' products from which it was purchased together with proof of purchase and installation date, failure date, and supporting installation data. Unless otherwise provided, the distributor or dealer will contact GRUNDFOS or an authorized service station for instructions. Any defective product to be returned to GRUNDFOS or a service station must be sent freight prepaid; documentation supporting the warranty claim and/or a Return Material Authorization must be included if so instructed.

GRUNDFOS WILL NOT BE LIABLE FOR ANY INCIDENTAL OR CONSEQUENTIAL DAMAGES, LOSSES, OR EXPENSES ARISING FROM INSTALLATION, USE, OR ANY OTHER CAUSES. THERE ARE NO EXPRESS OR IMPLIED WARRANTIES, INCLUDING MERCHANTABILITY OR FITNESS FOR A PARTICULAR PURPOSE, WHICH EXTEND BEYOND THOSE WARRANTIES DESCRIBED OR REFERRED TO ABOVE.

Some jurisdictions do not allow the exclusion or limitation of incidental or consequential damages and some jurisdictions do not allow limitations on how long implied warranties may last. Therefore, the above limitations or exclusions may not apply to you. This warranty gives you specific legal rights and you may also have other rights which vary from jurisdiction to jurisdiction.

ISO 9001 CERTIFIED

L-CP-TL-003	Rev. 05/04
Printed in USA	

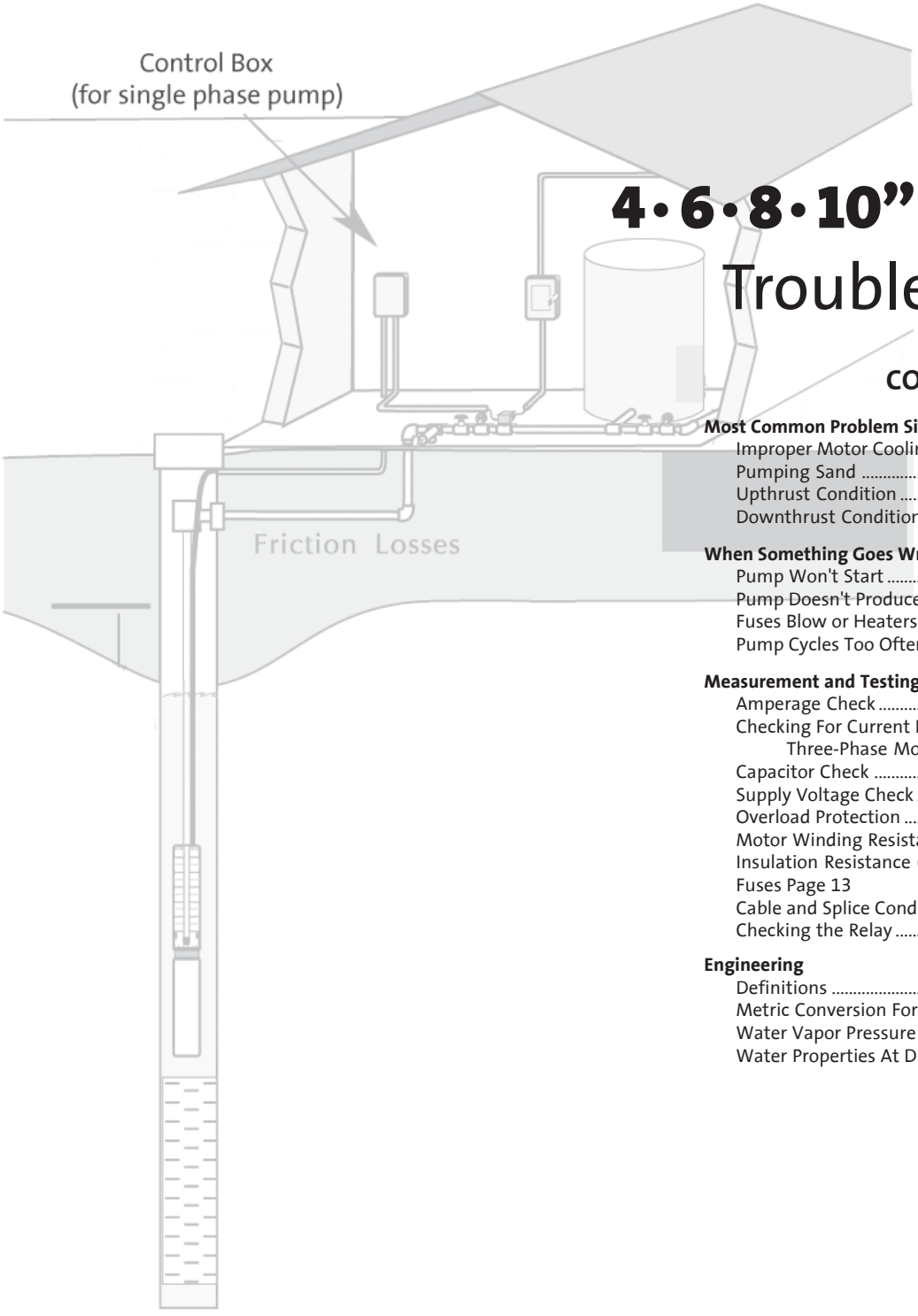

4•6•8•10" Submersibles
Troubleshooting

CONTENTS

Most Common Problem Situations
Improper Motor Cooling ..... Page 2
Pumping Sand ..... Page 3
Upthrust Condition ..... Page 4
Downthrust Condition ..... Page 5

When Something Goes Wrong . . .
Pump Won't Start ..... Page 6
Pump Doesn't Produce Enough Flow (GPM) ..... Page 6
Fuses Blow or Heaters Trip ..... Page 8
Pump Cycles Too Often ..... Page 8

Measurement and Testing
Amperage Check ..... Page 10
Checking For Current Imbalance On Three-Phase Motors ..... Page 10
Capacitor Check ..... Page 11
Supply Voltage Check ..... Page 11
Overload Protection ..... Page 12
Motor Winding Resistance (lead-to-lead) ..... Page 12
Insulation Resistance (lead-to-ground) ..... Page 13
Fuses Page 13
Cable and Splice Condition ..... Page 14
Checking the Relay ..... Page 14

Engineering
Definitions ..... Page 15
Metric Conversion Formulas ..... Page 16
Water Vapor Pressure and Specific Gravity ..... Page 17
Water Properties At Different Altitudes ..... Page 18

Poor Motor Cooling*

A submersible pump motor is cooled by the flow of water past its outer housing as the pump is pumping. The water must flow past the motor at a certain velocity for proper cooling to take place, and the minimum velocity needed is different for each diameter motor.

MINIMUM VELOCITY OF WATER PAST MOTOR*

4" diameter motor ..... .25 feet per second
6" diameter motor ..... .5 feet per second
8" diameter motor ..... .5 feet per second
10" diameter motor ..... .5 feet per second

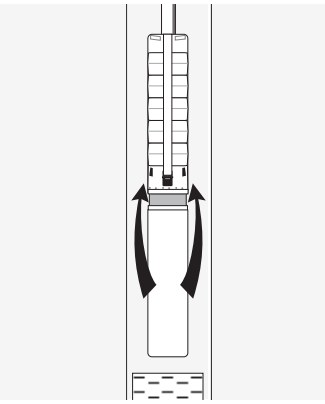

Correct screen position for proper cooling

To determine whether water is flowing past the motor at a high enough velocity, note where the motor diameter and outside sleeve or casing diameter intersect on the following chart. The Gallons Per Minute scale indicates the **minimum flow required** to keep the motor properly cooled.

MINIMUM FLOW REQUIREMENTS FOR SUBMERSIBLE MOTORS*

WELL CASING OR FLOW INDUCER SLEEVE (internal diameter in inches)	4" motor	6" motor	8" motor	10" motor	MOTOR DIAMETER
4 inches	1.2 GPM	--	--	--	MINIMUM FLOW (GPM) (to ensure proper motor cooling)
5	7	--	--	--	
6	13	10	--	--	
7	21	28	--	--	
8	30	45	10	--	
10	--	85	55	30	
12	--	140	110	85	
14	--	198	180	145	
16	--	275	255	220	
18	--	--	--	305	

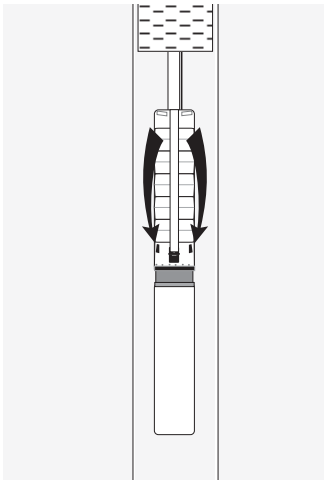

Cascading water from screen does not flow past motor

Insufficient cooling can sometimes result when:

(1) The screen is located above or at the pump, so that the water cascades down into the pump's suction intake without first flowing past the motor.

(2) The casing diameter is so large that the water is drawn into the pump's suction intake from the side without first flowing past the motor.

These problems can be solved by fitting the pump and motor into a **Flow Inducer Sleeve.** This sleeve attaches to the pump and forces water to pass around it and enter the pump's suction intake from below the motor.

If the diameter of the well's casing is too small for a sleeve inducer, a rigid tube (usually 1/4" inside diameter) can be tapped into the discharge piping above the pump (but below any check valves) with the other end positioned below the motor and pointing upwards.

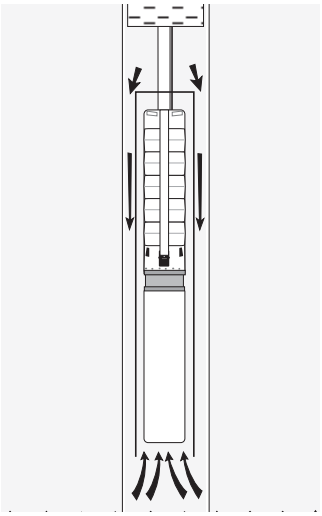

Flow Inducer Sleeve forces water past motor

***Grundfos motors have a more effective internal cooling design; therefore, a cooling sleeve is not required in water up to 30° C (86° F). However, all motors will have a longer life with a cooling sleeve installed.**

Pumping Sand

All submersible water pumps are designed with the idea they will be used to pump clean, clear water. Some design changes can be made to enable them to better handle situations that don't meet this ideal, but only to a limited degree.

No situation shortens the life of submersible pump more than pumping silt or **SAND**.

Effect On Pump	Will Be First Noticed By...	Design Changes To Deal With The Problem
SAND works its way into all moving parts of the pump, grinding bearings, impellers, and all other components as they spin against each other. 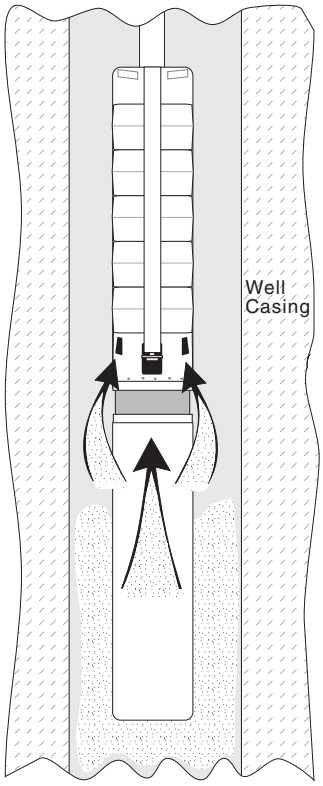	Reduced flow (GPM) and head, since the perfect fit of the impellers and other components will be slowly worn away and the pump will become less and less efficient. 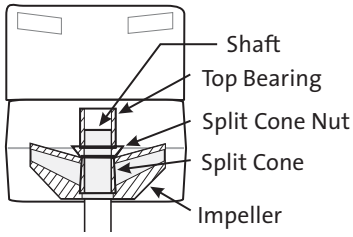 At some point, the pump's performance will become so poor it becomes quite apparent that something is seriously wrong. If the pump is pulled out of the well and the impellers and other moving components are examined, **uniform** wear (not random pitting, which might indicate that pump may have been cavitating) can be seen on virtually every moving part.	There is no way to eliminate all pump damage due to pumping sand. The effects can only be minimized. Since sand tends to be carried along with flow rates greater than 5-8 feet per second (water velocity), an enlarged drop pipe can reduce the water velocity and thereby reduce the chance sand can enter the pump. Of course, if the water velocity drops below the chart on the previous page, motor cooling may become a problem.

Upthrust Condition

Pumps are designed with the expectation that the correct size pump will be used in the right situation. An 80 gallon per minute pump which can produce about 600 feet of head (at the same time it delivers 80 GPM) is designed so that if it is used in this situation, the pump will operate at its best efficiency **and** all its components will have a long life. The perfomance curve to the right shows the most efficient operating range for this type of pump.

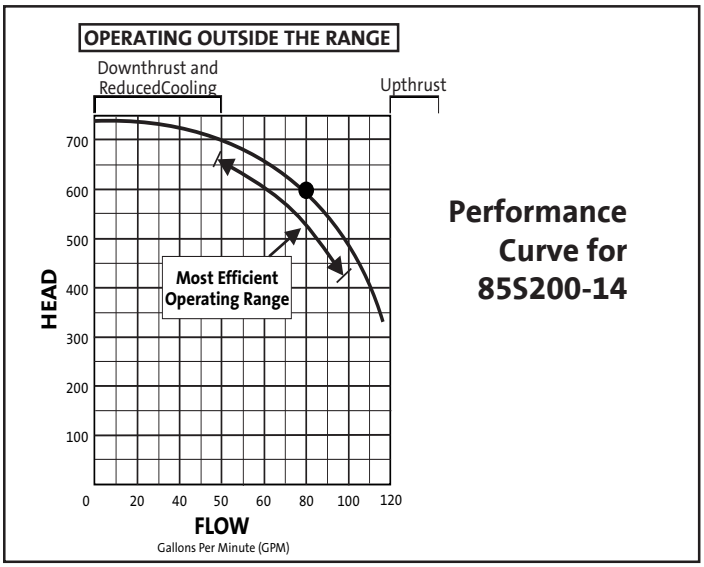

Performance Curve for 85S200-14

If the pump is not operated within this range, problems can occur.

One such problem can occur when a pump is installed and run in a situation in which it will produce far GREATER flow (GPM) than it was designed for. **In other words, the pump is oversized for what is really needed.** When such a pump is started, the initial thrust (upward water surge) generated by the spinning impellers is so much GREATER than the downward thrust it is expecting to overcome (such as the force of the different water pressure, the weight of the impellers and shaft, etc.), that the entire stack of impellers within the pump is lifted upwards **(UPTHRUST).** Pumps are manufactured with bearings designed to handle intermittent upward water surges up to a certain degree. If the actual flow is much greater than this, an upthrust condition exists. The force of this **UPTHRUST** will first put pressure on the motor's thrust bearing. If and when this bearing wears out, the pump's components will begin to absorb the upthrust as they grind against each other. Upthrust is especially damaging when the pump is started and the drop pipe is empty -- causing a great upthrust of water since no head is present. Check valves in the drop pipe will prevent this from occuring.

BEFORE
pump starts pumping

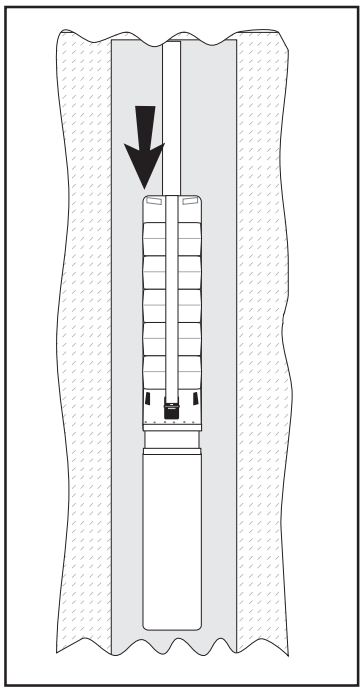

Weight of water and impellers pushes down

AFTER
pump starts pumping

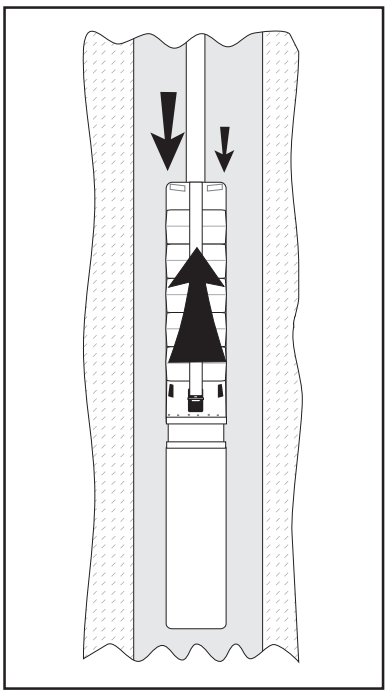

Initial surge of water thrusts impellers upwards

DAMAGE CAUSED

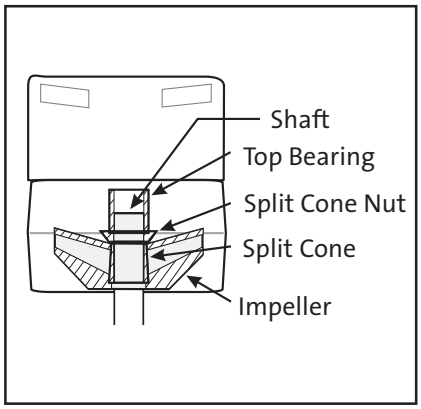

Once the motor's thrust bearing is worn, the pump components begin wearing

Usually, the **UPTHRUST** condition lasts for only a few seconds until the water pressure above the impellers acts as a counterforce to press the impeller stack down onto the motor shaft. Sometimes, however, if the pump is producing far more flow than for which it was designed, the upthrust condition can continue until the pump is stopped.

Downthrust Condition

Pumps are designed with the expectation that the correct size pump will be used in the right situation. An 80 gallon per minute pump which can produce about 600 feet of head (at the same time it delivers 80 GPM) is designed so that if it is used in this situation, the pump will operate at its best efficiency **and** all its components will have a long life. The perfomance curve at right shows the most efficient operating range for this type of pump.

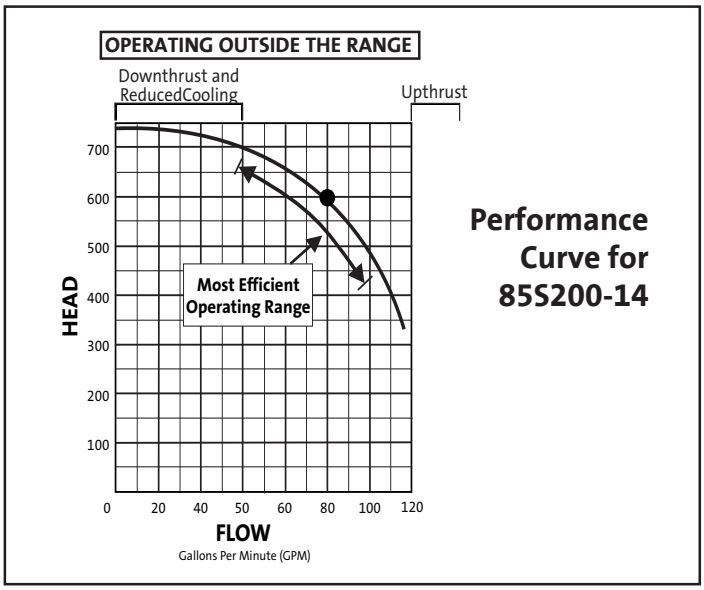

Performance Curve for 85S200-14

If the pump is not operated in this range, problems can occur.

One such problem can occur when a pump is installed and run in a situation in which it will produce HEAD in the range of shut-off pressure (left part of the curve, as shown above). Although the pump is designed to operate over the full curve, if it does not produce enough flow the weight of the shaft and the pressure of the water in the drop pipe is not counterbalanced, causing possible wear to the bearings in the pump and motor. **This can occur if a valve has been closed down so far that the flow is greatly restricted or when the pump is pumping water faster than the well can refill itself.**

In addition to causing possible bearing damage, operating the pump in a downthrust condition is an inefficient use of energy and may not allow for proper motor cooling (see page 2).

BEFORE
pump starts pumping

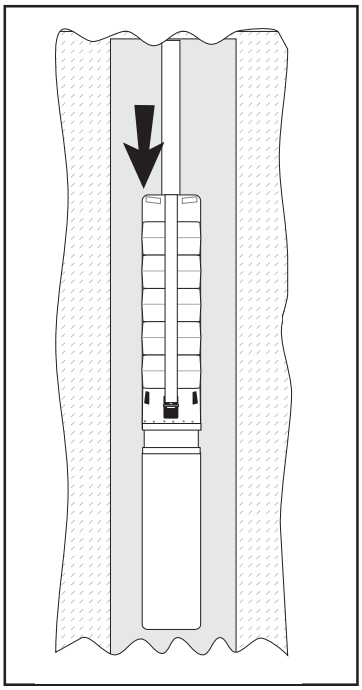

Weight of water and impellers pushes down

AFTER
pump starts pumping

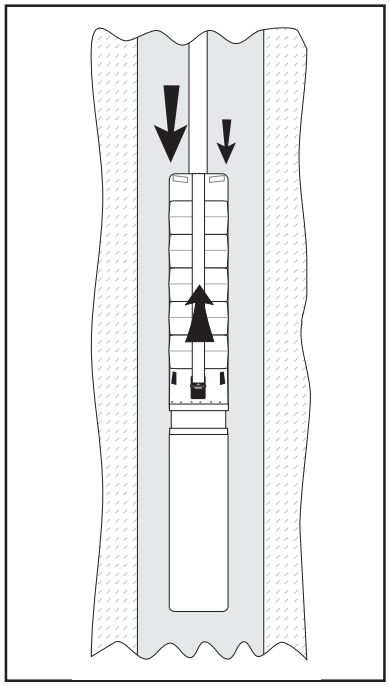

Impellers can produce so much pressure they can grind down against each other

DAMAGE CAUSED

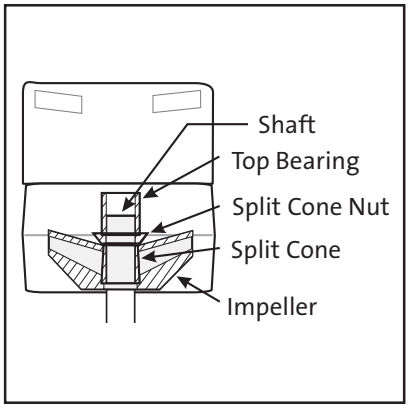

After motor's thrust bearing has worn out, pump components begin to show equal wear from grinding

The best way to check for motor bearing damage is with a shaft height gauge. Refer to the Dismantling & Reassembly section of this manual for complete instructions.

When Something Goes Wrong. . .

Pump Won't Start

Possible Cause	Check This By . . .	Correct This By . . .	
Low or no power at the motor	Check for voltage at the control box or panel. See page 11 for instructions.	If there is no voltage at the control panel, check the feeder panel for tripped circuits and reset those circuits.	1
Fuses are blown or the circuit breakers have tripped.	Turn off the power and remove the fuses. Check for continuity with an ohmmeter as shown on page 13.	Replace the blown fuses or reset the circuit breaker. If the new fuses blow or the circuit breaker trips, the electrical installation, motor, and wires must be checked for defects.	2
(3-phase motors only) **Motor starter overloads are burned or have tripped**	Check for voltage on the line and load side of the starter. Check the amp draw and make sure the heater is sized correctly.	Replace any burned heaters or reset. Inspect the starter for other damage. If the breaker trips again, check the supply voltage. Ensure that heaters are sized correctly and the trip setting is appropriately adjusted.	3
(3-phase motors only) **Starter does not energize**	Energize the control circuit and check for voltage at the holding coil.	If there is no voltage, check the control circuit fuses. If there is voltage, check the holding coil for weak connections. Ensure that the holding coil is designed to operate with the available control voltage. Replace the coil if defects are found.	4
Defective controls	Check all safety and pressure switches for defects. Inspect the contacts in control devices.	Replace worn or defective parts or controls.	5
Motor or cable is defective	Turn off the power and disconnect the motor leads from the control box. Measure the lead-to-lead resistance of the drop cable with an ohmmeter (set to R x 1). Measure the lead-to-ground values with a megohmmeter (set to R x 100K). See pages 12 and 13. Compare these measurements to the rated values for your motor.	If an open or grounded winding is found, pull the pump from the well and recheck the measurements with the lead separated from the motor. Repair or replace the motor or cable.	6
(1-phase motors only) **Defective capacitor**	Turn off the power and discharge the capacitor by shorting the leads together. Check it with an analog ohmmeter (set to R x 100K). See page 11 or use an audible capacitor tester.	When the meter is connected to the capacitor, the needle should jump toward 0 (zero) ohms and slowly drift back to infinity (∞). Replace the capacitor if it is defective.	7
Defective pressure switch or the tubing to it is plugged.	Watch the pressure gauges as the pressure switch operates. Remove the tubing and blow through it.	Replace as neccessary.	8
The pump is mechanically bound or stuck	Turn off the power, pull the pump, and manually rotate the pump shaft. Also check the motor shaft rotation, the shaft height, and the motor's amp draw (to see if it indicates a locked rotor).	If the pump shaft doesn't rotate, remove the pump and examine it. If necessary, dismantle it and check the impellers for obstruction. Check for motor corrosion.	9

Pump Does Not Produce Enough Flow (GPM)

Possible Cause	Check This By . . .	Correct This By . . .	
Shaft is turning in the wrong direction.	Check to make sure the electrical connections in the control panel are correct.	Turn off the power. Correct the wiring. For single phase motors, check the wiring diagram on the motor. For three phase motors, simply switch any two power leads.	10
Pump is operating at the wrong speed (too slow)	Check for low voltage (as shown on page 11) and phase imbalance (as shown on page 10)	Replace defective parts or contact power company, as applicable.	11
Check valve is stuck (or installed backwards)	Pull the pump and reove the check valve.	Re-install or replace.	12
Parts in the pump are worn **or** **Impellers, Inlet Strainer, or Well Screen is clogged**	Install a pressure gauge, start the pump, and gradually close the discharge valve. Read the pressure at shutoff. (Do not allow the pump to operate for an extended period at shutoff).	Convert the PSI you read on the gauge to Feet of Head by: **PSI x 2.31 ft** Add to this number the number of feet (vertically) from the gauge down to the water's pumping level. Refer to the pump curve for the model you are working with to determine the shutoff head expected for that model. If those figures and yours do not match, remove the pump and inspect impellers, chambers, etc., for clogging.	13
The water level in the well may be too low to supply the flow desired **or** **Collapsed well**	Using a depth gauge, check the drawdown in the well while the pump is operating.	If the pumping water level (including drawdown) is not **AT LEAST 3 FEET** above the pump's inlet strainer, either: 1. Lower the pump further down the well. 2. Throttle back the discharge valve to decrease the flow, thereby reducing drawdown.	14
Broken shaft or coupling	Pull pump and inspect	Replace as necessary.	15
There are leaks in the fittings or piping	Pull the pump out of the well.	The suction pipe, valves, and fittings must be made tight. Repair any leaks and retighten all loose fittings.	16

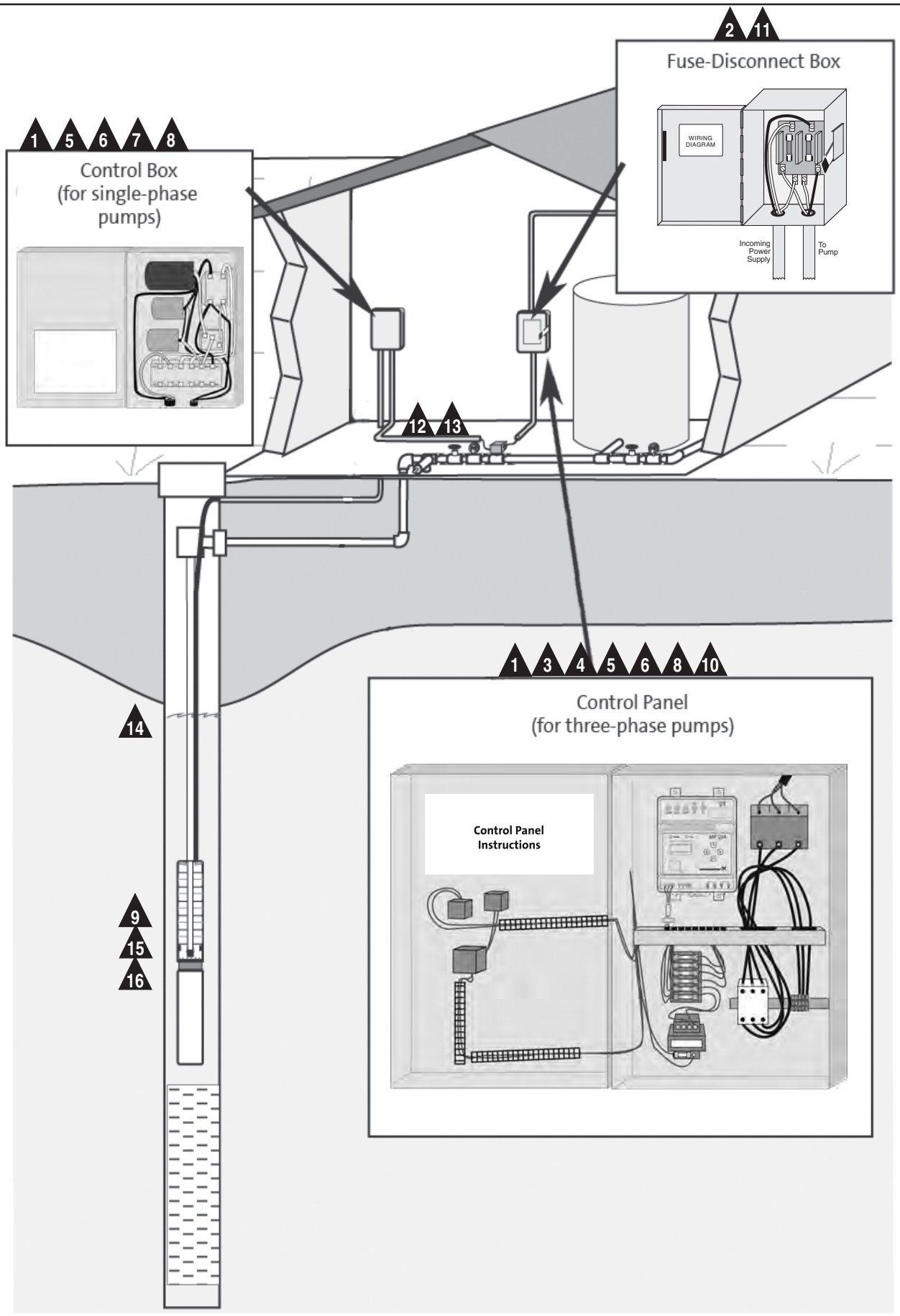
2 11
Fuse-Disconnect Box
WIRING DIAGRAM
Incoming Power Supply
To Pump
1 5 6 7 8
Control Box
(for single-phase pumps)
12 13
1 3 4 5 6 8 10
Control Panel
(for three-phase pumps)
Control Panel Instructions
14
9
15
16

Fuses Blow or Heaters Trip

Possible Cause	Check This By . . .	Correct This By . . .	
Improper voltage	Check the voltage at the control box or panel. See page 11 for instructions.	If voltage varies by more than 10% (+ or -), contact the power company.	
	If the incoming voltage is + or -10%, check the wire size and then measure the distance between the pump motor and the pump control panel.	Rewire with correct gauge. Undersized wire and a great distance between the control panel and the pump motor increases resistance and decreases the voltage by the time it reaches the pump motor.	1
The starter overload is set too low.	Cycle the pump and measure the amperage. See page 10 for instructions.	Increase the heater size (use a slo-bio) or adjust the trip setting. Do not, however, exceed the recommended rating.	2
(3-phase motors only) **Current is imbalanced.**	Check the current draw on each lead to the motor. See page 11 for instructions.	The current imbalance must be within 5% of each other. If they are not, check the wiring and the power supply.	3
The wiring or connections are faulty.	Check to make sure the wiring is correct and there are no loose terminals.	Tighten any loose terminals and replace any damaged wire.	4
(1-phase motors only) **Capacitor is defective**	Turn off the power and discharge the capacitor. Check start and run capacitors with an ohmmeter (set at R x 100K). See page 11 for instructions.	When the meter is connected to the capacitor, the needle should jump towards 0 (zero) ohms and then slowly drift back to infinity (∞). Replace the capacitor if it is defective.	5
Fuse, heater, or starter are the wrong size	Check the fuses and heaters against the motor manufacturer's specification charts.	Replace as necessary.	6
The control box location is too hot	Touch the box with your bare hand during the hottest part of the day -- you should be able to keep your hand on it without burning.	Shade, ventilate, or move the control box so its environment does not exceed 120°F.	7
(1-phase motors only) **Wrong control box**	Check requirements for the motor against the control box specifications.	Replace as necessary.	8
Defective pressure switch	Watch gauges as pressure switch operates.	Replace as necessary.	9
The motor is shorted or grounded.	Turn off the power and disconnect the wiring. Measure the lead-to-lead resistance with an ohmmeter (set to R x1). Measure the lead-to-ground resistance (set to R x100K). Compare these measurements to the rated values for your motor.	If you find an open or grounded winding, remove the motor and recheck the leads. If OK, check the leads for continuity and for bad splice.	10
Poor motor cooling	Find the internal diameter of the well casing (or sleeve, if used) on the chart on page 2 and check for proper cooling.	Increase the pump flow (GPM) so proper cooling is possible (see chart on page 2) or pull the pump out of the well and add a sleeve with a smaller internal diameter *(see chart on page 2).*	11
Bad motor thrust bearing	Measure for high amps as explained on page 10.	If amps are too high, pull the pump and replace the motor.	

Pump Cycles Too Often

Possible Cause	Check This By . . .	Correct This By . . .	
The pressure switch is defective or is not properly adjusted.	Check the pressure setting on the switch. Check the voltage across closed contacts.	Adjust the pressure switch with a screwdriver or replace it if defective.	13
The tank is too small	Check the tank size and amount of air in the tank. The tank size should be about 10 gallons for each GPM needed (16 GPM = 160 gal.). At the pump cut-in pressure, the tank should be about 2/3 filled with air.	Replace the tank with one that is the correct size.	14
There is insufficient air charging of the tank or piping is leaking.	Pump air into the tank or diaphragm chamber. Check the diaphragm for leaks. Check the tank and piping for leaks with soapy water. Check the air-to-water ratio in the tank.	Repair as necessary.	15
Plugged snifter valve or bleed orifice (causing pressure tank to be water-logged)	Examine them for dirt or erosion.	Repair or replace as necessary.	16
Leak in the pressure tank or piping.	Check the setting and operation of the level control.	Readjust the level control setting (according to the manufacturer's instructions) or replace it if defective.	17
The level control is defective or is not properly set.	Check the yield of the well (determined by the well-test) against the pump's performance curve.	Reduce the flow by throttling back the valve. or Change the pump.	18
Pump is oversized for the application. It is outpumping the yield of the well and pumping itself dry.	Refer to the tank's operating and installation instructions and make sure it is installed correctly.	Repair or replace as needed.	19

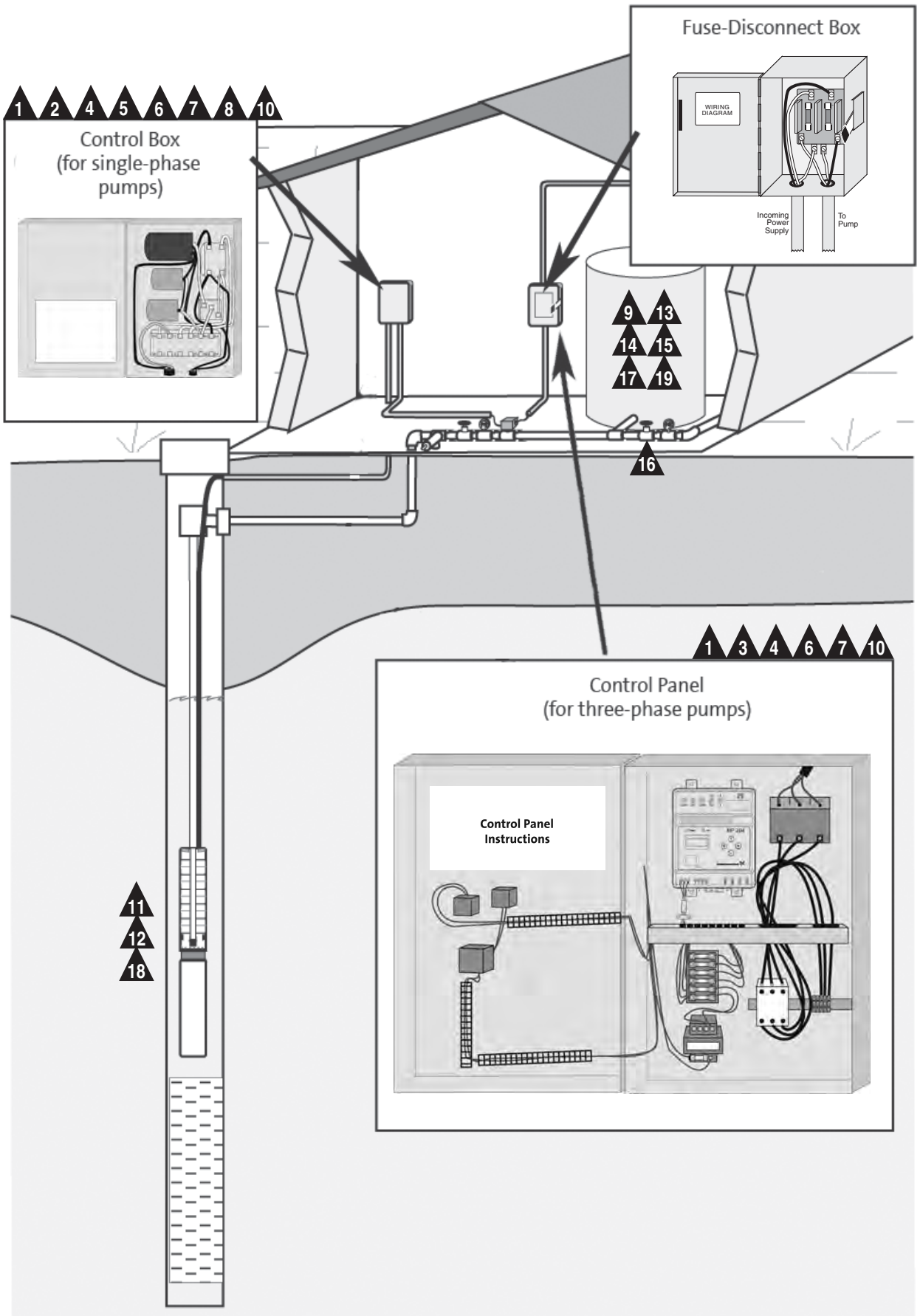
Fuse-Disconnect Box
WIRING DIAGRAM
Incoming Power Supply
To Pump
1 2 4 5 6 7 8 10
Control Box
(for single-phase pumps)
9 13
14 15
17 19
16
1 3 4 6 7 10
Control Panel
(for three-phase pumps)
Control Panel Instructions
11
12
18

Amperage Check

To check the electrical current (measured in amperes, or "amps") use an ammeter.

Instructions

1. Make sure the pump is running
2. Set the rotary scale on the front of the ammeter to the highest scale.
3. Open the control box and place the jaws of the ammeter around the wire to be measured.
4. Slowly rotate the scale on the ammeter back towards 0 (zero) until an exact reading is shown.
5. Record the measurement
6. Repeat for the other wires.

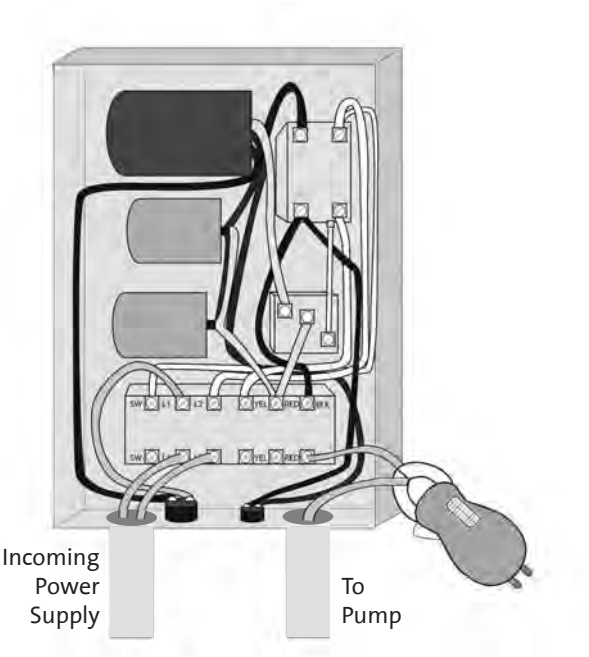

Evaluation

If the amp draw exceeds the service factor amps for the pump (as listed in the Motors section of the Service Manual), then:

- The motor starter may have burned contacts
- The terminals in the starter or terminal box may be loose
- There may be a winding defect. Check the winding and insulation resistance (see pages 12 and 13)
- The motor windings may be shorted or grounded
- The pump may be damaged in some way and may be causing a motor overload.
- A voltage supply or current imbalance (3-phase only) may exist. Follow the steps below to determine if this is true.
- The insulation on the drop cable may be torn, exposing the cable.

Current Imbalance On Three-Phase Motors

If the motor is connected to three-phase power, the balance of those three phases can be checked in the following way:

1. Measure the amperage of each wire as instructed above and record these figures.
2. Add together the total amperage measured by the three wires.
3. Divide this number by three to get the **average** amperage reading for the three wires.
4. Check over your numbers and determine which wire has the greatest difference from the average.
5. Take that number and subtract it from the average to determine the amount of **difference**.
6. Divide the **difference** by the **average**.
7. Multiply this number by 100 to obtain the percent of current imbalance for that particular hookup.
8. Turn **POWER OFF**
9. Repeat these steps for the other two possible hookup installations so that each motor lead is connected to a different power lead than it was before.

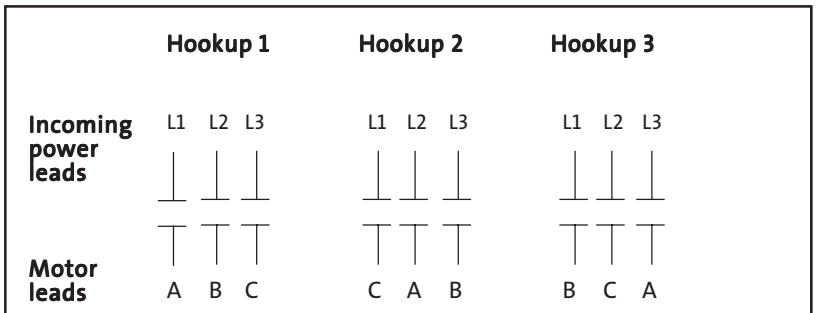

(where A, B, and C represent each motor lead or each set of leads joined together to make a single motor lead)

Example:

A	=	51 amps	C	=	50 amps	B	=	50 amps
B	=	46 amps	A	=	49 amps	C	=	48 amps
C	=	53 amps	B	=	51 amps	A	=	52 amps
Total	=	150	Total	=	150	Total	=	150
150/3	=	50	150/3	=	50	150/3	=	50
- 46	=	4	- 49	=	1	- 48	=	2
4/50	=	.08 or 8 %	1/50	=	.02 or 2 %	2/50	=	.04 or 4 %

Evaluation

If the the current imbalance is greater than 5% on all three hookups, then:

- If the largest difference in amps is consistently drawn from the same power lead (L1, L2, or L3 above), contact the power company. Your voltage should be balanced to within + or - 5%.
- If the largest difference in amps is consistently drawn from the same motor lead (A, B, or C above), there is likely a problem with the motor. Check the items listed under "Evaluation" near the top of this page.

If the current imbalance exceeds 5% one or two of the legs, use the hookup that has the least difference and check the motor for some of the other problems listed under "Evaluation" near the top of this page.

Capacitor Check

To check the condition of any capacitor on single phase motors, use an ohmmeter.

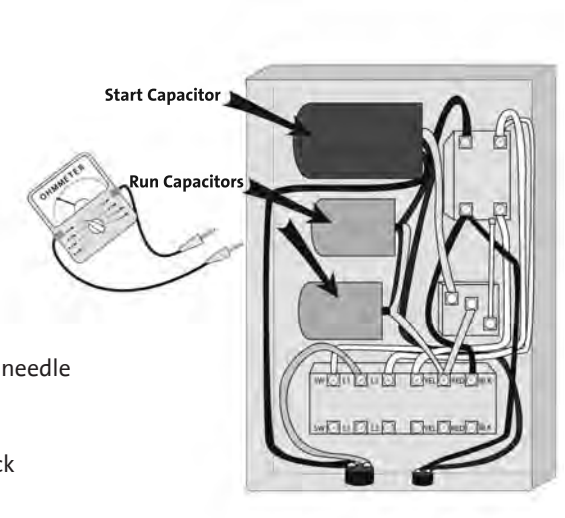

Instructions:

1. Turn the **POWER OFF**.
2. Disconnect the capacitor from the power source.
3. Discharge the capacitor by touching its leads together.
4. Set the scale selector on the ohmmeter to R x 100K.
5. Connect the leads of the ohmmeter to the black and orange wires of the capacitor.
6. Watch the ohmmeter scale.
7. Disconnect one lead from the capacitor for approximately 30 seconds. The needle should return to the last reading taken.

Evaluation

If the capacitor is OK, the needle should swing towards zero and then float back towards infinity (∞). If the needle drops and remains at zero, the capacitor is probably shorted. If the needle remains at a high value, there is an open circuit.

CAUTION: This test may indicate a good capacitor even though it may have lost some capacitance, making the motors run noisy or draw high amps. To safeguard against this, the capacitor can be checked with a capacitor meter.

Supply Voltage Check

To check the supply voltage, use a voltmeter (or amprobe) with the power on.

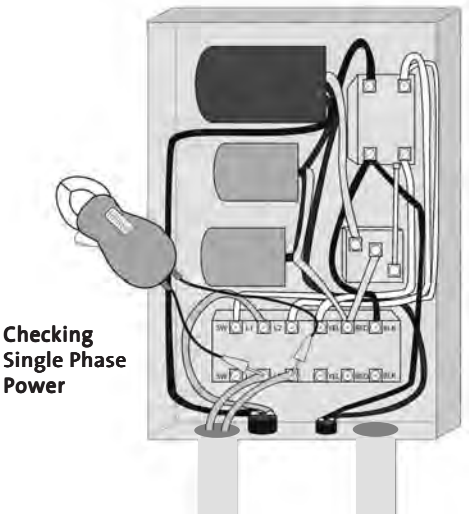

Instructions

1. Set the voltmeter to the highest scale
2. Remove the cover of the control box...BE CAREFUL -- POWER IS STILL BEING SUPPLIED TO THE CIRCUIT. Do not touch the voltmeter leads together while they are in contact with the power lines.
3. Touch the ends of the voltmeter leads as follows:

<u>Single Phase Motors</u>

Touch one voltmeter lead to each of the lines supplying power to the control (L_1 and L_2 , or L_1 and N for 115V circuits). ⟶

<u>Three Phase Motors</u>

Touch a voltmeter lead to the following:

- Power leads L_1 and L_2
- Power leads L_2 and L_3
- Power leads L_3 and L_1

} *These tests should give a reading of full line voltage.*

- Two fuses
- Two contact points
- Two heaters

Evaluation

When the motor is under load, the voltage should be -10% and +6% of the nameplate voltage. Any variation larger than this can cause damage to the motor windings and should be noticeable as a high amp problem.

If The Motor Nameplate Reads . . .		Then the minimum and maximum voltage should be . . .	
		Minimum	Maximum
115V	(single phase)	105 volts	121 volts
208V	(single or three phase)	188 "	220 "
230V	" "	210 "	243 "
460V	(three phase)	414 "	487 "
575V	" "	518 "	609 "

Any variations larger than these may indicate a poor electrical supply. The motor should not be operated under these conditions. Contact your power supplier to correct the problem or change the motor to one requiring the voltage you are receiving.

Motor Winding Resistance (lead-to-lead)

To check the electrical condition of the drop cable, splice, and motor windings, a resistance check with an ohmmeter is required.

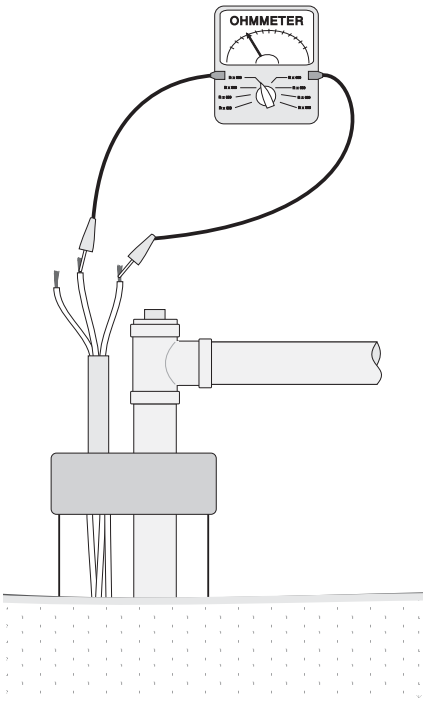

Instructions:

1. Turn the **POWER OFF**.
2. Disconnect all electrical leads to the drop cable.
3. Set the scale selector on the ohmmeter to R x 1 (if you expect ohm values under 10) or R x 10 (for ohm values over 10).
4. Touch the leads of the ohmmeter to two motor leads:
   Single Phase Motors
   Touching the leads of the ohmmeter to the black and yellow leads will measure the main winding's resistance for Franklin and Grundfos 402 motors. The red and yellow leads will be the start winding's resistance.
   Three Phase Motors
   Touching the leads of the ohmmeter to any two black leads will measure that winding's resistance. Repeat for all three possible lead combinations.
5. Watch the ohmmeter scale and record this figure. Subtract the ohm resistance for the drop cable (chart below) from the number. Compare the remaining figure with the one shown in the Motors section of this manual.

If:	Then:
Ohm values are normal	Motor windings are okay
One ohm value is less than normal	That motor winding may be starting to short
One ohm value is greater than normal	That winding may be starting to open
Some ohm values are greater than normal (>25%) and some are less than normal (± 25%)	The leads may be connected incorrectly, or have a break in the insulating jacket

If ohm readings are not normal and you want to verify the problem is not with the splice or drop cable, remove the lead from the motor and check the resistances from pin to pin directly at the motor. If the motor checks out okay, the fault is in the lead or splice (see page 14).

Total Resistance of Drop Cable *(from control box to motor and back)*

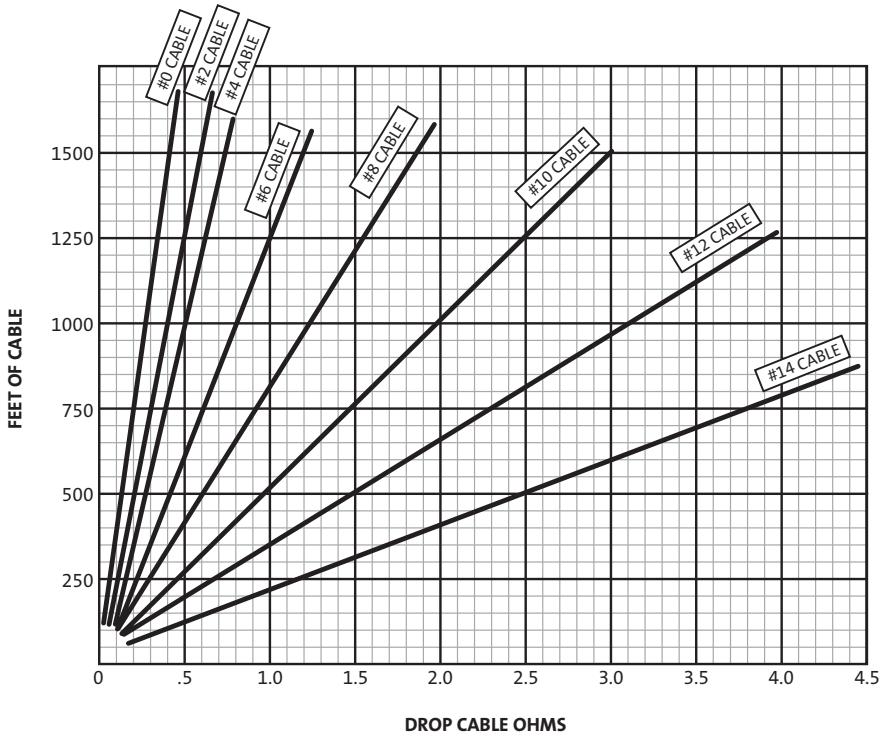

The values shown are for copper conductors. If aluminum conductor drop cable is used, the resistance will be higher for each foot of cable of the same size.

Copper ÷ .61 = Aluminum

Insulation Resistance (lead-to-ground)

To check the insulation resistance of the drop cable, splice, and motor leads, a megohmmeter is required.

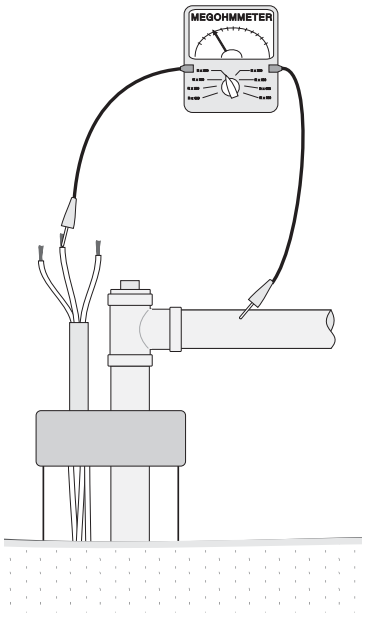

Instructions:

1. Turn the **POWER OFF**.
2. Disconnect all electrical leads to the drop cable.
3. Set the scale selector on the megohmmeter to R x 100, touch its leads together, and adjust the indicator to zero.
4. Touch the leads of the megohmmeter to each of the motor leads and to ground (i.e. L_1 to ground; L_2 to ground, etc.). The well casing, if made of steel, makes an excellent ground.
5. Watch the megohmmeter scale and compare this figure with the chart below.

Evaluation: In general, any ohm value above 1,000,000 ohms indicates everything is OK. The following table gives more specifics.

OHM VALUE	MEGAohm VALUE	THIS INDICATES THAT ...
		If The Motor <u>HAS NOT</u> Yet Been Installed:
2,000,000 (or more)	2.0	It is a new motor
1,000,000 (or more)	1.0	It is a used motor than can be used again (insulation OK)
		If The Motor <u>HAS</u> Been Installed: *(means that ohm readings will be for the drop cable plus the motor)*
500,000 - 1,000,000	0.5 - 1.0	The motor is in reasonably good condition
20,000 - 500,000	.02 - 0.5	The motor may have been damaged by lightning or has damaged leads.
10,000 - 20,000	.01 - .02	The motor has certainly been damaged or has damaged leads. The pump should be pulled and repairs made to the motor leads or replace the motor completely. The motor may still operate, but probably not for long.
less than 10,000	0 - .01	The motor has failed or the motor lead insulation has been completely destroyed. The pump must be pulled and the motor lead (drop cable) repaired or the entire motor replaced. **The motor will not run in this condition.**

Fuses

To check the condition of electrical fuses, an ohmmeter is required.

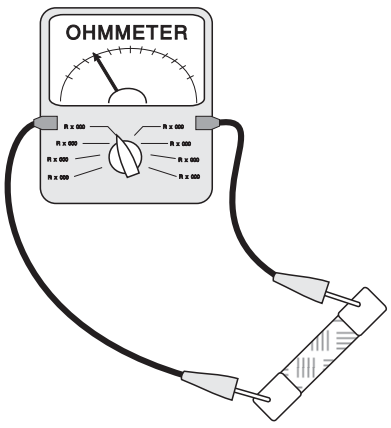

Instructions:

1. Turn the **POWER OFF** at the main disconnect or power source.
2. Remove the fuse.
3. Set the scale selector on the ohmmeter to R x 1.
4. Touch each lead of the ohmmeter to one end of the fuse.

Evaluation:

A good fuse should have zero (0) ohm reading. If the ohm value is near or past infinity, the fuse must be replaced.

Cable and Splice Condition

To check the electrical condition of the cable and splice insulation, a megohmmeter is required.

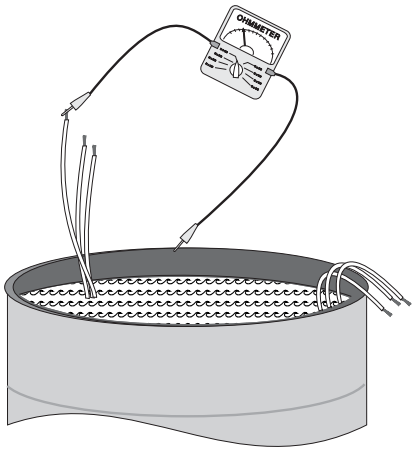

Instructions:

1. Turn the **POWER OFF.**
2. Remove the cable from the motor and electrical supply.
3. Submerge the cable in a steel barrel of water. Make sure both ends stay out of the water. Salt may be added to increase the conductance of the water.
4. Set the megohmmeter to R x 100K. Zero-adjust the ohmmeter by touching its two leads together.
5. Touch one megohmmeter lead to the steel barrel and other to a bare cable lead.
6. If the megohmmeter drifts towards zero (0), either that lead or the splice for that lead has a leak (fault). To find out if it is the splice:

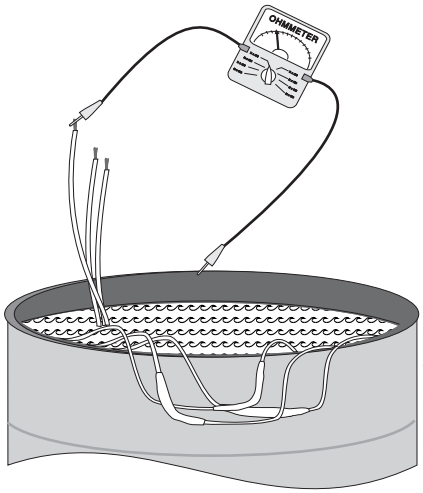

   a. Raise the splice for that lead out of the water.
   b. Repeat step 5.
   c. If the megohmmeter drifts towards infinity, the fault is in the splice.
   d. If the megohmmeter drifts towards zero (0), the fault is somewhere else in that lead. Gradually pull the rest of that cable lead out of the water until the megohmmeter drifts towards infinity. When it does, the leak is at that point in the cable lead.
7. Repeat for each of the motor leads.

Evaluation:
Any faulty leads should be replaced using waterproof electrical tape.

Checking the Relay

(SINGLE-PHASE CONTROL BOXES ONLY)

To check the electrical condition of the relays on single phase control boxes, an ohmmeter is required.

Specific instructions for checking the relay differ from control box to control box. Refer to the inside cover of your control box.

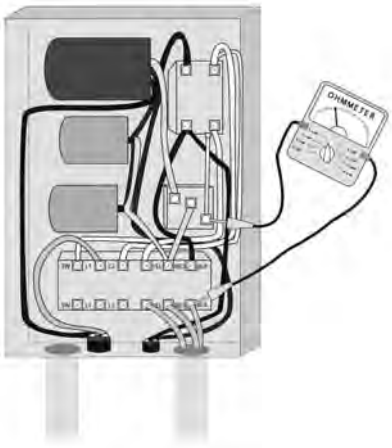

Overload Protection

To check the electrical condition of the thermal overloads, an ohmmeter is required.

Instructions:

1. Turn the **POWER OFF**.
2. Set the scale selector on the ohmmeter to R x 1.
3. Touch one of the ohmmeter leads to an overload protector and one to terminal 1, then terminal 3. Repeat for each overload protector.

Evaluation:
If the ohm values are 0.5 ohms or less, the overload protectors should still be functional. If not, they should be replaced.

Definitions

NET POSITIVE SUCTION HEAD (two types)

Before a centrifugal water pump can operate, the water must enter the pump under a certain minimum amount of pressure. For submersible pumps, this minimum is easily reached, since the pump is submerged in water and both the atmospheric pressure (14.7 psi) and the pressure of the water in the well are present. The amount of pressure (expressed in feet of head) required for a given pump to operate is known as its Net Positive Suction Head **Required**.

This number is determined by extensive testing of the pump by the manufacturer. These requirements are normally shown in graphical form (an **NPSH curve**) for a pump at every flow (GPM) within the flow range for which the pump is designed**.** As a pump's flow (GPM) increases, the NPSHR needed to continue that flow (without cavitating) also increases.

The amount of pressure (expressed in feet of head) that is actually available to a pump is known as its Net Positive Suction Head **Available**. Since the NPSH **Available** to the pump is almost always greater than the NPSH **Required** (for submersible pumps, that is), they are usually not a cause for any concern when sizing a pump or troubleshooting.

For submersible pumps, NPSH Required should not be confused with Total Dynamic Head, which is the amount of head the pump must produce to deliver water at the desired flow rate (GPM) in a given situation. ***Total Dynamic Head*** *(or TDH, as it is sometimes called) is explained below.*

TOTAL DYNAMIC HEAD

When selecting (or "sizing") a pump, two questions must be answered:

1. How much flow is needed ?
   (expressed in Gallons Per Minute)

2. How much head must the pump produce ?
   (known as ***Total Dynamic Head****)*

To determine the Total Dynamic Head the pump must produce, 5 pieces of information are needed:

A **STATIC WATER LEVEL**

+

B **DRAWDOWN**
(as the pump is pumping)

+

C **TANK ELEVATION**

+

D **TANK PRESSURE**
(multiply by 2.31 to convert psi to feet of head)

+

E **FRICTION LOSSES**

THE TOTAL
OF THESE 5 NUMBERS IS
THE AMOUNT OF HEAD
THE PUMP MUST PRODUCE

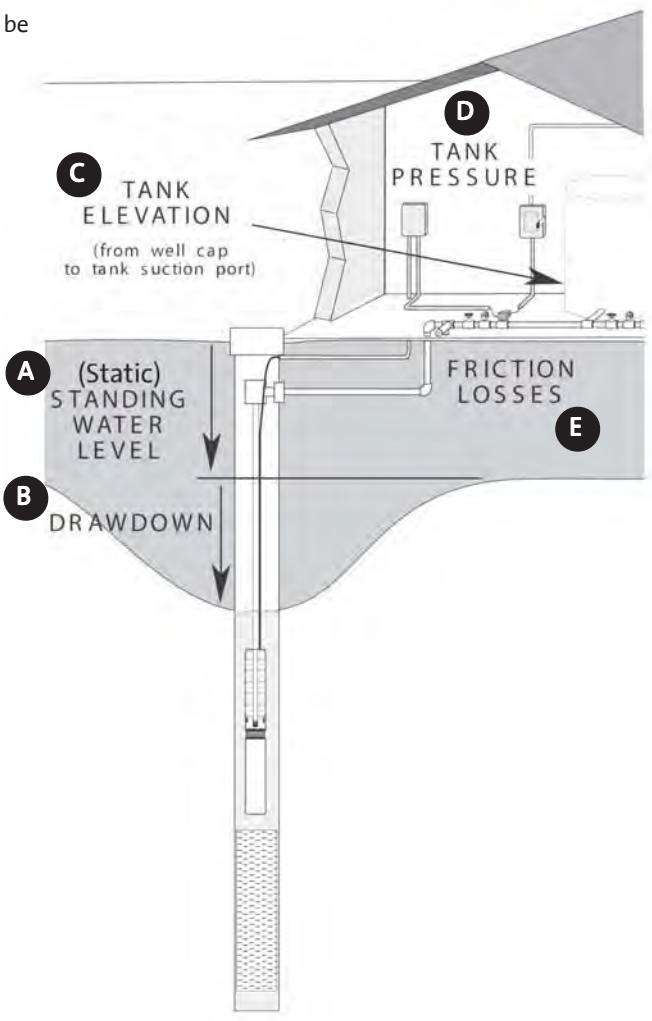

AFFINITY LAWS

The mathematical relationships which permit the head, capacity, brake horsepower (BHP), and NPSH of centrifugal pumps to be predicted based on small changes in impeller diameter size or shaft speed (RPM) changes. These relationships are:

For diameter changes at a constant RPM:

$\frac{D_1}{D_2} = \frac{GPM_1}{GPM_2}$ *Flow changes in direct proportion to the ratio of the diameter change.*

$\left(\frac{D_1}{D_2}\right)^2 = \frac{H_1}{H_2}$ *Head changes to the square ratio of the ratio of the diameter change.*

$\left(\frac{D_1}{D_2}\right)^3 = \frac{BHP_1}{BHP_2}$ *BHP changes to the cube of the ratio of the diameter change*

For RPM changes:

$\frac{RPM_1}{RPM_2} = \frac{GPM_1}{GPM_2}$

$\left(\frac{RPM_1}{RPM_2}\right)^2 = \frac{NPSH_1}{NPSH_2}$

$\left(\frac{RPM_1}{RPM_2}\right)^2 = \frac{H_1}{H_2}$

$\left(\frac{RPM_1}{RPM_2}\right)^3 = \frac{BHP_1}{BHP_2}$

} *Head is affected by the square of the ratio of RPM change and BHP is affected by the cube of the ratio of the RPM change*

Conversion Formulas

HEAD (in feet) = $\frac{\text{Pressure (PSI) x 2.31}}{\text{Specific Gravity (for water, 1.0 at ambient temperatures)}}$

PRESSURE (PSI) = $\frac{\text{HEAD (in ft) x Specific Gravity (for water, 1.0 at ambient temperatures)}}{2.31}$

ATMOSPHERIC PRESSURE Pressure of the Atmosphere Pushing Down (at sea level) = 14.7 PSI = 34 feet of HEAD

BRAKE HORSEPOWER Horsepower Delivered to the Pump Shaft = $\frac{\text{GPM x HEAD x Specific Gravity (for water, 1.0 at ambient temps)}}{\text{3960 x Efficiency Of Pump}}$

PUMP EFFICIENCY Of The Pump = $\frac{\text{GPM x HEAD x Specific Gravity}}{\text{3960 x Brake Horsepower}}$

FOOT POUNDS = Newton Meters (or Nm) x .7376

DEGREES FARENHEIT = (Degrees Celsius x 9/5) + 32

Water Vapor Pressure and Specific Gravity

°F	°C	Specific Gravity (1 at 60°F)	Weight (Lbs per cubic foot)	Vapor Pressure (PSIA)	Vapor Pressure (in feet)
32	0	1.002	62.42	0.0885	0.204
40	4.4	1.001	62.42	0.1217	0.281
45	7.2	1.001	62.40	0.1475	0.340
50	10.0	1.001	62.38	0.1781	0.411
55	12.8	1.000	62.34	0.2563	0.591
60	15.6	1.000	62.34	0.2563	0.591
65	18.3	.999	62.31	0.3056	0.839
70	21.1	.999	62.27	0.3631	0.839
75	23.9	.998	62.24	0.4298	0.994
80	26.7	.998	62.19	0.5069	1.172
85	29.4	.997	62.16	0.5959	1.379
90	32.2	.996	62.11	0.6982	1.617
95	35.0	.995	62.06	0.8153	1.890
100	37.8	.994	62.00	0.9492	2.203
110	43.3	.992	61.84	1.275	2.965
120	48.9	.990	61.73	1.692	3.943
130	54.4	.987	61.54	2.223	5.196
140	60.0	.985	61.39	2.889	6.766
150	65.6	.982	61.20	3.718	8.735
160	71.1	.979	61.01	4.741	11.172
170	76.7	.975	60.79	5.992	14.178
180	82.2	.972	60.57	7.510	17.825
190	87.8	.968	60.35	9.339	22.257
200	93.3	.964	60.13	11.526	27.584
212 (boiling point)	100.0	.959	59.81	14.696	35.353
220	104.4	.956	59.63	17.186	41.343
240	115.6	.948	59.10	24.97	60.77
260	126.7	.939	58.51	35.43	87.05
280	137.8	.929	58.00	49.20	122.18
300	148.9	.919	57.31	67.01	168.22
320	160.0	.909	56.66	89.66	227.55
340	171.1	.898	55.96	89.66	227.55
360	182.2	.886	55.22	153.04	398.49
380	193.3	.874	54.47	195.77	516.75
400	204.4	.860	53.65	247.31	663.42
420	215.6	.847	52.80	308.83	841.17
440	226.7	.833	51.92	381.59	1056.8
460	237.8	.818	51.02	466.9	1317.8
480	248.9	.802	50.00	566.1	1628.4
500	260.0	.786	49.02	680.8	1998.2

Water Properties at Different Altitudes

ALTITUDE		BAROMETER READING		ATMOS. PRESSURE		Boiling Point Of Water F°
Feet	Meters	IN. HG.	MM. HG	PSIA	Feet of Water	
-1000	-304.8	31.0	788	15.2	35.2	213.8
-500	-152.4	30.5	775	15.0	34.6	212.9
0	**0.0**	**29.9**	**760**	**14.7**	**33.9**	**212.0**
+500	+152.4	29.4	747	14.4	33.3	211.1
+1000	304.8	28.9	734	14.2	32.8	210.2
1500	457.2	28.3	719	13.9	32.1	209.3
2000	609.6	27.8	706	13.7	31.5	208.4
2500	762.0	27.3	694	13.4	31.0	207.4
3000	914.4	26.8	681	13.2	30.4	206.5
3500	1066.8	26.3	668	12.9	29.8	205.6
4000	1219.2	25.8	655	12.7	29.2	204.7
4500	1371.6	25.4	645	12.4	28.8	203.8
5000	1524.0	24.9	633	12.2	28.2	202.9
5500	1676.4	24.4	620	12.0	27.6	201.9
6000	1828.8	24.0	610	11.8	27.2	201.0
6500	1981.2	23.5	597	11.5	26.7	200.1
7000	2133.6	23.1	587	11.3	26.2	199.2
7500	2286.0	22.7	577	11.1	25.7	198.3
8000	2438.4	22.2	564	10.9	25.2	197.4
8500	2590.8	21.8	554	10.7	24.7	196.5
9000	2743.2	21.4	544	10.5	24.3	195.5
9500	2895.6	21.0	533	10.3	23.8	194.6
10000	3048.0	20.6	523	10.1	23.4	193.7
15000	4572.0	16.9	429	8.3	19.2	184.0

LSP-TL-015 | Rev. 08/06
PRINTED IN USA

GRUNDFOS Pumps Corporation
17100 W. 118th Terrace
Olathe, Kansas 66062
Phone: 913.227.3400
Fax: 913.227.3500

www.grundfos.com

GRUNDFOS Canada, Inc.
2941 Brighton Road
Oakville, Ontario L6H 6C9 Canada
Phone: 905.829.9533
Fax: 905.829.9512

Bombas GRUNDFOS de Mexico S.A. de C.V.
Boulevard TLC No. 15
Parque Industrial Stiva Aeropuerto
Apodaca, N.L. Mexico 66600
Phone: 52.81.8144.4000
Fax: 52.81.8144.4010

GRUNDFOS®

TAG: LSH-3000
LSH-3004

3E	3N	3B
1" to 3" NPT	#10 Machine Screws from Underside	3/8" - 18NPT, 5/8" - 18UNF, 5/8" - 24UNEF
1 thru 7	1 thru 3	1
Series 3E fittings are cast metal, pressure-tight assemblies capable of handling 1-7 probes. Attachment to vessels is accomplished with external pipe threading. 3E Fittings require the use of 3R rigid or 3W wire suspended electrodes.	Series 3N fittings accommodate 1-3 probes operating at atmospheric pressure. The assembly mounts on a flat surface atop open tanks or closed vessels. 3N Fittings require the use of 3R rigid or 3W wire suspended electrodes.	Series 3B fittings are compact pressure tight assemblies that hold a single electrode probe for use in water and chemicals. These fittings incorporate a 1/4-20 female thread that must be combined with a Series 3R (rigid rod electrode) or Series 3W/3Y (wire suspended electrode) to make a complete assembly.
Die-cast aluminum, epoxy coated	Die-cast aluminum, epoxy coated	—
Cast iron, red brass, 316 stainless steel	PVC, red brass, 316 stainless steel	316 stainless steel
Teflon®	Teflon®	Teflon®
125 psig @ 353°F (cast iron) 250 psig @ 406°F (brass, 316 S.S.)	0 psig @ 150°F (PVC) 0 psig @ 500°F (brass, 316 S.S.)	250 psig @ 406°F 500 psig @ 75°F
U.L. File #MP2489, Vol. 1 Sec. 1; CSA	CSA File #LR11644	U.L. File #MP2489, Vol. 1 Sec. 1; CSA

	No. of Probes	Attachment to Vessel	Conduit Boss Thread Size	Terminal Housing Size (W" x D" x H")
3E	1	1" NPT	1/2" NPT	2-1/4 x 2-1/4 x 2-1/4
	2-3	2" NPT	1/2" NPT	3-1/4 x 3-1/4 x 2-3/8
	4	2-1/2" NPT	1/2" NPT	3-1/4 x 3-1/4 x 2-3/8
	5-7	3" NPT	3/4" NPT	4 x 4 x 2-1/2
3N	1-3	2-1/4" square flat pad, 1-1/2" dia. hole in top of vessel secured with #10 machine screws at the corners of a 1-1/2" square	1/2" NPT	2-1/4 x 2-1/4 x 2-1/4

3E 2 A

- Series **3E**
- Number of Probes **1** thru **7**
- Body Material
  - **A** – Cast Iron
  - **B** – Red Brass
  - **C** – 316 Stainless Steel

3N X X

- Series **3N**
- Number of Probes **1** thru **3**
- Body Material
  - **A** – PVC
  - **B** – Red Brass
  - **C** – 316 Stainless Steel

3B X B

- Series **3B**
- Thread
  - **1** – 3/8" - 18 NPT
  - **2** – 5/8" - 18 UNF
  - **3** – 5/8" - 24 UNEF
- Metal Parts
  - **B** – 316 Stainless Steel

3R, 3W[1]	3R, 3W[1]	3R solid rod (up to 4') 3W[1] or 3Y[2] (greater than 4')

Custom options available. Consult factory.

TAG: LSH-3000
LSH-3004

Series 3R/3T
General Purpose Probes

- Metallic Rods
- Available in Many Materials for Various Requirements
- Adaptable for Various Fittings

For general purpose use, Series 3R probes are metallic rods with threaded ends that screw into a fitting that extends vertically down into the liquid. Available in a variety of materials for different applications. 3T tapered rods are also available.

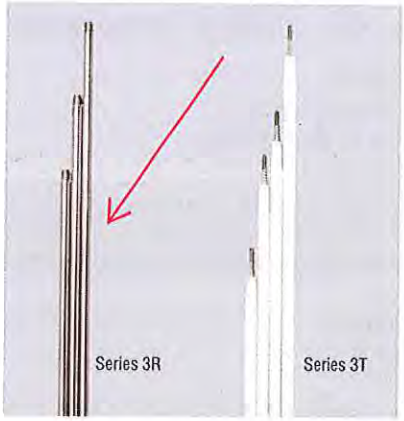

Specifications

Style	
Series 3R	1/4" (.64 cm) threaded rod
Series 3T	1/4" (.64 cm) tapered rod
Material	Brass, Hastelloy C, Monel, 316 stainless steel, titanium, Carp. 20
Sheathing (optional)	PVC heat shrink 200°F (93°C), Teflon® heat shrink 350°F (177°C)

Applications

3R: For use with Series 3E, 3F, 3G, 3B fittings

3T: For use with Series 3G and other custom configurations

How to Order

Use the **Bold** characters from the chart below to construct a product code.

3R 2 C 4

Series
- **3R**
- **3T**

Length (Feet)
- **1** – One
- **2** – Two
- **3** – Three
- **4** – Four
- **5** – Five
- **6** – Six
- **7** – Seven
- **8** – Eight
- **9** – Nine
- **10** – Ten

Probe Material
- **A** – Brass
- **C** – 316 Stainless Steel
- **D** – Carp. 20
- **E** – Hastelloy B
- **F** – Hastelloy C
- **G** – Monel
- **H** – Titanium

Sheathing Heat Shrink
- **0** – None
- **4** – PVC
- **5** – Teflon®

Contact your representative for custom lengths.

Note: Long lengths can be coupled to facilitate shipping and installation. Consult factory.

Dimensions

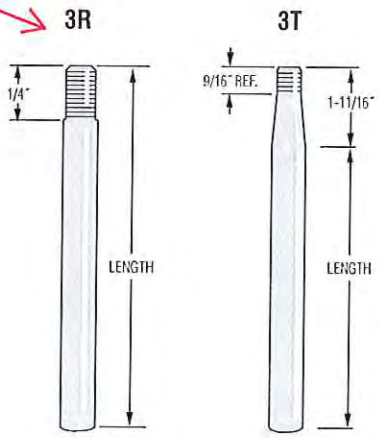

WARRICK CONDUCTIVITY SENSORS

TAG: LSH-3002
LSH-3003

Series 3W – Wire Suspended Probes

- Metallic Bars
- Plastic Shield Protected
- Adaptable to Many Fittings
- Field Assembled

Series 3W probes, consisting of metallic bars within a protective plastic shield, are designed to be suspended in liquid with PVC-insulated wires. They are ideal for applications where rigid electrode rods are impractical or cumbersome, such as:

- Deep Wells
- Pump Control
- Waste Water
- Deep Tanks

7/8″ (2.22 cm) diameter x 3-3/4″ (9.52 cm) length. 3Z1A wire and 3Z1B adaptor kit required for use with 3E, 3F and 3N fittings.

Series 3W

How to Order

Select a 3W electrode, a 3Z1B adaptor and a length of 3Z1A suspension wire to form a complete suspended probe.

1. 3W Electrodes

Probe Material	Part Number
Brass	3W1
316 Stainless Steel	3W2

2. 3Z1B Adaptor Kit
For use with 3E, 3F and 3N fittings.
Part Number: 3Z1B

3. 3Z1A Suspension Wire
Order in standard or custom length.

Length (Feet)	Part Number
500	100325-500
1000	100325-1000
5000	100325-5000
Custom	3Z1A-20

Specify in one foot increments up to 5000 ft.

Components Detail

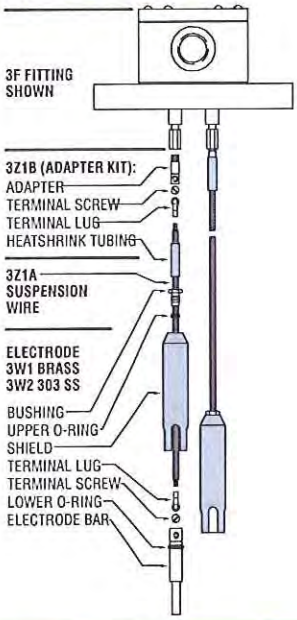

Series 3Y – Corrosion Resistant Probes

- Metallic Bars
- Corrosion Resistant
- Available in Many Materials for Various Requirements
- Adaptable for Various Fittings

Series 3Y wire suspended probes consist of metallic bars within a protective plastic shield, designed to be suspended in liquid. Series 3Y suspension wires are PVC or Teflon© insulated for use in corrosive liquid applications. 7/8″ (2.22 cm) diameter x 3-1/2″ (8.90 cm) length.

Series 3Y

Specifications

Style	Wire suspended
Tip Material	Carp. 20, Hastelloy C, 316 stainless steel
Shield Material	PVC 150°F (66°C), Teflon©

How to Order

Use the **Bold** characters from the chart below to construct a product code.

3Y X X X

Series
3Y

Shield Material
1 – PVC
3 – Teflon©

Probe Tip Material
C – 316 Stainless Steel
D – Carp. 20
F – Hastelloy C

Length of Wire
1 – 10 feet
2 – 20 feet
3 – 30 feet
etc.

Note: 3Z1B Connector is used to connect suspension wire with 3B, 3E, 3F, 3G or 3N fitting.

Applications

- General Purpose
- Wire Suspended Probes
- Corrosive Liquids, Chemicals

KAFB-106233 and KAFB-106234 Manufacturer's Literature

13B63622 150S400-22 60 Hz

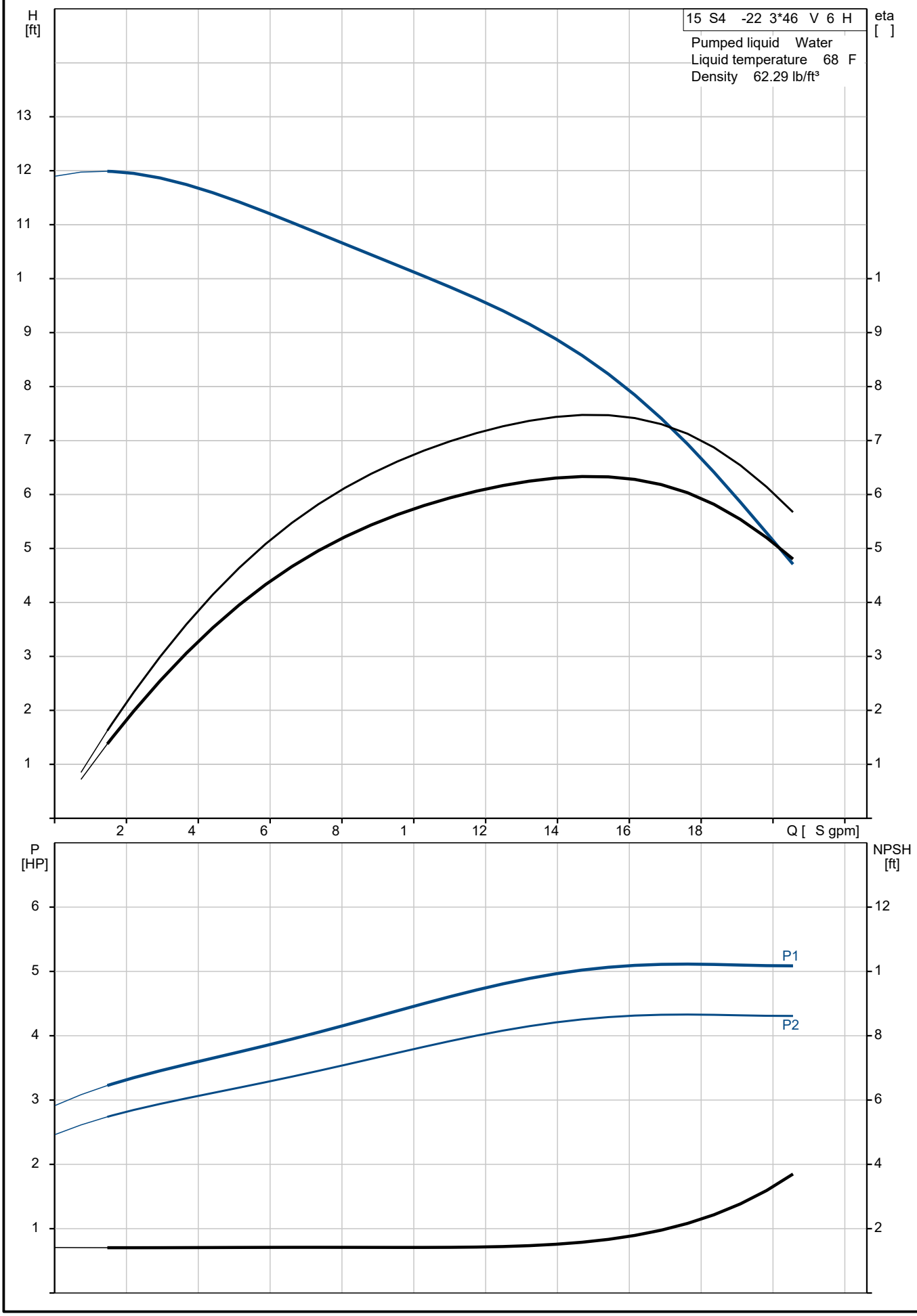

Description	Value
General information:	
Product name:	15 S4 -22
Position	
Product No.:	13B63622
EAN:	57 3914282 3
Price:	On request
Technical:	
Speed for pump data:	345 rpm
Rated flow:	159 S gpm
Rated head:	784 ft
Shaft seal for motor:	SIC/SICNBR
Curve tolerance:	ISO99 6:2 12 3B
Stages:	22
Model:	A
Valve:	pump with built-in non-return valve
Curve tolerance:	ISO99 6:2 12 3B
Materials:	
Pump:	Stainless steel
	DIN W.-Nr. 1.43 1
	AISI 3 4
Impeller:	Stainless steel
	DIN W.-Nr. 1.43 1
	AISI 3 4
Motor:	Stainless steel
	DIN W.-Nr. 1.43 1
	AISI 3 4
Installation:	
Maximum ambient pressure:	87 psi
Motor diameter:	6 inch
Liquid:	
Max liquid temperature at .15 m/sec:	116.6 F
Electrical data:	
Motor type:	MS6
Rated power - P2:	4 HP
KVA code:	H
Main frequency:	6 H
Rated voltage:	3 x 44 -46 -48 V
Start. method:	direct-on-line
Starter:	3
Service factor:	1.15
Rated current:	65. -62. -61. A
Starting current:	47 -52 -56
	32 A
Cos phi - power factor:	.88- .86- .84
Rated speed:	344 -346 -348 rpm
Axial load max:	59.5 lb
Motor efficiency at full load:	85
Enclosure class IEC 34-5 :	IP68
Insulation class IEC 85 :	F
Motor protection:	NONE
Thermal protec:	external
Built-in temperature transmitter:	yes
Motor Number:	9616617
Cable number:	96163476
Controls:	
Heather:	K78
Others:	

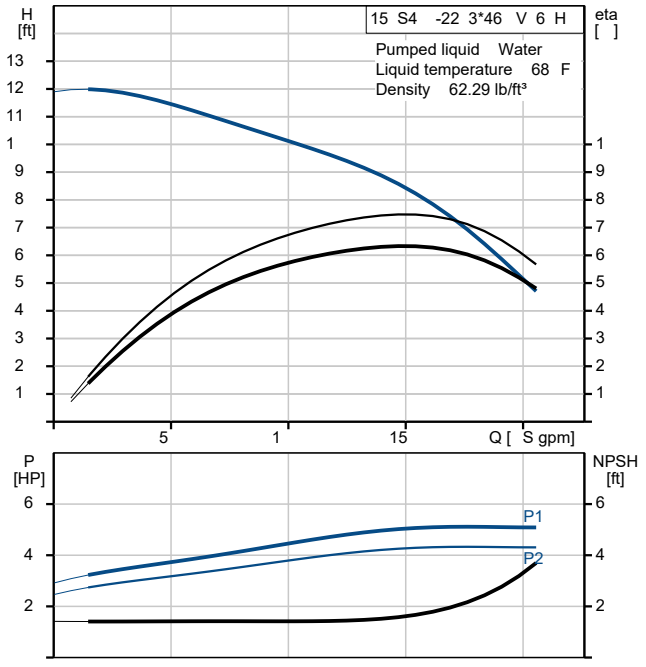

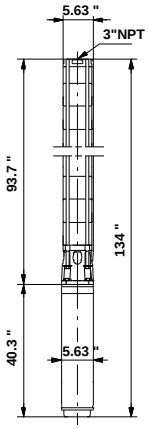

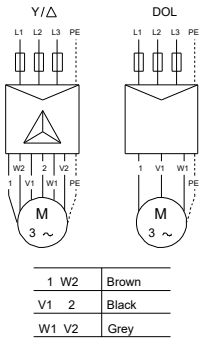

1 W2	Brown
V1 2	Black
W1 V2	Grey

Description	Value
Net weight:	281 lb
Gross weight:	381 lb
Sales region:	Namreg

13B63622 150S400-22 60 Hz

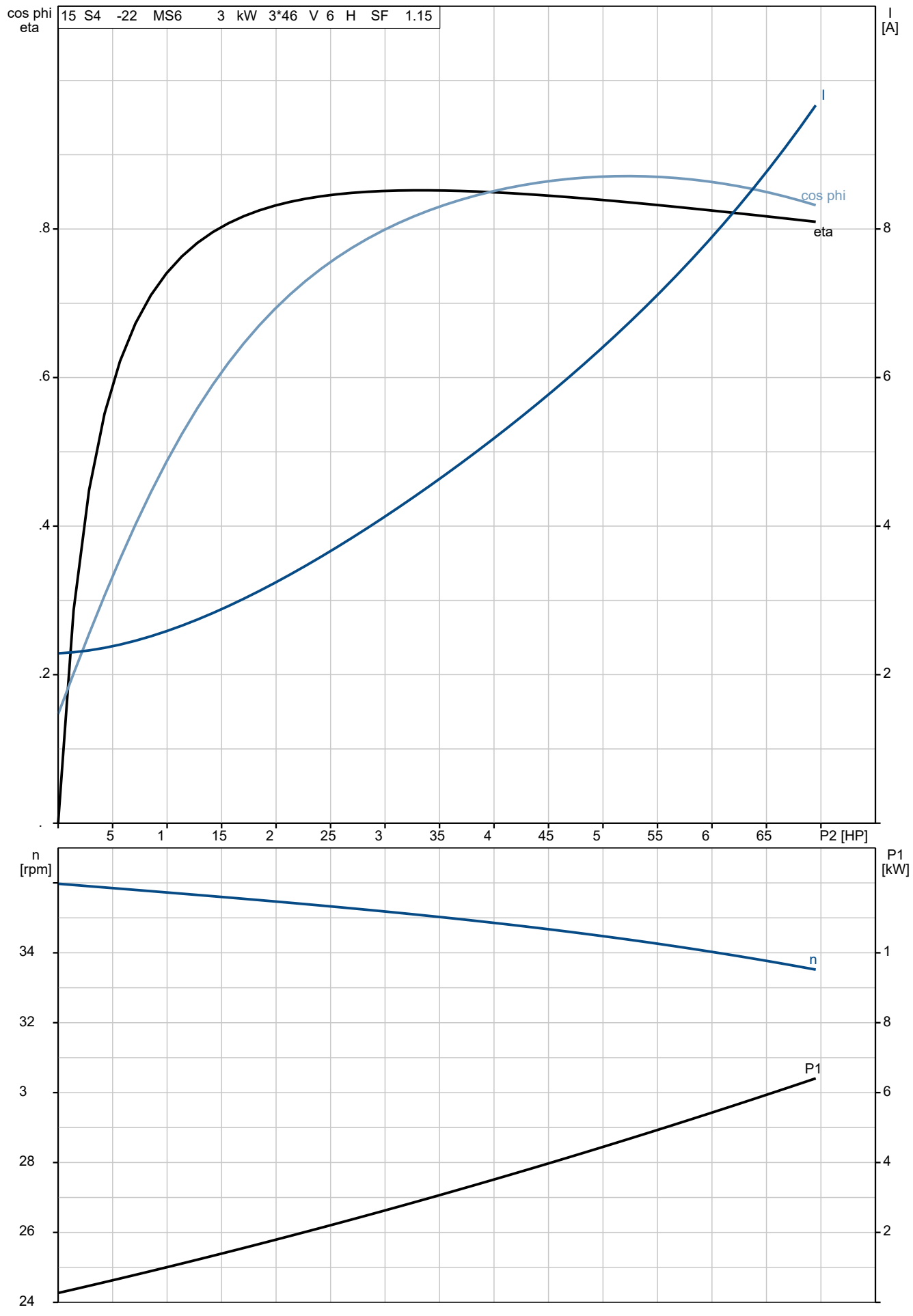

13B63622 150S400-22 60 Hz

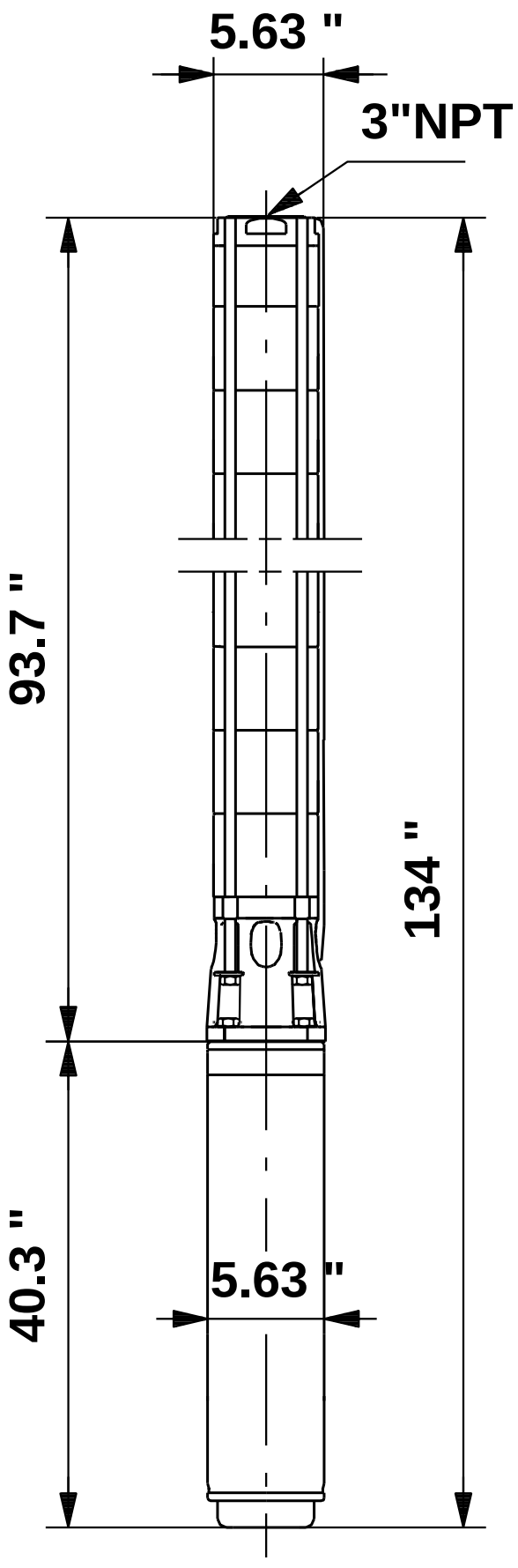

Note! All units are in [mm] unless otherwise stated.
Disclaimer: This simplified dimensional drawing does not show all details.

13B63622 150S400-22 60 Hz

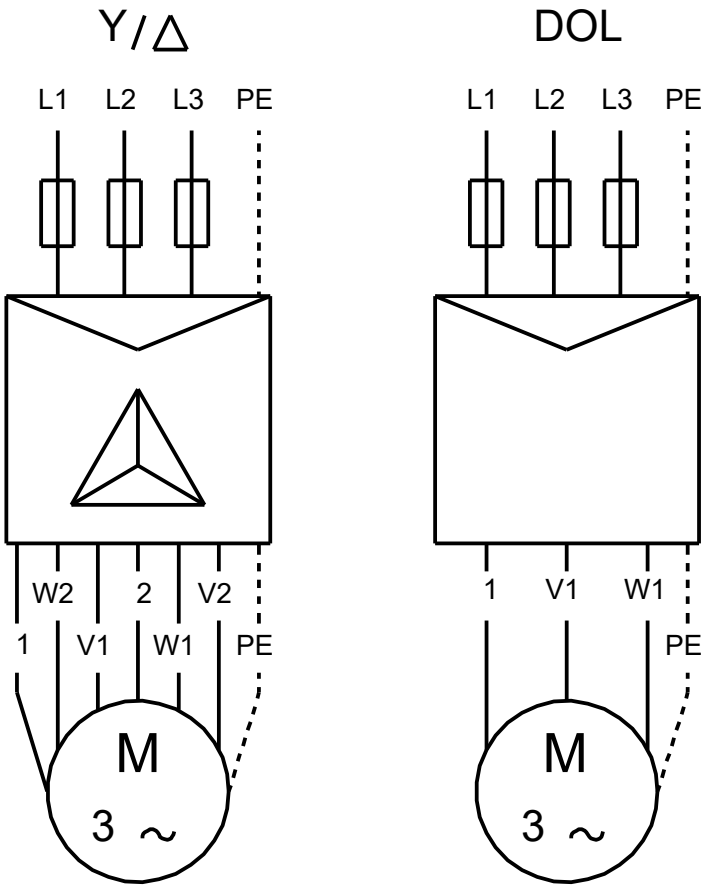

1 W2	Brown
V1 2	Black
W1 V2	Grey

All units are [mm] unless otherwise presented.

Part #: IMS3R-RV-S3/J-G100
Nema 3R with C/B Disconnect
40HP/460VAC/3-Phase

IMS-RV Intelligent Motor Soft-Starter

3Ø, 200~460VAC, 2-250HP,
ADVANCED ELECTRONIC OVERLOAD
INTEGRATED CONTACTOR BYPASS

The World's Most Intelligent Soft-Starter

Integrated electronic motor protection

- Our most advanced motor protection
- Wide range class 5-30 electronic overload
- Advanced protective features include over/under voltage/power, phase loss/unbalance, stalled/locked rotor, cycle fault and UL 1053 ground fault

Approved as equal, with exception to autotransformer requirement.

Soft start features

- Adjustable current limit, initial voltage, start/stop time
- Coast to stop
- Torque boost
- SCR over-temperature detection
- Shorted SCR detection
- Across-the-line start for emergency situations

Built-in power monitoring, fault logging and communications

- Last 15 fault types are recorded (overload, voltage/current loss/unbalance, etc.)
- Fault counter: stores how many times each fault type has occurred (Up to 255)
- Logs changes to parameter settings (e.g. overload, OV/UV)
- All power condition values are displayed
- Built-in RS-485 for Modbus RTU communication

Industrial grade construction

- Door mounted HOA switch
- UL/NEMA Type 3R outdoor rating (4, 4X Available)
- Multi-tap transformer accommodates common voltages; no fuses required
- 120V control power for field devices (optional 24V)
- NEMA rated contactor, 2.5 Million electrical cycles at full rated current

Programmable control options

- Auto-restart
- Backspin delay
- On/Off delay settings
- Minimum run time based on last input
- 12-120V auto run input terminal for remote start/stop
- Dry contact input terminal for remote start/stop
- Analog input for (selectable) 0-10V, 4-20mA, 10k Thermistor, viewable as a Modbus point

Optional circuit breaker disconnect.

- UL 489 circuit breaker provides branch and short circuit protection
- No fuses required
- Lockable handle for safety

< The internal keypad and LCD make the IMS intuitive and versatile. Parameters are easily changed and faults are clearly displayed.

< Standard control features include a 12-120V auto run input, shutdown terminal for applications such as a low level float switch, and more.

< Our multi-tap power transformer accepts inputs of: 200V, 230V, 460V

Ordering and Sizing Information

UL/NEMA TYPE 3R OUTDOOR ENCLOSURE
COMBINATION INTELLIGENT MOTOR SOFT STARTER - 3-Phase, 200–460VAC

200 V - 460 V 3-Phase SFA Range** (A)	Max. 3-PHASE HP (UL) / Max. Amps						Contactor NEMA Size	IMS-RV Part Number
	200V		230V		460V			
	HP	Amps	HP	Amps	HP	Amps		
6~8	2	8	2	8	5	8	1	IMS3R-RV-S1/J-G15
8~11	3	11	3	11	7.5	11		IMS3R-RV-S1/J-G20
11~17	3	17	5	17	10	17		IMS3R-RV-S1/J-G30
16~22	5	22	7.5	22	15	22		IMS3R-RV-S1/J-G40
20~28	7.5	28	10	28	20	28	1P	IMS3R-RV-S1P/J-G50
24~34	10	34	10	34	25	34		IMS3R-RV-S1P/J-G60
32~45	10	45	15	45	30	45	2	IMS3R-RV-S2/J-G80
40~57	15	57	20	57	40	57	3	IMS3R-RV-S3/J-G100
50~71	20	71	25	71	50	71		IMS3R-RV-S3/J-G125
60~85	25	85	30	85	60	85	3P	IMS3R-RV-S3P/J-G150
80~114	30	114	40	114	75	114	4	IMS3R-RV-S4/J-G200
100~DPV*	40	120	50	130	100	124		IMS3R-RV-S4/J-G250
100~142	40	142	50	142	100	142	5	IMS3R-RV-S5/J-G250
120~170	50	170	50	171	125	171		IMS3R-RV-S5/J-G300
160~220	60	220	75	220	150	220		IMS3R-RV-S5/J-G400
201~285	100	285	100	285	200	285		IMS3R-RV-S5/J-G500
240~320	100	330	100	330	250	330		IMS3R-RV-S5/J-G600

UL/NEMA TYPE 3R OUTDOOR ENCLOSURE
STANDARD INTELLIGENT MOTOR SOFT STARTER - 3-Phase, 200–460VAC

200 V - 460 V 3-Phase SFA Range** (A)	Max. 3-PHASE HP (UL) / Max. Amps						Contactor NEMA Size	IMS-RV Part Number
	200V		230V		460V			
	HP	Amps	HP	Amps	HP	Amps		
1~50	15	50	15	50	30	50	2	IMS3R-RV-S2/J-50
1~85	25	85	30	85	77	85	3	IMS3R-RV-S3P/J-85
50~DPV*	40	120	50	130	100	124	4	IMS3R-RV-S4/J-130
50~170	50	170	60	170	125	170	5	IMS3R-RV-S5/J-170
151~220	60	220	75	220	150	220		IMS3R-RV-S5/J-220
176~270	75	270	100	270	200	270		IMS3R-RV-S5/J-270
201~330	100	330	125	330	250	330		IMS3R-RV-S5/J-330

Dimensions

**All measurements in inches*

IMS-RV (Combination)

Starter Size	H	W	D
S1 ~ S3P	32	15	10
S4	36	24	12
S5/J-G200 ~ S5/J-G400	42	30	12
S5/J-G500 ~ S5/J-G600	48	30	16

IMS-RV (Standard)

Starter Size	H	W	D
S2 ~ S3P	32	15	10
S4	36	24	12
S5	42	30	12

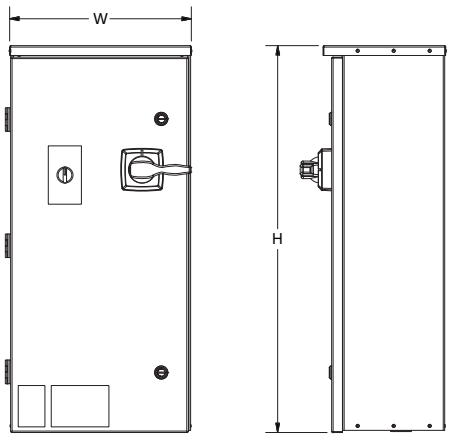

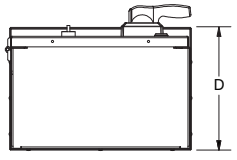

IMS-RV Options

Options	
IMS-SRG240	Surge Suppressor, 200/230 V
IMS-SRG480	Surge Suppressor, 460 V
IMS-SRG600	Surge Suppressor, 600 V
IMS-RPL	Run Pilot Light, Green
IMS-FPL	Fault Pilot Light, Red
IMS-SPB	Start Push-Button Control
IMS-STSP	Start/Stop Push-Button Control (In Lieu of Hand/Off/Auto Switch)
IMS-24	24 VAC Control Circuit (In Lieu of 120 VAC Control Circuit)

IMS-RV Wiring Diagram

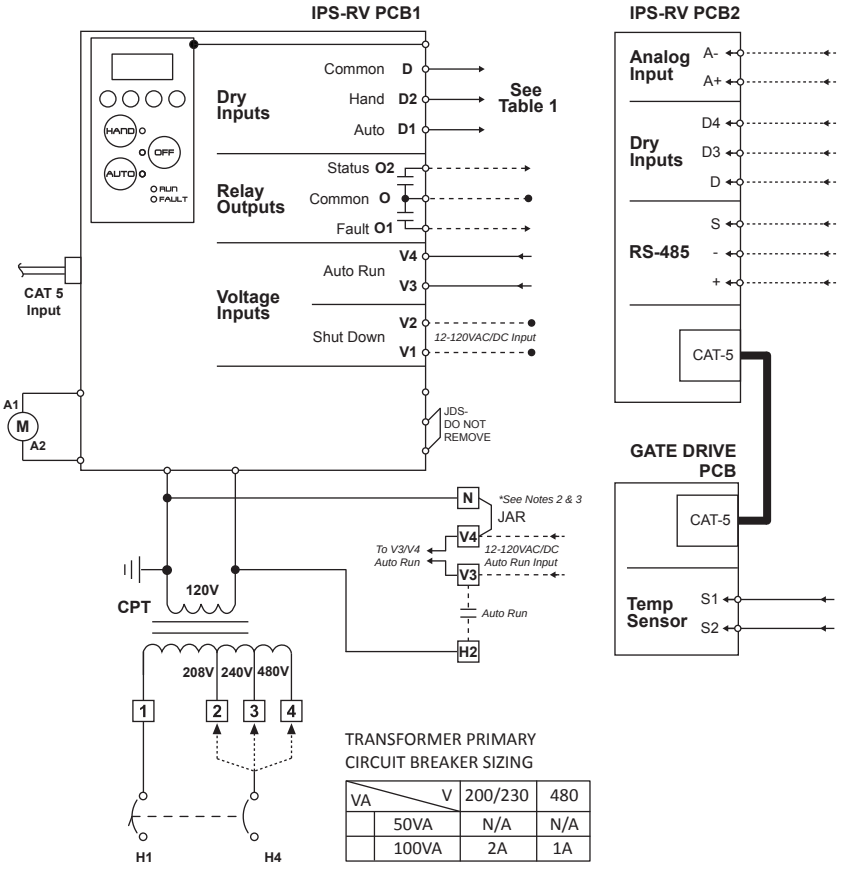

TRANSFORMER PRIMARY CIRCUIT BREAKER SIZING

VA \ V	200/230	480
50VA	N/A	N/A
100VA	2A	1A

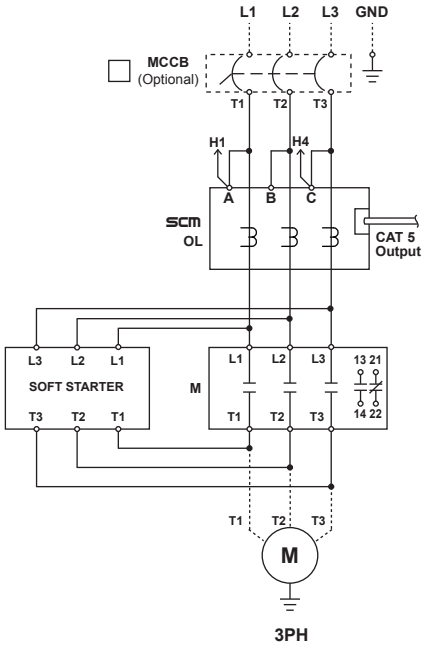

TABLE 1

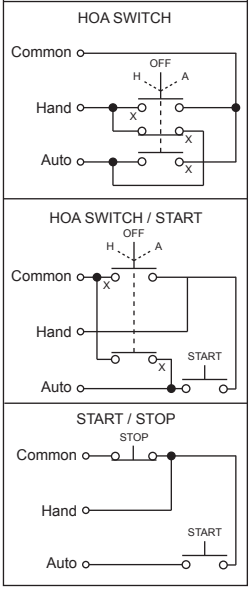

NOTES:

1. DASHED LINES INDICATE FIELD WIRING
2. WHEN JUMPER JAR IS PRESENT, TERMINALS V3 & H2 ACT AS CONNECTIONS FOR A NORMALLY OPEN, DRY CONTACT, AUTO RUN INPUT.
3. REMOVE JUMPER JAR TO USE V3 & V4 TERMINALS AS A VOLTAGE, AUTO RUN INPUT. APPLY 12~120VAC/DC TO ENERGIZE

Specifications

Starter Type			
IMS-RV - Intelligent Motor Soft-Starter			
Standard or Combination - Service Rated			
UL /NEMA Type 3R Enclosed			
User Interface			
Keypad with display screen		Internal	
Hand-Off-Auto Switch		Door mounted	
Standard Control Operations			
Inputs	Voltage Auto	Accepts 12-130VAC/DC. Applying voltage will send a run command to the starter when in Auto mode.	
	Dry Contact Auto	Normally Open dry contact. When closed, the starter will be commanded to run when in Auto mode.	
	Shutdown	Accepts 12-130VAC/DC. Applying voltage will open the contactor and the starter will not accept a run command Hand/Off/Auto LEDs will flash	
	RS-485	Modbus RTU slave	
	Analog	Selectable: 0-10V, 4-20mA, 10k Thermistor, viewable as a Modbus point	
Outputs	Status Relay	Normally Open relay contact, 0.3A @ 125VAC, 1A @ 24VAC	
	Fault Relay	Normally Open relay contact, 0.3A @ 125VAC, 1A @ 24VAC	
Operational	Overload Type	Electronic, I2t trip curve	
	Power Fail	Restart in last mode (Hand/Off/Auto) with no delay (default)	
		Restart in Off mode	
		Restart in Off mode if power failure lasts longer than 2 seconds. Restart in last mode if power failure is less than 2 seconds.	
	On/Off Delay	On/Off, Adjustable: 0.1-99 seconds	
	Fault Reset	Adjustable: Manual or Automatic (default differs per motor protection feature)	
	Starts	6/hour, 20 seconds max. start time @ 400% FLA, 30 seconds max. start time @ 300% FLA	
Environmental			
Ambient Operating Temp		-5° to 140° F (-20° to 60° C)	
Ambient Storage Temp		-5° to 185° F (-20° to 85° C)	
Relative Humidity		5% to 95% non-condensing (NEMA 1)	

Motor Protection	Adjustment/Description	Default Setting
Overload Current Setting Range	Differs per model	Per Amps
Overload Trip Class	Adjustable: 5-30	10
Overload Service Factor	Adjustable: 0.00-2.00	1.15
Over Power	On/Off, Adjustable: 101-200% of measured electrical input	On / 120%
Over / Under Voltage	On/Off, Adjustable: +5-25% over/under the nominal voltage setting	On / 10%
Voltage Phase Unbalance	On/Off, Adjustable: 1-20% voltage phase deviation	On / 3%
Voltage Phase Loss	Always On, Adjustable: 1-50% voltage phase deviation	On
Voltage Phase Sequence Reversal	On/Off, Trips within 0.1 seconds upon voltage phase reversal detection	On
Ground Fault (UL 1053 Certified)	On/Off, Adjustable: 1.0-9.9A	On / 1A
Cycle Fault	On/Off, Adjustable: Trip if cycle rate exceeds 20 starts/minute	On
Warm Start Provision	On/Off, Delays motor restart based on calculated motor temperature	On
Current Phase Unbalance	On/Off, Adjustable: 1-50% current phase unbalance	On / 5%
Locked Rotor / Stall	On/Off, Trips within 0.5 seconds	On
Shorted SCR	Always On: Trips upon detection of a shorted SCR or no motor	On
Open SCR	Always On: Trips if no current is detected during start-up or bypass	On
SCR Over-Temperature	Always On: Trips if the SCR temperature reaches 125oC	On
Across-the-Line Start	On/Off: Allows the user to start the motor across-the-line. (Turns soft starter into standard IPS)	On

Pilot Devices & Accessories

Fits 22mm Mounting Patterns
UL Type 1, 12, 3R, 4 & 4X

Selector Switches

	Type	Part Number
2-Position	Stay Put	CB2-BD2
	Spring Return	CB2-BDR2
3-Position	Stay Put	CB2-BD3
	Spring Return	CB2-BDR3
	Spring Return (R to C)	CB2-BD8
	Spring Return (L to C)	CB2-BD7

Key Switches

	Type	Part Number
2-Position	Stay Put	CB2-BG4
3-Position	Stay Put	CB2-BG0

** Key is removable in all positions*

Non-Illuminated Pushbuttons

	Type	Color	Part Number
	Flush Momentary	White	CB2-BA1
		Black	CB2-BA2
		Green	CB2-BA3
		Red	CB2-BA4
	Projecting Momentary	White	CB2-BL1
		Black	CB2-BL2
		Green	CB2-BL3
		Red	CB2-BL4
	Reset*	Black (Electrical)	CB2-BA2-RST

	Type	Style	Part Number
	Emergency Stop (Red, 40mm)	Turn Release	CB2-BS44
		Key Release	CB2-BS14
		Push/Pull	CB2-BT4
	Dual head Start/Stop	Push Button	CB2-BA87

**Mechanical style reset utilizes CB2-RPX extension shaft and electrical style utilizes CB2-BZ contact block assembly.*

Legend Plates

Description	Part Number
Bypass	CB2-PY2300BYP
Fwd-Auto-Rev	CB2-PY2300FAR
Fault	CB2-PY2300FLT
Fwd-Off-Rev	CB2-PY2300FOR
Low-Auto-High	CB2-PY2300LAH
M1-Auto-M2	CB2-PY2300MAM
M1-Off-M2	CB2-PY2300MOM
Off-Auto	CB2-PY2300OFA
Run	CB2-PY2300RUN
VFD-Off-Bypass	CB2-PY2300VFD
Start	CB2-PY2303
Forward	CB2-PY2305
Up	CB2-PY2307
On	CB2-PY2311
Open	CB2-PY2313
Auto	CB2-PY2315
Reset	CB2-PY2323
Slow	CB2-PY2327
Auto-Hand	CB2-PY2364
Stop	CB2-PY2304
Reverse	CB2-PY2306
Down	CB2-PY2308
Off	CB2-PY2312
Close	CB2-PY2314
Hand	CB2-PY2316
Inch	CB2-PY2321
Fast	CB2-PY2328
Hand-Off-Auto	CB2-PY2387
Low	CB2-PY2333
High	CB2-PY2334
High-Low	CB2-PY2335
Off-On	CB2-PY2336
Up-Down	CB2-PY2338
Emergency Stop (60mm)	CB2-PY9330
Emergency Stop (90mm)	CB2-PY8330

Complete Station - Start/Stop Spring Return

Meets UL Type 1, 12, 3R, 4 & 4X Ratings
Rugged Design
Convenient standard knockouts for easy installation

	Description	Part Number
	Plastic Control Station	**CC2P-215**
	Metal Control Station	**CC2M-215**

E-Stop Station

	Description	Part Number
	Keyed to Release Station	**CC-1PBS142**
	Pull to Release Station	**CC-1PBT42**

Compact Pilot Lights

	Color	Part Number
	Green	**CB2-B7-IV-73***
	Red	**CB2-B7-IV-74***
	Amber	**CB2-B7-IV-75***

** Select desired voltage from table upon ordering 12, 24, 110, 240*

Voltage Selection Chart

AC Voltage	24VAC	110VAC	240VAC
DC Voltage	12VDC	24VDC	

Miscellaneous Accessories

	Description	Part Number
	Attachment Collar	**CB2-B**
	Spare/Replacement Keys	**CB2-K455**
	Padlockable Cover	**CB2-BZ6**
	5.125"/130.18mm plastic shaft reset plunger (can be trimmed to any length)	**CB2-RPX**

Assemblies for Selector Switches & Pushbuttons

	Contact	Part Number
Contact Block & Collar	1 NO	**CB2-BZ101**
	1 NC	**CB2-BZ102**
	2 NO	**CB2-BZ103**
	2 NC	**CB2-BZ104**
	1 NO & 1 NC	**CB2-BZ105**
Additional Contact Blocks (Max 6)	1 NO	**CB2-BE101**
	1 NC	**CB2-BE102**

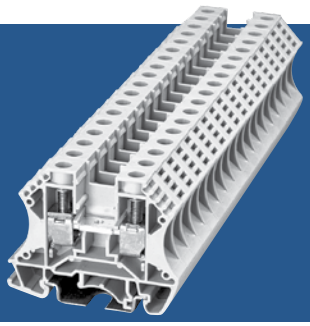

DIN Rail Mountable Terminal Blocks

25~230A at 600VAC
Accepts Wire Size 22~4/0 AWG
Compatible with 32mm & 35mm DIN rails

Specifications

- Increased conductivity and corrosion prevention through use of electrolytic copper conductors
- Screws and fasteners are made of high carbon steel to withstand higher torque
- Steel wirecase for tight connections and vibration resistance
- Large contact points for reliable connections
- Optional pre-printed terminal block markers (standard numeric or custom marking available)

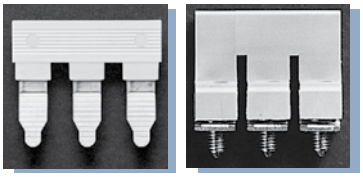

Choose between cage inserted (left) or central type (right) jumpers.

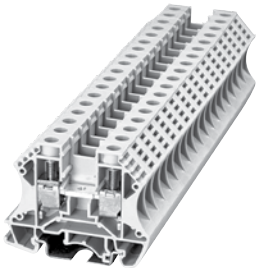

DK Series - Screw Clamp Connection

Part Number	Rated Current	Rated Surge Voltage (kV)	Solid Wire (AWG)	Stranded Wire (AWG)	Wire Strip Length (in)	Torque (lb-in)	Screw	Dimensions H x W x T (in)
DK2.5	25A	2.2	22~12	22~12	0.39~0.47	7	M3	0.20 x 1.87 x 2.32
DK4	35A	2.2	22~10	22~10	0.39~0.47	7	M3	0.24 x 1.87 x 2.32
DK6	45A	2.2	20~8	20~8	0.31	15.6	M4	0.31 x 1.87 x 2.32
DK10	60A	2.2	20~6	20~6	0.47~0.55	15.6	M4	0.39 x 1.87 x 2.32
DK16H	70A	2.2	14~6	14~6	0.59~0.67	30.4	M5	0.47 x 2.50 x 2.32
DK35H	115A	2.2	12~2	12~2	0.63~0.71	50	M6	0.63 x 2.50 x 2.32
DK50	150A	2.2	6~2(105A)	6~1/0	0.98~1.18	50	M6	0.79 x 3.02 x 2.78
DK95	230A	2.2	2~4(100A)	2~4/0	1.18~1.34	90	M8	0.98 x 3.48 x 3.15

Terminal Block Accessories

Model	End Cover	End Bracket	Cross Jumper			Terminal Markers*
			Central Type		Cage Inserted	
			2-Pole	3-Pole	2-Pole	
DK2.5	**DK2.5C**	**SS4**	**DS2.5-02P**	**DS2.5-03P**	**CSC-2.502P**	**TM26**
DK4		**SS4**	**DS4-02P**	**DS4-03P**	**CSC-402P**	**TM37**
DK6		**SS7**	**DS6-02P**	**DS6-03P**	**CSC-602P**	**TM27**
DK10		**SS7**	**DS10-02P**	**DS10-03P**	**CSC-1002P**	**TM28**
DK16H	**DK16HC**	**SS6**	**DS16-02P**	**DS16-03P**	-	**TM28**
DK35H		**SS6**	**DS35-02P**	**-**	-	**TM28**
DK50	-	**SS6**	-	**-**	-	**TM28**
DK95	-	**SS6**	-	-	-	**TM28**

**Specify numeric label range or custom values when ordering*

GK Series - Grounding Terminal Blocks

Part Number	Rated Current	Rated Surge Voltage (kV)	Solid Wire (AWG)	Stranded Wire (AWG)	Wire Strip Length (in)	Torque (lb-in)	Screw	Dimensions H x W x T (in)
DK2.5-PE	25A	2.2	26~12	26~12	0.39~0.55	6.9	M3	0.22 x 1.83 x 2.20
DK4-PE	35A	2.2	26~10	26~10	0.47~0.63	6.9	M3	0.26 x 1.83 x 2.20
DK10-PE	50A	2.2	16~8	16~8	0.47~0.63	15.6	M4	0.41 x 1.83 x 2.20
DK16-PE	65A	-	14~6	14~6	0.55~0.71	30.4	M5	0.47 x 2.46 x 2.20

SK Series - Spring Clamp Connection

Part Number	End Cover	Terminal Markers	Rated Current	Rated Surge Voltage (kV)	Solid Wire (AWG)	Stranded Wire (AWG)	Wire Strip Length (in)	Dimensions H x W x T (in)
AK4	**AK4C**	**TM37**	20A	2.2	28~12	28~12	0.39~0.55	1.30 x 2.32 x 0.24
AK4-TR	**AK4C-TR**	**TM37**	20A	2.2	28~12	28~12	0.39~0.55	1.30 x 3.39 x 0.24

Miniature Circuit Breakers

1~10A at 460VAC
Thermal-magnetic Release
1, 2 & 3-Pole Models

High Value, Supplemental Circuit Breaking

- D-curve magnetic trip point (10x rated current) provides quick response short circuit protection
- UL 1077 listed, supplemental overcurrent protection for situations where UL 489 branch protection is already provided or unnecessary
- Ideal for highly inductive loads or transformers
- IP20 finger safe design and 35mm DIN-rain mountable

Mini Circuit Breakers - D-Curve Magnetic Trip (6kA @ 400VAC)

Amps		Part Number		Part Number		Part Number
1		CI-MCB-D/1P-1A		CI-MCB-D/2P-1A		CI-MCB-D/3P-1A
2		CI-MCB-D/1P-2A		CI-MCB-D/2P-2A		CI-MCB-D/3P-2A
3		CI-MCB-D/1P-3A		CI-MCB-D/2P-3A		CI-MCB-D/3P-3A
4		CI-MCB-D/1P-4A		CI-MCB-D/2P-4A		CI-MCB-D/3P-4A
6		CI-MCB-D/1P-6A		CI-MCB-D/2P-6A		CI-MCB-D/3P-6A
10		CI-MCB-D/1P-10A		CI-MCB-D/2P-10A		CI-MCB-D/3P-10A
16	1-Pole	CI-MCB-D/1P-16A	2-Pole	CI-MCB-D/2P-16A	3-Pole	CI-MCB-D/3P-16A
20		CI-MCB-D/1P-20A		CI-MCB-D/2P-20A		CI-MCB-D/3P-20A
25		CI-MCB-D/1P-25A		CI-MCB-D/2P-25A		CI-MCB-D/3P-25A
32		CI-MCB-D/1P-32A		CI-MCB-D/2P-32A		CI-MCB-D/3P-32A
40		CI-MCB-D/1P-40A		CI-MCB-D/2P-40A		CI-MCB-D/3P-40A
50		CI-MCB-D/1P-50A		CI-MCB-D/2P-50A		CI-MCB-D/3P-50A
63		CI-MCB-D/1P-63A		CI-MCB-D/2P-63A		CI-MCB-D/3P-63A

WELD ON PITLESS ADAPTER

C USA
NSF / ANSI 372
LEAD FREE

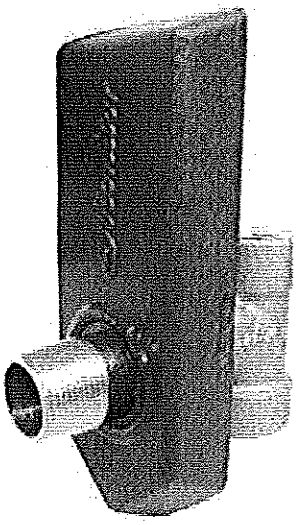

10/22/15

Weld on tear drop designed bottom for easy welding onto a steel casing in 8", 10" and 12" I.D. well sizes.

8123BEZLF Pitless Adapter Pressure Drop Test (using an 80 GPM pump to supply water flow)			
Flow Rate (GPM)	Inlet Pressure (psi)	Outlet Pressure (psi)	Pressure Drop (psi)
40	4	3	1
60	5.5	4.5	1
80	8.5	7	1.5

8-20-2002 Data

PDF Created with deskPDF PDF Writer - Trial :: http://www.docudesk.com

WELD ON PITLESS ADAPTERS

WELD ON PITLESS ADAPTER FOR 8", 10" & 12" WELLS

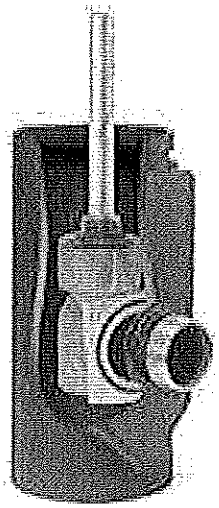

FEATURES

- Durable fabricated steel housing - brass elbow, stainless steel discharge, large drain hole in the pull pipe port, 3" FIP pull pipe, 3" FIP drop pipe, 3" stainless steel MIP discharge and large O-ring seal.
- Designed to be welded onto 8", 10" and 12" I.D. steel casing.
- Designed for shallow or deep settings and high working pressures up to 300 PSI.
- Durable steel housing with tear drop design for EZ bottom welding.
- Water contacts only 304 stainless steel and brass elbow for long term corrosion protection.
- No obstruction in the casing I.D. when the brass elbow is removed.
- Stainless steel 10° tapered slip fitting design on the elbow for easy installation and removal at time of servicing.
- Large O-ring neoprene seal.
- Large drain hole in the 3" FIP pull pipe port.
- Designed for 10,000 lbs. load.
- Also available factory welded to casing.

RCS 10/22/15

Weld On Pitless Adapter				
Order No.	Well Size	Drop Pipe Size	Discharge Size	Weight (lbs.)
8123BEZLF	8", 10", 12" I.D.	3" Female NPT	3" Male NPT	27
83BEZLF	Kit for 8" x 18" L.	3" Female NPT	3" Male NPT	75
83BEZ6LF	Kit for 6"	3" Female NPT	3" Male NPT	90
103BEZLF	Kit for 10" x 18" L.	3" Female NPT	3" Male NPT	95
123BEZLF	Kit for 12" x 18" L.	3" Female NPT	3" Male NPT	115
8123BEZ6LF	8"-12" w/nipple 6" L.	3" Female NPT	3" Male NPT	30

Baker Manufacturing Co., LLC/Monitor Division • Evansville, WI 53536
Phone: 800-356-5130 • Fax: 608-882-3777 • Website: bakermonitor.com
PDF Created with deskPDF PDF Writer - Trial :: http://www.docudesk.com

WELD ON PITLESS ADAPTERS

WELD ON PITLESS ADAPTER FOR 8", 10" & 12" WELLS

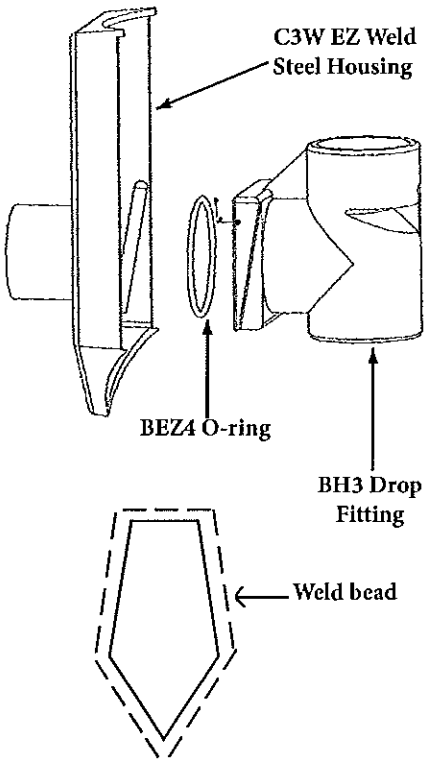

INSTALLATION INSTRUCTIONS

- Locate the template (provided) over the installation location on the steel pipe where you want to install the Monitor EZ Weld Pitless Adapter.
- Center punch at points A on the template.
- Connect all A points with A lines.
- Flame cut over lines. Note: Cut must be parallel with center line of pipe.
- After opening has been cut, pry out the cut casing at the bottom corner.
- BH3 drop fitting must fit through the cut hole.
- Clean off all slag and burrs on the cut casing opening. Place the C3W EZ weld steel housing onto the opening. Tac the corners to hold the steel housing in place. Weld the top and sides to the steel casing. Note: See diagram.

10/22/15

8123BEZLF Pitless Adapter Pressure Drop Test (using an 80 GPM pump to supply water flow)			
Flow Rate (GPM)	**Inlet Pressure** (psi)	**Outlet Pressure** (psi)	**Pressure Drop** (psi)
40	4	3	1
60	5.5	4.5	1
80	8.5	7	1.5

8-20-2002 Data

PDF Created with deskPDF PDF Writer - Trial :: http://www.docudesk.com

CERTIFIED LEAD FREE Ductile Iron Check Valve

NSF/ANSI 372

- ASTM A536 Ductile iron body. • Silicon bronze poppet.
- Stainless steel spring and nut. • Non-toxic polyester powder coat paint.

Standard Stemmed Poppet Check Valve

Stemmed Part No.	Size	Wt.Ea. lbs.	Ctn Qty
653SB	1	1.3	1
654SB	1-1/4	1.7	1
655SB	1-1/2	2.1	1
680SB	2	3.5	1
669SB	2-1/2	15.3	1
670SB	3	11.7	1
681SB	3*	13.1	1
671SB	4	21.5	1
674SB	5	33.7	1
672SB	6	44.5	1
683SB	6*	60.2	1
673SB	8	63.7	1
689SB	10	110.0	1

* High Flow Design

Stemless Poppet Check Valve

Stemless Part No.	Size	Wt.Ea. lbs.	Ctn Qty
2653SB	1	1.3	1
2654SB	1-1/4	1.7	1
2655SB	1-1/2	2.1	1
2680SB	2	3.5	1
-	2-1/2	15.3	1
-	3	11.7	1
2681SB	3*	13.1	1
2671SB	4	21.5	1
2674SB	5	33.7	1
-	6	44.5	1
2683SB	6*	60.2	1
-	8	63.7	1
-	10	110.0	1

* High Flow Design

CERTIFIED LEAD FREE Ductile Iron Check Valve with Break-off Plug

NSF/ANSI 372

- 1/2" Break-off plug standard. • 3/8" Break-off plug optional.

Check Valve (with Break-off Plug)

Stemmed Part No.	Size	Wt.Ea. lbs.	Ctn Qty
668SB	2-1/2	15.3	1
675SB	3	12.3	1
685SB	3*	13.4	1
676SB	4	21.3	1
679SB	5	34.0	1
677SB	6	44.7	1
687SB	6*	60.4	1
678SB	8	64.0	1
690SB	10	110.3	1

* High Flow Design

Stemless Check Valve (with Break-off Plug)

Stemless Part No.	Size	Wt.Ea. lbs.	Ctn Qty
-	2-1/2	15.3	1
-	3	12.3	1
2685SB	3*	13.4	1
2676SB	4	21.3	1
2679SB	5	34.0	1
-	6	44.7	1
2687SB	6*	60.4	1
-	8	64.0	1
-	10	110.3	1

* High Flow Design

CERTIFIED LEAD FREE Break-off Plug Only

- 303 Stainless steel.
- The break-off plug, when manually broken, allows water to drain from drop pipe before removal of pump.

Part No.	Size	Total Length	Wt.Ea. lbs.	Carton Quantity
4061	1/2	3.12	.5	1
4068	3/8	3.0	.4	1
4069**	1/2	6.0	.8	1

** For 8 & 10" Valves

*Silicon bronze components contain less than .05% (1/20 of 1%) Lead.

Check Valves furnished with Buna-N O-Ring, stainless steel spring, stainless steel washer, and stainless steel locknut. All valves 3/4" through 1-1/2" have a working pressure of 400 psi. All valves 2" and larger have a working pressure of 600 psi.

MADE IN U.S.A.

Founded 1882 PHOENIX ®

Commanding a Higher Standard SM

THE PHOENIX FORGE GROUP

1020 MACARTHUR ROAD, READING, PA 19605-9404
(610) 374-3117 • FAX: (610) 374-5211
www.phoenixforge.com

PRODUCT SPECIFICATION BULLETIN

CERTIFICATE of COMPLIANCE

COUPLINGS - API LINE

We hereby certify that the 1/8" through 12" API line couplings manufactured by Capitol Manufacturing conform to the requirements of the latest edition of API 5L. These products conform to the applicable metallurgical and hardness requirements of requirements of NACE MR0175, NACE MR0103, and ISO 15156 and do not exceed a Rockwell hardness of C-22 or a Brinnell hardness of 187 HBW maximum.

Dimensions: API line couplings conform to the dimensional requirements of API 5L.

Threads: The threads of API line couplings conform to API Standard 5B.

Material: API line couplings conform to the mechanical requirements of API 5L Grade "B" PLS 1.

Marking:
API line couplings sizes 1/8" through 3/8" are marked "∅".
API line couplings sizes 1/2" through 1" are marked "∅, SPEC 5L".
API line couplings sizes 1-1/4" through 1-1/2" are marked "∅, SPEC 5L, Heat Code".
API line couplings sizes 2" through 12" are marked "Cap Logo, API License Number, API Monogram, Date of Mfg., Size, B, PLS1, Heat Code".

Surface Finish:
Black Couplings: Zinc phosphate coated with light, dry to touch oil supplied as standard.
Galvanized Couplings: Electro-zinc plated per ASTM B633, Type III, SC2.

These products are manufactured in accordance with the Capitol Manufacturing and Phoenix Forging Company Certified Quality System Program conforming to ISO 9001:2008. These products are inspected by independent quality control personnel conforming to the requirements of EN 10204 Section 3.1B. These products were not exposed to mercury or any other metal alloy that is liquid at ambient temperatures during processing or while in our possession.

Bulletin: B-05.00 Rev. 6 Date: 08/01/11 Approved: Guy Cuccio Title: Technical Services Mgr.

Founded 1882 PHOENIX ®
Commanding a Higher Standard SM

THE PHOENIX FORGE GROUP

1020 MACARTHUR ROAD, READING, PA 19605-9404
(610) 374-3117 • FAX: (610) 374-5211
www.phoenixforge.com

PRODUCT SPECIFICATION BULLETIN

CERTIFICATE of COMPLIANCE

WORKING PRESSURES - API LINE and EXTRA HEAVY COUPLINGS

We hereby certify that the following API line and extra heavy non-recessed AAR couplings manufactured by Capitol Manufacturing will withstand the cold non-shock working pressures at ambient temperatures as listed below:

SIZE	COLD NON-SHOCK WORKING PRESSURE
1/8" - 1"	600 psi
1-1/4" - 2"	400 psi
2-1/2" - 4"	350 psi
5" – 12"	300 psi

We further certify that these products are manufactured and inspected in the United States of America. These products are produced in accordance with the Capitol Manufacturing and The Phoenix Forge Groups ISO 9001:2008 Certified Quality System Program.

These products are inspected by independent quality control personnel conforming to the requirements of EN 10204 Section 3.1B. These products were not exposed to mercury or any other metal alloy that is liquid at ambient temperatures during processing or while in our possession.

Bulletin: B-21.00 Rev. 6 Date: 08/01/11 Approved: Guy Cuccio Title: Technical Services Mgr.

Tags LT-4001
LT-5001

In-Situ

Innovations in **Water Monitoring** Spec Sheet

Level TROLL® 400, 500 & 700 Data Loggers

Get water level data the way you want it, when you want it with industry-leading water level/pressure and temperature data loggers. By partnering with In-Situ, you receive durable Level TROLL® Data Loggers that provide years of service, accurate results, intuitive software, and real-time functionality.

Be Effective

- **Increase productivity:** Reduce training and installation time with In-Situ intuitive software platform and integrated components. Patented twist-lock connectors, included on Level TROLL Loggers and RuggedCable® Systems, ensure error-free deployments.
- **Streamline analysis and reporting:** Automate water level corrections and post-processing, graph data, and accelerate report generation with Win-Situ® Software. Easily export data to Excel,® a web-based management service, or data analysis software.
- **Set up real-time networks:** Access data 24/7 and receive event notifications when you connect data loggers to Tube and Cube systems, radios, or other third-party data collection platforms. Get decision quality data when, where, and how you need it with HydroVu Data Services. Control gates, pumps, alarms, and other equipment by using built-in Modbus/RS485, SDI-12, or 4-20 mA communication protocols.

Be Reliable

- **Deploy in all environments:** Install loggers in fresh water, saltwater, and contaminated waters. Solid titanium and sealed construction outperforms and outlasts coated data loggers.
- **Log accurate data:** Get optimal accuracy under all operating conditions. Sensors undergo NIST®-traceable factory calibration across the full pressure and temperature range. For applications requiring the highest levels of accuracy, use a vented (gauged) system.
- **Get long-lasting operation:** Reduce trips to the field with low-power loggers that typically operate for 10 years.

Be In-Situ

- Receive **free**, 24/7 technical support and online resources.
- Order data loggers and accessories from the In-Situ website.
- Get guaranteed 7-day service for maintenance (U.S.A. only).

Applications

- **Aquifer characterization: slug tests & pumping tests**
- **Coastal: tide/harbor levels & wetland/estuary research**
- **Hydrologic events: crest stage gages, storm surge monitoring, & flood control systems**
- **Long-term, real-time groundwater & surface water monitoring**
- **Mining & remediation**

CALL OR CLICK TO PURCHASE OR RENT
1-800-446-7488 (toll-free in U.S.A. and Canada)
1-970-498-1500 (U.S.A. and international)
WWW.IN-SITU.COM

Level TROLL® 400, 500 & 700 Data Loggers

Spec Sheet

General	Level TROLL 400	Level TROLL 500	Level TROLL 700	Level BaroTROLL
Temperature ranges[1]	Operational: -20-80° C (-4-176° F) Storage: -40-80° C (-40-176° F) Calibrated: -5-50° C (23-122° F)	Operational: -20-80° C (-4-176° F) Storage: -40-80° C (-40-176° F) Calibrated: -5-50° C (23-122° F)	Operational: -20-80° C (-4-176° F) Storage: -40-80° C (-40-176° F) Calibrated: -5-50° C (23-122° F)	Operational: -20-80° C (-4-176° F) Storage: -40-80° C (-40-176° F) Calibrated: -5-50° C (23-122° F)
Diameter	1.83 cm (0.72 in.)	1.83 cm (0.72 in.)	1.83 cm (0.72 in.)	1.83 cm (0.72 in.)
Length	21.6 cm (8.5 in.)	21.6 cm (8.5 in.)	21.6 cm (8.5 in.)	21.6 cm (8.5 in.)
Weight	197 g (0.43 lb)	197 g (0.43 lb)	197 g (0.43 lb)	197 g (0.43 lb)
Materials	Titanium body; Delrin® nose cone	Titanium body; Delrin nose cone	Titanium body; Delrin nose cone	Titanium body; Delrin nose cone
Output options	Modbus/RS485, SDI-12, 4-20 mA	Modbus/RS485, SDI-12, 4-20 mA	Modbus/RS485, SDI-12, 4-20 mA	Modbus/RS485, SDI-12, 4-20 mA
Battery type & life[2]	3.6V lithium; 10 years or 2M readings	3.6V lithium; 10 years or 2M readings	3.6V lithium; 10 years or 2M readings	3.6V lithium; 10 years or 2M readings
External power	8-36 VDC	8-36 VDC	8-36 VDC	8-36 VDC
Memory *Data records*[3] *Data logs*	2.0 MB 130,000 50 logs	2.0 MB 130,000 50 logs	4.0 MB 260,000 50 logs	1.0 MB 65,000 2 logs
Fastest logging rate	2 per second	2 per second	4 per second	1 per minute
Fastest output rate	Modbus: 2 per second SDI-12 & 4-20 mA: 1 per second	Modbus: 2 per second SDI-12 & 4-20 mA: 1 per second	Modbus: 2 per second SDI-12 & 4-20 mA: 1 per second	Modbus: 2 per second SDI-12 & 4-20 mA: 1 per second
Log types	Linear, Fast Linear, and Event	Linear, Fast Linear, and Event	Linear, Fast Linear, Linear Average, Event, Step Linear, True Logarithmic	Linear
Sensor Type/Material	**Piezoresistive; titanium**	**Piezoresistive; titanium**	**Piezoresistive; titanium**	**Piezoresistive; titanium**
Range	Absolute (non-vented) 30 psia: 11 m (35 ft) 100 psia: 60 m (197 ft) 300 psia: 200 m (658 ft) 500 psia: 341 m (1120 ft)	Gauged (vented) 5 psig: 3.5 m (11.5 ft) 15 psig: 11 m (35 ft) 30 psig: 21 m (69 ft) 100 psig: 70 m (231 ft) 300 psig: 210 m (692 ft) 500 psig: 351 m (1153 ft)	Absolute (non-vented) 30 psia: 11 m (35 ft) 100 psia: 60 m (197 ft) 300 psia: 200 m (658 ft) 500 psia: 341 m (1120 ft) 1000 psia: 693 m (2273 ft) Gauged (vented) 5 psig: 3.5 m (11.5 ft) 15 psig: 11 m (35 ft) 30 psig: 21 m (69 ft) 100 psig: 70 m (231 ft) 300 psig: 210 m (692 ft) 500 psig: 351 m (1153 ft)	30 psia (usable up to 16.5 psi; 1.14 bar)
Accuracy[4]	±0.05% full scale (FS) ±0.1% FS	±0.05% FS ±0.1% FS	±0.05% FS ±0.1% FS	±0.05% FS ±0.1% FS
Resolution	±0.005% FS or better	±0.005% FS or better	±0.005% FS or better	±0.005% FS or better
Units of measure	Pressure: psi, kPa, bar, mbar, mmHg, inHg, cmH20, inH20 Level: in., ft, mm, cm, m	Pressure: psi, kPa, bar, mbar, mmHg, inHg, cmH20, inH20 Level: in., ft, mm, cm, m	Pressure: psi, kPa, bar, mbar, mmHg, inHg, cmH20, inH20 Level: in., ft, mm, cm, m	Pressure: psi, kPa, bar, mbar, mmHg, inHg, cmH20, inH20
Temperature Sensor	**Silicon**	**Silicon**	**Silicon**	**Silicon**
Accuracy	±0.1° C	±0.1° C	±0.1° C	±0.1° C
Resolution	0.01° C or better	0.01° C or better	0.01° C or better	0.01° C or better
Units of measure	Celsius or Fahrenheit	Celsius or Fahrenheit	Celsius or Fahrenheit	Celsius or Fahrenheit
Warranty	**3 years**	**3 years**	**3 years**	**3 years**
Notes	[1] Temperature range for non-freezing liquids. [2] Typical battery life when used within the factory-calibrated temperature range. [3] 1 data record = date/time plus 2 parameters logged (no wrapping) from device within the factory-calibrated temperature range. [4] Across factory-calibrated pressure range. [5] Across factory-calibrated pressure and temperature ranges. [6] Up to 5-year (total) extended warranties are available for all sensors—call for details. Delrin is a registered trademark of E.I. du Pont de Nemours and Company. Specifications are subject to change without notice.			

Every Application & Budget

Use maintenance-free, non-vented systems for long-term monitoring and at flood-prone or high-humidity sites. Pair with Tube and Cube Telemtry System and HydroVu for automtatic barometric compensation.

Use high-accuracy, vented systems to conduct aquifer tests and to view barometrically compensated water level data in real time.

Forgot to set a level reference at the beginning of a deployment? Automate level corrections by using Win-Situ Software's post-level correction Wizard.

BaroTROLL® Data Logger

When using a non-vented system, collect barometric pressure and temperature data with a titanium BaroTROLL Data Logger in order to post correct data for barometric pressure fluctuations.

Calculating barometric efficiency? Use the BaroTROLL Logger with vented systems.

CALL OR CLICK TO PURCHASE
1-800-446-7488 (toll-free in U.S.A. and Canada)
1-970-498-1500 (U.S.A. and international)
WWW.IN-SITU.COM
221 East Lincoln Avenue, Fort Collins, CO 80524 USA

Copyright © 2013 In-Situ Inc. All rights reserved. Nov. 2015 (T3; 2K)

Tags LT-4000
LT-5000

In-Situ Inc.

Innovations in Water Monitoring

In-Situ® RuggedCable® Systems

Durable, Direct-Read Cable

RuggedCable Systems are custom-built to endure harsh environments and to last for years. RuggedCable Systems include:

- Titanium twist-lock connectors for quick, reliable connections to instrument body, TROLL® Com Communication Device, desiccant, and other accessories (2-year warranty)
- Metal shield beneath the cable jacket to prevent electrical interferences
- Kellems® grip for secure instrument deployment
- Small desiccant for vented systems (only for storage)

Use RuggedCable Systems with:

- Aqua TROLL® 100, 200, and 400 Instruments
- BaroTROLL® Instruments
- Con TROLL® PRO System
- Level TROLL® 300, 500, and 700 Instruments
- RDO® PRO Probe (twist-lock models)
- TROLL® 9500 Water Quality Instruments
- TROLL® Link Telemetry Systems, MultiHop Radios, and TROLL® Net Hub

Customizable Cable

When ordering, consider the following options:

- **Vented or non-vented cable:** Vented cable is used with vented pressure/level sensors for gauged measurements. The cable vent tube ensures that atmospheric pressure is the reference pressure applied to the sensor diaphragm. Non-vented cable may be used with non-vented instruments for absolute measurements. Compensate absolute measurements with barometric pressure data by using a BaroTROLL® Instrument and Win-Situ® Baro Merge™ Software.
- **Jacket options:** Tefzel® (vented) or thermoplastic polyurethane (TPU; vented or non-vented)
- **Customized lengths:** Up to 1,219 m (4,000 ft) 600Ft Cable
- **Cable termination:** Twist-lock termination (female connector) on one or both cable ends. Other custom configurations are available—call for details.
- ~~**Cable reels:** Plastic or steel reel~~

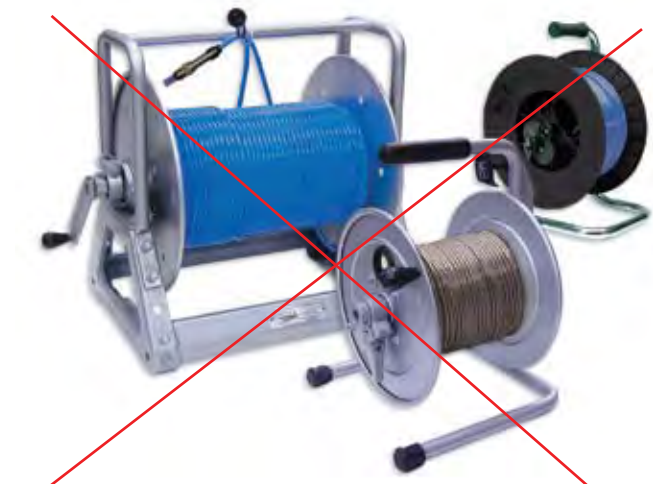

Steel and plastic reels available

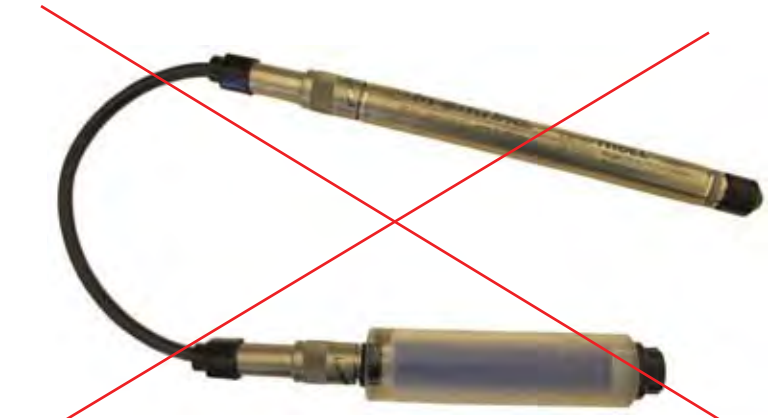

Extra large desiccant connected to RuggedCable System and Level TROLL Instrument

Titanium twist-lock connectors

In-Situ® RuggedCable® Systems

Specifications

Specifications	RuggedCable Systems
Operating temp. range	-25° to 80° C (-13° to 176° F)
Jacket options	• TPU (thermoplastic polyurethane) • Tefzel® (ETFE fluoropolymer; generic equivalent to Teflon®)
Vent options	• Non-vented (absolute) • Vented (gauged) with desiccant (used to mitigate moisture/humidity)
Conductors	6 conductors, 24 AWG, polypropylene insulation
Cable diameter	• TPU: 6.7 mm (0.265 in) • Tefzel: 6.35 mm (0.25 in)
Connector diameter	18. 5 mm (0.73 in)
Weight	• Non-vented, TPU: 16 kg/300 m (35.6 lbs/1,000 ft) • Non-vented, Tefzel: 14 kg/300 m (32 lbs/1,000 ft) • Vented, TPU: 14 kg/300 m (32 lbs/1,000 ft) • Vented, Tefzel: 14 kg/300 m (32 lbs/1,000 ft)
Minimum bend radius	2X cable diameter (13.5 mm; 0.54 in)
Break strength	127 kg (280 lbs)
Maximum cable length	1,219 m (4,000 ft) for RS485
Desiccant pack (required for vented systems)	Large and extra large desiccant packs available with titanium, ABS, or stripped-and-tinned termination.
Warranty	2 years

RuggedCable Selection Guide

Application	Jacket Type	Cable Type
Aquifer characterization	TPU or Tefzel	Vented
Crest stage gaging	TPU	Non-vented
Dewatering	TPU	Vented or non-vented
Flood and storm surge monitoring	TPU	Non-vented
Landfill monitoring	Tefzel	Non-vented
Municipal and industrial monitoring (SCADA)	TPU	Non-vented
Remediation projects	Tefzel	Vented
River, lake, and reservoir monitoring	TPU	Vented or non-vented
Saltwater/brackish water	TPU or Tefzel	Vented or non-vented
Stormwater monitoring	TPU	Vented or non-vented
Tide/harbor monitoring	TPU or Tefzel	Vented
Wetland and estuary monitoring	TPU or Tefzel	Vented or non-vented

Specifications are subject to change without notice.

Accessories

- Large desiccant for low-humidity environments or for deployments where maintenance occurs frequently.
- Extra large desiccant for high-humidity environments or for depolyments where maintenance occurs infrequently. Desiccates six times more saturated air than the large desiccant.
- Titanium cable extenders are used to join two lengths of cable without signal loss. The cable extender seals the cables, provides a weight-bearing connection, and maintains venting.
- Plastic and steel reels

Large desiccant with titanium twist-lock connector for standard deployments

Economical large plastic desiccant

Extra large desiccant with titanium twist-lock connector for high-humidity sites, remote sites, or applications that require fast sampling rates.

Outboard desiccant for use with stripped-and-tinned RuggedCable Systems

Titanium cable extender

Kellems is a registered trademark of Hubbell Incorporated.
Teflon and Tefzel are registered trademarks of E.I. Du Pont de Nemours and Co.

In-Situ Inc.

Call to purchase or rent—www.in-situ.com
221 East Lincoln Avenue, Fort Collins, Colorado, U.S.A. 80524
1-800-446-7488 (toll-free in U.S.A. and Canada)
1-970-498-1500 (U.S.A. and international)
Copyright © 2012 In-Situ Inc. All rights reserved. Sept. 2012 (web)

In-Situ Inc.

Information Sheet

Catalog No. 0053310

SHORT STRIPPED & TINNED CABLE with Male Twist-Lock Connector for Level TROLL®

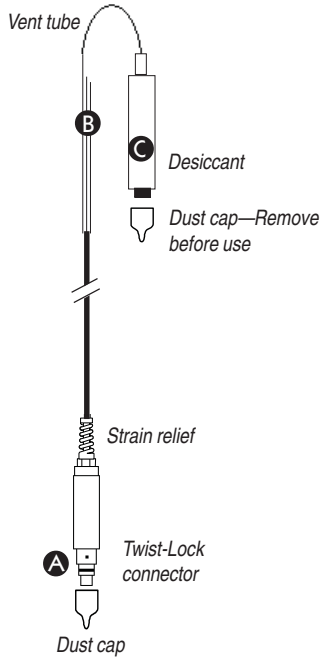

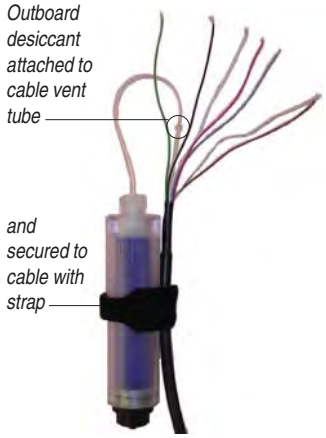

TIP: *The desiccant may be removed from the vent tube, if needed, for better access to the conductor wires. Pull the vent tube extender off the cable vent tube to remove. After connecting and trimming wires, attach desiccant vent tube to cable vent tube and secure desiccant to cable with hook-and-loop strap, as shown here.*

Connects a Level TROLL's RuggedCable™ to a controller or logger for communication via:

- Analog (4-20 mA)
- SDI-12
- RS485 Modbus
- RS232 Modbus (with a customer-supplied converter)

A Male Twist-Lock connector mates with female Twist-Lock connector on the RuggedCable

B Stripped & tinned wires on opposite end for wiring to PLC or logger

C Removable, refillable outboard desiccant protects cable vent tube from condensation in high-humidity environments

SPECIFICATIONS

Materials	PVC, titanium, nylon, Viton®
Dimensions	13.33 cm (5.25 in) long, 19 mm (0.75 in) O.D.
Environmental Rating	IP67 when connected, not designed for submersion
Cable	0.9 m (3 ft) vented TPU (Thermoplastic Polyurethane)
Conductors	6 conductors, 24 AWG, polypropylene insulation
Desiccant pack	Clear acrylic, nylon, HDPE membrane
Desiccant	approx. 22 g silica gel, type 4
Max. recommended cable lengths	SDI-12 61 m (200 ft) Modbus 1259 m (4000 ft) 4-20 mA 1259 m (4000 ft)

CONNECTIONS

Refer to wiring diagrams on back of sheet. Trim back and insulate unused wires. The shield should be wired to a chassis ground or earth ground.

Power Connections. The Red wire provides power for Modbus and SDI-12 modes. The Brown wire provides power for the 4-20 mA mode. If power is present on the Brown wire and not on the Red wire, the device enters the 4-20 mA mode automatically and stays in the 4-20 mode until power is removed from the Brown wire or is applied to the Red wire. The Red wire has priority — if power is applied to both wires at the same time, the device will operate in Modbus or SDI-12 modes but not in 4-20.

Communications. The device automatically switches between Modbus and SDI-12 modes depending on which of the two interfaces has activity. Modbus and SDI-12 cannot be used at the same time — whichever one is currently in use will block communication on the other.

To communicate with the device using Win-Situ® 5 software through a serial COM port: Disconnect the RuggedCable from the short stripped and tinned cable connector. Attach a TROLL Com to the RuggedCable. Connect the TROLL Com's DB9-pin connector to a serial port on a PC running Win-Situ 5.

(over)

SHORT STRIPPED & TINNED CABLE

Level TROLL Connections

ANALOG (4-20 mA) 2 WIRE

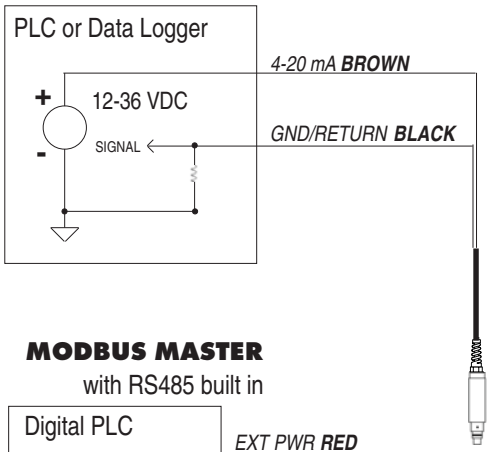

SDI-12 3 WIRE

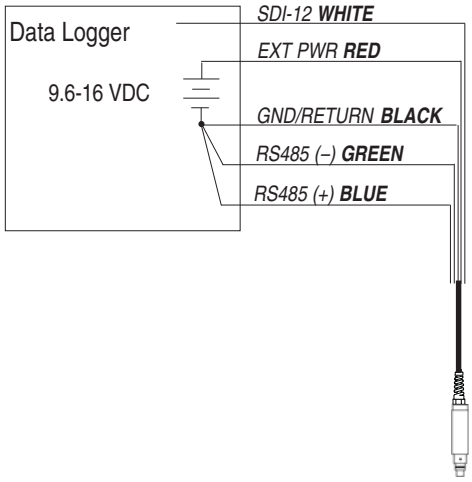

MODBUS MASTER

with RS485 built in

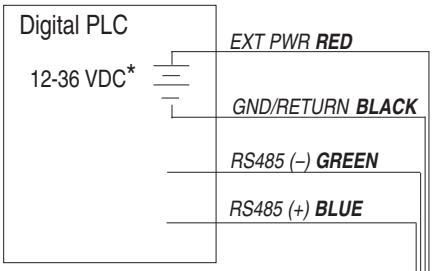

* Optional but highly recommended

MODBUS MASTER

with RS232 built in (converter required)

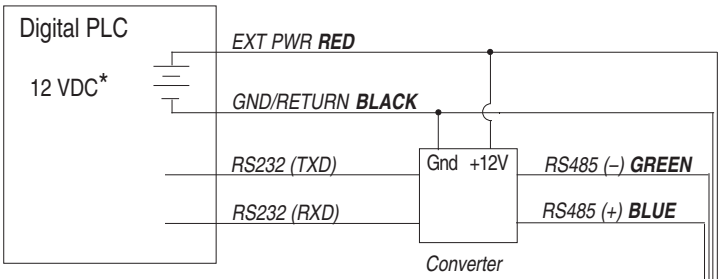

* Voltage limited by converter

Signal	Color
Gnd/Return	BLACK
Ext Power	RED
4-20 mA	BROWN
RS485(–)	GREEN
RS485(+)	BLUE
SDI-12	WHITE

CONVERTER

Port-Powered RS485 converter, such as B&B Electronics Model 485SD9TB

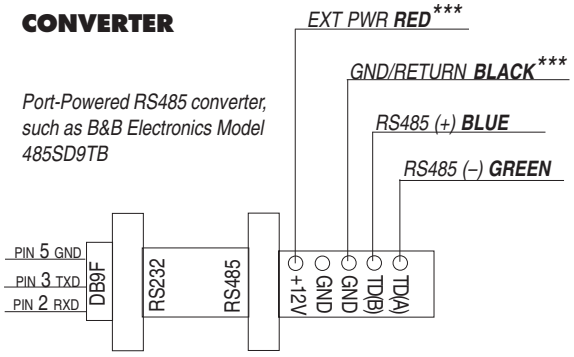

*** Required if port power is not available

1 800 446 7488
(toll-free, US and Canada) or 970 498 1500 **www.in-situ.com**

In-Situ Inc.

Due to continuing product development this information is subject to change without notice. In-Situ and the In-Situ logo, Win-Situ, TROLL, BaroTROLL, RuggedReader, RuggedCable and RDO are trademarks or registered trademarks of In-Situ Inc. Viton is a registered trademark of DuPont Dow Elastomers.
Copyright © 2005-2007 by In-Situ Inc. All rights reserved.

0053312 rev. 004 09/07

TAG: LSH-7001
LSH-7002
LSH-4002
LSH-5002
LSH-6001

Series 3R/3T
General Purpose Probes

- Metallic Rods
- Available in Many Materials for Various Requirements
- Adaptable for Various Fittings

For general purpose use, Series 3R probes are metallic rods with threaded ends that screw into a fitting that extends vertically down into the liquid. Available in a variety of materials for different applications. 3T tapered rods are also available.

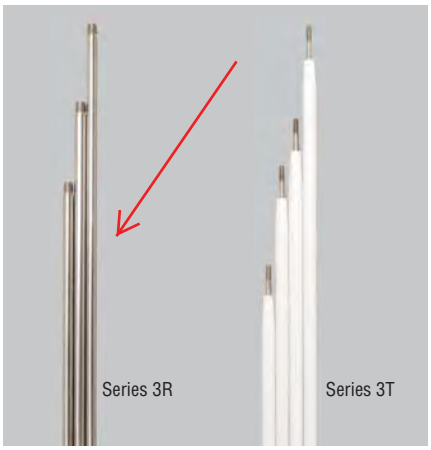

Specifications

Style	
Series 3R	1/4˝ (.64 cm) threaded rod
Series 3T	1/4˝ (.64 cm) tapered rod
Material	Brass, Hastelloy C, Monel, 316 stainless steel, titanium, Carp. 20
Sheathing (optional)	PVC heat shrink 200°F (93°C), Teflon® heat shrink 350°F (177°C)

Applications

3R: For use with Series 3E, 3F, 3G, 3B fittings

3T: For use with Series 3G and other custom configurations

How to Order

Use the **Bold** characters from the chart below to construct a product code.

3R **2** **C** **4**

Series
3R **3T**

Length (Feet)
1 – One
2 – Two
3 – Three
4 – Four
5 – Five
6 – Six
7 – Seven
8 – Eight
9 – Nine
10 – Ten

Probe Material
A – Brass
C – 316 Stainless Steel
D – Carp. 20
E – Hastelloy B
F – Hastelloy C
G – Monel
H – Titanium

Sheathing Heat Shrink
0 – None
4 – PVC
5 – Teflon®

Contact your representative for custom lengths.

Note: Long lengths can be coupled to facilitate shipping and installation. Consult factory.

Dimensions

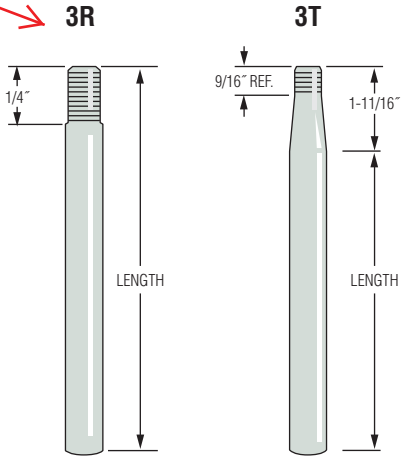

WARRICK CONDUCTIVITY SENSORS

TAG: LSH-4001
LSH-5001

Series 3W – Wire Suspended Probes

- Metallic Bars
- Plastic Shield Protected
- Adaptable to Many Fittings
- Field Assembled

Series 3W probes, consisting of metallic bars within a protective plastic shield, are designed to be suspended in liquid with PVC-insulated wires. They are ideal for applications where rigid electrode rods are impractical or cumbersome, such as:

- Deep Wells
- Pump Control
- Waste Water
- Deep Tanks

7/8″ (2.22 cm) diameter x 3-3/4″ (9.52 cm) length. 3Z1A wire and 3Z1B adaptor kit required for use with 3E, 3F and 3N fittings.

Series 3W

How to Order

Select a 3W electrode, a 3Z1B adaptor and a length of 3Z1A suspension wire to form a complete suspended probe.

1. 3W Electrodes

Probe Material	Part Number
Brass	3W1
316 Stainless Steel	3W2

2. 3Z1B Adaptor Kit
For use with 3E, 3F and 3N fittings.
Part Number: 3Z1B

3. 3Z1A Suspension Wire
Order in standard or custom length.

Length (Feet)	Part Number
500	100325-500
1000	100325-1000
5000	100325-5000
Custom	3Z1A-20

Specify in one foot increments up to 5000 ft.

Components Detail

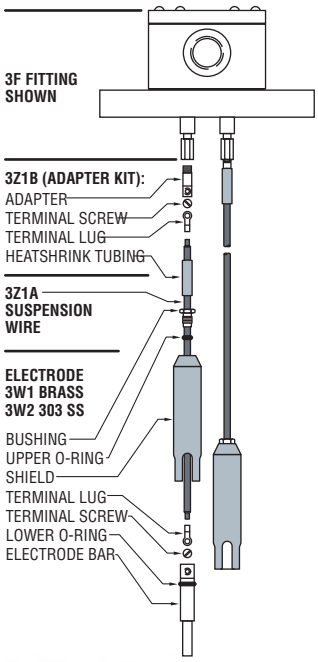

Series 3Y – Corrosion Resistant Probes

- Metallic Bars
- Corrosion Resistant
- Available in Many Materials for Various Requirements
- Adaptable for Various Fittings

Series 3Y wire suspended probes consist of metallic bars within a protective plastic shield, designed to be suspended in liquid. Series 3Y suspension wires are PVC or Teflon® insulated for use in corrosive liquid applications. 7/8″ (2.22 cm) diameter x 3-1/2″ (8.90 cm) length.

Series 3Y

Specifications

Style	Wire suspended
Tip Material	Carp. 20, Hastelloy C, 316 stainless steel
Shield Material	PVC 150°F (66°C), Teflon®

How to Order

Use the **Bold** characters from the chart below to construct a product code.

3Y X X X

Series
3Y

Shield Material
1 – PVC
3 – Teflon®

Probe Tip Material
C – 316 Stainless Steel
D – Carp. 20
F – Hastelloy C

Length of Wire
1 – 10 feet
2 – 20 feet
3 – 30 feet
etc.

Note: 3Z1B Connector is used to connect suspension wire with 3B, 3E, 3F, 3G or 3N fitting.

Applications

- General Purpose
- Wire Suspended Probes
- Corrosive Liquids, Chemicals

BOM #19
TAGS: LSHY-4001
LSHY-4002
LSHY-5001
LSHY-5002
LSHY-6001
LSHY-7001
LSHY-7002

Warrick

Series 16DM

Series 16DM DPDT Load Contact, Solid State Plug-In Module

Part No. 16DMB1B0
Unit Price $267
Lead Time (Days) 5

Image is of actual product

Model	16DM
Mode of Operation	Direct
Sensitivity	10 K
Control Style	Plug-In Module
Socket Style	DIN Mount
Standoff Style	N/A
Enclosure	None
Contact Design	2 Normally Open & 2 Normally Closed (non-powered)
Contact Rating	5 Amp Resistive 1/10 horse power
Secondary Voltage	12 VAC
Terminal Style	Screw Connector
Number of Channels	1
Minimum Temperature (°F)	-40
Maximum Temperature (°F)	150
Protection	Non-Intrinsically Safe
Approvals	UL 508 General Purpose
Minimum Qty (per Release)	1
Weight (Lbs)	1.1

Options

Warrick® Series 16DM Controls

Installation and Operation Bulletin

This bulletin should be used by experienced personnel as a guide to the installation of series 16DM controls. Selection or installation of equipment should always be accompanied by competent technical assistance. We encourage you to contact Gems Sensors Inc. or its representative if further information is required.

	Specifications
Control Design:	Solid-State components enclosed in clear Lexan plug-in style housing. Housing carries no NEMA rating
Contact Design:	2 SPDT (2 form C): Two Normally Open (N.O.) and two Normally Closed (N.C.), non-powered contacts
Contact Ratings:	5 A @ 120, 240 VAC resistive, 1/8 H.P. @ 120 or 240 VAC
Contact Life:	Mechanical: 5 million operations - Electrical: 100,000 operations minimum at rated load
Supply Voltage	24, 120, or 240 VAC Models - Factory Set. Plus 10%, minus 15%, 50/60 Hz
Supply Current:	120, 240, 24 VAC, Relay energized 4.4 VA
Secondary	12 VAC RMS Voltage on probes. 1.5 milli-amp Current
Circuit:	Models operate from 0 to 1,000,000 OHM maximum
Sensitivity:	specific resistance - Factory set
	-40° To 150°F Ambient
Temperature:	All connections #6-32 screw type with pressure clamps
Terminals:	Standard, 0.5 seconds on rising level.
Time Delays:	Additional time delays on rising and/or falling level available as option.
Listings:	U.L. Listing, Industrial Motor Control (508). 240 and 208 volt units are not U.L. limit control recognized.

Installation

1. Install octal socket in appropriate enclosure using two #6 or #8 metal screws.
   a) Install rail mount socket on appropriate rail (DIN mount) in appropriate enclosure, if applicable.
2. Wire control per wiring diagram, following N.E.C. and local codes.
3. Install control module in socket.

Sensitivities vs Maximum Probe Wire Distance*

Sensitivity Character	Sensitivity (K Ohms)	Distance (Ft.)
A or K	4.7	10,000
B or L	10	5,700
C or M	26	2,200
D or N	50	1,075
E or P	100	570
F or R	470	270
G or S	1,000	38

* Based on type MTW or THHN wire, #14 or #16 Awg

Dimensions

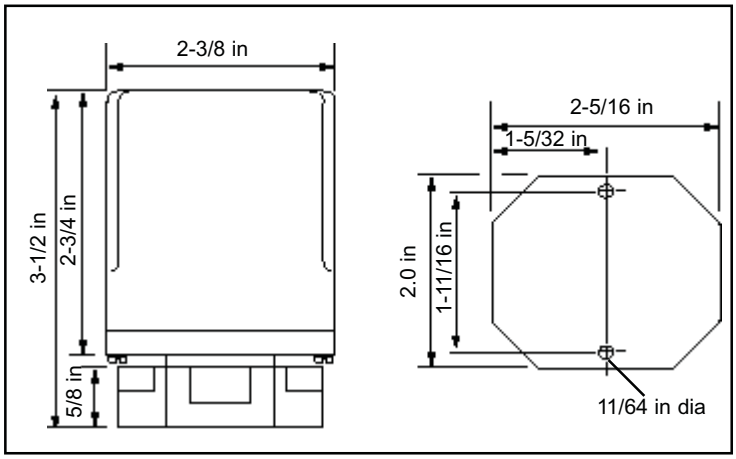

Use copper (60/70° C) wire only. Torque to 20 inch pounds.

Wiring Diagram

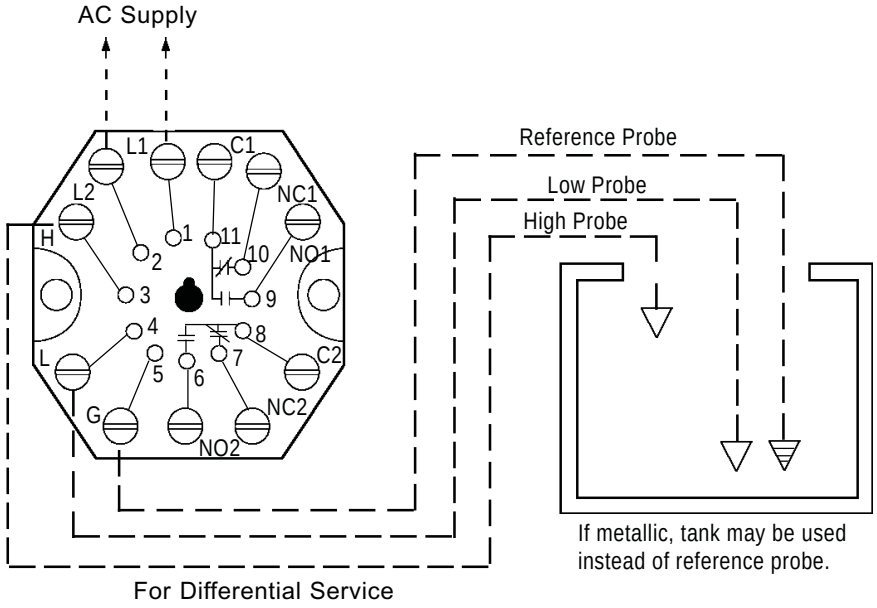

Note: For Single Level Service, use "H" and "G" Connections

Operation

Direct Mode - Single Level Service:
When the liquid rises to the electrode on terminal 3, the control energizes, changing state of the load contacts. **(LED will be lit)** The control remains energized until the liquid level recedes below electrode on terminal 3. The control then de-energizes, **(LED will not be lit)** returning load to original state.

Inverse Mode - Single Level Service:
Control energizes with power, changing state of the load contacts. **(LED will be lit)** When the liquid rises to the electrode on terminal 3, the control de-energizes, returning the load contacts to shelf state. **(LED will not be lit)** The control remains de-energized until liquid level recedes below the electrode connected to terminal 3. The control then energizes.

Direct Mode - Differential Service:
When the liquid rises to the electrode on terminal 3, the control energizes, changing state of the load contacts. **(LED will be lit)** The control remains energized until the liquid level recedes below electrode on terminal 4. The control then de-energizes, **(LED will not be lit)** returning the load contacts to original state.

Inverse Mode - Differential Service:
Control energizes with power, **(LED will be lit)** changing state of the load contacts. When the liquid rises to the electrode on terminal 3, the control de-energizes, returning load contacts to shelf state. **(LED will not be lit)** The control remains de-energized until the liquid level recedes below the electrode on terminal 4. The control then energizes.

Optional

Time Delays: With time delay on increasing level, the liquid must be in contact with the short electrode for the full duration of the time delay before control will operate. With delay on decreasing level, the liquid must be below long electrode for the full duration of the time delay before control will operate. In single level service, terminals 3 and 4 must be jumpered together to achieve time delays on both increasing and decreasing levels or just decreasing level.

16DM B 1 B **-XX-XX**

Time Delay: (decreasing level) 1-20 sec.
Time Delay: (increasing level) 1-20 sec.
Enclosure: 0-none, 1-NEMA 1, 4-NEMA 4, 7-NEMA 7, 12-NEMA 12
Socket Style: A - 11 Pin Octal, B - 11 Pin DIN Mount, M - None, Module Only
Supply Voltage: 1- 120 VAC, 2- 240 VAC, 3- 24 VAC, 8- 208/240 VAC*
Mode/Sensitivity:
Direct A- 4.7K, B- 10K, C- 26K, D- 50K, E- 100K, F- 470K, G- 1M
Inverse K- 4.7K, L- 10K, M- 26K, N- 50K, P- 100K, R- 470K, S- 1M

*187 Vmin to 255 Vmax VAC

Gems Sensors Inc.
One Cowles Road
Plainville, CT 06062-1198
Tel: 860-793-4579
Fax: 860-793-4580

Product: 700-HK32A1

BOM #21

Description: 700-HK General Purpose Slim Line Relay

Representative Photo Only
(actual product may vary based on configuration selections)

CONTROL RELAY DATA

Contact Rating	8 Amp Contact (Slim Line Relay)
Contact Configuration	DPDT Contact Arrangement
Coil Voltage	120V 50/60Hz
Relay Option	No Additional Options

CERTIFICATIONS AND APPROVALS

CE	Marked
UL	Listed with socket, Guide No. NLDX, File No. E3125
UR	Recognized, Guide No. NLDX2, File No. E3125
CSA	
For UL Certifications Directory:	http://database.ul.com/cgi-bin/XYV/template/LISEXT/1FRAME/index.htm

acr
10/4/15

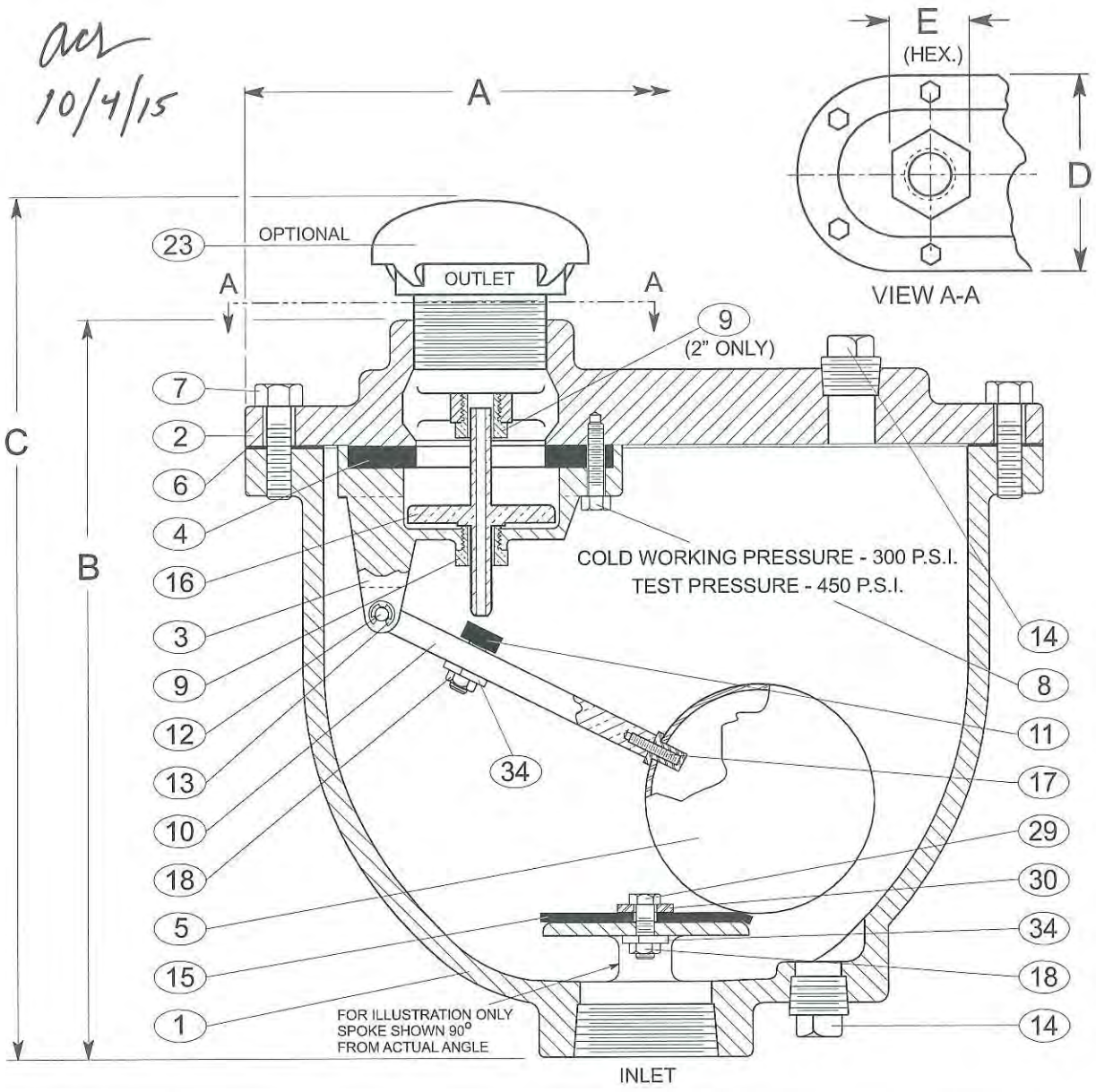

1	BODY	5	FLOAT	9	BUSHING	13	RETAINING RING	18	LOCK NUT
2	COVER	6	GASKET	10	FLOAT ARM	14	PIPE PLUG	23	SCREENED HOOD
3	BAFFLE	7	COVER BOLTS	11	ORIFICE BUTTON	15	CUSHION	29	CUSHION RETAINER
4	SEAT	8	RETAINING SCREWS	12	PIVOT PIN	16	PLUG	30	WASHER
						17	FLOAT RETAINER	34	LOCK WASHER

SEE DRAWING NO. VM-201C-M FOR STANDARD MATERIALS OF CONSTRUCTION.

VALVE SIZE	MODEL NO.*	A	B	C	D	E	INLET SIZE	OUTLET SIZE	ORIFICE SIZE
1"	201C.2	11 3/8"	10 1/2"	12 5/8"	6 3/8"	2"	1" N.P.T.	1" N.P.T.	5/64"
2"	202C.2	14"	13"	15 7/8"	8 1/4"	3 1/4"	2" N.P.T.	2" N.P.T.	3/32"

*Add "H" to Model No. for optional screened hood SPK-1H.

Revised 1-9-06

COMBINATION AIR VALVE (SINGLE BODY TYPE)

DATE 2-2-69

VAL-MATIC® VALVE AND MANUFACTURING CORP.

DRWG. NO. VM-201C

COMBINATION AIR VALVES (SINGLE BODY TYPE)

MODEL NOS. 201C.2 - 202C.2 - 203C.2 - 204C.2

STANDARD MATERIALS OF CONSTRUCTION

PART NO.	PART NAME	MATERIAL
1	BODY	CAST IRON ASTM A126, CLASS B
2	COVER	CAST IRON ASTM A126, CLASS B
3	BAFFLE	CAST IRON ASTM A126, CLASS B
4	SEAT	BUNA-N
5	FLOAT	STAINLESS STEEL T316, ASTM A240
6	GASKET	COMPRESSED NON-ASBESTOS FIBER
7	COVER BOLT	ALLOY STEEL SAE, GRADE 5
8	RETAINING SCREWS	STAINLESS STEEL T316, ASTM F593
9	GUIDE BUSHING	STAINLESS STEEL T316, ASTM A240
10	FLOAT ARM	STAINLESS STEEL T316, ASTM A240
11	ORIFICE BUTTON	STAINLESS STEEL & BUNA-N
12	PIVOT PIN	STAINLESS STEEL T316, ASTM A276
13	RETAINING RING	STAINLESS STEEL PH 15-7 MO
14	PIPE PLUG	STEEL
15	CUSHION	BUNA-N
16	PLUG	STAINLESS STEEL T316, ASTM A276
17	FLOAT RETAINER	STAINLESS STEEL T316, ASTM F880
18	LOCK NUT	STAINLESS STEEL T316, ASTM F594
29	CUSHION RETAINER	STAINLESS STEEL T316, ASTM F593
30	WASHER	STAINLESS STEEL T316, ASTM A240
34	LOCK WASHER	STAINLESS STEEL T316, ASTM A240

NOTE: ALL SPECIFICATIONS AS LAST REVISED.

Revised 1-29-03

MATERIALS OF CONSTRUCTION	DATE 2/2/69
VAL-MATIC® VALVE AND MANUFACTURING CORP.	DRWG. NO. VM-201C-M

CLASSIFIED C UL US

WATER QUALITY
NSF / ANSI 61
2LA8

aes
10/4/12

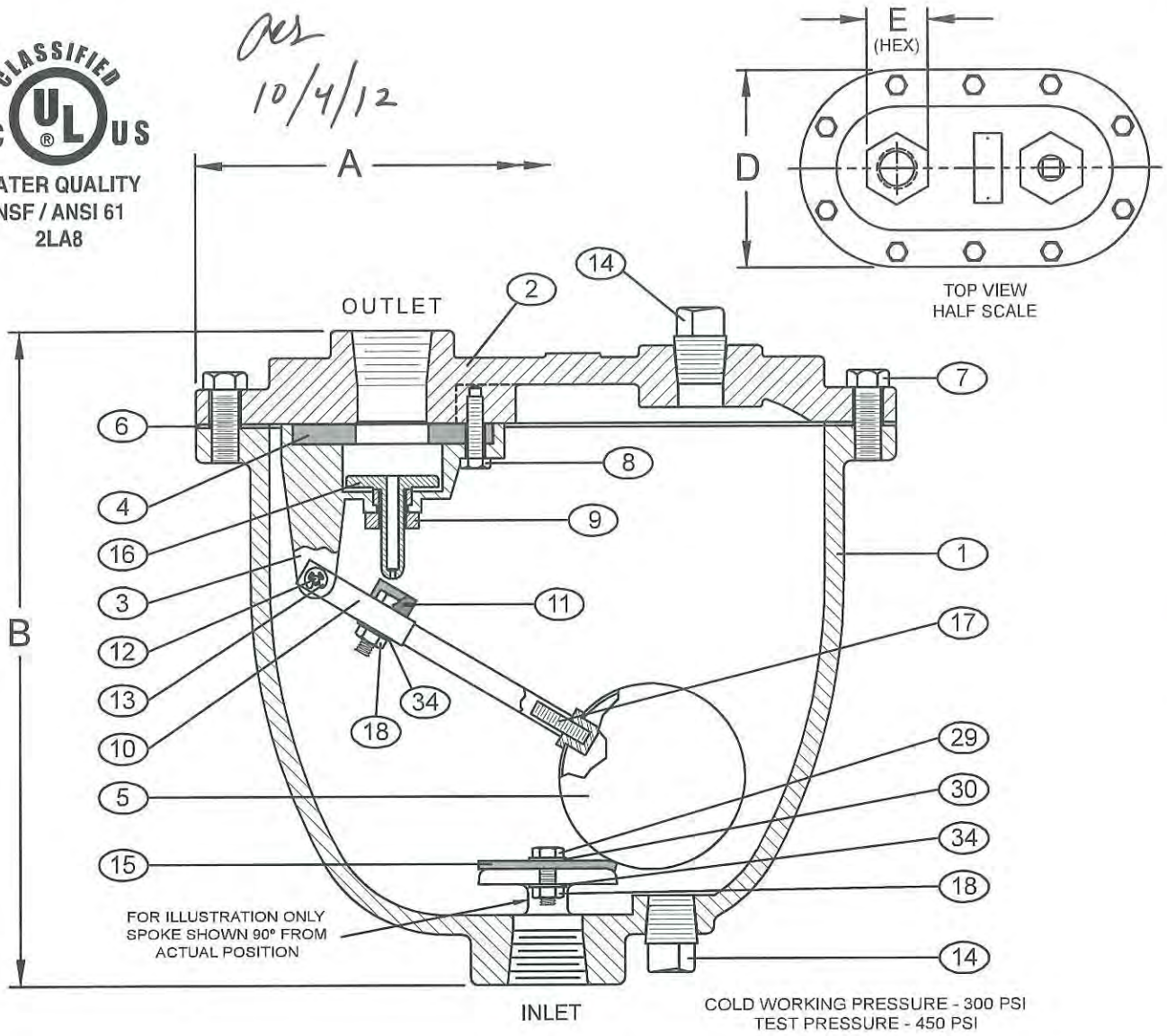

SEE DRAWING NO. VM-201C-M FOR STANDARD MATERIALS OF CONSTRUCTION.
SEE DRAWING NO. VM-201CDISV-M FOR SUPER VALVE MATERIALS OF CONSTRUCTION.

VALVE SIZE	MODEL NUMBER	A	B	D	E	INLET SIZE	OUTLET SIZE	ORIFICE SIZE
1"	201C.2	11.38	10.50	6.38	2.00	1" NPT	1" NPT	5/64"

1	BODY	8	RETAINING SCREWS	15	CUSHION
2	COVER	9	BUSHING	16	PLUG
3	BAFFLE	10	FLOAT ARM	17	FLOAT RETAINER
4	SEAT	11	ORIFICE BUTTON	18	LOCK NUT
5	FLOAT	12	PIVOT PIN	29	CUSHION RETAINER
6	GASKET	13	RETAINING RING	30	WASHER
7	COVER BOLTS	14	PIPE PLUG	34	LOCK WASHER

Revised 8-19-14 (Rev 1)

COMBINATION AIR VALVE (SINGLE BODY TYPE)

DATE 5-8-13

VAL-MATIC VALVE AND MANUFACTURING CORP.

DRWG. NO. VMC-201C

COMBINATION AIR VALVES (SINGLE BODY TYPE)

MODEL NOS. 201C.2SV - 202C.2SV - 203C.2SV - 204C.2SV

STANDARD MATERIALS OF CONSTRUCTION

PART NO.	PART NAME	MATERIAL
1	BODY	CAST IRON ASTM A126, CLASS B (INTERIOR / EXTERIOR FUSION BONDED EPOXY)
2	COVER	CAST IRON ASTM A126, CLASS B (INTERIOR / EXTERIOR FUSION BONDED EPOXY)
3	BAFFLE	CAST IRON ASTM A126, CLASS B (INTERIOR / EXTERIOR FUSION BONDED EPOXY)
4	SEAT	EPDM
5	FLOAT	STAINLESS STEEL T316, ASTM A240
6	GASKET	COMPRESSED NON-ASBESTOS FIBER
7	COVER BOLT	STAINLESS STEEL T316, ASTM F593
8	RETAINING SCREWS	STAINLESS STEEL T316, ASTM F593
9	GUIDE BUSHING	STAINLESS STEEL T316, ASTM A240
10	FLOAT ARM	STAINLESS STEEL T316, ASTM A240
11	ORIFICE BUTTON	STAINLESS STEEL & EPDM
12	PIVOT PIN	STAINLESS STEEL T316, ASTM A276
13	RETAINING RING	STAINLESS STEEL PH 15-7 MO
14	PIPE PLUG	STAINLESS STEEL
15	CUSHION	BUNA-N
16	PLUG	STAINLESS STEEL T316, ASTM A276
17	FLOAT RETAINER	STAINLESS STEEL T316, ASTM F880
18	LOCK NUT	STAINLESS STEEL T316, ASTM F594
29	CUSHION RETAINER	STAINLESS STEEL T316, ASTM F593
30	WASHER	STAINLESS STEEL T316, ASTM A240
34	LOCK WASHER	STAINLESS STEEL T316, ASTM A240

NOTE: ALL SPECIFICATIONS AS LAST REVISED.

MATERIALS OF CONSTRUCTION	DATE 8/10/09
VAL-MATIC® VALVE AND MANUFACTURING CORP.	DRWG. NO. VM-201C.2SV-M

WATER QUALITY
NSF / ANSI 61
2LA8

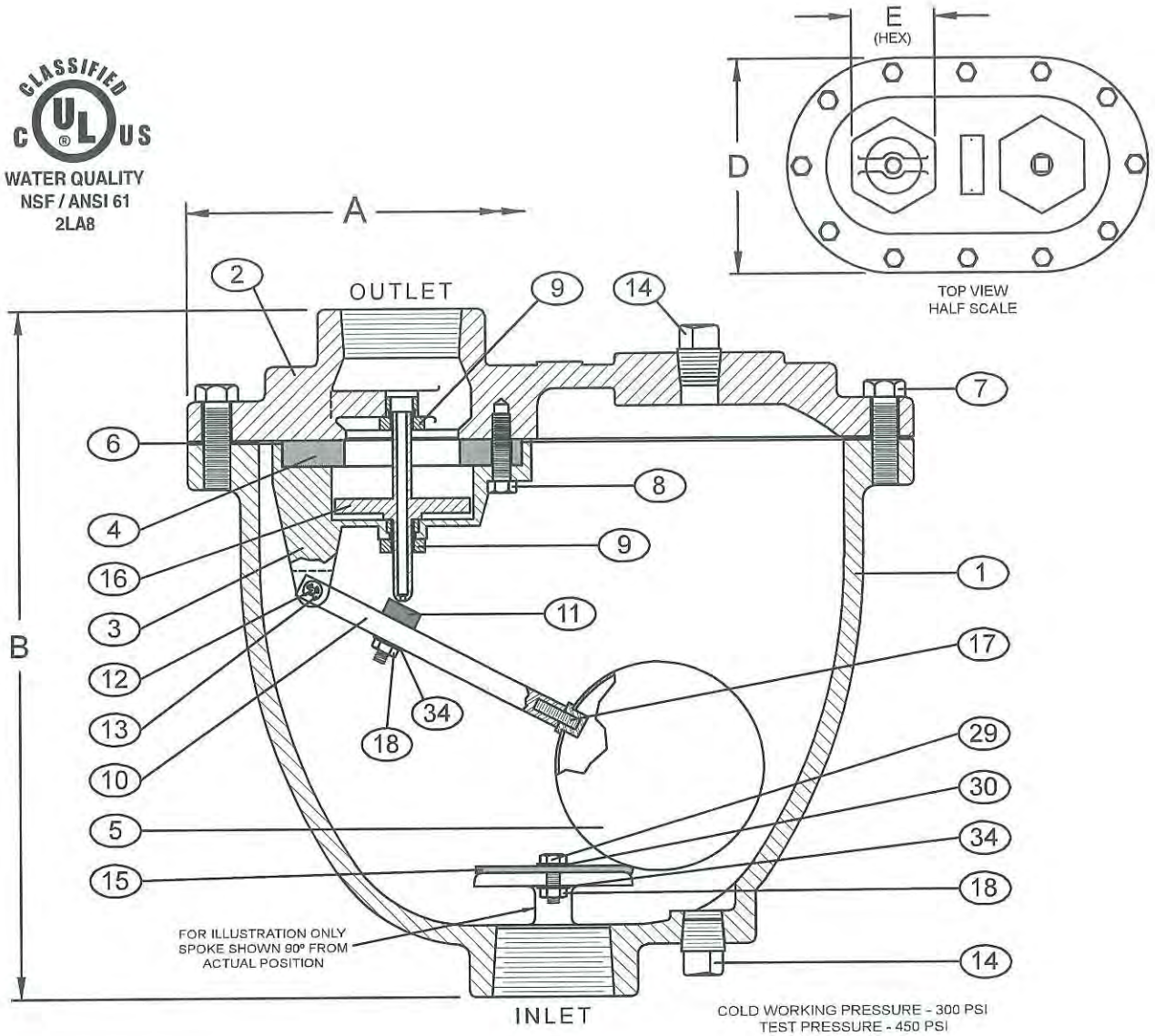

SEE DRAWING NO. VM-201C-M FOR STANDARD MATERIALS OF CONSTRUCTION
SEE DRAWING NO. VM-201CDISV-M FOR SUPER VALVE MATERIALS OF CONSTRUCTION

VALVE SIZE	MODEL NUMBER	A	B	D	E	INLET SIZE	OUTLET SIZE	ORIFICE SIZE
2"	202C.2	14.00	13.00	8.25	3.25	2" NPT	2" NPT	3/32"

1	BODY	8	RETAINING SCREWS	15	CUSHION
2	COVER	9	BUSHING	16	PLUG
3	BAFFLE	10	FLOAT ARM	17	FLOAT RETAINER
4	SEAT	11	ORIFICE BUTTON	18	LOCK NUT
5	FLOAT	12	PIVOT PIN	29	CUSHION RETAINER
6	GASKET	13	RETAINING RING	30	WASHER
7	COVER BOLTS	14	PIPE PLUG	34	LOCK WASHER

Revised 8-19-14 (Rev 1)

COMBINATION AIR VALVE (SINGLE BODY TYPE)

DATE 5-8-13

VAL-MATIC VALVE AND MANUFACTURING CORP.

DRWG. NO. VMC-202C

Triac "V" Series Ball Valves are ideal for achieving more precise control with the simplicity and sealing features of a ball valve. We offer them 1/2" – 4" in a 3-piece design and 1/2"– 6" flanged. The standard "V" notch options are 30, 60 & 90. While they are available as manual valves, we specialize in automating them to suit your particular control requirements.

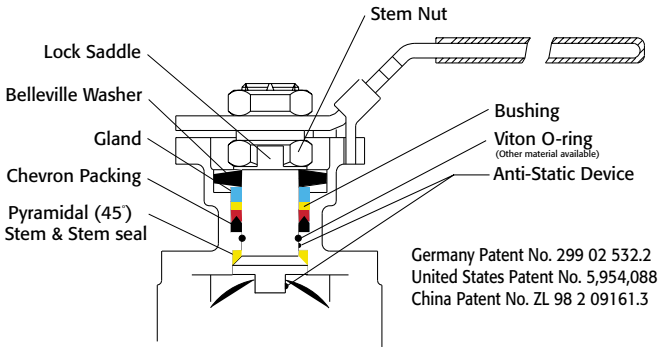

Easy to Automate!

See automated data sheets for pre-sized assemblies

Pneumatic

Electric

TRIAC® CONTROLS

"V" Series Control Port Ball Valves

Sizes 1/2" – 6"

3 Piece and 150# Flanged

316SS or WCB

30, 60 & 90 "V" Notch Standard
Others on Request

TA-Luft 2002, Sec.5.3.6.4
TA-Luft Certified for Low Emissions
VDI 2440 Nov.2000, Sec.3.3.1.3

HOW TO ORDER MANUAL VALVES

SAMPLE PART #

V8C-TH-0200-XXX

- V Port
- Valve Series
- Carbon Steel
- Threaded Ends
- Valve Size
- Seat Material
- Special Designation
- Additional Special Designation (V30, V60 or V90)

See part number matrix for itemized options

A-T Controls, Inc.
9955 International Blvd.
Cincinnati, Ohio 45246
www.atcontrols.com
PHONE (513) 247-5465
FAX (513) 247-5462
sales@atcontrols.com

VM-(A)-20130430
Copyright 2013 A-T Controls, Inc.

"V" Series

"V" Series Flow Coefficients- Cv Chart

Valve Size	Ball Angle	0%	15%	20%	30%	40%	50%	60%	70%	80%	90%	100%
	30	0	0.1	0.1	0.2	0.3	0.5	0.8	1.1	1.6	2.2	2.6
1/2"	60	0	0.1	0.1	0.3	0.5	0.9	1.4	2	3.3	4.4	6
	90	0	0.1	0.2	0.4	0.6	0.9	1.5	2.2	3.8	5.4	6.9
	30	0	0.1	0.2	0.5	0.7	1.1	1.8	2.4	3.3	4.5	5.4
3/4"	60	0	0.1	0.2	0.7	1	1.7	2.8	4	6.5	9	12
	90	0	0.2	0.4	0.8	1.2	2	3.1	4.6	8	11.3	14
	30	0	0.1	0.3	0.8	1.3	2.3	3.5	5.1	9.8	8.5	10
1"	60	0	0.2	0.4	1.1	1.8	3.4	5.3	7.9	12.3	15.3	21
	90	0	0.2	0.6	1.8	3.4	5.1	8.1	11.4	16	21	29
	30	0	0.2	0.4	1.1	2	3.7	5.5	8	10	13	15
1 1/4"	60	0	0.2	0.6	1.8	3	5.5	9.5	12.8	19	26	39
	90	0	0.3	0.8	2	5	8	14	19	28	39	55
	30	0	0.3	0.6	1.6	3	5	7.5	11	14	17	20
1 1/2"	60	0	0.4	0.8	2.5	4	8	13	19	27	40	52
	90	0	0.4	0.9	3.5	7	13	20	31	42	63	78
	30	**0**	**0.4**	**1.2**	**3.8**	**6**	**10**	**15**	**23**	**31**	**43**	**60**
2"	60	0	0.4	1.5	4.6	9	16.5	27	39	55	83	110
	90	0	0.5	2	6	12	22	35	45	70	105	135
	30	0	0.4	1	4	8	12	18	28	37	62	75
2 1/2"	60	0	0.4	1.5	5	10	21	34	53	75	103	150
	90	0	0.5	1.7	7	14	28	48	70	106	160	218
	30	0	0.5	1.2	4	8	14	23	33	46	65	82
3"	60	0	0.5	2.5	6	14	25	40	65	91	128	165
	90	0	0.7	3.5	8	18	35	60	90	135	205	310
	30	0	0.6	2	6	15	29	48	71	100	130	159
4"	**60**	**0**	**0.7**	**3**	**11**	**25**	**40**	**59**	**90**	**141**	**212**	**356**
	90	0	1	3.5	16	40	75	125	190	295	442	670
	30	0	0.9	3.2	14	33	60	103	155	220	280	350
6"	60	0	2	5	22	60	110	190	285	416	586	800
	90	0	3	8	35	90	160	280	425	650	970	1480
F_L		0	0.96	0.95	0.94	0.93	0.92	0.9	0.88	0.86	0.82	0.75
Xt		0	0.98	0.77	0.71	0.67	0.64	0.63	0.62	0.55	0.43	0.4

60 DEGREE BALL

Pressure vs. Temperature Charts 1"– 6"

150# Flanged Design

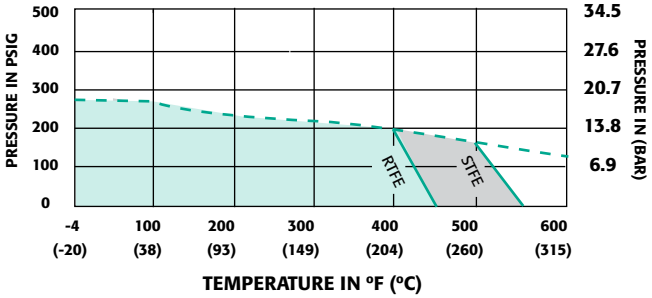

NOTE: Dotted line shows the rating for valve body. Solid line shows the rating for valve seat. Both ratings need to be consulted when determining the limitation of the valve for specific application.
Consult factory for other seat material.

3-piece Design

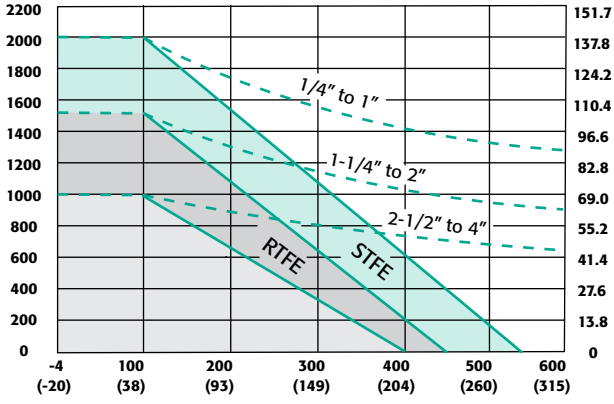

"V" Series

Triac "V" port control valves are available with 30V, 60V & 90V notch. V port valves offer better and more consistent control than traditional round ported ball valves. We offer this valve with the control port cast and machined into the ball, not in the seat. This allows for much better flow characteristics and eliminates the need to replace seats. The 30 option allows for finer tapered control throughout the valve rotation and the 60 & 90 offers a larger Cv in addition to controlled flow.

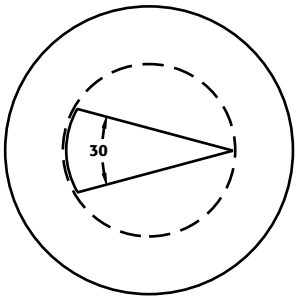

30 V-Port

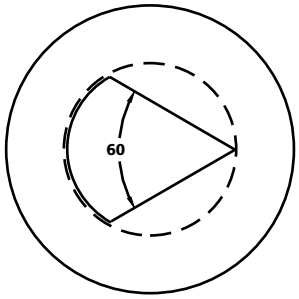

60 V-Port

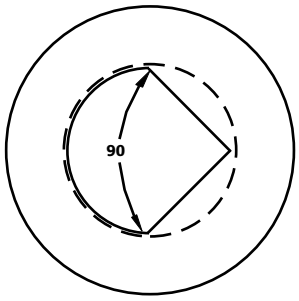

90 V-Port

The 50/50 seat is standard with all V port valves. The 50% SST powder and 50% PTFE offers both strength and superior sealing properties.

"V" Series
3 Piece

88 Series
V-Port
Control Valve

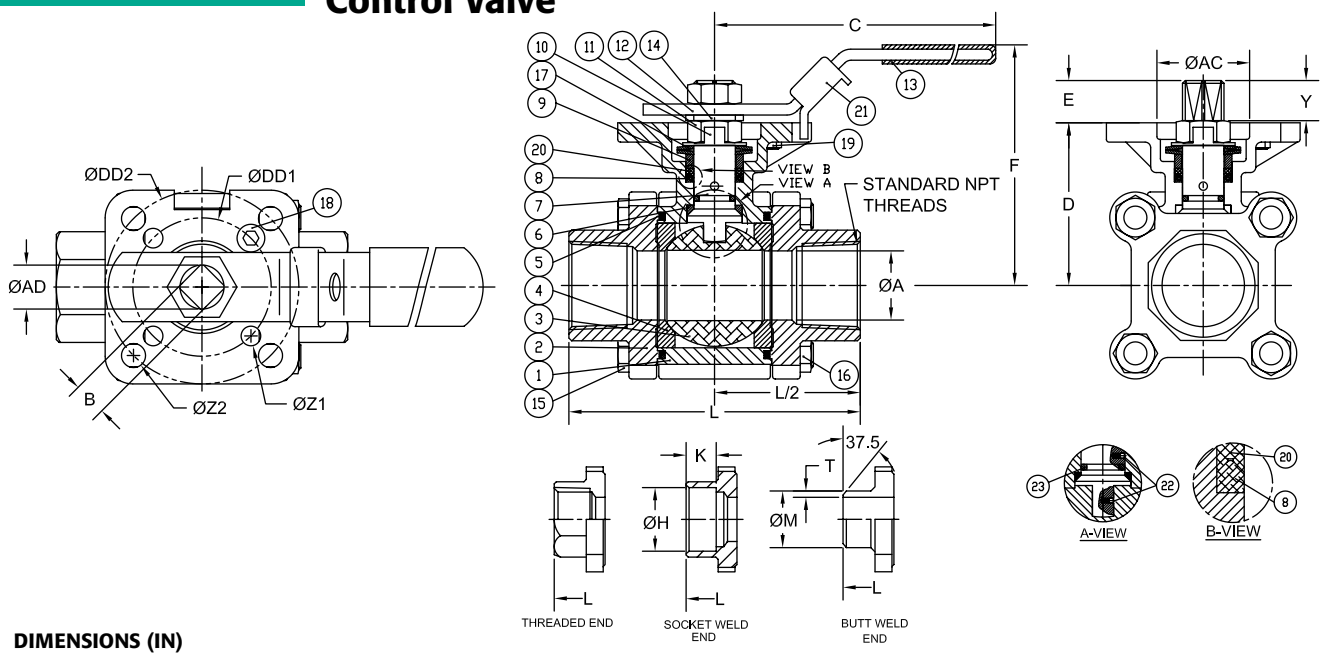

DIMENSIONS (IN)

SIZE	ØA	B	C	D	E	F	H	K	L	M	T	Y	AC	AD	DD1	DD2	ØZ2	ØZ1	(LBS)	ISO5211
1/2"	0.59	0.354	5.47	1.66	0.25	3.00	0.85	0.39	2.85	0.85	0.06	0.25	1.07	0.44	1.654	1.969	0.28	0.28	2.0	F04/F05
3/4"	0.79	0.354	5.47	1.83	0.33	3.20	1.07	0.51	3.36	1.07	0.06	0.33	1.07	0.44	1.969	2.756	0.34	0.28	3.0	FO5/F07
1"	0.98	0.433	6.50	2.31	0.41	3.86	1.34	0.51	4.15	1.34	0.06	0.41	1.34	0.56	1.969	2.756	0.34	0.28	4.5	FO5/F07
1-1/4"	1.26	0.433	6.50	2.46	0.41	4.00	1.69	0.51	4.37	1.68	0.06	0.41	1.34	0.56	1.969	2.756	0.34	0.28	6.0	FO5/F07
1-1/2"	1.50	0.551	8.46	3.11	0.53	5.04	1.92	0.51	5.01	1.91	0.06	0.53	1.54	0.74	1.969	2.756	0.34	0.28	10.0	FO5/F07
2"	1.97	0.551	8.46	3.42	0.53	5.35	2.40	0.63	5.62	2.38	0.06	0.53	1.54	0.74	1.969	2.756	0.35	0.30	13.0	FO5/F07
2-1/2"	2.56	0.748	10.31	4.28	0.66	6.60	2.89	0.63	7.28	3.00	N/A	0.66	2.09	0.94	2.756	4.016	0.47	0.39	26.0	FO7/F10
3"	3.15	0.748	10.31	4.63	0.70	6.96	3.54	0.63	8.07	3.54	N/A	0.70	2.09	0.94	2.756	4.016	0.47	0.39	34.0	FO7/F10
4"	3.94	0.748	12.28	5.26	0.66	7.59	4.54	0.79	9.45	4.57	N/A	0.66	2.09	0.94	2.756	4.016	0.47	0.39	52.0	FO7/F10

"V" Series
Flanged

90 Series
V-Port
Control Valve
Flanged

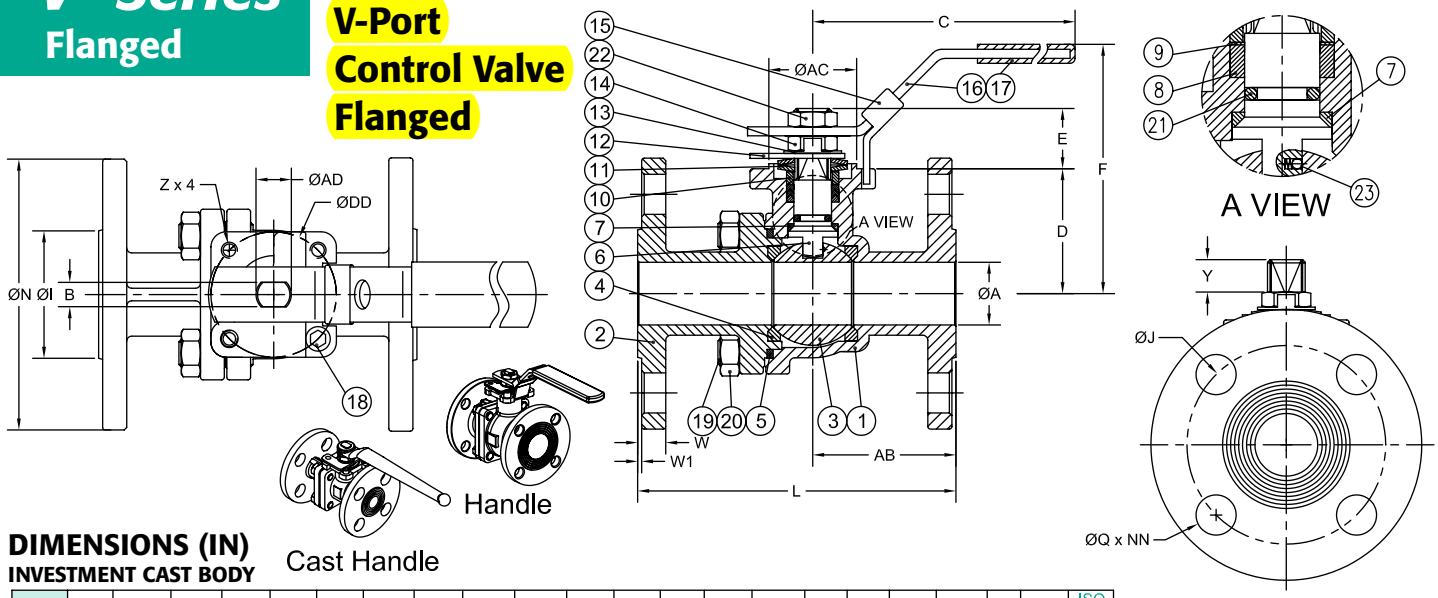

DIMENSIONS (IN)
INVESTMENT CAST BODY

SIZE	A	B	C	D	E	F	I	J	L	N	Q	W	W1	Y	Z	AB	AC	AD	DD	NN	(LBS)	ISO 5211
1/2"	0.59	0.315	6.69	1.34	0.92	3.15	1.47	2.38	4.26	3.50	0.63	0.44	0.06	0.36	M5	1.82	1.17	0.43	1.654	4	3.7	F04
3/4"	0.79	0.315	6.69	1.65	0.94	3.43	1.82	2.75	4.62	3.88	0.63	0.44	0.06	0.40	M5	2.17	1.17	0.43	1.654	4	4.6	F04
1"	0.98	0.382	8.05	1.95	0.94	3.85	2.08	3.13	5.00	4.26	0.63	0.44	0.06	0.32	M6	2.20	1.37	0.56	1.969	4	6.8	F05
1-1/2"	1.50	0.472	10.28	3.08	1.37	6.02	2.88	3.88	6.50	5.00	0.63	0.56	0.06	0.58	M8	2.81	2.17	0.75	2.756	4	13.6	F07
2"	1.97	0.472	10.28	3.40	1.37	6.38	3.62	4.75	7.02	6.00	0.75	0.63	0.06	0.58	M8	3.38	2.17	0.75	2.756	4	19.2	F07
2-1/2"	2.56	0.472	10.28	3.83	1.37	6.81	4.12	5.50	7.49	7.00	0.75	0.69	0.06	0.58	M8	3.02	2.17	0.75	2.756	4	30.0	F07
3"	3.15	0.591	13.94	4.23	1.81	6.95	5.00	6.00	8.01	7.50	0.75	0.75	0.06	0.93	M10	4.01	2.76	0.94	4.016	4	41.0	F10
4"	3.94	0.591	13.94	4.82	1.79	7.52	6.19	7.50	9.04	9.00	0.75	0.94	0.06	0.93	M10	4.06	2.76	0.94	4.016	8	65.0	F10

For 6" valve dimensions please see D9 brochure.

Viton® is a registered trademark of E.I. DuPont de Nemours.

A-T Controls reserves the right to change product designs and technical/dimensional specifications without notice.

A-T Controls, Inc.

9955 International Blvd.
Cincinnati, Ohio 45246
www.atcontrols.com

PHONE (513) 247-5465
FAX (513) 247-5462
sales@atcontrols.com

TRIAC CONTROLS

Electric Actuators

WE Series Weatherproof
CSA Approved TYPE 4 & 4X
350-80,000 In-lbs. torque

XE Series Explosion Proof
ATEX Certified E Ex d IIB T4
690-25,900 In-lbs. torque

AWWA C540-93

C SP US 201383 TYPE 4 & 4X

Ex ATEX II 2 G E Ex d IIB T4

IECEx

WE-350

The WE-350 Electric Actuator is specifically designed to operate small size ball valves (1" and less), dampers and other quarter-turn devices.

Features

- Compact and light weight
- High resistance to corrosion due to hard anodizing on inside and outside with polyester powder coating on external surface
- Multi-voltage (AC85-265V/1PH, 24VDC)
- Standard space heater (0.5W)
- Weather proof (IP67)
- Push Button and Manual lever
- Wide, easy mounting base standard to ISO5211 (F03/F04/F05)
- Standard four limit switches
- Captive cover bolts
- Mechanical position indicator & LED lamp indicators (Open/Close)

Construction

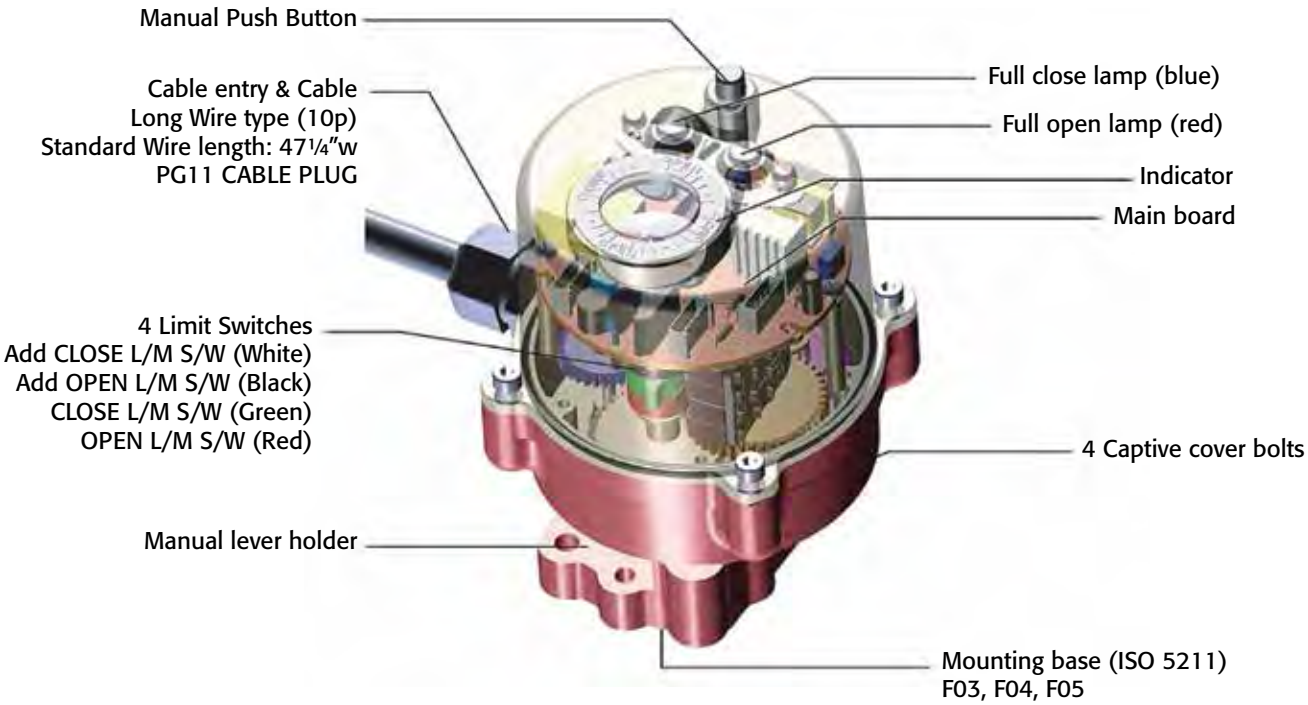

Performance

Type (Model)	Maximum Output Torque	Operating Time 60/50 Hz	Mounting Size	Electric Motor Stop	Suppling Power & Rating Current (A) 60/50Hz, 1 Phase			Duty Cycle IEC34-1	Manual Level Angle	Weight
	In-Lbs.	90°	ISO5211	A	110VAC	220VAC	24VDC	S4		Lbs.
WE-350	354	12 sec.	F03, F04, F05	2A	.12	.06	.46	50%	90°	2.65
WE-350HS	270	6.5 sec.			.065	.033	.25			

Dimensions

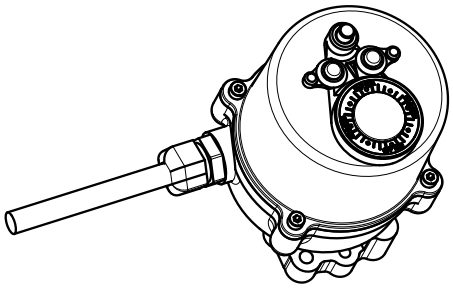

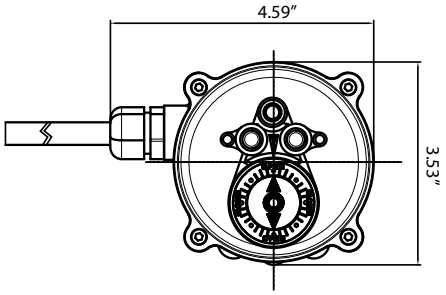

ENCLOSURE: IP67 (NEMA 4, 4X)
TORQUE: 354 In-lbs
OPERATION TIME: 10sec
POSITION SWITCH: 4 SPDT SWITCH
CABLE ENTRY: PG 11 x 1
MOUNTING FLANGE: F03/F04/F05
acc to DIN/ISO5211

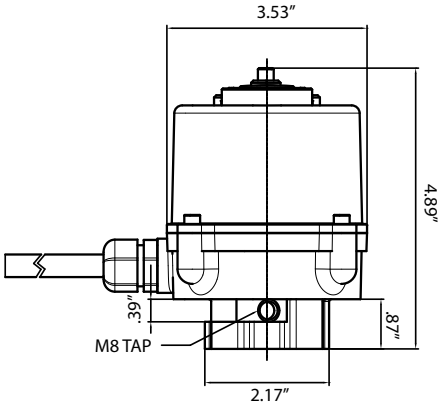

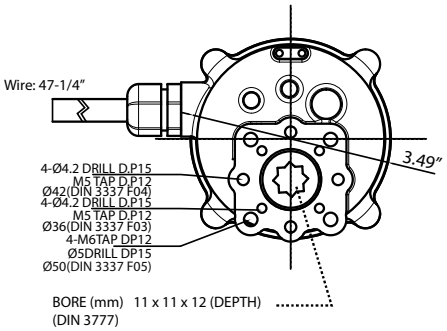

Wiring Connection

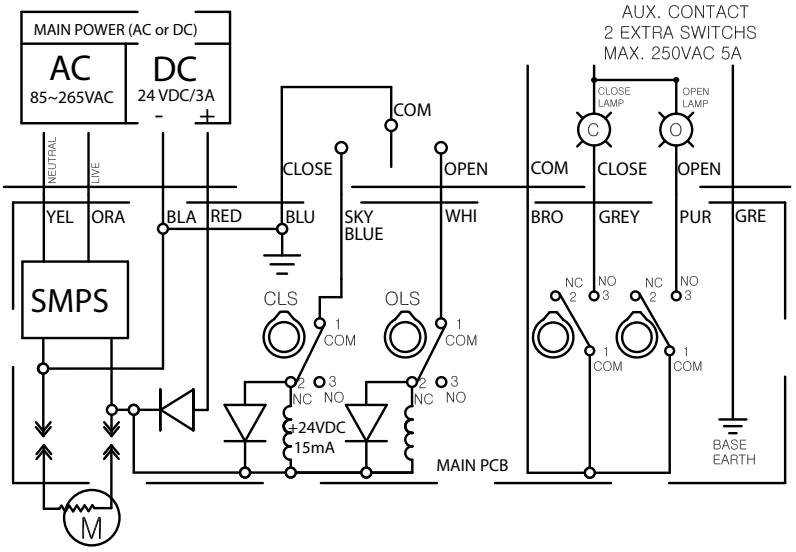

WE-500

The WE-500 Electric Actuator is an extremely rugged design actuator used for small ball valves (2" and less), dampers and other quarter-turn devices. The actuator is TYPE 4, 4X and includes a visual indicator, two auxiliary switches and a compartment heater. A convenient wrench manual override shaft is standard on the WE-500. This actuator is the clear choice when a compact, efficient electric actuator is required!

Features

- Compact and light due to high grade aluminum alloy housing.
- High resistance to corrosion due to hard
- anodizing on inside and outside with polyester powder coating on external surface
- Output torque: 530 In-lbs.
- The actuator motor is a reversible, high torque and low current design.
- Weatherproof (IP67, NEMA 4, 4X)

Standard Configuration

- Manual override
- Wide, easy mounting base standard to ISO5211(F03/F05/F07)
- Standard four limit switches. Two for operation, 2 auxilliary dry contacts
- Captive cover bolts
- Space heater
- Limit switches for tight, easy setting
- Terminal block (11P)
- Standard color : Red

Optional Configuration

Position Indication Unit (Potentiometer kit, PIU)

High resolution potentiometer with precisely machined gearing directly engaged with drive shaft provides continuous monitoring of position of valve and actuator.

TMC3 Electronic Modulating Card

- Auto Calibration for Easy Setup
- 10 Bit Microprocessor controller for precise positioning and control
- 4-20mA, 1-5mA, 0-10 VDC, 1-5 VDC, 0-135 Ohm or Command Signal Potentiometer
- TMC3 can be programmed to Fail in Place, Fail CW, or Fail CCW on loss of command signal
- Characterized Control options: Linear, Quick Opening (Square Root), or Equal Percentage (Square)
- OnBoard 4-20 mA transmitter (standard)

AC/DC 24V Control Unit

Dip Switch

Mode	1	2
DC	ON	OFF
AC	OFF	ON

Performance

Type (Model)	Maximum Output Torque	Operating Time 60/50 Hz	Mounting Size	Full Load Amps			Locked Rotor Amps			Duty Cycle	Number of Handle Turns	Weight
				AC 1PH. 50/60Hz		AC/DC	AC 1PH. 50/60Hz		AC/DC			
	In-Lbs.	90°	ISO5211	110V	220V	24V	110V	220V	24V	S2	N	Lbs.
WE-500	530	12/14	F03/F05/F07	0.4	0.2	0.8	0.5	0.25	2.5	70%	8	6.61

Standard Specification

Enclosure..... Weatherproof enclosure IP67, NEMA 4, 4X
Power Supply..... 110/220V AC 1PH, 50/60Hz, ± 10%, 24V AC/DC
Duty cycle..... 70%
Motor..... Class F Reversible motor
Limit switches..... Open/Close, SPDT, 5A 125 VAC, 3A 250 VAC, 0.4A125 VDC, 0.2A 250 VDC
Additional limit switches..... Open/Close, SPDT, 5A 1252 VAC, 3A 250 VAC, 0.4A 125 VDC, 0.2A 250 VDC
Space heater..... 2W (110/220V AC) Anti-condensation
Manual override..... Drive Nut (hexagon design)
Cable conduit..... Two 1/2" NPT
Movement angle..... 320° ±10°
Ambient temperature..... -4°F - 158°F (optional -40° Low Temp Kit)
External coating..... Polyester powder coating

Options Specification

Potentiometer unit (1K)
(TMC) Electronic Modulating Card
4-20mA, 1-5mA, 0-10 VDC, 1-5 VDC,
0-135 Ohm Command Signal
Current position transmitter
(0utput 4~20mA DC)
Multi(24VAC/DC)
DC motor (24VDC)
Local control unit
- remote/local/stop
- open/close

Dimensions

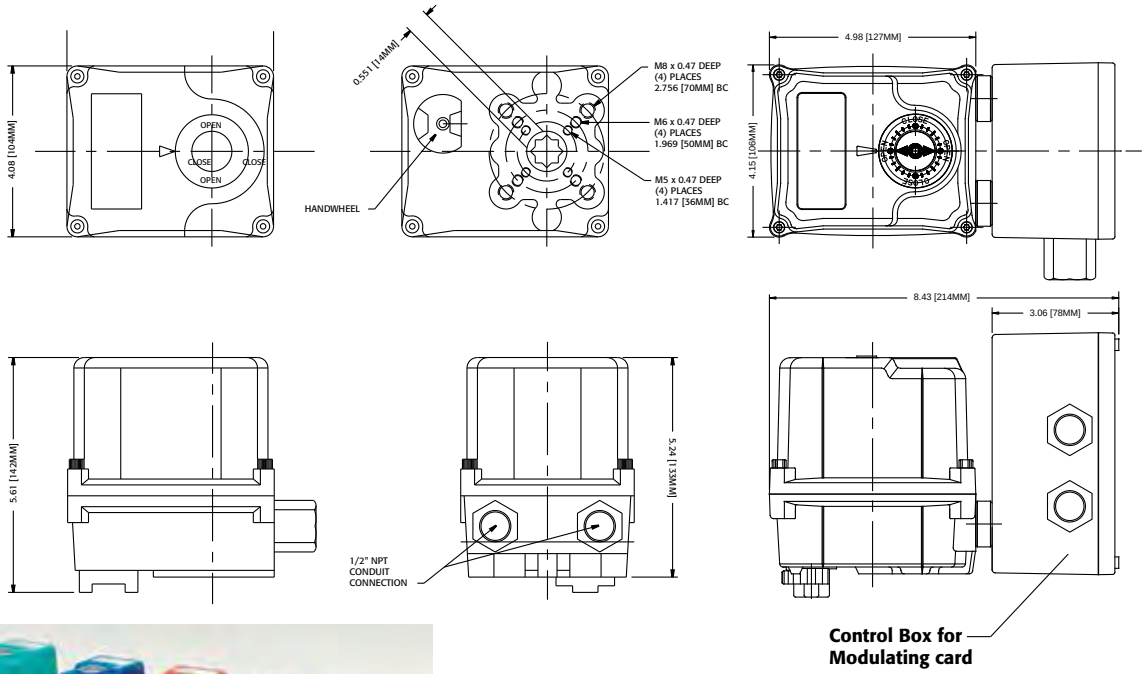

BUTTERFLY VALVES
BALL VALVES
DAMPER VALVES
PLUG VALVES

Electric Actuators WE/XE

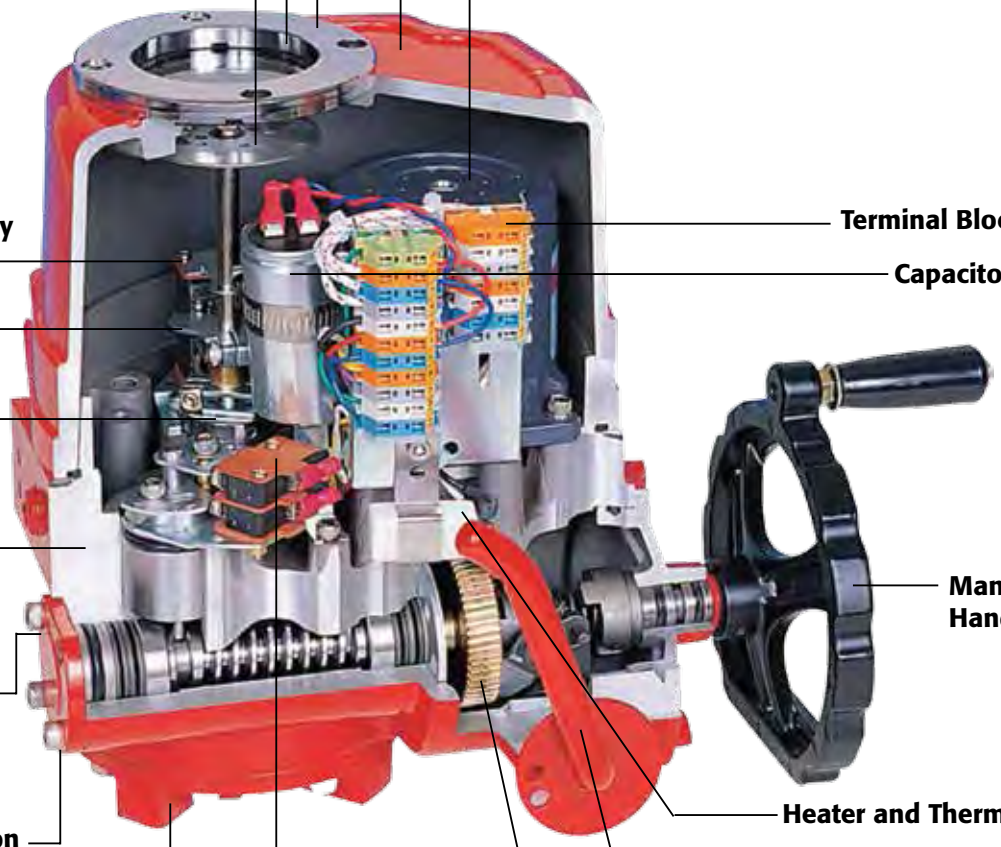

Window cover

Window

Position indicator
Option: illuminated red (close), green (open), yellow (over torque)

Actuator Cover
High corrosion-resistance due to anodizing on the inside and outside and polyester powder coating on the outside

Motor
Available in 1 Phase / 3 Phase, all motors are custom built for high-torque, low current draw and the highest duty cycle ratings offered. Fan Cooled Motor standard on model WE/XE 690 and larger

Limit Switch & Auxiliary Switch Set (standard)

Close Cam

Open Cam

Actuator Body

Mechanical Stops (rear side)

Dual Conduit Connection (rear)

Torque Switch System (except WE/XE-690)

Easy Mounting Base standard to ISO5211

Terminal Block

Capacitor

Manual Handwheel

Heater and Thermostat

Manual Override

Double reduction worm gear assembly is self locking with minimum blacklash

WE-690 - 25900

Terminal block

- Extra terminals for customer's convenience
- Spring Loaded Terminal Strip Provides Secure Connection

Heater

- Ceramic housing with thermostat to eliminate condensation (7-10 watt Standard).
- Optional High Wattage Heater for Low Temp applications to -40°

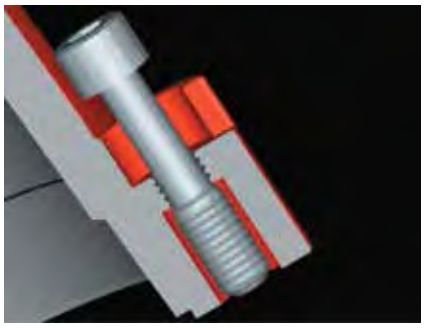

Captive cover bolt

- Cover bolts are specially designed to prevent loosening during maintenance or installation
- All external bolts are stainless steel for rust prevention

Indicator sustained by spring

- Direction of visual indicator is set by factory
- To change its direction simply grip the indicator plate and rotate to the new position
- Spring beneath indicator plate sustains the set position
- No need to loosen screw and tighten it again

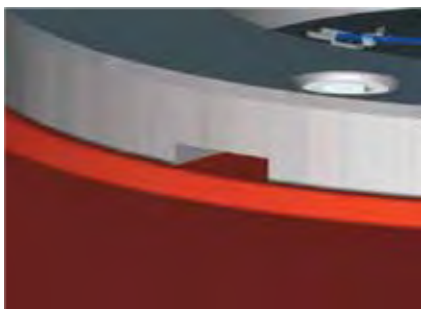

Slot on window cover for draining water

- A drain slot is provided to eliminate water buildup on window

WE/XE Series

WE NEMA 4, 4X & 6

XE NEMA 4, 4X, 6 & 7

SE NEMA 4, 4X, 6 & 9 IP68

Acutator Model	Output Torque	90° Cycle Time (sec)	Motor Size	Full Load Amps					Locked Rotor Amps					Handwheel Turns	Weight
				AC/DC	1 Phase		3 Phase		AC/DC	1 Phase		3 Phase			
WE / XE	In-Lbs.	60 / 50 Hz	Watts	24V	110V/60Hz	220V/60Hz	380V	440V	24V	110V/60Hz	220V/60Hz	380V	440V	N	Lbs.
-690	690	13 / 16	15	5	1.2	0.6	N/A	N/A	12.8	1.4	0.7	N/A	N/A	10	16.4
-1350	1350	21 / 25	40	6	2	1	0.28	0.36	16.9	2.5	1.2	0.75	0.66	11	36.7
-1700	1700	21 / 25	40	7.4	2.3	1.1	0.28	0.36	16.9	2.5	1.2	0.75	0.66	11	36.7
-2640	2640	26 / 31	40	8.9	2.3	1.3	0.27	0.34	30.8	2.9	1.4	1	0.87	13.5	48.6
-4400	4400	26 / 31	90	N/A	4.5	1.9	0.42	0.47	N/A	5	2.4	1.73	1.5	13.5	50.8
-5200	5200	26 / 31	90	N/A	4.5	2	0.42	0.47	N/A	5	2.4	1.73	1.5	13.5	50.8
-6900	6900	31 / 37	180	N/A	5.1	2.4	0.61	0.67	N/A	7.3	3.8	2.73	2.38	16.5	64
-10500	10500	31 / 37	180	N/A	5.4	3.4	0.61	0.67	N/A	7.3	3.8	2.73	2.38	16.5	64
-17500	17500	95 / 112	180	N/A	5.8	2.4	0.61	0.67	N/A	7.3	3.8	2.73	2.38	49.5	167
-25900	25900	95 / 112	180	N/A	6.3	3.4	0.61	0.67	N/A	7.3	3.8	2.73	2.38	49.5	167

Rev.20130924

Standard Specifications

Enclosure.....Weatherproof enclosure, IP67, TYPE 4, 4X, 6
AWWA.....Conforms to AWWA C540-93 requirements
Power supply.....110/220V AC 1PH, 220/380/440/460/480VAC, 3 Phase, 50/60Hz, ±10%
Control power supply.....110/220V AC 1PH, 50/60Hz, ±10%
Duty cycle(on-off).....70% Max 1800 start/hour
Duty cycle(modulating).....70% Max 1800 start/hour
Motor.....Class F Reversible Induction motor
Limit switches.....Open / Close, SPDT, 16A 1/2HP 125/250VAC, 0.6A 125VDC, 0.3A 250VDC
Additional limit switches.....Open / Close, SPDT, 16A 1/2HP 125/250VAC, 0.6A 125VDC, 0.3A 250VDC
Torque switches.....Open / Close, SPDT, 16A 1/2HP 125/250VAC, 0.6A 125VDC, 0.3A 250VDC (except WE/XE-690)
Stall protection.....Built-in thermal protection, Open 302°F (150°C) / Close 207°F (97°C)
Travel angle.....90° ± 10°
Indicator.....Continuous position indicator
Manual override.....Declutching mechanism
Self locking.....Provided by double worm gearing
Mechanical stopper.....Open / Close (external adjustable screws)
Space heater.....7-10W (110/220V AC) Anti-condensation
Cable Conduit.....Two 3/4" NPT
Lubrication.....Grease moly (EP type)
Terminal block.....Spring loaded lever push type
Materials.....Steel, Aluminium alloy, AI bronze, Polycarbonate
Ambient temperature.....-4°F —158°F (optional -40° Low Temp Kit)
Ambient humidity.....90% RH Max. (non-condensing)
External coating.....Anodizing treatment before Dry powder, Polyester, Munsell no. 5R 3.5/12

Options Specifications

ATEX II 2 G
EEx d IIB T4

Explosion-Proof enclosure II 2 G, E Ex d IIB T4, IP67	ATEX certification
Designed to comply with NEMA 7 Explosion Proof	
Watertight enclosure (IP68 10M 72HR)	SE/XE Series
Potentiometer unit (1K ~10K)	WE/XE Series
Proportional control unit (input, output 0~10V DC, 4~20mA DC)	WE/XE Series
Semi-Integral control unit (Local/Remote Selector Switches)	except WE/XE-690
Intelligent Digital control unit (Local/Remote Selector Switches)	except WE/XE-690
Current position transmitter (output 4-20mA DC)	WE/XE Series
Extension 120º, 180º, 270º turn	except WE/XE-17500, 25900
Duty Cycle 70% max (in Ambient temperature)	except WE/XE-690
DC motor (24V DC)	WE/XE-690C—WE/XE-2640C
AC/DC 24V control	WE/XE-690A—WE/XE-2640A
Lever plate actuator	except WE/XE-690
Signal lamp unit (red-close, green-open, yellow-over torque)	
Fire Proofing Actuator 1050 ±5ºC/50 min	Consult factory
Fire Proofing Actuator 250 ±5ºC/150 min	Consult factory

Explosion Proof Enclosure
- ATEX Certification
- Designed to comply with NEMA 7 Explosion Proof

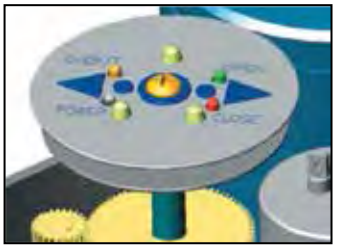

Signal LED Unit
Large indicator with monitoring lamps (Over torque, open and close)

Fire Proofing Acuator

Removable Drive Bushing

High Speed Electric Actuators

Model	Output Torque	Speed (60Hz)	Torque Switch Setting
WE-690*HS2	290 In-Lbs	4.5 seconds	N/A
WE-690*HS1	400 In-Lbs	7.0 seconds	N/A
WE-1350*HS2	840 In-Lbs	7.0 seconds	1,350 In-Lbs
WE-1350*HS1	1,200 In-Lbs	10.5 seconds	1,350 In-Lbs
WE-2640*HS2	1,390 In-Lbs	8.5 seconds	2,640 In-Lbs
WE-2640*HS1	2,050 In-Lbs	13.0 seconds	2,640 In-Lbs
WE-4400*HS2	2,350 In-Lbs	8.5 seconds	4,400 In-Lbs
WE-4400*HS1	3,500 In-Lbs	13.0 seconds	4,400 In-Lbs
WE-6900*HS2	4,500 In-Lbs	10.5 seconds	6,900 In-Lbs
WE-10500*HS1	6,700 In-Lbs	15.5 seconds	10,500 In-Lbs
WE-17500*HS2	12,000 In-Lbs	31.0 seconds	17,500 In-Lbs
WE-25900*HS1	18,000 In-Lbs	47.0 seconds	25,900 In-Lbs

Motor specifications remain the same.
*Must specify voltage - see part number matrix on back cover.

Modulating Options for WE-500-25900

Modulating Cards

TMC3 Electronic Modulating Card

- Auto Calibration for Easy Setup
- 10 Bit Microprocessor controller for precise positioning and control
- 4-20mA, 1-5mA, 0-10 VDC, 1-5 VDC, 0-135 Ohm or Command Signal Potentiometer
- TMC3 Can be programmed to Fall in Place, Fail CW, or Fail CCW on loss of command signal
- Characterized Control-Linear, quick opening (Square root), or Equal Percentage (Square)
- OnBoard 4-20 mA transmitter (standard)

TDC Electronic Modulating Card

- 450 Point Resolution, 16 Bit Micro Processor
- Auto Calibration
- Adaptive Control Feature (continuously adjusts for load and actuator conditions and positions to ±0.1°)
- Dynamic Breaking
- 4-20mA, 1-5V, 0-5V, 0-10V
- Programmed to Fail in place, Fail CW, or Fail CCW on loss of command signal
- 4-20mA Feedback Transmitter (Optional)

EPC Electronic AS-i Network Card

- AS-i Version 2.1
- 120 VAC or 24VDC Power
- Emergency Override-Normal Operation is overridden when actuator is driven to either Ch or CCh position on command
- Built in Emergency Position Command (EPC) overrides normal operation and automatically operates the valve into either the open or closed position (normally this is the closed position) as defined in the user specifications
- Signal Sentinel continuously monitors the EPC system offering additional failsafe backup in the event of an unexpected local event

Boiler Feedwater Application

- Control signal 4-20mA, specify these parts: LRC-100, POT-102 & Extended Bracket.
- Control signal 0-135 ohm, specify these parts: TDC-100, XMA-108, POT-102 & Extended Bracket

Other Network Cards Available Upon Request

Special Application

Intelligent Digital Control Unit

- Light, compact and integral design
- Wide range of electric power application (AC 220V~AC480V/3 Phase)
- Built-in auto phase discriminator (easy and convenient wiring)
- Digital indicator with number, bar graph, menu and (3) LED lamps
- Separate terminal chamber (Reliable against water, vibration, temperature, etc.)
- Easy application for WE-Series Actuators
- Various options available

Semi-Integral Control Unit

- Light, compact and integrated design (IMS, Local/Remote control)
- Wide range of electric power application (AC 115V~AC480V/1 Phase or 3 Phase)
- Phase protection monitoring by LED in case of reverse wiring
- Easy application for WE-Series Actuators
- Various options available

LED lamp signal	
White	:Power
Blue	:Remote
Yellow	:Fault
Red	:Open/Opening
Green	:Close/Closing

Dimensional Drawing

WE/XE-690, 1350, 1700, 2640, 4400, 5200, 6900, 10500

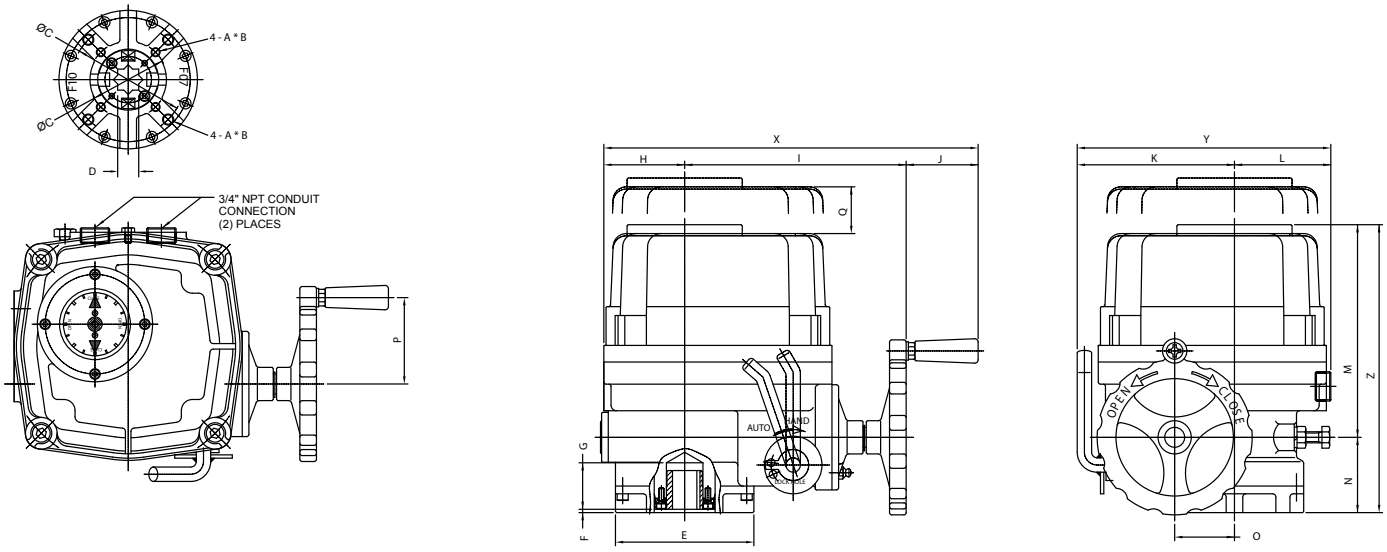

WE/XE-17500, 25900

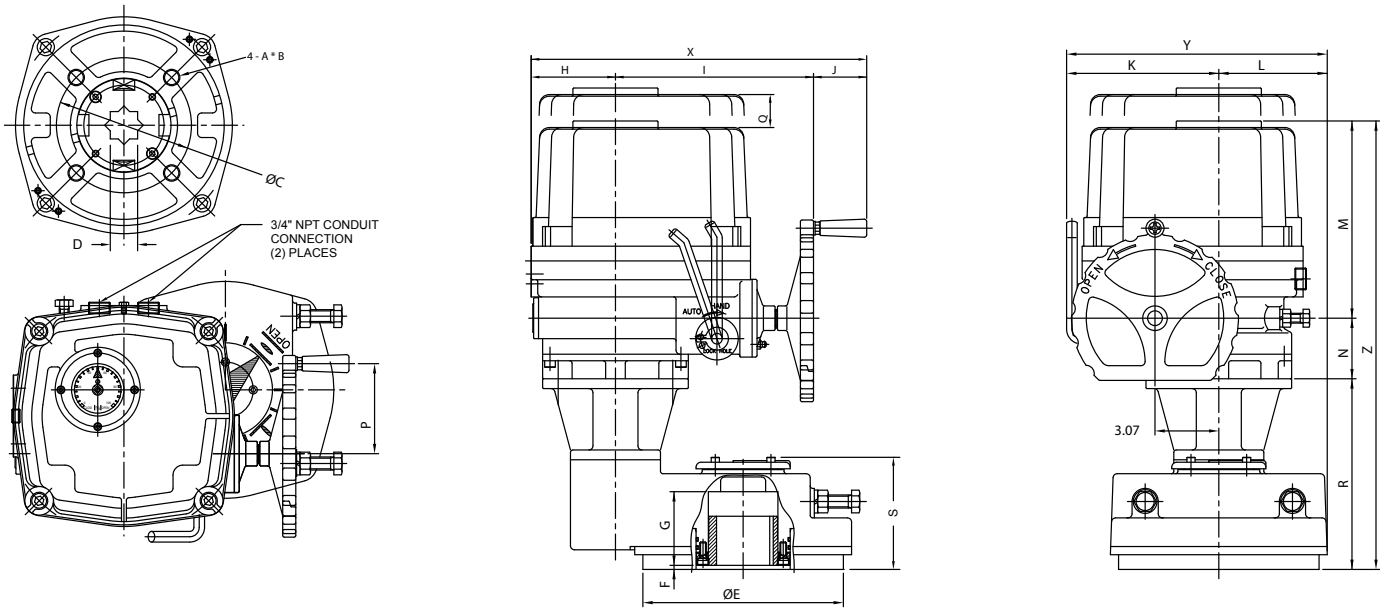

Dimensions

Units (inches)

Model WE/XE	ISO 5211	A	B	C	D sq	E	F	G	H	I	J	K	L	M	N	O	P	Q	R	S	X	Y	Z
-690	F07	M8	0.47	2.756	0.669	3.46	0.12	1.26	1.97	6.18	2.01	3.94	2.76	6.57	2.09	1.57	2.36	4.72	-	-	10.16	6.69	9.25
-1350	F07/F10	M8/M10	0.47/0.59	2.756/4.016	0.748	4.92	0.12	1.65	2.87	7.87	2.56	5.59	3.43	7.56	2.68	2.13	3.07	6.30	-	-	13.31	9.02	10.55
-1700	F07/F10	M8/M10	0.47/0.59	2.756/4.016	0.748	4.92	0.12	1.65	2.87	7.87	2.56	5.59	3.43	7.56	2.68	2.13	3.07	6.30	-	-	13.31	9.02	10.55
-2640	F10/F12	M10/M12	0.59/0.71	4.016/4.921	1.063	5.83	0.12	1.93	3.23	8.70	2.56	6.30	3.90	8.70	2.72	2.56	3.07	7.09	-	-	14.49	10.20	11.42
-4400	F10/F12	M10/M12	0.59/0.71	4.016/4.921	1.063	5.83	0.12	1.93	3.23	8.70	2.56	6.30	3.90	8.70	2.72	2.56	3.07	7.09	-	-	14.49	10.20	11.97
-5200	F10/F12	M10/M12	0.59/0.71	4.016/4.921	1.063	5.83	0.12	1.93	3.23	8.70	2.56	6.30	3.90	8.70	2.72	2.56	3.07	7.09	-	-	14.49	10.20	11.97
-6900	F14	M16	0.95	5.512	1.417	7.01	0.12	2.24	4.06	9.53	2.56	7.32	4.37	9.49	2.91	3.07	4.33	8.27	-	-	16.14	11.69	12.99
-10500	F14	M16	0.95	5.512	1.417	7.01	0.12	2.24	4.06	9.53	2.56	7.32	4.37	9.49	2.91	3.07	4.33	8.27	-	-	16.14	11.69	12.99
-17500	F16	M20	1.18	6.496	1.417	9.65	0.20	3.54	4.06	9.53	2.56	7.32	5.24	9.49	2.91	3.07	4.33	8.27	9.17	5.24	16.14	12.56	22.17
-25900	F16	M20	1.18	6.496	1.417	9.65	0.20	3.54	4.06	9.53	2.56	7.32	5.24	9.49	2.91	3.07	4.33	8.27	9.17	5.24	16.14	12.56	22.17

Dimensional Drawing

WE-1350, 1700, 2640, 4400, 5200, 6900, 10500 *Intelligent Digital Control Unit*

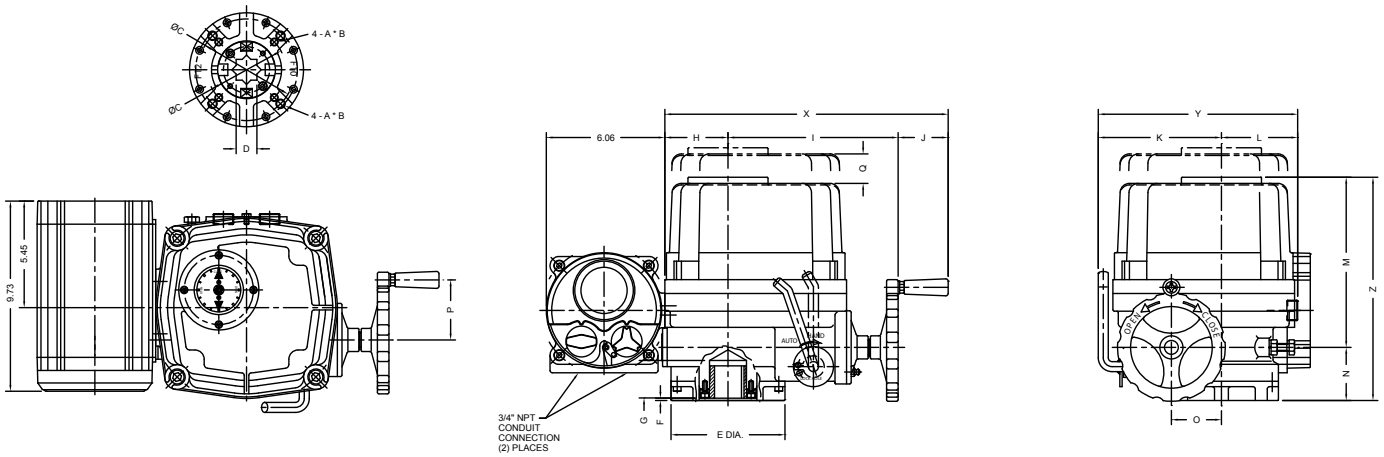

WE-17500, 25900 *Intelligent Digital Control Unit*

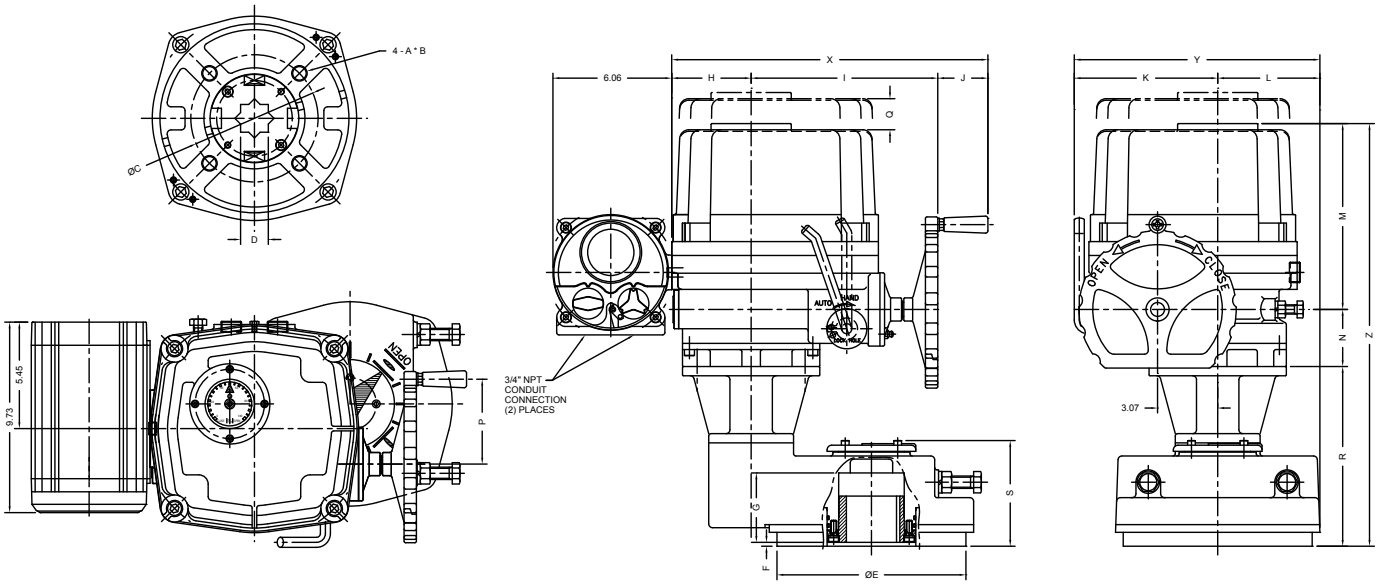

Dimensions

Units (inches)

Model WE	ISO 5211	A	B	C	D sq	E	F	G	H	I	J	K	L	M	N	O	P	Q	R	S	X	Y	Z
-1350	F07/F10	M8/M10	0.47/0.59	2.756/4.016	0.748	4.92	0.12	1.65	2.87	7.87	2.56	5.59	3.43	7.56	2.68	2.13	3.07	6.30	-	-	13.31	9.02	10.55
-1700	F07/F10	M8/M10	0.47/0.59	2.756/4.016	0.748	4.92	0.12	1.65	2.87	7.87	2.56	5.59	3.43	7.56	2.68	2.13	3.07	6.30	-	-	13.31	9.02	10.55
-2640	F10/F12	M10/M12	0.59/0.71	4.016/4.921	1.063	5.83	0.12	1.93	3.23	8.70	2.56	6.30	3.90	8.70	2.72	2.56	3.07	7.09	-	-	14.49	10.20	11.42
-4400	F10/F12	M10/M12	0.59/0.71	4.016/4.921	1.063	5.83	0.12	1.93	3.23	8.70	2.56	6.30	3.90	8.70	2.72	2.56	3.07	7.09	-	-	14.49	10.20	11.97
-5200	F10/F12	M10/M12	0.59/0.71	4.016/4.921	1.063	5.83	0.12	1.93	3.23	8.70	2.56	6.30	3.90	8.70	2.72	2.56	3.07	7.09	-	-	14.49	10.20	11.97
-6900	F14	M16	0.95	5.512	1.417	7.01	0.12	2.24	4.06	9.53	2.56	7.32	4.37	9.49	2.91	3.07	4.33	8.27	-	-	16.14	11.69	12.99
-10500	F14	M16	0.95	5.512	1.417	7.01	0.12	2.24	4.06	9.53	2.56	7.32	4.37	9.49	2.91	3.07	4.33	8.27	-	-	16.14	11.69	12.99
-17500	F16	M20	1.18	6.496	1.417	9.65	0.20	3.54	4.06	9.53	2.56	7.32	5.24	9.49	2.91	3.07	4.33	8.27	9.17	5.24	16.14	12.56	22.17
-25900	F16	M20	1.18	6.496	1.417	9.65	0.20	3.54	4.06	9.53	2.56	7.32	5.24	9.49	2.91	3.07	4.33	8.27	9.17	5.24	16.14	12.56	22.17

Dimensional Drawing

WE-1350, 1700, 2640, 4400, 5200, 6900, 10500 *Semi-integral Control Unit*

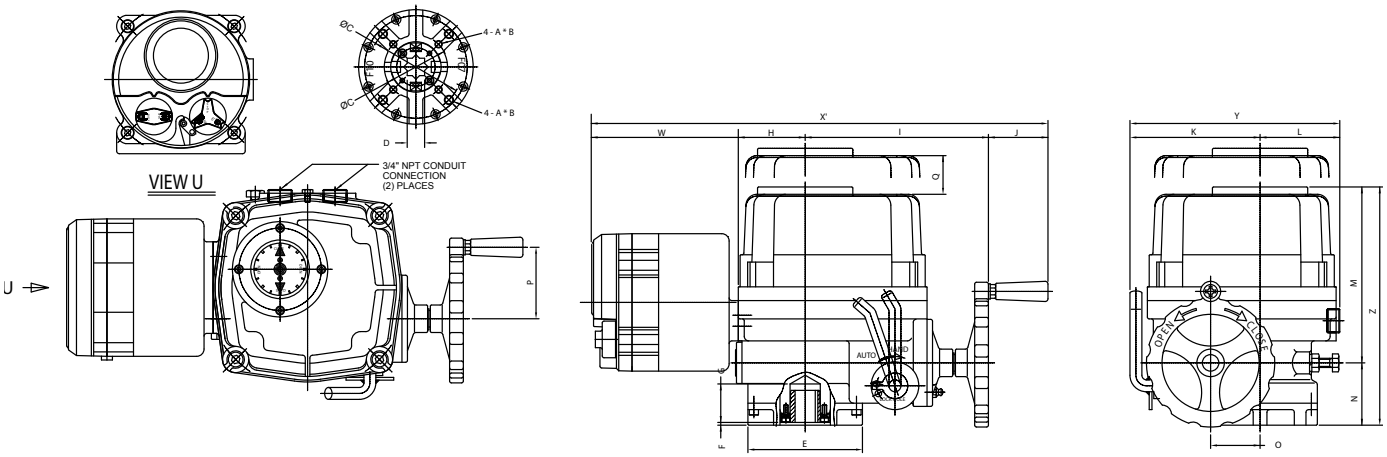

WE-17500, 25900 *Semi-integral Control Unit*

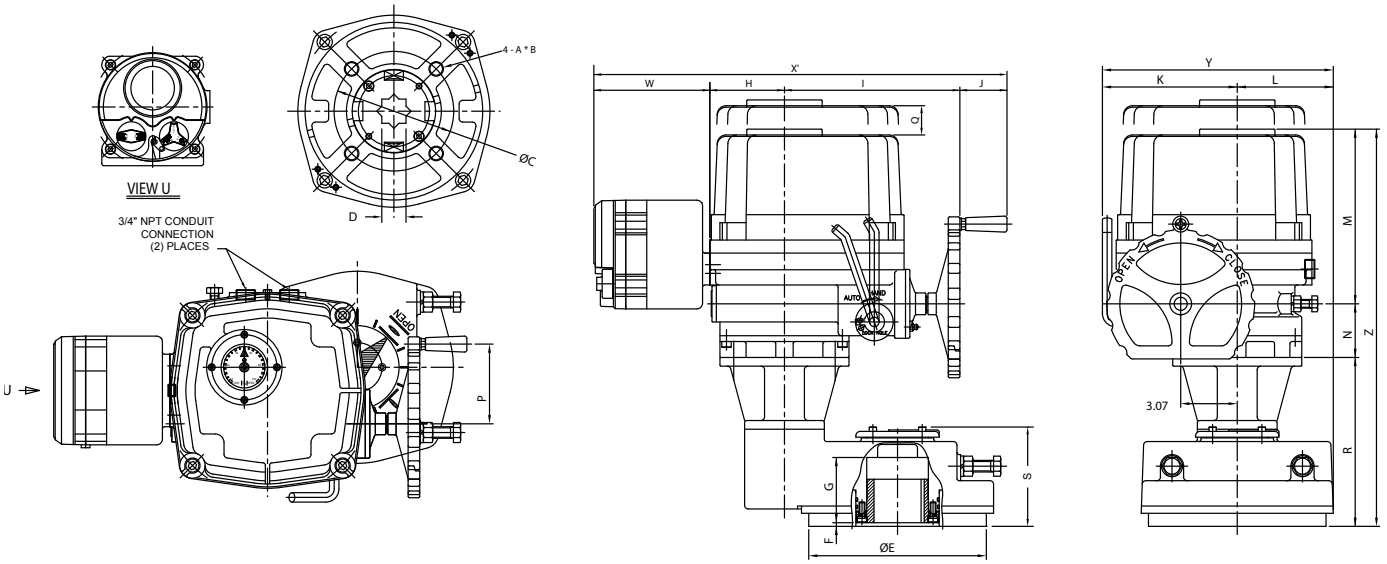

Dimensions

Units (inches)

Model WE	ISO 5211	A	B	C	D sq	E	F	G	H	I	J	K	L	M	N	O	P	Q	R	S	W	X	Y	Z
-1350	F07/F10	M8/M10	0.47/0.59	2.756/4.016	0.748	4.92	0.12	1.65	2.87	7.87	2.56	5.59	3.43	7.56	2.68	2.13	3.07	6.30	-	-	6.30	19.61	9.02	10.55
-1700	F07/F10	M8/M10	0.47/0.59	2.756/4.016	0.748	4.92	0.12	1.65	2.87	7.87	2.56	5.59	3.43	7.56	2.68	2.13	3.07	6.30	-	-	6.30	19.61	9.02	10.55
-2640	F10/F12	M10/M12	0.59/0.71	4.016/4.921	1.063	5.83	0.12	1.93	3.23	8.70	2.56	6.30	3.90	8.70	2.72	2.56	3.07	7.09	-	-	6.30	14.49	10.20	11.42
-4400	F10/F12	M10/M12	0.59/0.71	4.016/4.921	1.063	5.83	0.12	1.93	3.23	8.70	2.56	6.30	3.90	8.70	2.72	2.56	3.07	7.09	-	-	6.30	20.79	10.20	11.97
-5200	F10/F12	M10/M12	0.59/0.71	4.016/4.921	1.063	5.83	0.12	1.93	3.23	8.70	2.56	6.30	3.90	8.70	2.72	2.56	3.07	7.09	-	-	6.30	20.79	10.20	11.97
-6900	F14	M16	0.95	5.512	1.417	7.01	0.12	2.24	4.06	9.53	2.56	7.32	4.37	9.49	2.91	3.07	4.33	8.27	-	-	6.30	22.44	11.69	12.99
-10500	F14	M16	0.95	5.512	1.417	7.01	0.12	2.24	4.06	9.53	2.56	7.32	4.37	9.49	2.91	3.07	4.33	8.27	-	-	6.30	22.44	11.69	12.99
-17500	F16	M20	1.18	6.496	1.417	9.65	0.20	3.54	4.06	9.53	2.56	7.32	5.24	9.49	2.91	3.07	4.33	8.27	9.17	5.24	6.30	22.44	12.56	22.17
-25900	F16	M20	1.18	6.496	1.417	9.65	0.20	3.54	4.06	9.53	2.56	7.32	5.24	9.49	2.91	3.07	4.33	8.27	9.17	5.24	6.30	22.44	12.56	22.17

Wiring drawings are available upon request.

Wiring Connection

WE/XE-1350 thru 25900 *Two Position 115 VAC/1 Ph* SE 1080

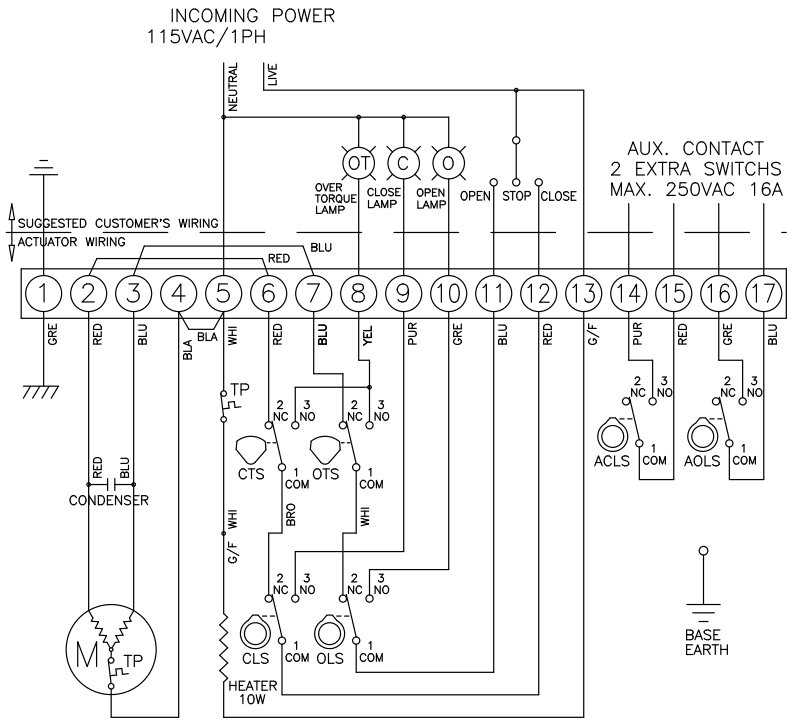

TORQUE AND LIMIT SWITCH OPERATION		
SWITCH	CLOSE ← INTERMEDIATE → OPEN	
CLS 1–2		
CLS 1–3		
OLS 1–2		
OLS 1–3		
ACLS 1–2		
ACLS 1–3		
AOLS 1–2		
AOLS 1–3		
CTS 1–3	* CLOSING TORQUE SWITCH INTERRUPTS CONTROL IF MECHANICAL OVERLOAD OCCURS DURING CLOSING CYCLE	
OTS 1–3	* OPENING TORQUE SWITCH INTERRUPTS CONTROL IF MECHANICAL OVERLOAD OCCURS DURING OPENING CYCLE	

SYMBOL	DESCRIPTION	RATING
CLS	CLOSE LIMIT SWITCH	250VAC 10A
OLS	OPEN LIMIT SWITCH	250VAC 10A
CTS	CLOSE TORQUE SWITCH	250VAC 10A
OTS	OPEN TORQUE SWITCH	250VAC 10A
ACLS	AUX. CLOSE LIMIT SWITCH	250VAC 16A
AOLS	AUX. OPEN LIMIT SWITCH	250VAC 16A
TP	THERMAL PROTECTOR	250VAC 15A

*EACH ACTUATOR SHOULD BE POWERED THROUGH IT'S OWN INDIVIDUAL SWITCH OR RELAY CONTACTS TO PREVENT CROSS FEED BETWEEN TWO OR MORE ACTUATORS.

WEM/XEM-1350 thru 25900 *Proportional 115 VAC/1 Ph* SE 1052

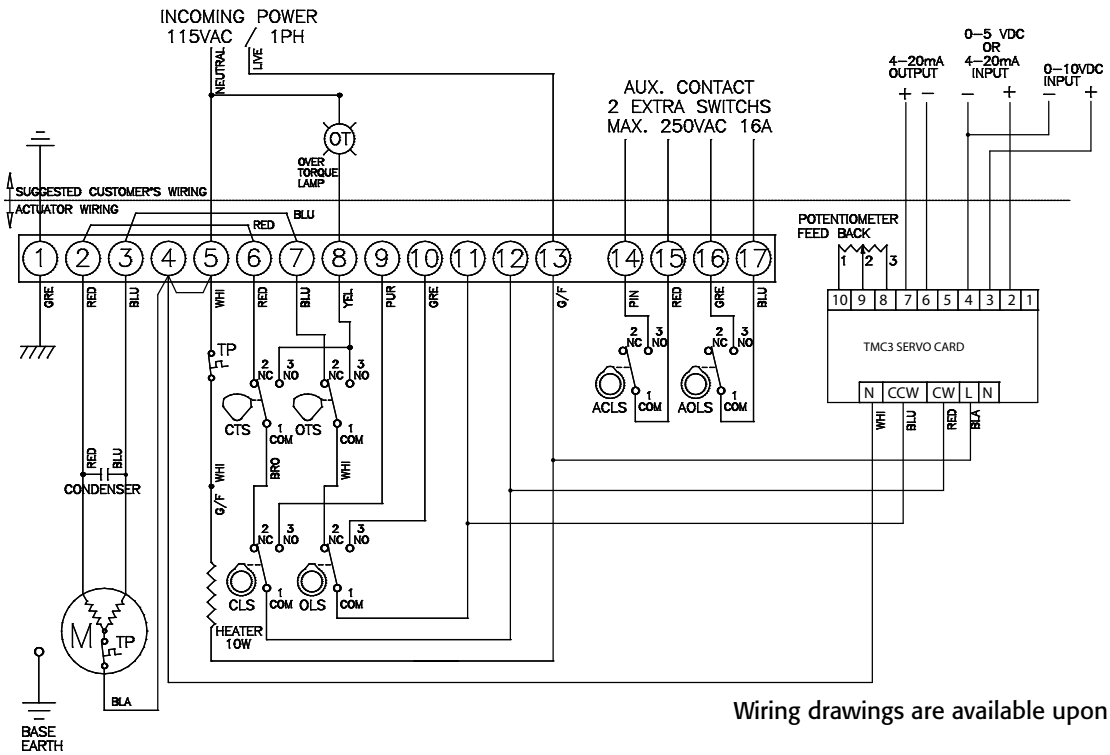

Wiring drawings are available upon request.

Wiring Connection

Digital Control Unit *3 Phase/Proportional* SE 1222

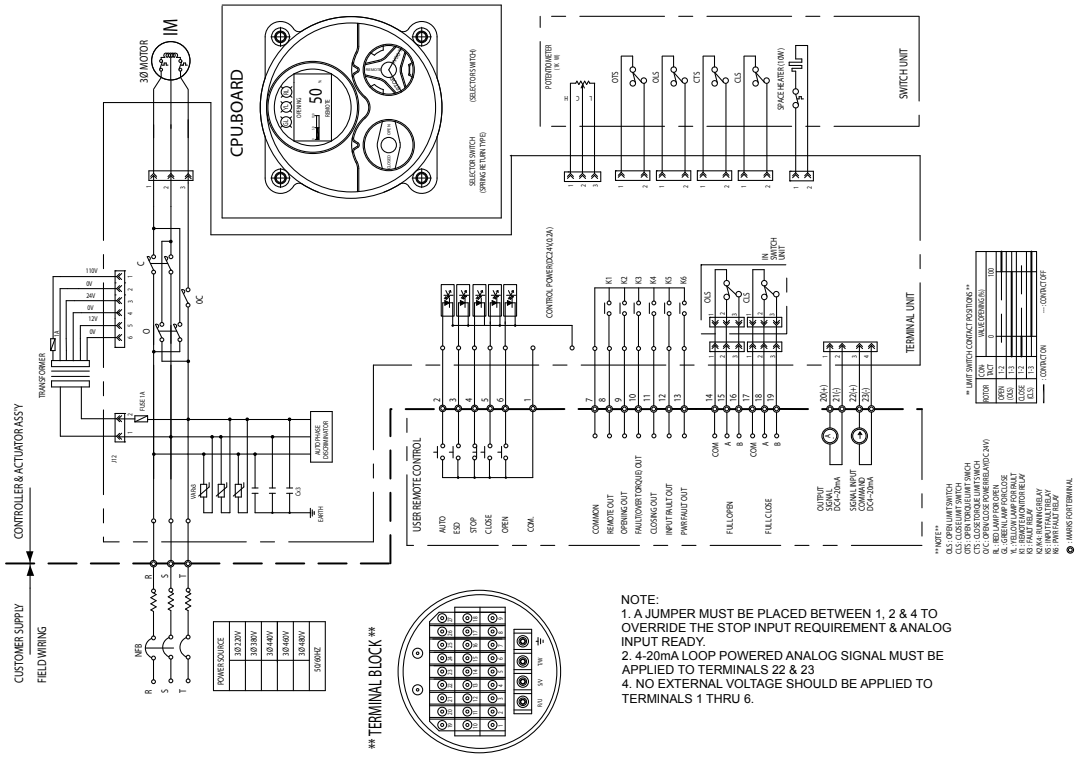

Digital Control Unit *3 Phase/2 Position* SE 1301

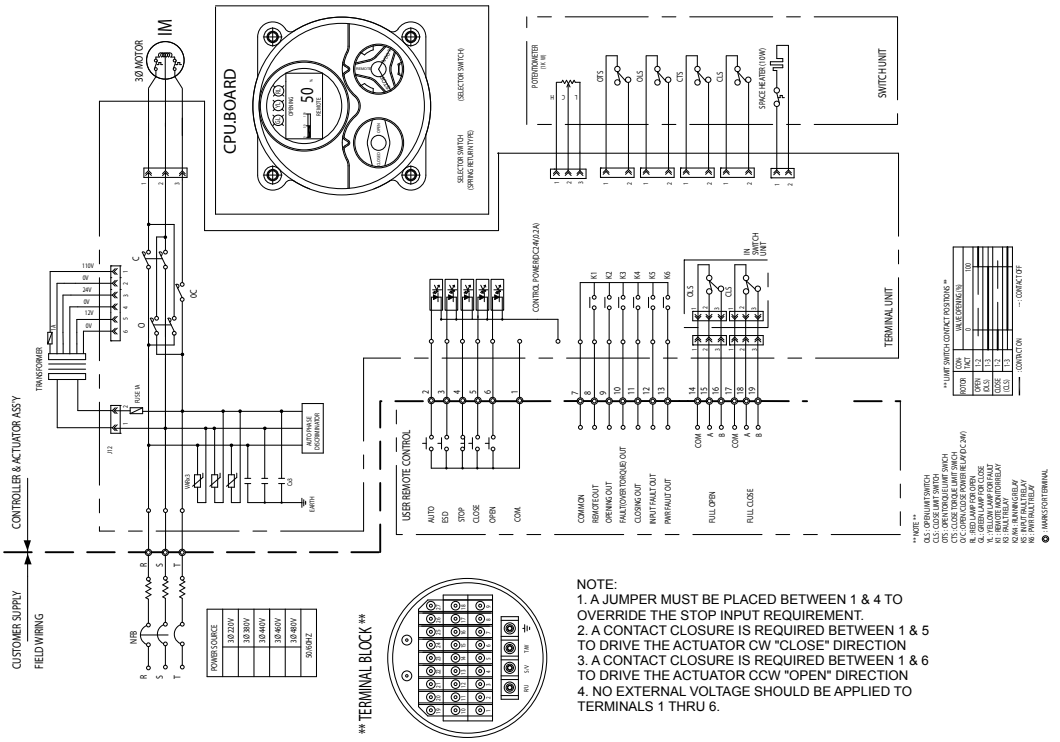

Wiring Connection

Semi-integral Unit 1 Phase/Proportional SE 1176

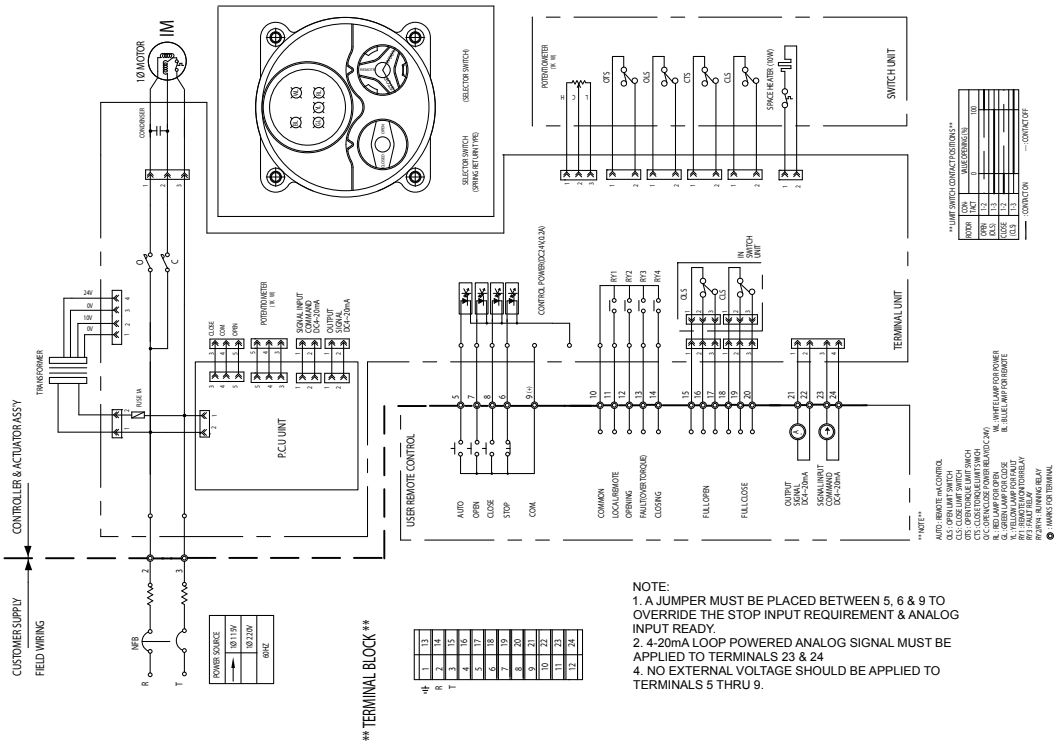

NOTE:
1. A JUMPER MUST BE PLACED BETWEEN 5, 6 & 9 TO OVERRIDE THE STOP INPUT REQUIREMENT & ANALOG INPUT READY.
2. 4-20mA LOOP POWERED ANALOG SIGNAL MUST BE APPLIED TO TERMINALS 23 & 24
4. NO EXTERNAL VOLTAGE SHOULD BE APPLIED TO TERMINALS 5 THRU 9.

Semi-integral Unit 1 Phase/2 Position SE 1097

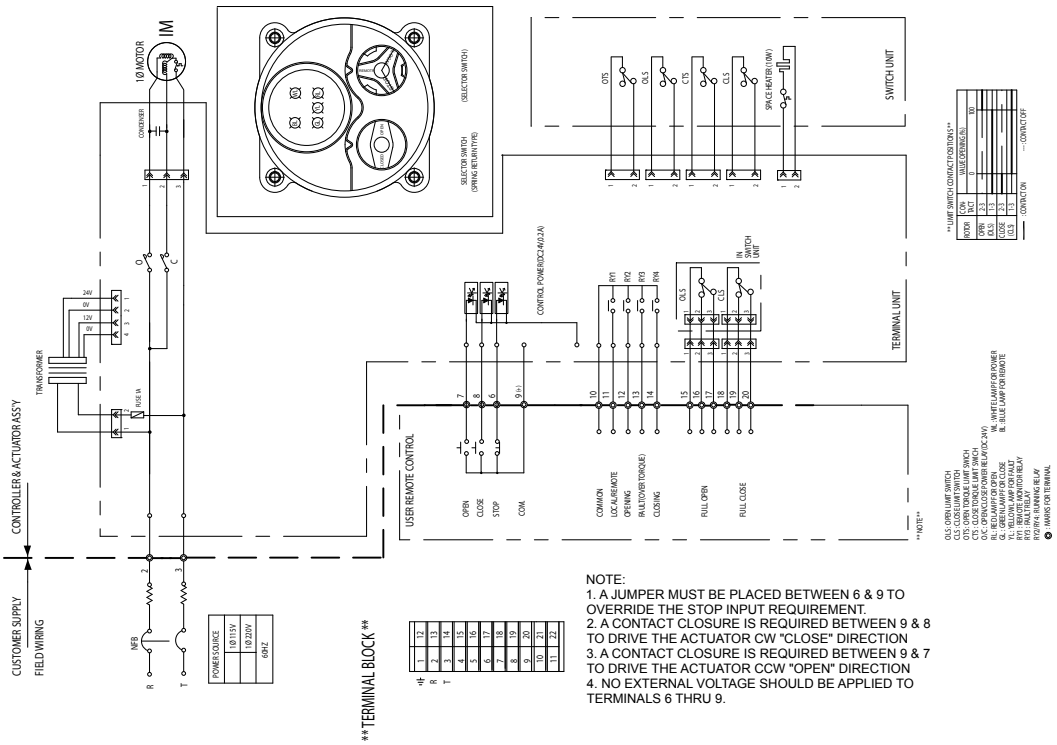

NOTE:
1. A JUMPER MUST BE PLACED BETWEEN 6 & 9 TO OVERRIDE THE STOP INPUT REQUIREMENT.
2. A CONTACT CLOSURE IS REQUIRED BETWEEN 9 & 8 TO DRIVE THE ACTUATOR CW "CLOSE" DIRECTION
3. A CONTACT CLOSURE IS REQUIRED BETWEEN 9 & 7 TO DRIVE THE ACTUATOR CCW "OPEN" DIRECTION
4. NO EXTERNAL VOLTAGE SHOULD BE APPLIED TO TERMINALS 6 THRU 9.

WE-53000 and WE-80000

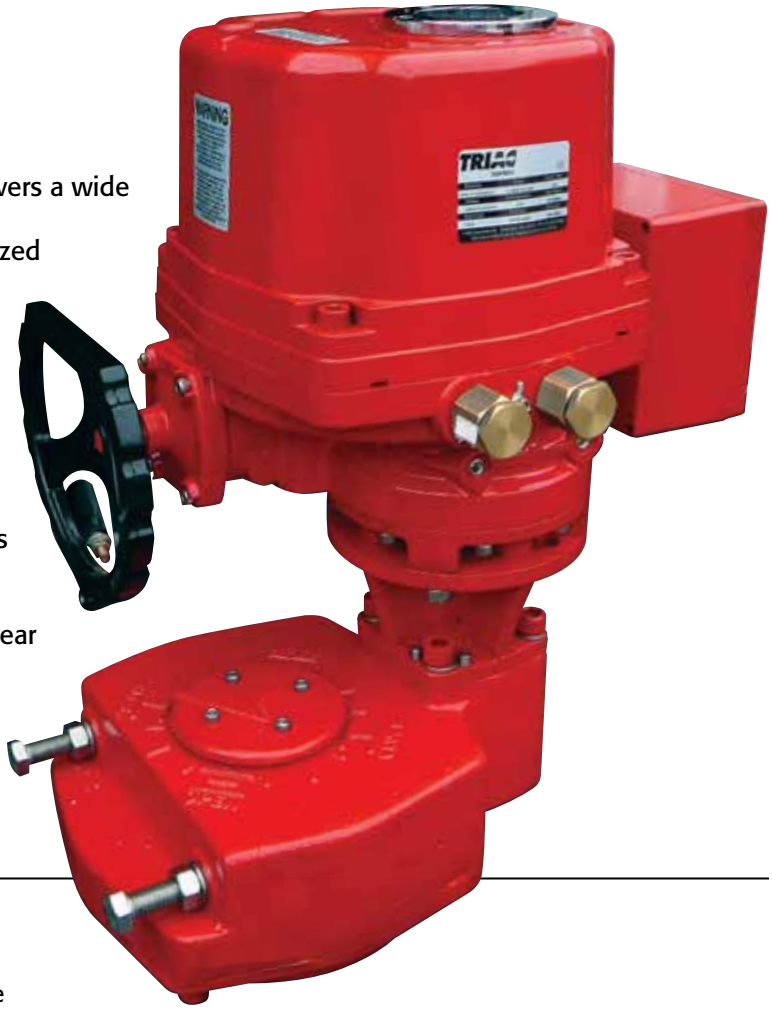

Features

- Compact, robust and lightweight construction covers a wide range of torques up to 80000 In-lbs.
- Polyester powder coated exterior and hard anodized aluminum interior provides excellent protection from the most severe industrial environments.
- Double worm gear design prevents any valve movement from dynamic forces within the pipeline.
- Standard ISO 5211 mounting configuration provides direct mounting option to any ISO 5211 valve.
- Weatherproof enclosure with O-ring seal provides NEMA 4, 4X and 6 (IP67) protection.
- Declutchable manual override with hand wheel.
- Mechanical torque switches prevent motor and gear set damage during excessive torque scenarios.
- Large visual indicator allows for positive visual position indentification from greater distances.
- Digitized control components.

Standard Construction

- Manual override
- External Mechanical Stopper
- Two Conduit entries PF 3/4"
- Removable drive bushing and ISO5211 mounting base
- Standard four limit switches. Two for each travel end (open/close)
- Captive cover bolt
- Space heater
- Limit switches for tight, easy setting
- Spring loaded push type terminal
- Standard color : Red

Technical Information

Type (Model)	Maximum Output Torque	Operating Time 60/50 Hz	Mounting Size	Motor Insulation Class	Rated Current(A) 60Hz			Duty Cycle	Number of Handle Turns	Weight	Maximum Bore Size (mm)	
				AC 1PH. 50/60Hz	1 Phase	3 Phase	3 Phase					
	In-Lbs.	90°	ISO5211		220V	380V	440V	S2		Lbs.	Key (ø)	Square (¤)
WE-53000 WE-80000	53000 80000	149 sec.	F25/30	F	3.15 3.85	1.8 2.0	2.2 2.4	30%	39	335	120	100

Standard Specification

Enclosure..... Weatherproof enclosure IP67, NEMA 4, 4X & 6, O-ring Sealed
Power Supply..... 220VAC/1PH/60Hz, 380/440/ VAC/3Ph/60Hz ± 10%, 24VDC
Duty cycle..... 30%
Motor..... Squirrel Cage induction motor
Limit switches..... 2 each for Open/Close, SPDT, 250 VAC, 10A Rating
Torque switches..... 1 each for Open/Close, SPDT, 250 VAC, 10A Rating
Space heater..... 5W (220VAC) Anti-condensation
Manual override..... Declutchable
Cable conduit..... Two PF 3/4" TAP
Movement angle..... 90° ± 5°
Ambient temperature..... -4°F to 158°F (optional -40° Low Temp Kit)
Ambient Humidity..... 90% RH Max (Non-Condensing)
Position Indicator..... Continuous mechanical indicator with arrow
Self locking..... Provided by double worm gearing (no brake)
Mechanical Stopper..... 1 for each travel end (open/close), external & adjustable
Stall protection/set temp..... Built in thermal protection, Open 302°F (150°C) / Close 207°F (97°C)
Terminal Block..... Spring loaded lever push type
External coating..... Polyester powder coating
Lubrication..... EP type grease
Anti Vibration..... XYZ 10g, 0.2-34Hz, 30 minutes

Dimensions

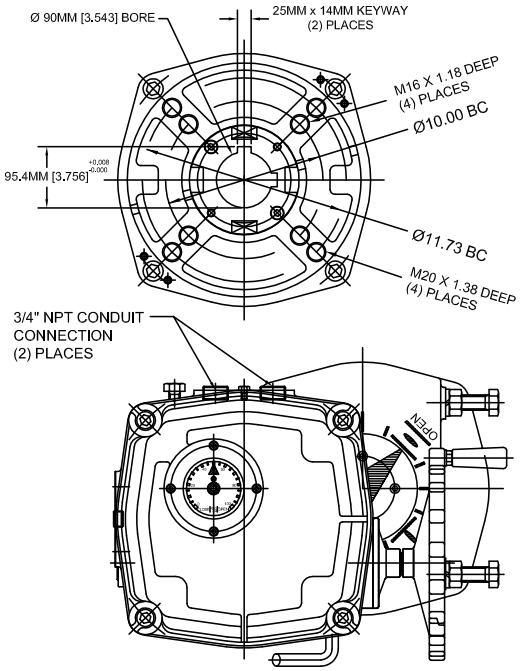

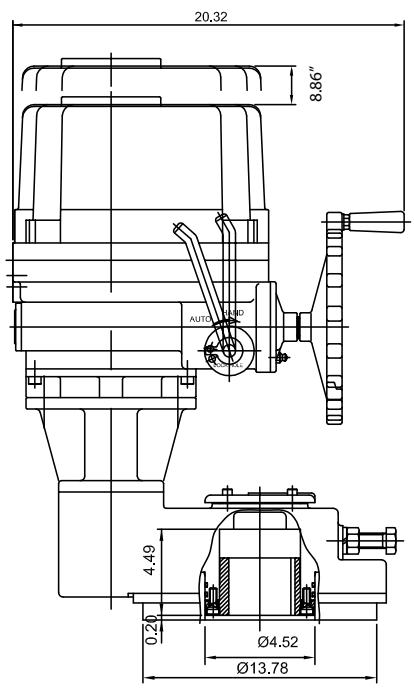

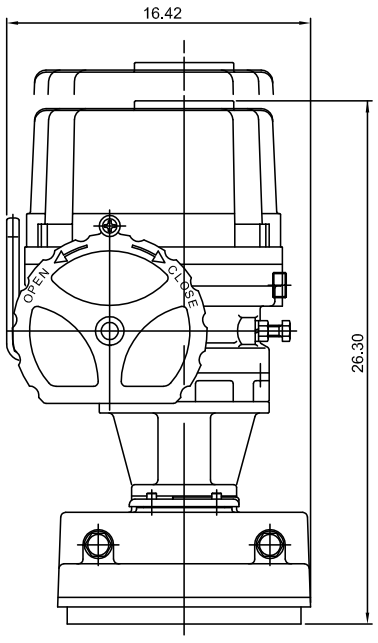

TRIAC CONTROLS

Triac WE / XE Series Part Number Reference

Model	
WE	Weather Proof, IP67, TYPE 4, 4X, 6
XE	Explosion Proof Design, ATEX & IECEx Ex d IIB T4, IP67
FE	Fire Proof Unit (1050ºF for 50 Min)
SE	Submersible unit (IP68, 10 meters for 72 Hours)

Control	
Blank	(2) Position Control (Open / Close)
M	Standard Modulating Control Card (TMC3)
D	TDC-100 Modulating Card (Provides 450 points of resolution)
P	Profibus DP
R	Modbus (RS485)
L	Boiler Feed (4-20mA)
S	Boiler Feed (0-135ohm)

Actuator	
Size	
-350	350 In-Lbs
-350HS	270 In-Lbs
-500	500 In-Lbs
-690	690 In-Lbs
-1350	1350 In-Lbs
-1700	1700 In-Lbs
-2640	2640 In-Lbs
-4400	4400 In-Lbs
-5200	5200 In-Lbs
-6900	6900 In-Lbs
-10500	10500 In-Lbs
-17500	17500 In-Lbs
-25900	25900 In-Lbs
-53000	53000 In-Lbs
-80000	80000 In-Lbs

Motor		
X	115VAC/1PH	Place holder only - Omit when at end of part number
A	24V AC/DC	(N/A 4400 - 25900)
B	12VDC	
C	24VDC*	(N/A 4400 - 25900)
	*Requires additional relays for customer supplied wiring	
D	24VAC/1PH	(N/A 4400 - 25900)
E	220VAC/1PH	
F	220VAC/3PH	(N/A 500, 690)
G	380VAC/3PH	(N/A 500, 690)
H	440VAC/3PH	(N/A 500, 690)
J	460VAC/3PH	(N/A 500, 690)
K	480VAC/3PH	(N/A 500, 690)

Options		
X	No options	Place holder only - Omit when at end of part number
2	ADM-100 Control Board - 24 VDC On/Off	
B	Semi-integral Control Unit	(N/A 500, 690)
C	Intelligent Digital Control Unit	(N/A 500, 690)
D	Local / Remote Control Switches	(Only 500, 690)
E	Electronic Speed Control Module - 115 VAC only	
F	2 Wire Control & Speed Control - 115 VAC only	
G	End of travel time delay (same in both directions)	
HS1/HS2	See High Speed Options	
R	2 Wire Control, Relay - 115 VAC control voltage	
S	2 Wire Control, Relay - 24 VAC control voltage	
T	2 Wire Control, Relay - 24 VDC control voltage	

Miscellaneous Options Note: Add all miscellaneous options to end of part number		
Blank	No options	
T	4-20mA Transmitter	
N	1000 Ohm Potentiometer	
O	5000 Ohm Potentiometer	
P	10K Ohm Potentiometer	
X	120º Operation	(N/A 17500 or 25900)
Y	180º Operation	(N/A 17500 or 25900)
Z	270º Operation	(N/A 17500 or 25900)
L	-40º Low Temp Kit	
I	Position Indicator Lamps (Open, Close, Torque)	(N/A 500, 690)
S	(2) additional limit switches (6 total)	(N/A 500, 690)
	Floor Drive Mounting Configuration - See Floor Drive Catalog	

Examples

WEM-1350
(Weather Proof Housing, Modulating Control, model size 1350, 115VAC / 1PH)

WEM-1350XXT
(Weather Proof Housing, Modulating Control, model size 1350, 115VAC / 1PH, 4-20mA Transmitter)

AT Controls reserves the right to change product designs and technical/dimensional specifications without notice.

A-T Controls, Inc.

9955 International Blvd. PHONE (513) 247-5465
Cincinnati, Ohio 45246 FAX (513) 247-5462
www.atcontrols.com sales@atcontrols.com

WE-20150508
Copyright 2013 A-T Controls, Inc.
LIT0021

CLA-VAL™

12" Model 581 KC
3" Model 581 KC

Series 581

Silent Globe Check Valve

FM APPROVED

- **Operates Horizontally or Vertically**
- **Watertight Seating**
- **Field Replaceable Parts**
- **Factory Mutual Approved – Various Sizes**
- **Optional Resilient Seat**

The Cla-Val Series 581 Silent Globe Check Valve has a spring-loaded poppet that allows the valve to close before flow reversal occurs, resulting in a silent, non-slam closure. It is a truly silent check valve. For ease of installation, the valve can be installed in vertical or horizontal positions with flow up or flow down. Silent Globe Check Valves are available in 2 1/2" to 42" sizes, with either a 125 lb. or 250 lb. pressure class rating. Silent Globe Check Valves shall be coated with NSF fusion bonded epoxy coating on valve interior and exterior.

Constructed of a cast iron body with bronze trim, the Cla-Val Silent Globe Check Valve offers watertight shutoff with metal-to-metal seating. ~~For special applications, stainless steel trim and Buna-N® resilient seats are available as options.~~ All materials conform to ASTM specifications, ensuring long lasting reliable performance. As a confirmation of Cla-Val's commitment to quality, 2 1/2" to 12" 125 lb. class Series 581 valves are Factory Mutual approved.

SPECIFICATIONS

The silent globe check valve shall consist of a heavy cast iron body, bronze seat, bronze disc, and stainless steel spring. The valve disc shall be center guided at both ends with an integral shaft and shall be spring loaded for silent operation. The spring shall be helical or conical and stone tumbled to achieve a micro-finish to resist mineral deposits. For ease of maintenance, the seat and disc shall be replaceable in the field.

Check valve shall be capable of silent operation when installed in vertical or horizontal positions with either flow up or flow down. The flow area through the body shall be equal to or greater than the cross-section area of the equivalent pipe size. Sizes 2 1/2" to 10" shall allow bolting a wafer style butterfly valve directly to the outlet flange without a spool piece.

All materials of construction shall conform to ASTM specifications as follows:

***Valve Body:** Cast Iron ASTM A126 Class B

Disc & Seat: Bronze ASTM B584

Spring: Stainless Steel ASTM A313.5
Stone Tumbled & Stress Relieved.

Sizes: 3" thru 10" shall accept a direct connected Butterfly Valve for isolation use and space saving in the pump station.

The valve shall be a Cla-Val Series 581 Silent Globe Check Valve.

~~**Note:** Cla-Val Series 581 Silent Globe Check Valve available in all 316 Stainless Steel Material.~~

Series 581 Pressure Loss Curve
(Typical)

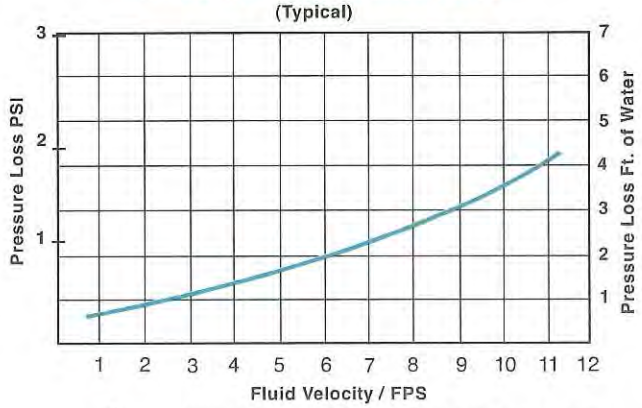

PRESSURE / TEMPERATURE RATINGS
WAFER AND GLOBE STYLE SILENT CHECK VALVES

TEMP DEG F.	MAXIMUM NON-SHOCK WATER SERVICE PRESSURE							
	GRAY IRON 125 LB. CLASS		DUCTILE IRON 150 LB. CLASS		GRAY IRON 250 LB. CLASS		DUCTILE IRON 300 LB. CLASS	
	2" - 12"	14" - 42"	2" - 12"	14" - 42"	2" - 12"	14" - 42"	2" - 12"	14" - 42"
0 -150°	200	150	300	250	400	300	500	400
200°	190	135	280	230	370	280	460	370
250°	*	*	270	220	*	*	440	355
TEST PRES.	300	230	450	375	600	450	750	600

* Ductile Iron Recommended For Hot Water Service Above 200° F.

CLA-VAL™

ACS
10/4/15

FM
* APPROVED

Silent Globe Check Valve
SERIES 581

*CHECK 12" QTY'S
VAULT "C" IS NOT ONLY
INSTALLED.
-PI- 00-000005
~~-CV-00-000012~~
-CV-00-000022

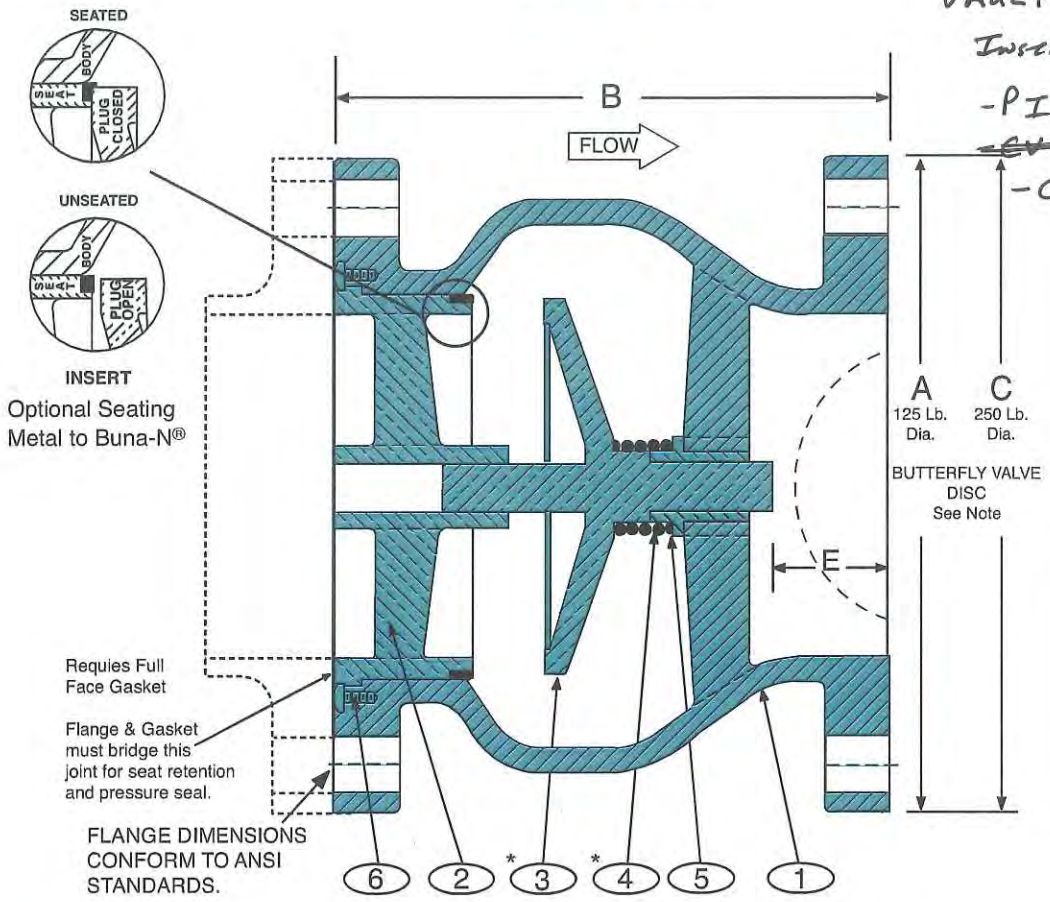

Note: Plug 3 & spring 4 compressed are shown in Open Position.

Dimensions (In Inches)

ANSI CLASS 125 and 250							
Model	Size	Weight Lbs		A 125 Dia.	B	C 250 Dia.	E
		125	250				
581	2 1/2	24	30	7	5 1/2	7 1/2	1
581	3*	29	36	7 1/2	6	8 1/4	1 3/8
581	4*	42	59	9	7 1/4	10	1 3/4
581	5*	52	78	10	8 1/2	11	2
581	6*	73	103	11	9 3/4	12 1/2	2 1/2
581	8*	126	179	13 1/2	12 1/2	15	3 1/4
581	10*	205	253	16	15 1/2	17 1/2	4 1/4
581	12*	306	401	19	14 1/4	20 1/2	
581	14	380	511	21	15 3/4	23	Spool
581	16	501	697	23 1/2	17 5/8	29 1/2	
581	18	724	959	25	18 3/4	28	Piece
581	20	890	1180	27 1/2	20 5/8	30 1/2	
581	24	1220	1680	32	24	36	is
581	30	2000	2375	38 3/4	29 1/4	43	
581	36	4421	5511	46	45	50	Needed
581	42	7203	8663	53	50	57	

* FM Approved

Detail No.	Name	Material Description
1	Body	Cast Iron ASTM A126, Class B
2	Seat	Bronze ASTM B584**
3	Plug	Bronze ASTM B584
4	Spring	Stainless Steel T302 ASTM A313.5
5	Bushing	Bronze ASTM B584
6	Screw	Stainless Steel T316 ASTM A276

**~~Optional Resilient Seat Available However Valve is not FM Approved~~

Temp. Rating	MAXIMUM SERVICE PRESSURE ANSI BI6.1 FLG. RATINGS			
	125 LB. CLASS		250 LB. CLASS	
	2" - 12"	14" - 42"	2" - 12"	14" - 42"
0-150° F	200	150	400	300
200° F	190	135	370	280
Test Pressure	300	230	600	450

NOTE: Butterfly Valve Disc sizes 3" to 10" designed to allow bolting a wafer style butterfly valve directly to the outlet flange without a spool piece.

CLA-VAL P.O. Box 1325 • Newport Beach, CA 92659-0325 • Phone: 949-722-4800 • Fax: 949-548-5441 • E-mail: claval@cla-val.com • Website cla-val.com
©Copyright Cla-Val 2011 Printed in USA Specifications subject to change without notice.

Technical Bulletin

EPOXY PROTECTIVE COATING

Epoxy resin powders were created and developed specifically for the application of thin film corrosion protection to metal or other substrates. Epoxy resin coatings are suitable for continuous exposure to a wide range of corrosive elements. Of particular interest for control valves is the high resistance to various water conditions. They also provide resistance to certain acids, chemicals, solvents and alkalis. They have excellent adhesion to almost any prepared surface. They are sufficiently flexible to be used to protect steel springs from corrosion and have an impact strength that allows retainability and restoration of surface coating under normal drop conditions.

Since the early 1970's the application process used by Cla-Val is the fusion method. This method of applying epoxy resins utilizes the principal of covering a suitably cleaned and preheated part with a one-part dry powdered resin. The dry powdered resin fuses itself to the heated part. A curing period in an oven at 400 degrees F completes the process. No volatile solvents are required and thus there are no pinholes left by evaporation of such materials. The coating is applied by electrostatic spray or flock spray to a nominal thickness recommended by the coating manufacturer.

Cla-Val valves specified with epoxy coating applied at the factory fully conform to the standards below. Applied to the inside and outside of all ferrous parts, this coating option is indicated with "KC" as a suffix to the valve catalog number.

CERTIFICATION

This is to confirm that Cla-Val uses AKZO Nobel R4-HJF42R (Blue) epoxy powder coating material for our factory applied protective coating. Our coating application process conforms to all applicable requirements of the American Water Works Association Standard C550 entitled "Protective Interior Coatings for Valves and Hydrants."

The AKZO Nobel R4-HJF42R (Blue) epoxy powder coating material is certified as a protective barrier material and approved by NSF Standard 61 - Drinking Water System Components - Health Effects (Nov. 16, 1995).

The AKZO Nobel R4-HJF42R (Blue) epoxy powder coating material is formulated with ingredients which are listed in or cited by the suppliers as in compliance with Federal Drug Administration Document, Title 21 of the Federal Regulations on Food Additives, Section 175.300, "Resinous and Polymeric Coatings."

CLA-VAL
AUTOMATIC CONTROL VALVES

581

Place this manual with personal responsible for maintenance of this valve

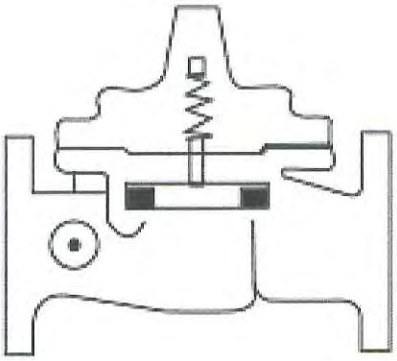

INSTALLATION

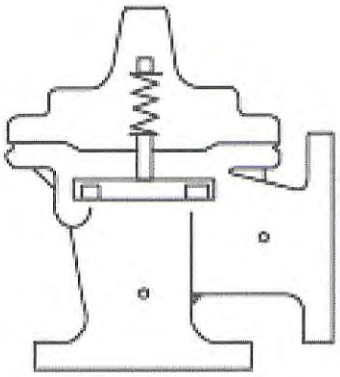

OPERATION

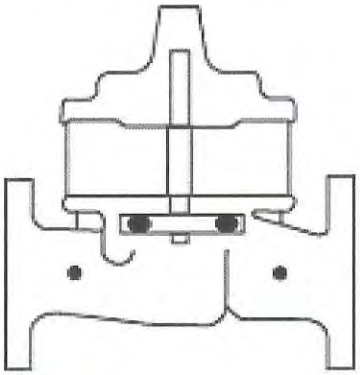

MAINTENANCE

CLA-VAL™

CLA-VAL ¥ P.O. BOX 1325 ¥ NEWPORT, CA 92659-0325 ¥ (949) 722-4800 ¥ FAX: (949) 548-5441
CLA-VAL CANADA LTD. ¥ 4687 Christie Drive ¥ Beamsville, Ontario, LOR 1B4 Canada ¥ (905) 563-4963

CLA-VAL

— SERIES — 580 & 581
SILENT CHECK VALVES

OPERATION:
Cla-Val Silent Check Valves operate automatically, to open... when pump flow starts and close silently ...when pump flow stops.

INSTALLATION:
Silent Check Valves, Wafer and Globe style must be installed between flat faced iron or steel flanges per ANSI B16.5 or Awwa 207, utilizing a full faced gasket to bridge the joint between the seat O.D. (2) and the body (1) flange face. In this manner a pressure seal at this joint is made (see **Note 1**). Install the valve so that the nameplate data is plainly read and the flow arrow points in the flow direction.

MAINTENANCE:
Cla-Val Silent Check Valves are ruggedly designed for years of trouble-free service. Therefore, regular maintenance is not required. However, during initial start-up period the following problems may surface (due to mis-application) that can be easily resolved:

A. No Flow thru Valve:
1. Observe that the flow arrow name plate, on the valve body, is pointing in the direction of flow.
2. Check that the down stream shut-off valve is full open.

B. Valve Chatters:
1. Confirm that the flow velocity is a minimum 3'/Sec.
2. Check that there is a minimum of 3 diameters of straight pipe installed up stream of the silent check valve.

C. Valve Leakage:
1. Confirm a full face gasket is installed per Note 1.

Series 581
Globe Style
Check Valve
2" thru 42"

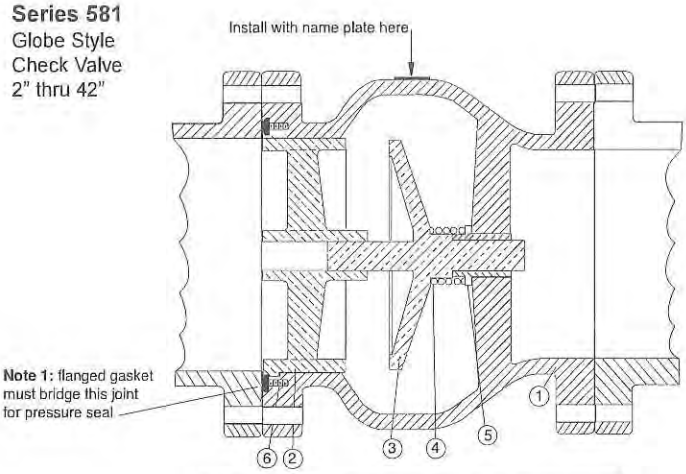

Detail	Description	Material
1	Body	Cast Iron
2	Seat*	Bronze or SS
3	Disc*	Bronze or SS (Optional Buna-N®)
4	Spring*	Stainless Steel
5	Bushing*	Bronze
6	Screw*	Stainless Steel (3" & larger valves)

Note 2: All size 2" and 2 1/2" valves have threaded seats in liev of screws

* Recommended Spare Part Kit

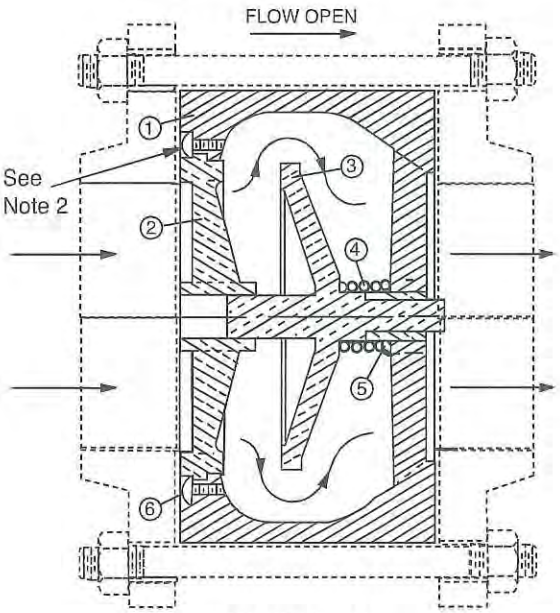

SERIES 580
WAFER STYLE CHECK VALVE
2" THRU 10"

TO REMOVE VALVE FROM PIPELINE FOR INSPECTION:

1. Shut off pump and pressure upstream and shut off isolation valve downstream to completely isolate check valve. A skilled pipe fitter should be used for this work.
2. Lay valve to rest on its downstream side and remove cap screws as shown in Fig. 3. **Note** that 2" and 2-1/2" valves threaded seats in lieu of cap screws.
3. Grip seat spokes by hand to pull out seats or push down the disc and release quickly to allow force of the spring to pop out the seat.
4. With seat removed, check that all internal parts are freely removable from valve body.
5. Examine all parts for wear/damage and order replacement PARTS KITS as shown below.

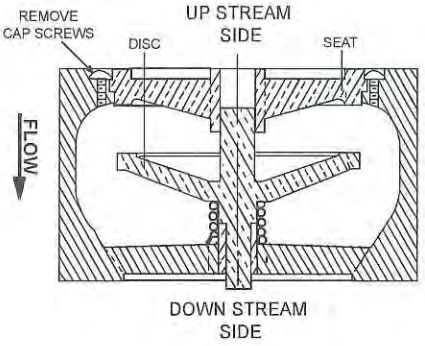

FIG. 3

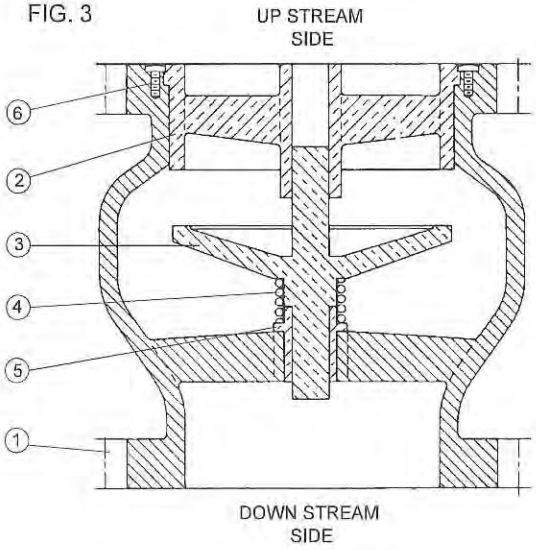

Detail	Description	Material
1	Body	Cast Iron
2	Seat*	Bronze or SS
3	Disc*	Bronze or SS (Optional Buna-N®)
4	Spring*	Stainless Steel
5	Bushing*	Bronze
6	Screw*	Stainless Steel (3" & larger valves)

Note 2: All size 2" and 2 1/2" valves have threaded seats in liev of screws

* Recommended Spare Part Kit

Silent Check Valve Spare Part Kits

Series 580 Wafer Style		
Model	Size	Kits
580	2"	A B C D
580	2 1/2"	A B C D
580	3"	A B C D
580	4"	A B C D
580	5"	A B C D
580	6"	A B C D
580	8"	A B C D
580	10"	A B C D

Series 581 Globe Style		
Model	Size	Kits
581	2"	A B C D
581	2 1/2"	A B C D
581	3"	A B C D
581	4"	A B C D
581	5"	A B C D
581	6"	A B C D
581	8"	A B C D
581	10"	A B C D
581	12"	A B C D
581	14"	A B C D

A- Kit Includes Detail 2 Bronze Seat & Detail 3 Disc
B- Kit Includes Detail 2 Stainless Steel Seat & Detail 3 Disc
C- Kit Includes Detail 2 Stainless Steel Seat, Detail 3 Disc, Detail 4 Spring, & Detail 5 Bronze Bushing
D- Kit Includes Detail 2 Stainless Steel Seat, Detail 3 Disc, Detail 4 Spring, & Detail 5 Stainless Steel Bushing

CLA-VAL P.O. Box 1325 • Newport Beach, CA 92659-0325 • Phone: 949-722-4800 • Fax: 949-548-5441 • E-mail: claval@cla-val.com • Website cla-val.com
©copyright Cla-Val 2001 Printed in USA Specification subject to change without notice.

Cla-Val Product Identification

How to Order

Proper Identification

For ordering repair kits, replacement parts, or for inquiries concerning valve operation it is important to properly identify Cla-Val products already in service. Include all nameplate data with your inquiry. Pertinent product data includes valve function, size, material, pressure rating, end details, type of pilot controls used and control adjustment ranges.

Identification Plates

For product identification, cast in body markings are supplemented by identification plates as illustrated on this page. The plates, depending on type and size of product, are mounted in the most practical position. **It is extremely important that these identification plates are not painted over, removed, or in any other way rendered illegible.**

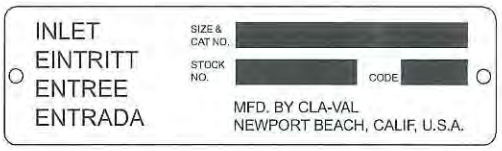

This brass plate appears on valves sized $2^1/_2$" and larger and is located on the top of the inlet flange.

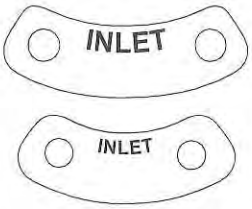

These two brass plates appear on $^3/_8$", $^1/_2$", and $^3/_4$" size valves and are located on the valve cover.

This brass plate appears on altitude valves only and is found on top of the outlet flange.

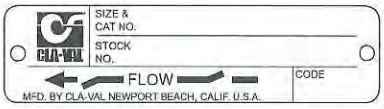

These two brass plates appear on 1" through 3" size screwed valves or 1" through 2" flanged valves . It is located on only one side of the valve body.

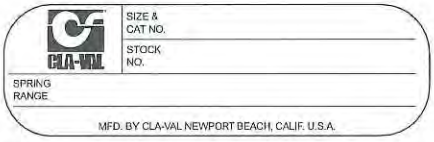

This tag is affixed to the cover of the pilot control valve. The adjustment range appears in the spring range section.

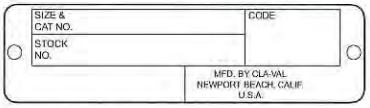

This brass plate is used to identify pilot control valves. The adjustment range is stamped into the plate.

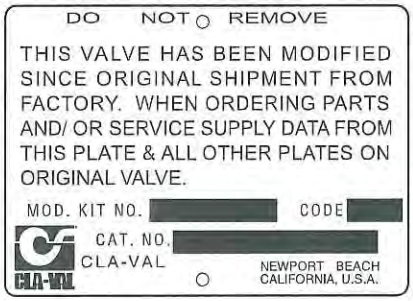

This aluminum plate is included in pilot system modification kits and is to be wired to the new pilot control system after installation.

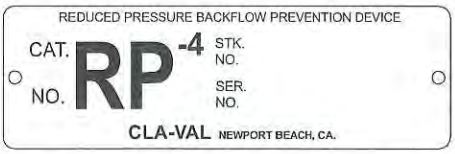

This brass plate is on our backflow prevention assemblies. It is located on the side of the number two check (2" through 10"). The serial number of the assembly is also stamped on the top of the inlet flange of the number one check.

HOW TO ORDER

There are many valves and controls manufactured by Cla-Val that are not listed due to the sheer volume. For information not listed, please contact your local Cla-Val office or our factory office located at:

P. O. Box 1325
Newport Beach, California 92659-0325
(949) 722-4800
FAX (949) 548-5441

SPECIFY WHEN ORDERING

- Model Number
- Globe or Angle Pattern
- Adjustment Range (As Applicable)
- Valve Size
- Screwed or Flanged
- Body and Trim Materials
- Optional Features
- Pressure Class

UNLESS OTHERWISE SPECIFIED

- Globe or angle pattern are the same price
- Ductile iron body and bronze trim are standard
- X46 Flow Clean Strainer or X43 "Y" Strainer are included
- CK2 Isolation Valves are included in price on 4" and larger valve sizes (6" and larger on 600 Series)

LIMITED WARRANTY

Automatic valves and controls as manufactured by Cla-Val are warranted for three years from date of shipment against manufacturing defects in material and workmanship which develop in the service for which they are designed, provided the products are installed and used in accordance with all applicable instructions and limitations issued by Cla-Val.

We will repair or replace defective material, free of charge, which is returned to our factory, transportation charges prepaid, provided that, after inspection, the material is found to have been defective at time of shipment. This warranty is expressly conditioned on the purchaser's giving Cla-Val immediate written notice upon discovery of the defect.

Components used by Cla-Val but manufactured by others, are warranted only to the extent of that manufacturer's guarantee.

This warranty shall not apply if the product has been altered or repaired by others, and Cla-Val shall make no allowance or credit for such repairs or alterations unless authorized in writing by Cla-Val.

DISCLAIMER OF WARRANTIES AND LIMITATIONS OF LIABILITY

The foregoing warranty is exclusive and in lieu of all other warranties and representations, whether expressed, implied, oral or written, including but not limited to any implied warranties or merchantability or fitness for a particular purpose. All such other warranties and representations are hereby cancelled.

Cla-Val shall not be liable for any incidental or consequential loss, damage or expense arising directly or indirectly from the use of the product. Cla-Val shall not be liable for any damages or charges for labor or expense in making repairs or adjustments to the product. Cla-Val shall not be liable for any damages or charges sustained in the adaptation or use of its engineering data and services. No representative of Cla-Val may change any of the foregoing or assume any additional liability or responsibility in connection with the product. The liability of Cla-Val is limited to material replacements F.O.B. Newport Beach, California.

TERMS OF SALE

ACCEPTANCE OF ORDERS

All orders are subject to acceptance by our main office at Newport Beach, California.

CREDIT TERMS

Credit terms are net thirty (30) days from date of invoice.

PURCHASE ORDER FORMS

Orders submitted on customer's own purchase order forms will be accepted only with the express understanding that no statements, clauses, or conditions contained in said order form will be binding on the Seller if they in any way modify the Seller's own terms and conditions of sales.

PRODUCT CHANGES

The right is reserved to make changes in pattern, design or materials when deemed necessary, without prior notice.

PRICES

All prices are F.O.B. Newport Beach, California unless expressly stated otherwise on our acknowledgement of the order. Prices are subject to change without notice. The prices at which any order is accepted are subject to adjustment to the Seller's price in effect at the time of shipment. Prices do not include sales, excise, municipal, state or any other Government taxes. Minimum order charge $75.00.

RESPONSIBILITY

We will not be responsible for delays resulting from strikes, accidents, negligence of carriers, or other causes beyond our control. Also, we will not be liable for any unauthorized product alterations or charges accruing there from.

RISK

All goods are shipped at the risk of the purchaser after they have been delivered by us to the carrier. Claims for error, shortages, etc., must be made upon receipt of goods.

EXPORT SHIPMENTS

Export shipments are subject to an additional charge for export packing.

RETURNED GOODS

1. Customers must obtain written approval from Cla-Val prior to returning any material.
2. Cla-Val reserves the right to refuse the return of any products.
3. Products more than six (6) months old cannot be returned for credit.
4. Specially produced, non-standard models cannot be returned for credit.
5. Rubber goods such as diaphragms, discs, o-rings, etc., cannot be returned for credit, unless as part of an unopened vacuum sealed repair kit which is less than six months old.
6. Goods authorized for return are subject to a 35% ($75 minimum) restocking charge and a service charge for inspection, reconditioning, replacement of rubber parts, retesting, repainting and repackaging as required.
7. Authorized returned goods must be packaged and shipped prepaid to Cla-Val, 1701 Placentia Avenue, Costa Mesa, California 92627.

CLA-VAL

CLA-VAL
PO Box 1325 Newport Beach CA 92659-0325
Phone: 949-722-4800 • Fax: 949-548-5441

CLA-VAL CANADA
4687 Christie Drive
Beamsville, Ontario
Canada LOR 1B4
Phone: 905-563-4963
Fax: 905-563-4040

CLA-VAL EUROPE
Chemin des Mésanges 1
CH-1032 Romanel/
Lausanne, Switzerland
Phone: 41-21-643-15-55
Fax: 41-21-643-15-50

www.cla-val.com

COPYRIGHT CLA-VAL 2003 Printed in USA
Specifications subject to change without notice.

Represented By:

E-Product I.D. (R-4/02)

Kirtland Air Force Base
Bulk Fuels Facility
Mid Plum Pump & Treat System

I&C Controls Submittal

Engineer: CB&I Federal Services LLC
6380 S. Fiddlers Green Circle, Suite 300
Greenwood Village, CO 80111

General Contractor: RMCI
6211 Chappell Rd NE
Albuquerque, NM 87113

Contractor: Corbins Electric
4829 S 38th Street
Phoenix, AZ 85040

Sub Contractor: I&C Solutions
4485 Irving Blvd NW
Albuquerque, NM 87114
(505) 821-8960

The intent of the design was for the RAPID contract to have a remote I/O rack, connected by Ethernet over radio to the permanent treatment system building's controller. It is our understanding that a controller is not necessary to achieve this.

However, a controller in the pump house doesn't prevent the system from running.

It may be more cost effective to remove the controller included. This is left up to the Contractor as either solution is viable.

Submittal includes the following

Flow transmitters
Level Transmitters
Leak Detection Devices for Vaults and Pipe
Control Panels

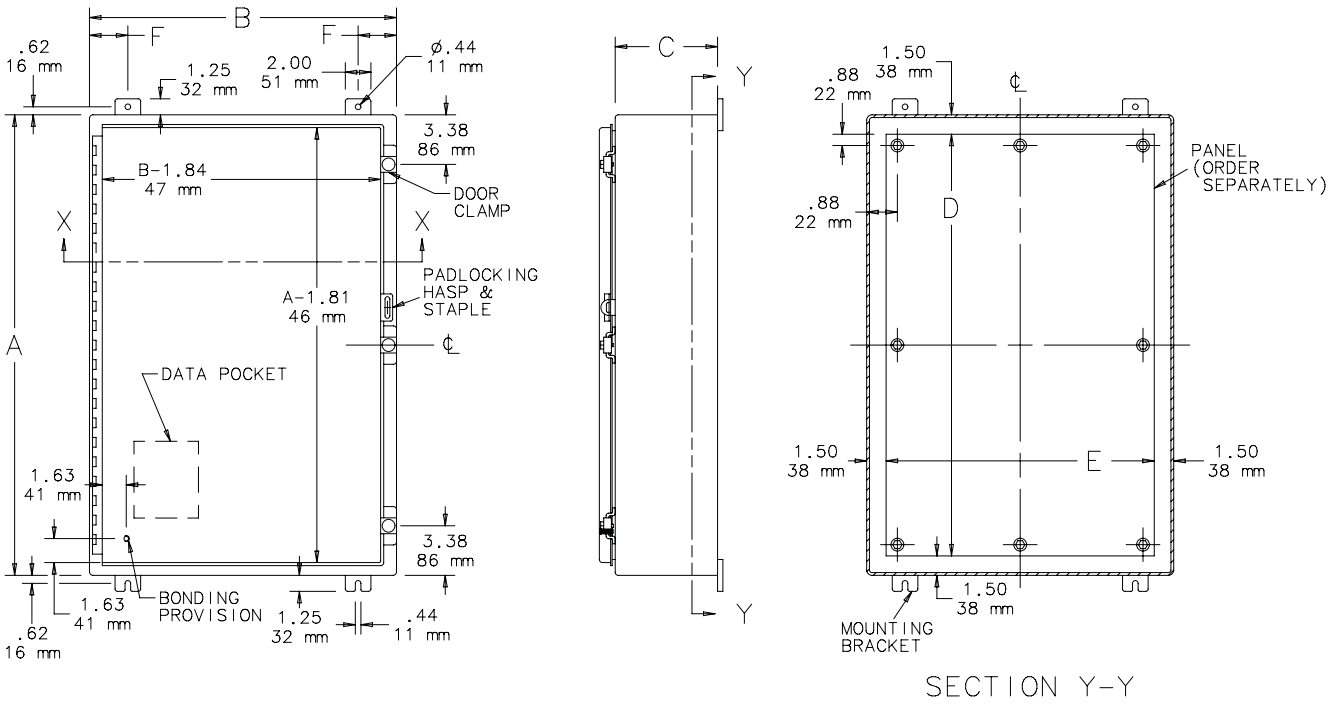
B
F
F
.62
16 mm
1.25
32 mm
2.00
51 mm
ø.44
11 mm
3.38
86 mm
B-1.84
47 mm
DOOR
CLAMP
X
X
PADLOCKING
HASP &
STAPLE
A-1.81
46 mm
A
DATA POCKET
1.63
41 mm
3.38
86 mm
1.63
41 mm
BONDING
PROVISION
1.25
32 mm
.44
11 mm
.62
16 mm
C
Y
Y
1.50
38 mm
.88
22 mm
PANEL
(ORDER
SEPARATELY)
.88
22 mm
D
1.50
38 mm
E
1.50
38 mm
1.50
38 mm
MOUNTING
BRACKET
SECTION Y-Y

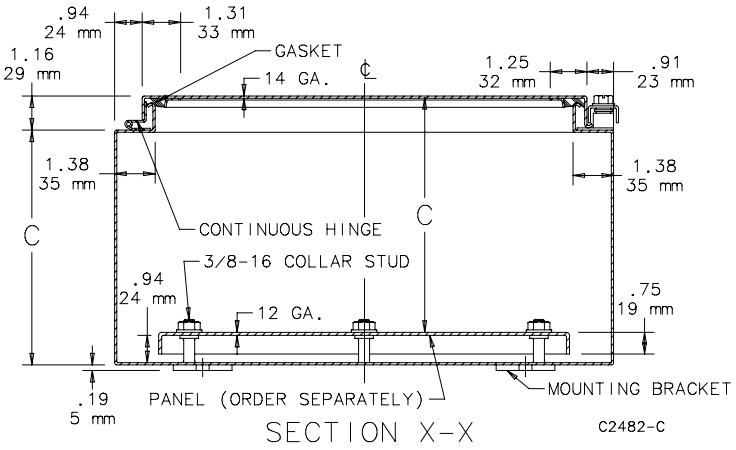
.94
24 mm
1.31
33 mm
1.16
29 mm
GASKET
14 GA.
1.25
32 mm
.91
23 mm
1.38
35 mm
1.38
35 mm
C
CONTINUOUS HINGE
C
3/8-16 COLLAR STUD
.94
24 mm
12 GA.
.75
19 mm
.19
5 mm
PANEL (ORDER SEPARATELY)
MOUNTING BRACKET
SECTION X-X
C2482-C

BOM #3

800T/H 30.5 mm Trigger Action E-Stops

Allen-Bradley

Product Summary

800T Type 4/13 Metal

Non-Illuminated
- 45 mm plastic head
- 60 mm plastic head
- 63 mm metal head

Illuminated
- 45 mm plastic head
- 60 mm plastic head

Key Release
- 45 mm plastic head

800H Type 4/4X/13 Plastic

Non-Illuminated
- 45 mm plastic head
- 60 mm plastic head

Illuminated
- 45 mm plastic head
- 60 mm plastic head

30.5 mm E-Stops in a state-of-the-art, tamper-resistant design

Time-Tested, Industry Proven

The Allen-Bradley® 800T/H push button product lines are designed and constructed to perform consistently in the most demanding industrial environments. This legacy of leadership continues with the introduction of the innovative 800T/H Trigger Action E-Stop devices.

Global Acceptance

Trigger action functionality provided in a 30.5 mm form factor delivers E-Stop operators that meet global requirements and are more than up to the task for installation in heavy duty applications. The twist release design conforms to functional safety guidelines where intentional action is required to reset the E-Stop device.

Tamper Resistance

Tamper resistance is provided by front-of-panel mounting. The mounting nut installs from back of panel, and is inaccessible when the control cabinet door is closed during normal machine operation. Additionally, the 800T/H Trigger Action E-Stop mushroom caps are factory installed and non-removable, further increasing tamper resistance.

State-of-the-Art Illumination

LED illumination is standard for illuminated devices, using state-of-the-art super bright LED technology. Full voltage or transformer type input is available. Full voltage devices employ the new Universal LED technology, accepting a wide range of 12...130V AC/DC input supply voltage.

Trigger Action E-Stop Units, Non-Illuminated

Trigger Action E-Stop Units, Illuminated

Trigger Action E-Stop Units, Key Release

Features and Benefits

Trigger Action Function

- Contacts can't be teased without latching of operator
- Complies with EN ISO 13850 and EN 60947-5-5
- Positive opening with direct drive contact blocks
- Allows use of standard contact blocks such as 800T-XA (1-NO, 1-NC)

Fixed Mushroom Cap

- Safety red color
- 45 mm, 60 mm and 63 mm (metal) options
- Non-removable for tamper resistance
- Integral "E-STOP" legend available as an option

Twist Release Function

- Conforms to functional safety guidelines
- Intentional action required for E-Stop resetting

Front-of-Panel Mounting

- Operator installs from front of panel and is secured with back-of-panel mounting nut
- E-Stop operator cannot be tampered with during normal machine operation with control cabinet closed

Yellow Bushing

- 800H bushing molded from yellow plastic material further enhances compliance for yellow background of installations

Reliable Contact Block Latching

- Tool-less installation of latch mechanism – snaps onto operator
- Contact block mounting screws secure latch mechanism to operator – latch cannot be removed while contact blocks are installed

Trigger Action E-Stop Units, Non-Illuminated

- 2-position
- Twist Release
- Red mushroom head

Add Required 5/5 NO/NC contacts

Head Type	Contact Configuration	Type 4/13 Metal Catalog Number ⌗	Type 4/4X/13 Plastic Catalog Number ⌗
45 mm Plastic	No Contacts	800T-TFXT6	800H-TFRXT6
	1-NO, 1-NC	800T-TFXT6A	800H-TFRXT6A
	1-SMCB ↗	800TC-TFXT6D4S	800HC-TFRXT6D4S
60 mm Plastic ✪	No Contacts	800T-TFXJT6	800H-TFRXJT6
	1-NO, 1-NC	800T-TFXJT6A	800H-TFRXJT6A
	1-SMCB ↗	800TC-TFXJT6D4S	800HC-TFRXJT6D4S
63 mm Anodized Aluminum ✧	No Contacts	800T-TFXLT6	–
	1-NO, 1-NC	800T-TFXLT6A	–
	1-SMCB ↗	800TC-TFXLT6D4S	–

Trigger Action E-Stop Units, Illuminated

- 2-position
- Twist Release
- Red mushroom head
- LED illumination

Head Type	Contact Configuration	Type	Voltage	Type 4/13 Metal Catalog Number ⌗	Type 4/4X/13 Plastic Catalog Number ⌗
45 mm Plastic	No Contacts	Operator Only		800T-TFXTS00R	800H-TFRXTS00R
	1-NO, 1-NC	Universal	12...130V AC/DC	800T-TFXTQH2RA	800H-TFRXTQH2RA
	1-SMCB ↗			800TC-TFXTQH2RD4S	800HC-TFRXTQH2RD4S
	1-NO, 1-NC	Transformer	120V AC	800T-TFXTPH16RA	800H-TFRXTPH16RA
	1-SMCB ↗			800TC-TFXTPH16RD4S	800HC-TFRXTPH16RD4S
60 mm Plastic ✪	No Contacts	Operator Only		800T-TFXJTS00R	800H-TFRXJTS00R
	1-NO, 1-NC	Universal	12...130V AC/DC	800T-TFXJTQH2RA	800H-TFRXJTQH2RA
	1-SMCB ↗			800TC-TFXJTQH2RD4S	800HC-TFRXJTQH2RD4S
	1-NO, 1-NC	Transformer	120V AC	800T-TFXJTPH16RA	800H-TFRXJTPH16RA
	1-SMCB ↗			800TC-TFXJTPH16RD4S	800HC-TFRXJTPH16RD4S

Trigger Action E-Stop Units, Key Release

- 2-position
- Familiar DO18 key
- Red mushroom head

Head Type	Contact Configuration	Type 4/13 Metal Catalog Number ⌗
45 mm Plastic	No Contacts	800T-TFXK6
	1-NO, 1-NC	800T-TFXK6A
	1-SMCB ↗	800TC-TFXK6D4S

⌗ For finger-safe contact block terminals, order 800TC or 800HC
✪ To order a device with "E-STOP" printed on the cap add the letter "E" after "J"; for example: 800T-TFXJET6
✧ To order a device with "E-STOP" engraved on the cap add the letter "E" after "L"; for example: 800T-TFXLET6
↗ Self-Monitoring Contact Block

Synetcom
Your Industrial Wireless Source

BOM #5

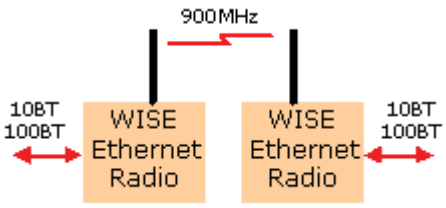

900 MHz Ethernet PLC Radios - Industrial Wireless Ethernet bridges link SCADA network equipment up to 25 miles away

- home
- services
- customers
- white papers
- contact us

Synetcom
Your Industrial Wireless Source

View Specs

Industrial Wireless Ethernet 900 MHz PLC Radio Modem - 900 MHz FHSS Industrial Wireless Ethernet Radio Modem System

Models: WISE-B-900 (170 KB/s)

Approvals: Class 1, Division 2, Groups A,B,C,D Class 1, Zone 2, Group IIC

Extend Ethernet connections to PLC locations not serviced by your company network with Synetcom's 900 MHz Industrial Wireless PLC Radio Modem product. Connect PLC, RTU, Wireless I/O, data acquisition and remote control equipment with the WISE-B-900 PLC Ethernet Radio - build reliable long distance, license free wireless industrial SCADA systems.

Synetcom's 900 MHz Ethernet Radio systems are designed for reliable high data throughput even if the radio path is not ideal. Higher transmit power and better receiver sensitivity enable Ethernet connections to remote PLC and RTU locations that you could not reach in the past.

For higher data throughput on line of site links, see our 2.4 GHz Ethernet Radio products.

Features

- 900 MHz Frequency Hopping Spread Spectrum FHSS PLC radio
- Wireless networking of PLCs
- Wireless networking of industrial data acquisition and remote control equipment
- Radio is IP addressable
- Wireless Ethernet bridge between PLC, RTU, sensors, controllers and HMI computers
- Long Range - up to 25 miles with 20 dB fade margin - high throughput sustained
- Advanced ARQ, CRC error control, hopping algorithm
- Excellent immunity to interference and multipath fading
- Ethernet Radio repeaters for >25 miles
- Rugged packaging for industrial use - 14GA metal enclosure
- -30°C to + 70°C

900 MHz Industrial Wireless Ethernet PLC Radio

Synetcom's 900 MHz Ethernet PLC Radio is a rugged, long range 900 MHz radio that connects PLC, RTU, I/O and other SCADA equipment. The radio is designed to provide high speed wireless connectivity between PLCs and PLC networks - without compromising reliability and performance. Typical uses include Ethernet bridging, SCADA device networking, PLC networking and industrial wireless data acquisition and control.

The product can function as a high speed bridge between two Ethernet networks, or it can provide wireless networking between an HMI computer + master PLC and multiple remote slave PLCs. Complex data acquisition and control systems can be built using repeaters to extend

Applications

- Wireless Networking of PLCs

- Industrial Wireless Ethernet SCADA systems

- Wireless PLC Data Acquisition

- Wireless PLC Remote Control

- Long Distance Wireless PLC

range and coverage.

Data Throughput and Range

The 900 MHz Ethernet PLC Radio operates with data throughput significantly higher than other industrial (FHSS) Ethernet radios:

WISE-B-900: 150 KB/s (25 miles with 11 dBi gain antennas)

Maximum throughput occurs on a point-to-point link. Error-free data transmission is assured via CRC error checking and ARQ (automatic retransmission of packets with bit errors).

Why doesn't the radio transmit at 10 MB/s? Industrial Ethernet applications often demand long range and high reliability which is obtained only by operating the link more slowly - a limitation of physics, not the radio design.

For example, faster commodity 802.11 Ethernet bridges or routers offer a higher throughout but only over short distances (1-2 miles under ideal conditions) with the same reliability our radios deliver at 25 miles.

Comparison to 2.4 GHz

Our 2.4 GHz Industrial Ethernet Radios typically operate at 220 KB/s or faster by design. Actual data throughput may be compromised if there are obstructions in the radio path. The 900 MHz Wireless Ethernet Modem is less affected by obstructions.

Ethernet Links

Transmission Range:
Synetcom specifies a 25 mile range (900 MHz Ethernet PLC Radio) that includes a 20 dB margin (if the signal fades as much as 20 dB - a factor of 1/100 - the link continues to operate).

Obstructions in the line of sight path reduces range, depending on the type of obstruction. Contact our factory for assistance.

900 MHz Ethernet PLC radio modem specifications>

www.synetcom.com
(310) 379-2000
23879 Madison Street
Torrance, CA 90505

home
services
customers
white papers
contact us

900 MHz PLC radio page 1>

900 MHz Industrial Wireless Ethernet PLC Radio Modem Specifications:

Model - WISE-B-900 PLC Radio
PLC Radio Data Rate - 170 Kbps; Maximum Throughput - 150 KB/s
PLC Interface - 10Base-T
PLC Radio Network Topologies - Point-to-Point or Multipoint
RF Output Power - 500 mW (.5 watt)
RF Modulation - Frequency Hopping Spread Spectrum (FHSS)
Frequency Range - 902 MHz to 928 MHz
Power - 9VDC to 30VDC (external AC power supply included)
Enclosure Material - Aluminum
Enclosure Size - 7.9" x 5.7" x 2.1" (201 x 144 x 53 mm)
Operating Temperature -30º C to +70ºC; 0 to 95% humidity, non-condensing
Licensing Type Certified; License-free operation under FCC Part 15

Industry Approvals: Class 1, Division 2, Groups A,B,C,D Class 1, Zone 2, Group IIC

PLC 900 MHz Radio Connectors

o Power 2-Pin
o RS-232 RJ-11 Configuration Port
o Sync In RJ-11
o Sync Out RJ-11
o 10BT RJ-45
o Antenna RVS TNC

PLC 900 MHz Radio Indicators

Radio Power, Ethernet Link Status, TX, RX, Ethernet Radio Link Status

900 MHz PLC Radio (back view)

back to 900 MHz PLC Radio page 1>

Synetcom
Your Industrial Wireless Source
www.synetcom.com
(310) 379-2000
23879 Madison Street
Torrance, CA 90505

KATHREIN
SCALA DIVISION

TY-900
Yagi Antenna

The Kathrein-Scala TY series are rugged broadband yagi antennas fabricated of 6061/T6 aluminum rod and seamless drawn pipe, anodized for maximum reliability and corrosion resistance. The hardware and fastenings are stainless steel. The internal balun, coax feed and connector are sealed in a foam potting system to prevent moisture penetration and assure long service life in severe environmental conditions. The heavy aluminum mounting casting allows installation for V or H polarization.

- The TY-900 is specifically designed for professional fixed-station applications in the 890–960 MHz band.

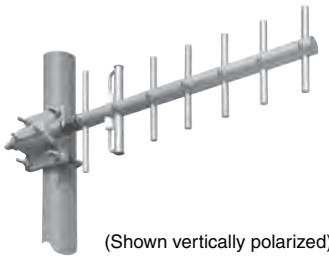

(Shown vertically polarized)

Specifications:

Frequency range	890–960 MHz
Gain	12 dBi
Impedance	50 ohms
VSWR	< 1.5:1 maximum (1.35:1 typical)
Polarization	Horizontal or vertical
Front-to-back ratio	>20 dB
Maximum input power	100 watts (at 50°C)
H-plane beamwidth	48 degrees (half-power)
E-plane beamwidth	40 degrees (half-power)
Connector	N female
Weight	3 lb (1.4 kg)
Dimensions	23 x 7 inches (584 x 178 mm)
Wind load Front/Side	at 93 mph (150kph) 3 lbf / 4 lbf (11 N) / (17 N)
Wind survival rating*	150 mph (240 kph)
Shipping dimensions	28 x 10 x 4.5 inches (710 x 254 x 114 mm)
Shipping weight	5.0 lb (2.3 kg)
Mounting	For masts of 1.25 to 2.375 inch (32 to 60 mm) OD.
See reverse for order information.	

* Mechanical design is based on environmental conditions as stipulated in TIA-222-G-2 (December 2009) and/or ETS 300 019-1-4 which include the static mechanical load imposed on an antenna by wind at maximum velocity. See the Engineering Section of the catalog for further details.

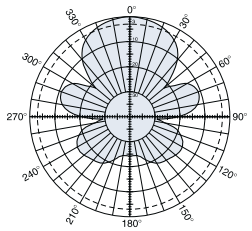

H-plane
Horizontal pattern – V-polarization
Vertical pattern – H-polarization

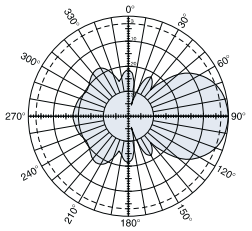

E-plane
Horizontal pattern – H-polarization
Vertical pattern – V-polarization

10065-E

Kathrein Inc., Scala Division Post Office Box 4580 Medford, OR 97501 (USA) Phone: (541) 779-6500 Fax: (541) 779-3991
Email: communications@kathrein.com Internet: www.kathrein-scala.com

KATHREIN
SCALA DIVISION

TY-900
Yagi Antenna

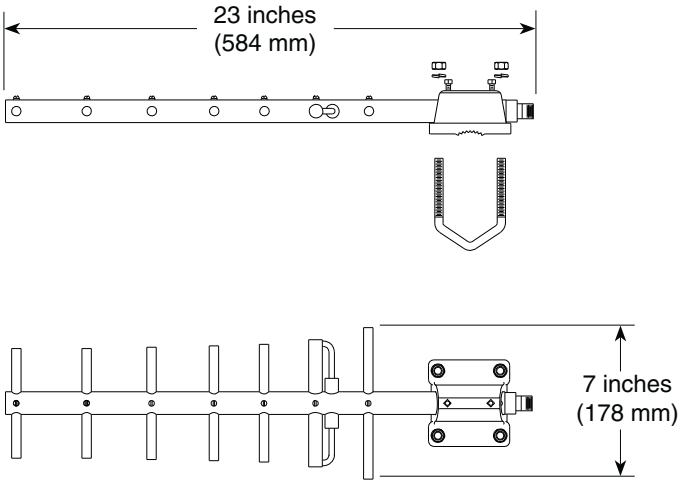

Order Information:

Model	Description
TY-900	Yagi antenna with N connector

All specifications are subject to change without notice. The latest specifications are available at www.kathrein-scala.com.

Kathrein Inc., Scala Division Post Office Box 4580 Medford, OR 97501 (USA) Phone: (541) 779-6500 Fax: (541) 779-3991
Email: communications@kathrein.com Internet: www.kathrein-scala.com

ALL DESIGN, OPERATIVE AND PROCESS DATA PERTAINING TO THE ARTICLE SHOWN ON THIS SHEET IS THE PROPERTY OF POLYPHASER CORPORATION. THE INFORMATION IS NOT TO BE COPIED, REPRODUCED, REVEALED TO OR APPROPRIATED BY OTHERS WITHOUT THE EXPRESS WRITTEN CONSENT OF POLYPHASER CORPORATION.

These commodities or technology are exported from the U.S. in accordance with the Export Administration Regulations. Diversion contrary to U.S. law prohibited.

REVISIONS				
REV LTR	DATE	ENG	MKTG	Q.A.
F	03/05/07 CM	AD	–	–

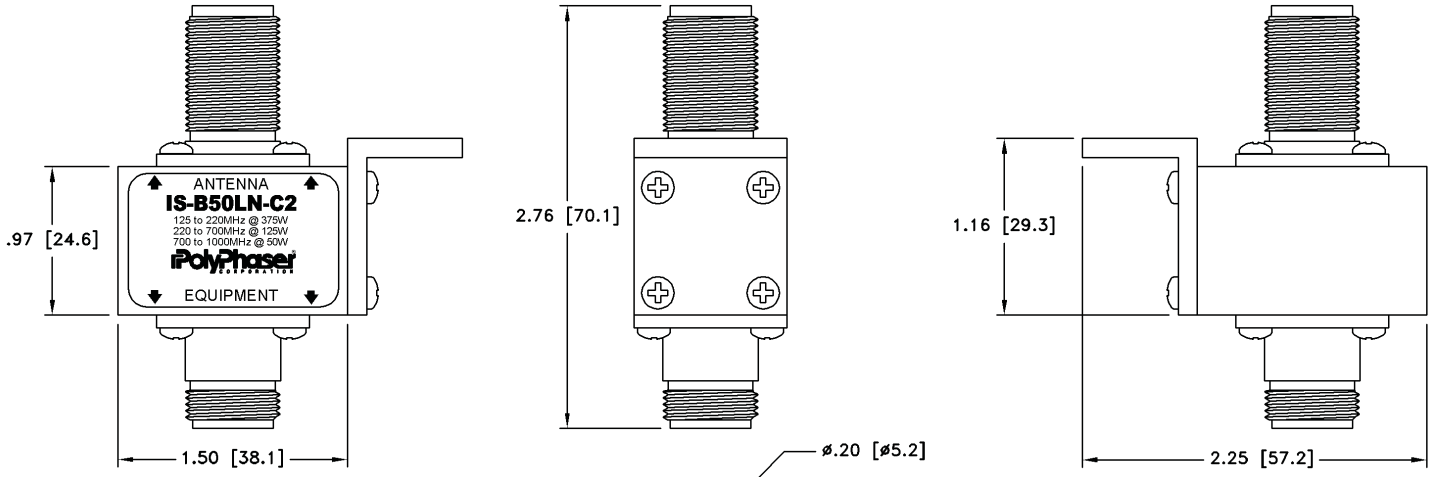

MAXIMUM CHARACTERISTICS

APPLICATION:
BULKHEAD MOUNT

FREQUENCY RANGE:
125MHz TO 1GHz

VSWR:
≤1.1:1 OVER FREQUENCY RANGE

INSERTION LOSS:
≤0.1dB OVER FREQUENCY RANGE

MAX POWER:
375W @ 125MHz DECREASING TO 50W @ 1GHz

TURN-ON:
600Vdc±20%

THROUGHPUT ENERGY:
≤220µJ FOR 8/20µs WAVEFORM

OPERATING TEMPERATURE:
−55°C TO +50°C

STORAGE TEMPERATURE:
−55°C TO +85°C

RELATIVE HUMIDITY:
90% AT 40°C

VIBRATION
1G AT 5Hz TO 100Hz

CUSTOMER APPROVAL: _____ DATE: _____

ALL DIMENSIONS SHOWN ABOVE ARE FOR REFERENCE ONLY.

DRAFTER: M. JOHNSON	DATE: 07/11/94	PolyPhaser	
MECH ENGINEER: – – – –	DATE: – – –	P.O. BOX 9000 MINDEN, NV 89423 TEL: 775-782-2511 FAX: 775-782-4476	
ELEC ENGINEER: K. BARTEL	DATE: 05/01/95	DWG NO/PART NO/DESCRIPTION: IS-B50LN-C2 CUSTOMER PRINT	
MARKETING: – – – –	DATE: – – –		
QUALITY DEPT: R. MATHEUS	DATE: 05/01/95	CAGE CODE: 61114	FILE NAME: -C1
		SCALE: 1/1	SHEET: 1 OF 1

FSJ4-50B Product Detail

Cable and Connectors >> Coaxial Cable >> Transmission Line >> 1/2" Superflexible, 50 Ohm

Product Description

Part Number: FSJ4-50B
Manufacturer: CommScope / Andrew
List Price: $4.54
My Price: Login >>

QTY: 1 Add to Cart

Email

1/2" Superflex 50 Ohm Coax Cable

Catalog Description

1/2" Superflexible 50 Ohm Foam HELIAX® Coaxial Cable, corrogated copper. FSJ4-50B is Riser Rated. FSJ4RK-50B - is non-halogenated, fire retarden.

Specifications

Attenuation (dB)/100 Ft.	
30 MHz	0.557
150 MHz	1.28
450 MHz	2.31
824 MHz	3.23
960 MHz	3.52
1500 MHz	4.54
2000 MHz	5.37
2300 MHz	5.83
5800 MHz	10.27
General Characteristics	
Max. Frequency	10.2 GHz
Propagation Velocity	81%
Overall Diameter(in)	.52
Dielectric	Closed Cell Foam Polyethylene
Outer Conductor	Helical Corrugated Solid Copper
Inner Conductor	Copper Clad Aluminum
Min. Bending Radius(in)	1.25"
Warranty	10 Year
Shipping Method	Less Than 350 Ft - UPS
Jacket Material	Black Polyethylene
Ship Weight (lbs.)	.14
Shipping	Parcel Freight

Similar Products

Product Specifications

F4PDMV2-C

7-16 DIN Male for 1/2 in FSJ4-50B cable

CHARACTERISTICS

General Specifications

Interface	7-16 DIN Male
Body Style	Straight
Brand	HELIAX®
Mounting Angle	Straight

Electrical Specifications

Connector Impedance	50 ohm
Operating Frequency Band	0 – 7500 MHz
Cable Impedance	50 ohm
3rd Order IMD	-120 dBm @ 910 MHz
3rd Order IMD Test Method	Two +43 dBm Carriers
RF Operating Voltage, maximum (vrms)	884.00 V
dc Test Voltage	2500 V
Outer Contact Resistance	1.50 mOhm
Inner Contact Resistance	0.80 mOhm
Insulation Resistance, minimum	5000 MOhm
Average Power	1.0 kW @ 900 MHz
Peak Power, maximum	15.60 kW
Insertion Loss, typical	0.05 dB
Shielding Effectiveness	-110 dB

Mechanical Specifications

Outer Contact Attachment Method	Crush-flare
Inner Contact Attachment Method	Captivated
Outer Contact Plating	Trimetal
Inner Contact Plating	Silver
Attachment Durability	25 cycles
Interface Durability	500 cycles
Interface Durability Method	IEC 169-4:9.5
Connector Retention Tensile Force	890 N | 200 lbf
Connector Retention Torque	5.42 N-m | 48.00 in lb
Insertion Force	200.17 N | 45.00 lbf

www.commscope.com

©2009 CommScope, Inc. All rights reserved.
All trademarks identified by ® or ™ are registered trademarks or trademarks, respectively, of CommScope.
All specifications are subject to change. See www.commscope.com for the most current information.

Product Specifications

F4PDMV2-C

Insertion Force Method	IEC 169-1:15.2.4
Pressurizable	No
Coupling Nut Proof Torque	24.86 N-m | 220.00 in lb
Coupling Nut Retention Force	1000.85 N | 225.00 lbf
Coupling Nut Retention Force Method	MIL-C-39012C-3.25, 4.6.22

Dimensions

Nominal Size	1/2 in
Diameter, maximum	34.54 mm | 1.36 in
Length	50.01 mm | 1.97 in
Weight	136.08 g | 0.30 lb

Environmental Specifications

Operating Temperature	-55 °C to +85 °C (-67 °F to +185 °F)
Storage Temperature	-55 °C to +85 °C (-67 °F to +185 °F)
Immersion Depth	1 m
Immersion Test Mating	Mated
Immersion Test Method	IEC 60529:2001, IP68
Water Jetting Test Mating	Mated
Water Jetting Test Method	IEC 60529:2001, IP66
Moisture Resistance Test Method	MIL-STD-202F, Method 106F
Mechanical Shock Test Method	MIL-STD-202F, Method 213B, Test Condition C
Thermal Shock Test Method	MIL-STD-202, Method 107, Test Condition A-1, Low Temperature -55 °C
Vibration Test Method	MIL-STD-202F, Method 204D, Test Condition B
Corrosion Test Method	MIL-STD-1344A, Method 1001.1, Test Condition A

Standard Conditions

Attenuation, Ambient Temperature	20 °C | 68 °F
Average Power, Ambient Temperature	40 °C | 104 °F

Return Loss

Frequency Band	VSWR	Return Loss (dB)
0–2200 MHz	1.03	36.00
2200–2700 MHz	1.05	33.00
2700–3000 MHz	1.05	32.00

Regulatory Compliance/Certifications

Agency	Classification
RoHS 2002/95/EC	Compliant by Exemption
China RoHS SJ/T 11364-2006	Above Maximum Concentration Value (MCV)

©2009 CommScope, Inc. All rights reserved.
All trademarks identified by ® or ™ are registered trademarks or trademarks, respectively, of CommScope.
All specifications are subject to change. See www.commscope.com for the most current information.

Product Specifications

F4PDMV2-C

* Footnotes

Immersion Depth	Immersion at specified depth for 24 hours
Insertion Loss, typical	0.05√freq (GHz) (not applicable for elliptical waveguide)

800.949.7079
order online today at www.talleycom.com

ANDREW®
www.commscope.com

©2009 CommScope, Inc. All rights reserved.
All trademarks identified by ® or ™ are registered trademarks or trademarks, respectively, of CommScope.
All specifications are subject to change. See www.commscope.com for the most current information.

BOM #6

Product: 1492-REC15G

Description: 1492 DIN Rail Receptacle

Representative Photo Only
(actual product may vary based on configuration selections)

DIN Rail Receptacle	
Current Rating	15A
Options	Ground Fault Current Interrupt

CERTIFICATIONS AND APPROVALS	
cULus	UL 508A (file# E54866)
For UL Certifications Directory:	http://database.ul.com/cgi-bin/XYV/template/LISEXT/1FRAME/index.htm

SDN-P DIN Rail Series

The SDN DIN Rail power supplies provide industry leading performance. Sag Immunity, transient suppression and noise tolerant, the SDN series ensures compatibility in demanding applications. Power factor correction to meet European directives, hazardous location approvals and optional redundant accessories allow the SDN series to be used in a wide variety of applications. Wide operation temperature range, high tolerance to shock and vibration and reliable design make the SDN series the preferred choice of users.

Applications

- Industrial/Machine Control
- Process Control
- Conveying Equipment
- Material Handling
- Vending Machines
- Packaging Equipment
- DeviceNet™
- Amusement Park Equipment
- Semiconductor Fabrication Equipment

Features

- Power Factor Correction (per EN61000-3-2)
- Auto Select 115/230 Vac, 50/60 Hz Input
- Improved metal mounting clip
- DC OK Signal
- Adjustable Voltage
- Parallel Capability standard on all units
- Industrial grade design
  - -10°C to 60°C operation without derating. Indefinite short circuit, overvoltage and overtemperature protection.
  - Powers high inrush loads without shutdown or foldback
  - Rugged metal case and DIN connector
- Narrow width on rail for space critical applications
- User-friendly front panel
  - Large, rugged, accessible, multiple connection screw terminations
  - Easy installation
- 12 Vdc and 48 Vdc single phase models available
- Highly efficient >90% switching technology
- High MTBF and reliability

Accessories

- Chassis Mount Bracket (SDN-PMBRK2)

Certifications and Compliances *

All Models

- c UL us Listed, Ind. Control Equipment, E61379
  - UL 508, CSA C22.2 No. 107.1
- c UL us UL Recognized Component, ITE, E137632
  - UL 60950-1/CSA C22.2 No. 60950-1, 2nd Edition
- c UL us UL Recognized Component, Haz. Loc., E234790
  - ISA 12.12.01, CSA C22.2 No. 213
  - Class I, Division 2, Groups A, B, C, D
- CE - Low Voltage Directive
  - IEC/EN60950-1, 2nd Edition
- Sag Immunity: SEMI F47
- RoHS Compliant

Models SDN 2.5-24-100P, SDN 4-24-100LP

- Class 2 per UL 1310, CSA C22.2 No. 223

Models SDN 2.5-24-100P, SDN 4-24-100LP, SDN 5-24-100P, SDN 10-24-100P

- Ex ATEX Directive
  - EN50021, Ex II 3 G, Ex nC IIC Gc

Related Products

- SDP™ Series
- SCP Series
- SCL Series
- SDU UPS

* Refer to user manual for installation requirements when used in hazardous locations.

SDN-P Specifications (Single Phase), 24 Vdc Output

Description	Catalog Number			
	SDN 2.5–24–100P	SDN 4–24–100LP	SDN 5–24–100P	SDN 10–24–100P
Input				
Nominal Voltage	115/230 Vac, Auto select			
–AC Range	85-264 Vac	85-132/176-264 Vac		
–DC Range [1]	90 - 375 Vdc	210 - 375 Vdc		
–Frequency	47 - 63 Hz			
Nominal Current [2]	1.3 / 0.7 A	2.1 / 1.0 A	2.2 / 1.0 A	5 / 2 A typ.
–Inrush current max.	typ. < 25 A	typ. < 20 A		typ. < 40 A
Efficiency (Losses [3])	> 87.5% typ. (8.6 W)	> 88% typ. (13.1 W)	> 88% typ. (16.4 W)	> 88% typ. (32.7 W)
Power Factor Correction	Units Fulfill EN61000-3-2			
Output				
Nominal Voltage	24 Vdc (22.5 - 28.5 Vdc adj.)	24 Vdc (22.5 - 28.5 Vdc adj.)	24 Vdc (22.5 - 28.5 Vdc adj.)	
–Tolerance	< ±2% overall (combination Line, load, time and temperature related changes)			
–Ripple [4]	< 50 mVpp			
Overvoltage Protection	< 33 Vdc	< 27 Vdc	< 33 Vdc	
Nominal Current	2.5 A (60 W)	3.8 A (92 W)	5 A (120 W)	10 A (240 W)
–Current Limit	Fold Forward (Current rises, voltage drops to maintain constant power during overload up to max peak current)			
Holdup Time [5]	> 20 ms @ full load			
Parallel Operation	Single or Parallel use is selectable via Front Panel Switch (SDN 2.5, 4 should not be used in parallel as Class 2 rating would be violated.)			
General				
EMC: –Emissions	EN61000-6-3, -4; Class B EN55011, EN55022 Radiated and Conducted including Annex A. EN61000-3-2			
–Immunity	EN61000-6-1, -2; EN61000-4-2 Level 4, EN61000-4-3 Level 3; EN61000-4-6 Level 3; EN61000-4-4 Level 4 input and Level 3 output; EN61000-4-5 Isolation Class 4, EN61000-4-11;			
Temperature	Storage: -25°C...+85°C Operation. -10°-60°C full power with operation to 70°C possible with a linear derating to half power from 60°C to 70°C (Convection cooling, no forced air required). Operation up to 50% load permissible with sideways or front side up mounting orientation.			
Humidity	The relative humidity is < 90% RH, noncondensing; IEC 68-2-2, 68-2-3.			
MTBF:	> 820,000 hours	> 640,000 hours		> 600,000 hours
– Standard	Bellcore Issue 6 Method 1 Case 3 @ 40°C			
Warranty	5 year limited warranty			
General Protection/Safety	Protected against continuous short-circuit, overload, open-circuit. Protection Class 1 (IEC536), degree of protection IP20 (IEC 529) Safe low voltage: SELV (acc. EN60950)			
Status Indicators	Green LED and DC OK signal (N.O. Solid State Contact rated 200 mA / 60 Vdc)			
Installation				
Fusing –Input	Internally fused. External 10 A slow acting fusing for the input is recommended to protect input wiring.			
–Output	Outputs are capable of providing high currents for short periods of time for inductive load startup or switching. Fusing may be required for wire/loads if 2x Nominal O/P current rating cannot be tolerated. Continuous current overload allows for reliable fuse tripping.			
Mounting	Simple snap-on system for DIN Rail TS35/7.5 or TS35/15 or chassis-mounted (optional screw mounting set SDN-PMBRK2 required).			
Connections	Input: IP20-rated screw terminals, connector size range: 16-10 AWG (1.5-6 mm²) for solid conductors. 16-12 AWG (0.5-4 mm²) for flexible conductors. Output: Two connectors per output, connector size range: 16-10 AWG (1.5 - 6 mm²) for solid conductors.			
Case	Fully enclosed metal housing with fine ventilation grid to keep out small parts.			
–Free Space	25 mm above and below, 25 mm left and right, 10 mm in front		25 mm above and below, 25 mm left and right, 15 mm in front	70 mm above and below, 25 mm left and right, 15 mm in front
H x W x D inches (mm)	4.88. x 1.97 x 4.55 (124.0 x 50.0 x 116.0)	4.88 x 2.56 x 4.55 (124.0 x 65.0 x 116.0)		4.88 x 3.26 x 4.55 (124.0 x 83.0 x 116.0)
Weight lbs (kg)	1.6 (.73)	2.4 (1.10)		3.3 (1.50)

1. Not UL listed for DC input.
2. Input current ratings are conservatively specified with low input, worst case efficiency and power factor.
3. Losses are heat dissipation in watts at full load, nominal input line.
4. Ripple/noise is stated as typical values when measured with a 20 MHz, bandwidth scope and 50 Ohm resistor.
5. Full load, 100 Vac Input @ T_{amb} = +25°C

Contact **Technical Services** at **(800) 377-4384** with any questions.
Visit our website at www.solahd.com.

SDN-P Series Dimensions

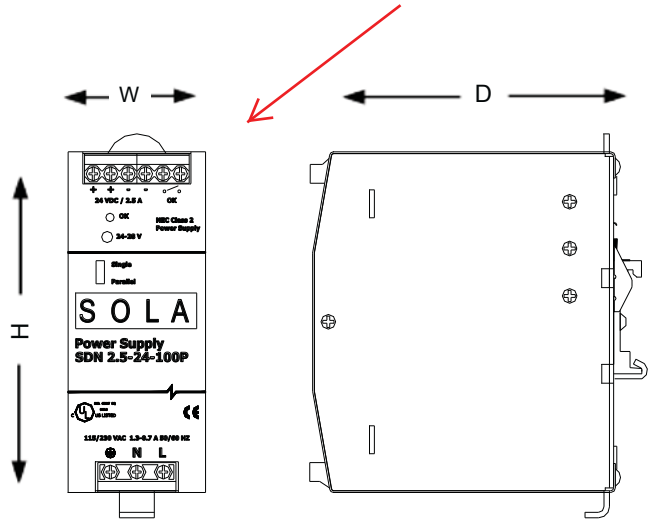

Catalog Number	Dimensions – inches (mm)		
	H	W	D
12 Vdc			
SDN 9–12–100P	4.88 (124.0)	2.56 (65.0)	4.55 (116.0)
SDN 16–12–100P	4.88 (124.0)	3.23 (83.0)	4.55 (116.0)
24 Vdc			
SDN 2.5–24–100P	4.88 (124.0)	1.97 (50.0)	4.55 (116.0)
SDN 4–24–100LP	4.88 (124.0)	2.56 (65.0)	4.55 (116.0)
SDN 5–24–100P	4.88 (124.0)	2.56 (65.0)	4.55 (116.0)
SDN 10–24–100P	4.88 (124.0)	3.26 (83.0)	4.55 (116.0)
48 Vdc			
SDN 5–48–100P	4.88 (124.0)	3.23 (83.0)	4.55 (116.0)

SDN-P Series Mounting

DIN Rail Mounting

Snap on the DIN Rail:

1. Tilt unit slightly backwards
2. Put it onto the DIN Rail
3. Push downwards until stopped
4. Push at the lower front edge to lock
5. Shake the unit slightly to ensure that the retainer has locked

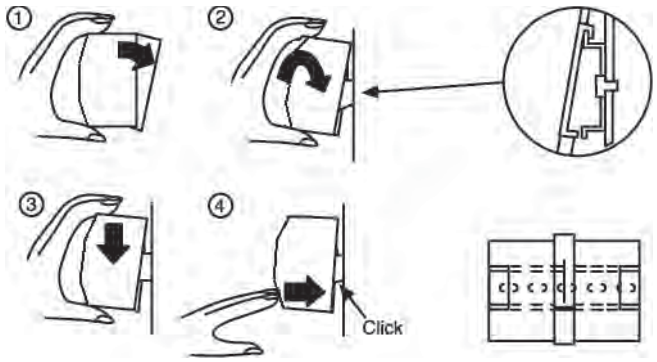

Alternative Panel Mount: Using the optional SDN-PMBRK2 accessory, the unit can be screw mounted to a panel.

Detachment from DIN Rail:

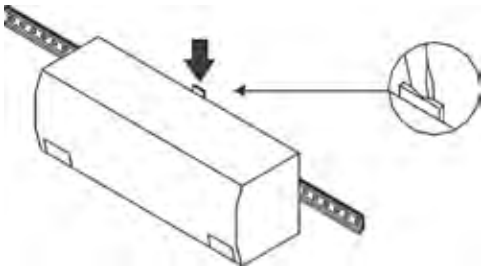

Chassis Mounting

Instead of snapping a SolaHD SDN™ unit on the DIN Rail, you can also attach it using the screw mounting set SDN-PMBRK2.

This set consists of two metal brackets, which replace the existing two aluminum profiles.

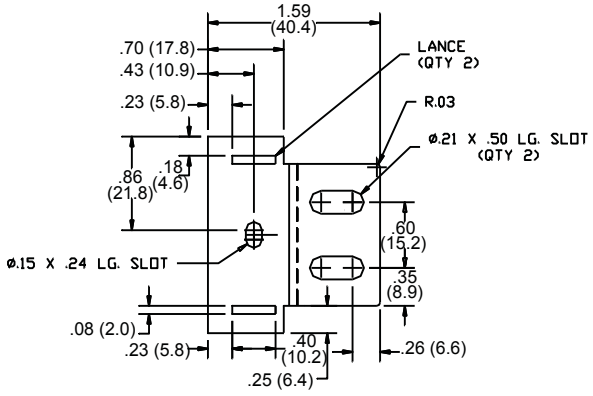

Dimensions - in. (mm)

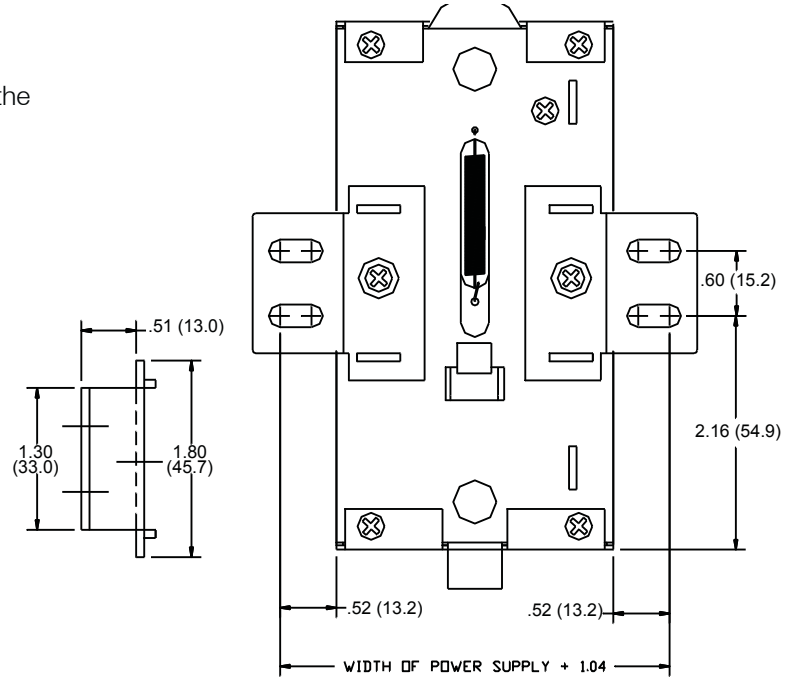

BOM #8

Product: 1492-H5

Description: 1492-H Finger-Safe Terminal Blocks

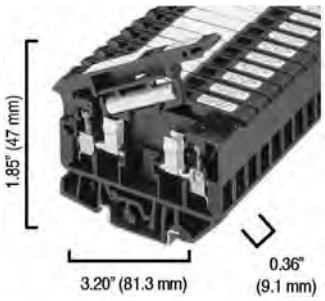

Representative Photo Only (actual product may vary based on configuration selections)

BASE DATA

Electrical Standards	UL
Type of Device	Finger-Safe Terminal Block
Base Block Type	Single Circuit Fuse Block

DETAIL DATA

Features	LED Blown Fuse Indicator
Wire Range	#30 - #12 AWG
Color	Black (Standard)
Bulk Pack	No Bulk Pack (Single Block)

CERTIFICATIONS AND APPROVALS

UR	UL 486E, UL 1059; Reference File: E40735
CSA	CSA C22.2 No. 65, No. 158; On Website, Name: Rockwell, Keyword Search: 1492
IEC	EN 60947-1, EN 60947-7-1(Feed-Through), -2(Ground), -3(Fuse)
Short Circuit Current Rating	This terminal block carries a minimum of 10kA SCCR rating for all protection methods. Please see the table for other possible elevated ratings.
For CSA Certifications:	http://directories.csa-international.org/directorymain.asp
For UL Certifications Directory:	http://database.ul.com/cgi-bin/XYV/template/LISEXT/1FRAME/index.htm

BOM #9

Product: 1492-J3

Description: 1492 IEC Screw Terminal Blocks

Representative Photo Only (actual product may vary based on configuration selections)

BLOCK STYLE	
Base Block Style	Standard Feed-Through Blocks

BASE DATA	
Base Block Type	One-Circuit Feed-Through Block

DETAIL DATA	
Features	Standard Feedthrough
Maximum Wire Size & Rating	UL: 30-12 AWG (25A @600V AC/DC)\nCSA: 26-12 AWG (20A @600V AC/DC)\nIEC: 2.5mm² (24A @800V AC/DC)\nEEx e II: 2.5mm²/20-14 AWG (21A @ 550V AC/DC)
Color	Gray (Standard)

CERTIFICATIONS AND APPROVALS	
UR	UL 486E, UL 1059; Reference File: E40735, E187022
CSA	CSA C22.2 No. 65, No. 158; On Website, Name: Rockwell, Keyword Search: 1492
IEC	EN 60947-1, EN 60947-7-1(Feed-Through), -2(Ground), -3(Fuse)
ATEX	http://www.rockwellautomation.com/products/certification/ex/excert.html
Short Circuit Current Rating	This terminal block carries a minimum of 10kA SCCR rating for all protection methods. Please see the table for other possible elevated ratings.
For CSA Certifications:	http://directories.csa-international.org/directorymain.asp
For UL Certifications Directory:	http://database.ul.com/cgi-bin/XYV/template/LISEXT/1FRAME/index.htm

Selection Guide

BOM #11

Allen-Bradley

CompactLogix System

Catalog Numbers 1769-L16ER-BB1B, 1769-L18ER-BB1B, 1769-L18ERM-BB1B, 1769-L24ER-QB1B, 1769-L24ER-QBFC1B, 1769-L27ERM-QBFC1B, 1769-L30ER, 1769-L30ER-NSE, 1769-L30ERM, 1769-L33ER, 1769-L33ERM, 1769-L36ERM, 1769-AENTR, 1768-L43, 1768-L43S, 1768-L45, 1768-L45S

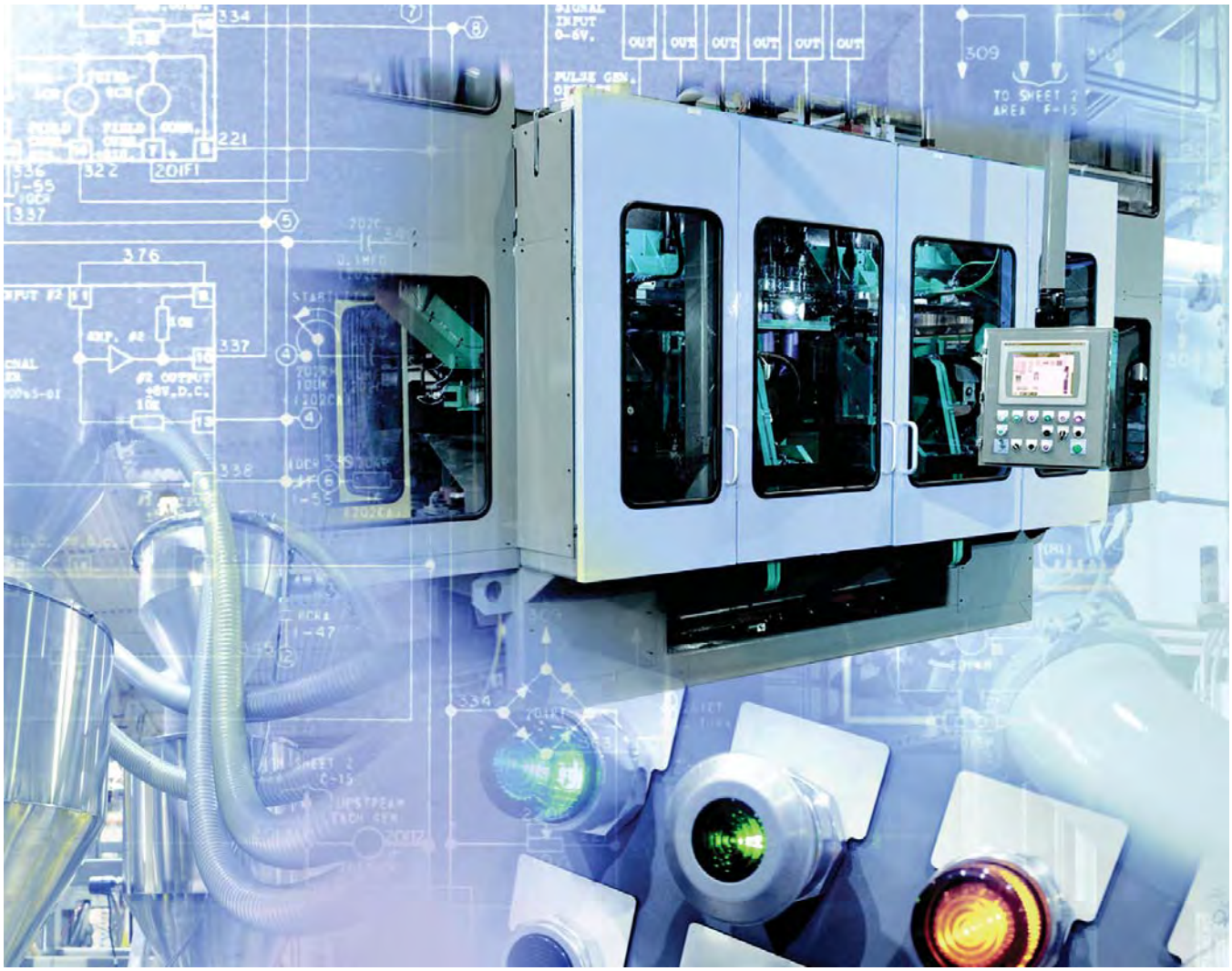

1734 POINT I/O Modules
1769 Compact I/O Modules
1768 Integrated Motion Modules
1768 and 1769 Communication Modules
1768 and 1769 CompactLogix Controllers
1768 and 1769 Compact Power Supplies

LISTEN. THINK. SOLVE.®

Logix Controllers Comparison

Characteristic	**ControlLogix** 1756-71, 1756-L72, 1756-L73, 1756-L73XT, 1756-L74, 1756-L75 **GuardLogix** 1756-L72S, 1756-L73S, 1756-L73SXT	**CompactLogix** 1769-L30ER, 1769-L30ER-NSE, 1769-L30ERM, 1769-L33ER, 1769-L33ERM, 1769-L36ERM	**CompactLogix** 1769-L24ER-BB1B, 1769-L24ER-QBFC1B, 1769-L27ERM-QBFC1B	**CompactLogix** 1769-L16ER-BB1B, 1769-L18ER-BB1B, 1769-L18ERM-BB1B	**CompactLogix** 1768-L43, 1768-L45 **Compact GuardLogix** 1768-L43S, 1768-L45S	**SoftLogix 5800™** 1789-L10, 1789-L30, 1789-L60
Controller tasks: • Continuous • Periodic • Event	32; 100 programs/task	32; 100 programs/task	32; 100 programs/task	32; 100 programs/task	• 1768-L43: 16; 32 programs/task • 1768-L45: 30; 32 programs/task	32; 100 programs/task
Event tasks	All event triggers	All event triggers	All event triggers	All event triggers, plus embedded inputs	All event triggers	All event triggers, plus outbound and Windows events
User memory	• 1756-L71: 2 MB • 1756-L72: 4 MB • 1756-L72S: 4 MB + 2 MB safety • 1756-L73, 1756-L73SXT, 1756-L73XT: 8 MB • 1756-L73S: 8 MB + 4 MB safety • 1756-L74: 16 MB • 1756-L75: 32 MB	• 1769-L30ER, 1769-L30ER-NSE, 1769-L30ERM: 1MB • 1769-L33ER, 1769-L33ERM: 2 MB • 1769-L36ERM: 3 MB	• 1769-L24ER: 750 KB • 1769-L27ERM: 1 MB	• 1769-L16ER: 384 KB • 1769-L18ER, 1769-L18ERM: 512 KB	• 1768-L43: 2 MB • 1768-L43S: 2 MB + 0.5 MB safety • 1768-L45: 3 MB • 1768-L45S: 3 MB + 1 MB safety	• 1789-L10: 2 MB; 1 controller; no motion • 1789-L30: 64 MB; 3 controllers • 1789-L60: 64 MB; 6 controllers
Memory card	Secure Digital	Secure Digital	Secure Digital	Secure Digital	CompactFlash	None
Built-in ports	1 USB	2 EtherNet/IP 1 USB	2 EtherNet/IP 1 USB	2 EtherNet/IP 1 USB	1 RS-232	Depends on personal computer
Communication options	• EtherNet/IP (standard and safety) • ControlNet (standard and safety) • DeviceNet (standard and safety) • DH+ • Remote I/O • SynchLink	• Dual-port EtherNet/IP(1) • DeviceNet	• Dual-port EtherNet/IP(1) • DeviceNet	• Dual-port EtherNet/IP(1)	• EtherNet/IP (standard and safety) • ControlNet (standard and safety) • DeviceNet (standard)	• EtherNet/IP • ControlNet • DeviceNet
Controller connections	500	256	256	256	250	250
Network connections	Per module: • 128 ControlNet (CN2/B) • 40 ControlNet (CNB) • 256 EtherNet/IP; 128 TCP (EN2*x*) • 128 EtherNet/IP; 64 TCP (ENBT)	• 1769-L30ER, 1769-L30ER-NSE, 1769-L30ERM: 256 EtherNet/IP; 120 TCP • 1769-L33ER, 1769-L33ERM: 256 EtherNet/IP; 120 TCP • 1769-L36ERM: 256 EtherNet/IP; 120 TCP	• 1769-L24ER: 256 EtherNet/IP; 120 TCP • 1769-L27ERM: 256 EtherNet/IP; 120 TCP	• 1769-L16ER: 256 EtherNet/IP; 120 TCP • 1769-L18ER, 1769-L18ERM: 256 EtherNet/IP; 120 TCP	Per module: • 48 ControlNet • 128 EtherNet/IP; 64 TCP	Per module: • 48 ControlNet • 128 EtherNet/IP; 64 TCP
EtherNet/IP nodes in a single Logix Designer application, max	N/A	• 1769-L30ER, 1769-L30ER-NSE, 1769-L30ERM: 16 • 1769-L33ER, 1769-L33ERM: 32 • 1769-L36ERM: 48	• 1769-L24ER: 8 • 1769-L27ERM: 16	• 1769-L16ER: 4 • 1769-L18ER, 1769-L18ERM: 8	N/A	N/A
Controller redundancy	Full support	Backup via DeviceNet	Backup via DeviceNet	—	Backup via DeviceNet	—
Integrated motion	• Integrated motion on an EtherNet/IP network • SERCOS interface • Analog options	Integrated motion on an EtherNet/IP network	Integrated motion on an EtherNet/IP network	Integrated motion on an EtherNet/IP network	SERCOS interface	• SERCOS interface • Analog encoder input
Programming languages	• Standard task: all languages • Safety task: relay ladder, safety application instructions	• Relay ladder • Structured text • Function block • SFC	• Relay ladder • Structured text • Function block • SFC	• Relay ladder • Structured text • Function block • SFC	• Standard task: all languages • Safety task: relay ladder, safety application instructions	• Relay ladder • Structured text • Function block • SFC • External routines (C/C++)

(1) CompactLogix™ 5370 controllers have two EtherNet/IP ports to connect to an EtherNet/IP network. The ports carry the same network traffic as part of the controller's embedded switch. The controller uses only one IP address.

Select a CompactLogix System

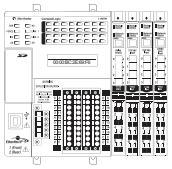

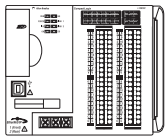

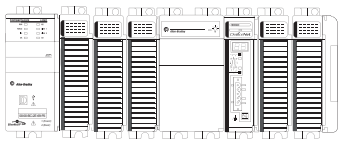

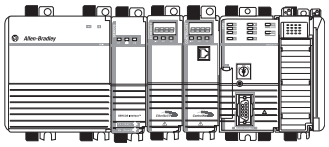

1 [CompactLogix Controllers](#) Page 7

Select:
- A controller with sufficient memory
- A memory card

2 [CompactLogix Communication Options](#) Page 13

Select:
- Networks
- Communication interfaces
- Associated cables and network equipment

3 [CompactLogix Integrated Motion](#) Page 16

Select:
- A CompactLogix 5370 controller for integrated motion on an EtherNet/IP network
- A 1768 CompactLogix controller for SERCOS motion
- Drives, motors, and accessories (use the Motion Analyzer tool)

4 [Compact GuardLogix Integrated Safety](#) Page 20

Select:
- A 1768 Compact GuardLogix® controller for integrated safety

5 [Additional Local I/O Modules](#) Page 24

Select:
- 1734 POINT I/O™ or 1769 Compact I/O™ modules
- Associated cables and accessories

6 [CompactLogix Power Supplies](#) Page 30

Select:
- One 1769 power supply for each CompactLogix 5370 L3 controller
- One 1768 power supply for each 1768 CompactLogix controller
- Additional 1769 power supplies as needed

Optional

[Programming Software](#) Page 31

CompactLogix Controllers Overview

The CompactLogix system is designed to provide a Logix solution for small and mid-size applications. Typically, these applications are machine-level control applications. A simple system can consist of a standalone controller with a single bank of I/O modules and DeviceNet communication. In a more complex system, add other networks, motion control, and safety control. As part of the Integrated Architecture™ system, the CompactLogix controllers use the same programming software, network protocol, and information capabilities as all Logix controllers, providing a common development environment for all control disciplines.

- The CompactLogix 5370 L3 controllers deliver scalable, affordable control ideal for applications from small standalone equipment to high-performance indexing tables, process skids, case packers and erectors, and packaging. The CompactLogix 5370 L3 controllers also provide a truly integrated motion solution.
- The CompactLogix 5370 L2 controllers combine the power of the Logix architecture with the flexibility of Compact I/O modules. From small standalone equipment to higher performance applications, these controllers are ideal for assembly machines, hoisting systems, process skids, indexing tables, and packaging.
- The CompactLogix 5370 L1 controllers combine the power of the Logix architecture with the flexibility of POINT I/O. Ideal for small to mid-size machines, these controllers offer value to customers looking for the benefits of Integrated Architecture in a lower cost system.

CompactLogix 5370 System on an EtherNet/IP Network

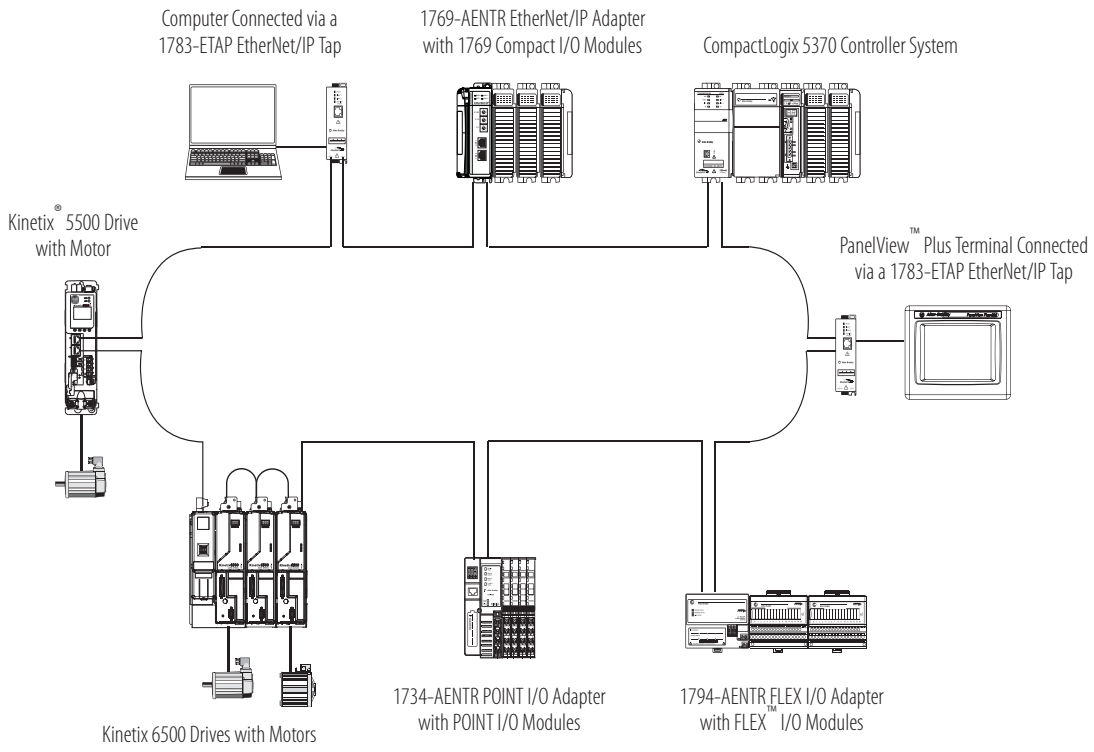

The CompactLogix 5370 L2 and L3 controllers support DeviceNet connectivity.

CompactLogix 5370 System on an DeviceNet Network

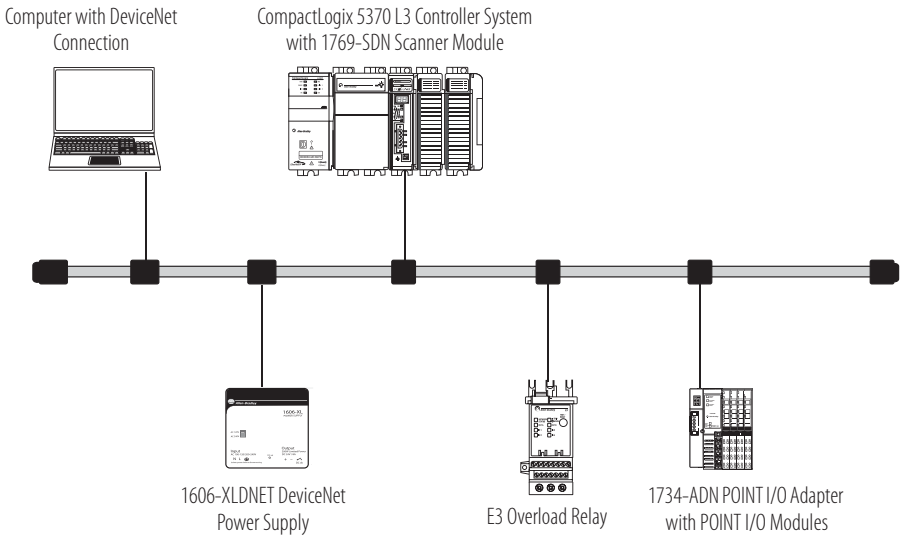

1768 CompactLogix System

The 1768 CompactLogix system combines a 1768 backplane for communication and motion support and a 1769 backplane for I/O support. The 1768 controller is designed for integrated motion, integrated safety, and more complex communication requirements than the other CompactLogix controllers. The 1768 controller has one serial port. Add 1768 modules for motion control, EtherNet/IP communication, and ControlNet communication.

1768 CompactLogix System on an EtherNet/IP Network

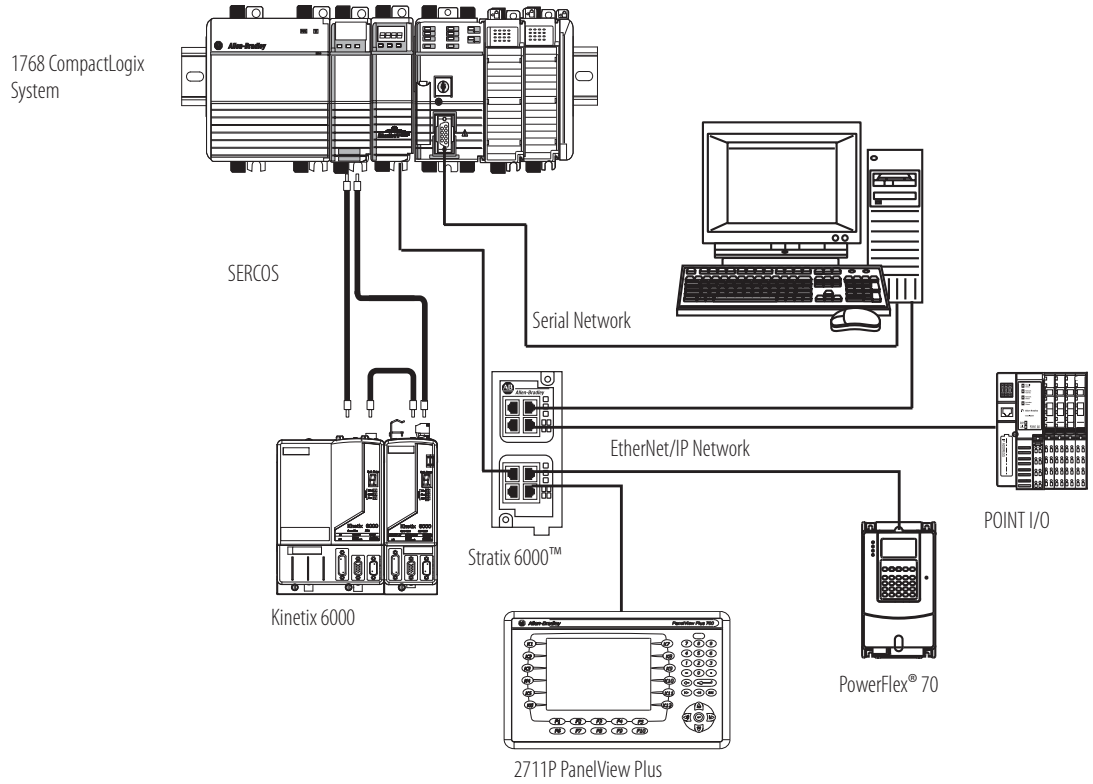

1768 Compact GuardLogix Safety System

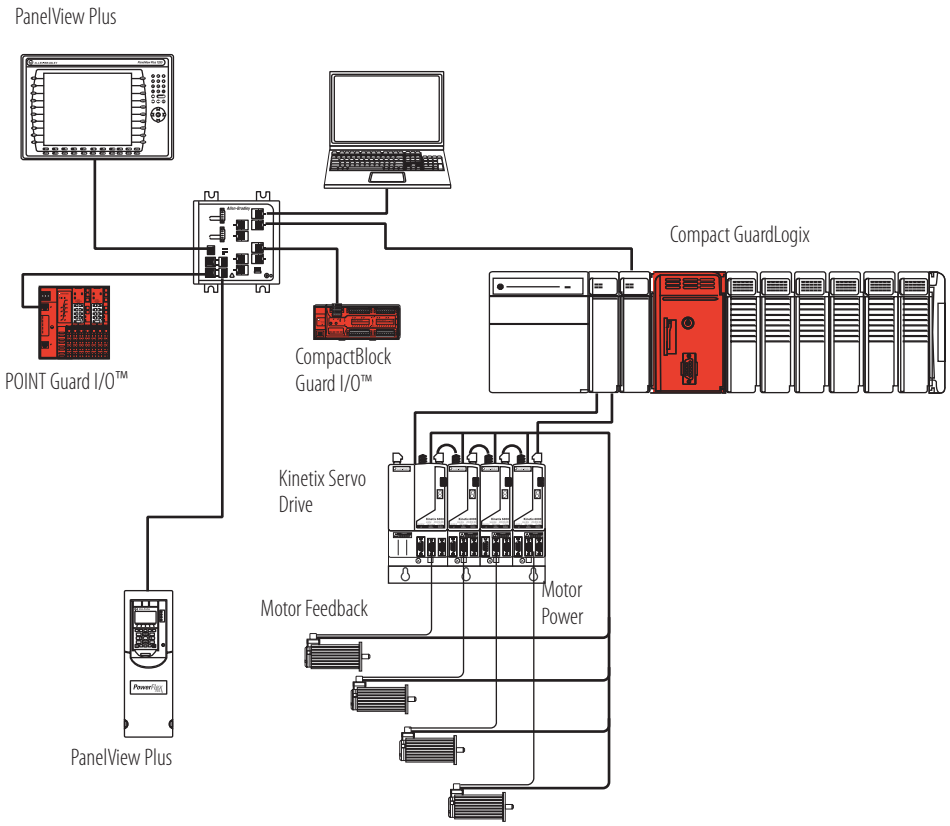

CompactLogix Controllers

The CompactLogix platform brings together the benefits of the Logix platform— common programming environment, common networks, common control engine—in a small footprint with high performance. Combined with Compact I/O modules, the CompactLogix platform is perfect for tackling smaller, machine-level control applications, with or without simple motion, with unprecedented power and scalability. A CompactLogix platform is ideal for systems that require standalone and system-connected control over EtherNet/IP, ControlNet, or DeviceNet networks.

For detailed specifications, see CompactLogix Controllers Specifications Technical Data, publication 1769-TD005.

Characteristic	CompactLogix 5370 L1 Controllers	CompactLogix 5370 L2 Controllers	CompactLogix 5370 L3 Controllers	1768 Controllers
Controller application	Small applications Embedded 1734 I/O modules	Small applications Embedded 1769 I/O modules	General purpose	Integrated safety Integrated SERCOS motion
Controller tasks	32; 100 programs/task	32; 100 programs/task	32; 100 programs/task	• 1768-L43: 16; 32 programs/task • 1768-L45: 30; 32 programs/task
Event tasks	Consumed tag, EVENT instruction, embedded inputs, remote I/O, axis, and motion event triggers	Consumed tag, EVENT instruction, remote I/O, axis, and motion event triggers	Consumed tag, EVENT instruction, remote I/O, axis, and motion event triggers	Consumed tag, EVENT instruction, remote I/O, axis, and motion event triggers
User memory	• 1769-L16ER-BB1B: 384 KB • 1769-L18ER-BB1B, 1769-L18ERM-BB1B: 512 KB	• 1769-L24ER-QB1B, 1769-L24ER-QBFC1B: 750 KB • 1769-L27ERM-QBFC1B: 1 MB	• 1769-L30ER, 1769-L30ERM, 1769-L30ER-NSE: 1MB • 1769-L33ER, 1769-L33ERM: 2 MB • 1769-L36ERM: 3 MB	• 1768-L43: 2 MB • 1768-L43S: 2 MB + 0.5 MB safety • 1768-L45: 3 MB • 1768-L45S: 3 MB + 1 MB safety
Built-in ports	• 2 EtherNet/IP(1) • 1 USB	• 2 EtherNet/IP(1) • 1 USB	• 2 EtherNet/IP(1) • 1 USB	• 1 port RS- 232 serial (DF1 or ASCII)
Communication options	• Dual-port EtherNet/IP	• Dual-port EtherNet/IP • DeviceNet	• Dual-port EtherNet/IP • DeviceNet	• EtherNet/IP (standard and safety) • ControlNet (standard and safety) • DeviceNet (standard)

(1) CompactLogix 5370 controllers have two EtherNet/IP ports to connect to an EtherNet/IP network. The ports carry the same network traffic as part of the controller's embedded switch. The controller uses only one IP address.

For information on estimating memory requirements for you application, see Logix5000 Controllers Execution Time and Memory Use Reference Manual, publication 1756-RM087.

The intent of the design was for the RAPID contract to have a remote I/O rack, connected by Ethernet over radio to the permanent treatment system building's controller. It is our understanding that a controller is not necessary to achieve this.
However, a controller in the pump house doesn't prevent the system from running.
It may be more cost effective to remove the controller pictured here.

CompactLogix 5

In a CompactLogix 5370 L3 controller s
the left and the right of the power sup
on each side of the power supply. The

- dual EtherNet/IP ports for ring t
- USB port for firmware download and programming.

Characteristic	1769-L30ER	1769-L30ERM	1769-L30ER-NSE	1769-L33ER	1769-L33ERM	1769-L36ERM
Available user memory	1 MB	1 MB	1 MB No capacitor	2 MB	2 MB	3 MB
Memory card	1784-SD1 (1 GB), shipped with controller 1784-SD2 (2 GB)					
Communication ports	• 2 EtherNet/IP • 1 USB					
EtherNet/IP connections	• 256 EtherNet/IP • 120 TCP	• 256 EtherNet/IP • 120 TCP	• 256 EtherNet/IP • 120 TCP	• 256 EtherNet/IP • 120 TCP	• 256 EtherNet/IP • 120 TCP	• 256 EtherNet/IP • 120 TCP
EtherNet/IP nodes in a single Logix Designer application, max	16			32		48
Integrated motion on an EtherNet/IP network	—	Supports up to 4 axes	—	—	Supports up to 8 axes	Supports up to 16 axes
Module expansion capacity	8 1769 modules 1 bank of modules			16 1769 modules 2 banks of modules		30 1769 modules 3 banks of modules
Battery	None					
Power supply distance rating	4 modules			4 modules		4 modules
Programming software support	• RSLogix 5000 software, version 20 - For controllers that use firmware revision 20.*xxx*. • Logix Designer application, version 21 or later - For controllers that use firmware revision 21.*xxx* or later.					

These controllers replace previous catalog numbers.

New Controller[1]	Replaces Previous Controller[2]	Differences
1769-L30ER 1769-L30ERM 1769-L30ER-NSE	1769-L31 1769-L32C[3] 1769-L32E	• Additional memory • Integrated motion on EtherNet/IP support (1769-L30ERM, 1769-L33ERM, 1769-L36ERM) • USB port instead of RS-232 port • Dual-port EtherNet/IP support • SD card instead of CompactFlash card
1769-L33ER 1769-L33ERM	1769-L35CR[3] 1769-L35E	
1769-L36ERM	Any previous 1769-L3*x* controller	

(1) IMPORTANT: Typically, you can use any of the new controllers listed in each row as replacements for any of the previous controllers listed in the corresponding cell to the right. For example, you can replace a 1769-L32E with a 1769-L30ER, 1769-L30ERM, or 1769-L30ER-NSE controller.
In some rare cases, system configuration prevents controller replacement as shown above. For example, if your system uses a 1769-L32E controller with 12 expansion modules, you cannot replace that controller with a 1769-L30ER, 1769-L30ERM, or 1769-L30ER-NSE controller. Those controllers support no more than 8 expansion modules. You must replace the 1769-L32E controller with a 1769-L33ER, 1769-L33ERM, or 1769-L36ERM controller.
We recommend that before you upgrade your controllers, consider your application requirements to verify that the replacements listed above apply.

(2) These catalog numbers are still available for sale, see page 12 for details. Please contact your local Rockwell Automation sales office for ordering information.

(3) Requires converting from ControlNet connections to EtherNet/IP connections.

CompactLogix Communication Options

You can configure your system for information exchange between a range of devices and computing platforms and operating systems. Select a CompactLogix controller with integrated communication or the appropriate communication module.

For detailed specifications, see:

- CompactLogix Controllers Specifications Technical Data, publication 1769-TD005.
- CompactLogix Communication Modules Specifications Technical Data, publication 1769-TD007.

EtherNet/IP Communication Options

The Ethernet Industrial network protocol (EtherNet/IP) is an open industrial-networking standard that supports both real-time I/O messaging and message exchange. The EtherNet/IP network uses off-the-shelf Ethernet communication chips and physical media.

Dual-port EtherNet/IP support embeds switch technology directly in the controller to so the controller can operate on star, linear, or ring EtherNet/IP topologies.

Cat. No.	Description	Communication Rate	Logix Resources[1]	TCP/IP Connections
1769-L16ER-BB1B,	CompactLogix 5370 L1 controller with integrated EtherNet/IP dual-port, POINT I/O form factor	10/100 Mbps	4 nodes 256 EtherNet/IP connections	120
1769-L18ER-BB1B, 1769-L18ERM-BB1B			8 nodes 256 EtherNet/IP connections	
1769-L24ER-BB1B, 1769-L24ER-QBFC1B	CompactLogix 5370 L2 controller with integrated EtherNet/IP dual-port, Compact I/O form factor	10/100 Mbps	8 nodes 256 EtherNet/IP connections	120
1769-L27ERM-QBFC1B		10/100 Mbps	16 nodes 256 EtherNet/IP connections	
1769-L30ER, 1769-L30ERM	CompactLogix 5370 L3 controller with integrated EtherNet/IP dual-port	10/100 Mbps	16 nodes 256 EtherNet/IP connections	120
1769-L33ER, 1769-L33ERM			32 nodes 256 EtherNet/IP connections	
1769-L36ERM			48 nodes 256 EtherNet/IP connections	
1769-AENTR	1769 EtherNet/IP adapter	10/100 Mbps	128 EtherNet/IP connections	96
1768-ENBT	1768 EtherNet/IP communication bridge module	10/100 Mbps	128 EtherNet/IP connections	64
1768-EWEB	1768 Ethernet web server module	10/100 Mbps	128 EtherNet/IP connections	64

(1) The number of nodes listed for CompactLogix 5370 controllers represents the maximum number of EtherNet/IP nodes you can include in a Logix Designer application project for those controller. For example, in a Logix Designer application project that uses a 1769-L18ERM-BB1B controller, you can add as many as 8 EtherNet/IP nodes to the project.

Serial Communication Options

These CompactLogix controllers support serial communication.

Cat. No.	Serial Options
1769-L16ER-BB1B, 1769-L18ER-BB1B, 1769-L18ERM-BB1B	1734-232ASC module for an RS-232 serial interface 1734-485 ASC module for an RS-422 and RS-485 serial device
1769-L24ER-BB1B, 1769-L24ER-QBFC1B	1769-ASCII module for an ASCII interface to RS-232, RS-422, and RS-485 devices 1769-SM2 module for a Modbus RTU interface
1769-L27ERM-QBFC1B	
1769-L30ER, 1769-L30ERM	
1769-L33ER, 1769-L33ERM	
1769-L36ERM	
1768-L43, 1768-L43S, 1768-L45, 1768-L45S	Built-in serial port 1769-ASCII module for an ASCII interface to RS-232, RS-422, and RS-485 devices 1769-SM2 module for a Modbus RTU interface

Modbus Support

To access a Modbus TCP network, connect through the embedded Ethernet port of the CompactLogix 5370 controllers and execute a specific ladder-logic routine. For more information, see Knowledgebase document 470365 at http://www.rockwellautomation.com/knowledgebase/.

To access a Modbus RTU network, connect through the serial port (if available) and execute a specific ladder-logic routine. For more information, see Using Logix5000 Controllers as Masters or Slaves on Modbus Application Solution, publication CIG-AP129.

1734 Specialty I/O Modules

Cat. No.	Description	Wiring Base	POINTBus Current
1734-232ASC 1734-485ASC	The 1734-232ASC and 1734-485ASC serial interface modules offer a serial-link communication interface solution for peripheral products with RS-232 (only 1734-232ASC), RS-485, and RS-422 ports (only 1734-485ASC.)	1734-TB, 1734-TBS	75 mA
1734-ARM	The 1734-ARM address reserve module reserves address and slot numbers to maintain a numbering scheme of an existing system. The 1734-ARM has no module configuration and does not communicate I/O data.	1734-TB, 1734-TBS	75 mA
1734-CTM 1734-VTM	The common terminal module (1734-CTM) and voltage term66inal module (1734-VTM) expand the termination capabilities of POINT I/O modules. Install the modules to provide support for higher density (8 channel) POINT I/O modules.	1734-TB, 1734-TBS, 1734-TOP, 1734-TOPS	75 mA
1734-SSI	The 1734-SSI module collects serial data from absolute-position, encoding sensors that use standard Synchronous Serial Interface (SSI) protocol.	1734-TB, 1734-TBS	110 mA

1769 Compact I/O Modules

The 1769 Compact I/O modules can be installed on the CompactLogix 5370 L2 and L3 controllers and 1768 CompactLogix controllers. The modules mechanically lock together by means of a tongue-and-groove design and have an integrated communication bus that is connected from module to module by a moveable bus connector.

Each I/O module includes a built-in removable terminal block with finger-safe cover for connections to I/O sensors and actuators. The terminal block is behind a door at the front of the module. I/O wiring can be routed from beneath the module to the I/O terminals.

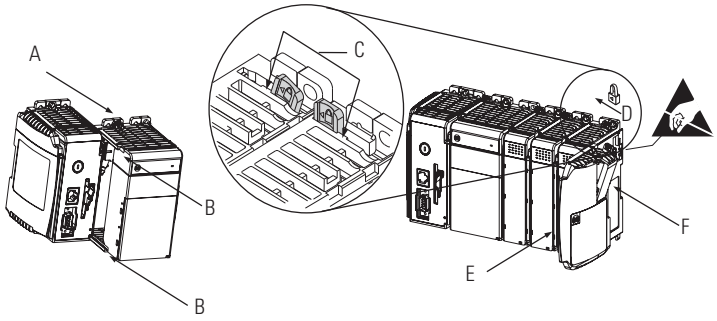

For detailed specifications, see 1769 Compact I/O Modules Specifications Technical Data, publication 1769-TD006.

Power Supply Distance Ratings

Check each module's specification table for the power supply distance rating. This indicates how many slot positions the module can be from the power supply.

1769 AC Digital Modules

Cat. No.	Inputs/Outputs	Voltage Category	Operating Voltage Range	Backplane Current	Power Supply Distance Rating
1769-IA8I	8 inputs, individually isolated	100/120V AC	79…132V AC, 47…63 Hz	90 mA @ 5.1V(1)	8
1769-IA16	16 inputs	100/120V AC	79…132V AC, 47…63 Hz	115 mA @ 5.1V	8
1769-IM12	12 inputs	200/240V AC	159…265V AC, 47…63 Hz	100 mA @ 5.1V	8
1769-OA8	8 outputs	100/240V AC	85…265V AC 47…63 Hz	145 mA @ 5.1V	8
1769-OA16	16 outputs	100/240V AC	85…265V AC 47…63 Hz	225 mA @ 5.1V	8

(1) Maximum is 190 mA.

1769 DC Digital Modules

Cat. No.	Inputs/Outputs	Voltage Category	Operating Voltage Range	Backplane Current	Power Supply Distance Rating
1769-IG16	16 inputs	5V DC TTL	4.5…5.5V DC	120 mA @ 5.1V	8
1769-IQ16	16 inputs	24V DC sink/source	10…30V DC @ 30 °C (86 °F) 10…26.4V DC @ 60 °C (140 °F)	115 mA @ 5.1V	8
1769-IQ16F	16 inputs, high-speed	24V DC sink/source	10…30V DC @ 30 °C (86 °F) 10…26.4V DC @ 60 °C (140 °F)	100 mA @ 5.1V	8
1769-IQ32	32 inputs	24V DC sink/source	10…30V DC @ 30 °C (86 °F) 10…26.4V DC @ 60 °C (140 °F)	170 mA @ 5.1V	8
1769-IQ32T	32 inputs	24V DC sink/source	20.4…26.4V DC @ 60 °C (140 °F)	170 mA @ 5.1V	8
1769-IQ6XOW4	6 inputs 4 outputs	24V DC sink/source input AC/DC normally open relay contact outputs	10…30V DC @ 30 °C (86 °F) 10…26.4V DC @ 60 °C (140 °F)	105 mA @ 5.1V 50 mA @ 24V	8
1769-OB8	8 outputs	24V DC source	20.4…26.4V DC	145 mA @ 5.1V	8
1769-OB16	16 outputs	24V DC source	20.4…26.4V DC	200 mA @ 5.1V	8
1769-OB16P	16 outputs, protected	24V DC source	20.4…26.4V DC	160 mA @ 5.1V	8
1769-OB32	32 outputs	24V DC source	20.4…26.4V DC	300 mA @ 5.1V	6
1769-OB32T	32 outputs	24V DC source	10.2…26.4V DC	220 mA @ 5.1V	8
1769-OG16	16 outputs	5V DC TTL	4.5…5.5V DC	200 mA @ 5.1V	8
1769-OV16	16 outputs	24V DC sink	20.4…26.4V DC	200 mA @ 5.1V	8
1769-OV32T	32 outputs	24V DC sink	10.2…26.4V DC	300 mA @ 5.1V	8

1769 Contact Output Modules

Cat. No.	Inputs/Outputs	Operating Voltage Range	Backplane Current	Power Supply Distance Rating
1769-OW8	8 outputs	5…265V AC 5…125V DC	125 mA @ 5.1V 100 mA @ 24V	8
1769-OW8I	8 outputs, individually isolated	5…265V AC 5…125V DC	125 mA @ 5.1V 100 mA @ 24V	8
1769-OW16	16 outputs	5…265V AC 5…125V DC	205 mA @ 5.1V 180 mA @ 24V	8

1769 Analog Modules

Cat. No.	Inputs/Outputs	Range	Resolution	Backplane Current	Power Supply Distance Rating
1769-IF4	4 inputs, differential or single-ended	±10V, 0…10V, 0…5V, 1…5V 0…20 mA, 4…20 mA	14 bits (unipolar) 14 bits plus sign (bipolar)	120 mA @ 5.1V 60 mA @ 24V	8
1769-IF4I	4 inputs, differential or single-ended, individually isolated	±10V, 0…10V, 0…5V, 1…5V 0…20 mA, 4…20 mA	16 bits (unipolar) 15 bits plus sign (bipolar)	145 mA @ 5.1V 125 mA @ 24V	8
1769-IF8	8 inputs, differential or single-ended	±10V, 0…10V, 0…5V, 1…5V 0…20 mA, 4…20 mA	16 bits (unipolar) 15 bits plus sign (bipolar)	120 mA @ 5.1V 70 mA @ 24V	8
1769-IF16C	16 inputs, single-ended	0…20 mA, 4…20 mA	16 bits (unipolar) 15 bits plus sign (bipolar)	190 mA @ 5.1V 70 mA @ 24V	8
1769-IF16V	16 inputs, differential	±10V, 0…10V, 0…5V, 1…5V	16 bits (unipolar) 15 bits plus sign (bipolar)	190 mA @ 5.1V 70 mA @ 24V	8
1769-IF4XOF2	4 differential or single-ended inputs 2 single-ended outputs	0…10V 0…20 mA	Input: 8 bits plus sign Output: 8 bits plus sign	120 mA @ 5.1V 160 mA @ 24V	8
1769-IF4FXOF2F	4 fast differential or single-ended inputs 2 fast single-ended outputs	±10V, 0…10V, 0…5V, 1…5V 0…20 mA, 4…20 mA	Input: 14 bits (unipolar) 14 bits plus sign (bipolar) Output: 13 bits (unipolar) 13 bits plus sign (bipolar)	220 mA @ 5.1V 120 mA @ 24V	8
1769-OF2	2 outputs, single-ended	±10V, 0…10V, 0…5V, 1…5V 0…20 mA, 4…20 mA	14 bits (unipolar) 14 bits plus sign (bipolar)	120 mA @ 5.1V 120 mA @ 24V	8
1769-OF4	4 outputs, single-ended	±10V, 0…10V, 0…5V, 1…5V 0…20 mA, 4…20 mA	15 bits plus sign unipolar and bipolar	120 mA @ 5.1V 170 mA @ 24V	8
1769-OF4CI	4 outputs, differential, individually isolated	0…20 mA 4…20 mA	16 bits (unipolar)	140 mA @ 5.1V 145 mA @ 24V	8
1769-OF4VI	4 outputs, differential, individually isolated	±10V 0…10V 0…5V 1…5V	15 bits plus sign (bipolar)	145 mA @ 5.1V 75 mA @ 24V	8
1769-OF8C	8 outputs, single-ended	0…20 mA 4…20 mA	16 bits (unipolar)	140 mA @ 5.1V 145 mA @ 24V	8
1769-OF8V	8 outputs, single-ended	±10V 0…10V 0…5V 1…5V	16 bits plus sign (bipolar)	145 mA @ 5.1V 125 mA @ 24V	8

1769 Analog RTD and Thermocouple Modules

Cat. No.	Inputs/Outputs	Sensors Supported	Backplane Current	Power Supply Distance Rating
1769-IR6	6 RTD inputs	100, 200, 500, 1000 Ω Platinum 385 100, 200, 500, 1000 Ω Platinum 3916 120 Ω Nickel 618 120 Ω Nickel 672 10 Ω Nickel-iron 518 0…150 Ω, 0…500 Ω, 0…1000 Ω, 0…3000 Ω	100 mA @ 5.1V 45 mA @ 24V	8
1769-IT6	6 thermocouple inputs	Thermocouple types B, C, E, J, K, N, R, S, T ±50V, ±100V	100 mA @ 5.1V 45 mA @ 24V	8(1)

(1) To reduce the effects of electrical noise, install the 1769-IT6 module at least two slots away from the AC power supplies.

1769 Specialty I/O Modules

Cat. No.	Description	Backplane Current	Power Supply Distance Rating
1769-ARM	Use a 1769-ARM address reserve module to reserve module slots. After creating an I/O configuration and user program, you can remove and replace any I/O module in the system with a 1769-ARM module once you inhibit the removed module in the Logix Designer application.	60 mA @ 5.1V	8
1769-ASCII	The 1769-ASCII module, a general purpose two-channel ASCII interface, provides a flexible network interface to a wide variety of RS-232, RS-485, and RS-422 ASCII devices. The module provides the communication connections to the ASCII device.	425 mA @ 5.1V	4
1769-BOOLEAN	Use the 1769-BOOLEAN module in applications that require repeatability, such as material handling and packaging, when there is a requirement to activate an output based on an input's transition. If the Boolean expression is true, the output is directed to the ON state. If the Boolean expression is false, the output channel is directed to the OFF state. There are four operators that you can configure as OR, AND, XOR, or none.	220 mA @ 5.1V	8
1769-HSC	Use the 1769-HSC when you need: • a counter module that is capable of reacting to high-speed input signals. • to generate rate and time-between-pulses (pulse interval) data. • as many as two channels of quadrature or four channels of pulse/count inputs.	245 mA @ 5.1V	4
1769-SM1	The Compact I/O to DPI/SCANport™ module connects to PowerFlex 7-class drives, other DPI-based host devices, and SCANport-based host devices such as 1305 and 1336 PLUS II drives.	280 mA @ 5.1V	6
1769-SM2	The Compact I/O to DSI/Modbus module connects to PowerFlex 4-class drives and to other Modbus RTU slave devices, such as PowerFlex 7-class drives with 20-COMM-H RS485 HVAC adapters.	350 mA @ 5.1V	4

1769 Expansion Cables

If you divide 1769 modules into multiple banks, make sure:

- each bank needs its own power supply.
- use expansion cables to connect the banks.
- the last I/O bank requires an end cap.

Vertical

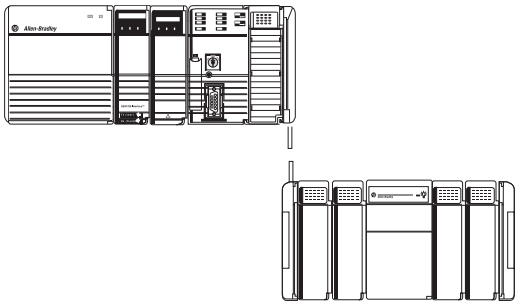

Horizontal

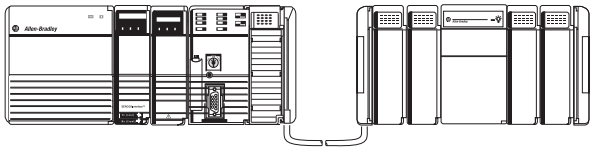

How you orient I/O banks determines the expansion cables you need to connect the I/O banks.

If you add a	And connect the chassis	Use this cable[1]
Second bank	Right to left	1769-CRL*x*
	Right to right	1769-CRR*x*
Third bank	Right to left	1769-CRL*x*
	Right to right	1769-CRR*x*
	Left to left	1769-CLL*x*

(1) Where *x* = 1 for 1 ft (305 mm) or 3 for 3.28 ft (1 m).

1769 End Caps

The final 1769 Compact I/O bank requires an end cap on the end without the expansion cable. The CompactLogix 5370 L2 controller comes with a right-end cap, so you do not need to order one separately.

- Right end cap, catalog number 1769-ECR
- Left end cap, catalog number 1769-ECL

1769 Wiring Systems

As an alternative to buying removable terminal blocks (RTBs) and connecting the wires yourself, you can buy a wiring system of:

- interface modules (IFMs) that provide the output terminal blocks for digital I/O modules. Use the pre-wired cables that match the I/O module to the IFM.
- analog interface modules (AIFMs) that provide the output terminal blocks for analog I/O modules. Use the pre-wired cables that match the I/O module to the AIFM.
- I/O module-ready cables. One end of the cable assembly is an RTB that plugs into the front of the I/O module. The other end has individually color-coded conductors that connect to a standard terminal block.

Removable Terminal Kits

You can order removable terminal kits with the CompactLogix 5370 L1 and L2 controllers separately. The kits are used to connect wiring to the controllers. describes the kits.

Cat. Nos.	Controllers Supported	Description
1769-RTB45	CompactLogix 5370 L1	• Four 10-pin connectors used to connect wiring to the controllers' embedded digital I/O module. • One 5-pin connector used to connect an external 24V DC power source to the controller.
1769-RTB40DIO	CompactLogix 5370 L2	Four 10-pin connectors used to connect wiring to the controllers' embedded digital I/O module.
1769-RTB40AIO	1769-L24ER-QBFC1B and 1769-L27ERM-QBFC1B	Four 10-pin connectors used to connect wiring to the controllers' embedded analog I/O module.

CompactLogix Power Supplies

Select power supplies based on the controller and the number of additional I/O banks.

For a	Select
CompactLogix 5370 L3 controller	• One 1769 power supply for the controller and local I/O modules • One 1769 power supply for each additional bank of I/O modules
CompactLogix 5370 L2 controller	No power supply as it is integral to the controller package
CompactLogix 5370 L1 controller	No power supply as it is integral to the controller package
1768 CompactLogix controller	• One 1768 power supply for the controller and 1768 modules • One 1769 power supply for each additional bank of I/O modules

Power Supplies

Cat. No.	Description	Voltage Category	Operating Voltage Range
1769-PA2	1769 Compact I/O expansion power supply	120V/220V AC	85...265V AC
1769-PB2		24V DC	19.2...31.2V DC
1769-PA4		120V/220V AC	85...265V AC or 170...265V AC (switch selectable) 47...63 Hz
1769-PB4		24V DC	19.2...31.2V DC
1768-PA3	1768 CompactLogix power supply	120V/220V AC	85...265V AC or 108...132V DC
1768-PB3		24V DC	16.8...31.2V DC

For detailed specifications, see Compact Power Supplies Specifications Technical Data, publication 1769-TD008.

Allen-Bradley, Compact GuardLogix, Compact I/O, CompactBlock Guard I/O, CompactLogix, ControlLogix, FactoryTalk, GuardLogix, Integrated Architecture, Kinetix, Logix5000, PanelView, POINT Guard I/O, POINT I/O, POINTBus, PowerFlex, Rockwell Software, Rockwell Automation, RSLinx, RSLogix, RSNetWorx, SCANport, SoftLogix, Stratix 6000, Stratix 8000, Studio 5000, Studio 5000 Logix Designer, and Ultra are trademarks of Rockwell Automation, Inc.

Trademarks not belonging to Rockwell Automation are property of their respective companies.

www.rockwellautomation.com

Power, Control and Information Solutions Headquarters

Americas: Rockwell Automation, 1201 South Second Street, Milwaukee, WI 53204-2496 USA, Tel: (1) 414.382.2000, Fax: (1) 414.382.4444
Europe/Middle East/Africa: Rockwell Automation NV, Pegasus Park, De Kleetlaan 12a, 1831 Diegem, Belgium, Tel: (32) 2 663 0600, Fax: (32) 2 663 0640
Asia Pacific: Rockwell Automation, Level 14, Core F, Cyberport 3, 100 Cyberport Road, Hong Kong, Tel: (852) 2887 4788, Fax: (852) 2508 1846

Publication 1769-SG001P-EN-P - January 2014
Supersedes Publication 1769-SG001O-EN-P - January 2013

Copyright © 2014 Rockwell Automation, Inc. All rights reserved. Printed in the U.S.A.

CompactLogix Power Supplies Specifications

1768 CompactLogix Power Supplies Catalog Numbers 1768-PA3, 1768-PB3

1769 Compact I/O Power Supplies Catalog Numbers 1769-PA2, 1769-PB2, 1769-PA4, 1769-PB4

Topic	Page
1768 CompactLogix Power Supplies	3
1769 Compact I/O Power Supplies	7

Environmental Specifications - 1768 and 1769 Power Supplies

Attribute	1768-PA3, 1769-PB3 1769-PA2, 1769-PB2, 1769-PA4, 1769-PB4
Temperature, operating IEC 60068-2-1 (Test Ad, Operating Cold), IEC 60068-2-2 (Test Bd, Operating Dry Heat), IEC 60068-2-14 (Test Nb, Operating Thermal Shock)	0…60 °C (32…140 °F)
Temperature, storage IEC 60068-2-1 (Test Ab, Unpackaged Nonoperating Cold), IEC 60068-2-2 (Test Bb, Unpackaged Nonoperating Dry Heat), IEC 60068-2-14 (Test Na, Unpackaged Nonoperating Thermal Shock)	-40…85 °C (-40…185 °F)
Relative humidity IEC 60068-2-30 (Test Db, Unpackaged Nonoperating Damp Heat)	5…95% noncondensing
Vibration IEC 60068-2-6 (Test Fc, Operating)	5 g @ 10…500 Hz
Shock, operating IEC 60068-2-27 (Test Ea, Unpackaged Shock)	30 g
Shock, nonoperating IEC 60068-2-27 (Test Ea, Unpackaged Shock)	50 g

Important User Information

Solid state equipment has operational characteristics differing from those of electromechanical equipment. Safety Guidelines for the Application, Installation and Maintenance of Solid State Controls (publication SGI-1.1 available from your local Rockwell Automation sales office or online at http://www.rockwellautomation.com/literature/) describes some important differences between solid state equipment and hard-wired electromechanical devices. Because of this difference, and also because of the wide variety of uses for solid state equipment, all persons responsible for applying this equipment must satisfy themselves that each intended application of this equipment is acceptable.

In no event will Rockwell Automation, Inc. be responsible or liable for indirect or consequential damages resulting from the use or application of this equipment.

The examples and diagrams in this manual are included solely for illustrative purposes. Because of the many variables and requirements associated with any particular installation, Rockwell Automation, Inc. cannot assume responsibility or liability for actual use based on the examples and diagrams.

No patent liability is assumed by Rockwell Automation, Inc. with respect to use of information, circuits, equipment, or software described in this manual.

Reproduction of the contents of this manual, in whole or in part, without written permission of Rockwell Automation, Inc., is prohibited.

Throughout this manual, when necessary, we use notes to make you aware of safety considerations.

WARNING	Identifies information about practices or circumstances that can cause an explosion in a hazardous environment, which may lead to personal injury or death, property damage, or economic loss.
IMPORTANT	Identifies information that is critical for successful application and understanding of the product.
ATTENTION	Identifies information about practices or circumstances that can lead to personal injury or death, property damage, or economic loss. Attentions help you identify a hazard, avoid a hazard, and recognize the consequence
SHOCK HAZARD	Labels may be on or inside the equipment, for example, a drive or motor, to alert people that dangerous voltage may be present.
BURN HAZARD	Labels may be on or inside the equipment, for example, a drive or motor, to alert people that surfaces may reach dangerous temperatures.

Rockwell Automation, Rockwell Software, Allen-Bradley, TechConnect, Compact I/O, and CompactLogix are trademarks of Rockwell Automation, Inc.

Trademarks not belonging to Rockwell Automation are property of their respective companies.

1768 CompactLogix Power Supplies

The 1768 backplane requires one 1768 power supply. The power supply is a dual input supply that operates in multiple ranges. The power supply also offers a 24V dc external power source. The power supply sends 24V dc to the controller in slot 0.

- The controller converts the 24V dc to 5V dc and 24V dc and distributes it as needed.
  - 5V and 24V power to 1769 I/O modules on the right side of the controller
  - 24V power to 1768 modules on the left side of the controller

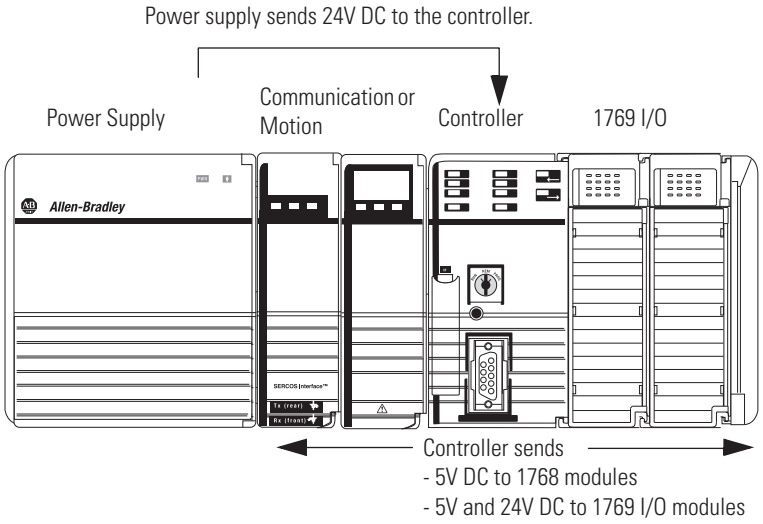

The 1768 modules do not have a distance rating to the 1768 power supply. For the 1769 I/O modules in the 1768 system, the distance rating is from the controller and not the 1768 power supply.

Technical Specifications - 1768 CompactLogix Power Supplies

Attribute	1768-PA3	1768-PB3
Input voltage range	85…265V AC 108…132V DC	16.8...31.2V DC
Input voltage, nom	120V/220V AC	24V DC
Input frequency range	47…63 Hz	DC
Input power, max	120VA/120 W	112 W
Output power, max	90 W 24V DC to backplane: 3.5 24V DC to user-accessible terminal block: 0.25 A	
Output power, min	6 W 24V DC to backplane: 0.25 A 24V DC to user-accessible terminal block: 0.0 A	
Power dissipation	30 W	22 W
Inrush current, max	50 A @ 85…132V AC 80 A @ 195…265V AC	50 A @ 16.8...31.2V DC(1)

Technical Specifications - 1768 CompactLogix Power Supplies

Attribute	1768-PA3	1768-PB3
Isolation voltage	250V, reinforced insulation type, input to system and 24V DC AUX Tested at 4250V DC for 60 s 150V, basic insulation type, 24V DC AUX to system Tested at 2200V dc for 60 s	
Internal overcurrent protection	Non-replaceable fuse is soldered in place	
Recommended external overcurrent protection	4…6 A @ 28.5…36.7 A^2S	8...12 A @ 166...250 A^2S
Overcurrent protection	15 A, user supplied	
Weight, approx.	0.98 kg (2.15 lb)	1.01 kg (2.22 lb)
Dimensions (HxWxD), approx.	131.25 x 132.75 x 105.50 mm (5.17 x 5.23 x 4.15 in.)	
Module location	DIN rail or panel mount	
Mounting screw torque	1.16 N•m (10 lb•in) - use M4 or #8 screws	
Wire category	1 - on power ports[2]	
Wire size, input power terminal	14 AWG (2.5 mm^2) solid or stranded copper wire rated at 75 °C (167 °F) or greater, 1.2 mm (3/64 in.) insulation maximum	
Wire size, output power terminal	14 AWG (2.5 mm^2)…22 AWG (0.25 mm^2) solid or stranded copper wire rated at 75 °C (167 °C) or greater, 1.2 mm (3/64 in.) insulation max	
Conductor screw torque	0.6 N•m (5 lb•in)	
North American temperature code	T4	
Output #1: 24V DC to backplane		
Ride-through interval time, min	25 ms @ 90 W	5 ms @ 90 W
Full power hold-up interval	5 ms @ 90 W	
Extended hold-up interval	8...12 s @ 1.25 W	
Output #2: 24V DC to front panel terminal block		
Voltage	18...27.60V @ front panel	
Output disable	Disable output during hold-up periods	
Enclosure type rating	None (open-style)	

(1) Does not include X-capacitor charging current.

(2) Use this conductor category information for planning conductor routing as described in the system level installation manual. See the Industrial Automation Wiring and Grounding Guidelines, publication 1770-4.1.

Certifications - 1768 CompactLogix Power Supplies

Certification[1]	1768-PA3, 1768-PB3
c-UL-us	UL Listed Industrial Control Equipment, certified for US and Canada. See UL File E65584. UL Listed for Class I, Division 2 Group A,B,C,D Hazardous Locations, certified for U.S. and Canada. See UL File E194810.
CE	European Union 89/336 EEC EMC Directive, compliant with: • EN 50082-2; Industrial Immunity • EN 61326-1; Meas./Control/Lab., Industrial Requirements • EN 61000-6-2; Industrial Immunity • EN 61000-6-4; Industrial Emissions • EN 61131-2; Programmable Controllers (Clause 8, Zone A & B) European Union 73/23/EEC LVD Directive, compliant with: • EN 1010-1; Meas./Control/Lab
C-Tick	Australian Radiocommunications Act, compliant with: AS/NZS CISPR 11; Industrial Emissions

(1) When marked. See the Product Certification link at http://www.ab.com for Declarations of Conformity, Certificates, and other certification details.

Power Requirements and Transformer Sizing - 1768 CompactLogix Power Supplies

1768-PA3 Power Dissipation

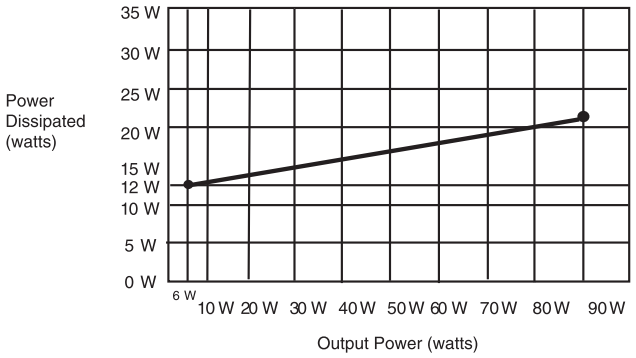

1768-PA3 Input Power Requirements

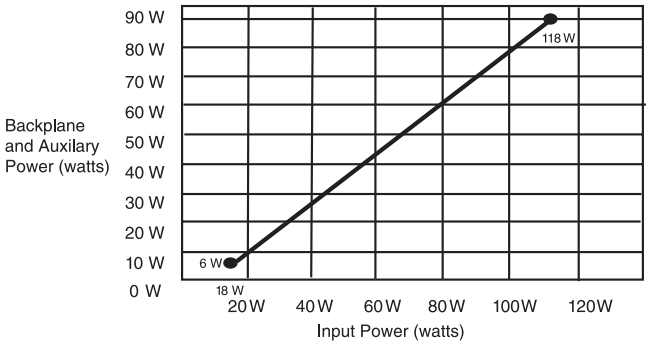

1768-PB3 Power Dissipation

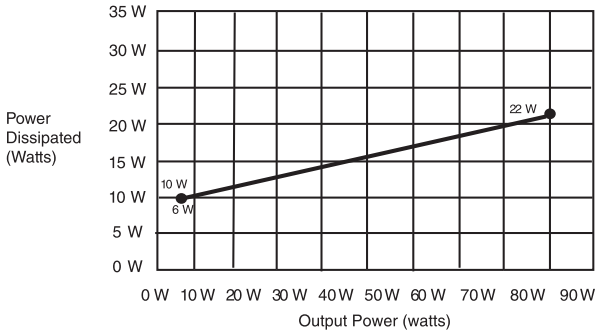

1768-PB3 Input Power Requirements

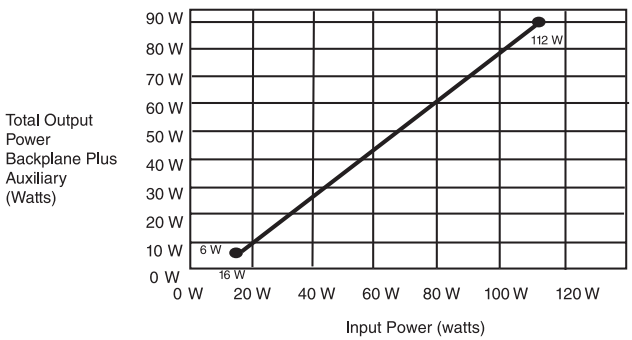

Mounting Dimensions - 1768 CompactLogix Power Supplies

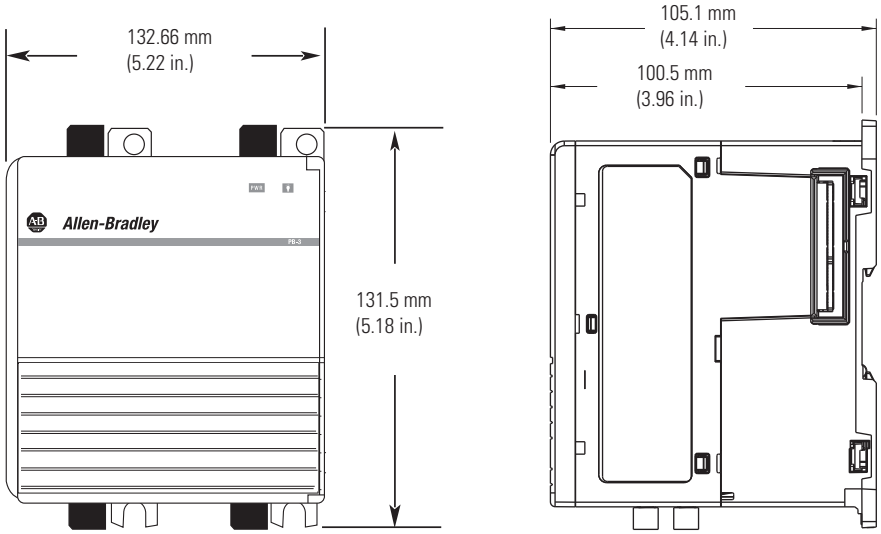

1769 Compact I/O Power Supplies

Each 1769-L3*x* controller and additional bank of I/O modules requires a 1769 power supply. Place 1769 I/O modules to the left or right of the 1769 power supply. As many as eight I/O modules can be placed on each side of the power supply.

Each 1769 module also has a power supply distance rating (the number of modules from the power supply). Each module must be located within its distance rating. See the specifications for the module to determine its distance rating.

Technical Specifications - 1769 Compact I/O Power Supplies

Attribute	1769-PA2	1769-PB2	1769-PA4	1769-PB4
Input voltage range	85…265V AC	19.2...31.2V DC	85…265V AC or 170...265V AC, switch selectable	19.2...31.2V DC
Input voltage, nom	120V/220V AC	24V DC	120V/220V AC	24V DC
Power consumption	100 VA @ 120V AC 130 VA @ 240V AC	50 VA @ 24V DC	200 VA @ 120V AC 240 VA @ 240V AC	100 VA @ 24V DC
Power dissipation	8 W @ 60° C (140° F)	7.5 W @ 60° C (140° F)	18 W @ 60° C (140° F)	14.5 W @ 60° C (140° F)
Current capacity @ 5V	2.0 A	2.0 A	4.0 A	4.0 A
Current capacity @ 24V	0.8 A	0.8 A	2.0 A	2.0 A
Inrush current, max	25 A @ 132V AC	30 A @ 31.2V DC	25 A @ 132V AC	30 A @ 31.2V DC
Isolation voltage	265V (continuous), reinforced insulation type (IEC Class 1 grounding required) Routine tested @ 2596V DC for 1 s, AC power input to system and AC power input to 24V DC user power	75V (continuous), reinforced insulation type (IEC Class 1 grounding required) Routine tested at 1697V DC for 1 s, DC power input to system	265V (continuous), reinforced insulation type (IEC Class 1 grounding required) Routine tested at 2596V DC for 1 s, AC power input to system	75V (continuous), reinforced insulation type (IEC Class 1 grounding required) Routine tested at 1697V DC for 1 s, DC power input to system
Fuse type	Wickmann 19195-3.15A Littelfuse 02183.15MXP	Wickmann 19193-6.3A Littelfuse 021706.3MXP	Wickmann 19195-3.15A Littelfuse 02183.15MXP	Wickmann 19193-6.3A Littelfuse 021706.3MXP
Weight, approx.	525 g (1.16 lb)		630 g (1.39 lb)	
Dimensions (HxWxD), approx.	118 x 70 x 87 mm (4.65 x 2.76 x 3.43 in.)			
Module location	DIN rail or panel mount			
Mounting screw torque	1.16 N•m (10 lb•in) - use M4 or #8 screws			
Power supply distance rating	8 8 I/O modules can be connected on either side of the power supply for a maximum of 16 modules			
Wire category[1]	1 - on power ports	2 - on power ports	1 - on power ports	2 - on power ports
Wire size	14 AWG (2.5 mm^2) solid copper wire rated at 90 °C (194 °F) or greater, 1.2 mm (3/64 in.) insulation max			
North American temperature code	T3C			
IEC temperature code	—	T4	—	T4
Enclosure type rating	None (open-style)			

[1] Use this conductor category information for planning conductor routing as described in the system level installation manual. See the Industrial Automation Wiring and Grounding Guidelines, publication 1770-4.1.

Certifications - 1769 Compact Power Supplies

Certification[1]	1769-PA2, 1769-PA4	1769-PB2, 1769-PB4
c-UL-us	UL Listed for Class 1, Division 2 Group A,B,C,D Hazardous Locations, certified for U.S. and Canada. See UL File E10314	
CE	European Union 2004/108/EC EMC Directive, compliant with: • EN 61000-6-2; Industrial Immunity • EN 61000-6-4; Industrial Emissions	
C-Tick	Australian Radiocommunications Act, compliant with: AS/NZS CISPR 11; Industrial Emissions	
	—	European Union 94/9/EC ATEX Directive, compliant with: • EN 60079-15; Potentially Explosive Atmospheres, Protection "n" (Zone 2) • EN 60079-0; General Requirements (Zone 2)

(1) When marked. See the Product Certification link at http://www.ab.com for Declarations of Conformity, Certificates, and other certification details.

Power Requirements and Transformer Sizing - 1769 CompactLogix Power Supplies

1769-PA2 Output Derating

User +24V Current Draw at 0 A

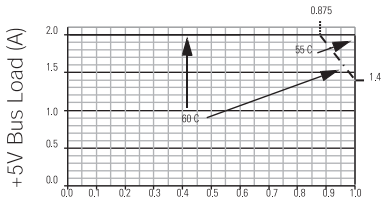

User +24V Current Draw at 0.2 A

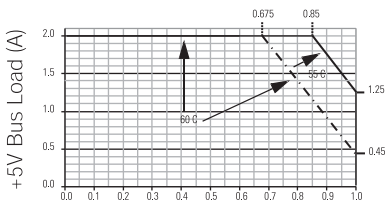

User +24V Current Draw at 0.25 A

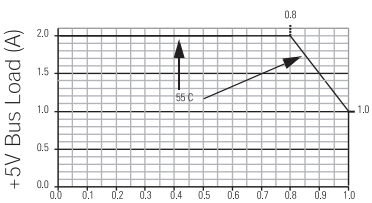

1769-PA2 Power Disspation

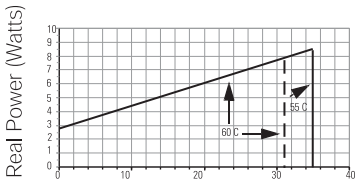

Bus +5V, +24V, and User Load (Watts)

1769-PB2 Output Derating

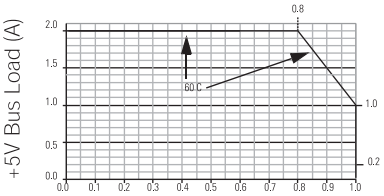

1769-PB2 Power Dissipation

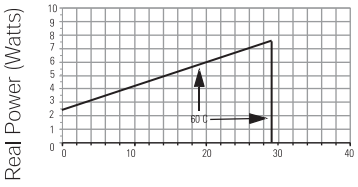

Bus +5V, +24V, and User Load (Watts)

1769-PA4 Output Derating

Total Output: 68 W @ 55 °C (131 °F) or below
61 W @ 60 °C (140 °F) or below

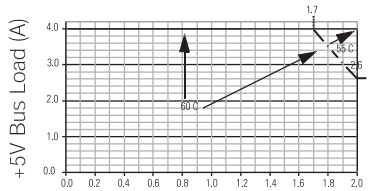

1769-PB4 Output Derating

Total Output: 68 W @ 55 °C (131 °F) or below
61 W @ 60 °C (140 °F) or below

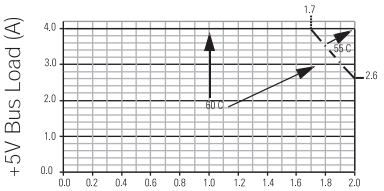

1769-PA4 Power Disspation

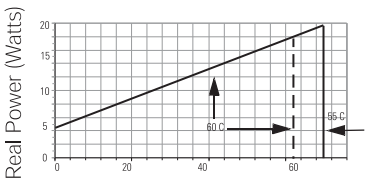

Bus +5V, +24V, and User Load (Watts)

1769-PB4 Power Disspation

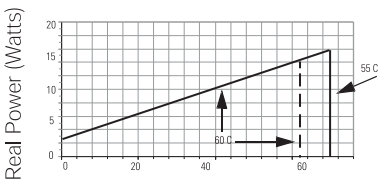

Bus +5V, +24V, and User Load (Watts)

Mounting Dimensions - 1769 CompactLogix Power Supplies

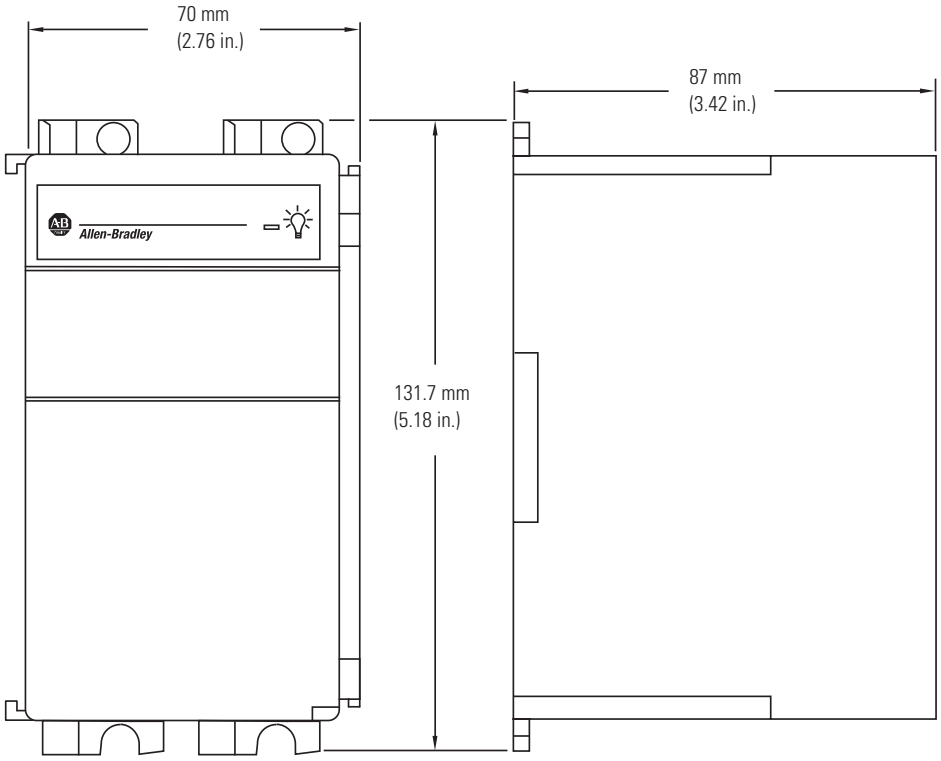

Notes:

Rockwell Automation Support

Rockwell Automation provides technical information on the Web to assist you in using its products. At http://www.rockwellautomation.com/support/, you can find technical manuals, a knowledge base of FAQs, technical and application notes, sample code and links to software service packs, and a MySupport feature that you can customize to make the best use of these tools.

For an additional level of technical phone support for installation, configuration, and troubleshooting, we offer TechConnect support programs. For more information, contact your local distributor or Rockwell Automation representative, or visit http://www.rockwellautomation.com/support/.

Installation Assistance

If you experience an anomoly within the first 24 hours of installation, review the information that is contained in this manual. You can contact Customer Support for initial help in getting your product up and running.

United States or Canada	1.440.646.3434
Outside United States or Canada	Use the Worldwide Locator at http://www.rockwellautomation.com/support/americas/phone_en.html, or contact your local Rockwell Automation representative.

New Product Satisfaction Return

Rockwell Automation tests all of its products to ensure that they are fully operational when shipped from the manufacturing facility. However, if your product is not functioning and needs to be returned, follow these procedures.

United States	Contact your distributor. You must provide a Customer Support case number (call the phone number above to obtain one) to your distributor to complete the return process.
Outside United States	Please contact your local Rockwell Automation representative for the return procedure.

Documentation Feedback

Your comments will help us serve your documentation needs better. If you have any suggestions on how to improve this document, complete this form, publication RA-DU002, available at http://www.rockwellautomation.com/literature/.

www.rockwellautomation.com

Power, Control and Information Solutions Headquarters

Americas: Rockwell Automation, 1201 South Second Street, Milwaukee, WI 53204 USA, Tel: (1) 414.382.2000, Fax: (1) 414.382.4444
Europe/Middle East/Africa: Rockwell Automation, Vorstlaan/Boulevard du Souverain 36, 1170 Brussels, Belgium, Tel: (32) 2 663 0600, Fax: (32) 2 663 0640
Asia Pacific: Rockwell Automation, Level 14, Core F, Cyberport 3, 100 Cyberport Road, Hong Kong, Tel: (852) 2887 4788, Fax: (852) 2508 1846

Publication 1769-TD008A-EN-P - January 2010

Copyright © 2010 Rockwell Automation, Inc. All rights reserved. Printed in the U.S.A.

BOM #12

Product: 1492-GS1G200

Description: 1492-GS High Density Mini Circuit Breakers (Toggle Style)

Representative Photo Only (actual product may vary based on configuration selections)

MINIATURE CIRCUIT BREAKER DATA	
Electrical Standards	UL
Number of Poles	1 pole
Magnetic Trip Range	G-Trip Characteristics - Inductive Loads (AC)
Amp Rating	20.0 A
Optional Auxiliary Contact	No Contact

CERTIFICATIONS AND APPROVALS	
UL	1077, Guide No. QVNU2, File No. E65138
CSA	22.2 NO. 235
EN	60934
CE	Marked
For UL Certifications Directory:	http://database.ul.com/cgi-bin/XYV/template/LISEXT/1FRAME/index.htm

Specifications ❶

Cat. No.	1492-GS																	
Description	High-density circuit breaker (supplementary protector) with universal mounting foot for Allen-Bradley and DIN rail mounting																	
Maximum Voltage Ratings	277/480V AC 50/60 Hz 65V DC																	
Standard Current Ratings Internal Resistance per Pole	**A** **Ω**	0.2 26	0.5 4.2	0.8 1.6	1.0 1.1	1.5 0.47	2.0 0.25	2.5 0.20	3.0 0.13	4.0 0.08	5.0 0.06	6.0 0.05	8.0 0.01	10.0 0.01	12.0 0.01	15.0 0.01	16.0 0.01	20.0 0.005	25.0 0.004
Dielectric Strength	1960V AC																	
Shock and Vibration Specifications	Shock: 25 G, 11 ms duration Vibration: 5 G (10…500 Hz)																	
Insulation Resistance	Greater than 100 MΩ @ 500V DC																	
Current Capacity of Auxiliary Contacts (N.O., N.C.)	1.0 A AC or DC (resistive load)																	
Voltage Rating of Auxiliary Contacts	277V AC 65V DC																	
Operating Life	6000 cycles @ rated current (UL 1077)																	
Temperature Range	–40…+149°F (–40…+65°C)																	
Wire Size	#22…#10 AWG (0.5…6 mm²)																	
Recommended Wire Strip Length	0.51" (13.0 mm) for Mail Terminals 0.41" (10.4 mm) for Auxiliary Terminals																	
Recommended Tightening Torque	5 lb-in. (0.565 Nm)																	

❶ Performance Data — See page Important-2.

Approvals

- UL 1077
- CSA 22.2 NO. 235
- VDE 0631 (IEC 60934)

In North America, the Cat. No. 1492-GS circuit breaker is rated as a Supplementary Protector with a short-circuit current rating. Internationally, it is rated by IEC as a Circuit Breaker for Equipment with an interrupt rating

Electrical Characteristics

Poles	Rated Current (A)	Voltage Rating		Short-Circuit Current Rating ❶ Interrupt Rating *I*cn (IEC only)
		AC	DC	
UL 1077 Supplementary Protector Rating				
1	0.2…5	277	—	0.4 kA, U2
1	6…25	277	—	0.7 kA, U2
2, 3	0.2…5	277/480	—	0.4 kA, U2
2, 3	6…25	277/480	—	0.5 kA, U2
1, 2, 3	0.2…5	—	65	0.4 kA, U2
1, 2, 3	6…25	—	65	0.8 kA, U2
1	0.2…16	277	—	5 kA, C1
1	18…25	277	—	2 kA, C1
2, 3	0.2…16	277/480	—	5 kA, C1
2, 3	18…25	277/480	—	2 kA, C1
1	0.2…25	—	65	2 kA, C1
CSA 22.2 #235 Supplementary Protector Ratings				
1	0.2…16	277	—	5 kA, C1
1	18…25	277	—	2 kA, C1
2, 3	0.2…16	277/480	—	5 kA, C1
2, 3	18…25	277/480	—	2 kA, C1
1	0.2…25	—	65	2 kA, C1
IEC 60934 Circuit Breaker for Equipment Ratings				
1	0.2…5	250	—	0.4 kA
1	6…25	250	—	0.8 kA
2, 3	0.2…5	240/415	—	0.4 kA
2, 3	6…25	240/415	—	0.8 kA
1	0.2…5	—	65	0.4 kA
1	6…25	—	65	0.8 kA

❶ The short-circuit current rating is followed by a letter and number designating the test conditions and any calibrations and dielectric tests following the short-circuit test. These designations are defined as follows (see ❷ also):
C — Indicates that the short-circuit test was conducted with series overcurrent protection
U — Indicates that the short-circuit test was conducted without series overcurrent protection
1 — Indicates that a recalibration and dielectric test was not conducted as part of the short-circuit test
2 — Indicates that a recalibration and dielectric test was conducted as part of the short-circuit test

❷ These alphanumeric designations were established by UL. CSA has not yet adopted them; however, the test conditions are equivalent to UL and the coding is appropriate.

http://raise.rockwellautomation.com/raconfig/rtcache/jpg/1492gs.jpg[10/7/2015 4:09:21 PM]

BOM #13

Compact Modular Fuse Holders

COOPER Bussmann

DIN-Rail Mount Fuse Holders Protect Your Electrical System and Simplify Installation

- Colour coded for simple visual identification: yellow for **PV (1000Vdc)**, red for **IEC (690Vac)** and **black** for **UL (600Vac/dc)** applications.
- CHPV Models, with 1000Vdc rating for use with solar gPV fuse links, are suitable for photovoltaic applications of any size.
- Tested to a wide range of standards: IEC, cULus, CCC, CSA and UR, allowing for use across global applications.
- World class space-saving footprint - smaller than any other Modular Fuse Holder, reducing required installation space.
- Toolless DIN-Rail mounting improves ease of use and reduces installation time and costs.
- Rated for use with 75ºC or 90ºC wire, fine stranded wire, spade terminals and with comb-bus bars. Use any higher temperature rated wire with appropriate derating.

PV IEC UL

For more information visit www.cooperbussmann.com/ModularFuseHolders

Modular Fuse Holder Selection Table (10 x 38, Photovoltaic and Class CC)

Series & Size	Catalogue Number		Rated Voltage & Rated Current	Agency Markings	Number of Poles	Terminal Rating	Rated Breaking Capactiy	Cooper Bussmann Fuse Links
	With Indicator	Without Indicator						
CHM 10x38 and Midget	CHM1DIU	CHM1DU	IEC 690Vac/32A UL 600Vac/30A;	IEC 60269-2 UR; CSA; CCC	1	IEC: 1 to 25mm² 70°C PVC/Copper Cable Solid, Stranded, Fine Stranded, Spade Lug, Comb Bus Bar; Single and Dual	IEC 120kA rms sym UL 200kA rms sym CCC 100kA rms sym	IEC: C10 Series UL: FNQ, KLM, FNM, KTK, BAF, FWA, PVM, AGU, BAN, FWC.
	CHM2DIU	CHM2DU			2			
	CHM3DIU	CHM3DU			3			
	CHM4DIU	CHM4DU			4			
	CHM1DNIU	CHM1DNU		IEC 60269-2	1-pole + 1 neutral			
	CHM3DNIU	CHM3DNU			3-pole + 1 neutral			
	CHM1DI-48U	N/A	IEC 48Vdc/32A UL 48Vdc/30A;	IEC 60269-2; UR; CSA; CCC	1			
	N/A	CHM1DNXU	IEC 690Vac/32A	IEC 60269-2	1 neutral		N/A	N/A
CHPV Photovoltaic	CHPV1IU	CHPV1U	IEC 1000Vdc/32A UL 1000Vdc/30A;	IEC 60269-1 UR; CSA; CCC UL4248-18	1		33kA	Solar PV series, PVM, PV-xxA10F
	CHPV2IU	CHPV2U			2			
CHCC Class CC	CHCC1DIU	CHCC1DU	UL 600Vac/dc 30A	UL; CSA; CCC	1	Cable 75°C and 90°C Cu cable	200kA rms sym	LP-CC, FNQ-R, KTK-R
	CHCC2DIU	CHCC2DU			2			
	CHCC3DIU	CHCC3DU			3			
	N/A	CHCC1DI-48U	UL 48Vdc/30A		1			

Features

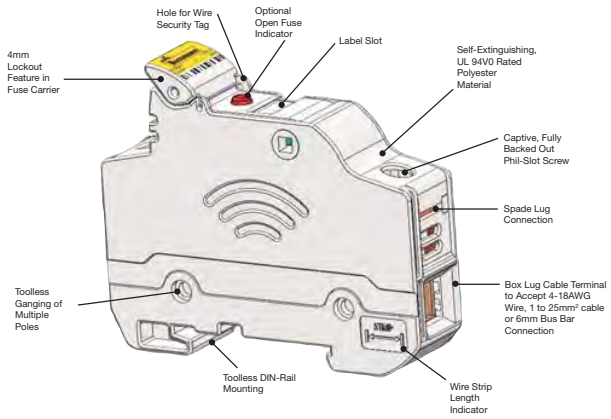

Specifications

Temperature Operating Range:
-20°C to +120°C (non-indicating)
-20°C to +90°C (indicating)
Flammability: Self-extinguishable UL 94V0 rated

Comb Bus Bar & Power Feed Accessories Make Installation Easier

- Distributes power in single- or three-phase configurations
- Cut-to-length solution does not compromise finger-safe protection
- Single-phase bus bars rated to 1000Vdc and 100A in end-fed configuration (200A for center-fed configuration)
- Three-phase bus bars rated to 600Vac/dc and 100A in end-fed configuration (200A for center-fed configuration)
- Power feed terminals for single-phase and three-phase service

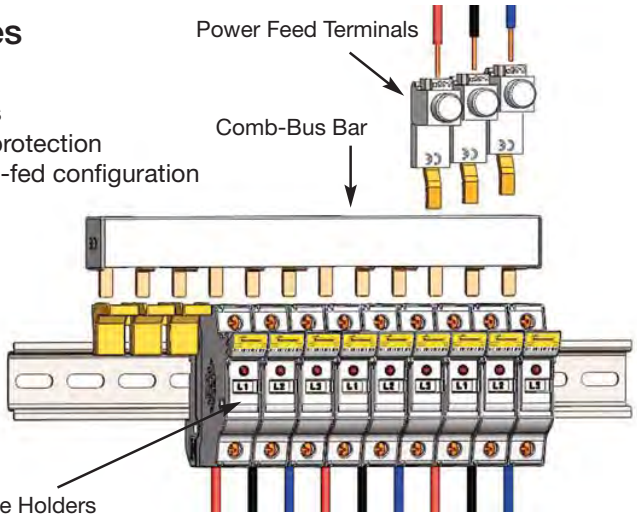

© 2012 Cooper Bussmann
www.cooperbussmann.com

COOPER Bussmann

Time-Current Characteristic Curves–Average Melt

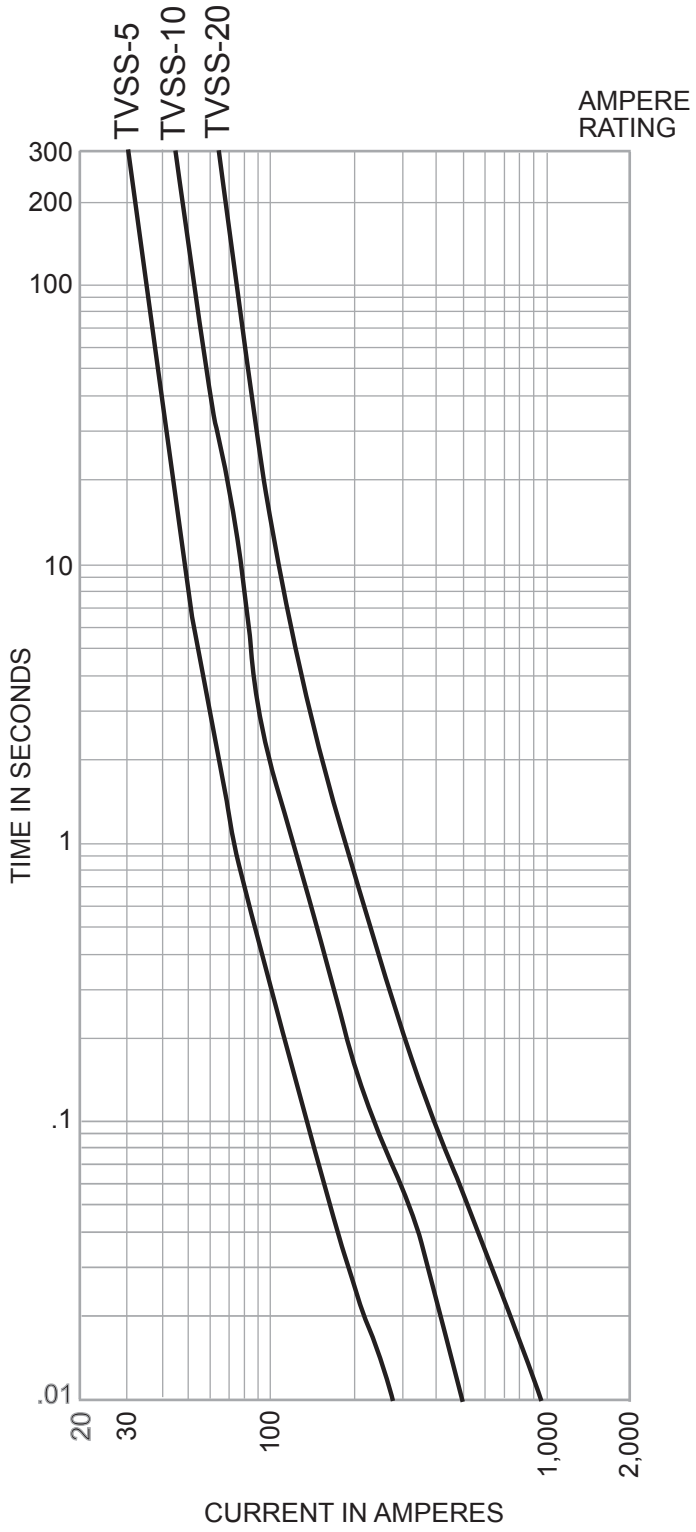

Time-Current Characteristic Curves–Peak Let-Through

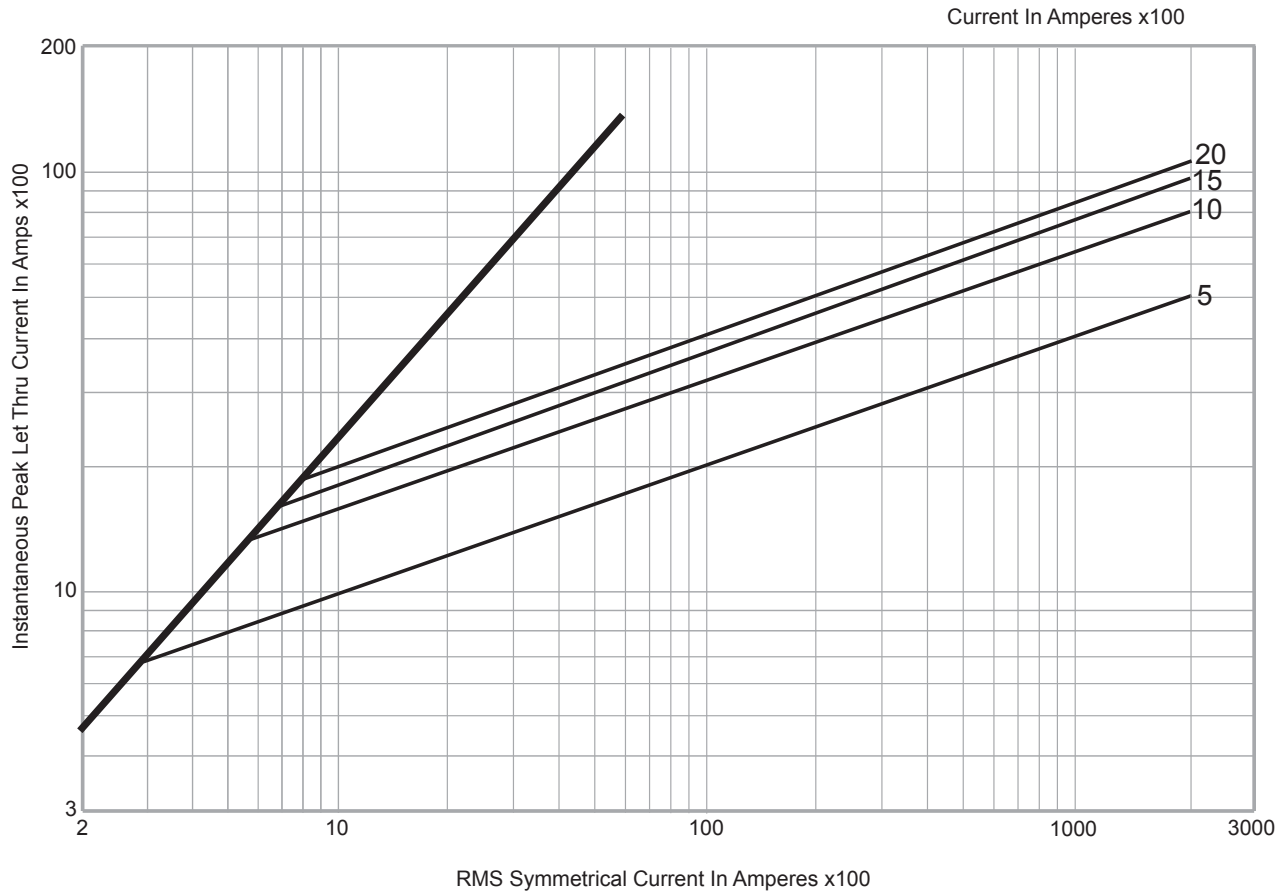

The only controlled copy of this Data Sheet is the electronic read-only version located on the Bussmann Network Drive. All other copies of this document are by definition uncontrolled. This bulletin is intended to clearly present comprehensive product data and provide technical information that will help the end user with design applications. Bussmann reserves the right, without notice, to change design or construction of any products and to discontinue or limit distribution of any products. Bussmann also reserves the right to change or update, without notice, any technical information contained in this bulletin. Once a product has been selected, it should be tested by the user in all possible applications.

DIN-Rail TVS Series

Status LED

OFF - Suppressor Non-Operational (power may be on)
GREEN - Suppressor Operational (power on)

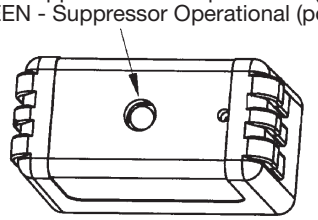

Specifications

Description: DIN-Rail mount voltage surge protection system for AC or DC voltage using diode or MOV technology.

Construction:

Suppressor: Case: 20% glass filled PES (Polyethersulfone)
Terminals: 110 Copper
Terminal Plating: Electroless tin

Holder: Case: 15% glass filled PBT (Polybutylene Terephthalate)
Interface Clips: CDA 7025
Interface Clip Plating: Electroless tin
Contact Lubricant: Fluoroether grease
Box Lug: Copper
DIN-Rail Springs: Stainless steel

Ratings*:

Volts: — 12Vdc (2kA surge current)
— 24Vdc (2kA surge current)
— 48Vdc (2kA surge current)
— 120Vac (7kA-18kA surge current)
— 240Vac (7kA-18kA surge current)

* See Catalog Numbers table for all specifications pertaining to specific voltage ratings.

Agency Information: UL Recognized (UL 1449) for AC products, (UL 497B) for DC products, CSA Approved.

Dimensions -in

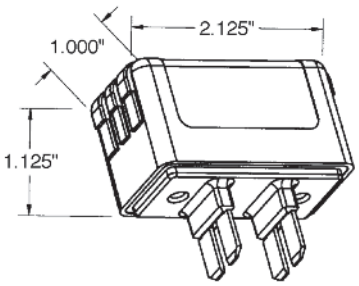

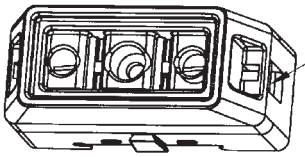

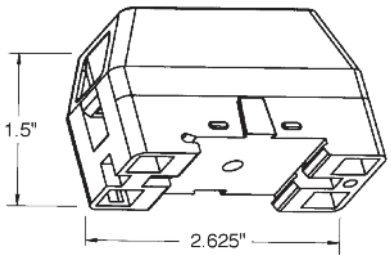

Product Specifications:

1. All TVS devices have non-polarized electrical connections as shown.
2. Suppressor voltage characteristics per chart.
3. Suppressor to provide non-interrupted service.
4. Enclosure material is 94V0 flame and explosion resistant.
5. Product markings show manufacturer, part number and safety warnings as required.
6. Mechanical dimensions as noted.
7. Suppressor Status LED as shown.
8. AC units operate on either 50 or 60Hz.

Catalog Numbers

Catalog Numbers	Voltage Application	MCOV	Technology	SVR 500A, 8x20μs	Surge Current Rating	Agency Information	Label Color
TVS12DCD	12Vdc	14Vdc	SASD	36Vdc	2kA	UL 497B	Red
TVS24DCD	24Vdc	28Vdc	SASD	58Vdc	2kA	UL 497B	White
TVS48DCD	48Vdc	57Vdc	SASD	90Vdc	2kA	UL 497B	Black
TVS120ACD	120Vac	140Vac	SASD	330Vac	7kA	UL 1449	Blue
TVS120ACM	120Vac	140Vac	MOV	500Vac	18kA	UL 1449	Grey
TVS240ACD	240Vac	280Vac	SASD	600Vac	7kA	UL 1449	Blue
TVS240ACM	240Vac	280Vac	MOV	800Vac	18kA	UL 1449	Grey

Data Sheet: 9006

BOM #15

Product: 1492-GH100

Description: 1492-GH High Density Mini Circuit Breakers (Push to Set)

Representative Photo Only (actual product may vary based on configuration selections)

MINIATURE CIRCUIT BREAKER DATA	
Electrical Standards	UL
Amp Rating	10.0 A

CERTIFICATIONS AND APPROVALS	
UL	1077, Guide No. QVNU2, File No. E65138
CSA	22.2 NO. 235
VDE	0631 (EN 60934)
CE	Marked
For UL Certifications Directory:	http://database.ul.com/cgi-bin/XYV/template/LISEXT/1FRAME/index.htm

BOM #16

SOLAHD

Dry Contact Relay Kit

RELAYCARD-SDU

Instruction Manual

While every precaution has been taken to ensure accuracy and completeness in this manual, SolaHD assumes no responsibility, and disclaims all liability for damages resulting from use of this information or for any errors or omissions.

©2009 SolaHD. All rights reserved throughout the world. Specifications are subject to change without notice.

®SolaHD name and logo are registered trademarks of EGS Electrical Group, LLC. All names referred to are trademarks or registered trademarks of their respective owners.

Table of Contents

What's Included 4

Installation 4

Product Description 5–6

Notes 7

What's Included

- One dry contact relay box
- One interface cable (DB-9 connector)
- One 12 V dc power interconnection cable
- Four M3 mounting screws

Installation

⚠ DANGER **Only qualified personnel should install or service this system. Electrical safety precautions must be followed when installing or servicing this equipment. To prevent risk of electrical shock, turn off and lock out all power sources to the unit before making electrical connections.**

1. Using the four M3 screws provided, mount the dry relay box on the right side of the SDU UPS. If mounting on a separate chassis, the hole diameter for the relay box is 0.378 in. (3.5 mm).

2. Plug the 12 V dc power interconnection cable into the 12 V dc input of the relay box. Plug the other end of the power interconnection cable into the aux dc output (or Vout) of the SDU UPS.

3. Plug the DB-9 connector cable into the RS232 communication port of the SDU UPS. Plug the other end of the connector into the remote port of the dry contact relay.

Product Description

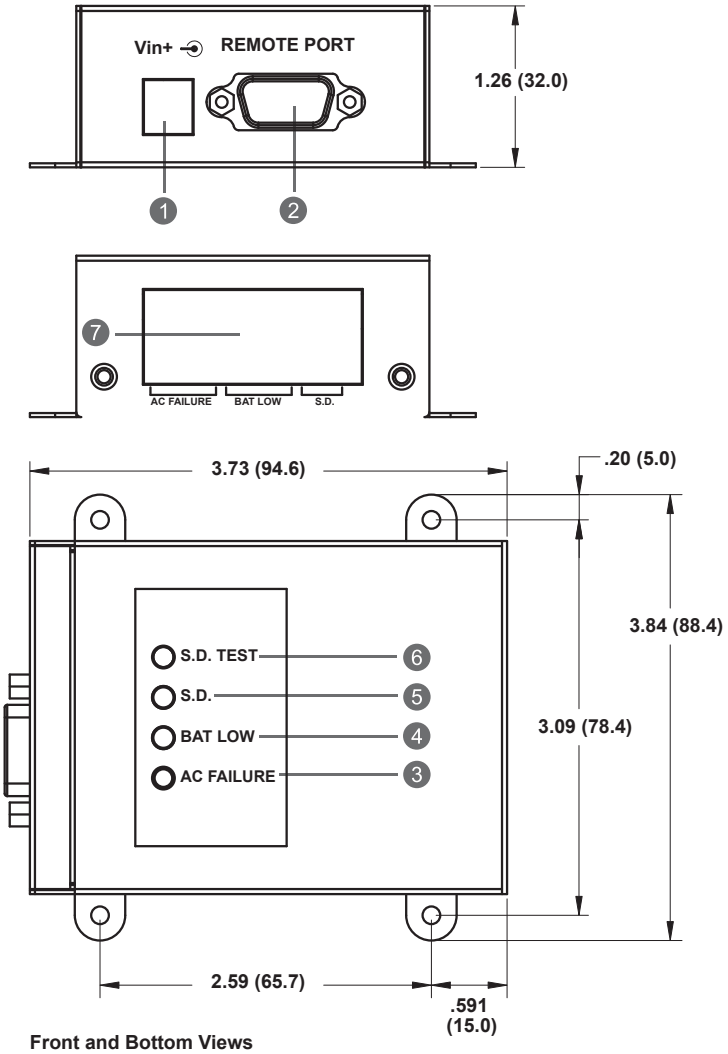

Front and Bottom Views
All dimensions are in inches (mm)

1. **Vin:** Input connector used to provide the dry contact relay with 12 V dc input power.
2. **Remote Port:** This communication port is used for linking to the SDU UPS.

   NOTE: The provided connection cable is used only for this dry contact relay.
3. **Ac Failure Indicator:** This yellow LED is illuminated when ac voltage is abnormal.
4. **Battery Low Indicator:** This green LED is illuminated when battery capacity is low.
5. **Shut Down Indicator (S.D.):** When the dry contact relay receives the shut down signal for 1 second, the red LED is illuminated and the SDU UPS goes into shut down mode.

Product Description continued from page 5

6. Shut Down Test Button (S.D. Test): Provides the dry contact relay a shut down signal to test the shut down function when the UPS is operating in the battery mode. Push this button for 1 second and the red LED is illuminated. The SDU UPS goes into shut down mode after 3 minutes.

7. 8 Pole Terminal Blocks

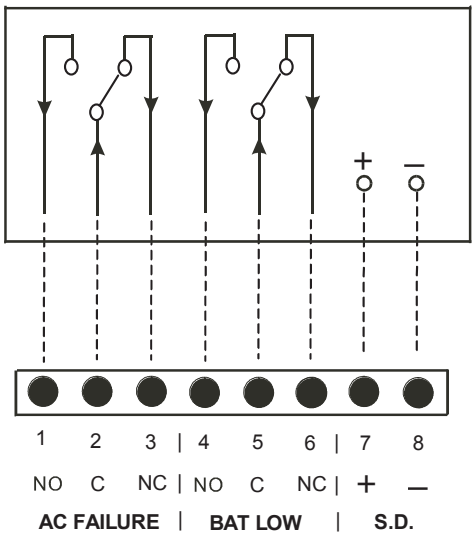

Table 1: Terminal Blocks—Layout and Operation

+UPS State		External Input	DCB LED Display			Terminal Blocks			
O = Occur X = Does not occur		O = Enable X = Disable	O = LED On X = LED Off			O = Close X = Open			
Ac Failure	BAT Low	S.D.	Yellow	Green	Red	Pin 1–2	Pin 2–3	Pin 4–5	Pin 5–6
X	X	X	X	X	X	X	O	X	O
O	X	X	O	X	X	O	X	X	O
O	O	X	X	O	X	O	X	O	X
O	X	O	X	X	O	X	O	X	O

Notes

1. Suitable electric wire = AWG 22–12 (IEC 2.5 mm).

2. Contact maximum current = 1.0 A @ 250 V ac.

3. Shut down input signal (range = +5 V to +12 V) can be provided by enabling terminals 7 and 8 for remote shut down control, assured by an external remote device.

Technical Support
U.S.: (800) 377-4384
International: (847) 268-6000
E-mail: www.tech@solahd.com
Web site: www.solahd.com

Part Number: A272-081 Rev 7
May 20, 2009

SDU Series, DIN Rail AC UPS

The SDU DIN Rail UPS combines an industry leading compact design with a wide operation temperature range and unique installation options. The SDU series provides economical protection from damaging impulses and power interruptions. These units include easy to wire screw terminations for critical devices needing battery back up such as computer based control systems.

E179213

Applications

- Programmable Logic Controllers
- Factory Automation
- Robotics
- Conveying Equipment
- Computer-based Control Systems

Features

- Lightweight, compact industrial design
- Wide operation temperature range (0ºC to 50ºC)
- Cold start capability
- Phone/dataline surge protection
- Software and cable included for easy installation
- Simulated sinewave output
- RS232 communication port
- USB communication port (optional)
- Form C dry contact relay (optional)
- Panel/wall mounting brackets (optional)
- Remote turn-on and shut-off capabilities
- Two year limited warranty

Certifications and Compliances

120V Models

- c UL us UL Recognized Component, UPS Equipment
  - UL 60950-1/CSA C22.2 No. 60950-1
  - Suitable for UL 508, CSA C22.2 No. 107.1 Ind. Control Equipment Applications with no derating
    - Overvoltage Cat III, Pollution Degree III

230V Models

- CE
  - EN62040-1-1

Related Products

- Portable MCR Power Conditioners
- STV Surge Protective Devices
- SDN DIN Rail Power Supplies
- STFV Plus Active Tracking® Filters

Selection Table

Capacity (VA/W)	Catalog Number	Volts, Frequency In/Out	Typical Back–up Time (minutes) *	Input/Output Connections	Approx. Ship Weight – lbs (kg)
500/300	**SDU 500**	120 Vac, 50/60 Hz	4	IP20 touch proof, screw terminals. Wire range: 10 ~ 24 AWG.	10.7 (4.70)
850/510	**SDU 850**		2		11.4 (5.00)
500/300	**SDU 500–5**	230 Vac, 50/60 Hz	4		11.5 (5.20)
850/510	**SDU 850–5**		2		11.9 (5.40)

* At full load.

SDU Accessories

Catalog Number	Description	Approx. Ship Weight – lbs (kg)
RELAYCARD–SDU	Dry contact I/O relay box, IP20 touch proof screw terminals, wire size range 12~22 AWG (IEC 2.5mm); N.O./N.C. form "C" contact. Relay contact signal for "On Battery", "Low Battery" and "UPS Shutdown".	1.0 (0.45)
UPSMON–USB	RS232 to USB adapter cable	1.0 (0.45)
SDU–PMBRK	Mounting brackets to secure UPS to wall, back of panel or enclosure.	1.0 (0.45)

Specifications

Catalog Number	SDU 500	SDU 850	SDU 500–5	SDU 850–5
Capacity (VA/Watts)	500/300	850/510	500/300	850/510
Load Power Factor	0.6			
Dimensions – inches (mm)				
Unit (H x W x D) – in. (mm)	4.88 x 11.1 x 4.55 (124.0 x 281.0 x 116.0)			
Weight – lbs (kg)	10.7 (4.70)	11.4 (5.00)	11.5 (5.20)	11.9 (5.40)
Input Parameters				
Voltage	120 V (+10%, -20%)		230 V (+/- 20%)	
Frequency	50 +/- 5 Hz or 60 Hz +/- 6 Hz (auto sensing)			
Output AC Parameters				
Voltage (Battery Mode)	Step sinewave			
	+/- 5%			
Frequency (On Battery)	50 or 60 Hz			
	+/- 0.3 Hz			
Overload Protection	UPS automatic shutdown if overload exceeds 105% of nominal at 20 seconds, 120% at 10 seconds, 130% at 3 seconds			
Short Circuit	UPS output cut off immediately			
Battery Parameters				
Battery Type	Sealed, non-spillable, maintenance-free lead acid batteries			
Transfer Time	4 - 6 ms typical			
Back–up Time * (minutes)	4.5/18	2.5/10	4.5/18	2.5/10
Recharge Time	8 hours to 90% capacity after full discharge			
Environmental				
Operating Temperature	0°C to 50°C			
Storage Temperature	-15°C to 60°C			
Relative Humidity	1% to 95%, non-condensing			
Ambient Operation	1-95% humidity non-condensing, 0-50°C up to 5,000 ft. (1500m)			
Audible Noise	< 40dBA (1 meter from surface)			
Standards				
EMC	FCC Part 15, Subpart B, Class A; EMC: EN50091-2, EN61000-3-2, EN61000-3-3, IEC60801-2, IEC60801-3, IEC60801-4, IEC61000-2-2			
Elevation	5000 ft. without derating			
Shock & Vibration	According to the International Safe Transit Association standard ISTA 2A.			
Mounting	To be mounted on DIN TS35/7.5 or TS35/15 rail system. Chassis mounting permissible via optional brackets. Unit handles normal shock and vibration of industrial use and transportation without coming off rail.			

* At full load/half load.

BOM #19
TAGS: LSHY-4001
LSHY-4002
LSHY-5001
LSHY-5002
LSHY-6001
LSHY-7001
LSHY-7002

Warrick

Series 16DM

Series 16DM DPDT Load Contact, Solid State Plug-In Module

Part No. 16DMB1B0
Unit Price $267
Lead Time (Days) 5

Image is of actual product

Model	16DM
Mode of Operation	Direct
Sensitivity	10 K
Control Style	Plug-In Module
Socket Style	DIN Mount
Standoff Style	N/A
Enclosure	None
Contact Design	2 Normally Open & 2 Normally Closed (non-powered)
Contact Rating	5 Amp Resistive 1/10 horse power
Secondary Voltage	12 VAC
Terminal Style	Screw Connector
Number of Channels	1
Minimum Temperature (°F)	-40
Maximum Temperature (°F)	150
Protection	Non-Intrinsically Safe
Approvals	UL 508 General Purpose
Minimum Qty (per Release)	1
Weight (Lbs)	1.1

Options

Warrick® Series 16DM Controls

Installation and Operation Bulletin

This bulletin should be used by experienced personnel as a guide to the installation of series 16DM controls. Selection or installation of equipment should always be accompanied by competent technical assistance. We encourage you to contact Gems Sensors Inc. or its representative if further information is required.

	Specifications
Control Design:	Solid-State components enclosed in clear Lexan plug-in style housing. Housing carries no NEMA rating
Contact Design:	2 SPDT (2 form C): Two Normally Open (N.O.) and two Normally Closed (N.C.), non-powered contacts
Contact Ratings:	5 A @ 120, 240 VAC resistive, 1/8 H.P. @ 120 or 240 VAC
Contact Life:	Mechanical: 5 million operations - Electrical: 100,000 operations minimum at rated load
Supply Voltage	24, 120, or 240 VAC Models - Factory Set. Plus 10%, minus 15%, 50/60 Hz
Supply Current:	120, 240, 24 VAC, Relay energized 4.4 VA
Secondary	12 VAC RMS Voltage on probes. 1.5 milli-amp Current
Circuit:	Models operate from 0 to 1,000,000 OHM maximum
Sensitivity:	specific resistance - Factory set
	-40° To 150°F Ambient
Temperature:	All connections #6-32 screw type with pressure clamps
Terminals:	Standard, 0.5 seconds on rising level.
Time Delays:	Additional time delays on rising and/or falling level available as option.
Listings:	U.L. Listing, Industrial Motor Control (508). 240 and 208 volt units are not U.L. limit control recognized.

Installation

1. Install octal socket in appropriate enclosure using two #6 or #8 metal screws.
   a) Install rail mount socket on appropriate rail (DIN mount) in appropriate enclosure, if applicable.
2. Wire control per wiring diagram, following N.E.C. and local codes.
3. Install control module in socket.

Sensitivities vs Maximum Probe Wire Distance*

Sensitivity Character	Sensitivity (K Ohms)	Distance (Ft.)
A or K	4.7	10,000
B or L	10	5,700
C or M	26	2,200
D or N	50	1,075
E or P	100	570
F or R	470	270
G or S	1,000	38

* Based on type MTW or THHN wire, #14 or #16 Awg

Dimensions

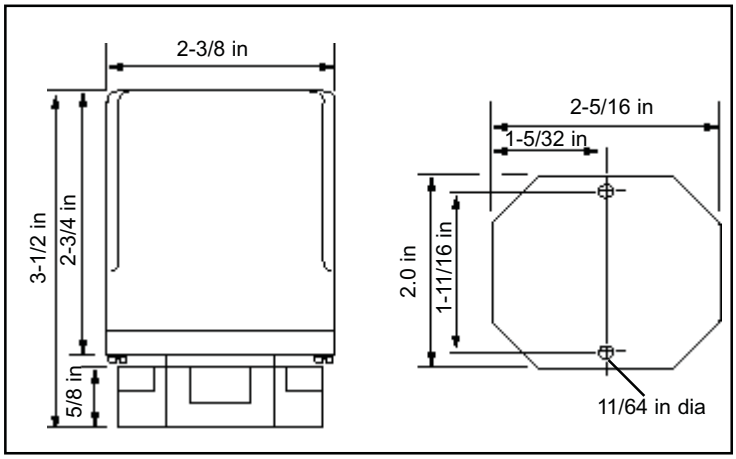

Use copper (60/70° C) wire only. Torque to 20 inch pounds.

Wiring Diagram

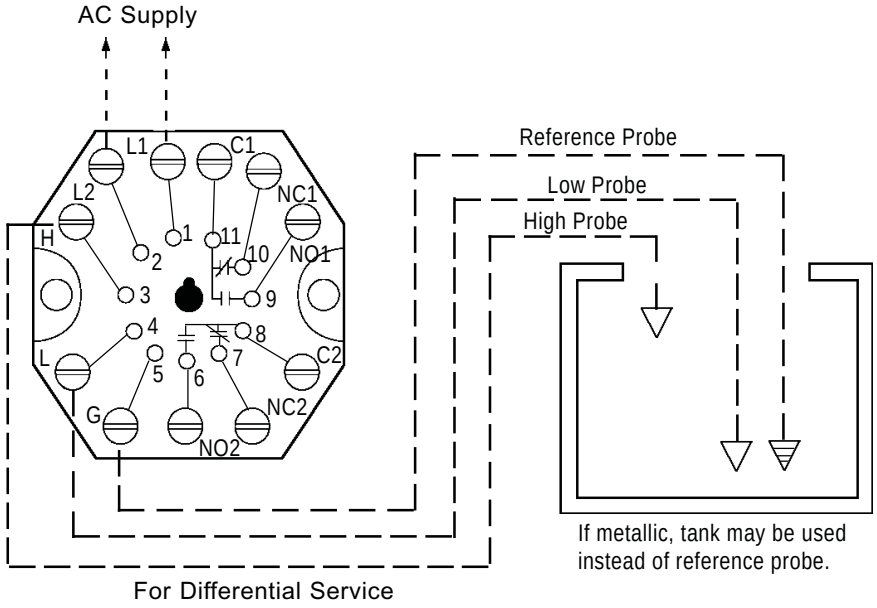

Note: For Single Level Service, use "H" and "G" Connections

Operation

Direct Mode - Single Level Service:
When the liquid rises to the electrode on terminal 3, the control energizes, changing state of the load contacts. **(LED will be lit)** The control remains energized until the liquid level recedes below electrode on terminal 3. The control then de-energizes, **(LED will not be lit)** returning load to original state.

Inverse Mode - Single Level Service:
Control energizes with power, changing state of the load contacts. **(LED will be lit)** When the liquid rises to the electrode on terminal 3, the control de-energizes, returning the load contacts to shelf state. **(LED will not be lit)** The control remains de-energized until liquid level recedes below the electrode connected to terminal 3. The control then energizes.

Direct Mode - Differential Service:
When the liquid rises to the electrode on terminal 3, the control energizes, changing state of the load contacts. **(LED will be lit)** The control remains energized until the liquid level recedes below electrode on terminal 4. The control then de-energizes, **(LED will not be lit)** returning the load contacts to original state.

Inverse Mode - Differential Service:
Control energizes with power, **(LED will be lit)** changing state of the load contacts. When the liquid rises to the electrode on terminal 3, the control de-energizes, returning load contacts to shelf state. **(LED will not be lit)** The control remains de-energized until the liquid level recedes below the electrode on terminal 4. The control then energizes.

Optional

Time Delays: With time delay on increasing level, the liquid must be in contact with the short electrode for the full duration of the time delay before control will operate. With delay on decreasing level, the liquid must be below long electrode for the full duration of the time delay before control will operate. In single level service, terminals 3 and 4 must be jumpered together to achieve time delays on both increasing and decreasing levels or just decreasing level.

16DM B 1 B **-XX-XX**

Time Delay: (decreasing level) 1-20 sec.
Time Delay: (increasing level) 1-20 sec.
Enclosure: 0-none, 1-NEMA 1, 4-NEMA 4, 7-NEMA 7, 12-NEMA 12
Socket Style: A - 11 Pin Octal, B - 11 Pin DIN Mount, M - None, Module Only
Supply Voltage: 1- 120 VAC, 2- 240 VAC, 3- 24 VAC, 8- 208/240 VAC*
Mode/Sensitivity:
Direct A- 4.7K, B- 10K, C- 26K, D- 50K, E- 100K, F- 470K, G- 1M
Inverse K- 4.7K, L- 10K, M- 26K, N- 50K, P- 100K, R- 470K, S- 1M

*187 Vmin to 255 Vmax VAC

Gems Sensors Inc.
One Cowles Road
Plainville, CT 06062-1198
Tel: 860-793-4579
Fax: 860-793-4580

Product: 700-HK32A1

BOM #21

Description: 700-HK General Purpose Slim Line Relay

Representative Photo Only
(actual product may vary based on configuration selections)

CONTROL RELAY DATA

Contact Rating	8 Amp Contact (Slim Line Relay)
Contact Configuration	DPDT Contact Arrangement
Coil Voltage	120V 50/60Hz
Relay Option	No Additional Options

CERTIFICATIONS AND APPROVALS

CE	Marked
UL	Listed with socket, Guide No. NLDX, File No. E3125
UR	Recognized, Guide No. NLDX2, File No. E3125
CSA	
For UL Certifications Directory:	http://database.ul.com/cgi-bin/XYV/template/LISEXT/1FRAME/index.htm

		Cat. No. 700-HK...			
Electrical Ratings					
Rated Thermal Current (I^{th})		1-Pole, 1 CO, SPDT — 16 A		2-Pole, 2 CO, DPDT — 8 A	
Rated Insulation Voltage (U_i)		250V IEC, 300V UL/CSA			
Contacts	Inductive V AC	120V AC	AC-15, 6.2 A B300 Pilot Duty, 3 A A300 (700-HKM_) 1/3 Hp (0.24 kW) 1-phase	120V AC	AC-15, 2.9 A B300 Pilot Duty, 3.0 A 1/4 Hp (0.18 kW), 1-phase
		240V AC	AC-15, 3.1 A B300 Pilot Duty, 1.5 A A300 (700-HKM_) 3/4 Hp (0.55 kW), 1-phase	240V AC	AC-15, 1.4 A B300 Pilot Duty, 1.5 A 1/2 Hp (0.37 kW), 1-phase
		230V AC	0.55 kW, 1-phase	230V AC	0.37 kW, 1-phase
	Inductive V DC	24V DC	DC-13, 5.0 A	24V DC	DC-13, 3.0 A
		125V DC	DC-13, 0.2 A R300 Pilot Duty, 0.22 A	125V DC	DC-13, 0.2 A R300 Pilot Duty, 0.22 A
		250V DC	DC-13, 0.1 A R300 Pilot Duty, 0.11 A	5 A, 250V AC	DC-13, 0.1 A R300 Pilot Duty, 0.11 A
	Resistive	230V AC	AC-1, 16 A	230V AC	AC-1, 8 A
		277V AC	16 A, General Use	277V AC	8 A, General Use
	Make, Break & Continuous	30V DC	DC-1, 12 A 10 A, Resistive	30V DC	DC-1, 6 A 6 A, Resistive
Min. Permissible Contact Ratings		300 mW (5V/60 mA or 60V/5 mA) for AgNi Contacts (700-HK3_) 50 mW (5V/10 mA or 25V/2 mA) for AgNi + Gold Contacts (700-HKX_) 500 mW (100V/5 mA or 5V/100 mA) for $AgSnO_2$ Contacts (700-HKM_)			
Permissible Coil Voltage Variation	Pickup: holding Voltage: Must Dropout Voltage:	80...110% of Nominal Voltage at 50/60 Hz, 73...110% of Nominal Voltage at DC 80% of Nominal V AC at 50/60 Hz, 40% of Nominal V DC 20% of Nominal V AC at 50/60 Hz, 10% Nominal V DC			
Power Consumption		1.2V A (V AC Coils), 0.5 W (V DC Coils)			
Coil Voltages		See Overview/Product Selection			
Design Specification/Test Requirements					
Dielectric Withstand Voltage	Between Open Contacts (VRMS)	1000V AC			
	Contact to Coil (VRMS)	1600V AC			
Mechanical					
Degree of Protection		IP 20 (guarded terminal sockets), RT II — Flux-proof (Relay)			
Mechanical Life Operations		10 x 10^6			
Electrical Life Cycles		230V AC, 16 A Resistive: 100 000 min. 277V AC, 16 A Resistive: 30 000 min. 30V DC, 10 A Resistive: 30 000 min. B300, R300, Hp (kW): 6000 min. A300 (700-HKM_): 100,000 min.		230V AC, 8 A Resistive: 100 000 min. 277V AC, 8 A Resistive: 30 000 min. 30V DC, 6 A Resistive: 30 000 min. B300, R300, Hp (kW): 6000 min.	
Switching Frequency		Mechanical: 18,000 cycles/hr. Electrical: 900 cycles/hr.			
Operating Time at Nominal Voltage at 20 °C (ms)	Pickup	15 ms max.			
	Dropout	5 ms max.			
Vibration	Operational	10...2000 Hz, 0.76 mm (0.03 in.) 2.5 G			
	Non-Operational	10...2000 Hz, 0.76 mm (0.03 in.) 5.0 G			
Shock	Operational	15 G			
	Non-Operational	50 G			
Environmental					
Temperature	Operating	–40...+70 °C (–40...+158 °F)			
	Storage	–40...+85 °C (–40...+185 °F)			
Altitude		2000 m (6560 ft)			
Construction					
Insulating Material		Molded High Dielectric Material			
Enclosure		Transparent Dust Cover			
Contact Material		700-HK3_: Silver nickel (AgNi); 700-HKX_: Silver Nickel + Gold Plating (AgNi + Au); 700-HKM_: Silver Tin Oxide ($AgSnO_2$)			
Terminal Markings on Socket		In accordance with EN 50005			
Sockets			**1-Pole**		**2-Pole**
	Screw Terminal	700-HN121 (10 A @ 70 °C) 700-HN221 (16 A @ 50 °C, 12 A @ 70 °C)		700-HN122 (2 x 5 A @ 70 °C) 700-HN222 (2 x 8 A @ 70 °C)	
	Spring Clamp (Available September 2006)	700-HN223 (15 A @ 40 °C with 2 conductors per terminal) (10 A @ 70 °C with 1 conductor per terminal)		700-HN224 (2 x 8 A@ 70 °C)	
Approvals					
Certifications		CSA Certified, File 75088, UL Recognized, File E3125 Guide NLDX2/NLCX8, cULus Listed with Allen-Bradley sockets (File No. 3125 Guide NLDX/NLDX7), CE Marked			
Standards		EN61810-1, CSA 22.2 No. 14, UL 508			

http://raise.rockwellautomation.com/raconfig/rtcache/jpg/700-hk%20specs.jpg[10/7/2015 4:14:36 PM]

BOM #22 and 23

Spring-Clamp Connection Terminal Blocks

Plug-in Style Blocks (Cat. Nos. 1492-L3P, -LDG3P) and Analog Loop Control Block (Cat. No. 1492-LDAG3)

	1492-L3P			1492-LDG3P			1492-LDAG3		
Dimensions are not intended to be used for manufacturing purposes. **Note:** Height dimension is measured from top of rail to top of terminal block.	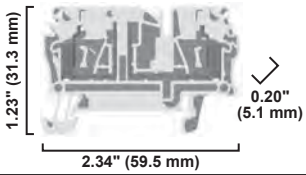			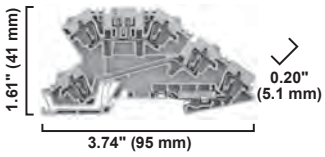					
Specifications	*Single Circuit Plug-In Component Block for a Variety of Components*			*Terminal Block with slot for Plug-In Component, Feed-Through Circuit and 1 Ground Connection*			*Analog Loop Control Terminal Block with 2 Feed-Through Circuits and 1 Ground Connection*		
Certifications	cULus	CSA	IEC	cULus	CSA	IEC	cULus	CSA	IEC
Voltage Rating	600V AC/DC		500V AC/DC	300V AC/DC		250V AC/DC	300V AC/DC		250V AC/DC
Maximum Current	20 A		24 A	10 A		20 A	10 A		24 A
Wire Range (Rated Cross Section)	#30…12 AWG		4 mm²	#26…12 AWG		2.5 mm²	#26…12 AWG		2.5 mm²
Wire Strip Length	0.39 in. (10 mm)			0.31 in. (8 mm)			0.31 in. (8 mm)		
Density	59 pcs/f (/196 pcs/m)			59 pcs/ft (196 pcs/m)			59 pcs/ft (196 pcs/m)		
Housing Temperature Range	–58…+248 °F (–50…+120 °C)			–58…+248 °F (–50…+120 °C)			–58…+248 °F (–50…+120 °C)		
Terminal Blocks	**Cat. No.**		**Pkg Qty.**	**Cat. No.**		**Pkg Qty.**	**Cat. No.**		**Pkg Qty.**
Color Grey	**1492-L3P**		25	**1492-LDG3P**		25	**1492-LDAG3**		25
Accessories	**Cat. No.**		**Pkg Qty.**	**Cat. No.**		**Pkg Qty.**	**Cat. No.**		**Pkg Qty.**
Mounting Rails 1 m Symmetrical DIN (Steel)	**199-DR1**		10	**199-DR1**		10	**199-DR1**		10
1 m Symmetrical DIN (Aluminum)	**1492-DR5**		10	**1492-DR5**		10	**1492-DR5**		10
1 m Hi-Rise Symmetrical DIN (Aluminum)	**1492-DR6**		2	**1492-DR6**		2	**1492-DR6**		2
1 m Angled Hi-Rise Sym. DIN (Steel)	**1492-DR7**		2	**1492-DR7**		2	**1492-DR7**		2
End Barrier	**1492-EBL3**		50	**1492-EBLDAG3**		20	**1492-EBLDAG3**		20
End Anchors and Retainers Screwless End Retainer	**1492-ERL35**		20	**1492-ERL35**		20	**1492-ERL35**		20
DIN Rail — Normal Duty	**1492-EAJ35**		100	**1492-EAJ35**		100	**1492-EAJ35**		100
DIN Rail — Heavy Duty	**1492-EAHJ35**		50	**1492-EAHJ35**		50	**1492-EAHJ35**		50
Jumpers Plug-In Center Jumper — 50-pole	**1492-CJK5-50**		10	**1492-CJLJ5-50**		10	**1492-CJLJ5-50**		10
Plug-In Center Jumper — 10-pole	**1492-CJK5-10**		20	**1492-CJLJ5-10**		20	**1492-CJLJ5-10**		20
Plug-In Center Jumper — 9-pole	**1492-CJK5-9**		20	**1492-CJLJ5-9**		20	**1492-CJLJ5-9**		20
Plug-In Center Jumper — 8-pole	**1492-CJK5-8**		20	**1492-CJLJ5-8**		20	**1492-CJLJ5-8**		20
Plug-In Center Jumper — 7-pole	**1492-CJK5-7**		20	**1492-CJLJ5-7**		20	**1492-CJLJ5-7**		20
Plug-In Center Jumper — 6-pole	**1492-CJK5-6**		20	**1492-CJLJ5-6**		20	**1492-CJLJ5-6**		20
Plug-In Center Jumper — 5-pole	**1492-CJK5-5**		20	**1492-CJLJ5-5**		20	**1492-CJLJ5-5**		20
Plug-In Center Jumper — 4-pole	**1492-CJK5-4**		60	**1492-CJLJ5-4**		60	**1492-CJLJ5-4**		60
Plug-In Center Jumper — 3-pole	**1492-CJK5-3**		60	**1492-CJLJ5-3**		60	**1492-CJLJ5-3**		60
Plug-In Center Jumper — 2-pole	**1492-CJK5-2**		60	**1492-CJLJ5-2**		60	**1492-CJLJ5-2**		60
Other Accessories Disconnect Plug	**1492-DPL**		50	**1492-DPL**		50	—		—
Component Plug	**1492-CPL**		50	**1492-CPL**		50	—		—
Fuse Plug Without Blown Fuse Indicator	**1492-FPK2**		20	**1492-FPK2**		20	—		—
10…36V Blown Fuse Indicator	**1492-FPK224**		20	**1492-FPK224**		20	—		—
35…70V Blown Fuse Indicator	**1492-FPK248**		20	**1492-FPK248**		20	—		—
60…150V Blown Fuse Indicator	**1492-FPK2120**		20	**1492-FPK2120**		20	—		—
140…250V Blown Fuse Indicator	**1492-FPK2250**		20	**1492-FPK2250**		20	—		—
Reducing Sleeves 28…24 AWG (0.13…0.2 mm²) White	1492-PSL3-2		100	—		—	—		—
Reducing Sleeves 22…20 AWG (0.25…0.5 mm²) Grey	**1492-PSL3-5**		100	—		—	—		—
Reducing Sleeves 18 AWG (0.75…1.0 mm²) Dark Grey	**1492-PSL3-10**		100	—		—	—		—
Test Plug	**1492-TPL5**		25	**1492-TP23**		20	—		—
Electrical Warning Plate	**1492-EWPL5**		20	—		—	—		—
Group Marking Carrier	**1492-GM35**		25	**1492-GM35**		25	**1492-GM35**		25
Marking Systems Snap-In Marker Cards	**1492-M5X10** (144/card)		5	**1492-M5X10** (144/card)		5	**1492-M5X10** (144/card)		5
Snap-In Marker Cards	**1492-M5X5** (200/card)		5	**1492-M5X5** (200/card)		5	**1492-M5X5** (200/card)		5

12

Panduct® Type F Narrow Slot Wiring Duct

- Narrow slot/finger design provides more slots to fit the spacing of high-density terminal blocks and other hardware
- Material: Lead-free PVC
- UL recognized continuous use temperature: 122°F (50°C)
- UL 94 flammability rating of V-0
- Conforms with NFPA 79-2007 section 13.3.1 requirement for flame retardant material
- Provided with mounting holes
- Base and cover length is 6 feet

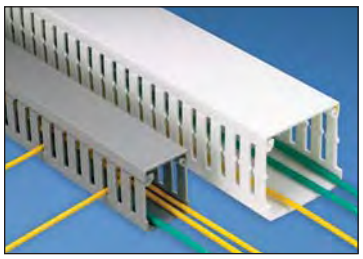

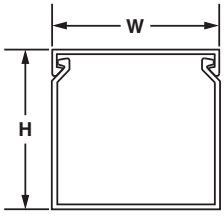

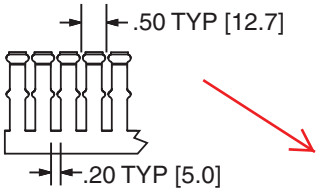

Multiple slot restrictors present with 2" and greater duct wall height.

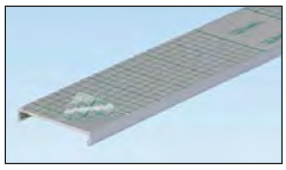

To order cover with protective film add "-F" to part number. 6" cover not available with film.

NEW!

Base Part Number	Duct Size (W x H)* In.	Duct Size (W x H)* mm	Slot Width In.	Slot Width mm	Cover Part Number	Std. Pkg. Qty.	Base Ctn. Qty.	Cover Ctn. Qty.
F.5X.5LG6	0.69 x 0.60	17.5 x 15.2	0.20	5.0	C.5LG6	6	120	120
F.5X1LG6	0.69 x 1.06	17.5 x 26.9	0.20	5.0	C.5LG6	6	120	120
F.75X.75LG6	0.93 x 0.82	23.6 x 20.9	0.20	5.0	C.75LG6	6	120	120
F.75X1.5LG6	0.93 x 1.57	23.6 x 39.9	0.20	5.0	C.75LG6	6	120	120
F1X1LG6	1.26 x 1.13	32.0 x 28.7	0.20	5.0	C1LG6	6	120	120
F1X1.5LG6	1.26 x 1.62	32.0 x 41.1	0.20	5.0	C1LG6	6	120	120
F1X2LG6	1.26 x 2.12	32.0 x 53.8	0.20	5.0	C1LG6	6	120	120
F1X3LG6	1.26 x 3.12	32.0 x 79.2	0.20	5.0	C1LG6	6	120	120
F1X4LG6	1.26 x 4.10	32.0 x 104.1	0.20	5.0	C1LG6	6	60	120
F1.5X1LG6	1.75 x 1.12	44.5 x 28.4	0.20	5.0	C1.5LG6	6	120	120
F1.5X1.5LG6	1.75 x 1.62	44.5 x 41.1	0.20	5.0	C1.5LG6	6	120	120
F1.5X2LG6	1.75 x 2.12	44.5 x 53.8	0.20	5.0	C1.5LG6	6	120	120
F1.5X3LG6	1.75 x 3.12	44.5 x 79.2	0.20	5.0	C1.5LG6	6	120	120
F1.5X4LG6	1.75 x 4.10	44.5 x 104.1	0.20	5.0	C1.5LG6	6	60	120
F2X1LG6	2.25 x 1.12	57.2 x 28.4	0.20	5.0	C2LG6	6	120	120
F2X1.5LG6	2.25 x 1.62	57.2 x 41.1	0.20	5.0	C2LG6	6	120	120
F2X2LG6	2.25 x 2.12	57.2 x 53.8	0.20	5.0	C2LG6	6	120	120
F2X3LG6	2.25 x 3.12	57.2 x 79.2	0.20	5.0	C2LG6	6	60	120
F2X4LG6	2.25 x 4.10	57.2 x 104.1	0.20	5.0	C2LG6	6	60	120
F2X5LG6	2.25 x 5.10	57.2 x 129.5	0.20	5.0	C2LG6	6	60	120
F2.5X3LG6	2.75 x 3.12	69.9 x 79.2	0.20	5.0	C2.5LG6	6	120	120
F3X1LG6	3.25 x 1.12	82.6 x 28.4	0.20	5.0	C3LG6	6	120	120
F3X2LG6	3.25 x 2.12	82.6 x 53.8	0.20	5.0	C3LG6	6	120	120
F3X3LG6	3.25 x 3.12	82.6 x 79.2	0.20	5.0	C3LG6	6	60	120
F3X4LG6	3.25 x 4.10	82.6 x 104.1	0.20	5.0	C3LG6	6	60	120
F3X5LG6	3.25 x 5.10	82.6 x 129.5	0.20	5.0	C3LG6	6	60	120
F4X2LG6	4.25 x 2.12	108.0 x 53.8	0.20	5.0	C4LG6	6	60	120
F4X3LG6	4.25 x 3.12	108.0 x 79.2	0.20	5.0	C4LG6	6	60	120
F4X4LG6	4.25 x 4.10	108.0 x 104.1	0.20	5.0	C4LG6	6	60	120
F4X5LG6	4.25 x 5.10	108.0 x 129.5	0.20	5.0	C4LG6	6	60	120
F6X4LG6	6.25 x 4.15	158.8 x 105.4	0.20	5.0	C6LG6	6	60	120

Part number shown for LG (Light Gray). For other color availability see color selection guide, page C1.48.
Base and cover sold separately.
*"H" dimension includes duct and cover.

THIS COPY IS PROVIDED ON A RESTRICTED BASIS AND IS NOT TO BE USED IN ANY WAY DETRIMENTAL TO THE INTERESTS OF PANDUIT CORP.

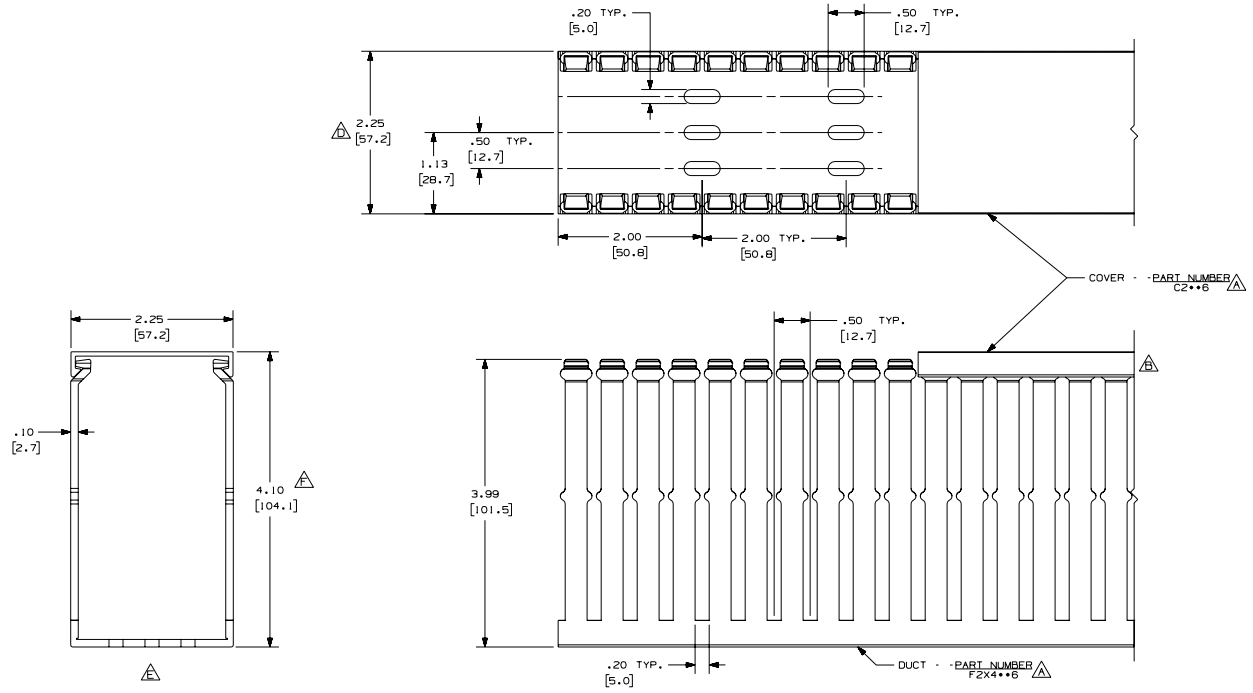

NOTES:

1. ALL DIMENSIONS ARE REFERENCE ONLY.
2. DIMENSIONS IN PARENTHESIS ARE METRIC.
3. THE ** DENOTE COLOR.
4. DUCT AND COVER AREA AVAILABLE IN 6 FT [1828.8] LENGTHS

REV	DATE	BY	CHK	DESCRIPTION
--	.....	...	...	G. ADDED LENGTH NOTE F. CORRECTED DIMENSION
2	7-23-07	JCST	MKBE	E. DELETED DIMENSION D. ADDED DIMENSION
--	.....	...	...	C. CHANGED DRAWING SIZE
1	9-24-04	JCST	MKBE	B. CHANGED VIEW A. ADDED TOP VIEW, NOTES, AND LABELS
R	3-20-03	JCST	JGG	DRAWING RELEASED

CAD FILENAME/LAYERS: D11000CL_DC/00C

PANDUIT CORP. TINLEY PARK, ILLINOIS

WIRING DUCT - TYPE F DUCT WITH COVER
2 X 4
MARKETING DRAWING

DRAWN BY	MAT'L:	SCALE
JCST	PVC	FULL
DATE: 3-20-03		DRAWING NO. 36897-774
CHECKED BY: JGG		SIZE C

BOM #25

Mounting rails allow many blocks to be fastened in a panel with only a few screws to anchor the rail to the panel. Mounting rails allow easy installation and removal of a block in a row.

Cat. No.	Description	Pkg Qty.	Dimensions*
199-DR1	Symmetrical Rail 35 mm x 7.5 mm 3.28 ft (1 m) long Zinc-Plated Clear Chromated Steel EN60715 **DIN #3**	10	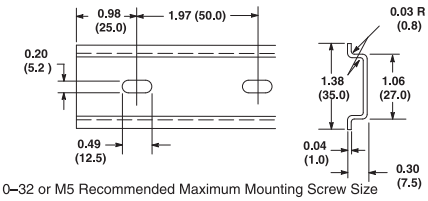 #10–32 or M5 Recommended Maximum Mounting Screw Size
199-DR2	Same as Cat. No. 199-DR1, but length = 2 m	20	
199-DR4	Heavy Duty Symmetrical Rail 35 mm x 15 mm 3.28 ft (1 m) long Zinc-Plated Clear Chromated Steel EN60715 **DIN #3**	5	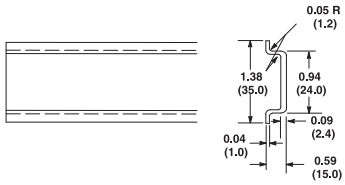
1492-DR3	Mini 15 mm x 5.5 mm Rail 3.28 ft (1 m) long Zinc-Plated Clear Chromated Steel EN60715 **DIN #2**	5	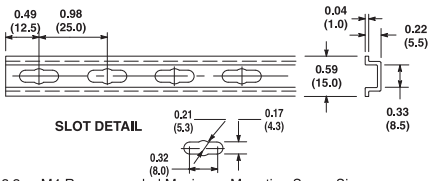 #8-3 2 or M4 Recommended Maximum Mounting Screw Size
1492-DR5	Symmetrical Rail 35 mm x 7.5 mm 3.28 ft (1 m) long Copper-Free Aluminum EN60715 For Bul. 1492 Terminal Blocks Only **DIN #3**	10	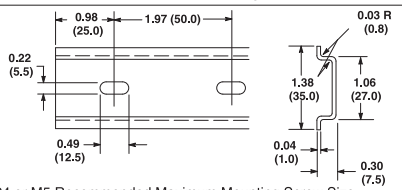 #12–24 or M5 Recommended Maximum Mounting Screw Size
❄ **1492-DR6**	Symmetrical Rail 35 mm x 7.5 mm 2.26 in. (57.4 mm) high 3.28 ft (1 m) long Copper-Free Aluminum For Bul. 1492 Terminal Blocks Only **DIN #3**	2	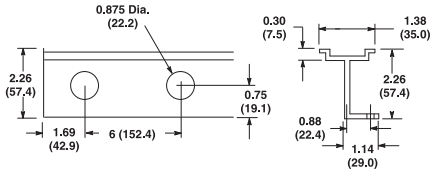 Wire insulator plug for wire access through rail — use Heyco UB875
❄ **1492-DR7**	Symmetrical Rail 35 mm x 7.5 mm 2.80 in. (71.0 mm) high 3.28 ft (1 m) long Angled 30° Zinc-Plated, Chromated Steel **DIN #3**	2	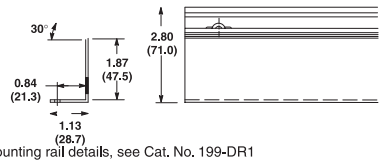 For mounting rail details, see Cat. No. 199-DR1
1492-DR8	Symmetrical Rail 35 mm x 15 mm 3.28 ft (1 m) long Copper EN60715 **DIN #3**	5	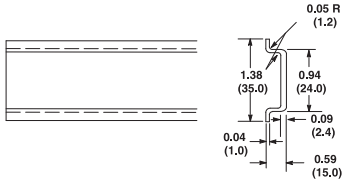
‡ **1492-DR9**	Symmetrical Rail 35 mm x 15 mm 3.28 ft (1 m) long Zinc-Plated Clear Chromated Steel EN60715 **DIN #3**	5	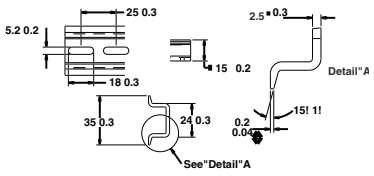

* Dimensions shown in inches (millimeters). Dimensions are not intended to be used for manufacturing purposes.
❄ 0.218 x 0.50 in. (5.5 x 12.7 mm) slotted mounting holes every 3 in. (76.2 mm) starting 1.69 in. (42.9 mm) from end.
‡ Dimensions in millimeters.

12

BOM #26

ELECTRIC HEATERS

115/230 Volt
100/200 Watt

115/230 Volt
400/800 Watt

115/230 Volt
1300 Watt

INDUSTRY STANDARDS

UL 508A Component Recognized; File No. E61997

CSA Certified, CSA File No. LR42186
CE

APPLICATION

Protect mechanical, electrical and electronic equipment from low temperatures, condensation and corrosion with this thermostatically controlled, fan-driven heater that maintains a stable enclosure temperature.
Fan draws cool air from the bottom of the enclosure and passes this air across the thermostat and heating element before being released into enclosure cavity. Heated air is discharged through the top of the heater unit.

SPECIFICATIONS

- Aluminum housing
- Thermostat range adjustable from 0 F to 100 F (-18 C to 38 C)
- Four 10-32 x self-tapping screws are included with each heater
- Ball bearing fan
- Terminal strip with clamp connector that accepts both solid and stranded wire

FINISH

- Brushed aluminum

⚠ CAUTION

These electric heaters are not designed for use in dusty, dirty, corrosive, or hazardous locations. Portions of the heater can get hot. Adequate protection must be taken to protect people from potential burns, and to protect other components from this heat. Pentair Technical Products recommends this heater only be installed in a totally-enclosed metal enclosure.

DO NOT INSTALL HEATERS ON WOOD PANELS. Heat sensitive components should not be placed near the heater discharge area since this air can be quite warm. The clearance range defines the space that must be kept free of these components for proper and safe operation of the heater.

Performance Data **100 and 200 Watt Heaters**

CATALOG NUMBERS	DAH1001A	DAH1002A	DAH2001A	DAH2002A
ELECTRICAL DATA				
Rated Voltage	**115**	**230**	**115**	**230**
Frequency (Hz)	50/60	50/60	50/60	50/60
Power Consumption (Watts)	100	100	200	200
Nominal Current (Amps)	0.98	0.49	1.89	0.95
HEATING PERFORMANCE				
Watts	**100**	**100**	**200**	**200**
UNIT CONSTRUCTION				
Weight (lb./kg)	1.6/0.73	1.6/0.73	1.6/0.73	1.6/0.73
X (in./mm)	4.00/102	4.00/102	6.00/152	6.00/152

Performance Data **400 and 800 Watt Heaters**

CATALOG NUMBERS	DAH4001B	DAH4002B	DAH8001B	DAH8002B
ELECTRICAL DATA				
Rated Voltage	**115**	**230**	**115**	**230**
Frequency (Hz)	50/60	50/60	50/60	50/60
Power Consumption (Watts)	400	400	800	800
Nominal Current (Amps)	3.72	1.86	7.37	3.69
HEATING PERFORMANCE				
Watts	**400**	**400**	**800**	**800**
UNIT CONSTRUCTION				
Weight (lb./kg)	2.2/1.00	2.2/1.00	2.2/1.00	2.2/1.00
X (in./mm)	6.00/152	6.00/152	8.00/203	8.00/203

Performance Data **1300 Watt Heaters**

CATALOG NUMBERS	DAH13001C	DAH13002C
ELECTRICAL DATA		
Rated Voltage	**115**	**230**
Frequency (Hz)	50/60	50/60
Power Consumption (Watts)	1300	1300
Nominal Current (Amps)	11.5	5.7
HEATING PERFORMANCE		
Watts	**1300**	**1300**
UNIT CONSTRUCTION		
Weight (lb./kg)	3.4/1.54	3.4/1.54
X (in./mm)	8.00/203	8.00/203

Dimensions and Clearance Range Drawing for DAH1001A, -2A and DAH2001A, -2A

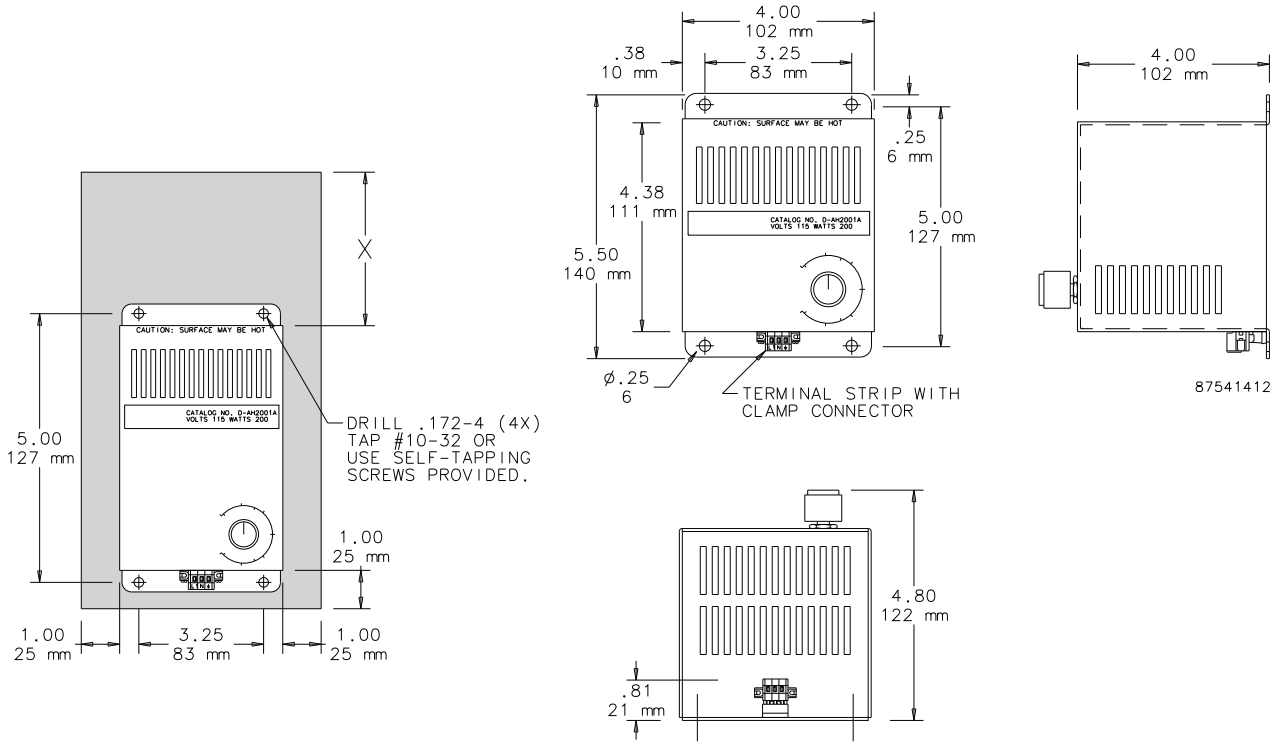

Dimensions and Clearance Range Drawing for DAH4001B, -2B and DAH8001B, -2B

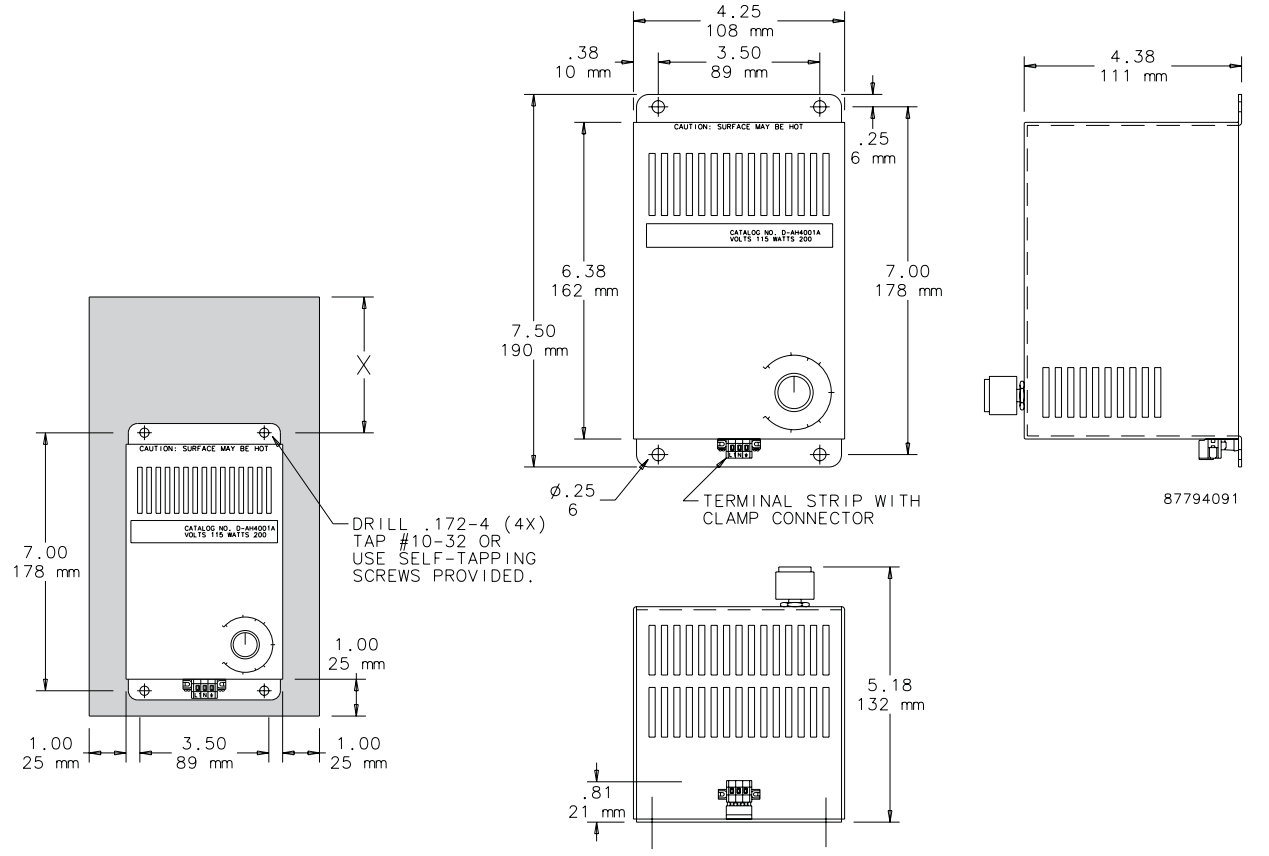

Dimensions and Clearance Range Drawing for DAH13001C and DAH13002C

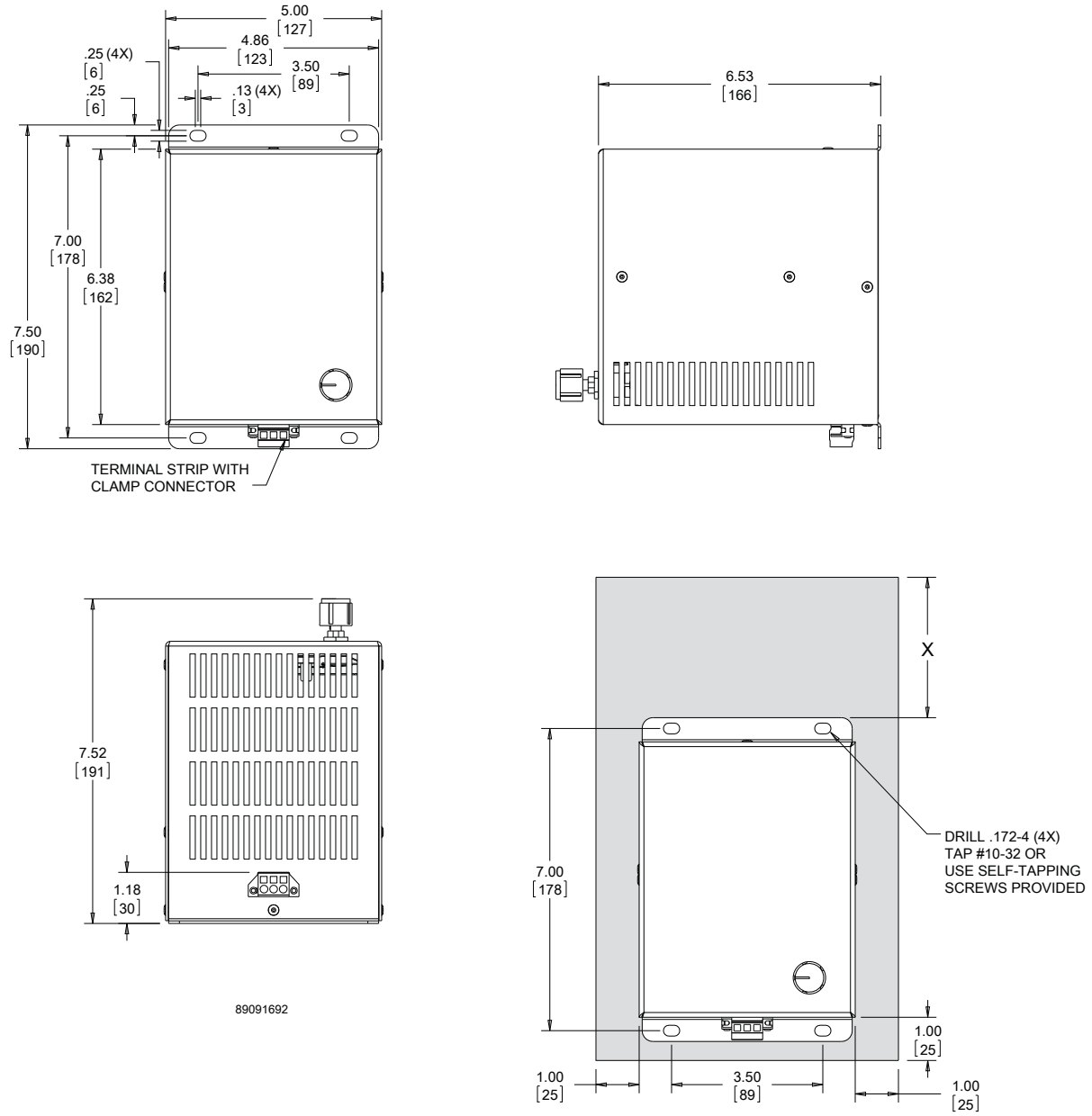

TIGG Carbon Vessel Manual

ACTIVATED CARBON VESSEL SYSTEM OPERATION & MAINTENANCE MANUAL

For

KIRTLAND AFB,NM

TIGG Corporation
1 Willow Ave
Oakdale, PA 15071
Ph: (724)703-3020
Fax: (724)703-3026
September 2015

TABLE OF CONTENTS

1.0 INTRODUCTION 1

2.0 EQUIPMENT SUMMARY 2
2.1 Design Basis 2
2.2 Carbon Vessel 3
2.3 Piping 3
2.4 Valves 3
2.5 Gaskets 3
2.6 Underdrains 3
2.7 Rupture Disk 3
2.8 Hose Adapters 3

3.0 PROCESS DESCRIPTION 4
3.1 Mode of Operation 4
3.2 Startup Procedures / Backwash Determination 4
3.2.1 Initial Carbon Fill 5
3.2.2 Backwashing to Segregate carbon 5
3.2.3 Deaerating/Prewetting 5
3.3 Initial Operation 6
3.4 Effluent Sampling/Change-out Determination 6
3.5 Suspended Solids Accumulation/Backwashing 7
3.6 Maintenance 7
3.7 Shutdown 7
3.8 Minimum Safety Precautions 8
3.9 Troubleshooting 8
3.9.1 General 8
3.9.2 Excessive Carbon Loses 9
3.9.3 High Pressure Drop in the Vessel 9
3.9.4 Poor Adsorption and Inefficient Carbon Usage 9
3.9.5 Carbon in the Effluent Line 10

4.0 System Pressure Drop 10

5.0 GAC Specificatiom 10

6.0 DETAILED CARBON CHANGE-OUT PROCEDURE 10
6.1 Removing Spent Carbon 10
6.1.1 Connections 10
6.1.2 Carbon Transfer 11

1.0 INTRODUCTION

The following sections discuss the design, process conditions and recommended operating procedures for a ***Liquid Phase Carbon Adsorption System***.

The system utilizes granular activated carbon for the adsorption of volatile and semi-volatile organic compounds for the treatment potable water following initial filtration for removal of suspended solids. The system is provided with two carbon adsorption vessels. It is intended that most of the time two vessels will treat the water in series operational mode. However, the vessels can also be operated in parallel mode if desired.

Scope of Supply

TIGG CORPORATION is supplying two, 10' diameter x 10' long straight side carbon adsorption vessels. These vessels are designed and constructed in accordance with ASME section VIII Division I with a pressure rating of 125 psi. See the Appendix for a drawing of the vessels.

Vessels are lined with Plasite 4110 as manufactured by Plasite Protective Coatings. Each vessel was tested for pinhole free lining by spark testing methods and then heat cured to meet NSF requirements.

The underdrain system consists of 8" stainless steel, schedule 10 headers with 1-1/2" stainless schedule 10, 0.01" slotted pipe for laterals on the bottom of the vessel. An 8" stainless steel, schedule 10 inlet distributor is provided at the top of the vessel.

A piping skid is supplied with the vessels with a total of four customer hookup points. These points are Inlet Water, Treated water, Inlet Backwash and Effluent backwash. The inlet and treated water lines are 8" Schedule 40 carbon steel with 8" butterfly valves. The 8" valves are manually gear operated hand wheels. The backwash inlet and effluent lines are 8" schedule 40 carbon steel pipe with 8" diameter butterfly valves. The 8" valves are operated manually by gear operated hand wheels.

It is the responsibility of the contractor to hook up the piping past the flanged pipe rack supplied. A total system assembly can be seen on the System General Arrangement drawing. Other than the process piping supplied on the referenced drawing, a stainless steel carbon fill line with a pressure relief rupture disk is supplied on each vessel and a 4" carbon discharge pipe is supplied for a carbon slurry discharge. Also, a 2" carbon steel vent line is provided for venting the vessel manually and an air relief valve with 3/4" vent line for continuous automatic venting.

A tie-in point for utility water connection (3/4") is provided via a fitting on the carbon fill pipe. The connection can be used for carbon slurry water supply. Also, a compressed air connection (3/4") for the purposes of aiding carbon transfers is provided on the same line. The compressed air connection has a ball valve and threaded fitting for attaching the customer's preferred hose coupling. See System General Arrangement drawing for the depiction of the assembly.

The pressure relief system on each vessel consists of a 2" graphite rupture disk designed for 125 psig working pressure. The discharge from the rupture disk terminates in a threaded fitting for attaching a hose connection. One spare rupture disk is provided with the system.

Each carbon vessel will contain 20,000 lbs of TIGG NSF 12 x 40 coconut carbon for the removal and treatment of organic compounds.

Installation Requirements

The installation contractor shall be responsible for off loading of the vessels, setting the vessels on a firm foundation appropriately compacted for the weight of the vessels, and setting the vessels in place.

When the fixed bed carbon system is delivered to the jobsite, it should be checked thoroughly to ensure that all required items have been received and the filter equipment is free of any shipping damage ***prior to signing the bill of lading***.

All equipment will arrive at the job site via flat bed trailer. The vessels will arrive on their sides. The pipe rack, peripheral piping sections and miscellaneous parts will be directly secured to the truck bed of the trailer.

The vessels should be rigged for lifting by qualified workers. The vessels should be removed from the truck in a horizontal position by a dual block crane. Lift a vessel from the truck by the lifting lugs on the top head ***and*** the tailing pick point located by strapping the vessel legs high and tight. Vessels should never be rigged and maneuvered into an upright position by the tilt up method, as severe damage to the vessel legs could result.

- Remove tanks from truck and set upright on legs in a stable location
- Place valve rack between the vessels.
- Install 8" pipe connections from the tank to the valve rack (note: install lower pipe first) Repeat for all connections.
- Install the carbon discharge pipe (SS pipe) on the outside of the tank.

In addition, the contractor shall supply and install the influent supply, effluent discharge, backwash supply, and backwash discharge piping to the vessels.

Utility piping to be provided includes, uncontaminated water @ 100 gpm and 30 psig for hydraulic carbon transfer; uncontaminated water @ up to 710 gpm and 30 psig for a period of 10-15 minutes for backwash.

The Treatment Plant shall have the capability of managing 7100- 10,650 gallons of backwash water per event and 8000 gallons of slurry transfer water generated during carbon transfer operations.

2.0 EQUIPMENT SUMMARY

2.1 Design Basis

The design basis for this operation is as follows:

Influent type	Pre-filtered raw water
Flow rate	750 gpm Series flow 1500 gpm maximum, parallel flow
Temperature	75°F maximum 33°F minimum
Pressure	125 psig
Carbon fill	20,000 lbs per vessel
Superficial contact time	10 *min @ 550 gpm*
Backwash rate	700- 710 gpm for solids removal
Contaminants	influent water: ppb organic constituents

2.2 Carbon Vessel

Vessel Nomenclature	GAC1, GAC2
Outer Diameter	120 in
Straight Side	120 in
Design Pressure	125 psig
Design Temperature	33-75° F
Material	SA 516-70 Carbon Steel
Lining	Plasite Protective Coatings 4110 Heat Cured
Exterior Paint	Sherwin Williams Kemkromik epoxy (or equal).
Approximate Weight	18,500 *lbs empty; 113,000 lbs full (carbon & water)*

2.3 Piping

Piping associated with the carbon vessels is constructed with Sch 40 carbon steel materials. TIGG System General Arrangement drawing (see Appendix) depicts the external pipe provided with the carbon vessels.

2.4 Valves - Process

Butterfly valves with manual gear operator (8") are provided.

2.5 Gaskets

Flange gaskets are EPDM rubber 1/8"tk per ANSI bolt pattern.

2.6 Underdrains

An underdrain system consists of stainless steel sch 10 slotted pipe with 0.01 slot size.

2.7 Rupture Disk

Rupture disks on the carbon vessels are 2" graphite disks with a burst pressure rating of 125psi. They are referenced on the P&ID dwg. Rupture disks were placed on the 4" carbon fill line to relieve any excess pressure build-up on the adsorber. The rupture disks will rupture at 125 psig. At no time should the adsorbers be operated at pressure greater than 125 psig. If the pressure is excessive and causes rupture disk to burst, immediately stop flow to the adsorber and carefully release any residual pressure through the 2" vent line. Once the system pressure is reduced, the rupture disk will need to be replaced.

2.8 Hose Adapters

Hose adapters on the carbon discharge, and drain, carbon fill pipelines are PT Coupling Co. "Part A" Cam-Lok style adapters.

Spare parts that may be required include rupture discs, underdrain nozzles, pressure gages, and valves if required. These parts may be ordered through TIGG.

3.0 PROCESS DESCRIPTION AND OPERATING PROCEDURES

The carbon adsorption system provided by TIGG Corporation consists of two vessels (GAC 1 & 2) and a pipe rack shown on the drawing. This system is to be employed as a polishing treatment system following primary filtration where the flow would be 1500 GPM (maximum) parallel mode or 750 GPM series operating mode. When running maximum flow, the vessels must be run in parallel. Each vessel is rated for 750 gpm maximum flow.

In order to achieve good organic compound removal and more efficient use of the carbon bed, it is recommended that the system be used in series mode at a typical flow of 550 gpm. Series flow will achieve maximum utilization of the activated carbon, thereby reducing annual costs. With the two adsorbers in series, the lead adsorber is used to remove the majority of organic constituents. The second adsorber is used to assure that the system meets treatment objectives as the organic mass transfer zone is maintained with the lead adsorber. The carbon in the lead adsorber will be eventually become saturated with organics. At his time, the lead adsorber must be taken out of service to allow the carbon bed to be exchanged with fresh carbon. The lag vessel is then put into service as the lead vessel.

By sampling and analyzing the residual organic constituents in the outlet of the adsorbers, the laboratory results can be plotted over time to develop a breakthrough curve for the organic constituents. This information is employed to assist the operating personnel in achieving maximum utilization of the activated carbon. In addition, three, ¼" sample ports are provided on the vertical side of each vessel so that the presence of organic constituents can be observed migrating down through the carbon bed.

Parallel flow can be employed by opening the specific inlet and outlet valves on the adsorbers as detailed in Table 2 of the Appendix. Parallel flow through the adsorbers is advantageous when the organic constituents present are readily adsorbable or a larger flow rate is desired. However, the maximum utilization of the carbon is reduced by operating the adsorbers in parallel. Also, the piping system is designed to allow the operation of each adsorber individually. This will enable one adsorber to be taken off-line for service while the other adsorber remains in operation.

The mode and valve operation on this versatile pipe system can be seen on the valve sequencing Tables in the Appendix.

3.1 Mode of Operation

Please refer to the Tables in the Appendix for the various modes of operation. The vessels can be operated in the following manner:

- Series GAC 1 to GAC 2, or GAC 2 to GAC 1
- Parallel, GAC 1 & GAC 2 on line
- GAC 1 on line with GAC 2 in either idle, backwash, spent carbon unloading, or fresh carbon loading mode
- GAC 2 on line with GAC 1 in either idle, backwash, spent carbon unloading, or fresh carbon loading mode

3.2 STARTUP PROCEDURES

The following steps outline the procedures to follow prior to placing the vessels in service. Tables in the Appendix identify the valve number and function description for the valves associated with each GAC vessel.

3.2.1 Initial Carbon Fill

Initially, carbon must be loaded into the vessels at the site. Fresh carbon will arrive in bulk containers (i.e., sacks). In order to protect the liquid collector (under drain) system, ***uncontaminated water must be added to the vessel prior to adding the carbon***. A sufficient amount of water should be added

such that the water level is at least 2 feet above the collector, or approximately 2200 gallons. Water can be added through the top manway. When adding clean uncontaminated water, all valves shall remain closed except for the vent valve.

After water has been added to the vessel, the adsorber is now ready to be filled with carbon. Proceed with the carbon filling as outlined below:

- Position the bulk carbon container near the adsorber to be filled. The fork lift or crane operator should elevate the sack over the manway on top of the vessel.
- Once this is done, the operator can slightly open the drawstring on the bulk bag and slowly start the transfer of carbon into the vessel. It should take about 18 sacks to fill the vessel.
- After the transfer of carbon is complete, the manway on the adsorber can be replaced and bolted in place.

Subsequent carbon exchanges following the initial fill will be done in the following manner: carbon will be loaded into the vessels via slurry method by TIGG's subcontractor. The carbon will arrive in bulk trailers.

In order to protect the liquid collector (under drain) system, ***uncontaminated water must be added to the vessel prior to adding the carbon***. A sufficient amount of water should be added such that the water level is at least 2 feet above the collector, or approximately 3,000 gallons. Water can be added through the 4" carbon fill line via the 3/4" connection on side of the carbon adsorber or by opening the manway on top of the vessel and letting a hose drape over for filling. When adding city or clean uncontaminated water, all valves shall remain closed except for the vent valve and the fresh water supply valve (3/4").

After the above procedure has been completed, the adsorber is now ready to be filled with carbon. The necessary valve sequences for filling the respective carbon vessel are provided in Tables in the Appendix. Proceed with the carbon filling as outlined below:

- The subcontractor should position the bulk trailer near the adsorber to be filled. The driver will connect all necessary hoses and will operate all the valves on the bulk trailer.
- Fill the trailer with approximately 5000 gallons of treated water.
- Connect a flexible hose with quick connect coupling between the bulk trailer and the adsorbers fill line 4" Cam-Lok fitting.
- Connect a temporary compressed air line to the bulk trailer and regulate the compressed air at 150scfm and 18 psig. Once this is done, the driver will open the bulk trailer starting the transfer of carbon.
- If the transfer of the carbon slurry is proceeding too slowly, there may be an issue with displacement of air in the vessel. In that case, it may be advantageous to displace the air through the backwash effluent line by opening valve 9 (Adsorber #2) or 10 (Adsorber #1) to vent the tank.
- Once the air flow is evidenced through the transfer hose, all of the replacement carbon should have been transferred from the bulk trailer into the adsorber. After the transfer is complete, disconnect the temporary compressed air and carbon transfer hoses. The 2" drain on the adsorber or by draining through the backwash effluent line can be used to displace the transfer water if the volume of water exceeds the capacity of the adsorber.

The adsorber is not ready to be placed on line. It is essential that two actions be taken prior to placing an adsorber in service. They are:

1) The carbon particles have been classified/segregated (Section 3.2.2); and,

2) All of the air has been removed from the carbon pores (Section 3.2.3).

If these steps are not completed, premature breakthrough of the organics can occur and thus there may be poor utilization of the carbon.

3.2.2 Backwashing to Segregate the Carbon

It is recommended that the carbon should be segregated in each bed prior to the adsorbers being placed on-line. This is important so that the carbon particles will always return to their same relative position in the bed after each backwashing operation. If the bed is not segregated, the carbon particles could change position and the adsorption zone (where adsorption is occurring) may be disturbed. This may result in poor utilization of the carbon and early breakthrough of organics. If backwashing of the beds is not feasible during initial operations, then proceed to section 3.2.3 below, prewetting the carbon.

Initial backwashing should be performed at a rate of 6 to 8 gpm/ft^2 or 480-630 gpm for 10 to 15 minutes until the backwash is clear of carbon fines. ***Uncontaminated*** water is preferred for this and all subsequent backwashing operations.

Backwashing of each vessel is accomplished by isolating the vessel to be backwashed. To isolate the vessel, close the treated water effluent valves and the influent valves. Once the vessel has been isolated the vessel can be backwashed. To initiate backwash, open the backwash discharge valve for the adsorber to be backwashed, (see Tables 3 & 5). Start the back wash pump and open the backwash supply valve slowly for the adsorber to be backwashed to prevent shocking the carbon bed and losing carbon. If possible, observe the backwash effluent stream to confirm that carbon is not being washed out of the vessel. If carbon, other than fines, is being washed out of the bed, close the supply valve slightly to reduce the flow to the vessel.

After backwashing is complete, close the backwash supply valve, shut down the pump and close the backwash discharge valve.

Subsequent to backwashing, the system is ready to be deaerated/prewetted as described in the following section.

3.2.3 Deaerating / Prewetting

As discussed previously, it is necessary to ensure that the carbon bed is properly deaerated prior to placing the unit in service. This is required to ensure proper flow though the bed to eliminate channeling, reduce pressure drop, and prevent premature breakthrough.

A bed of carbon consists of the following:

Void volume	-	40%
Pore volume	-	40%
Carbon skeleton	-	20%

A relatively long time is required for water to enter the pores and displace the air since the pores in dry carbon are filled with air and some adsorbed oxygen. Approximately 90% of the pores may be filled with water after 24 hours at ambient temperature (70° F).

In order to have the carbon pre-wetted, the adsorber should remain filled with water for at least 24-48 hours with the 3/4" vent line valve open on the carbon fill line. Having this valve open will permit trapped air to escape. After the carbon is pre-wetted, the bed should be backwashed for 10 to 15 minutes, prior to being placed on-line. It may be beneficial to repeat the backwash cycle after 2 or 3 days operation in order to remove any remaining air which collects in the bed.

3.3 Initial Operation

Assuming the vessels have been filled with carbon, properly pre-wetted and segregated as described in the preceding sections, the system is ready to be placed on-line for treating the contaminated water. The vessels should now be topped off with water and readied for operation by closing vent valves and opening the process inlet and outlet valves to the adsorbers required for treatment. (see Table 1).

Prior to introducing water into the adsorbers, ensure that the adsorber's influent valves are open on the vessels. Pressurize the influent line with the supply pumps and then slowly open the discharge valves to process water. **CAUTION - Sudden opening and closing of the valves could cause pre-mature failure of the rupture disks. Again please refer to the Appendix to identify the mode of operation and the associated valve positioning.**
Note: Before any water is processed, it is recommended practice that all the pipes on the pipe rack are filled with fresh water and high point vents be used to remove air from the piping. If air is allowed to stay in the piping, pressure drop through the piping system may increase.

3.4 Effluent Sampling / Change-out Determination

During operation, water samples should be taken on a regular basis from the discharge water and sample ports to monitor the mass transfer zone (MTZ) in each adsorber. After several cycles, it should be possible to determine how the MTZ moves and to predict when carbon exchange is required. If the MTZ is short, the concentration of the contaminants at the sample port will eventually equal the concentration in the influent.

The long term frequency for sampling the effluent of each vessel can be determined after the carbon in the adsorber has been changed two or three times. The effluent concentration of the contaminants should be plotted as a function of gallons treated. Assuming the influent concentration is essentially constant, it will be possible to determine when sampling should begin prior to the expected time to remove the spent carbon.

Once it has been determined that the carbon in the vessel is saturated with contaminants, then the lag vessel should be placed into lead service. Make sure the effluent valve on the standby adsorber is open, and then slowly open the inlet valve on the vessel to allow the process flow to enter the vessel. Once the lag vessel is on-line as the lead, the spent vessel can be taken out of service. The spent vessel is then isolated and the procedures should be followed for carbon change-out (section 7).

3.5 Suspended Solids / Backwashing

If there are suspended solids in the influent these may be filtered by the carbon bed. If this occurs they will collect on top of the bed and the pressure drop across the bed will increase. When the differential pressure drop across the system is roughly 10 psi above the initial clean bed pressure drop, the vessels should be backwashed. This operation should remove the solids and the differential pressure drop should return to normal. If it is necessary to backwash a vessel, the valve positions should be adjusted to block the vessel out of the process stream and open the valves to the backwash feed and return lines. The backwash flow rate should be approximately 710 gpm but should be adjusted such that the carbon bed is expanded but no carbon exits the bed. For each vessel, with 20,000 pounds of carbon, there is sufficient space above the carbon bed for 10 – 20% percent expansion. Experience will determine the required backwash period. When backwashing is completed, the pump must be shut off and

the vessel with fresh carbon can be placed on-line.

3.6 MAINTENANCE

The fixed bed carbon system is designed to require minimal maintenance. The following items should be inspected with regard to the carbon vessels, ancillary piping, valves and gages.

1) Internal inspection of a vessel should be performed each time carbon is removed.
2) Inspect the lining to verify it has not been damaged. If damage has occurred or been compromised in any way, it must be repaired prior to putting the vessel back in service.
3) Inspect the underdrain nozzles in the collector to insure they are intact and not plugged.
4) Pressure gages should be checked periodically to insure proper operation.
5) Piping and valves should be periodically inspected for signs of wear and/or leakage.

3.7 SHUTDOWN

The adsorption system is designed to operate continuously, 24 hours per day, 365 days per year. A short-term shutdown, as discussed below, is defined as a shutdown period that is expected to last less than 48 to 72 hours.

3.7.1 Short-Term Shutdown

A short-term shutdown is most likely to occur during weekend shutdown or routine maintenance of the system. During a short-term shutdown, the adsorbers may remain filled with water unless work is being performed on the adsorbers themselves. It may be necessary to close the inlet/outlet valves to prevent any siphoning or drainage from the vessels.

3.7.2 Long-Term Shutdown

A long-term shutdown is most likely to occur during spent carbon change-out, changes in the system configuration, major maintenance, etc. During a long-term shutdown the adsorbers should be completely drained to minimize potential for biological growth and bed septic condition.

The adsorbers are drained of excess water draining the vessels through the effluent water pipe until no water continues to run. After that water is allowed to drain, open the bottom 1” brass ball valve to drain the remaining water from the vessel. This drain should remain open for some time to allow water draining from the carbon to exit. **Do not open** the bottom 3” stainless steel ball valve at this time as carbon will be removed by doing so.

3.8 MINIMUM SAFETY PRECAUTIONS

All electrical, mechanical and rotating machinery constitute a potential hazard, particularly for those not familiar with the design, construction and operation. Accordingly, adequate safeguards (including use of protective equipment when necessary) should be taken with this equipment to safeguard the public (including minors) from injury and to prevent damage to the equipment, its’ associated system and the premises. Refer to the site specific health and safety plan (prepared by others) for site specific health risks and safety precautions to be undertaken when operating and maintaining this equipment.

The operation, maintenance and repair of this equipment should be undertaken only by personnel qualified to do so. All such personnel should be thoroughly familiar with the

equipment, the associated system and controls, and the procedures set forth in this manual. Proper care, procedures and tools must be used in handling, lifting, installing, operating, maintaining and repairing this equipment to prevent personal injury and/or property damage.

WET ACTIVATED CARBON CAN REDUCE OXYGEN LEVELS IN CONFINED SPACES. USE AND COMPLY WITH ALL APPLICABLE CONFINED SPACE ENTRY PROCEDURES WHEN ENTERING ADSORBER VESSELS CONTAINING WET CARBON, OR FROM WHICH CARBON HAS BEEN REMOVED.

Contaminated water may contain chemicals or biological contaminants which could be harmful if exposed to the skin, inhaled or ingested. Accordingly, personnel who may be exposed directly to the mists produced by water jets or compressed air should wear appropriate OSHA protective equipment.

3.9 TROUBLESHOOTING

This section is intended to identify a portion of the more common problems which may be encountered during the operation of a granular activated carbon system. The following "cause and effect" discussion is not intended to be all inclusive since situations and circumstances will vary with each individual system by virtue of design, operating philosophy, etc. Therefore, this section should only be considered as a guideline for troubleshooting.

3.9.1 General

The problems which arise generally fall under the following categories:

- Excessive carbon losses
- High pressure drop
- Poor adsorption and inefficient carbon usage

3.9.2 Excessive Carbon Losses

Generally, it is reasonable to expect 3% to 5% carbon loss for the following reason:

1) The fines in fresh carbon (up to 5%) may be washed out during the backwashing operation.

2) Backwashing causes the carbon particles to become rounded over time. Experience shows that the mean particle diameter can decrease 5 to 10 percent due to abrasion. This results in a reduction in the volume of carbon in the system because smaller, more rounded granules tend to pack more efficiently.

3.9.3 High Pressure Drop in the Adsorber

High pressure drop in the adsorber can be caused by:

1) Air in the carbon bed,

2) Suspended solids in the influent,

3) Plugging of the collector (under drain), and/or

4) Excessive carbon fines.

3.9.3.1 Air in the Carbon Bed

As discussed in Section 6.3, air in the carbon bed is generally caused by inadequate wetting of the carbon granules. Adherence to the startup procedures should eliminate this as a potential problem.

3.9.3.2 Suspended Solids in the Influent

If suspended solids are present in the influent water they will generally be filtered on top of the carbon bed. If this becomes a serious problem, causing excess pressure buildup and relatively frequent backwash cycles, pretreatment of the influent stream may be required.

3.9.3.3 Plugging of the Collector (Under drain)

Openings in the underdrain nozzles are designed such that small carbon particles may pass through without plugging. In some cases the characteristics of the water are such that oils, bacterial growth, etc. may migrate through the carbon and plug the underdrain nozzles. Usually a vigorous backwash will alleviate the problem.

3.9.4 Poor Adsorption and Inefficient Carbon Usage

Poor adsorption and inefficient carbon usage may be caused by the following:

1) Channeling caused by air and /or suspended solids in the carbon bed - Refer to Sections 4.2.1 and 4.2.2
2) Carbon saturation from organics - Change the carbon.
3) Increase in influent concentration of organics - Compare influent analyses.
4) Change in types of organics in the influent - Compare influent analyses.
5) Presence of non-adsorbable organics - Compare influent analyses.
6) Change of pH of influent water - Compare influent analyses.
7) Backwashing without segregating the carbon prior to startup - Refer to Section 4.2.

3.9.5 Carbon in the Effluent Line

Carbon may pass into the effluent line if the slotted pipe laterals fail(s). If carbon is detected, the particle size should be determined. If the particle size is greater than 0.012 inch, it is probable that a lateral pipe has been damaged or loosened from the header pipe.

4.0 SYSTEM PRESSURE DROP

Pressure drop when running 500 gpm through each vessel will be approximately 5 psi. Total pressure drop across the system operating in series can be approximately 15 psig total. The system should be backwashed if the total system pressure drop reaches 25 psig.

5.0 GAC SPECIFICATION – See Appendix, for carbon specs

6.0 DETAILED CARBON CHANGE-OUT PROCEDURE

When contaminant saturation has been identified in a vessel, the vessel will be taken off-line and isolated from the process stream as identified in Section 4.4. The carbon in the vessel must then be removed and replaced with fresh carbon. When it is determined that carbon should be removed from a vessel, the procedure discussed in the following sections should be followed.

6.1 Removing Spent Carbon in a Slurry Form

There are two options to remove the carbon as slurry. One option is to use air as the motive force. The other is to use water as the motive force.

6.1.1 Connections

The carbon slurry outlet line located on the bottom center of each vessel should be connected with a hose to a receiving container prior to carbon removal. For this size adsorber the container is usually a bulk trailer. The container should have a drain for removing the excess water from the carbon (prior to transportation).

A 3/4" water connection is provided for fresh water supply to aid in the slurry process. This is normally the fill line when the vessel is being filled but can serve to introduce carbon flush water also.

6.1.2 Carbon Transfer

To ensure a proper transfer of carbon from the adsorber, it is necessary to isolate the vessel from the process stream and to close any vent valves. This is required for pressurization of the adsorber vessel.

6.1.2.1 Carbon Transfer from Adsorber – using compressed air or pressure blower

To initiate the carbon transfer process for an Adsorber follow the steps detailed below:

1) Prepare for carbon removal by closing all valves and any other sample or flush valves that maybe open at that time.

2) With the vessel full of water, add pressurized air to the top head by connecting an air hose to the 3/4" ball valve on the carbon fill line. When the top of the vessel reaches 10-15 psi, open the carbon discharge valve (4" full port carbon discharge ball valve) and carbon should begin to flow through the transfer line.

3) There should be sufficient water in the vessel to remove the majority of the spent carbon. However, some carbon may remain in the adsorber due to the angle of repose of the carbon, which is 25 to 30 degrees. This remaining carbon is called the carbon heel. This amount may be as much as 2,000 to 3,000 pounds. The remaining carbon can be removed by either introducing water into the vessel through the underdrain via the backwash lines (carbon effluent) or by flushing it out with a hose by accessing the vessel through one of the manways.

4) Close the 3/4" ball valve in the fill line and open the 2" vent valve as soon as air exits the discharge line.

5) When pressure in the vessel is essentially atmospheric, prepare to add water for a period of

5 to 10 minutes. This should cause the carbon bed heal to slump.

6) Close the carbon discharge valve and open the backwash valve to introduce water to the vessel.

7) After 5 minutes, close the backwash valve to isolate the adsorber

8) Close vent valve.

9) Open the air supply valve to pressurize the vessel as in step 2. Open the carbon discharge valve and transfer the balance of the carbon to the trailer.

10) When the carbon removal process is completed, close the carbon discharge valve and prepare to add fresh carbon as described in Section 3.2.1.

Note: After completing steps 1 through 10, there is still the possibility of a portion of spent carbon remaining in the bottom head. Therefore, open the manway to inspect the vessel. Depending on the quantity and location of the carbon, it may be necessary to use a hose to wash it into the bottom of the head and/or repeat the above backwashing/air pressure steps after closing the manway.

6.1.2.2 Carbon Transfer from Adsorber – using total water slurry

To initiate the carbon transfer process for an Adsorber follow the steps detailed below:

1) Prepare for carbon removal by closing all valves and any other sample or flush valves.

2) Complete a backwash of the vessels as described in Section 4.2.2

3) Insure the vessel is full of water. Open the 8" influent valve and push approximately 100 gpm of clean or treated water through the vessel. A pressure of 10 – 20 psi at this flow rate should transfer the carbon to the bulk trailer. The carbon discharge valve will need to be opened after the pressure on the tank has been allowed to build to this level or slightly higher. Carbon will usually be pushed out at a rate of 1-3 lbs carbon/gal of water. However, there must be continuous flow. Once all the carbon is out of the vessel, an inspection through the manway may result in a wash down of any hanging carbon and a repeat of this step to push the remaining carbon back to the bulk trailer.

Also, during this process, the bulk trailer will need to be drained at a rate similar to the fill of 100 gpm. Usually the draining will require frequent stopping and starting of the feed to the 4" discharge line. This stopping and starting can be accomplished by closing the carbon discharge valve. When this occurs, the pressure on the pump must be either maintained so as not to rupture the pressure disk or it must be shut down to avoid over pressurization.

4) When the carbon removal process is completed, close the carbon discharge valve and all the process valves and prepare to add fresh carbon as described in Section 3.2.1.

Note: After completing steps 1 through 3 there is still the possibility of a portion of spent carbon remaining in the bottom head. Therefore, open the manway to inspect the vessel. Depending on the quantity and location of the carbon, it may be necessary to use a hose to wash it into the bottom of the head and/or repeat the above backwashing/air pressure steps after closing the manway.

APPENDIX

P&ID DRAWING

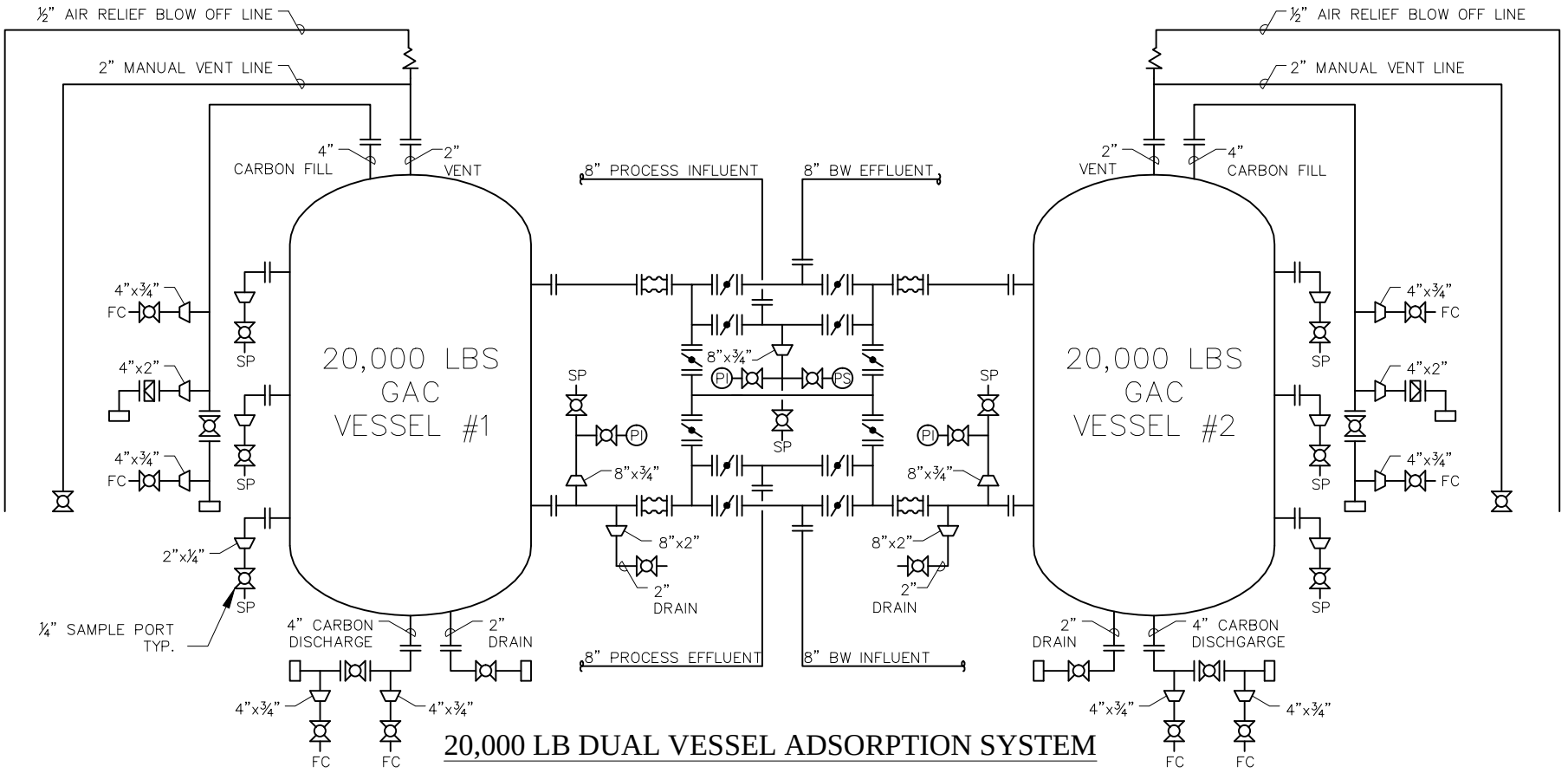

20,000 LB DUAL VESSEL ADSORPTION SYSTEM

LEGEND

BALL VALVE	FC — FLUSH CONNECTION	SP — SAMPLE PORT	
EXPANSION JOINT	REDUCER	RUPTURE DISK	PS — PRESSURE SWITCH
AIR RELIEF VALVE	QUICK CONNECT CAM LOCK FITTING	MANUALLY OPERATED BUTTERFLY VALVE	PI — PRESSURE GUAGE

NO.	REVISION	BY	DATE

PROJECT
CB&I
EXTRACTION & TREATMENT SYSTEM

PROJ. NO.	CS GROU150024
P.O. NO.	1116799-00 OP

THIS DRAWING AND DESIGN ARE THE PROPERTY OF TIGG CORP. AND SHALL NOT BE REPRODUCED IN WHOLE OR IN PART, NOR EMPLOYED FOR ANY PURPOSE OTHER THAN SPECIFICALLY PERMITTED IN WRITING BY TIGG CORP. THIS DRAWING LOANED SUBJECT TO RETURN ON DEMAND.

DRAWN BY	JB
DESIGN BY	JB
CHKD. BY	JI
DATE	2/17/15
SCALE	NTS

TIGG LLC.

KIRKLAND AFB
P&ID

C15-004-001

REV. 6

GENERAL ARRANGEMENT DRAWING

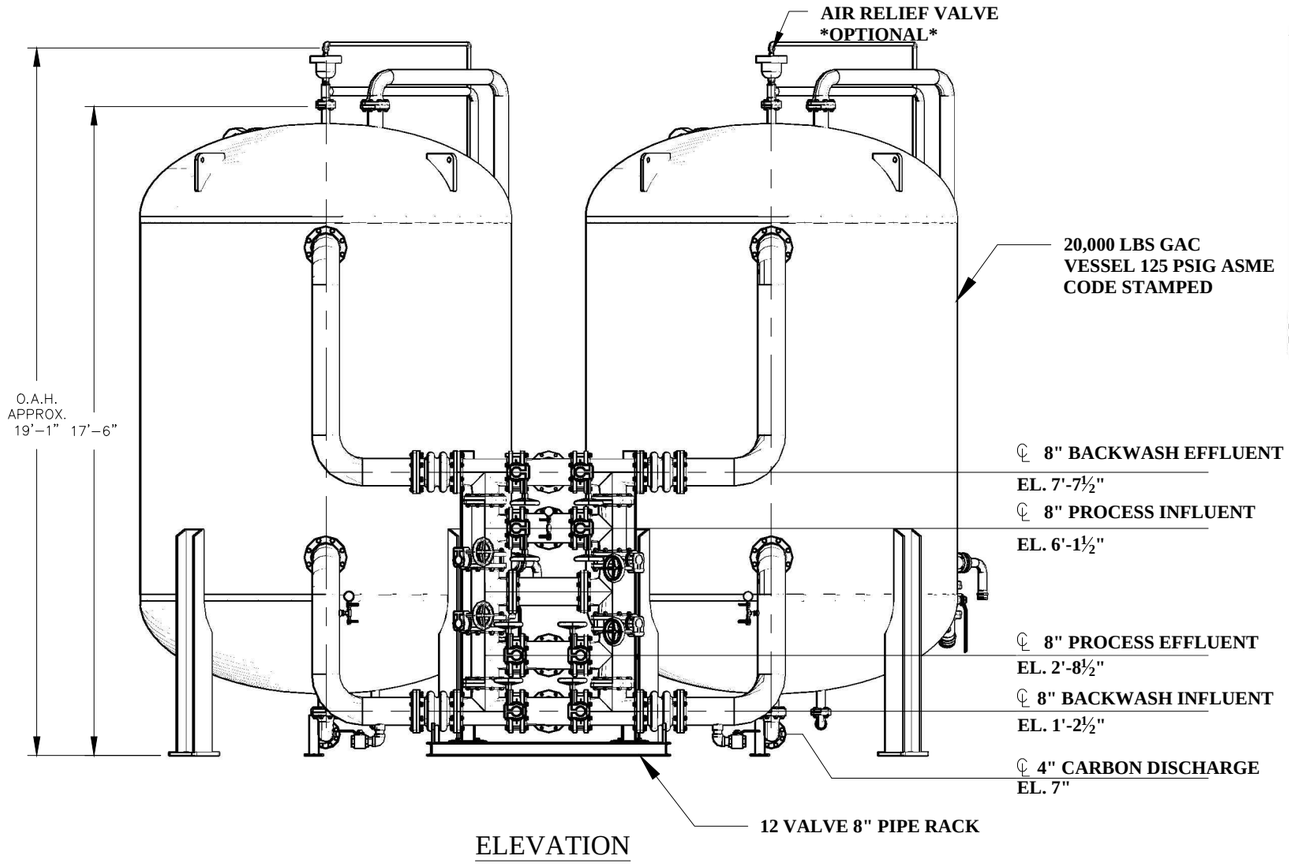

ELEVATION

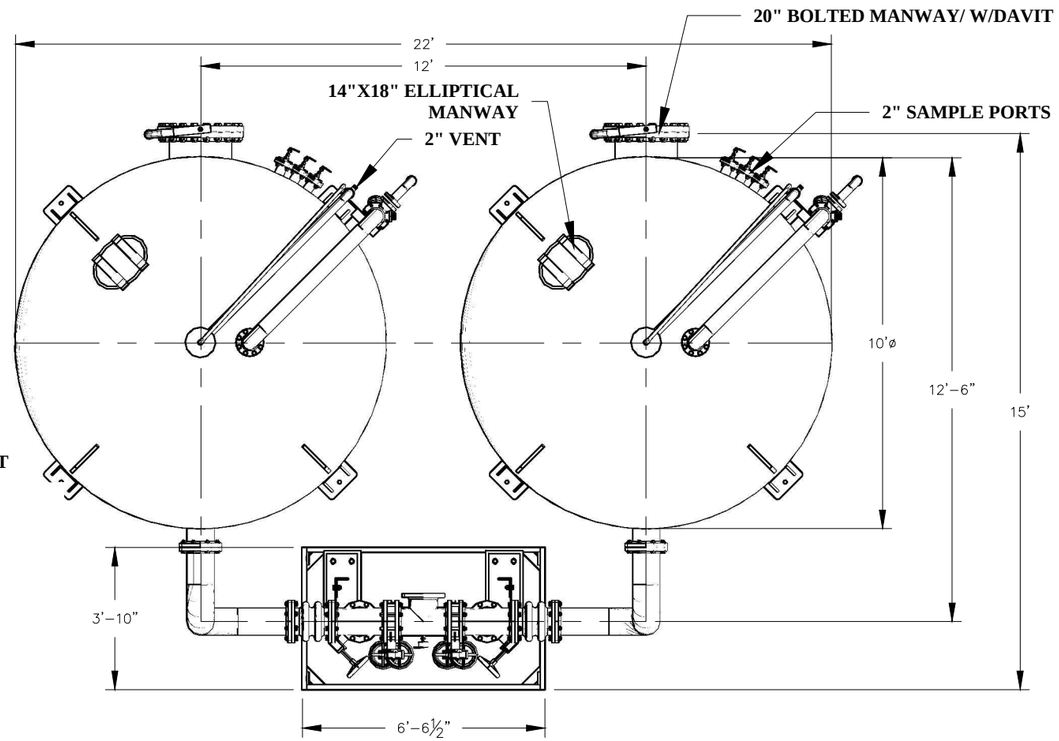

PLAN

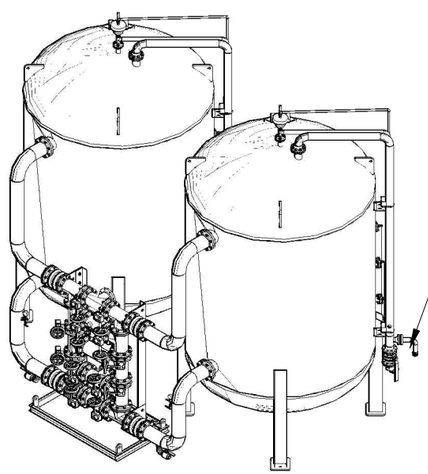

EMPTY VESSEL WT. (1):	13,000 LBS
VESSEL OPERATING WT. (1):	79,000 LBS
PIPE RACK OPERATING WT:	12,000 LBS
SYSTEM OPERATING WT.:	170,000 LBS

FOR REFERENCE ONLY

NO.	REVISION	BY	DATE
3	ADD ADD 2" MANUAL VENT & EFFLUENT DRAIN	JB	3/21/14
2	ADD EXPANSION JOINTS	JB	1/10/13
1	ADD SAMPLE PORTS TO VESSEL	RC	12/19/12

PROJECT
CP–20K–10
(SYSTEM)

PROJ. NO.	SALES
P.O. NO.	

THIS DRAWING AND DESIGN ARE THE PROPERTY OF TIGG CORP. AND SHALL NOT BE REPRODUCED IN WHOLE OR IN PART, NOR EMPLOYED FOR ANY OTHER PURPOSE OTHER THAN SPECIFICALLY PERMITTED IN WRITING BY TIGG CORP. THIS DRAWING IS LOANED SUBJECT TO RETURN ON DEMAND.

DRAWN BY	JB
DESIGN BY	JB
CHKD. BY	BB
DATE	2/9/10
SCALE	NTS

TIGG LLC.

SYSTEM GENERAL ARRANGEMENT

DWG. NO. CP–20K–10–1003 REV. 3

VESSEL DRAWINGS

MARK	SERVICE	DESCRIPTION	LOCATION
N6	AIR RELIEF	2" 150# FFSO FLANGE	TOP HEAD
N5	DRAIN	2" 150# FFSO FLANGE	BOTTOM HEAD
N4	CARBON DISCHARGE	4" 150# FFSO FLANGE	BOTTOM HEAD
N3	CARBON FILL/PRES. RELIEF	4" 150# FFSO FLANGE	TOP HEAD
N2	OUTLET	8" 150# FFSO FLANGE	SHELL
N1	INLET	8" 150# FFSO FLANGE	SHELL
M2	MANWAY	20" 150# FFSO W/ DAVIT	SHELL
M1	MANWAY	14"x18" ELL. MANWAY	TOP HEAD

NOZZLE SCHEDULE

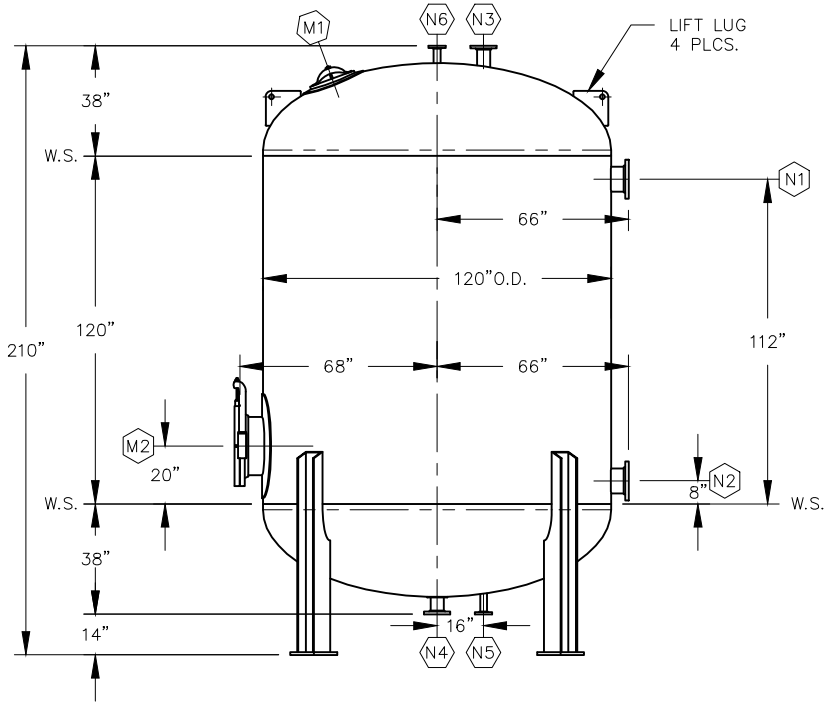

ELEVATION

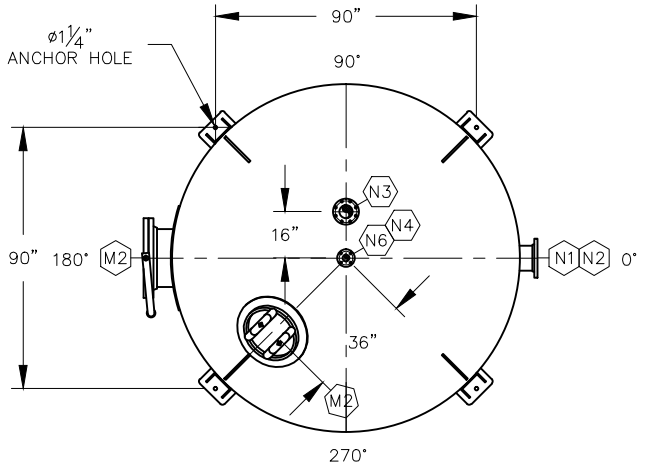

PLAN

NO.	REVISION	BY	DATE
1	REVISE FLANGE TYPE & LINING	JB	7/5/11

VESSEL STANDARDS

VESSEL MATERIALS : SA-516-70	VESSEL ACCESS : 20" BOLTED MANWAY W/ DAVIT
LINING : NSF APPROVED VINYL ESTER	LIQUID DRAIN ASSEMBLY : 2" 150# FFSO FLANGE
EXTERIOR PAINT : EPOXY BASE / URETHANE TOP COAT	TOTAL VOLUME : 1055 FT^3
HEAD THICKNESS : ½" NOM.	SHIP WT. EMPTY : 11783 LBS
SHELL THICKNESS : ½" NOM.	MAX. OPERATING PRESSURE : 125 PSIG/-15 PSIG (VAC.)
INTERNALS : PVC	MAX. OPERATING TEMPERATURE. : 150°F

PROJECT

CP-20K-10

PROJ. NO.	SALES
P.O. NO.	

THIS DRAWING AND DESIGN ARE THE PROPERTY OF TIGG CORP. AND SHALL NOT BE REPRODUCED IN WHOLE OR IN PART, NOR EMPLOYED FOR ANY PURPOSE OTHER THAN SPECIFICALLY PERMITTED IN WRITING BY TIGG CORP. THIS DRAWING LOANED SUBJECT TO RETURN ON DEMAND.

DRAWN BY	JB
DESIGN BY	BB
CHKD. BY	BB
DATE	2/28/11
SCALE	NTS

TIGG corporation

PLAN & ELEVATION

CP-20K-10-1001 REV. 1

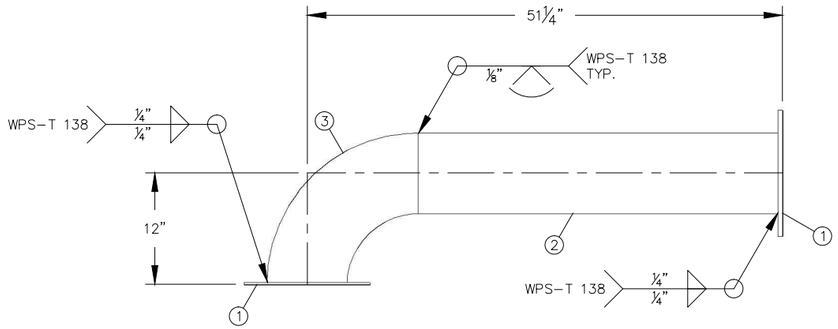

DISCHARGE FLANGE CONNECTION

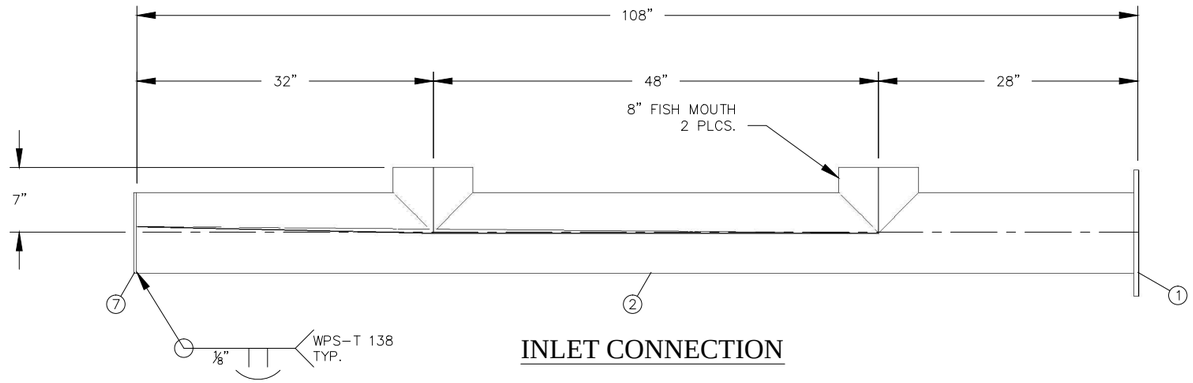

INLET CONNECTION

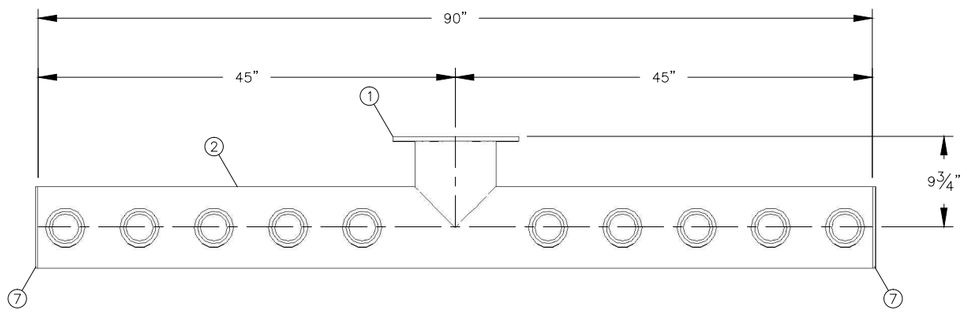

DISCHARGE LATERAL CONNECTION

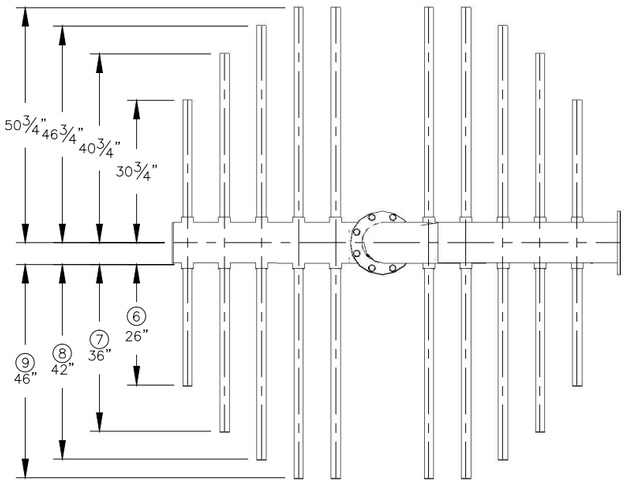

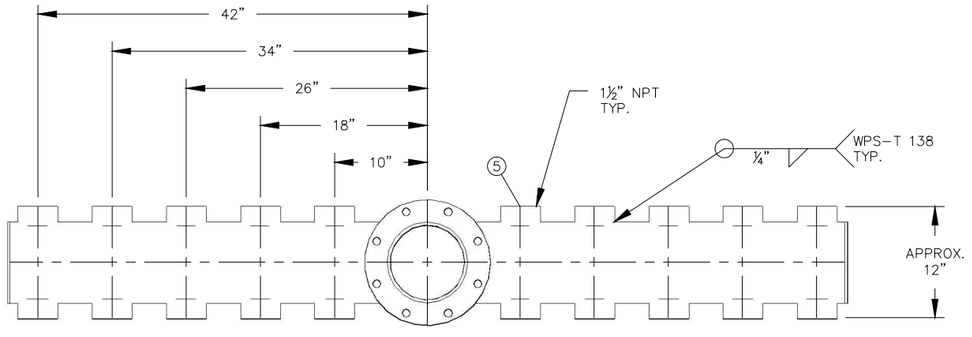

DISCHARGE LATERAL CONNECTION

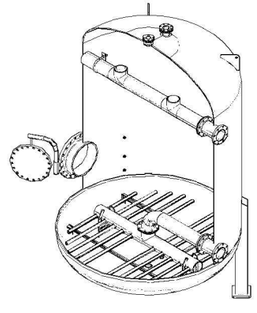

ITEM	QTY.	DESCRIPTION	MATERIAL
	1	8" U–BOLT	304SS
	20	1½" U–BOLT	304SS
	48	¾"ø WASHER	304SS
	24	¾"ø HEAVY HEX NUT	18–8 OR BETTER
	24	¾"ø x2" BOLT	18–8 OR BETTER
	3	8" 150# FULL FACE GASKET	NEOPRENE
9	8	1½" WEDGE WIRE 0.010"SLOTTED PIPE 46" LONG	SA–182 304L
8	4	1½" WEDGE WIRE 0.010"SLOTTED PIPE 42" LONG	SA–182 304L
7	4	1½" WEDGE WIRE 0.010"SLOTTED PIPE 36" LONG	SA–182 304L
6	4	1½" WEDGE WIRE 0.010"SLOTTED PIPE 26" LONG	SA–182 304L
5	20	1½" NPT 3000# HALF COUPLING	SA–182 304L
4	3	8⅝"ø x¼" END PLATE	SA–240 304L
3	1	8" SCH 10 90° LR ELBOW	SA–312 304L
2	22'	8" SCH 10 PIPE	SA–312 304L
1	4	8" 150# FABRICATED FLANGE ½" TK.	SA–240 304L

BILL OF MATERIALS

NO.	REVISION	BY	DATE

RELEASED FOR FABRICATION

PROJECT

CP–20K–10

PROJ. NO.	PLANT STANDARDS
P.O. NO.	

THIS DRAWING AND DESIGN ARE THE PROPERTY OF TIGG CORP. AND SHALL NOT BE REPRODUCED IN WHOLE OR IN PART, NOR EMPLOYED FOR ANY PURPOSE OTHER THAN SPECIFICALLY PERMITTED IN WRITING BY TIGG CORP. THIS DRAWING LOANED SUBJECT TO RETURN ON DEMAND.

DRAWN BY	JB
DESIGN BY	BB
CHKD. BY	
DATE	3/11/11
SCALE	NTS

TIGG corporation

VESSEL INTERNALS
(STAINLESS STEEL)

DWG. NO. CP–20K–10–2004(SS) REV. 0

VALVE POSITION TABLES
SERIES & PARALLEL FLOW

TABLE 1- SERIES FLOW

VESSEL V1 TO VESSEL V2

VALVE POSITIONS

OPEN VALVES	CLOSED VALVES
2	1
3	4
6	5
7	8
	9
	10
	11
	12
	13
	14
	15
	16

VESSEL V2 TO VESSEL V1

VALVE POSITIONS

OPEN VALVES	CLOSED VALVES
1	2
4	3
5	6
8	7
	9
	10
	11
	12
	13
	14
	15
	16

TABLE 2-PARALLEL FLOW

VESSEL V1 & VESSEL V2 OPERATING

VALVE POSITIONS

OPEN VALVES	CLOSED VALVES
1	3
2	4
7	5
8	6
	9
	10
	11
	12
	13
	14
	15
	16

PARALLEL FLOW

VESSEL V1 ON-LINE, VESSEL V2 IDLE

VALVE POSITIONS

OPEN VALVES	CLOSED VALVES
2	1
8	3
	4
	5
	6
	7
	9
	10
	11
	12
	13
	14
	15-16

TABLE 3 VESSEL V1 ON-LINE, VESSEL V-2 BACKWASH

VALVE POSITIONS

OPEN VALVES	CLOSED VALVES
2	1
	3
8	4
9	5
11	6
	7
	10
	12
	13
	14
	15
	16

PARALLEL FLOW

TABLE 4 VESSEL V-1 ON-LINE, VESSEL V2 UNLOADING CARBON

VALVE POSITIONS

OPEN VALVES	CLOSED VALVES
2	1
8	3
15	4
	5
	6
	7
	9
	10
	11
	12
	13
	14
	16

VESSEL V1 ON-LINE, VESSEL V-2 LOADING CARBON

VALVE POSITIONS

OPEN VALVES	CLOSED VALVES
2	1
8	3
13	4
	5
	6
	7
	9
	10
	11
	12
	14
	15
	16

PARALLEL FLOW

VESSEL V2 ON-LINE, V1 IDLE

VALVE POSITIONS

OPEN VALVES	CLOSED VALVES
1	2
7	3
	4
	5
	6
	8
	9
	10
	11
	12
	13
	14
	15-18

TABLE 5 VESSEL V-2 ON-LINE, VESSEL V-1 BACKWASH

VALVE POSITIONS

OPEN VALVES	CLOSED VALVES
1	2
7	3
	4
10	5
12	6
	8
	9
	11
	13
	14
	15
	16

PARALLEL FLOW

TABLE 6 VESSEL V-2 ON-LINE, V-1 UNLOADING CARBON

VALVE POSITIONS

OPEN VALVES	CLOSED VALVES
1	2
7	3
16	4
	5
	6
	8
	9
	10
	11
	12
	13
	14
	15

VESSEL V-2 ON-LINE, V-1 LOADING CARBON

VALVE POSITIONS

OPEN VALVES	CLOSED VALVES
1	2
7	3
14	4
	5
	6
	8
	9
	10
	11
	12
	13
	15
	16

VESSEL MEDIA

TIGG 5DC 1240 NSF

Virgin Liquid Phase Coconut Based Activated Carbon

www.TIGG.com

DESCRIPTION

TIGG 5DC 1240 NFS is a coconut-based activated carbon specially designed to remove low concentrations of contaminants in potable water applications. This activated carbon combines high microporosity and high surface area to permit effective removal of THMs, chlorinated hydrocarbons and other contaminants.

TYPICAL PROPERTIES	TIGG 5DC 1240 NSF
U.S Sieve, 90 wt% min	12 x 40
Iodine Number, mg/g, min	1100
Apparent Density, (dense packing)	
g/cc	0.48 - 0.50
lbs/ft^3	29 - 31
Total Surface Area, m2/g	1150 - 1200
Ash (ASTM-2866), % w/w	3.0
Abrasion No. - min	85

TYPICAL APPLICATIONS

In TIGG liquid phase potable water treatment equipment, TIGG 5DC 1240 NSF will effectively remove organics listed above as well as chlorine, phenols, pesticides, taste & odor, etc. TIGG 5DC 1240 NSF meets AWWA Standard B-600-74, ANSI/NSF Standard 61 for drinking water applications.

Standard packaging of the activated carbon is in 1000 pound supersaks.

Wet drained activated carbon adsorbs oxygen from the air. Therefore, when workers need to enter a vessel containing wet activated carbon, they should follow confined space/low oxygen level procedures. Activated carbon dust does not present an explosion hazard.

800-925-0011
www.TIGG.com
www.TIGGtanks.com

TIGG Corporation
1 Willow Avenue
Oakdale, PA 15071

TIGG Corporation
Purifying Air & Water

PRESSURE GAGE INFORMATION

XSEL™ Process Gauge - Stainless Steel
Type 232.34 - Dry Case
Type 233.34 - Liquid-filled Case

WIKA Datasheet 23X.34

Applications

- For applications with high dynamic pressure pulsations or vibration a liquid filled case and socket restrictor are available
- Suitable for corrosive environments and gaseous or liquid media that will not obstruct the pressure system
- Process industry: chemical/petrochemical, power stations, mining, on and offshore, environmental technology, mechanical engineering and plant construction

Special features

- Excellent load-cycle stability and shock resistance
- Solid front thermoplastic case
- Positive pressure ranges to 30,000 psi
- XSEL™ Process Gauge with 5 year warranty on gauge and 10 year warranty on pressure system (see terms and condition
- All lower mount connection gauges are factory prepared for liquid filling

(LBM: must install membrane prior to field filling)

Bourdon Tube Pressure Gauge Model 232.34

Standard Features

Design
ASME B40.100

Sizes
4½" & 6" (115 & 160 mm) dial size

Accuracy class
± 0.5% of span (ASME B40.100 Grade 2A)
± 1.0% of span (ASME B40.100 Grade 1A)
(for 20,000 psi range and above)

Ranges
Vacuum / Compound to 200 psi
Pressure from 15 psi to 30,000 psi
or other equivalent units of pressure or vacuum

Working pressure

Steady:	full scale value
Fluctuating:	0.9 x full scale value
Short time:	1.5 x full scale value

Operating temperature
Ambient: -40°F to +150°F (-40°C to +66°C) - dry
-4°F to +150°F (-20°C to +66°C) - glycerine filled
-40°F to +150°F (-40°C to +66°C) - silicone filled
Medium: max. +212°F (+100°C) (See Note 1 on reverse)

Temperature error
Additional error when temperature changes from reference temperature of 68°F (20°C) ±0.4% for every 18°F (10°C) rising or falling. Percentage of span.

Weather protection
Weather resistant (NEMA 3 / IP54) - without membrane
Weather tight (NEMA 4X / IP65) - dry case or filled case with membrane installed

Pressure connection
Material: 316L stainless steel
Lower mount (LM) or lower back mount (LBM)
1/4" or 1/2" NPT with M4 internal tap

Restrictor
Material: Stainless steel (0.6 mm)

Bourdon tube
Material: 316L stainless steel
≤ 1,000 PSI: C-type
≥ 1,500 PSI: helical type

Movement
Stainless steel. Internal stop pin at 1.3 x full scale
Overload and underload stops - standard
Dampened movement - optional

Dial
White aluminum with black lettering, stop pin at 6 o'clock

Pointer
Black aluminum, adjustable

Case
Black fiberglass-reinforced thermoplastic (POCAN)
Solid front, blowout back
Turret-style case with built in rear flange lugs

WIKA®
Part of your business

Window
Clear acrylic with Buna-N gasket

Case filling
Glycerine 99.7% - Type 233.34

Optional extras

- Silicone dampened movement
- Panel mounting adaptor kit (field assembled)
- Silicone case filling
- Halocarbon case filling
- Cleaned for oxygen service
- Instrument glass or safety glass window
- Drag pointer (maximum reading indicator)
- Alarm contacts switches (magnetic or inductive)
- Special process connections
- Custom dial layout
- External zero adjustment (4.5" size only)

Note 1: The maximum continuous media temperature for this gauge is 212°F. However, higher temperatures can be maintained safely for short term exposure per table to the right. The user should consider temperature error and gauge component degradation when exposing gauge to any media or ambient temperature above 212°F. For continuous use in either ambient or media temperatures above 212°F, a diaphragm seal or other heat dissipating means is recommended. Consult factory for technical inquiries and application assistance.

Short term, intermittent maximum media temperature limits
(Optional glass window required for all these temperatures)

500°F (260 °C) -	Dry Gauge
250°F (130°C) -	Liquid filled gauge
300°F (150°C) -	Dampened movement gauge

Dimensions

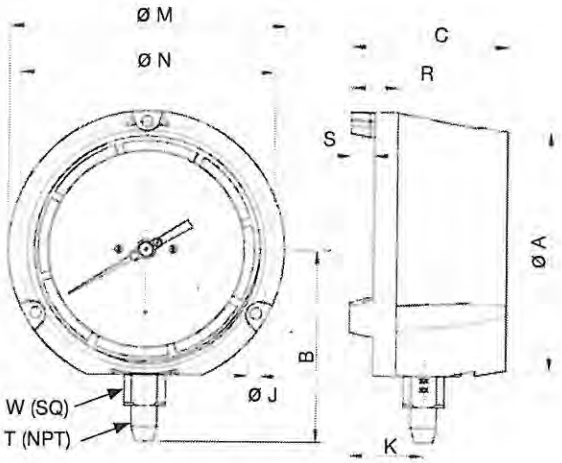

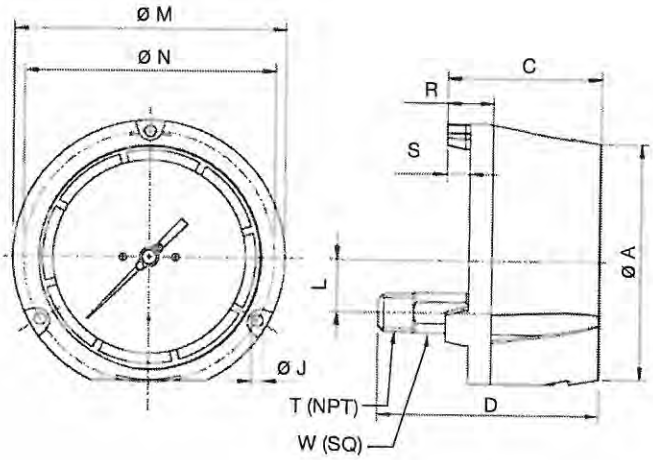

Size		A	B	C	D	J	K	L	M	N	R	S	T	W	Weight[1]	
4.5"	mm	128	103	84	120.3	6.3	40	28.5	148	136.5	25	12.5		22	2 lb.	dry
	in	5	4.06	3.31	4.74	0.248	1.57	1.12	5.83	5.37	0.99	0.49	1/2"	0.87	3 lb.	filled
6"	mm	164	122.5	88	123.4	7.1	40.2	28.5	190	177.8	25.4	12.7		22	3 lb.	dry
	in	6.46	4.82	3.46	4.86	0.28	1.58	1.12	7.5	7	1	0.5	1/2"	0.87	4 lb.	filled

[1] Weight without optional accessories

WIKA Datasheet 23X.34 06/2010

Ordering information
Pressure gauge model / Nominal size / Scale range / Size of connection / Optional extras required
Specifications and dimensions given in this leaflet represent the state of engineering at the time of printing.
Modifications may take place and materials specified may be replaced by others without prior notice.

WIKA Instrument Corporation
1000 Wiegand Boulevard
Lawrenceville, GA 30043
Tel (770) 513-8200 Toll-free 1-888-WIKA-USA
Fax (770) 338-5118
E-Mail info@wika.com
www.wika.com

BUTTERFLY VALVE & OPERATOR INFORMATION

Bray CONTROLS

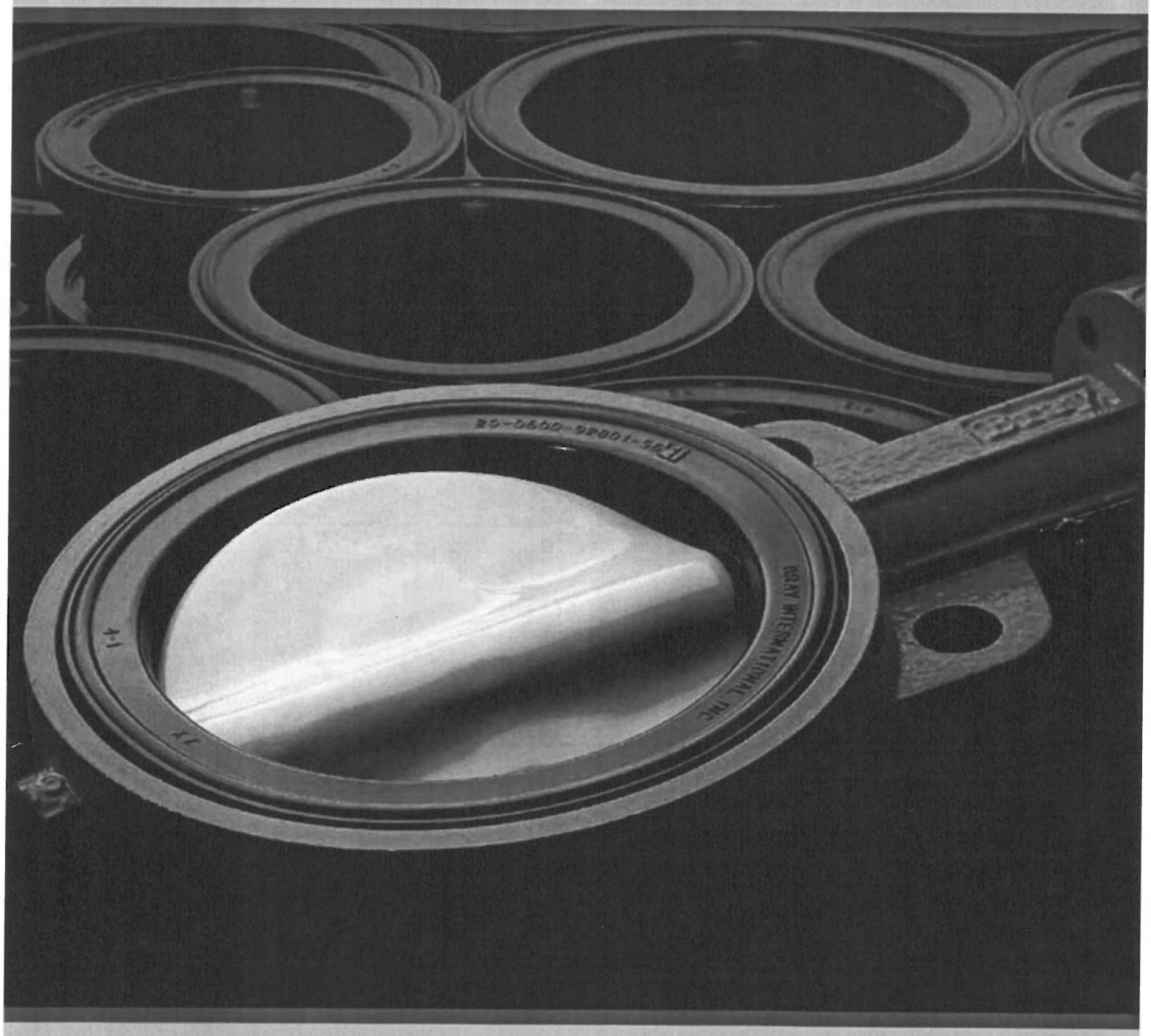

RESILIENT SEATED

Butterfly Valves

SERIES 30/31 2"-20" (50mm-500mm)

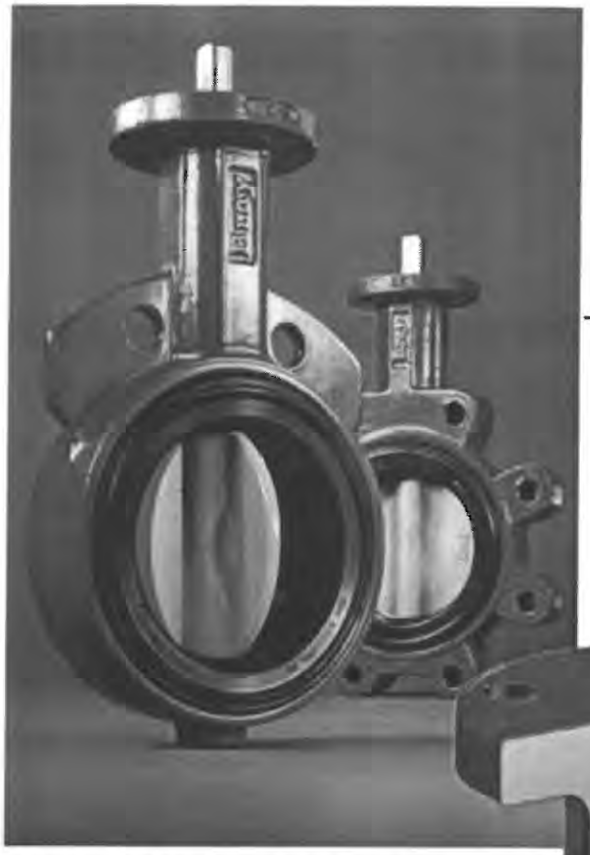

PRESSURE RATINGS		
BIDIRECTIONAL BUBBLE-TIGHT SHUT-OFF – Standard Disc* Downstream Flanges/Disc in Closed Position		
S30/31 Standard Disc*	2-12" (50-300mm)	175 psi (12 Bar)
	14-20" (350-500mm)	150 psi (10.3 Bar)
DEAD-END SERVICE – Lug Bodies/Standard Disc* No Downstream Flanges/Disc in Closed Position		
S31	2-12" (50-300mm)	75 psi (5.2 Bar)
	14-20" (350-500mm)	50 psi (3.4 Bar)
BODY: 250 psi (17.2 Bar) CWP		

*For low pressure application, Bray offers a standard reduced disc diameter to decrease seating torques and extend seat life, thus increasing the valve's performance and reducing actuator costs.

VELOCITY LIMITS For On/Off Services:	
Fluids 30 ft/sec (9 m/s)	**Gases** 175 ft/sec (54 m/s)

High strength through-stem design allows easy disassembly and reduced disc to stem failure.

PRIMARY & SECONDARY SEALS: These seals prevent line media from coming in contact with the stem or body. *Primary* Seal is achieved by an interference fit of the molded seat flat with the disc hub. *Secondary* Seal is created because the stem diameter is greater than the diameter of the seat stem hole.

STEM: Precision double "D" disc to stem connection drives the disc without the need for screws or pins. The close tolerance, double "D" connection that drives the valve disc is an exclusive feature of the Bray valve. Disassembly of the Bray stem is just a matter of pulling the stem out of the disc.

SEAT: Bray's tonque and groove seat design lowers torque and provides complete isolation of flowing media from the body. The seat also features a molded O-ring which eliminates the use of flange gaskets.

STEM RETAINING ASSEMBLY: The stem is retained in the body by means of a unique Stainless Steel Spirolox® retaining ring, a thrust washer and two C-rings, manufactured from brass as standard, stainless steel upon request. The retaining ring may be easily removed with a standard hand tool. The stem retaining assembly prevents unintentional removal of the stem during field service.

STEM BUSHING: Non-corrosive, heavy duty acetal bushing absorbs actuator side thrust.

STEM SEAL: Double "U" cup seal design is self-adjusting and gives positive sealing in both directions.

NECK: Extended neck length allows for 2" of piping insulation and is easily accessible for mounting actuators.

DISC: Casting is spherically machined and hand polished to provide a bubble-tight shut off, minimum torque, and longer seat life.

BODY: One-piece wafer or lug style. Polyester coating for excellent corrosion resistance. Nylon 11 coating is available as an option.

Spirolox® designation is a registered trademark of Kaydon Ring and Seal, Inc.

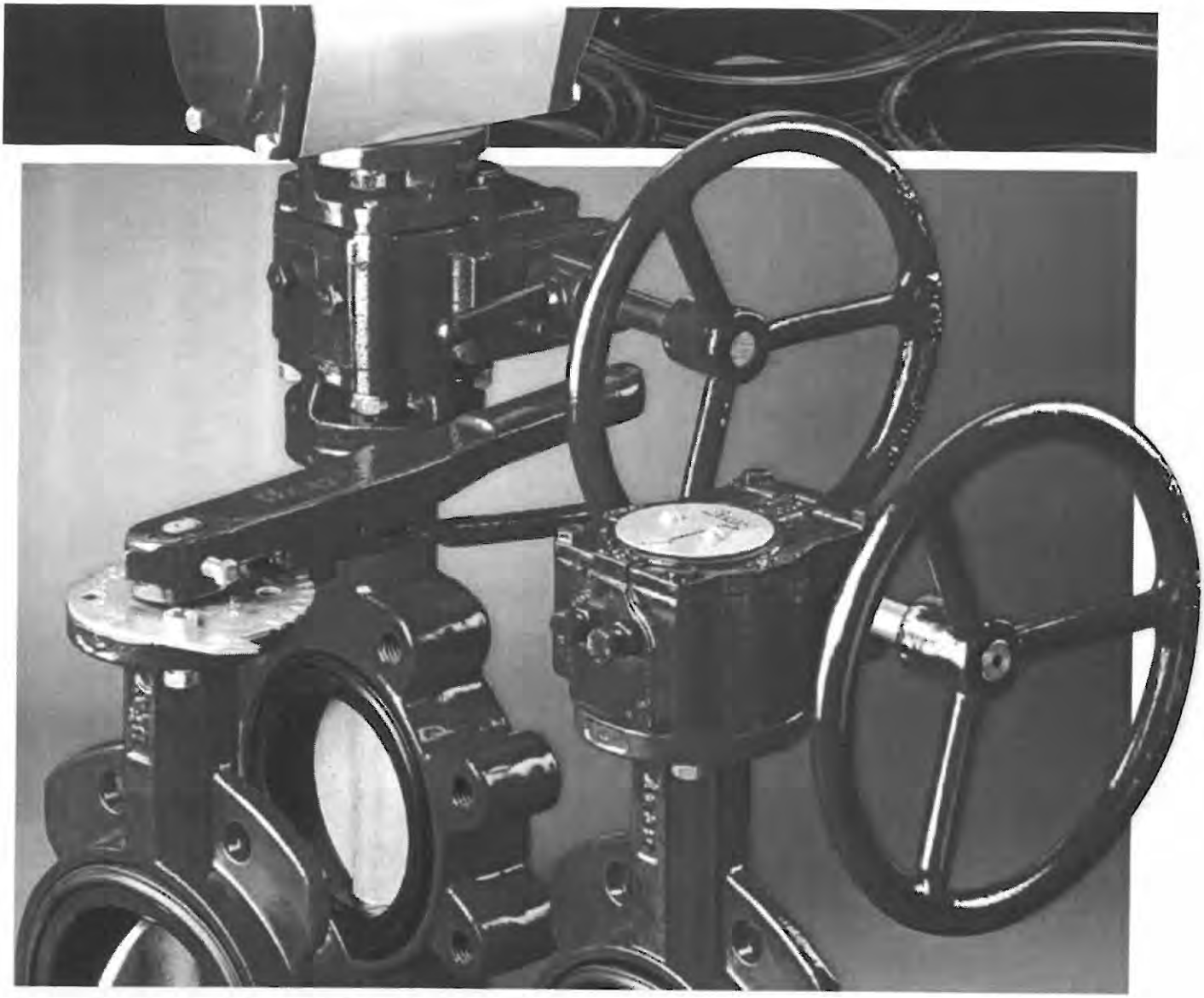

MANUAL OPERATORS

Bray Controls offers three operators for manual control of valve position. All manual operators mount directly to Bray valves, and all are epoxy coated for excellent corrosion, abrasion and impact resistance.

MANUAL OPERATORS	
SERIES 1 - Handle	1"-12" (25mm -300mm)
SERIES 4 - Gear Operator	2"-48" (50mm -1200mm)
SERIES 5 - Declutchable Gear Operator	2"-36" (50mm -900mm)

SERIES 1 HANDLE & NOTCH PLATE Bray offers two handles for on-off and throttling service – one for resilient seated valves from 1"-12" (25mm-300mm), and a high torque handle for high pressure valves from 2 1/2"- 8" (65mm-200mm). These quarter turn handles have a locking spring and a directional pointer for valve disc position indication. Bolted notch plates are offered. For resilient seated valves a 10 position plate is standard. For high pressure valves an 8 position plate is standard. Both contain on-off stops to prevent over rotation of the valve. Optionally available are an infinite position plate, a 180° notch plate, a memory stop, a padlock kit, and a 2" square nut version.

SERIES 4 GEAR OPERATOR For heavy duty on-off and throttling service of 2"-48" (50mm-1200mm) valves, the Series 4 is self lubricated for smooth, trouble-free operation. The rugged, cast iron body with O-ring body seals is weatherproof to IP65. A self-locking worm and worm gear drive holds the valve in the desired position. Features include a readily accessible handwheel, a valve position indicator and mechanical travel stops which permit field adjustment of valve movement to specific degrees of rotation. Optionally available are chainwheel accessories, padlock kits and 2" square nut versions. A Gear Operator with a Stainless Steel housing is also available for valve sizes 1"-16".

SERIES 5 DECLUTCHABLE GEAR OPERATOR Available for 2"-36" (50mm-900mm) valves. This operator is excellent for the safe handling of spring return actuators. During pneumatic operation, the worm of the gear unit is disengaged. Should the valve require opening or closing in the event of power loss, manual rotation of the declutch lever will provide a camming action and engage the worm to the segmented worm gear, allowing rotation of the valve using the handwheel. The Series 5 can be installed in the field with existing Bray pneumatic actuators.

Bray CONTROLS

OPERATION AND MAINTENANCE MANUAL

RESILIENT SEATED BUTTERFLY VALVES

20/21, 22/23, 30/31, 3A/3AH, 31H, 31U, 32/33, 35/36, 36H

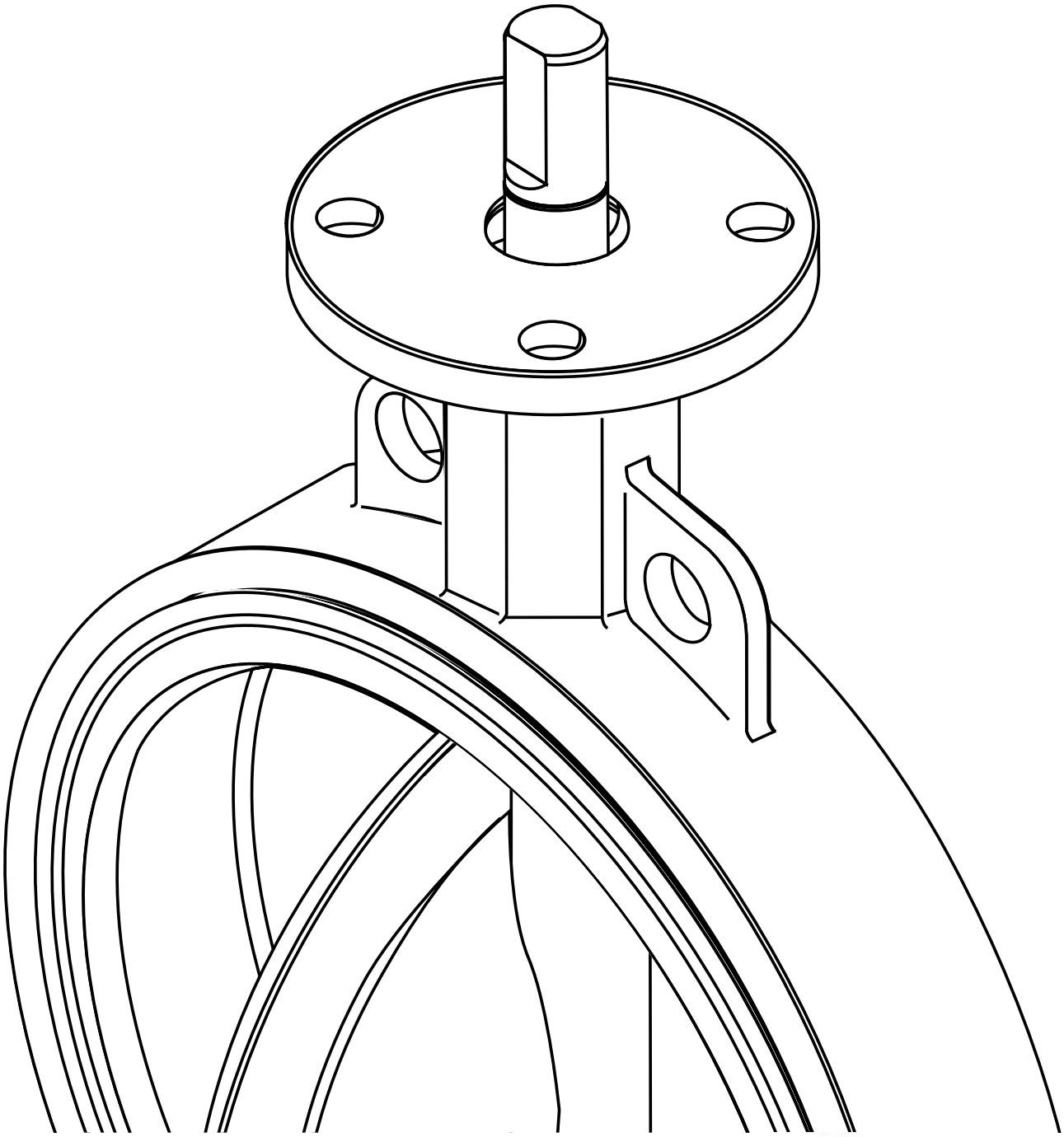

The High Performance Company

Table Of Contents:

PAGE

Safety Instructions: Definition Of Terms 1

Introduction 1

Shipment & Storage 1

Installation Considerations 2

Valves With Spring Return Actuators 2

- Fail Open Assembly 2
- Fail Closed Assembly 2

Valve Location And Orientation In Piping 2

- Valve Orientation Diagrams 4-6

Installation Procedure 6-9

- PTFE Seated Butterfly Valves in Plastic Flanges 9

Maintenance & Repair 9

Appendix 'A' - S20/21 Disassembly/Assembly Instructions 10-11

Appendix 'B' - S22/23 Disassembly/Assembly Instructions 12-13

Appendix 'C' - S30/31 Disassembly/Assembly Instructions 14-15

Appendix 'D' - S3A/3AH Disassembly/Assembly Instructions 16-17

Appendix 'E' - S31H Disassembly/Assembly Instructions 18-19

Appendix 'F' - S31U Disassembly/Assembly Instructions 20-21

Appendix 'G' - S32/33 Disassembly/Assembly Instructions 22-24

Appendix 'H' - S35/36 (Taper Pin Disc/Stem Connection)
Disassembly/Assembly Instructions 25-27

Appendix 'I' - S35/36 (Internal Spline or Keyed Disc/Stem Connection)
Disassembly/Assembly Instructions 28-33

Appendix 'J' - S36H Disassembly/Assembly Instructions 34-36

FOR INFORMATION ON THESE PRODUCTS AND OTHER BRAY PRODUCTS
PLEASE VISIT US AT OUR WEB PAGE - www.bray.com

SAFETY INSTRUCTIONS - DEFINITION OF TERMS

READ AND FOLLOW THESE INSTRUCTIONS
SAVE THESE INSTRUCTIONS

WARNING	indicates a potentially hazardous situation which, if not avoided, **could** result in death or serious injury.
CAUTION	indicates a potentially hazardous situation which, if not avoided, may result in minor or moderate injury.
NOTICE	used without the safety alert symbol indicates a potential situation which, if not avoided, may result in an undesirable result or state, including property damage.

Introduction

Historical Experience

Based on over twenty years experience in the butterfly industry, Bray can state without question the majority of all field problems for resilient seated butterfly valves are directly related to poor installation procedures. For this reason, it is very important all distributor salespeople educate their customers regarding proper installation of resilient seated butterfly valves.

Butterfly Valve Seat / Disc Function

Before reviewing the proper installation, maintenance, and repair procedures for resilient seated butterfly valves, let's discuss the seat-disc function of a butterfly valve. The seat in a resilient seated butterfly valve has molded o-rings on its flange face. **As a result, no gaskets are required as these o-rings serve the function of a gasket.** The flange face and molded o-rings of the seat extend beyond the body face-to-face to ensure sealing at the flange faces. The seat material, which extends past the face is compressed in installation and flows toward the center of the valve seat I.D.

In essence, the elastomer seat acts as a liquid, and the displaced elastomer moves toward the point of least resistance. The seat I.D. of all resilient seated butterfly valves is smaller than the disc O.D. This difference, the disc-seat interference, plus the increased interference due to the elastomer movement toward the seat center after installation, has been engineered so as to be the basis for pressure rating capability and the related seating/unseating torques. **Any change in this interference due to improper installation directly affects the pressure rating and seating/unseating torques.**

Finally, unlike many valve types, the resilient seated butterfly valve's disc actually extends beyond the face of the valve body at given angles of opening (say, 30° or more) when installed between flanges.

CAUTION

It is very important before installation to ensure the critical chord dimension of the disc at the full open position is less than the adjacent pipe flange I.D.

Shipment & Storage

A. The seat, disc, stem and bushing of the resilient seated butterfly valve should be coated with silicone lubricant unless specified otherwise as recommended by Bray Technical Bulletin 1028.

B. The disc should be positioned at 10° open. **Note**: See page 2 for special considerations for valves with spring return actuators.

C. Valves should be stored indoors with a preferred temperature range from 40° F (4°C) to 85° F (29°C).

D. When valves are stored for a long time, open and close the valves once every 3 months.

E. Ship and store valves so that no heavy loads are applied to the bodies.

Installation Considerations – Piping and Valve Orientation and Placement

Piping and Flanged Compatibilities

Piping

These valves have been engineered so that the critical disc chord dimension at the full open position will clear the adjacent inside diameter of most types of piping, including Schedule 40, lined pipe, heavy wall, etc.

Metal Flanges

Resilient seated butterfly valves have been designed to be suitable for all types of flanges (ASME, DIN, JIS and other international flange standards), whether flat-faced, raised face, slip-on, weld-neck, etc. Proper alignment of any butterfly valve between flanges is critical to good performance of the valve. The flange bolts must also be evenly tightened around the circumference of the valve, providing consistent flange compression of the molded o-ring in the seat face.

Since Bray does not recommend the use of gaskets between flanges on resilient seated butterfly valves, a uniform flange face is critical to proper valve sealing. Most weld-neck and slip-on flanges conforming to ASME specifications have an appropriate flange face. Types A and B butt-weld stub-end flanges also provide a suitable mating surface for the molded o-ring.

It should be noted that Type C butt-weld stub-end flanges have an "as formed" flange face. The varying surface of this flange face can create sealing problems between any resilient-seated butterfly valve and the flange face. For this reason, Type C flanges are not recommended for use with resilient-seating butterfly valves.

Non-Metallic Flanges

When non-metallic flanges, such as plastic or PVC, are used with resilient seated butterfly valves, care must be taken not to over-tighten the flange bolts. The inherent flexibility of these non-metallic flange materials allow them to be over-tightened relatively easily. Flexing caused by this over-tightening can actually reduce the compression of the valve between the flanges, causing leaks between the valve and the flange face. Proper alignment and firm, even, but not excessive tightening of flange bolts are especially important with non-metallic flanges. In some cases, non-metallic flanges of low quality will not mate tightly with butterfly valves regardless of the care taken during installation.

Valves with Spring Return Actuators

1. Fail Closed Assemblies

The resilient seated butterfly valve disc is shipped in the full closed position since no air pressure is present to compress the springs and open the disc.

CAUTION

Installing the valve with the disc in the full closed position may create an increase in the valve seating torque, which may prevent the valve from opening.

It is recommended that the actuator be removed and the disc be opened to approximately 10° before and during installation.

2. Fail Open Assemblies

The resilient seated butterfly valve disc is shipped in the full open position since no air pressure is present to compress the springs and close the valve disc. As a result, the disc edge is exposed to possible damage, which will cause premature valve failure.

CAUTION

Use caution when handling and installing the valve to prevent damage to the disc edge. It is recommended that the actuator be removed and the disc closed before and during installation.

3. Valve Location

a. Resilient seated butterfly valves should be installed if possible a minimum of 6 pipe diameters from other line elements, i.e., elbows, pumps, valves, etc. of course, 6 pipe diameters are not always practical, but it is important to achieve as much distance as possible.

b. Where the resilient seated butterfly valve is connected to a check valve or pump, use an expansion joint between them to ensure the disc does not interfere with the adjacent equipment.

4. Valve Orientation

a. In general, Bray recommends the resilient seated valve be installed with the stem in the vertical position and the actuator mounted vertically directly above the valve; however, there are those applications as discussed below where the stem should be horizontal. **NOTE:** Bray does not recommend valves be installed in an upside-down position.

b. For slurries, sludge, mine tailing, pulp stock, dry cement, and any media with sediment or particles, Bray recommends the resilient seated valve be installed with the stem in the horizontal position with the lower disc edge opening in the down-stream direction.

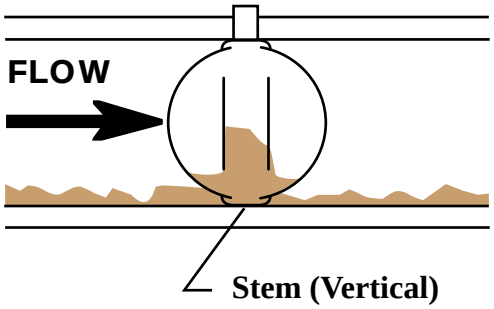

INCORRECT INSTALLATION

Sludge builds up on disc

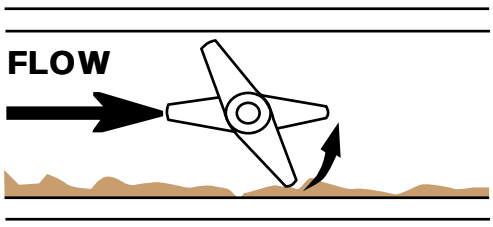

Stem (Horizontal)

CORRECT INSTALLATION

Sludge passes under disc

Valve Orientation (Continued)

c. Resilient seated butterfly valve located at the discharge of a pump should be oriented as follows:

	INCORRECT INSTALLATION	CORRECT INSTALLATION
i.) For centrifugal Pump – Pump shaft horizontal and stem vertical	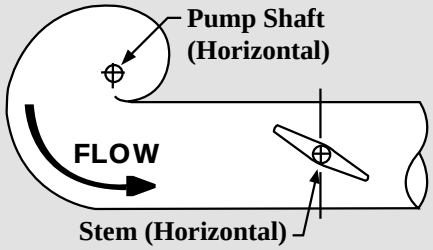	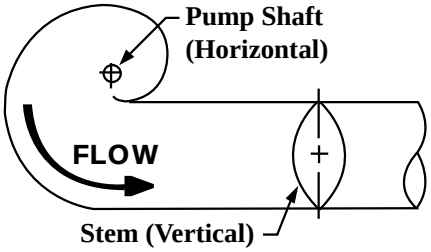
ii.) Centrifugal Pump – Pump shaft vertical & stem horizontal	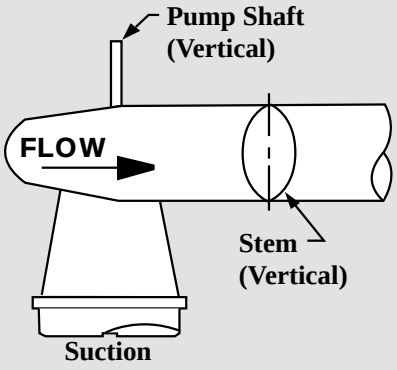	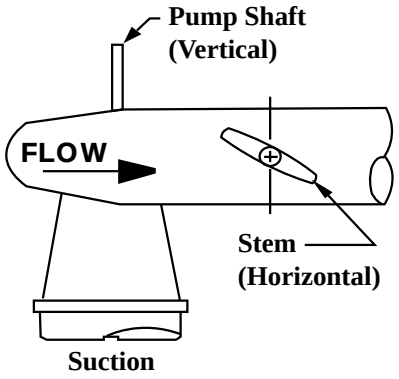
iii.) Axial Pump – Pump shaft vertical & stem vertical	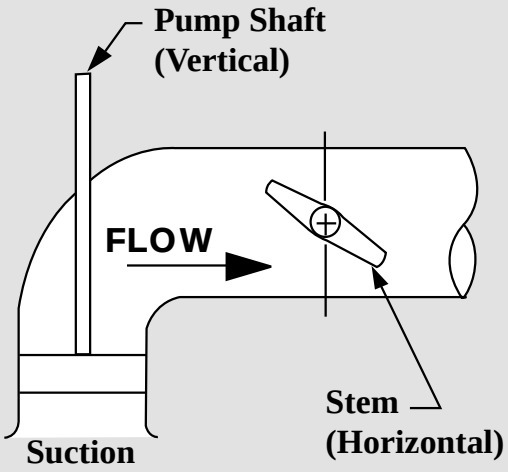	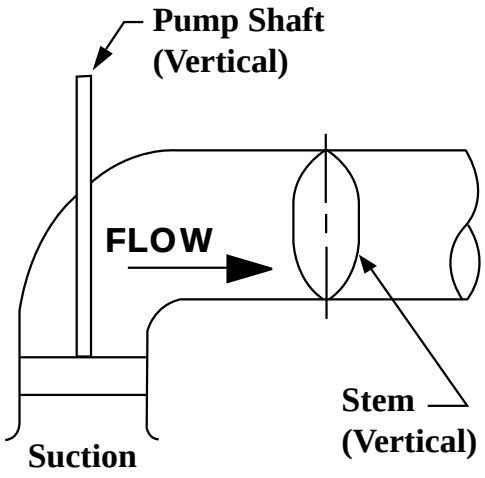

Valve Orientation (Continued)

d. Butterfly valves located downstream of a bend or pipe reducer should be oriented as follows:

	INCORRECT INSTALLATION	CORRECT INSTALLATION
i.) Bend	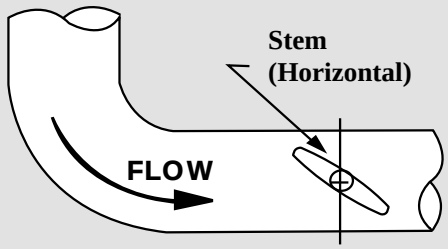	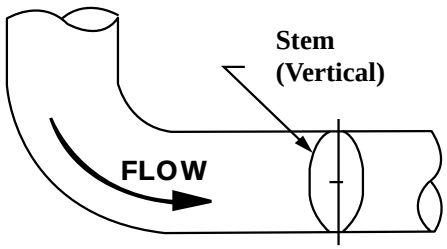
ii.) Tee	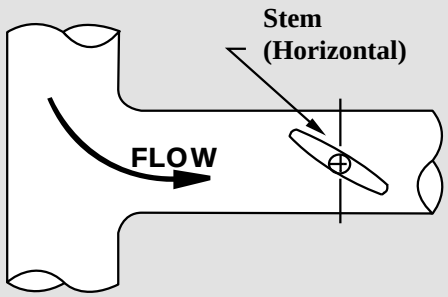	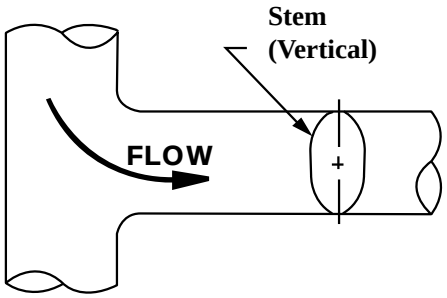
iii.) Pipe Reducer	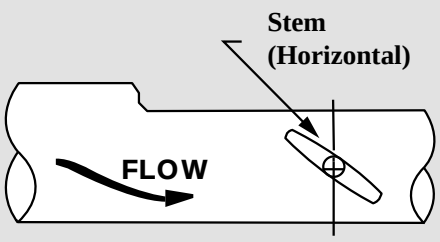	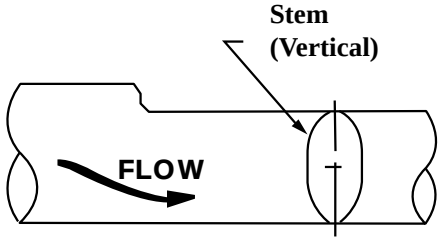

Valve Orientation (Continued)

e. Butterfly valves in combination for control/isolation applications should be installed as follows:

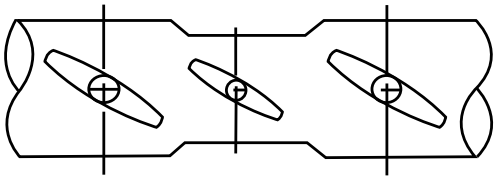

INCORRECT INSTALLATION

Combination with all valve stems in the same direction accelerates possible noise, vibration, & erosion problems.

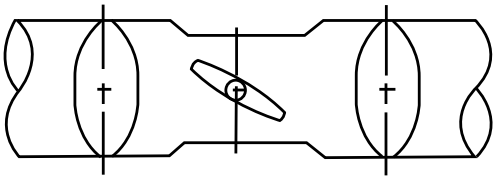

CORRECT INSTALLATION

Combination with the stem of the control valve at right angle to those of other valves tends to cancel the drift of the fluid, and reduces noises, vibration, and erosion.

Installation Procedure

A. General Installation

1. Make sure the pipeline and pipe flange faces are clean. Any foreign material such as pipe scale, metal chips, welding slag, welding rods, etc., can obstruct disc movement or damage the disc or seat.
2. The Bray elastomer seat has molded o-rings on the face of the seat. **As a result, no gaskets are required as these o-rings serve the function of a gasket.**
3. Align the piping and then spread the pipe flanges a distance apart so as to permit the valve body to be easily dropped between the flanges without contacting the pipe flanges ***(see figure 1 page 6).***
4. Check to see that the valve disc has been positioned to a partially open position, with the disc edge about 1/2 inch to 3/8 inch inside the face of the seat, (approximately 10° open) ***(see figure 1 page 6)*** **Note: See page 2 for special consideration for valves with spring return actuators.**
5. Insert the valve between the flanges as shown in figure 1 of page 6, taking care not to damage the seat faces. Always pick the valve up by the locating holes or by using a nylon sling on the neck of the body.

WARNING

Never pick up the valve by the actuator or operator mounted on top of the valve.

Figure 1 – Insert Resilient Seated Butterfly Valve Between Flanges

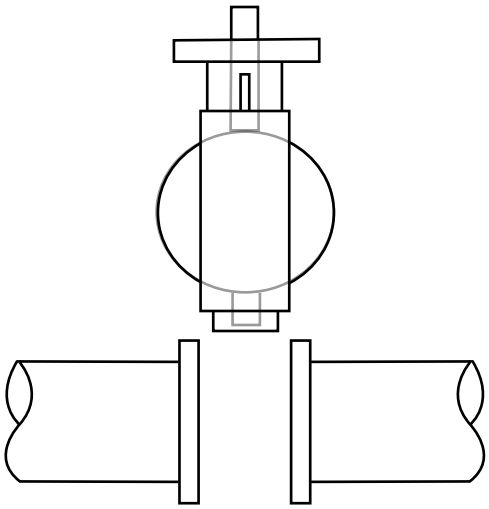

INCORRECT INSTALLATION

CAUTION

Pipe not spread, disc opened beyond valve body face; Results; Disc edge damaged when it hits pipe flange.

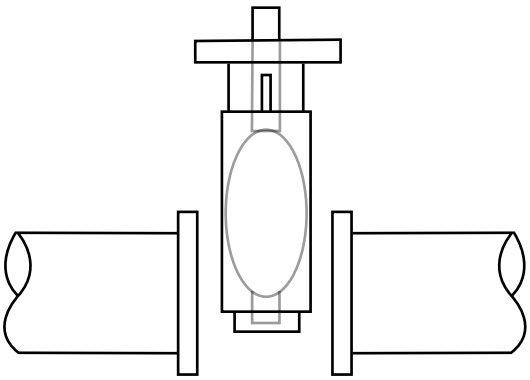

CORRECT INSTALLATION

Pipe spread and aligned, disc rotated; Results; no undesirable beginning seating/ unseating torque, disc edge protected.

6. Place the valve between the flanges, center it, and then span the valve body with all flange bolts, but do not tighten the bolts. Carefully open the disc to the full open position, making sure the disc does not hit the adjacent pipe I.D. Now systematically remove jack bolts or other flange spreaders, and hand-tighten the flange bolts as shown in **Figure 2** below. Very slowly close the valve disc to ensure disc edge clearance from the adjacent pipe flange I.D. Now open the disc to full open and tighten all flange bolts per specification as shown in **Figure 2**. Finally, repeat a full close to full open rotation of the disc to ensure proper clearances ***(See figures 3 & 4 page 7)***.

Figure 2 – Flange Bolt Tightening Pattern

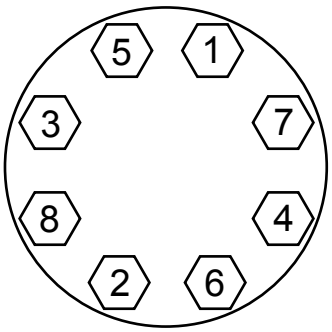

Figure 3 – Initial Centering & Flanging of Valve

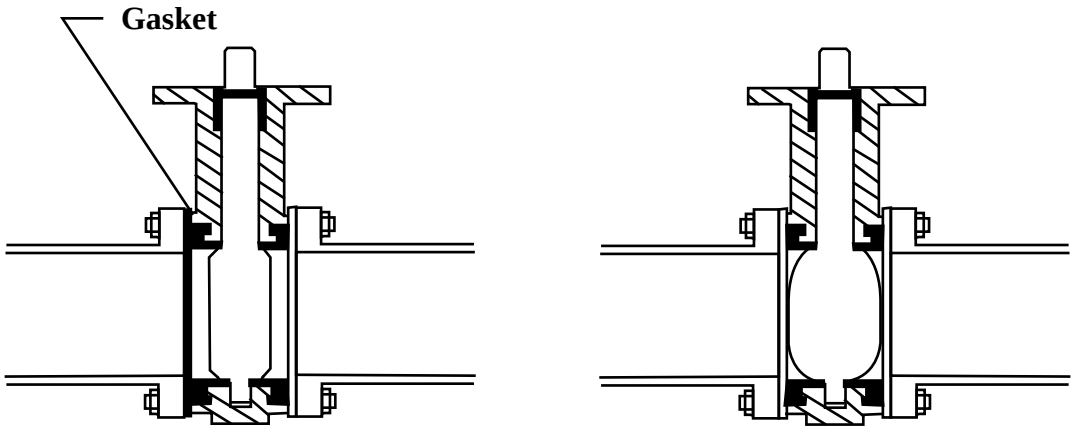

INCORRECT INSTALLATION

Disc in closed position; gaskets used; Results – Seat distorted and over-compressed causing high initial unseating torque problems.

CORRECT INSTALLATION

Bolts snugged, not torqued tight, disc edge within body face-to-face but not fully closed, no flange gaskets; Results: No disc edge damage, proper sealing allowed.

Figure 4 – Final Aligning & Tightening of Flange Bolts

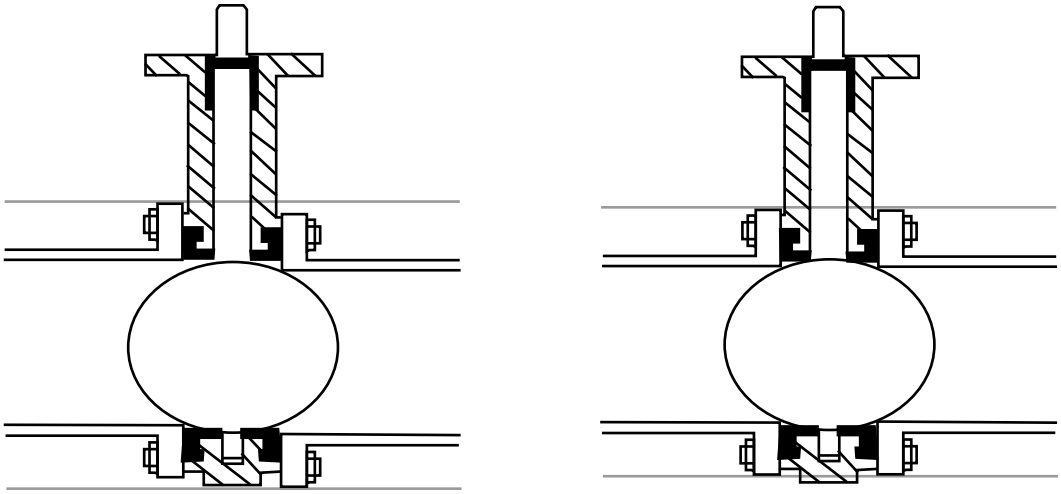

INCORRECT INSTALLATION

Piping misaligned; Results Disc O.D. strikes pipe I.D. causing disc edge damage, increased torque & leakage. Seat face o-rings will not seal properly with incorrectly aligned piping.

CORRECT INSTALLATION

Piping aligned properly when bolts tightened, disc in full open position; Results – disc clears adjacent pipe I.D., seat face seals properly, no excessive initial torque.

When resilient seated butterfly valves are to be installed between ASME welding type flanges, care should be taken to abide by the following procedure to ensure no damage will occur to the seat:

1. Place the valve between the flanges with the flange bores and valve body aligned properly. The disc should be in the 10° open position.
2. Span the body with the bolts.
3. Take this assembly of flange-body-flange and align it properly to the pipe.
4. Tack weld the flanges to the pipe.
5. When tack welding is complete, remove the bolts and the valve from the pipe flanges and complete the welding of the flanges. Be sure to let the pipe and flanges cool before installing the valve.

CAUTION

Never complete the welding process (after tacking) with the valve between pipe flanges. This causes severe seat damage due to heat transfer.

Installation of Bray PTFE Seated Butterfly Valves in Plastic Flanges.

Bray recommends the following guidelines when PTFE Seated Valves are installed between plastic flanges:

1. The valve body should be coated with epoxy, not nylon. The extra thickness of the nylon coating slightly reduces the seat compression, and every advantage to maximize seat compression should be taken with plastic flanges.
2. The plastic flange can be either one piece construction, or two piece construction comprised of a stub end and a backup ring.
3. The plastic flange style can be butt-weld, socket or slip-on, but butt-weld and socket are preferred.
4. The plastic flange face must be flat. Concave and convex flange faces are not acceptable. This includes flange faces that were originally flat but later distorted into a concave shape by over tightening the flange bolts.
5. The plastic flange face surface may have grooves or serrations, provided the grooves do not exceed .100" (2.54 mm) in width or .020" (.508 mm) in depth. If the grooves are less than .100" (2.54 mm) in width, the groove depth must not exceed the width. However, fine conentric or "phonograph record" grooves are acceptable regardless of the groove depth.
6. Flange gaskets must not be used with PTFE seats, since they create an uncontrolled over compression that can buckle the PTFE and damage the seat. If a damaged face, a flange gasket can appear to cure the leak to atmosphere, while simultaneously damaging the PTFE seat and creating a second leak across the disc or up the stem hole. Leaks across the plastic flange must be cured without the use of gaskets, by proper selection and installation of the flange.
7. The bolts holding plastic flanges should be installed in strict conformance to the recommended practices of the plastic flange manufacturer. This usually involves aligning the flanges accurately, using lubricated bolts, and tightening the bolts in the proper sequence and to the specified torque. Uniform stress across the flange prevents leakage.

Maintenance and Repair

The many Bray features minimize wear and maintenance requirements. No routine lubrication is required. **All components – stem, disc, seat, bushing, stem seal, etc., are field replaceable, no adjustment is required**. If components require replacement, the valve may be removed from the line by placing the disc in the near closed position, then supporting the valve and removing the flange bolts.

WARNING No valve maintenance, including removal of manual or power actuators, should be performed until the piping system is completely depressurized.

Appendix C

Disassembly/Assembly Instructions

Series 30/31 Resilient Seated Butterfly Valves

Disassembly –

1. Remove the handle, gear operator, or power actuator from actuator mounting flange.
2. Remove the "Spirolox"® retaining ring and the two C-ring stem retainers from the stem hole.
3. Then remove the stem, bushing and seal.
4. Remove the disc from the seat, protecting the disc edge at all times.
5. Push the seat into an oval shape, and then remove the seat from the body.

Assembly –

1. Push the valve seat into an oval and push it into the body with seat stem holes aligned to body stem holes.

NOTICE	When installing the seat the larger hole should be on top and the smaller hole should be on bottom.

2. Insert stem seal and bushing.
3. Push stem into the stem hole of the body until the bottom of the stem is flush with the inner top edge of the seat.
4. Install a light coating of silicone or grease on the I.D. of seat. Insert the disc into the seat by lining up the disc holes with the stem holes of the seat.

   Note: The broached double "D" flats in the disc must be toward the bottom of the valve body.

5. With a downward pressure and rotating the stem back and forth, push the stem until the stem touches the bottom of the body stem hole.
6. Make certain that when pushing the stem through the disc bottom, the broached flats of stem and disc are aligned.
7. Replace the stem bushing and two stem retainers, then replace the "Spirolox"® retaining ring back into position.
8. Replace handle, manual gear operator or power actuator on the actuator mounting flange.

SERIES 30/31

RESILIENT SEATED BUTTERFLY VALVES

1 BODY (S30 WAFER STYLE SHOWN)
2 SEAT
3 DISC
4 STEM
5 STEM SEAL
6 STEM BUSHING
7 STEM RETAINER
8 THRUST WASHER
9 RETAINING RING

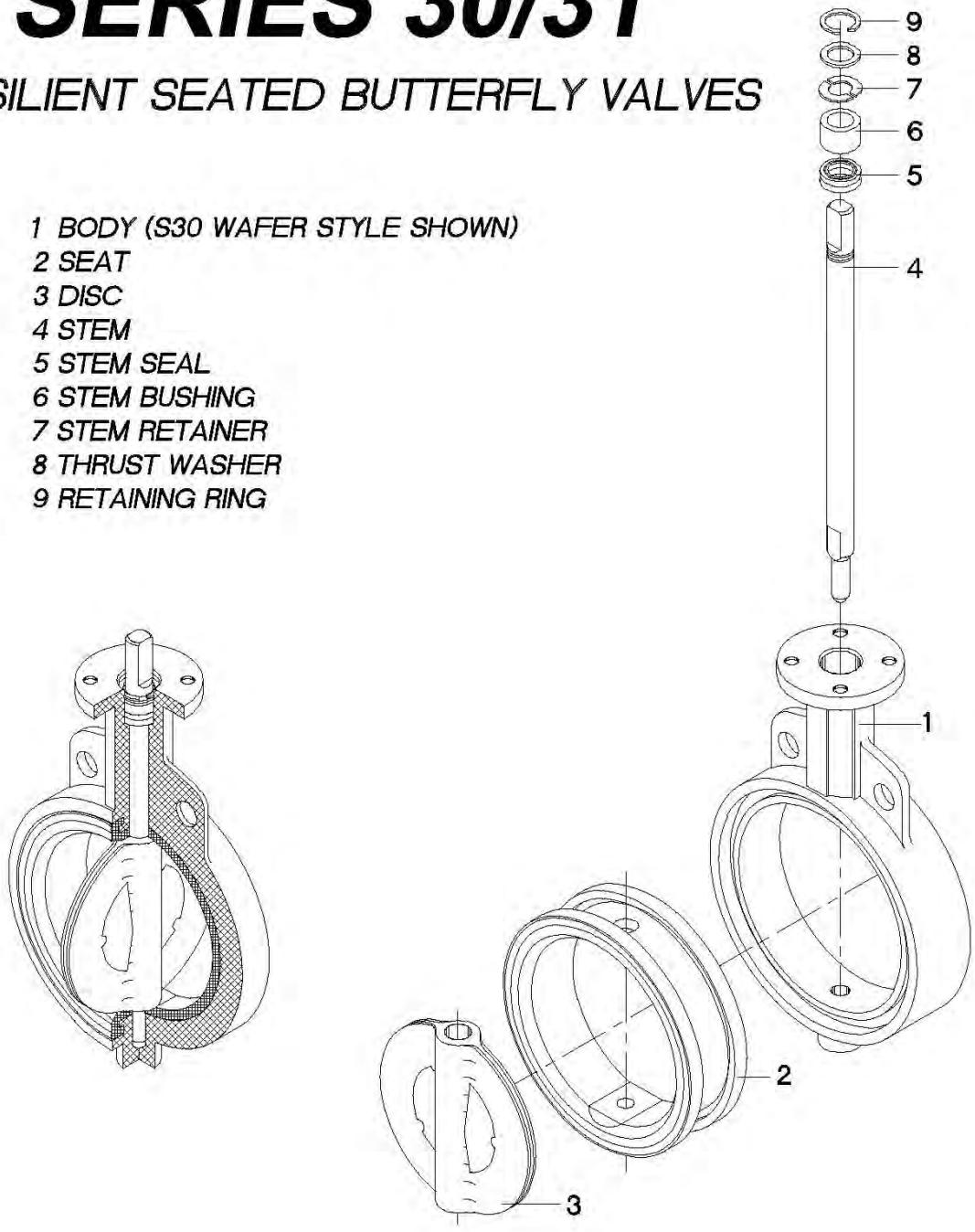

STAINLESS STEEL BALL VALVE INFORMATION

Series 50

Flanged Full Port Ball Valve

SHARPE®

Valves, Automation & Controls

Features

- Full port
- Class 150
- Locking device
- Blow-out proof stem
- NACE MR-0175
- ISO 5211 mounting pad
- Wall thickness ASME B16.34
- Face to face dimensions ASME B16.10
- Flange dimensions ASME B16.5
- Pressure test B16.34 (Optional API 598)

Toll Free (877) 774-2773 | Local (708) 562-9221 | Fax (708) 562-0890 | www.sharpevalves.com

Dimensions

1/2" - 2"

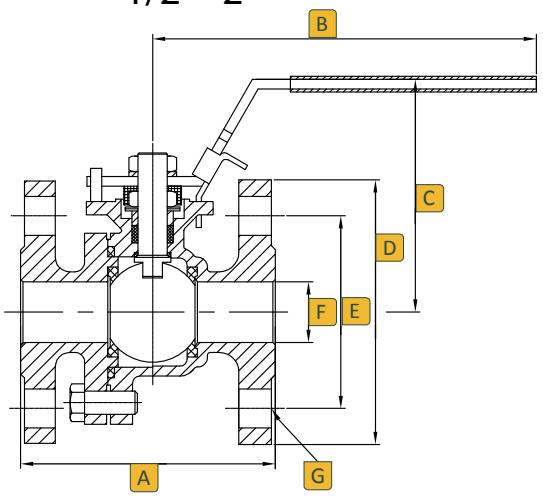

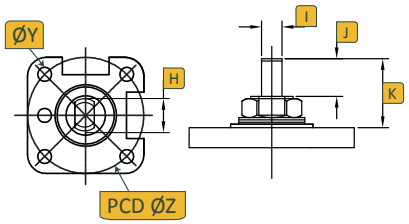

2-1/2" - 4"

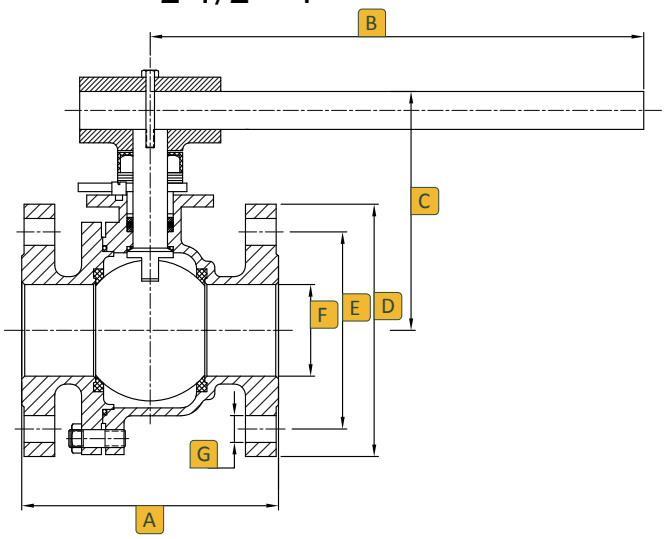

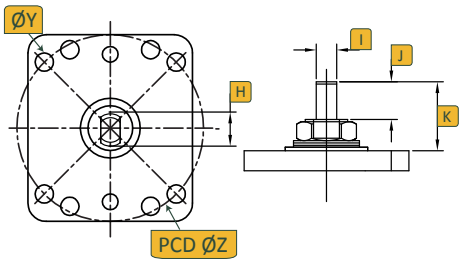

6" & 8"

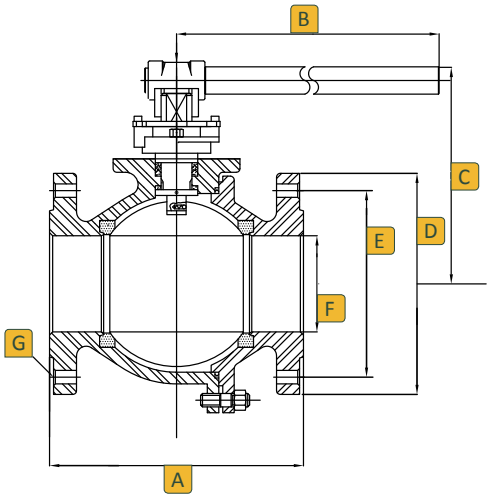

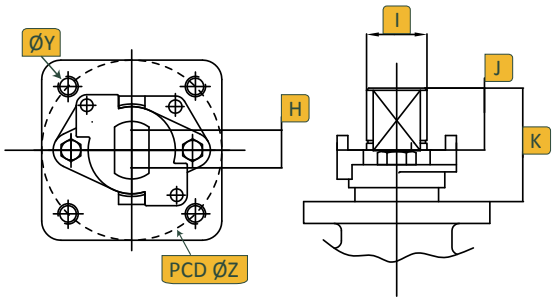

Size	A	B	C	D	E	F	G	H	I	J	K	ØY	ØZ
1/2	4.25	4.75	3.60	3.50	2.38	0.59	4-0.630	3/8-24 UNF	0.22	0.39	0.73	M6	1.969
3/4	4.62	4.75	3.75	3.88	2.75	0.787	4-0.630	3/8-24 UNF	0.22	0.34	0.70	M6	1.969
1	5.00	6.22	3.75	4.25	3.12	0.984	4-0.630	7/16-20 UNF	0.30	0.60	0.85	M6	1.969
1-1/2	6.50	9.00	4.50	5.00	3.88	1.496	4-0.630	9/16-18 UNF	0.35	0.68	1.18	M8	2.756
2	7.00	9.00	4.80	6.00	4.75	1.969	4-0.748	9/16-18 UNF	0.35	0.65	1.18	M8	2.756
2-1/2	7.48	13.74	6.70	7.01	5.50	2.56	4-0.750	1-14 UNS	0.75	0.66	1.87	M10	4.02
3	7.99	13.74	7.00	7.48	6.00	3.15	4-0.750	1-14 UNS	0.75	0.69	1.87	M10	4.02
4	8.98	13.74	7.70	9.02	7.50	3.94	4-0.750	1-14 UNS	0.75	0.69	1.91	M10	4.02
6	15.50	25.59	10.50	10.98	8.50	6.00	8-0.875	1.72	1.02	1.46	3.58	M12	4.92
8	18.00	55.12	13.38	13.50	10.63	8.00	8-0.875	1.72	1.02	1.46	3.58	M12	4.92

SHARPE - SERIES 50 | 2-Piece Flanged Ball Valve
Toll Free (877) 774-2773 | Local (708) 562-9221 | Fax (708) 562-0890 | www.sharpevalves.com

SHARPE - SERIES 50 | 2-Piece Flanged Ball Valve
Toll Free (877) 774-2773 | Local (708) 562-9221 | Fax (708) 562-0890 | www.sharpevalves.com

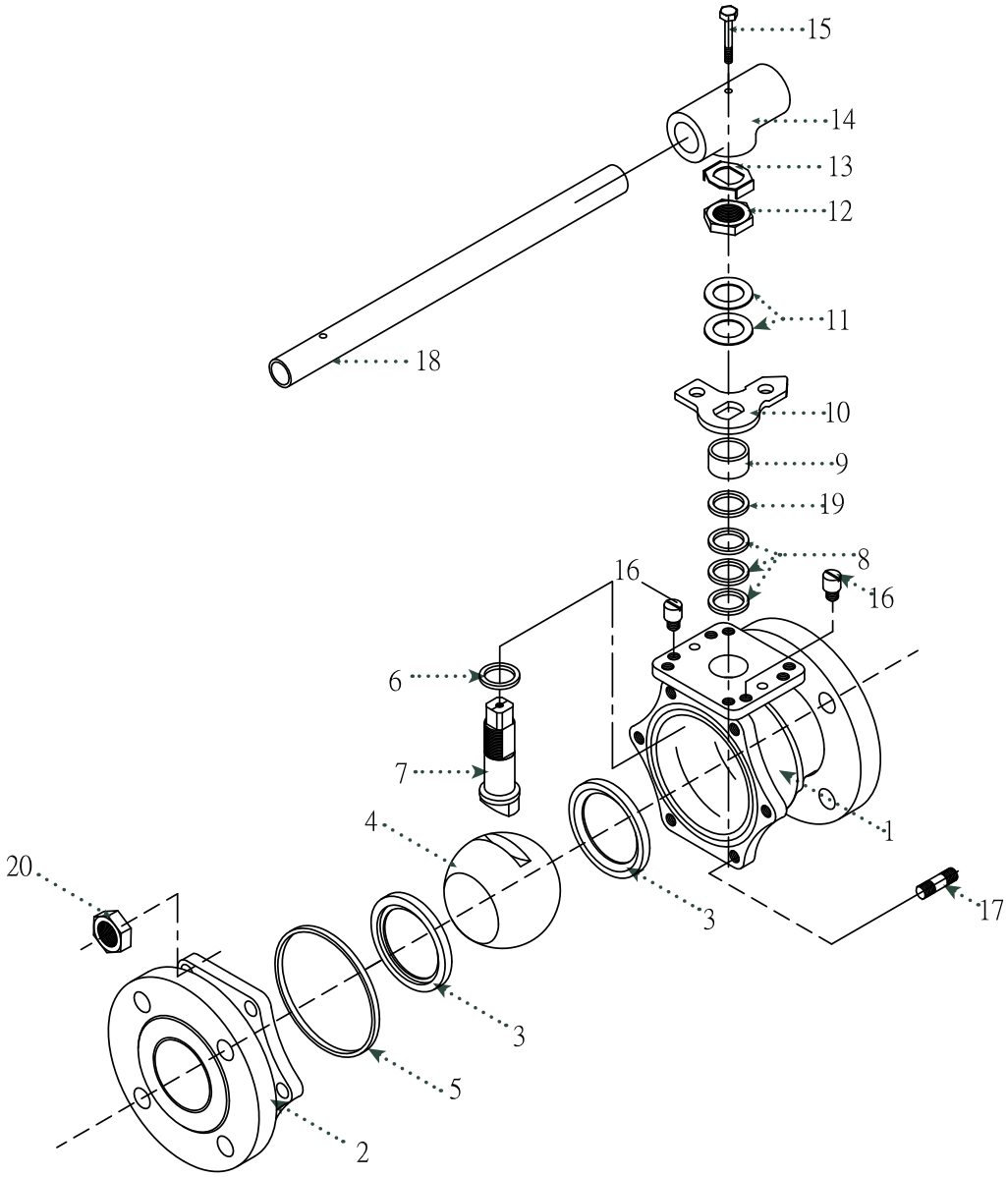

No.	Part Name	Qty	Material
1	Body	1	316 Stainless Steel, ASTM A351 or Carbon Steel, ASTM A216 WCB
2	Body Ends	1	316 Stainless Steel, ASTM A351 or Carbon Steel, ASTM A216 WCB
3	Seat	2	PTFE, RTFE, or TFM
4	Ball	1	316 Stainless Steel
5	Body Seal	1	RTFE, PTFE or MG1241
6	Thrust Washer	1	RTFE, PTFE or MG1241
7	Stem	1	316 Stainless Steel
8	Stem Seal	2	RTFE, PTFE or MG1241
9	Gland	1	304 Stainless Steel
10	Stopper	1	304 Stainless Steel
11	Belleville Washer	2	301 Stainless Steel
12	Packing Nut	1	304 Stainless Steel
13	Lock Tab	1	304 Stainless Steel
14	Wrench Block	1	304 Stainless Steel
15	Hex Head Bolt	1	304 Stainless Steel
16	Stop Pin	2	304 Stainless Steel
17	Body Bolts	6/8	304 Stainless Steel
18	Handle	1	304 Stainless Steel
19	Flat Washer	1	304 Stainless Steel
20	Body Bolts	6/8	304 Stainless Steel

Size	CV	Port	Weight LB
1/2	26	0.59	4
3/4	50	0.78	6
1	94	1.00	8
1-1/2	260	1.50	15
2	480	2.00	20
2-1/2	750	2.55	36
3	1300	3.00	45
4	2300	4.00	75
6	5400	6.00	135
8	10000	7.88	290

Class 150 Temperature / Pressure Rating

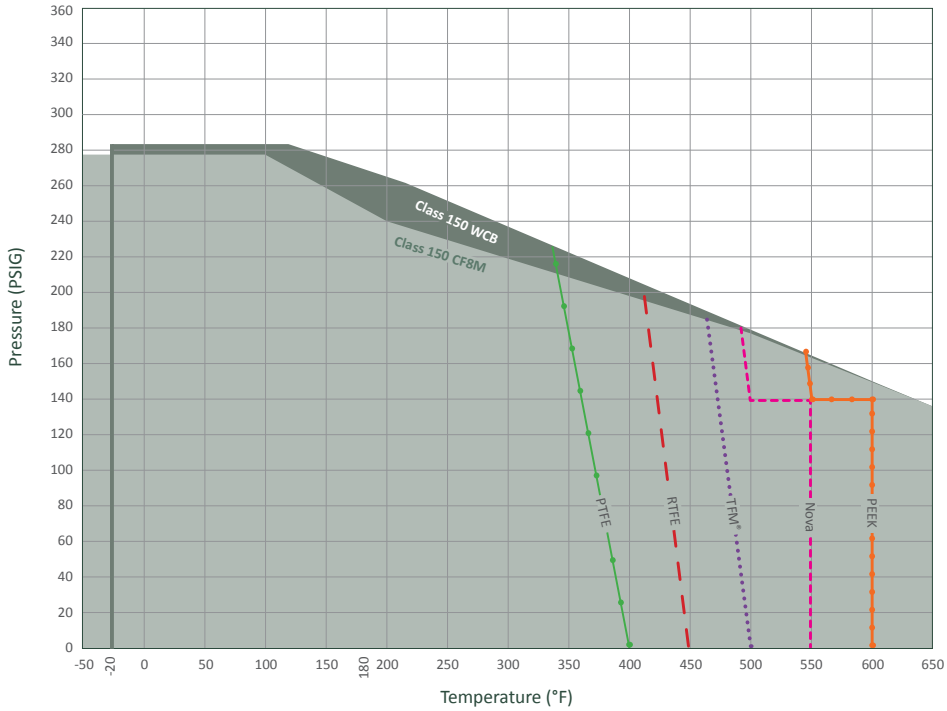

Ordering

Fig: 1/2 - 50 - 11 - 6 - N
Description: 1/2" - 5011 - 316 Body - Nova Seat

Size	Series	Class		Body		Seat		Options	
1/2	50	11	150#	2	Alloy 20	R	RTFE	X	Oxygen Service
3/4				3	Monel	N	Nova	OH	Oval Handle
1				4	Carbon Steel	T	PTFE	F	Fugitive Emissions, Certified ANSI 593.00.01
1-1/2				5	Hastelloy C	P	PEEK	E	Extended Stem
2				6	Stainless Steel	M	TFM	L	Lockable Extended Stem
2-1/2								D	Leak Detection Stem
3								GO	Gear Operator
4								7	17-4PH Stem
6								A	Nace
8									

Due to continuous development of our product range, we reserve the right to change the dimensions and information for this product as required.

RUPTURE DISK INFORMATION

MONO Type

the best choice for low and intermediate burst ratings

- Sizes 1/2" thru 24" diameters
- Designed to fit ASME B16.5 Class 150 flanges (Higher ratings to fit Class 300 flanges are furnished in the INVERTED and DUPLEX Type Disks)
- Burst ratings 0.25 to 150 psig
- 0% manufacturing range
- Operating pressures to 90% of the disk's marked burst pressure (Contact ZOOK for operating ratio for burst pressures below 40 psig)
- Temperature ratings –290°F to +700°F (–179°C to +371°C). Maximum temperature rating without insulation is 430°F (221°C) or 700°F (371°C) with insulation. Contact ZOOK for higher temperature ratings. The specified temperature shall be at the disk location at the time when the disk is expected to rupture
- Counterbored side of the disk contacts the process media
- Vacuum supports are available for ratings below 25 psig
- May be configured to withstand high back pressure generated in closed piping systems – request Bak-Pressure™ bulletin
- Stocked MONO Disks, ready for immediate shipment
  Sizes: 1", 1-1/2", 2", 3", 4", 6", 8" to fit ASME B16.5 Class 150 flanges
  Burst Ratings: 10, 15, 20, 25, 30, 40, 50, 75, 100, 125, 150 psig @ 72°F (22°C)

Note: Sizes 6" and 8" with burst ratings 125 and 150 psig @ 72°F (22°C) are stocked in INVERTED type

- ASME UD marking available

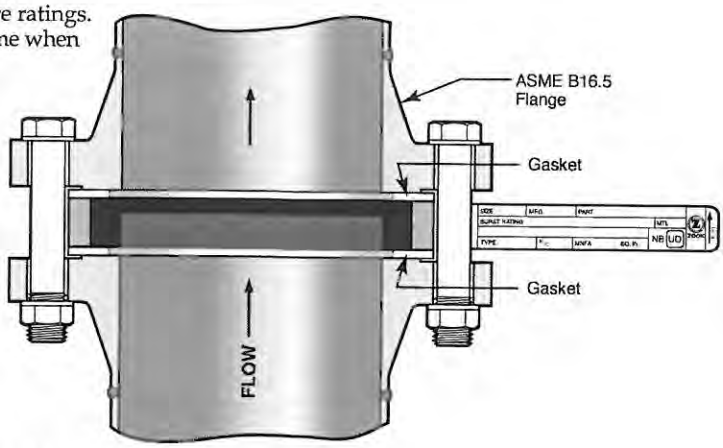

Certified Flow Resistance Factor (K_{rgl})

Support Style	K_{rgl}
MONO – no support	0.26
MONO – with bar	2.40
MONO – with cross	5.40
MONO – with ring	6.44
MONO – with plate	15.70

Required Vacuum Support Style for Full Vacuum Service

Size	Burst Rating	Support Style
1"	below 25 psig	MONO – with ring
1-1/2"	below 25 psig	MONO – with bar
2" - 14"	9 to 25 psig	MONO – with bar
2" - 14"	5 to below 9 psig	MONO – with cross
2" - 14"	below 5 psig	MONO – with plate

Contact ZOOK for sizes 16" and larger

Specifications – ASME B16.5 Class 150

Nominal Disk Sizes	Minimum net flow area (MNFA) Sq. inches					Disk Dimensions				Burst Ratings psig	
	Full Bore	Vacuum support style				Diameter		Thickness*			
		Ring	Bar	Cross	Plate	I.D.	O.D.	Standard Disk	Insulated Unit	Min.	Max.
1/2"	0.30	N/A	N/A	N/A	N/A	0.622"	1-3/4"	5/8"	1-3/4"	25	150
3/4"	0.53	N/A	N/A	N/A	N/A	0.824"	2-1/8"	5/8"	1-3/4"	25	150
1"	0.78	0.44	0.60	0.47	0.32	1"	2-1/2"	7/8"	2-1/4"	10	150
1-1/2"	1.76	N/A	1.34	1.05	0.72	1-1/2"	3-1/4"	7/8"	2-1/4"	7	150
2"	3.14	N/A	2.39	1.86	1.30	2"	4"	7/8"	2-1/4"	3	150
3"	7.06	N/A	5.56	4.31	2.95	3"	5-1/4"	7/8"	2-1/4"	2	150
4"	12.56	N/A	10.56	8.81	5.47	4"	6-3/4"	7/8"	2-1/4"	1.5	150
6"	28.27	N/A	22.27	17.27	12.05	6"	8-5/8"	7/8"	2-1/4"	1	100
8"	50.02	N/A	40.26	31.82	21.14	8"	10-7/8"	1-1/8"	2-3/4"	0.50	100
10"	78.53	N/A	63.53	50.78	32.66	10"	13-1/4"	1-1/2"	3-3/8"	0.25	100
12"	113.09	N/A	89.09	69.09	47.24	12"	16"	2"	4-3/8"	0.25	75
14"	137.88	N/A	108.06	83.31	58.07	13-1/4"	17-5/8"	2-1/4"	4-7/8"	0.25	50
16"	182.65	N/A	144.52	112.65	84.49	15-1/4"	20-1/8"	2-1/2"	5-3/8"	0.25	50
18"	233.70	N/A	181.95	153.70	104.31	17-1/4"	21-1/2"	2-3/4"	5-7/8"	0.25	50
20"	291.03	N/A	233.28	184.53	122.49	19-1/4"	23-3/4"	3"	6-3/8"	0.25	40
24"	424.55	N/A	354.80	294.05	190.61	23-1/4"	28-1/8"	3"	6-3/8"	0.25	25

125

*Standard disk thickness does not include gaskets.
Insulated unit thickness includes all gaskets

Note: Maximum pressure rating of ASME B16.5 Class 150 flanges is 290 psig @ 100°F (38°C). The maximum pressure rating is lower at higher temperatures. Reference ASME/ANSI B16.5

AIR RELEASE VALVE INFORMATION

Pressure Air Release Valves

Dimensions and Weights

MODEL	INLET NPT	TRIM	HEIGHT	WIDTH	WEIGHT (lbs)
PL10	1" NPT	S/S	9 1/8"	9 3/4"	22
PL10A	2" NPT	S/S	9 1/8"	9 3/4"	22
PL20	2" NPT	S/S	10 1/2"	10 1/8"	45
PL20A	3" NPT	S/S	12 1/4"	10 1/8"	54
PL21	2" 125# Flg.	S/S	14"	10 1/8"	51
PL22	2" 250# Flg.	S/S	14 1/4"	10 1/8"	56
P250	2 1/2" NPT	IBBT	11 1/8"	11 1/2"	58
P251	2 1/2" 125# Flg.	IBBT	14 1/8"	11 1/2"	68
P252	2 1/2" 250# Flg.	IBBT	14 5/16"	11 1/2"	70
P30	3" NPT	IBBT	13 1/2"	12 1/2"	87
P31	3" 125# Flg.	IBBT	16 3/16"	12 1/2"	100
P32	3" 250# Flg.	IBBT	16 9/16"	12 1/2"	103
P40	4" NPT	IBBT	16 5/8"	4 1/4"	132
P41	4" 125# Flg.	IBBT	18 7/8"	14 1/4"	145
P42	4" 250# Flg.	IBBT	19 3/16"	14 1/4"	158

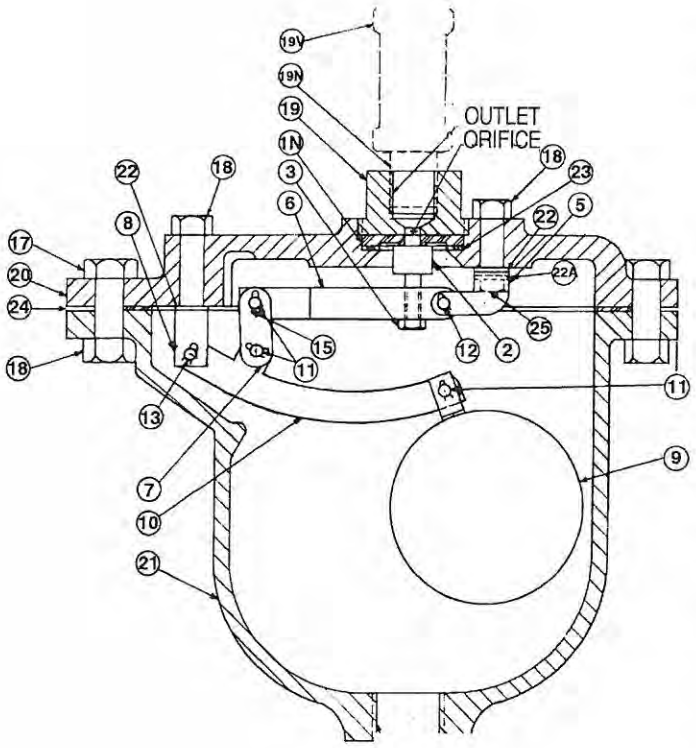

CRISPIN Pressure Air Release Valves operate by means of a compound lever system. This lever system multiplies the weight of the float so that the force pulling the rubber valve away from the orifice is greater than the force or system pressure holding it closed. The pressure at which it will operate is determined by the orifice size. The orifice size will vary inversely to the pressure, that is, as the operating pressure increases the orifice must be smaller, as the operating pressure decreases the orifice can be larger. A valve with an orifice size small enough to permit operation at 300 psig will still function at pressures less than 300 PSIG.

Where pressure air release valves are used on systems other than water, the specific gravity of the liquid must be considered (re. catalog sheet: "Air Release Valves For Liquids Other Than Water"). The specific gravity affects the float buoyancy and, subsequently, valve performance. For example, a valve applied on a petroleum application would require a float of lighter weight in order to provide a buoyancy equivalent to that of the float in water.

Pressure Air Release Valves

PL SERIES

Pressure Air Release Valve Parts Lists:

1" and 2" Valves

PART NO.	ITEM	MATERIAL
1N*	SEAT	PVC
1P*	SEAT	Stainless Steel
2	VALVE	BUNA-N Rubber
3	PLUNGER NUT	Stainless Steel
5	VALVE FULCRUM	Stainless Steel
6	VALVE LEVER	Stainless Steel
7	LINK	Stainless Steel
8	BALL FULCRUM	Stainless Steel
9	BALL FLOAT	Stainless Steel
10	BALL LEVER	Stainless Steel
11	BEARING PIN	Stainless Steel
12	BEARING PIN	Stainless Steel
13	BEARING PIN	Stainless Steel
15	PIN CLIP	Stainless Steel
17	BOLT	Steel
18	NUT	Steel
19	TOP	Cast Iron
19N**	NIPPLE	Steel
~~19V**~~	~~VACUUM CHECK~~	~~Brass~~
20	FLANGE	Cast Iron
21**	BODY	Cast Iron
21F**	BODY-125* ANSI Flanged	Cast Iron
~~21FH**~~	~~BODY-250* ANSI Flanged~~	~~Cast Iron~~
22	FULCRUM WASHER	Fiber
22A	FULCRUM WASHER	Fibre
23	SEAT GASKET	Fibre
24	FLANGE GASKET	Armstrong
25	BOLT	Stainless Steel
26	NUT	Stainless Steel

2 1/2", 3" and 4" Valves

PART NO.	ITEM	MATERIAL
1N*	SEAT	PVC
1P*	SEAT	Stainless Steel
2	VALVE	BUNA-N Rubber
3	PLUNGER NUT	Brass
4	PLUNGER	Brass
5	VALVE FULCRUM	Stainless Steel
6	VALVE LEVER	Stainless Steel
7	LINK	Stainless Steel
8	BALL FULCRUM	Stainless Steel
9	BALL FLOAT	Stainless Steel
10	BALL LEVER	Stainless Steel
11	BEARING PIN	Brass
12	BEARING PIN	Brass
13	SCREW	Stainless Steel
14	NUT	Steel
15	PIN CLIP	Stainless Steel
16	SCREW	Stainless Steel
17	BOLT	Steel
18	NUT	Steel
19	TOP	Cast Iron
19N**	NIPPLE	Steel
19V**	VACUUM CHECK	Brass
20	FLANGE	Cast Iron
21**	BODY	Cast Iron
21F**	BODY-125* ANSI FLANGED	Cast Iron
21FH**	BODY-250* ANSI FLANGED	Cast Iron
22	FULCRUM WASHER	Fibre
23	SEAT GASKET	BUNA-N
24	FLANGE GASKET	Armstrong

* Part No. 1P is interchangeable with Part No. 1N and is optional at customer's request
** Part No.'s 19N, 19V, 21, 21F & 21FH are at customer's option

Submittal Sheet for Crispin PL Series

1"–2" Pressure Air Release Valve

Manufactured in compliance with ANSI/AWWA C512 **Date: October, 2001**

Specifications

The Pressure Air Release Valve(s) shall be installed at high points selected by the engineer to vent the accumulation of air and other gases with the line under pressure.

The valve(s) shall operate through a compound lever system and shall have a 5/16 " orifice with valve sealing faces of an adjustable Buna-N rubber valve and stainless steel or PVC. It shall operate at 150 PSIG, and be capable of passing 152 scfm. of air.

The valve(s) shall be _____" ~~NPT screwed or~~ ANSI Class (125, 250) flanged inlet connection and shall have a cast iron body, top and inlet flange (where required), a stainless steel float and trim. Valves which use a needle to seal the orifice will not be acceptable.

The valve(s) shall be Crispin Model PL 21 Pressure Air Valve(s), Type N (PVC seat and Buna-N rubber valve) or or Type P (stainless steel seat and Buna-N rubber valve) as manufactured by Crispin-Multiplex Manufacturing Co., Berwick, PA.

~~Option: A~~ Vacuum Check Valve shall be supplied on the outlet to eliminate the possibility of air entering the system where the pressure decreases, or if a vacuum is drawn.

~~Option:~~ Where pressures are greater than 300 PSIG, the valve(s) shall be ANSI Class _____ flanged inlet connection and shall have a (steel, stainless steel, or ductile iron) body, top and inlet flange.

Standard operating pressure for Crispin Air Valves is 20 to 150 PSIG. Please check one of the following if your operating needs differ:

____ 2 to 40 PSIG ____ 151 to 300 PSIG

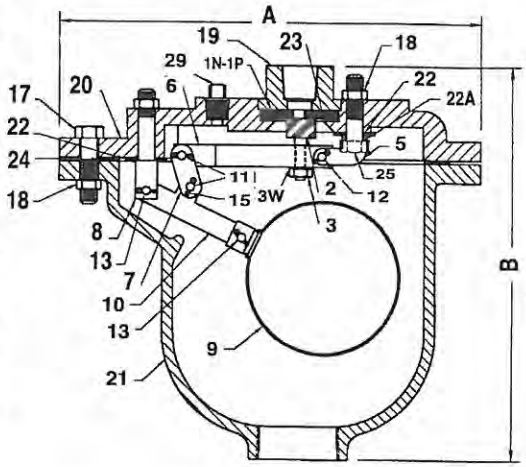

Pressure Air Valve Parts List

ITEM	DESCRIPTION	MATERIAL	ASTM
*1N	SEAT	PVC	1784
*1P	SEAT	STAINLESS STEEL	A240
2	VALVE PLUNGER	BUNA–N RUBBER & S/S	D2000
3	PLUNGER NUT	STAINLESS STEEL	A194
3W	LOCK WASHER	STAINLESS STEEL	A240
5	VALVE FULCRUM	STAINLESS STEEL	A240
6	VALVE LEVER	STAI N LESS STEEL	A240
7	LINK	STAINLESS STEEL	A240
8	BALL FULCRUM	STAINLESS STEEL	A582
9	BALL FLOAT	STAINLESS STEEL	A240
10	BALL LEVER	STAINLESS STEEL	A240
11	BEARING PIN	STAINLESS STEEL	A582
12	BEARING PIN	STAINLESS STEEL	A582
13	BEARING PIN	STAINLESS STEEL	A582
15	COTTER PIN	STAINLESS STEEL	A313
17	BOLT	STEEL	A307
18	NUT	STEEL	A563
19	TOP	CAST IRON	A126 CL.B
20	FLANGE	CAST IRON	A126 CL.B
21	BODY	CAST IRON	A126 CL.B
22	FULCRUM WASHER	FIBER	N/A
22A	FULCRUM WASHER	FIBER	N/A
23	SEAT GASKET	BUNA–N RUBBER	D2000
24	FLANGE GASKET	ARMSTRONG N–8092	N/A
25	BOLT	STAINLESS STEEL	A193
29	PLUG	BRASS	B505

* Parts are interchangable and optional at customer's request

Size Specifications

MODEL	INLET SIZE	OUTLET SIZE	A	B	WT.
PL10	1" NPT	1/2" NPT	9.75	9.00	22
PL10A	2" NPT	1/2" NPT	9.75	9.00	23
PL20	2" NPT	1/2" NPT	10.25	10.50	45
†PL20A	3" NPT	1/2" NPT	10.13	12.25	54
**PL21	2" 125# FLG	1/2" NPT	10.25	14.00	51
**PL22	2" 250# FLG	1/2" NPT	10.25	14.25	53

† Indicates 3" valve with 3"inlet
** Includes ANSI CL. 125 or 250 companion FLG & NPL

PL10 & PL10A Orifice Options

DIAMETER	MAX. PRESSURE	DISCHARGE RATE
5/16	100 PSIG	105 SCFM
1/4	150 PSIG	98 SCFM
3/16	200 PSIG	72 SCFM
5/32	250 PSIG	61.1 SCFM
1/8	300 PSIG	46.7 SCFM

PL20 & PL20A Orifice Options

DIAMETER	MAX. PRESSURE	DISCHARGE RATE
3/8	100 PSIG	152 SCFM
5/16	150 PSIG	152 SCFM
1/4	200 PSIG	127 SCFM
3/16	250 PSIG	88 SCFM
5/32	300 PSIG	73 SCFM

SUBMITTAL SHEET FOR PL SERIES

Crispin Valve, 600 Fowler Ave., Berwick, PA 18603 • 1-800-AIR-VALV • T: (570) 752-4524 • F: (570) 752-4962 • WWW.CRISPINVALVE.COM • sales@crispinvalve.com

Crispin Pressure Air Release Valves

OPERATION

The CRISPIN Pressure Air Release Valve allows air to be released from a system while the system is in operation and under pressure. This is accomplished by the mechanics of the simple or compound lever system inside the valve.

The buoyancy of the float raises the linkage to seal the orifice as the valve body fills upon start-up. As accumulating air displaces the liquid in the valve body, the water level drops. The weight of the float multiplied by the lever system begins to pull the resilient seal away from the seat. This releases a quantity of air that allows more liquid to enter the valve body and, in turn, raises the float to again seat the orifice. The valve will continue to function in this fashion as long as air accumulates.

MAINTENANCE

The valve should be inspected periodically for leakage, particularly at the seat area.

SEAT REPLACEMENT

Isolate or remove the valve from the system. Remove the top (Part No. 1S) which secures the seat (Part No. lN-PVC Seat or Part No. lP- stainless steel seat) in place. Mark the location of the top in relation to the top flange (Part No. 20). With the proper size wrench, turn the top counter-clockwise.

Once the top is removed, the seat will be exposed. Remove the seat and the seat gasket (Part No. 23) and make the required replacement.

It is always best to coat the threads of the top with a suitable thread sealer prior to reassembling the valve. Turn the top into the flange thread (Part No. 20) until it is snug and as close as possible to the original mark. Tighten the top one-quarter turn.

INTERNAL REPAIRS:

The top flange (Part No. 20) must be removed for internal repair. Simply remove the flange nuts and bolts after isolating the valve from the system.

REPLACING VALVE PLUNGER

The valve plunger (Part No. 2–Buna-N Rubber) should be replaced when it begins to deteriorate because of age (4 to 5 years).

The linkage is easily disassembled by removing the pin clips from the bearing pins, then removing the bearing pins.

Now replace the valve plunger (Valve and Lever Assembly Part No. 6) and reconnect the bearing pins and clips.

Crispin Pressure Air Release Valves (continued)

ADJUSTING THE VALVE

The valve plunger is adjusted by removing the top flange, then turning the flange upside down, exposing the lever mechanism. The float is extended away from the valve orifice in order to pull the plunger away from the orifice. A light dusting of powder is spread over the valve seat and the float is allowed to relax.

While extending the float again, observe the powder pattern on the rubber valve, and make appropriate adjustments to permit its full face contact with the valve seat. Secure the plunger by locking the nut or screw.

Replace the flange, being careful not to allow the linkage to toggle over, which would prevent its functioning. This is done by placing either the valve body over the linkage with the flange inverted and resting on a table, or by holding the linkage closed with a screwdriver while replacing the flange on the body. Secure the flange nuts and bolts.

INSTALLATION

The CRISPIN Pressure Air Valve shall be installed at the high points in the line and mounted vertically. The inlet of the valve should be at the same elevation or greater than the elevation at the top of the pipe, with the piping to the inlet on a continuous upward slope. Valves should be protected from freezing.

For more detailed information on valve sizing, etc., please refer to the CRISPIN Catalog and/or Technical Reference No. 5.

Troubleshooting

Seat Leakage

—If a low volume leak persists with the rubber valve against the orifice, then the rubber valve should be adjusted or replaced.

—Replace the rubber valve if the valve has been in operation longer than five years.

—Inspect the valve seating area for foreign particles that could be preventing the valve from seating.

—Internal pressure should be adequate to provide a drip tight seat.

—If problem continues, please consult the factory.

** These valves are intended for use on municipal waste water systems or approved industrial applications.*

UTILITY BALL VALVE INFORMATION

SHARPE® VALVES

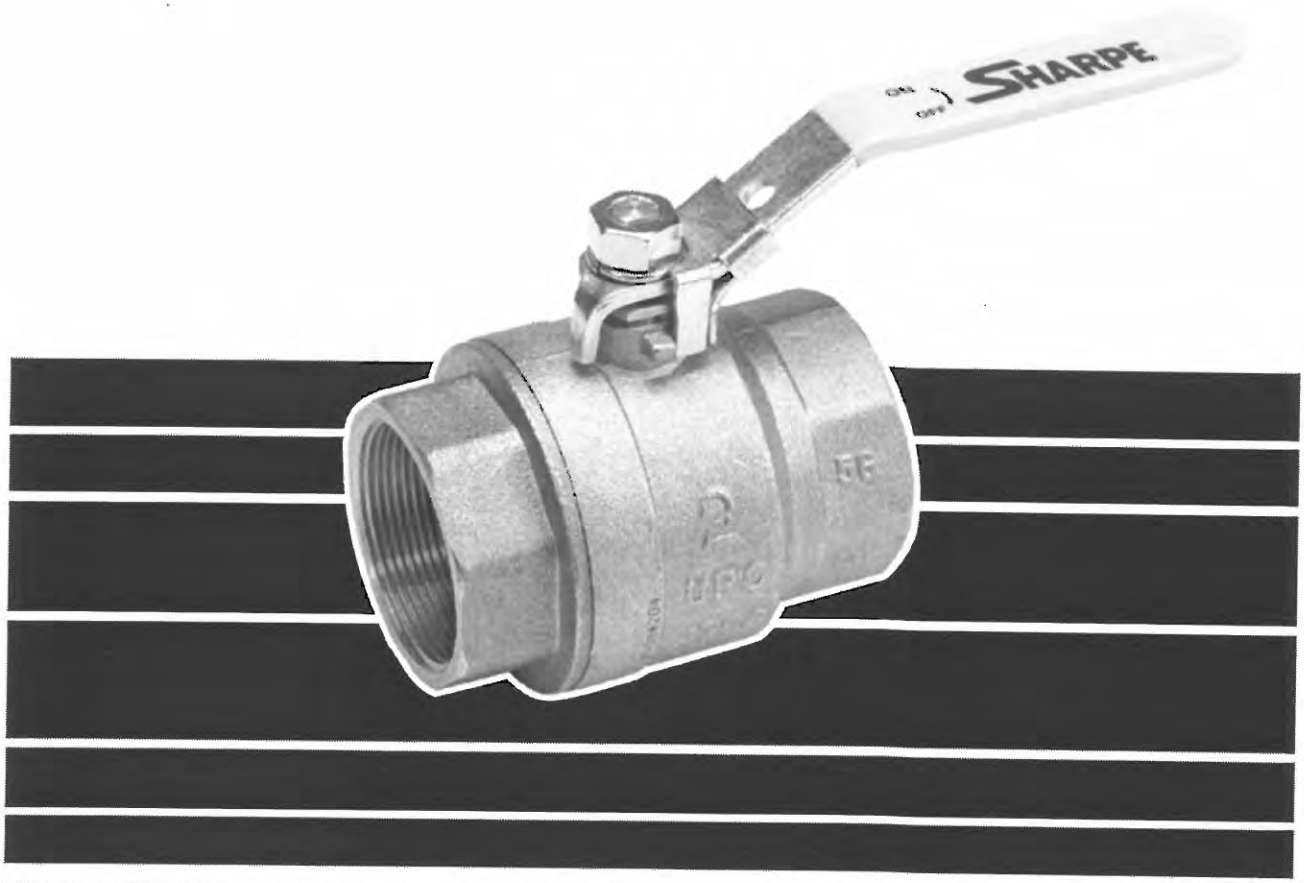

SERIES 10
BRASS FULL PORT
BALL VALVE

SERIES 10 BRASS FULL PORT BALL VALVE

1/4" - 4" 600 WOG
BLOWOUT PROOF STEM
LOCKING DEVICE HANDLES
OVAL HANDLES AVAILABLE

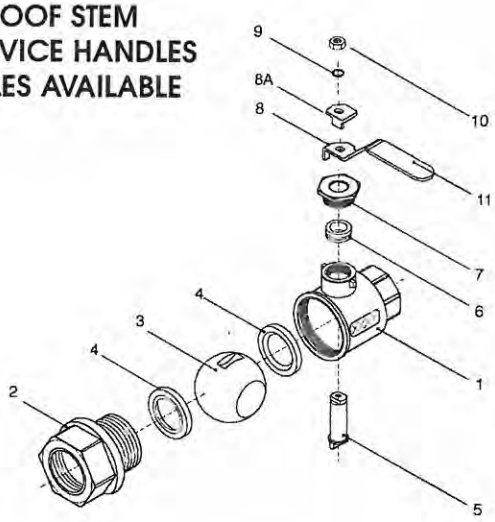

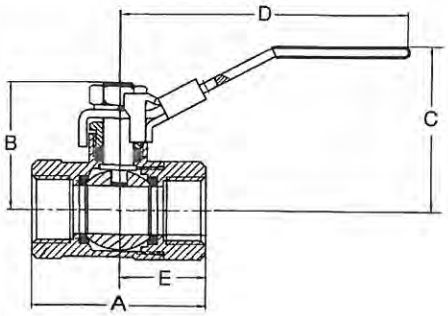

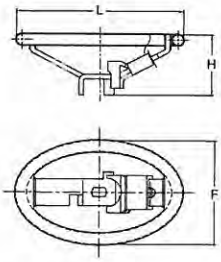

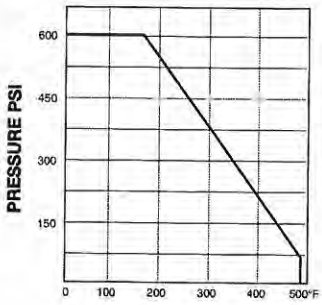

VALVE PARTS AND IDENTIFICATION

PART NO.	PART	QTY.	MATERIAL
1	Body	1	Forged Brass
2	Cap	1	Forged Brass
3	Ball	1	Chrome Plated Brass
4	Ball Seat	2	PTFE
5	Stem	1	Brass
6	Stem Packing	1	PTFE
7	Gland Packing	1	Brass
8	Handle	1	Galvanized Steel
8A	Locking Device	1	Galvanized Steel
9	Handle Washer	1	Steel
10	Handle Nut	1	Steel
11	Handle Sleeve	1	Plastic

*See Dimensions

DIMENSIONS

SIZE	A	B	C	D	E	L	F	H	PORT	WEIGHT
1/4"	1.70	1.38	1.85	3.46	0.85	3.62	2.30	1.34	0.39	0.33
3/8"	1.70	1.38	1.85	3.46	0.85	3.62	2.30	1.34	0.39	0.33
1/2"	2.10	1.58	1.99	3.46	1.05	3.62	2.30	1.34	0.59	0.52
3/4"	2.32	1.77	2.38	4.64	1.19	3.78	2.36	1.69	0.75	0.78
1"	2.90	2.00	2.54	4.64	1.45	3.78	2.36	1.69	1.00	1.10
1-1/4"	3.26	2.37	2.82	5.90	1.63	4.65	3.50	1.93	1.25	1.72
1-1/2"	3.63	2.75	3.03	5.90	1.81	4.65	3.50	1.93	1.50	2.28
2"	4.40	3.23	3.45	5.90	2.20	4.65	3.50	1.93	2.00	3.55
2-1/2"	6.00	3.94	4.59	9.05	3.00	-	-	-	2.50	7.50
3"	6.50	4.45	4.86	9.05	3.25	-	-	-	3.00	9.06
4"	7.76	5.32	5.66	10.00	3.88	-	-	-	4.00	16.30

HOW TO ORDER

VALVE SIZE	VALVE SERIES	BODY & END PLUG	BALL & STEM	SEAT	ENDS	OPTIONS
1/4" 1-1/2" 3/8" 2" 1/2" 2-1/2" 3/4" 3" 1" 4" 1-1/4"	10	1 = Brass	1 = Brass	T = Teflon	TE = Threaded	OH = Oval Handle

3/4" 10 1 1 T TE

SHARPE® VALVES
A Division of Smith-Cooper International, LLC

Toll Free: 1-877-7SHARPE
(877) 774-2773
Fax: (708) 562-9250
Email: info@sharpevalves.com
www.sharpevalves.com
1260 Garnet Drive
Northlake, Illinois 60164 U.S.A.

Due to continuous development of our product range we reserve the right to change the dimensions and information contained in the leaflet as required.
Teflon® is a registered trademark of E.I. DuPont.

Rev. 1/09

PRESSURE SWITCH INFORMATION

Series A1F Compact OEM Pressure Switch

Specifications - Installation and Operating Instructions

A1F

A1F with A-447

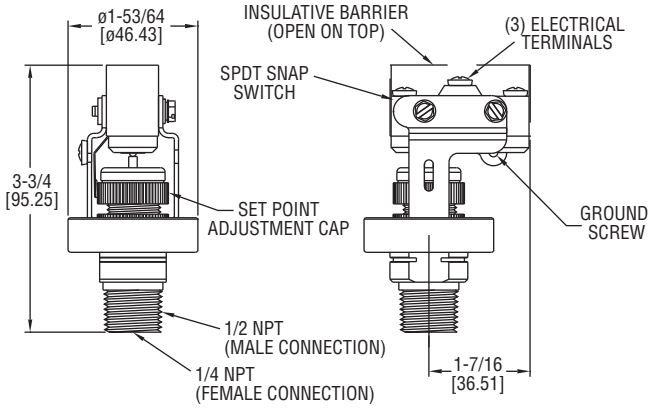

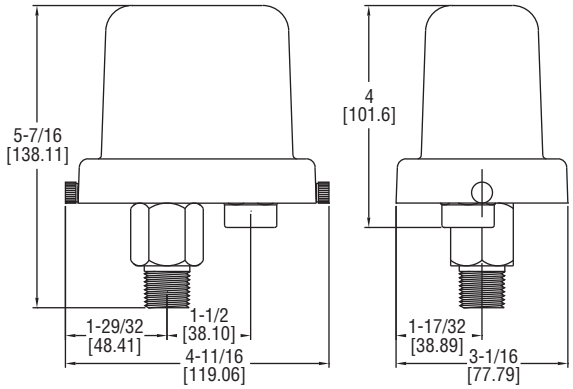

The Series A1F Compact OEM Pressure Switch is ideal for panel mounting wherever a high-quality, economical open-case or weatherproof control is required.

INSTALLATION

1. Location: Select a location where the temperature limits of -40 to 180°F (-40 to 82°C) will not be exceeded. Locate the switch as close as possible to the pressure source. Long lengths of piping will not affect accuracy of the actuation point but will slightly add to response time.

2. Mounting and Processing Connection: Avoid mounting surfaces with excess vibration which could cause false actuation when pressure is near setpoint. The switch should be mounted within 20° of vertical for proper operation. Mount the switch by connecting it to the process piping using either 1/4″ NPT female or 1/2″ male connection. Pipe joint compound or TFE thread tape should be used to prevent leakage.

3. Electrical Connections: The SPDT snap switch includes normally open, normally closed and common connections. The common and normally open contacts will close and the common and normally closed contacts will open when pressure increases to the setpoint. The actions will reverse when pressure decreases below the setpoint minus the deadband. A green grounding screw is provided on the switch bracket. All wiring should be in accordance with local codes.

SETPOINT ADJUSTMENT

1. Determine the setpoint pressure. The approximate actuation point can be set by turning the adjustment cap up or down, aligning the top of the O-ring, located above the cap, with the appropriate scale graduation.
2. Connect tubing or piping from the pressure port on bottom of switch to one leg of a tee. Connect the second leg to a pressure test gage of known accuracy and in an appropriate range. The third leg should be connected to a controllable source of pressure.
3. Connect a volt/ohm meter or other circuit tester to the snap action terminals to indicate when switching occurs.
4. Slowly apply pressure to the system and note the pressure at which switching occurs.
5. Operate the switch through several cycles to confirm proper actuation point.
6. Remove test apparatus and attach switch to pressure source and control circuit wiring. Place switch in service.

SPECIFICATIONS

Service: Compatible liquids and gases.
Wetted Materials:
Pressure Chamber: 316 SS.
Diaphragm: Fluorocarbon.
Temperature Limit: -40 to 175°F (-40 to 80°C).
Pressure Limits: 750 psig (51 bar).
Enclosure Rating: No rating for open construction. Installed properly within an optional A-447 enclosure meets NEMA 4X standards.
Switch Type: SPDT snap switch.
Electrical Rating: 15A @ 120/240/480 VAC, 1/8 HP @ 125 VAC, 1/4 HP @ 250 VAC.
Electrical Connection: Screw terminals.
Process Connection: 1/4″ female NPT and 1/2″ male NPT.
Mounting Orientation: Within 20° of vertical.
Set Point Adjustment: Knurled screw cap with indicating scale.
Deadband: Fixed, See deadband chart.
Weight: 10.5 oz (297 g).

DWYER INSTRUMENTS, INC.
P.O. BOX 373 • MICHIGAN CITY, INDIANA 46361, U.S.A.
Phone: 219/879-8000 www.dwyer-inst.com
Fax: 219/872-9057 e-mail: info@dwyer-inst.com

Example of how to order:

A1F	-	O	-	SS	-	1	-	4
1		2		3		4		5

1. Diaphragm Designation:
F - Fluorocarbon

2. Enclosure Designation:
O - Open Construction No Enclosure

3. Housing Material Designation:
SS - 316SS

4. Switch Designation:
1 - SPDT Snap Action Switch

5. Operating Pressure Range Designation:
1 - 2 to 15 psig
2 - 4 to 75 psig
3 - 8 to 225 psig
4 - 16 to 450 psig

Series A1F Deadband Chart-psig (bar)

Range	Deadband at Minimum Range	Deadband at Maximum Range
2 to 15 (0.14 to 1.03)	2 (0.14)	3 (0.21)
4 to 75 (0.28 to 5.17)	4 (0.27)	15 (1.0)
8 to 225 (0.55 to 15.5)	8 (0.55)	25 (1.7)
16 to 450 (1.1 to 31.0)	15 (1.0)	50 (3.5)

MAINTENANCE

Upon final installation of the Series A1F Compact OEM Pressure Switch, no routine maintenance is required. A periodic check of the system calibration is recommended. The Series A1F is not field serviceable and should be returned if repair is needed (field repair should not be attempted and may void warranty). Be sure to include a brief description of the problem plus any relevant application notes. Contact customer service to receive a return goods authorization number before shipping.

©Copyright 2008 Dwyer Instruments, Inc.
Printed in U.S.A. 7/08 FR# 89-440838-10 Rev.2

DWYER INSTRUMENTS, INC.
P.O. BOX 373 • MICHIGAN CITY, INDIANA 46361, U.S.A.
Phone: 219/879-8000 www.dwyer-inst.com
Fax: 219/872-9057 e-mail: info@dwyer-inst.com

GWTS Equipment

Corrected calibration for FIT-3001, Feb 2016

Tag Name / ID: **FIT-3001**	**Transducer/Transmitter Calibration/Verification**	Manufacture **Seimens/McCrometer**
Contract ID **15-056** / ISA S20 Sheet		Model Number **7MF4433-1EA22/VH03-A1SF3**
Ambient Conditions Temperature **60** °C (°F) Pressure **n/a** mm Hg Humidity **n/a** %	Loop Number **3000** ☐ Initial Calibration ☑ Verification	Serial Number **1X-C314-9002789/15-1854** Calibration Range 0 to 160 DP **0** to **250** **gpm**

1. Visual Inspection: Mechanical connections ☑ Finish ☑ Nameplate/ID Tag ☑ Mounted at correct height ☑
2. Electrical: Conduit Connections ☑ Terminal/Wire Labels ☑ Conduit ID ☐
3. Calibration Proof test at: zero
4. Action: Direct ☑ Indirect ☐ Linear ☐ Non-linear ☐ Square Root ☑
5. Loop Voltage **24 VDC** 4-Wire ☐ 2-Wire ☑
6. Load Impedance **N/A** ohms max @ 24 vdc

Calibration Points

%	Input DP	Expected Output (mADC)	Meter EU GPM	As Found Data: Output Increase	As Found Data: Output Decrease	As Found Data: Maximum Output Error	As Left Data: Output Increase	As Left Data: Output Decrease	As Left Data: Maximum Output Error
0	**0.00**	**4.00**	**0.00**	0	0	± 0	0	0	± 0
10	-					±			±
20	-					±			±
25		**8.00**	**62.50**	0	0	± 0	0	0	± 0
30	-					±			±
40	-					±			±
50	**40.04**	**12.00**	**125.00**	0	0	± 0	0	0	± 0
60	-		-			±			±
70	-		-			±			±
75		**16.00**	**187.50**	0	0	± 0	0	0	± 0
80	-		-			±			±
90	-		-			±			±
100	**160.16**	**20.00**	**250.00**	0	0	± 0	0	0	± 0

Test Equipment Used	Model No:	Serial No:	Calibration/Certification Date
☑ Fluke 789	789	14970085	February 7, 2016
☑ Emerson Filed Calibrator	375	12061955	N/A
☐			
☐			
☐			
☐			
☐			
☐			
☐			

Comments Mcrometer Vcone Fitted with Seimens DP transmimtter and setup per New Vcone cal parameteres
Zero of transmitter performed in field after media introduced to flow meter and stablized
Span verifed in field with actual field conditions and flow rate and visual DP recorded in Hart Communicator

Print Name: Robbie Satriana DCN 2/4/2016
Signed By: Robbie Satriana Date 2/4/2016
Approved By: Preston Patterson Date 2/4/2016

02-04-16

I&C Solutions LLC
4485 Irving Blvd
Albuquerque, NM 87114
505-821-8960 fax 505-821-8970

V-Cone® Application Sizing

Serial #	15-1854	Fluid	WATER
Tag		Fluid State	LIQUID
P.O. Ref.	462-056614	End User	
Model	VH03-A1SF3	Market	Other
		Application	Other

Mark/App Code ZZZ

Description	Wafer-Cone 3"
Note	

C_d	0.8872	
P_f	150	psiG
T_f	75	°F
ρ	62.13	lb/ft3
μ	0.9353	cP
G		
Z		
Y		
k		
C_P		
Mw	18.015	
P_b		
T_b		
Z_b		
P_{atm}	14.696	psi
P_c	3198.8	psi
T_c	705.16	°F
F_a	1.000	
aPE	D 6.7e-06	d 6.7e-06
P_v	0.4302	psi
P_{loss}	2.818	psi

⇐ Entered value.

q	max. Flowrate	250	GPM
Re	max. Reynolds	2.901e+05	
V	max. Velocity	12.14	fps
ΔP	max. Dp	160.16	inWC
ΔP	min. Dp	1.6016	inWC
D	Meter I.D.	2.9000	in
d	Cone O.D.	2.2038	in
β	Beta Ratio	0.6500	
	Turn Down	10	

McCrometer Eng. AlBa

	Re	Cd	Velocity fps	Gas. Exp. Y	ΔP inWC	Flowrate GPM
1	2.901e+05	0.8872	12.14		160.16	250.00
2	2.611e+05	0.8872	10.93		129.73	225.00
3	2.321e+05	0.8872	9.715		102.50	200.00
4	2.031e+05	0.8872	8.500		78.479	175.00
5	1.741e+05	0.8872	7.286		57.658	150.00
6	1.451e+05	0.8872	6.072		40.041	125.00
7	1.160e+05	0.8872	4.857		25.625	100.00
8	8.703e+04	0.8872	3.643		14.415	75.000
9	5.802e+04	0.8872	2.429		6.4065	50.000
10	2.901e+04	0.8872	1.214		1.6016	25.000

Table based on one flow condition (P, T ,Z , k ...) V40 Version 2.0

Record Start Date	6/16/2015
Print Date	07-09-2015

McCROMETER

Corrected calibration for FIT 3108, Feb 2016

Tag Name / ID: FIT-3108	**Transducer/Transmitter Calibration/Verification**	Manufacture: Endress Hauser/McCrometer
Contract ID: N/A; ISA S20 Sheet		Model Number: DP141-200-02/VH03-A1SF3
Ambient Conditions Temperature 60 °C (°F) Pressure n/a mm Hg Humidity n/a %	Loop Number: 3000 ☐ Initial Calibration ☑ Verification	Serial Number: E15-01717/15-1022 Calibration Range 0 to 161 DP 0 to 500 gpm

1. Visual Inspection: Mechanical connections ☑ Finish ☑ Nameplate/ID Tag ☑ Mounted at correct height ☑
2. Electrical: Conduit Connections ☑ Terminal/Wire Labels ☑ Conduit ID ☐
3. Calibration Proof test at: zero
4. Action: Direct ☑ Indirect ☐ Linear ☐ Non-linear ☐ Square Root ☑
5. Loop Voltage 24 VDC 4-Wire ☐ 2-Wire ☑
6. Load Impedance N/A ohms max @ 24 vdc

Calibration Points

%	Input DP	Expected Output (mADC)	Meter EU GPM	As Found Data: Output Increase	As Found Data: Output Decrease	As Found Data: Maximum Output Error	As Left Data: Output Increase	As Left Data: Output Decrease	As Left Data: Maximum Output Error
0	**0.00**	**4.00**	**0.00**	0	0	± 0	0	0	± 0
10	-					±			±
20	-					±			±
25		**8.00**	**125.00**	0	0	± 0	0	0	± 0
30	-					±			±
40	-					±			±
50	**40.13**	**12.00**	**250.00**	0	0	± 0	0	0	± 0
60	-		-			±			±
70	-		-			±			±
75		**16.00**	**375.00**	0	0	± 0	0	0	± 0
80	-		-			±			±
90	-		-			±			±
100	**160.58**	**20.00**	**500.00**	0	0	± 0	0	0	± 0

Test Equipment Used	Model No:	Serial No:	Calibration/Certification Date
☐ Fluke 789	789	14970085	February 7, 2016
☑ Emerson Filed Calibrator	375	12061955	N/A
☐			
☐			
☐			
☐			
☐			
☐			
☐			

Comments: This was a rescale only from 0-400GPM to 0-500GPM directed by customer, performed a zero only

Span verifed in field with actual field conditions and flow rate and visual DP recorded in Hart Communicator

Print Name: Robbie Satriana DCN 2/2/2016
Signed By: Robbie Satriana Date 2/2/2016
Approved By: Preston Patterson Date 2/2/2016

I&C Solutions LLC
4485 Irving Blvd
Albuquerque, NM 87114
505-821-8960 fax 505-821-8970

V-Cone® Application Sizing

Serial #	15-1022	Fluid	WATER
Tag		Fluid State	LIQUID
P.O. Ref.	518506	End User	
Model	VM04QE03F-E1HS-V3	Market	
		Application	
			Mark/App Code

Description	4" VM meter
Note	

C_d	0.8104	
P_f	175	psiG
T_f	70	°F
ρ	62.18	lb/ft3
μ	0.9957	cP
G		
Z		
Y		
k		
C_P		
Mw	18.015	
P_b		
T_b		
Z_b		
P_{atm}	14.696	psi
P_c	3198.8	psi
T_c	705.16	°F
F_a	1.000	
aPE	D 6.7e-06	d 6.7e-06
P_v	0.3633	psi
P_{loss}	2.587	psi

⇐ Entered value.

q	max. Flowrate	500	GPM
Re	max. Reynolds	3.922e+05	
V	max. Velocity	12.56	fps
ΔP	max. Dp	160.58	inWC
ΔP	min. Dp	1.6058	inWC
D	Meter I.D.	4.0330	in
d	Cone O.D.	2.9460	in
β	Beta Ratio	0.6829	
	Turn Down	10	

McCrometer Eng. MaBa

	Re	Cd	Velocity fps	Gas. Exp. Y	ΔP inWC	Flowrate GPM
1	3.922e+05	0.8104	12.56		160.58	500.00
2	3.530e+05	0.8104	11.30		130.07	450.00
3	3.138e+05	0.8104	10.05		102.77	400.00
4	2.745e+05	0.8104	8.790		78.683	350.00
5	2.353e+05	0.8104	7.534		57.808	300.00
6	1.961e+05	0.8104	6.279		40.145	250.00
7	1.569e+05	0.8104	5.023		25.693	200.00
8	1.177e+05	0.8104	3.767		14.452	150.00
9	7.844e+04	0.8104	2.511		6.4231	100.00
10	3.922e+04	0.8104	1.256		1.6058	50.000

Table based on one flow condition (P, T ,Z , k ...) V40 Version 2.0

Record Start Date	3/31/2015
Print Date	01-25-2016

McCROMETER

Corrected Calibration for FIT 3102, Feb 016

Tag Name / ID: **FIT-3102**	**Transducer/Transmitter Calibration/Verification**	Manufacture **Endress Hauser/McCrometer**
Contract ID **N/A** / ISA S20 Sheet		Model Number **DD141-200-02/VH03-A1SF3**
Ambient Conditions Temperature **60** °C (°F) Pressure **n/a** mm Hg Humidity **n/a** %	Loop Number **3000** ☐ Initial Calibration ☑ Verification	Serial Number **E15-01718/15-1023** Calibration Range 0 to 159 DP **0** to **500** **gpm**

1. Visual Inspection: Mechanical connections ☑ Finish ☑ Nameplate/ID Tag ☑ Mounted at correct height ☑
2. Electrical: Conduit Connections ☑ Terminal/Wire Labels ☑ Conduit ID ☐
3. Calibration Proof test at: zero
4. Action: Direct ☑ Indirect ☐ Linear ☐ Non-linear ☐ Square Root ☑
5. Loop Voltage **24 VDC** 4-Wire ☐ 2-Wire ☑
6. Load Impedance **N/A** ohms max @ 24 vdc

Calibration Points

%	Input DP	Expected Output (mADC)	Meter EU GPM	As Found Data: Output Increase	As Found Data: Output Decrease	As Found Data: Maximum Output Error	As Left Data: Output Increase	As Left Data: Output Decrease	As Left Data: Maximum Output Error
0	**0.00**	**4.00**	**0.00**	0	0	± 0	0	0	± 0
10	-					±			±
20	-					±			±
25		**8.00**	**125.00**	0	0	± 0	0	0	± 0
30	-					±			±
40	-					±			±
50	**39.81**	**12.00**	**250.00**	0	0	± 0	0	0	± 0
60	-		-			±			±
70	-		-			±			±
75		**16.00**	**375.00**	0	0	± 0	0	0	± 0
80	-		-			±			±
90	-		-			±			±
100	**159.24**	**20.00**	**500.00**	0	0	± 0	0	0	± 0

Test Equipment Used	Model No:	Serial No:	Calibration/Certification Date
☐ Fluke 789	789	14970085	February 7, 2016
☑ Emerson Filed Calibrator	375	12061955	N/A
☐			
☐			
☐			
☐			
☐			
☐			
☐			

Comments This was a rescale only from 0-400GPM to 0-500GPM directed by customer, performed a zero only

Span verifed in field with actual field conditions and flow rate and visual DP recorded in Hart Communicator

Print Name: Robbie Satriana DCN 2/2/2016
Signed By: Robbie Satriana Date 2/2/2016
Approved By: Preston Patterson Date 2/2/2016

02-04-16

I&C Solutions LLC
4485 Irving Blvd
Albuquerque, NM 87114
505-821-8960 fax 505-821-8970

V-Cone® Application Sizing

Serial #	15-1023
Tag	
P.O. Ref.	518505
Model	VM04QE03F-E1HS-V3

Fluid	WATER	
Fluid State	LIQUID	
End User		
Market		Mark/App Code
Application		

Description	4" VM meter
Note	

C_d	0.8138	
P_f	175	psiG
T_f	70	°F
ρ	62.18	lb/ft3
μ	0.9957	cP
G		
Z		
Y		
k		
C_P		
Mw	18.015	
P_b		
T_b		
Z_b		
P_{atm}	14.696	psi
P_c	3198.8	psi
T_c	705.16	°F
F_a	1.000	
aPE	D 6.7e-06	d 6.7e-06
P_v	0.3633	psi
P_{loss}	2.565	psi

⇐ Entered value.

q	max. Flowrate	500	GPM
Re	max. Reynolds	3.922e+05	
V	max. Velocity	12.56	fps
ΔP	max. Dp	159.24	inWC
ΔP	min. Dp	1.5924	inWC
D	Meter I.D.	4.0330	in
d	Cone O.D.	2.9460	in
β	Beta Ratio	0.6829	
	Turn Down	10	

McCrometer Eng. MaBa

	Re	Cd	Velocity fps	Gas. Exp. Y	ΔP inWC	Flowrate GPM
1	3.922e+05	0.8138	12.56		159.24	500.00
2	3.530e+05	0.8138	11.30		128.98	450.00
3	3.138e+05	0.8138	10.05		101.91	400.00
4	2.745e+05	0.8138	8.790		78.027	350.00
5	2.353e+05	0.8138	7.534		57.325	300.00
6	1.961e+05	0.8138	6.279		39.810	250.00
7	1.569e+05	0.8138	5.023		25.479	200.00
8	1.177e+05	0.8138	3.767		14.332	150.00
9	7.844e+04	0.8138	2.511		6.3696	100.00
10	3.922e+04	0.8138	1.256		1.5924	50.000

Table based on one flow condition (P, T ,Z , k ...) V40 Version 2.0

Record Start Date	3/31/2015
Print Date	01-25-2016

McCROMETER

RUPERT PLUMBING AND HEATING

PIPE FABRICATION

40 05 13-2.1: Product Data—Part 2 additional items

ars 10/6/15

This section contains the following:

- 3 way valve –revised for two separate valves—one 6" and one 2"

ACS 10/6/15

Technical Data

Components & Materials

Carbon Steel bodies on Valve sizes 1/2" – 4" are Black Phosphate Coated.

All Stainless Steel bodies are solution annealed/ normalized.

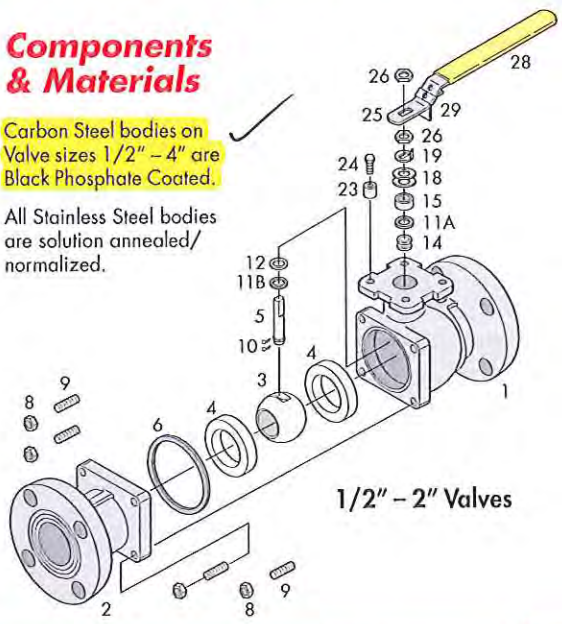

1/2" – 2" Valves

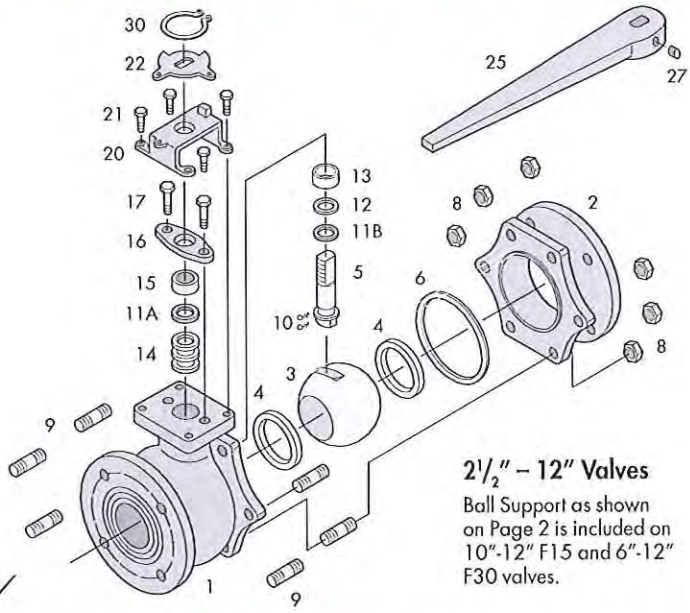

2½" – 12" Valves

Ball Support as shown on Page 2 is included on 10"-12" F15 and 6"-12" F30 valves.

Item	Name	Stainless Steel	Carbon Steel	Qty.
1	Body	ASTM A351 Gr CF8M	ASTM A216 Gr WCB	1
2	End Cap	ASTM A351 Gr CF8M	ASTM A216 Gr WCB	1
3	Ball	ASTM A351 Gr CF8M	ASTM A351 Gr CF8M	1
4	Seat	TFM 1600	TFM 1600	2
5	Stem	ASTM A479 Type 316	ASTM A479 Type 316	1
6	Body Seal	Spiral Wound (316/Graphite)	Spiral Wound (316/Graphite)	1
8	Body Nut	ASTM A194 Gr 8	ASTM A194 2H	*
9	Body Stud	ASTM A193 B8	ASTM A193 B7	*
10	Anti-Static Device	SS304	SS304	2
11 A	Packing Protector	PEEK	PEEK	1
11 B	Thrust Washer Protector	PEEK	PEEK	1
12	Thrust Washer	Tek-Fil	Tek-Fil	1
13	Stem Bearing	15% RPTFE	15% RPTFE	1
14	Stem Packing	RPTFE/Graphite	RPTFE/Graphite	3/1
15	Packing Gland	ASTM A167 Type 304	ASTM A167 Type 304	1
16	Packing Follower	ASTM A351 Gr CF8M	ASTM A216 Gr WCB	1
17	Gland Bolt	SS304	SS304	2
18	Belleville Washer	SS301	SS301	2
19	Tab Lock Washer	SS304	SS304	1
20	Travel Stop Housing	CF8M	WCB	1
21	Housing Bolt	SS304	Alloy Steel	4
22	Travel Stop	SS304	Zinc Plated Carbon Steel	1
23	Travel Stop Sleeve	ASTM A167 Type 304	ASTM A167 Type 304	1
24	Travel Stop Bolt	SS304	SS304	1
25	Handle	SS304/**Ductile Iron	SS304/**Ductile Iron	1
26	Lock Nut	ASTM A167 Type 304	ASTM A167 Type 304	2
27	Handle Bolt	Carbon Steel	Carbon Steel	1
28	Handle Sleeve	Vinyl through 2"	Vinyl through 2"	1
29	Locking Device	SS304	SS304	1
30	Snap Ring	Nickel Plated Carbon Steel	Nickel Plated Carbon Steel	2

*Quantity depends on valve size. ** 2-½" and larger valves.

Flow-Tek offers the seat, body seal, thrust washer and stem packing as recommended spare parts. These parts are available as a packaged repair kit.

Specifications

End Connections meet ASME Class 150/300.
Flanges meet ASME B16.5 raised face.
Face to Face Dimensions meet ASME B16.10 long pattern.
All Valves meet ASME B16.34, API 608, & MSS-SP 72.
All Valves are certified to API 607 4th Edition (with Graphite Stem Packing).
NACE MR0175–Consult Factory.

All Valves are Hydrostatically Pressure Tested (Shell) and Air Pressure Tested (Seat) to the following in psi:
Class 150: Shell 450 [CS] 425 [SS] Seat 80
Class 300: Shell 1125 [CS] 1100 [SS] Seat 80
Valves meet or exceed ASME Class VI shutoff.

Pressure / Temperature

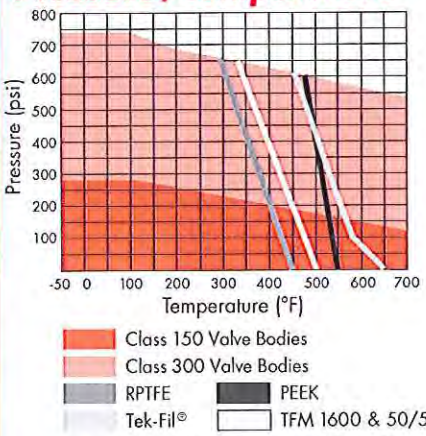

Note: Carbon Steel valves limited to -20°F.

Steam Service Pressure Ratings: WSP

Valve	TFM Seats PSI	°F	Tek-Fil Seats PSI	°F	PEEK Seats PSI	°F
Class 150	150	365	190	450	170	500
Class 300	150	365	425	450	425	500

Vacuum Service to 29.9 inches Hg. gauge.

Dimensions

MODEL F15 – Class 150

SIZE ins (mm)	A	øB	C	C1	D	E	øF	N	øS	øT	C_V	TORQUE * lbs-in (kg-Nm)	WEIGHT lbs. (kg.)
1/2	4.25	0.59	2.60	1.54	6.50	1.79	3.50	4	2.38	0.62	32	36	4
15	108.0	15.0	66.0	39.0	165.0	45.5	88.9		60.5	15.8	28	4	2
3/4	4.62	0.79	2.91	1.67	6.50	2.01	3.88	4	2.75	0.62	60	65	5
20	117.0	20.0	73.9	42.4	165.0	51.0	98.6		69.9	15.8	52	7	2
1	5.00	0.98	3.43	2.05	7.87	2.13	4.25	4	3.12	0.62	105	95	10
25	127.0	24.9	87.0	52.0	199.9	54.0	108.0		79.0	15.8	91	11	4.5
1-1/2	6.50	1.49	4.23	2.60	9.84	2.76	5.00	4	3.88	0.62	275	230	14
40	165.0	37.9	107.0	66.0	249.9	70.0	127.0		98.6	15.8	238	26	6
2	7.00	1.97	4.53	2.95	10.43	3.07	6.00	4	4.75	0.75	500	390	20.5
50	177.8	50.0	115.0	74.9	264.9	78.0	152.0		120.7	19.0	433	44	9
2-1/2	7.50	2.56	6.22	3.39	15.35	3.08	7.00	4	5.50	0.75	780	500	36
65	190.5	65.0	158.0	86.0	389.9	78.0	177.8		139.7	19.0	675	56	16
3	8.00	2.99	6.54	3.66	15.35	3.74	7.50	4	6.00	0.75	1,150	650	45
80	203.0	76.0	166.0	93.0	389.9	95.0	190.5		152.0	19.0	995	73	20
4	9.00	3.99	7.20	4.39	15.35	4.47	9.00	8	7.50	0.75	2,100	1,505	65
100	228.6	101.0	182.9	111.5	389.9	113.5	228.6		190.5	19.0	1,817	170	29.5
6	15.50	5.98	11.22	7.17	15.35	7.62	11.00	8	9.50	0.88	5,000	3,250	157
150	393.7	151.9	284.9	182.0	389.9	193.6	279.0		241.0	22.0	4,325	367	71
8	18.00	7.87	12.72	7.80	38.98	8.35	13.50	8	11.75	0.88	9,800	4,750	290
200	457.0	199.9	323.0	193.0	990.0	212.0	342.9		298.5	22.0	8,304	537	132
10	21.00	9.84	13.70	9.88	38.98	10.47	16.00	12	14.25	1.00	15,000	13,700	500
250	533.0	249.9	348.0	251.0	990.0	265.9	406.0		362.0	25.0	12,975	1,548	227
12	24.00	11.81	15.28	11.46	38.98	12.01	19.00	12	17.00	1.00	21,000	19,700	700
300	609.6	300.0	388.0	291.0	990.0	305.0	482.6		431.8	25.0	18,165	2,226	318

Face to Face dimensions meet ASME B16.10 long pattern.
*Torque at maximum rated pressure, clean water, TFM 1600 seating material. Other seat materials exhibit different torques. Please refer to TB 1005 for specific torques.

MODEL F30 – Class 300

SIZE ins (mm)	A	øB	C	C1	D	E	øF	N	øS	øT	C_V	TORQUE * lbs-in (kg-Nm)	WEIGHT lbs. (kg.)
1/2	5.50	0.59	2.60	1.57	6.50	2.44	3.75	4	2.62	0.62	32	40	5
15	139.7	15.0	66.0	39.9	165.0	62.0	95.0		66.6	15.8	28	5	2
3/4	6.00	0.79	2.91	1.67	6.50	2.72	4.62	4	3.25	0.75	60	70	7
20	152.0	20.0	73.9	42.0	165.0	69.0	117.0		82.6	19.0	52	8	3
1	6.50	0.98	3.43	2.05	7.87	2.91	4.88	4	3.50	0.75	105	108	10
25	165.0	24.9	87.0	52.0	199.9	73.9	124.0		88.9	19.0	91	12	5
1-1/2	7.50	1.49	4.23	2.60	9.84	3.27	6.12	4	4.50	0.88	275	270	19
40	190.5	37.9	107.0	66.0	249.9	83.0	155.5		114.0	22.0	238	31	9
2	8.50	1.97	4.53	2.95	10.43	3.94	6.50	8	5.00	0.75	500	445	25
50	215.9	50.0	115.0	74.9	264.9	100.0	165.0		127.0	19.0	433	50	11
2-1/2	9.50	2.56	6.22	3.39	15.35	4.18	7.50	8	5.88	0.88	780	600	44
65	241.0	65.0	158.0	86.0	389.9	106.0	190.5		149.0	22.0	675	68	20
3	11.12	2.99	6.54	3.72	15.35	5.57	8.25	8	6.62	0.88	1,150	850	61
80	282.5	76.0	166.0	94.5	389.9	141.5	209.6		168.0	22.0	995	96	27.7
4	12.00	3.99	7.20	4.35	15.35	5.96	10.00	8	7.88	0.88	2,100	2,600	96
100	304.8	101.0	182.9	110.5	389.9	151.0	254.0		200.0	22.0	1,817	294	44
6	15.88	5.98	11.22	7.19	38.98	7.60	12.50	12	10.62	0.88	5,000	5,300	243
150	403.0	151.9	285.0	182.6	990.0	193.0	317.5		269.8	22.0	4,325	599	110
8	19.75	7.87	12.72	8.64	38.98	9.33	15.00	12	13.00	1.00	9,800	7,600	430
200	501.7	199.9	323.0	219.5	990.0	237.0	381.0		330.0	25.0	8,304	859	195
10	22.38	9.84	13.70	9.69	38.98	11.18	17.50	16	15.25	1.12	15,000	17,800	610
250	568.5	249.9	348.0	246.0	990.0	284.0	444.5		387.0	28.5	12,975	2,011	277
12	25.50	11.81	15.28	11.26	38.98	12.80	20.50	16	17.75	1.25	21,000	24,800	950
300	647.7	300.0	388.0	286.0	990.0	325.0	520.7		450.9	31.8	18,165	2,802	431

SECURE MOUNT

SIZE ins (mm)	H	J	Fo	BC DIA.	K	L	M	øP	U UNC
1/2	1.17	1.17	F04	1.65	0.31	0.61	0.25	0.37	#10-24
15	29.7	29.7		41.9	7.9	15.5	6.0	9.4	
3/4	1.17	1.17	F04	1.65	0.31	0.61	0.25	0.37	#10-24
20	29.7	29.7		41.9	7.9	15.5	6.0	9.4	
1	1.39	1.39	F05	1.97	0.43	0.82	0.31	0.43	1/4-20
25	35.0	35.0		50.0	10.9	20.8	7.9	10.9	
1-1/2	1.95	1.95	F07	2.76	0.55	0.95	0.37	0.62	5/16-18
40	49.5	49.5		70.0	14.0	24.0	9.0	15.8	
2	1.95	1.95	F07	2.76	0.55	0.95	0.37	0.62	5/16-18
50	49.5	49.5		70.0	14.0	24.0	9.0	15.8	
2-1/2-4	3.54	1.87	F10	–	1.75	3.10	0.67	1.10	1/2-13
65-100	89.9	47.5			44.5	78.7	17.0	27.9	
6	3.37	3.37	F12	4.77	1.61	3.58	1.02	1.71	1/2-13
150	85.6	85.6		121.0	40.9	90.9	25.9	43.0	
8[1]	3.37	3.37	F12	4.77	2.13[1]	3.58[1]	1.02	1.71	1/2-13
200	85.6	85.6		121.0	54.0	90.9	25.9	43.0	
10-12[2]	4.53	4.53	F16	6.40	2.15	3.86[2]	1.38	1.97[2]	5/8-11
250-300	115.0	115.0		162.6	54.6	98.0	35.0	50.0	

[1] For 8" F30: K=1.61, L=3.42 [2] For 10" F30: L=3.82, P=2.165

NOTE 1: Ball Support as shown on Page 2 is included on 10"-12" F15 and 6"-12" F30 valves.
NOTE 2: 2½", 3" & 4" valves feature a NAMUR stem slot for ease of limit switch mounting.

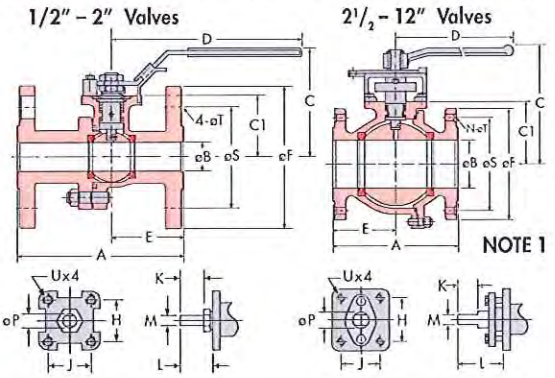

All statements, technical information, and recommendations in this bulletin are for general use only. Consult Flow-Tek representatives or factory for the specific requirements and material selection for your intended application. The right to change or modify product design or product without prior notice is reserved.

Flow-Tek® is a registered trademark of Flow-Tek, Inc.
© 2010 Flow-Tek, Inc.
F-2400_EN_F15-30_2010-10

Flow-Tek®
A Subsidiary of BRAY INTERNATIONAL, Inc.
8323 N. Eldridge Pkwy #100 Houston, Texas 77041
832.912.2300 Fax: 832.912.2301
www.flow-tek.com

BRAY SERIES 70

MODULATING ACTUATOR - SERVO PRO

For precision control of valve position. The Bray Series 70 Electric Actuator can be equipped with a Servo for precise control of valve position. The Servo consists of a microprocessor controlled circuit board and a feedback potentiometer assembly, which both fit entirely within the standard Series 70 actuator housing. The circuit board has terminal blocks for customer field wiring, and other terminals for internal connections to the actuator components. The feedback potentiometer is driven by a gear set connected to the actuator output drive. Also available are Servos capable of serial BUS communication, such as DeviceNet.

VOLTAGE SPIKE PROTECTION: Voltage spikes that can damage electrical equipment are very common in industrial locations. Large voltage spikes can be caused by switching power loads, such as large motor drives, at the customer location. The output stage triacs of the Servo Pro are protected against damage from voltage spikes by a special combination of:

- Limit Switch Circuitry
- Metal Oxide Varistor (MOV)
  For Transient Voltage Suppression
- Zero Crossing Detection

DeviceNet Servo PRO: Bray also offers the Series 70 with the most advanced serial BUS communication Servo on the market. The Bray DeviceNet Servo Pro is fully ODVA (Open DeviceNet Vendor Association) compliant. Benefits include greatly simplified field wiring and installation, advanced control and diagnostics in real-time from a remote location, and full network integration. Please contact your Bray representative for more information.

SERVO PRO FEATURES / SPECIFICATIONS

Servo is available for modulating service, continuous duty actuators only.

Power Input	24 , 120 or 220 VAC, 50/60 Hz (power must match motor)
Power Consumption	2 Watts (not including actuator power)
Input Signal	Standard: 4-20 mADC Configurable: 1. 0-10 VDC 2. 2-10 VDC 3. 10K Ohm or greater potentiometer,
Calibration	Single Button Autocalibration
Indicators	Power: Green LED Status: Flashing Red / Green LED Motor: Red LED (Close), Green LED (Open)
Control Modes	Standard: Full Range, Direct Acting Configurable: Reverse Acting, Split Range
Fail Position (Loss Of Input Signal)	Standard: Fail Closed Configurable: Fail Open
Control Characteristic	Linear
Duty Cycle	100%
Internal Feedback	10K Ohm Potentiometer, gear driven
Retransmission Output	Standard: 4-20 mADC Configurable: 0-5 VDC, 0-10 VDC, 2-10 VDC Retransmission Output is designed to drive an isolated 250–500 Ohm resistive load.
Speed Control	Standard: Full Speed (Speed Control is Disabled) Configurable: Bidirectional–Independent Open and Close Trim Pots adjustment

"Standard" is the way the Servo is set at the factory.

"Configurable" means the customer, or the factory, can modify the Servo by setting DIP switche(s).

WATERPROOF ENCLOSURE
S70-003 TO S70-065

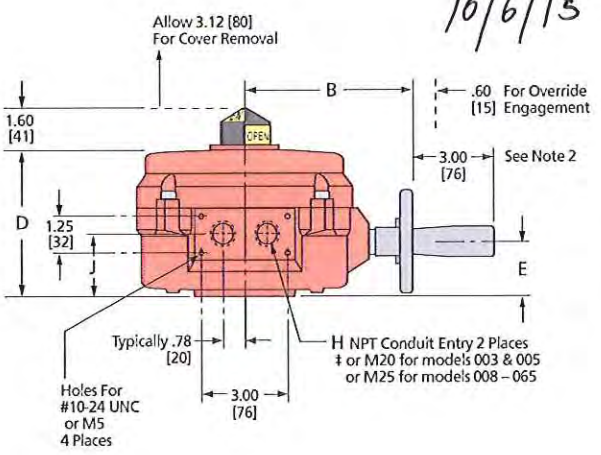

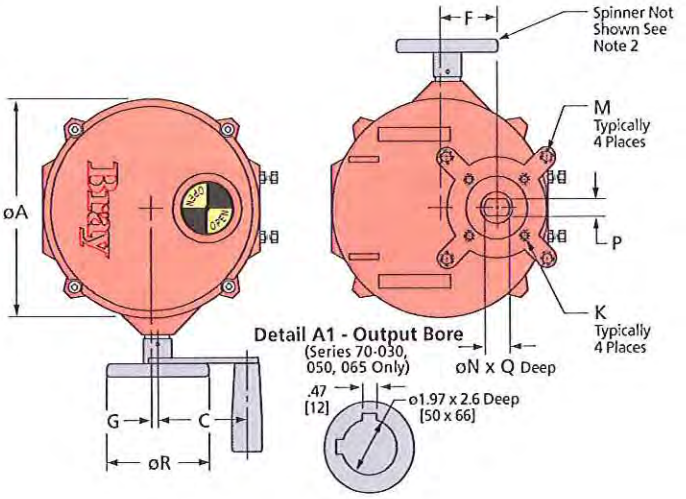

IMPERIAL DIMENSIONS - Inches

Actuator Series	A	B	C	D	E	F	G	H	J	K (UNC) x B.C.	M (UNC) x B.C.	N	P	Q	øR	S	T	U	Weight lbs
S70-003 S70-005	7.5	5.6	3.0	5.1	1.9	1.94	.19	1/2‡	2.0	5/16-18 x ø2.76 F07	—	.75	.51	1.75	3.5	–	–	–	12
S70-008 S70-012 S70-020	10.1	7.8	3.7	6.5	2.5	2.69	.56	3/4‡	2.6	5/16-18 x ø2.76 F07	1/2-13 x ø4.92 F12	1.18	.87	2.20	8	–	–	–	28
S70-030 S70-050 S70-065	12.1	9.5	5.6	7.2	2.9	3.19	.56	3/4‡	3.1	1/2-13 x ø4.92 F12	3/4-10 x ø6.50 F16	See Detail A1			12	–	–	–	48

METRIC DIMENSIONS - Millimeters

Actuator Series	A	B	C	D	E	F	G	H	J	K (UNC) x B.C.	M (UNC) x B.C.	N	P	Q	øR	S	T	U	Weight kgs
S70-003 S70-005	191	142	76	130	48	49.3	4.8	1/2‡	51	5/16-18 x ø2.76 F07	—	19	13	44	89	–	–	–	6
S70-008 S70-012 S70-020	257	198	94	165	64	68.3	14.2	3/4‡	66	5/16-18 x ø2.76 F07	1/2-13 x ø4.92 F12	30	22	56	203	–	–	–	13
S70-030 S70-050 S70-065	307	241	142	183	74	81	14.2	3/4‡	79	1/2-13 x ø4.92 F12	3/4-10 x ø6.50 F16	See Detail A1			305	–	–	–	22

Notes:

‡ The duty cycle for intermittent on-off operation is 25%. The continuous duty actuator with Servo is rated for 100% modulating operation.
2) Handwheel Spinner shown in drawing is available as an option.
3) K & M Dimensions are also available in M8, M12, and M20.
4) N Dimension is also available with Double Square (Star) drive.

Drawings are for reference only. Please refer to Bray ES drawings on the Bray website, www.bray.com. Bray reserves the right to change product dimensions without notice.

SR Drawing #70-003/065-im - August 2012- Rev. 0

Inquire/P.O. No.:_____

Customer/Project: _____

Bray Order No.: _____

Bray SERIES 70

2ND GENERATION ELECTRIC ACTUATOR

OPERATION AND MAINTENANCE MANUAL

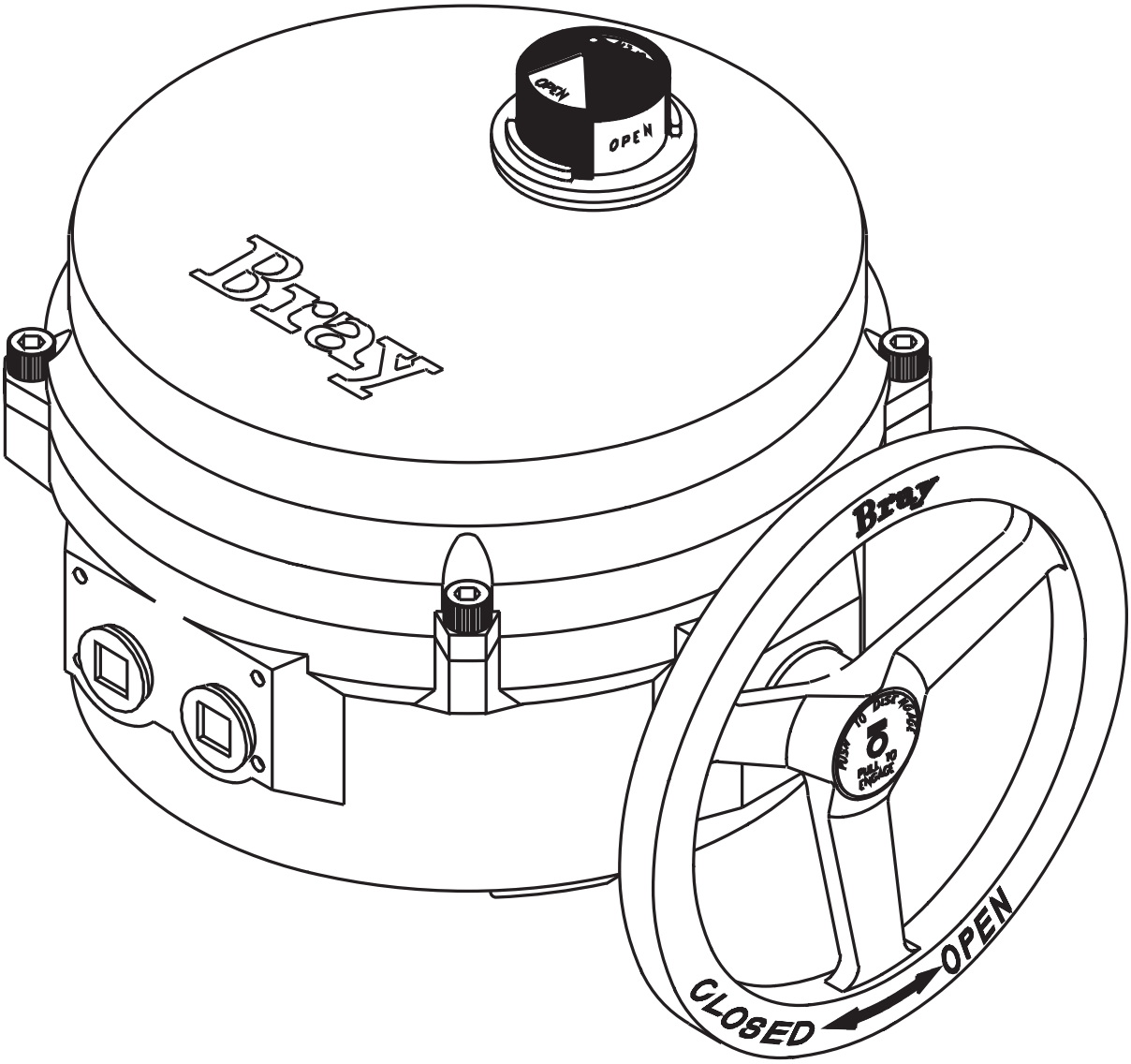

The High Performance Company

Table of Contents

Safety Instructions - Definition of Terms . . . 2
Hazard-Free Use . . . 2
Qualified Personnel . . . 2
Part Numbering System Reference Chart . . . 3
Introduction . . . 3
- Principle of Operation . . . 3
- Electrical Operation . . . 3
- General Electrical Schematic . . . 3
- Mechanical Operation . . . 3
- Manual Override Operation (Declutchable) . . . 4
- Pre-Installation Storage . . . 4

Installation . . . 4
- Mounting to a Valve . . . 4
- Field Wiring . . . 4
- Multiple Actuator (Parallel) Wiring . . . 5
- Actuator Diagram without I.R.B. . . . 5
- Travel Limit Switch and Mechanical Travel Stop Adjustment . . . 5
- S70 On/Off Actuator with Interposing Relay Board (I.R.B.) . . . 5
- Close Travel Switch Adjustment . . . 6
- Open Travel Switch Adjustment . . . 6

Disassembly and Assembly . . . 7
- Procedure . . . 7

Field or Factory Installable Options . . . 8
- Torque Switches . . . 8
- Torque Switch Mechanism . . . 8
- Heater . . . 9
  - Installation Procedure . . . 9
- Servo-Pro Module . . . 9
  - Installation Procedure . . . 10
  - Servo Calibration . . . 10
- External Signal Feedback Potentiometer . . . 11
  - Installation Procedure . . . 11
  - Set the Potentiometer . . . 11
- Auxiliary Switches . . . 11
  - Installation Procedure . . . 11
- Auxiliary Switch Configuration Chart . . . 12
- Typical Wiring Diagram: On/Off Service . . . 13
- Typical Wiring Diagram: Modulating Service . . . 14
- Adjustments, Calibration and Status LED of Servo Pro . . . 15
- Receptacles (Quick Connectors) . . . 16
- Spinner . . . 17
- Local Control Station (Single Phase Powered Actuators) . . . 17

Appendix A . . . 18
- Basic Tools . . . 18

Appendix B . . . 19
- Actuator Troubleshooting Chart . . . 19
- S70 Servo Pro Troubleshooting Chart . . . 20

Appendix C - Exploded Views . . . 21
- Series 70 - Housing Size 6 . . . 21
- Series 70 - Housing Size 12 . . . 22
- Series 70 - Housing Size 30 . . . 23
- Series 70 - Housing Size 180 for 3:1 Gear Box . . . 24
- Series 70 - 3:1 Gear Box . . . 25

For information on this product and other Bray products please visit us at our web page - www.bray.com

Safety Instructions - Definition of Terms

READ AND FOLLOW THESE INSTRUCTIONS
SAVE THESE INSTRUCTIONS

WARNING	indicates a potentially hazardous situation which, if not avoided, **could** result in death or serious injury.
CAUTION	indicates a potentially hazardous situation which, if not avoided, may result in minor or moderate injury.
NOTICE	used without the safety alert symbol indicates a potential situation which, if not avoided, may result in an undesirable result or state, including property damage.

HAZARD-FREE USE

This device left the factory in proper condition to be safely installed and operated in a hazard-free manner. The notes and warnings in this document must be observed by the user if this safe condition is to be maintained and hazard-free operation of the device assured.

Take all necessary precautions to prevent damage to the actuator due to rough handling, impact, or improper storage. Do not use abrasive compounds to clean the actuator, or scrape metal surfaces with any objects.

The control systems in which the actuator is installed must have proper safeguards to prevent injury to personnel, or damage to equipment, should failure of system components occur.

QUALIFIED PERSONNEL

- A qualified person in terms of this document is one who is familiar with the installation, commissioning and operation of the device and who has appropriate qualifications, such as:
- Is trained in the operation and maintenance of electric equipment and systems in accordance with established safety practices
- Is trained or authorized to energize, de-energize, ground, tag and lock electrical circuits and equipment in accordance with established safety practices
- Is trained in the proper use and care of personal protective equipment (PPE) in accordance with established safety practices
- Is trained in first aid
- In cases where the device is installed in a potentially explosive (hazardous) location – is trained in the operation, commissioning, operation and maintenance of equipment in hazardous locations

WARNING

The actuator must only be installed, commissioned, operated and repaired by qualified personnel.

The device generates large mechanical force during normal operation.

All installation, commissioning, operation and maintenance must be performed under strict observation of all applicable codes, standards and safety regulations.

Reference is specifically made here to observe all applicable safety regulations for actuators installed in potentially explosive (hazardous) locations.

PART NUMBERING SYSTEM REFERENCE CHART

Series	Torque Code	Speed	Product	Style	Voltage	Trim
70	AAA	X	113	Y	Z	536

Housing Size	Part Number	Torque (In.Lbs)	Speed, ¼ Turn (Seconds)	Supply (Z Voltage)
6	70-003**X**-113**YZ**-536	300	30/15	0/2/4
6	70-006**X**-113**YZ**-536	600	30	0/3/4
12	70-008**X**-113**YZ**-536	800	30/15/6	0/4/8
12	70-012**X**-113**YZ**-536	1200	30/15/6	0/4/9
12	70-020**X**-113**YZ**-536	2000	30/15	0/2/3/4/5/6/7/8
30	70-030**X**-113**YZ**-536	3000	30/18	0/2/4/5/6/7/8
30	70-050**X**-113**YZ**-536	5000	30/18	0/2/3/4/5/6/7/8
30	70-065**X**-113**YZ**-536	6500	30	0/2/4/5/6/7/8
180	70-13**WX**-113**YZ**-536	13000	110	0/4
180	70-18**WX**-113**YZ**-536	18000	110	0/4

Use this chart as a guide to interpret the S70 electric actuator part number.
Note: Not all combinations are possible.

W - DESIGNATES THE OUTPUT BORE DIAMETER

0	2.5 Inches
1	1.97 Inches

X - DESIGNATES THE SPEED

X:	0	1	2	3	4	5	6
Sec:	60	30	15/18	10	6	8	110

Y - DESIGNATES STYLE

A	Basic Unit - Declutchable
C	24VAC Unit with 24VAC Servo
D	With Interposing Relay Board*

*Only available for 120VAC or 220VAC On/Off units

Z - DESIGNATES THE VOLTAGE

Z:	0	1	2	3	4	5	6	7	8	9
Voltage:	120VAC	12VDC	24VDC	24VAC	220VAC	380V 3-PH	400V 3-PH	440V 3-PH	480V 3-PH	208V 3-PH

INTRODUCTION

The Bray Series 70 is a quarter turn electric actuator with manual override for use on any quarter turn valve requiring up to 18000 in.lb of torque. Operating speeds vary between 6 to 110 seconds.

PRINCIPLE OF OPERATION

The Series 70 actuator is divided into two internal sections; the power center below the switchplate, and the control center above the switchplate. Below the switchplate the capacitor and gearmotor with its spur geartrain drive a non-backdriveable worm gear output. The override mechanism for manual operation is also housed here. Above the switchplate is where user required, readily accessible components are placed. The camshaft assembly, limit switches, terminal strips, torque switches, heater, and servo are all placed here for easy access. External to the unit are adjustable mechanical travel stops, a large easy to read indicator, the unique manual override handwheel and dual conduit entry ports. The external coating is a high quality polyester powder coat which has exceptional UV as well as chemical resistance.

ELECTRICAL OPERATION

The motors used in the Bray Series 70 are either permanent induction split capacitor design (single phase AC power), SCI (Three Phase AC Power) or PM (DC Power). Travel limit switches are mechanical form (SPDT) with contacts rated at 10 amp (0.8 PF), 1/2 HP 125/250 VAC. In cases where the torque capacity of the unit is exceeded to the point where the motor stalls and overheats, a thermal protector switch built into the motor windings will automatically disconnect the motor power. Once the motor cools sufficiently the thermal protector switch will reset. Optional torque switches are available in all units to prevent the possibility of stalling the motor, thus reducing the necessity for an inoperable thermal cooldown period. Torque switches installed by Bray are factory adjusted to the output torque rating of the unit using electronic torque testing equipment.

NOTICE

Torque switches are not field adjustable. Adjustment of torque switches in the field will void warranty.

GENERAL ELECTRICAL SCHEMATIC

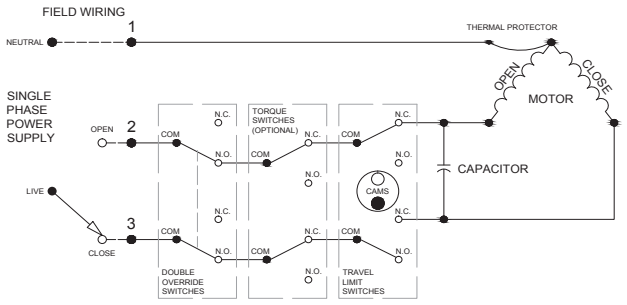

NOTE: *this is only a reference. For the actual wiring diagram refer to the diagram placed inside the actuator cover.*

MECHANICAL OPERATION

Mechanically, the ratio of the gearmotor determines the speed of the unit. The gearmotor utilizes high efficiency spur gears with various ratios for the different speeds. Initial gear reduction through the spur gears is then transferred to the worm shaft. The final gear reduction and output is through a non-backdriveable worm gear set. Positioning is determined by an indicator-cam shaft linked to the output shaft. In the declutchable condition the manual override drives the worm shaft when engaged.

MANUAL OVERRIDE OPERATION (DECLUTCHABLE)

The manual override operates similar to a watch adjusting knob. To engage the manual override, simply pull the handwheel to its outermost position. A yellow stripe is revealed for visual indication that the unit cannot run electrically. The two handwheel positions, engaged and disengaged, are held in place with the use of spring plungers. The handwheel remains in position until physically moved. Rotating the handwheel in the clockwise direction will rotate the output shaft in the same clockwise (closed) direction and vice-versa.

⚠ CAUTION

A label on the handwheel hub warns users not to exceed a specific rim pull force, for each size of actuator. If the rim pull force is exceeded, the roll pin securing the handwheel onto the manual override shaft is designed to shear, thus preventing more serious internal gearing damage.

PRE-INSTALLATION STORAGE

Actuators are not weatherproof until properly installed on the valve or prepared for storage. Bray cannot accept responsibility for deterioration caused on-site once the cover is removed.

⚠ NOTICE

Units are shipped with two metal screw-in plugs to prevent foreign matter from entering the unit. To prevent condensation from forming inside these units, maintain a near constant external temperature and store in a well-ventilated, clean, dry room away from vibration.

For units with an internal heater, power should be supplied to the heater via conduit entry and appropriate sealing gland.

Store units on a shelf or wooden pallet in order to protect against floor dampness.

Keep units covered to protect against dust and dirt.

INSTALLATION

MOUNTING TO A VALVE

All Bray Series 70 electric actuators are suitable for direct mounting on Bray butterfly valves. With proper mounting hardware, the S70 actuator can be installed onto other quarter-turn valves or devices.

⚠ NOTICE

The standard mounting position for the actuator is to orient the unit with its handwheel in a vertical plane and parallel to the pipeline. If the actuator is to be mounted on a vertical pipe, it is recommended that the unit be positioned with the conduit entries on the bottom to prevent condensation from entering the actuator by way of the conduit. In all cases, the conduit should be positioned to prevent drainage into the actuator.

The actuator should be mounted to the valve as follows:

1. Manually operate the actuator until the output shaft of the actuator is in line with the valve stem. If possible, select an intermediate position (i.e. valve disc/stem and actuator both half open).
2. Place the proper adapter, if required, onto the valve stem. It is recommended that a small amount of grease be applied to the adapter to ease assembly.
3. Mount the actuator onto the valve stem. It may be necessary to swing or manually override the actuator to align the bolt patterns.
4. Install the furnished mounting studs by threading them all the way into the actuator base.
5. Fasten in place with the furnished hex nuts and lock washers.

FIELD WIRING

⚠ WARNING

Turn off all power and lock out service panel before installing or modifying any electrical wiring.

Each actuator is provided with two (2) conduit entries (one for power and one for control).

1. The motor full load current is noted on the nameplate of the actuator. The terminal strip will accept wire sizes ranging from 14 to 22 AWG (14 to 24 AWG for the servo).

⚠ NOTICE

18 AWG minimum wire is recommended for all field wiring.

***Note** that the optional heaters use approximately 0.5 amps at 110 volts.*

2. **All actuators have their applicable wiring diagram attached to the inside of the cover.** Field wiring should be terminated at the actuator terminal strip in accordance with **this** wiring diagram.

NOTICE

The conduit connections must be properly sealed to maintain the weatherproof integrity of the actuator enclosure.

MULTIPLE ACTUATOR (PARALLEL) WIRING

CAUTION

Do not connect more than one S70 actuator which do not have I.R.B. installed to a single SPDT switch. A voltage is present on the opposite winding to the powered one. If this winding is connected to another as shown in the INCORRECT diagram it will interfere with the motor performance. Use a multiple pole switch as shown in the CORRECT diagram.

ACTUATOR DIAGRAM WITHOUT I.R.B.

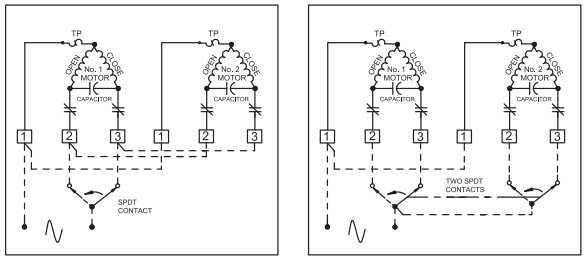

INCORRECT CORRECT

CAUTION

Do not reverse motor instantaneously when it is still running. Reversing direction to actuator motor when it is running can cause damage to motor, switches and gearing. Directional control switching can be done by PLC in 20ms or by a small relay in 46ms. Therefore time delay of 1s has to be incorporated into the control scheme to avoid damage.

TRAVEL LIMIT SWITCH AND MECHANICAL TRAVEL STOP ADJUSTMENT

CAUTION

The electrical travel switches **must** be set to activate (depress) prior to reaching the mechanical travel stops. The cams are color coded (green for open, red for closed).

NOTE: *Manual travel stops are designed to prevent manual overtravel from turning the handwheel, not to stop the electric motor. The travel stops have an adjustment range of approximately 10-degrees.*

S70 ON/OFF ACTUATOR WITH INTERPOSING RELAY BOARD (I.R.B.)

The back feeding of one actuator by another one wired in parallel is eliminated by using the I.R.B.

If actuator is running Open and customer switches “instantaneously” to run Closed, the Open relay will take time to ‘drop-out’ and the Close relay will take time to ‘pull-in’ this time lapse is ~ 40ms. The time delay provided by the I.R.B. will protect the switches and gears from the controller’s instantaneous command signal reversal.

Current draws and field wirings are not affected by adding I.R.B.

S70 120VAC I.R.B., auxiliary switch, heater, and torque switch option are UL certified units.

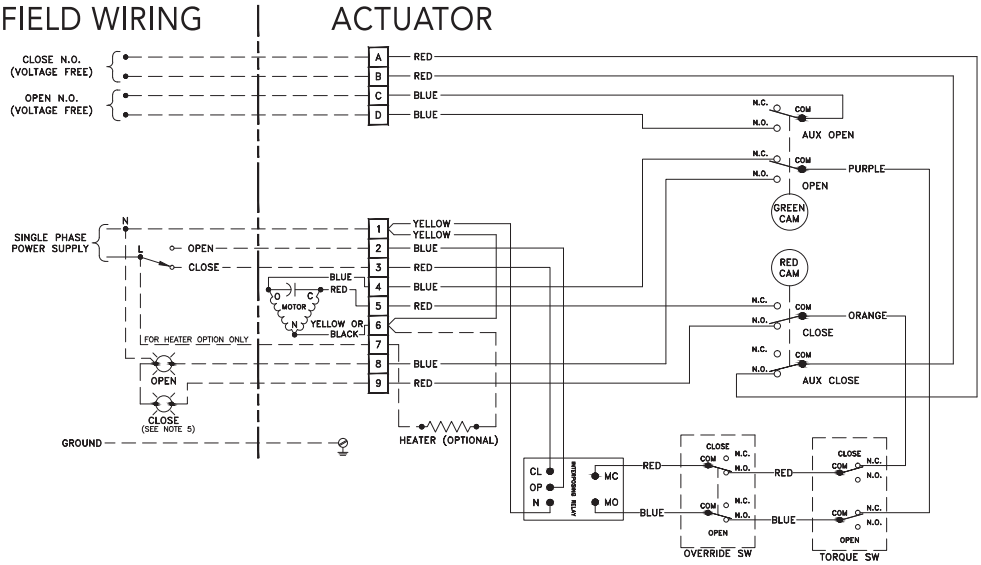

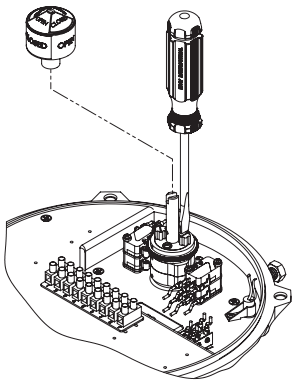

CLOSE TRAVEL SWITCH ADJUSTMENT

1. Loosen the mechanical stop for the closed position and back it off so that it does not interfere with actuator travel (closed stop located on right when viewed from travel stop side of actuator).
2. Remove the indicator rotor by pulling up it straight up away from the indicator shaft. This will expose the machined groove on the end of the cam shaft, which is the reference to the valve disc position.

NOTE: *For Housing Size 180, ignore steps 2 and 6. The valve position indicator plate on the lower gearbox is the reference to the valve position.*

3. Manually operate the actuator handwheel clockwise until the valve reaches the desired fully closed position.
4. Rotate the red adjusting knob by hand or with a flat head screwdriver until the cam lobe just activates (depresses) the switch from a clockwise direction.

NOTICE: *All continuous duty actuators have a cam locking screw. Cam locking screw must be slackened before cam adjustments and re-tightened after cam adjustments.*

NOTE: *It is possible that the rotation of one cam will move the other cam. If this occurs, hold the other knobs or cams during adjustment.*

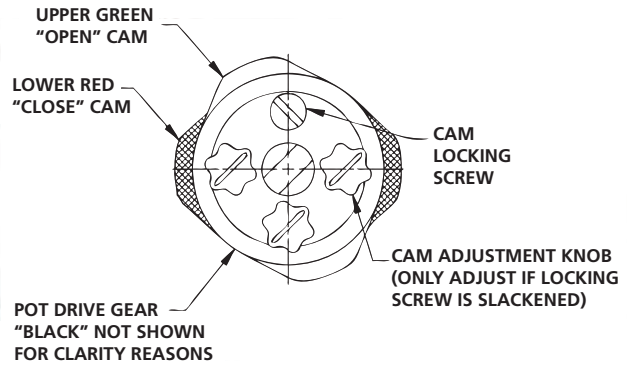

5. With the travel switch in the closed position, rotate the handwheel clockwise ½ turn for Housing Size 6, 1 turn for Housing Size 12, ½ turn for Housing Size 30, and 2 turns for Housing Size180. Adjust the closed travel stop bolt until it bottoms against the output gear and lock it in position with the locknut.
6. After all travel switch adjustments have been completed, replace the indicator rotor and secure the actuator cover.

OPEN TRAVEL SWITCH ADJUSTMENT

1. Loosen the mechanical stop for the open position and back it off, so that it does not interfere with actuator travel. The open stop is located on the left, when viewed from travel stop side of actuator.
2. Remove the indicator rotor by pulling it straight up away from the indicator shaft. This will expose the machined groove on the end of the cam shaft, which is the reference to the valve disc position.

NOTE: *For Housing Size180, ignore steps 2 and 6. The valve position indicator plate on the lower gearbox is the reference to the valve position.*

3. Manually operate the actuator handwheel counterclockwise until the valve reaches the desired open position.
4. Rotate the green adjusting knob until the cam lobe just activates (depresses) the switch from a counterclockwise direction.

NOTICE: *All continuous duty actuators have a cam locking screw. Cam locking screw must be slackened before cam adjustments and re-rightened after cam adjustments.*

NOTE: *It is possible that the rotation of one cam will move the other cam. If this occurs, hold the other knobs or cams during adjustment.*

5. With the travel switch in the open position, rotate the handwheel counterclockwise ½ turn for Housing Size 6, 1 turn for Housing Size 12, ½ turn for Housing Size 30, and 2 turns for Housing Size 180. Adjust the open travel stop bolt until it bottoms against the output gear and lock in position with the locknut.
6. After all travel stop adjustments have been completed, replace indicator rotor and secure the actuator cover.

DISASSEMBLY AND ASSEMBLY

Tools required:

See Appendix A for a complete list of basic tools.

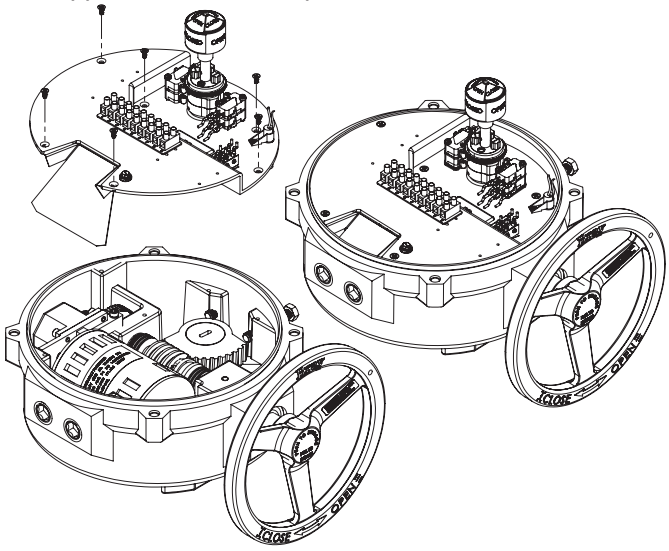

NOTE 1: *Assembly is the opposite of removal*

NOTE 2: *Pictures shown for Housing Size 6 are typical for all sizes*

PROCEDURE

⚠ WARNING

Turn off all power and lock out service panel before installing or modifying any electrical wiring.

1. Disconnect motor wires from the main terminal strip (motor neutral, open, and close).
2. Remove the switchplate by unscrewing the seven Phillips head mounting screws. The switchplate should lift out as an assembly with the camshaft attached.

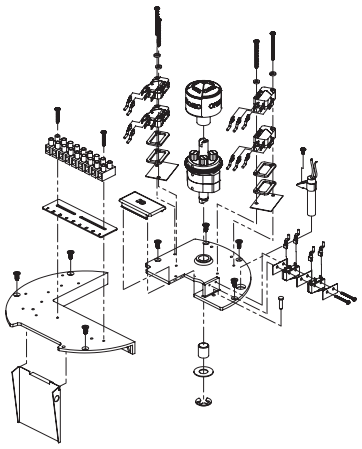

3. The switchplate can be independently disassembled.
4. To remove the Gearmotor, first disconnect the motor leads which run to the capacitor, and unscrew the mounting screws for Housing Size 6 (two lower, one upper) for other Housing Sizes (four lower, one upper). The motor can now be removed vertically out of the unit. **Note:** do not misplace the alignment pin.
5. To remove the worm shaft spur gear, remove the spring pin using a 3/32” punch, then slide the gear off the end of the worm shaft for Housing Sizes 6 and 12. Remove bowed E-clip retainer for Housing Size 30-180.
6. To remove the output drive worm gear, back off both mechanical travel stops. Remove the retaining ring and thrust washer, then lift the output drive worm gear out of its base.
7. The handwheel is held by a spring pin.

⚠ CAUTION

Further disassembly of the unit requires special tools and procedures, and thus will not be covered in this manual.

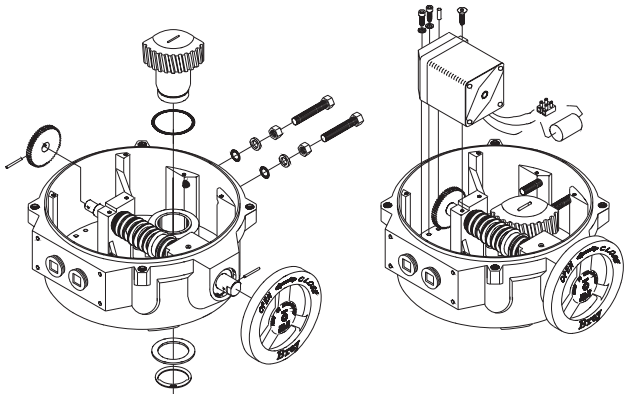

FIELD OR FACTORY INSTALLABLE OPTIONS

TORQUE SWITCHES

Torque switches are a factory installed and calibrated option available for all Series 70 units. Installation is simple, but due to the requirement for special calibration equipment, it is not recommended for field installation. In fact, modifying the factory torque setting voids the actuator warranty. Removal of the switchplate invalidates factory calibration

The unique mechanism is extremely accurate and has excellent repeatability. The worm is pinned to the worm shaft, which is held in position with a stack of disc springs at both ends. The torque transmitted through the worm to the output worm gear acts directly against the disc springs, which compress proportionately. The worm and worm shaft shift longitudinally as a result.

A specially designed drive lever and pin is incorporated into the worm, providing the profile for the torque switching mechanism. A drive lever & pin rides in the worm gear torque sensor groove, and in turn drives a cam. The cam then actuates its electrical switch, which interrupts the power to the motor winding when the torque exceeds the setting. The motor can still be powered to run in the opposite direction, the switch will release automatically.

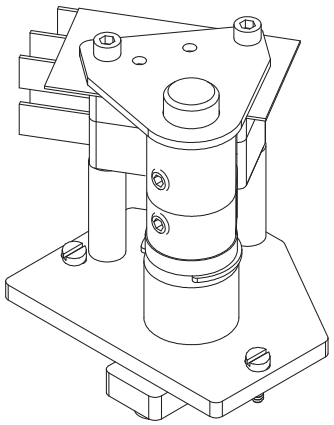

Switching Mechanism

TORQUE SWITCH MECHANISM

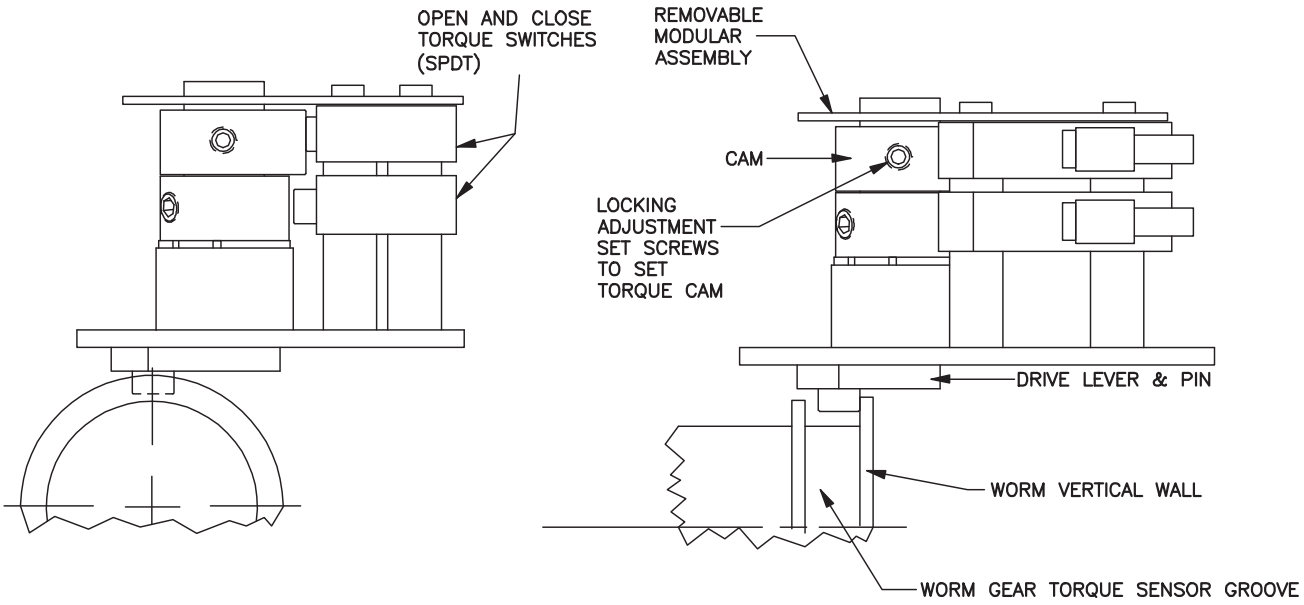

HEATER

To prevent condensation from forming inside the actuator, Bray offers an optional heater. The heater is a PTC (Positive Temperature Coefficient) style which has a unique temperature - resistance characteristic. The heater self-regulates by increasing its electrical resistance relative to its temperature. The heater does not require external thermostats or switches to control its heat output. It is constructed of a polycrystalline ceramic, sandwiched between two conductors, and wrapped inside a thermally conductive electrical insulator.

Connect the heater wires to the terminal strip as indicated on the wiring diagram.

***NOTE:** The heater must have a constant power supply to be effective.*

⚠ WARNING

The heater surface can reach temperatures in excess of 200 degrees Celsius

Heater Kit Consists of:

1. Heater with flying leads
2. Heater Mounting Bracket
3. #10 pan head screw, Phillips drive

Tools required:

- For terminal wiring: Screwdriver, 3/16” tip flat blade
- For heater mounting screw: Screwdriver, No.1 Phillips

INSTALLATION PROCEDURE

The heater is mounted through a hole provided in the switchplate.

Before servicing unit, switch all power off at the service panel and lock the service disconnecting means to prevent power from being switched on accidentally. When the service disconnecting means cannot be locked, securely fasten a prominent warning device, such as a tag, to the service panel.

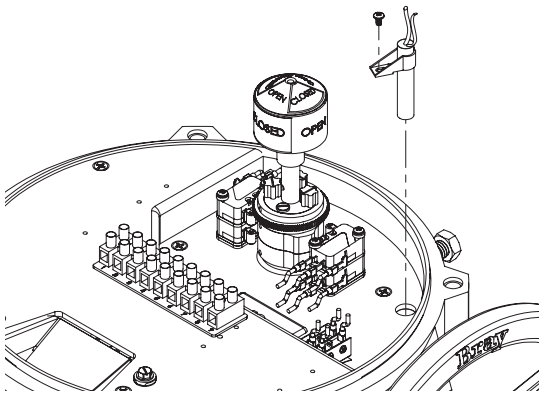

Disconnect all power to the unit.

1. Place the heater snugly into its mounting bracket until approx. 1/2 to 1” is left above the bracket as shown in diagram.
2. Slip the heater into its mounting hole.
3. Align the fastening hole in the bracket with the threaded screw hole in the plate. Fasten the heater to the switchplate.
4. Connect the heater wires to the terminal strip as indicated on the wiring diagram.

SERVO-PRO MODULE

Servo kits can be field installed on any continuous duty actuator (30, 60, or 110 sec. operation speed) to provide proportional positioning in response to a control signal. Intermittent duty actuators are not adaptable for servo control.

Servo Kit Consists of:

1. One servo module
2. Four #6 cross drive pan head screw (two for servo, two for feedback potentiometer)
3. One potentiometer assembly
4. Two #6 type A internal lockwashers (for pot)
5. One wiring diagram sticker for attaching to inside of actuator’s cover
6. One wiring diagram sticker for servo units with torque switches

Tools required:

- For actuator terminals wiring Screwdriver, 3/16” flatblade
- For servo terminals: Screwdriver, No.1 Phillips
- For servo and pot mounting screws: Screwdriver, No.2 Phillips

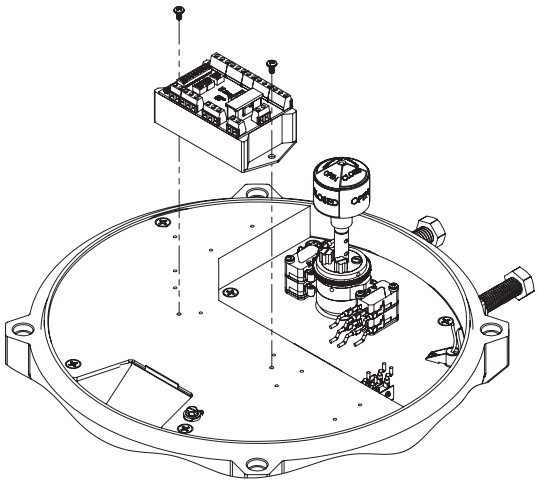

INSTALLATION PROCEDURE

- Disconnect all power to the unit.
- Remove the on/off duty, 9 point terminal strip and its marker

1. Disconnect all wiring to the terminal strip.
2. All wiring in the actuator is color coded to facilitate wiring, and does not need to be tagged or marked.
3. Field wiring should be marked if it is not already color coded.

Mount the servo module

4. Secure the servo card module onto switchplate with the 2X #6 screws.

Install the potentiometer assembly

5. The potentiometer installs next to the camshaft where there are two threaded holes provided.
6. The potentiometer assembly must be mounted in the correct orientation, with the actuator in its fully open (counter clockwise) position, the indicator shaft should be in-line with raised green rib on pot gear.
7. Push the assembly towards the cam to mesh the pot gears. Then tighten the mounting screws.

Note: *On Housing Size 180, the raised green rib on pot gear should be aligned with arrow on lower gear box's position indicator plate.*

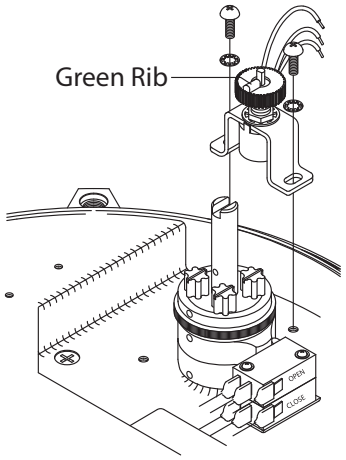

8. Rotate the actuator handwheel so that the red cam lobe is facing the body of the potentiometer. Make sure that the cam is not touching the potentiometer assembly. Readjust the assembly position if necessary.

Wire the potentiometer to the servo

9. Connect the potentiometer wires into the terminal strip on the servo module.
10. Wire according to the wiring diagram provided.

Wire the servo to the actuator

11. Wire according to the wiring diagram provided.
12. See the servo calibration instructions.

SERVO CALIBRATION

The calibration procedure defines the limits of operation of the Series 70 Actuator between the fully open valve position and the fully closed valve position. The cams on the Series 70 Actuator define the fully open and closed positions of the valve and may be set at any degree of opening. The only requirement is that the open cam limit setting must set at a higher degree of opening than the closed cam limit setting. In other words, the "Open" position must be more open than the "Closed" position.

Calibration is performed as follows:

1. Adjust the Open and Closed limit switch cams on the Series 70 Actuator to the desired position.
2. Engage the handwheel and move the Series 70 Actuator to its mid position.

NOTE: *An analog signal source is not required for calibration. Press and hold the "Calibrate" Set pushbutton for a minimum of 2 seconds. When the servo status LED begins to flag rapidly, release the button. The servo will now seek both travel limits and record these values to its nonvolatile memory. Following a successful calibration, the status LED will begin to flash a slow single green flash. If the calibration is unsuccessful, the status LED will alternately flash red and green. If this occurs, make sure the cams and the potentiometer are set correctly.*

This completes the "Self Calibration" procedure.

After completing the calibration procedure, it is good practice to apply the fully closed and fully open Command Signals, and verify that the S70 Actuator moves to the proper positions.

* Refer to Servo Pro Version 3.0 Operation & Maintenance Manual for more details

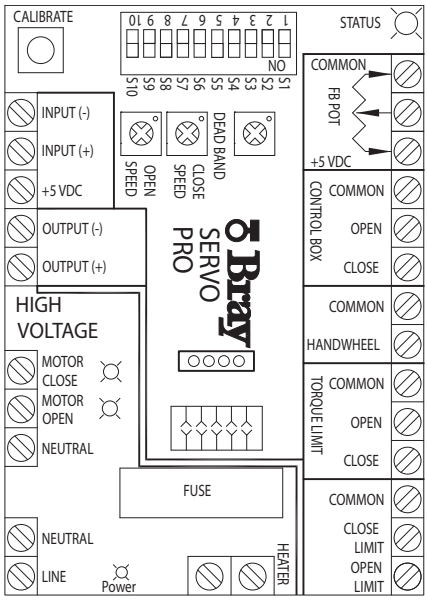

EXTERNAL SIGNAL FEEDBACK POTENTIOMETER

Potentiometers for external feedback can be field installed on all continuous duty actuators. Actuators which are not continuous duty do not have a pot gear fitted on their indicator shafts & must be fitted with a new shaft which has a pot drive gear for feedback pot (see Options: Auxiliary Switches).

Feedback Potentiometer Kit consists of:

- One potentiometer assembly
- Two #6 cross drive pan head screws
- Two #6 internal lockwashers
- One 4 point terminal strip
- One terminal strip marker for feedback pot
- One small wiring diagram sticker for the additional potentiometer

Tools Required:

- For terminal wiring Screwdriver, 3/16″ tip flat blade
- For pot mounting screws Screwdriver, No.2 Phillips

INSTALLATION PROCEDURE

1. The potentiometer installs next to the camshaft where there are two threaded holes provided for it.
2. The potentiometer assembly must be mounted in the correct orientation, with the actuator in its fully open (counter clockwise) position, the indicator shaft should be in-line with raised green rib on pot gear.

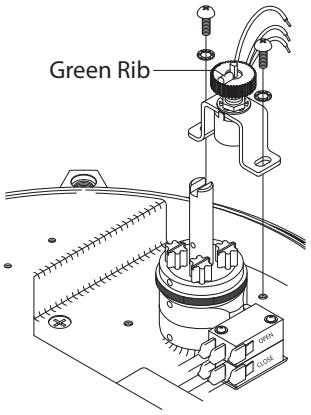

3. Push the assembly towards the cam to mesh the pot gears. Then tighten the mounting screws.
4. Rotate the actuator handwheel so that the red cam lobe is facing the body of the potentiometer. Make sure that the cam is not touching the potentiometer assembly. Readjust the assembly position if necessary.
5. Fit the 4 point terminal strip and marker in the kit. Before laying down the marker, cut it to obtain a marker as illustrated: opposite
6. Wire the pot to the terminal strip using the small stick-on wiring diagram provided.
7. Adhere the wiring diagram sticker to the inside of the cover.

SET THE POTENTIOMETER

1. Manually operate the actuator handwheel until the unit is in the fully closed position.
2. Rotate the black potentiometer drive gear adjustment knob, to engage the potentiometer gear at the closed position.
3. Manually operate the actuator to the fully open position.

AUXILIARY SWITCHES

Auxiliary switches are available, refer to chart on next page.

NOTES:

1. All auxiliary switches have voltage-free contacts.
2. Housing Sizes 6, 12, and 30 have double lobe cams. Housing Size 180 has single lobe cams.
3. Main limit switches are one OPEN and one CLOSE switch.
4. Auxiliary switches are one OPEN and one CLOSE switch, which are fixed to activate 3° before the main switches.
5. Adjustable auxiliary switches are adjustable to any position.

INSTALLATION PROCEDURE

1. Cut terminal strip marker to length needed with letters facing up.
2. Mount terminal strip and marker to switchplate using two #4-40 screws.

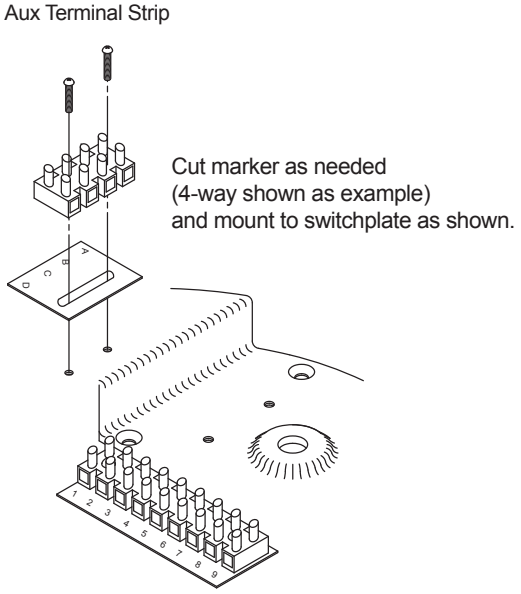

AUXILIARY SWITCH CONFIGURATION CHART

CONFIGURATION	HOUSING SIZE 6	HOUSING SIZES 12 & 30	HOUSING SIZE 180
1. ON/OFF (Intermittent Duty Motor) with Main Switches (Standard OPEN and CLOSE switches)	2 Switch 2 Cams Standard Assembly P/N	2 Switch 2 Cams Standard Assembly P/N	N/A
2. ON/OFF (Continuous Duty Motor) with Main Switches (Standard OPEN and CLOSE Switches	2 Switch 2 Cams & Pot Gear Standard Assembly P/N	2 Switch 2 Cams & Pot Gear Standard Assembly P/N	N/A
3. ON/OFF (Intermittent Duty Motor) with Main and 1 set of Auxiliary Switches	4 Switch 2 Cams Kit PN/ 70-0006-22980-536	4 Switch 2 Cams Kit PN/ 70-0012-22960-536	4 Switch 2 Cams & Pot Gear Standard Assembly P/N
4. ON/OFF (Continuous Duty Motor) with Main and 1 set of Auxiliary Switches	4 Switch 2 Cams & Pot Gear Kit P/N 70-0006-22980-536	4 Switch 2 Cams & Pot Gear Kit P/N 70-0012-22960-536	4 Switch 2 Cams & Pot Gear Standard Assembly P/N
5. ON/OFF with Main, 1 set of Auxiliary, and 1 Adjustable Auxiliary Switches	5 Switch 3 Cams Kit P/N 70-0006-22983-536	5 Switch 3 Cams Kit P/N 70-0012-22963-536	N/A
6. ON/OFF with Main, 1 set of Auxiliary, and 1 set of Adjustable Auxiliary Switches	6 Switch 3 Cams Kit P/N 70-0006-22984-536	6 Switch 3 Cams Kit P/N 70-0012-22964-536	N/A
7. ON/OFF with Main, 1 set of Auxiliary, and 2 adjustable Auxiliary Switches	For use with control station only. See Factory	6 Switch 4 Cams Kit P/N 70-0012-22961-536	6 Switch 4 Cams & Pot Gear
8. ON/OFF with Main, 1 set of Auxiliary, and 2 sets of adjustable Auxiliary Switches	N/A	8 Switch 4 Cams Kit P/N 70-0012-22962-536	N/A
9. Servo with Main, 1 set of Auxiliary, and 1 adjustable Auxiliary Switches	N/A	5 Switch 3 Cams & 1 Pot Gear Kit P/N 70-0012-22966-536	5 Switch 3 Cams & 1 Pot Gear
10. Servo with Main, 1 set of Auxiliary, and 2 Adjustable Auxiliary Switches	N/A	N/A	6 Switch 4 Cams & Pot Gear
11. ON/OFF with Main and 1 Adjustable Auxiliary Switch	3 Switches 3 Cams Kit P/N 70-0006-22988-536	3 Switch 3 Cams Kit P/N 70-0012-22968-536	N/A
12. Servo with Main and 1 Adjustable Auxiliary Switch	N/A	3 Switch 3 Cams & 1 Pot Gear Kit P/N 70-0012-22971-536	N/A

TYPICAL WIRING DIAGRAM: ON/OFF SERVICE

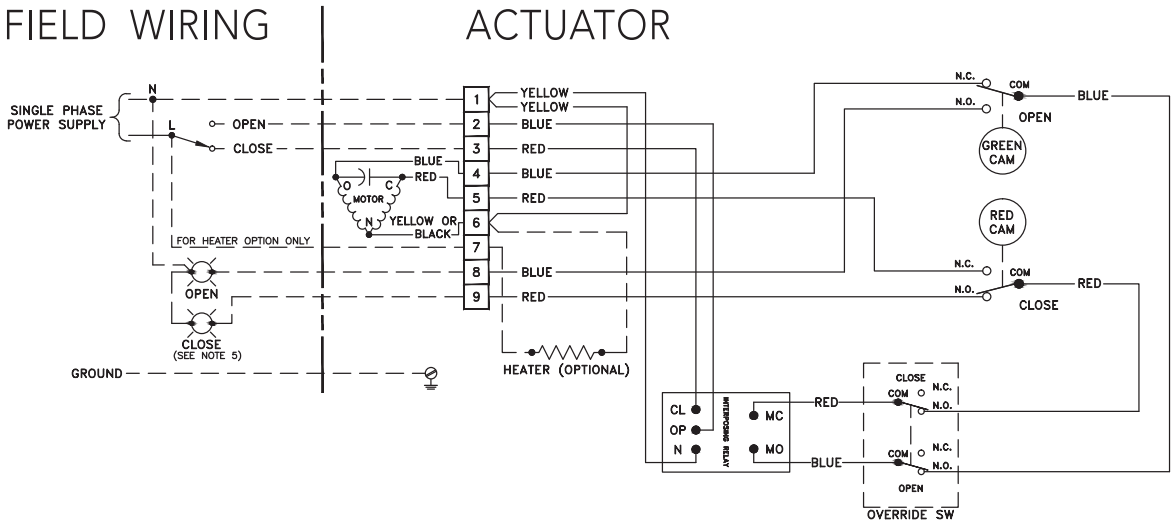

Wiring diagram for basic unit with Form-C (SPDT) travel limit switches, I.R.B., and double override switches. (Drawn for actuator in its fully closed condition.)

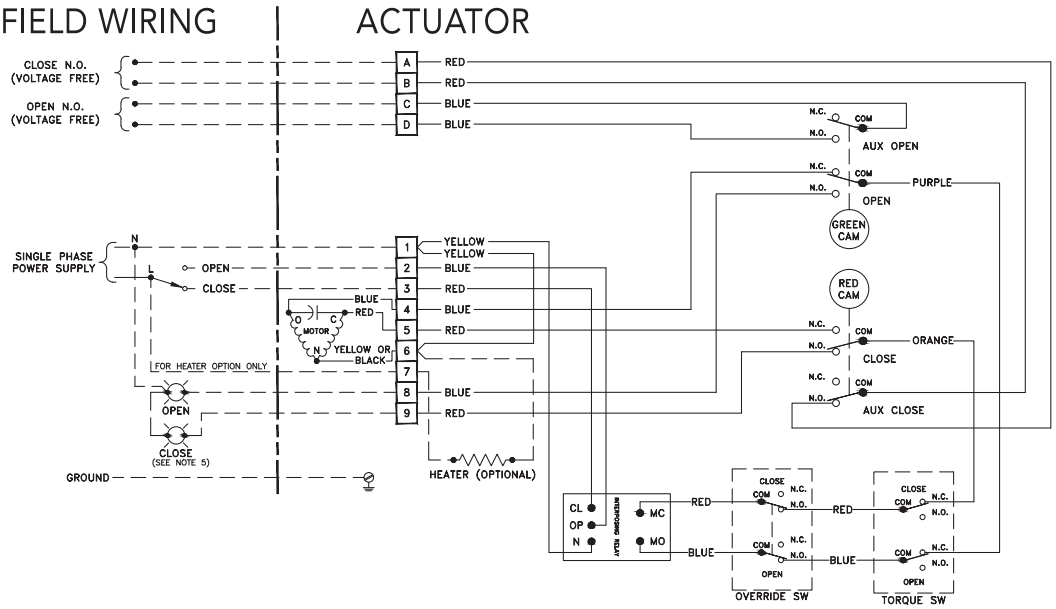

Wiring diagram for unit with Form-C (SPDT) travel limit switches, “Voltage Free” Auxiliary open/close switches, I.R.B., double override switches and torque switches. (Drawn for actuator in its fully closed condition.)

Actuator Form-C Switches, SPDT

Housing Size: 6
V3-Sw

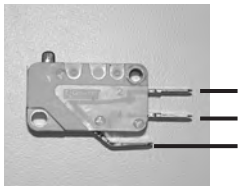

Housing Size:12, 30 & 180
V3-Sw with Lever

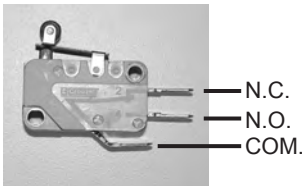

TYPICAL WIRING DIAGRAM: MODULATING SERVICE

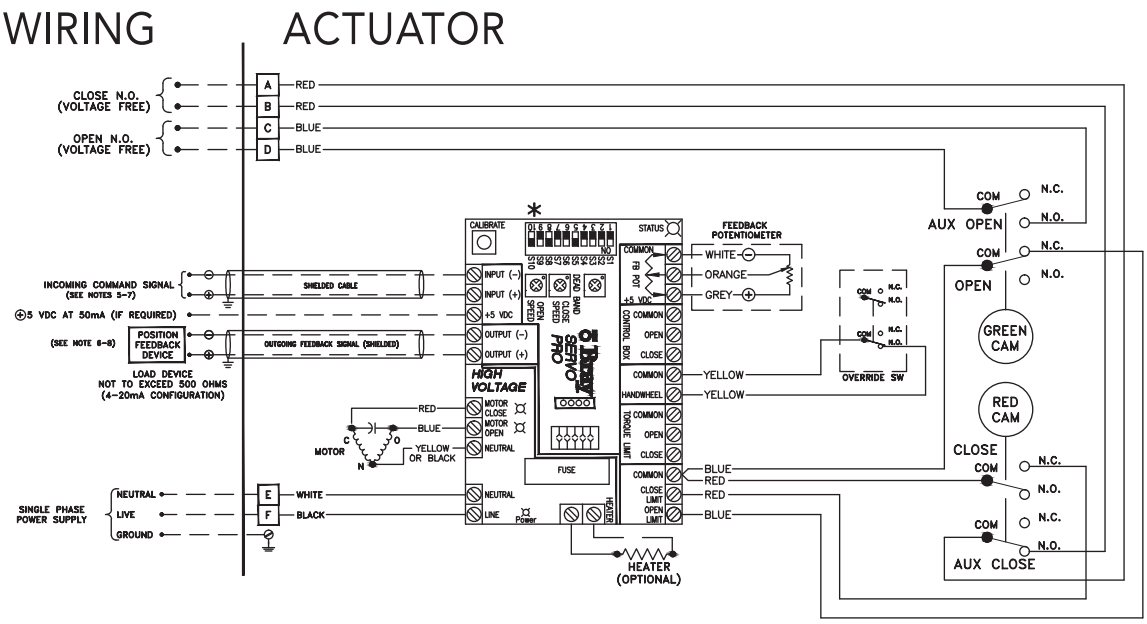

Wiring diagram for unit with Form-C (SPDT) travel limit switches, “Voltage Free” Auxiliary open/close switches, Servo and double override switches. (Drawn for actuator in its full closed position.)

Warning: Turn ALL Power Off prior to adjusting DIP switches.

SWITCH	COMMAND INPUT			
	4-20 mA DC	**0-5 VDC ***	**0-10 VDC**	**2-10 VDC**
1	Off	On	On	On
2	Off	Off	On	On
3	Off	Off	Off	On
	OUTPUT			
	4-20 mA DC	**0-5 VDC**	**0-10 VDC**	**2-10 VDC**
4	Off	On	On	N/A
5	On	Off	Off	N/A
6	Off	On	Off	N/A
	Forward Acting	**Reverse Acting**		
7	Off	On		
	Fail in Last Position	**Fail Enable ****		
8	Off	On		
	Fail Close	**Fail Open**		
9	Off	On		
	Torque Switch Enable	**Torque Switch Disable**		
10	Off	On		

*To control servo with a remote potentiometer, set the Command Input to 0-5VDC (see Command Signal Connector section; page 8 Servo Pro Manual).

**Fail position is the position that the servo will travel to when the control signal is removed. It does not apply to 0-5VDC or 0-10VDC Command Signals.

ADJUSTMENTS, CALIBRATION AND STATUS LED OF SERVO PRO

A. Adjust the open and close speed of your actuator (The fastest closing speed of your actuator is printed on the label of the unit):

1. Use the Close Speed trim pot to adjust the closing speed of your actuator (pot in the fully CCW position equals fastest close speed).
2. Use the Open Speed trim pot to adjust the opening speed of your actuator (pot in the fully CCW position equals fastest open speed).

B. Calibrate the Servo:

1. Manually position your actuator somewhere in mid position; away from the travel limits.
2. Disengage your handwheel (push it back in towards the actuator), hold down the Calibration push button for two seconds and release, the servo will begin to drive the actuator in the close direction and then in the open direction in order to save these limits to memory.
3. Following a successful calibration the servo's Status LED will begin to flash the normal operation code, an unsuccessful calibration will yield a Red-Green-Red-Green flash immediately following the attempted calibration (for more information on the Status LED flash codes see the Status LED Flash Code Table).

Status LED

The "Status LED" is a bi-color LED which provides detailed information regarding the operation of the S70 Servo Pro. Table 2 below illustrates the different combinations of LED flash codes and their corresponding conditions. Following the table is a more descriptive explanation of the Flash Code. Whenever the LED is flashing green, regardless of the flash code, the servo will operate, but not necessarily optimally. Whenever the LED flash codes are RED, the servo will not operate. An example is an engaged handwheel, the Status LED will flash a single red flash code and will not operate.

Table 2: Status LED Flash Codes

Green Status LED warning and information Flash Codes:

#	Indication	Reason	Solution
1	Steady Green Flash	Normal Operation	Servo Functioning Ok
2	2 Green Flashes	Calibration Defaults Loaded	Adjust travel limits, push autocalibration PB
3	3 Green Flashes	Reverse Acting Mode	If you would like your servo to not operate in reverse acting mode, set DIP switch 7 accordingly
4	4 Green Flashes	2-10VDC Input Command Signal Selected	If you require a different configuration, set DIP switches 1, 2, and 3 accordingly
5	1 Red Flashes	Handwheel engaged	Push the Handwheel in towards the actuator
6	2 Red Flashes	Command Signal Failure	Set DIP switches accordingly, send servo appropriate signal
7	3 Red Flashes	Feedback Pot Fault	Position the feedback Pot correctly, see Feedback Pot calibration
8	4 Red Flashes	Limit Switch Fault	Check wiring of limit switches, ensure that both switches are not tripped simultaneously
9	5 Red Flashes	Torque Switch Fault	Ensure that DIP switch 10 is positioned correct, check wiring of torque switches, reverse direction of actuator, correct over torque condition
10	6 Red Flashes	Feedback Pot Wired In Reverse	Correctly wire the Feedback Pot

***Note:** A flashing green LED provides status and warning information. The servo will operate normally in this state. Some flash codes indicate a warning, where the servo has recovered automatically such as the detection of an invalid calibration. In this case, a default calibration is automatically loaded that will allow the Servo to operate, but may not be a perfect match to the actuator. The servo should be re-calibrated as soon as possible.*

RECEPTACLES (QUICK CONNECTORS)

Unless otherwise specified, power receptacles will be 5-pin mini style standard duty with a black anodized aluminum finish. They conform to ANSI B93.55M except in wire color. Euro receptacles will be used for low power instrument and signal cable since they can be supplied shielded. Wiring diagrams for plug-in receptacles for either the Bray Series 70 or the local control station will be provided as a separate diagram. Units ordered with pin connector receptacles factory installed are wired and tested. Cordsets which fit these receptacles may be ordered in several lengths.

Receptacle Kit consists of:

1. Receptacle(s), male pin and male thread 1/2"-NPT, in the quantity, style, and number of pins ordered
2. Reducing bushing 3/4" to 1/2" NPT for installation in Housing Sizes 12 - 180 and control stations
3. Wiring diagram (SK-# below)

Tools required:

- For terminal wiring: Screwdriver, 3/16" tip flat blade
- For Mini or Euro receptacle: Wrench, 1"

Installation procedure:

1. Screw the receptacle into the actuator conduit entry using Teflon tape or similar.
2. Wire to the terminal strip according to the wiring diagram or the field wiring requirements.

Wiring Schematic for Optional Pin Connector Receptacles

REQUIREMENTS				RECEPTACLES REQ'D		NO L.C.S.[1] DIAGRAM	WITH L.C.S.[1] DIAGRAM
ON - OFF UNITS (INTERMITTENT OR CONTINUOUS)							
POWER	———			ONE MINI		SK-960517	SK-960515
POWER	———	POSITION INDICATION[2]		ONE MINI	ONE EURO	SK-960717	SK-960513
POWER	———	POSITION INDICATION[3]		ONE MINI	ONE EURO	SK-960516	SK-960716[5]
POWER	———		FEEDBACK POTENTIOMETER	ONE MINI	ONE EURO	SK-960718	SK-960720
POWER	———	POSITION INDICATION[3]	FEEDBACK POTENTIOMETER	ONE MINI	6-PIN EURO[4]	SK-960719	N/A

Custom configurations are possible - consult the factory.

[1] L.C.S.: Local Control Station , WHICH implies mounted to the actuator

[2] Travel indication is wired to the supply voltage

[3] Travel indication wiring is voltage free

[4] A 6-pin EURO connector is required for this application, consult factory for price and availability.

[5] The Local Control Station comes standard with 120 Volt lamp bulbs, for other voltages consult factory.

Note: *the Control Station lights must be wired to the same voltage as the remote end of travel indication.*

Euro receptacles use 22 AWG wire rated at 250V, 4 Amp. Pin configuration interfaces with European standards.

Mini receptacles use 18 AWG wire rated at 300 V, 9 Amp. Pin configuration conforms to ANSI B93.55M.

*** For requirements beyond these ratings consult the factory.**

SPINNER

A spinner is available to ease and speed the manual override of the Bray Series 70 actuator. The Housing Size 6 units mount the spinner on a lever which screws onto the back of the handwheel. The Housing Size 12-180 units mount the spinner on the rim of the handwheel. Note that care should be exercised in the use of spinner equipped handwheels. Rapid operation of the handwheel to close the valve may cause water hammer. Also, rapid travel into a travel stop may cause damage.

Spinner Kit Consists of:	
For Housing Size 6	**For Housing Sizes 12-180**
Spinner and lever assembly	Spinner handle
Flat head socket cap screw, #10-32UNF x 3/8	Socket head shoulder bolt, 1/4-20UNC x .75

Tools required:

- For socket head shoulder bolt and flat head capscrew
- Hex key, 1/8" for Housing Size 6
- Hex key, 3/16" for Housing Sizes 12-180

Installation procedure:

- For Housing Size 6 units simply position the lever onto the back of the handwheel then screw the flat head cap screw in to place from behind.

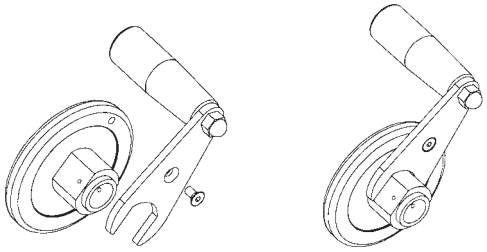

- For Housing Size 12-180 units, put the socket head shoulder bolt through the spinner handle and screw it firmly into the handwheel rim.

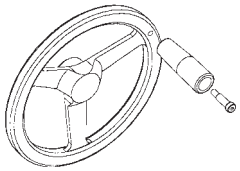

LOCAL CONTROL STATION (SINGLE PHASE POWERED ACTUATORS)

Bray's local control station gives the user the ability to locally override the actuator electrically. The station is open / stop / close operation in the local control mode. Red and green end of travel indication lights are also provided. Depending on how it is wired the control station can be used on the on - off units and the servo controlled modulating units. Optional key operated locking switches are available.

Note: *The control station used with On - Off S70 and that used with modulating S70 have different contact blocks internally, the correct part number must be used to ensure you order the correct unit (see price sheet).*

Local Control Station Kit consists of:

1. Local control station assembly
2. Four socket head cap screws, #10-24UNC x 4.50 long, for mounting the station to the actuator
3. A gasket for sealing the station to the actuator
4. Wiring diagram

Tools required:

- For tapping control station mounting holes on actuator, #10-24UNC Tap.
- For wiring Screwdriver, 3/16" flat blade.
- For mounting and cover screws Hex key, 5/32"

Installation procedure:

1. Tap #10-24UNC holes using the cored holes on the side of actuator.
2. Adhere the gasket to the control box.
3. Mount the control box to the actuator using the 4 long socket head capscrews.

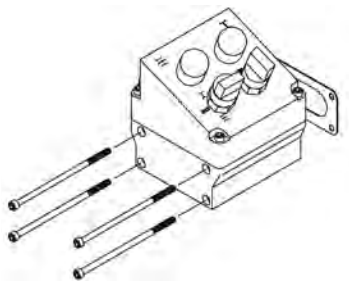

4. Wire the control box to the actuator in accordance to the wiring diagram provided. The local control station contains no terminal strips, and all wiring is direct to the switches and lights via 2" x 3/4" NPT holes in bottom of housing. Ordering the control station with optional pin connector receptacles will eliminate the necessity of field wiring. The units will be completely factory wired and tested.

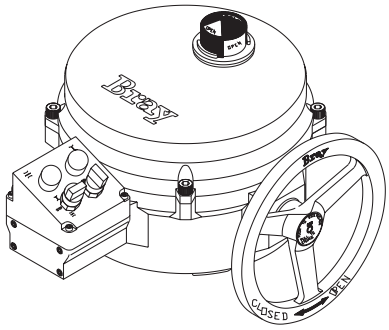

Note: *The inclined cover of the local control station can be mounted in any of its four symmetrical positions. If field wiring is required, first mount the base to the actuator, then remove the cover to gain access for wiring.*

**Local Control Station requires a dedicated set of auxiliary switches for control station use only. Two additional adjustable auxiliary switches are needed for remote indication of open/close position in ON/OFF configurations*

APPENDIX A

BASIC TOOLS

Common To All Units	
Terminal connections, cam adjustment	Screwdriver, ¼" tip flat tip blade
All switches, terminal strip, torque switch plate	Screwdriver, No.1 Phillips
Switchplate screws, capacitor	Screwdriver, No. 2 Phillips
Servo trimmer pots	Screwdriver, ⅛" flat tip for trim pots
Housing Size 6	
Mounting nuts	Wrench, ½ "
Cover captivated capscrews	Hex key, ¼"
Travel stop adjusting bolts	Wrench, 7⁄16"
Travel stop jam nuts	Wrench, 7⁄16"
Motor mount socket flat head capscrew	Hex key, 3⁄32"
Motor mount socket head capscrew	Hex key, 9⁄64"
Conduit Entry Plug	Hex key, ⅜"
Housing Size 12	
Mounting nuts (small pattern)	Wrench, ½"
Mounting nuts (large pattern)	Wrench, ¾"
Cover captivated capscrews	Hex key, 5⁄16"
Travel stop adjusting bolts	Wrench, 9⁄16"
Travel stop nuts	Wrench, 9⁄16"
Motor mount socket head capscrew	Hex key, 5⁄32"
Conduit Entry Plug	Hex key, 9⁄16"
Housing Size 30	
Mounting nuts, travel stop jam nuts	Wrench, ¾"
Cover captivated capscrews	Hex key, ⅜"
Travel stop adjusting studs	Wrench, ¾"
Motor mount socket head shoulder bolt	Hex key, 5⁄32"
Motor mount socket head cap screws	Hex key, 3⁄16"
Conduit Entry Plug	Hex key, 9⁄16"
Housing Size 180	
Mounting nuts, travel stop jam nuts	Wrench, ¾"
Cover captivated capscrews	Hex key, ⅜"
Travel stop adjusting studs	Wrench, 5⁄16"
Motor mount socket head shoulder bolt	Hex key, 5⁄32"
Motor mount socket head cap screws	Hex key, 3⁄16"
Conduit Entry Plug	Hex key, 9⁄16"

APPENDIX B

ACTUATOR TROUBLESHOOTING CHART

Problem	Possible Cause	Solutions
Actuator does not operate	Override is engaged	Push handwheel in all the way
	Wiring is incorrect	Check wiring and power supply
	Actuator motor has reached its thermal shutdown temperature	Allow time to cool
Actuator operates in reverse directions	Field wiring is reversed	Rewire field wiring
Actuator does not fully close valve (or open valve)	Limit switches are depressed	Readjust travel limit switches
	Mechanical travel stop is stopping actuator	Adjust mechanical travel stops
	Valve torque requirement is higher than actuator output	Manually override out of seat, try angle seating or larger actuator
	Optional torque switches are activating	Valve torque exceeds actuator torque rating - consult factory
	Voltage power supply is low	Check power source.
Engaging override handwheel does not shut off motor	Override pin is corroded or damaged	Clean and check for smooth operation of the override switch pin
	Override switch is damaged	Replace switch
Disengaging override hand-wheel does not restart motor	Not completely disengaged	Push handwheel in as far as possible (no yellow showing)
	Override pin is damaged or and does not activate switch	Replace override pin
	Incorrect wiring of override switch	Check wiring
Motor runs but worm and gear segment do not	Worm gear segment is not meshing with worm	Remove switchplate and inspect, adjust travel stops to prevent gear disengaging
	Pin/Key on Worm/Motor drive gear sheared	Replace Pin/Key on drive gear
Corrosion inside unit	Condensation forming	Test heater wiring, should have constant power
	Water leaking in	Check all seals and possible water entry through conduit

S70 SERVO PRO TROUBLESHOOTING CHART

Refer to the Servo Pro Operation Manual for more information.

Problem	Possible Cause	Solutions
Actuator moves back and forth near setpoint (hunts)	Signal is fluctuating beyond deadband setting	Increase the deadband using the Deadband trim pot.
	Signal has interference	Shield signal from interference
Actuator does not travel fully open or fully closed	Travel limit switches are not set correctly	Set travel limit switches for 90° operation
	Servo DIP switches are not set correctly	See Quick Setup Instructions on page 5
	Mechanical travel stops are not set correctly	Set mechanical travel stops for 90° operation
Actuator motor does not run and green servo power light is off	Power is disconnected	Connect power
Actuator motor does not run and green servo power light is on	Limit switches or torque switches are triggered	Ensure that there is continuity between the two wires going to each switch
	Handwheel is engaged	Push handwheel in (disengage)
	Servo is not wired correctly	Check servo wiring to all points
	Motor has thermally tripped	Allow motor to cool down
Actuator does not properly respond to command signal	Potentiometer gear is not engaged	Engage and adjust pot. gear
	Command signal DIP switch selection is not correct	Set the DIP switches correctly
	Command signal polarity is incorrect	Wire the command signal correctly
Actuator runs in one direction only	Wiring is incorrect	Correct Wiring
	Potentiometer wired backwards	Reverse white and gray wires, see wiring diagram inside cover
	Limit switch or torque switch is triggered	Ensure that there is continuity between the wires coming from the switches. If your actuator has reached its travel limit, reverse direction. If one of your torque switches has tripped, reverse the actuator direction and correct the over torque condition.
	Command signal DIP switch selection is not correct	Set the DIP switches correctly

APPENDIX C - EXPLODED VIEWS

SERIES 70 - HOUSING SIZE 6

ON / OFF

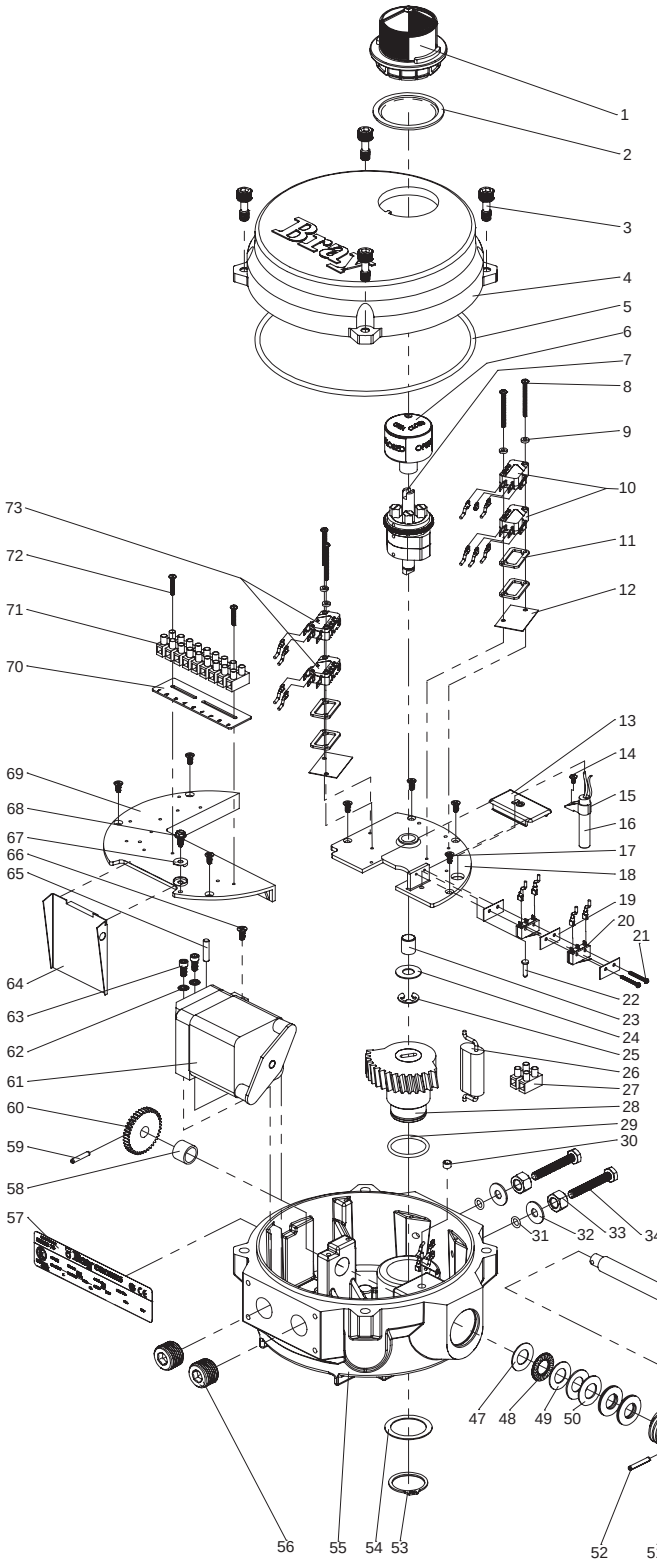

1 POSITION INDICATOR COVER
2 POSITION INDICATOR SEAL
3 COVER FASTENING SCREWS
4 COVER
5 O-RING
6 INDICATOR ROTOR
7 INDICATOR SHAFT ASSEMBLY
8 SWITCH MOUNTING SCREW
9 FIBER WASHER
10 LIMIT OPEN/CLOSE SWITCHES
11 SWITCH SPACER
12 SWITCH INSULATOR
13 TORQUE SWITCH COVER
14 PAN HEAD SCREW
15 HEATER MOUNTING BRACKET
16 HEATER
17 FLAT HEAD SCREW
18 SWITCH PLATE, FIXED
19 INSULATOR
20 OVERRIDE SWITCH (SPDT FORM C)
21 SCREW, PAN HEAD
22 OVERRIDE SWITCH TRIGGER PIN
23 BUSHING
24 THRUST WASHER
25 RETAINING RING
26 CAPACITOR
27 TERMINAL STRIP
28 OUTPUT WORM GEAR SEGMENT
29 O-RING
30 OVERRIDE SPRING PIN
31 O-RING
32 NYLON FLAT WASHER
33 LOCK NUT
34 TRAVEL STOP BOLT
35 WORM SHAFT
36 OVERRIDE DRIVE PIN
37 SPRING PLUNGER
38 MANUAL OVERRIDE SHAFT
39 MANUAL OVERRIDE SLEEVE
40 O-RING
41 O-RING
42 RETAINING RING
43 HANDWHEEL
44 HANDWHEEL WARNING LABEL
45 SPRING PIN
46 MANUAL OVERRIDE BUSHING
47 THRUST WASHER
48 THRUST ROLLER BEARING
49 THRUST WASHER
50 DISC SPRING
51 WORM
52 PIN, SLOT SPRING
53 RETAINING RING
54 THRUST WASHER
55 BASE
56 CONDUIT ENTRY PLUG
57 NAME TAG
58 BUSHING
59 DRIVE GEAR PIN
60 DRIVE GEAR
61 GEAR MOTOR
62 LOCK WASHER
63 SOCKET HEAD CAP SCREW
64 CONDUIT WIRE DEFLECTOR
65 DOWEL PIN
66 FLAT HEAD SCREW
67 WASHER, GROUND TERMINAL
68 GROUND SCREW
69 SWITCH PLATE REMOVABLE
70 TERMINAL STRIP TAG: 1-9
71 TERMINAL STRIP
72 PAN HEAD SCREW
73 AUX OPEN/CLOSE SWITCHES

Item 73 is optional.
Items 14,15, and 16 are optional.
Item 13 is installed in units when torque switches are not required.

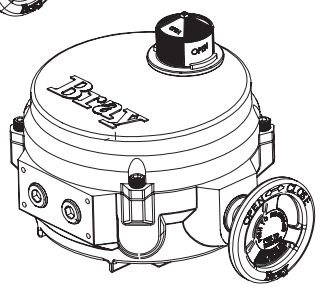

SERIES 70 - HOUSING SIZE 12

ON / OFF

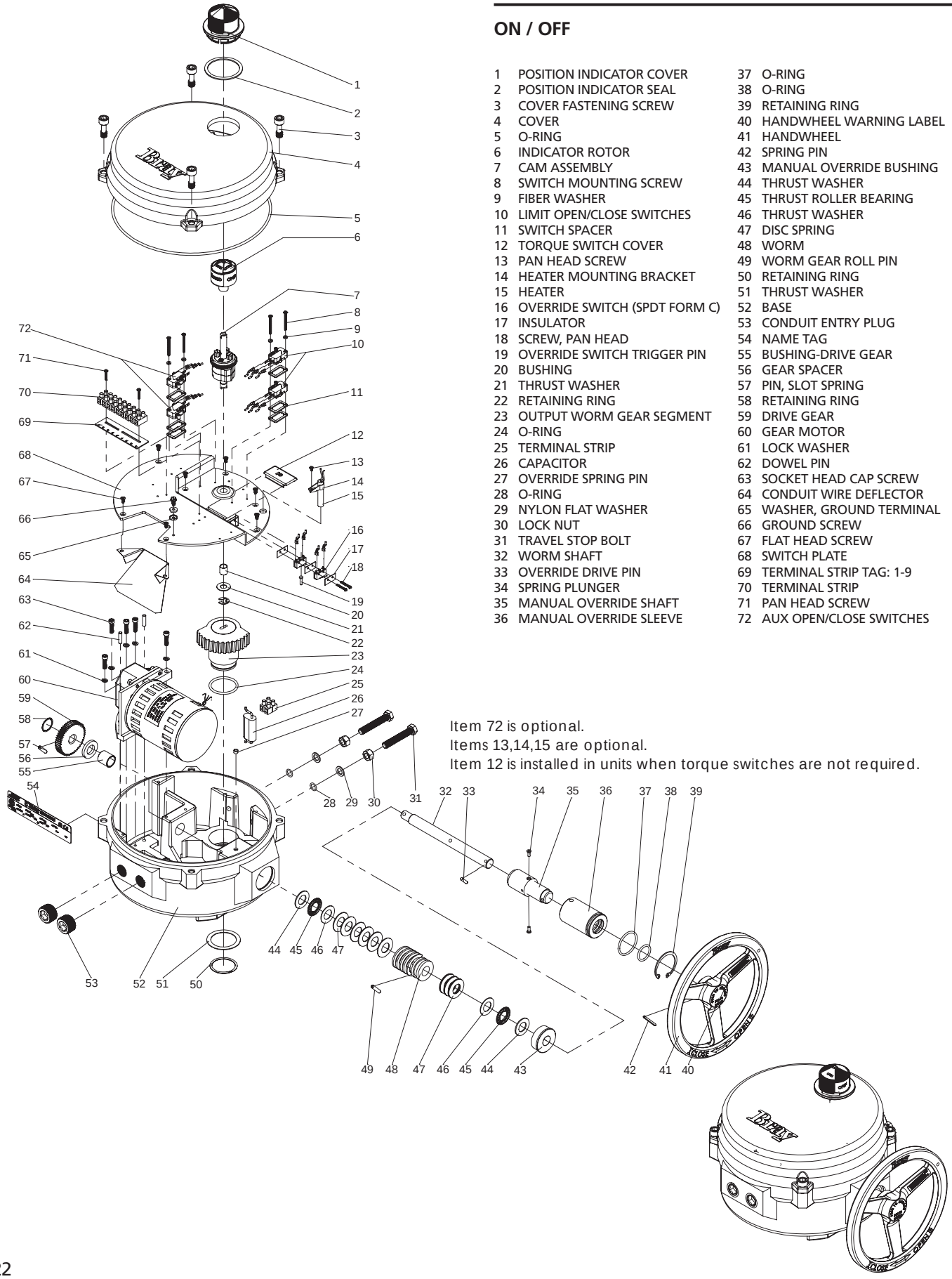

1	POSITION INDICATOR COVER	37	O-RING
2	POSITION INDICATOR SEAL	38	O-RING
3	COVER FASTENING SCREW	39	RETAINING RING
4	COVER	40	HANDWHEEL WARNING LABEL
5	O-RING	41	HANDWHEEL
6	INDICATOR ROTOR	42	SPRING PIN
7	CAM ASSEMBLY	43	MANUAL OVERRIDE BUSHING
8	SWITCH MOUNTING SCREW	44	THRUST WASHER
9	FIBER WASHER	45	THRUST ROLLER BEARING
10	LIMIT OPEN/CLOSE SWITCHES	46	THRUST WASHER
11	SWITCH SPACER	47	DISC SPRING
12	TORQUE SWITCH COVER	48	WORM
13	PAN HEAD SCREW	49	WORM GEAR ROLL PIN
14	HEATER MOUNTING BRACKET	50	RETAINING RING
15	HEATER	51	THRUST WASHER
16	OVERRIDE SWITCH (SPDT FORM C)	52	BASE
17	INSULATOR	53	CONDUIT ENTRY PLUG
18	SCREW, PAN HEAD	54	NAME TAG
19	OVERRIDE SWITCH TRIGGER PIN	55	BUSHING-DRIVE GEAR
20	BUSHING	56	GEAR SPACER
21	THRUST WASHER	57	PIN, SLOT SPRING
22	RETAINING RING	58	RETAINING RING
23	OUTPUT WORM GEAR SEGMENT	59	DRIVE GEAR
24	O-RING	60	GEAR MOTOR
25	TERMINAL STRIP	61	LOCK WASHER
26	CAPACITOR	62	DOWEL PIN
27	OVERRIDE SPRING PIN	63	SOCKET HEAD CAP SCREW
28	O-RING	64	CONDUIT WIRE DEFLECTOR
29	NYLON FLAT WASHER	65	WASHER, GROUND TERMINAL
30	LOCK NUT	66	GROUND SCREW
31	TRAVEL STOP BOLT	67	FLAT HEAD SCREW
32	WORM SHAFT	68	SWITCH PLATE
33	OVERRIDE DRIVE PIN	69	TERMINAL STRIP TAG: 1-9
34	SPRING PLUNGER	70	TERMINAL STRIP
35	MANUAL OVERRIDE SHAFT	71	PAN HEAD SCREW
36	MANUAL OVERRIDE SLEEVE	72	AUX OPEN/CLOSE SWITCHES

Item 72 is optional.
Items 13,14,15 are optional.
Item 12 is installed in units when torque switches are not required.

SERIES 70 - HOUSING SIZE 30

ON / OFF

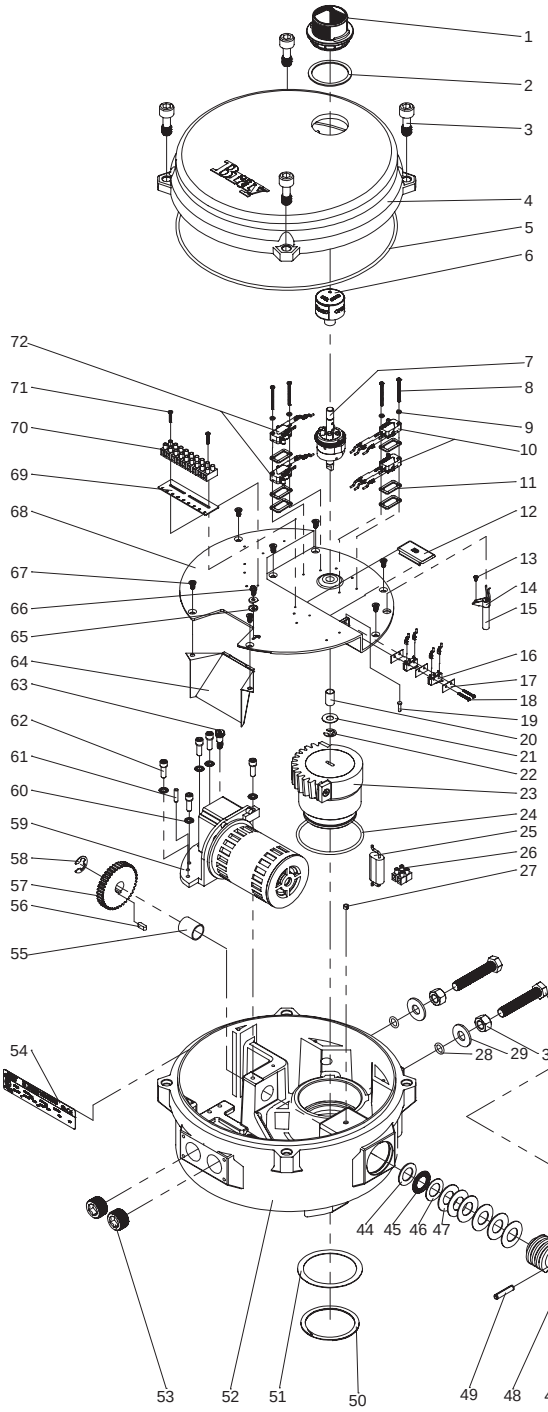

1 POSITION INDICATOR COVER
2 POSITION INDICATOR SEAL
3 COVER FASTENING SCREW
4 COVER
5 O-RING
6 INDICATOR ROTOR
7 CAM ASSEMBLY
8 SWITCH MOUNTING SCREW
9 FIBER WASHER
10 LIMIT OPEN/CLOSE SWITCHES
11 SWITCH SPACER
12 TORQUE SWITCH COVER
13 PAN HEAD SCREW
14 HEATER MOUNTING BRACKET
15 HEATER
16 OVERRIDE SWITCH (SPDT FORM C)
17 INSULATOR
18 SCREW, PAN HEAD
19 OVERRIDE SWITCH TRIGGER PIN
20 BUSHING
21 THRUST WASHER
22 RETAINING RING
23 WORM SEGMENT WITH PADS
24 O-RING
25 CAPACITOR
26 TERMINAL STRIP
27 OVERRIDE SPRING PIN
28 O-RING
29 NYLON FLAT WASHER
30 LOCK NUT
31 TRAVEL STOP BOLT
32 WORM SHAFT
33 OVERRIDE DRIVE PIN
34 SPRING PLUNGER
35 MANUAL OVERRIDE SHAFT
36 MANUAL OVERRIDE SLEEVE
37 O-RING
38 O-RING
39 RETAINING RING, INTERNAL
40 SPRING PIN
41 HANDWHEEL WARNING LABEL
42 HANDWHEEL
43 MANUAL OVERRIDE BUSHING
44 THRUST WASHER
45 THRUST ROLLER BEARING
46 THRUST WASHER
47 DISC SPRING
48 WORM
49 WORM GEAR ROLL PIN
50 RETAINING RING, EXT.
51 THRUST WASHER
52 BASE
53 CONDUIT ENTRY PLUG
54 NAME TAG
55 BUSHING
56 DRIVE GEAR KEY
57 DRIVE GEAR
58 RETAINING RING, BOWED E-RING
59 MOTOR ASSEMBLY
60 LOCK WASHER
61 DOWEL PIN
62 SOCKET HEAD CAP SCREW
63 SOCKET HEAD SHOULDER SCREW
64 WIRE ENTRY GUARD
65 WASHER, GROUND TERMINAL
66 GROUND SCREW
67 FLAT HEAD SCREW
68 SWITCH PLATE
69 TERMINAL STRIP TAG: 1-9
70 TERMINAL STRIP
71 PAN HEAD SCREW
72 AUX OPEN/CLOSE SWITCHES

Item 72 is optional.
Items 13,14,15 are optional.
Item 12 is installed in units when torque switches are not required.

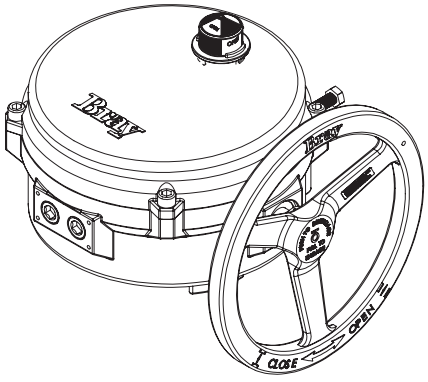

SERIES 70 - HOUSING SIZE 180 FOR 3:1 GEAR BOX

ON / OFF

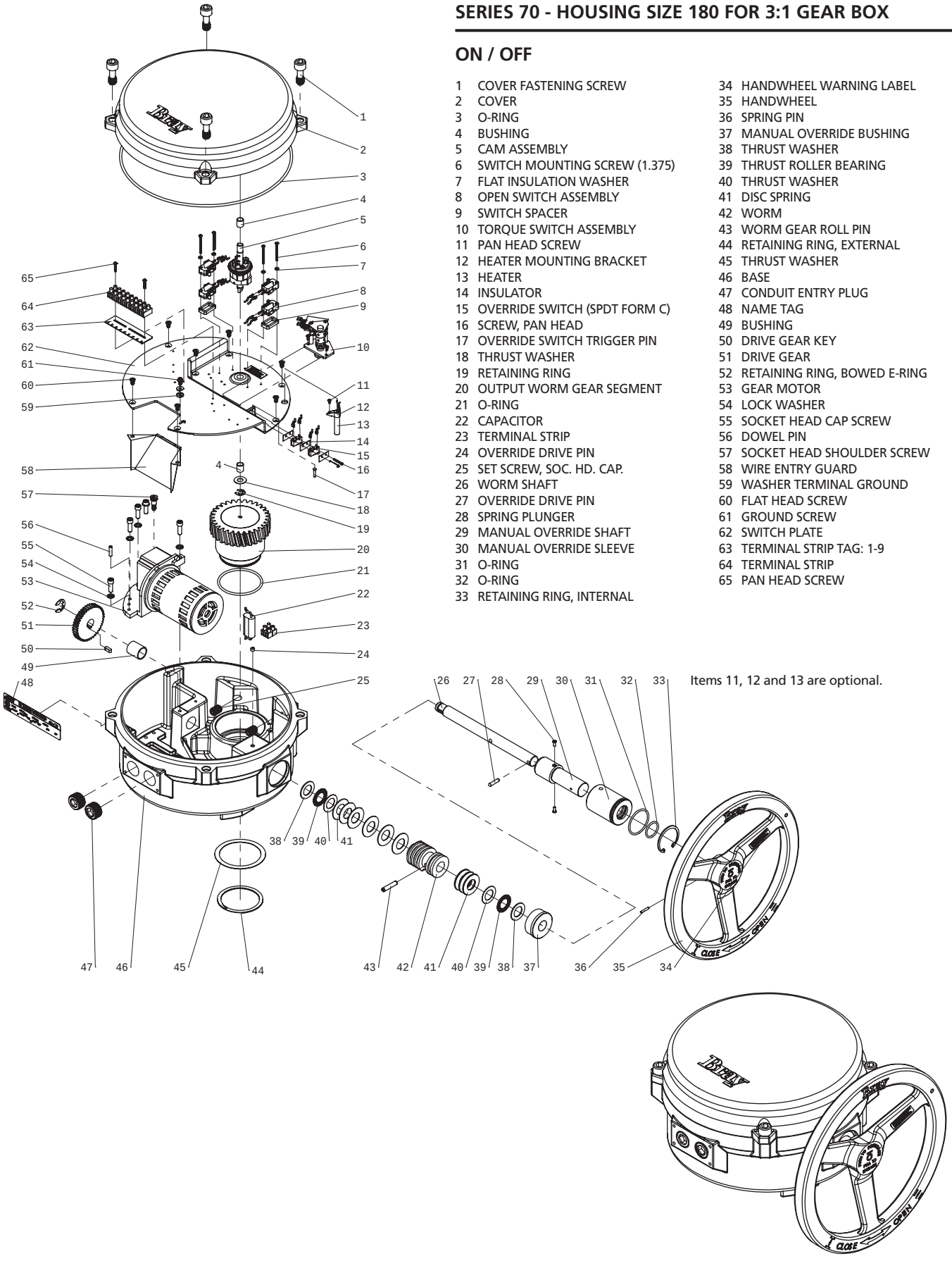

1 COVER FASTENING SCREW
2 COVER
3 O-RING
4 BUSHING
5 CAM ASSEMBLY
6 SWITCH MOUNTING SCREW (1.375)
7 FLAT INSULATION WASHER
8 OPEN SWITCH ASSEMBLY
9 SWITCH SPACER
10 TORQUE SWITCH ASSEMBLY
11 PAN HEAD SCREW
12 HEATER MOUNTING BRACKET
13 HEATER
14 INSULATOR
15 OVERRIDE SWITCH (SPDT FORM C)
16 SCREW, PAN HEAD
17 OVERRIDE SWITCH TRIGGER PIN
18 THRUST WASHER
19 RETAINING RING
20 OUTPUT WORM GEAR SEGMENT
21 O-RING
22 CAPACITOR
23 TERMINAL STRIP
24 OVERRIDE DRIVE PIN
25 SET SCREW, SOC. HD. CAP.
26 WORM SHAFT
27 OVERRIDE DRIVE PIN
28 SPRING PLUNGER
29 MANUAL OVERRIDE SHAFT
30 MANUAL OVERRIDE SLEEVE
31 O-RING
32 O-RING
33 RETAINING RING, INTERNAL
34 HANDWHEEL WARNING LABEL
35 HANDWHEEL
36 SPRING PIN
37 MANUAL OVERRIDE BUSHING
38 THRUST WASHER
39 THRUST ROLLER BEARING
40 THRUST WASHER
41 DISC SPRING
42 WORM
43 WORM GEAR ROLL PIN
44 RETAINING RING, EXTERNAL
45 THRUST WASHER
46 BASE
47 CONDUIT ENTRY PLUG
48 NAME TAG
49 BUSHING
50 DRIVE GEAR KEY
51 DRIVE GEAR
52 RETAINING RING, BOWED E-RING
53 GEAR MOTOR
54 LOCK WASHER
55 SOCKET HEAD CAP SCREW
56 DOWEL PIN
57 SOCKET HEAD SHOULDER SCREW
58 WIRE ENTRY GUARD
59 WASHER TERMINAL GROUND
60 FLAT HEAD SCREW
61 GROUND SCREW
62 SWITCH PLATE
63 TERMINAL STRIP TAG: 1-9
64 TERMINAL STRIP
65 PAN HEAD SCREW

Items 11, 12 and 13 are optional.

SERIES 70 - 3:1 GEAR BOX

ON / OFF

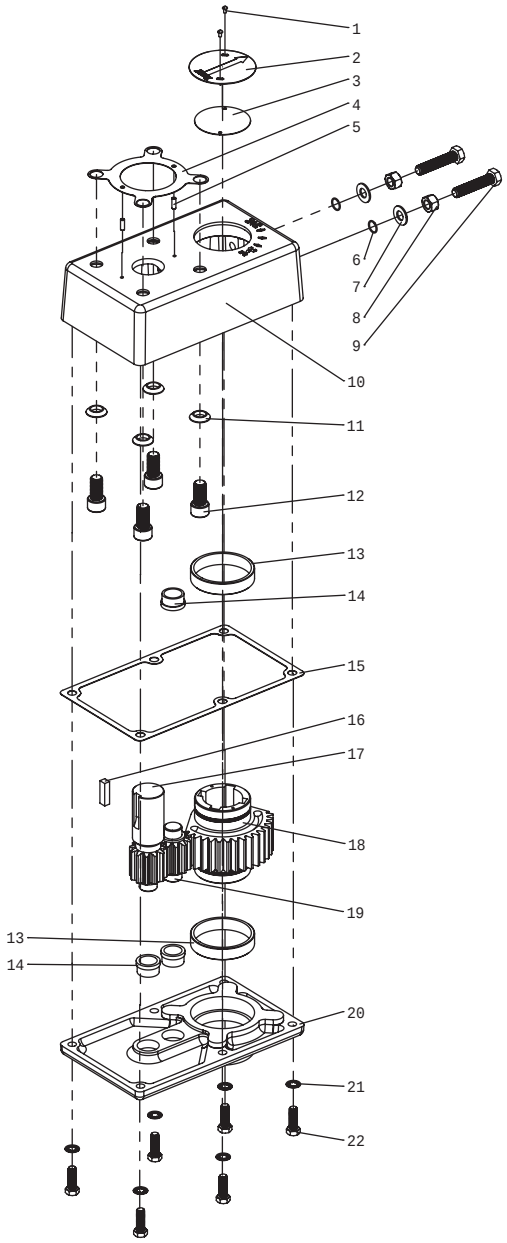

1 FASTENING SCREW
2 POSITION INDICATOR PLATE
3 POSITION INDICATOR GASKET
4 ACTUATOR/GEAR BOX GASKET
5 DOWEL PIN
6 O-RING
7 WASHER, FLAT, NYLON
8 NUT, HEX
9 BOLT, HEX HEAD
10 COVER
11 WASHER, CONICAL
12 ACTUATOR/GEAR BOX FASTENING SCREW
13 OUTPUT GEAR BEARING
14 IDLER/INPUT GEAR BEARING
15 COVER GASKET
16 INPUT GEAR KEY
17 INPUT GEAR
18 OUTPUT GEAR
19 IDLER GEAR
20 BASE
21 LOCK WASHER
22 BASE FASTENING SCREW

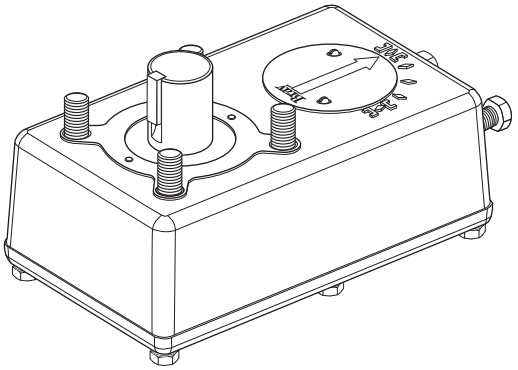

FI/FQI 3120

elster
Vital Connections

evoQ$_4$ Electromagnetic Meter - LF Low Flow

Sizes 1 ½" and 2"

EvoQ$_4$ Low Flow brings stable, accurate measurement to mid-size meter applications.

Specification

Performance		1 ½"	(DN40)	2"	(DN50)
> 95% accuarcy	GPM (m³/h)	0.25	(0.057)	0.25	(0.057)
98.5% - 101.5% accuracy	GPM (m³/h)	1.0-130	(0.227-30)	1.0-170	(0.227-39)
Maximum flow*	GPM (m³/h)	130	(30)	170	(39)
Max. operating pressure	psi (bar)	175	(12)	175	(12)

* Flow in excess of maximum does not affect performance at flows within limits

Materials

Body	Stainless steel grade 304
Flow tube	Stainless steel grade 316
Liner	Polyethylene epoxy
Electrodes	Stainless steel grade 316
Flanges	Epoxy coated cast iron
Register	Stainless steel with glass lens
Register housing/lid	UV-resistant plastic
Environmental class	IP68 hermetically sealed unit waterproof to 30 ft depth

Features

Improved low flow performance
No moving parts
0.5 second sample rate
Floating flanges
Pulse, Encoder, or Remote
AWWA lay lengths
IP68 sealed
NSF61 listed
10 year continuous life

Benefits

Detect smaller leaks
No accuracy degradation
Suitable for billing apps
Easy to install
Integrate with AMR / AMI
No spool pieces or pipe work
Submersible and reliable
Approved for potable water
Eliminate maintenance visits

Operation

The evoQ$_4$ Low Flow is a battery powered electromagnetic water meter that is suitable for a wide range of metering applications. Using Faraday's law of electromagnetic induction, two magnets provide a magnetic field within the pipe; two electrodes measure the induced voltage that is proportional to the flow of conductive water through the field in the pipe. Every 0.5 seconds the measurement is taken and the totalized volume is calculated and updated on the LCD display. The meter is designed for 10 years of continuous operation with no battery changes necessary.

Application

The meter is for use with potable cold water up to 120 °F. The meter will typically register at +/-0.75% accuracy at normal and high flows and better than 95% accuracy at extended low flows. The evoQ$_4$ product line is suited for metering utility customer services for potable water. With the addition of outputs described below, the meter can fulfill a number of distribution management roles as well. The meter is particularly suited to replacing AWWA C700 and C712 mechanical meters for utility billing.

Outputs

The evoQ$_4$ LF can be fitted with one of the output modules available for the meter product line. These modules are common among all sizes and variants of evoQ$_4$. Current modules include pulse (with two pulse channels), Elster protocol encoder, Sensus protocol encoder, the combined pulse + Sensus encoder module, and the remote display interface module. Please see individual specification sheets for these modules.

Connections

The evoQ$_4$ LF comes in AWWA C700 / C712 meter lay lengths. The oval flanges are epoxy coated cast iron to reduce weight and prevent corrosion and conform to ANSI B16.1 Class 125 standards. Full face gaskets are provided with each meter. Allow for 5 pipe diameters of straight pipe upstream and 3 pipe diameters of straight pipe downstream for optimum performance.

LCD

Bright, large and easy-to-read LCD incorporating totalized volume and a reference flow-rate indicator. Alarm functions provide in-situ status ensuring no loss in measuring continuity. An IP68 seal ensures the meter electronics are safely protected providing long term reliability.

Display functions

1. **Low-Battery** – The indicator blinks when the meter has approximately 3 months working life remaining.
2. **End of Life Battery** – Measurement stopped. The indicator appears permanently when the meter life expires. Data is displayed for up to 9 months.
3. **No-Water** – The indicator blinks when there is an empty pipe condition.
4. **Flow Rate** – If water is flowing in the reverse direction a minus sign is displayed to the left of the value.
5. **Net Volume** – Any reverse flow is subtracted from the volume display. The top line displays billable units with the multiplier shown in upper right corner. Measurement resolution is provided in the lower right for testing.

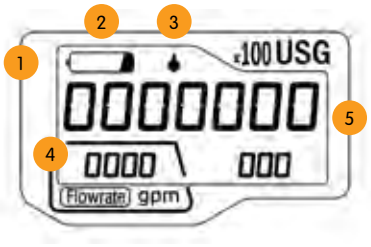

USG

x100

Cuft

x10

m³

Dimensions and net weight

Meter size	A in (mm)	B in (mm)	C in (mm)	Weight lbs (kg)
1 ½"	13 (330)	5 ½ (140)	6 (152)	9.0 (4.1)
2" x 17"	17 (432)	6 ¼ (159)	6 (152)	11.5 (5.2)

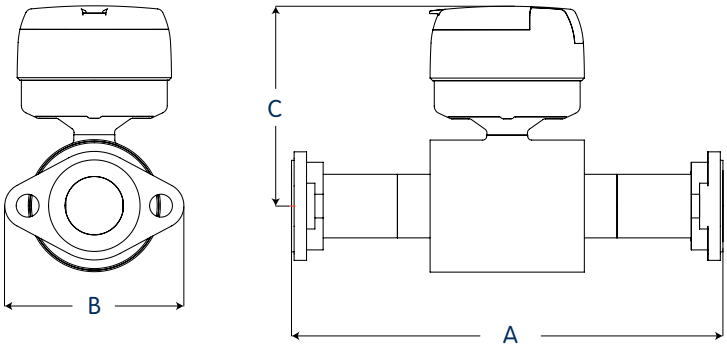

elster
Vital Connections

NSF

United States
Elster AMCO Water, LLC
10 SW 49th Avenue, Building 100
Ocala, FL 34474
T +1 800 874 0890
F +1 352 368 1950
watermeters@us.elster.com

Canada
Elster Canadian Meter Company Inc.
1100 Walker's Line, Suite 101
Burlington, Ontario L7N 2G3
T +1 866 703 7581
F +1 905 634 6705
watermeters@ca.elster.com

Caribbean
Elster AMCO Water, Inc.
P.O. Box 225, Carretera 112 KM 2.3
Isabela, PR 00662
T +1 787 872 2006
F +1 787 872 5427
prwatermeters@pr.elster.com

© 2015 by Elster. All rights reserved.
The company's policy is one of continuous product improvement and the right is reserved to modify the specifications contained herein without notice. These products have been manufactured with current technology and in accordance with applicable AWWA Standards.

www.elsteramcowater.com

Lit Ref: evoQ4LF/03-15

evoQ$_4$ Electromagnetic Meter Sensus Encoder Module

Specification

Protocol	Sensus V frame
Encoded digits	6 most significant v_6 v_8-8 most significant
Encoder ID	10 digit fixed
Power source	Lithium battery (10 yr)
Environmental rating (with appropriate splice kit)	NEMA 6P / IP68
Cable lengths (bare wire)	30 feet, 90 feet
Optional connectors (25')	Itron In Line Connector™ Nicor Connector™
Compatibility	MegaNet™ Enc MTU Itron™ 60W, 60W-R, 200W, 100W Datamatic™ Firefly, MOSAIC Others, contact AMI provider tech support
Materials module	ABS Resin 3 conductor AWG 22 cable

Operation

The Elster AMCO Water evoQ4 Sensus Protocol encoder module is designed for use with 3 wire radio endpoints. The 3 wire to 2 wire adapter module is necessary to allow the encoder to interface with 2 wire endpoints such as wall or pit pads for touch reading or AMR devices that utilize a 2 wire coupler integrated into the radio module.

The encoder reading is obtained through the normal means of interrogation of the reading point via radio endpoint.

The Sensus (also called V frame) protocol is transmitted from the encoder module and reported to the interrogating device.

Reading resolution is determined by the version of Sensus protocol encoder module used and the programming set in the handheld. Either 6 digit or 8 digit reads are transmitted.

evoQ4 size and units	1.5"-4" USG	6"-12" USG	1.5"-4" CuFt	6"-12" CuFt	1.5"-4" M3	6"-12" M3
Resolution						
6 Digit Sensus encoder module	123456 x 1000 USG	123456 x 1000 USG	123456 x 100 CuFt	123456 x 100 CuFt	123456 x 1 M3	123456 x 1 M3
8 Digit Sensus encoder module	12345678 x 10 USG	12345678 x 10 USG	12345678 x 1 CuFt	12345678 x 1 CuFt	12345678 x 10 Litre	12345678 x 10 Litre

1. Lift the lid, using a small screwdriver blade, carefully remove the pulser clip.

2. Remove the blank cover by lifting up...

3. ...and then slide out.

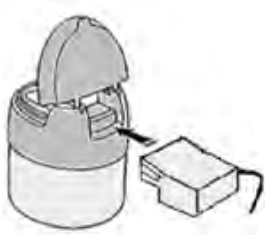

4. Fit the Encoder unit in the opposite manner to the cover removal.

5. Replace the securing clip (lugs uppermost).

WARNING: Take care not to dislodge the rubber gasket on the underside of the unit when fitting / removing.

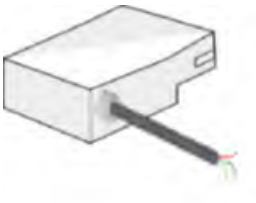

Generic Wire Diagram:

Red: Data
White: V+ (power)
Black: V0 (ground)

elster
Vital Connections

www.elsteramcowater.com

United States
Elster AMCO Water, LLC
10 SW 49th Avenue, Building 100
Ocala, FL 34474
T +1 800 874 0890
F +1 352 368 1950
watermeters@us.elster.com

Canada
Elster Canadian Meter Company Inc.
1100 Walker's Line, Suite 101
Burlington, Ontario L7N 2G3
T +1 866 703 7581
F +1 905 634 6705
watermeters@ca.elster.com

Caribbean
Elster AMCO Water, Inc.
P.O. Box 225, Carretera 112 KM 2.3
Isabella, PR 00662
T +1 787 872 2006
F +1 787 872 5427
prwatermeters@pr.elster.com

© 2013 by Elster. All rights reserved.
The company's policy is one of continuous product improvement and the right is reserved to modify the specifications contained herein without notice. These products have been manufactured with current technology and in accordance with applicable AWWA Standards.

Lit Ref: evoQ$_4$ENCS/05-13

EA_Water module 3.0

AMI network management

Solutions for advanced water AMI

Utilities and consumers have become increasingly aware of the need to conserve water and monitor its consumption. With the improved capabilities of the EA_Water 3.0 module, the utility can deploy modules faster, obtain more precise billing data, and offer improved customer service.

Elster supports all major water meter suppliers' encoded or digital registers.

Reduce inventory and streamlined installation

The EA_Water module is compatible with most all major brands of water meters. Utilities no longer have to plan inventory for each brand of water meter because the module's compatibility can be set at the time of installation. Also, account information is captured at the time of installation, allowing the installer to quickly deploy the module in the field without having to match up the correct unit to the address.

The integral water module and the Elster water meter can be shipped from the factory pre-installed. Remote mounting options allow units to be wall- or pipe-mounted with up to 100 feet (30 meters) of wire

Improved network communications

The EA_Water module supports two-way communication within the EnergyAxis mesh local area network (EA_LAN). The module automatically finds the optimal path to the first hop toward the EA_ Gatekeeper, giving the EA_Water module the same robust network coverage as other devices within the EA_LAN.

Using the time signals obtained from the EA_LAN, water meter intervals are synchronized with real time, giving the utility an accurate view of data simply not possible with devices that merely bubble-up at various, uncoordinated times.

Secure by design

As with other network elements within the EnergyAxis System, the EA_Water 3.0 module has security built in and not patched on. Supporting AES-128 bit encryption, the EA_Water module protects its data and communications with enterprise strength technology.

To ensure secure upgrades, the EA_Water 3.0 uses advanced techniques when implementing over-the-air (OTA) upgrades of its firmware. Even if the utility does not implement all of the security features of the EA_LAN, the firmware image and communication link are secured by AES-128 bit encryption. When the OTA process is complete and verified, the EA_Water modue will automatically resume operation as it was programmed to do prior to the upgrade.

- Pit mounted or remote mounted (shown)
- As a network element within Elster's EnergyAxis® System, the EA_Water 3.0 offers enhanced network communications for advanced water AMI.
- Elster takes water AMI to the next level, supporting encrypted two-way communications, OTA upgradeability, and automatic communication pathway optimization.

About the EnergyAxis System

Over 80 EnergyAxis systems deployed worldwide, with over 4.5 million smart endpoints, are being used every day for both advanced metering infrastructure and distribution automation applications. EnergyAxis is a utility-grade, Internet protocol (IP) based two-way communications system based on a dynamic, flexible, and scalable architecture.

The EnergyAxis System provides a layered end-to-end security architecture based on NIST, NEMA, and FIPS approved standards. EnergyAxis supports AES-128 bit encryption for any inter-network device communication session.

Water meter compatibility

Fully compatible with current digital and encoded registers from the following manufacturers:

- AMCO (Elster)
- Badger
- Hersey
- Metron Farnier
- Neptune
- Sensus

EA_Water 3.0 module specifications

- Unlicensed frequeny hopping spread spectrum (FHSS) RF technology
- 902 MHz to 928 MHz communication range
- Compliant with FCC Rules, Part 15 and Industry Canada RSS-210
- Temperature range of -40 °C to +65 °C
- Remote housing meets IP67
- Pit housing meets IP68
- Multiple operation mode:
  - fixed network
  - hybrid (mobile/fixed)

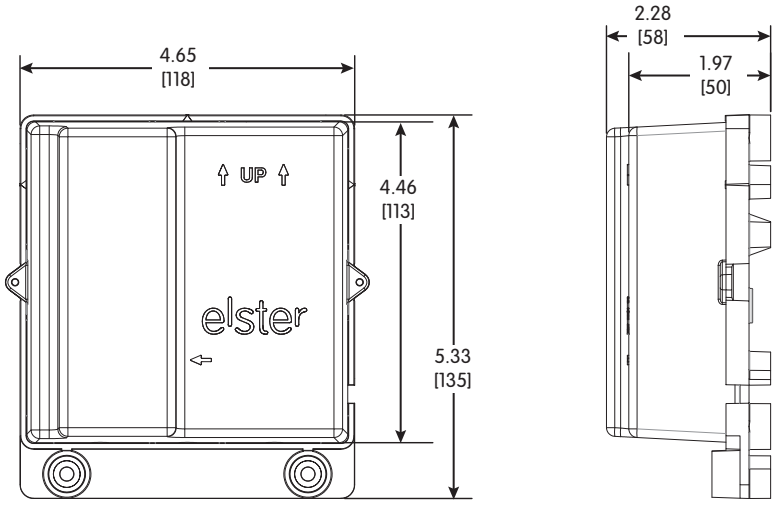

Approximate dimensions in inches [millimeters]

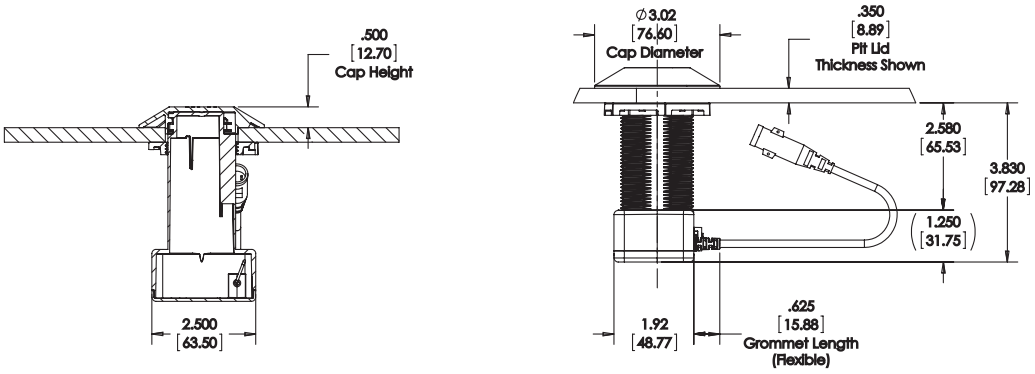

Approximate dimensions in inches [millimeters]

elster
Vital Connections

Elster
208 S Rogers Lane
Raleigh, NC 27610-2144
United States

T +1 800 257 9754 (Elster sales information)
T +1 800 338 5251 (Elster product support)
T +1 905 634 4895 (Canada)

© 2012 by Elster. All rights reserved.

Information contained herein is subject to change without notice. Product specifications may change. Contact your Elster representative for the most current product information. Printed in the United States.

www.elster.com

DS42-1056C

James, Cooke & Hobson, Inc.

Sales Engineers / Process Equipment

Submittal Data

Kirtland AFB Phase 4 Treatment Plant
Albuquerque, NM

Cla-Val Model 36 Combination Air Valve

Albuquerque • El Paso • Phoenix

Submittals

June 9, 2015

Albuquerque, New Mexico

Cla-Val Model 36 combination air valve
1” NPT inlet and outlet
Model 361-CAV564.3

Prepared for: Albuquerque Pump and Pipe
4300 Ellison Street NE
Albuquerque, NM 87109

Prepared by: JCH/ James, Cooke & Hobson
Kendra Brown
3810 Academy Parkway S. NE
Albuquerque, NM 87109

Table of Contents

1. Project references
    a. Equipment Supplier/ Local Representative/ Parts & Service Contact
    b. Manufacturer

2. Submittal Data

Project References

1. Equipment Supplier & Source for Parts and Repairs:
   JCH/ James, Cooke & Hobson, Inc.
   3810 Academy Parkway S, NE
   Albuquerque, NM 87109
   Website: www.jchinc.com
   Email: sales@jchinc.com
   (505) 344-7100

   Order number: N/A

2. Manufacturer:
   Cla-Val
   1701 Placentia Ave.
   Costa Mesa, CA 92627-4475
   Website: www.cla-val.com
   800-942-6326

Series 36
Combination Air Release and Vacuum Valve

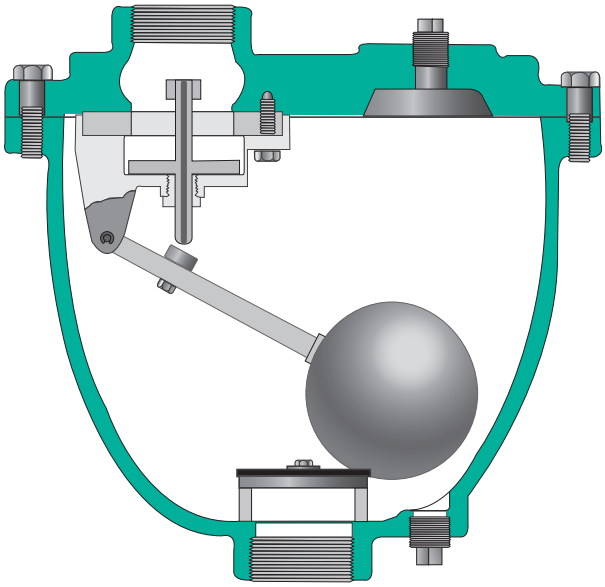

- **Stainless Steel T316 Standard**
- **Stainless Steel T316 Floats Guaranteed**
- **Fully Ported Valves - No Restrictions**
- **Easily Serviced Without Removal From Pipeline**
- **Engineered For Drip Tight Seal At Low Pressures**

The Cla-Val Series 36 Air and Vacuum Valve is a multipurpose valve that combines the operation of both the Model 34 Air Release Valve and Model 35 Air and Vacuum Valve. It functions to exhaust large quantities of air in the pipeline during the filling cycle and to admit air, as necessary, to prevent potentially dangerous vacuum from forming when being emptied either intentionally or as a result of pipeline breakage.

Note: See Sizing Guide Pages 14 & 15

Installation

The Series 36 Combination Air Valve should be installed at high points at grade changes within the pipeline.

Mount the unit in the vertical position on top of the pipeline with an isolation valve installed below each valve in the event servicing is required. A vault with adequate venting and drainage should also be provided.

Design / Purchase Specifications

The combination air valve shall combine the operating features of both an air and vacuum valve and an air release valve in one housing. The air and vacuum valve portion shall automatically exhaust large quantities of air during the filling of the pipeline and automatically allow air to reenter the pipeline when the internal pressure of the pipeline approaches a negative value due to column separation, draining of the pipeline, or other emergency. The air release valve portion shall automatically release small amounts of air from the pipeline while it is under pressure.

The inlet and outlet of the valve shall have the same cross-section area. The float shall be guided by a stainless steel guide shaft and seat drip tight against a synthetic rubber seal. 4" and larger valves shall have dual guided shafts of hexagonal cross section and a protective discharge hood.

The float shall be of all stainless steel construction and capable of withstanding maximum system surge pressure without failure. The body and cover shall be concentrically located and of cast iron and the valve internal parts shall be of T316 stainless steel or Buna-N® rubber.

The Combination Air Release and Vacuum Valve shall be manufactured per ANSI/AWWA C512-04 Series 36 from Cla-Val., Newport Beach, CA, U.S.A.

Design Specifications

Size Inlet/Outlet
1" 2", 3", 4" NPT or Flanged
3" through 8"
125 lb. flange & ANSI
300 lb. flange & ANSI

Pressure Ratings (see note)
150 psi
300 psi

Temperature Range
Water to 180°F

Note: Specify when operating pressure is below 10 PSI

Materials
Body and Cover:
Cast Iron ASTM A 126, Class B

Float:
Stainless Steel T316

Plug:
Stainless Steel T316

Internal Parts:
Stainless Steel T316

Seal: Buna-N® Rubber

Note: Manufactured to meet ANSI/AWWA C512-04

When Ordering, Please Specify

1. Model Number
2. Inlet/Outlet Size
3. Inlet Pressure Rating
4. Orifice Size

Optional:
For Anti-Shock Air Valve shut-off, order with arrestor check device (suffix "AC").
See Data Sheet Page 34 & 35

CLA-VAL

Series 36

Combination Air Valve – Single Body Style

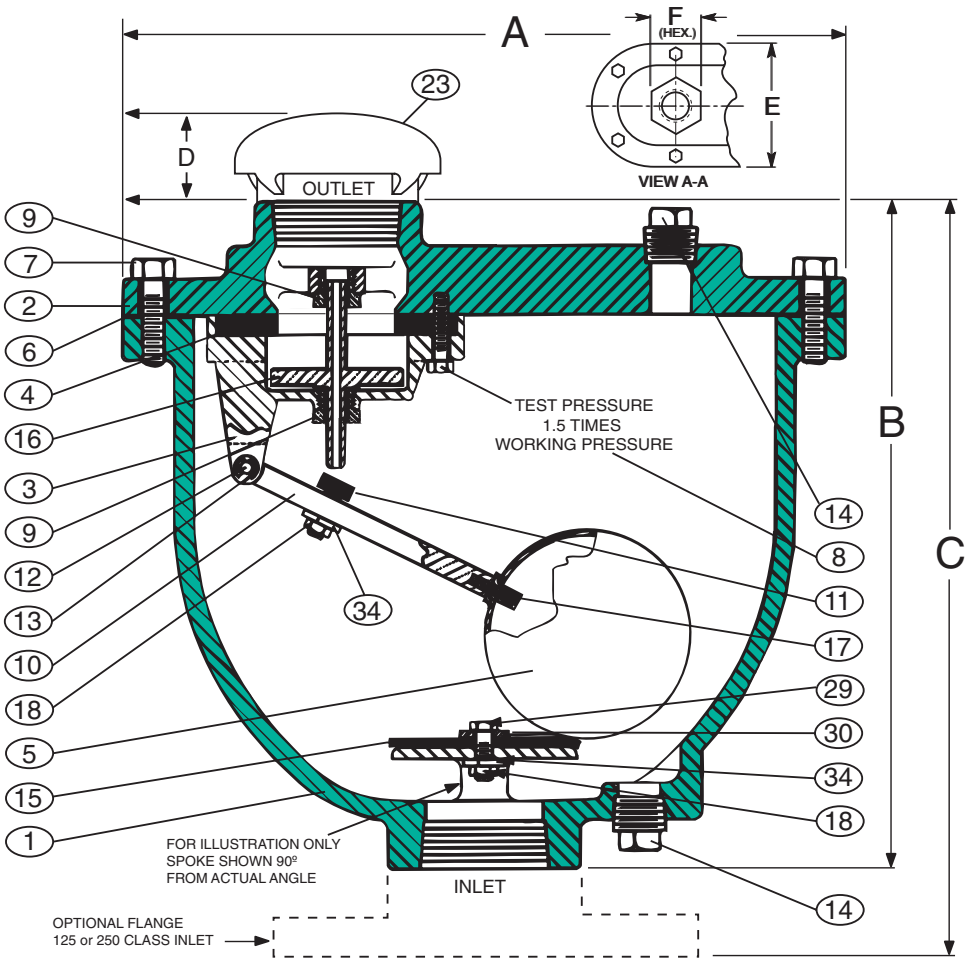

Detail No.	Part Name	Material
1	Body	Cast Iron ASTM A126, Class B
2	Cover	Cast Iron ASTM A126, Class B
3	Baffle	Cast Iron ASTM A126, Class B
4	Seat	Buna-N®
5	Float	Stainless Steel T316, ASTM A276
6	Gasket	Lexide NK - 511 (Non-Asbestos)
7	Cover Bolt	Alloy Steel ASTM A449, Grade 5
8	Retaining Screw	Stainless Steel T316, ASTM A276
9	Guide Bushing	Stainless Steel T316, ASTM A276
10	Float Arm	Stainless Steel T316, ASTM A276

Detail No.	Part Name	Material
11	Orifice Button	Stainless Steel T316 & Buna-N®
12	Pivot Pin	Stainless Steel T316, ASTM A276
13	Retaining Ring	Stainless Steel PH 15-7 MO
14	Pipe Plug	Malleable Iron
15	Cushion	Buna-N®
16	Plug	Stainless Steel T316, ASTM A276
17	Float Retainer	Stainless Steel T316, ASTM A276
18	Lock Nut	Stainless Steel T316, ASTM A276
23	Screened Hood	Optional-Screened Outlet Hood
29	Cushion Retainer	Stainless Steel T316, ASTM A276
30	Washer (internal)	Stainless Steel T316, ASTM A276
34	Washer (external)	Stainless Steel T316, ASTM A276

Note 1: All Stainless Steel Parts Austenitic
Note 2: Manufactured to meet ANSI/AWWA C512-04

Valve Size	Model No.	A	B	C	D Approx.	E	F	Inlet Size	Outlet Size	Orifice Size	CWP PSI	Inlet** Flange	Screened Hood	Wt. Lbs.
1"	361-CAV564.3	11 3/8"	10 1/2"	12"	2"	7"	2"	1" N.P.T	1" N.P.T	3/32"	300	SPK-001F	SPK-1H	40
2"	362-CAV332.3	14"	13"	15"	3"	8"	3"	2" N.P.T	2" N.P.T	3/32"	300	SPK-002F	SPK-2H	71
3"	363-CAV332.3	16"	15"	17"	4"	9 5/8"	4 3/8"	3" N.P.T.	3" N.P.T	3/32"	300	SPK-003F	SPK-3H	112
4"	364-CAV332.3	18 1/2	17"	19"	5"	11"	5 3/8"	4" N.P.T	4" N.P.T	3/32"	300	SPK-004F	SPK-4H	170

©Copyright Cla-Val 2007 Printed in USA Specifications subject to change without notice.

RUPERT

PLUMBING AND HEATING

PIPE FABRICATION

Weamco Startup Strainer

Shown on 140705-001-PI-03-400003 DETAIL 1

Cone Strainers

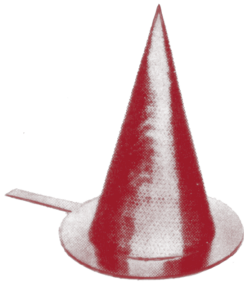

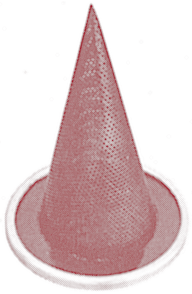

LENGTH L C						
LINE SIZE	STD. LGTH.	75%	100%	150%	200%	300%
2	4	–	4	6	8	11
3	6	–	6	9	12	18
4	8	–	8	10	13	20
6	11	–	11	13	18	27
8	12	–	12	17	23	34
10	12	12	14	22	29	44
12	12	12	16	26	35	50
14	14	14	18	27	36	53
16	16	16	21	31	40	60
18	18	18	24	35	46	68
20	20	20	26	39	51	76
24	23	23	31	45	60	90
30	29	29	38	57	76	114
36	33	33	44	66	88	126

STANDARD MATERIAL IS
PERFORATED 1/8" DIAMETER
HOLES ON 3/16" CENTERS
40% OPEN AREA
CARBON STEEL

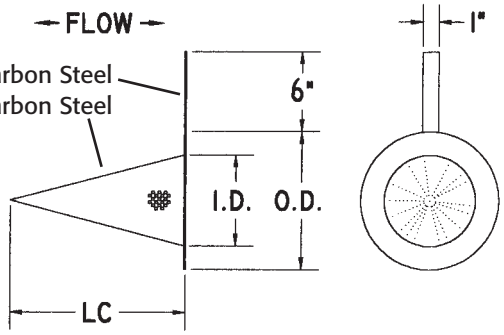

TYPE CP

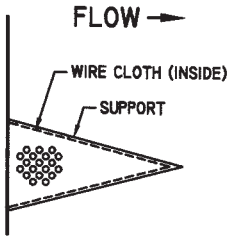

TYPE CWI
Wire Cloth Inside
*Perforated Support

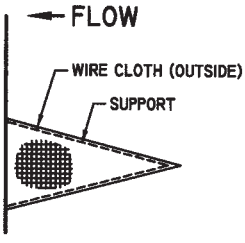

TYPE CWO
Wire Cloth Outside
*Perforated Support

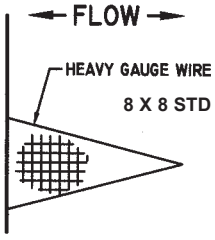

TYPE CW
1 Ply Heavy
Wire
(Customers' Choice)

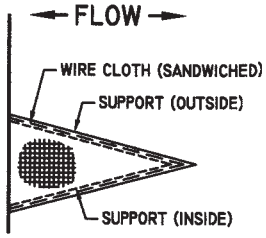

TYPE CTP
Expanded Support
Inside and Outside

* Expanded metal support available

REFERENCE STRAINER DESIGN SELECTION AND CONSTRUCTION SECTION FOR OPTIONAL MATERIALS. (Reference Bulletin AC112 for Wire Cloth, Perforated and expanded metal availability.)

Available with any type
temporary strainer

Percent open areas shown are compared to the cross sectional flow area of Standard Weight Pipe. All dimensions are in inches. Standard length designed to fit weld neck flange plus long radius weld elbow. OD is designed to fit inside flange bolt hole circle. Full face is available, add FF to type of strainer. ID is designed to fit inside standard weight pipe for 150# and 300# rating, extra strong pipe for 600# rating. Advise pipe wall or schedule for higher pressure ratings. See Bulletins BP112 and FP112 for additional Temporary Strainer information.

WEAMCO METRIC
(918) 445-1141
(800) 331-3790
Fax: (918) 445-4617
sales@weamco.com
www.weamco.com

RUPERT

PLUMBING AND HEATING

PIPE FABRICATION

Butterfly Valves

Resilient Seated Butterfly Valves

ABZ VALVE | A GFT COMPANY

Figures 101/108/102

Sizes
2" - 12"
Rated Up To 175 PSI

ABZ VALVES & CONTROLS
PO Box 157 • 113 W. Main • Madison, KS 66860
620-437-2440 • FAX 620-437-2435
www.abzvalve.com • info@abzvalve.com

ABZ Precision Built Butterfly Valves

Resil-O-Seat™ Seated Valves for Chemical and Abrasion Resistance Applications.

The figures 101/102/108 provide excellent flexibility with a variety of trim materials. These are available for a wide selection of applications.

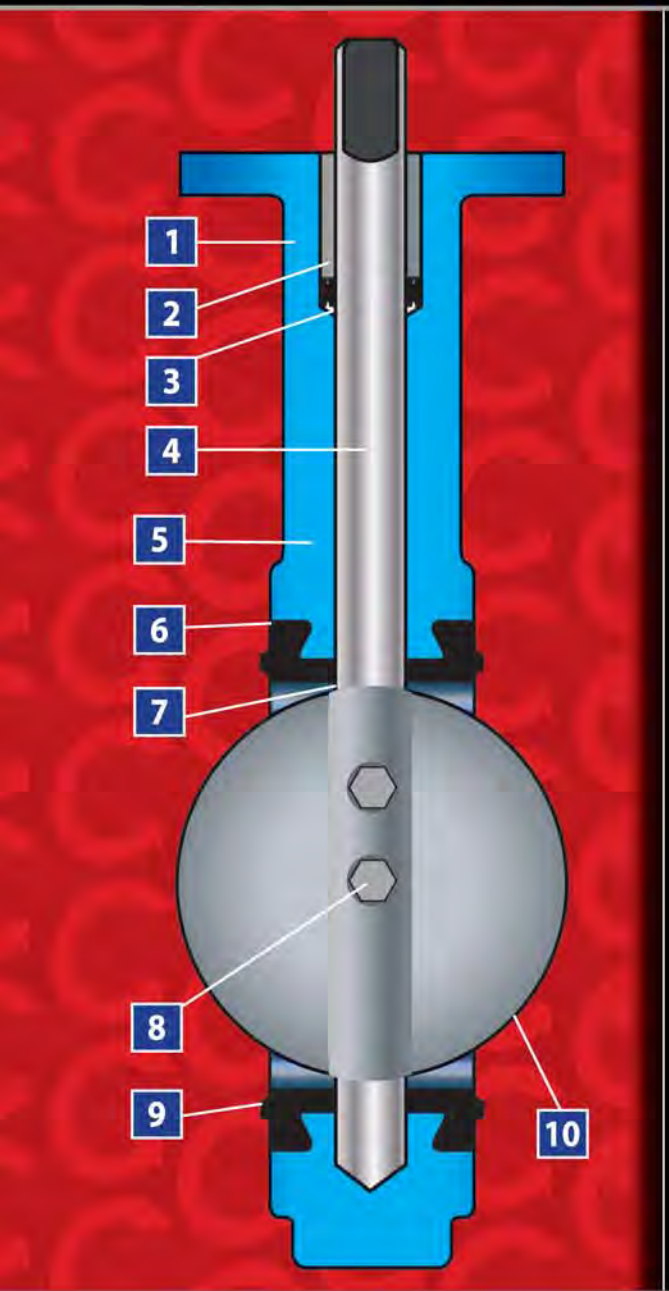

1 Body machined to high tolerances. Guaranteed standard dimensions for interchangeability of parts and actuators.

2 Top bushings protect the stem from side thrust of operators. They are made of impact and corrosion resistant materials.

3 Special double-V-shape of stem seal self-adjusts to protect the stem area for either vacuum or pressure use.

4 Stem extends through disc and aligns with socket in body. Stem end has standard dimensions for operator interchangeability.

5 Long neck allows for insulation requirements.

6 The special snap-in Resil-O-Seat™ design fixes seat in place without bonding. The Resil-O-Seat™ is 100% field replaceable - no special tools required.

7 Stem and body are isolated from the line media by the interference fit of the primary seal created between the disc and seat.

8 Stainless steel cap screws securely hold disc to stem. O-ring seal prevents leakage into the stem area and creates a positive connection.

9 Resil-O-SeatTM forms a seal against all standard ANSI 125/150 flanges. Gasketing requirements are eliminated.

10 Disc edge is individually processed through machining and hand buffing for a smooth edge, providing a bubble tight shutoff and maximum seat life.

101 is a wafer style body
108 is semi-lug style body
102 is a full lug style body

ABZ VALVE

FIGURES 101/108/102

Valve Dimensions

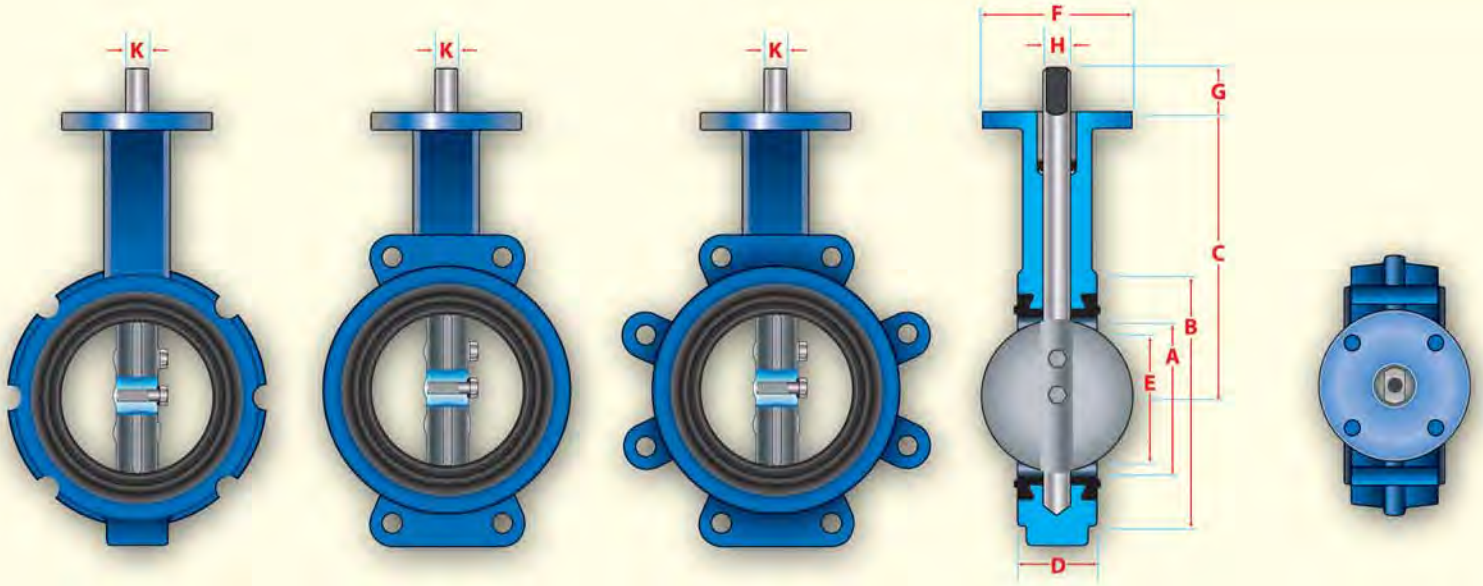

All standard seats are Food Grade with the exception of Viton

Valve Size	DIMENSIONS									TOP PLATE DRILLING			TAPPED LUG DATA				WEIGHT (POUNDS)		
	A	B	C	D	E	F	G	H	K	Bolt Circle	No. Holes	Hole Dia.	Bolt Circle	No. Holes 102	No. Holes 108	Tap	101	108	102
2	2 1/8	4 1/8	5 1/2	1 5/8	1 11/16	4	1 1/4	9/16	3/8	3 1/4	4	7/16	4 3/4	4	4	5/8-11 UNC	7	8	8
2 1/2	2 9/16	4 7/8	6	1 3/4	2 3/16	4	1 1/4	9/16	3/8	3 1/4	4	7/16	5 1/2	4	4	5/8-11 UNC	8	9	9
3	3 1/8	5 3/8	6 1/4	1 3/4	2 7/8	4	1 1/4	9/16	3/8	3 1/4	4	7/16	6	4	4	5/8-11 UNC	9	10	10
4	4 1/8	6 7/8	7	2	3 7/8	4	1 1/4	5/8	7/16	3 1/4	4	7/16	7 1/2	8	4	5/8-11 UNC	13	17	20
5	5 3/16	7 5/8	7 1/2	2 1/8	5	4	1 1/4	5/8	7/16	3 1/4	4	7/16	8 1/2	8	4	3/4-10 UNC	19	20	23
6	6 1/8	8 3/4	8	2 1/8	6	4	1 1/4	5/8	7/16	3 1/4	4	7/16	9 1/2	8	4	3/4-10 UNC	20	24	27
8	8 1/8	11	9 1/2	2 1/2	8	6	1 1/4	3/4	1/2	5	4	9/16	11 3/4	8	4	3/4-10 UNC	36	38	43
10	10 1/8	13 3/8	10 3/4	2 1/2	10 1/16	6	1 1/4	7/8	5/8	5	4	9/16	14 1/4	12	4	7/8-9 UNC	49	55	63
12	12 1/8	16 1/8	12 1/4	3	11 15/16	6	2	1 1/8	1/4	5	4	9/16	17	12	4	7/8-9 UNC	70	82	90

STANDARD CONSTRUCTION SPECIFICATIONS:

Body: Cast Iron, Ductile Iron (Lug) and Aluminum (Wafer)

Disc: 316 Stainless Steel, Aluminum Bronze, Ductile Iron, Epoxy Coated Ductile Iron

Stem: 316 Stainless Steel, 416 Stainless Steel, Carbon Steel

Resilient Seat: EPDM, Buna-N, Viton, Natural Rubber, White Buna, White Neoprene.

Stem Bushing: Teflon® – Graphite Impregnated

Stem Packing: Buna-N and Viton

Additional materials are available for a wide selection of applications.

NOTES:

1. Dimension "K" not applicable to 12" size. The 12" stem is round with ¼" Key.
2. The figures 101, 102 and 108 cannot be used on pipe or flange with an inside diameter less than the "E" dimension.
3. Valves are rated up to 175 PSI bi-directional service and 85 PSI end of line rating. Undercut disc is rated up to 50 PSI bi-directional service and 25 PSI end of line rating. Preferred direction is with disc bolts on downstream side of disc.
4. Designed in accordance with sections of API 609 Catagory A, ASME 16.1/16.5, ASME 16.34 and MSS SP67. Design tested in accordance with API 598.
5. Compatible with ANSI Class 125/150 flange standards.

Rated Flow Coefficient (Cv) - Figure 101/108/102

Valve Size	ANGLE OF DISC OPENING								
	10°	20°	30°	40°	50°	60°	70°	80°	90°
2	1.67	7.7	17	29	48	74	115	145	195
2 1/2	2.50	11.0	25	44	69	109	174	237	307
3	3.33	15.7	37	64	105	165	276	377	487
4	5.00	27.7	63	110	177	278	472	671	827
5	8.33	43.7	99	177	276	443	752	1,083	1,325
6	13.33	58.7	136	242	385	616	1,075	1,521	1,883
8	20.00	107.3	247	434	687	1,094	1,821	2,671	3,239
10	31.67	174.0	394	696	1,092	1,770	2,983	4,288	5,210
12	47.0	251.7	578	1,002	1,665	2,654	4,398	6,466	8,026

Cv is defined as the volume of water in U.S.G.P.M. that will flow through a given restriction or valve opening with a pressure drop of one (1) p.s.i. at room temperature. Recommended control angles are between 25°-70° open.

Torque Chart - Figure 101/108/102

Valve Size	NORMAL CONDITIONS					SEVERE CONDITIONS				
	Δ P=0	Δ P=50	Δ P=100	Δ P=150	Δ P=175	Δ P=0	Δ P=50	Δ P=100	Δ P=150	Δ P=175
2	221	230	240	250	254	373	384	400	406	410
2 1/2	269	283	288	302	311	454	464	475	486	497
3	322	341	365	379	392	540	568	589	611	634
4	480	514	542	576	590	816	848	886	918	936
5	653	706	754	806	854	1,102	1,162	1,220	1,274	1,301
6	907	1,008	1,109	1,210	1,260	1,529	1,642	1,756	1,868	1,926
8	1,512	1,714	1,915	2,112	2,215	2,549	2,776	3,002	3,229	3,343
10	2,318	2,621	2,900	3,224	3,372	3,910	4,250	4,590	4,931	5,101
12	3,125	3,629	4,138	4,637	6,112	5,270	5,838	6,404	6,971	7,258

Undercut disc available.

All torques shown in inch lbs. 20% Safety factor already included.

ABZ VALVES & CONTROLS, INC.
A Global Flow Technologies Company
P.O. Box 157 • 113 West Main • Madison, KS 66860
PHONE: 620-437-2440 • FAX: 620-437-2435
www.abzvalve.com • www.globalflowtech.com
info@abzvalve.com

The data presented in this bulletin is for general information only. Manufacture is not responsible for compatibility or acceptability of these products in relation to system requirements. Patents and Patents Pending in U.S. and foreign countries. All rights reserved. Printed in U.S.A. ABZ reserves the right to change product designs and specifications without notice. Copyright 2008.

Certified System ISO 9001-2008

RUPERT

PLUMBING AND HEATING

PIPE FABRICATION

40 05 13-2.1: Product Data—Part 2 additional items

This section contains the following:

- Backflow preventer
- Ball Valves
- Sump pump
- Tank Vent
- Wye Strainer

RUPERT

PLUMBING AND HEATING

PIPE FABRICATION

BACKFLOW PREVENTER

"Apollo" Valves

SUBMITTAL SHEET

LEAD FREE*

Model RP4A & RPLF4A

Reduced Pressure Principle **Backflow Preventer**
– A Series –

Job Name:	
Job Location:	
Engineer:	
Contractor:	
Tag:	
PO Number:	
Representative:	
Wholesale Distributor:	

SPECIFICATIONS

The Apollo® Model RP4A and RPLF4A Lead Free* Reduced Pressure Backflow Preventer A Series provide maximum protection of the potable water supply due to back-siphonage or backpressure from substances that are hazardous to the potable water supply. The top accessed modular check valve cartridges provide captured springs, replaceable seats, and reversible silicone seat discs. This **Made in America** assembly features ball valve shutoffs with stainless steel handles and nuts as standard and carries the **five-year** Apollo® factory warranty.

FEATURES

- Low pressure loss documented by independent approval agencies
- Easily removable modular check valve cartridge
- Captured stainless steel springs
- Ball valve shutoffs w/ SS handles & nuts standard
- Top-mounted test cocks for easy testing
- Modular relief valve
- Chloramine-resistant elastomers
- No special tools required
- **Made in the USA**
- Horizontal installation

PERFORMANCE RATING

- Maximum Working Pressure: 175 psi
- Temperature Range: 33 ° F – 180 ° F

APPROVALS

- ASSE 1013
- CSA B64.4
- IAPMO
- Approved by the Foundation for Cross-Connection Control and Hydraulic Research at the University of Southern California

STANDARD MATERIALS LIST

Part Name	Material
Body, Caps	Bronze C84400 or C89836 Lead Free*
BV Shutoffs, Test cocks	Bronze C84400 or C87800 Lead Free*
Check Valve Cartridges	Glass-Filled PPO
Springs	300 Series Stainless Steel
Seat Discs	Chloramine-resistant Silicone
O-rings	Chloramine-resistant EPDM

DIMENSIONS

Model Number	Size (in.)	Dimensions (in.)						Wt. (lbs.)
		A	B	C	D	E	F	
4A-203-A2F	1/2"	10-7/8	7-3/8	7-1/8	2-7/8	3-1/4	3-7/8	6.9
4A-204-A2F	3/4"	12-5/8	8-1/2	7-3/8	3-1/8	3-1/2	3-7/8	8.2
4A-205-A2F	1"	14-5/8	9-1/2	8	3-1/4	4	4	11.7
4A-206-A2F	1-1/4"	17-1/2	11-3/4	9-7/8	5-1/8	4-1/2	5-3/8	13.6
4A-207-A2F	1-1/2"	18	11-5/8	9-7/8	5-1/8	4-1/2	5-3/8	17.4
4A-208-A2F	2"	20-1/8	12-3/4	11	5-7/8	5	6	24.5

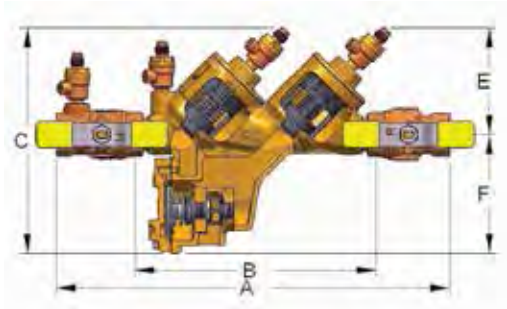

** LEAD FREE: The wetted surfaces of this product shall contain no more than 0.25% lead by weighted average. Complies with Federal Public Law 111-380. ANSI 3rd party approved and listed.*

Apollo Valves, Manufactured by **Conbraco Industries, Inc.**
701 Matthews Mint-Hill Road, Matthews, NC 28105 USA
www.**apollovalves**.com | (704) 841-6000

This specification is provided for reference only. Conbraco Industries Inc. reserves the right to change any portion of this specification without notice and without incurring obligation to make such changes to Conbraco products previously or subsequently sold. Please visit our website @ www.apollovalves.com for the most current information.

AALBERTS INDUSTRIES

"Apollo" Valves

SUBMITTAL SHEET

LEAD FREE*

— Model RP4A & RPLF4A —

Reduced Pressure Principle **Backflow Preventer**
– A Series –

FACTORY CODE

4A [XX]	2 X	X	XX	F	X	
	Y-STRAINER	**SIZE**	**SHUT-OFF VALVES**			**OPTIONS**
4A = Non-Lead Free 4ALF = Lead Free*	☐ 0 = None (Standard) ☐ 1 = With Y-Strainer (Shipped loose)	☐ 3 = 1/2" ☐ 4 = 3/4" ☐ 5 = 1" ☐ 6 = 1-1/4" ☐ 7 = 1-1/2" ☐ 8 = 2"	☐ A2 = w/ball valves (Standard) ☐ A4 = w/union end ball valves	☐ Blank = NPT testcocks ☐ F = SAE testcocks	☐ Blank = Standard SS Handle ☐ LL = Locking lever handles (1/2" - 2")	

FLOW CURVES

● Meter Rated Flow

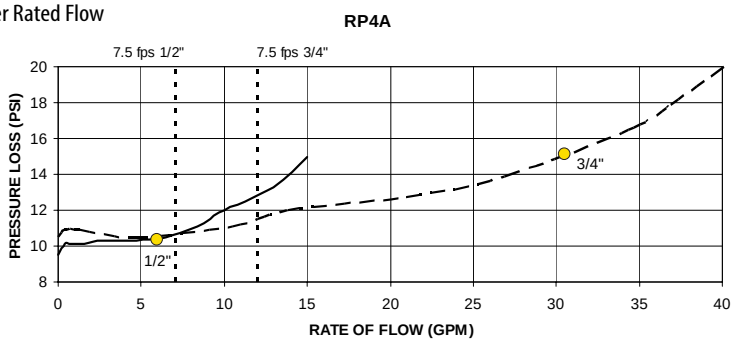

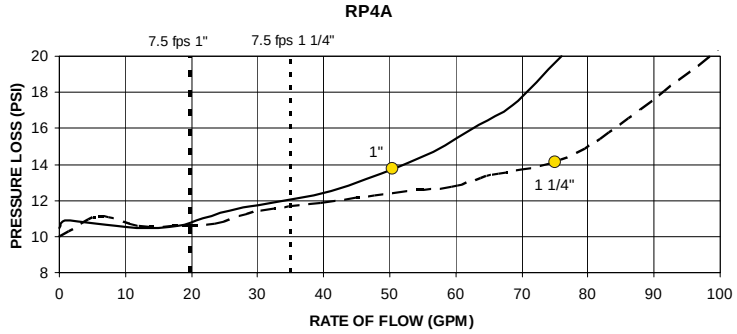

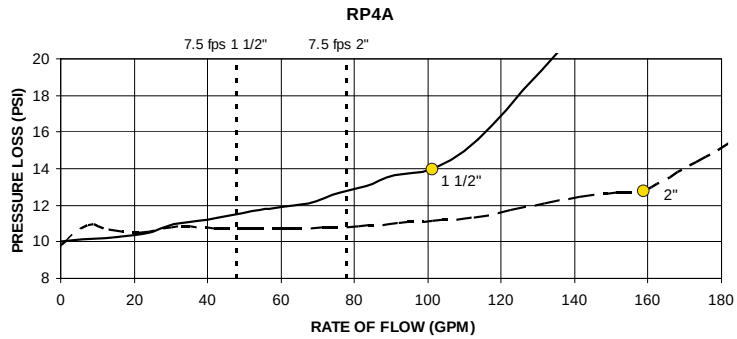

** LEAD FREE: The wetted surfaces of this product shall contain no more than 0.25% lead by weighted average. Complies with Federal Public Law 111-380. ANSI 3rd party approved and listed.*

Curves developed from independent approval agencies actual tests – Consult factory for details.

● indicates rated flow as determined by approval agencies, 7.5 ft/sec is the typical maximum Plumbing system flow rate.

Apollo Valves, Manufactured by **Conbraco Industries, Inc.**
701 Matthews Mint-Hill Road, Matthews, NC 28105 USA
www.**apollovalves**.com | (704) 841-6000

This specification is provided for reference only. Conbraco Industries Inc. reserves the right to change any portion of this specification without notice and without incurring obligation to make such changes to Conbraco products previously or subsequently sold. Please visit our website @ www.apollovalves.com for the most current information.

AALBERTS INDUSTRIES

RUPERT

PLUMBING AND HEATING

PIPE FABRICATION

BALL VALVES

"Apollo" Valves

SUBMITTAL SHEET

LEAD FREE

77CLF Series

Bronze Full Port **Ball Valve**

Job Name:	
Job Location:	
Engineer:	
Contractor:	
Tag:	
PO Number:	
Representative:	
Wholesale Distributor:	

DESCRIPTION

The Apollo® 77CLF "Contractor Series" 2 piece ball valve features a de-zincification resistant, Lead Free* bronze body, premium "multi-fill" MPTFE seats and stem packing, and a Lead Free* "Solid Ball" design that delivers true full-port flow performance. Cast and machined in Apollo's South Carolina manufacturing plants using proven Lead Free* materials.

FEATURES

- Easily Identifiable White Handle and Blue "Lead Free" Hang Tag
- EZ-Solder™ Lead Free Bronze
- Lead Free* Brass & Bronze Materials
- NSF/ANSI 61 Section 8, Annex F & G
- Multi-Fill PTFE Seats & Seals.
- Manufactured and 100% Factory Tested in the USA

PERFORMANCE RATING

- Maximum Pressure: 600 psi CWP, 150 SWP
- Maximum Temperature: 500°F
- Vacuum service to 29 in. Hg

APPROVALS

- MSS SP-110; Ball Valves
- NSF/ANSI 61 Section 8, Annex F & G
- NSF/ANSI 372 Lead Free
- ANSI 3rd Party Approval to 0.25% Lead Max.
- CSA B51 CRN: OC10908.5C
- IAPMO R&T / UPC - IGC 157
- City of Los Angeles DBS

OPTIONS (For 1/4" to 2")

- (-01) Standard
- (-04) 2-1/4" Stem Extension
- (-07) Tee Handle
- (-10) S.S. Handle and Nut
- (-11) Therma-Seal™ Insulating Tee Handle
- (-27) Locking Handle
- (-92) Standard lever with Balancing Stop
- (-94) 2-1/4" Stem Extension with Balancing Stop

MODELS

- 77CLF100/200 Series - Standard Trim
- 77CLF140/240 Series - 316 SS Ball & Stem

STANDARD MATERIALS LIST

Part Name	Material
Gland	B16 Brass
Nut	Zinc Plated Steel
Packing	MPTFE
Seat	MPTFE
Stem	C27451 Lead Free* Brass
Ball	C27451 Lead Free* Brass Cr. Plated or B283, C37700
Retainer	C27451 Lead Free* Brass or B283, C37700 (1/4"-1/2")
	B584-C89836 Lead Free* Bronze (3/4"-2 1/2")
Body	B584-C89836 Lead Free* Bronze
Handle	Zinc Plated Steel w/ Vinyl Grip

– **Continued on the next page.**

** LEAD FREE: The wetted surfaces of this product shall contain no more than 0.25% lead by weighted average. Complies with Federal Public Law 111-380. ANSI 3rd party approved and listed.*

Apollo Valves, Manufactured by **Conbraco Industries, Inc.**
701 Matthews Mint-Hill Road, Matthews, NC 28105 USA
www.**apollovalves**.com | (704) 841-6000

This specification is provided for reference only. Conbraco Industries Inc. reserves the right to change any portion of this specification without notice and without incurring obligation to make such changes to Conbraco products previously or subsequently sold. Please visit our website @ www.apollovalves.com for the most current information.

AALBERTS INDUSTRIES

"Apollo" Valves

SUBMITTAL SHEET

LEAD FREE

77CLF Series

Bronze Full Port **Ball Valve**

NPT

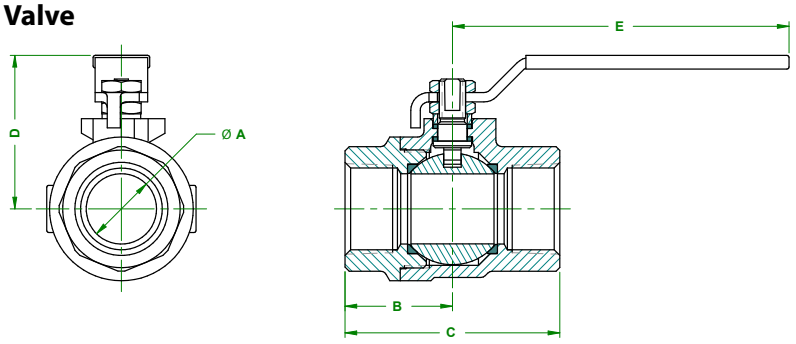

Solder

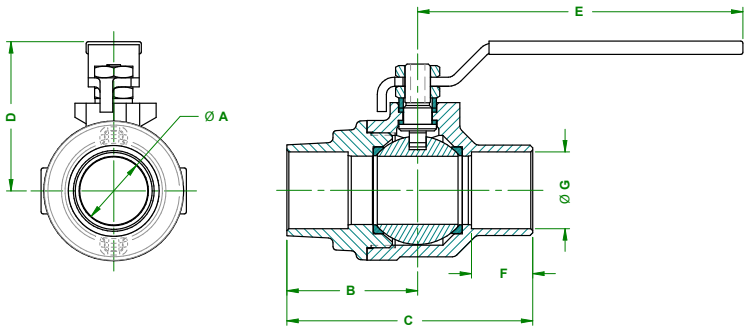

DIMENSIONS

LF Part Number	Size (in.)	Dimensions (in.)								Wt. *** (lbs.)
		A	B	C	D	E	F	G	Cv	
NPT										
77CLF-101-01	1/4"	0.37	0.95	1.97	1.76	3.74	-	-	4.5	0.6
77CLF-102-01	3/8"	0.37	1.07	2.09	1.76	3.74	-	-	7.2	0.6
77CLF-103-01	1/2"	0.50	1.15	2.25	1.79	3.74	-	-	15.5	0.6
77CLF-104-01	3/4"	0.75	1.32	2.65	2.00	4.88	-	-	35.6	1.1
77CLF-105-01	1"	1.00	1.53	3.07	2.19	4.88	-	-	68.1	1.8
77CLF-106-01	1-1/4"	1.25	2.04	4.08	3.13	7.06	-	-	125.0	4.4
77CLF-107-01	1-1/2"	1.50	2.12	4.23	3.29	7.06	-	-	177.0	4.6
77CLF-108-01	2"	2.00	2.43	4.85	3.83	7.06	-	-	389.0	7.9
77CLF-109-01	2-1/2"	2.50	3.12	6.37	4.51	8.06			503.0	16.2
SOLDER										
77CLF-202-01	3/8"	0.37	1.30	2.21	1.76	3.74	0.41	0.50	7.2	0.6
77CLF-203-01	1/2"	0.50	1.41	2.56	1.76	3.74	0.50	0.63	15.5	0.6
77CLF-204-01	3/4"	0.75	1.64	3.03	2.00	4.88	0.75	0.88	35.6	1.0
77CLF-205-01	1"	1.00	1.92	3.61	2.19	4.88	0.90	1.13	68.1	1.6
77CLF-206-01	1-1/4"	1.25	2.36	4.44	3.13	7.06	0.97	1.38	125.0	3.9
77CLF-207-01	1-1/2"	1.50	2.63	4.89	3.29	7.06	1.09	1.63	177.0	4.3
77CLF-208-01	2"	2.00	3.17	6.06	3.83	7.06	1.34	2.13	389.0	7.6
77CLF-209-01	2-1/2"	2.50	3.77	7.14	4.51	8.06	1.43	2.63	503.0	15.9

*** *Weights based on Standard Configuration*

Apollo Valves, Manufactured by **Conbraco Industries, Inc.**
701 Matthews Mint-Hill Road, Matthews, NC 28105 USA
www.**apollovalves**.com | (704) 841-6000

This specification is provided for reference only. Conbraco Industries Inc. reserves the right to change any portion of this specification without notice and without incurring obligation to make such changes to Conbraco products previously or subsequently sold. Please visit our website @ www.apollovalves.com for the most current information.

AALBERTS INDUSTRIES

RUPERT

PLUMBING AND HEATING

PIPE FABRICATION

TANK VENT

REFERENCE DRAWING 140705-001-PI-03-400002.

MODEL # 4006-CR-6"

Free Vents
Model 4000 & 4100

The Enardo Models 4000 and 4100 are designed to be used on tanks containing non-volatile liquids. Enardo Free Vents offer efficient flow capacity to protect the tank from positive or negative overpressure. They allow vapors to flow freely in and out of the storage tank.

The 4000 and 4100 are designed to protect against rain, dirt, insects and other foreign matter from entering the vent.

Available in aluminum, carbon steel and stainless steel.

Approved Equal to turn-down vent.

Model 4000

Model 4100

Features and Benefits

- Enardo Free Vents are built of corrrosion resistant materials. A wire mesh screen prevents foreign matter from entering the tank or pipe opening.
- Convient 150 lb. flange connections for quick and easy installation
- As with all Enardo products, every Enardo Free Vent is factory inspected to meet all critical requirements and special needs.
- Rugged forged design provides years of trouble free service life.
- Available in API, ANSI, DIN and JIS flanges.

Vent Flange Sizes

Model Numbers	Sizes Available mm (In.)
Series 4000 & Series 4100	50 (2), 80 (3), 100 (4), 150 (6), 200 (8), 250 (10), and 300 (12)

Materials of Construction

Materials Available
Aluminum, Carbon Steel, 304 Stainless Steel, 316 Stainless Steel, Special

ENARDO Vents

Free Vents
Model 4000 & 4100

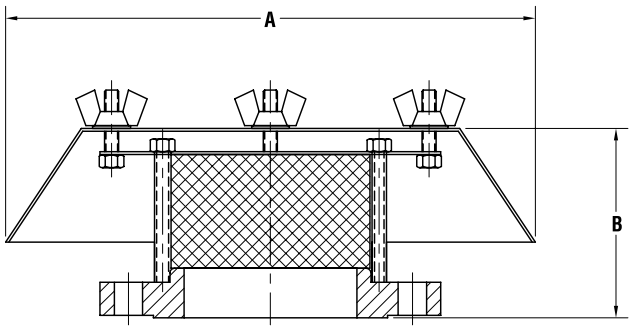

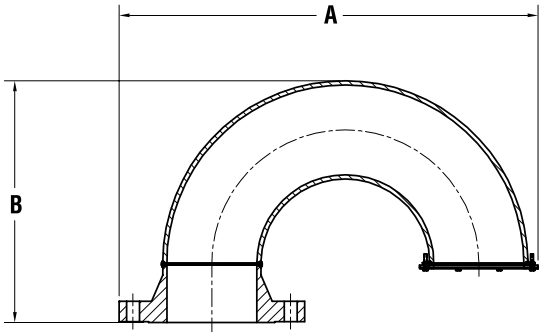

Model 4000 Dimensions and Weights

Model	150 Lb. Flange Size in. (mm)	A Width in. (mm)	B Height in. (mm)	Approx. Ship. Wt. lb. (kg)
4000	2 (50)	9 (228.6)	3-1/4 (82.5)	11 (5)
4000	3 (80)	9 (228.6)	3-1/4 (82.5)	14 (6.4)
4000	4 (100)	16-1/2 (419.1)	5 (127)	18 (8.2)
4000	6 (150)	16-1/2 (419.1)	5 (127)	28 (12.7)
4000	8 (200)	24-1/2 (662.3)	6-9/16 (166.7)	42 (19)
4000	10 (250)	24-1/2 (662.3)	6-9/16 (166.7)	60 (27.3)
4000	12 (300)	24-1/2 (662.3)	6-9/16 (166.7)	95 (43.2)

Larger sizes are available on special order.

Model 4100 Dimensions and Weights

Model	150 Lb. Flange Size in. (mm)	A Width in. (mm)	B Height in. (mm)	Approx. Ship. Wt. lb. (kg)
4100	2 (50)	11 (279.4)	6 (169.9)	8 (3.6)
4100	3 (80)	15-1/4 (387.4)	9 (228.6)	20 (9.1)
4100	4 (100)	19-1/2 (495.3)	11-1/4 (285.8)	35 (15.9)
4100	6 (150)	27-1/2 (698.5)	15-13/16 (401.6)	70 (31.8)
4100	8 (200)	35-3/4 (908.1)	20-5/16 (515.9)	135 (61.4)
4100	10 (250)	44 (1117.6)	24-3/8 (619.1)	235 (106.8)
4100	12 (300)	52-1/2 (1333.5)	27-7/8 (708)	350 (159)

Key to Enardo Series 4100 Free Vent Model Number

□□ □□ — □ □ — □

Series
40 = 4000
41 = 4100

Connection Size
2", 3", 4", 6", 8", 10" and 12" (50, 80, 100, 150, 200, 250, 300 mm)

Material
A. Aluminum
C. Carbon Steel
4. 304 Stainless Steel
6. 316 Stainless Steel
X. Special

Flange Type
F. Flat Face
R. Raised Face

Options
1. Protective Coating
2. Special Features

Example:

4 1 0 4 — C R — 1

Indicates a Free Vent with a 4" ANSI 150 lb. raised face flange connection made with carbon steel materials.

ENARDO • 4470 S. 70th East Ave. • Tulsa, OK 74145-4607 • 1-800-336-2736 U.S. and Canada • **www.enardo.com**

RUPERT

PLUMBING AND HEATING

PIPE FABRICATION

WYE STRAINER

"Y" Strainers

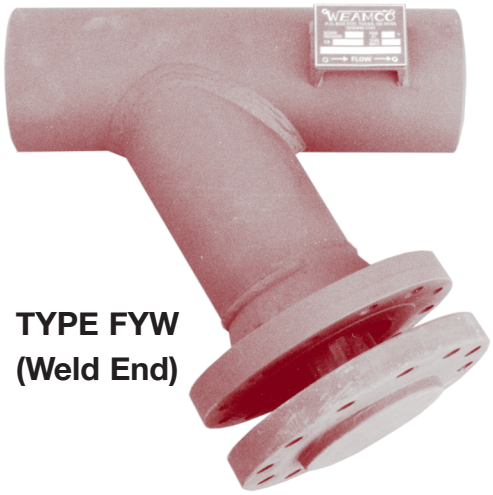

TYPE FYW
(Weld End)

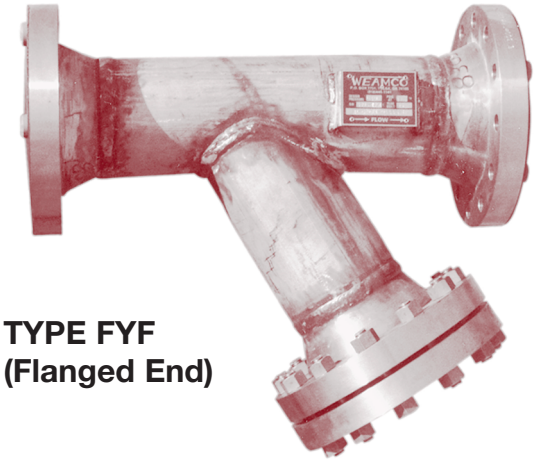

TYPE FYF
(Flanged End)

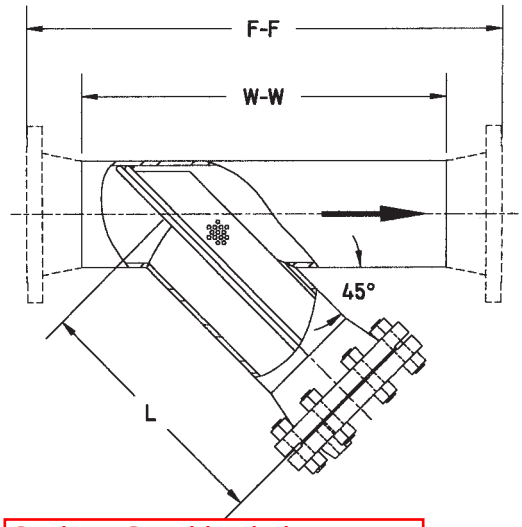

Carbon Steel body is approved equal to bronze body

SIZE	O.D.	TYPE FYW W-W	TYPE FYF F-F	L	BLOWDOWN (NPT)
4	4 1/2	18 1/2	26	12	3/4
6	6 5/8	20 1/4	30	16	3/4
8	8 5/8	26	37	20	1
10	10 3/4	33 1/2	46	23	1
12	12 3/4	38 1/4	51	26	1 1/2
14	14	42 1/2	56	29	1 1/2
16	16	47 1/2	62	32	1 1/2
18	18	53	68	36	1 1/2
20	20	57 1/2	73	39	2
24	24	63 1/2	80	43	2

Larger sizes on application

Dimensions are in inches.

WEAMCO "Y" Strainers can be fabricated from any commercially available pipe including carbon steel, low and intermediate alloy steels and stainless steel. The F-F dimensions shown for the Type FYF Strainer is applicable for any flange rating or facing 150# ANSI thru 300# ANSI. Higher pressures on application. Special Dimensions available to match your piping requirements.
Std. Design ASME/ANSI B31.4

INFORMATION REQUIRED

1. Quantity
2. Line Size
3. Weamco type
4. Flange Rating and Face
5. Housing material *
6. Housing Pipe Schedule
7. Basket material *
8. Mesh liner if required
9. Additional Features

*Carbon Steel is standard. Other materials are available.

EXAMPLE: 2 – 6" 300# RF WEAMCO type FYW, C.S. housing,
Std. Wt. 304 SS basket, 1" NPT blowdown, 300# R.F.

Standard Basket – Perforated 1/8" Diameter holes on 3/16" Centers

(Other Patterns, wire mesh and liners available,
see WEAMCO Bulletin AC 112 or Consult Factory)

WEAMCO METRIC
(918) 445-1141
(800) 331-3790
Fax: (918) 445-4617
sales@weamco.com
www.weamco.com

SDU Series, DIN Rail AC UPS

The SDU DIN Rail UPS combines an industry leading compact design with a wide operation temperature range and unique installation options. The SDU series provides economical protection from damaging impulses and power interruptions. These units include easy to wire screw terminations for critical devices needing battery back up such as computer based control systems.

E179213

Applications

- Programmable Logic Controllers
- Factory Automation
- Robotics
- Conveying Equipment
- Computer-based Control Systems

Features

- Lightweight, compact industrial design
- Wide operation temperature range (0ºC to 50ºC)
- Cold start capability
- Phone/dataline surge protection
- Software and cable included for easy installation
- Simulated sinewave output
- RS232 communication port
- USB communication port (optional)
- Form C dry contact relay (optional)
- Panel/wall mounting brackets (optional)
- Remote turn-on and shut-off capabilities
- Two year limited warranty

Certifications and Compliances

120V Models

- c UL us UL Recognized Component, UPS Equipment
  - UL 60950-1/CSA C22.2 No. 60950-1
  - Suitable for UL 508, CSA C22.2 No. 107.1 Ind. Control Equipment Applications with no derating
    - Overvoltage Cat III, Pollution Degree III

230V Models

- CE
  - EN62040-1-1

Related Products

- Portable MCR Power Conditioners
- STV Surge Protective Devices
- SDN DIN Rail Power Supplies
- STFV Plus Active Tracking® Filters

Selection Table

Capacity (VA/W)	Catalog Number	Volts, Frequency In/Out	Typical Back–up Time (minutes) *	Input/Output Connections	Approx. Ship Weight – lbs (kg)
500/300	**SDU 500**	120 Vac, 50/60 Hz	4	IP20 touch proof, screw terminals. Wire range: 10 ~ 24 AWG.	10.7 (4.70)
850/510	**SDU 850**		2		11.4 (5.00)
500/300	**SDU 500–5**	230 Vac, 50/60 Hz	4		11.5 (5.20)
850/510	**SDU 850–5**		2		11.9 (5.40)

* At full load.

SDU Accessories

Catalog Number	Description	Approx. Ship Weight – lbs (kg)
RELAYCARD–SDU	Dry contact I/O relay box, IP20 touch proof screw terminals, wire size range 12~22 AWG (IEC 2.5mm); N.O./N.C. form "C" contact. Relay contact signal for "On Battery", "Low Battery" and "UPS Shutdown".	1.0 (0.45)
UPSMON–USB	RS232 to USB adapter cable	1.0 (0.45)
SDU–PMBRK	Mounting brackets to secure UPS to wall, back of panel or enclosure.	1.0 (0.45)

Contact **Technical Services** at **(800) 377-4384** with any questions.
Visit our website at www.solahd.com.

Specifications

Catalog Number	SDU 500	SDU 850	SDU 500–5	SDU 850–5
Capacity (VA/Watts)	500/300	850/510	500/300	850/510
Load Power Factor	0.6			
Dimensions – inches (mm)				
Unit (H x W x D) – in. (mm)	4.88 x 11.1 x 4.55 (124.0 x 281.0 x 116.0)			
Weight – lbs (kg)	10.7 (4.70)	11.4 (5.00)	11.5 (5.20)	11.9 (5.40)
Input Parameters				
Voltage	120 V (+10%, -20%)		230 V (+/- 20%)	
Frequency	50 +/- 5 Hz or 60 Hz +/- 6 Hz (auto sensing)			
Output AC Parameters				
Voltage (Battery Mode)	Step sinewave			
	+/- 5%			
Frequency (On Battery)	50 or 60 Hz			
	+/- 0.3 Hz			
Overload Protection	UPS automatic shutdown if overload exceeds 105% of nominal at 20 seconds, 120% at 10 seconds, 130% at 3 seconds			
Short Circuit	UPS output cut off immediately			
Battery Parameters				
Battery Type	Sealed, non-spillable, maintenance-free lead acid batteries			
Transfer Time	4 - 6 ms typical			
Back–up Time * (minutes)	4.5/18	2.5/10	4.5/18	2.5/10
Recharge Time	8 hours to 90% capacity after full discharge			
Environmental				
Operating Temperature	0°C to 50°C			
Storage Temperature	-15°C to 60°C			
Relative Humidity	1% to 95%, non-condensing			
Ambient Operation	1-95% humidity non-condensing, 0-50°C up to 5,000 ft. (1500m)			
Audible Noise	< 40dBA (1 meter from surface)			
Standards				
EMC	FCC Part 15, Subpart B, Class A; EMC: EN50091-2, EN61000-3-2, EN61000-3-3, IEC60801-2, IEC60801-3, IEC60801-4, IEC61000-2-2			
Elevation	5000 ft. without derating			
Shock & Vibration	According to the International Safe Transit Association standard ISTA 2A.			
Mounting	To be mounted on DIN TS35/7.5 or TS35/15 rail system. Chassis mounting permissible via optional brackets. Unit handles normal shock and vibration of industrial use and transportation without coming off rail.			

* At full load/half load.

SOLA HD

Uninterruptible Power Systems

SDU Series
500, 850, 500-5, 850-5

Instruction Manual

While every precaution has been taken to ensure accuracy and completeness in this manual, SolaHD assumes no responsibility, and disclaims all liability for damages resulting from use of this information or for any errors or omissions.

©2008 SolaHD. All rights reserved throughout the world. Specifications are subject to change without notice.

®SolaHD name and logo are registered trademarks of EGS Electrical Group, LLC. All names referred to are trademarks or registered trademarks of their respective owners.

Aunque se han tomado todas las precauciones para asegurar la exactitud y acuciosidad de este manual, SolaHD no asume responsabilidad alguna, y rechaza toda responsabilidad por daños que pudieran resultar debido al uso de esta información o por cualquier error u omisión.

©2008 SolaHD. Todos los derechos reservados en el mundo entero. Las especificaciones pueden cambiar sin previo aviso.

El nombre y el logotipo de ®SolaHD son marcas registradas de EGS Electrical Group, LLC. Todos los nombre mencionados son marcas comerciales o registradas de sus respectivos titulares.

Bien que toutes les précautions aient été prises afin d'assurer que les renseignements du présent manuel sont complets et exacts, Sola/Hevi-Duty n'assume aucune responsabilité, et décline toute responsabilité pour des dommages découlant de l'utilisation de cette information ou de toute erreur ou omission.

©2008 SolaHD Tous droits réservés mondialement. Les caractéristiques techniques sont sujettes à modification sans préavis.

Le nom et le logo ®SolaHD sont des marques déposées de EGS Electrical Group, LLC. Tous les noms évoqués sont des marques de commerce ou des marques déposées de leurs propriétaires respectifs.

Table of Contents/Índice/Table des matières

English

1.0 Important Safety Instructions 4–5
2.0 Warnings Defined 5
3.0 Introduction 6
4.0 System Description 7–8
5.0 Installation Instructions 9
6.0 Operating Instructions 9–10
7.0 Battery Overload Alarms 10
8.0 PIN-Out Configuration for DB9 Connector 11
9.0 Battery Backup Times 11
10.0 Troubleshooting 12
11.0 Storage 12
12.0 Specifications 13
13.0 Conditions for Safe Use of SDU 500 & 850 14–15
14.0 Product Registration & Warranty Information 15

Español

1.0 Instrucciones importantes de seguridad 16–17
2.0 Definición de advertencias 17
3.0 Introducción 18
4.0 Descripción de sistema 19–20
5.0 Instrucciones de instalación 21
6.0 Instrucciones de operación 21–22
7.0 Tiempo de autonomía de la batería (Alarma) 23
8.0 Configuración de disposición de las clavijas del conector DB9 23
9.0 Tiempo de reserva de la batería 24
10.0 Almacenamiento 24
11.0 Solución de problemas 25
12.0 Especificaciones 26
13.0 Registro del Producto y Información sobre la Garantía 27

Français

1.0 Instructions importantes sur la sécurité 28–29
2.0 Définition des avertissements 29
3.0 Introduction 30
4.0 Description du système 31–32
5.0 Instructions d'installation 33
6.0 Instructions d'utilisation 33–34
7.0 Alarmes de la batterie de secours 35
8.0 Configuration des broches de sortie du connecteur DB9 35
9.0 Temps de secours de batterie 36
10.0 Entreposage 36
11.0 Dépannage 37
12.0 Spécifications 38
13.0 Enregistrement du produit et information sur la garantie 39

1.0 Important Safety Instructions

This manual contains important safety instructions that should be followed during the installation of the Uninterruptible Power System (UPS). Please read all safety, installation, and operating instructions before attempting to install or operate the UPS. Please adhere to all warnings on the unit and in this manual during installation and operation.

The UPS is designed for Industrial or Commercial use and can be installed and operated by individuals without previous training.

1.1 Safety Precautions—Warnings

- To prevent the risk of fire or electric shock, install the UPS in a temperature and humidity controlled ventilated enclosure, free of conductive contaminants, moisture, flammable liquids, gases, and corrosive substances.

- Operate the UPS only from a properly grounded (earthed) ac supply.
- To reduce the risk of electric shock, do not remove the cover, as it has no user-serviceable parts inside. Some components are live, even when ac power is disconnected. For service, contact a qualified technician.

Although your UPS has been designed and manufactured to assure personal safety, improper use can result in electrical shock or fire. To ensure safety, please observe the following rules:

- Turn OFF UPS and disconnect the ac supply before cleaning. Do not use liquid or aerosol cleaners. A dry cloth is recommended to remove dust from the surface of your UPS.
- Do not install or operate the UPS in or near water.
- Do not place the UPS on an unstable cart, stand, or table.
- Do not place the UPS under direct sunlight or close to heat-emitting sources.
- To allow proper ventilation of the UPS, do not block or cover the top and bottom sides of the unit.
- Never block or insert any objects into the ventilation holes or other openings of the UPS. Keep all vents free of dust accumulation that could restrict airflow.

- Follow all warnings and instructions marked on the UPS. Do not attempt to service the UPS, as it has no user-serviceable parts inside. Refer all repairs to qualified service personnel.
- Do not dispose of batteries in a fire; they may explode.
- Do not open or damage the battery. Released electrolyte is harmful to the skin and eyes and may be toxic.

If your UPS demonstrates any of the following conditions, turn OFF the UPS, disconnect the ac supply and contact your local distributor, SolaHD representative or SolaHD Technical Support at 1-800-377-4384.

- Liquid has been spilled on the UPS.
- The circuit breaker opens frequently.
- The UPS does not operate in accordance with the user manual.

1.2 Conditions of Use

Your UPS provides conditioned power to connected equipment. The maximum load must not exceed that shown on UPS rating label. If uncertain, contact your distributor or SolaHD Technical Support at 1-800-377-4384.

U.S. Only: For Conditions of Acceptability in accordance with UL 508A, see “13.0 Conditions for Safe Use of SDU 500 & 850”.

2.0 Warnings Defined

⚠ DANGER **Danger:** Indicates an imminently hazardous situation that, if not avoided, will result in death or serious injury. This signal word is limited to the most extreme situations.

⚠ WARNING **Warning:** Indicates a potentially hazardous situation that, if not avoided, could result in death or serious injury.

⚠ CAUTION **Caution:** Indicates a potentially hazardous situation that, if not avoided, may result in minor or moderate injury. It may also be used to alert against unsafe practices.

3.0 Introduction

Congratulations on your choice of the SDU Uninterruptible Power System (UPS). The SDU is a compact, “Off-Line” DIN rail mountable UPS, which provides conditioned power to sensitive electronic equipment. It supplies connected equipment with stepped approximation to sinewave power to simulate the power generated by the utility.

The SDU is a powerful, microprocessor-controlled UPS. Input voltage range is 80% to 110% (ideal protection for the critical connected loads). Battery charging occurs automatically when ac power is applied, no need to switch ON the UPS. When power fails, the UPS can be automatically turned OFF, as long as the connected loads are not operating to save the battery energy. The SDU also includes an automatic self-test feature to test the UPS function and battery. If the battery is no longer useful, the unit will sound an alarm and an LED indicator will illuminate.

NOTE: This equipment has been tested and found to comply with the limits for a Class A digital device, pursuant to Part 15 of the FCC Rules. These limits are designed to provide reasonable protection against harmful interference in an industrial installation. This equipment uses, generates and can radiate radio frequency energy and, if not installed and used in accordance with the instructions, may cause harmful interference with radio communications. However, there is no guarantee that interference will not occur in a particular installation. If this equipment does cause harmful interference to radio or television reception, which can be determined by turning the equipment OFF and ON, the user is encouraged to try to correct the interference by one or more of the following measures:

- Reorient or relocate the receiving antenna.
- Increase the separation between the UPS and the receiver.
- Connect the UPS into a circuit different from that which the receiver is connected.
- Consult the dealer or an experienced radio/TV technician for help.

4.0 System Description

4.1 Front Panel

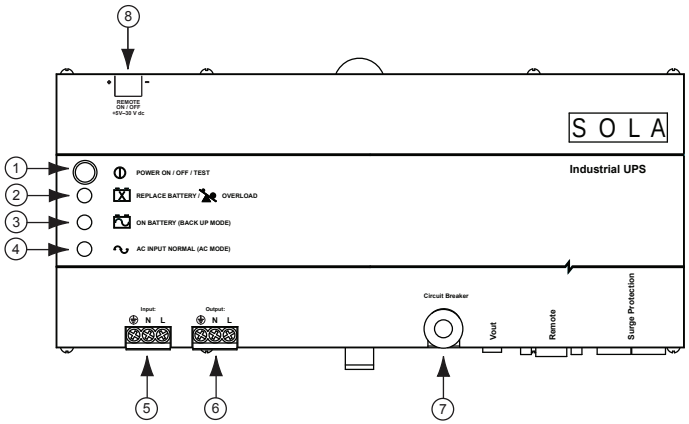

1. **Power ON/OFF/Test Button:** Press the button for more than one second to turn the UPS ON. Press the button for less than one second to activate the self-testing. Press for more than five seconds to turn OFF.
2. **Battery Warning/Overload Indicator (Red LED):** The LED flashes when the battery needs to be recharged and tested. The LED will illuminate when the unit is subjected to an overload condition. If the unit shuts down due to overload, the LED and alarm will continue for two minutes.
3. **ON Battery Indicator (Yellow LED)**: The LED illuminates when the UPS is supplying battery power to the loads.
4. **Ac Input Normal Indicator (Green LED):** The LED illuminates when the line input voltage is normal.
5. **IP20-rated Input Screw Terminals** (see table below)
6. **IP20-rated Output Screw Terminals** (see table below)

Screw	M3.0; Current rating = 30 A, Ac 300 V
Insulation Withstands Volts	Ac 2000 V min.
PCB Hole Diameter	1.8 mm, wire strip length = 8 mm
Wire Range	10–24 AWG
Screw Torque	5.5 lb.-in.

7. **Input Circuit Breaker:** Protection from ac overload and short circuit.
8. **Remote ON/OFF:** The remote switch provides the same functions as the front panel switch including ON/OFF/Test functions with Green Mode enabled or disabled.

4.2 Bottom Panel

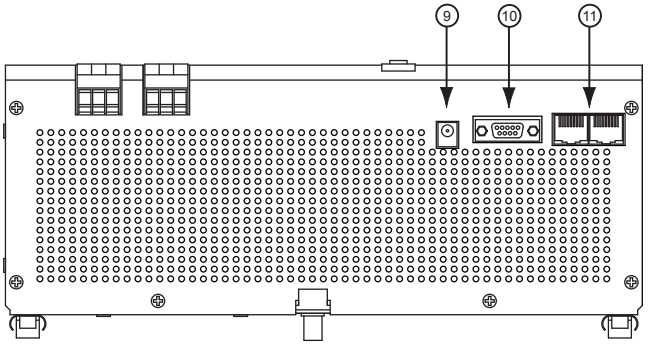

9. **V Output:** Output terminal providing 12 V power source to the optional relay card.
10. **Remote:** RS232 communication port; DB-9 connector.
11. **Tel/Surge Protection:** Data line surge protection for phones (UL497A).

4.3 What's Included

The SDU UPS is shipped with the following items:

- User manual
- UPSMON software CD

  NOTE: Monitoring/diagnostic software is included on the UPSMON CD. The software is compatible with Windows NT and Windows 2000 (including XP operating systems).
- UPSMON DB-9 serial cable
- RJ-11 cord
- Electrical shock warning label

4.4 Accessories

- **UPSMON-USB:** RS232 to USB adapter cable
- **RELAYCARD-SDU:** Dry contact relay box
- **SDU-PMBRK:** Mounting brackets to secure the UPS to the wall, back of the panel or enclosure

5.0 Installation Instructions

1. **Placement:** Install the UPS in a protected area with adequate airflow and free of excessive dust. Do not operate the UPS outdoors.
2. **Connect to Utility:** To power up the UPS, connect the ac input connector to the utility power.
3. **Charge the Battery:** The UPS charges its battery whenever it is connected to utility power. For best results, charge the battery for four hours during initial use.
4. **Connect the Loads:** Connect the loads to the output hardwire connector.
5. **Apply the Electrical Shock Warning Label:** Apply the electrical shock warning label to the panel, in a way that is clearly visible to the user.

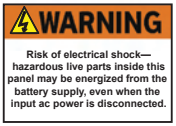

6.0 Operating Instructions

1. **Output Connector:** The output connector will provide protection from surges and power failures to the critical loads.
2. **Switch ON Green Mode Enabled:** After connecting the UPS to the utility power, press the ON button until you hear the first beep, then release the button immediately. The Green Mode is enabled, i.e. if a load less than forty watts (or no load) is connected and the UPS operates in the Backup Mode. The UPS will enter into the Green Mode status after three minutes of backup time; the green light will flash every three to five seconds and after a short period of time; and the unit will enter a “power save” status by shutting down to prevent deep discharge of the battery. To reactivate the unit, power the unit OFF then ON again or reapply utility power.
3. **Switch ON Green Mode Disabled:** After connecting the UPS to the utility power, press the ON button and keep pressing it until you hear two short beeps “Bi-Bip”, then release the button immediately. The Green Mode is now disabled. Any kind of load, whether smaller than forty watts or larger, will not affect the normal operation of the UPS under Ac or Battery Mode.
4. **Switch OFF:** To switch OFF the UPS, press and hold the Power ON/OFF/Test button until the “Ac Power Normal” LED or “ON Battery” LED turns OFF.

5. **Self-test:** Use the self-test to verify both the operation of the UPS and the condition of the battery. In normal utility power, push the Power ON/OFF/Test button for less than one second; the UPS will perform a self-test. During the self-test, the UPS runs in Backup Mode. If the UPS passes the self-test, it returns to “Ac Input Normal” operation.
6. **Remote ON/OFF:** To ensure the remote ON/OFF function, connect a remote push-button switch in series with 5–30 V dc voltage source to the ON/OFF terminal as shown below.

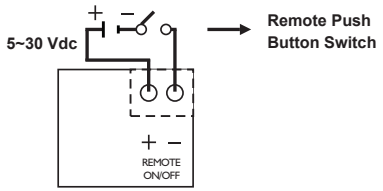

The remote switch provides the same functions as the front panel switch including ON/OFF/Test functions with Green Mode enabled or disabled. If the Green Mode is not needed, a remote toggle switch can be used.

7.0 Battery Overload Alarms

1. **ON Battery (slow beeping):** When in ON Battery Mode, the yellow LED illuminates and the UPS sounds an audible alarm. The alarm stops when the UPS returns to Ac Input Normal operation.
2. **Low Battery (rapid beeping):** In ON Battery Mode when the battery energy runs low, the UPS beeps rapidly until the UPS shuts down from battery exhaustion or returns to Ac Input Normal operation.
3. **Overload (continuous alarm):** When the UPS is overloaded (the connected loads exceed the maximum rated capacity), the UPS sounds a continuous alarm and LED to warn of an overload condition. Reduce the load to eliminate the overload.

8.0 PIN-Out Configuration for DB9 Connector

Female Connector PIN No.	RS-232 Signal	Open Collector Signal
1	---	---
2	TX	---
3	RD	Remote shutdown*
4	DTR (+12 V)	---
5	GND	GND
6	---	Ac failure
7	RTS (-12 V)	---
8	---	Battery low
9	TX	---

DTR = Data terminal ready

RTS = Request to send

RD = Transmitted data

GND = Signal Ground

TX = Received data

*When a remote shutdown signal is applied for one second, the UPS will shut down in three minutes.

9.0 Battery Backup Times

	SDU 500, SDU 500-5	SDU 850, SDU 850-5
VA/Watts	500/300	850/510
Battery	YUASA NP7-12	YUASA REW45-12
Load Level	Backup Time (Minutes)	Backup Time (Minutes)
10%	130	80
20%	55	37
30%	36	20
40%	23	13
50%	18	10
60%	13	7
70%	10	5
80%	9	4
90%	6	3
100%	5	2.5

10.0 Troubleshooting

Problem	Probable Cause	Required Action
UPS is not ON; LED will not light	UPS is OFF or the ON/OFF/Test button was not pushed for 1+ seconds	Press the ON/OFF/Test button for more than 2 seconds
	Battery voltage is less than 10 V	Recharge the UPS for at least 4 hours. If the unit still does not start, check the input fuse.
	Other failure	Call SolaHD Technical Support
	Load is less than 20 W in Backup Mode	Normal condition
UPS is always in Backup Mode	Loose ac input power connection	Tighten the ac power connection
	Circuit breaker trips	Reset the breaker
	Line voltage too high, too low, or blackout	Normal condition
	Other failure	Call SolaHD Technical Support
Backup time is too short	Battery is not fully charged	Recharge the UPS for at least 4 hours
	Other failure	Call SolaHD Technical Support
Continuous beep & LED overload indication	Overload condition	Remove the overload
Red LED is flashing	Battery failure	Recharge the UPS for at least 8 hours. Perform UPS self-test.

⚠ CAUTION **Do not attempt to open the UPS or replace the battery. Call SolaHD Technical Support for further instructions.**

11.0 Storage

11.1 Storage Conditions

Store the UPS covered and upright in a cool, dry location, with its battery fully charged. Before storing, charge the UPS for at least four hours. Remove any accessories in the accessory slot and disconnect any cables connected to the computer interface port to avoid unnecessary draining of the battery.

11.2 Extended Storage

During extended storage in environments where the ambient temperature is -15 to +30 °C (+5 to +86 °F), charge the UPS battery every six months.

During extended storage in environments where the ambient temperature is +30 to +45 °C (+86 to +113 °F), charge the UPS battery every three months.

12.0 Specifications

Description	Catalog Number			
	SDU 500	SDU 850	SDU 500-5	SDU 850-5
INPUT				
Capacity VA/Watts	500/300	850/510	500/300	850/510
Voltage (Single Phase)	120 V + 10%, -20%		230 V +/ -20%	
Frequency	50 or 60 Hz, +/ -10% (auto-sensing)			
OUTPUT				
Voltage (on battery)	Simulated sine wave			
	120 V +/-5%		230 V +/-5%	
Frequency (on battery)	50 or 60 Hz, +/-0.5% auto-sensing			
Transfer Time	<4 milliseconds			
PROTECTION				
Unit Input	Circuit breaker for overload and short circuit protection			
Overload Protection	UPS automatic shutdown if overload exceeds 105% of nominal at 20 s, 120% at 10 s, 130% at 3 s			
Short Circuit	UPS output cut off immediately			
BATTERY				
Type	Sealed, maintenance-free, lead acid batteries			
Typical Recharge Time (to 90% of full capacity)	8 hours			
Backup Time (at full load)	4 min.	2 min.	4 min.	2 min.
ALARM				
ON Battery	Slow beeping every 4 seconds			
Battery Low	Rapid beeping every second			
Overload	Continuous beeping sound			
ENVIRONMENT				
Ambient Operation	0–95% humidity, non-condensing. 50˚C up to 10,000 ft. (3000 m).			
Audible Noise	<40 dBA (1 m from surface)			
WEIGHT & DIMENSIONS				
Net Weight, lb. (kg)	10.7 (4.7)	11.4 (5.0)	11.5 (5.2)	11.9 (5.4)
H x W x D, in. (mm)	4.88 x 11.1 x 4.55 (124 x 281 x 116)			
SAFETY/APPROVALS				
	UL 1778 C-UL Recognized* for industrial applications in accordance with UL 508A without derating. Overvoltage Category 3, Pollution Degree 3. FCC Part 15, Subpart B, Class A.		CE Marked; LVD: EN62040-1-1; EMC: EN50091-2, EN61000-3-2, EN61000-3-3, IEC801-2, IEC801-3, IEC801-4, IEC1000-2-2	

*For Conditions of Acceptability in accordance with UL 508A, see “13.0 Conditions for Safe Use of SDU 500 & 850”.

13.0 Conditions for Safe Use of SDU 500 & 850

NOTE: Applicable for U.S. only.

Considerations shall be given to the following:

1. The equipment shall be installed in compliance with the enclosure, mounting, spacing, casualty, and segregation requirements of the ultimate application.
2. The equipment has been judged on the basis of the required spacings for use in Overvoltage Category III and Pollution Degree 3 and in the Second Edition of the Standard for Uniterruptible Power Supply Equipment, UL 1778, par. 23 and table 23.1, which would cover the component itself if submitted for unrestricted listing.
3. The suitability of grounding connection shall be determined in the end-use product.
4. The equipment is provided with means for permanent mounting, the suitability of assembly shall be determined in the end-use product.
5. Equipment is considered acceptable for use in a maximum ambient of 50°C.
6. The equipment inside live parts are energized from the battery supply even when the input ac power is disconnected.
7. For CNR investigation, total harmonic distortion of 44.8% and maximum single harmonic of 33.1%.
8. The equipment was investigated under 20 amperes branch circuit in accordance with the National Electrical Code, ANSI/NFPA 70, to reduce the risk of fire, connect only to a circuit provided with 20 amperes maximum branch circuit over current protection.
9. Use No. 18 AWG, 90°C copper wire and 9 lb.-in. Torque force when connecting to terminal block.
10. Polarity Identification in UPS unit for filed wiring terminals: Provided with label adjacent to the unit supply connections. See below for details.

Input			Output		
⏚	N	L	⏚	N	L

11. The following tests were additionally conducted at specified conditions as noted below, in accordance with the Standard for Industrial Control Equipment, UL 508A, 17th Edition.

    Temperature Test: Models SDU 850 and SDU 500 were mounted in an enclosure (150% of the dimensions of the device, overall 420 by 180 by 160 mm), in accordance with par. 42.6 of UL 508A. The suitability usage of industrial control equipment shall be considered in end application.

    Breakdown of Components Test: Model SDU 850 had been conducted through a 30-ampere non-time-delay fuse, in accordance with par. 57.5 of UL 508A.

12. **The products, Models SDU 850 and SDU 500 were evaluated based on Pollution Degree 3 and Overvoltage Category III criteria and a minimum end use ambient of 40°C, so that these devices do not have to be derated when installed within an industrial control panel.**

14.0 Product Registration & Warranty Information

14.1 Product Registration

To register your product for updates and information on service and support:

- Visit the Technical Support section of our Web site at: http://www.solahd.com/support/registration.htm
- Click on the Product Registration link and fill in the form. This will register your product with SolaHD.

14.2 Warranty Information

Please see “Terms and Conditions of Sale”.

1.0 Instrucciones importantes de seguridad

Este manual contiene instrucciones importantes de seguridad que deberán seguirse durante la instalación del Sistema de Energía Eléctrica Ininterrumpible (UPS). Por favor lea este manual completamente antes de intentar instalar u operar este UPS.

Lea todas las instrucciones de seguridad, instalación y operación antes de operar el UPS. Cumpla con todas las advertencias indicadas en la unidad y en este manual. Siga todas las instrucciones de operación y deuso.

Este equipo está diseñado para uso Industrial o Comercial. Este equipo puede ser instalado y operado por personas no capacitadas previamente para hacer estas funciones.

1.1 Precauciones de seguridad—Advertencia

- Para evitar el riesgo de incendio o choque eléctrico, instale el UPS en una habitación con temperatura y humedad controladas, libre de contaminantes conductivos, humedad, líquidos inflamables, gases y sustancias corrosivas.

- Opere el UPS únicamente desde una fuente de suministro de CA debidamente conectada a tierra (unida a tierra).
- Para reducir el riesgo de choque eléctrico, no retire la cubierta, ya que la unidad no contiene piezas que el usuario puede reemplazar o reparar. Algunos de los componentes tienen energía eléctrica, aún cuando la energía de CA está desconectada. Para obtener servicio, póngase en contacto con un técnico calificado.

Aunque su UPS ha sido diseñado y fabricado para garantizar la seguridad personal del usuario, el uso indebido del mismo puede resultar en un choque eléctrico o incendio. Para garantizar su seguridad, por favor observe las siguientes normas:

- Apague el UPS y desconecte el suministro de energía de CA antes de limpiarlo. No utilice limpiadores líquidos o aerosol. Se recomienda utilizar un trapo seco para quitar el polvo de la superfi cie de su UPS.
- No instale ni opere su UPS en o cerca del agua.
- No coloque el UPS en un carro, soporte o mesa inestable.
- No coloque el UPS bajo la luz directa del sol o cerca de fuentes emisoras de calor.

- Para permitir una ventilación adecuada del UPS, no bloquee ni cubra los lados superior e inferior de la unidad.
- Nunca bloquee ni inserte ningún objeto en los orifi cios de ventilación u otras aberturas del UPS. Mantenga todas las aberturas de ventilación libre de acumulaciones de polvo que puedan restringir el fl ujo del aire.
- Siga todas las advertencias e instrucciones marcadas en el UPS. No intente darle servicio al UPS, ya que este no contiene ninguna pieza que usted pueda reparar o reemplazar. Refi era todas las reparaciones al personal de servicio técnico califi cado.
- No deseche la batería o las baterías en el fuego. La batería podría explotar.
- No abra ni dañe la batería. El electrolito derramado es peligroso para la piel y los ojos. Podría ser tóxico.

Si su UPS exhibe cualquiera de las siguientes condiciones, apague el UPS, desconecte el suministro de energía de CA y póngase en contacto con su distribuidor local, representante de SolaHD o Servicios Técnicos de SolaHD.

- Se ha derramado o vertido líquido en el UPS.
- El cortacircuito se abre frecuentemente.
- El UPS no funciona de acuerdo con el manual del usuario.

1.2 Condiciones de Uso

Su UPS le proporciona energía eléctrica acondicionada al equipo conectado. La carga máxima no deberá exceder la capacidad indicada en la etiqueta o placa del UPS. Si no está seguro, póngase en contacto con su distribuidor o SolaHD.

2.0 Definición de advertencias

⚠ PELIGRO — **Peligro:** Indica una situación de riesgo inminente que, si no se evita, causará lesiones graves o letales. Esta palabra de señal se utilizará sólo en las situaciones más extremas.

⚠ ADVERTENCIA — **Advertencia:** Indica una situación potencialmente riesgosa, que si no se evita, podría causar lesiones graves o letales.

⚠ PRECAUCIÓN — **Precaución:** Indica una situación potencialmente riesgosa, que si no se evita, podría causar lesiones leves o moderadas. También se puede utilizar para indicar prácticas poco seguras.

3.0 Introducción

Felicitaciones por su elección de un Sistema de Energía Eléctrica Ininterrumpible (UPS) de la Serie SDU Sola. Éste proporciona energía eléctrica acondicionada a los equipos electrónicos sensibles.

La Serie SDU es un UPS compacto “Fuera de línea”, montable en Riel DIN. El mismo le proporciona al equipo conectado una aproximación escalonada de alimentación eléctrica sinusoidal para simular la energía generada por la fuente pública.

La unidad SDU es un potente UPS controlado por microprocesador. La gama del voltaje de entrada es de un 80% a un 110%, una protección ideal para las cargas críticas conectadas. La recarga de la batería se realiza automáticamente cuando se conecta el suministro de energía de CA, no es necesario encender (poner en ON) el UPS. Cuando se corta la energía eléctrica, puede apagarse automáticamente el UPS si ninguna de las cargas conectadas está funcionando, para conservar la energía de la batería. La unidad SDU incluye una función de autocomprobación automática que verifi ca el funcionamiento del UPS y la batería.

Si se detecta que la batería ya no funciona, la unidad se pone en alarma y un indicador LED se ilumina.

NOTA: Este equipo ha sido sometido a prueba y se ha determinado que cumple con los límites para un dispositivo digital de Clase A, según la parte 15 de las Normas de la FCC. Estos límites están diseñados para proporcionar una protección razonable contra las interferencias dañinas en una instalación industrial. Este equipo utiliza, genera y puede emitir energía de radiofrecuencia y, si no se instala y se utiliza de acuerdo con las instrucciones, es posible que pueda causar interferencia dañina con las comunicaciones por radio. Sin embargo, no hay ninguna garantía de que la interferencia no se producirá en una instalación en particular. Si este equipo produce interferencia dañina en la recepción de las señales de radio o televisión, lo cual puede determinarse apagando y encendiendo el equipo, el usuario debe tratar de corregir la interferencia mediante una o más de las siguientes medidas:

- Vuelva a orientar o ubicar la antena de recepción.
- Aumente la separación entre el UPS y el receptor.
- Conecte el UPS en un circuito diferente al que esté conectado el receptor.
- Consulte con su distribuidor o un técnico especializado en radio/televisión para obtener ayuda.

4.0 Descripción de sistema

4.1 Panel frontal

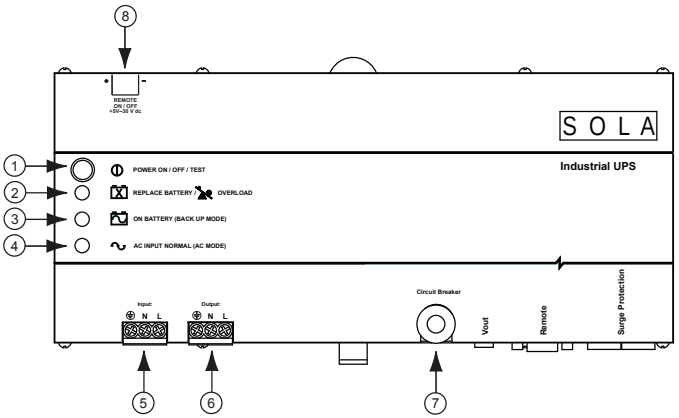

1. **Botón "POWER ON/OFF/TEST" (Encendido/Apagado/Prueba):** Presione el botón durante más de 1 segundo para encender el UPS. Presione el botón durante menos de 1 segundo para activar la autocomprobación del UPS. Presione el botón durante más de 5 segundos para apagar.
2. **Indicador (LED ROJO) "BATTERY WARNING/OVERLOAD" (Advertencia de Batería/Sobrecarga):** El LED destella cuando es necesario recargar y comprobar la batería del UPS. El LED se enciende cuando la unidad está en condición de sobrecarga. Si la unidad se apaga debido a una condición de sobrecarga, el LED y la alarma permanecerán activados durante 2 minutos.
3. **Indicador (LED AMARILLO) "ON-BATTERY" (En Batería):** El LED se enciendecuando el UPS suministra energía de la batería a las cargas.
4. **Indicador (LED VERDE) "AC INPUT NORMAL" (Entrada de CA Normal):** El LED se enciende cuando el voltaje de entrada de línea es normal.
5. Terminales de entrada con tornillos de capacidad IP20 (vea la tabla abajo)
6. Terminales de salida con tornillos de capacidad IP20 (vea la tabla abajo)

Tornillo	M3.0, capacidad de corriente = 30 Amp CA 300V
Voltaje no disruptivo del aislamiento	CA 2000 V mín.
Diámetro de agujero PCB	1.8 mm, longitud de alambre pelado = 8 mm
Gama de tamaños de alambre	10 a 24 AWG
Par torsor para los tornillos	5.5 libras - pulgada

7. **Cortacircuito de entrada:** Protección contra sobrecargas de CA y cortocircuitos.
8. **Encendido/Apagado Remoto:** El interruptor remoto proporciona las mismas funciones que el interruptor en el panel frontal, incluyendo las funciones ON/OFF/TEST con la modalidad verde habilitada o no habilitada.

4.2 Panel inferior

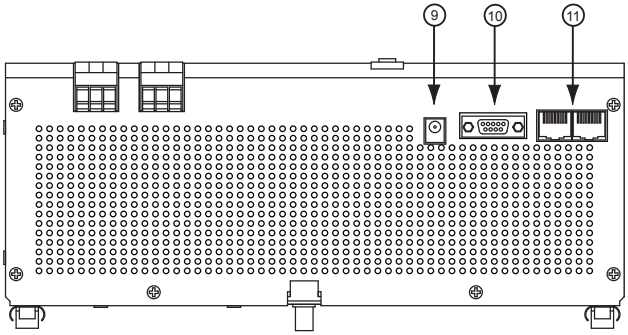

9. **V Out (salida de voltaje):** Terminal de salida que proporciona un suministro de energía de 12 voltios a la tarjeta opcional de relés.
10. **Remoto:** Puerto de comunicación RS-232 con conector DB9.
11. **Protección contra sobretensiones en la línea de teléfono:** Protección contra sobretensiones para línea de datos telefónica (UL497A).

4.3 Qué se incluye

El UPS SDU se envía con los siguientes artículos:

• Manual del usuario del SDU

• CD con el software UPSMON

NOTA: Junto con la unidad se suministran un CD UPSMON que incluye un software de monitoreo y diagnóstico. El programa es compatible con Windows NT y Windows 2000 (incluyendo el Protocolo XP).

• Cable serie UPSMON

• Cordón RJ-11

• Etiqueta de advertencia de descarga eléctrica

4.4 Accesorios

• **UPSMON-USB:** Cable de adaptación de RS232 a USB

• **RELAYCARD-SDU:** Caja de relés de contacto seco

• **SDU-PMBRK:** Soportes de montaje para sujetar el UPS en la pared, detrás de un panel o en un recinto

5.0 Instrucciones de instalación

1. **Ubicación:** Instale el UPS en una zona protegida con un fl ujo de aire adecuado y libre de polvo excesivo. No opere el UPS en el exterior.
2. **Conecte el UPS a la fuente eléctrica pública:** Acople el conector de entrada de CA a la fuente de energía eléctrica pública para energizar el UPS.
3. **Cargue la batería:** El UPS recarga su batería siempre que está conectado a la fuente de energía pública. Para obtener los mejores resultados, cargue la batería durante 4 horas en el uso inicial de la unidad.
4. **Conecte las cargas:** Acople las cargas al conector cableado de salida.
5. **Aplicar la etiqueta de advertencia de descarga eléctrica:** Aplicar la etiqueta de advertencia de descarga eléctrica al grupo de una manera que sea claramente visible para el usuario.

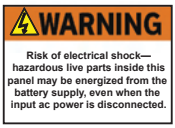

6.0 Instrucciones de operación

1. **Conector de salida:** El Conector de salida proporcionará protección contra sobretensiones e interrupciones del suministro eléctrico a las cargas críticas suyas.
2. **Encendido con el 'Modo verde' habilitado:** Luego de conectar el UPS (Sistema de Energía Eléctrica Ininterrumpible) al suministro de energía pública, presione el botón de encendido (ON) hasta que escuche el primer pitido después de transcurridos menos de 3 segundos, y luego suéltelo de inmediato. El modo Verde se encuentra habilitado, por ejemplo, si una carga inferior a 40 vatios (o ninguna carga) está conectada y el UPS funciona en el modo de respaldo, el UPS pasará al estado de modo verde luego de transcurridos 3 minutos del tiempo de respaldo; la luz verde destellará cada 3 a 5 segundos y tras un corto período de tiempo, la unidad pasará al modo de 'ahorro de energía' y se desactivará para impedir que la batería se descargue demasiado. Para reactivar la unidad, apague y encienda la unidad, o reconecte el suministro de energía pública al UPS y la energía se encenderá nuevamente.

3. **Encendido con el 'Modo verde' inhabilitado:** Luego de conectar el UPS (Sistema de Energía Eléctrica Ininterrumpible) al suministro de energía pública, presione el botón de encendido (ON) y continúe presionándolo hasta que escuche dos pitidos cortos; luego suéltelo de inmediato y el modo verde quedará inhabilitado. Ningún tipo de carga, ya sea menor o mayor que 40 vatios, afectará de manera alguna el funcionamiento normal del UPS bajo el modo batería o CA.

4. **Apagado:** Para apagar el UPS, presione y no suelte el botón Power ON/OFF/ Test (Encendido / Apagado /Prueba) hasta que se apague el LED "AC INPUT NORMAL" (Entrada de CA Normal) o el LED "ON BATTERY" (En Batería).

5. **Autocomprobación:** Utilice la autocomprobación para verifi car el funcionamiento del UPS y la condición de la batería.Con el suministro de energía pública, presione el botón Power ON/OFF/Test (Encendido/Apagado/Prueba) durante menos de 1 segundo y el UPS realizará la función de autocomprobación. Durante la autocomprobación, el UPS funciona en la modalidad de respaldo (en batería). Si el UPS pasa la autocomprobación, éste regresa al funcionamiento de Entrada de CA Normal ("AC INPUT NORMAL").

6. **Encendido/Apagado Remoto:** Para asegurar la función CON./DESC. alejada, conecte un interruptor de botón alejado en serie con fuente del voltaje de 5~30 VDC con el terminal con./desc. según lo demostrado en la figura siguiente.

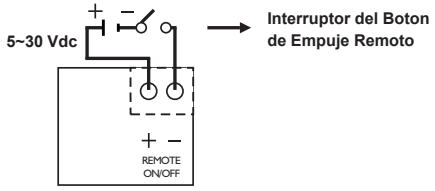

El interruptor remoto proporciona las mismas funciones que el interruptor en el panel frontal, incluyendo las funciones ON/OFF/TEST con la modalidad verde habilitada o no habilitada. Si no necesita el modo verde, se puede usar uninterruptor de palanca.

7.0 Tiempo de autonomía de la batería (Alarma)

1. **"EN BATERÍA" (pitidos lentos):** Cuando la unidad está en la modalidad EN BATERÍA, el LED AMARILLO se enciende y el UPS emite una alarma audible. La alarma cesa cuando el UPS regresa al funcionamiento con ENTRADA DE CA NORMAL (AC INPUT NORMAL).
2. **"BATERÍA BAJA" (pitidos rápidos):** En la modalidad EN BATERÍA, cuando la carga de energía de la batería está baja, el UPS emite pitidos rápidos hasta que el UPS se apaga porque la batería ya no tiene carga o el UPS regresa al funcionamiento con ENTRADA DE CA NORMAL (AC INPUT NORMAL).
3. **"SOBRECARGA" (alarma continua):** Cuando el UPS está en condición de sobrecarga (las cargas conectadas ex-ceden la capacidad nominal máxima de la unidad), el UPS emite un sonido de alarma continuo y un LED se enciende y permanece encendido para advertir sobre la condición de sobrecarga. Disminuya la carga para eliminar la condición de sobrecarga.

8.0 Configuración de disposición de las clavijas del conector DB9

Número de clavija del conector hembra DB9	Señal RS-232	Señal de colector abierto
1	---	---
2	TX	---
3	RD	Desactivación Remota*
4	DTR (+12 V)	---
5	GND	GND
6	---	Fallo de CA
7	RTS (-12 V)	---
8	---	Batería Baja
9	TX	---

DTR = Terminal de datos listo

RTS = Petición para enviar

RD = Datos transmitidos

GND = Señal de Tierra

TX = Datos recibidos

*Cuando se aplica la señal de desactivación remota durante 1 segundo, el UPS se desactivará (o apagará) al cabo de 3 minutos.

9.0 Tiempo de reserva de la batería

	SDU 500, SDU 500-5	SDU 850, SDU 850-5
VA/Watts	500/300	850/510
Batería	YUASA NP7-12	YUASA REW45-12
Nivel de la carga	Tiempo de reserva (Minutos)	Tiempo de reserva (Minutos)
10%	130	80
20%	55	37
30%	36	20
40%	23	13
50%	18	10
60%	13	7
70%	10	5
80%	9	4
90%	6	3
100%	5	2.5

10.0 Almacenamiento

10.1 Condiciones de almacenamiento

Almacene el UPS cubierto y en posición vertical en un lugar seco y frío, con su batería plenamente cargada. Antes de almacenarlo, cargue el UPS durante 4 horas como mínimo. Retire todo accesorio de la ranura de accesorios y desconecte todo cable que esté conectado al puerto interfaz para computadora, a fi n de impedir el drenaje innecesario de la batería.

10.2 Almacenamiento prolongado

Durante los almacenamientos prolongados en los entornos donde la temperatura ambiente es de -15 a +30°C (+5 a +86°F), cargue la batería del UPS cada 6 meses.Durante los almacenamientos prolongados en los entornos donde la temperatura ambiente es de +30 +45°C (+86 +113°F), cargue la batería del UPS cada 3 meses.

11.0 Solución de problemas

Problema	Causa probable	Acción a tomar
El UPS no enciende; el LED está apagado	El UPS está apagado o no se ha presionado el botón On/Off/Test (Encendido/Apagado/Prueba) la cantidad de tiempo suficiente	Presione el botón On/Off/Test (Encendido/Apagado/Prueba) durante más de 2 segundos
	Voltaje de batería inferior a 10V	Recargue el UPS durante 4 horas como mínimo. Si la unidad no enciende, verifi que el fusible de entrada
	Otra avería	Llame a Servicios Técnicos
	Carga inferior a 20 vatios en modalidad de respaldo (en batería)	Condición normal
El UPS permanece en la modalidad de respaldo (en batería)	Conexión de entrada de energía de CA suelta o floja	Apriete la conexión de energía de CA
	El cortacircuito se dispara	Reponga el cortacircuito
	Voltaje de línea demasiado alto, demasiado bajo o se produjo un apagón	Condición normal
	Otra avería	Llame a Servicios Técnicos
Tiempo de respaldo demasiado corto	La batería no está totalmente cargada	Recargue el UPS durante 4 horas como mínimo
	Otra avería	Llame a Servicios Técnicos
Pitido continuo y se enciende el LED de indicación de sobrecarga	Condición de sobrecarga	Elimine la sobrecarga
LED rojo intermitente	Fallo de la batería	Recargue el UPS durante 8 horas como mínimo, luego realice la autocomprobación del UPS

⚠ PRECAUCIÓN **No intente abrir el UPS ni reemplazar la batería. Llame a Servicios Técnicos para obtener más explicaciones.**

12.0 Especificaciones

Descripción	Modelo			
	SDU 500	SDU 850	SDU 500-5	SDU 850-5
ENTRADA				
Capacidad VA/Vatios	500/300	850/510	500/300	850/510
Voltaje (Monofásico)	120 V + 10%, -20%		230 V +/-20%	
Frecuencia	50 ó 60Hz +/-10% (autodetección)			
SALIDA				
Voltaje (en batería)	Onda sinusoidal simulada			
	120 V +/-5%		230 V +/-5%	
Frecuencia (en batería)	50 ó 60Hz; +/-0.5% autodetección			
Tiempo de transferencia	<4 milisegundos			
PROTECCIÓN				
Entrada de la unidad	Cortacircuito para proteger contra sobrecargas y cortocircuitos			
Protección contra sobrecargas	El UPS se apaga automáticamente si la sobrecarga excede el 105% del valor nominal a 20 segundos, 120% a 10 segundos, 130% a 3 segundos			
Cortocircuito	La salida del UPS se corta automáticamente			
BATERÍA				
Tipo	Baterías selladas de plomo y ácido que no requieren mantenimiento			
Tiempo de recarga típico (hasta el 90% de plena capacidad)	8 horas			
Tiempo de autonomía en minutos a plena carga	4 min.	2 min.	4 min.	2 min.
ALARMA				
En batería	Pitidos lentos a cada 4 segundos			
Batería baja	Pitidos rápidos cada segundo			
Sobrecarga	Sonido de pitido continuo			
AMBIENTE				
Operación ambiental	0-95% de humedad sin condensación; 50°C hasta 10,000 pies (3000 m)			
Ruido audible	<40 dBA (a 1 metro de la superficie)			
PESO/DIMENSIONES				
Peso neto, lb. (kg)	10.7 (4.7)	11.4 (5.0)	11.5 (5.2)	11.9 (5.4)
Altura x Anchura x Profundidad, pulg. (mm)	4.88 x 11.1 x 4.55 (124 x 281 x 116)			
SEGURIDAD/APROBACIONES				
	Clasificación UL 1778 C-UL, reconocida para aplicaciones industriales de acuerdo con UL508 sin ninguna corrección. Categoría 3 de sobrevoltaje, grado 3 de contaminación. Parte 15, Subparte B, Clase A de la FCC.		Clasificación CE; LVD: EN62040-1-1;EMC: EN50091-2, EN61000-3-2, EN61000-3-3, IEC801-2, IEC801-3, IEC801-4, IEC1000-2-2	

13.0 Registro del producto y información sobre la garantía

13.1 Registro del producto

A fin de registrar su producto para obtener actualizaciones e información sobre servicio y apoyo:

- Visite la sección Apoyo Técnico o nuestro sitio Web en: http://www.solahd.com/support/registration.htm
- Haga clic en el enlace de Registro de Productos y complete el formulario. Así, su producto quedará registrado con SolaHD. Vous pourrez ainsi enregistrer votre produit chez SolaHD.

13.2 Información sobre la garantía

Sírvase consultar “Términos y Condiciones”.

1.0 Instructions importantes sur la sécurité

Ce manuel contient des instructions importantes sur la sécurité, qui doivent être respectées lors de l'installation de l'UPS. Veuillez lire attentivement ce manuel avant de commencer à installer ou utiliser cet UPS.

Lire toutes les instructions sur la sécurité, l'installation et le fonctionnement avant d'utiliser l'UPS. Respecter tous les avertissements indiqués sur l'appareil et dans ce manuel. Suivre toutes les instructions d'utilisation et celles destinées à l'utilisateur.

Cet équipement est conçu pour un usage industriel ou commercial. Cet équipement peut être installé et utilisé par des personnes n'ayant reçu aucune formation préalable.

1.1 Mesures de sécurité—avertissements

- Afin d'éviter les risques d'incendie ou de décharge électrique, installer l'UPS dans une enceinte dont la température et l'humidité sont contrôlées, exempte de contaminants conducteurs, d'humidité, de liquides et gaz infl ammables et de substances corrosives.

- Utiliser l'UPS seulement à partir d'une source d'alimentation en courant alternatif correctement mise à la terre.
- Afin de réduire les risques de décharge électrique, ne pas enlever le couvercle, car aucune pièce réparable par l'utilisateur ne se trouve à l'intérieur. Certains composants sont sous tension, même lorsque l'alimentation c.a est coupée. Pour obtenir du service, contacter un technicien qualifié.

Bien que l'UPS ait été conçu et fabriqué pour assurer la sécurité personnelle, une utilisation incorrecte peut entraîner une décharge électrique ou un incendie. Afin d'assurer la sécurité, observer les règles suivantes :

- Mettre l'UPS hors tension et couper l'alimentation c.a avant de le nettoyer. Ne pas utiliser de nettoyants liquides ou aérosols. On recommande d'utiliser un chiffon sec pour enlever la poussière de la surface de l'UPS.
- Ne pas installer ou utiliser l'UPS dans ou à proximité d'un plan d'eau.
- Ne pas placer l'UPS sur un chariot, un support ou une table instable.
- Ne pas placer l'UPS sous les rayons directs du soleil ou à proximité d'une source de chaleur.

- Pour assurer une ventilation adéquate de l'UPS, ne pas bloquer ou recouvrir le dessus et les côtés inférieurs de l'appareil.
- Ne jamais bloquer ou insérer un quelconque objet dans les trous de ventilation ou dans les autres ouvertures de l'UPS. Faire en sorte qu'aucune poussière susceptible de restreindre le débit d'air ne s'accumule sur aucun des évents.
- Suivre tous les avertissements et les instructions apposés sur l'UPS. Ne pas tenter de réparer l'UPS, aucune pièce réparable par l'utilisateur ne se trouve à l'intérieur. Consulter du personnel qualifi é pour effectuer des réparations.
- Ne pas jeter la ou les batteries dans un feu. La batterie pourrait exploser.
- Ne pas ouvrir ou endommager la batterie. Une fuite d'électrolyte est nocive pour la peau et les yeux. Ca peut être toxique.

Si votre UPS présente une des anomalies suivantes, mettre l'UPS hors tension, couper l'alimentation c.a. et contacter votre distributeur local, un représentant SolaHD ou les services techniques de SolaHD.

- En cas de liquide versé sur l'UPS.
- Le disjoncteur déclenche fréquemment.
- L'UPS ne fonctionne pas suivant les indications du manuel de l'utilisateur.

1.2 Conditions d'utilisation

Votre UPS fournit une l'alimentation conditionnée à l'équipement raccordé. La charge maximale ne doit pas excéder celle indiquée sur l'étiquette. En cas de doute, contacter votre distributeur ou SolaHD.

2.0 Définition des avertissements

⚠ DANGER **Danger:** Indique une situation éminemment dangereuse qui, si elle n'est pas évitée, peut causer la mort ou des blessures graves. Ce signal n'est utilisé que pour les situations les plus dangereuses.

⚠ AVERTISSEMENT **Avertissement:** Indique une situation potentiellement dangereuse qui, si elle n'est pas évitée, peut causer la mort ou des blessures graves.

⚠ ATTENTION **Attention:** Indique une situation potentiellement dangereuse qui, si elle n'est pas évitée, peut causer des blessures légères ou modérées. Elle peut aussi être utilisée pour mettre en garde contre les pratiques non sécuritaires.

3.0 Introduction

Félicitations pour avoir choisi l'UPS de Sola, série SDU. Il assure une l'alimentation conditionnée aux l'équipements électroniques sensibles.

L'UPS de la série SDU est compact, « autonome », montable sur rail DIN. Il fournit à l'équipement raccordé une approximation par étape de puissance d'ondes sinusoïdales pour simuler la puissance générée par le fournisseur d'électricité.

Le SDU est un UPS puissant commandé par microprocesseur. La plage de tension d'entrée se situe entre 80 % et 110 %, une protection idéale pour les charges critiques raccordées. La recharge de la batterie est automatique lorsque l'alimentation c.a. est appliquée; aucun besoin de mettre l'UPS sous tension. En cas de panne de courant, l'UPS peut être mis HORS TENSION automatiquement si aucune des charges raccordées ne fonctionne, afi n d'économiser l'énergie de la batterie. Le SDU inclut une fonction d'auto-vérifi cation du fonctionnement de l'UPS et de la batterie. Si la batterie n'est plus utile, l'appareil déclenche une alarme et la DÉL s'allume.

REMARQUE : Cet équipement a été mis à l'essai et déclaré conforme aux limites prévues pour un appareil numérique de classe A, conformément à la partie 15 du règlement de la FCC. Ces limites ont pour but d'assurer une protection raisonnable contre une interférence nuisible dans une installation résidentielle. Cet équipement utilise, génère et peut émettre de l'énergie en radiofréquence et, s'il n'est pas installé et utilisé conformé-ment aux directives, il peut causer un brouillage nuisible dans les communications radio. Cependant, il est impossible de garantir qu'aucune interférence ne se produira dans une installation particulière. Si cet équipement cause un brouillage de la réception de radio ou de télévision (que vous pouvez déterminer en éteignant puis en rallumant l'appareil), l'utilisateur est prié d'essayer d'éviter le brouillage au moyen de l'une ou de plusieurs des mesures suivantes :

- Réorienter ou déplacer l'antenne de réception.
- Éloigner davantage l'UPS du récepteur.
- Raccorder l'UPS à un circuit différent de celui du récepteur.
- Consulter le concessionnaire ou un technicien en radio / télévision qualifié pour obtenir de l'aide.

4.0 Description du système

4.1 Panneau avant

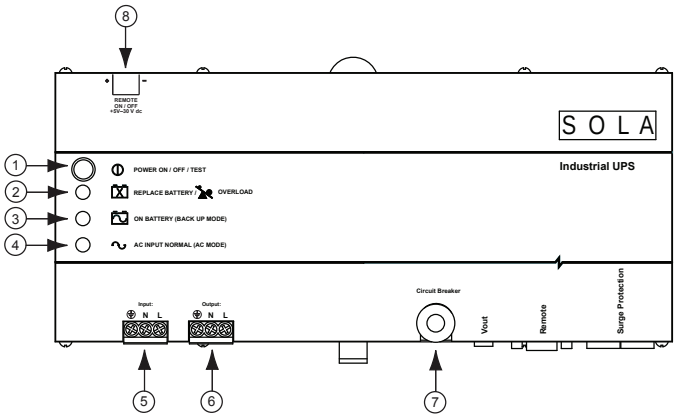

1. **Bouton « POWER ON/OFF/TEST » :** Appuyer sur le bouton pendant plus d'une (1) seconde pour mettre l'UPS sous tension. Appuyer sur le bouton pendant moins d'une seconde pour activer l'auto-vérification de l'UPS.Appuyerpendant plus de 5 secondes pour mettre hors tension.
2. **Voyant « BATTERYWARNING / OVERLOAD » (DÉL ROUGE) :** La DÉLclignote lorsque la batterie de l'UPS doit être rechargée et vérifiée. La DÉL s'allume lorsque l'appareil est en surcharge. Si l'appareil s'éteint suite à une surcharge, la DÉL et l'alarme sont activées pendant 2 minutes.
3. **Voyant « ON BATTERY » (DÉL JAUNE) :** La DÉL s'illumine lorsque l'UPS alimente les charges en courant de la batterie.
4. **Voyant «AC INPUT NORMAL » (DÉL VERTE) :** La DÉL s'allume lorsque la tension d'entrée de ligne est normale.
5. **Bornes à vis d'entrée classifiées IP-20** (voir le tableau ci-dessous)
6. **Bornes à vis de sortie classifiées IP-20** (voir le tableau ci-dessous)

Vis	M3.0, courant nominal = 30A c.a. 300 V
L'isolation résiste à la tension	c.a. 2000 V min
Diamètre du trou PCB	1,8 mm, longueur de dénudage de câble = 8 mm
Calibre du fil	10 ~ 24AWG
Couple de serrage des vis	5,5 lb - po

7. **Disjoncteur du circuit d'entrée :** Protection contre une surcharge de c.a. et des courts-circuits.
8. **Commande à distance marche/arrêt :** La commande à distance marche/arrêt offre les mêmes fonctions que L'interrupteur marche/arrêt sur le panneau.

4.2 Panneau inférieur

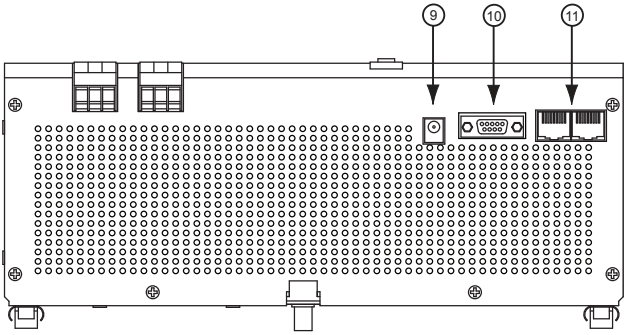

9. **Sortie V :** Borne de sortie fournissant une source d'alimentation de 12 V à la carte de relais en option.
10. **Distant :** Port de communication RS 232, connecteur DB9.
11. **Protection contre Téléphone/surtension :** Protection contre la surtension de ligne de données pour téléphone (UL497A).

4.3 Ce qui est inclus

L'UPS SDU est expédié avec les articles suivants :

• Manuel utilisateur du SDU

• CD delogiciel UPSMON

REMARQUE : Le logiciel de surveillance / diagnostic est inclus sur le CD UPSMON. Le programme est compatible avec Windows NT et Windows 2000, incluant le protocole XP.

• Câble série UPSMON DB-9

• Cordon RJ-11

• Etiquette indiquant Choc électrique de mise en garde

4.4 Accessoires

• **UPSMON-USB :** RS232 à câble adaptateur USB

• **RELAYCARD-SDU :** Boîte à relais avec contact sec

• **SDU-PMBRK :** Supports de montage pour fixer solidement l'UPS à un mur, à l'arrière d'un panneau ou dans une enceinte

5.0 Instructions d'installation

1. **Placement :** Installer l'UPS dans une zone protégée, avec une circulation d'air adéquate et exempte de poussière excessive. Ne pas utiliser l'UPS à l'extérieur.
2. **Branchement à la source d'alimentation électrique :** Brancher le connecteur d'entrée de c.a. au secteur pour mettre l'UPS sous tension.
3. **Recharge de la batterie :** L'UPS recharge sa batterie dès qu'il est branché au secteur. Pour obtenir de meilleurs résultats, recharger la batterie pendant 4 heures avant son utilisation initiale.
4. **Raccordement des charges :** Raccorder les charges au connecteur câblé de sortie.
5. **Appliquer l'étiquette indiquant la mise en garde contre le choc électrique :** Appliquer l'étiquette indiquant la mise en garde contre le choc électrique sur le panneau de façon à être clairement visible à l'utilisateur.

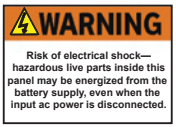

6.0 Instructions d'utilisation

1. **Connecteur de sortie :** Le connecteur de sortie protège vos charges critiques contre les surtensions et les pannes de courant.
2. **Mise en marche avec le « Mode vert » activé :** Après avoir connecté l'UPS à l'alimentation secteur, appuyer sur le bouton de mise en marche « ON » jusqu'à ce que le premier bip se fasse entendre après moins de trois secondes, puis relâcher immédiatement le bouton. Le mode vert est activé, c.-à-d. que si une charge inférieure à 40 watts (ou aucune charge) est connectée et que l'UPS fonctionne en mode de secours; l'UPS passe en mode vert après avoir été trois minutes en mode de secours; le voyant vert clignote à toutes les trois ou cinq secondes, puis, après une brève période, passe en mode « économie d'énergie » en s'éteignant pour éviter une décharge excessive de la batterie. Pour réactiver l'appareil, le mettre hors tension puis sous tension ou remettre l'alimentation secteur vers l'appareil après que l'alimentation secteur soit revenue.

3. **Mise en marche avec le « Mode vert » désactivé :** Après avoir connecté l'UPS à l'alimentation secteur, appuyer sur le bouton de mise en marche « ON » jusqu'à ce que deux bi-bip courts se fassent entendre, puis relâcher immédiatement le bouton; le mode vert est désactivé. Toute charge, qu'elle soit inférieure à 40 watts ou plus, ne modifiera pas le fonctionnement normal de l'UPS en mode c.a. ou de batterie.

4. **Mise hors tension :** Pour mettre l'UPS hors tension, maintenir enfoncé le bouton POWER ON /OFF / TEST, jusqu'à ce que la DÉL « AC POWER NORMAL » ou « ON BATTERY » s'éteigne.

5. **Auto-vérification :** Utiliser l'auto-vérification pour contrôler le fonctionnement de l'UPS et l'état de la batterie. Si l'alimentation secteur est normale, appuyer sur le bouton POWER ON / OFF / TEST pendant moins d'une (1) seconde et l'UPS exécute une autovérification. Pendant l'auto-vérification, l'UPS fonctionne en mode de secours. Si l'UPS réussit l'auto-vérification, elle reprend son mode de fonctionnement « AC INPUT NORMAL ».

6. **Commande à distance marche/arrêt :** Pour assurer la fonction commande a distance marche/arrêt, connecter un interrupteur a bouton poussoir en série avec une source de tension continue 5~30Vdc au bornes « On/Off » comme indiqué sur la figure suivante :

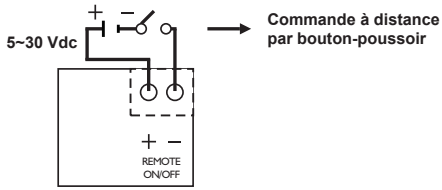

La commande à distance marche/arrêt offre les mêmes fonctions que L'interrupteur marche/arrêt sur le panneau. Si le mode vert n'est pas nécessaire, un interrupteur à bascule marche/arrêt peut être utilisé au lieu de l'interrupteur à bouton poussoir.

7.0 Alarmes de la batterie de secours

1. **« ON BATTERY » (bip lent) :** Lorsqu'en mode ON BATTERY, la DÉL JAUNE s'allume et l'UPS émet une alarme audible. L'alarme arrête lorsque l'UPS retourne au mode de fonc-tionnementAC INPUT NORMAL.
2. **« LOW BATTERY » (bip rapide) :** En mode ONBATTERY,lorsque l'énergie de la batterie faiblit,l'UPS émet un bip rapide jusqu'à ce que l'UPS arrête de fonctionner en raison de l'épuisement de la batterie ou qu'il retourne au mode de fonctionnementAC INPUT NORMAL.
3. **« OVERLOAD » (alarme continue) :** Lorsque l'UPS est surchargé (les charges raccordées excèdent la capacité nominale maximale), l'UPS émet un son d'alarme continu et la DÉL indique une condition de surcharge. Réduire la charge pour éliminer la surcharge.

8.0 Configuration des broches de sortie du connecteur DB9

Connecteur UPS DB9 femelle, broche no	Signal RS-232	Signal de collecteur ouvert
1	---	---
2	TT	---
3	RD	Coupure à distance*
4	DTR (+12 V)	---
5	TERRE	TERRE
6	---	Défaillance c.a.
7	RTS (-12 V)	---
8	---	Batterie faible
9	TT	---

DTR = Terminal prêt
RTS = Demande d'émission
RD = Données transmises
TERRE = Retour commun du signal
TT = Données reçues
*Cuando se aplica la señal de desactivación remota durante 1 segundo, el UPS se desactivará (o apagará) al cabo de 3 minutos.

9.0 Temps de secours de batterie

	SDU 500, SDU 500-5	SDU 850, SDU 850-5
VA/Watts	500/300	850/510
Batterie	YUASA NP7-12	YUASA REW45-12
Niveau de charge	Temps de secours (Minutes)	Temps de secours (Minutes)
10%	130	80
20%	55	37
30%	36	20
40%	23	13
50%	18	10
60%	13	7
70%	10	5
80%	9	4
90%	6	3
100%	5	2.5

10.0 Entreposage

10.1 Conditions d'entreposage

Entreposer l'UPS en le recouvrant, en le plaçant en position verticale dans un endroit frais et sec, avec la batterie à pleine charge. Avant d'entreposer, charger l'UPS pendant au moins 4 heures. Enlever tous les accessoires de la fente aux accessoires et débrancher tous les câbles connectés au port de l'interface ordinateur, afi n d'éviter une décharge inutile de la batterie.

10.2 Entreposage de longue durée

Lors d'un entreposage prolongé dans un environnement où la température ambiante est de -15 à +30 °C (+5 à +86 °F), recharger la batterie tous les 6 mois.

Lors d'un entreposage prolongé dans un environnement où la température ambiante est de +30 à +45 °C (+86 à +113 °F), recharger la batterie tous les 3 mois.

11.0 Dépannage

Probléme	Cause Probable	Action Corrective
UPS hors tension, la DÉL ne s'allume pas	L'UPS est hors tension ou le bouton ON / OFF / TEST n'a pas été enfoncé suffi samment longtemps	Appuyer sur POWER / ON / OFF / TEST pendant plus de 2 secondes
	La tension de la batterie est inférieure à 10 V	Recharger l'UPS pendant au moins 4 heures. Si l'appareil ne se met toujours pas en marche, vérifi er le fusible d'entrée.
	Autre défaillance	Appeler les services techniques
	La charge est inférieure à 20 W en mode de secours	Condition normale
L'UPS est toujours en mode de secours	Desserrer la connexion de l'alimentation d'entrée de c.a.	Resserrer la connexion d'alimentation c.a.
	Déclenchement du disjoncteur	Réenclencher le disjoncteur
	La tension de ligne est trop élevée, trop faible ou en panne	Condition normale
	Autre défaillance	Appeler les services techniques
Temps de fonctionnement en secours trop court	La batterie n'est pas complètement chargée	Recharger l'UPS pendant au moins 4 heures
	Autre défaillance	Appeler le service technique
Bip continu et indication de DÉL de surcharge	Condition de surcharge	Éliminer la surcharge
La DÉL rouge clignote	Défaillance de la batterie	Recharger l'UPS pendant au moins 8 heures, effectuer l'auto-vérifi cation de l'UPS.

⚠ ATTENTION **Ne pas essayer d'ouvrir l'UPS ou de remplacer la batterie. Appeler les servic-es techniques pour obtenir des explications supplémentaires.**

12.0 Spécifications

Description	Modèle			
	SDU 500	SDU 850	SDU 500-5	SDU 850-5
ENTRÉE				
Capacité V A / Watts	500/300	850/510	500/300	850/510
Tension (Monophasé)	120 V + 10%, -20%		230 V +/-20%	
Fréquence	50 ou 60 Hz +/-10 % (auto-détection)			
SORTIE				
Tension (sur batterie)	Onde sinusoïdale simulée			
	120 V +/-5%		230 V +/-5%	
Fréquence (sur batterie)	50 ou 60 Hz, +/-0,5% auto-détection			
Temps de transfert	< 4 millisecondes			
PROTECTION				
Entrée de l'appareil	Disjoncteur protégeant contre les surcharges et les courts-circuits			
Protection contre les surcharges	Coupure automatique UPS si la surcharge dépasse 105 % de la charge nominale à 20 secondes, 120 % à 10 secondes, 130 % à 3 secondes			
Court-circuit	La sortie UPS est coupée immédiatement			
BATTERIE				
Type	Accumulateurs au plomb, sans entretien et hermétiques			
Temps typique de recharge (à 90 % de la pleine charge)	8 heures			
Durée en utilisation secours – minutes à pleine charge	4 min.	2 min.	4 min.	2 min.
ALARME				
Sur la batterie	Bip lent toutes les 4 secondes			
Batterie faible	Bip rapide chaque seconde			
Surcharge	Bip continu			
ENVIRONNEMENT				
Fonctionnement à température ambiante	0 à 95 % d'humidité, sans condensation50 °C jusqu'à 3000 m (10 000 pi)			
Bruit audible	< 40 dBA (1 mètre de la surface)			
POIDS / DIMENSIONS				
Poids net en kg (livres)	4,7 (10,7)	5,0 (11,4)	5,2 (11,5)	5,4 (11,9)
H x L x P, mm (po)	124 x 281 x 116 (4,88 x 11,1 x 4,55)			
SÉCURITÉ / AUTORISATIONS				
	Reconnu UL 1778 C-UL pour les applications industrielles, conformément à UL508, sans déclassement. Surtension de catégorie 3, degré de pollution : 3. FCC, partie 15, sous-partie B, classe A.		Marqué CE; LVD: EN62040-1-1;EMC: EN50091-2, EN61000-3-2, EN61000-3-3, IEC801-2, IEC801-3, IEC801-4, IEC1000-2-2	

13.0 Enregistrement du produit et information sur la garantie

13.1 Enregistrement du produit

Pour enregistrer votre produit afin de recevoir des mises à jour et de l'information sur le service et le soutien :

- Visiter la section du Soutien technique sur notre site Web au : http://www.solahd.com/support/registration.htm
- Cliquer sur le lien d'enregistrement du produit et remplir le formulaire. Vous pourrez ainsi enregistrer votre produit chez SolaHD.

13.2 Informations sur la garantie

Veuillez voir le « Termes et conditions générales de Sale » .

SOLAHD

Technical Support
U.S.: (800) 377-4384
International: (847) 268-6000
E-mail: www.solahd.com

Servicio Técnico
EE.UU. (800) 377-4384
Internacional: (847) 268-6000
Correo electrónico: www.solahd.com

Assistance technique
États-Unis: (800) 377-4384
International: (847) 268-6000
Courriel: www.solahd.com

EMERSON
Industrial Automation

Part Number: A272-080 Rev 8
May 30, 2008

SOLA HD

Dry Contact Relay Kit

RELAYCARD-SDU

Instruction Manual

While every precaution has been taken to ensure accuracy and completeness in this manual, SolaHD assumes no responsibility, and disclaims all liability for damages resulting from use of this information or for any errors or omissions.

©2009 SolaHD. All rights reserved throughout the world. Specifications are subject to change without notice.

®SolaHD name and logo are registered trademarks of EGS Electrical Group, LLC. All names referred to are trademarks or registered trademarks of their respective owners.

Table of Contents

What's Included 4

Installation 4

Product Description 5–6

Notes 7

What's Included

- One dry contact relay box
- One interface cable (DB-9 connector)
- One 12 V dc power interconnection cable
- Four M3 mounting screws

Installation

⚠ DANGER **Only qualified personnel should install or service this system. Electrical safety precautions must be followed when installing or servicing this equipment. To prevent risk of electrical shock, turn off and lock out all power sources to the unit before making electrical connections.**

1. Using the four M3 screws provided, mount the dry relay box on the right side of the SDU UPS. If mounting on a separate chassis, the hole diameter for the relay box is 0.378 in. (3.5 mm).

2. Plug the 12 V dc power interconnection cable into the 12 V dc input of the relay box. Plug the other end of the power interconnection cable into the aux dc output (or Vout) of the SDU UPS.

3. Plug the DB-9 connector cable into the RS232 communication port of the SDU UPS. Plug the other end of the connector into the remote port of the dry contact relay.

Product Description

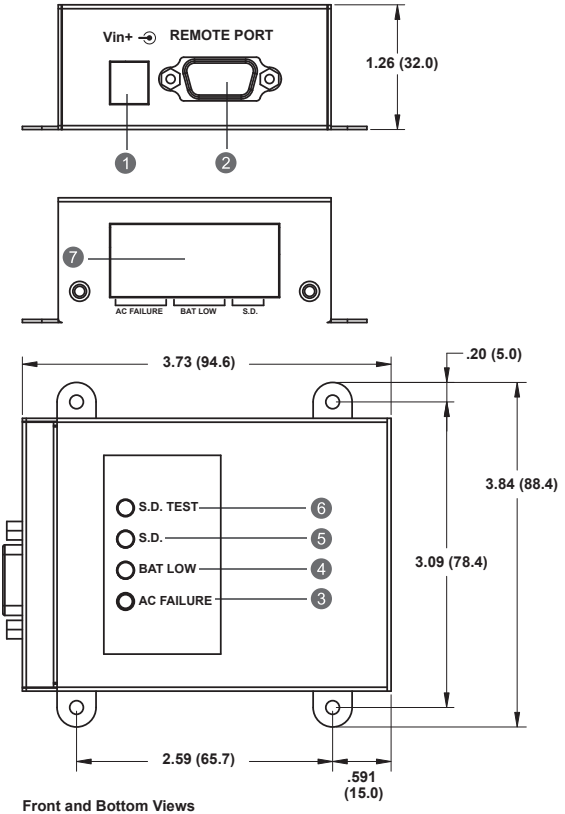

Front and Bottom Views
All dimensions are in inches (mm)

1. **Vin:** Input connector used to provide the dry contact relay with 12 V dc input power.
2. **Remote Port:** This communication port is used for linking to the SDU UPS.

   NOTE: The provided connection cable is used only for this dry contact relay.
3. **Ac Failure Indicator:** This yellow LED is illuminated when ac voltage is abnormal.
4. **Battery Low Indicator:** This green LED is illuminated when battery capacity is low.
5. **Shut Down Indicator (S.D.):** When the dry contact relay receives the shut down signal for 1 second, the red LED is illuminated and the SDU UPS goes into shut down mode.

Product Description continued from page 5

6. Shut Down Test Button (S.D. Test): Provides the dry contact relay a shut down signal to test the shut down function when the UPS is operating in the battery mode. Push this button for 1 second and the red LED is illuminated. The SDU UPS goes into shut down mode after 3 minutes.

7. 8 Pole Terminal Blocks

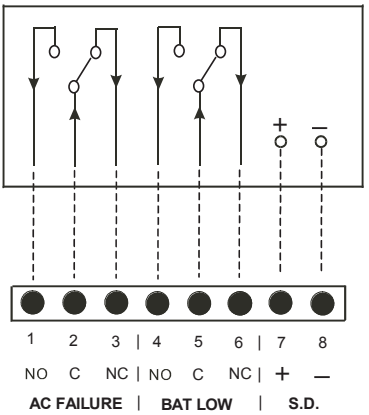

Table 1: Terminal Blocks—Layout and Operation

+UPS State		External Input	DCB LED Display			Terminal Blocks			
O = Occur X = Does not occur		O = Enable X = Disable	O = LED On X = LED Off			O = Close X = Open			
Ac Failure	BAT Low	S.D.	Yellow	Green	Red	Pin 1–2	Pin 2–3	Pin 4–5	Pin 5–6
X	X	X	X	X	X	X	O	X	O
O	X	X	O	X	X	O	X	X	O
O	O	X	X	O	X	O	X	O	X
O	X	O	X	X	O	X	O	X	O

Notes

1. Suitable electric wire = AWG 22–12 (IEC 2.5 mm).

2. Contact maximum current = 1.0 A @ 250 V ac.

3. Shut down input signal (range = +5 V to +12 V) can be provided by enabling terminals 7 and 8 for remote shut down control, assured by an external remote device.

SOLAHD

Technical Support
U.S.: (800) 377-4384
International: (847) 268-6000
E-mail: www.tech@solahd.com
Web site: www.solahd.com

EMERSON™
Industrial Automation

Part Number: A272-081 Rev 7
May 20, 2009

Series A1F Compact OEM Pressure Switch

Specifications - Installation and Operating Instructions

A1F

A1F with A-447

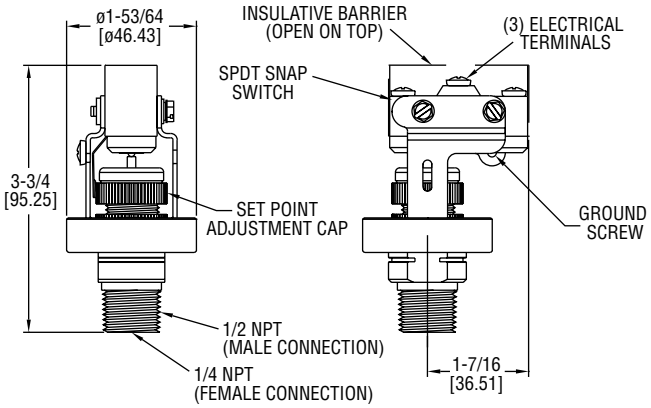

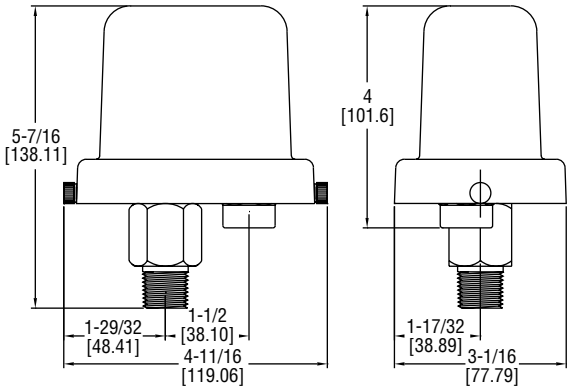

The **SERIES A1F** Compact OEM Pressure Switch is ideal for panel mounting wherever a high-quality, economical open-case or weatherproof control is required.

INSTALLATION

1. Location: Select a location where the temperature limits of -40 to 180°F (-40 to 82°C) will not be exceeded. Locate the switch as close as possible to the pressure source. Long lengths of piping will not affect accuracy of the actuation point but will slightly add to response time.

2. Mounting and Processing Connection: Avoid mounting surfaces with excess vibration which could cause false actuation when pressure is near setpoint. The switch should be mounted within 20° of vertical for proper operation. Mount the switch by connecting it to the process piping using either 1/4″ NPT female or 1/2″ male connection. Pipe joint compound or TFE thread tape should be used to prevent leakage.

3. Electrical Connections: The SPDT snap switch includes normally open, normally closed and common connections. The common and normally open contacts will close and the common and normally closed contacts will open when pressure increases to the setpoint. The actions will reverse when pressure decreases below the setpoint minus the deadband. A green grounding screw is provided on the switch bracket. All wiring should be in accordance with local codes.

SPECIFICATIONS

Service: Compatible liquids and gases.
Wetted Materials: Pressure Chamber: 316 SS; Diaphragm: Fluorocarbon.
Temperature Limit: -40 to 175°F (-40 to 80°C).
Pressure Limits: 500 psig (34 bar).
Enclosure Rating: No rating for open construction. Installed properly within an optional A-447 enclosure meets NEMA 4X standards.
Switch Type: SPDT snap switch.
Electrical Rating: 15A @ 120/240/480 VAC, 1/8 HP @ 125 VAC, 1/4 HP @ 250 VAC.
Electrical Connection: Screw terminals.
Process Connection: 1/4″ female NPT and 1/2″ male NPT.
Mounting Orientation: Within 20° of vertical.
Set Point Adjustment: Knurled screw cap with indicating scale.
Deadband: Fixed, See deadband chart.
Weight: 10.5 oz (297 g).

MERCOID A DIVISION OF DWYER INSTRUMENTS, INC.
P.O. BOX 373 • MICHIGAN CITY, INDIANA 46360, U.S.A.
Phone: 219/879-8000 www.dwyer-inst.com
Fax: 219/872-9057 e-mail: info@dwyermail.com

SETPOINT ADJUSTMENT

1. Determine the setpoint pressure. The approximate actuation point can be set by turning the adjustment cap up or down, aligning the top of the O-ring, located above the cap, with the appropriate scale graduation.
2. Connect tubing or piping from the pressure port on bottom of switch to one leg of a tee. Connect the second leg to a pressure test gage of known accuracy and in an appropriate range. The third leg should be connected to a controllable source of pressure.
3. Connect a volt/ohm meter or other circuit tester to the snap action terminals to indicate when switching occurs.
4. Slowly apply pressure to the system and note the pressure at which switching occurs.
5. Operate the switch through several cycles to confirm proper actuation point.
6. Remove test apparatus and attach switch to pressure source and control circuit wiring. Place switch in service.

Example of how to order:

A1F - O - SS - 1 - 4
1 2 3 4 5

1. Diaphragm Designation:
   F - Fluorocarbon
2. Enclosure Designation:
   O - Open Construction No Enclosure
3. Housing Material Designation:
   SS - 316SS
4. Switch Designation:
   1 - SPDT Snap Action Switch
5. Operating Pressure Range Designation:
   1 - 2 to 15 psig
   2 - 4 to 75 psig
   3 - 8 to 225 psig
   4 - 16 to 450 psig

DEADBAND CHART-PSIG (BAR)		
Range	Deadband at Minimum Range	Deadband at Maximum Range
2 to 15 (0.14 to 1.03)	2 (0.14)	3 (0.21)
4 to 75 (0.28 to 5.17)	4 (0.27)	15 (1.0)
8 to 225 (0.55 to 15.5)	8 (0.55)	25 (1.7)
16 to 450 (1.1 to 31.0)	15 (1.0)	50 (3.5)

MAINTENANCE

Upon final installation of the Series A1F Compact OEM Pressure Switch, no routine maintenance is required. A periodic check of the system calibration is recommended. The Series A1F is not field serviceable and should be returned if repair is needed (field repair should not be attempted and may void warranty). Be sure to include a brief description of the problem plus any relevant application notes. Contact customer service to receive a return goods authorization number before shipping.

©Copyright 2015 Dwyer Instruments, Inc.
Printed in U.S.A. 12/15 FR# 440838-10 Rev. 3

MERCOID A DIVISION OF DWYER INSTRUMENTS, INC.
P.O. BOX 373 • MICHIGAN CITY, INDIANA 46360, U.S.A.
Phone: 219/879-8000 **www.dwyer-inst.com**
Fax: 219/872-9057 **e-mail: info@dwyermail.com**

KAFB-7 Injection Well Equipment

© Siemens AG 2011

Tags PIT-9013

SITRANS P DS III
Technical description

Overview

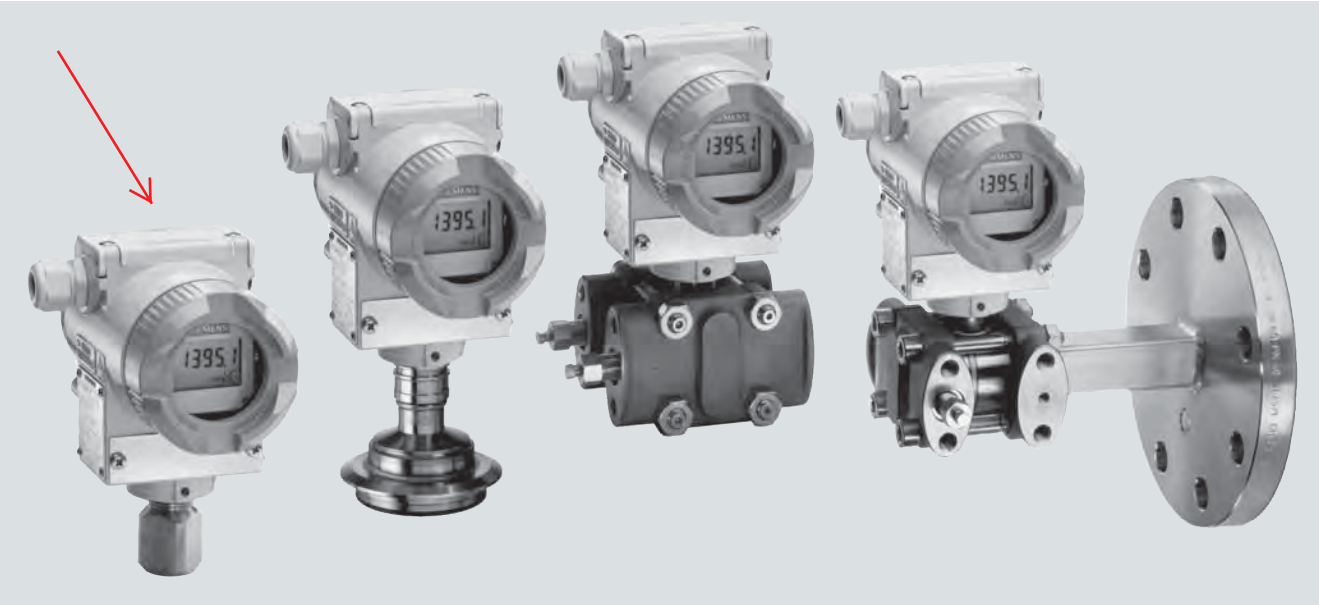

SITRANS P DS III pressure transmitters are digital pressure transmitters featuring extensive user-friendliness and high accuracy. The parameterization is performed using control keys or via HART communication, PROFIBUS-PA or FOUNDATION Fieldbus interface.

Extensive functionality enables the pressure transmitter to be precisely adapted to the plant's requirements. Operation is very simple in spite of the numerous setting options.

Transmitters with type of protection "Intrinsic safety" and "Explosion-proof" may be installed within potentially explosive atmospheres (zone 1) or in zone 0. The transmitters are provided with an EC type examination certificate and comply with the corresponding harmonized European standards (ATEX).

The transmitters can be equipped with various designs of remote seals for special applications such as the measurement of highly viscous substances.

Various versions of the DS III pressure transmitters are available for measuring:

- Gauge pressure
- Absolute pressure
- Differential pressure
- Level
- Volume level
- Mass level
- volume flow
- Mass flow

Benefits

- High quality and service life
- High reliability even under extreme chemical and mechanical loads
- For aggressive and non-aggressive gases, vapors and liquids
- Extensive diagnosis and simulation functions
- Separate replacement of measuring cell and electronics without recalibration
- Minimum conformity error
- Small long-term drift
- Wetted parts made of high-grade materials (e.g. stainless steel, Hastelloy, gold, Monel, tantalum)
- Infinitely adjustable span from 0.15 psi to 10153 psi (0.01 bar to 700 bar) for DS III with HART communication
- Nominal measuring range from 14.5 psi to 10153 psi (1 bar to 700 bar) for DS III PA (PROFIBUS PA) and FF (FOUNDATION Fieldbus)
- High measuring accuracy
- Parameterization over control keys and HART communication, PROFIBUS PA communication or FOUNDATION Fieldbus interface.

Application

The pressure transmitters of the DS III series, can be used in industrial areas with extreme chemical and mechanical loads. Electromagnetic compatibility in the range 10 kHz to 1 GHz makes the DS III pressure transmitters suitable for locations with high electromagnetic emissions.

Pressure transmitters with type of protection "Intrinsic safety" and "Explosion-proof" may be installed within potentially explosive atmospheres (zone 1) or in zone 0. The pressure transmitters are provided with an EC type examination certificate and comply with the corresponding harmonized European standards (ATEX).

Pressure transmitters with the type of protection "Intrinsic safety" for use in zone 0 may be operated with power supply units of category "ia" and "ib".

The transmitters can be equipped with various designs of remote seals for special applications such as the measurement of highly viscous substances.

The pressure transmitter can be operated locally over 3 control buttons or programmed externally over HART communication or over PROFIBUS PA or FOUNDATION Fieldbus interface.

© Siemens AG 2011

Pressure transmitter for gauge pressure

Measured variable: Gauge pressure of aggressive and non-aggressive gases, vapors and liquids.

Span (infinitely adjustable)
for DS III HART: 0.15 psi to 10153 psi (0.01 bar to 700 bar)

Nominal measuring range
for DS III PA and FF: 14.5 psi to 10153 psi (1 bar to 700 bar)

Pressure transmitters for absolute pressure

Measured variable: Absolute pressure of aggressive and non-aggressive gases, vapors and liquids.

Span (infinitely adjustable)
for DS III HART: 0.12 ... 1450 psi a (8.3 mbar a ... 100 bar a)

Nominal measuring range
for DS III PA and FF: 3.63...1450 psi a (250 mbar a...100 bar a)

There are two series:

- Gauge pressure series
- Differential pressure series

Pressure transmitters for differential pressure and flow

Measured variables:

- Differential pressure
- Small positive or negative pressure
- Flow q ~ √Δp (together with a primary differential pressure device (see Chap.ter "Flow Meters"))

Span (infinitely adjustable)
for DS III HART: 0.0145 ... 435 psi (1 mbar ... 30 bar)

Nominal measuring range
for DS III PA and FF: 0.29 ... 435 psi (20 mbar ... 30 bar)

Pressure transmitters for level

Measured variable: Level of aggressive and non-aggressive liquids in open and closed vessels.

Span (infinitely adjustable)
for DS III HART: 0.363 ... 72.5 psi (25 mbar ... 5 bar)

Nominal measuring range
for DS III PA and FF: 3.63 ... 72.5 psi (250 mbar ... 5 bar)

Nominal diameter of the mounting flange

- DN 80 or DN 100
- 3 inch or 4 inch

In the case of level measurements in open containers, the low-pressure connection of the measuring cell remains open (measurement "compared to atmospheric").

In the case of measurements in closed containers, the lower-pressure connection has to be connected to the container in order to compensate the static pressure.

The wetted parts are made from a variety of materials, depending on the degree of corrosion resistance required.

Design

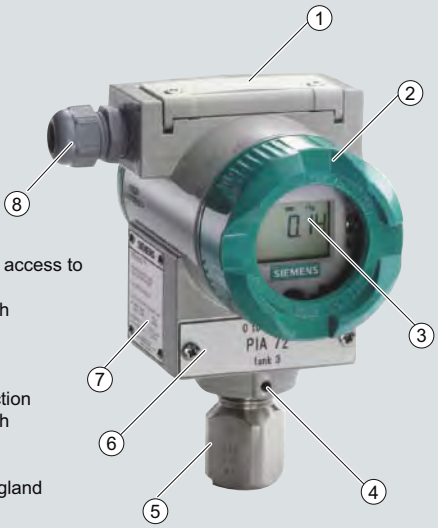

1 Plastic cover as access to the input keys
2 Screw cover with viewing pane
3 Digital display
4 Locking screw
5 Process connection
6 Screw cover with viewing pane
7 Rating plate
8 Inlet with cable gland

Front view

The transmitter consists of various components depending on the order. The possible versions are listed in the ordering information. The components described below are the same for all transmitters.

The rating plate (7, Figure "Front view") with the Order No. is located on the side of the housing. The specified number together with the ordering information provide details on the optional design details and on the possible measuring range (physical properties of built-in sensor element).

The approval label is located on the opposite side.

The housing is made of die-cast aluminium or stainless steel precision casting. A round cover (6) is screwed on at the front and rear of the housing. The front cover can be fitted with a viewing pane so that the measured values can be read directly on the digital display. The inlet (8) for the electrical connection is located either on the left or right side. The unused opening on the opposite side is sealed by a blanking plug. The protective earth connection is located on the rear of the housing.

The electrical connections for the power supply and screen are accessible by unscrewing the rear cover. The bottom part of the housing contains the measuring cell with process connection (5). The measuring cell is prevented from rotating by a locking screw (4). As the result of this modular design, the measuring cell and the electronics can be replaced separately from each other. The set parameter data are retained.

At the top of the housing is a plastic cover (1), which hides the input keys.

Example for an attached measuring point label

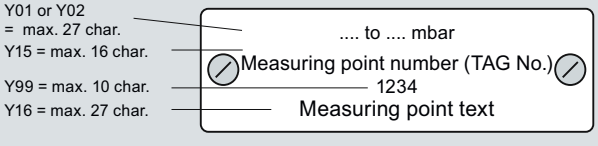

© Siemens AG 2011

Function

Operation of electronics with HART communication

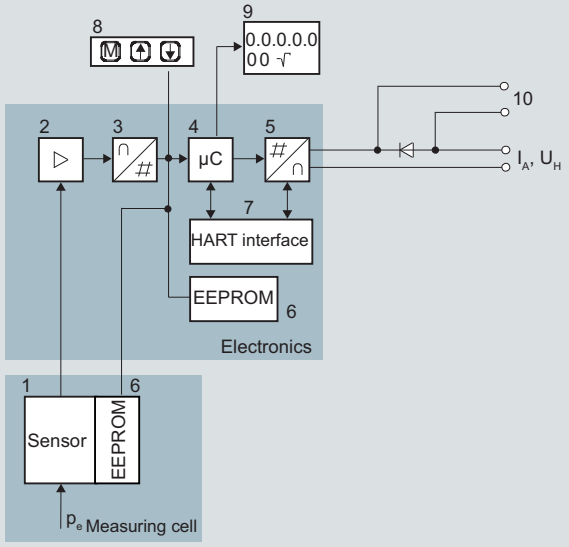

1 Measuring cell sensor
2 Instrument amplifier
3 Analog-to-digital converter
4 Microcontroller
5 Digital-to-analog converter
6 One non-volatile memory each in the measuring cell and electronics
7 HART interface
8 Three input keys (local operation)
9 Digital display
10 Diode circuit and connection for external ammeter
I_A Output current
U_H Power supply
P_e Input variable

Function diagram of electronics

The bridge output voltage created by the sensor (1, Figure "Function diagram of the electronics") is amplified by the measuring amplifier (2) and digitized in the analog-to-digital converter (3). The digital information is evaluated in a microcontroller, its linearity and temperature response corrected, and converted in a digital-to-analog converter (5) into an output current of 4 to 20 mA.

The diode circuit (10) protects against incorrect polarity.

The data specific to the measuring cell, the electronics data, and the parameter data are stored in the two non-volatile memories (6). The one memory is coupled to the measuring cell, the other to the electronics. As the result of this modular design, the electronics and the measuring cell can be replaced separately from each other.

Using the 3 input keys (8) you can parameterize the pressure transmitter directly at the measuring point. The input buttons can also be used to control the view of the results, the error messages and the operating modes on the digital display (9).

The HART modem (7) permits parameterization using a protocol according to the HART specification.

The pressure transmitters with spans ≤ 63 bar measure the input pressure compared to atmosphere, transmitters with spans ≥ 160 bar compared to vacuum.

Operation of electronics with PROFIBUS PA communication

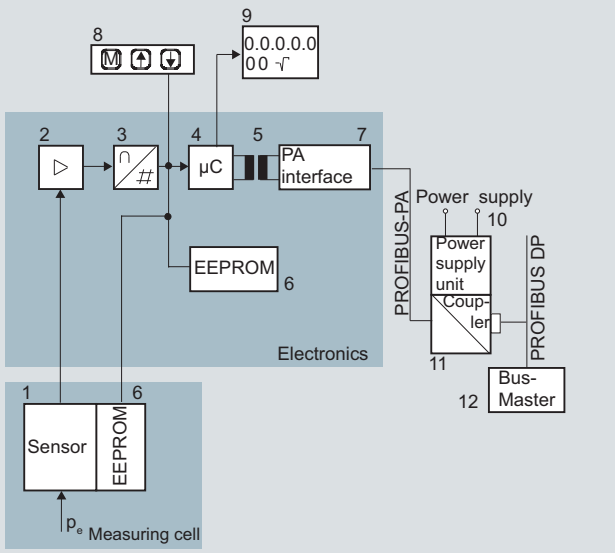

1 Measuring cell sensor
2 Instrument amplifier
3 Analog-to-digital converter
4 Microcontroller
5 Electrical isolation
6 One non-volatile memory each in the measuring cell and electronics
7 PROFIBUS-PA interface
8 Three input keys (local operation)
9 Digital display
10 Power supply
11 DP/PA coupler or link
12 Bus master
p_e Input variable

Function diagram of electronics

The bridge output voltage created by the sensor (1, Figure "Function diagram of the electronics") is amplified by the measuring amplifier (2) and digitized in the analog-to-digital converter (3). The digital information is evaluated in the microcontroller, its linearity and temperature response corrected, and provided on the PROFIBUS PA through an electrically isolated PA interface (7).

The data specific to the measuring cell, the electronics data, and the parameter data are stored in the two non-volatile memories (6). The one memory is coupled to the measuring cell, the other to the electronics. As the result of this modular design, the electronics and the measuring cell can be replaced separately from each other.

Using the three input buttons (8) you can parameterize the pressure transmitter directly at the measuring point. The input buttons can also be used to control the view of the results, the error messages and the operating modes on the digital display (9).

The results with status values and diagnostic values are transferred by cyclic data transmission on the PROFIBUS PA. Parameterization data and error messages are transferred by acyclic data transmission. Special software such as SIMATIC PDM is required for this.

© Siemens AG 2011

Operation of electronics with FOUNDATION Fieldbus communication

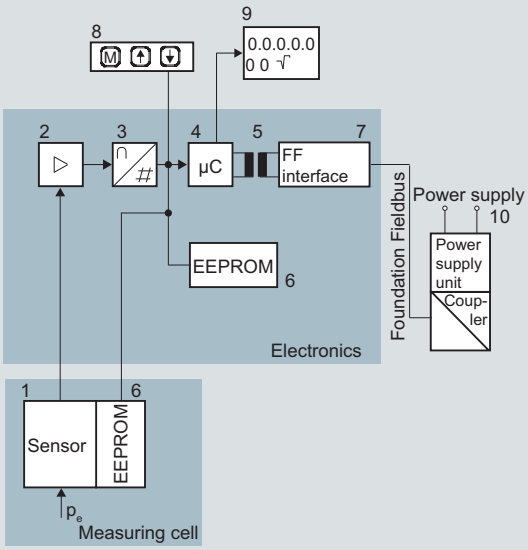

1	Measuring cell sensor	8	Three input keys (local operation)
2	Instrument amplifier	9	Digital display
3	Analog-to-digital converter	10	Power supply
4	Microcontroller		
5	Electrical isolation	p_e	Input variable
6	One non-volatile memory each in the measuring cell and electronics		
7	FF interface		

Function diagram of electronics

The bridge output voltage created by the sensor (1, Figure "Function diagram of electronics") is amplified by the measuring amplifier (2) and digitized in the analog-to-digital converter (3). The digital information is evaluated in the microcontroller, its linearity and temperature response corrected, and provided on the FOUNDATION Fieldbus through an electrically isolated FOUNDATION Fieldbus interface (7).

The data specific to the measuring cell, the electronics data, and the parameter data are stored in the two non-volatile memories (6). The one memory is coupled to the measuring cell, the other to the electronics. As a result of this modular design, the electronics and the measuring cell can be replaced separately from each other.

Using the three input buttons (8) you can parameterize the pressure transmitter directly at the measuring point. The input buttons can also be used to control the view of the results, the error messages and the operating modes on the digital display (9).

The results with status values and diagnostic values are transferred by cyclic data transmission on the FOUNDATION Fieldbus. Parameterization data and error messages are transferred by acyclic data transmission. Special software such as National Instruments Configurator is required for this.

Mode of operation of the measuring cells

Measuring cell for gauge pressure

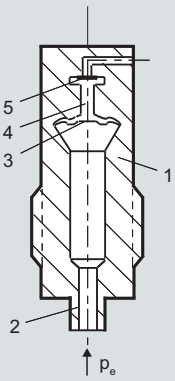

1	Measuring cell
2	Process connection
3	Seal diaphragm
4	Filling liquid
5	Silicon pressure sensor
p_e	Pressure as input variable

Measuring cell for gauge pressure, function diagram

The pressure p_e is applied through the process connection (2, Figure "Measuring cell for gauge pressure, function diagram) to the measuring cell (1). This pressure is subsequently transmitted further through the seal diaphragm (3) and the filling liquid (4) to the silicon pressure sensor (5) whose measuring diaphragm is then flexed. This changes the resistance of the four piezo-resistors fitted in the diaphragm in a bridge circuit. This change in resistance results in a bridge output voltage proportional to the absolute pressure.

Measuring cell for gauge pressure with front-flush diaphragm

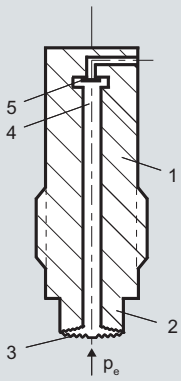

1	Measuring cell
2	Process connection
3	Seal diaphragm
4	Filling liquid
5	Silicon pressure sensor
p_e	Pressure as input variable

Measuring cell for gauge pressure, with front-flush diaphragm for paper industry, function diagram

The pressure $_p$e is applied through the process connection (2, Figure "Measuring cell for gauge pressure, with front-flush diaphragm for paper industry, function diagram") to the measuring cell (1). This pressure is subsequently transmitted further through the seal diaphragm (3) and the filling liquid (4) to the silicon pressure sensor (5) whose measuring diaphragm is then flexed. This changes the resistance of the four piezo-resistors fitted in the diaphragm in a bridge circuit. This change in resistance results in a bridge output voltage proportional to the absolute pressure.

© Siemens AG 2011

Measuring cell for absolute pressure from gauge pressure series

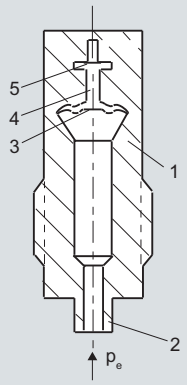

1 Measuring cell
2 Process connection
3 Seal diaphragm
4 Filling liquid
5 Silicon absolute pressure sensor
p_e Absolute pressure as input variable

Measuring cell for absolute pressure from the pressure series, function diagram

The absolute pressure $_p$e is transmitted through the seal diaphragm (3, Figure "Measuring cell for absolute pressure from pressure series, gauge pressure, function diagram ") and the filling liquid (4) to the silicon absolute pressure sensor (5) whose measuring diaphragm is then flexed. This changes the resistance of the four piezo-resistors fitted in the diaphragm in a bridge circuit. This change in resistance results in a bridge output voltage proportional to the absolute pressure.

Measuring cell for absolute pressure from differential pressure series

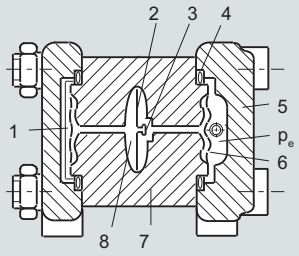

1 Reference vacuum
2 Overload diaphragm
3 Silicon pressure sensor
4 O-ring
5 Process flange
6 Seal diaphragm
7 Body of measuring cell
8 Filling liquid
p_e Absolute pressure as input variable

Measuring cell for absolute pressure from differential pressure series, function diagram

The input pressure p_e is transmitted through the seal diaphragm (6, Figure "Measuring cell for absolute pressure from differential pressure series, function diagram") and the filling liquid (8) to the silicon pressure sensor (3).

The difference in pressure between the input pressure p_e and the reference vacuum (1) on the low-pressure side of the measuring cell flexes the measuring diaphragm. This changes the resistance of the four piezo-resistors fitted in the diaphragm in a bridge circuit. This change in resistance results in a bridge output voltage proportional to the absolute pressure.

An overload diaphragm is installed to provide protection from overloads. If the measuring limits are exceeded, the overload diaphragm (2) is flexed until the seal diaphragm rests on the body of the measuring cell (7), thus protecting the silicon pressure sensor from overloads.

Measuring cell for differential pressure and flow

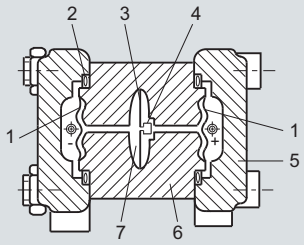

1 Seal diaphragm
2 O-ring
3 Overload diaphragm
4 Silicon pressure sensor
5 Process flange
6 Body of measuring cell
7 Filling liquid

Measuring cell for differential pressure and flow, function diagram

The differential pressure is transmitted through the seal diaphragms (1, Figure "Measuring cell for differential pressure and flow, function diagram") and the filling liquid (7) to the silicon pressure sensor (4).

The measuring diaphragm is flexed by the applied differential pressure. This changes the resistance of the four piezo-resistors fitted in the diaphragm in a bridge circuit. This change in resistance results in a bridge output voltage proportional to the absolute pressure.

An overload diaphragm is installed to provide protection from overloads. If the measuring limits are exceeded, the overload diaphragm (2) is flexed until the seal diaphragm rests on the body of the measuring cell (7), thus protecting the silicon pressure sensor from overloads.

Measuring cell for level

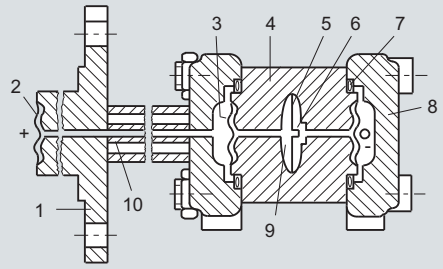

1 Flange with tube
2 Seal diaphragm on mounting flange
3 Seal diaphragm
4 Body of measuring cell
5 Overload diaphragm
6 Silicon pressure sensor
7 O-ring
8 Process flange
9 Filling liquid
10 Capillary with filling liquid of mounting flange

Measuring cell for level, function diagram

The input pressure (hydrostatic pressure) acts hydraulically on the measuring cell through the seal diaphragm on the mounting flange (2, Figure "Measuring cell for level, function diagram"). This differential pressure is subsequently transmitted further through the measuring cell (3) and the filling liquid (9) to the silicon pressure sensor (6) whose measuring diaphragm is then flexed.

This changes the resistance of the four piezo-resistors fitted in the diaphragm in a bridge circuit.

This change in resistance results in a bridge output voltage proportional to the differential pressure.

An overload diaphragm is installed to provide protection from overloads. If the measuring limits are exceeded, the overload diaphragm (2) is flexed until the seal diaphragm rests on the body of the measuring cell (7), thus protecting the silicon pressure sensor from overloads.

© Siemens AG 2011

Parameterization DS III

Depending on the version, there are a range of options for parameterizing the pressure transmitter and for setting or scanning the parameters.

Parameterization using the pushbuttons (local operation)

With the input buttons you can easily set the most important parameters without any additional equipment.

Parameterization using HART communication

Parameterization using HART communication is performed with a HART communicator or a PC.

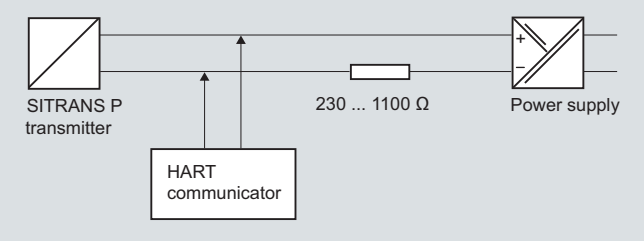

Communication between a HART communicator and a pressure transmitter

When parameterizing with the HART communicator, the connection is made directly to the 2-wire cable.

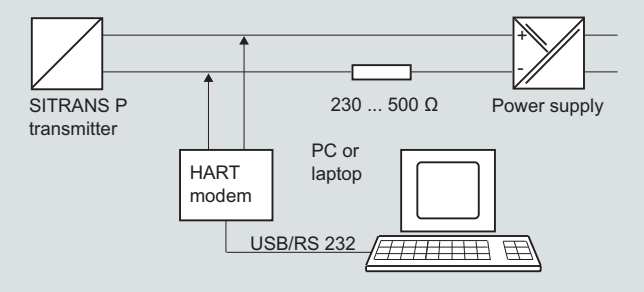

HART communication between a PC communicator and a pressure transmitter

When parameterizing with a PC, the connection is made through a HART modem.

The signals needed for communication in conformity with the HART 5.x or 6.x protocols are superimposed on the output current using the Frequency Shift Keying (FSK) method.

Adjustable parameters, DS III HART

Parameters	Pushbuttons (DS III HART)	HART communication
Start of scale	x	x
Full-scale value	x	x
Electrical damping	x	x
Start-of-scale value without application of a pressure ("Blind setting")	x	x
Full-scale value without application of a pressure ("Blind setting")	x	x
Zero adjustment	x	x
current transmitter	x	x
Fault current	x	x
Disabling of buttons, write protection	x	x[1)]
Type of dimension and actual dimension	x	x
Linear or square root output	x[2)]	x[2)]
Characterizer setup		x
Freely-programmable LCD		x
Diagnostic functions		x

[1)] Cancel apart from write protection
[2)] Only differential pressure

Diagnostic functions for DS III HART

- Zero correction for position
- Event counter
- Transmitter alarms
- Saturation alarm
- Min/Max registers
- Simulation functions
- Maintenance timer

Available physical units of display for DS III HART

Table style: Technical specifications 2

Physical variable	Physical dimensions
Pressure (setting can also be made in the factory)	Pa, MPa, kPa, bar, mbar, torr, atm, psi, g/cm^2, kg/cm^2, inH_2O, inH_2O (4 °C), mmH_2O, ftH_2O (20 °C), inHg, mmHg
Level (height data)	m, cm, mm, ft, in
Volume	m^3, dm^3, hl, yd^3, ft^3, in^3, US gallon, Imp. gallon, bushel, barrel, barrel liquid
Mass	g, kg, t, lb, Ston, Lton, oz
volume flow	m^3/d, m^3/h, m^3/s, l/min, l/s, ft^3/d, ft^3/min, ft^3/s, US gallon/min, US gallon/s
Mass flow	t/d, t/h, t/min, kg/d, kg/h, kg/min, kg/s, g/d, g/h, g/min, g/s, lb/d, lb/h, lb/min, lb/s, LTon/d, LTon/h, STon/d, STon/h, STon/min
Temperature	K, °C, °F, °R
Miscellaneous	%, mA

Parameterization through PROFIBUS PA interface

Fully digital communication through PROFIBUS PA, profile 3.0, is particularly user-friendly. The PROFIBUS puts the DS III PA is in connection with a process control system, e.g. SIMATIC PSC 7. Communication is possible even in a potentially explosive environment.

For parameterization through PROFIBUS you need suitable software, e.g. SIMATIC PDM (Process Device Manager).

Parameterization through FOUNDATION Fieldbus interface

Fully digital communication through FOUNDATION Fieldbus is particularly user-friendly. Through the FOUNDATION Fieldbus the DS III FF is connected to a process control system. Communication is possible even in a potentially explosive environment.

For parameterization through the FOUNDATION Fieldbus you need suitable software, e.g. National Instruments Configurator.

Adjustable parameters for DS III PA and FF

Parameters	Push-buttons	PROFIBUS PA and FOUNDATION Fieldbus interface
Electrical damping	x	x
Zero adjustment (correction of position)	x	x
Buttons and/or function disabling	x	x
Source of measured-value display	x	x
Physical dimension of display	x	x
Position of decimal point	x	x
Bus address	x	x
Linear or square root output	x	x
Characterizer setup		x
Freely-programmable LCD		x
Diagnostics functions		x

© Siemens AG 2011

SITRANS P DS III
Technical description

Diagnostic functions for DS III PA and FF

- Event counter
- Min/Max registers
- Maintenance timer
- Simulation functions
- Zero correction for position
- Transmitter alarms
- Saturation alarm

Physical dimensions available for the display

Physical variable	Physical dimensions
Pressure (setting can also be made in the factory)	MPa, kPa, Pa, bar, mbar, torr, atm, psi, g/cm^2, kg/cm^2, mmH_2O, mmH_2O (4 °C), inH_2O, in$H_2$0 (4 °C), ftH_2O (20 °C), mmHg, inHg
Level (height data)	m, cm, mm, ft, in, yd
Volume	m^3, dm^3, hl, yd^3, ft^3, in^3, US gallon, Imp. gallon, bushel, barrel, barrel liquid
volume flow	m^3/s, m^3/min, m^3/h, m^3/d, l/s, l/min, l/h, l/d, Ml/d, ft^3/s, ft^3/min, ft^3/h, ft^3/d, US gallon/s, US gallon/min, US gallon/h, US gallon/d, bbl/s, bbl/min, bbl/h, bbl/d
Mass flow	g/s, g/min, g/h, g/d, kg/s, kg/min, kg/h, kg/d, t/s, t/min, t/h, /t/d, lb/s, lb/min, lb/h, lb/d, STon/s, STon/min, STon/h, STon/d, LTon/s, LTon/min, LTon/h, LTon/d
Total mass flow	t, kg, g, lb, oz, LTon, STon
Temperature	K, °C, °F, °R
Miscellaneous	%

© Siemens AG 2015

Selection and Ordering data		Article No.
Pressure transmitter for gauge pressure, SITRANS P DS III with HART	↗	7MF4033 -
↗ Click on the Article No. for the online configuration in the PIA Life Cycle Portal.		
Measuring cell filling	**Measuring cell cleaning**	
Silicone oil	normal	1
Inert liquid[1]	grease-free to cleanliness level 2	3
Measuring span (min. ... max.)		
0.01 ... 1 bar	(0.15 ... 14.5 psi)	B
0.04 ... 4 bar	(0.58 ... 58 psi)	C
0.16 ... 16 bar	(2.32 ... 232 psi)	D
0.63 ... 63 bar	(9.14 ... 914 psi)	E
1.6 ... 160 bar	(23.2 ... 2320 psi)	F
4.0 ... 400 bar	(58.0 ... 5802 psi)	G
7.0 ... 700 bar	(102.0 ...10153 psi)	J
Wetted parts materials		
Seal diaphragm	Process connection	
Stainless steel	Stainless steel	A
Hastelloy	Stainless steel	B
Hastelloy	Hastelloy	C
Version as diaphragm seal [2) 3) 4) 5)]		Y
Process connection		
• Connection shank G½B to EN 837-1		0
• Female thread ½-14 NPT		1
• Stainless steel oval flange with process connection (Oval flange has no female thread)		
- Mounting thread $^{7}/_{16}$-20 UNF to IEC 61518		2
- Mounting thread M10 to DIN 19213		3
- Mounting thread M12 to DIN 19213		4
• Male thread M20 x 1.5		5
• Male thread ½ -14 NPT		6
Non-wetted parts materials		
• Housing made of die-cast aluminium		0
• Housing stainless steel precision casting[6)]		3
Version		
• Standard versions		1
• International version, English label inscriptions, documentation in 5 languages on CD (no Order code selectable)		2
Explosion protection		
• None		A
• With ATEX, Type of protection:		
- "Intrinsic safety (Ex ia)"		B
- "Explosion-proof (Ex d)"[7)]		D
- "Intrinsic safety and flameproof enclosure" (Ex ia + Ex d)"[8)]		P
- "Ex nA/ic (Zone 2)"[9)]		E
- "Intrinsic safety, explosion-proof enclosure and dust explosion protection (Ex ia + Ex d + Zone 1D/2D)"[8)10)]		R
• FM + CSA intrinsic safe (is)		F
• FM + CSA (is + ep) + Ex ia + Ex d (ATEX)[10)]		S
• With FM + CSA, Type of protection:		
- "Intrinsic Safe und Explosion Proof (is + xp)"[7)]		NC
Electrical connection / cable entry		
• Screwed gland Pg 13.5 (adapter)[11)]		A
• Screwed gland M20 x1 .5		B
• Screwed gland ½-14 NPT		C
• Han 7D plug (plastic housing) incl. mating connector[11)]		D
• M12 connectors (stainless steel)[11)12)]		F

Selection and Ordering data	Article No.
Pressure transmitter for gauge pressure, SITRANS P DS III with HART	7MF4033 -
Display	
• Without display	0
• Without visible display (display concealed, setting: mA)	1
• With visible display (setting: mA)	6
• with customer-specific display (setting as specified, Order code "Y21" or "Y22" required)	7

Power supply units see Chap. 7 "Supplementary Components".

Included in delivery of the device:
- Brief instructions (Leporello)
- CD-ROM with detailed documentation

1) For oxygen application, add Order code E10.

2) When the manufacture's certificate (calibration certificate) has to be ordered for transmitters with diaphragm seals according to IEC 60770-2, it is recommended only to order this certificate exclusively with the diaphragm seals. The measuring accuracy of the total combination is certified here.

3) If the acceptance test certificate 3.1.is ordered for the transmitter with mounted diaphragm seals this certificate must also be ordered with the respective remote seals.

4) The diaphragm seal is to be specified with a separate order number and must be included with the transmitter order number, for example 7MF403.-..Y..-.... and 7MF4900-1...-.B

5) The standard measuring cell filling of configurations with remote seals (Y) is silicone oil.

6) Not in conjunction with Electrical connection "Screwed gland Pg 13.5" and "Han7D plug".

7) Without cable gland, with blanking plug

8) With enclosed cable gland Ex ia and blanking plug

9) Configurations with HAN and M12 connectors are only available in Ex ic.

10) Only in connection with IP65.

11) Only in connection with Ex approval A, B or E.

12) M12 delivered without cable socket

Tags LT-9010

In-Situ

Innovations in Water Monitoring

Spec Sheet

Level TROLL® 400, 500 & 700 Data Loggers

Get water level data the way you want it, when you want it with industry-leading water level/pressure and temperature data loggers. By partnering with In-Situ, you receive durable Level TROLL® Data Loggers that provide years of service, accurate results, intuitive software, and real-time functionality.

Be Effective

- **Increase productivity:** Reduce training and installation time with In-Situ intuitive software platform and integrated components. Patented twist-lock connectors, included on Level TROLL Loggers and RuggedCable® Systems, ensure error-free deployments.
- **Streamline analysis and reporting:** Automate water level corrections and post-processing, graph data, and accelerate report generation with Win-Situ® Software. Easily export data to Excel,® a web-based management service, or data analysis software.
- **Set up real-time networks:** Access data 24/7 and receive event notifications when you connect data loggers to Tube and Cube systems, radios, or other third-party data collection platforms. Get decision quality data when, where, and how you need it with HydroVu Data Services. Control gates, pumps, alarms, and other equipment by using built-in Modbus/RS485, SDI-12, or 4-20 mA communication protocols.

Be Reliable

- **Deploy in all environments:** Install loggers in fresh water, saltwater, and contaminated waters. Solid titanium and sealed construction outperforms and outlasts coated data loggers.
- **Log accurate data:** Get optimal accuracy under all operating conditions. Sensors undergo NIST®-traceable factory calibration across the full pressure and temperature range. For applications requiring the highest levels of accuracy, use a vented (gauged) system.
- **Get long-lasting operation:** Reduce trips to the field with low-power loggers that typically operate for 10 years.

Be In-Situ

- Receive **free**, 24/7 technical support and online resources.
- Order data loggers and accessories from the In-Situ website.
- Get guaranteed 7-day service for maintenance (U.S.A. only).

Applications

- **Aquifer characterization: slug tests & pumping tests**
- **Coastal: tide/harbor levels & wetland/estuary research**
- **Hydrologic events: crest stage gages, storm surge monitoring, & flood control systems**
- **Long-term, real-time groundwater & surface water monitoring**
- **Mining & remediation**

CALL OR CLICK TO PURCHASE OR RENT

1-800-446-7488 (toll-free in U.S.A. and Canada)
1-970-498-1500 (U.S.A. and international)

WWW.IN-SITU.COM

Level TROLL® 400, 500 & 700 Data Loggers

Spec Sheet

General	Level TROLL 400	Level TROLL 500	Level TROLL 700	Level BaroTROLL
Temperature ranges[1]	Operational: -20-80° C (-4-176° F) Storage: -40-80° C (-40-176° F) Calibrated: -5-50° C (23-122° F)	Operational: -20-80° C (-4-176° F) Storage: -40-80° C (-40-176° F) Calibrated: -5-50° C (23-122° F)	Operational: -20-80° C (-4-176° F) Storage: -40-80° C (-40-176° F) Calibrated: -5-50° C (23-122° F)	Operational: -20-80° C (-4-176° F) Storage: -40-80° C (-40-176° F) Calibrated: -5-50° C (23-122° F)
Diameter	1.83 cm (0.72 in.)	1.83 cm (0.72 in.)	1.83 cm (0.72 in.)	1.83 cm (0.72 in.)
Length	21.6 cm (8.5 in.)	21.6 cm (8.5 in.)	21.6 cm (8.5 in.)	21.6 cm (8.5 in.)
Weight	197 g (0.43 lb)	197 g (0.43 lb)	197 g (0.43 lb)	197 g (0.43 lb)
Materials	Titanium body; Delrin® nose cone	Titanium body; Delrin nose cone	Titanium body; Delrin nose cone	Titanium body; Delrin nose cone
Output options	Modbus/RS485, SDI-12, 4-20 mA	Modbus/RS485, SDI-12, 4-20 mA	Modbus/RS485, SDI-12, 4-20 mA	Modbus/RS485, SDI-12, 4-20 mA
Battery type & life[2]	3.6V lithium; 10 years or 2M readings	3.6V lithium; 10 years or 2M readings	3.6V lithium; 10 years or 2M readings	3.6V lithium; 10 years or 2M readings
External power	8-36 VDC	8-36 VDC	8-36 VDC	8-36 VDC
Memory *Data records*[3] *Data logs*	2.0 MB 130,000 50 logs	2.0 MB 130,000 50 logs	4.0 MB 260,000 50 logs	1.0 MB 65,000 2 logs
Fastest logging rate	2 per second	2 per second	4 per second	1 per minute
Fastest output rate	Modbus: 2 per second SDI-12 & 4-20 mA: 1 per second	Modbus: 2 per second SDI-12 & 4-20 mA: 1 per second	Modbus: 2 per second SDI-12 & 4-20 mA: 1 per second	Modbus: 2 per second SDI-12 & 4-20 mA: 1 per second
Log types	Linear, Fast Linear, and Event	Linear, Fast Linear, and Event	Linear, Fast Linear, Linear Average, Event, Step Linear, True Logarithmic	Linear
Sensor Type/Material	**Piezoresistive; titanium**	**Piezoresistive; titanium**	**Piezoresistive; titanium**	**Piezoresistive; titanium**
Range	Absolute (non-vented) 30 psia: 11 m (35 ft) 100 psia: 60 m (197 ft) 300 psia: 200 m (658 ft) 500 psia: 341 m (1120 ft)	Gauged (vented) 5 psig: 3.5 m (11.5 ft) 15 psig: 11 m (35 ft) 30 psig: 21 m (69 ft) 100 psig: 70 m (231 ft) 300 psig: 210 m (692 ft) 500 psig: 351 m (1153 ft)	Absolute (non-vented) 30 psia: 11 m (35 ft) 100 psia: 60 m (197 ft) 300 psia: 200 m (658 ft) 500 psia: 341 m (1120 ft) 1000 psia: 693 m (2273 ft) Gauged (vented) 5 psig: 3.5 m (11.5 ft) 15 psig: 11 m (35 ft) 30 psig: 21 m (69 ft) 100 psig: 70 m (231 ft) 300 psig: 210 m (692 ft) 500 psig: 351 m (1153 ft)	30 psia (usable up to 16.5 psi; 1.14 bar)
Accuracy[4]	±0.05% full scale (FS) ±0.1% FS	±0.05% FS ±0.1% FS	±0.05% FS ±0.1% FS	±0.05% FS ±0.1% FS
Resolution	±0.005% FS or better	±0.005% FS or better	±0.005% FS or better	±0.005% FS or better
Units of measure	Pressure: psi, kPa, bar, mbar, mmHg, inHg, cmH20, inH20 Level: in., ft, mm, cm, m	Pressure: psi, kPa, bar, mbar, mmHg, inHg, cmH20, inH20 Level: in., ft, mm, cm, m	Pressure: psi, kPa, bar, mbar, mmHg, inHg, cmH20, inH20 Level: in., ft, mm, cm, m	Pressure: psi, kPa, bar, mbar, mmHg, inHg, cmH20, inH20
Temperature Sensor	**Silicon**	**Silicon**	**Silicon**	**Silicon**
Accuracy	±0.1° C	±0.1° C	±0.1° C	±0.1° C
Resolution	0.01° C or better	0.01° C or better	0.01° C or better	0.01° C or better
Units of measure	Celsius or Fahrenheit	Celsius or Fahrenheit	Celsius or Fahrenheit	Celsius or Fahrenheit
Warranty	**3 years**	**3 years**	**3 years**	**3 years**
Notes	[1] Temperature range for non-freezing liquids. [2] Typical battery life when used within the factory-calibrated temperature range. [3] 1 data record = date/time plus 2 parameters logged (no wrapping) from device within the factory-calibrated temperature range. [4] Across factory-calibrated pressure range. [5] Across factory-calibrated pressure and temperature ranges. [6] Up to 5-year (total) extended warranties are available for all sensors—call for details. Delrin is a registered trademark of E.I. du Pont de Nemours and Company. Specifications are subject to change without notice.			

Every Application & Budget

Use maintenance-free, non-vented systems for long-term monitoring and at flood-prone or high-humidity sites. Pair with Tube and Cube Telemtry System and HydroVu for automtatic barometric compensation.

Use high-accuracy, vented systems to conduct aquifer tests and to view barometrically compensated water level data in real time.

Forgot to set a level reference at the beginning of a deployment? Automate level corrections by using Win-Situ Software's post-level correction Wizard.

BaroTROLL® Data Logger

When using a non-vented system, collect barometric pressure and temperature data with a titanium BaroTROLL Data Logger in order to post correct data for barometric pressure fluctuations.

Calculating barometric efficiency? Use the BaroTROLL Logger with vented systems.

CALL OR CLICK TO PURCHASE
1-800-446-7488 (toll-free in U.S.A. and Canada)
1-970-498-1500 (U.S.A. and international)
WWW.IN-SITU.COM
221 East Lincoln Avenue, Fort Collins, CO 80524 USA

Copyright © 2013 In-Situ Inc. All rights reserved. Nov. 2015 (T3; 2K)

Tags LT-9010

In-Situ Inc.

Innovations in Water Monitoring

In-Situ® RuggedCable® Systems

Durable, Direct-Read Cable

RuggedCable Systems are custom-built to endure harsh environments and to last for years. RuggedCable Systems include:

- Titanium twist-lock connectors for quick, reliable connections to instrument body, TROLL® Com Communication Device, desiccant, and other accessories (2-year warranty)
- Metal shield beneath the cable jacket to prevent electrical interferences
- Kellems® grip for secure instrument deployment
- Small desiccant for vented systems (only for storage)

Use RuggedCable Systems with:

- Aqua TROLL® 100, 200, and 400 Instruments
- BaroTROLL® Instruments
- Con TROLL® PRO System
- Level TROLL® 300, 500, and 700 Instruments
- RDO® PRO Probe (twist-lock models)
- TROLL® 9500 Water Quality Instruments
- TROLL® Link Telemetry Systems, MultiHop Radios, and TROLL® Net Hub

Customizable Cable

When ordering, consider the following options:

- **Vented or non-vented cable:** Vented cable is used with vented pressure/level sensors for gauged measurements. The cable vent tube ensures that atmospheric pressure is the reference pressure applied to the sensor diaphragm. Non-vented cable may be used with non-vented instruments for absolute measurements. Compensate absolute measurements with barometric pressure data by using a BaroTROLL® Instrument and Win-Situ® Baro Merge™ Software.
- **Jacket options:** Tefzel® (vented) or thermoplastic polyurethane (TPU; vented or non-vented)
- **Customized lengths:** Up to 1,219 m (4,000 ft) 600Ft Cable
- **Cable termination:** Twist-lock termination (female connector) on one or both cable ends. Other custom configurations are available—call for details.
- ~~**Cable reels:** Plastic or steel reel~~

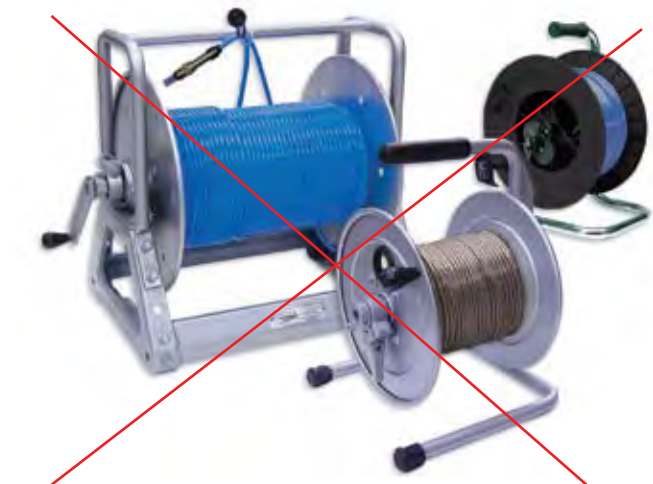

Steel and plastic reels available

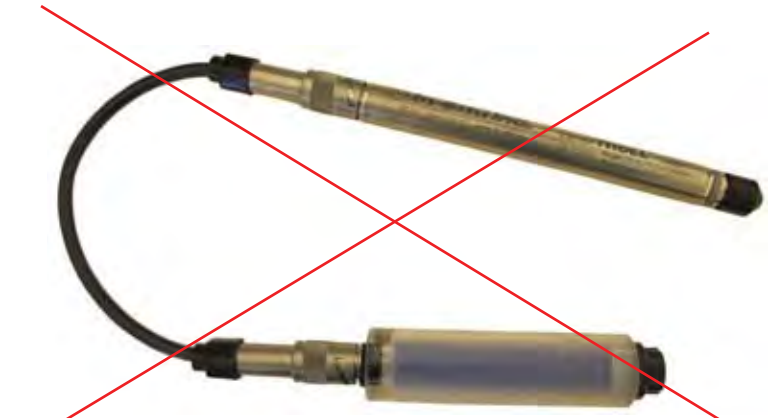

Extra large desiccant connected to RuggedCable System and Level TROLL Instrument

Titanium twist-lock connectors

In-Situ® RuggedCable® Systems

Specifications

Specifications	RuggedCable Systems
Operating temp. range	-25° to 80° C (-13° to 176° F)
Jacket options	• TPU (thermoplastic polyurethane) • Tefzel® (ETFE fluoropolymer; generic equivalent to Teflon®)
Vent options	• Non-vented (absolute) • Vented (gauged) with desiccant (used to mitigate moisture/humidity)
Conductors	6 conductors, 24 AWG, polypropylene insulation
Cable diameter	• TPU: 6.7 mm (0.265 in) • Tefzel: 6.35 mm (0.25 in)
Connector diameter	18. 5 mm (0.73 in)
Weight	• Non-vented, TPU: 16 kg/300 m (35.6 lbs/1,000 ft) • Non-vented, Tefzel: 14 kg/300 m (32 lbs/1,000 ft) • Vented, TPU: 14 kg/300 m (32 lbs/1,000 ft) • Vented, Tefzel: 14 kg/300 m (32 lbs/1,000 ft)
Minimum bend radius	2X cable diameter (13.5 mm; 0.54 in)
Break strength	127 kg (280 lbs)
Maximum cable length	1,219 m (4,000 ft) for RS485
Desiccant pack (required for vented systems)	Large and extra large desiccant packs available with titanium, ABS, or stripped-and-tinned termination.
Warranty	2 years

RuggedCable Selection Guide

Application	Jacket Type	Cable Type
Aquifer characterization	TPU or Tefzel	Vented
Crest stage gaging	TPU	Non-vented
Dewatering	TPU	Vented or non-vented
Flood and storm surge monitoring	TPU	Non-vented
Landfill monitoring	Tefzel	Non-vented
Municipal and industrial monitoring (SCADA)	TPU	Non-vented
Remediation projects	Tefzel	Vented
River, lake, and reservoir monitoring	TPU	Vented or non-vented
Saltwater/brackish water	TPU or Tefzel	Vented or non-vented
Stormwater monitoring	TPU	Vented or non-vented
Tide/harbor monitoring	TPU or Tefzel	Vented
Wetland and estuary monitoring	TPU or Tefzel	Vented or non-vented

Specifications are subject to change without notice.

Accessories

- Large desiccant for low-humidity environments or for deployments where maintenance occurs frequently.
- Extra large desiccant for high-humidity environments or for depolyments where maintenance occurs infrequently. Desiccates six times more saturated air than the large desiccant.
- Titanium cable extenders are used to join two lengths of cable without signal loss. The cable extender seals the cables, provides a weight-bearing connection, and maintains venting.
- Plastic and steel reels

Large desiccant with titanium twist-lock connector for standard deployments

Economical large plastic desiccant

Extra large desiccant with titanium twist-lock connector for high-humidity sites, remote sites, or applications that require fast sampling rates.

Outboard desiccant for use with stripped-and-tinned RuggedCable Systems

Titanium cable extender

Kellems is a registered trademark of Hubbell Incorporated.
Teflon and Tefzel are registered trademarks of E.I. Du Pont de Nemours and Co.

In-Situ Inc.

Call to purchase or rent—www.in-situ.com
221 East Lincoln Avenue, Fort Collins, Colorado, U.S.A. 80524
1-800-446-7488 (toll-free in U.S.A. and Canada)
1-970-498-1500 (U.S.A. and international)
Copyright © 2012 In-Situ Inc. All rights reserved. Sept. 2012 (web)

In-Situ Inc.

Information Sheet

Catalog No. 0053310

SHORT STRIPPED & TINNED CABLE with Male Twist-Lock Connector for Level TROLL®

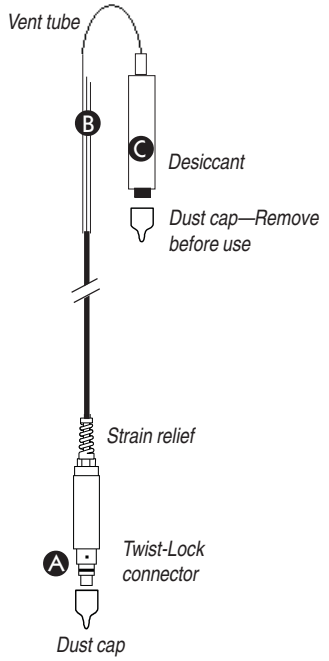

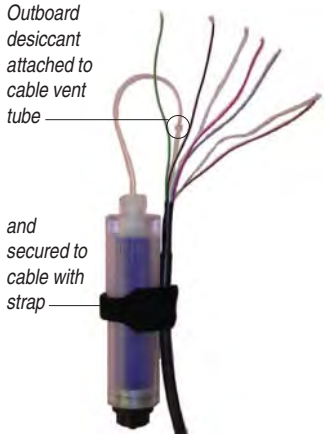

TIP: *The desiccant may be removed from the vent tube, if needed, for better access to the conductor wires. Pull the vent tube extender off the cable vent tube to remove. After connecting and trimming wires, attach desiccant vent tube to cable vent tube and secure desiccant to cable with hook-and-loop strap, as shown here.*

Connects a Level TROLL's RuggedCable™ to a controller or logger for communication via:

- Analog (4-20 mA)
- SDI-12
- RS485 Modbus
- RS232 Modbus (with a customer-supplied converter)

A Male Twist-Lock connector mates with female Twist-Lock connector on the RuggedCable

B Stripped & tinned wires on opposite end for wiring to PLC or logger

C Removable, refillable outboard desiccant protects cable vent tube from condensation in high-humidity environments

SPECIFICATIONS

Materials	PVC, titanium, nylon, Viton®
Dimensions	13.33 cm (5.25 in) long, 19 mm (0.75 in) O.D.
Environmental Rating	IP67 when connected, not designed for submersion
Cable	0.9 m (3 ft) vented TPU (Thermoplastic Polyurethane)
Conductors	6 conductors, 24 AWG, polypropylene insulation
Desiccant pack	Clear acrylic, nylon, HDPE membrane
Desiccant	approx. 22 g silica gel, type 4
Max. recommended cable lengths	SDI-12 61 m (200 ft) Modbus 1259 m (4000 ft) 4-20 mA 1259 m (4000 ft)

CONNECTIONS

Refer to wiring diagrams on back of sheet. Trim back and insulate unused wires. The shield should be wired to a chassis ground or earth ground.

Power Connections. The Red wire provides power for Modbus and SDI-12 modes. The Brown wire provides power for the 4-20 mA mode. If power is present on the Brown wire and not on the Red wire, the device enters the 4-20 mA mode automatically and stays in the 4-20 mode until power is removed from the Brown wire or is applied to the Red wire. The Red wire has priority — if power is applied to both wires at the same time, the device will operate in Modbus or SDI-12 modes but not in 4-20.

Communications. The device automatically switches between Modbus and SDI-12 modes depending on which of the two interfaces has activity. Modbus and SDI-12 cannot be used at the same time — whichever one is currently in use will block communication on the other.

To communicate with the device using Win-Situ® 5 software through a serial COM port: Disconnect the RuggedCable from the short stripped and tinned cable connector. Attach a TROLL Com to the RuggedCable. Connect the TROLL Com's DB9-pin connector to a serial port on a PC running Win-Situ 5.

(over)

SHORT STRIPPED & TINNED CABLE

Level TROLL Connections

ANALOG (4-20 mA) 2 WIRE

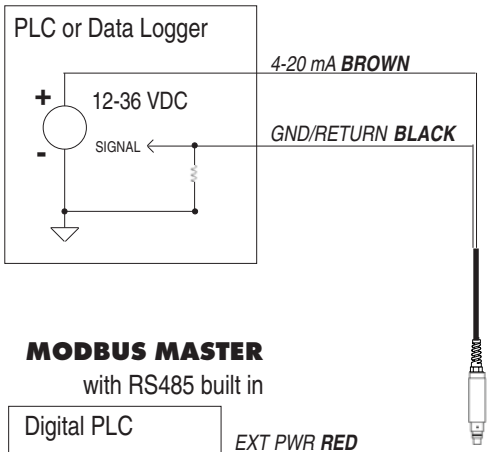

SDI-12 3 WIRE

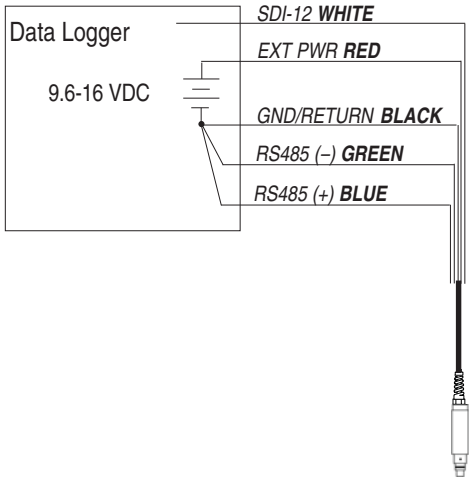

MODBUS MASTER

with RS485 built in

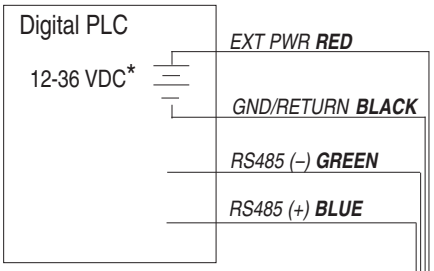

* Optional but highly recommended

MODBUS MASTER

with RS232 built in (converter required)

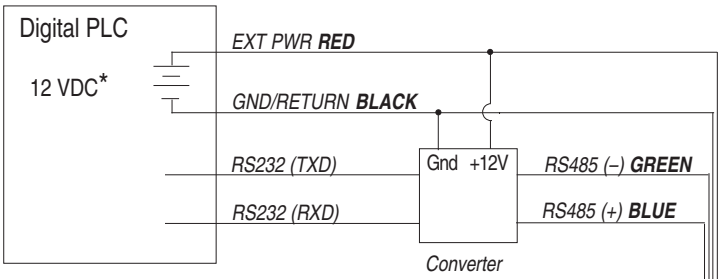

* Voltage limited by converter

Signal	Color
Gnd/Return	BLACK
Ext Power	RED
4-20 mA	BROWN
RS485(–)	GREEN
RS485(+)	BLUE
SDI-12	WHITE

CONVERTER

Port-Powered RS485 converter, such as B&B Electronics Model 485SD9TB

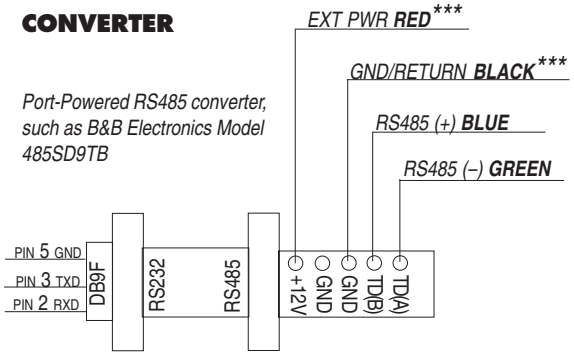

*** Required if port power is not available

1 800 446 7488
(toll-free, US and Canada) or 970 498 1500 **www.in-situ.com**

In-Situ Inc.

Due to continuing product development this information is subject to change without notice. In-Situ and the In-Situ logo, Win-Situ, TROLL, BaroTROLL, RuggedReader, RuggedCable and RDO are trademarks or registered trademarks of In-Situ Inc. Viton is a registered trademark of DuPont Dow Elastomers.
Copyright © 2005-2007 by In-Situ Inc. All rights reserved.

0053312 rev. 004 09/07

Panel Materials for CP-100

CONCEPT, TYPE 4 AND 12

INDUSTRY STANDARDS

Wall-mounting brackets required to maintain UL/CSA external mounting requirement.

CONCEPT solid single-door, door with window and flush-mount models

UL 508A Listed; Type 4, 12; File No. E61997
cUL Listed per CSA C22.2 No. 94; Type 4, 12; File No. E61997

NEMA/EEMAC Type 4, 12, 13
CSA, File No. 42186: Type 4, 12
VDE IP66
IEC 60529, IP66

CONCEPT two-door models

UL 508A Listed; Type 12; File No. E61997
cUL Listed per CSA C22.2 No. 94; Type 12; File No. E61997

NEMA/EEMAC Type 12
CSA, File No. 42186, Type 12
VDE IP 55
IEC 60529, IP55

APPLICATION

CONCEPT Enclosures are ideal for machine control applications. With streamlined styling, flush quarter-turn latches and an attractive, durable finish. Available in solid or window single-door and two-door landscape, flush-mount and sloped-top versions for application and mounting flexibility. Two-door landscape models provide full-width access and easy panel installation.

SPECIFICATIONS

- 18, 16 or 14 gauge steel
- Seams continuously welded and ground smooth
- Corner-formed doors
- Simple easy-to-remove and install hinge pins with captivation clip
- High-torque threadless studs and fasteners on door
- Minimum-width body flange provides maximum door opening
- Door opens 210 degrees
- External formed body flange
- Panel mounting studs fit optional CONCEPT panels and other accessories
- Mounting holes in back of body for direct mounting or optional external mounting brackets
- Removable door with hidden hinges for clean, aesthetic appearance
- Seamless foam-in-place gasket
- Quarter-turn slotted latch(es)
- Door alignment device on doors wider than 30 in.
- Four hinges on 60-in.-high enclosures
- Grounding stud on body; bonding provision on door (except window-door models)
- Provisions on door for optional high-impact thermoplastic data pocket
- Hardware kit with panel mounting nuts, panel grounding hardware and sealing washers
- Installation instructions provided

Single-Door and Window-Door Models:

- 3-point latch system on enclosures with height equal to or greater than 42-in. with quarter-turn, slotted latch

Flush-Mount Models:

- Mounting frame extends completely around enclosure

Two-Door Models:

- Overlapping door design provides full-width access
- Three-point latch system on right-hand hinged door with quarter-turn, slotted latch

FINISH

Two standard finishes are available: ANSI 61 gray or RAL 7035 textured light-gray polyester powder paint inside and out.

ACCESSORIES

Door Stop Kit
Handles
Lock Inserts
CONCEPT Panels
Mounting-Bracket Kits
See also the Popular Cooling Products and Accessories tables following the Standard Product tables

MODIFICATION AND CUSTOMIZATION

Hoffman excels at modifying and customizing products to your specifications. Contact your local Hoffman sales office or distributor for complete information.

BULLETIN: CW1

Catalog Number	AxBxC in./mm	Finish	Door Ga.	Body Ga.	CONCEPT Panel	Conductive CONCEPT Panel	Panel Size D x E in./mm	Mounting G x H in./mm	Latches qty.	Latches style	J in./mm
CSD36248LG	36.00 x 24.00 x 8.00 914 x 610 x 203	RAL 7035 Lt. Gray	14	16	CP3624	CP3624G	34.20 x 22.20 869 x 564	34.50 x 22.50 876 x 572	2	Quarter-turn	5.00 127
CSD36308	36.00 x 30.00 x 8.00 914 x 762 x 203	ANSI 61 Gray	14	14	CP3630	CP3630G	34.20 x 28.20 869 x 716	34.50 x 28.50 876 x 724	2	Quarter-turn	5.00 127
CSD36308LG	36.00 x 30.00 x 8.00 914 x 762 x 203	RAL 7035 Lt. Gray	14	14	CP3630	CP3630G	34.20 x 28.20 869 x 716	34.50 x 28.50 876 x 724	2	Quarter-turn	5.00 127
CSD36368	36.00 x 36.00 x 8.00 914 x 914 x 203	ANSI 61 Gray	14	14	CP3636	CP3636G	34.20 x 34.20 869 x 869	34.50 x 34.50 876 x 876	2	Quarter-turn	5.00 127
CSD36368LG	36.00 x 36.00 x 8.00 914 x 914 x 203	RAL 7035 Lt. Gray	14	14	CP3636	CP3636G	34.20 x 34.20 869 x 869	34.50 x 34.50 876 x 876	2	Quarter-turn	5.00 127
CSD42248	42.00 x 24.00 x 8.00 1067 x 610 x 203	ANSI 61 Gray	14	14	CP2442	CP2442G	22.20 x 40.20 564 x 1021	40.50 x 22.50 1029 x 572	1	3-point	21.00 533
CSD42248LG	42.00 x 24.00 x 8.00 1067 x 610 x 203	RAL 7035 Lt. Gray	14	14	CP2442	CP2442G	22.20 x 40.20 564 x 1021	40.50 x 22.50 1029 x 572	1	3-point	21.00 533
CSD42308	42.00 x 30.00 x 8.00 1067 x 762 x 203	ANSI 61 Gray	14	14	CP4230	CP4230G	40.20 x 28.20 1021 x 716	40.50 x 28.50 1029 x 716	1	3-point	21.00 533
CSD42308LG	42.00 x 30.00 x 8.00 1067 x 762 x 203	RAL 7035 Lt. Gray	14	14	CP4230	CP4230G	40.20 x 28.20 1021 x 716	40.50 x 28.50 1029 x 716	1	3-point	21.00 533
CSD42368	42.00 x 36.00 x 8.00 1067 x 914 x 203	ANSI 61 Gray	14	14	CP4236	CP4236G	40.20 x 34.20 1021 x 869	40.50 x 34.50 1029 x 876	1	3-point	21.00 533
CSD42368LG	42.00 x 36.00 x 8.00 1067 x 914 x 203	RAL 7035 Lt. Gray	14	14	CP4236	CP4236G	40.20 x 34.20 1021 x 869	40.50 x 34.50 1029 x 876	1	3-point	21.00 533
CSD48248	48.00 x 24.00 x 8.00 1219 x 610 x 203	ANSI 61 Gray	14	14	CP4824	CP4824G	46.20 x 22.20 1174 x 564	46.50 x 22.50 1181 x 572	1	3-point	24.00 610
CSD48248LG	48.00 x 24.00 x 8.00 1219 x 610 x 203	RAL 7035 Lt. Gray	14	14	CP4824	CP4824G	46.20 x 22.20 1174 x 564	46.50 x 22.50 1181 x 572	1	3-point	24.00 610
CSD48308	48.00 x 30.00 x 8.00 1219 x 762 x 203	ANSI 61 Gray	14	14	CP3048	CP3048G	28.20 x 46.20 716 x 1174	46.50 x 28.50 1181 x 724	1	3-point	24.00 610
CSD48308LG	48.00 x 30.00 x 8.00 1219 x 762 x 203	RAL 7035 Lt. Gray	14	14	CP3048	CP3048G	28.20 x 46.20 716 x 1174	46.50 x 28.50 1181 x 724	1	3-point	24.00 610
CSD48368	48.00 x 36.00 x 8.00 1219 x 914 x 203	ANSI 61 Gray	14	14	CP4836	CP4836G	46.20 x 34.20 1174 x 876	46.50 x 34.50 1181 x 876	1	3-point	24.00 610
CSD48368LG	48.00 x 36.00 x 8.00 1219 x 914 x 203	RAL 7035 Lt. Gray	14	14	CP4836	CP4836G	46.20 x 34.20 1174 x 876	46.50 x 34.50 1181 x 876	1	3-point	24.00 610
CSD60368	60.00 x 36.00 x 8.00 1524 x 914 x 203	ANSI 61 Gray	14	14	CP6036	CP6036G	58.20 x 34.20 1478 x 869	58.50 x 34.50 1486 x 876	1	3-point	30.00 762
CSD60368LG	60.00 x 36.00 x 8.00 1524 x 914 x 203	RAL 7035 Lt. Gray	14	14	CP6036	CP6036G	58.20 x 34.20 1478 x 869	58.50 x 34.50 1486 x 876	1	3-point	30.00 762
CSD161210	16.00 x 12.00 x 10.00 406 x 305 x 254	ANSI 61 Gray	16	18	CP1612	CP1612G	14.20 x 10.20 361 x 259	14.50 x 10.50 368 x 267	1	Quarter-turn	8.00 203
CSD161210LG	16.00 x 12.00 x 10.00 406 x 305 x 254	ANSI 61 Gray	16	18	CP1612	CP1612G	14.20 x 10.20 361 x 259	14.50 x 10.50 368 x 267	1	Quarter-turn	8.00 203
CSD161610	16.00 x 16.00 x 10.00 406 x 406 x 254	RAL 7035 Lt. Gray	16	18	CP1616	CP1616G	14.20 x 14.20 361 x 361	14.50 x 14.50 368 x 368	1	Quarter-turn	8.00 203
CSD161610LG	16.00 x 16.00 x 10.00 406 x 406 x 254	RAL 7035 Lt. Gray	16	18	CP1616	CP1616G	14.20 x 14.20 361 x 361	14.50 x 14.50 368 x 368	1	Quarter-turn	8.00 203
CSD162010	16.00 x 20.00 x 10.00 406 x 508 x 254	ANSI 61 Gray	16	18	CP2016	CP2016G	18.20 x 14.20 462 x 361	14.50 x 18.50 368 x 470	1	Quarter-turn	8.00 203
CSD162010LG	16.00 x 20.00 x 10.00 406 x 508 x 254	RAL 7035 Lt. Gray	16	18	CP2016	CP2016G	18.20 x 14.20 462 x 361	14.50 x 18.50 368 x 470	1	Quarter-turn	8.00 203
CSD201610	20.00 x 16.00 x 10.00 508 x 406 x 254	ANSI 61 Gray	16	18	CP2016	CP2016G	18.20 x 14.20 462 x 361	18.50 x 14.50 470 x 368	1	Quarter-turn	10.00 254
CSD201610LG	20.00 x 16.00 x 10.00 508 x 406 x 254	RAL 7035 Lt. Gray	16	18	CP2016	CP2016G	18.20 x 14.20 462 x 361	18.50 x 14.50 470 x 368	1	Quarter-turn	10.00 254
CSD202010	20.00 x 20.00 x 10.00 508 x 508 x 254	ANSI 61 Gray	16	18	CP2020	CP2020G	18.20 x 18.20 462 x 462	18.50 x 18.50 470 x 470	1	Quarter-turn	10.00 254
CSD202010LG	20.00 x 20.00 x 10.00 508 x 508 x 254	RAL 7035 Lt. Gray	16	18	CP2020	CP2020G	18.20 x 18.20 462 x 462	18.50 x 18.50 470 x 470	1	Quarter-turn	10.00 254
CSD202410	20.00 x 24.00 x 10.00 508 x 610 x 254	ANSI 61 Gray	16	18	CP2420	CP2420G	22.20 x 18.20 564 x 462	18.50 x 22.50 470 x 572	1	Quarter-turn	10.00 254
CSD202410LG	20.00 x 24.00 x 10.00 508 x 610 x 254	RAL 7035 Lt. Gray	16	18	CP2420	CP2420G	22.20 x 18.20 564 x 462	18.50 x 22.50 470 x 572	1	Quarter-turn	10.00 254
CSD241210	24.00 x 12.00 x 10.00 610 x 305 x 254	ANSI 61 Gray	16	18	CP2412	CP2412G	22.20 x 10.20 564 x 259	22.50 x 10.50 572 x 267	1	Quarter-turn	12.00 305
CSD241210LG	24.00 x 12.00 x 10.00 610 x 305 x 254	RAL 7035 Lt. Gray	16	18	CP2412	CP2412G	22.20 x 10.20 564 x 259	22.50 x 10.50 572 x 267	1	Quarter-turn	12.00 305
CSD241610	24.00 x 16.00 x 10.00 610 x 406 x 254	ANSI 61 Gray	16	18	CP2416	CP2416G	22.20 x 14.20 564 x 361	22.50 x 14.50 572 x 368	1	Quarter-turn	12.00 305
CSD241610LG	24.00 x 16.00 x 10.00 610 x 406 x 254	RAL 7035 Lt. Gray	16	18	CP2416	CP2416G	22.20 x 14.20 564 x 361	22.50 x 14.50 572 x 368	1	Quarter-turn	12.00 305
CSD242010	24.00 x 20.00 x 10.00 610 x 508 x 254	ANSI 61 Gray	16	18	CP2420	CP2420G	22.20 x 18.20 564 x 462	22.50 x 18.50 572 x 470	1	Quarter-turn	12.00 305
CSD242010LG	24.00 x 20.00 x 10.00 610 x 508 x 254	RAL 7035 Lt. Gray	16	18	CP2420	CP2420G	22.20 x 18.20 564 x 462	22.50 x 18.50 572 x 470	1	Quarter-turn	12.00 305
CSD242410	24.00 x 24.00 x 10.00 610 x 610 x 254	ANSI 61 Gray	14	16	CP2424	CP2424G	22.20 x 22.20 564 x 564	22.50 x 22.50 572 x 572	2	Quarter-turn	5.00 127
CSD242410LG	24.00 x 24.00 x 10.00 610 x 610 x 254	RAL 7035 Lt. Gray	14	16	CP2424	CP2424G	22.20 x 22.20 564 x 564	22.50 x 22.50 572 x 572	2	Quarter-turn	5.00 127

Synetcom
Your Industrial Wireless Source

BOM #4

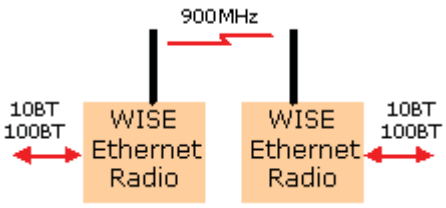

900 MHz Ethernet PLC Radios - Industrial Wireless Ethernet bridges link SCADA network equipment up to 25 miles away

- home
- services
- customers
- white papers
- contact us

Synetcom
Your Industrial Wireless Source

View Specs

Industrial Wireless Ethernet 900 MHz PLC Radio Modem - 900 MHz FHSS Industrial Wireless Ethernet Radio Modem System

Models: WISE-B-900 (170 KB/s)

Approvals: Class 1, Division 2, Groups A,B,C,D Class 1, Zone 2, Group IIC

Extend Ethernet connections to PLC locations not serviced by your company network with Synetcom's 900 MHz Industrial Wireless PLC Radio Modem product. Connect PLC, RTU, Wireless I/O, data acquisition and remote control equipment with the WISE-B-900 PLC Ethernet Radio - build reliable long distance, license free wireless industrial SCADA systems.

Synetcom's 900 MHz Ethernet Radio systems are designed for reliable high data throughput even if the radio path is not ideal. Higher transmit power and better receiver sensitivity enable Ethernet connections to remote PLC and RTU locations that you could not reach in the past.

For higher data throughput on line of site links, see our 2.4 GHz Ethernet Radio products.

Features

- 900 MHz Frequency Hopping Spread Spectrum FHSS PLC radio
- Wireless networking of PLCs
- Wireless networking of industrial data acquisition and remote control equipment
- Radio is IP addressable
- Wireless Ethernet bridge between PLC, RTU, sensors, controllers and HMI computers
- Long Range - up to 25 miles with 20 dB fade margin - high throughput sustained
- Advanced ARQ, CRC error control, hopping algorithm
- Excellent immunity to interference and multipath fading
- Ethernet Radio repeaters for >25 miles
- Rugged packaging for industrial use - 14GA metal enclosure
- -30°C to + 70°C

900 MHz Industrial Wireless Ethernet PLC Radio

Synetcom's 900 MHz Ethernet PLC Radio is a rugged, long range 900 MHz radio that connects PLC, RTU, I/O and other SCADA equipment. The radio is designed to provide high speed wireless connectivity between PLCs and PLC networks - without compromising reliability and performance. Typical uses include Ethernet bridging, SCADA device networking, PLC networking and industrial wireless data acquisition and control.

The product can function as a high speed bridge between two Ethernet networks, or it can provide wireless networking between an HMI computer + master PLC and multiple remote slave PLCs. Complex data acquisition and control systems can be built using repeaters to extend

Applications

- Wireless Networking of PLCs

- Industrial Wireless Ethernet SCADA systems

- Wireless PLC Data Acquisition

- Wireless PLC Remote Control

- Long Distance Wireless PLC

range and coverage.

Data Throughput and Range

The 900 MHz Ethernet PLC Radio operates with data throughput significantly higher than other industrial (FHSS) Ethernet radios:

WISE-B-900: 150 KB/s (25 miles with 11 dBi gain antennas)

Maximum throughput occurs on a point-to-point link. Error-free data transmission is assured via CRC error checking and ARQ (automatic retransmission of packets with bit errors).

Why doesn't the radio transmit at 10 MB/s? Industrial Ethernet applications often demand long range and high reliability which is obtained only by operating the link more slowly - a limitation of physics, not the radio design.

For example, faster commodity 802.11 Ethernet bridges or routers offer a higher throughout but only over short distances (1-2 miles under ideal conditions) with the same reliability our radios deliver at 25 miles.

Comparison to 2.4 GHz

Our 2.4 GHz Industrial Ethernet Radios typically operate at 220 KB/s or faster by design. Actual data throughput may be compromised if there are obstructions in the radio path. The 900 MHz Wireless Ethernet Modem is less affected by obstructions.

Ethernet Links

Transmission Range:
Synetcom specifies a 25 mile range (900 MHz Ethernet PLC Radio) that includes a 20 dB margin (if the signal fades as much as 20 dB - a factor of 1/100 - the link continues to operate).

Obstructions in the line of sight path reduces range, depending on the type of obstruction. Contact our factory for assistance.

900 MHz Ethernet PLC radio modem specifications>

www.synetcom.com
(310) 379-2000
23879 Madison Street
Torrance, CA 90505

home
services
customers
white papers
contact us

900 MHz PLC radio page 1>

900 MHz Industrial Wireless Ethernet PLC Radio Modem Specifications:

Model - WISE-B-900 PLC Radio
PLC Radio Data Rate - 170 Kbps; Maximum Throughput - 150 KB/s
PLC Interface - 10Base-T
PLC Radio Network Topologies - Point-to-Point or Multipoint
RF Output Power - 500 mW (.5 watt)
RF Modulation - Frequency Hopping Spread Spectrum (FHSS)
Frequency Range - 902 MHz to 928 MHz
Power - 9VDC to 30VDC (external AC power supply included)
Enclosure Material - Aluminum
Enclosure Size - 7.9" x 5.7" x 2.1" (201 x 144 x 53 mm)
Operating Temperature -30º C to +70ºC; 0 to 95% humidity, non-condensing
Licensing Type Certified; License-free operation under FCC Part 15

Industry Approvals: Class 1, Division 2, Groups A,B,C,D Class 1, Zone 2, Group IIC

PLC 900 MHz Radio Connectors

o Power 2-Pin
o RS-232 RJ-11 Configuration Port
o Sync In RJ-11
o Sync Out RJ-11
o 10BT RJ-45
o Antenna RVS TNC

PLC 900 MHz Radio Indicators

Radio Power, Ethernet Link Status, TX, RX, Ethernet Radio Link Status

900 MHz PLC Radio (back view)

back to 900 MHz PLC Radio page 1>

Synetcom
Your Industrial Wireless Source
www.synetcom.com
(310) 379-2000
23879 Madison Street
Torrance, CA 90505

KATHREIN
SCALA DIVISION

TY-900
Yagi Antenna

The Kathrein-Scala TY series are rugged broadband yagi antennas fabricated of 6061/T6 aluminum rod and seamless drawn pipe, anodized for maximum reliability and corrosion resistance. The hardware and fastenings are stainless steel. The internal balun, coax feed and connector are sealed in a foam potting system to prevent moisture penetration and assure long service life in severe environmental conditions. The heavy aluminum mounting casting allows installation for V or H polarization.

- The TY-900 is specifically designed for professional fixed-station applications in the 890–960 MHz band.

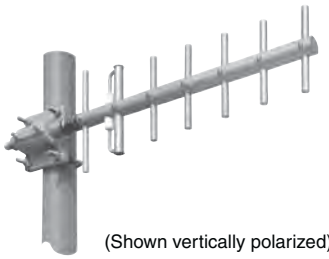

(Shown vertically polarized)

Specifications:

Frequency range	890–960 MHz
Gain	12 dBi
Impedance	50 ohms
VSWR	< 1.5:1 maximum (1.35:1 typical)
Polarization	Horizontal or vertical
Front-to-back ratio	>20 dB
Maximum input power	100 watts (at 50°C)
H-plane beamwidth	48 degrees (half-power)
E-plane beamwidth	40 degrees (half-power)
Connector	N female
Weight	3 lb (1.4 kg)
Dimensions	23 x 7 inches (584 x 178 mm)
Wind load Front/Side	at 93 mph (150kph) 3 lbf / 4 lbf (11 N) / (17 N)
Wind survival rating*	150 mph (240 kph)
Shipping dimensions	28 x 10 x 4.5 inches (710 x 254 x 114 mm)
Shipping weight	5.0 lb (2.3 kg)
Mounting	For masts of 1.25 to 2.375 inch (32 to 60 mm) OD.
See reverse for order information.	

* Mechanical design is based on environmental conditions as stipulated in TIA-222-G-2 (December 2009) and/or ETS 300 019-1-4 which include the static mechanical load imposed on an antenna by wind at maximum velocity. See the Engineering Section of the catalog for further details.

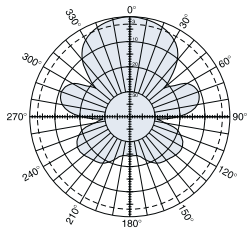

H-plane
Horizontal pattern – V-polarization
Vertical pattern – H-polarization

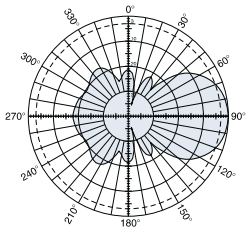

E-plane
Horizontal pattern – H-polarization
Vertical pattern – V-polarization

10065-E

Kathrein Inc., Scala Division Post Office Box 4580 Medford, OR 97501 (USA) Phone: (541) 779-6500 Fax: (541) 779-3991
Email: communications@kathrein.com Internet: www.kathrein-scala.com

KATHREIN
SCALA DIVISION

TY-900
Yagi Antenna

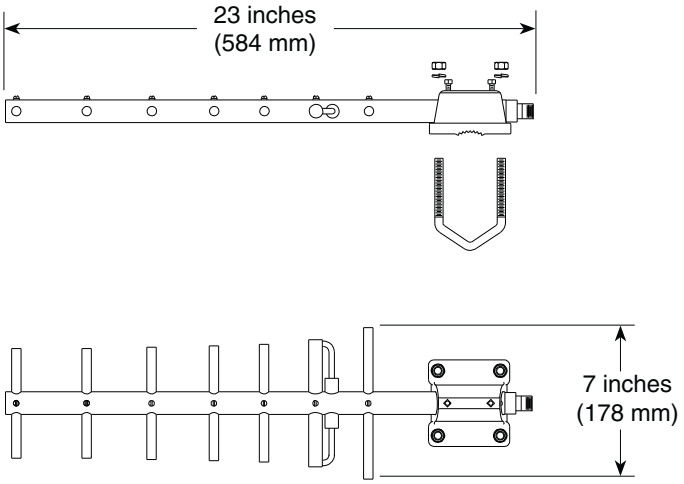

Order Information:

Model	Description
TY-900	Yagi antenna with N connector

All specifications are subject to change without notice. The latest specifications are available at www.kathrein-scala.com.

Kathrein Inc., Scala Division Post Office Box 4580 Medford, OR 97501 (USA) Phone: (541) 779-6500 Fax: (541) 779-3991
Email: communications@kathrein.com Internet: www.kathrein-scala.com

ALL DESIGN, OPERATIVE AND PROCESS DATA PERTAINING TO THE ARTICLE SHOWN ON THIS SHEET IS THE PROPERTY OF POLYPHASER CORPORATION. THE INFORMATION IS NOT TO BE COPIED, REPRODUCED, REVEALED TO OR APPROPRIATED BY OTHERS WITHOUT THE EXPRESS WRITTEN CONSENT OF POLYPHASER CORPORATION.

These commodities or technology are exported from the U.S. in accordance with the Export Administration Regulations. Diversion contrary to U.S. law prohibited.

REVISIONS				
REV LTR	DATE	ENG	MKTG	Q.A.
F	03/05/07 CM	AD	–	–

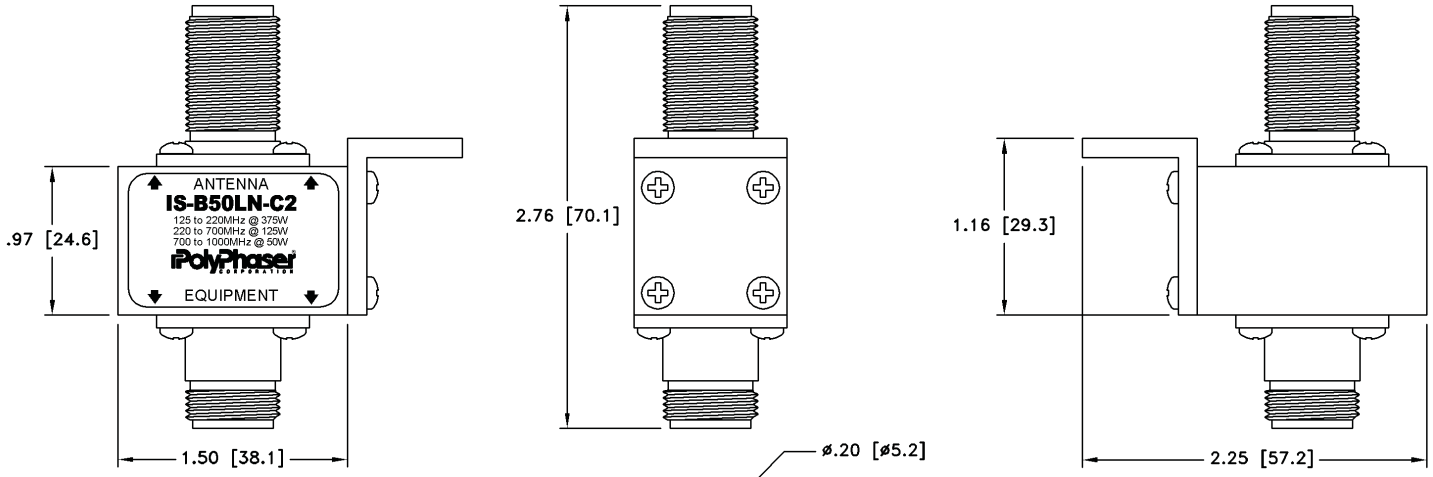

MAXIMUM CHARACTERISTICS

APPLICATION:
BULKHEAD MOUNT

FREQUENCY RANGE:
125MHz TO 1GHz

VSWR:
≤1.1:1 OVER FREQUENCY RANGE

INSERTION LOSS:
≤0.1dB OVER FREQUENCY RANGE

MAX POWER:
375W @ 125MHz DECREASING TO 50W @ 1GHz

TURN-ON:
600Vdc±20%

THROUGHPUT ENERGY:
≤220µJ FOR 8/20µs WAVEFORM

OPERATING TEMPERATURE:
−55°C TO +50°C

STORAGE TEMPERATURE:
−55°C TO +85°C

RELATIVE HUMIDITY:
90% AT 40°C

VIBRATION
1G AT 5Hz TO 100Hz

CUSTOMER APPROVAL: _____ DATE: _____

ALL DIMENSIONS SHOWN ABOVE ARE FOR REFERENCE ONLY.

DRAFTER: M. JOHNSON	DATE: 07/11/94	PolyPhaser	
MECH ENGINEER: – – – –	DATE: – – –	P.O. BOX 9000 MINDEN, NV 89423 TEL: 775-782-2511 FAX: 775-782-4476	
ELEC ENGINEER: K. BARTEL	DATE: 05/01/95	DWG NO/PART NO/DESCRIPTION: IS-B50LN-C2 CUSTOMER PRINT	
MARKETING: – – – –	DATE: – – –		
QUALITY DEPT: R. MATHEUS	DATE: 05/01/95	CAGE CODE: 61114	FILE NAME: -C1
		SCALE: 1/1	SHEET: 1 OF 1

FSJ4-50B Product Detail

Cable and Connectors >> Coaxial Cable >> Transmission Line >> 1/2" Superflexible, 50 Ohm

Product Description

Part Number: FSJ4-50B
Manufacturer: CommScope / Andrew
List Price: $4.54
My Price: Login >>

QTY: 1 Add to Cart

Email

1/2" Superflex 50 Ohm Coax Cable

Catalog Description

1/2" Superflexible 50 Ohm Foam HELIAX® Coaxial Cable, corrogated copper. FSJ4-50B is Riser Rated. FSJ4RK-50B - is non-halogenated, fire retarden.

Specifications

Attenuation (dB)/100 Ft.	
30 MHz	0.557
150 MHz	1.28
450 MHz	2.31
824 MHz	3.23
960 MHz	3.52
1500 MHz	4.54
2000 MHz	5.37
2300 MHz	5.83
5800 MHz	10.27
General Characteristics	
Max. Frequency	10.2 GHz
Propagation Velocity	81%
Overall Diameter(in)	.52
Dielectric	Closed Cell Foam Polyethylene
Outer Conductor	Helical Corrugated Solid Copper
Inner Conductor	Copper Clad Aluminum
Min. Bending Radius(in)	1.25"
Warranty	10 Year
Shipping Method	Less Than 350 Ft - UPS
Jacket Material	Black Polyethylene
Ship Weight (lbs.)	.14
Shipping	Parcel Freight

Similar Products

Product Specifications

F4PDMV2-C

7-16 DIN Male for 1/2 in FSJ4-50B cable

CHARACTERISTICS

General Specifications

Interface	7-16 DIN Male
Body Style	Straight
Brand	HELIAX®
Mounting Angle	Straight

Electrical Specifications

Connector Impedance	50 ohm
Operating Frequency Band	0 – 7500 MHz
Cable Impedance	50 ohm
3rd Order IMD	-120 dBm @ 910 MHz
3rd Order IMD Test Method	Two +43 dBm Carriers
RF Operating Voltage, maximum (vrms)	884.00 V
dc Test Voltage	2500 V
Outer Contact Resistance	1.50 mOhm
Inner Contact Resistance	0.80 mOhm
Insulation Resistance, minimum	5000 MOhm
Average Power	1.0 kW @ 900 MHz
Peak Power, maximum	15.60 kW
Insertion Loss, typical	0.05 dB
Shielding Effectiveness	-110 dB

Mechanical Specifications

Outer Contact Attachment Method	Crush-flare
Inner Contact Attachment Method	Captivated
Outer Contact Plating	Trimetal
Inner Contact Plating	Silver
Attachment Durability	25 cycles
Interface Durability	500 cycles
Interface Durability Method	IEC 169-4:9.5
Connector Retention Tensile Force	890 N | 200 lbf
Connector Retention Torque	5.42 N-m | 48.00 in lb
Insertion Force	200.17 N | 45.00 lbf

www.commscope.com

©2009 CommScope, Inc. All rights reserved.
All trademarks identified by ® or ™ are registered trademarks or trademarks, respectively, of CommScope.
All specifications are subject to change. See www.commscope.com for the most current information.

Product Specifications

F4PDMV2-C

Insertion Force Method	IEC 169-1:15.2.4
Pressurizable	No
Coupling Nut Proof Torque	24.86 N-m | 220.00 in lb
Coupling Nut Retention Force	1000.85 N | 225.00 lbf
Coupling Nut Retention Force Method	MIL-C-39012C-3.25, 4.6.22

Dimensions

Nominal Size	1/2 in
Diameter, maximum	34.54 mm | 1.36 in
Length	50.01 mm | 1.97 in
Weight	136.08 g | 0.30 lb

Environmental Specifications

Operating Temperature	-55 °C to +85 °C (-67 °F to +185 °F)
Storage Temperature	-55 °C to +85 °C (-67 °F to +185 °F)
Immersion Depth	1 m
Immersion Test Mating	Mated
Immersion Test Method	IEC 60529:2001, IP68
Water Jetting Test Mating	Mated
Water Jetting Test Method	IEC 60529:2001, IP66
Moisture Resistance Test Method	MIL-STD-202F, Method 106F
Mechanical Shock Test Method	MIL-STD-202F, Method 213B, Test Condition C
Thermal Shock Test Method	MIL-STD-202, Method 107, Test Condition A-1, Low Temperature -55 °C
Vibration Test Method	MIL-STD-202F, Method 204D, Test Condition B
Corrosion Test Method	MIL-STD-1344A, Method 1001.1, Test Condition A

Standard Conditions

Attenuation, Ambient Temperature	20 °C | 68 °F
Average Power, Ambient Temperature	40 °C | 104 °F

Return Loss

Frequency Band	VSWR	Return Loss (dB)
0–2200 MHz	1.03	36.00
2200–2700 MHz	1.05	33.00
2700–3000 MHz	1.05	32.00

Regulatory Compliance/Certifications

Agency	Classification
RoHS 2002/95/EC	Compliant by Exemption
China RoHS SJ/T 11364-2006	Above Maximum Concentration Value (MCV)

©2009 CommScope, Inc. All rights reserved.
All trademarks identified by ® or ™ are registered trademarks or trademarks, respectively, of CommScope.
All specifications are subject to change. See www.commscope.com for the most current information.

BOM #5

Product: 1492-REC15G

Description: 1492 DIN Rail Receptacle

Representative Photo Only
(actual product may vary based on configuration selections)

DIN Rail Receptacle	
Current Rating	15A
Options	Ground Fault Current Interrupt

CERTIFICATIONS AND APPROVALS	
cULus	UL 508A (file# E54866)
For UL Certifications Directory:	http://database.ul.com/cgi-bin/XYV/template/LISEXT/1FRAME/index.htm

SDN-P DIN Rail Series

The SDN DIN Rail power supplies provide industry leading performance. Sag Immunity, transient suppression and noise tolerant, the SDN series ensures compatibility in demanding applications. Power factor correction to meet European directives, hazardous location approvals and optional redundant accessories allow the SDN series to be used in a wide variety of applications. Wide operation temperature range, high tolerance to shock and vibration and reliable design make the SDN series the preferred choice of users.

Applications

- Industrial/Machine Control
- Process Control
- Conveying Equipment
- Material Handling
- Vending Machines
- Packaging Equipment
- DeviceNet™
- Amusement Park Equipment
- Semiconductor Fabrication Equipment

Features

- Power Factor Correction (per EN61000-3-2)
- Auto Select 115/230 Vac, 50/60 Hz Input
- Improved metal mounting clip
- DC OK Signal
- Adjustable Voltage
- Parallel Capability standard on all units
- Industrial grade design
  - -10°C to 60°C operation without derating. Indefinite short circuit, overvoltage and overtemperature protection.
  - Powers high inrush loads without shutdown or foldback
  - Rugged metal case and DIN connector
- Narrow width on rail for space critical applications
- User-friendly front panel
  - Large, rugged, accessible, multiple connection screw terminations
  - Easy installation
- 12 Vdc and 48 Vdc single phase models available
- Highly efficient >90% switching technology
- High MTBF and reliability

Accessories

- Chassis Mount Bracket (SDN-PMBRK2)

Certifications and Compliances *

All Models

- c UL us Listed, Ind. Control Equipment, E61379
  - UL 508, CSA C22.2 No. 107.1
- c UL us UL Recognized Component, ITE, E137632
  - UL 60950-1/CSA C22.2 No. 60950-1, 2nd Edition
- c UL us UL Recognized Component, Haz. Loc., E234790
  - ISA 12.12.01, CSA C22.2 No. 213
  - Class I, Division 2, Groups A, B, C, D
- CE - Low Voltage Directive
  - IEC/EN60950-1, 2nd Edition
- Sag Immunity: SEMI F47
- RoHS Compliant

Models SDN 2.5-24-100P, SDN 4-24-100LP

- Class 2 per UL 1310, CSA C22.2 No. 223

Models SDN 2.5-24-100P, SDN 4-24-100LP, SDN 5-24-100P, SDN 10-24-100P

- Ex ATEX Directive
  - EN50021, Ex II 3 G, Ex nC IIC Gc

Related Products

- SDP™ Series
- SCP Series
- SCL Series
- SDU UPS

* Refer to user manual for installation requirements when used in hazardous locations.

SDN-P Specifications (Single Phase), 24 Vdc Output

Description	Catalog Number			
	SDN 2.5–24–100P	SDN 4–24–100LP	SDN 5–24–100P	SDN 10–24–100P
Input				
Nominal Voltage	115/230 Vac, Auto select			
–AC Range	85-264 Vac	85-132/176-264 Vac		
–DC Range [1]	90 - 375 Vdc	210 - 375 Vdc		
–Frequency	47 - 63 Hz			
Nominal Current [2]	1.3 / 0.7 A	2.1 / 1.0 A	2.2 / 1.0 A	5 / 2 A typ.
–Inrush current max.	typ. < 25 A	typ. < 20 A		typ. < 40 A
Efficiency (Losses [3])	> 87.5% typ. (8.6 W)	> 88% typ. (13.1 W)	> 88% typ. (16.4 W)	> 88% typ. (32.7 W)
Power Factor Correction	Units Fulfill EN61000-3-2			
Output				
Nominal Voltage	24 Vdc (22.5 - 28.5 Vdc adj.)	24 Vdc (22.5 - 28.5 Vdc adj.)	24 Vdc (22.5 - 28.5 Vdc adj.)	
–Tolerance	< ±2% overall (combination Line, load, time and temperature related changes)			
–Ripple [4]	< 50 mVpp			
Overvoltage Protection	< 33 Vdc	< 27 Vdc	< 33 Vdc	
Nominal Current	2.5 A (60 W)	3.8 A (92 W)	5 A (120 W)	10 A (240 W)
–Current Limit	Fold Forward (Current rises, voltage drops to maintain constant power during overload up to max peak current)			
Holdup Time [5]	> 20 ms @ full load			
Parallel Operation	Single or Parallel use is selectable via Front Panel Switch (SDN 2.5, 4 should not be used in parallel as Class 2 rating would be violated.)			
General				
EMC: –Emissions	EN61000-6-3, -4; Class B EN55011, EN55022 Radiated and Conducted including Annex A. EN61000-3-2			
–Immunity	EN61000-6-1, -2; EN61000-4-2 Level 4, EN61000-4-3 Level 3; EN61000-4-6 Level 3; EN61000-4-4 Level 4 input and Level 3 output; EN61000-4-5 Isolation Class 4, EN61000-4-11;			
Temperature	Storage: -25°C...+85°C Operation. -10°-60°C full power with operation to 70°C possible with a linear derating to half power from 60°C to 70°C (Convection cooling, no forced air required). Operation up to 50% load permissible with sideways or front side up mounting orientation.			
Humidity	The relative humidity is < 90% RH, noncondensing; IEC 68-2-2, 68-2-3.			
MTBF:	> 820,000 hours	> 640,000 hours		> 600,000 hours
– Standard	Bellcore Issue 6 Method 1 Case 3 @ 40°C			
Warranty	5 year limited warranty			
General Protection/Safety	Protected against continuous short-circuit, overload, open-circuit. Protection Class 1 (IEC536), degree of protection IP20 (IEC 529) Safe low voltage: SELV (acc. EN60950)			
Status Indicators	Green LED and DC OK signal (N.O. Solid State Contact rated 200 mA / 60 Vdc)			
Installation				
Fusing –Input	Internally fused. External 10 A slow acting fusing for the input is recommended to protect input wiring.			
–Output	Outputs are capable of providing high currents for short periods of time for inductive load startup or switching. Fusing may be required for wire/loads if 2x Nominal O/P current rating cannot be tolerated. Continuous current overload allows for reliable fuse tripping.			
Mounting	Simple snap-on system for DIN Rail TS35/7.5 or TS35/15 or chassis-mounted (optional screw mounting set SDN-PMBRK2 required).			
Connections	Input: IP20-rated screw terminals, connector size range: 16-10 AWG (1.5-6 mm²) for solid conductors. 16-12 AWG (0.5-4 mm²) for flexible conductors. Output: Two connectors per output, connector size range: 16-10 AWG (1.5 - 6 mm²) for solid conductors.			
Case	Fully enclosed metal housing with fine ventilation grid to keep out small parts.			
–Free Space	25 mm above and below, 25 mm left and right, 10 mm in front		25 mm above and below, 25 mm left and right, 15 mm in front	70 mm above and below, 25 mm left and right, 15 mm in front
H x W x D inches (mm)	4.88. x 1.97 x 4.55 (124.0 x 50.0 x 116.0)	4.88 x 2.56 x 4.55 (124.0 x 65.0 x 116.0)		4.88 x 3.26 x 4.55 (124.0 x 83.0 x 116.0)
Weight lbs (kg)	1.6 (.73)	2.4 (1.10)		3.3 (1.50)

1. Not UL listed for DC input.
2. Input current ratings are conservatively specified with low input, worst case efficiency and power factor.
3. Losses are heat dissipation in watts at full load, nominal input line.
4. Ripple/noise is stated as typical values when measured with a 20 MHz, bandwidth scope and 50 Ohm resistor.
5. Full load, 100 Vac Input @ T_{amb} = +25°C

Contact **Technical Services** at **(800) 377-4384** with any questions.
Visit our website at www.solahd.com.

SDN-P Series Dimensions

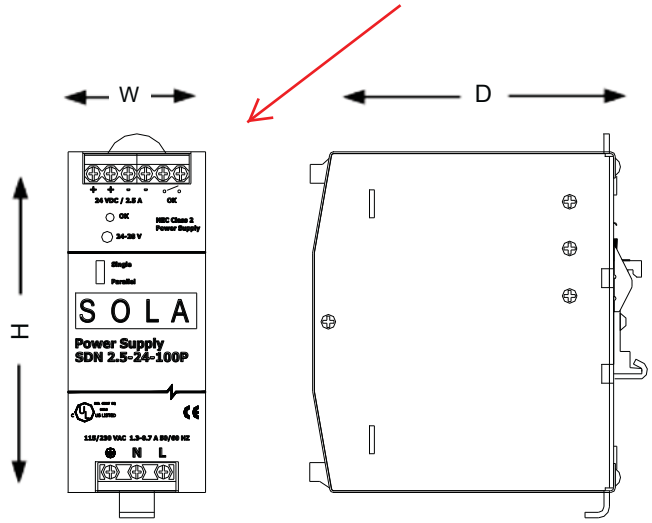

Catalog Number	Dimensions – inches (mm)		
	H	W	D
12 Vdc			
SDN 9–12–100P	4.88 (124.0)	2.56 (65.0)	4.55 (116.0)
SDN 16–12–100P	4.88 (124.0)	3.23 (83.0)	4.55 (116.0)
24 Vdc			
SDN 2.5–24–100P	4.88 (124.0)	1.97 (50.0)	4.55 (116.0)
SDN 4–24–100LP	4.88 (124.0)	2.56 (65.0)	4.55 (116.0)
SDN 5–24–100P	4.88 (124.0)	2.56 (65.0)	4.55 (116.0)
SDN 10–24–100P	4.88 (124.0)	3.26 (83.0)	4.55 (116.0)
48 Vdc			
SDN 5–48–100P	4.88 (124.0)	3.23 (83.0)	4.55 (116.0)

Contact **Technical Services** at **(800) 377-4384** with any questions.
Visit our website at www.solahd.com.

BOM #7

SOLAHD

Dry Contact Relay Kit

RELAYCARD-SDU

Instruction Manual

While every precaution has been taken to ensure accuracy and completeness in this manual, SolaHD assumes no responsibility, and disclaims all liability for damages resulting from use of this information or for any errors or omissions.

©2009 SolaHD. All rights reserved throughout the world. Specifications are subject to change without notice.

®SolaHD name and logo are registered trademarks of EGS Electrical Group, LLC. All names referred to are trademarks or registered trademarks of their respective owners.

Table of Contents

What's Included 4

Installation 4

Product Description 5–6

Notes 7

What's Included

- One dry contact relay box
- One interface cable (DB-9 connector)
- One 12 V dc power interconnection cable
- Four M3 mounting screws

Installation

⚠ DANGER **Only qualified personnel should install or service this system. Electrical safety precautions must be followed when installing or servicing this equipment. To prevent risk of electrical shock, turn off and lock out all power sources to the unit before making electrical connections.**

1. Using the four M3 screws provided, mount the dry relay box on the right side of the SDU UPS. If mounting on a separate chassis, the hole diameter for the relay box is 0.378 in. (3.5 mm).

2. Plug the 12 V dc power interconnection cable into the 12 V dc input of the relay box. Plug the other end of the power interconnection cable into the aux dc output (or Vout) of the SDU UPS.

3. Plug the DB-9 connector cable into the RS232 communication port of the SDU UPS. Plug the other end of the connector into the remote port of the dry contact relay.

Product Description

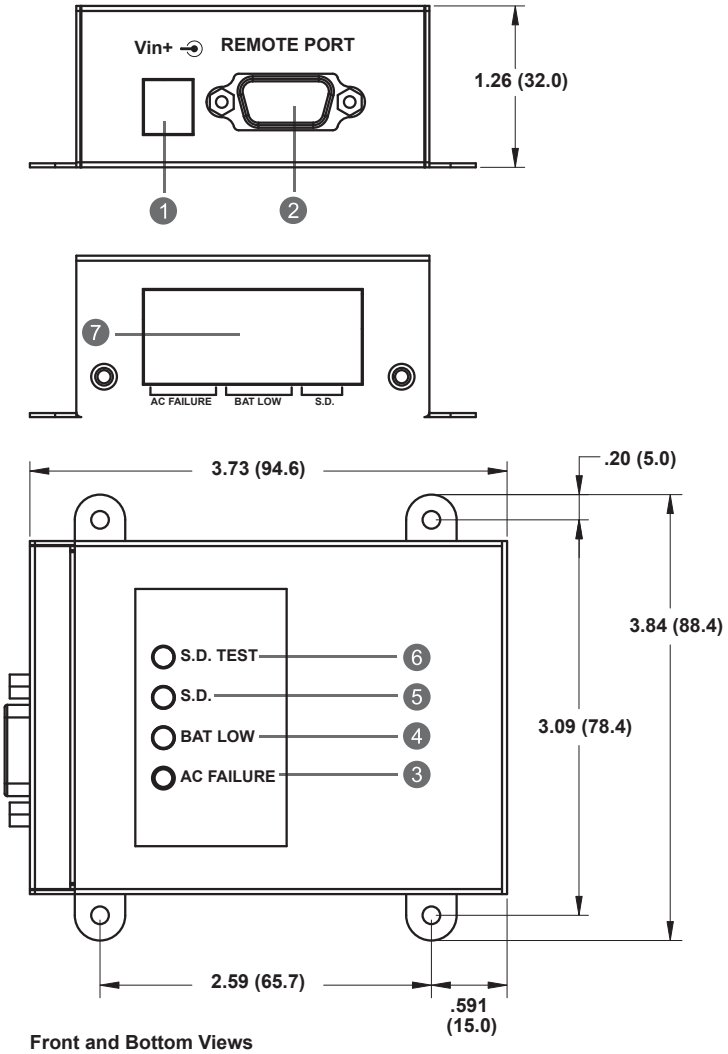

Front and Bottom Views
All dimensions are in inches (mm)

1. **Vin:** Input connector used to provide the dry contact relay with 12 V dc input power.
2. **Remote Port:** This communication port is used for linking to the SDU UPS.

   NOTE: The provided connection cable is used only for this dry contact relay.
3. **Ac Failure Indicator:** This yellow LED is illuminated when ac voltage is abnormal.
4. **Battery Low Indicator:** This green LED is illuminated when battery capacity is low.
5. **Shut Down Indicator (S.D.):** When the dry contact relay receives the shut down signal for 1 second, the red LED is illuminated and the SDU UPS goes into shut down mode.

Product Description continued from page 5

6. Shut Down Test Button (S.D. Test): Provides the dry contact relay a shut down signal to test the shut down function when the UPS is operating in the battery mode. Push this button for 1 second and the red LED is illuminated. The SDU UPS goes into shut down mode after 3 minutes.

7. 8 Pole Terminal Blocks

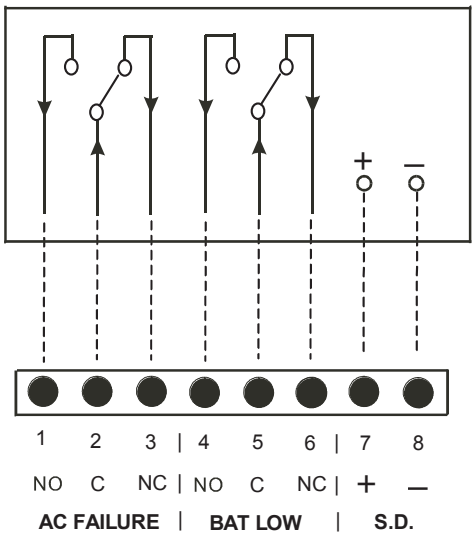

Table 1: Terminal Blocks—Layout and Operation

+UPS State		External Input	DCB LED Display			Terminal Blocks			
O = Occur X = Does not occur		O = Enable X = Disable	O = LED On X = LED Off			O = Close X = Open			
Ac Failure	BAT Low	S.D.	Yellow	Green	Red	Pin 1–2	Pin 2–3	Pin 4–5	Pin 5–6
X	X	X	X	X	X	X	O	X	O
O	X	X	O	X	X	O	X	X	O
O	O	X	X	O	X	O	X	O	X
O	X	O	X	X	O	X	O	X	O

Notes

1. Suitable electric wire = AWG 22–12 (IEC 2.5 mm).

2. Contact maximum current = 1.0 A @ 250 V ac.

3. Shut down input signal (range = +5 V to +12 V) can be provided by enabling terminals 7 and 8 for remote shut down control, assured by an external remote device.

Technical Support
U.S.: (800) 377-4384
International: (847) 268-6000
E-mail: www.tech@solahd.com
Web site: www.solahd.com

Part Number: A272-081 Rev 7
May 20, 2009

BOM #8

Selection Guide

Allen-Bradley

CompactLogix System

Catalog Numbers 1769-L16ER-BB1B, 1769-L18ER-BB1B, 1769-L18ERM-BB1B, 1769-L24ER-QB1B, 1769-L24ER-QBFC1B, 1769-L27ERM-QBFC1B, 1769-L30ER, 1769-L30ER-NSE, 1769-L30ERM, 1769-L33ER, 1769-L33ERM, 1769-L36ERM, 1769-AENTR, 1768-L43, 1768-L43S, 1768-L45, 1768-L45S

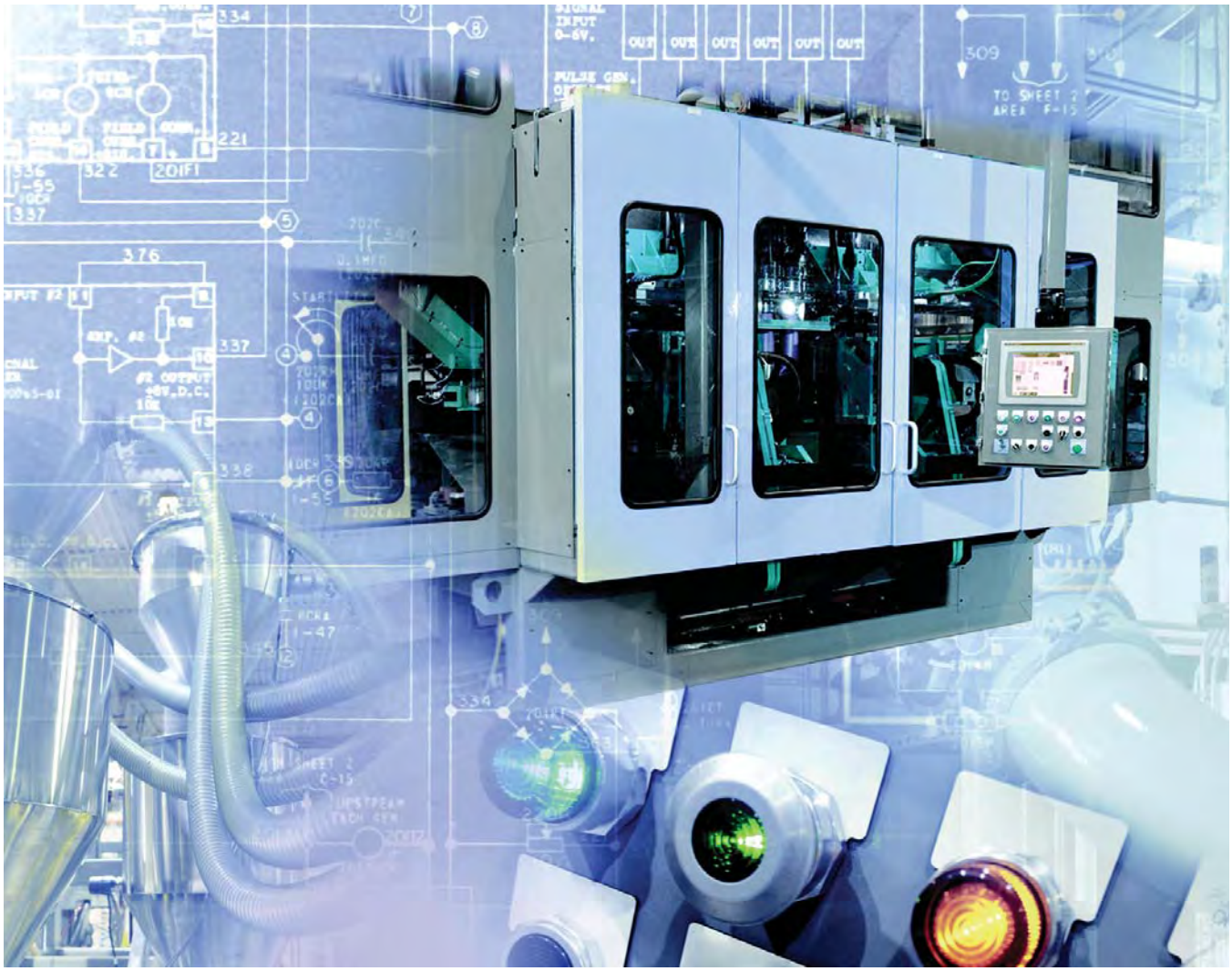

1734 POINT I/O Modules
1769 Compact I/O Modules
1768 Integrated Motion Modules
1768 and 1769 Communication Modules
1768 and 1769 CompactLogix Controllers
1768 and 1769 Compact Power Supplies

LISTEN. THINK. SOLVE.®

CompactLogix Communication Options

You can configure your system for information exchange between a range of devices and computing platforms and operating systems. Select a CompactLogix controller with integrated communication or the appropriate communication module.

For detailed specifications, see:

- CompactLogix Controllers Specifications Technical Data, publication 1769-TD005.
- CompactLogix Communication Modules Specifications Technical Data, publication 1769-TD007.

EtherNet/IP Communication Options

The Ethernet Industrial network protocol (EtherNet/IP) is an open industrial-networking standard that supports both real-time I/O messaging and message exchange. The EtherNet/IP network uses off-the-shelf Ethernet communication chips and physical media.

Dual-port EtherNet/IP support embeds switch technology directly in the controller to so the controller can operate on star, linear, or ring EtherNet/IP topologies.

Cat. No.	Description	Communication Rate	Logix Resources[1]	TCP/IP Connections
1769-L16ER-BB1B,	CompactLogix 5370 L1 controller with integrated EtherNet/IP dual-port, POINT I/O form factor	10/100 Mbps	4 nodes 256 EtherNet/IP connections	120
1769-L18ER-BB1B, 1769-L18ERM-BB1B			8 nodes 256 EtherNet/IP connections	
1769-L24ER-BB1B, 1769-L24ER-QBFC1B	CompactLogix 5370 L2 controller with integrated EtherNet/IP dual-port, Compact I/O form factor	10/100 Mbps	8 nodes 256 EtherNet/IP connections	120
1769-L27ERM-QBFC1B		10/100 Mbps	16 nodes 256 EtherNet/IP connections	
1769-L30ER, 1769-L30ERM	CompactLogix 5370 L3 controller with integrated EtherNet/IP dual-port	10/100 Mbps	16 nodes 256 EtherNet/IP connections	120
1769-L33ER, 1769-L33ERM			32 nodes 256 EtherNet/IP connections	
1769-L36ERM			48 nodes 256 EtherNet/IP connections	
1769-AENTR	1769 EtherNet/IP adapter	10/100 Mbps	128 EtherNet/IP connections	96
1768-ENBT	1768 EtherNet/IP communication bridge module	10/100 Mbps	128 EtherNet/IP connections	64
1768-EWEB	1768 Ethernet web server module	10/100 Mbps	128 EtherNet/IP connections	64

(1) The number of nodes listed for CompactLogix 5370 controllers represents the maximum number of EtherNet/IP nodes you can include in a Logix Designer application project for those controller. For example, in a Logix Designer application project that uses a 1769-L18ERM-BB1B controller, you can add as many as 8 EtherNet/IP nodes to the project.

1734 Specialty I/O Modules

Cat. No.	Description	Wiring Base	POINTBus Current
1734-232ASC 1734-485ASC	The 1734-232ASC and 1734-485ASC serial interface modules offer a serial-link communication interface solution for peripheral products with RS-232 (only 1734-232ASC), RS-485, and RS-422 ports (only 1734-485ASC.)	1734-TB, 1734-TBS	75 mA
1734-ARM	The 1734-ARM address reserve module reserves address and slot numbers to maintain a numbering scheme of an existing system. The 1734-ARM has no module configuration and does not communicate I/O data.	1734-TB, 1734-TBS	75 mA
1734-CTM 1734-VTM	The common terminal module (1734-CTM) and voltage term66inal module (1734-VTM) expand the termination capabilities of POINT I/O modules. Install the modules to provide support for higher density (8 channel) POINT I/O modules.	1734-TB, 1734-TBS, 1734-TOP, 1734-TOPS	75 mA
1734-SSI	The 1734-SSI module collects serial data from absolute-position, encoding sensors that use standard Synchronous Serial Interface (SSI) protocol.	1734-TB, 1734-TBS	110 mA

1769 Compact I/O Modules

The 1769 Compact I/O modules can be installed on the CompactLogix 5370 L2 and L3 controllers and 1768 CompactLogix controllers. The modules mechanically lock together by means of a tongue-and-groove design and have an integrated communication bus that is connected from module to module by a moveable bus connector.

Each I/O module includes a built-in removable terminal block with finger-safe cover for connections to I/O sensors and actuators. The terminal block is behind a door at the front of the module. I/O wiring can be routed from beneath the module to the I/O terminals.

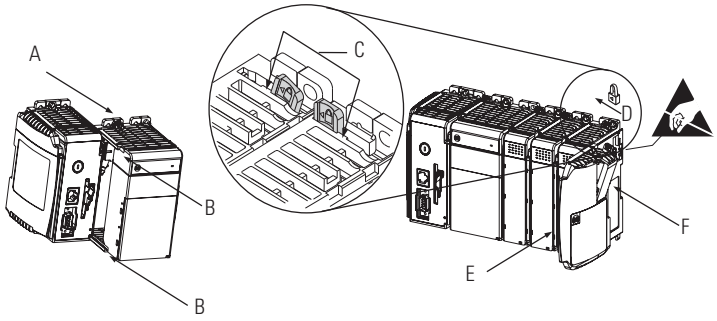

For detailed specifications, see 1769 Compact I/O Modules Specifications Technical Data, publication 1769-TD006.

Power Supply Distance Ratings

Check each module's specification table for the power supply distance rating. This indicates how many slot positions the module can be from the power supply.

1769 AC Digital Modules

Cat. No.	Inputs/Outputs	Voltage Category	Operating Voltage Range	Backplane Current	Power Supply Distance Rating
1769-IA8I	8 inputs, individually isolated	100/120V AC	79…132V AC, 47…63 Hz	90 mA @ 5.1V(1)	8
1769-IA16	16 inputs	100/120V AC	79…132V AC, 47…63 Hz	115 mA @ 5.1V	8
1769-IM12	12 inputs	200/240V AC	159…265V AC, 47…63 Hz	100 mA @ 5.1V	8
1769-OA8	8 outputs	100/240V AC	85…265V AC 47…63 Hz	145 mA @ 5.1V	8
1769-OA16	16 outputs	100/240V AC	85…265V AC 47…63 Hz	225 mA @ 5.1V	8

(1) Maximum is 190 mA.

1769 DC Digital Modules

Cat. No.	Inputs/Outputs	Voltage Category	Operating Voltage Range	Backplane Current	Power Supply Distance Rating
1769-IG16	16 inputs	5V DC TTL	4.5…5.5V DC	120 mA @ 5.1V	8
1769-IQ16	16 inputs	24V DC sink/source	10…30V DC @ 30 °C (86 °F) 10…26.4V DC @ 60 °C (140 °F)	115 mA @ 5.1V	8
1769-IQ16F	16 inputs, high-speed	24V DC sink/source	10…30V DC @ 30 °C (86 °F) 10…26.4V DC @ 60 °C (140 °F)	100 mA @ 5.1V	8
1769-IQ32	32 inputs	24V DC sink/source	10…30V DC @ 30 °C (86 °F) 10…26.4V DC @ 60 °C (140 °F)	170 mA @ 5.1V	8
1769-IQ32T	32 inputs	24V DC sink/source	20.4…26.4V DC @ 60 °C (140 °F)	170 mA @ 5.1V	8
1769-IQ6XOW4	6 inputs 4 outputs	24V DC sink/source input AC/DC normally open relay contact outputs	10…30V DC @ 30 °C (86 °F) 10…26.4V DC @ 60 °C (140 °F)	105 mA @ 5.1V 50 mA @ 24V	8
1769-OB8	8 outputs	24V DC source	20.4…26.4V DC	145 mA @ 5.1V	8
1769-OB16	16 outputs	24V DC source	20.4…26.4V DC	200 mA @ 5.1V	8
1769-OB16P	16 outputs, protected	24V DC source	20.4…26.4V DC	160 mA @ 5.1V	8
1769-OB32	32 outputs	24V DC source	20.4…26.4V DC	300 mA @ 5.1V	6
1769-OB32T	32 outputs	24V DC source	10.2…26.4V DC	220 mA @ 5.1V	8
1769-OG16	16 outputs	5V DC TTL	4.5…5.5V DC	200 mA @ 5.1V	8
1769-OV16	16 outputs	24V DC sink	20.4…26.4V DC	200 mA @ 5.1V	8
1769-OV32T	32 outputs	24V DC sink	10.2…26.4V DC	300 mA @ 5.1V	8

1769 Contact Output Modules

Cat. No.	Inputs/Outputs	Operating Voltage Range	Backplane Current	Power Supply Distance Rating
1769-OW8	8 outputs	5…265V AC 5…125V DC	125 mA @ 5.1V 100 mA @ 24V	8
1769-OW8I	8 outputs, individually isolated	5…265V AC 5…125V DC	125 mA @ 5.1V 100 mA @ 24V	8
1769-OW16	16 outputs	5…265V AC 5…125V DC	205 mA @ 5.1V 180 mA @ 24V	8

1769 Analog Modules

Cat. No.	Inputs/Outputs	Range	Resolution	Backplane Current	Power Supply Distance Rating
1769-IF4	4 inputs, differential or single-ended	±10V, 0…10V, 0…5V, 1…5V 0…20 mA, 4…20 mA	14 bits (unipolar) 14 bits plus sign (bipolar)	120 mA @ 5.1V 60 mA @ 24V	8
1769-IF4I	4 inputs, differential or single-ended, individually isolated	±10V, 0…10V, 0…5V, 1…5V 0…20 mA, 4…20 mA	16 bits (unipolar) 15 bits plus sign (bipolar)	145 mA @ 5.1V 125 mA @ 24V	8
1769-IF8	8 inputs, differential or single-ended	±10V, 0…10V, 0…5V, 1…5V 0…20 mA, 4…20 mA	16 bits (unipolar) 15 bits plus sign (bipolar)	120 mA @ 5.1V 70 mA @ 24V	8
1769-IF16C	16 inputs, single-ended	0…20 mA, 4…20 mA	16 bits (unipolar) 15 bits plus sign (bipolar)	190 mA @ 5.1V 70 mA @ 24V	8
1769-IF16V	16 inputs, differential	±10V, 0…10V, 0…5V, 1…5V	16 bits (unipolar) 15 bits plus sign (bipolar)	190 mA @ 5.1V 70 mA @ 24V	8
1769-IF4XOF2	4 differential or single-ended inputs 2 single-ended outputs	0…10V 0…20 mA	Input: 8 bits plus sign Output: 8 bits plus sign	120 mA @ 5.1V 160 mA @ 24V	8
1769-IF4FXOF2F	4 fast differential or single-ended inputs 2 fast single-ended outputs	±10V, 0…10V, 0…5V, 1…5V 0…20 mA, 4…20 mA	Input: 14 bits (unipolar) 14 bits plus sign (bipolar) Output: 13 bits (unipolar) 13 bits plus sign (bipolar)	220 mA @ 5.1V 120 mA @ 24V	8
1769-OF2	2 outputs, single-ended	±10V, 0…10V, 0…5V, 1…5V 0…20 mA, 4…20 mA	14 bits (unipolar) 14 bits plus sign (bipolar)	120 mA @ 5.1V 120 mA @ 24V	8
1769-OF4	4 outputs, single-ended	±10V, 0…10V, 0…5V, 1…5V 0…20 mA, 4…20 mA	15 bits plus sign unipolar and bipolar	120 mA @ 5.1V 170 mA @ 24V	8
1769-OF4CI	4 outputs, differential, individually isolated	0…20 mA 4…20 mA	16 bits (unipolar)	140 mA @ 5.1V 145 mA @ 24V	8
1769-OF4VI	4 outputs, differential, individually isolated	±10V 0…10V 0…5V 1…5V	15 bits plus sign (bipolar)	145 mA @ 5.1V 75 mA @ 24V	8
1769-OF8C	8 outputs, single-ended	0…20 mA 4…20 mA	16 bits (unipolar)	140 mA @ 5.1V 145 mA @ 24V	8
1769-OF8V	8 outputs, single-ended	±10V 0…10V 0…5V 1…5V	16 bits plus sign (bipolar)	145 mA @ 5.1V 125 mA @ 24V	8

1769 Expansion Cables

If you divide 1769 modules into multiple banks, make sure:

- each bank needs its own power supply.
- use expansion cables to connect the banks.
- the last I/O bank requires an end cap.

Vertical

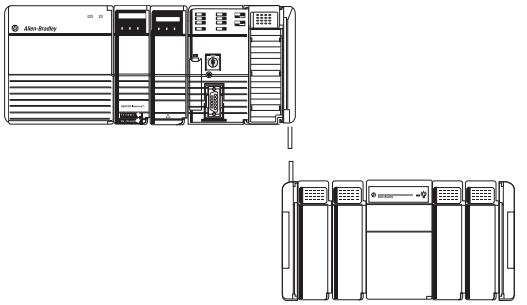

Horizontal

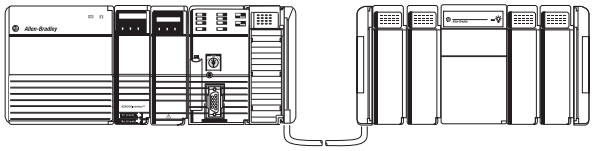

How you orient I/O banks determines the expansion cables you need to connect the I/O banks.

If you add a	And connect the chassis	Use this cable[1]
Second bank	Right to left	1769-CRL*x*
	Right to right	1769-CRR*x*
Third bank	Right to left	1769-CRL*x*
	Right to right	1769-CRR*x*
	Left to left	1769-CLL*x*

(1) Where *x* = 1 for 1 ft (305 mm) or 3 for 3.28 ft (1 m).

1769 End Caps

The final 1769 Compact I/O bank requires an end cap on the end without the expansion cable. The CompactLogix 5370 L2 controller comes with a right-end cap, so you do not need to order one separately.

- Right end cap, catalog number 1769-ECR
- Left end cap, catalog number 1769-ECL

CompactLogix Power Supplies

Select power supplies based on the controller and the number of additional I/O banks.

For a	Select
CompactLogix 5370 L3 controller	• One 1769 power supply for the controller and local I/O modules • One 1769 power supply for each additional bank of I/O modules
CompactLogix 5370 L2 controller	No power supply as it is integral to the controller package
CompactLogix 5370 L1 controller	No power supply as it is integral to the controller package
1768 CompactLogix controller	• One 1768 power supply for the controller and 1768 modules • One 1769 power supply for each additional bank of I/O modules

Power Supplies

Cat. No.	Description	Voltage Category	Operating Voltage Range
1769-PA2	1769 Compact I/O expansion power supply	120V/220V AC	85...265V AC
1769-PB2		24V DC	19.2...31.2V DC
1769-PA4		120V/220V AC	85...265V AC or 170...265V AC (switch selectable) 47...63 Hz
1769-PB4		24V DC	19.2...31.2V DC
1768-PA3	1768 CompactLogix power supply	120V/220V AC	85...265V AC or 108...132V DC
1768-PB3		24V DC	16.8...31.2V DC

For detailed specifications, see Compact Power Supplies Specifications Technical Data, publication 1769-TD008.

CompactLogix Power Supplies Specifications

1768 CompactLogix Power Supplies Catalog Numbers 1768-PA3, 1768-PB3

1769 Compact I/O Power Supplies Catalog Numbers 1769-PA2, 1769-PB2, 1769-PA4, 1769-PB4

Topic	Page
1768 CompactLogix Power Supplies	3
1769 Compact I/O Power Supplies	7

Environmental Specifications - 1768 and 1769 Power Supplies

Attribute	1768-PA3, 1769-PB3 1769-PA2, 1769-PB2, 1769-PA4, 1769-PB4
Temperature, operating IEC 60068-2-1 (Test Ad, Operating Cold), IEC 60068-2-2 (Test Bd, Operating Dry Heat), IEC 60068-2-14 (Test Nb, Operating Thermal Shock)	0…60 °C (32…140 °F)
Temperature, storage IEC 60068-2-1 (Test Ab, Unpackaged Nonoperating Cold), IEC 60068-2-2 (Test Bb, Unpackaged Nonoperating Dry Heat), IEC 60068-2-14 (Test Na, Unpackaged Nonoperating Thermal Shock)	-40…85 °C (-40…185 °F)
Relative humidity IEC 60068-2-30 (Test Db, Unpackaged Nonoperating Damp Heat)	5…95% noncondensing
Vibration IEC 60068-2-6 (Test Fc, Operating)	5 g @ 10…500 Hz
Shock, operating IEC 60068-2-27 (Test Ea, Unpackaged Shock)	30 g
Shock, nonoperating IEC 60068-2-27 (Test Ea, Unpackaged Shock)	50 g

Important User Information

Solid state equipment has operational characteristics differing from those of electromechanical equipment. Safety Guidelines for the Application, Installation and Maintenance of Solid State Controls (publication SGI-1.1 available from your local Rockwell Automation sales office or online at http://www.rockwellautomation.com/literature/) describes some important differences between solid state equipment and hard-wired electromechanical devices. Because of this difference, and also because of the wide variety of uses for solid state equipment, all persons responsible for applying this equipment must satisfy themselves that each intended application of this equipment is acceptable.

In no event will Rockwell Automation, Inc. be responsible or liable for indirect or consequential damages resulting from the use or application of this equipment.

The examples and diagrams in this manual are included solely for illustrative purposes. Because of the many variables and requirements associated with any particular installation, Rockwell Automation, Inc. cannot assume responsibility or liability for actual use based on the examples and diagrams.

No patent liability is assumed by Rockwell Automation, Inc. with respect to use of information, circuits, equipment, or software described in this manual.

Reproduction of the contents of this manual, in whole or in part, without written permission of Rockwell Automation, Inc., is prohibited.

Throughout this manual, when necessary, we use notes to make you aware of safety considerations.

WARNING	Identifies information about practices or circumstances that can cause an explosion in a hazardous environment, which may lead to personal injury or death, property damage, or economic loss.
IMPORTANT	Identifies information that is critical for successful application and understanding of the product.
ATTENTION	Identifies information about practices or circumstances that can lead to personal injury or death, property damage, or economic loss. Attentions help you identify a hazard, avoid a hazard, and recognize the consequence
SHOCK HAZARD	Labels may be on or inside the equipment, for example, a drive or motor, to alert people that dangerous voltage may be present.
BURN HAZARD	Labels may be on or inside the equipment, for example, a drive or motor, to alert people that surfaces may reach dangerous temperatures.

Rockwell Automation, Rockwell Software, Allen-Bradley, TechConnect, Compact I/O, and CompactLogix are trademarks of Rockwell Automation, Inc.

Trademarks not belonging to Rockwell Automation are property of their respective companies.

1769 Compact I/O Power Supplies

Each 1769-L3*x* controller and additional bank of I/O modules requires a 1769 power supply. Place 1769 I/O modules to the left or right of the 1769 power supply. As many as eight I/O modules can be placed on each side of the power supply.

Each 1769 module also has a power supply distance rating (the number of modules from the power supply). Each module must be located within its distance rating. See the specifications for the module to determine its distance rating.

Technical Specifications - 1769 Compact I/O Power Supplies

Attribute	1769-PA2	1769-PB2	1769-PA4	1769-PB4
Input voltage range	85…265V AC	19.2...31.2V DC	85…265V AC or 170...265V AC, switch selectable	19.2...31.2V DC
Input voltage, nom	120V/220V AC	24V DC	120V/220V AC	24V DC
Power consumption	100 VA @ 120V AC 130 VA @ 240V AC	50 VA @ 24V DC	200 VA @ 120V AC 240 VA @ 240V AC	100 VA @ 24V DC
Power dissipation	8 W @ 60° C (140° F)	7.5 W @ 60° C (140° F)	18 W @ 60° C (140° F)	14.5 W @ 60° C (140° F)
Current capacity @ 5V	2.0 A	2.0 A	4.0 A	4.0 A
Current capacity @ 24V	0.8 A	0.8 A	2.0 A	2.0 A
Inrush current, max	25 A @ 132V AC	30 A @ 31.2V DC	25 A @ 132V AC	30 A @ 31.2V DC
Isolation voltage	265V (continuous), reinforced insulation type (IEC Class 1 grounding required) Routine tested @ 2596V DC for 1 s, AC power input to system and AC power input to 24V DC user power	75V (continuous), reinforced insulation type (IEC Class 1 grounding required) Routine tested at 1697V DC for 1 s, DC power input to system	265V (continuous), reinforced insulation type (IEC Class 1 grounding required) Routine tested at 2596V DC for 1 s, AC power input to system	75V (continuous), reinforced insulation type (IEC Class 1 grounding required) Routine tested at 1697V DC for 1 s, DC power input to system
Fuse type	Wickmann 19195-3.15A Littelfuse 02183.15MXP	Wickmann 19193-6.3A Littelfuse 021706.3MXP	Wickmann 19195-3.15A Littelfuse 02183.15MXP	Wickmann 19193-6.3A Littelfuse 021706.3MXP
Weight, approx.	525 g (1.16 lb)		630 g (1.39 lb)	
Dimensions (HxWxD), approx.	118 x 70 x 87 mm (4.65 x 2.76 x 3.43 in.)			
Module location	DIN rail or panel mount			
Mounting screw torque	1.16 N•m (10 lb•in) - use M4 or #8 screws			
Power supply distance rating	8 8 I/O modules can be connected on either side of the power supply for a maximum of 16 modules			
Wire category[1]	1 - on power ports	2 - on power ports	1 - on power ports	2 - on power ports
Wire size	14 AWG (2.5 mm^2) solid copper wire rated at 90 °C (194 °F) or greater, 1.2 mm (3/64 in.) insulation max			
North American temperature code	T3C			
IEC temperature code	—	T4	—	T4
Enclosure type rating	None (open-style)			

[1] Use this conductor category information for planning conductor routing as described in the system level installation manual. See the Industrial Automation Wiring and Grounding Guidelines, publication 1770-4.1.

Certifications - 1769 Compact Power Supplies

Certification[1]	1769-PA2, 1769-PA4	1769-PB2, 1769-PB4
c-UL-us	UL Listed for Class 1, Division 2 Group A,B,C,D Hazardous Locations, certified for U.S. and Canada. See UL File E10314	
CE	European Union 2004/108/EC EMC Directive, compliant with: • EN 61000-6-2; Industrial Immunity • EN 61000-6-4; Industrial Emissions	
C-Tick	Australian Radiocommunications Act, compliant with: AS/NZS CISPR 11; Industrial Emissions	
	—	European Union 94/9/EC ATEX Directive, compliant with: • EN 60079-15; Potentially Explosive Atmospheres, Protection "n" (Zone 2) • EN 60079-0; General Requirements (Zone 2)

(1) When marked. See the Product Certification link at http://www.ab.com for Declarations of Conformity, Certificates, and other certification details.

Power Requirements and Transformer Sizing - 1769 CompactLogix Power Supplies

1769-PA2 Output Derating

User +24V Current Draw at 0 A

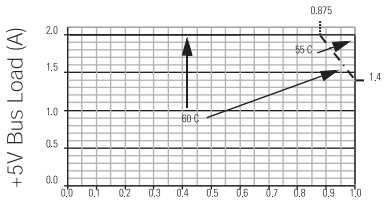

User +24V Current Draw at 0.2 A

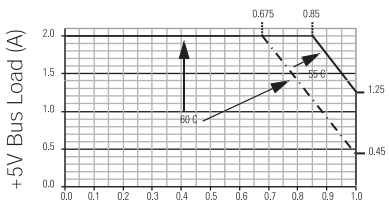

User +24V Current Draw at 0.25 A

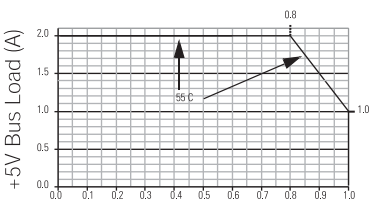

1769-PA2 Power Disspation

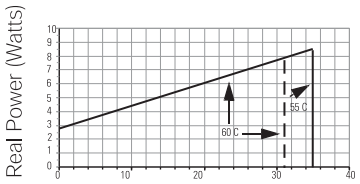

Bus +5V, +24V, and User Load (Watts)

1769-PB2 Output Derating

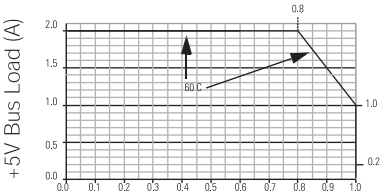

1769-PB2 Power Dissipation

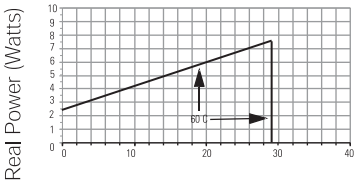

Bus +5V, +24V, and User Load (Watts)

1769-PA4 Output Derating

Total Output: 68 W @ 55 °C (131 °F) or below
61 W @ 60 °C (140 °F) or below

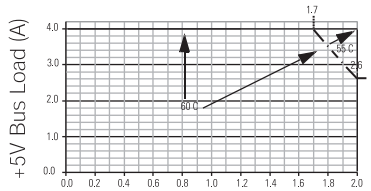

1769-PB4 Output Derating

Total Output: 68 W @ 55 °C (131 °F) or below
61 W @ 60 °C (140 °F) or below

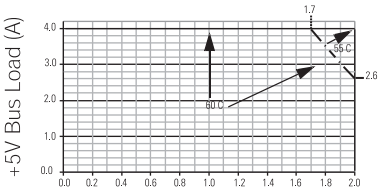

1769-PA4 Power Disspation

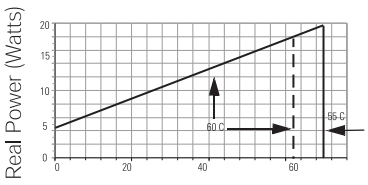

Bus +5V, +24V, and User Load (Watts)

1769-PB4 Power Disspation

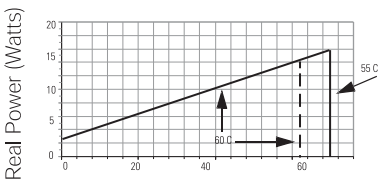

Bus +5V, +24V, and User Load (Watts)

Mounting Dimensions - 1769 CompactLogix Power Supplies

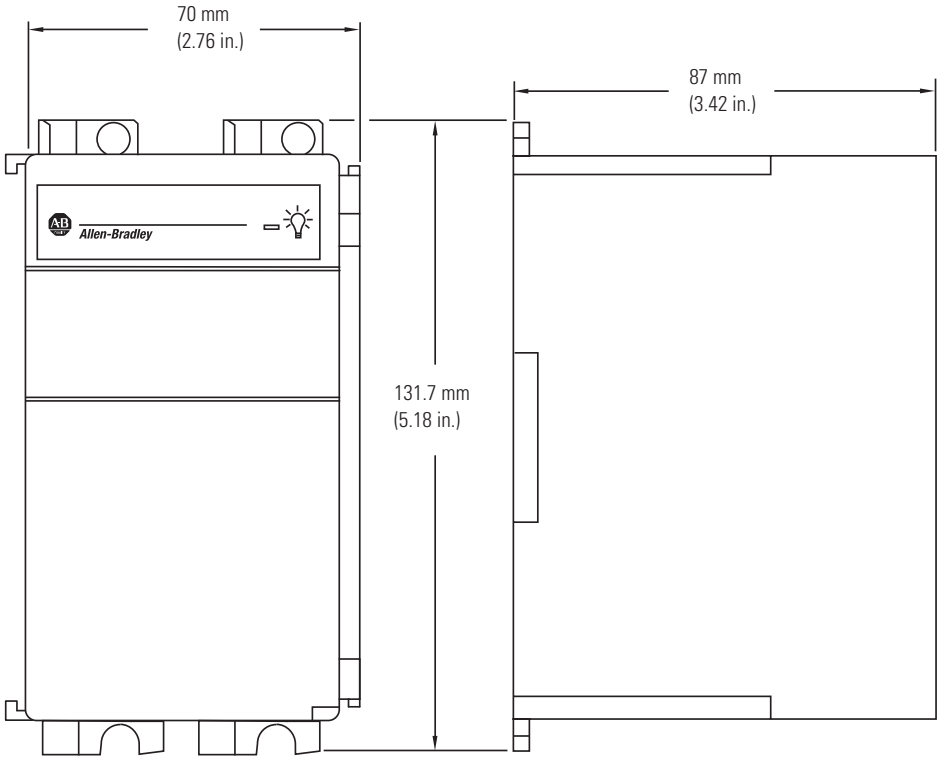

BOM #9

Panduct® Type F Narrow Slot Wiring Duct

- Narrow slot/finger design provides more slots to fit the spacing of high-density terminal blocks and other hardware
- Material: Lead-free PVC
- UL recognized continuous use temperature: 122°F (50°C)
- UL 94 flammability rating of V-0
- Conforms with NFPA 79-2007 section 13.3.1 requirement for flame retardant material
- Provided with mounting holes
- Base and cover length is 6 feet

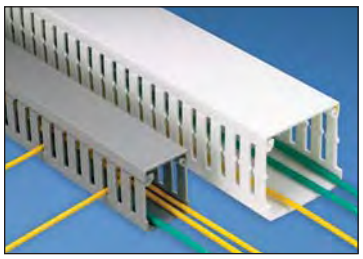

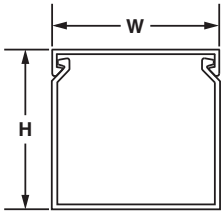

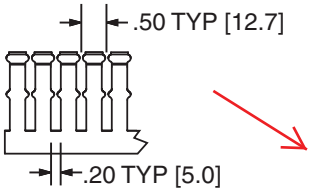

Multiple slot restrictors present with 2" and greater duct wall height.

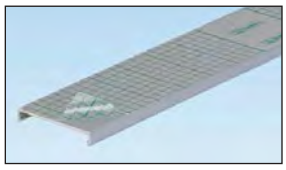

To order cover with protective film add "-F" to part number. 6" cover not available with film.

NEW!

Base Part Number	Duct Size (W x H)* In.	Duct Size (W x H)* mm	Slot Width In.	Slot Width mm	Cover Part Number	Std. Pkg. Qty.	Base Ctn. Qty.	Cover Ctn. Qty.
F.5X.5LG6	0.69 x 0.60	17.5 x 15.2	0.20	5.0	C.5LG6	6	120	120
F.5X1LG6	0.69 x 1.06	17.5 x 26.9	0.20	5.0	C.5LG6	6	120	120
F.75X.75LG6	0.93 x 0.82	23.6 x 20.9	0.20	5.0	C.75LG6	6	120	120
F.75X1.5LG6	0.93 x 1.57	23.6 x 39.9	0.20	5.0	C.75LG6	6	120	120
F1X1LG6	1.26 x 1.13	32.0 x 28.7	0.20	5.0	C1LG6	6	120	120
F1X1.5LG6	1.26 x 1.62	32.0 x 41.1	0.20	5.0	C1LG6	6	120	120
F1X2LG6	1.26 x 2.12	32.0 x 53.8	0.20	5.0	C1LG6	6	120	120
F1X3LG6	1.26 x 3.12	32.0 x 79.2	0.20	5.0	C1LG6	6	120	120
F1X4LG6	1.26 x 4.10	32.0 x 104.1	0.20	5.0	C1LG6	6	60	120
F1.5X1LG6	1.75 x 1.12	44.5 x 28.4	0.20	5.0	C1.5LG6	6	120	120
F1.5X1.5LG6	1.75 x 1.62	44.5 x 41.1	0.20	5.0	C1.5LG6	6	120	120
F1.5X2LG6	1.75 x 2.12	44.5 x 53.8	0.20	5.0	C1.5LG6	6	120	120
F1.5X3LG6	1.75 x 3.12	44.5 x 79.2	0.20	5.0	C1.5LG6	6	120	120
F1.5X4LG6	1.75 x 4.10	44.5 x 104.1	0.20	5.0	C1.5LG6	6	60	120
F2X1LG6	2.25 x 1.12	57.2 x 28.4	0.20	5.0	C2LG6	6	120	120
F2X1.5LG6	2.25 x 1.62	57.2 x 41.1	0.20	5.0	C2LG6	6	120	120
F2X2LG6	2.25 x 2.12	57.2 x 53.8	0.20	5.0	C2LG6	6	120	120
F2X3LG6	2.25 x 3.12	57.2 x 79.2	0.20	5.0	C2LG6	6	60	120
F2X4LG6	2.25 x 4.10	57.2 x 104.1	0.20	5.0	C2LG6	6	60	120
F2X5LG6	2.25 x 5.10	57.2 x 129.5	0.20	5.0	C2LG6	6	60	120
F2.5X3LG6	2.75 x 3.12	69.9 x 79.2	0.20	5.0	C2.5LG6	6	120	120
F3X1LG6	3.25 x 1.12	82.6 x 28.4	0.20	5.0	C3LG6	6	120	120
F3X2LG6	3.25 x 2.12	82.6 x 53.8	0.20	5.0	C3LG6	6	120	120
F3X3LG6	3.25 x 3.12	82.6 x 79.2	0.20	5.0	C3LG6	6	60	120
F3X4LG6	3.25 x 4.10	82.6 x 104.1	0.20	5.0	C3LG6	6	60	120
F3X5LG6	3.25 x 5.10	82.6 x 129.5	0.20	5.0	C3LG6	6	60	120
F4X2LG6	4.25 x 2.12	108.0 x 53.8	0.20	5.0	C4LG6	6	60	120
F4X3LG6	4.25 x 3.12	108.0 x 79.2	0.20	5.0	C4LG6	6	60	120
F4X4LG6	4.25 x 4.10	108.0 x 104.1	0.20	5.0	C4LG6	6	60	120
F4X5LG6	4.25 x 5.10	108.0 x 129.5	0.20	5.0	C4LG6	6	60	120
F6X4LG6	6.25 x 4.15	158.8 x 105.4	0.20	5.0	C6LG6	6	60	120

Part number shown for LG (Light Gray). For other color availability see color selection guide, page C1.48.
Base and cover sold separately.
*"H" dimension includes duct and cover.

Product: 700-HK32A1-3-4

Description: 700-HK General Purpose Slim Line Relay

BOM #11

Representative Photo Only
(actual product may vary based on configuration selections)

CONTROL RELAY DATA

Contact Rating	8 Amp Contact (Slim Line Relay)
Contact Configuration	DPDT Contact Arrangement
Coil Voltage	120V 50/60Hz
Relay Option	No Additional Options

CERTIFICATIONS AND APPROVALS

CE	Marked
UL	Listed with socket, Guide No. NLDX, File No. E3125
UR	Recognized, Guide No. NLDX2, File No. E3125
CSA	
For UL Certifications Directory:	http://database.ul.com/cgi-bin/XYV/template/LISEXT/1FRAME/index.htm

		Cat. No. 700-HK...			
Electrical Ratings					
Rated Thermal Current (I^{th})		1-Pole, 1 CO, SPDT — 16 A		2-Pole, 2 CO, DPDT — 8 A	
Rated Insulation Voltage (U_i)		250V IEC, 300V UL/CSA			
Contacts	Inductive V AC	120V AC	AC-15, 6.2 A B300 Pilot Duty, 3 A A300 (700-HKM_) 1/3 Hp (0.24 kW) 1-phase	120V AC	AC-15, 2.9 A B300 Pilot Duty, 3.0 A 1/4 Hp (0.18 kW), 1-phase
		240V AC	AC-15, 3.1 A B300 Pilot Duty, 1.5 A A300 (700-HKM_) 3/4 Hp (0.55 kW), 1-phase	240V AC	AC-15, 1.4 A B300 Pilot Duty, 1.5 A 1/2 Hp (0.37 kW), 1-phase
		230V AC	0.55 kW, 1-phase	230V AC	0.37 kW, 1-phase
	Inductive V DC	24V DC	DC-13, 5.0 A	24V DC	DC-13, 3.0 A
		125V DC	DC-13, 0.2 A R300 Pilot Duty, 0.22 A	125V DC	DC-13, 0.2 A R300 Pilot Duty, 0.22 A
		250V DC	DC-13, 0.1 A R300 Pilot Duty, 0.11 A	5 A, 250V AC	DC-13, 0.1 A R300 Pilot Duty, 0.11 A
	Resistive	230V AC	AC-1, 16 A	230V AC	AC-1, 8 A
		277V AC	16 A, General Use	277V AC	8 A, General Use
	Make, Break & Continuous	30V DC	DC-1, 12 A 10 A, Resistive	30V DC	DC-1, 6 A 6 A, Resistive
Min. Permissible Contact Ratings		300 mW (5V/60 mA or 60V/5 mA) for AgNi Contacts (700-HK3_) 50 mW (5V/10 mA or 25V/2 mA) for AgNi + Gold Contacts (700-HKX_) 500 mW (100V/5 mA or 5V/100 mA) for $AgSnO_2$ Contacts (700-HKM_)			
Permissible Coil Voltage Variation	Pickup: holding Voltage: Must Dropout Voltage:	80...110% of Nominal Voltage at 50/60 Hz, 73...110% of Nominal Voltage at DC 80% of Nominal V AC at 50/60 Hz, 40% of Nominal V DC 20% of Nominal V AC at 50/60 Hz, 10% Nominal V DC			
Power Consumption		1.2V A (V AC Coils), 0.5 W (V DC Coils)			
Coil Voltages		See Overview/Product Selection			
Design Specification/Test Requirements					
Dielectric Withstand Voltage	Between Open Contacts (VRMS)	1000V AC			
	Contact to Coil (VRMS)	1600V AC			
Mechanical					
Degree of Protection		IP 20 (guarded terminal sockets), RT II — Flux-proof (Relay)			
Mechanical Life Operations		10 x 10^6			
Electrical Life Cycles		230V AC, 16 A Resistive: 100 000 min. 277V AC, 16 A Resistive: 30 000 min. 30V DC, 10 A Resistive: 30 000 min. B300, R300, Hp (kW): 6000 min. A300 (700-HKM_): 100,000 min.		230V AC, 8 A Resistive: 100 000 min. 277V AC, 8 A Resistive: 30 000 min. 30V DC, 6 A Resistive: 30 000 min. B300, R300, Hp (kW): 6000 min.	
Switching Frequency		Mechanical: 18,000 cycles/hr. Electrical: 900 cycles/hr.			
Operating Time at Nominal Voltage at 20 °C (ms)	Pickup	15 ms max.			
	Dropout	5 ms max.			
Vibration	Operational	10...2000 Hz, 0.76 mm (0.03 in.) 2.5 G			
	Non-Operational	10...2000 Hz, 0.76 mm (0.03 in.) 5.0 G			
Shock	Operational	15 G			
	Non-Operational	50 G			
Environmental					
Temperature	Operating	–40...+70 °C (–40...+158 °F)			
	Storage	–40...+85 °C (–40...+185 °F)			
Altitude		2000 m (6560 ft)			
Construction					
Insulating Material		Molded High Dielectric Material			
Enclosure		Transparent Dust Cover			
Contact Material		700-HK3_: Silver nickel (AgNi); 700-HKX_: Silver Nickel + Gold Plating (AgNi + Au); 700-HKM_: Silver Tin Oxide ($AgSnO_2$)			
Terminal Markings on Socket		In accordance with EN 50005			
Sockets			**1-Pole**		**2-Pole**
	Screw Terminal	700-HN121 (10 A @ 70 °C) 700-HN221 (16 A @ 50 °C, 12 A @ 70 °C)		700-HN122 (2 x 5 A @ 70 °C) 700-HN222 (2 x 8 A @ 70 °C)	
	Spring Clamp (Available September 2006)	700-HN223 (15 A @ 40 °C with 2 conductors per terminal) (10 A @ 70 °C with 1 conductor per terminal)		700-HN224 (2 x 8 A@ 70 °C)	
Approvals					
Certifications		CSA Certified, File 75088, UL Recognized, File E3125 Guide NLDX2/NLCX8, cULus Listed with Allen-Bradley sockets (File No. 3125 Guide NLDX/NLDX7), CE Marked			
Standards		EN61810-1, CSA 22.2 No. 14, UL 508			

http://raise.rockwellautomation.com/raconfig/rtcache/jpg/700-hk%20specs.jpg[10/7/2015 4:14:36 PM]

Product: 1492-J3

Description: 1492 IEC Screw Terminal Blocks

BOM #12

Representative Photo Only (actual product may vary based on configuration selections)

BLOCK STYLE	
Base Block Style	Standard Feed-Through Blocks
BASE DATA	
Base Block Type	One-Circuit Feed-Through Block
DETAIL DATA	
Features	Standard Feedthrough
Maximum Wire Size & Rating	UL: 30-12 AWG (25A @600V AC/DC)\nCSA: 26-12 AWG (20A @600V AC/DC)\nIEC: 2.5mm² (24A @800V AC/DC)\nEEx e II: 2.5mm²/20-14 AWG (21A @ 550V AC/DC)
Color	Gray (Standard)
CERTIFICATIONS AND APPROVALS	
UR	UL 486E, UL 1059; Reference File: E40735, E187022
CSA	CSA C22.2 No. 65, No. 158; On Website, Name: Rockwell, Keyword Search: 1492
IEC	EN 60947-1, EN 60947-7-1(Feed-Through), -2(Ground), -3(Fuse)
ATEX	http://www.rockwellautomation.com/products/certification/ex/excert.html
Short Circuit Current Rating	This terminal block carries a minimum of 10kA SCCR rating for all protection methods. Please see the table for other possible elevated ratings.
For CSA Certifications:	http://directories.csa-international.org/directorymain.asp
For UL Certifications Directory:	http://database.ul.com/cgi-bin/XYV/template/LISEXT/1FRAME/index.htm

Bulletin 931 Analog Signal Conditioners

BOM #14

Analog Signal

Analog Signal Conditioners are designed for use with Rockwell Automation I/O systems to provide reduced installation and maintenance costs in process applications. The products are available with single, 2-way or 3-way isolation and provide the following functionality.

- Isolation of analog measurement and control signals
- Conversion of analog signals from Voltage to Current (i.e., 0-10V to 4-20 mA)
- Amplification, linearization and transmission of low-level sensor signals (i.e., mV signals from thermocouples)
- Transmission of analog signals over long distances
- Provide local status indications and alarms via relay contact closures based on the analog signals
- Multiple products are approved to be used in hazardous location environments - UL (Class 1, Div 2) and ATEX (Zone 2)

Typical Applications

- Feed and Conveyor Control
- Boiler and Heat Control
- Water & Effl uent Treatment
- Machine Speed and Power
- Product Thickness and Alignment
- Batching, Mixing and Weighing
- Crystallization Control
- Valve Position Control
- Tanks and Silos – Inventory Control
- Chemical Dosing
- Safety Interlocks and Shutdown
- Pollution Control
- Refrigeration and Storage
- Dust Control

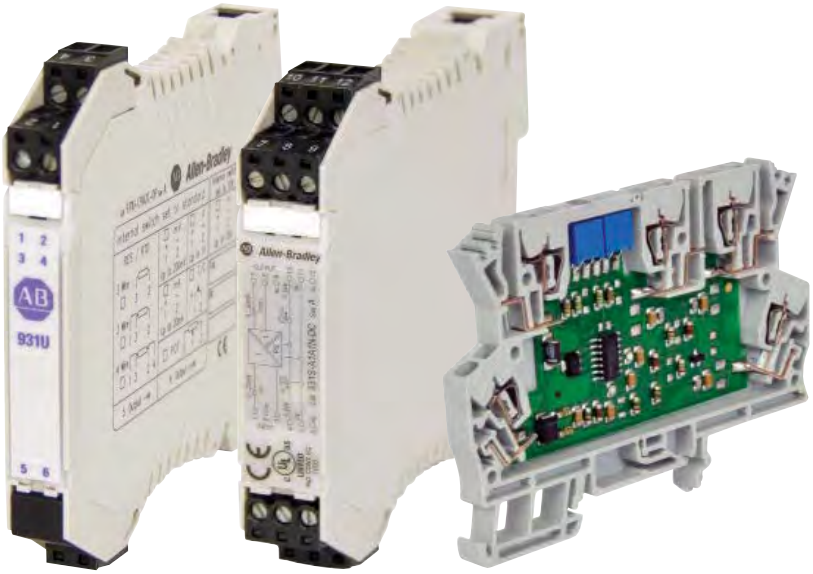

Rockwell Automation is pleased to introduce the Allen-Bradley® Bulletin 931 Analog Signal Conditioner product line. This new offering provides a wide range of products for use wherever temperature, pressure, speed, weight, level, and flow are measured and controlled as part of a continuous or batch production process.

Your facility or working environment needs to operate in a specific manner to reach maximum efficiency and profitability. The Bulletin 931 Analog Signal Conditioners are designed to help you convert, isolate and amplify signals in your applications and can isolate between multiple field measurement devices on a common power supply to help prevent interference that can occur due to ground loops or common mode noise.

In addition, these DIN rail-mounted analog signal conditioners are compatible with all types of integrated PLC and DCS I/O systems and can be integrated with our PlantPAx™ Process Automation System to leverage a single control platform for batch, drives, motion control, process and safety.

Catalog Number	Description	Width (mm)	Input Ratings	Output Ratings	Power
Current/Voltage					
931H-A1A1N-IP	Passive Isolator, 1 Channel	6.0	0(4)...20 mA	0(4)...20 mA	ILP[4]
931H-A2A2N-DC	Active Isolator, 3 Way,	6.1	4...20 mA	4...20 mA	AUX
931H-C2C2D-DC	Active Converter, 3 Way	6.1	0...20 mA, 4…20mA, 0…10 VDC	0...20 mA, 4…20mA, 0…10 VDC	AUX
931S-A1A1N-DC	Active Converter, 3 Way	17.5	0(4)...20 mA	0(4)...20 mA	AUX
931S-A1A1N-IP1	Passive Isolator, 1 Channel	17.5	0(4)...20 mA	0(4)...20 mA	ILP[4]
931S-A1A1N-IP2	Passive Isolator, 2 Channel	17.5	0(4)...20 mA	0(4)...20 mA	ILP[4]
931S-A2A2N-DC	Active Isolator	12.5	4...20 mA	4...20 mA	AUX
931S-A2A5N-0P	Passive Isolator, Splitter	17.5	4...20 mA	(2x) 4...20 mA	OLP[5]
931S-C1A2D-0P	Passive Converter	17.5	0...20 mA, 4…20mA, 0…5 VDC, 0…10 VDC	4...20 mA	OLP[5]
931S-C3C3J-DC	Active Converter, 3 Way,	12.5	0...22mA[3], 0…10 VDC[3]	0…22mA[3], 0...10 VDC[3]	AUX
931S-C4C5D-BC	Active Converter, 3 Way	12.5	±0.1mA…±100mA[3], ±20mV…±200VDC[3]	0...±20 mA, 0…+10 VDC	AUX[1]
Temperature - RTD					
931H-P2C1D-DC	Active Converter, PT100/RTD	6.1	PT100, 2 or 3 conds (0…100°C)	0...20 mA, 4…20mA, 0…5 VDC, 0…10 VDC	AUX
931H-P2A2N-0P	Active Converter, PT100/RTD	6.0	PT100, 2 or 3 conds (0...200°C)	4...20 mA	OLP[5]
931S-P1C2D-DC	Active Converter, 3 Way, RTD	17.5	Pt100, Ni100 2, 3 or 4 conds; Pot.: 0...100kΩ; Res.: 0...4.5kΩ	0...20 mA, 4…20mA, 0…10 VDC	AUX
Temperature - Thermocouple					
931H-T1C1D-DC	Thermocouple, Type J	6.1	Type J (0…700°C)	0...20 mA, 4…20mA, 0…5 VDC, 0…10 VDC	AUX
931H-T2C1D-DC	Thermocouple, Type K	6.1	Type K, (0…1000°C)	0...20 mA, 4…20mA, 0…5 VDC, 0…10 VDC	AUX
931S-T9C2D-DC	Universal Thermocouple, 3 Way	17.5	Type K, J, T, E, N, R, S, B (-200…+1820°C)	0...20 mA, 4…20mA, 0…10 VDC	AUX
Line Monitoring					
931S-A3A2D-0P	Passive Converter, Monitoring	22.5	0…1A or 0…5A or 0…10A (AC)	4...20 mA	OLP[5]
931S-A3C2D-DC	Active Converter, Monitoring	22.5	0…1A or 0…5A or 0…10A (AC)	0...20 mA, 4…20mA, 0…10 VDC	AUX
931S-A4C2D DCHall	Active Isolator, Hall-Effect Monitoring	22.5	0…20A or 0…25A or 0…30A (AC/DC)	0...20 mA, 4…20mA, 0…10 VDC	AUX
931S-C2R1D-DC2R	Isolator, 3 Way, Limit Value Monitoring	17.5	0...20 mA, 4…20mA, 0…10 VDC	2 Relays	AUX
931S-V1R1D-MC1R	Isolator, 3 Way, Monitoring	17.5	24…70 / 70…140 / 140…210 / 210…260 V (AC/DC)	1 Relay	ILP[4]
Application Specific					
931S-B1C6D-DC	Bridge Converter, 3 Way	17.5	-500 mV...+500 mV (Excitation = +10 VDC, +5 VDC or 4.8...10.2 VDC adjustable)	0...20mA, 4…20mA, 20…0mA, 20…4mA, 0…5VDC, 0….10VDC, 5…0 VDC, 10…0 VDC	AUX
931S-F1C2D-DC	Frequency Converter, 3 Way	12.5	2 or 3 wire PNP/NPN, NAMUR initiator, push-pull step	0...20 mA, 4…20mA, 0…10 VDC	AUX
931H-A2C2D-DCHart	Active Isolator, 3 Way, Hart	6.1	4...20 mA (HART)	0...20 mA, 4…20mA, 0…10 VDC (HART)	AUX
Universal					
931U-C9A2C-0P[6]	Active Converter, Universal	12.5	Current/Voltage: -10…20mA; -5…10Vdc / -10…20mA; -5…10V / -100…200mV; TC: B, C, E, J, K, L, N, R, S, T, W3, W5 (-200…+2300°C); RTD: Pt100/200, Ni100, Cu100 2/3/4 cond. (-200…+850°C)	4...20 mA	OLP[5]
U-C9C7C-BC[6]	Active Converter, 3 Way, Universal	45.0	Current/Voltage: -20…50mA; -200…500mV , -20…50 VDC; TC: B, E, J, K, L, N, R, S, T; RTD: PT100, PT1000, Ni100, Ni1000, Cu10, Cu25, Cu50, Cu100 2/3/4 cond; Pot: 100Ω…100kΩ; Res.: 10Ω…5kΩ Freq.: 2Hz…100kHz	0…20mA, -10…10 VDC (programmable); 2 Relays	AUX[2]
931U-CABLE	Programming Cable	NA	NA	NA	NA
Accessories					
931H-EB1	End Barrier	1.5	NA	NA	NA

BOM #15

*All non-marked AUX are 24VDC

[1] 22…230V AC/DC
[2] 18…264V AC/DC
[3] These ranges are scalable
[4] Input Loop Powered
[5] Output Loop Powered
[6] Software Programmable

Rockwell Automation offers a breadth of quality Allen-Bradley® components to fit your specific needs. In order to assist you with your component selection, we offer a variety of configuration and selection tools.

Local Distributor
Call 1.800.223.3354 to contact your local Distributor today.
http://www.rockwellautomation.com/distributor/

On-Line Product Directory
Our extensive product portfolio is designed to improve your processes through every stage of your manufacturing cycle.
http://www.rockwellautomation.com/products/

Product Selection Toolbox
Our powerful range of product selection and system configuration tools assist you in choosing and applying our products.
http://www.rockwellautomation.com/en/e-tools/

Catalogs
Within our catalogs you'll find an extensive selection of essential Allen-Bradley component products.
http://www.ab.com/catalogs/

Allen-Bradley, LISTEN. THINK. SOLVE., and PlantPAx are trademarks of Rockwell Automation, Inc. Trademarks not belonging to Rockwell Automation are property of their respective companies.

www.rockwellautomation.com

Power, Control and Information Solutions Headquarters

Americas: Rockwell Automation, 1201 South Second Street, Milwaukee, WI 53204-2496 USA, Tel: (1) 414.382.2000, Fax: (1) 414.382.4444
Europe/Middle East/Africa: Rockwell Automation NV, Pegasus Park, De Kleetlaan 12a, 1831 Diegem, Belgium, Tel: (32) 2 663 0600, Fax: (32) 2 663 0640
Asia Pacific: Rockwell Automation, Level 14, Core F, Cyberport 3, 100 Cyberport Road, Hong Kong, Tel: (852) 2887 4788, Fax: (852) 2508 1846

Publication 931-PP001C-EN-P – August 2012
Supersedes Publication 931-PP001B-EN-P – January 2010

Copyright © 2012 Rockwell Automation, Inc. All Rights Reserved. Printed in USA.

BOM #16

Spring-Clamp Connection Terminal Blocks

Plug-in Style Blocks (Cat. Nos. 1492-L3P, -LDG3P) and Analog Loop Control Block (Cat. No. 1492-LDAG3)

	1492-L3P			1492-LDG3P			1492-LDAG3		
Dimensions are not intended to be used for manufacturing purposes. **Note:** Height dimension is measured from top of rail to top of terminal block.	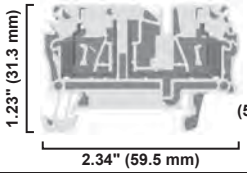			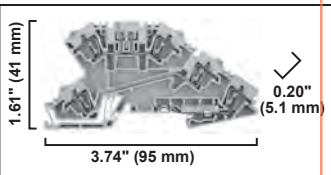			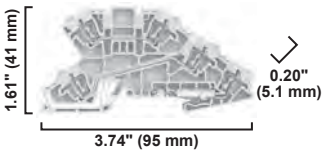		
Specifications	*Single Circuit Plug-In Component Block for a Variety of Components*			*Terminal Block with slot for Plug-In Component, Feed-Through Circuit and 1 Ground Connection*			*Analog Loop Control Terminal Block with 2 Feed-Through Circuits and 1 Ground Connection*		
Certifications	cULus	CSA	IEC	cULus	CSA	IEC	cULus	CSA	IEC
Voltage Rating	600V AC/DC		500V AC/DC	300V AC/DC		250V AC/DC	300V AC/DC		250V AC/DC
Maximum Current	20 A		24 A	10 A		20 A	10 A		24 A
Wire Range (Rated Cross Section)	#30…12 AWG		4 mm²	#26…12 AWG		2.5 mm²	#26…12 AWG		2.5 mm²
Wire Strip Length	0.39 in. (10 mm)			0.31 in. (8 mm)			0.31 in. (8 mm)		
Density	59 pcs/f (/196 pcs/m)			59 pcs/ft (196 pcs/m)			59 pcs/ft (196 pcs/m)		
Housing Temperature Range	–58…+248 °F (–50…+120 °C)			–58…+248 °F (–50…+120 °C)			–58…+248 °F (–50…+120 °C)		
Terminal Blocks	**Cat. No.**		**Pkg Qty.**	**Cat. No.**		**Pkg Qty.**	**Cat. No.**		**Pkg Qty.**
Color Grey	**1492-L3P**		25	BOM #18		25	**1492-LDAG3**		25
Accessories	**Cat. No.**		**Pkg Qty.**	**Cat. No.**		**Pkg Qty.**	**Cat. No.**		**Pkg Qty.**
Mounting Rails 1 m Symmetrical DIN (Steel)	**199-DR1**		10	**199-DR1**		10	**199-DR1**		10
1 m Symmetrical DIN (Aluminum)	**1492-DR5**		10	BOM #17		10	**1492-DR5**		10
1 m Hi-Rise Symmetrical DIN (Aluminum)	**1492-DR6**		2	**1492-DR6**		2	**1492-DR6**		2
1 m Angled Hi-Rise Sym. DIN (Steel)	**1492-DR7**		2	**1492-DR7**		2	**1492-DR7**		2
End Barrier	**1492-EBL3**		50	**1492-EBLDAG3**		20	**1492-EBLDAG3**		20
End Anchors and Retainers Screwless End Retainer	**1492-ERL35**		20	**1492-ERL35**		20	**1492-ERL35**		20
DIN Rail — Normal Duty	**1492-EAJ35**		100	**1492-EAJ35**		100	**1492-EAJ35**		100
DIN Rail — Heavy Duty	**1492-EAHJ35**		50	**1492-EAHJ35**		50	**1492-EAHJ35**		50
Jumpers Plug-In Center Jumper — 50-pole	**1492-CJK5-50**		10	**1492-CJLJ5-50**		10	**1492-CJLJ5-50**		10
Plug-In Center Jumper — 10-pole	**1492-CJK5-10**		20	**1492-CJLJ5-10**		20	**1492-CJLJ5-10**		20
Plug-In Center Jumper — 9-pole	**1492-CJK5-9**		20	**1492-CJLJ5-9**		20	**1492-CJLJ5-9**		20
Plug-In Center Jumper — 8-pole	**1492-CJK5-8**		20	**1492-CJLJ5-8**		20	**1492-CJLJ5-8**		20
Plug-In Center Jumper — 7-pole	**1492-CJK5-7**		20	**1492-CJLJ5-7**		20	**1492-CJLJ5-7**		20
Plug-In Center Jumper — 6-pole	**1492-CJK5-6**		20	**1492-CJLJ5-6**		20	**1492-CJLJ5-6**		20
Plug-In Center Jumper — 5-pole	**1492-CJK5-5**		20	**1492-CJLJ5-5**		20	**1492-CJLJ5-5**		20
Plug-In Center Jumper — 4-pole	**1492-CJK5-4**		60	**1492-CJLJ5-4**		60	**1492-CJLJ5-4**		60
Plug-In Center Jumper — 3-pole	**1492-CJK5-3**		60	**1492-CJLJ5-3**		60	**1492-CJLJ5-3**		60
Plug-In Center Jumper — 2-pole	**1492-CJK5-2**		60	**1492-CJLJ5-2**		60	**1492-CJLJ5-2**		60
Other Accessories Disconnect Plug	**1492-DPL**		50	**1492-DPL**		50	—		—
Component Plug	**1492-CPL**		50	**1492-CPL**		50	—		—
Fuse Plug Without Blown Fuse Indicator	**1492-FPK2**		20	**1492-FPK2**		20	—		—
10…36V Blown Fuse Indicator	**1492-FPK224**		20	**1492-FPK224**		20	—		—
35…70V Blown Fuse Indicator	**1492-FPK248**		20	**1492-FPK248**		20	—		—
60…150V Blown Fuse Indicator	**1492-FPK2120**		20	**1492-FPK2120**		20	—		—
140…250V Blown Fuse Indicator	**1492-FPK2250**		20	**1492-FPK2250**		20	—		—
Reducing Sleeves 28…24 AWG (0.13…0.2 mm²) White	1492-PSL3-2		100	—		—	—		—
Reducing Sleeves 22…20 AWG (0.25…0.5 mm²) Grey	**1492-PSL3-5**		100	—		—	—		—
Reducing Sleeves 18 AWG (0.75…1.0 mm²) Dark Grey	**1492-PSL3-10**		100	—		—	—		—
Test Plug	**1492-TPL5**		25	**1492-TP23**		20	—		—
Electrical Warning Plate	**1492-EWPL5**		20	—		—	—		—
Group Marking Carrier	**1492-GM35**		25	**1492-GM35**		25	**1492-GM35**		25
Marking Systems Snap-In Marker Cards	**1492-M5X10** (144/card)		5	**1492-M5X10** (144/card)		5	**1492-M5X10** (144/card)		5
Snap-In Marker Cards	**1492-M5X5** (200/card)		5	**1492-M5X5** (200/card)		5	**1492-M5X5** (200/card)		5

ELECTRIC HEATERS

BOM #19

115/230 Volt
100/200 Watt

115/230 Volt
400/800 Watt

115/230 Volt
1300 Watt

INDUSTRY STANDARDS

UL 508A Component Recognized; File No. E61997

CSA Certified, CSA File No. LR42186
CE

APPLICATION

Protect mechanical, electrical and electronic equipment from low temperatures, condensation and corrosion with this thermostatically controlled, fan-driven heater that maintains a stable enclosure temperature.
Fan draws cool air from the bottom of the enclosure and passes this air across the thermostat and heating element before being released into enclosure cavity. Heated air is discharged through the top of the heater unit.

SPECIFICATIONS

- Aluminum housing
- Thermostat range adjustable from 0 F to 100 F (-18 C to 38 C)
- Four 10-32 x self-tapping screws are included with each heater
- Ball bearing fan
- Terminal strip with clamp connector that accepts both solid and stranded wire

FINISH

- Brushed aluminum

⚠ CAUTION

These electric heaters are not designed for use in dusty, dirty, corrosive, or hazardous locations. Portions of the heater can get hot. Adequate protection must be taken to protect people from potential burns, and to protect other components from this heat. Pentair Technical Products recommends this heater only be installed in a totally-enclosed metal enclosure.

DO NOT INSTALL HEATERS ON WOOD PANELS. Heat sensitive components should not be placed near the heater discharge area since this air can be quite warm. The clearance range defines the space that must be kept free of these components for proper and safe operation of the heater.

Performance Data **100 and 200 Watt Heaters**

CATALOG NUMBERS	DAH1001A	DAH1002A	DAH2001A	DAH2002A
ELECTRICAL DATA				
Rated Voltage	**115**	**230**	**115**	**230**
Frequency (Hz)	50/60	50/60	50/60	50/60
Power Consumption (Watts)	100	100	200	200
Nominal Current (Amps)	0.98	0.49	1.89	0.95
HEATING PERFORMANCE				
Watts	**100**	**100**	**200**	**200**
UNIT CONSTRUCTION				
Weight (lb./kg)	1.6/0.73	1.6/0.73	1.6/0.73	1.6/0.73
X (in./mm)	4.00/102	4.00/102	6.00/152	6.00/152

Performance Data **400 and 800 Watt Heaters**

CATALOG NUMBERS	DAH4001B	DAH4002B	DAH8001B	DAH8002B
ELECTRICAL DATA				
Rated Voltage	**115**	**230**	**115**	**230**
Frequency (Hz)	50/60	50/60	50/60	50/60
Power Consumption (Watts)	400	400	800	800
Nominal Current (Amps)	3.72	1.86	7.37	3.69
HEATING PERFORMANCE				
Watts	**400**	**400**	**800**	**800**
UNIT CONSTRUCTION				
Weight (lb./kg)	2.2/1.00	2.2/1.00	2.2/1.00	2.2/1.00
X (in./mm)	6.00/152	6.00/152	8.00/203	8.00/203

Performance Data **1300 Watt Heaters**

CATALOG NUMBERS	DAH13001C	DAH13002C
ELECTRICAL DATA		
Rated Voltage	**115**	**230**
Frequency (Hz)	50/60	50/60
Power Consumption (Watts)	1300	1300
Nominal Current (Amps)	11.5	5.7
HEATING PERFORMANCE		
Watts	**1300**	**1300**
UNIT CONSTRUCTION		
Weight (lb./kg)	3.4/1.54	3.4/1.54
X (in./mm)	8.00/203	8.00/203

Dimensions and Clearance Range Drawing for DAH1001A, -2A and DAH2001A, -2A

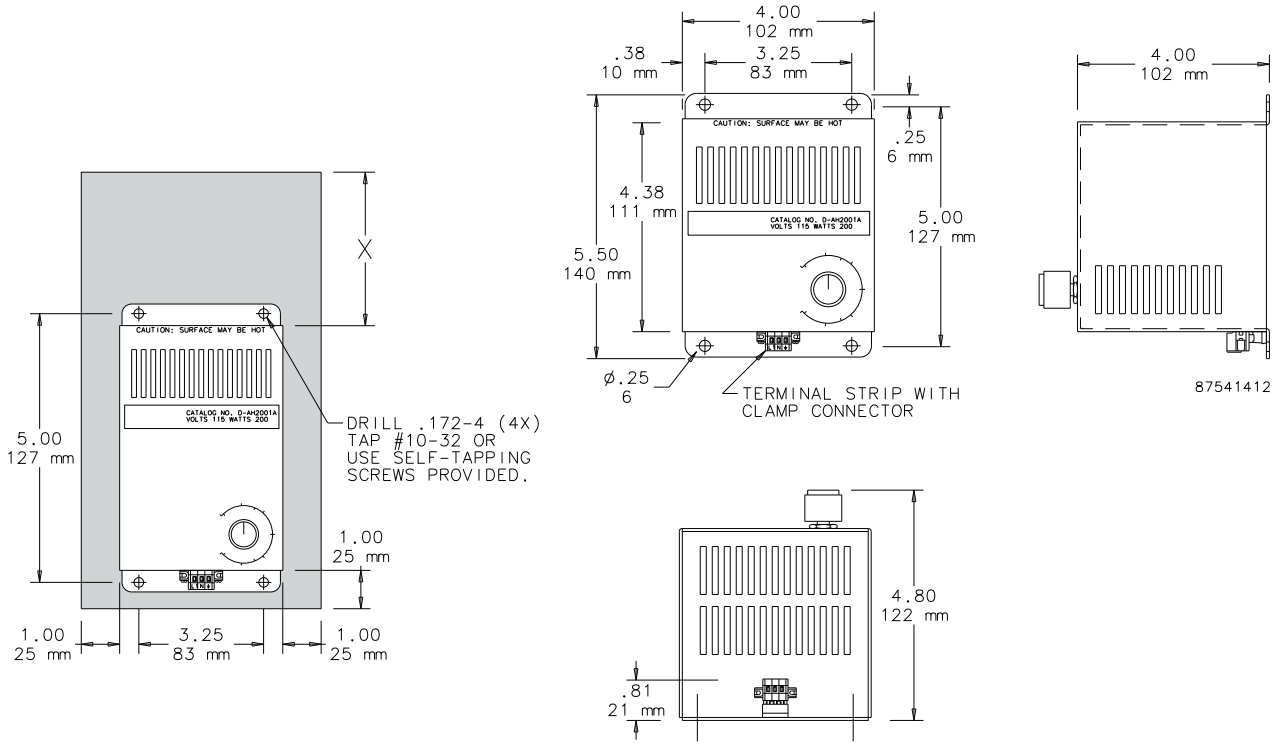

Dimensions and Clearance Range Drawing for DAH4001B, -2B and DAH8001B, -2B

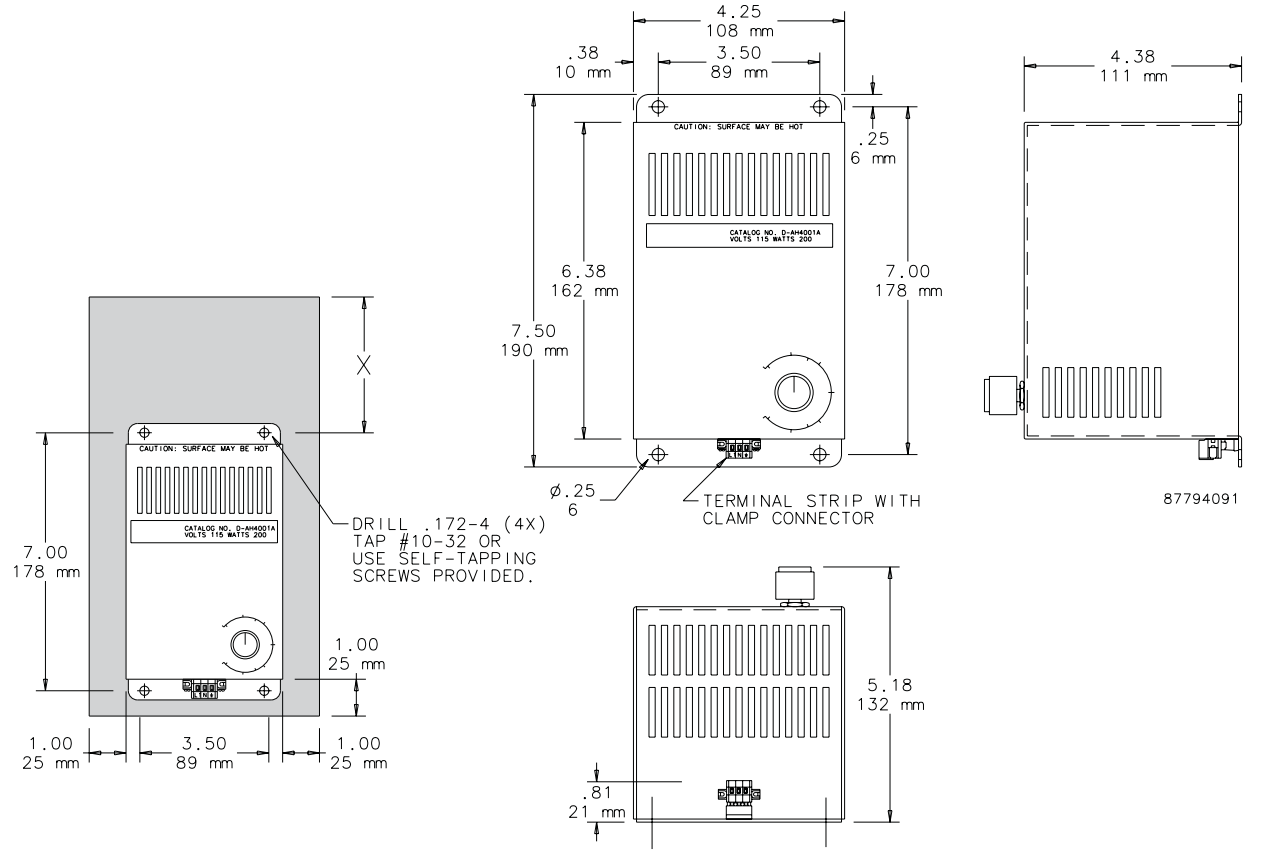

Dimensions and Clearance Range Drawing for DAH13001C and DAH13002C

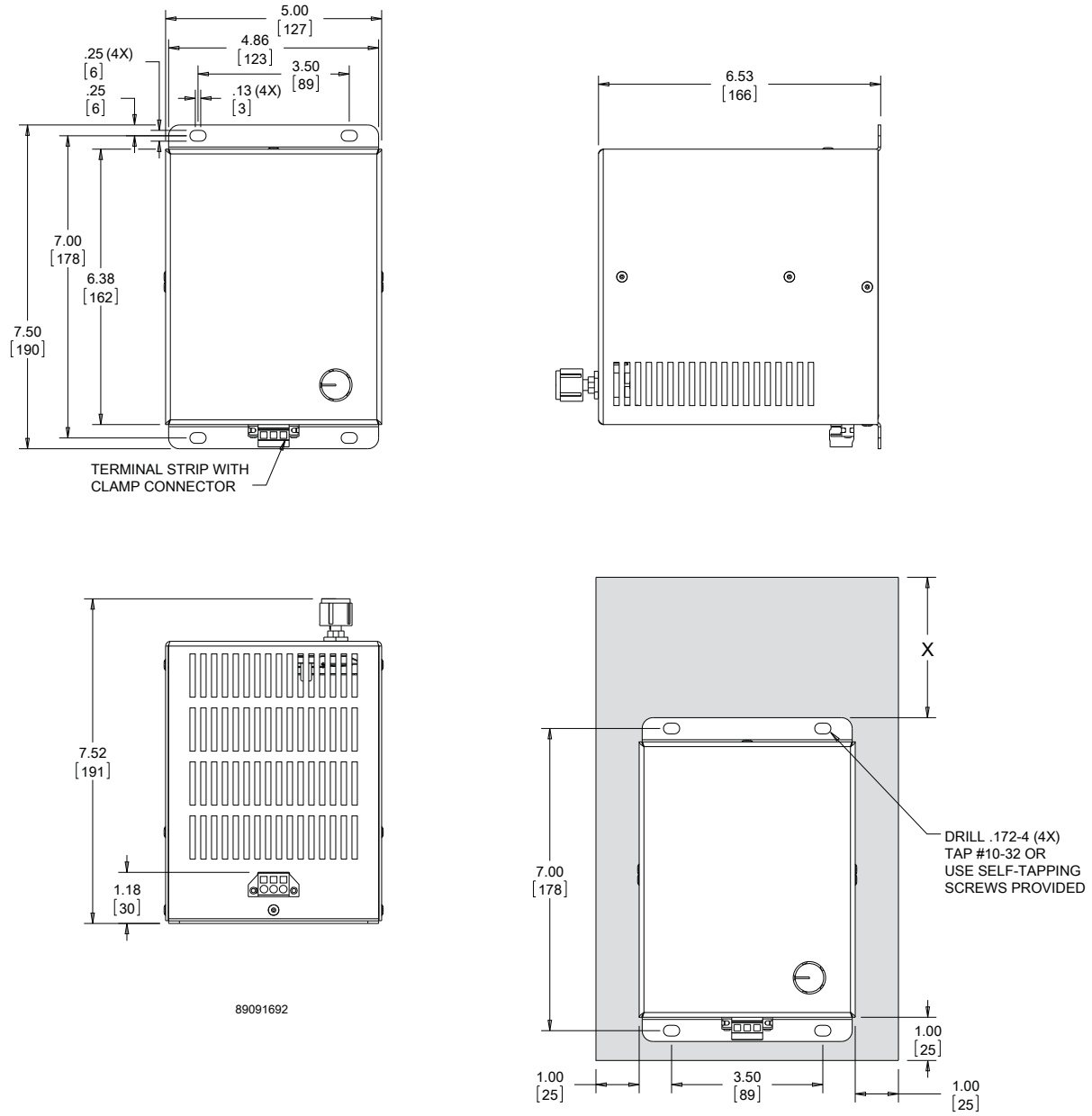

BOM #20

Product: 1492-GS1G200

Description: 1492-GS High Density Mini Circuit Breakers (Toggle Style)

Representative Photo Only (actual product may vary based on configuration selections)

MINIATURE CIRCUIT BREAKER DATA	
Electrical Standards	UL
Number of Poles	1 pole
Magnetic Trip Range	G-Trip Characteristics - Inductive Loads (AC)
Amp Rating	20.0 A
Optional Auxiliary Contact	No Contact

CERTIFICATIONS AND APPROVALS	
UL	1077, Guide No. QVNU2, File No. E65138
CSA	22.2 NO. 235
EN	60934
CE	Marked
For UL Certifications Directory:	http://database.ul.com/cgi-bin/XYV/template/LISEXT/1FRAME/index.htm

Specifications ❶

Cat. No.	1492-GS																	
Description	High-density circuit breaker (supplementary protector) with universal mounting foot for Allen-Bradley and DIN rail mounting																	
Maximum Voltage Ratings	277/480V AC 50/60 Hz 65V DC																	
Standard Current Ratings Internal Resistance per Pole	**A** **Ω**	0.2 26	0.5 4.2	0.8 1.6	1.0 1.1	1.5 0.47	2.0 0.25	2.5 0.20	3.0 0.13	4.0 0.08	5.0 0.06	6.0 0.05	8.0 0.01	10.0 0.01	12.0 0.01	15.0 0.01	16.0 0.01	20.0 0.005	25.0 0.004
Dielectric Strength	1960V AC																	
Shock and Vibration Specifications	Shock: 25 G, 11 ms duration Vibration: 5 G (10…500 Hz)																	
Insulation Resistance	Greater than 100 MΩ @ 500V DC																	
Current Capacity of Auxiliary Contacts (N.O., N.C.)	1.0 A AC or DC (resistive load)																	
Voltage Rating of Auxiliary Contacts	277V AC 65V DC																	
Operating Life	6000 cycles @ rated current (UL 1077)																	
Temperature Range	–40…+149°F (–40…+65°C)																	
Wire Size	#22…#10 AWG (0.5…6 mm²)																	
Recommended Wire Strip Length	0.51" (13.0 mm) for Mail Terminals 0.41" (10.4 mm) for Auxiliary Terminals																	
Recommended Tightening Torque	5 lb-in. (0.565 Nm)																	

❶ Performance Data — See page Important-2.

Approvals

- UL 1077
- CSA 22.2 NO. 235
- VDE 0631 (IEC 60934)

In North America, the Cat. No. 1492-GS circuit breaker is rated as a Supplementary Protector with a short-circuit current rating. Internationally, it is rated by IEC as a Circuit Breaker for Equipment with an interrupt rating

Electrical Characteristics

Poles	Rated Current (A)	Voltage Rating		Short-Circuit Current Rating ❶ Interrupt Rating *I*cn (IEC only)
		AC	DC	
UL 1077 Supplementary Protector Rating				
1	0.2…5	277	—	0.4 kA, U2
1	6…25	277	—	0.7 kA, U2
2, 3	0.2…5	277/480	—	0.4 kA, U2
2, 3	6…25	277/480	—	0.5 kA, U2
1, 2, 3	0.2…5	—	65	0.4 kA, U2
1, 2, 3	6…25	—	65	0.8 kA, U2
1	0.2…16	277	—	5 kA, C1
1	18…25	277	—	2 kA, C1
2, 3	0.2…16	277/480	—	5 kA, C1
2, 3	18…25	277/480	—	2 kA, C1
1	0.2…25	—	65	2 kA, C1
CSA 22.2 #235 Supplementary Protector Ratings				
1	0.2…16	277	—	5 kA, C1
1	18…25	277	—	2 kA, C1
2, 3	0.2…16	277/480	—	5 kA, C1
2, 3	18…25	277/480	—	2 kA, C1
1	0.2…25	—	65	2 kA, C1
IEC 60934 Circuit Breaker for Equipment Ratings				
1	0.2…5	250	—	0.4 kA
1	6…25	250	—	0.8 kA
2, 3	0.2…5	240/415	—	0.4 kA
2, 3	6…25	240/415	—	0.8 kA
1	0.2…5	—	65	0.4 kA
1	6…25	—	65	0.8 kA

❶ The short-circuit current rating is followed by a letter and number designating the test conditions and any calibrations and dielectric tests following the short-circuit test. These designations are defined as follows (see ❷ also):
C — Indicates that the short-circuit test was conducted with series overcurrent protection
U — Indicates that the short-circuit test was conducted without series overcurrent protection
1 — Indicates that a recalibration and dielectric test was not conducted as part of the short-circuit test
2 — Indicates that a recalibration and dielectric test was conducted as part of the short-circuit test

❷ These alphanumeric designations were established by UL. CSA has not yet adopted them; however, the test conditions are equivalent to UL and the coding is appropriate.

http://raise.rockwellautomation.com/raconfig/rtcache/jpg/1492gs.jpg[10/7/2015 4:09:21 PM]

BOM #20

COOPER Bussmann

Compact Modular Fuse Holders

COOPER Bussmann

DIN-Rail Mount Fuse Holders Protect Your Electrical System and Simplify Installation

- Colour coded for simple visual identification: yellow for **PV (1000Vdc)**, red for **IEC (690Vac)** and **black** for **UL (600Vac/dc)** applications.
- CHPV Models, with 1000Vdc rating for use with solar gPV fuse links, are suitable for photovoltaic applications of any size.
- Tested to a wide range of standards: IEC, cULus, CCC, CSA and UR, allowing for use across global applications.
- World class space-saving footprint - smaller than any other Modular Fuse Holder, reducing required installation space.
- Toolless DIN-Rail mounting improves ease of use and reduces installation time and costs.
- Rated for use with 75ºC or 90ºC wire, fine stranded wire, spade terminals and with comb-bus bars. Use any higher temperature rated wire with appropriate derating.

PV IEC UL

For more information visit www.cooperbussmann.com/ModularFuseHolders

Modular Fuse Holder Selection Table (10 x 38, Photovoltaic and Class CC)

Series & Size	Catalogue Number		Rated Voltage & Rated Current	Agency Markings	Number of Poles	Terminal Rating	Rated Breaking Capactiy	Cooper Bussmann Fuse Links
	With Indicator	Without Indicator						
CHM 10x38 and Midget	CHM1DIU	CHM1DU	IEC 690Vac/32A UL 600Vac/30A;	IEC 60269-2 UR; CSA; CCC	1	IEC: 1 to 25mm² 70°C PVC/Copper Cable Solid, Stranded, Fine Stranded, Spade Lug, Comb Bus Bar; Single and Dual	IEC 120kA rms sym UL 200kA rms sym CCC 100kA rms sym	IEC: C10 Series UL: FNQ, KLM, FNM, KTK, BAF, FWA, PVM, AGU, BAN, FWC.
	CHM2DIU	CHM2DU			2			
	CHM3DIU	CHM3DU			3			
	CHM4DIU	CHM4DU			4			
	CHM1DNIU	CHM1DNU		IEC 60269-2	1-pole + 1 neutral			
	CHM3DNIU	CHM3DNU			3-pole + 1 neutral			
	CHM1DI-48U	N/A	IEC 48Vdc/32A UL 48Vdc/30A;	IEC 60269-2; UR; CSA; CCC	1			
	N/A	CHM1DNXU	IEC 690Vac/32A	IEC 60269-2	1 neutral		N/A	N/A
CHPV Photovoltaic	CHPV1IU	CHPV1U	IEC 1000Vdc/32A UL 1000Vdc/30A;	IEC 60269-1 UR; CSA; CCC UL4248-18	1		33kA	Solar PV series, PVM, PV-xxA10F
	CHPV2IU	CHPV2U			2			
CHCC Class CC	CHCC1DIU	CHCC1DU	UL 600Vac/dc 30A	UL; CSA; CCC	1	Cable 75°C and 90°C Cu cable	200kA rms sym	LP-CC, FNQ-R, KTK-R
	CHCC2DIU	CHCC2DU			2			
	CHCC3DIU	CHCC3DU			3			
	N/A	CHCC1DI-48U	UL 48Vdc/30A		1			

Features

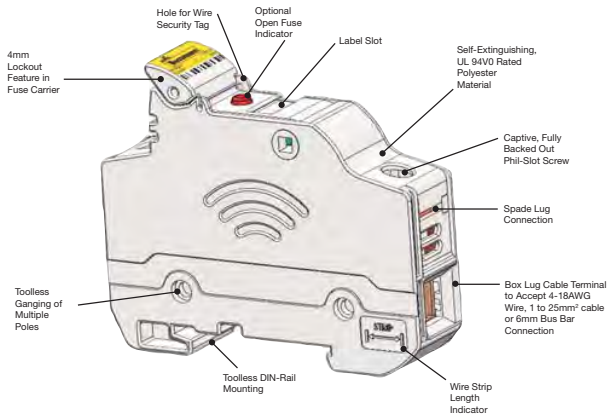

Specifications

Temperature Operating Range:
-20°C to +120°C (non-indicating)
-20°C to +90°C (indicating)
Flammability: Self-extinguishable UL 94V0 rated

Comb Bus Bar & Power Feed Accessories Make Installation Easier

- Distributes power in single- or three-phase configurations
- Cut-to-length solution does not compromise finger-safe protection
- Single-phase bus bars rated to 1000Vdc and 100A in end-fed configuration (200A for center-fed configuration)
- Three-phase bus bars rated to 600Vac/dc and 100A in end-fed configuration (200A for center-fed configuration)
- Power feed terminals for single-phase and three-phase service

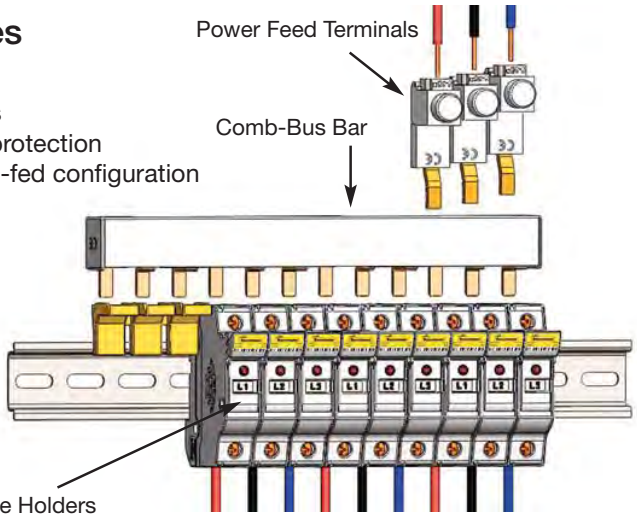

© 2012 Cooper Bussmann
www.cooperbussmann.com

COOPER Bussmann

Time-Current Characteristic Curves–Average Melt

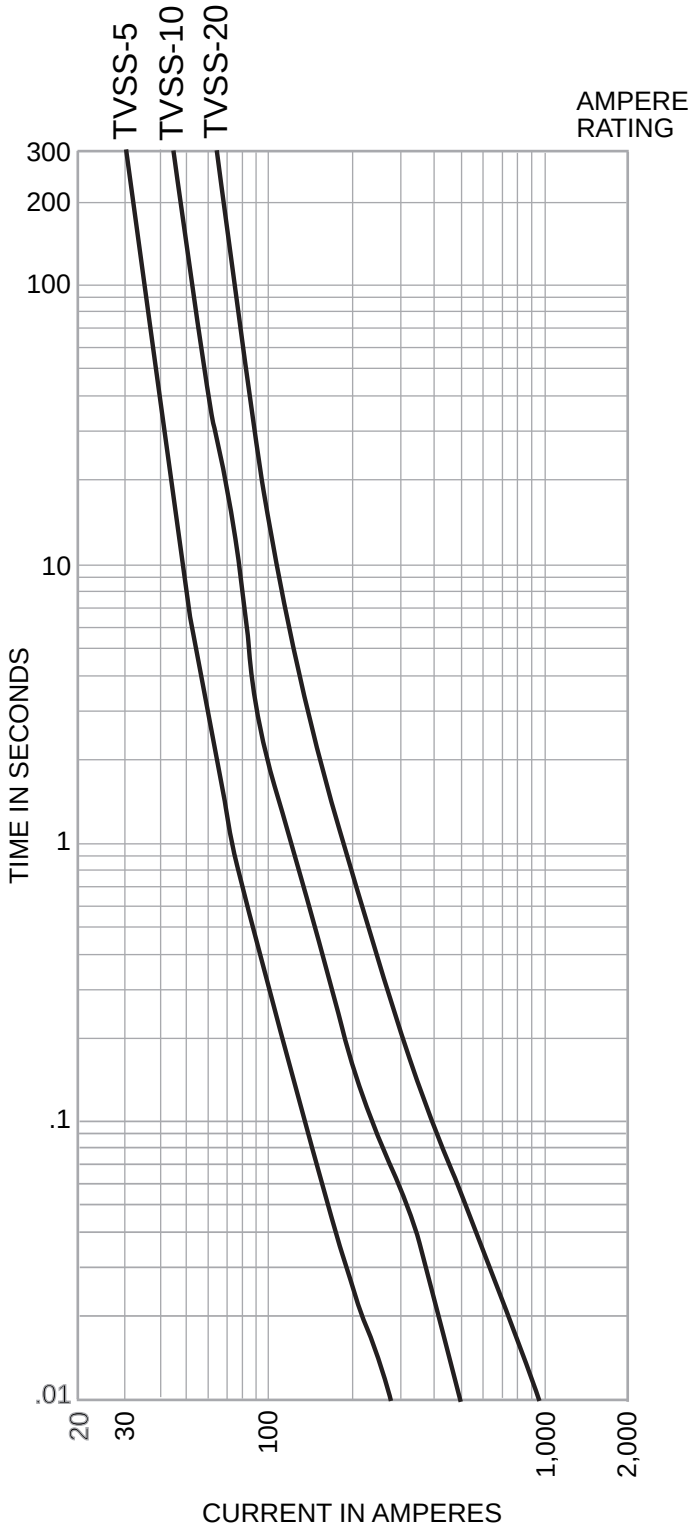

Time-Current Characteristic Curves–Peak Let-Through

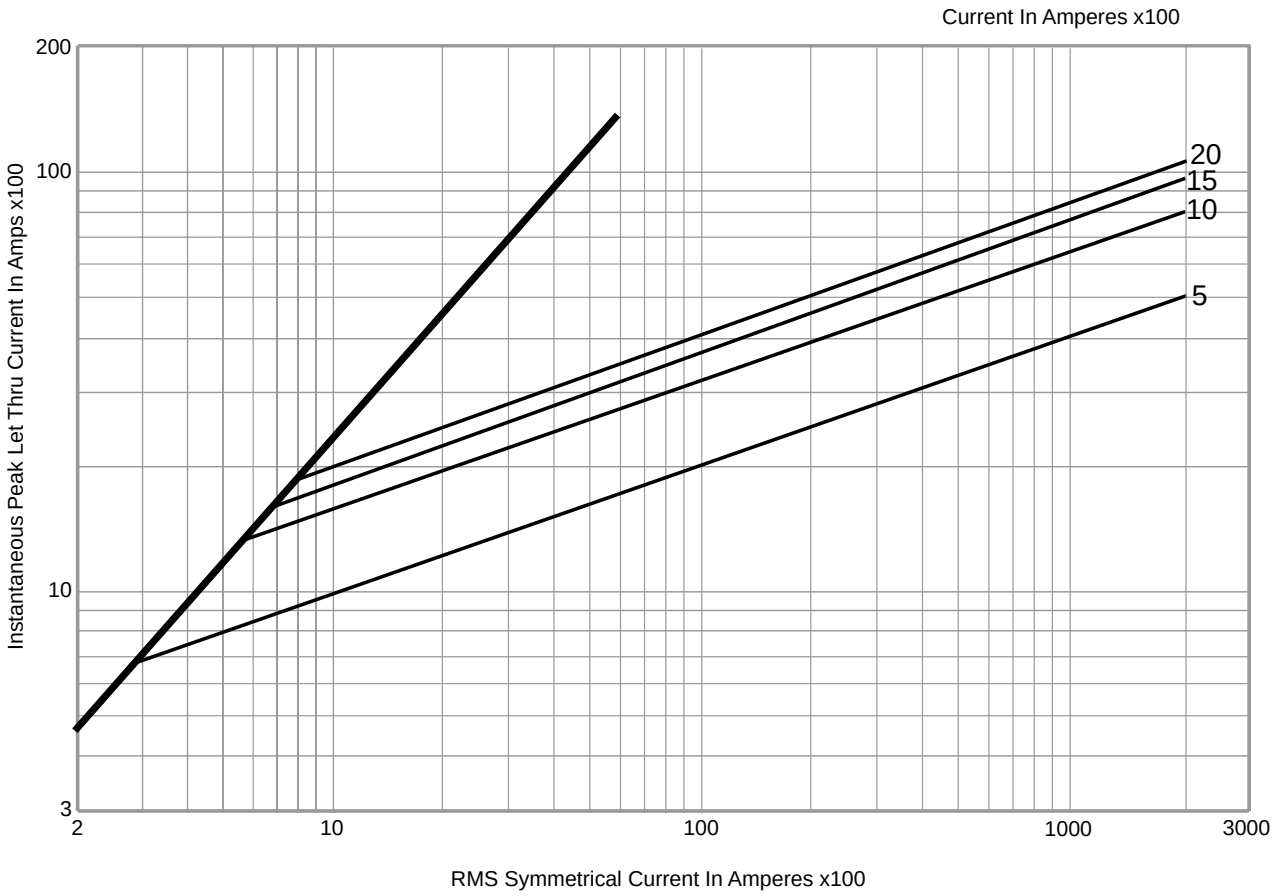

The only controlled copy of this Data Sheet is the electronic read-only version located on the Bussmann Network Drive. All other copies of this document are by definition uncontrolled. This bulletin is intended to clearly present comprehensive product data and provide technical information that will help the end user with design applications. Bussmann reserves the right, without notice, to change design or construction of any products and to discontinue or limit distribution of any products. Bussmann also reserves the right to change or update, without notice, any technical information contained in this bulletin. Once a product has been selected, it should be tested by the user in all possible applications.

Time-Current Characteristic Curves–Average Melt

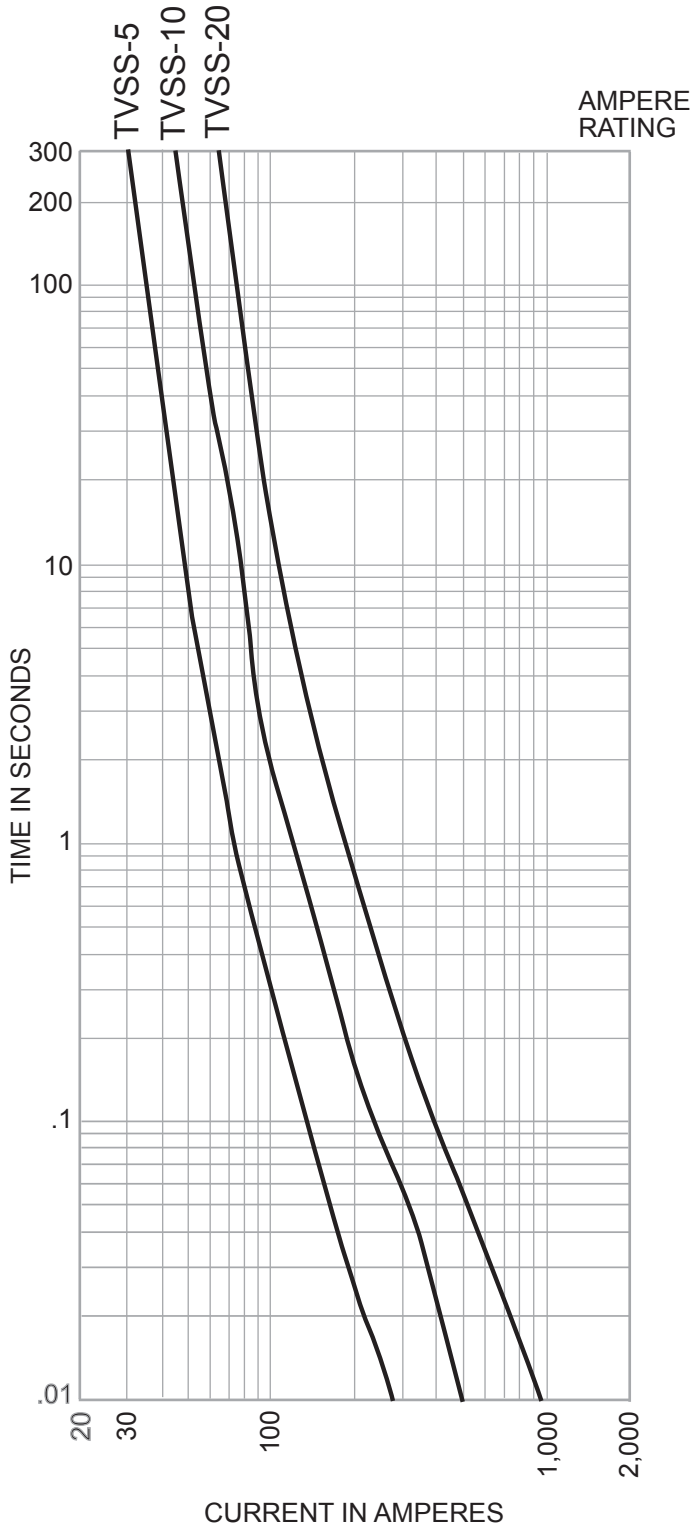

Time-Current Characteristic Curves–Peak Let-Through

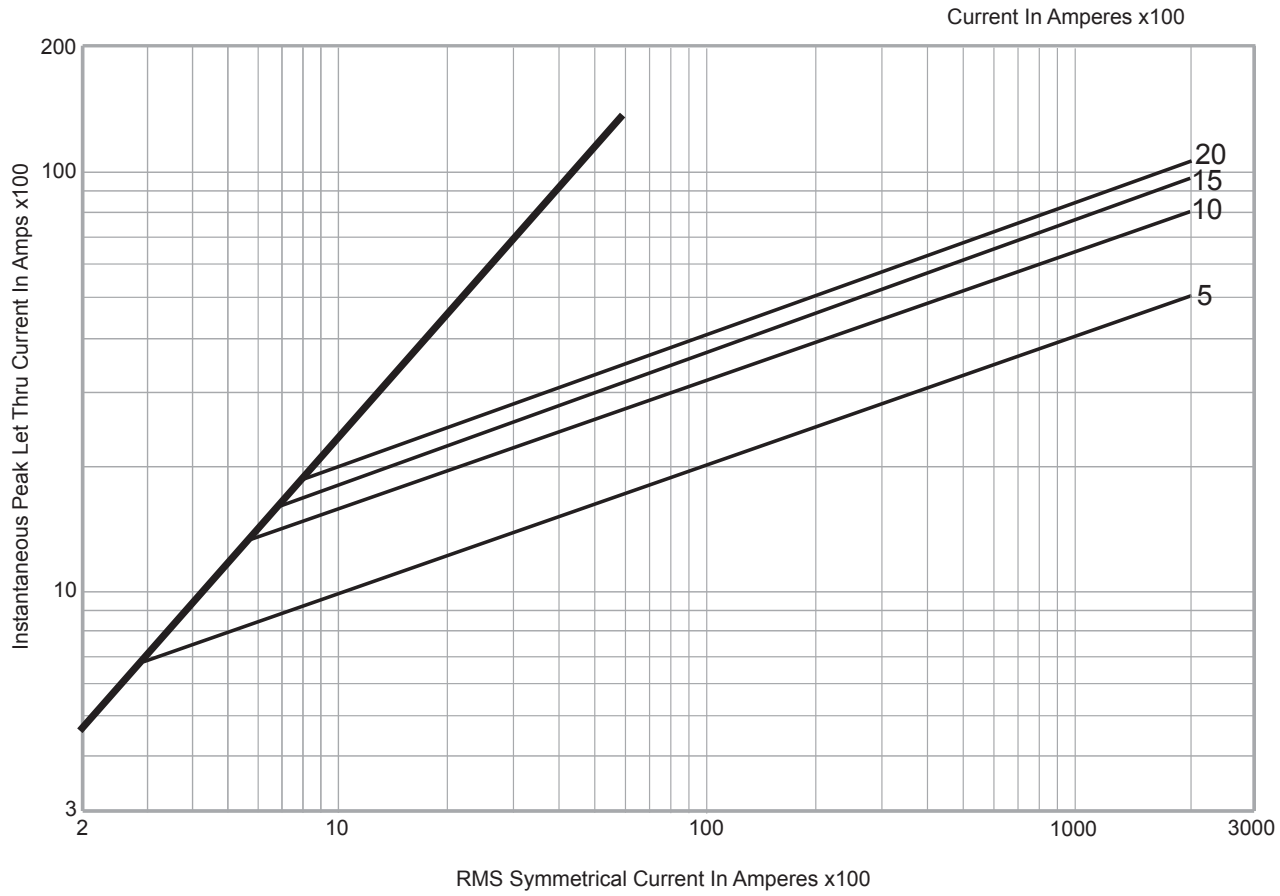

The only controlled copy of this Data Sheet is the electronic read-only version located on the Bussmann Network Drive. All other copies of this document are by definition uncontrolled. This bulletin is intended to clearly present comprehensive product data and provide technical information that will help the end user with design applications. Bussmann reserves the right, without notice, to change design or construction of any products and to discontinue or limit distribution of any products. Bussmann also reserves the right to change or update, without notice, any technical information contained in this bulletin. Once a product has been selected, it should be tested by the user in all possible applications.

DIN-Rail TVS Series

Status LED

OFF - Suppressor Non-Operational (power may be on)
GREEN - Suppressor Operational (power on)

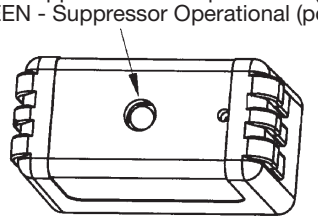

Specifications

Description: DIN-Rail mount voltage surge protection system for AC or DC voltage using diode or MOV technology.

Construction:

Suppressor: Case: 20% glass filled PES (Polyethersulfone)
Terminals: 110 Copper
Terminal Plating: Electroless tin

Holder: Case: 15% glass filled PBT (Polybutylene Terephthalate)
Interface Clips: CDA 7025
Interface Clip Plating: Electroless tin
Contact Lubricant: Fluoroether grease
Box Lug: Copper
DIN-Rail Springs: Stainless steel

Ratings*:

Volts: — 12Vdc (2kA surge current)
— 24Vdc (2kA surge current)
— 48Vdc (2kA surge current)
— 120Vac (7kA-18kA surge current)
— 240Vac (7kA-18kA surge current)

* See Catalog Numbers table for all specifications pertaining to specific voltage ratings.

Agency Information: UL Recognized (UL 1449) for AC products, (UL 497B) for DC products, CSA Approved.

Dimensions -in

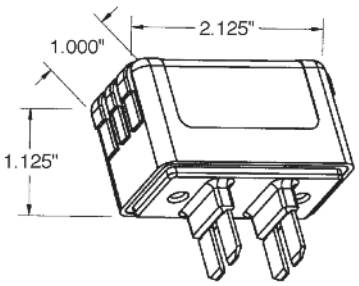

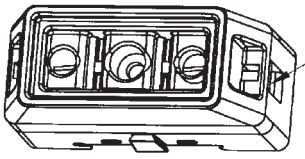

Power Terminals
14AWG - 4AWG
Dual 10AWG

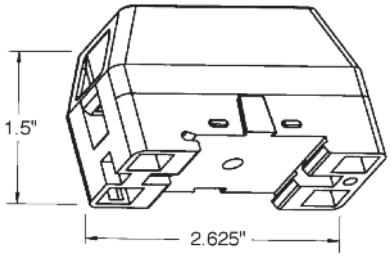

Product Specifications:

1. All TVS devices have non-polarized electrical connections as shown.
2. Suppressor voltage characteristics per chart.
3. Suppressor to provide non-interrupted service.
4. Enclosure material is 94V0 flame and explosion resistant.
5. Product markings show manufacturer, part number and safety warnings as required.
6. Mechanical dimensions as noted.
7. Suppressor Status LED as shown.
8. AC units operate on either 50 or 60Hz.

Catalog Numbers

Catalog Numbers	Voltage Application	MCOV	Technology	SVR 500A, 8x20μs	Surge Current Rating	Agency Information	Label Color
TVS12DCD	12Vdc	14Vdc	SASD	36Vdc	2kA	UL 497B	Red
TVS24DCD	24Vdc	28Vdc	SASD	58Vdc	2kA	UL 497B	White
TVS48DCD	48Vdc	57Vdc	SASD	90Vdc	2kA	UL 497B	Black
TVS120ACD	120Vac	140Vac	SASD	330Vac	7kA	UL 1449	Blue
TVS120ACM	120Vac	140Vac	MOV	500Vac	18kA	UL 1449	Grey
TVS240ACD	240Vac	280Vac	SASD	600Vac	7kA	UL 1449	Blue
TVS240ACM	240Vac	280Vac	MOV	800Vac	18kA	UL 1449	Grey

Data Sheet: 9006

BOM #23

Product: 1492-MCGAT115

Description: 1492-MC Circuit Breaker

Representative Photo Only (actual product may vary based on configuration selections)

CIRCUIT BREAKER DATA	
Voltage Rating	120 V AC
Type of Device	Ground Fault Circuit Interrupters (GFCI), Panel mounting
AIC Rating	With Self Test Capability
Number of Poles	1 Pole
Continuous Ampere Rating	15 Amps

CERTIFICATIONS AND APPROVALS	
UL	489 Listed Circuit Breaker (CSA 22.2 No. 5.1)
UL	Guide No. DIVQ, File No. E197878
For UL Certifications Directory:	http://database.ul.com/cgi-bin/XYV/template/LISEXT/1FRAME/index.htm

BOM #24

Product: 1492-GH100

Description: 1492-GH High Density Mini Circuit Breakers (Push to Set)

Representative Photo Only (actual product may vary based on configuration selections)

MINIATURE CIRCUIT BREAKER DATA	
Electrical Standards	UL
Amp Rating	10.0 A

CERTIFICATIONS AND APPROVALS	
UL	1077, Guide No. QVNU2, File No. E65138
CSA	22.2 NO. 235
VDE	0631 (EN 60934)
CE	Marked
For UL Certifications Directory:	http://database.ul.com/cgi-bin/XYV/template/LISEXT/1FRAME/index.htm

Product: 1492-JG3

Description: 1492 IEC Screw Terminal Blocks

BOM #25

Representative Photo Only
(actual product may vary based on configuration selections)

BLOCK STYLE	
Base Block Style	Grounding Blocks
BASE DATA	
Base Block Type	One-Circuit Feed-Through Ground Block
DETAIL DATA	
Features	Standard Feedthrough
Maximum Wire Size & Rating	UL: 22-12 AWG\nCSA: 22-12 AWG\nIEC: 2.5mm²\nEEx e II: 2.5mm²/20-14 AWG
Color	Green / Yellow Stripe (Standard)
CERTIFICATIONS AND APPROVALS	
UR	UL 486E, UL 1059; Reference File: E40735, E187022
CSA	CSA C22.2 No. 65, No. 158; On Website, Name: Rockwell, Keyword Search: 1492
IEC	EN 60947-1, EN 60947-7-1(Feed-Through), -2(Ground), -3(Fuse)
ATEX	http://www.rockwellautomation.com/products/certification/ex/excert.html
Short Circuit Current Rating	This terminal block carries a minimum of 10kA SCCR rating for all protection methods. Please see the table for other possible elevated ratings.
For CSA Certifications:	http://directories.csa-international.org/directorymain.asp
For UL Certifications Directory:	http://database.ul.com/cgi-bin/XYV/template/LISEXT/1FRAME/index.htm

BOM #26

Product: 1492-EBJ3-Y

Description: 1492 Terminal Block Accessories

ACCESSORY ITEMS

Accessories	End Barriers, Partition Plates, and Terminal Covers

SDU Series, DIN Rail AC UPS

The SDU DIN Rail UPS combines an industry leading compact design with a wide operation temperature range and unique installation options. The SDU series provides economical protection from damaging impulses and power interruptions. These units include easy to wire screw terminations for critical devices needing battery back up such as computer based control systems.

E179213

Applications

- Programmable Logic Controllers
- Factory Automation
- Robotics
- Conveying Equipment
- Computer-based Control Systems

Features

- Lightweight, compact industrial design
- Wide operation temperature range (0ºC to 50ºC)
- Cold start capability
- Phone/dataline surge protection
- Software and cable included for easy installation
- Simulated sinewave output
- RS232 communication port
- USB communication port (optional)
- Form C dry contact relay (optional)
- Panel/wall mounting brackets (optional)
- Remote turn-on and shut-off capabilities
- Two year limited warranty

Certifications and Compliances

120V Models

- c UL us UL Recognized Component, UPS Equipment
  - UL 60950-1/CSA C22.2 No. 60950-1
  - Suitable for UL 508, CSA C22.2 No. 107.1 Ind. Control Equipment Applications with no derating
    - Overvoltage Cat III, Pollution Degree III

230V Models

- CE
  - EN62040-1-1

Related Products

- Portable MCR Power Conditioners
- STV Surge Protective Devices
- SDN DIN Rail Power Supplies
- STFV Plus Active Tracking® Filters

Selection Table

Capacity (VA/W)	Catalog Number	Volts, Frequency In/Out	Typical Back–up Time (minutes) *	Input/Output Connections	Approx. Ship Weight – lbs (kg)
500/300	**SDU 500**	120 Vac, 50/60 Hz	4	IP20 touch proof, screw terminals. Wire range: 10 ~ 24 AWG.	10.7 (4.70)
850/510	**SDU 850**		2		11.4 (5.00)
500/300	**SDU 500–5**	230 Vac, 50/60 Hz	4		11.5 (5.20)
850/510	**SDU 850–5**		2		11.9 (5.40)

* At full load.

SDU Accessories

Catalog Number	Description	Approx. Ship Weight – lbs (kg)
RELAYCARD–SDU	Dry contact I/O relay box, IP20 touch proof screw terminals, wire size range 12~22 AWG (IEC 2.5mm); N.O./N.C. form "C" contact. Relay contact signal for "On Battery", "Low Battery" and "UPS Shutdown".	1.0 (0.45)
UPSMON–USB	RS232 to USB adapter cable	1.0 (0.45)
SDU–PMBRK	Mounting brackets to secure UPS to wall, back of panel or enclosure.	1.0 (0.45)

Specifications

Catalog Number	SDU 500	SDU 850	SDU 500–5	SDU 850–5
Capacity (VA/Watts)	500/300	850/510	500/300	850/510
Load Power Factor	0.6			
Dimensions – inches (mm)				
Unit (H x W x D) – in. (mm)	4.88 x 11.1 x 4.55 (124.0 x 281.0 x 116.0)			
Weight – lbs (kg)	10.7 (4.70)	11.4 (5.00)	11.5 (5.20)	11.9 (5.40)
Input Parameters				
Voltage	120 V (+10%, -20%)		230 V (+/- 20%)	
Frequency	50 +/- 5 Hz or 60 Hz +/- 6 Hz (auto sensing)			
Output AC Parameters				
Voltage (Battery Mode)	Step sinewave			
	+/- 5%			
Frequency (On Battery)	50 or 60 Hz			
	+/- 0.3 Hz			
Overload Protection	UPS automatic shutdown if overload exceeds 105% of nominal at 20 seconds, 120% at 10 seconds, 130% at 3 seconds			
Short Circuit	UPS output cut off immediately			
Battery Parameters				
Battery Type	Sealed, non-spillable, maintenance-free lead acid batteries			
Transfer Time	4 - 6 ms typical			
Back–up Time * (minutes)	4.5/18	2.5/10	4.5/18	2.5/10
Recharge Time	8 hours to 90% capacity after full discharge			
Environmental				
Operating Temperature	0°C to 50°C			
Storage Temperature	-15°C to 60°C			
Relative Humidity	1% to 95%, non-condensing			
Ambient Operation	1-95% humidity non-condensing, 0-50°C up to 5,000 ft. (1500m)			
Audible Noise	< 40dBA (1 meter from surface)			
Standards				
EMC	FCC Part 15, Subpart B, Class A; EMC: EN50091-2, EN61000-3-2, EN61000-3-3, IEC60801-2, IEC60801-3, IEC60801-4, IEC61000-2-2			
Elevation	5000 ft. without derating			
Shock & Vibration	According to the International Safe Transit Association standard ISTA 2A.			
Mounting	To be mounted on DIN TS35/7.5 or TS35/15 rail system. Chassis mounting permissible via optional brackets. Unit handles normal shock and vibration of industrial use and transportation without coming off rail.			

* At full load/half load.

BOM #28

Wireless module - RAD-900-IFS - 2901540

Please be informed that the data shown in this PDF Document is generated from our Online Catalog. Please find the complete data in the user's documentation. Our General Terms of Use for Downloads are valid (http://phoenixcontact.com/download)

Bidirectional, Radioline 900 MHz transceiver for wireless transmission of serial and I/O data

Product Description

Radioline is the new wireless system for large systems. Special features include extremely easy assignment of inputs and outputs by simply turning the thumbwheel - without any programming. Radioline transmits I/O signals (I/O mode) or serial data (serial mode) and is therefore very versatile. Alternatively, I/O signals can now also be connected to controllers directly using the Modbus protocol (PLC/Modbus RTU mode).
In addition, you can implement various network structures: from a simple point-to-point connection to complex mesh networks. Thanks to the latest Trusted Wireless technology, Radioline is the ideal choice for industrial use.

Product Features

- Extended temperature range, -40°C ... +70°C
- Range of several kilometers thanks to adjustable data rates for the wireless interface (16 ... 500 kbps)
- Integrated RS-232/RS-485 interface
- Quick and easy startup without programming
- High degree of reliability due to Trusted Wireless 2.0 technology (AES encryption, frequency hopping method, and coexistence management)
- Mesh networks of up to 250 devices

Key Commercial Data

Packing unit	1 pc
Weight per Piece (excluding packing)	350.0 g
Custom tariff number	85176200
Country of origin	United States

Technical data

Note

Trade restriction	The products are offered exclusively for export outside the EU and the European Economic Area.

Dimensions

Wireless module - RAD-900-IFS - 2901540

Technical data

Dimensions

Width	35 mm
Height	99 mm
Depth	114.5 mm

Ambient conditions

Degree of protection	IP20
Ambient temperature (operation)	-40 °C ... 70 °C
	-40 °F ... 158 °F
Ambient temperature (storage/transport)	-40 °C ... 85 °C
	-40 °F ... 185 °F
Permissible humidity (operation)	20 % ... 85 %
Permissible humidity (storage/transport)	20 % ... 85 %
Altitude	2000 m
Vibration (operation)	in accordance with IEC 60068-2-6: 5g, 10 Hz ... 150 Hz
Shock	16g, 11 ms

General

Overvoltage category	II
Assembly instructions	on standard DIN rail NS 35 in accordance with EN 60715
Pollution degree	2
Housing material	PA 6.6-FR
Flammability rating according to UL 94	V0
Export note	The products are offered exclusively for export outside the European Economic Area (EEA).

Supply

Supply voltage range	10.8 V DC ... 30.5 V DC
Max. current consumption	328 mA (@24 V DC)
Nominal power consumption	1.7 W (30 dBm)
Power consumption	8.4 W (peak; 30 dBm)
Transient surge protection	Yes

Wireless interface

Antenna connection	RSMA (female)
Direction	Bi-directional
Frequency	900 MHz
Frequency range	902 MHz ... 928 MHz
Data rate	16 kbps (adjustable)
	125 kbps (adjustable)
	250 kbps (adjustable)

Wireless module - RAD-900-IFS - 2901540

Technical data

Wireless interface

	500 kbps (adjustable)
Receiver sensitivity	-112 dBm (16 kbps)
	-105 dBm (125 kbps)
	-102 dBm (250 kbps)
	-95 dBm (500 kbps)
Transmission power	max. 1 W (adjustable)
Range	± 32 km (The range may be considerably above or below that stated, and depends on the environment, antenna technology, and the product used)
Security	128-bit data encryption

Serial interface

Interface 1	RS-232
Connection method	COMBICON plug-in screw terminal block
	D-SUB 9 (socket)
	3-conductor
Transmission speed	0.3 … 115.2 kbps
Interface 2	RS-485
Connection method	COMBICON plug-in screw terminal block
	2-wire
Termination resistor	390 Ω (switchable via DIP switches)
	150 Ω (switchable via DIP switches)
	390 Ω (switchable via DIP switches)
Transmission speed	0.3 … 115.2 kbps

RSSI output

Number of outputs	1
Voltage output signal	0 V ... 3 V

RF link relay output

Number of outputs	1
Contact type	PDT
Contact material	PdRu, gold-plated
Maximum switching voltage	30 V AC/DC
Max. switching current	500 mA
Electrical service life	5 x 10^5 cycles with 0.5 A @ 30 V DC

Connection data

Connection method	Screw connection
Conductor cross section solid min.	0.2 mm²
Conductor cross section solid max.	2.5 mm²

Wireless module - RAD-900-IFS - 2901540

Technical data

Connection data

Conductor cross section flexible min.	0.2 mm²
Conductor cross section flexible max.	2.5 mm²
Conductor cross section AWG min.	24
Conductor cross section AWG max.	14
Stripping length	7 mm
Tightening torque	0.6 Nm
Screw thread	M3

Status indicator

Status display	Green LED (supply voltage, PWR)
	Green LED (bus communication, DAT)
	Red LED (periphery error, ERR)
	3 x green, 1 x yellow LED (LED bar graph receive quality, RSSI)
	Green LED (receive data, RX)
	Green LED (transmit data, TX)

Approvals and conformance

Conformance	FCC Directive, Part 15.247
UL, USA / Canada	Class I, Div. 2, Groups A, B, C, D
Standards/regulations	EN 300328
	EN 61000-6-2
	EN 61000-6-4
	EN 50371
	EN 60950-1

Standards and Regulations

Electromagnetic compatibility	Conformance with EMC Directive 2004/108/EC
Standards/regulations	EN 300328
	EN 61000-6-2
	EN 61000-6-4
	EN 50371
	EN 60950-1
Shock	16g, 11 ms
Flammability rating according to UL 94	V0
Interface description	Trusted Wireless
Security	128-bit data encryption
Vibration (operation)	in accordance with IEC 60068-2-6: 5g, 10 Hz ... 150 Hz
Conformance	FCC Directive, Part 15.247
	ISC Directive RSS 210

Wireless module - RAD-900-IFS - 2901540

Technical data

Standards and Regulations

UL, USA	Class I, Zone 2, AEx nA nC IIC T4
UL, USA / Canada	Class I, Div. 2, Groups A, B, C, D
UL, Canada	Class I, Zone 2, Ex nA nC nL IIC T4 Gc X
CSA	CSA C22.2

Classifications

eCl@ss

eCl@ss 4.0	27230207
eCl@ss 4.1	27230207
eCl@ss 5.0	27230207
eCl@ss 5.1	27242208
eCl@ss 6.0	27242208
eCl@ss 7.0	27242208

ETIM

ETIM 3.0	EC001423
ETIM 4.0	EC000310
ETIM 5.0	EC000310

UNSPSC

UNSPSC 6.01	30211506
UNSPSC 7.0901	43223108
UNSPSC 11	39121008
UNSPSC 12.01	43223108
UNSPSC 13.2	43223108

Approvals

Approvals

Approvals

UL Listed / cUL Listed / cULus Listed

Ex Approvals

UL Listed / cUL Listed / cULus Listed

Wireless module - RAD-900-IFS - 2901540

Approvals

Approvals submitted

Approval details

UL Listed

cUL Listed

cULus Listed

Drawings

Block diagram

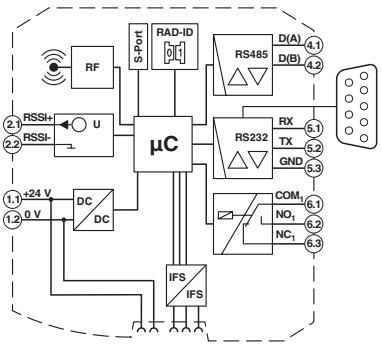

Dimensional drawing

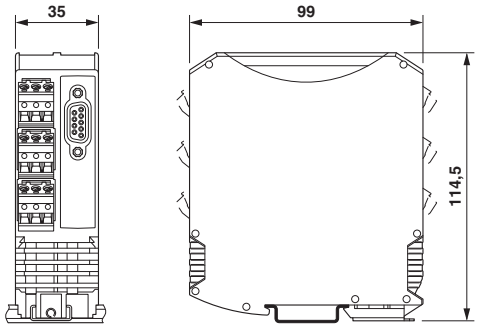

Phoenix Contact 2015 © - all rights reserved
http://www.phoenixcontact.com

BOM #29

I/O extension module - RAD-AO4-IFS - 2901538

Please be informed that the data shown in this PDF Document is generated from our Online Catalog. Please find the complete data in the user's documentation. Our General Terms of Use for Downloads are valid (http://phoenixcontact.com/download)

Analog I/O extension module with 4 analog current/voltage outputs (0/4 mA ... 20 mA, 0...10 V), with screw connection, incl. DIN rail connector

Product Features

- Channel-to-channel electrical isolation
- Extended temperature range, -40°C ... +70°C
- Easy module replacement even during operation (hot swap)
- Suitable for ATEX zone 2
- Easy startup via thumbwheel

Key Commercial Data

Packing unit	1 pc
Weight per Piece (excluding packing)	220.0 g
Custom tariff number	85389091
Country of origin	Germany

Technical data

Note

Utilization restriction	EMC: class A product, see manufacturer's declaration in the download area

Dimensions

Width	17.5 mm
Height	99 mm
Depth	114.5 mm

Ambient conditions

I/O extension module - RAD-AO4-IFS - 2901538

Technical data

Ambient conditions

Degree of protection	IP20
Ambient temperature (operation)	-40 °C ... 70 °C (>55°C derating)
	-40 °F ... 158 °F (>131°F derating)
Ambient temperature (storage/transport)	-40 °C ... 85 °C
	-40 °F ... 185 °F
Permissible humidity (operation)	20 % ... 85 %
Permissible humidity (storage/transport)	20 % ... 85 %
Altitude	2000 m
Vibration (operation)	in accordance with IEC 60068-2-6: 5g, 10 Hz ... 150 Hz
Shock	16g, 11 ms

General

Overvoltage category	II
Mounting position	any
Assembly instructions	on standard DIN rail NS 35 in accordance with EN 60715
Pollution degree	2
Housing material	PA 6.6-FR
Flammability rating according to UL 94	V0
MTTF	999 Years (Telcordia standard, 25°C temperature, 21% operating cycle (5 days a week, 8 hours a day))
	404 Years (Telcordia standard, 40°C temperature, 34.25% operating cycle (5 days a week, 12 hours a day))
	156 Years (Telcordia standard, temperature 40 °C, operating cycle 100 % (7 days a week, 24 hours a day))

Supply

Supply voltage range	19.2 V DC ... 30.5 V DC (TBUS)
Max. current consumption	≤ 115 mA (At 24 V DC, at 25°C)
Transient surge protection	Yes

Analog outputs

Number of outputs	4
Voltage output signal	0 V ... 10 V
Max. voltage output signal	approx. 10.83 V
Load	≥ 10 kΩ
Precision	typ. 0.5 % (Voltage output)
Current output signal	0 mA ... 20 mA
	4 mA ... 20 mA
Max. current output signal	approx. 21.67 mA
Load	≤ 500 Ω

I/O extension module - RAD-AO4-IFS - 2901538

Technical data

Analog outputs

Precision	≤ 0.02 % (at 25 °C)
Resolution	16 bit
Temperature coefficient, typical	0.0025 %/K (at -40 °C ... +70 °C)
Behavior of the outputs (adjustable via DIP switch)	Hold / Reset
Protective circuit	Transient protection of outputs

Electrical isolation

Analog I/O	50 V (Rated insulation voltage (in each case between the TBUS analog outputs / supply, reinforced insulation according to EN 61010))

Test voltage

Analog I/O	1.5 kV AC (50 Hz, 1 min.)

Connection data

Connection method	Screw connection
Conductor cross section solid min.	0.2 mm²
Conductor cross section solid max.	2.5 mm²
Conductor cross section flexible min.	0.2 mm²
Conductor cross section flexible max.	2.5 mm²
Conductor cross section AWG min.	24
Conductor cross section AWG max.	14
Stripping length	7 mm
Tightening torque	0.6 Nm
Screw thread	M3

Status indicator

Status display	Green LED (supply voltage, PWR)
	Green LED (bus communication, DAT)
	Red LED (periphery error, ERR)

Approvals and conformance

Conformance	CE-compliant
IECEx	Ex nA IIC T4 Gc
UL, USA / Canada	UL 508 Listed
Standard designation	EMC Directive 2004/108/EC
Standards/regulations	EN 61000-6-2
Standard designation	EMC Directive 2004/108/EC
Standards/regulations	EN 61000-6-4
Standard designation	Ex Directive (ATEX)
Standards/regulations	EN 60079-0

I/O extension module - RAD-AO4-IFS - 2901538

Technical data

Approvals and conformance

Standard designation	Ex Directive (ATEX)
Standards/regulations	EN-60079-15

Standards and Regulations

Electromagnetic compatibility	Conformance with EMC Directive 2004/108/EC
Standard designation	EMC Directive 2004/108/EC
Standards/regulations	EN 61000-6-2
Standard designation	EMC Directive 2004/108/EC
Standards/regulations	EN 61000-6-4
Standard designation	Ex Directive (ATEX)
Standards/regulations	EN 60079-0
Standard designation	Ex Directive (ATEX)
Standards/regulations	EN-60079-15
Shock	16g, 11 ms
Noise emission	EN 61000-6-4
Noise immunity	EN 61000-6-2
Flammability rating according to UL 94	V0
Vibration (operation)	in accordance with IEC 60068-2-6: 5g, 10 Hz ... 150 Hz
Conformance	CE-compliant
IECEx	Ex nA IIC T4 Gc
UL, USA / Canada	UL 508 Listed
	Class I, Div. 2, Groups A, B, C, D T4A
	Class I, Zone 2, IIC T4

Classifications

eCl@ss

eCl@ss 4.0	27230207
eCl@ss 4.1	27230207
eCl@ss 5.0	27230207
eCl@ss 5.1	27242208
eCl@ss 6.0	27242208
eCl@ss 7.0	27242208
eCl@ss 8.0	27242601

ETIM

ETIM 3.0	EC001423
ETIM 4.0	EC000310

I/O extension module - RAD-AO4-IFS - 2901538

Classifications

ETIM

ETIM 5.0	EC001596

UNSPSC

UNSPSC 6.01	30211506
UNSPSC 7.0901	43223108
UNSPSC 11	39121008
UNSPSC 12.01	43223108
UNSPSC 13.2	43223108

Approvals

Approvals

Approvals

UL Listed / cUL Listed / EAC / cULus Listed

Ex Approvals

ATEX / IECEx / UL Listed / cUL Listed / cULus Listed

Approvals submitted

Approval details

UL Listed

cUL Listed

EAC

cULus Listed

I/O extension module - RAD-AO4-IFS - 2901538

Drawings

Schematic diagram

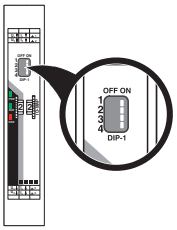

DIP switches

Schematic diagram

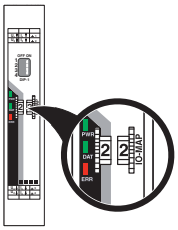

Thumb wheel

I/O extension module - RAD-AO4-IFS - 2901538

Block diagram

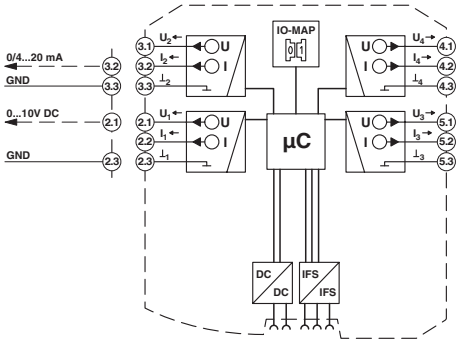

Functional drawing

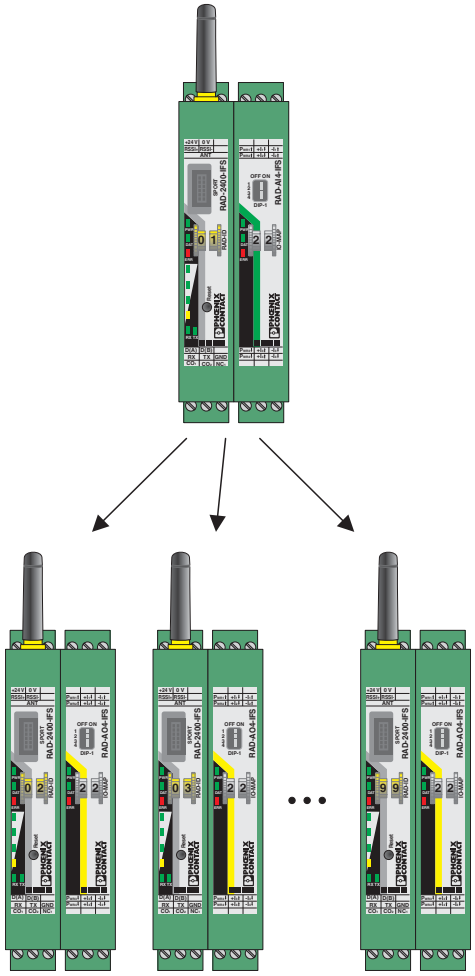

Assignment of analog inputs and analog outputs

I/O extension module - RAD-AO4-IFS - 2901538

Dimensional drawing

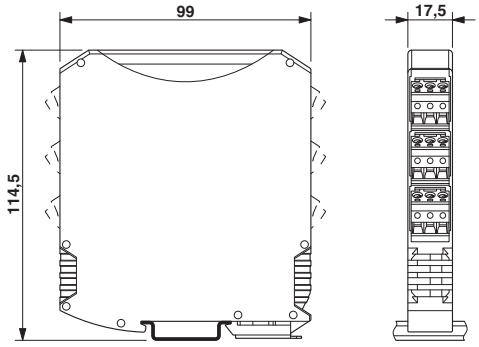

Schematic diagram

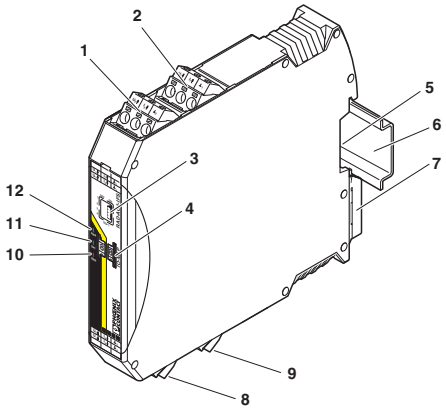

Function elements

I/O extension module - RAD-AO4-IFS - 2901538

Application drawing

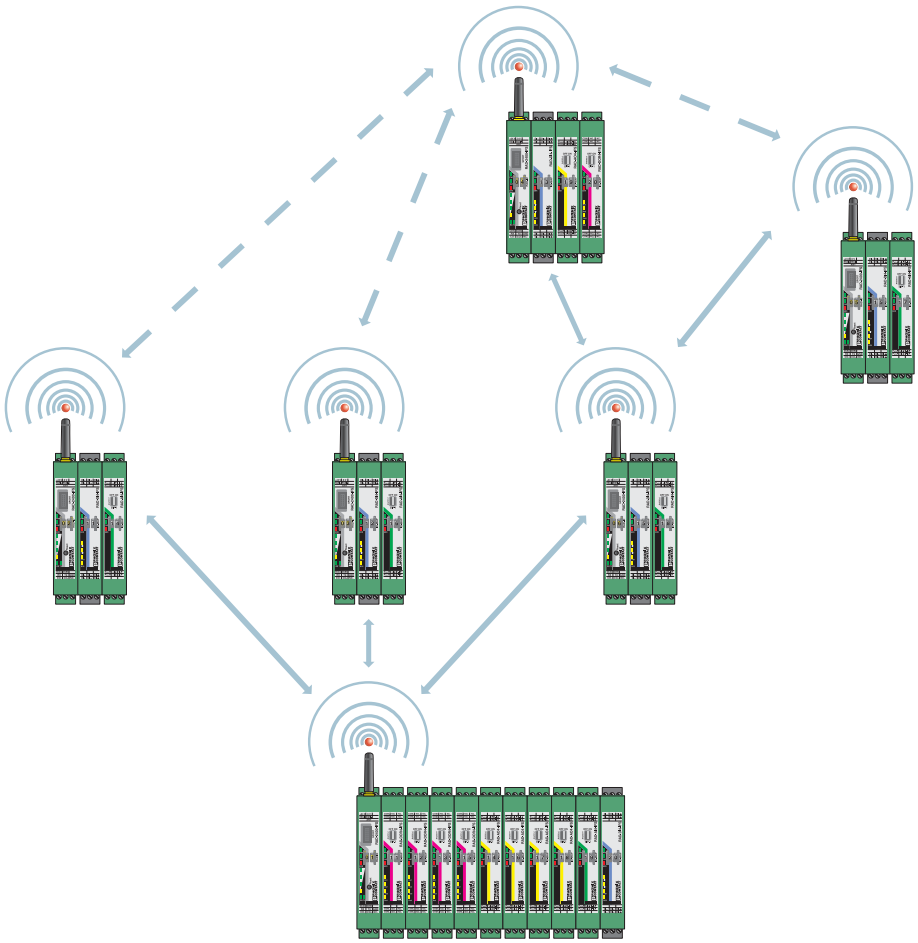

Wireless module in I/O data mode

I/O extension module - RAD-AO4-IFS - 2901538

Application drawing

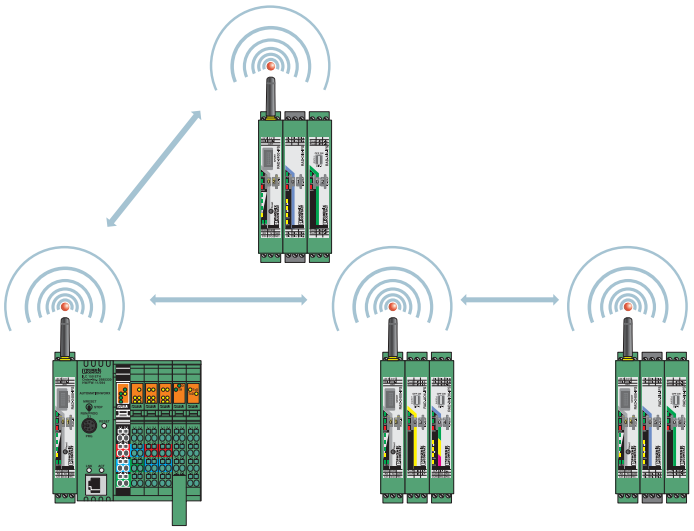

Wireless module in PLC/Modbus RTU mode

Phoenix Contact 2015 © - all rights reserved
http://www.phoenixcontact.com

Panel Materials for CP-101

CONTINUOUS HINGE WITH CLAMPS, TYPE 12

INDUSTRY STANDARDS

UL 508A Listed; Type 12, 13; File No. E61997
cUL Listed per CSA C22.2 No. 94; Type 12, 13; File No. E61997

NEMA/EEMAC Type 12 and 13
CSA, File No. 42186: Type 12
IEC 60529, IP65

APPLICATION

For applications requiring a bright white interior to increase control visibility, this enclosure includes a padlocking hasp and staple for security and screw-down clamps for secure closure.

SPECIFICATIONS

- Enclosure bodies are 14 or 16 gauge steel. Doors are 14 gauge steel.
- Seams continuously welded and ground smooth
- External wall-mounting brackets
- Formed external return flanges around all sides of enclosure opening
- Screw-down door clamps
- Removable heavy-gauge continuous hinge pin
- Hasp and staple for padlocking
- Data pocket is high-impact thermoplastic
- Collar studs provided for mounting optional panels
- Bonding provision on door

FINISH

White inside with ANSI 61 gray finish outside.

ACCESSORIES

See also Accessories.
Drip Shield Kit for Type 12 Enclosures
Electric Heater
Fast-Operating Clamp Assembly
Compact Cooling Fans
Steel and Stainless Steel Window Kits

MODIFICATION AND CUSTOMIZATION

Hoffman excels at modifying and customizing products to your specifications. Contact your local Hoffman sales office or distributor for complete information.

BULLETIN: A12

Standard Product

Catalog Number	AxBxC in./mm	Body Gauge	Panel	Conductive Panel	Panel Size D x E in./mm	F in./mm	Number of Clamps	Data Pocket
A122406LP	12.00 x 24.00 x 6.00 305 x 610 x 152	16	A12P24	A12P24G	9.00 x 21.00 229 x 533	3.00 76	2	Small
A161206LP	16.00 x 12.00 x 6.00 406 x 305 x 152	16	A16P12	A16P12G	13.00 x 9.00 330 x 229	1.25 32	2	Small
A161606LP	16.00 x 16.00 x 6.00 406 x 406 x 152	16	A16P16	A16P16G	13.00 x 13.00 330 x 330	3.00 76	2	Small
A162006LP	16.00 x 20.00 x 6.00 406 x 508 x 152	16	A20P16	A20P16G	17.00 x 13.00 432 x 330	3.00 76	2	Small
A201206LP	20.00 x 12.00 x 6.00 508 x 305 x 152	16	A20P12	A20P12G	17.00 x 9.00 432 x 229	1.25 32	2	Small
A201606LP	20.00 x 16.00 x 6.00 508 x 406 x 152	16	A20P16	A20P16G	17.00 x 13.00 432 x 330	3.00 76	2	Small
A202006LP	20.00 x 20.00 x 6.00 508 x 508 x 152	16	A20P20	A20P20G	17.00 x 17.00 432 x 432	3.00 76	2	Small
A202406LP	20.00 x 24.00 x 6.00 508 x 610 x 152	16	A24P20	A24P20G	21.00 x 17.00 533 x 432	3.00 76	2	Small
A241206LP	24.00 x 12.00 x 6.00 610 x 305 x 152	16	A12P24	A12P24G	9.00 x 21.00 229 x 533	1.25 32	2	Small
A241606LP	24.00 x 16.00 x 6.00 610 x 406 x 152	16	A24P16	A24P16G	21.00 x 13.00 533 x 330	3.00 76	2	Small
A242006LP	24.00 x 20.00 x 6.00 610 x 508 x 152	16	A24P20	A24P20G	21.00 x 17.00 533 x 432	3.00 76	2	Small
A242406LP	24.00 x 24.00 x 6.00 610 x 610 x 152	16	A24P24	A24P24G	21.00 x 21.00 533 x 533	3.00 76	2	Small
A301606LP	30.00 x 16.00 x 6.00 762 x 406 x 152	14	A30P16	A30P16G	27.00 x 13.00 686 x 330	3.00 76	2	Small
A302006LP	30.00 x 20.00 x 6.00 762 x 508 x 152	14	A30P20	A30P20G	27.00 x 17.00 686 x 432	3.00 76	2	Small
A302406LP	30.00 x 24.00 x 6.00 762 x 610 x 152	14	A30P24	A30P24G	27.00 x 21.00 686 x 533	3.00 76	2	Large
A362406LP	36.00 x 24.00 x 6.00 914 x 610 x 152	14	A36P24	A36P24G	33.00 x 21.00 838 x 533	3.00 76	2	Large
A363006LP	36.00 x 30.00 x 6.00 914 x 762 x 152	14	A36P30	A36P30G	33.00 x 27.00 838 x 686	3.00 76	2	Large
A122408LP	12.00 x 24.00 x 8.00 305 x 610 x 203	16	A12P24	A12P24G	9.00 x 21.00 229 x 533	3.00 76	2	Small
A161208LP	16.00 x 12.00 x 8.00 406 x 305 x 203	16	A16P12	A16P12G	13.00 x 9.00 330 x 229	1.25 32	2	Small
A161608LP	16.00 x 16.00 x 8.00 406 x 406 x 203	16	A16P16	A16P16G	13.00 x 13.00 330 x 330	3.00 76	2	Small

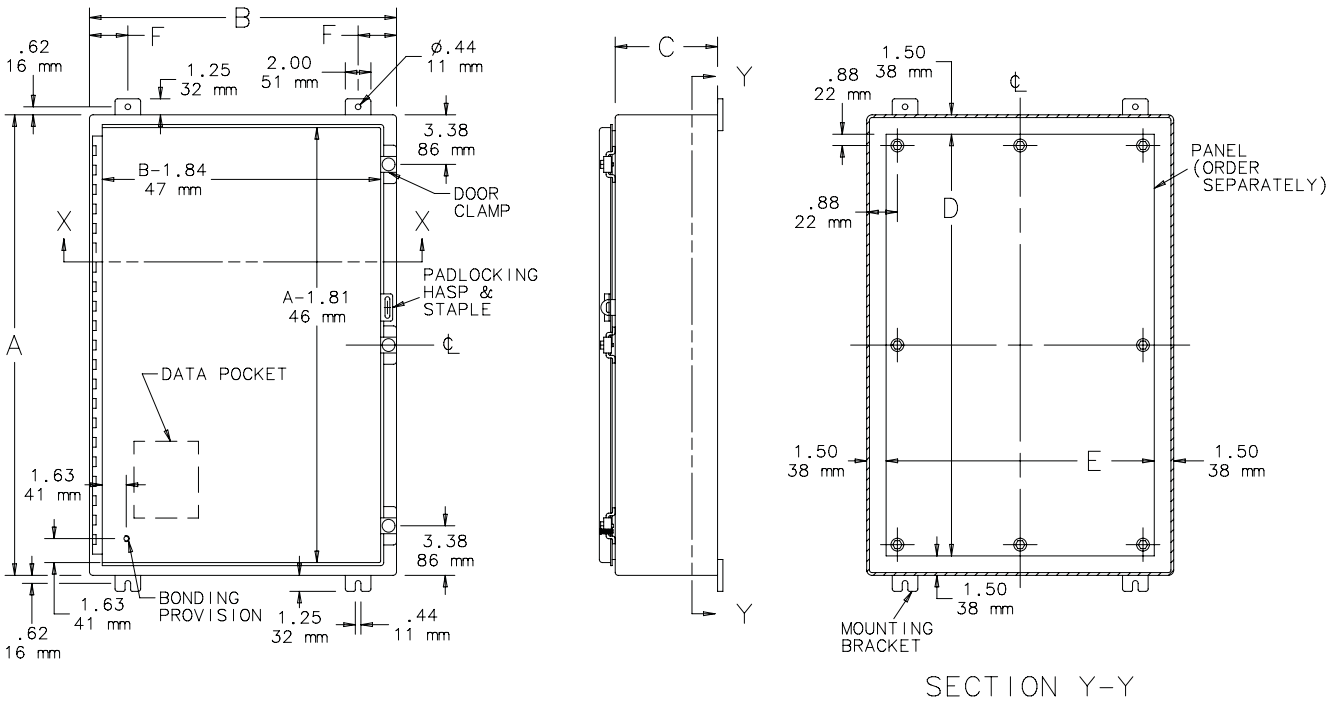
B
F
F
.62
16 mm
1.25
32 mm
2.00
51 mm
ø.44
11 mm
3.38
86 mm
B-1.84
47 mm
DOOR
CLAMP
X
X
PADLOCKING
HASP &
STAPLE
A-1.81
46 mm
A
DATA POCKET
1.63
41 mm
3.38
86 mm
1.63
41 mm
BONDING
PROVISION
1.25
32 mm
.44
11 mm
.62
16 mm
C
Y
Y
1.50
38 mm
.88
22 mm
PANEL
(ORDER
SEPARATELY)
.88
22 mm
D
1.50
38 mm
E
1.50
38 mm
1.50
38 mm
MOUNTING
BRACKET
SECTION Y-Y

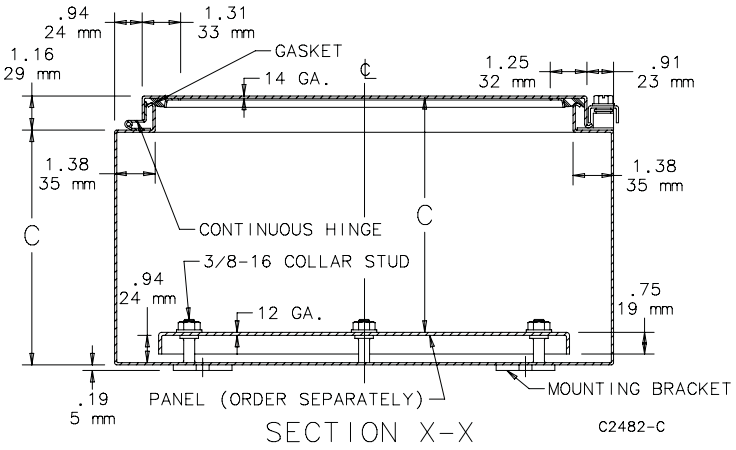
.94
24 mm
1.31
33 mm
1.16
29 mm
GASKET
14 GA.
1.25
32 mm
.91
23 mm
1.38
35 mm
1.38
35 mm
C
CONTINUOUS HINGE
C
3/8-16 COLLAR STUD
.94
24 mm
12 GA.
.75
19 mm
.19
5 mm
PANEL (ORDER SEPARATELY)
MOUNTING BRACKET
SECTION X-X
C2482-C

BOM #4

Product: 1492-EBJ3-Y

Description: 1492 Terminal Block Accessories

ACCESSORY ITEMS

Accessories	End Barriers, Partition Plates, and Terminal Covers

Product: 1492-JG3

Description: 1492 IEC Screw Terminal Blocks

BOM #5

Representative Photo Only
(actual product may vary based on configuration selections)

BLOCK STYLE	
Base Block Style	Grounding Blocks
BASE DATA	
Base Block Type	One-Circuit Feed-Through Ground Block
DETAIL DATA	
Features	Standard Feedthrough
Maximum Wire Size & Rating	UL: 22-12 AWG\nCSA: 22-12 AWG\nIEC: 2.5mm²\nEEx e II: 2.5mm²/20-14 AWG
Color	Green / Yellow Stripe (Standard)
CERTIFICATIONS AND APPROVALS	
UR	UL 486E, UL 1059; Reference File: E40735, E187022
CSA	CSA C22.2 No. 65, No. 158; On Website, Name: Rockwell, Keyword Search: 1492
IEC	EN 60947-1, EN 60947-7-1(Feed-Through), -2(Ground), -3(Fuse)
ATEX	http://www.rockwellautomation.com/products/certification/ex/excert.html
Short Circuit Current Rating	This terminal block carries a minimum of 10kA SCCR rating for all protection methods. Please see the table for other possible elevated ratings.
For CSA Certifications:	http://directories.csa-international.org/directorymain.asp
For UL Certifications Directory:	http://database.ul.com/cgi-bin/XYV/template/LISEXT/1FRAME/index.htm

BOM #6

Product: 1492-GS1G150

Description: 1492-GS High Density Mini Circuit Breakers (Toggle Style)

Representative Photo Only (actual product may vary based on configuration selections)

MINIATURE CIRCUIT BREAKER DATA	
Electrical Standards	UL
Number of Poles	1 pole
Magnetic Trip Range	G-Trip Characteristics - Inductive Loads (AC)
Amp Rating	15.0 A
Optional Auxiliary Contact	No Contact

CERTIFICATIONS AND APPROVALS	
UL	1077, Guide No. QVNU2, File No. E65138
CSA	22.2 NO. 235
EN	60934
CE	Marked
For UL Certifications Directory:	http://database.ul.com/cgi-bin/XYV/template/LISEXT/1FRAME/index.htm

BOM #7

Power supply unit - UNO-PS/1AC/24DC/ 60W - 2902992

Please be informed that the data shown in this PDF Document is generated from our Online Catalog. Please find the complete data in the user's documentation. Our General Terms of Use for Downloads are valid (http://phoenixcontact.com/download)

Primary-switched UNO POWER power supply for DIN rail mounting, input: 1-phase, output: 24 V DC/60 W

Product Description

UNO POWER power supplies with basic functionality
Thanks to their high power density, compact UNO POWER power supplies are the ideal solution for loads up to 100 W, particularly in compact control boxes. The power supply units are available in various performance classes and overall widths. Their high degree of efficiency and low idling losses ensure a high level of energy efficiency.

Product Features

- Flexible mounting by simply snapping onto the DIN rail
- More space in the control cabinet with up to 20 % higher power density
- Maximum energy efficiency, thanks to over 90 % efficiency and extremely low idling losses under 0.3 W

Key Commercial Data

Packing unit	1 pc
Weight per Piece (excluding packing)	240.0 g
Custom tariff number	85044030
Country of origin	Germany

Technical data

Dimensions

Width	35 mm
Height	90 mm
Depth	84 mm

Ambient conditions

Degree of protection	IP20
Ambient temperature (operation)	-25 °C ... 70 °C (> 55° C derating : 2.5%/K)

Power supply unit - UNO-PS/1AC/24DC/ 60W - 2902992

Technical data

Ambient conditions

Ambient temperature (storage/transport)	-40 °C ... 85 °C
Max. permissible relative humidity (operation)	≤ 95 % (at 25 °C, non-condensing)
Noise immunity	EN 61000-6-2:2005

Input data

Nominal input voltage range	100 V AC ... 240 V AC
Input voltage range	85 V AC ... 264 V AC
AC frequency range	45 Hz ... 65 Hz
Inrush surge current	< 30 A (typical)
Power failure bypass	> 20 ms (120 V AC)
	> 85 ms (230 V AC)
Input fuse	2.5 A (slow-blow, internal)
Choice of suitable circuit breakers	6 A ... 16 A (Characteristics B, C, D, K)
Type of protection	Transient surge protection
Protective circuit/component	Varistor

Output data

Nominal output voltage	24 V DC ±1 %
Nominal output current	2.5 A (-25°C ... 55°C)
Derating	55 °C ... 70 °C (2.5%/K)
Connection in parallel	Yes, for redundancy and increased capacity
Connection in series	Yes
Control deviation	< 1 % (change in load, static 10 % ... 90 %)
	< 2 % (Dynamic load change 10 % ... 90 %, 10 Hz)
	< 0.1 % (change in input voltage ±10 %)
Residual ripple	< 30 mV_{PP} (with nominal values)
Output power	60 W
Typical response time	< 1 s
Maximum power dissipation in no-load condition	< 0.3 W
Power loss nominal load max.	< 7 W

General

Net weight	0.2 kg
Efficiency	> 90 % (for 230 V AC and nominal values)
Insulation voltage input/output	4 kV AC (type test)
	3 kV AC (routine test)
Protection class	II (in closed control cabinet)
MTBF (IEC 61709, SN 29500)	> 785000 h (40°C)
Mounting position	horizontal DIN rail NS 35, EN 60715

Power supply unit - UNO-PS/1AC/24DC/ 60W - 2902992

Technical data

General

Assembly instructions	Alignable: 0 mm horizontally, 30 mm vertically
Electromagnetic compatibility	Conformance with EMC Directive 2004/108/EC
Low Voltage Directive	Conformance with LV directive 2006/95/EC
Standard – Electrical equipment of machines	EN 60204-1
Standard - Electrical safety	IEC 60950-1/VDE 0805 (SELV)
Standard – Electronic equipment for use in electrical power installations and their assembly into electrical power installations	EN 50178/VDE 0160 (PELV)
Standard – Safety extra-low voltage	IEC 60950-1 (SELV) and EN 60204-1 (PELV)
Standard - Safe isolation	DIN VDE 0100-410
Standard – Limitation of mains harmonic currents	EN 61000-3-2
Approval - requirement of the semiconductor industry with regard to mains voltage dips	EN 61000-4-11
Information technology equipment - safety (CB scheme)	CB Scheme
UL approvals	UL Listed UL 508
	UL/C-UL Recognized UL 60950
	NEC Class 2 as per UL 1310
	UL ANSI/ISA-12.12.01 Class I, Division 2, Groups A, B, C, D T4A (Hazardous Location)

Connection data, input

Connection method	Screw connection
Conductor cross section solid min.	0.2 mm²
Conductor cross section solid max.	2.5 mm²
Conductor cross section flexible min.	0.2 mm²
Conductor cross section flexible max.	2.5 mm²
Conductor cross section AWG min.	24
Conductor cross section AWG max.	14
Stripping length	8 mm
Screw thread	M3

Connection data, output

Connection method	Screw connection
Conductor cross section solid min.	0.2 mm²
Conductor cross section solid max.	2.5 mm²
Conductor cross section flexible min.	0.2 mm²
Conductor cross section flexible max.	2.5 mm²
Conductor cross section AWG min.	24
Conductor cross section AWG max.	14
Stripping length	8 mm

Power supply unit - UNO-PS/1AC/24DC/ 60W - 2902992

Technical data

Connection data, output

Screw thread	M3

Standards and Regulations

Electromagnetic compatibility	Conformance with EMC Directive 2004/108/EC
Shock	30g in each direction, according to IEC 60068-2-27
Noise immunity	EN 61000-6-2:2005
Connection in acc. with standard	CUL
Standards/regulations	EN 61000-4-3
	EN 61000-4-4
	EN 61000-4-6
Standard – Electrical equipment of machines	EN 60204-1
Standard - Electrical safety	IEC 60950-1/VDE 0805 (SELV)
Standard – Electronic equipment for use in electrical power installations and their assembly into electrical power installations	EN 50178/VDE 0160 (PELV)
Standard – Safety extra-low voltage	IEC 60950-1 (SELV) and EN 60204-1 (PELV)
Standard - Safe isolation	DIN VDE 0100-410
Standard – Limitation of mains harmonic currents	EN 61000-3-2
UL approvals	UL Listed UL 508
	UL/C-UL Recognized UL 60950
	NEC Class 2 as per UL 1310
	UL ANSI/ISA-12.12.01 Class I, Division 2, Groups A, B, C, D T4A (Hazardous Location)
Vibration (operation)	< 15 Hz, amplitude ±2.5 mm (according to IEC 60068-2-6)
Low Voltage Directive	Conformance with LV directive 2006/95/EC
Approval - requirement of the semiconductor industry with regard to mains voltage dips	EN 61000-4-11
Information technology equipment - safety (CB scheme)	CB Scheme

Classifications

eCl@ss

eCl@ss 4.0	27040702
eCl@ss 4.1	27040702
eCl@ss 5.0	27049002
eCl@ss 5.1	27049002
eCl@ss 6.0	27049002
eCl@ss 7.0	27049002
eCl@ss 8.0	27049002
eCl@ss 9.0	27040701

Power supply unit - UNO-PS/1AC/24DC/ 60W - 2902992

Classifications

ETIM

ETIM 3.0	EC001039
ETIM 4.0	EC000599
ETIM 5.0	EC002540

UNSPSC

UNSPSC 6.01	30211502
UNSPSC 7.0901	39121004
UNSPSC 11	39121004
UNSPSC 12.01	39121004
UNSPSC 13.2	39121004

Approvals

Approvals

Approvals

UL Recognized / UL Listed / cUL Recognized / cUL Listed / IECEE CB Scheme / EAC / EAC / cULus Recognized / cULus Listed

Ex Approvals

UL Listed / cUL Listed / cULus Listed

Approvals submitted

Approval details

UL Recognized

UL Listed

cUL Recognized

Power supply unit - UNO-PS/1AC/24DC/ 60W - 2902992

Approvals

cUL Listed

IECEE CB Scheme

EAC

EAC

cULus Recognized

cULus Listed

Drawings

Block diagram

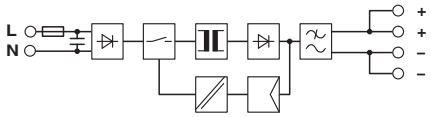

Phoenix Contact 2015 © - all rights reserved
http://www.phoenixcontact.com

BOM #8

Wireless module - RAD-900-IFS - 2901540

Please be informed that the data shown in this PDF Document is generated from our Online Catalog. Please find the complete data in the user's documentation. Our General Terms of Use for Downloads are valid (http://phoenixcontact.com/download)

Bidirectional, Radioline 900 MHz transceiver for wireless transmission of serial and I/O data

Product Description

Radioline is the new wireless system for large systems. Special features include extremely easy assignment of inputs and outputs by simply turning the thumbwheel - without any programming. Radioline transmits I/O signals (I/O mode) or serial data (serial mode) and is therefore very versatile. Alternatively, I/O signals can now also be connected to controllers directly using the Modbus protocol (PLC/Modbus RTU mode).
In addition, you can implement various network structures: from a simple point-to-point connection to complex mesh networks. Thanks to the latest Trusted Wireless technology, Radioline is the ideal choice for industrial use.

Product Features

- Extended temperature range, -40°C ... +70°C
- Range of several kilometers thanks to adjustable data rates for the wireless interface (16 ... 500 kbps)
- Integrated RS-232/RS-485 interface
- Quick and easy startup without programming
- High degree of reliability due to Trusted Wireless 2.0 technology (AES encryption, frequency hopping method, and coexistence management)
- Mesh networks of up to 250 devices

Key Commercial Data

Packing unit	1 pc
Weight per Piece (excluding packing)	350.0 g
Custom tariff number	85176200
Country of origin	United States

Technical data

Note

Trade restriction	The products are offered exclusively for export outside the EU and the European Economic Area.

Dimensions

Wireless module - RAD-900-IFS - 2901540

Technical data

Dimensions

Width	35 mm
Height	99 mm
Depth	114.5 mm

Ambient conditions

Degree of protection	IP20
Ambient temperature (operation)	-40 °C ... 70 °C
	-40 °F ... 158 °F
Ambient temperature (storage/transport)	-40 °C ... 85 °C
	-40 °F ... 185 °F
Permissible humidity (operation)	20 % ... 85 %
Permissible humidity (storage/transport)	20 % ... 85 %
Altitude	2000 m
Vibration (operation)	in accordance with IEC 60068-2-6: 5g, 10 Hz ... 150 Hz
Shock	16g, 11 ms

General

Overvoltage category	II
Assembly instructions	on standard DIN rail NS 35 in accordance with EN 60715
Pollution degree	2
Housing material	PA 6.6-FR
Flammability rating according to UL 94	V0
Export note	The products are offered exclusively for export outside the European Economic Area (EEA).

Supply

Supply voltage range	10.8 V DC ... 30.5 V DC
Max. current consumption	328 mA (@24 V DC)
Nominal power consumption	1.7 W (30 dBm)
Power consumption	8.4 W (peak; 30 dBm)
Transient surge protection	Yes

Wireless interface

Antenna connection	RSMA (female)
Direction	Bi-directional
Frequency	900 MHz
Frequency range	902 MHz ... 928 MHz
Data rate	16 kbps (adjustable)
	125 kbps (adjustable)
	250 kbps (adjustable)

Wireless module - RAD-900-IFS - 2901540

Technical data

Wireless interface

	500 kbps (adjustable)
Receiver sensitivity	-112 dBm (16 kbps)
	-105 dBm (125 kbps)
	-102 dBm (250 kbps)
	-95 dBm (500 kbps)
Transmission power	max. 1 W (adjustable)
Range	± 32 km (The range may be considerably above or below that stated, and depends on the environment, antenna technology, and the product used)
Security	128-bit data encryption

Serial interface

Interface 1	RS-232
Connection method	COMBICON plug-in screw terminal block
	D-SUB 9 (socket)
	3-conductor
Transmission speed	0.3 … 115.2 kbps
Interface 2	RS-485
Connection method	COMBICON plug-in screw terminal block
	2-wire
Termination resistor	390 Ω (switchable via DIP switches)
	150 Ω (switchable via DIP switches)
	390 Ω (switchable via DIP switches)
Transmission speed	0.3 … 115.2 kbps

RSSI output

Number of outputs	1
Voltage output signal	0 V ... 3 V

RF link relay output

Number of outputs	1
Contact type	PDT
Contact material	PdRu, gold-plated
Maximum switching voltage	30 V AC/DC
Max. switching current	500 mA
Electrical service life	5 x 10^5 cycles with 0.5 A @ 30 V DC

Connection data

Connection method	Screw connection
Conductor cross section solid min.	0.2 mm²
Conductor cross section solid max.	2.5 mm²

Wireless module - RAD-900-IFS - 2901540

Technical data

Connection data

Conductor cross section flexible min.	0.2 mm²
Conductor cross section flexible max.	2.5 mm²
Conductor cross section AWG min.	24
Conductor cross section AWG max.	14
Stripping length	7 mm
Tightening torque	0.6 Nm
Screw thread	M3

Status indicator

Status display	Green LED (supply voltage, PWR)
	Green LED (bus communication, DAT)
	Red LED (periphery error, ERR)
	3 x green, 1 x yellow LED (LED bar graph receive quality, RSSI)
	Green LED (receive data, RX)
	Green LED (transmit data, TX)

Approvals and conformance

Conformance	FCC Directive, Part 15.247
UL, USA / Canada	Class I, Div. 2, Groups A, B, C, D
Standards/regulations	EN 300328
	EN 61000-6-2
	EN 61000-6-4
	EN 50371
	EN 60950-1

Standards and Regulations

Electromagnetic compatibility	Conformance with EMC Directive 2004/108/EC
Standards/regulations	EN 300328
	EN 61000-6-2
	EN 61000-6-4
	EN 50371
	EN 60950-1
Shock	16g, 11 ms
Flammability rating according to UL 94	V0
Interface description	Trusted Wireless
Security	128-bit data encryption
Vibration (operation)	in accordance with IEC 60068-2-6: 5g, 10 Hz ... 150 Hz
Conformance	FCC Directive, Part 15.247
	ISC Directive RSS 210

Wireless module - RAD-900-IFS - 2901540

Technical data

Standards and Regulations

UL, USA	Class I, Zone 2, AEx nA nC IIC T4
UL, USA / Canada	Class I, Div. 2, Groups A, B, C, D
UL, Canada	Class I, Zone 2, Ex nA nC nL IIC T4 Gc X
CSA	CSA C22.2

Classifications

eCl@ss

eCl@ss 4.0	27230207
eCl@ss 4.1	27230207
eCl@ss 5.0	27230207
eCl@ss 5.1	27242208
eCl@ss 6.0	27242208
eCl@ss 7.0	27242208

ETIM

ETIM 3.0	EC001423
ETIM 4.0	EC000310
ETIM 5.0	EC000310

UNSPSC

UNSPSC 6.01	30211506
UNSPSC 7.0901	43223108
UNSPSC 11	39121008
UNSPSC 12.01	43223108
UNSPSC 13.2	43223108

Approvals

Approvals

Approvals

UL Listed / cUL Listed / cULus Listed

Ex Approvals

UL Listed / cUL Listed / cULus Listed

Wireless module - RAD-900-IFS - 2901540

Approvals

Approvals submitted

Approval details

UL Listed

cUL Listed

cULus Listed

Drawings

Block diagram

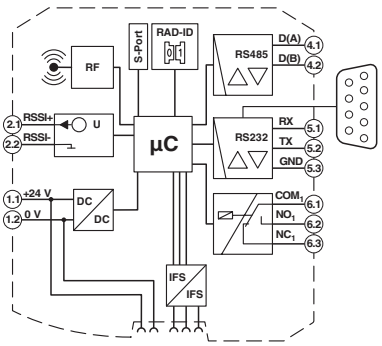

Dimensional drawing

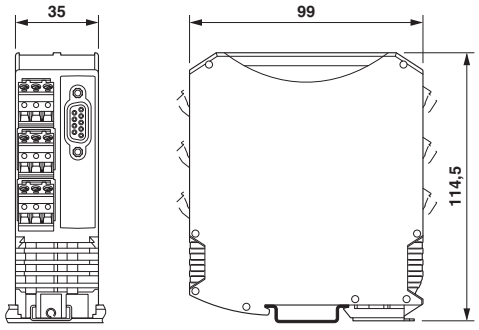

Phoenix Contact 2015 © - all rights reserved
http://www.phoenixcontact.com

BOM #9

I/O extension module - RAD-AI4-IFS - 2901537

Please be informed that the data shown in this PDF Document is generated from our Online Catalog. Please find the complete data in the user's documentation. Our General Terms of Use for Downloads are valid (http://phoenixcontact.com/download)

Analog extension module with 4 analog current inputs (0/4 mA ... 20 mA), with screw connection, incl. DIN rail connector

Product Features

- Channel-to-channel electrical isolation
- Extended temperature range, -40°C ... +70°C
- Easy module replacement even during operation (hot swap)
- Suitable for ATEX zone 2
- Easy startup via thumbwheel

Key Commercial Data

Packing unit	1 pc
Weight per Piece (excluding packing)	220.0 g
Custom tariff number	85389091
Country of origin	Germany

Technical data

Note

Utilization restriction	EMC: class A product, see manufacturer's declaration in the download area

Dimensions

Width	17.5 mm
Height	99 mm
Depth	114.5 mm

Ambient conditions

I/O extension module - RAD-AI4-IFS - 2901537

Technical data

Ambient conditions

Degree of protection	IP20
Ambient temperature (operation)	-40 °C ... 70 °C (>55°C derating)
	-40 °F ... 158 °F (>131°F derating)
Ambient temperature (storage/transport)	-40 °C ... 85 °C
	-40 °F ... 185 °F
Permissible humidity (operation)	20 % ... 85 %
Permissible humidity (storage/transport)	20 % ... 85 %
Altitude	2000 m
Vibration (operation)	in accordance with IEC 60068-2-6: 5g, 10 Hz ... 150 Hz
Shock	16g, 11 ms

General

Overvoltage category	II
Mounting position	any
Assembly instructions	on standard DIN rail NS 35 in accordance with EN 60715
Pollution degree	2
Housing material	PA 6.6-FR
Flammability rating according to UL 94	V0
MTTF	771 Years (Telcordia standard, 25°C temperature, 21% operating cycle (5 days a week, 8 hours a day))
	351 Years (Telcordia standard, 40°C temperature, 34.25% operating cycle (5 days a week, 12 hours a day))
	136 Years (Telcordia standard, temperature 40 °C, operating cycle 100 % (7 days a week, 24 hours a day))

Supply

Supply voltage range	19.2 V DC ... 30.5 V DC (TBUS)
Max. current consumption	≤ 120 mA (At 24 V DC, at 25°C)
Transient surge protection	Yes

Analog inputs

Number of inputs	4
Current input signal	0 mA ... 20 mA (can be set via DIP switches)
	4 mA ... 20 mA (can be set via DIP switches)
Max. current input signal	22 mA
Input resistance current input	< 70 Ω
Precision	≤ 0.02 % (at 25 °C)
Temperature coefficient, typical	0.0025 %/K (at -40 °C ... +70 °C)
Supply voltage	≥ 12 V DC (For passive sensors (via terminal PWR1, +I1))
Resolution	16 (Bit)

I/O extension module - RAD-AI4-IFS - 2901537

Technical data

Analog inputs

Protective circuit	Overload protection, short-circuit protection

Electrical isolation

Analog I/O	50 V (Rated insulation voltage (in each case between the TBUS analog outputs / supply, reinforced insulation according to EN 61010))

Test voltage

Analog I/O	1.5 kV AC (50 Hz, 1 min.)

Connection data

Connection method	Screw connection
Conductor cross section solid min.	0.2 mm²
Conductor cross section solid max.	2.5 mm²
Conductor cross section flexible min.	0.2 mm²
Conductor cross section flexible max.	2.5 mm²
Conductor cross section AWG min.	24
Conductor cross section AWG max.	14
Stripping length	7 mm
Tightening torque	0.6 Nm
Screw thread	M3

Status indicator

Status display	Green LED (supply voltage, PWR)
	Green LED (bus communication, DAT)
	Red LED (periphery error, ERR)

Approvals and conformance

Conformance	CE-compliant
IECEx	Ex nA IIC T4 Gc
UL, USA / Canada	UL 508 Listed
Standard designation	EMC Directive 2004/108/EC
Standards/regulations	EN 61000-6-2
Standard designation	EMC Directive 2004/108/EC
Standards/regulations	EN 61000-6-4
Standard designation	Ex Directive (ATEX)
Standards/regulations	EN 60079-0
Standard designation	Ex Directive (ATEX)
Standards/regulations	EN-60079-15

Standards and Regulations

Electromagnetic compatibility	Conformance with EMC Directive 2004/108/EC

I/O extension module - RAD-AI4-IFS - 2901537

Technical data

Standards and Regulations

Standard designation	EMC Directive 2004/108/EC
Standards/regulations	EN 61000-6-2
Standard designation	EMC Directive 2004/108/EC
Standards/regulations	EN 61000-6-4
Standard designation	Ex Directive (ATEX)
Standards/regulations	EN 60079-0
Standard designation	Ex Directive (ATEX)
Standards/regulations	EN-60079-15
Shock	16g, 11 ms
Noise emission	EN 61000-6-4
Noise immunity	EN 61000-6-2
Flammability rating according to UL 94	V0
Vibration (operation)	in accordance with IEC 60068-2-6: 5g, 10 Hz ... 150 Hz
Conformance	CE-compliant
IECEx	Ex nA IIC T4 Gc
UL, USA / Canada	UL 508 Listed
	Class I, Div. 2, Groups A, B, C, D T4A
	Class I, Zone 2, IIC T4

Classifications

eCl@ss

eCl@ss 4.0	27230207
eCl@ss 4.1	27230207
eCl@ss 5.0	27230207
eCl@ss 5.1	27242208
eCl@ss 6.0	27242208
eCl@ss 7.0	27242208
eCl@ss 8.0	27242601

ETIM

ETIM 3.0	EC001423
ETIM 4.0	EC000310
ETIM 5.0	EC001596

UNSPSC

UNSPSC 6.01	30211506
UNSPSC 7.0901	43223108

I/O extension module - RAD-AI4-IFS - 2901537

Classifications

UNSPSC

UNSPSC 11	39121008
UNSPSC 12.01	43223108
UNSPSC 13.2	43223108

Approvals

Approvals

Approvals

UL Listed / cUL Listed / EAC / cULus Listed

Ex Approvals

ATEX / IECEx / UL Listed / cUL Listed / cULus Listed

Approvals submitted

Approval details

UL Listed

cUL Listed

EAC

cULus Listed

Drawings

I/O extension module - RAD-AI4-IFS - 2901537

Schematic diagram

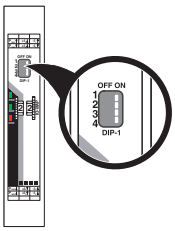

DIP switches

Schematic diagram

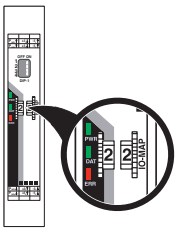

Thumb wheel

Block diagram

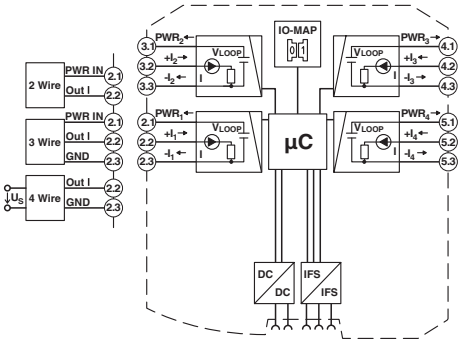

Functional drawing

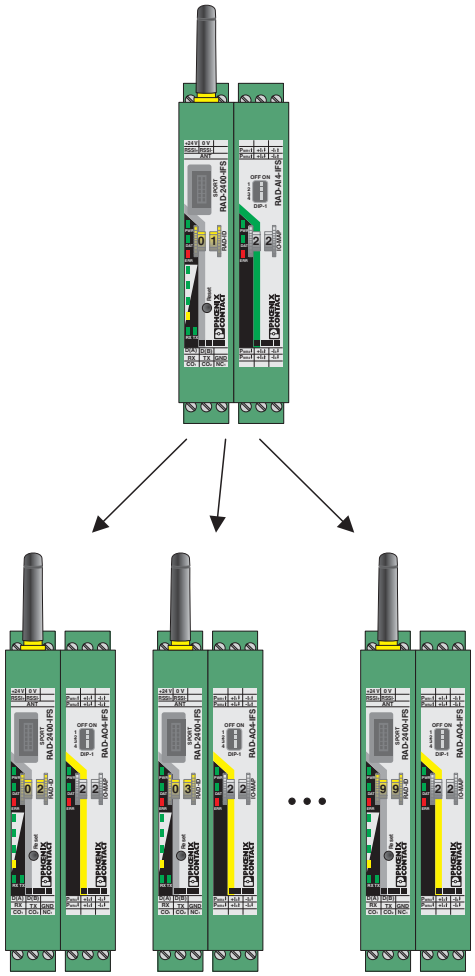

Assignment of analog inputs and analog outputs

I/O extension module - RAD-AI4-IFS - 2901537

Dimensional drawing

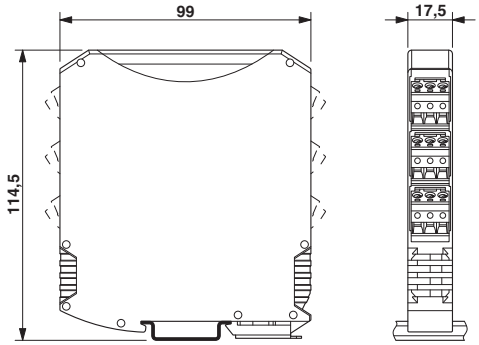

Schematic diagram

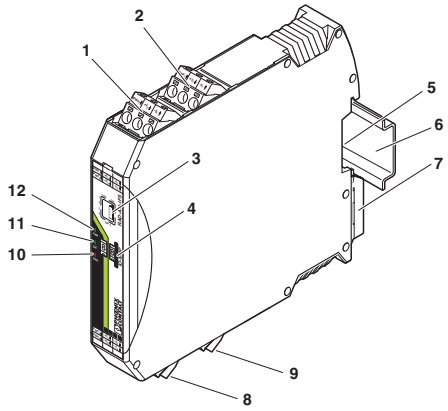

Function elements

I/O extension module - RAD-AI4-IFS - 2901537

Application drawing

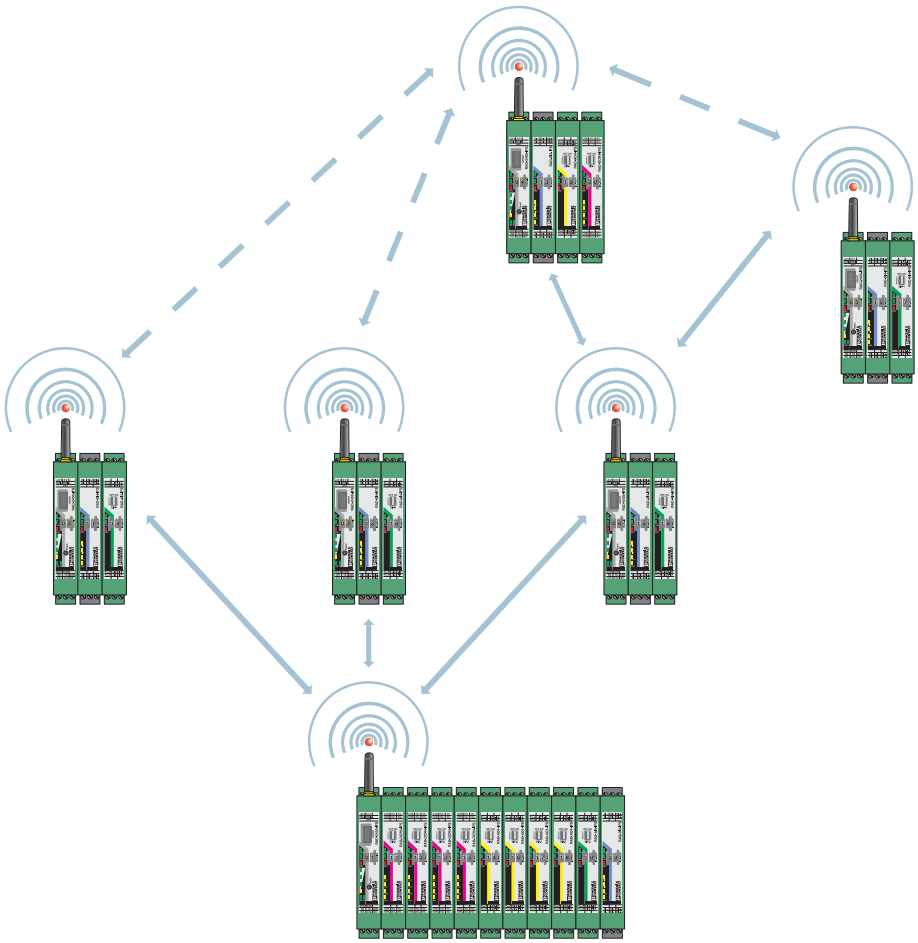

Wireless module in I/O data mode

I/O extension module - RAD-AI4-IFS - 2901537

Application drawing

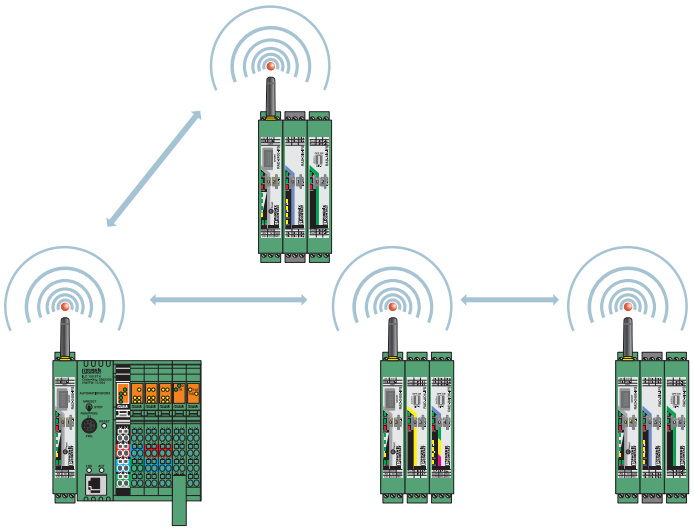

Wireless module in PLC/Modbus RTU mode

Phoenix Contact 2015 © - all rights reserved
http://www.phoenixcontact.com

BOM #10

Product: 1492-H5

Description: 1492-H Finger-Safe Terminal Blocks

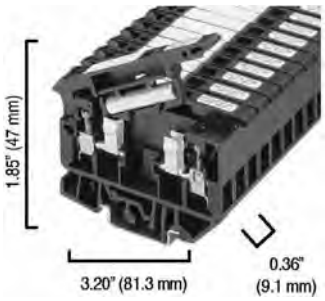

Representative Photo Only (actual product may vary based on configuration selections)

BASE DATA

Electrical Standards	UL
Type of Device	Finger-Safe Terminal Block
Base Block Type	Single Circuit Fuse Block

DETAIL DATA

Features	LED Blown Fuse Indicator
Wire Range	#30 - #12 AWG
Color	Black (Standard)
Bulk Pack	No Bulk Pack (Single Block)

CERTIFICATIONS AND APPROVALS

UR	UL 486E, UL 1059; Reference File: E40735
CSA	CSA C22.2 No. 65, No. 158; On Website, Name: Rockwell, Keyword Search: 1492
IEC	EN 60947-1, EN 60947-7-1(Feed-Through), -2(Ground), -3(Fuse)
Short Circuit Current Rating	This terminal block carries a minimum of 10kA SCCR rating for all protection methods. Please see the table for other possible elevated ratings.
For CSA Certifications:	http://directories.csa-international.org/directorymain.asp
For UL Certifications Directory:	http://database.ul.com/cgi-bin/XYV/template/LISEXT/1FRAME/index.htm

BOM #11

Spring-Clamp Connection Terminal Blocks

Plug-in Style Blocks (Cat. Nos. 1492-L3P, -LDG3P) and Analog Loop Control Block (Cat. No. 1492-LDAG3)

	1492-L3P			1492-LDG3P			1492-LDAG3		
Dimensions are not intended to be used for manufacturing purposes. **Note:** Height dimension is measured from top of rail to top of terminal block.	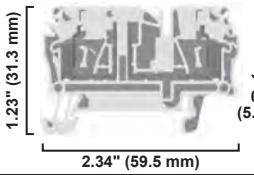			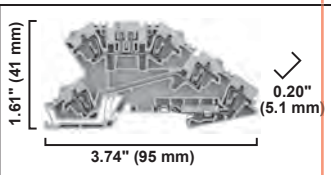			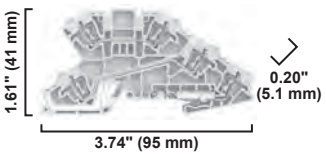		
Specifications	*Single Circuit Plug-In Component Block for a Variety of Components*			*Terminal Block with slot for Plug-In Component, Feed-Through Circuit and 1 Ground Connection*			*Analog Loop Control Terminal Block with 2 Feed-Through Circuits and 1 Ground Connection*		
Certifications	cULus	CSA	IEC	cULus	CSA	IEC	cULus	CSA	IEC
Voltage Rating	600V AC/DC		500V AC/DC	300V AC/DC		250V AC/DC	300V AC/DC		250V AC/DC
Maximum Current	20 A		24 A	10 A		20 A	10 A		24 A
Wire Range (Rated Cross Section)	#30…12 AWG		4 mm²	#26…12 AWG		2.5 mm²	#26…12 AWG		2.5 mm²
Wire Strip Length	0.39 in. (10 mm)			0.31 in. (8 mm)			0.31 in. (8 mm)		
Density	59 pcs/f (/196 pcs/m)			59 pcs/ft (196 pcs/m)			59 pcs/ft (196 pcs/m)		
Housing Temperature Range	–58…+248 °F (–50…+120 °C)			–58…+248 °F (–50…+120 °C)			–58…+248 °F (–50…+120 °C)		
Terminal Blocks	**Cat. No.**		**Pkg Qty.**	**Cat. No.**		**Pkg Qty.**	**Cat. No.**		**Pkg Qty.**
Color Grey	**1492-L3P**		25	**1492-L**		25	**1492-LDAG3**		25
Accessories	**Cat. No.**		**Pkg Qty.**	**Cat. No.**		**Pkg Qty.**	**Cat. No.**		**Pkg Qty.**
Mounting Rails 1 m Symmetrical DIN (Steel)	**199-DR1**		10	**199-DR1**		10	**199-DR1**		10
1 m Symmetrical DIN (Aluminum)	**1492-DR5**		10	**1492-DR5**		10	**1492-DR5**		10
1 m Hi-Rise Symmetrical DIN (Aluminum)	**1492-DR6**		2	**149**		2	**1492-DR6**		2
1 m Angled Hi-Rise Sym. DIN (Steel)	**1492-DR7**		2	**1492-DR7**		2	**1492-DR7**		2
End Barrier	**1492-EBL3**		50	**1492-EBLDAG3**		20	**1492-EBLDAG3**		20
End Anchors and Retainers Screwless End Retainer	**1492-ERL35**		20	**1492-ERL35**		20	**1492-ERL35**		20
DIN Rail — Normal Duty	**1492-EAJ35**		100	**1492-EAJ35**		100	**1492-EAJ35**		100
DIN Rail — Heavy Duty	**1492-EAHJ35**		50	**1492-EAHJ35**		50	**1492-EAHJ35**		50
Jumpers Plug-In Center Jumper — 50-pole	**1492-CJK5-50**		10	**1492-CJLJ5-50**		10	**1492-CJLJ5-50**		10
Plug-In Center Jumper — 10-pole	**1492-CJK5-10**		20	**1492-CJLJ5-10**		20	**1492-CJLJ5-10**		20
Plug-In Center Jumper — 9-pole	**1492-CJK5-9**		20	**1492-CJLJ5-9**		20	**1492-CJLJ5-9**		20
Plug-In Center Jumper — 8-pole	**1492-CJK5-8**		20	**1492-CJLJ5-8**		20	**1492-CJLJ5-8**		20
Plug-In Center Jumper — 7-pole	**1492-CJK5-7**		20	**1492-CJLJ5-7**		20	**1492-CJLJ5-7**		20
Plug-In Center Jumper — 6-pole	**1492-CJK5-6**		20	**1492-CJLJ5-6**		20	**1492-CJLJ5-6**		20
Plug-In Center Jumper — 5-pole	**1492-CJK5-5**		20	**1492-CJLJ5-5**		20	**1492-CJLJ5-5**		20
Plug-In Center Jumper — 4-pole	**1492-CJK5-4**		60	**1492-CJLJ5-4**		60	**1492-CJLJ5-4**		60
Plug-In Center Jumper — 3-pole	**1492-CJK5-3**		60	**1492-CJLJ5-3**		60	**1492-CJLJ5-3**		60
Plug-In Center Jumper — 2-pole	**1492-CJK5-2**		60	**1492-CJLJ5-2**		60	**1492-CJLJ5-2**		60
Other Accessories Disconnect Plug	**1492-DPL**		50	**1492-DPL**		50	—		—
Component Plug	**1492-CPL**		50	**1492-CPL**		50	—		—
Fuse Plug Without Blown Fuse Indicator	**1492-FPK2**		20	**1492-FPK2**		20	—		—
10…36V Blown Fuse Indicator	**1492-FPK224**		20	**1492-FPK224**		20	—		—
35…70V Blown Fuse Indicator	**1492-FPK248**		20	**1492-FPK248**		20	—		—
60…150V Blown Fuse Indicator	**1492-FPK2120**		20	**1492-FPK2120**		20	—		—
140…250V Blown Fuse Indicator	**1492-FPK2250**		20	**1492-FPK2250**		20	—		—
Reducing Sleeves 28…24 AWG (0.13…0.2 mm²) White	1492-PSL3-2		100	—		—	—		—
Reducing Sleeves 22…20 AWG (0.25…0.5 mm²) Grey	**1492-PSL3-5**		100	—		—	—		—
Reducing Sleeves 18 AWG (0.75…1.0 mm²) Dark Grey	**1492-PSL3-10**		100	—		—	—		—
Test Plug	**1492-TPL5**		25	**1492-TP23**		20	—		—
Electrical Warning Plate	**1492-EWPL5**		20	—		—	—		—
Group Marking Carrier	**1492-GM35**		25	**1492-GM35**		25	**1492-GM35**		25
Marking Systems Snap-In Marker Cards	**1492-M5X10** (144/card)		5	**1492-M5X10** (144/card)		5	**1492-M5X10** (144/card)		5
Snap-In Marker Cards	**1492-M5X5** (200/card)		5	**1492-M5X5** (200/card)		5	**1492-M5X5** (200/card)		5

BOM #13

BOM #16

12

Product: 1492-J3

Description: 1492 IEC Screw Terminal Blocks

BOM #14

Representative Photo Only (actual product may vary based on configuration selections)

BLOCK STYLE	
Base Block Style	Standard Feed-Through Blocks
BASE DATA	
Base Block Type	One-Circuit Feed-Through Block
DETAIL DATA	
Features	Standard Feedthrough
Maximum Wire Size & Rating	UL: 30-12 AWG (25A @600V AC/DC)\nCSA: 26-12 AWG (20A @600V AC/DC)\nIEC: 2.5mm² (24A @800V AC/DC)\nEEx e II: 2.5mm²/20-14 AWG (21A @ 550V AC/DC)
Color	Gray (Standard)
CERTIFICATIONS AND APPROVALS	
UR	UL 486E, UL 1059; Reference File: E40735, E187022
CSA	CSA C22.2 No. 65, No. 158; On Website, Name: Rockwell, Keyword Search: 1492
IEC	EN 60947-1, EN 60947-7-1(Feed-Through), -2(Ground), -3(Fuse)
ATEX	http://www.rockwellautomation.com/products/certification/ex/excert.html
Short Circuit Current Rating	This terminal block carries a minimum of 10kA SCCR rating for all protection methods. Please see the table for other possible elevated ratings.
For CSA Certifications:	http://directories.csa-international.org/directorymain.asp
For UL Certifications Directory:	http://database.ul.com/cgi-bin/XYV/template/LISEXT/1FRAME/index.htm

McCROMETER

The Flow Measurement Specialists

ACCURACY TEST

This flow meter has been wet flow calibrated in an NIST traceable flow laboratory per the manufacturer's specification for the model and size listed below. The final reading on mechanical totalizers is the result of final form testing (totalizers with electronic displays are reset to zero after testing.)

Totalizer Reading: 18350

METER SIZE: 10"

MODEL: MJL7-10

Cal. for pipe ID: 10.22

Serial No.: 20140402

Date: 2-17-14

Form 507

CERTIFIED TEST REPORT

CUSTOMER: MCCALLS METER SALES & SERVICE

MODEL NO: MLI1-10

METER SERIAL NO: 20140402

CONFIGURATION

METER INSIDE DIAMETER: 10.22

DIAL: GAL X 1000 2000 GPM

GEARS: 25 / 36

TOTALIZER GEARS: 24L / 36L

ACTUAL METER INDEX: 0.6189

TEST FACILITY: Volumetric

CALIBRATION DATA

	FLOW RATE GPM	% ACCURACY
1	2036.67	99.46
2	1036.40	99.54
3	263.30	100.38

TEST DATE: 2/17/2014

CERTIFIED BY: Paul Hobbs

PRINT DATE: 2/17/2014

This calibration was performed on a primary or secondary test facility, traceable to the National Institute of Standards and Technology, USA. The estimated flow measurement uncertainty of the calibration facilities are:
Primary +/- 0.15% Secondary +/- 0.5%

McCROMETER
3255 WEST STETSON AVENUE
HEMET, CA 92545 USA
PHONE (951) 652-6811 / FAX (951) 652-3078
WEB SITE: http://www.mccrometer.com E-MAIL: customerservice@mccrometer.com

20140402

Printed by Don Hawley
2/17/2014 5:31:46 PM
Version 1.0 (3/9/2007)

30119-04 Rev. 3.1/03-13

WATER SPECIALTIES™
PROPELLER METER

2"-20"
MAIN LINE METERS
MODELS
ML04, ML08, ML12, ML16, ML20, ML22, MLI1

OPERATION AND MAINTENANCE MANUAL
PARTS LIST

FEATURING:
*MODEL CN06-2 INDICATOR-TOTALIZER
*CERAMIC BEARING CARTRIDGE PROPELLER
* ONE PIECE SEPARATOR/SPINDLE AND THREADED REVERSE THRUST BEARING CARTRIDGE

McCROMETER
3255 WEST STETSON AVENUE
HEMET, CALIFORNIA 92545 U.S.A.

PHONE: 951-652-6811
FAX: 951-652-3078
VISIT OUR WEBSITE: www.mccrometer.com

ASR Resources, LLC

V-Smart Control Valve
Installation, Operation & Maintenance Manual

Kirtland AFB Project

December 2015

Project Overview

The Kirtland AFB groundwater remediation well project utilizes (1) 4” multi-port V-Smart down hole control valve. This valve was installed by CB&I in December 2015. Installation included one set of continuous length dual line hydraulic hose connected to a Nema-3R enclosed hydraulic power unit (HPU). The HPU includes a front door mounted control panel which features a local/remote selector switch, push buttons for local operation, pump run and open/closed lights.

Valve Installation

The V-Smart valve has 4” female NPT threads in both the upper and lower integral couplings. The lower coupling is plugged. Care must be exercised when tightening the valve onto the column pipe. When using chain-type wrenches, be careful to avoid marring the surface of the valve coupling. The chain-type wrench should only be positioned on the upper coupling, while avoiding the hydraulic fittings. It should never be positioned on the sliding sleeve section of the valve or on the lower coupling.

Hydraulic Power Unit Installation

The hydraulic power unit is mounted in a Nema-3R enclosure with a hinged lockable door for easy access.

CONTINENTAL
HYDRAULICS
OPEN

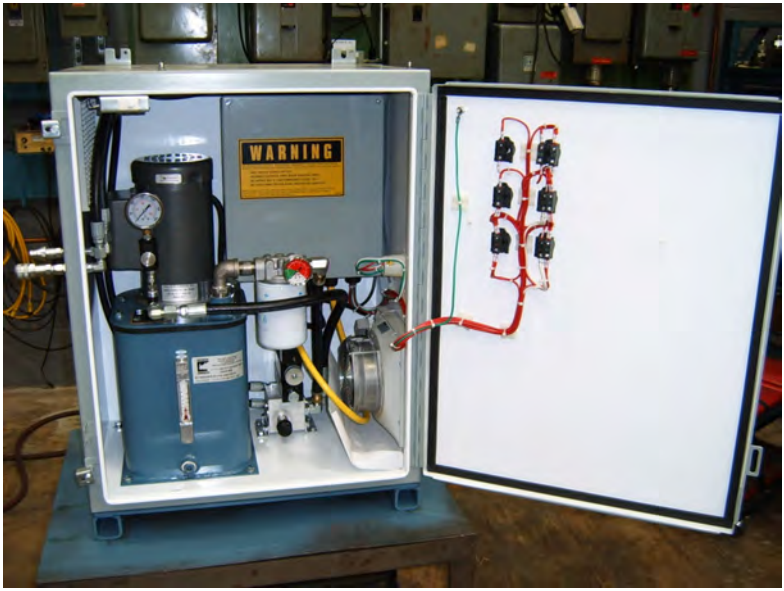

The 120VAC pump should be wired per the wiring diagram and checked for proper rotation by observing the motor shaft direction located at the top of the pump. An enclosure-mounted fan provides ventilation. The pump enclosure has two hydraulic hose fittings located on the left side of the enclosure for the open and closed hydraulic hose connections.

Fill the reservoir with the supplied food grade mineral oil until full as indicated on the level indicating gage located on the side of the pump reservoir. Remove the filler cap located on the top of the reservoir and fill using a flexible oil funnel or a small drill pump with a filler hose.

Adding Fluid to Reservoir

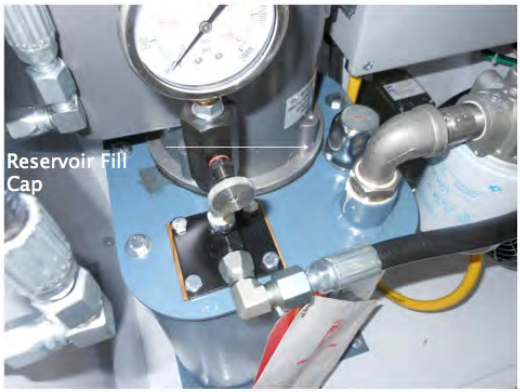

Remove cap by turning left and lifting up.
Use approved USDA Food Grade mineral oil ONLY.

Checking Reservoir Level

Maintain FULL level in oil level site glass

Hydraulic power unit hose connections

Once the hydraulic power unit reservoir is filled, connect the hydraulic hoses via the quick disconnect fittings.

After connecting the fittings, start the hydraulic power unit at the front cabinet control panel by placing the selector switch in the local (HAND) setting and pushing pump start button. Remove the open fitting plug on the valve end of the hose set, then push the pump open button and allow the oil to discharge into a clean bucket to remove any air that may have been trapped during removal of the valve from the well. Repeat for the closed hose. Run each hose for at least two minutes then cap the valve end of the hoses to keep the hoses full and air-free. This is required since the hoses are likely still partially full of oil from the last use.

Energizing the HPU Cabinet

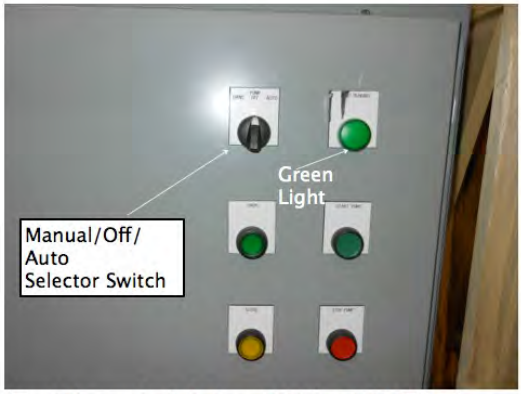

Turn Selector Switch from "OFF" to "HAND" or "AUTO". The HPU fan will run but green "PUMP RUNNING" light will not illuminate.

Manual HPU Pump Start

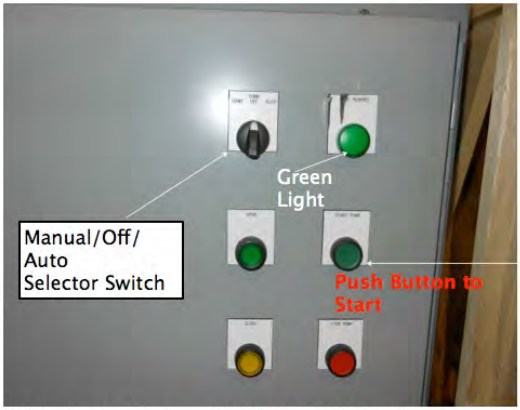

While in "HAND" push "START PUMP". The green "PUMP RUNNING" light will illuminate.

Open V-Smart Valve

Push green "OPEN" button and hold to open V-Smart valve to desired set point. It will illuminate while engaged.

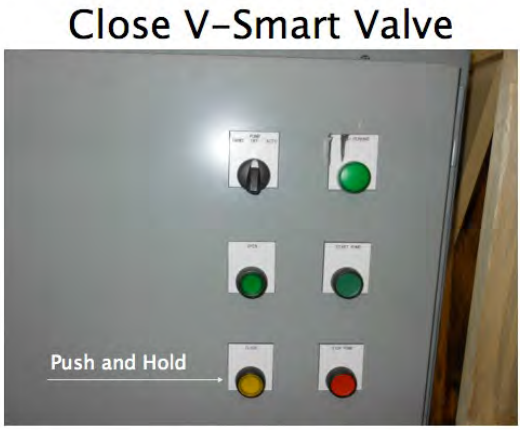

Push yellow "CLOSE" button and hold to close V-Smart valve to desired set point. It will illuminate while engaged.

V-Smart valve connections

Once the valve is connected to the column pipe and lowered into position above the well-head, the hydraulic hoses can be attached to the valve. First, identify the correct valve fittings for the open and closed hydraulic connections. The open fitting, marked "O", is to the right (with the valve in a vertical position) with the closed fitting, marked "C" on the left. While holding the open hose fitting in a vertical position to prevent oil from leaking, remove the "open" fitting cap on the valve and "open" plug on the hose fitting. Start the pump at the control panel by placing the selector switch in the local (HAND) setting and push the pump start button. Push and release the "open" button briefly to make sure oil is flowing at the top of the hose fitting, then quickly connect the open hose fitting (marked with green tape) to the open fitting on the valve and loosely tighten the fitting. Push the open button on the hydraulic power unit one more time to make sure oil is flowing past the fitting and to eliminate any air at the fitting connection, then tighten. Repeat the same process for the closed hose (marked with red tape).

With the selector switch still in the local (HAND) setting and the pump running, press and hold the open push button while the valve moves to the open position (valve sleeve will rise up exposing the injection ports). Once the valve reaches the end of travel, release the push button. [Note: The pressure relief valve on the hydraulic pump is set for 900 psi and will automatically bypass pressure once the valve reaches end of travel.] Repeat the procedure for the closed position. Run the valve several times full open and closed in the local (HAND) mode to verify operation. While running the valve, observe that there are no leaks at the fitting connections on the valve, at the internal hydraulic hose fittings inside the valve, or at the quick disconnect fittings where the two hose sections are connected and tighten fittings as required.

Pump Stop

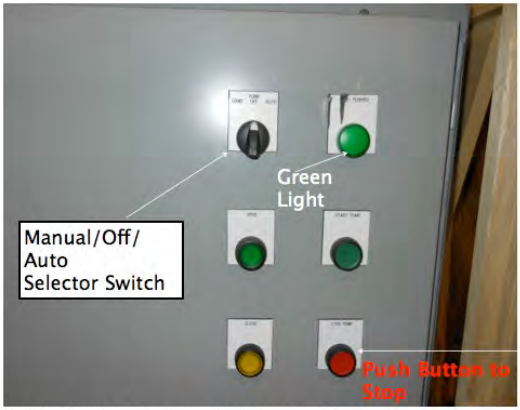

While in "HAND" push "STOP PUMP". The green "PUMP RUNNING" light will power off.

De-energizing the HPU Cabinet

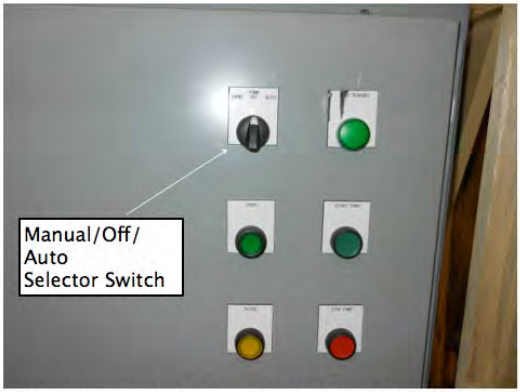

Turn Selector Switch from "HAND" or "AUTO" to "OFF". The HPU fan will run shut down.

At this point the hoses can be disconnected at the quick disconnect fittings, where the hoses are connected at the HPU, with hose ends bagged and taped to prevent any foreign debris from getting into the fittings. The valve can be installed in the well casing with the hoses taped along each section of joint pipe. The hoses can be reconnected with the quick disconnect fittings to the HPU unit at start up.

Start up

The pump is factory set to relieve pressure back to the reservoir in excess of 900 psi as verified on the pump gage. This pressure setting only be changed if directed by ASR Resources.

Adjusting System Pressure

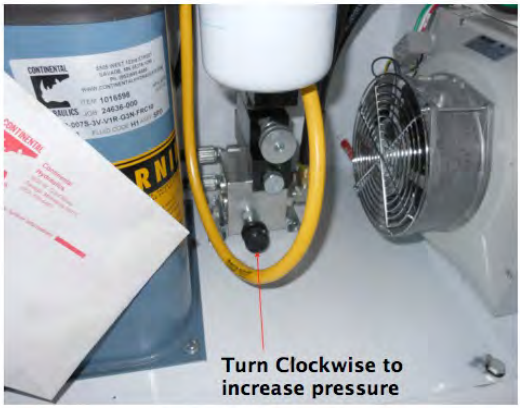

Warning: Do not exceed 1200 PSI Gauge pressure

With the hoses re-connected to the HPU, start the pump at the control panel by placing the selector switch in the local (HAND) setting and pushing the pump start button. Verify all above ground isolation valves are closed for the “dry run” operation prior to pressurizing the column pipe. Press and hold the open push button for 2 minutes while the valve moves to the open position. Repeat the procedure for the closed position. Run the valve several times full open and closed in the local (HAND) mode to verify operation. With the selector switch in the remote (AUTO) setting, open and close the valve via the PLC or computer (supplied by others) to verify operation. The valve is now ready to operate either manually in the local (HAND) mode or remotely in the (AUTO) setting to commence pumping or injection operation. Once the valve is operating in a flowing condition the speed control hydraulic needle valves can be adjusted to the desired setting to speed up or slow down the valve travel response time. The needle valve speed control adjustments typically address all speed of operation requirements. If larger adjustments need to be made, the internal flow control adjustment knob, which is factory pre-set, can be rotated to provide the required response time.

Internal Flow Control Adjustment

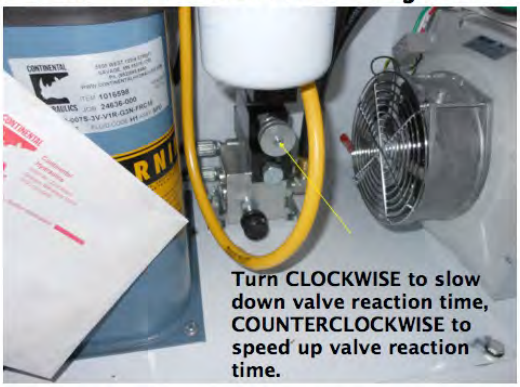

This flow control is factory set. It should not be readjusted unless external needle valve adjustments to not provide sufficient speed range settings.

V-Smart Valve Maintenance

There are no owner-serviceable components on the V-Smart valve itself. Any valve repairs will require the valve to be returned to ASR Resources for disassembly, repair, re-assembly and testing.

HPU Pump Maintenance

Oil Filter Replacement

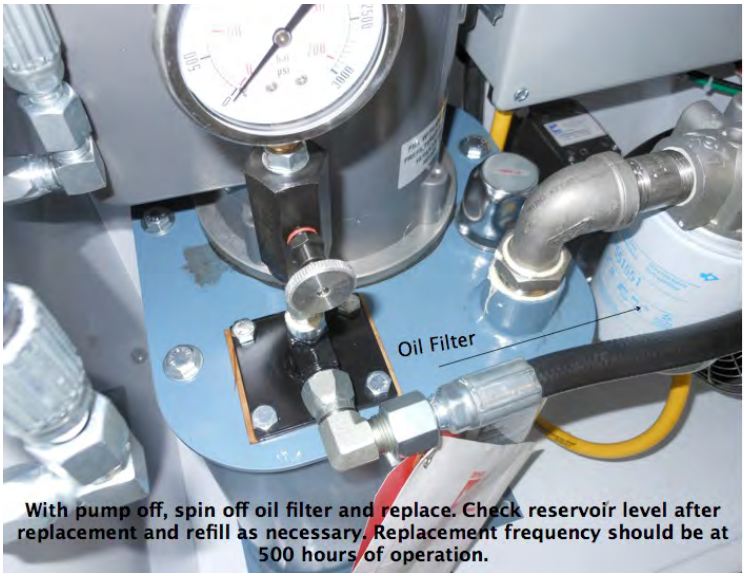

Cooling Air Filter

Filter pad may be cleaned with soft soap and water

Cooling Fan Maintenance

Advisory: Cooling Fan Starter control is thermostat, do not attempt to service when power unit is active.

Troubleshooting

Pump does not develop pressure - Confirm wiring and pump rotation is correct. Confirm internal pressure adjustment knob has not been changed. Rotate clockwise to increase pressure

Pump shows pressure on the internal gage but no pressure on the external hose gages - Make sure flow control needle valves in the hose assembly are not fully closed.

Valve operates too slow or too fast - Adjust external flow control needle valves in the hose assembly. If required, adjust internal flow limiting knob.

Reservoir level drops during operation - A leak is present in the between the HPU and the valve. If not above ground leaks are noted, the valve will need to be pulled.

V-Smart drawing and flow performance data, HPU drawing, Wiring Diagram, Bill of Materials are located in the valve submittal documents.

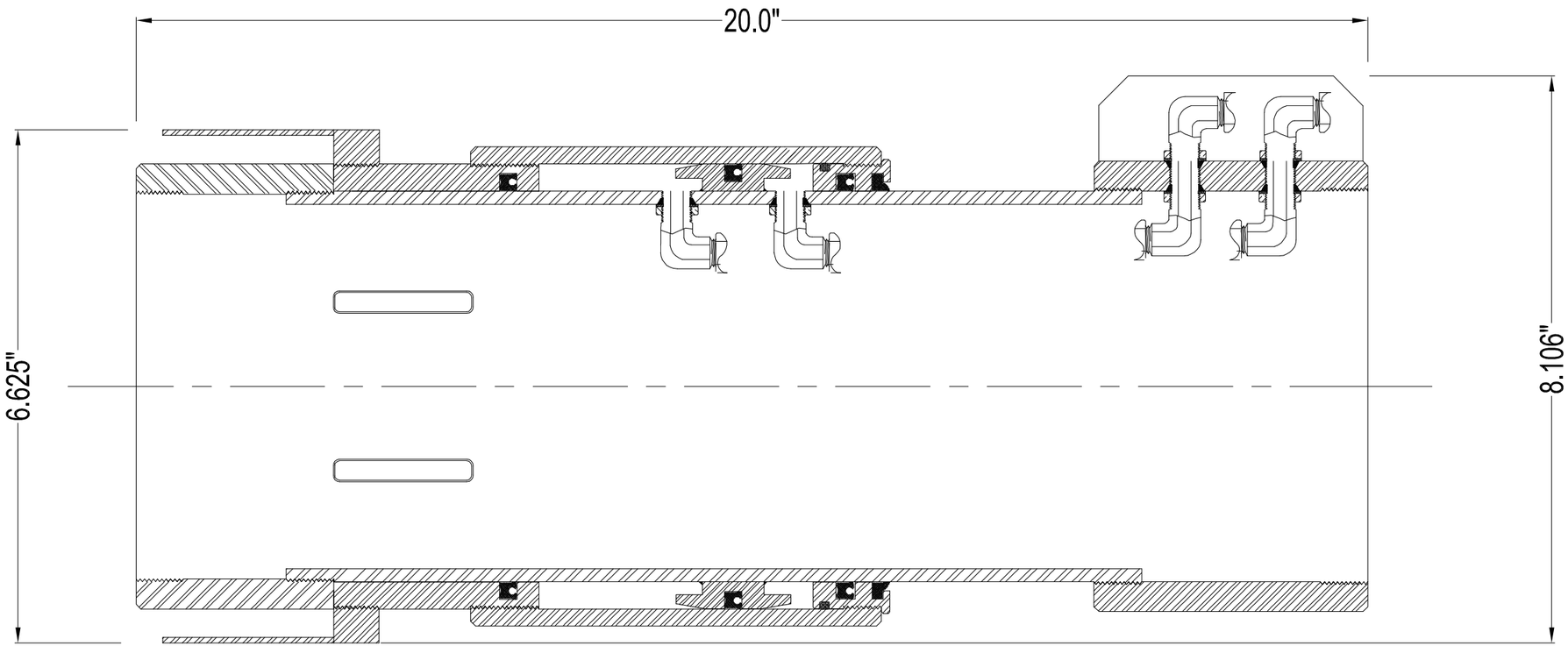

4" V-SMART OVERALL DRAWING

NOTES:
1.) UPPER AND LOWER THREADS - NPT

ASR Resources, LLC
7345 S Durango Dr. STE B107-176
Las Vegas, NV 89113
702-525-0250

4" V-SMART VALVE

DRAWN BY: SRP 03/21/2016
CHECKED BY: MRP 03/21/2016

CONTRACT NUMBER

DRAWING NUMBER NO.
SHEET 1 OF 1

ASR Resources, LLC (702) 525-0250

V-Smart Valve

CONSULTANT/CONTACT

PROJECT 4" valve for Kirtland AFB

SIZE		PORTS	DATE 9/21/2015
4.0 in.	X	4	

Web: www.ASRRESOURCES.COM

E-mail: cactuscontrols@cox.net

DROP PIPE DIAMETER	= 4.0 in.	Cv @ 100% FLOW	= 30.43
WELL SET DEPTH	= 530.0 ft.	WELL HEAD PRESSURE	= 25.0 psi.
DYNAMIC WATER LEVEL	= 500.0 ft.		

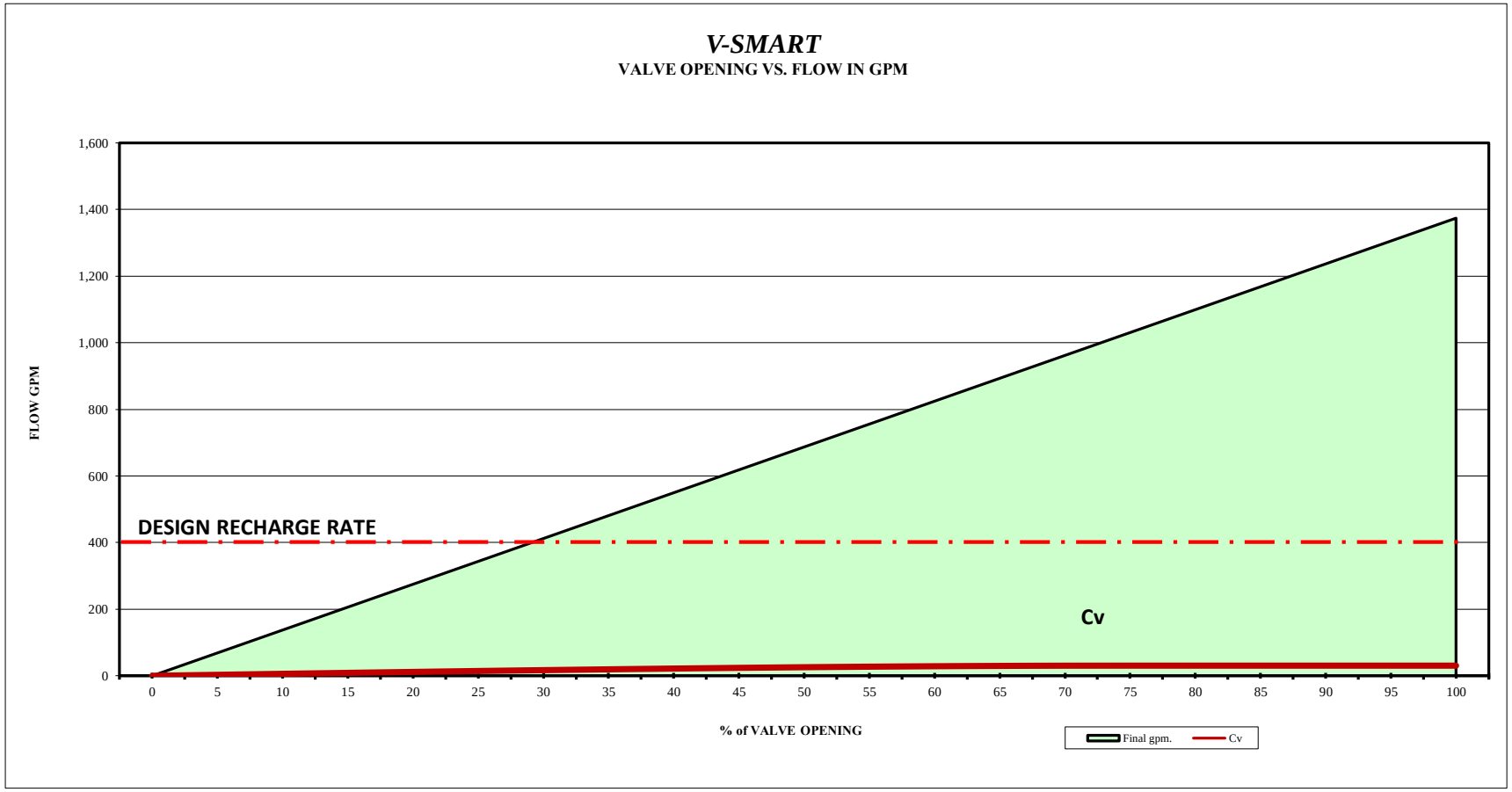

ASR Resources, LLC (702) 525-0250

V-Smart Valve

CONSULTANT/CONTACT

PROJECT 4" valve for Kirtland AFB

SIZE 4.0 in. X PORTS 4

DATE 9/21/2015

Web: www.ASRRESOURCES.COM

E-mail: cactuscontrols@cox.net

VELOCITIES IN THE PIPING SYSTEMS

DURING RECHARGE

% OPEN	GPM	VELOCITY - THRU DROP PIPE Vdp	V-SMART VALVE Vv	VALVE PORTS Vp	VALVE SHROUD Vc	WELL CASING Vc	
0	0 gpm.	0.0 fps.	0.0 fps.	0.0 fps.	0.0 fps.	0.0 fps.	
5	69 gpm.	1.1 fps.	1.9 fps.	129.7 fps.	0.3 fps.	0.1 fps.	
10	137 gpm.	2.1 fps.	3.8 fps.	129.7 fps.	0.6 fps.	0.3 fps.	
15	203 gpm.	3.2 fps.	5.7 fps.	129.7 fps.	0.9 fps.	0.4 fps.	
20	268 gpm.	4.2 fps.	7.5 fps.	129.7 fps.	1.2 fps.	0.5 fps.	
25	331 gpm.	5.1 fps.	9.2 fps.	129.7 fps.	1.4 fps.	0.6 fps.	
30	391 gpm.	6.1 fps.	10.9 fps.	129.7 fps.	1.7 fps.	0.7 fps.	
35	448 gpm.	7.0 fps.	12.5 fps.	129.7 fps.	2.0 fps.	0.8 fps.	←— Qr
40	501 gpm.	7.8 fps.	14.0 fps.	129.7 fps.	2.2 fps.	0.9 fps.	
45	550 gpm.	8.6 fps.	15.4 fps.	129.7 fps.	2.4 fps.	1.0 fps.	
50	594 gpm.	9.2 fps.	16.6 fps.	129.7 fps.	2.6 fps.	1.1 fps.	
55	631 gpm.	9.8 fps.	17.6 fps.	129.7 fps.	2.7 fps.	1.2 fps.	
60	662 gpm.	10.3 fps.	18.5 fps.	129.7 fps.	2.9 fps.	1.3 fps.	
65	685 gpm.	10.7 fps.	19.1 fps.	129.7 fps.	3.0 fps.	1.3 fps.	
70	699 gpm.	10.9 fps.	19.5 fps.	129.7 fps.	3.0 fps.	1.3 fps.	
75	702 gpm.	10.9 fps.	19.6 fps.	129.7 fps.	3.1 fps.	1.3 fps.	
80	702 gpm.	10.9 fps.	19.6 fps.	129.7 fps.	3.1 fps.	1.3 fps.	
85	702 gpm.	10.9 fps.	19.6 fps.	129.7 fps.	3.1 fps.	1.3 fps.	
90	702 gpm.	10.9 fps.	19.6 fps.	129.7 fps.	3.1 fps.	1.3 fps.	
95	702 gpm.	10.9 fps.	19.6 fps.	129.7 fps.	3.1 fps.	1.3 fps.	
100	702 gpm.	10.9 fps.	19.6 fps.	129.7 fps.	3.1 fps.	1.3 fps.	

FROM VALVE TO WELLHEAD DURING PUMPING

GPM	VELOCITY - THRU WELL CASING Vc	V-SMART VALVE Vv	DROP PIPE Vp	
0 gpm.	0.0 fps.	0.0 fps.	0.0 fps.	
30 gpm.	0.1 fps.	0.8 fps.	0.8 fps.	
60 gpm.	0.1 fps.	1.7 fps.	1.5 fps.	
90 gpm.	0.2 fps.	2.5 fps.	2.3 fps.	
120 gpm.	0.2 fps.	3.3 fps.	3.0 fps.	
150 gpm.	0.3 fps.	4.2 fps.	3.8 fps.	
180 gpm.	0.3 fps.	5.0 fps.	4.5 fps.	
210 gpm.	0.4 fps.	5.9 fps.	5.3 fps.	
240 gpm.	0.5 fps.	6.7 fps.	6.0 fps.	
270 gpm.	0.5 fps.	7.5 fps.	6.8 fps.	
300 gpm.	0.6 fps.	8.4 fps.	7.6 fps.	
330 gpm.	0.6 fps.	9.2 fps.	8.3 fps.	
360 gpm.	0.7 fps.	10.0 fps.	9.1 fps.	
390 gpm.	0.7 fps.	10.9 fps.	9.8 fps.	
420 gpm.	0.8 fps.	11.7 fps.	10.6 fps.	Qp ⟶
450 gpm.	0.9 fps.	12.6 fps.	11.3 fps.	
480 gpm.	0.9 fps.	13.4 fps.	12.1 fps.	
510 gpm.	1.0 fps.	14.2 fps.	12.9 fps.	
540 gpm.	1.0 fps.	15.1 fps.	13.6 fps.	
570 gpm.	1.1 fps.	15.9 fps.	14.4 fps.	
600 gpm.	1.1 fps.	16.7 fps.	15.1 fps.	

ASR Resources, LLC (702) 525-0250

V-Smart Valve

CONSULTANT/CONTACT

PROJECT 4" valve for Kirtland AFB

SIZE		PORTS
4.0 in.	X	4

DATE 9/21/2015

Web: www.ASRRESOURCES.COM

E-mail: cactuscontrols@cox.net

FRICTION LOSS IN THE PIPING SYSTEM

DURING RECHARGE

%		FRICTION LOSS - THRU DROP PIPE	V-SMART VALVE	VALVE PORTS	WELL CASING	VALVE SHROUD	LOSS TOTAL	
OPEN	GPM	FLdp	FLv	Fp *	FLc	FLT	FLT	
0	0 gpm.	0.0 ft.	0.0 ft.	0.0 ft.	0.0 ft.	0.0 ft.	**0.0 ft.**	
5	69 gpm.	1.9 ft.	0.0 ft.	530.9 ft.	0.0 ft.	0.0 ft.	**1.9 ft.**	
10	137 gpm.	6.7 ft.	0.0 ft.	526.0 ft.	0.0 ft.	0.1 ft.	**6.8 ft.**	
15	203 gpm.	13.9 ft.	0.1 ft.	518.6 ft.	0.0 ft.	0.2 ft.	**14.2 ft.**	
20	268 gpm.	23.3 ft.	0.1 ft.	509.1 ft.	0.0 ft.	0.3 ft.	**23.7 ft.**	
25	331 gpm.	34.4 ft.	0.1 ft.	497.8 ft.	0.0 ft.	0.4 ft.	**35.0 ft.**	
30	391 gpm.	46.8 ft.	0.2 ft.	485.1 ft.	0.0 ft.	0.6 ft.	**47.6 ft.**	
35	448 gpm.	60.2 ft.	0.3 ft.	471.5 ft.	0.0 ft.	0.7 ft.	**61.2 ft.**	←— Qr
40	501 gpm.	74.0 ft.	0.3 ft.	457.4 ft.	0.1 ft.	0.9 ft.	**75.3 ft.**	
45	550 gpm.	87.9 ft.	0.4 ft.	443.4 ft.	0.1 ft.	1.1 ft.	**89.4 ft.**	
50	594 gpm.	101.2 ft.	0.4 ft.	429.8 ft.	0.1 ft.	1.2 ft.	**102.9 ft.**	
55	631 gpm.	113.4 ft.	0.5 ft.	417.4 ft.	0.1 ft.	1.4 ft.	**115.4 ft.**	
60	662 gpm.	123.9 ft.	0.5 ft.	406.7 ft.	0.1 ft.	1.5 ft.	**126.0 ft.**	
65	685 gpm.	132.0 ft.	0.6 ft.	398.5 ft.	0.1 ft.	1.6 ft.	**134.2 ft.**	
70	699 gpm.	136.9 ft.	0.6 ft.	393.4 ft.	0.1 ft.	1.7 ft.	**139.3 ft.**	
75	702 gpm.	138.0 ft.	0.6 ft.	392.3 ft.	0.1 ft.	1.7 ft.	**140.4 ft.**	
80	702 gpm.	138.0 ft.	0.6 ft.	392.3 ft.	0.1 ft.	1.7 ft.	**140.4 ft.**	
85	702 gpm.	138.0 ft.	0.6 ft.	392.3 ft.	0.1 ft.	1.7 ft.	**140.4 ft.**	
90	702 gpm.	138.0 ft.	0.6 ft.	392.3 ft.	0.1 ft.	1.7 ft.	**140.4 ft.**	
95	702 gpm.	138.0 ft.	0.6 ft.	392.3 ft.	0.1 ft.	1.7 ft.	**140.4 ft.**	
100	702 gpm.	138.0 ft.	0.6 ft.	392.3 ft.	0.1 ft.	1.7 ft.	**140.4 ft.**	

* The remaining energy in the well is removed by the velocity across the ports

FROM VALVE TO WELLHEAD DURING PUMPING

	FRICTION LOSS - THRU DROP PIPE	V-SMART VALVE	LOSS TOTAL	
GPM	FLdp	FLv	SYSTEM	
0 gpm.	0.00 ft.	0.00 ft.	**0.00 ft.**	
30 gpm.	0.40 ft.	0.00 ft.	**0.41 ft.**	
60 gpm.	1.46 ft.	0.01 ft.	**1.46 ft.**	
90 gpm.	3.08 ft.	0.01 ft.	**3.10 ft.**	
120 gpm.	5.25 ft.	0.02 ft.	**5.28 ft.**	
150 gpm.	7.94 ft.	0.03 ft.	**7.97 ft.**	
180 gpm.	11.12 ft.	0.05 ft.	**11.17 ft.**	
210 gpm.	14.79 ft.	0.06 ft.	**14.85 ft.**	
240 gpm.	18.94 ft.	0.08 ft.	**19.02 ft.**	
270 gpm.	23.55 ft.	0.10 ft.	**23.65 ft.**	
300 gpm.	28.61 ft.	0.12 ft.	**28.74 ft.**	
330 gpm.	34.13 ft.	0.15 ft.	**34.28 ft.**	
360 gpm.	40.09 ft.	0.17 ft.	**40.26 ft.**	
390 gpm.	46.49 ft.	0.20 ft.	**46.69 ft.**	
Qp —→ 420 gpm.	53.32 ft.	0.23 ft.	**53.55 ft.**	
450 gpm.	60.58 ft.	0.26 ft.	**60.84 ft.**	
480 gpm.	68.26 ft.	0.29 ft.	**68.56 ft.**	
510 gpm.	76.36 ft.	0.33 ft.	**76.69 ft.**	
540 gpm.	84.88 ft.	0.37 ft.	**85.25 ft.**	
570 gpm.	93.81 ft.	0.40 ft.	**94.22 ft.**	
600 gpm.	103.15 ft.	0.44 ft.	**103.59 ft.**	

ASR Resources, LLC (702) 525-0250

V-Smart Valve

CONSULTANT/CONTACT

PROJECT 4" valve for Kirtland AFB

SIZE 4.0 in. X PORTS 4

DATE 9/21/2015

Web: www.ASRRESOURCES.COM

E-mail: cactuscontrols@cox.net

INPUT DATA

MINIMUM DEPTH TO WATER	MDTW =	400.0 ft.	NUMBER OF PORTS	=	4
STATIC WATER LEVEL	=	475.0 ft.	PORT DIMENSIONS	=	0.50 in. x 1.700 in.
DYNAMIC WATER LEVEL	=	500.0 ft.	VALVE ID	=	3.826 in.
WELL HEAD PRESSURE	=	25.0 psi.	VALVE LENGTH	=	21.0 in.
PUMP SET DEPTH	=	530.0 ft.	VALVE to SCREEN	=	10.0 ft.
VALVE SET DEPTH (~ 10' above Pump)	=	520.0 ft.	VALVE SIZE	=	4.0 in.
HAZEN WILLIAMS FRICTION FACTOR	C =	130	"K" Value	=	0.70
Qr @ MDTW w/ 100% OPEN VALVE	=	1,274 gpm.	DESIGN PUMPING RATE	Qp =	400 gpm.
WELL HEAD = total head =	h =	532.8 ft. TOTAL.	DESIGN RECHARGE RATE	Qr =	400 gpm.

		Normal Size	SCHEDULE	LENGTH	ID	OD	Coup. OD
DROP PIPE	=	4.0 in.	40		4.026 in.	4.500 in.	
SHROUD	=	8.0 in.	40	4.0 in.	7.981 in.	8.625 in.	5.790 in.
CASING	=	12.0 in.	10		12.390 in.	12.750 in.	

FRICTION LOSS IN FEET HEAD = (4.727*L)*(Q/449)^1.85/((C^1.85)*((D/12)^4.855))

% OPEN	Qr FINAL (gpm)	DELTA $(2gh)^{1/2}$	AREA 1 PORT	AREA	AREA	Cv $Q_g/h^{1/2}$	h = FRICT. LOSS	g=32.2 $(2gh)^{1/2}$	Q_c $K*Ao(2gh)^{1/2}$	Q_g	VEL. @ PORT	DTW	Qr @ DTW 100% Open
0	0 gpm.	185.227	0.0 si.	0.0 si.	0.000 sf.	0.00	0.000 ft.	185	0.00 cfs.	0 gpm.	0.0 fps.	475.0 ft.	1,374 gpm.
5	69 gpm.	184.896	0.0 si.	0.2 si.	0.001 sf.	2.97	1.903 ft.	185	0.15 cfs.	69 gpm.	129.7 fps.	471.3 ft.	1,369 gpm.
10	137 gpm.	184.031	0.1 si.	0.3 si.	0.002 sf.	5.91	6.861 ft.	185	0.31 cfs.	137 gpm.	129.7 fps.	467.5 ft.	1,364 gpm.
15	203 gpm.	182.685	0.1 si.	0.5 si.	0.004 sf.	8.81	14.526 ft.	185	0.46 cfs.	206 gpm.	129.7 fps.	463.8 ft.	1,359 gpm.
20	268 gpm.	180.877	0.2 si.	0.7 si.	0.005 sf.	11.63	24.733 ft.	185	0.61 cfs.	275 gpm.	129.7 fps.	460.0 ft.	1,354 gpm.
25	331 gpm.	178.612	0.2 si.	0.9 si.	0.006 sf.	14.35	37.373 ft.	185	0.77 cfs.	343 gpm.	129.7 fps.	456.3 ft.	1,350 gpm.
30	391 gpm.	175.889	0.3 si.	1.0 si.	0.007 sf.	16.96	52.365 ft.	185	0.92 cfs.	412 gpm.	129.7 fps.	452.5 ft.	1,345 gpm.
35	448 gpm.	172.696	0.3 si.	1.2 si.	0.008 sf.	19.42	69.645 ft.	185	1.07 cfs.	481 gpm.	129.7 fps.	448.8 ft.	1,340 gpm.
40	501 gpm.	169.018	0.3 si.	1.4 si.	0.009 sf.	21.73	89.161 ft.	185	1.22 cfs.	550 gpm.	129.7 fps.	445.0 ft.	1,335 gpm.
45	550 gpm.	164.831	0.4 si.	1.5 si.	0.011 sf.	23.84	110.869 ft.	185	1.38 cfs.	618 gpm.	129.7 fps.	441.3 ft.	1,330 gpm.
50	594 gpm.	160.102	0.4 si.	1.7 si.	0.012 sf.	25.73	134.729 ft.	185	1.53 cfs.	687 gpm.	129.7 fps.	437.5 ft.	1,325 gpm.
55	631 gpm.	154.789	0.5 si.	1.9 si.	0.013 sf.	27.36	160.708 ft.	185	1.68 cfs.	756 gpm.	129.7 fps.	433.8 ft.	1,320 gpm.
60	662 gpm.	148.835	0.5 si.	2.0 si.	0.014 sf.	28.70	188.776 ft.	185	1.84 cfs.	824 gpm.	129.7 fps.	430.0 ft.	1,315 gpm.
65	685 gpm.	142.168	0.6 si.	2.2 si.	0.015 sf.	29.70	218.905 ft.	185	1.99 cfs.	893 gpm.	129.7 fps.	426.3 ft.	1,310 gpm.
70	699 gpm.	134.685	0.6 si.	2.4 si.	0.017 sf.	30.30	251.072 ft.	185	2.14 cfs.	962 gpm.	129.7 fps.	422.5 ft.	1,304 gpm.
75	702 gpm.	126.249	0.6 si.	2.6 si.	0.018 sf.	30.43	285.253 ft.	185	2.30 cfs.	1,030 gpm.	129.7 fps.	418.8 ft.	1,299 gpm.
80	702 gpm.	116.658	0.7 si.	2.7 si.	0.019 sf.	30.43	321.427 ft.	185	2.45 cfs.	1,099 gpm.	129.7 fps.	415.0 ft.	1,294 gpm.
85	702 gpm.	105.605	0.7 si.	2.9 si.	0.020 sf.	30.43	359.577 ft.	185	2.60 cfs.	1,168 gpm.	129.7 fps.	411.3 ft.	1,289 gpm.
90	702 gpm.	92.572	0.8 si.	3.1 si.	0.021 sf.	30.43	399.682 ft.	185	2.76 cfs.	1,237 gpm.	129.7 fps.	407.5 ft.	1,284 gpm.
95	702 gpm.	76.562	0.8 si.	3.2 si.	0.022 sf.	30.43	441.728 ft.	185	2.91 cfs.	1,305 gpm.	129.7 fps.	403.8 ft.	1,279 gpm.
100	702 gpm.	55.047	0.9 si.	3.4 si.	0.024 sf.	30.43	485.698 ft.	185	3.06 cfs.	1,374 gpm.	129.7 fps.	400.0 ft.	1,274 gpm.

Initial Construction Warranty Information

GUARANTEE
OF
ELECTRICAL MATERIALS AND WORKMANSHIP

As part of the consideration for the electrical contract identified below, the undersigned **WILSON ELECTRIC** hereby guarantees to the OWNER of the premises, for a period of one (1) year limited from date, that the electrical work performed under said contract was performed in a workmanlike manner and that the electrical material purchased and installed by the undersigned thereunder was, when installed, free of inherent manufacturing or mechanical defects, all to the extent and on the conditions herein specifically set forth, that is:

1) The undersigned Qualified Electrical Contractor shall replace, without cost or charge to the OWNER for either labor or materials, such individual parts of the electrical material or apparatus installed under said contract as may become defective or unserviceable within the period of the guarantee by reason of any failure of the undersigned in performing the work in a workmanlike manner or by reason of inherent manufacturing or mechanical defect in any electrical material or apparatus purchased and installed by the undersigned; provided:
   (a) The OWNER notifies the Contractor, in writing, of any failure or default within ten (10) days of the date such failure or default becomes apparent;
   (b) There shall be no responsibility on the Contractor to replace light bulbs, globes, stolen or vandalized materials or workmanship;
   (c) NO person, firm, or corporation other than the undersigned Qualified Electrical Contractor has, during or since the completion of the work performed or attempted to perform any of the work included in said contract or repaired or attempted to repair any of the electrical work performed by the undersigned thereunder;
   (d) The defect or failure was not caused or affected by the improper use or operation of the electrical facilities installed under said contract.
2) The undersigned Qualified Electrical Contractor's liability shall be fixed by the terms hereof and this express guarantee excludes and supersedes all implied guarantees or warranties.
3) This guarantee shall pass with the title of the premises to the new owner or owners thereof.

IN WITNESS WHEREOF, this guarantee has been executed this, **2/12/2016**

CONTRACT WITH: Mick Rich Contractors
CONTRACT DATE: 09/01/2015
PROJECT: KAFB Bulk Fuel Facility Phase IV Mid-Plume Pump & Treatment System

Matthew Walstrom

WILSON ELECTRIC
501 General Somervell St. SE Suite B
Albuquerque, NM 87123
Phone: 505-271-8773
Fax: 505-271-0246

Fliteway Technologies, Inc.
2129 East Birchwood Ave., Cudahy, WI 53110
(414) 483-5600 • 1-800-236-3580 • FAX (414) 483-1957

WARRANTY

ONE YEAR LIMITED WARRANTY- Fliteway Technologies, Inc. remediation equipment is warranted by Fiteway to the original user against defects in workmanship or materials under normal use for one year after date of shipment. Exceptions to this are positive displacement vacuum pumps and blowers which have 18 Month warranties direct from the original manufacturer (Roots and Sutorbilt only). Any part determined by Fliteway Technologies, Inc. to be defective in material or workmanship and returned to Fliteway Technologies, Inc., shipping costs prepaid, will be repaired or replaced at Fliteway's option, as the exclusive remedy. See PROMPT DISPOSITION below for limited warranty claim procedures. This limited warranty gives the purchaser specific legal rights which may vary from state to state.

LIMITATIONS OF LIABILITY- To the extent allowable under applicable law, Fliteway's liability (or incidental and consequential damages is expressly disclaimed. Fliteway's liability in all events is limited to, and shall not exceed, the purchase price.

PRODUCT SUITABILITY - Many states and localities have regulations and codes governing sales, construction, installation, and/or use of products for certain purposes, which may vary from those in neighboring areas. While Fliteway Technologies, Inc. attempts to assure that its products comply with such codes, it cannot guarantee compliance, and cannot be responsible for how the product is installed or used. Before purchase and use of a product, please determine local and national codes and regulations, review the product application, and verify that the product, installation and use comply with those regulations and codes.

PROMPT DISPOSITION - Fliteway Technologies, Inc. will make every effort for a prompt correction or other adjustment with respect to any product which proves to be defective within the limited warranty. For any product believed to be defective within limited warranty, first write or call Fliteway Technologies, Inc. giving the model and serial number of tile unit and describing the nature of the defect. Title and risk of loss pass to the buyer on delivery to common carrier. If product was damaged in transit to you, file a claim with carrier. Freight of postage charges on returns to the factory are at the customer's expense. If returned product is returned under warranty, the manufacturer will cover return freight.

Ultra Painting Inc.

State Labor and Industrial Reg. # 0046720050604

ultrapainting@aol.com

Bonding rate 3%

Phone: (505) 792-5153 Fax: (505) 792-7226

Date: 24 February 2016

To: Mick Rich Contractors

From: Andrew Sanchez

RE: Warranty

Please accept this as a warranty that Ultra Painting Inc. will guarantee out workmanship and material for a one year period after the final acceptance date.

Project: KAFB Bulk Fuel Facility

Final Acceptance Date: 24 February 2016

Expiration Date: 24 February 2017

Scope of work: Painting- Subcontractor

Address: P.O. Box 3835

Corrales, New Mexico 87048

Signed:

Andrew Sanchez

Date: 24 February 2016

Rupert Plumbing & Heating Co., Inc.

1401 Candelaria Rd. NE Albuquerque, New Mexico 87107
Phone (505) 247-8138 Fax (505) 764-9704

February 25, 2016

PROJECT WARRANTY

Project: KAFB Bulk Fuels Facility

Rupert Plumbing and Heating Co Inc guarantees that this installation is free from mechanical defects. Rupert Plumbing agrees to repair any part of the installation which may fail within a period of one year after date of final acceptance or occupancy, whichever occurs first, provided that such failure is due to defects in materials or workmanship.

Rupert Plumbing and Heating Co Inc

Michael Rupert

FAIRWAY INC.
DOORS & FRAMES
6820 Academy Parkway East, NE • Albuquerque, New Mexico 87109
Phone: (505) 343-9044 • Fax: (505) 344-2321

CUSTOMER: **Mick Rich Contractors**
DATE: **February 25, 2016**
PROJECT: **KAFB Bulk Fuels Facility**
REGARDING: **Warranty**

Please find attached the requested warranty documents for doors and frames supplied at the above listed project.

Fairway Inc. agrees to replace hardware that may prove to be defective in workmanship or materials, which would include replacement of hardware because of defective work, within a period of one (1) year from date of the Certificate of Occupancy, with the exception of the items listed below. Damages caused by natural disaster, or unusual abuse and neglect by others are excluded from this warranty. The following costs and expenses are not covered by the provisions of this limited warranty; labor costs for the removal and reinstallation of products; shipping and freight expenses required to return the material.

Exit Device:	3 years
Lock Set:	7 years
Door Closure:	10 years

Thank you for the opportunity to work with your firm on this project. If you have any questions, please feel free to call our office.

Respectfully submitted,

Fairway, Inc.

CURRIES

ASSA ABLOY

WARRANTY

WARRANTY

We warrant our products against defects in workmanship and materials for a period of one year, as follows:

(a) There are no warranties, express or implied, which extend beyond those described herein, and there is no implied warranty or merchantability.

(b) If our products should prove to be defective, our only responsibility will be to either repair or replace the defective item(s), and we will have no liability or obligation for any damages of any kind beyond such repair or replacement.

(c) Our obligation to repair or replace any defective item terminates one year after the product has been delivered by us to the customer, and also terminates at any time anyone other than our company performs any work of repair, service, or replacement on the item without our prior written consent.

(d) We assume no liability to pay any costs of labor or material for repair, service or replacement of any CURRIES product which has been incurred by anyone other than us.

(e) CURRIES is committed to providing the highest quality products and services to its customers as possible. Errors can occur on occasion. We request our distributors to act as "final" quality control on our hollow metal. A simple double check procedure by an assembly person prior to modifying a door or welding a frame should be performed on every unit of product that leaves a distributor's place of business. This simple action can prevent a considerable amount of potential field problems.

CURRIES Division of ASSA ABLOY Door Group, LLC

CURRIES • 1502 12th Street NW • Mason City, IA 50401-1814
Mailing Address: P.O. Box 1647 • Mason City, IA 50402-1647
Phone: 641-423-1334 • Fax: 641-424-8305 • Website: www.curries.com

ASSA ABLOY, the global leader in door opening solutions

***EverGuard*® Roofing**
512 Veranda Road NW
Albuquerque, NM 87107
Tel 505-821-9543
Fax 505-821-9081
dave@everguardroofing.com

KAFB Bulk Fuel Facility

EPDM Warranty

EverGuard Roofing a subcontractor for Mick Rich Contractors does hereby warrant that all labor and materials furnished and work performed in conjunction with Mick Rich Contractors for the above referenced project will be free from defects due to defective materials or workmanship for a period of two years from the date of Substantial Completion.

This obligation includes the repair or replacement of membrane or accessories and the cost or furnishing of labor to repair roof leaks provided that EverGuard Roofing has authorized the repair and that only EverGuard Roofing personnel perform the repair.

EverGuard Roofing shall in no instance be held liable for any damage whatsoever arising from causes not fully within its control, including:

- Damage caused by natural disasters, including but not limited to lightning, hurricanes, gales, hail, tornadoes or similar natural disasters. Falling snow or ice, are excluded.
- Vandalism, intentional acts, negligence or failure of Owner to use reasonable care
- Damage caused by any unauthorized modifications or alterations of the roof or installing any structures, fixtures, or utilities on or through the roof, damage caused by unauthorized components used in installation or repair, or by additional equipment added to or made part of roof under warranty or damage caused by chemicals not normally found in nature.
- The contents or other parts of the buildings are not covered by this warranty.
- Moisture entering the roof system through walls, copings, structural defects or any part of the building structure
- All remediation or abatement for any reason are excluded
- This warranty does not supersede the terms of the roof warranty from Firestone. All limitations listed in the Firestone warranty apply to this warranty. This warranty does not offer any additional coverage not offered in the Firestone warranty.

This limited warranty is void if any repairs, alterations, or modification of the roof are done by anyone other than EverGuard Roofing.

Should a leak or defect develop during the warranty period due to improper materials and/or workmanship, Firestone should be contacted at **800-830-5612** as soon as possible, Also please call 505-821-1895 to report any leaks to **Everguard Roofing**.

01/04/2016
Date _____

_____
David Simmons
Vice President
Everguard Roofing, LLC

RED SHIELD WARRANTY

RED SHIELD ROOFING SYSTEM LIMITED WARRANTY

Warranty No: RO086339 **FBPCO #** DD3780 **Square Footage:** 4160 **s.f.**
Building Owner: US ARMY CORPS OF ENGINEER ALBUQUERQUE DI
Building Identification: KAFB BULK FUEL FACILITY
Building Address: 5202 RANDOLPH AVENUE SE, ALBUQUERQUE, NM, 87101-0000
Warranty Period Of: TWENTY (20) Years, Beginning On: 01/04/16
Roofing Contractor: EVERGUARD ROOFING, LLC (08760)

For the warranty period indicated above, Firestone Building Products Company, LLC ("Firestone"), an Indiana limited liability company, warrants to the Building Owner ("Owner") named above that Firestone will, subject to the Terms, Conditions and Limitations set forth below, repair any leak in the Firestone Roofing System ("System").

TERMS, CONDITIONS AND LIMITATIONS

1. **Products Covered.** The System shall mean only the Firestone brand roofing membranes, Firestone brand roofing insulations, Firestone brand roofing metal, and other Firestone brand roofing accessories when installed in accordance with Firestone technical specifications by a Firestone-licensed applicator.
2. **Notice**. In the event any leak should occur in the System, the Owner must give notice in writing or by telephone to Firestone within thirty (30) days of any occurrence of a leak. Written notice may be sent to Firestone at the street address or fax number shown on the reverse side of this Limited Warranty. Evidence of this notice shall be the receipt by Owner of a Firestone Leak Notification Acknowledgement. By so notifying Firestone, the Owner authorizes Firestone or its designee to investigate the cause of the leak.
3. **Investigation**. If upon investigation, Firestone determines that the leak is not excluded under the Terms, Conditions and Limitations set forth in this Red Shield Roofing System Limited Warranty (the "Limited Warranty"), the Owner's sole and exclusive remedy and Firestone's total liability shall be limited to the repair of the leak. Should the investigation reveal that the leak is excluded under the Terms, Conditions and Limitations, the Owner shall be responsible for payment of the investigation costs. Failure by Owner to pay for these costs shall render this Limited Warranty null and void. Firestone will advise the Owner of the type and/or extent of repairs required to be made at the Owner's expense that will permit this Limited Warranty to remain in effect for the unexpired portion of its term. Failure by the Owner to properly make these repairs in a reasonable manner using a Firestone-licensed applicator and within 60 days shall render this Limited Warranty null and void.
4. **No Dollar Limit (NDL).** There is no dollar limit placed on warranted leak repairs to the extent such repairs are covered by this Limited Warranty.
5. **Disputes**. Any dispute, controversy or claim between the Owner and Firestone concerning this Limited Warranty shall be settled by mediation. In the event that the Owner and Firestone do not resolve the dispute, controversy or claim in mediation, the Owner and Firestone agree that neither party will commence or prosecute any suit, proceeding, or claim other than in the courts of Hamilton County in the state of Indiana or the United States District Court, Southern District of Indiana, Indianapolis Division. Each party irrevocably consents to the jurisdiction and venue of the above-identified courts.
6. **Payment Required**. Firestone shall have no obligation under this Limited Warranty unless and until Firestone and the licensed applicator have been paid in full for all materials, supplies, services, approved written change orders, warranty costs and other costs which are included in, or incidental to, the System. In the event that repairs not covered by this Limited Warranty are necessary in the future, Firestone reserves the right to suspend this Limited Warranty until such repairs have been completed and the licensed applicator and/or Firestone has been paid in full for such repairs.
   Exclusions. Firestone shall have no obligation under this Limited Warranty, or any other liability, now or in the future if a leak or damage is caused by: (a) Natural forces, disasters, or acts of God including, but not limited to, fires, hurricanes, tornadoes, hail, wind-blown debris, lightning, earthquakes, volcanic activity, atomic radiation, insects or animals; (b) Winds of peak gust speed at or in excess of 55 MPH calculated at ten(10) meters above ground using available meteorological data;(c) Act(s), conduct or omission(s) by any person, or act(s) of war, terrorism or vandalism, which damage the System or which impair the System's ability to resist leaks; (d) Failure by the Owner to use reasonable care in maintaining the System, said maintenance to include, but not be limited to, those items listed on the reverse side of this Limited Warranty entitled "Building Envelope Care and Maintenance Guide"; (e) Deterioration or failure of building components, including, but not limited to, the roof substrate, walls, mortar, HVAC units, skylights etc.; (f) Construction generated moisture, condensation or infiltration of moisture in, from, through, or around the walls, copings, rooftop hardware or equipment, skylights, building structure or underlying or surrounding materials; (g) Acid, oil, harmful chemicals, or the reaction between them; (h) Alterations or repairs to the System that are not completed in accordance with Firestone's published specifications, not completed by an approved contractor, and/or not completed with proper notice to Firestone; (i) The design of the roofing system: Firestone does not undertake any analysis of the architecture or engineering required to evaluate what type of System is appropriate for a building and makes no warranty express or implied as to the suitability of its Products for any particular structure; such a determination is the responsibility of the architect, engineer or design professional; (j) Improper selection of materials for the roof assembly or the failure to accurately calculate wind uplift and/or roof loads;(k) Deterioration to metal roofing materials and accessories caused by marine salt water, atmosphere, or by regular spray of either salt or fresh water; or, (l) Change in building use or purpose.
7. **Transfer**. This Limited Warranty shall be transferable subject to Owner's payment of the current transfer fee set by Firestone.
8. **Term.** The term of this Limited Warranty shall be for the period set forth above and such term shall not be extended under any circumstances.
9. **Roof Access**. During the term of this Limited Warranty, Firestone's designated representative or employees shall have free access to the roof during regular business hours. In the event that roof access is limited due to security or other restrictions, Owner shall reimburse Firestone for all reasonable cost incurred during inspection and/or repair of the System that are due to delays associated with said restrictions. Owner shall be responsible for the damage caused by, removal and replacement of any overburdens, superstrata or overlays, either permanent or temporary, excluding accepted stone ballast or pavers, as necessary to expose the system for inspection and/or repair.
10. **Waiver**. Firestone's failure to enforce any of the terms or conditions stated herein shall not be construed as a waiver of such provision or of any other terms and conditions of this Limited Warranty.
11. **Governing Law**. This Limited Warranty shall be governed by and construed in accordance with the laws of the State of Indiana without regard to that State's rules on conflict of laws.
12. **Severability**. If any portion of this Limited Warranty is held by a court of competent jurisdiction to be invalid, void or unenforceable, the remaining provisions shall nevertheless continue in full force.

FIRESTONE DOES NOT WARRANT PRODUCTS INCORPORATED OR UTILIZED IN THIS INSTALLATION THAT WERE NOT FURNISHED BY FIRESTONE. FIRESTONE SPECIFICALLY DISCLAIMS LIABILITY UNDER ANY THEORY OF LAW ARISING OUT OF THE INSTALLATION OF, PERFORMANCE OF, OR DAMAGES SUSTAINED BY OR CAUSED BY, PRODUCTS NOT FURNISHED BY FIRESTONE.

THIS LIMITED WARRANTY SUPERSEDES AND IS IN LIEU OF ALL OTHER WARRANTIES OF MERCHANTABILITY AND FITNESS FOR A PARTICULAR PURPOSE, AND FIRESTONE HEREBY DISCLAIMS ALL SUCH WARRANTIES. THIS LIMITED WARRANTY SHALL BE THE OWNER'S SOLE AND EXCLUSIVE REMEDY AGAINST FIRESTONE, AND FIRESTONE SHALL NOT BE LIABLE FOR ANY CONSEQUENTIAL, SPECIAL, INCIDENTAL OR OTHER DAMAGES INCLUDING, BUT NOT LIMITED TO, LOSS OF PROFITS OR DAMAGES TO THE BUILDING OR ITS CONTENTS OR THE ROOF DECK. THIS LIMITED WARRANTY CANNOT BE AMENDED, ALTERED OR MODIFIED IN ANY WAY EXCEPT IN WRITING SIGNED BY AN AUTHORIZED OFFICER OF FIRESTONE. NO OTHER PERSON HAS ANY AUTHORITY TO BIND FIRESTONE WITH ANY REPRESENTATION OR WARRANTY WHETHER ORAL OR WRITTEN.

FIRESTONE BUILDING PRODUCTS COMPANY, LLC
By: **Chris Huettig**

Authorized Signature: _____

Title: **Director, Quality Building Services**

BUILDING ENVELOPE CARE AND MAINTENANCE GUIDE
(For Red Shield Warranted Roofing Systems)

Congratulations on your purchase of a Firestone Roofing System! Your roof is a valuable asset that should be properly maintained. **Firestone Building Products recommends that all roofs and roofing systems receive periodic inspections and maintenance to ensure that they perform as designed.**

1. The roof should be inspected at least twice yearly and after any severe storms. A record of all inspection and maintenance activities should be maintained, including a listing of the date and time of each activity as well as the identification of the parties performing the activity.
2. Proper maintenance and good roofing practice require that ponded water (defined as water standing on the roof forty-eight hours after it stops raining) not be allowed on the roof. Roofs should have slope to drain, and all drain areas must remain clean. Bag and remove all debris from the roof since such debris can be quickly swept into drains by rain. This will allow for proper water run-off and avoid overloading the roof.
3. The Firestone Roofing System should not be exposed to acids, solvents, greases, oil, fats, chemicals and the like. If the Firestone Roofing System is in contact with any such materials, these contaminants should be removed immediately and any damaged areas should be inspected by a Firestone Licensed Applicator and repaired if necessary.
4. The Firestone Roofing System is designed to be a waterproofing membrane and not a traffic surface. Roof traffic other than periodic traffic to maintain rooftop equipment and conduct periodic inspections should be prohibited. In any areas where periodic roof traffic may be required to service rooftop equipment or to facilitate inspection of the roof, protective walkways should be installed by a Firestone Licensed Applicator as needed to protect the roof surface from damage.
5. Firestone recommends periodic maintenance for some roofing membranes:
   a. **Smooth-surfaced Firestone APP membranes** should be coated with an approved liquid coating, such as Firestone Aluminum Roof Coating or Firestone AcryliTop applied in accordance with Firestone specifications, in order to maximize the service life of the membrane. If this coating is not applied as part of the initial roofing installation, it should be applied within the first five years after the roof is installed to help protect the membrane from surface crazing and cracking. In addition, this coating should be maintained as needed to re-coat any areas that have blistered, peeled or worn through.
   b. **Granule-surfaced Firestone APP and SBS membranes** do not normally need surface maintenance other than periodic inspection for contaminants, cuts or punctures. If areas of granular loss are discovered during inspection, these areas should be coated with Firestone AcryliTop or other Firestone-approved coating applied in accordance with Firestone specifications.
   c. **Gravel-surfaced Firestone BUR membranes** do not normally need surface maintenance other than periodic inspection for contaminants or damage. If areas of gravel loss are discovered during inspection, gravel shall be reinstalled into hot asphalt to protect the surface of the membrane. Coatings on smooth surface BUR membranes shall be maintained as needed to re-coat any areas that have blistered, peeled or worn through.
   d. **Firestone EPDM and TPO roofing membranes** do not normally need surface maintenance other than periodic inspection for contaminants, cuts or punctures. Occasionally, approved liquid roof coatings, such as Firestone AcryliTop, are applied to the surface of EPDM membranes in order to provide a lighter surface color. Such coatings do not need to be maintained to assure the performance of the underlying EPDM roof membrane, but some maintenance and re-coating may be necessary in order to maintain a uniform surface appearance.
   e. **Firestone Una-Clad metal roofing panels and trim** do not normally need surface maintenance other than periodic inspection for contaminants or damage. In addition, periodic cleaning of the surface may be needed to remove dirt and maintain the aesthetic appearance of the coated metal. Simple washing with plain water using hoses or pressure spray equipment is usually adequate. If cleaning with agents other than water is contemplated, several precautions should be observed: (1) do not use wire brushes, abrasives, or similar cleaning tools which will mechanically abrade the coating surface, and (2) cleaning agents should be tested in an inconspicuous area before use on a large scale.
6. All metal work, including counter-flashings, drains, skylights, equipment curbs and supports, and other Firestone brand rooftop accessories should be properly maintained at all times. Particular attention should be paid to sealants at joints in metal work and flashings. If cracking or shrinkage is observed, the joint sealant should be removed and replaced with new sealant.
7. Any alterations to the roof, including but not limited to roof curbs, pipe penetrations, roof-mounted accessories, and tie-ins to building additions must be performed by a licensed Firestone Licensed Applicator and reported to Firestone. Additional information and reporting forms for roof alterations are available at www.firestonebpco.com.
8. Should you experience a leak:
   (a) Check for the obvious: clogged roof drains, loose counterflashings, broken skylights, open grills or vents, broken water pipes.
   (b) Note conditions resulting in leakage. Heavy or light rain, wind direction, temperature and time of day that the leak occurs are all-important clues to tracing roof leaks. Note whether the leak stops shortly after each rain or continues to drip until the roof is dry. If you are prepared with the facts, the diagnosis and repair of the leak can proceed more rapidly.
   (c) Contact Firestone Warranty Claims at 1-800-830-5612 as soon as possible...but please don't call until you are reasonably sure that the Firestone Roofing System is the cause of the leak.

Firestone feels that the preceding requirements will assist you, the building owner, in maintaining a watertight roof for many years. Your roof is an investment, and maintenance is essential to maximize your return on this important investment.

Firestone
BUILDING PRODUCTS
NOBODY COVERS YOU BETTER.©
250 West 96th Street – Indianapolis, IN 46260
1-800-428-4442 * 1-317-575-7000 * FAX 1-317-575-7100
www.firestonebp.com

One Year Certificate of Warranty

The undersigned **SubContractor** absolutely and unconditionally warrants and guarantees the materials for its portion of the work to be and remain free from defects for a period of one year from the date of execution of the **Certificate of Substantial Completion,** as required by the Contract Documents for the project, unless a longer guarantee period is specifically called for in the plans and specifications.

Supplier: **ACCENT LANDSCAPE CONTRACTORS, INC.**

Materials Supplied: **Landscape & Irrigation**

The work was installed and/or supplied for **Mick Rich Contractors (contractor)** at **Kirtland AFB, NM (Owner), Mid-Plume Treat System**. The Supplier hereby agrees to repair or replace any or all of its product, together with any other adjacent work which may be displaced in so doing, that may prove to be defective within a period of one year from the date of execution of **Certificate of Substantial Completion,** without any expense whatsoever to the Owner, ordinary wear and tear and unusual abuse or neglect expected.

In the event of the Suppliers failure to comply with the above-mentioned conditions and within ten (10) calendar days after being notified in writing by the Owner, Supplier does hereby authorize Owner to proceed to have said defects repaired and made good at Suppliers sole expense and Supplier will reimburse the Owner upon demand. Repair or replacement of work will carry an additional one year warranty from the date of said repairs or replacement.

Supplier: **ACCENT LANDSCAPE CONTRACTORS, INC.**

By: Jose L. Aguilar

Its: Vice President

Date: 2-23-16

Sworn to and subscribed before me this 23 day of February, 2016

Notary Public: Veronica Ruiz

My Commission Expires: May 22, 2019

Official Seal
VERONICA RUIZ
Notary Public
State of New Mexico
My Commission Expires 5-22-19

90 Cutler Drive • P.O. Box 540445
North Salt Lake, Utah 84054-0445
Phone: (800) 825-1948 • Fax: (801) 292-4164
www.vfcinc.com
www.z-pen.com

"Lightning Protection and Grounding Solutions for Industry"

Atlanta, GA
P:(252) 213-9900

Dallas, TX
1240 Texan Trail
Ste 108
Grapevine, TX 76501
P: (817) 488-4788
F: (817) 488-4757

Denver, CO
1500 W. Hampden Ave
Ste 4J
Sheridan, CO 80110
P: (303) 649-4905
F: (303) 649-4906

Hamilton, NJ
200 Whitehead Rd
Bldg A Ste 219
Hamilton, NJ 08619
P: (609) 781-0382

Las Vegas, NV
Local Representative
P: (702) 461-7739

Phoenix, AZ
425 South 48th Street
Ste 110
Tempe, AZ 85281
P: (480) 966-0175
F: (480) 966-0184

Raleigh / Durham, NC
112-A Wheaton Dr
Youngsville, NC 27596
P: (919) 556-0685
F: (919) 556-0636

Salt Lake City, UT
90 Cutler Drive
North Salt Lake, UT 84054
P: (801) 292-2956
F: (801) 292-4164

San Antonio, TX
Local Installer
P: (214) 316-3126

Seattle, WA
P:(303) 243-2586

Torrance, CA
3547 Voyager Street
Ste 204
Torrance, CA 90503
P: (800) 962-2610

Spare Parts List

Depending upon the size of the facility, it may prudent to maintain an inventory of spare parts. If desired, please contact VFC. for recommendations, specific to the facility, of a spare parts list.

Warranty

All VFC materials are warranted for a period of 1-year from the date of installation, against defects in manufacturing quality. Additional project specifications or contract requirements may apply. In the event of a warranty request, please notify VFC at the earliest possible convenience by fax for replacement of the individual item or items. This warranty does not cover adhesives, sealants, or chemicals that may or may not have been used in the installation of the system, whether or not they were supplied by VFC. For warranty information on these products, please see their individual manufacturers.

Manufacturer Contact List

VFC (Headquarters)
90 Cutler Drive
P.O. Box 540445
*Email*service@vfcinc.com
North Salt Lake, UT 84054
*Internet:*http://www.vfcinc.com
U.S.A.

Phone: (801) 292-2956
Fax: (801) 292-4164

Beaty Masonry Company LLC
6219 Corona Ave, NE
Albuquerque, NM 87113
Ph : 505-856-1800

Letter of Transmittal

To: Jeff Henderson
Mick Rich Contractors, Inc.
8401 Firestone Lane NE
Albuquerque, NM 87113
Ph: (505)823-9782 Fax: (505)823-9783

Transmittal #: 4
Date: 2/24/2016
Job: 02-1529 KAFB Bulk Fuel Facility

Subject: Closeout

WE ARE SENDING YOU
☑ Attached ☐ Under separate cover via None the following items:
☐ Shop drawings ☐ Prints ☐ Plans ☐ Samples
☐ Copy of letter ☐ Change order ☐ Specifications ☐ Other

Document Type	Copies	Date	No.	Description
Warranty Letter	1	2/24/16		For closeout

THESE ARE TRANSMITTED as checked below:
☐ For approval ☐ Approved as submitted ☐ Resubmit ___ copies for approval
☑ For your use ☐ Approved as noted ☐ Submit ___ copies for distribution
☑ As requested ☐ Returned for corrections ☐ Return ___ corrected prints
☐ For review and comment ☐ Other
☐ FOR BIDS DUE ☐ PRINTS RETURNED AFTER LOAN TO US

Remarks:

Copy To:

From: Lydia Honan (Beaty Masonry Company, LLC) **Signature:** Lydia Honan

If enclosures are not as noted, kindly notify us at once.

BEATY MASONRY COMPANY, LLC

SUBCONTRACTOR'S STATEMENT OF WARRANTY

February 24, 2016

Mick Rich Contractors
8401 Firestone Lane NE
Albuquerque, NM 87113

Project: KAFB Bulk Fuels Facility
Kirtland Air Force Base
5202 Randolph Ave. SE
Albuquerque, NM 87117
(Beaty Job #1529)

Beaty Masonry Company, LLC. ("Beaty") hereby warrants all materials and workmanship provided on the above-referenced project for a period of one (1) year from the Date of Substantial Completion. Beaty agrees to repair, at no charge to the Owner, any defective materials and/or workmanship as required during this period.

Beaty Masonry Company, LLC

Tim Stephenson
President

The Genuine. The Original.

OVERHEAD DOOR®

RHX®

Commercial Operator Limited Warranty

The authorized distributor of Overhead Door Corporation products, whose name appears below ("Seller") warrants to the original purchaser of the model RHX® Trolley or RHX® Hoist commercial door operator ("Product"), subject to all of the terms and conditions hereof, that the Product and all components thereof will be free from defects in materials and workmanship under normal use for the following components thereof will be free from defects in materials and workmanship under normal use for the following period(s), measured from the date of installation:

- Two (2) years

Seller's obligation under this warranty is specifically limited to repairing or replacing, at its option, any part which is determined by Seller to be defective during the applicable warranty period. Any labor charges are excluded and will be the responsibility of the purchaser.

This warranty is made to the original purchaser of the Product only, and is not transferable or assignable. This warranty applies only to an operator which is installed in commercial or industrial building applications. This warranty does not apply to any unauthorized alteration or repair of the Product, or to any Product or component which has been damaged or deteriorated due to misuse, neglect, accident, failure to provide necessary maintenance, normal wear and tear, or acts of God or any other cause beyond the reasonable control of Seller.

THIS WARRANTY IS EXCLUSIVE AND IN LIEU OF ANY OTHER WARRANTIES, EITHER EXPRESS OR IMPLIED, INCLUDING BUT NOT LIMITED TO ANY IMPLIED WARRANTY OF MERCHANTABILITY OR FITNESS FOR A PARTICULAR PURPOSE.

IN NO EVENT SHALL SELLER BE RESPONSIBLE FOR, OR LIABLE TO ANYONE FOR, SPECIAL, INDIRECT, COLLATERAL, PUNITIVE, INCIDENTAL OR CONSEQUENTIAL DAMAGES, even if Seller has been advised of the possibility of such damages. Such excluded damages include, but are not limited to, loss of goodwill, loss of profits, loss of use, cost of any substitute product, interruption of business, or other similar indirect financial loss.

Claims under this warranty must be made promptly after discovery, within the applicable warranty period, and in writing to the Seller or to the authorized distributor or installer whose name and address appear below. The purchaser must allow Seller a reasonable opportunity to inspect any Product claimed to be defective prior to removal or any alteration of its condition. Proof of the purchase and/or installation date, and identification as the original purchaser, may be required.

ORIGINAL PURCHASER Mick Rich

INSTALLATION ADDRESS KAFB

SELLER: Overhead Door Company

SELLER'S ADDRESS: 5656 Pasadena Ave NE, Albuquerque, NM 87113

FACTORY ORDER #: 749346

DATE OF INSTALLATION: 12-15-15

SIGNATURE OF SELLER: Chris Duggins

Digitally signed by Chris Duggins
DN: cn=Chris Duggins, o=Overhead Door of Albuquerque, ou, email=chris.duggins@dhpace.com, c=US
Date: 2016.02.23 16:41:22 -07'00'

C900-832

Air Distribution Technologies
Terms and Conditions

Air Distribution Technologies Global Terms and Conditions of Sale

GLOBAL TERMS AND CONDITIONS OF SALE

1. **Applicability**. These Global Terms and Conditions of Sale (these "**Terms**") are the only terms that govern the sale of the goods ("**Goods**") by the seller ("**Seller**") and the buyer ("**Buyer**"), each of which is identified in the accompanying quotation, credit application, proposal, order acknowledgement, or invoice (the "**Sales Confirmation**"). These Terms and the Sales Confirmation comprise the entire agreement between the parties (collectively, this "**Agreement**") and supersede all prior or contemporaneous understandings, agreements, negotiations, representations and warranties, and communications, both written and oral. These Terms prevail over any of Buyer's general terms and conditions of purchase, regardless whether or when Buyer submitted its purchase order or such terms. Seller's fulfillment of Buyer's order does not constitute, and shall not be deemed to constitute, acceptance of any of Buyer's terms and conditions and does not serve to modify or amend these Terms.

2. **Cancellation**. Cancellation or modifications of orders are subject to Seller's prior written consent in each instance.

3. **Price**. Unless otherwise set forth in the Sales Confirmation, the price of the Goods is based on the prices quoted in Seller's product catalog. All stated prices are exclusive of any taxes, fees, duties, and levies, however designated or imposed, including but not limited to value-added and withholding taxes that are levied or based upon the amounts paid under this Agreement (collectively, "Taxes"). Any Taxes related to the Goods purchased pursuant to this Agreement are the responsibility of Buyer (excluding taxes based on Seller's net income), unless Buyer presents an exemption certificate acceptable to Seller and the applicable taxing authorities. If possible, Seller will bill Taxes as a separate item on the invoice presented to Buyer. If any exemption certificate presented by Buyer is held to be invalid, then Buyer shall pay Seller the amount of the Tax and any penalties and interest related thereto.

4. **Payment; Taxes**. Unless otherwise set forth in the Sales Confirmation, Buyer shall pay all invoiced amounts within thirty (30) days following the date of Seller's invoice. Unpaid amounts shall accrue interest at a rate equal to the lesser of one and one-half percent (1.5%) per month and the maximum rate permitted by applicable law, from due date until paid, plus Seller's reasonable costs of collection. Seller reserves all other rights granted to a seller under the Uniform Commercial Code ("UCC") for Buyer's failure to pay for the Goods or any other breach by Buyer of these Terms. In addition to all other remedies available to Seller (which Seller does not waive by the exercise of any rights hereunder), Seller may suspend the delivery of any Goods if Buyer fails to pay any amounts when due and such failure continues for five (5) days following Buyer's receipt of notice thereof. Buyer may not withhold payment of any amounts due and payable as a set-off of any claim or dispute with Seller, regardless of whether relating to Seller's breach, bankruptcy, or otherwise.

5. **Delivery; Shipping.**

   Seller will deliver the Goods within a reasonable time after receiving Buyer's purchase order, subject to their availability. Seller shall not be liable for any delays, loss, or damage in transit. Unless otherwise set forth in the Sales Confirmation, Seller shall deliver the Goods, EX WORKS (Incoterms® 2010) at the location specified in the Sales Confirmation (the "**Delivery Location**"), using Seller's standard methods for packaging and shipping same. Buyer shall take delivery of the Goods within three (3) days of Seller's notice that the Goods have been delivered to the Delivery Location. If Buyer fails to take delivery of the Goods within this three (3) day period Buyer shall pay Seller for the Goods and all storage expenses incurred by Seller. Seller may, in its sole discretion, without liability or penalty, make partial shipments of Goods to Buyer. Each shipment will constitute a separate sale, and Buyer shall pay for the units shipped whether such shipment is in whole or partial fulfillment of Buyer's purchase order.

   The quantity of any installment of the Goods, as recorded by Seller on the dispatch from Seller's place of business, is conclusive evidence of the quantity received by Buyer upon delivery, unless Buyer provides conclusive evidence to the contrary. Seller shall not be liable for any non-delivery of the Goods to the Delivery Location, unless Buyer gives written notice to Seller of such non-delivery within five (5) days following the date that Buyer would, in the ordinary course of business, have received the Goods. Seller's liability for any non-delivery of the Goods shall be limited to replacing the Goods within a reasonable time or adjusting the invoice respecting such Goods to reflect the actual quantity delivered.

6. **Title; Risk Of Loss**.

   (a) Title passes to Buyer upon delivery of the Goods at the Delivery Location. As collateral security for the payment of the purchase price of the Goods, Buyer hereby grants to Seller a lien on, and security interest in, and to all of the right, title, and interest of Buyer in, to, and under the Goods, wherever located, and whether now existing or hereafter arising or acquired from time to time, and in all accessions thereto and replacements or modifications thereof, as well as all proceeds (including insurance proceeds) of the foregoing. The security interest granted under this provision constitutes a purchase money security interest under the Uniform Commercial Code as adopted in the State of Texas.

   (b) Risk of loss or damage to the Goods passes to Buyer in accordance with the applicable Incoterm. If Buyer fails to accept delivery of any of the Goods on the date set forth in Seller's notice that Seller has delivered the Goods to the Delivery Location, or if Seller is unable to deliver the Goods to the Delivery Location on such date because Buyer has failed to provide appropriate instructions, documents, licenses, or authorizations, then: (i) risk of loss to the Goods shall pass to Buyer; (ii) the Goods shall be deemed to have been delivered to Buyer; and (iii) Seller, at its option, may store the Goods until Buyer takes possession of them, at which time Buyer shall be liable for all costs and expenses resulting from such failure (including but not limited to the cost of storage and insurance).

7. **Inspection; Rejection of Goods**

   (a) As used in this Section 7, "**Nonconforming Goods"** means only the following: (i) the items shipped are different from those identified in Buyer's purchase order; or (ii) the labels or packaging of the items incorrectly identifies them. Buyer shall inspect the Goods within five (5) days following receipt thereof (the "**Inspection Period**"). If, prior to the end of the Inspection Period, Buyer fails to notify Seller in writing of any Nonconforming Goods and to furnish Seller such written evidence or other documentation as reasonably required by Seller, then Buyer will be deemed to have accepted the Goods.

   (b) If Buyer timely and properly notifies Seller of any Nonconforming Goods, then Seller shall, in its sole discretion, (i) replace such Nonconforming Goods with conforming Goods or (ii) credit or refund the purchase price for such Nonconforming Goods, together with any reasonable shipping and handling expenses incurred by Buyer in connection therewith. Buyer shall ship, at Seller's expense and risk of loss, the Nonconforming Goods to the Delivery Location. If Seller exercises its option to replace Nonconforming Goods, then after receiving Buyer's shipment of Nonconforming Goods pursuant to Seller's instructions, Seller shall, at Seller's expense and risk of loss, deliver the replaced Goods to the Delivery Location.

   (c) Buyer acknowledges and agrees that the remedies set forth in this Section 7 are Buyer's exclusive remedies for the delivery of Nonconforming Goods, and except as set forth in this Section 7, Buyer has no right to return the Goods to Seller without Seller's written authorization

8. **Limited Warranty**.

   (a) Unless otherwise set forth in the Sales Confirmation, Seller warrants to Buyer, for a period of twelve (12) months following the date of delivery to the Delivery Location (the "**Warranty Period**"), that the Goods will be free from defects in material and workmanship. Notwithstanding the foregoing, the Warranty Period for consumable Goods shall in no event exceed recommended replacement intervals set forth in the Instructions (hereinafter defined). If, prior to the expiration of the Warranty Period, Buyer informs Seller in writing of any breach of this limited warranty, then Seller may repair or replace the Goods that gave rise to such breach or, in Seller's sole and exclusive discretion, refund the amounts that Buyer paid for such Goods.

   (b) The foregoing limited warranties do not apply to (i) any defect in Goods not manufactured by Seller; and (ii) any Goods manufactured according to Buyer's specifications.

   (c) Buyer shall bear the costs of access, de-installation, re-installation and transportation of the Goods to Seller and back to Buyer. Any repair or replacement pursuant to this limited warranty shall not extend the Warranty Period. Seller does not warrant the Goods, or any repaired or replacement parts, against normal wear and tear. This limited warranty and remedy are expressly conditioned upon: (i) Buyer's payment of the purchase price in full, (ii) Buyer giving written notice of the defect, reasonably described, to Seller within ten (10) days of the time when Buyer discovers or ought to have discovered the defect, (iii) the storage, installation, operation, use, and maintenance of the Goods in compliance with the published specifications and instructions provided by Seller or its suppliers or subcontractors (the "**Instructions**"), (iv) the existence of proper records of Buyer's operation and maintenance of the Goods during the Warranty Period, (v) Buyer providing Seller with a reasonable opportunity to examine the Goods and the aforementioned records, and (vi) the absence of any unauthorized modification or repair of the Goods.

   (d) Before any test may be used to evaluate the Goods, Buyer shall: (i) provide Seller with reasonable written notification of such test, (ii) allow Seller to be present during such test, and (iii) receive Seller's consent to the conditions of such test, which consent will not be unreasonably withheld. If a test is performed on the Goods, and Seller has not consented to the conditions of such test, then this limited warranty shall be void.

   (e) **THE REMEDIES SET FORTH IN THIS SECTION 8 ARE BUYER'S SOLE AND EXCLUSIVE REMEDIES FOR ANY FAILURE OF SELLER TO COMPLY WITH ITS OBLIGATIONS UNDER THIS AGREEMENT, INCLUDING ANY BREACH OF THE LIMITED WARRANTY SET FORTH IN THIS SECTION 8**. Correcting any defect in the manner set forth in this Section 8 shall constitute complete fulfillment of Seller's obligations and liabilities under the Agreement following the delivery of the Goods, regardless of whether a claim is based in contract law, tort law (including negligence, strict liability or otherwise), or other legal theory. **THE LIMITED WARRANTY SET FORTH IN THIS SECTION 8 IS EXCLUSIVE AND IN LIEU OF ALL OTHER WARRANTIES, WHETHER STATUTORY, EXPRESS, OR IMPLIED. EXCEPT AS SET FORTH IN THIS SECTION 8, SELLER MAKES NO EXPRESS OR IMPLIED WARRANTIES, INCLUDING, BUT NOT LIMITED TO ANY WARRANTIES OF MERCHANTABILITY, NON-INFRINGEMENT, OR FITNESS FOR A PARTICULAR PURPOSE, OR ANY WARRANTIES ARISING FROM COURSE OF DEALING OR USAGE OF TRADE**. Any other oral or written statements, whether contained in general advertising or other printed material, do not constitute warranties, and Buyer agrees that it is not entering into the Agreement in reliance upon any such statements.

9. **Indemnification**. Buyer shall defend, indemnify, and hold harmless Seller and its parent company, their respective subsidiaries, affiliates, successors, and assigns and their respective directors, officers, shareholders, and employees from and against any loss, injury, death, damage, liability, claim, deficiency, action, judgment, interest, award, penalty, fine, cost, fees (including import and export customs fees), or expense (including reasonable attorney and professional fees and costs, and the cost of enforcing any right to indemnification hereunder and the cost of pursuing any insurance providers) arising out of or occurring in connection with the negligence or willful misconduct of Buyer or its employees or agents, including but not limited to: (i) any misuse or modification of the Goods by Buyer or its employees or agents, (ii) any act (or failure to act) by Buyer or its employees or agents in contravention of any safety procedures or instructions that Seller provides to Buyer or its employees or agents, or (iii) the failure to store, install, operate, or maintain the Goods in accordance with the Instructions.
10. **Infringement**.

    (a) Seller will defend, at its own expense, any action against Buyer brought by a third party to the extent that the action is based upon a claim that the Goods infringe any U.S. patents or copyrights, or misappropriate any trade secrets, of a third party. Seller will pay those costs and damages finally awarded against Buyer in any such action that are specifically attributable to such claim or those costs and damages agreed to in a monetary settlement of such action.

    (b) The foregoing obligations are conditioned on Buyer (i) notifying Seller promptly in writing of such action, (ii) making no admission of liability and giving Seller sole control of the defense thereof and any related settlement negotiations, and (iii) cooperating and, at Seller's request and expense, assisting in such defense.

    (c) If the Goods become, or in Seller's opinion are likely to become, the subject of an infringement claim, Seller may, at its option and expense, either (i) procure for Buyer the right to continue using such Goods, (ii) replace or modify such Goods so that they become non-infringing, or (iii) accept return of such Goods and refund Buyer the amounts actually paid by Buyer to Seller for such Goods.

    (d) Notwithstanding the foregoing, Seller will have no obligation under this Section 10 or otherwise with respect to any infringement claim based upon any: (i) misuse or modification of the Goods by Buyer or its employees or agents, (ii) use of the Goods in combination with other materials, goods, products, or services for which the Good were not intended to be used, (iii) failure of Buyer to implement any update provided by Seller that would have prevented the claim, (iv) Goods that Seller made to Buyer's specifications or designs.

(e) **THIS SECTION 10 STATES SELLER'S ENTIRE LIABILITY AND BUYER'S EXCLUSIVE REMEDY FOR INFRINGEMENT CLAIMS AND ACTIONS.**

11. **Limitation of Liability**.

    (a) **IN NO EVENT WILL SELLER BE LIABLE FOR ANY INDIRECT, SPECIAL, INCIDENTAL, EXEMPLARY, OR CONSEQUENTIAL DAMAGES, INCLUDING BUT NOT LIMITED TO ANY LOSS OF USE OR UNDER-UTILIZATION OF LABOR OR FACILITIES, LOSS OF REVENUE OR ANTICIPATED PROFITS, LOST DATA, AND COSTS OF PROCUREMENT OF SUBSTITUTE GOODS, REGARDLESS OF THE FORM OF ACTION, WHETHER IN CONTRACT, TORT, OR OTHERWISE, EVEN IF SELLER HAS BEEN ADVISED OF THE POSSIBILITY OF SUCH DAMAGES. SELLER'S TOTAL LIABILITY FOR ALL CLAIMS ARISING OUT OF, OR RELATING TO, THE GOODS SHALL BE LIMITED TO GENER¬AL MONEY DAMAGES IN AN AMOUNT NOT TO EXCEED THE TOTAL PURCHASE PRICE FOR THE GOODS GIVING RISE TO THE CLAIM.**

    (b) The limitation of liability set forth in this Section 11 shall not apply to: (i) liability resulting from Seller's negligence or willful misconduct or (ii) death or bodily injury resulting from Seller's acts or omissions.

12. **Design Changes**. Seller reserves the right to alter, modify, or redesign its products without any obligation to replace previous shipments to Buyer.

13. **No License**. The sale of the Goods shall not confer upon Buyer any license, express or implied, under any patents, trademarks, trade names, or other proprietary rights owned or controlled by Seller, its subsidiaries, affiliates, or suppliers; it being specifically understood and agreed that all such rights are reserved to Seller, its subsidiaries, affiliates, or suppliers. Without limiting the foregoing, Buyer will not, without Seller's prior written consent, use any trademark or trade name of Seller in connection with any the Goods, other than with respect to the resale of the Goods pre-marked or packaged by or on behalf of Seller.

14. **Termination**. In addition to any other remedies that Seller may have, Seller may terminate this Agreement with immediate effect upon written notice to Buyer, if Buyer: (i) fails to pay any amount when due under this Agreement and such failure continues for five (5) days after Buyer's receipt of written notice of nonpayment; (ii) has not otherwise performed or complied with any of these Terms, in whole or in part; or (iii) becomes insolvent, files a petition for bankruptcy or commences or has commenced against it proceedings relating to bankruptcy, receivership, reorganization or assignment for the benefit of creditors.

15. **Confidentiality**. All non-public, confidential, or proprietary information of Seller, including but not limited to specifications, samples, patterns, designs, plans, drawings, documents, data, business operations, customer lists, pricing, discounts or rebates, that Seller discloses to Buyer, whether disclosed orally or disclosed or accessed in written, electronic or other form or media, and regardless of whether marked, designated, or otherwise identified as "confidential," in connection with the Agreement is confidential, solely for the use of performing the Agreement, and may not be disclosed or copied unless authorized in advance by Seller in writing. Upon Seller's request, Buyer shall promptly return all documents and other materials received from Seller. Seller shall be entitled to injunctive relief for any violation of this Section 15, without having to post bond or establish the insufficiency of a remedy at law. This Section 15 does not apply to information that is: (a) in the public domain; (b) known to Buyer at the time of disclosure; or (c) rightfully obtained by Seller on a non-confidential basis from a third party.

16. **Force Majeure**. Seller shall not be liable for any failures or delays caused by strikes, differences with workers, or any causes beyond the reasonable control of Seller, including but not limited to fires, floods, accidents, action of any governmental authority, war, insurrection or riots, or short¬ages of labor, energy, raw materials, production facilities, or transportation. Where delays or failures are caused by labor difficulties, Seller shall not be obligated to seek or obtain any settlement that, in Seller's sole judgment, is not in Seller's best interest.

17. **Compliance**. Each party shall comply with all applicable laws, regulations, and ordinances. Without limiting the foregoing, in no event shall Buyer take any action(s) contrary to the export and import laws and regulations in effect as of the date of shipment of the Goods of any country involved in the transactions contemplated by the Agreement.

18. **Governing Law and Jurisdiction**.

    (a) If both parties are US residents, exclusive jurisdiction and venue for any action, suit, or proceeding concerning the Agreement or other documents related thereto shall be governed, enforced, and construed in accordance with the internal laws of the State of Texas, without giving effect to any choice or conflict of law provision or rule (whether of the State of Texas or any other jurisdiction) that would cause the application of the laws of any jurisdiction other than those of the State of Texas. Any legal suit, action, or proceeding arising out of or relating to the Sales Confirmation, these Terms, or the documents related thereto shall be instituted in the United States District Court for the Northern District of Texas, Dallas Division, or the courts of the State of Texas serving the City of Richardson and County of Collin. Each party irrevocably submits to the exclusive jurisdiction of such courts in any such suit, action, or proceeding. Each party waives its rights to a jury trial of any claim or cause of action based upon, or arising out of, the Order, these Terms, or the documents related thereto, or their respective subject matter.

    (b) If neither party is a Chinese entity and Seller is not a U.S. entity, then any controversy or claim arising out of or relating to this Agreement including, but not limited to, its breach, existence, validity, legality, enforceability, interpretation, performance, nullity, termination or expiration, (a "**Controversy**") will be settled by binding arbitration; and notwithstanding its place of execution or performance, this Agreement will be governed by, and construed under and in accordance with, the Laws of the State of New York, USA, irrespective of any laws regarding choice or conflict of laws that direct the application of the laws of another jurisdiction. The place of arbitration will be New York, New York, under the rules prescribed by the International Centre for Dispute Resolution ("**ICDR**") in accordance with its ICDR Rules. Unless the parties agree to a single arbitrator, the arbitration will be heard and determined by three arbitrators, who will be appointed pursuant to the ICDR Rules. The arbitration proceedings will be conducted in the English language. The award will be rendered in writing with the reasons detailed. The award may be in the nature of money damages, injunctive relief, or specific performance as decided by the arbitrator. Either party may initiate arbitration by notifying the other in writing. The arbitrator's ruling and award from such arbitration is final; the parties consent to judgment upon the award; and the award may be entered in any court of competent jurisdiction.

    (c) If either party is a Chinese entity, the laws of China govern this Agreement, irrespective of any laws regarding choice or conflict of laws that direct the application of the laws of another jurisdiction. The Controversy will be submitted to the China International Economic and Trade Arbitration Commission in Shanghai ("**CIETAC**") for final resolution by arbitration in accordance with the rules and procedures of CIETAC. The CIETAC tribunal will consist of three (3) arbitrators. The parties will at all times comply with, and observe all requirements and rulings of, CIETAC made in relation to any Controversy submitted to CIETAC for resolution. Submission of evidentiary documents may be in copies without the need of notarization unless specifically ordered by the CIETAC tribunal. Any interim decisions or orders by the CIETAC tribunal will be binding, and sanctions may be given on failures of any party in implementing such interim decision or order. Any award or determination by the CIETAC tribunal is final and binding on both parties. The arbitration proceedings will be conducted in the English language. The United Nations Convention on Contracts for the International Sale of Goods does not apply to the Agreement or the documents related thereto.

19. **Choice of Language**. It is by the express intention of the parties hereto that the present Agreement and all its related documents be drafted in English. Il est de l'intention expresse des parties à la présente Convention (connaissement, bon de commande, bon de conditionnement ou facture) et tout document s'y rattachant soient écrit en langue anglaise.

20. **Survival**. In addition to any other term whose context may so require, the terms contained in Sections 1, 4, 6, 7, 8, 9, 10, 11, 15, 18, 19, 20, and 21 will survive any cancellation of the Sales Confirmation.

21. **Miscellaneous**. Buyer acknowledges that is has not been induced to purchase any the Goods from Seller by any representation or warranty not expressly set forth in this Agreement. These Terms and the Sales Confirmation constitute the entire agreement of the parties and supersede all existing agree¬ments and all other oral or written communications between them concerning its subject matter. None of the Terms may be added to, modified, superseded, or otherwise altered, except by a written docu¬ment signed by an authorized representative of Seller that specifically references these Terms and states that it modifies them. If there is a conflict between the provisions of the Sales Confirmation and these Terms, then the terms of the Sales Confirmation shall govern. No waiver by Seller of any of the provisions of these Terms is effective unless explicitly set forth in writing that specifically references these Terms and is signed by Seller. No failure to exercise, or delay in exercising, any rights, remedy, power, or privilege arising from these Terms operates or may be construed as a waiver thereof. No single or partial exercise of any right, remedy, power, or privilege hereunder precludes any other or further exercise thereof or the exercise of any other right, remedy, power or privilege. The Section headings contained in these Terms are intended for convenience of reference only and shall not affect the inter¬pretation of any provision. If any provision of this Agreement is held to be prohibited or unenforceable, such provision will be changed and interpreted to accomplish the objectives of such provision to the greatest extent possible under applicable law and the remaining provisions will continue in full force and effect. Buyer may not assign this Agreement or any quotation or order for the Goods, in whole or in part, without Seller's prior written consent.

Rev. 06/17/13 ADTI GLOBAL TERMS AND CONDITIONS OF SALE

©Copyright 2013 Air Distribution Technologies, All rights reserved.

Scoggin Mechanical Industries, Inc.

HVAC – Commercial / Industrial Lic. 377350 MM-98 GB-98
3300 Princeton Dr. NE, Suite 4, Albuquerque, NM 87107

Office 505-433-4114 Fax 505-433-4783

PO Box 6615 Albuquerque, NM 87197

Date: 02-10-2016

Company/Client: U.S. Army Corps of Engineer District

Address: Albuquerque District Albuquerque, NM

Attention:

Project: KAFB Bulk Fuel Facility Phase IV Mid-Plume Pump & Treat System

5202 Randolph Avenue SE Albuquerque, NM 87117

Dear Sir,

Scoggin Mechanical Industries (SMII) scope of work for the referenced project was completed 02-10-2016, per our records. As of this date construction is sufficiently complete to provide beneficial use and otherwise has been completed in accordance with the Contract Documents.

General Terms of Our Warranty:

1. SMII is responsible for repair or replacement of any equipment we identify as being either defective or of poor workmanship.
2. Owner/End User is responsible for preventive maintenance, inspections, calibration, operation and other general maintenance tasks.
3. Warranty work will be performed during regular working hours, and is subject to availability of technicians on a first call, first response basis.
4. If we determine the problem is outside the scope of warranty and we provide work, a service call becomes billable to you.
5. SMII is not responsible for warranty coverage on any system repaired by others, abused, altered, misused, damaged by fire, flood, or force of nature, or which has not been reasonably and properly maintained.
6. Warranty requests are handled by calling 505-433-4114.
7. Please be advised that, pursuant to SMII's completion of our scope of work for this project the applicable warranty for this project will begin as of 02-10-2016, and will continue through 02-10-2017. Should you disagree with this date, please advise us within ten days of the date of this letter.

Sincerely,

Scoggin Mechanical Industries, Inc.

CENTURY CLUB CONSTRUCTION
8201 Golf Course Rd NW Suite D3-295, Albuquerque, NM 87120
Office (505) 344-1096 Fax (505) 847-3612

December 21, 2015

Mr. Mick Rich
Owner
Mick Rich Contractors, Inc
8401 Firestone Lane NE
Albuquerque, NM 87113

RE: Letter of Warranty for KAFB Bulk Fuel Facility

Mr. Rich,

As of December 20th, 2015, the above referenced project has been inspected and deemed Substantially Complete. This shall establish the beginning of the One Year Warranty Period. Century Club Construction, LLC shall warranty all materials and labor for the next year, ending on December 20th, 2016.

If you have any further questions, please call me on my cell phone, (505) 850-6190.

Sincerely,

Jeff Webster

President
Century Club Construction, LLC
8201 Golf Course Rd NW, Suite D3-295
Albuquerque, NM 87120
Office (505) 344-1096
Fax (505) 847-3612

jeff@centuryclubconstruction.com

Fliteway Technologies, Inc.

Operations and Maintenance Manual

QI4508 Rev 6

CB & I Federal Services
Pump and Treat Groundwater System
Bulk Fuels Facility
Kirtland AFB

2129 East Birchwood Ave. Cudahy, WI 53110

(414) 483-5600 1-800-236-3580 FAX (414) 483-1957

Fliteway Technologies, Inc.
2129 East Birchwood Ave.• Cudahy, WI 53110
(414) 483-5600 • 1-800-236-3580 • FAX (414) 483-1957

Q14508 Rev 6

CB&I Federal Services

Pump and Treat Groundwater Treatment System, Kirtland Air Force Base, Bulk Fuels Facility

- **One (1) Groundwater Treatment Feed Tank**
  - 6150 gallon steel tank, 122” Outer Diameter x 125” High
  - Interior Epoxy Coating for Potable Water
  - Exterior Polyurethane
  - Openings per drawing Tank Data Sheet supplied by customer
  - Conic roof
  - ¼” plate wall thickness
  - 24” man way
  - ~~One (1) Rosemount Liquid Level Transmitter [3051L-2-A-G0-M-D-21-A-J] (LIT-3101)~~
  - ~~Two (2) Flotech L-6EPS-S-S-S-3A Liquid level switches [L6EPS-S-S-3-A] (LSH-3100 LSL-3100)~~
  - Seismic calculations for anchoring the Tank

- **One (1) Feed Pump Skid**

  - Steel Base Skid (approximately 6’ by 10’) with Forklift pockets and Bolt down Tabs

  - Two (2) Gould ANSI Centrifugal Pumps (P-112A P-112B)
    - Gould ANSI Model 3196 MTI 2x3-6 with 15 HP TEFC Motors (Inverter Rated) each rated for 200 GPM at 100 TDH
    - Pumps plumbed in Parallel with 4” Steel piping with Valves, Flex connectors,
    - Ashcroft Pressure Gauges [P/N 45-1259-S-SL-04-60-#] (PI-3102) and Sample ports

  - Two (2) VFD’s installed in NEMA4 (High Voltage) Enclosure mounted and wired on Feed Pump Skid
    - One (1) 36” by 36” NEMA 4 Weigmann Enclosure and vent fan
    - Two (2) 20HP Allen-Bradley VFD’s [20BD027A0AYNAND0] (SIC-3102A SIC-3102B)
      - Each with HIM Module [20-HIM-A3] and Ether/IP COMM card [20-COMM-ER]
    - Two (2) 5% Line Reactors [1321-3R35-C]
    - Two (2) each ISC Model LR6304FAC15 Multi-Round Liquid Bag Filter Housings each with:
    - Carbon Steel housing (holds six (6) #2 size 7” by 32” Filter Bags
    - Each Rated for 1,200 GPM with 26.4 sq. ft. filtering area
    - 4” Flanged Inlet / Discharge Ports
    - 1” NPT drain
    - Buna N Seals on lid and baskets, differential, drain, and vent ports
    - Two part epoxy finish

- Davit cover lift
- Heavy Duty Legs
- HH Pressure Switch [Dwyer A1F-O-SS-1-2 with weather cover A-447] (PSH-3102)
- Two (2) Differential Pressure Indicators [45-1130SL-25-30#] across the bag filters (PDI-3102A/B)
- Bag Filters plumbed in Parallel with 4" Steel piping with Valves, Flex connectors, Ashcroft Pressure Gauges [P/N 45-1259-S-SL-04-60-#] (PI-3103) and Sample ports
- One (1) McCrometer 4" Flow Meter [P/N VM04QE03F-E1HS-V3] (40 to 900 GPM) with Local Display Transmitter and 4-20mA Output (FIT-3102)

- One (1) NEMA 4 Junction Box (Low Voltage) prewired with terminal strips to facilitate wiring to System Control Panels

- **One (1) Treated Water Storage Tank**
  - 6150 gallon steel tank, 122" Outer Diameter x 125" High
  - Interior Epoxy Coating for Potable Water
  - Exterior Polyurethane
  - Openings per drawing Tank Data Sheet supplied by customer
  - Conic roof
  - ¼" plate wall thickness
  - 24" man way
  - One (1) Rosemount Liquid Level Transmitter [P/N 3051L-2-A-G0-M-D-21-A-J] (LIT-3107)
  - Two (2) Flotech 6EPS-S-S-S-3A Liquid level switches [P/N L6EPS-S-S-3-A] (LSH-3106 LSL-3106)
  - Seismic calculations for anchoring the Tank

- **One (1) Treated Water Pump Skid**

  - Steel Base Skid (approximately 6' by 10') with Forklift pockets and Bolt down Tabs

  - One (1) Gould ANSI Centrifugal Pump (P-118)
    - Gould ANSI Model 3196 MTI 3x4-8G with 40 HP TEFC Motor (Inverter Rated) rated for 400 GPM at 180 TDH
    - Pump plumbed with 4" Steel piping with Valves, Flex connectors, Ashcroft [P/N 45-1259-S-SL-04-100-#] (PI-3108) Pressure Gauges and Sample ports

  - One (1) VFD Installed in NEMA4 (High Voltage) Enclosure mounted and wired on Treated Water Pump Skid
    - One (1) 36" by 36" NEMA 4 Weigmann Enclosure and vent fan
    - One (1) 50HP Allen-Bradley VFD [20BD065A0AYNAND0] (SIC-3108)
      - With HIM Module [20-HIM-A3] and Ether/IP COMM card [20-COMM-ER]
    - One (1) 5% Line Reactor [1321-3R80-C]

  - Two (2) each ISC Model LR6304FAC15 Multi-Round Liquid Bag Filter Housings each with:
    - Carbon Steel housing (holds six (6) #2 size 7" by 32" Filter Bags
    - Each Rated for 1,200 GPM with 26.4 sq. ft. filtering area
    - 4" Flanged Inlet / Discharge Ports
    - 1" NPT drain
    - Buna N Seals on lid and baskets, differential, drain, and vent ports
    - Two part epoxy finish

- Davit cover lift
- Heavy Duty Legs
- HH Pressure Switch [Dwyer A1F-O-SS-1-2 with weather cover A-447] (PSH-3108)
- Two (2) Differential Pressure indicators [45-1130SL-25-30#] across the bag filters (PDI-3108A/B)
- Bag Filters plumbed in Parallel with 4" Steel piping with Valves, Flex connectors, Ashcroft Pressure Gauges [P/N 45-1259-S-SL-04-100-#] (PI-3102) and Sample ports
- ~~One (1) McCrometer 4" Flow Meter [VM04QE03F-E1HS-V3] (40 to 900 GPM) with Local Display Transmitter and 4-20mA Output (FIT-3108)~~

- One (1) NEMA 4 Junction Box (Low Voltage) prewired with terminal strips to facilitate wiring to System Control Panel.

One (1) Air Compressor System
One (1) **Mattei Model AC-15 LX Air Compressor rated for 106 CFM at 115 PSIG**
- **20 HP 460 VAC Three Phase TEFC Motor**
- After Cooler
- Standard AC-15 Control Panel
- One (1) 1" Pressure Regulator [Norgen R17-801-RGLA]
- One (1) 1" Particulate Filter [Norgen F17-800-M3DA]
- One (1) 1" Coalescing Filter [Norgen F46-801-M0DA]
- One (1) Electronic Auto Drain
- Plumbed and tested.

- **Two (2) Day Factory functional and wet testing of System including temporary electrical connections from skid junction boxes to shop power**

- **Four (4) Day On-Site Installation Assistance**

- **Four (4) Day On-Site Startup Assistance**

Q14508R5 -CB&I

ITEM	MANUFACTURER	MODEL	FLITEWAY ASSIGNED SERIAL NUMBER	MANUFACTURER ASSIGNED SERIAL NUMBER
GROUNDWATER TREATMENT FEED TANK				
~~ROSEMOUNT TRANSMITTER~~	~~ROSEMOUNT~~	~~3051L2AG0MD21AJ~~	~~N/A~~	~~2493096~~
FEED PUMP SKID				
GOULDS CENTRIFUGAL PUMPS #1	GOULDS	3196 MTI 2X3-6	N/A	N723H146-1
PUMP MOTOR #1 -	BALDOR	09P011Z602	N/A	Z1407180103
GOULDS CENTRIFUGAL PUMPS #2	GOULDS	3196 MTI 2X3-6	N/A	N723H146-2
PUMP MOTOR #2 -	BALDOR	09P011Z602	N/A	Z1407180148
~~McCROMETER FLOW METER~~	~~McCROMETER~~	~~VM04QE03F-E1HS-V3~~	~~N/A~~	~~15-1023~~
TREATED WATER STORAGE TANK				
~~ROSEMOUNT TRANSMITTER~~	~~ROSEMOUNT~~	~~3051L2AG0MD21AJ~~	~~N/A~~	~~2493097~~
TREATMENT WATER PUMP SKID				
GOULDS CENTRIFUGAL PUMPS	GOULDS	3196 MTI 3X4-8G	N/A	N723H145
PUMP MOTOR	BALDOR	12H0114292G1	N/A	C1501290072
~~McCROMETER FLOW METER~~	~~McCROMETER~~	~~VM04QE03F-E1HS-V3~~	~~N/A~~	~~15-1022~~
MATTEI AIR COMPRESSOR	MATTEI	AC-15 LX	N/A	EZVPGF-2014

Fliteway Technologies, Inc.
2129 East Birchwood Ave., Cudahy, WI 53110
(414) 483-5600 • 1-800-236-3580 • FAX (414) 483-1957

WARRANTY

ONE YEAR LIMITED WARRANTY- Fliteway Technologies, Inc. remediation equipment is warranted by Fiteway to the original user against defects in workmanship or materials under normal use for one year after date of shipment. Exceptions to this are positive displacement vacuum pumps and blowers which have 18 Month warranties direct from the original manufacturer (Roots and Sutorbilt only). Any part determined by Fliteway Technologies, Inc. to be defective in material or workmanship and returned to Fliteway Technologies, Inc., shipping costs prepaid, will be repaired or replaced at Fliteway's option, as the exclusive remedy. See PROMPT DISPOSITION below for limited warranty claim procedures. This limited warranty gives the purchaser specific legal rights which may vary from state to state.

LIMITATIONS OF LIABILITY- To the extent allowable under applicable law, Fliteway's liability (or incidental and consequential damages is expressly disclaimed. Fliteway's liability in all events is limited to, and shall not exceed, the purchase price.

PRODUCT SUITABILITY - Many states and localities have regulations and codes governing sales, construction, installation, and/or use of products for certain purposes, which may vary from those in neighboring areas. While Fliteway Technologies, Inc. attempts to assure that its products comply with such codes, it cannot guarantee compliance, and cannot be responsible for how the product is installed or used. Before purchase and use of a product, please determine local and national codes and regulations, review the product application, and verify that the product, installation and use comply with those regulations and codes.

PROMPT DISPOSITION - Fliteway Technologies, Inc. will make every effort for a prompt correction or other adjustment with respect to any product which proves to be defective within the limited warranty. For any product believed to be defective within limited warranty, first write or call Fliteway Technologies, Inc. giving the model and serial number of tile unit and describing the nature of the defect. Title and risk of loss pass to the buyer on delivery to common carrier. If product was damaged in transit to you, file a claim with carrier. Freight of postage charges on returns to the factory are at the customer's expense. If returned product is returned under warranty, the manufacturer will cover return freight.

Fliteway Technologies, Inc.

Bill of Materials

2129 East Birchwood Ave. Cudahy, WI 53110

(414) 483-5600 1-800-236-3580 FAX (414) 483-1957

Warehouse 18 *** INDENTED B.O.M. REPORT *** Batch Qty. 1

From WTQ14508 GRD TK to WTQ14508 GRD Scrap/Yield OFF

Level	Seq	Stock Code	Description	Category Code/Description	Scrap/ Yield %	Inst.	Lead Time	U/M	Usage Qty.
**Top Assembly*		18-WTQ14508 GRD TK	GRNDWTR TRMT FEED TANK CB&I KI	04 Distributed Goods	100.00	N			
1	001	00-TK-6150	TANK, 6150 GAL. SW 122"DIA X 1	01 Soil Remediation		N		EA	1.000
1	002	00-EC-3051L2AG0MD2	ROSEMOUNT TRANSMITTER -250 TO	01 Soil Remediation		N		EA	1.000
1	003	00-FS-L6EPS-S-S-3A	FLOAT SWITCH 304SS 1" FLOTECT	01 Soil Remediation		N		EA	2.000

** END OF REPORT **

Warehouse 18 *** INDENTED B.O.M. REPORT *** Batch Qty. 1

From WTQ14508 FD SKD to WTQ14508 FD Scrap/Yield OFF

Level	Seq	Stock Code	Description	Category Code/Description	Scrap/ Yield %	Inst.	Lead Time	U/M	Usage Qty.
**Top Assembly*		18-WTQ14508 FD SKD	FEED PUMP SKID CB&I KIRTLAND A	04 Distributed Goods	100.00	N			
1	001	00-ST-C7X12.25	CHANNEL, 7" X 12.25	01 Soil Remediation		N		FT	40.000
1	002	00-ST-72X120X3/16	DIAMOND PLATE 72 X 120 X 3/16"	01 Soil Remediation		N		IN	120.000
1	003	00-ST-RT4X2X.25	STEEL,RECT TUBING, 4X2X1/4	01 Soil Remediation		N		FT	20.000
1	004	00-ST-SQT1.5X1/4	SQUARE TUBE 1-1/2 X 1-1/2 X 1/	01 Soil Remediation		N		FT	15.000
1	005	00-ST-SQT2X2X1/4	SQUARE TUBE 2 X 2 X 1/4"	01 Soil Remediation		N		FT	12.000
1	006	00-IF-LR6304FAC15	BAG FILTER 4" CARBON STEEL (6)	01 Soil Remediation		N		EA	2.000
1	007	00-IF-PO10P2SH	FILTER BAGS, 10 MICRON #2 7X32	01 Soil Remediation		N		EA	25.000
1	008	04-WP-3196 MTI 2X3	PUMP GOULDS 3196 MTi2X3-6 200G	04 Distributed Goods		N		EA	2.000
1	009	00-FM-VM04QE03F-E1	FLOW METER 4" 40-400GPM 4-20mA	01 Soil Remediation		N		EA	1.000
1	010	00-GU-451130SL-30#	DIFF PRESS 0-30 45-1130SL-25-S	01 Soil Remediation		N		EA	2.000
1	011	00-GU-45-1259-60#	PRESS GAUGE 0-60 ASCRFT 45-125	01 Soil Remediation		N		EA	2.000
1	012	00-VA-4" BUTTERFLY	BUTTERFLY VALVE 4" GEAR LUG EP	01 Soil Remediation		N		EA	6.000
1	013	00-PF-4 F	FLANGE, 4" WELD-ON (SLIP) 150#	01 Soil Remediation		N		EA	27.000
1	014	00-PF-4X6 EXP JNTS	EXPANSION JOINTS 4"X6" EPDM RB	01 Soil Remediation		N		EA	2.000
1	015	00-ST-PIPEB4SCHD40	STEEL PIPE,BLACK,4 in,SCHED 40	01 Soil Remediation		N		FT	15.000
1	016	00-PF-4 90	ELBOW 4" 90 CS STD LR WELD	01 Soil Remediation		N		EA	7.000
1	017	00-PF-4 T	TEE,4" CS STD WELD	01 Soil Remediation		N		EA	3.000
1	018	00-EX-IMC3/4	CONDUIT IMC 3/4"	03 Electrical		N		FT	5.000
1	019	00-EF-3/4-UA	CONDUIT FLEX 3/4"	03 Electrical		N		EA	4.000
1	020	00-EF-1/2-UA	CONDUIT, FLEX 1/2"	03 Electrical		N		FT	12.000
1	021	00-EF-K05091	FITTING, 1/2 90 LIQUIDTITE	03 Electrical		N		EA	2.000
1	022	00-EF-K07591	FITTING, 3/4 90 LIQUIDTITE	03 Electrical		N		EA	2.000
1	023	00-EF-K0751	FITTING, 3/4" STRAIGHT LIQUIDT	03 Electrical		N		EA	2.000
1	024	00-PF-3 FLNG SLIP	FLANGE 3 150# CS RF SLIP ON	01 Soil Remediation		N		EA	2.000
1	025	00-PF-4X2 RB WELD	REDUCER BUSHING 4X2" CS STD CO	01 Soil Remediation		N		EA	2.000
1	026	00-PF-4X3 RB WELD	REDUCER BUSHING 4X3" CS STD CO	01 Soil Remediation		N		EA	2.000
1	027	00-PF-2 FLNG WELD	FLANGE 2 WELD NECK 150# CS STD	01 Soil Remediation		N		EA	2.000

** END OF REPORT **

Warehouse 15 *** INDENTED B.O.M. REPORT *** Batch Qty. 1

From CQ14508R5 FEED to CQ14508R5 FEE Scrap/Yield OFF

Level	Seq	Stock Code	Description	Category Code/Description	Scrap/ Yield %	Inst.	Lead Time	U/M	Usage Qty.
**Top Assembly*		15-CQ14508R5 FEED	CONTROL PANEL FEED PUMP CB&I K	03 Electrical	100.00	N			
1	001	00-EB-N412363612C	ENCLOSURE SUBPANEL,SWNG DR,PAD	03 Electrical		N		EA	1.000
1	002	00-EB-NP3636C	SUB PANEL WIEGMANN	03 Electrical		N		EA	1.000
1	003	00-EB-N412MFK	FOOT KIT	03 Electrical		N		EA	1.000
1	004	00-EB-N41214TWPL	HANDLE, WING PDLK	03 Electrical		N		EA	2.000
1	005	00-EB-N412121206C	ENCLOSURE 12X12X6	03 Electrical		N		EA	1.000
1	006	00-EB-NP1212C	SUB-PANEL 12X12	03 Electrical		N		EA	1.000
1	007	00-VFD-20BD027A0AY	VAR FRQ PWRFLX 27A 20HP 20BD02	03 Electrical		N		EA	2.000
1	008	00-VFD-1321-3R35-C	LINE REACTOR 35A ALLEN BRADLEY	03 Electrical		N		EA	2.000
1	009	00-VFD-20HIMA3	HIM MODULE LCD DISPLAY NUMERIC	03 Electrical		N		EA	2.000
1	010	00-VFD-20COMM-ER	COMMUNICATIONS CARD A-B DUAL-P	03 Electrical		N		EA	2.000
1	011	00-EC-G3P-040	CIRCUIT BREAKER 40A 3P 480VAC	03 Electrical		N		EA	2.000
1	012	00-EH-4WT46	FAN FOR PANELS 115 CFM 115V	03 Electrical		N		EA	1.000
1	013	00-EH-4YD78	FILTER GUARD ASSY, ALUM 4-45/6	03 Electrical		N		EA	2.000
1	014	00-EH-3RP12	CORDSET, AXIAL FAN, 36"	03 Electrical		N		EA	1.000
1	015	00-EC-GDL 1	FUSE,1AMP, FERRAZ SHAWMUT	03 Electrical		N		EA	1.000
1	016	00-EC-57.904.6355	FUSEHOLDER 1P GLASS ABB	03 Electrical		N		ea	1.000
1	017	00-EC-011419-00	THERMOSTAT, 32-140F N.O. DIN M	03 Electrical		N		EA	1.000
1	018	00-EC-1D374	GROUND BAR KIT PK7GTA	03 Electrical		N		EA	1.000
1	019	00-PS-A1F-O-SS-1-2	PRESSURE SWITCH 4-75 PSIG	03 Electrical		N		EA	1.000
1	020	00-PS-A-447	WEATHERPROOF HOUSING A1F PRESS	03 Electrical		N		EA	1.000

** END OF REPORT **

Warehouse 18 *** INDENTED B.O.M. REPORT *** Batch Qty. 1

From WTQ14508 TRT TK to WTQ14508 TRT Scrap/Yield OFF

Level	Seq	Stock Code	Description	Category Code/Description	Scrap/ Yield %	Inst.	Lead Time	U/M	Usage Qty.
**Top Assembly*		18-WTQ14508 TRT TK	TREATED WATER STRG TANK CB&I K	04 Distributed Goods	100.00	N			
1	001	00-TK-6150	TANK, 6150 GAL. SW 122"DIA X 1	01 Soil Remediation		N		EA	1.000
1	002	00-EC-3051L2AG0MD2	ROSEMOUNT TRANSMITTER -250 TO	01 Soil Remediation		N		EA	1.000
1	003	00-FS-L6EPS-S-S-3A	FLOAT SWITCH 304SS 1" FLOTECT	01 Soil Remediation		N		EA	2.000

** END OF REPORT **

Warehouse 18 *** INDENTED B.O.M. REPORT *** Batch Qty. 1

From WTQ14508 TRT SK to WTQ14508 TRT Scrap/Yield OFF

Level	Seq	Stock Code	Description	Category Code/Description	Scrap/ Yield %	Inst.	Lead Time	U/M	Usage Qty.
**Top Assembly*		18-WTQ14508 TRT SK	TREATED WATER PUMP SKID CB&I K	04 Distributed Goods	100.00	N			
1	001	00-ST-C7X12.25	CHANNEL, 7" X 12.25	01 Soil Remediation		N		FT	40.000
1	002	00-ST-72X120X3/16	DIAMOND PLATE 72 X 120 X 3/16"	01 Soil Remediation		N		IN	120.000
1	003	00-ST-RT4X2X.25	STEEL,RECT TUBING, 4X2X1/4	01 Soil Remediation		N		FT	20.000
1	004	00-ST-SQT1.5X1/4	SQUARE TUBE 1-1/2 X 1-1/2 X 1/	01 Soil Remediation		N		FT	15.000
1	005	00-ST-SQT2X2X1/4	SQUARE TUBE 2 X 2 X 1/4"	01 Soil Remediation		N		FT	12.000
1	006	00-IF-LR6304FAC15	BAG FILTER 4" CARBON STEEL (6)	01 Soil Remediation		N		EA	2.000
1	007	00-IF-PO10P2SH	FILTER BAGS, 10 MICRON #2 7X32	01 Soil Remediation		N		EA	25.000
1	008	04-WP-3196 MTI 3X4	PUMP GOULDS 3196 MTi 3X4-8G 40	01 Soil Remediation		N		EA	1.000
1	009	00-FM-VM04QE03F-E1	FLOW METER 4" 40-400GPM 4 20mA	01 Soil Remediation		N		EA	1.000
1	010	00-GU-451130SL-30#	DIFF PRESS 0-30 45-1130SL-25-S	01 Soil Remediation		N		EA	2.000
1	011	00-GU-45-1259-100#	PRESS GAGE 0-100 ASCRFT 45-125	01 Soil Remediation		N		EA	2.000
1	012	00-VA-4" BUTTERFLY	BUTTERFLY VALVE 4" GEAR LUG EP	01 Soil Remediation		N		EA	5.000
1	013	00-PF-4 F	FLANGE, 4" WELD-ON (SLIP) 150#	01 Soil Remediation		N		EA	21.000
1	014	00-PF-4X6 EXP JNTS	EXPANSION JOINTS 4"X6" EPDM RB	01 Soil Remediation		N		EA	1.000
1	015	00-PF-3 FLNG SLIP	FLANGE 3 150# CS RF SLIP ON	01 Soil Remediation		N		EA	1.000
1	016	00-PF-4X3 RB WELD	REDUCER BUSHING 4X3" CS STD CO	01 Soil Remediation		N		EA	1.000
1	017	00-ST-PIPEB4SCHD40	STEEL PIPE,BLACK,4 in,SCHED 40	01 Soil Remediation		N		FT	15.000
1	018	00-PF-4 90	ELBOW 4" 90 CS STD LR WELD	01 Soil Remediation		N		EA	7.000
1	019	00-PF-4 T	TEE,4" CS STD WELD	01 Soil Remediation		N		EA	2.000
1	020	00-EX-IMC-1/2	CONDUIT IMC 1/2"	03 Electrical		N		FT	10.000
1	021	00-EX-IMC1	CONDUIT IMC 1"	03 Electrical		N		FT	4.000
1	022	00-EF-1/2-UA	CONDUIT, FLEX 1/2"	03 Electrical		N		FT	10.000
1	023	00-EF-1-UA	CONDUIT, FLEX 1"	03 Electrical		N		FT	3.000
1	024	00-EF-K05091	FITTING, 1/2 90 LIQUIDTITE	03 Electrical		N		EA	6.000
1	025	00-EF-K0501	FITTING, 1/2" STRAIGHT LIQUIDT	03 Electrical		N		EA	2.000
1	026	00-EF-K10041	FITTING, 1" 45 LIQUIDTITE	03 Electrical		N		EA	2.000
1	027	00-EF-K10091	FITTING, 1" 90 LIQUID-TIGHT	03 Electrical		N		EA	1.000
1	028	00-EF-K1001	FITTING, 1" STRAIGHT LIQUIDITE	03 Electrical		N		EA	1.000

** END OF REPORT **

Warehouse 15 *** INDENTED B.O.M. REPORT *** Batch Qty. 1

From CQ14508R5 WATER to CQ14508R5 WA Scrap/Yield OFF

Level	Seq	Stock Code	Description	Category Code/Description	Scrap/ Yield %	Inst.	Lead Time	U/M	Usage Qty.
**Top Assembly*		15-CQ14508R5 WATER	CONTROL PANEL TRT WATER CB&I K	03 Electrical	100.00	N			
1	001	00-EB-N412363612C	ENCLOSURE SUBPANEL,SWNG DR,PAD	03 Electrical		N		EA	1.000
1	002	00-EB-NP3636C	SUB PANEL WIEGMANN	03 Electrical		N		EA	1.000
1	003	00-EB-N412MFK	FOOT KIT	03 Electrical		N		EA	1.000
1	004	00-EB-N41214TWPL	HANDLE, WING PDLK	03 Electrical		N		EA	2.000
1	005	00-EB-N412121206C	ENCLOSURE 12X12X6	03 Electrical		N		EA	1.000
1	006	00-EB-NP1212C	SUB-PANEL 12X12	03 Electrical		N		EA	1.000
1	007	00-VFD-20BD065A0AY	VAR FRQ PWRFLX 65A 50HP 20BD06	03 Electrical		N		EA	1.000
1	008	00-VFD-1321-3R80-C	LINE REACTOR 80A ALLEN BRADLEY	03 Electrical		N		EA	1.000
1	009	00-VFD-20HIMA3	HIM MODULE LCD DISPLAY NUMERIC	03 Electrical		N		EA	1.000
1	010	00-VFD-20COMM-ER	COMMUNICATIONS CARD A-B DUAL-P	03 Electrical		N		EA	1.000
1	011	00-EC-G3P-080	CIRCUIT BREAKER MCCB 80A 3P 48	03 Electrical		N		EA	1.000
1	012	00-EH-4WT46	FAN FOR PANELS 115 CFM 115V	03 Electrical		N		EA	1.000
1	013	00-EH-4YD78	FILTER GUARD ASSY, ALUM 4-45/6	03 Electrical		N		EA	2.000
1	014	00-EH-3RP12	CORDSET, AXIAL FAN, 36"	03 Electrical		N		EA	1.000
1	015	00-EC-GDL 1	FUSE,1AMP, FERRAZ SHAWMUT	03 Electrical		N		EA	1.000
1	016	00-EC-57.904.6355	FUSEHOLDER 1P GLASS ABB	03 Electrical		N		ea	1.000
1	017	00-EC-011419-00	THERMOSTAT, 32-140F N.O. DIN M	03 Electrical		N		EA	1.000
1	018	00-EC-1D374	GROUND BAR KIT PK7GTA	03 Electrical		N		EA	1.000
1	019	00-PS-A1F-O-SS-1-2	PRESSURE SWITCH 4-75 PSIG	03 Electrical		N		EA	1.000
1	020	00-PS-A-447	WEATHERPROOF HOUSING A1F PRESS	03 Electrical		N		EA	1.000

** END OF REPORT **

Warehouse 14 *** INDENTED B.O.M. REPORT *** Batch Qty. 1
From AQ14508R5 to AQ14508R5 Scrap/Yield OFF

Level	Seq	Stock Code	Description	Category Code/Description	Scrap/ Yield %	Inst.	Lead Time	U/M	Usage Qty.
**Top Assembly*		14-AQ14508R5	AC-15LX CB&I KIRTLAND AFB, NM	04 Distributed Goods	100.00	N			
1	001	04-MA-AC-15 LX	MATTEI COMPRESSOR 20HP 460/3/6	04 Distributed Goods		N		EA	1.000
1	002	04-FR-4959K5	REGULATOR, AIR 1" W/PRESS GAUG	01 Soil Remediation		N		EA	1.000
1	003	04-FR-4959K999A	PARTICULATE FILTER F17-800-M3D	01 Soil Remediation		N		EA	1.000
1	004	04-FR-4959K999B	COALESCING FILTER F46-801-M0DA	01 Soil Remediation		N		EA	1.000
1	005	00-PF-G-1 CN	NIPPLE, 1" GALV CLOSE	01 Soil Remediation		N		ea	3.000
1	006	00-PF-G-1 90	ELBOW, 1" GALV	01 Soil Remediation		N		ea	1.000
1	007	00-PF-G-1 U	UNION, 1" GALV	01 Soil Remediation		N		ea	1.000
1	008	00-PF-G-1X3 N	NIPPLE, 1X3 GALV	01 Soil Remediation		N		ea	3.000

** END OF REPORT **

Fliteway Technologies, Inc.

Submittal Drawings

2129 East Birchwood Ave. Cudahy, WI 53110

(414) 483-5600 1-800-236-3580 FAX (414) 483-1957

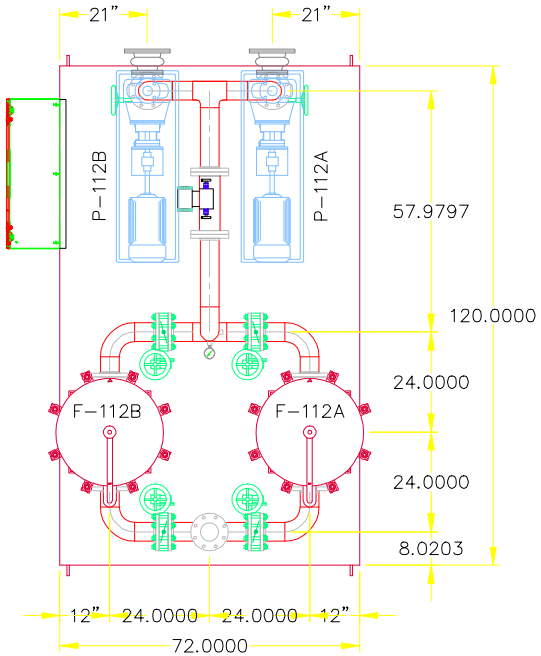

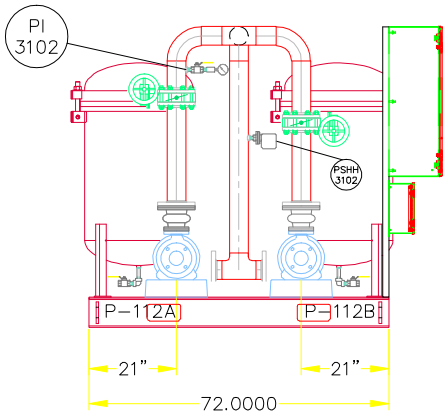

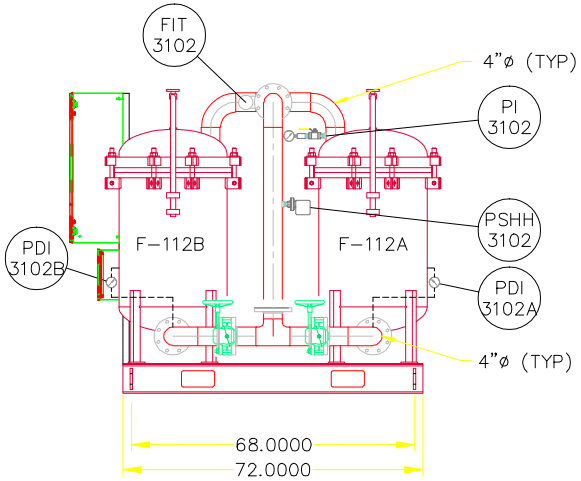

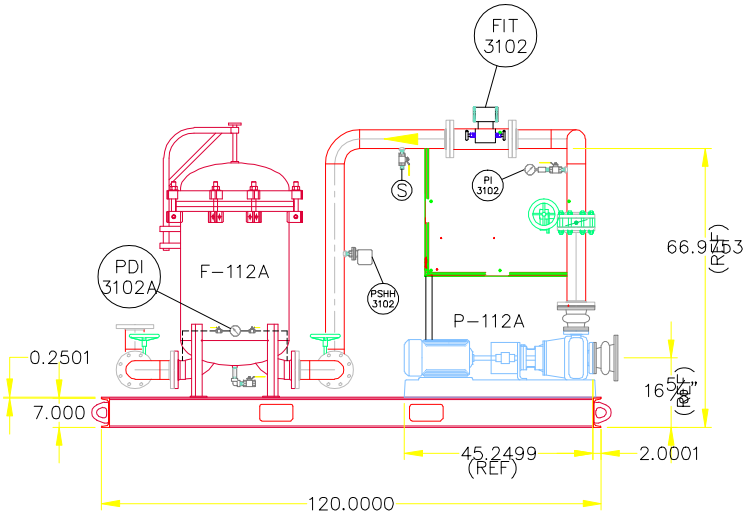

THIS DRAWING IS THE PROPERTY OF
Fliteway Technologies, Inc
2129 EAST BIRCHWOOD AVE
CUDAHY WI, 53110
414.483.5600 414.483.1957
AND IS NOT TO BE REPRODUCED
WITHOUT WRITTEN PERMISSION

6'X10' FEED PUMP SKID

CB&I WATER TREATMENT

3/19/15	SIZE	FSCM NO.	DWG NO. Q14508
	SCALE NONE		SHEET 1 OF 1

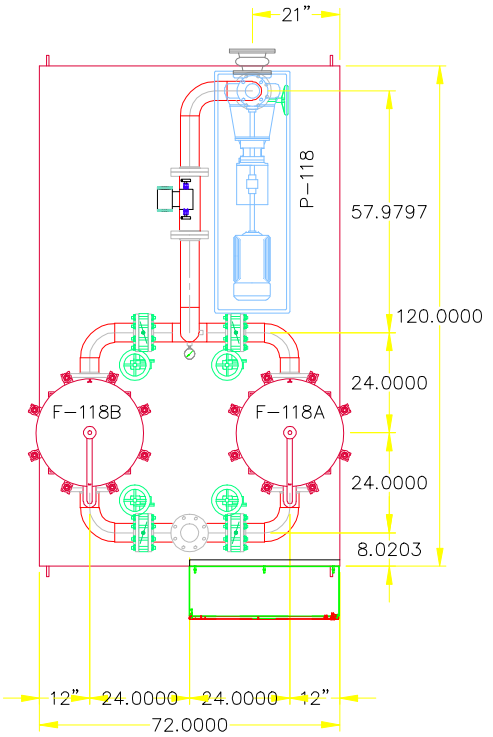

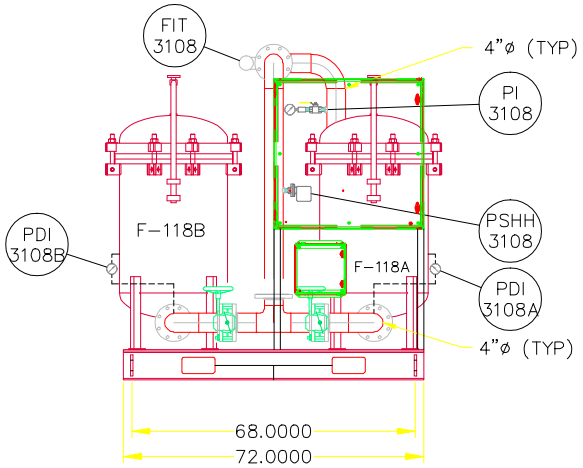

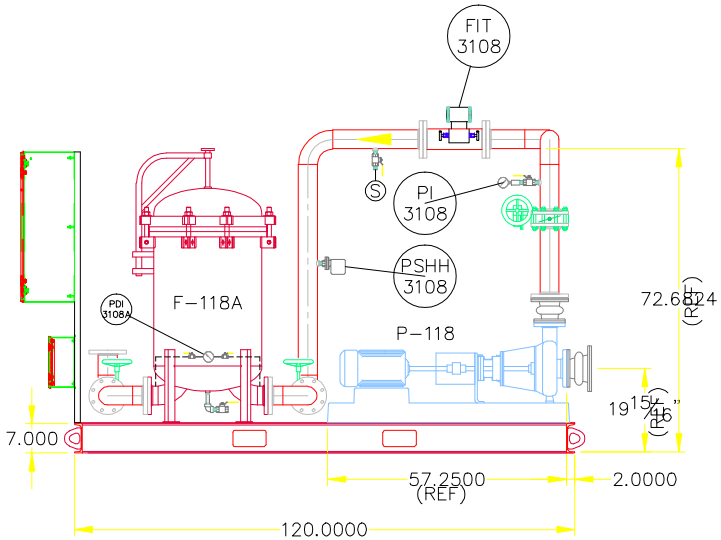

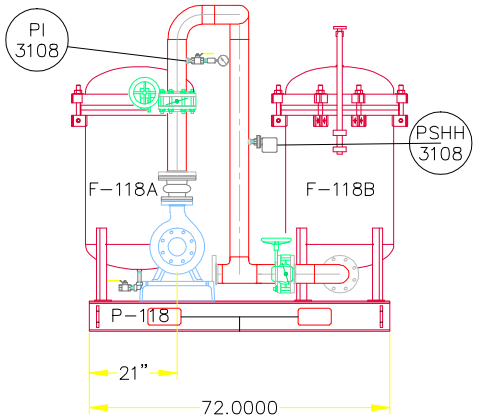

THIS DRAWING IS THE PROPERTY OF
Fliteway Technologies, Inc
2129 EAST BIRCHWOOD AVE
CUDAHY WI, 53110
414.483.5600 414.483.1957

AND IS NOT TO BE REPRODUCED
WITHOUT WRITTEN PERMISSION

3/19/15

6'X10' TREATED WATER PUMP SKID

CB&I WATER TREATMENT

SIZE	FSCM NO.	DWG NO.
		Q14508

SCALE NONE

SHEET 1 OF 1

FEED PUMP SKID

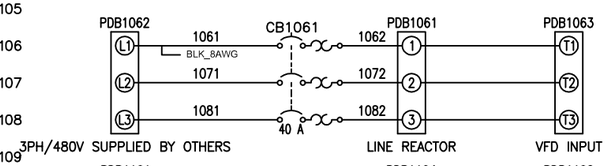

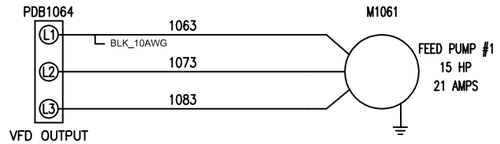

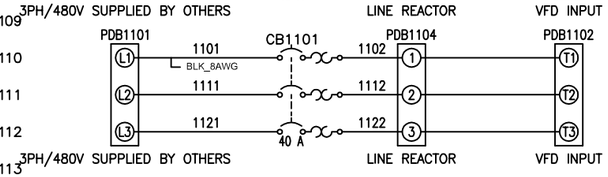

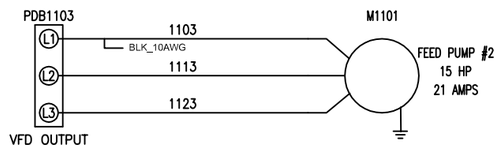

HIGH VOLTAGE PANEL

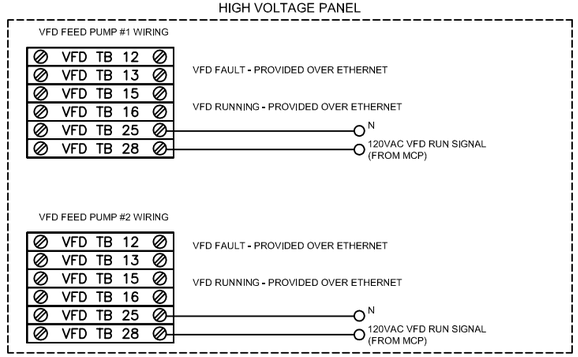

LOW VOLTAGE JUNCTION BOX

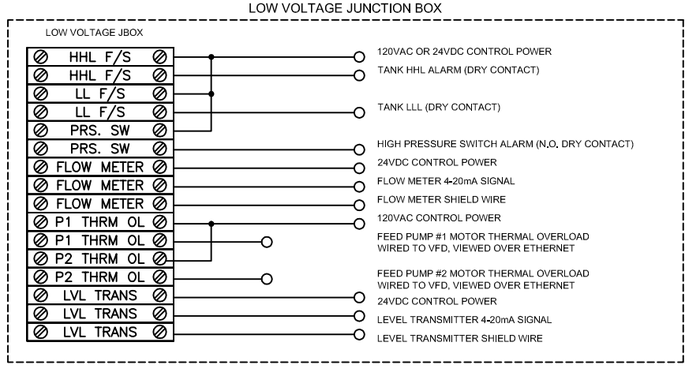

TREAT WATER PUMP SKID

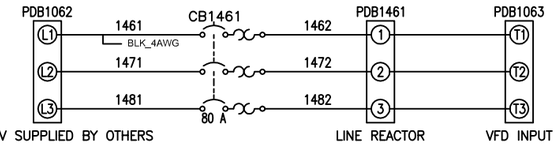

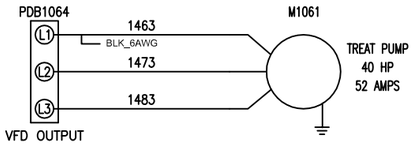

HIGH VOLTAGE PANEL

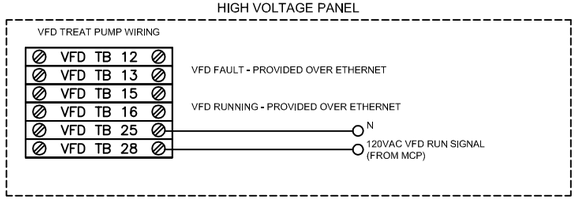

LOW VOLTAGE JUNCTION BOX

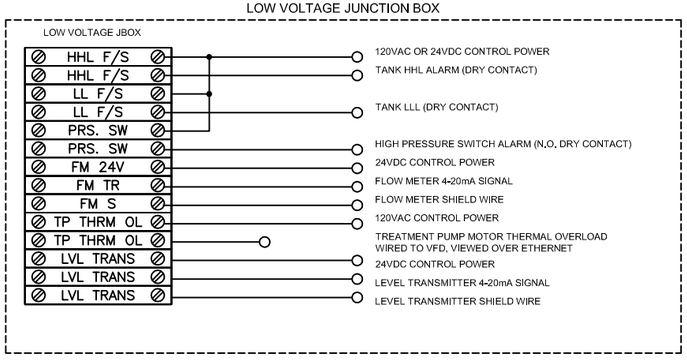

THIS PRINT AND ITS CONTENTS ARE THE PROPERTY OF FLITEWAY AND MUST NOT BE USED FOR ANY PURPOSE NOT AUTHORIZED BY FLITEWAY. DO NOT DISCLOSE, REPRODUCE OR OTHERWISE USE THIS PRINT OR ITS CONTENTS IN ANY MANNER DETRIMENTAL TO THE INTEREST OF FLITEWAY WITHOUT FLITEWAY'S PRIOR WRITTEN CONSENT. FLITEWAY RESERVES ALL RIGHTS OF DESIGN AND INVENTION TO THE EXTENT PERMITTED BY LAW.

CAD SYSTEM	UNITS
ACADE	IN
SCALE	FORMAT
1:1	D

Fliteway Technologies, Inc.
2129 East Birchwood Ave.
Cudahy, WI 53110

DRAWN BY	Q #	DESCRIPTION
Josh	Q14508	AS BUILT

DESIGNED FOR: CB&I Federal Services

Drawing Number

PLOTTED : 09-16-2015

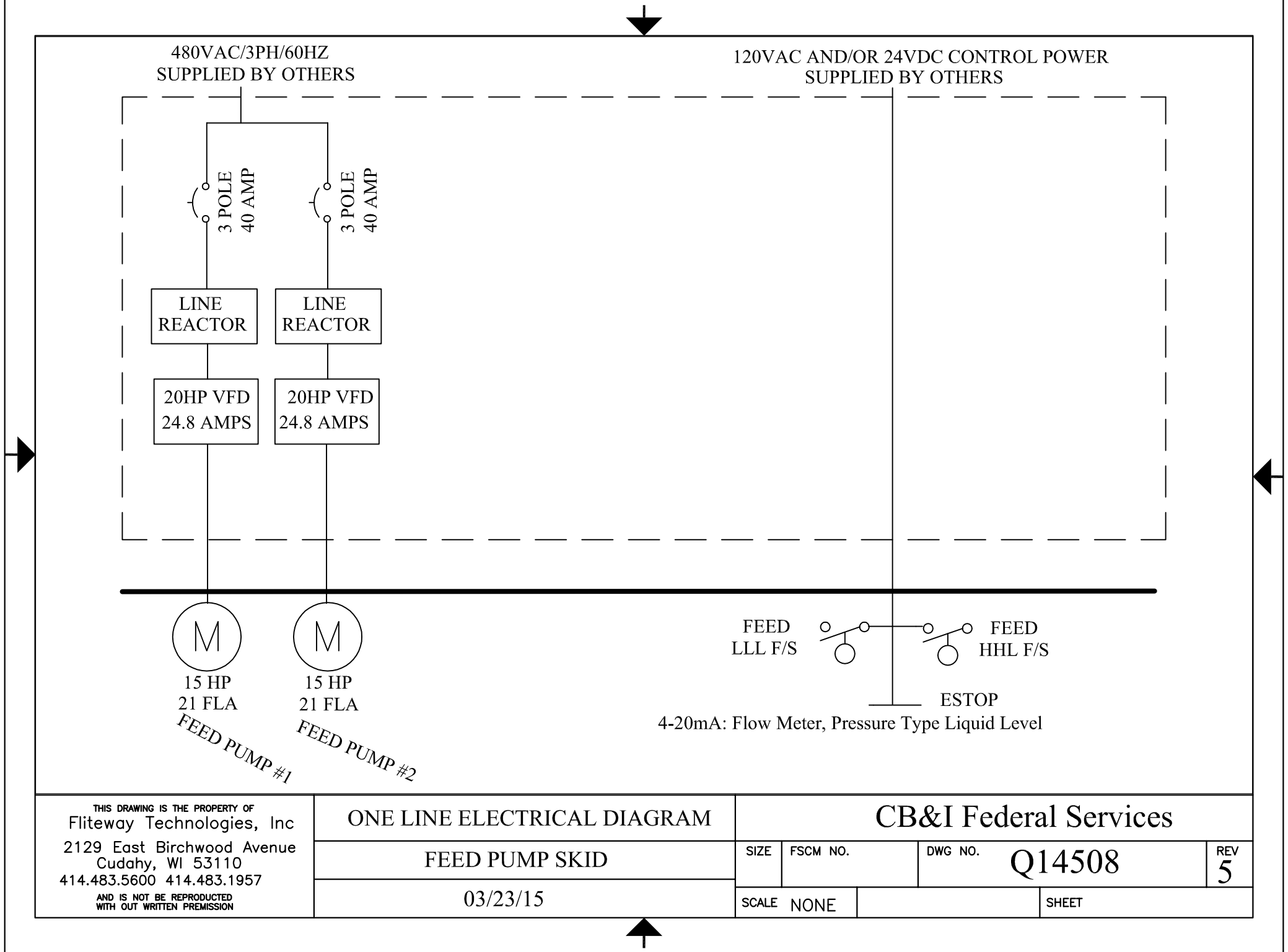

THIS DRAWING IS THE PROPERTY OF
Fliteway Technologies, Inc
2129 East Birchwood Avenue
Cudahy, WI 53110
414.483.5600 414.483.1957
AND IS NOT BE REPRODUCTED
WITH OUT WRITTEN PREMISSION

ONE LINE ELECTRICAL DIAGRAM

FEED PUMP SKID

03/23/15

CB&I Federal Services

SIZE	FSCM NO.	DWG NO.	REV
		Q14508	5

SCALE NONE

SHEET

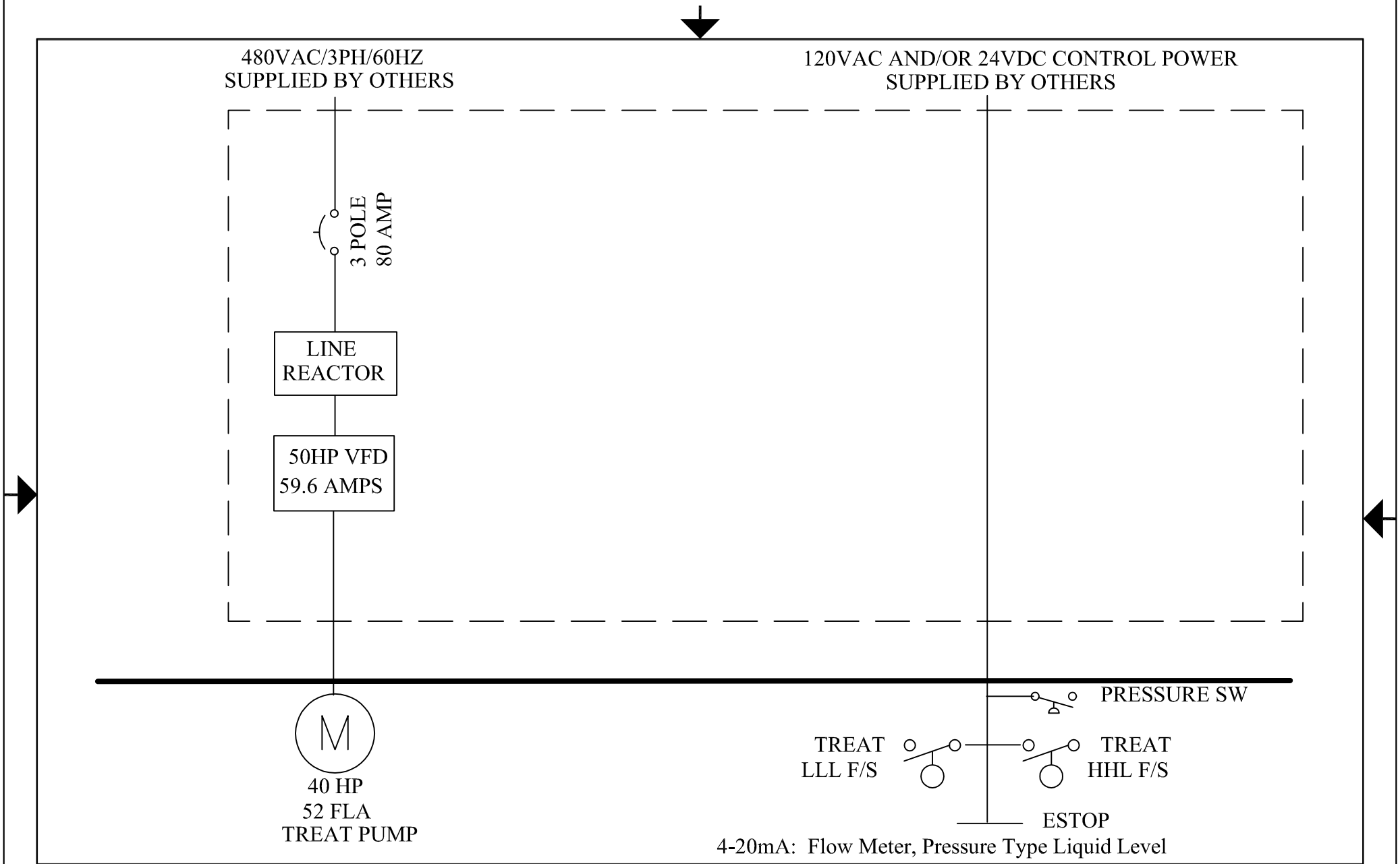

THIS DRAWING IS THE PROPERTY OF
Fliteway Technologies, Inc
2129 East Birchwood Avenue
Cudahy, WI 53110
414.483.5600 414.483.1957
AND IS NOT BE REPRODUCTED
WITH OUT WRITTEN PREMISSION

ONE LINE ELECTRICAL DIAGRAM

TREAT PUMP SKID

03/23/15

CB&I Federal Services

SIZE	FSCM NO.	DWG NO.	REV
		Q14508	5

SCALE NONE

SHEET

480VAC/3PH/60HZ
SUPPLIED BY OTHERS

120VAC CONTROL POWER
SUPPLIED BY OTHERS

SELF-PROTECTED
(TYPE E) MANUAL
COMBINATION
STARTER

M

20 HP
AIR COMPRESSOR
27 FLA

AUTO-DRAIN

SOLENOID

THIS DRAWING IS THE PROPERTY OF
Fliteway Technologies, Inc
2129 East Birchwood Avenue
Cudahy, WI 53110
414.483.5600 414.483.1957
AND IS NOT BE REPRODUCTED
WITH OUT WRITTEN PREMISSION

ONE LINE ELECTRICAL DIAGRAM

COMPRESSORSKID

03/23/15

CB&I Federal Services

SIZE	FSCM NO.	DWG NO.	REV
		Q14508	5

SCALE NONE

SHEET

Fliteway Technologies, Inc.

Test Data

2129 East Birchwood Ave. Cudahy, WI 53110

(414) 483-5600 1-800-236-3580 FAX (414) 483-1957

VFd tested OK

Pressure tested @ 15 PSI no Leaks SJH

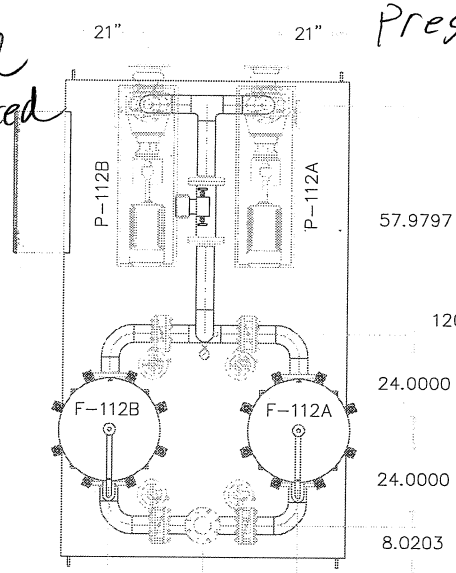

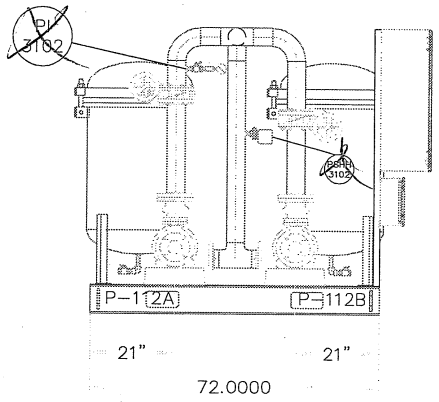

MOTOR Rotation needs to Be Checked Before couplers are Installed.

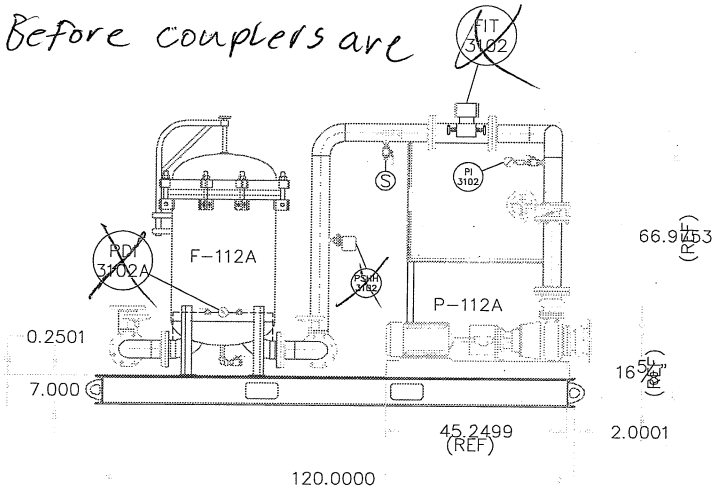

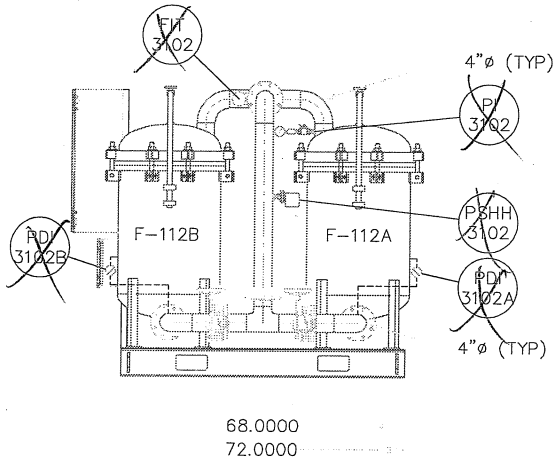

tested By: Sean Higgins
01 July 15

THIS DRAWING IS THE PROPERTY OF
Fliteway Technologies, Inc
2129 EAST BIRCHWOOD AVE
CUDAHY WI, 53110
414.483.5600 414.483.1957
AND IS NOT TO BE REPRODUCED WITHOUT WRITTEN PERMISSION

3/19/15	6'X10' FEED PUMP SKID
	CB&I WATER TREATMENT
SIZE	FSCM NO. DWG NO. Q14508
SCALE NONE	SHEET 1 OF 1

Pressure tested @ 15PSI no Leaks SJH

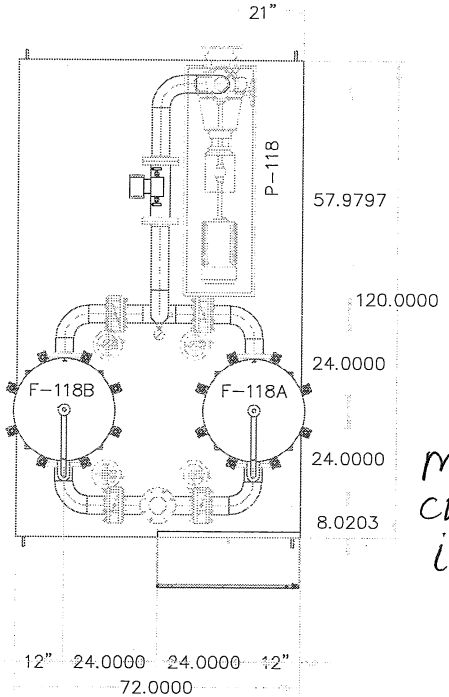

VFD tested OK

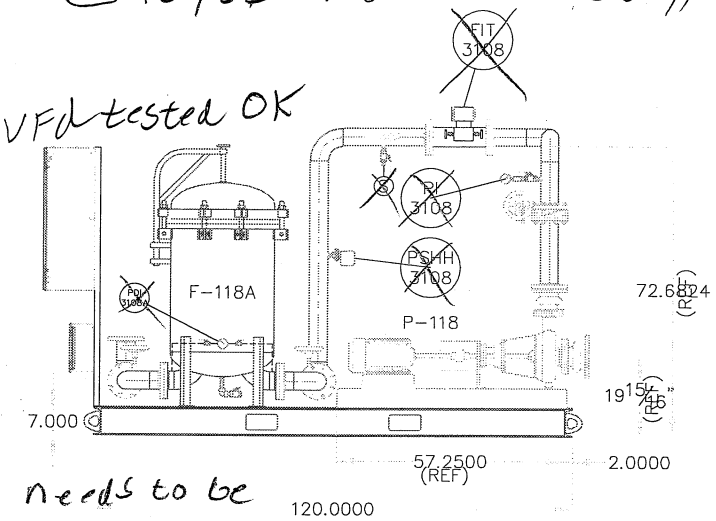

Motor rotation needs to be checked Before couplers are installed

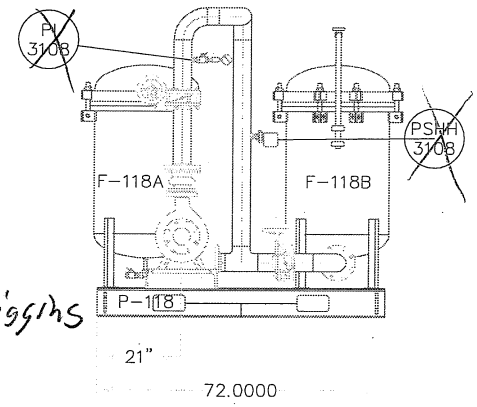

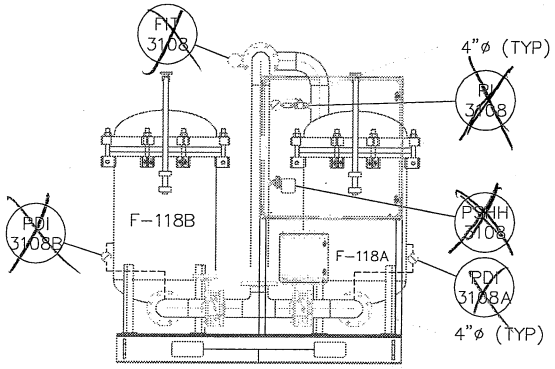

tested By: Sean Higgins
01 July 15

THIS DRAWING IS THE PROPERTY OF
Fliteway Technologies, Inc
2129 EAST BIRCHWOOD AVE
CUDAHY WI, 53110
414.483.5600 414.483.1957
AND IS NOT TO BE REPRODUCED WITHOUT WRITTEN PERMISSION

3/19/15

6'X10' TREATED WATER PUMP SKID

CB&I WATER TREATMENT

SIZE	FSCM NO.	DWG NO.
		Q14508

SCALE NONE

SHEET 1 OF 1

Fliteway Technologies, Inc.

Groundwater Treatment Feed Tank

2129 East Birchwood Ave. Cudahy, WI 53110

(414) 483-5600 1-800-236-3580 FAX (414) 483-1957

6000 GAL. WATER STORAGE TANKS (T-110 & T-116)
(10.17'DIA. x 11'HGT.) AWWA-D100-11
FOR
EDB INTERIM MEASURE
KIRTLAND, AFB

TANK - DRAWING LOG						
INDEX	DWG #	CUST DWG #	DESCRIPTION	REVISION #	STATUS	DATE
1	CS01		COVER SHEET	2	P	04/14/2015
2	E01		GENERAL ARRANGEMENT	1	P	03/23/2015
3	E02		TANK ORIENTATION	2	P	04/14/2015
4	E03		SHELL LAYOUT	2	P	04/14/2015
5	E04		X-RAY MAP	1	P	03/23/2015
6	E05		SHELL WELD MAP	1	P	03/23/2015
7	E06		BOTTM WELD MAP	1	P	03/23/2015
8	E07		ROOF WELD MAP	1	P	03/23/2015
9	E08		DIESEL TEST VACUUM	1	P	03/23/2015
10	E09		WELD MAP	2	P	04/14/2015
11	BL01		BOTTOM LAYOUT	1	P	03/23/2015
12	BL02		BOTTOM PLATE	1	P	03/23/2015
13	RL01		ROOF LAYOUT	1	P	03/23/2015
14	RL02		ROOF PLATE DETAILS	1	P	03/23/2015
15	TM01		TOP MEMBER	1	P	03/23/2015
16	PL01		SHELL COURSE PLATES	1	P	03/23/2015
17	SM01	I	24" SHELL MANWAY	1	P	03/23/2015
18	SN01	E	6" DISCHARGE NOZZLE	2	P	04/14/2015
19	SN02	G	4" LEVEL NOZZLE	2	P	04/14/2015
20	SN03	F	2" DRAIN NOZZLE	2	P	04/14/2015
21	SN04	H	4" LEVEL NOZZLE	2	P	04/14/2015
22	SN05	J	2" LEVEL NOZZLE	2	P	04/14/2015
23	SN06	K	4" SPARE NOZZLE	2	P	04/14/2015
24	SN07	L	4" SPARE NOZZLE	2	P	04/14/2015
25	SN08	M	6" SPARE NOZZLE	2	P	04/14/2015
26	RN01	A	6" FILL NOZZLE	2	P	04/14/2015
27	RN02	B	6" FILL NOZZLE	2	P	04/14/2015
28	RN03	C	6" VENT NOZZLE	2	P	04/14/2015
29	RN04	D	6" SPARE NOZZLE	2	P	04/14/2015
30	LL01		LIFTING LUGS	1	P	03/23/2015
31	NP01		NAMEPLATE & G. LUGS	1	P	03/23/2015

STATUS CODE	
STATUS	DESCRIPTION
P	PRELIMINARY
A	APPROVED
REF	REFERENCE ONLY
R	RESENT TO CUSTOMER
D	DONE

REV.	BY	DATE	DESCRIPTION
2	MEM	04/14/2015	REVISE FLANGE FACE
1	EJ	03/23/2015	UPDATED TANK -- DRAWING LOG REVISED TITLE BLOCK
0	EJ	02/16/2015	INITIAL ISSUE

BMT ACQUISITION, LLC
ENGINEERS - FABRICATORS - CONSTRUCTORS

8301 BROADWAY BLVD SE
ALBUQUERQUE, NM 87105-7453
PHONE: 505-563-4800
FAX: 505-563-4799
http://www.bmt-tank.com

T-110
&
T-116

COVER SHEET
6,000 GAL. WATER STORAGE TANKS
(10.17'DIA. X 11'HGT.) AWWA-D100-11

CUSTOMER:
FLITEWAY TECH., INC

PROJECT:
EDB INTERIM MEASURE

DRAWN:	JOB No.:
EJ	30883
CHECKED: GAV	
DATE: 02/16/2015	SHEET No.: CS01
REVISION: 2	

DESIGN PARAMETERS

GOVERNING STANDARD:	AWWA-D-100	INTERNAL PRESSURE:	0 PSI	MIN. DESIGN METAL TEMP.:	25 °F	C.A. SHELL:	0 IN
EDITION:	11TH EDITION	EXTERNAL PRESSURE:	0 PSI	JOINT EFFICIENCY:	0.85	C.A. BOTTOM:	0 IN
APPENDIX(ICS):		SPECIFIC GRAVITY:	1.0	BOTTOM SEAMS:	LWTSO	C.A. ROOF:	0 IN
CAPACITY TO TOP OF SHELL:	6679 GALLONS	WIND:	E= C I= 1.15 V= 100 MPH	FIXED ROOF SEAMS:	LWTSO	C.A. STRUCTURE:	0 IN
DESIGN LIQUID LEVEL:	10.08 FT	SEISMIC:	SUG= 3 SC= D TL= 6.0 Ss= 0.47 S1= 0.14	FLOATING ROOF SEAMS:	--		
MAX OPERATING TEMPERATURE:	100 °F	ALLOWABLE STRESS:	15,000 PSI	SHELL SEAMS	DBW		

RADIOGRAPH:	SPOT PER CODE		
ANCHORAGE:	NONE		
WINDGIRDER:	NONE		
WORKING CAPACITY:	6123 GALLONS		
DESIGN BY: GAV	DATE 02/16/2015		
CHECK BY: GAV	DATE		

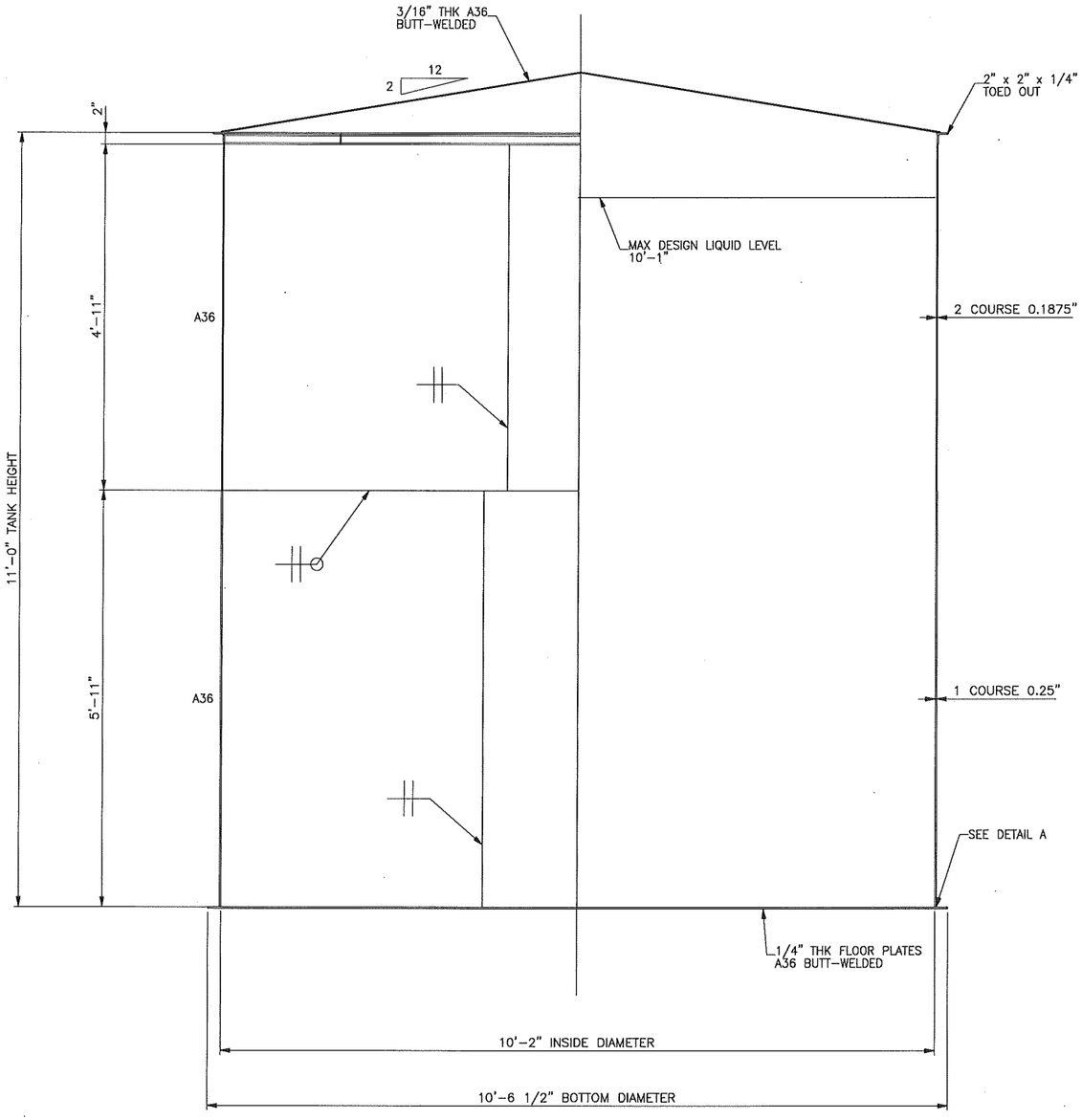

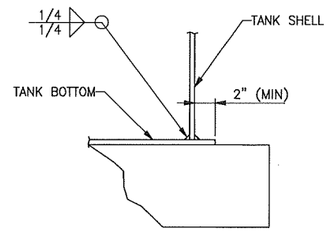

DETAIL A

REV.	BY	DATE	DESCRIPTION
1	EJ	03/23/2015	REVISED TITLE BLOCK
0	EJ	02/16/2015	INITIAL ISSUE

BMT ACQUISITION, LLC
ENGINEERS – FABRICATORS – CONSTRUCTORS

8301 BROADWAY BLVD SE
ALBUQUERQUE, NM 87105-7453
PHONE: 505-563-4800
FAX: 505-563-4799
http://www.bmt-tank.com

T-110
&
T-116

GENERAL ARRANGEMENT
6,000 GAL. WATER STORAGE TANKS
(10.17'DIA. X 11'HGT.) AWWA-D100-11

CUSTOMER: FLITEWAY TECH., INC

PROJECT: EDB INTERIM MEASURE

DRAWN: EJ	JOB No.: 30883
CHECKED: GAV	
DATE: 02/16/2015	SHEET No.: E01
REVISION: 1	

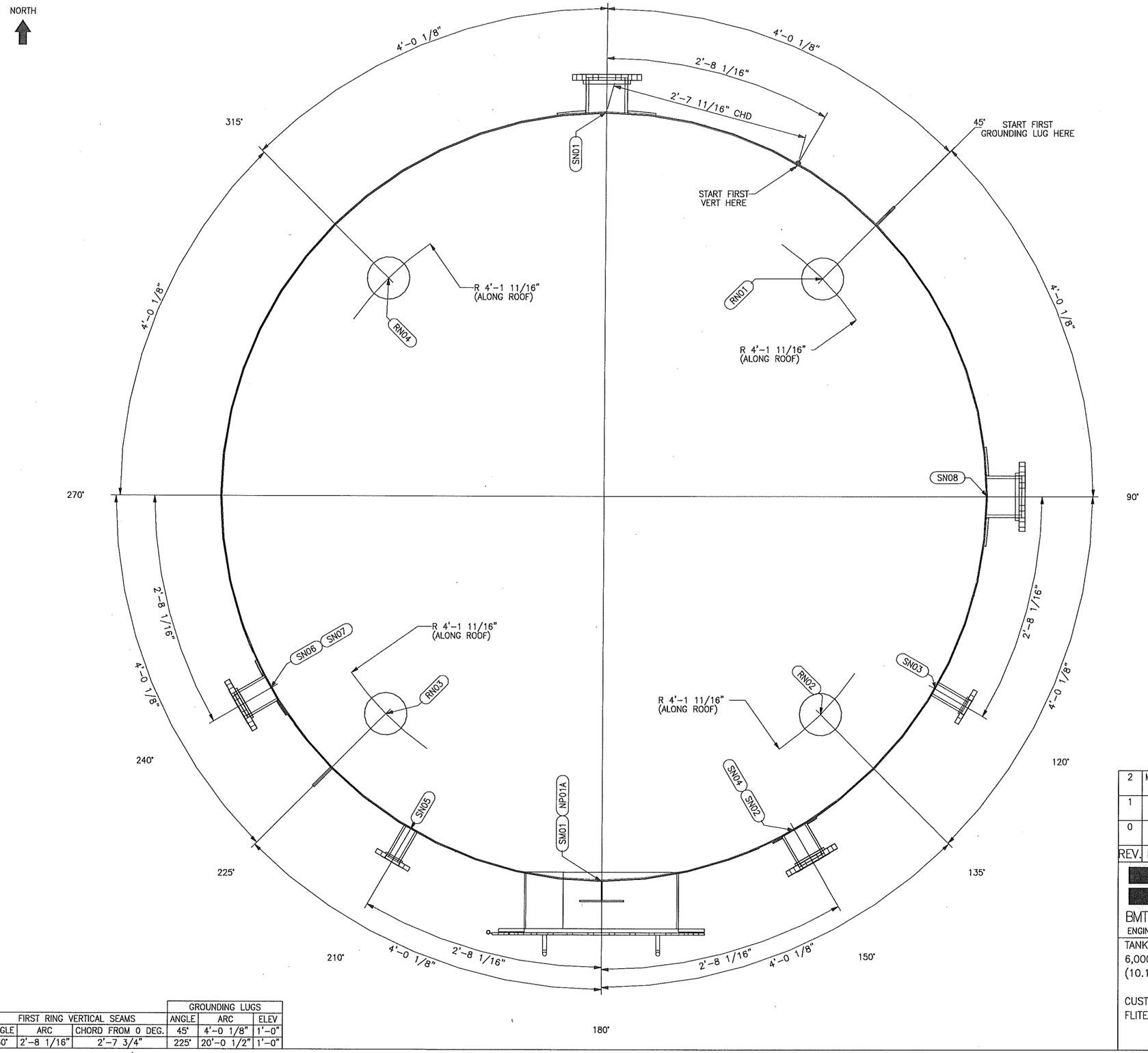

PLAN VIEW APPURTENANCE								
MARK	CUST. MARK	DESCRIPTION	OUTSIDE PROJ	INSIDE PROJ	ORIENT	RADIUS	REMARKS	REF DWG
RN01	A	6" FILL NOZZLE	6"	0"	45°	4'-1"		RN01
RN02	B	6" FILL NOZZLE	6"	0"	135°	4'-1"		RN02
RN03	C	6" VENT NOZZLE	6"	0"	225°	4'-1"		RN03
RN04	D	6" SPARE NOZZLE	6"	0"	315°	4'-1"		RN04

NOTE 1: RADIUS SHOWN IS HORIZONTAL

ELEVATION VIEW APPURTENANCE								
MARK	CUST. MARK	DESCRIPTION	OUTSIDE PROJ	INSIDE PROJ	ORIENT	ELEVATION	REMARKS	REF DWG
NP01A		NAME PLATE	---	---	180°	4'-0"		NP01
NP01B		GROUNDING LUGS	4"	0"	SEE TABLE	1'-0"		NP01
PS01		LIFTING LUG	---	---	120°	10'-6 3/4"		ERROR
PS02		LIFTING LUG	---	---	300°	10'-6 3/4"		ERROR
SM01	I	24" SHELL MANWAY	8"	0"	180°	1'-6"	W/ HINGE	SM01
SN01	E	6" DISCHARGE NOZZLE	6"	0"	0°	1'-0"		SN01
SN02	G	4" LEVEL NOZZLE	6"	0"	150°	8'-4"		SN02
SN03	F	2" DRAIN NOZZLE	6"	0"	120°	6"		SN03
SN04	H	4" LEVEL NOZZLE	6"	0"	150°	2'-1"		SN04
SN05	J	2" LEVEL NOZZLE	6"	0"	210°	2'-1"		SN05
SN06	K	4" SPARE NOZZLE	6"	0"	240°	8'-4"		SN06
SN07	L	4" SPARE NOZZLE	6"	0"	240°	2'-1"		SN07
SN08	M	6" SPARE NOZZLE	6"	0"	90°	1'-0"		SN08

NOTE 2: ELEVATIONS SHOWN FROM TOP OF TANK BOTTOM AT THE LOCATION OF THE APPURTENANCE.

NOTE 3: ARC DIMENSIONS CALCULATED ON THE OUTSIDE OF THE FIRST SHELL COURSE.

NOTE 4: CHORD DIMENSIONS CALCULATED ON OUTSIDE OF THE FIRST SHELL COURSE.

FIRST RING VERTICAL SEAMS			GROUNDING LUGS		
ANGLE	ARC	CHORD FROM 0 DEG.	ANGLE	ARC	ELEV
30°	2'-8 1/16"	2'-7 3/4"	45°	4'-0 1/8"	1'-0"
			225°	20'-0 1/2"	1'-0"

REV.	BY	DATE	DESCRIPTION
2	MEM	04/14/2015	REVISE NOZZLE ORIENTATION
1	EJ	02/16/2015	
0	EJ	02/16/2015	INITIAL ISSUE

BMT ACQUISITION, LLC
ENGINEERS – FABRICATORS – CONSTRUCTORS
8301 BROADWAY BLVD SE
ALBUQUERQUE, NM 87105-7453
PHONE: 505-563-4800
FAX: 505-563-4799
http://www.bmt-tank.com

T-110 & T-116

TANK ORIENTATION
6,000 GAL. WATER STORAGE TANKS
(10.17'DIA. X 11'HGT.) AWWA-D100-11

CUSTOMER: FLITEWAY TECH., INC

PROJECT: EDB INTERIM MEASURE

DRAWN: EJ
CHECKED: GAV
DATE: 02/16/2015
REVISION: 2

JOB No.: 30883

SHEET No.: E02

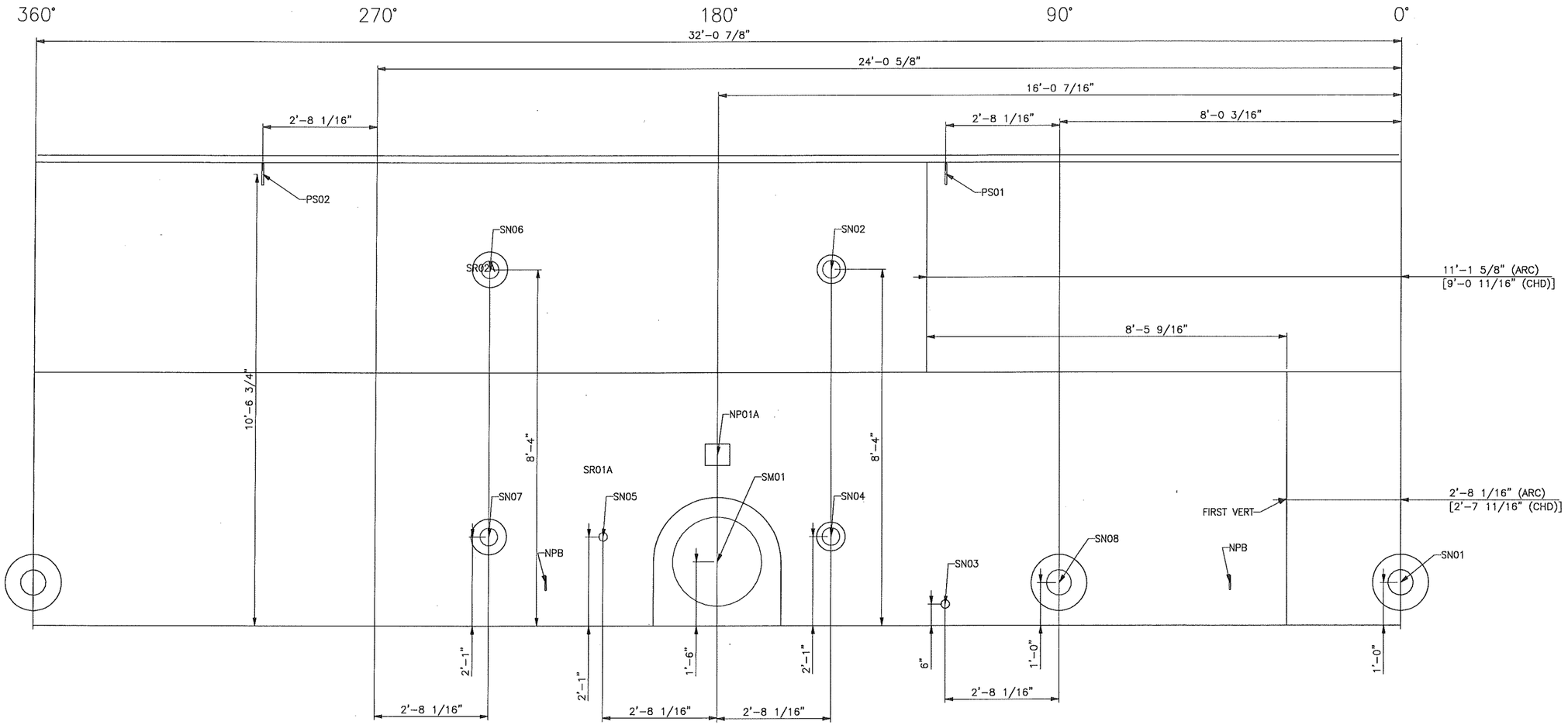

GROUNDING LUGS		
ANGLE	ARC	ELEV
45°	4'-0 1/8"	1'-0"
225°	20'-0 1/2"	1'-0"

ELEVATION VIEW APPURTENANCE

MARK	CUST. MARK	DESCRIPTION	OUTSIDE PROJ	INSIDE PROJ	ORIENT	ELEVATION	REMARKS	REF DWG
NP01A		NAME PLATE	--	--	180°	4'-0"		NP01
NP01B		GROUNDING LUGS	4"	0"	SEE TABLE	1'-0"		NP01
PS01		LIFTING LUG	--	--	120°	10'-6 3/4"		ERROR
PS02		LIFTING LUG	--	--	300°	10'-6 3/4"		ERROR
SM01	I	24" SHELL MANWAY	8"	0"	180°	1'-6"	W/ HINGE	SM01
SN01	E	6" DISCHARGE NOZZLE	6"	0"	0°	1'-0"		SN01
SN02	G	4" LEVEL NOZZLE	6"	0"	150°	8'-4"		SN02
SN03	F	2" DRAIN NOZZLE	6"	0"	120°	6"		SN03
SN04	H	4" LEVEL NOZZLE	6"	0"	150°	2'-1"		SN04
SN05	J	2" LEVEL NOZZLE	6"	0"	210°	2'-1"		SN05
SN06	K	4" SPARE NOZZLE	6"	0"	240°	8'-4"		SN06
SN07	L	4" SPARE NOZZLE	6"	0"	240°	2'-1"		SN07
SN08	M	6" SPARE NOZZLE	6"	0"	90°	1'-0"		SN08

NOTE 1: SHELL PLATE IS TO BE STACKED FLUSH INSIDE.
NOTE 2: ELEVATIONS SHOWN FROM TOP OF TANK BOTTOM AT THE LOCATION OF THE APPURTENANCE.
NOTE 3: ARC DIMENSIONS CALCULATED ON THE OUTSIDE OF THE FIRST SHELL RING.

REV.	BY	DATE	DESCRIPTION
2	MEM	04/14/2015	REVISED NOZZLE ORIENTATINO AND SHELL VERT
1	EJ	03/23/2015	RELOCATED ALL NOZZLES REVISED B.O.M. & TITLE BLOCK
0	EJ	02/16/2015	INITIAL ISSUE

BMT ACQUISITION, LLC
ENGINEERS – FABRICATORS – CONSTRUCTORS
8301 BROADWAY BLVD SE
ALBUQUERQUE, NM 87105-7453
PHONE: 505-563-4800
FAX: 505-563-4799
http://www.bmt-tank.com

T-110
&
T-116

SHELL LAYOUT
VIEWED FROM OUTSIDE
6,000 GAL. WATER STORAGE TANKS
(10.17'DIA. X 11'HGT.) AWWA-D100-11
CUSTOMER: FLITEWAY TECH., INC
PROJECT: EDB INTERIM MEASURE

DRAWN:	JOB No.:
EJ	30883
CHECKED: GAV	
DATE: 02/16/2015	SHEET No.: E03
REVISION: 2	

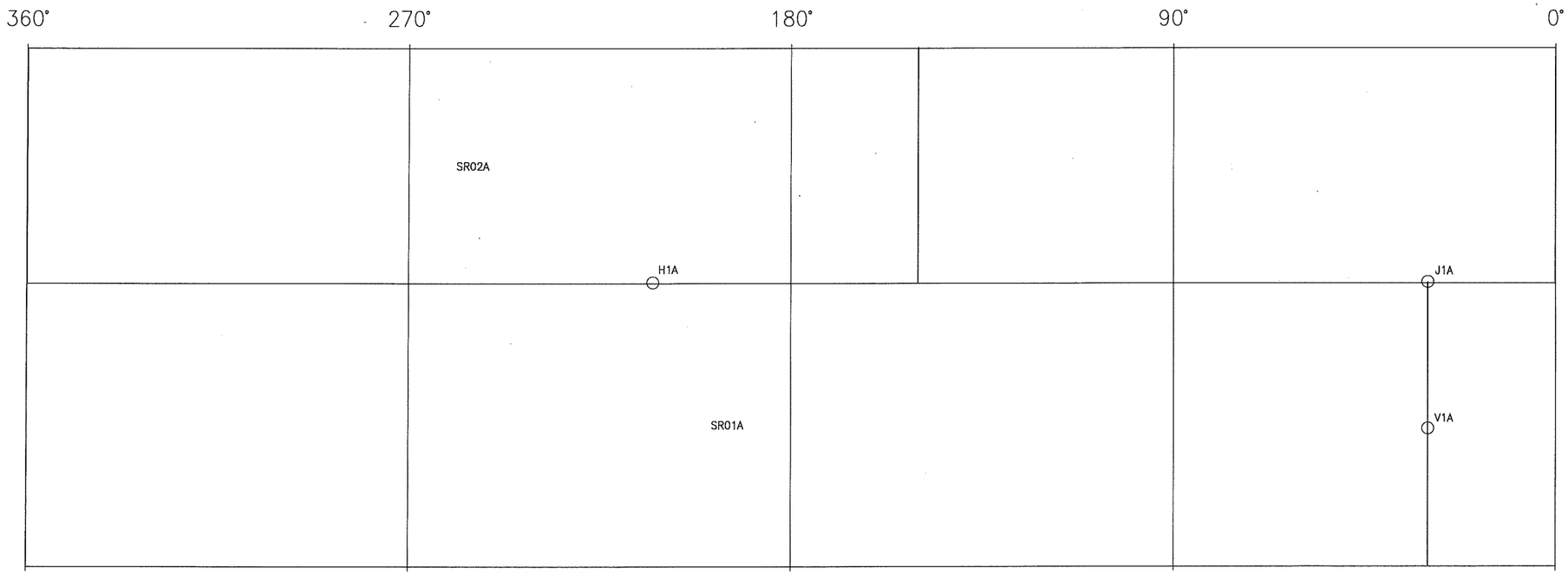

PLATE DIMENSIONS		
PLATE MARK	ARC LENGTH	CHORD LENGTH
SR01A	384 3/4"	1/8"
SR02A	384 1/2"	1/8"

NOTE 1: ARC LENGTHS ARE VERT TO VERT AT OUTSIDE OF SHELL.
NOTE 2: CHORD LENGTHS ARE VERT TO VERT AT OUTSIDE OF SHELL.

X-RAY LIST			
WELDER'S NUMBER/NAME	WELDER'S NUMBER/NAME	WELDER'S NUMBER/NAME	WELDER'S NUMBER/NAME

NOTE 1: MANDATORY X-RAYS PER API 650 ARE SHOWN.
NOTE 2: VERTICAL JOINTS REQUIRE AN X-RAY IN THE FIRST 10'-0" FOR EACH WELDER FOR EACH THICKNESS AND, WITHOUT REGARD TO THE NUMBER OF WELDERS, EACH ADDITIONAL 100'-0" OR MAJOR FRACTION OF 100'-0" OF THE SAME THICKNESS.
NOTE 3: HORIZONTAL JOINTS REQUIRE AN X-RAY IN THE FIRST 10'-0" AND ONE X-RAY FOR EACH 200'-0" OR MAJOR FRACTION OF 200'-0" FOR EACH THICKNESS WITHOUT REGARD TO THE NUMBER OF WELDERS.

WELD MARK LEGEND	
MARK	DESCRIPTION
○	X-RAY LOCATION
⊠	X-RAY ACCEPTABLE
●	X-RAY UNACCEPTABLE
● ○	X-RAY REPAIR
● ⊠	REPAIR ACCEPTABLE
+	TRACER LOCATION
✳	TRACER ACCEPTABLE

REV.	BY	DATE	DESCRIPTION
1	EJ	03/23/2015	REVISED TITLE BLOCK
0	EJ	02/16/2015	INITIAL ISSUE

BMT ACQUISITION, LLC
ENGINEERS – FABRICATORS – CONSTRUCTORS
8301 BROADWAY BLVD SE
ALBUQUERQUE, NM 87105-7453
PHONE: 505-563-4800
FAX: 505-563-4799
http://www.bmt-tank.com

T-110
&
T-116

X-RAY MAP
VIEWED FROM OUTSIDE
6,000 GAL. WATER STORAGE TANKS
(10.17'DIA. X 11'HGT.) AWWA-D100-11
CUSTOMER: FLITEWAY TECH., INC
PROJECT: EDB INTERIM MEASURE

DRAWN:	JOB No.:
EJ	30883
CHECKED: GAV	
DATE: 02/16/2015	SHEET No.: E04
REVISION: 1	

SEAM	WELDER		REMARKS	SEAM	WELDER		REMARKS
	INSIDE	OUTSIDE			INSIDE	OUTSIDE	
1H1				1V1			
2H1				2V1			

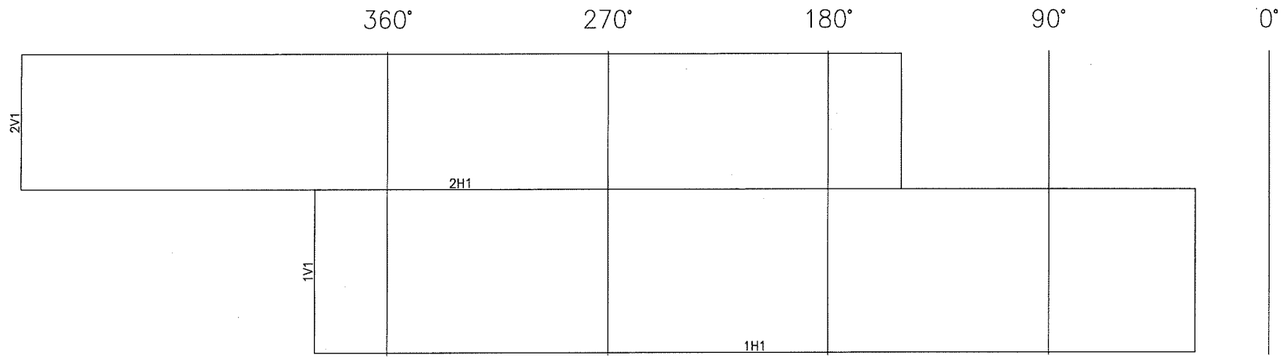

POSITION OF WELD
(H– HORIZONTAL)
(V– VERTICAL)

SHELL RING NUMBER → 3 V 12 ← CONSECUTIVE NUMBER TO REPRESENT WELD SEAM FOR THAT SPECIFIC RING AND POSITION.

SEAM IDENTIFICATION KEY

LOOKING FROM OUTSIDE TO INSIDE

CODE:_____ NOMINAL DIAMETER: 10'–2"

NOMINAL HEIGHT: 11'–0"

FIELD FOREMAN:_____

WELDER:_____ WELDER:_____

WELDER:_____ WELDER:_____

WELDER:_____ WELDER:_____

DATE:_____

REV.	BY	DATE	DESCRIPTION
1	EJ	03/23/2015	REVISED TITLE BLOCK
0	EJ	02/16/2015	INITIAL ISSUE

BMT ACQUISITION, LLC
ENGINEERS – FABRICATORS – CONSTRUCTORS

8301 BROADWAY BLVD SE
ALBUQUERQUE, NM 87105–7453
PHONE: 505–563–4800
FAX: 505–563–4799
http://www.bmt–tank.com

T–110
&
T–116

SHELL WELD MAP
ROLL–OUT
6,000 GAL. WATER STORAGE TANKS
(10.17'DIA. X 11'HGT.) AWWA–D100–11
CUSTOMER: FLITEWAY TECH., INC
PROJECT: EDB INTERIM MEASURE

DRAWN:	JOB No.:
EJ	30883
CHECKED: GAV	
DATE: 02/16/2015	SHEET No.: E05
REVISION: 1	

SEAM	WELDER	REMARKS
HS1		

WELDER INFORMATION	
FULL NAME	INITIALS

MARK LOCATIONS	
LEAK	○
REPAIRED	⊠
RETESTED	⊠

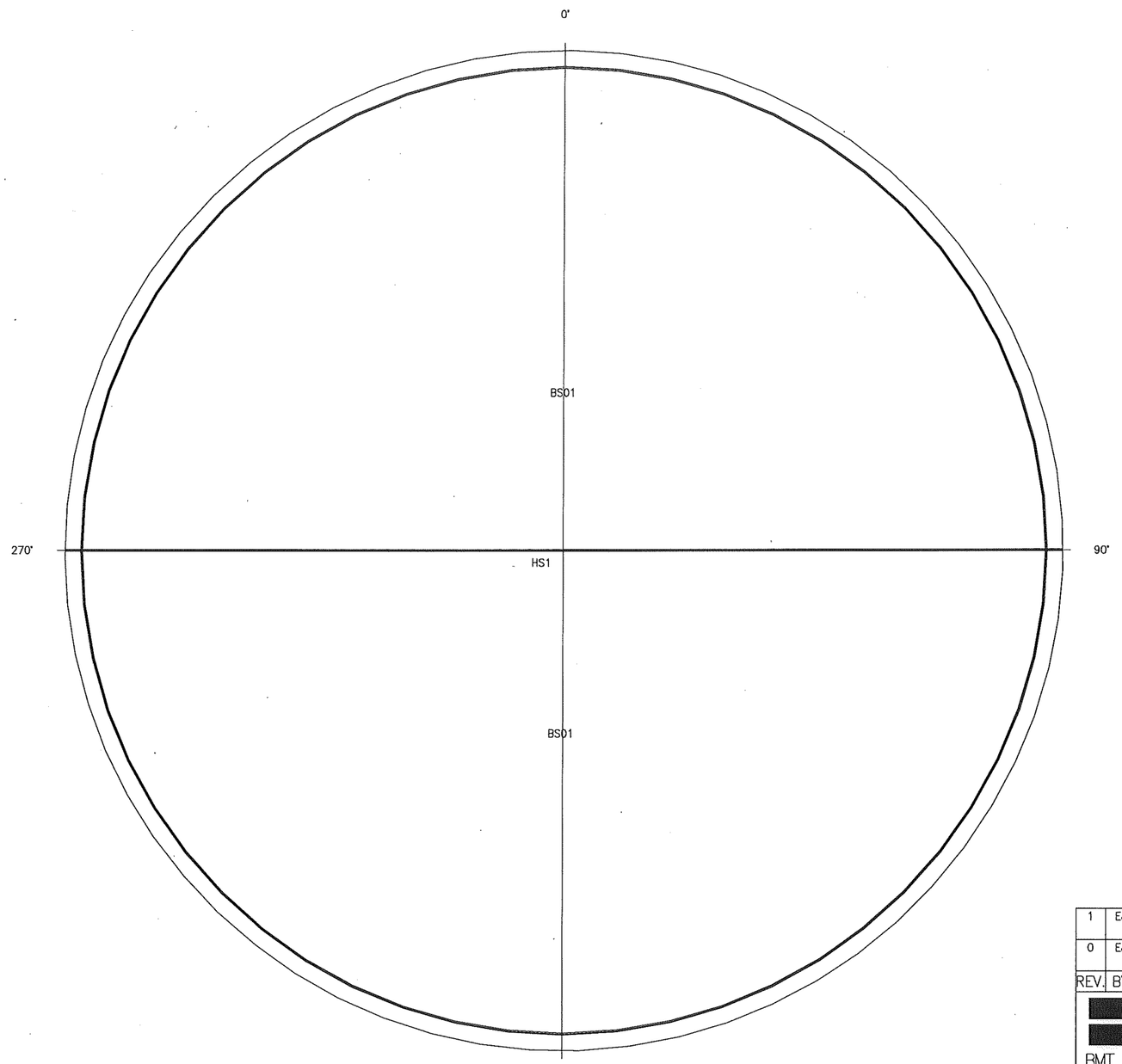

PLAN VIEW

POSITION OF WELD
(H– HORIZONTAL)
(V– VERTICAL)

H 12 ← CONSECUTIVE NUMBER TO REPRESENT LINEAR WELD FOR THAT SPECIFIC BOTTOM PLATES AND POSITION

SEAM IDENTIFICATION KEY

REV.	BY	DATE	DESCRIPTION
1	EJ	03/23/2015	CHANGED BOTTOM PLATE ORIENTATION REVISED TITLE BLOCK
0	EJ	02/16/2015	INITIAL ISSUE

BMT ACQUISITION, LLC
ENGINEERS – FABRICATORS – CONSTRUCTORS

8301 BROADWAY BLVD SE
ALBUQUERQUE, NM 87105-7453
PHONE: 505-563-4800
FAX: 505-563-4799
http://www.bmt-tank.com

T-110
&
T-116

BOTTOM WELD MAP
6,000 GAL. WATER STORAGE TANKS
(10.17'DIA. X 11'HGT.) AWWA-D100-11

CUSTOMER:
FLITEWAY TECH., INC

PROJECT:
EDB INTERIM MEASURE

DRAWN:	JOB No.:
EJ	30883
CHECKED: GAV	
DATE: 02/16/2015	SHEET No.:
REVISION: 1	E06

SEAM	WELDER	REMARKS
VS1		

WELDER INFORMATION	
FULL NAME	INITIALS

MARK LOCATIONS	
LEAK	○
REPAIRED	⊠
RETESTED	⊠

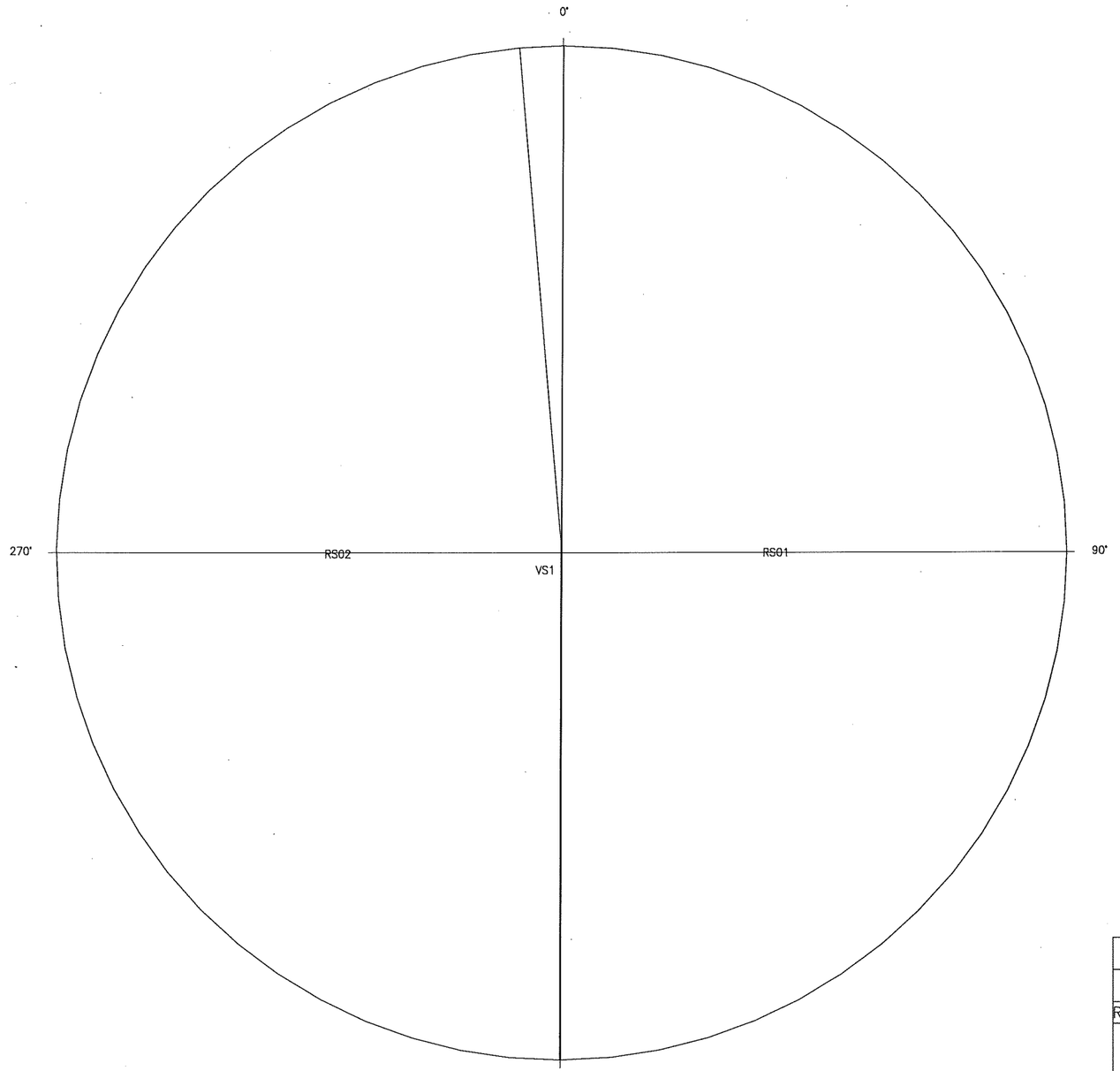

PLAN VIEW

POSITION OF WELD
(H– HORIZONTAL)
(V– VERTICAL)

V 12 ← CONSECUTIVE NUMBER TO REPRESENT LINEAR WELD FOR THAT SPECIFIC BOTTOM PLATES AND POSITION

SEAM IDENTIFICATION KEY

REV.	BY	DATE	DESCRIPTION
1	EJ	03/23/2015	REVISED TITLE BLOCK
0	EJ	02/16/2015	INITIAL ISSUE

BMT ACQUISITION, LLC
ENGINEERS – FABRICATORS – CONSTRUCTORS

8301 BROADWAY BLVD SE
ALBUQUERQUE, NM 87105–7453
PHONE: 505–563–4800
FAX: 505–563–4799
http://www.bmt-tank.com

T–110
&
T–116

ROOF WELD MAP
6,000 GAL. WATER STORAGE TANKS
(10.17'DIA. X 11'HGT.) AWWA–D100–11

CUSTOMER:
FLITEWAY TECH., INC

PROJECT:
EDB INTERIM MEASURE

DRAWN:	JOB No.:
EJ	30883
CHECKED: GAV	
DATE: 02/16/2015	SHEET No.: E07
REVISION: 1	

NORTH

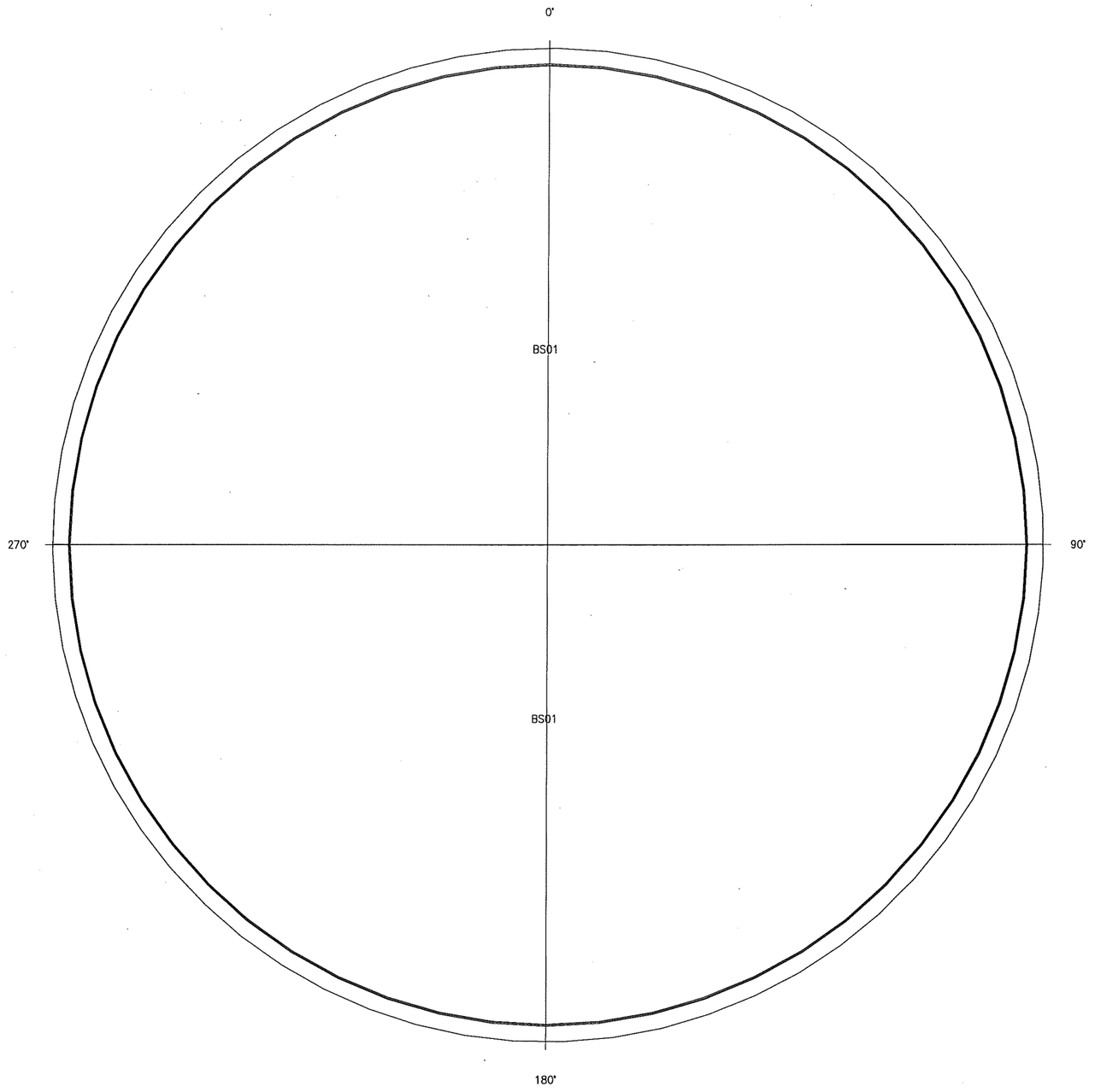

PLAN VIEW

WELDER INFORMATION	
FULL NAME	INITIALS

MARK LOCATIONS	
LEAK	○
REPAIRED	⊠
RETESTED	⊠

DATE:_____

NOTES:_____

CUSTOMER (WITNESS):_____
SIGNATURE

FIELD FOREMAN:_____
SIGNATURE

REV.	BY	DATE	DESCRIPTION
1	EJ	03/23/2015	CHANGED BOTTOM PLATE ORIENTATION REVISED TITLE BLOCK
0	EJ	02/16/2015	INITIAL ISSUE

BMT ACQUISITION, LLC
ENGINEERS – FABRICATORS – CONSTRUCTORS

8301 BROADWAY BLVD SE
ALBUQUERQUE, NM 87105-7453
PHONE: 505-563-4800
FAX: 505-563-4799
http://www.bmt-tank.com

T-110
&
T-116

DIESEL TEST VACUUM
6,000 GAL. WATER STORAGE TANKS
(10.17'DIA. X 11'HGT.) AWWA-D100-11

CUSTOMER:
FLITEWAY TECH., INC

PROJECT:
EDB INTERIM MEASURE

DRAWN: EJ	JOB No.: 30883
CHECKED: GAV	
DATE: 02/16/2015	SHEET No.: E08
REVISION: 1	

NORTH

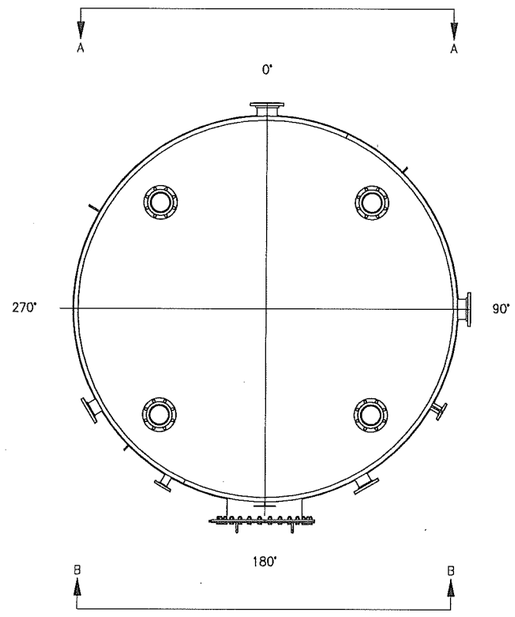

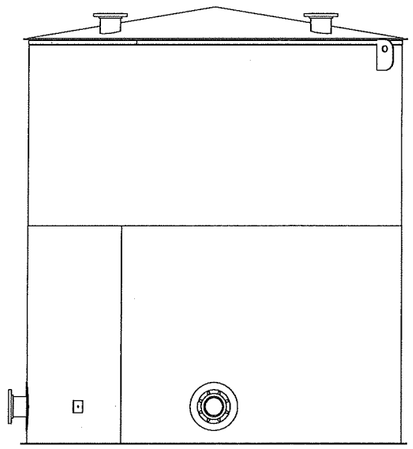

VIEW A–A

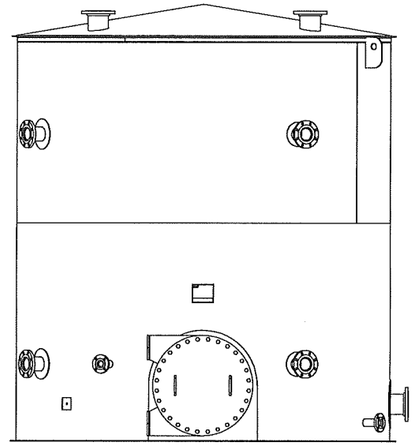

VIEW B–B

REV.	BY	DATE	DESCRIPTION
2	MEM	04/14/2015	REVISE NOZZLE ORIENTATION
1	EJ	03/23/2015	RELOCATED ALL NOZZLES REVISED TITLE BLOCK
0	EJ	02/16/2015	INITIAL ISSUE

BMT ACQUISITION, LLC
ENGINEERS – FABRICATORS – CONSTRUCTORS

8301 BROADWAY BLVD SE
ALBUQUERQUE, NM 87105–7453
PHONE: 505–563–4800
FAX: 505–563–4799
http://www.bmt-tank.com

T–110
&
T–116

WELD MAP
6,000 GAL. WATER STORAGE TANKS
(10.17'DIA. X 11'HGT.) AWWA–D100–11

CUSTOMER:
FLITEWAY TECH., INC

PROJECT:
EDB INTERIM MEASURE

DRAWN: EJ	JOB No.: 30883
CHECKED: GAV	
DATE: 02/16/2015	SHEET No.: E09
REVISION: 2	

NORTH

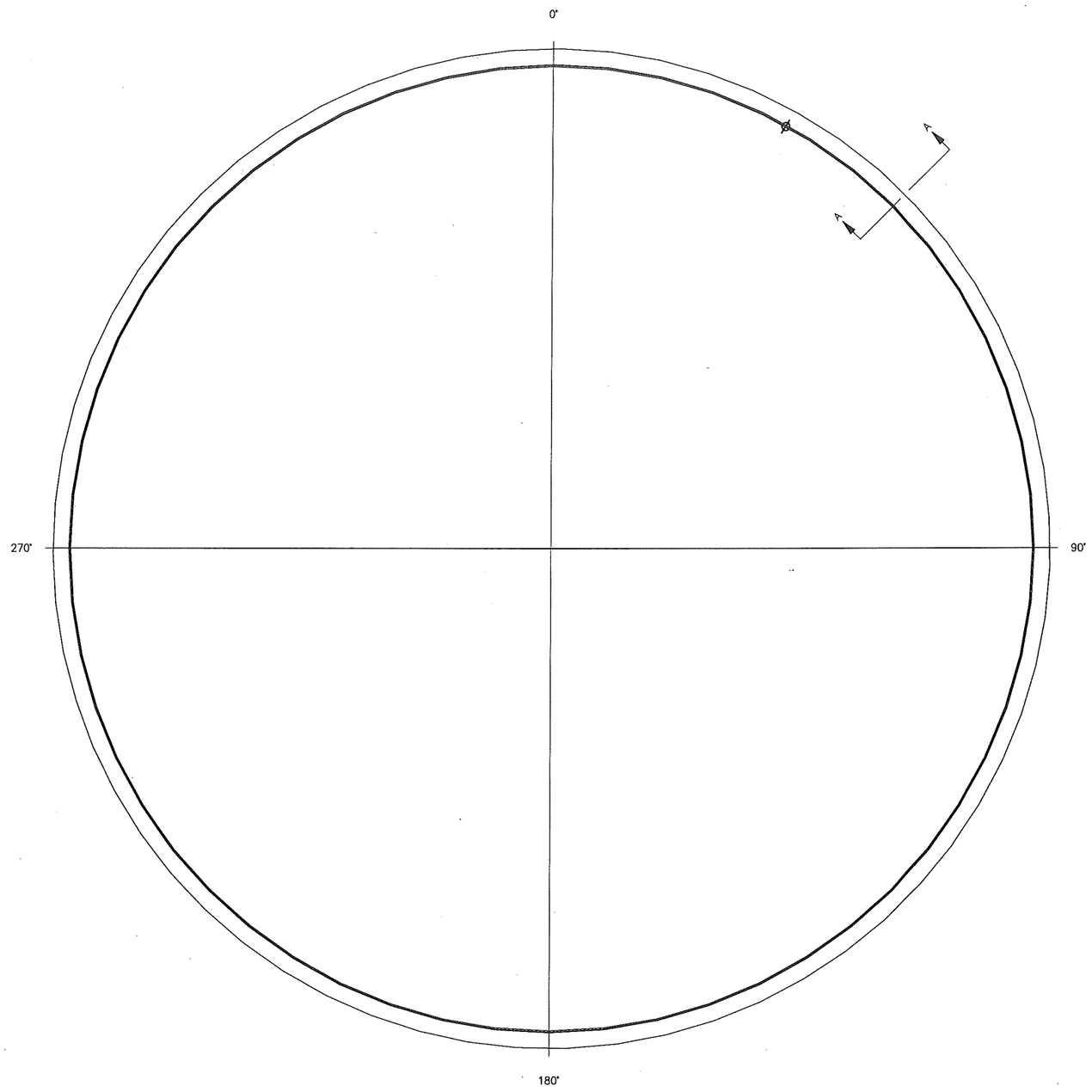

10'-6 1/2" BUTT-WELDED BOTTOM

NOTE 1: LINEAR FEET OF WELD IS 10'-6 1/2"

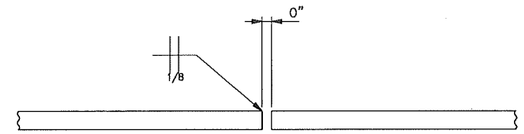

TYPICAL BUTT JOINT

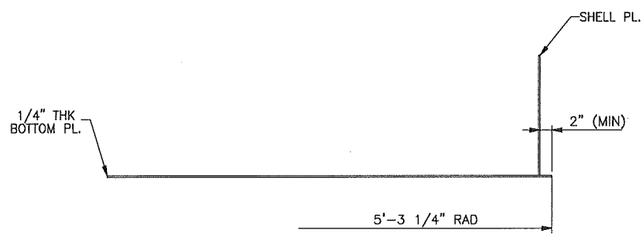

SECTION A-A

REV.	BY	DATE	DESCRIPTION
1	EJ	03/23/2015	CHANGED BOTTOM PLATE ORIENTATION REVISED TITLE BLOCK
0	EJ	02/16/2015	INITIAL ISSUE

BMT ACQUISITION, LLC
ENGINEERS - FABRICATORS - CONSTRUCTORS

8301 BROADWAY BLVD SE
ALBUQUERQUE, NM 87105-7453
PHONE: 505-563-4800
FAX: 505-563-4799
http://www.bmt-tank.com

T-110
&
T-116

BOTTOM LAYOUT
AND DETAILS
6,000 GAL. WATER STORAGE TANKS
(10.17'DIA. X 11'HGT.) AWWA-D100-11
CUSTOMER: FLITEWAY TECH., INC
PROJECT: EDB INTERIM MEASURE

DRAWN: EJ	JOB No.: 30883
CHECKED: GAV	
DATE: 02/16/2015	SHEET No.: BL01
REVISION: 1	

WORK INSTRUCTIONS								
RECV	CUT ROLL	FIT	WELDED	READY TO COAT	SENT TO VENDOR	COATING COMPLETE	READY TO SHIP	SHIPPED

BILL OF MATERIALS								
QTY	SHPG MARK	ASSY QTY	ASSY MARK	DESCRIPTION	LENGTH	SPEC MATL	REMARKS	LBS WEIGHT
2	BS01			BOTTOM PL. 1/4" x 63 3/16" x	10'-6 1/2"	A36		[889]

BILL OF MATERIALS LISTED FOR (1) TANK - (2) TANKS REQUIRED.
NOTE 1.- CUTTING RADIUS IS 5'-3 1/4"
NOTE 2.- TOTAL WEIGHT PLATES SHOWN = 889 LBS

RAW MATERIAL					
QTY	MK	PLATES	DESCRIPTION	CUT LENGTH	WEIGHT
1	BRAW-01	BS01, NIL	PL. 1/4" x 96" x 17'-5 7/8"	611 13/16"	[1427]

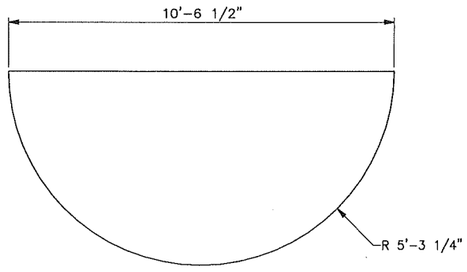

BS01 (2 REQD)

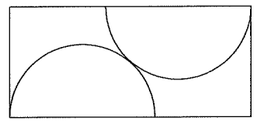

SEE RAW MATERIAL TABLE

REV.	BY	DATE	DESCRIPTION
1	EJ	03/23/2015	REVISED TITLE BLOCK
0	EJ	02/16/2015	INITIAL ISSUE

BMT ACQUISITION, LLC
ENGINEERS - FABRICATORS - CONSTRUCTORS
8301 BROADWAY BLVD SE
ALBUQUERQUE, NM 87105-7453
PHONE: 505-563-4800
FAX: 505-563-4799
http://www.bmt-tank.com

T-110
&
T-116

BOTTOM PLATE
DETAILS
6,000 GAL. WATER STORAGE TANKS
(10.17'DIA. X 11'HGT.) AWWA-D100-11
CUSTOMER: FLITEWAY TECH., INC
PROJECT: EDB INTERIM MEASURE

DRAWN:	JOB No.:
EJ	30883
CHECKED: GAV	
DATE: 02/16/2015	SHEET No.:
REVISION: 1	BL02

NORTH

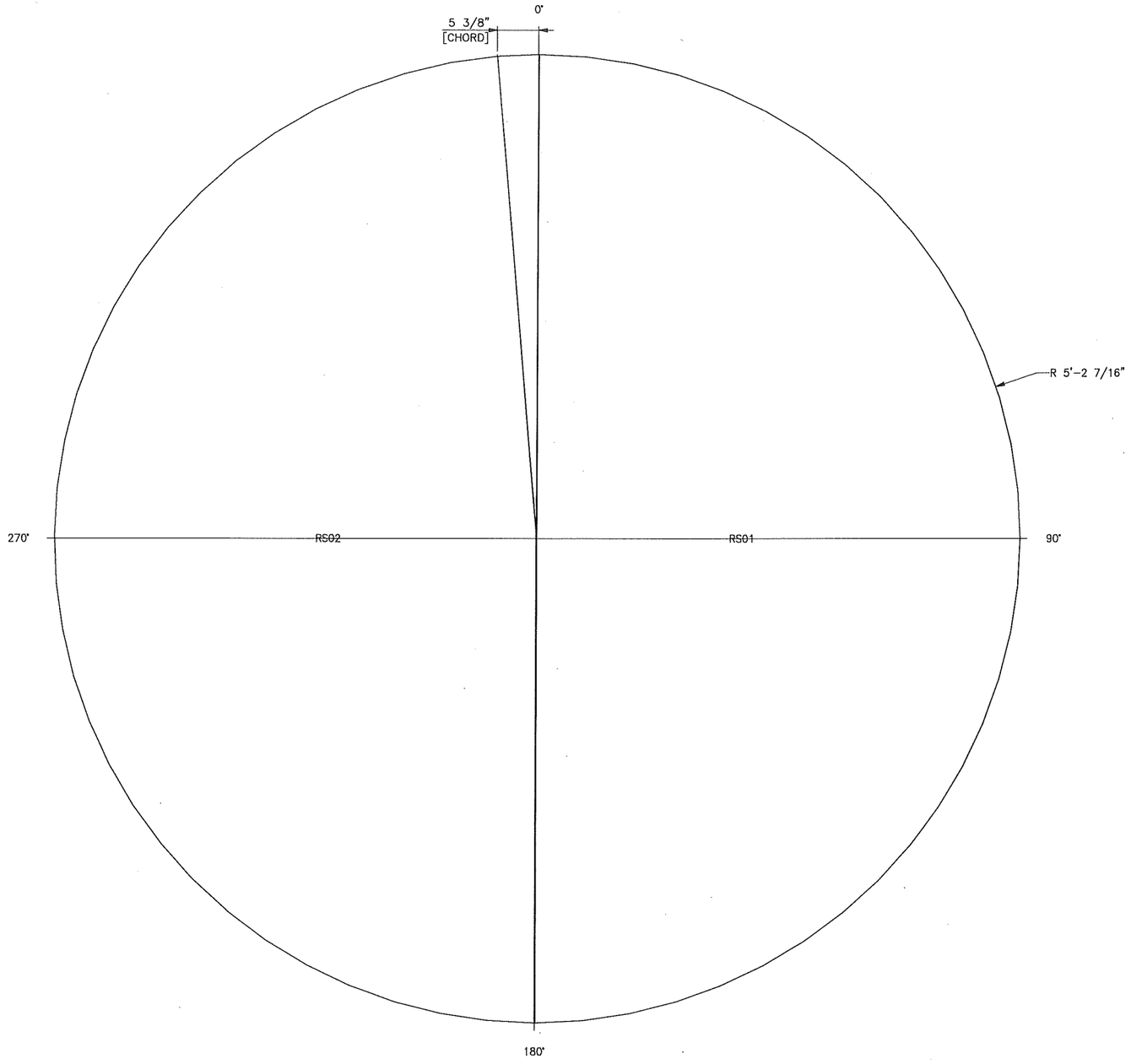

BUTT-WELDED ROOF FOR 10'-2" DIA TANK

NOTE 1: LINEAR FEET OF WELD IS 10'-4 13/16"

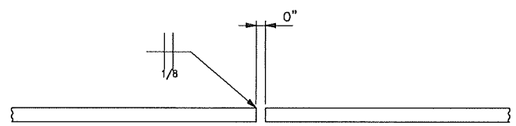

TYPICAL BUTT JOINT

REV.	BY	DATE	DESCRIPTION
1	EJ	03/23/2015	REVISED TITLE BLOCK
0	EJ	02/16/2015	INITIAL ISSUE

BMT ACQUISITION, LLC
ENGINEERS - FABRICATORS - CONSTRUCTORS

8301 BROADWAY BLVD SE
ALBUQUERQUE, NM 87105-7453
PHONE: 505-563-4800
FAX: 505-563-4799
http://www.bmt-tank.com

T-110
&
T-116

ROOF LAYOUT
AND DETAILS
6,000 GAL. WATER STORAGE TANKS
(10.17'DIA. X 11'HGT.) AWWA-D100-11
CUSTOMER: FLITEWAY TECH., INC
PROJECT: EDB INTERIM MEASURE

DRAWN: EJ	JOB No.: 30883
CHECKED: GAV	
DATE: 02/16/2015	SHEET No.: RL01
REVISION: 1	

WORK INSTRUCTIONS								
RECV	CUT ROLL	FIT	WELDED	READY TO COAT	SENT TO VENDOR	COATING COMPLETE	READY TO SHIP	SHIPPED

BILL OF MATERIALS								
QTY	SHPG MARK	ASSY QTY	ASSY MARK	DESCRIPTION	LENGTH	SPEC MATL	REMARKS	LBS WEIGHT
1	RS01			ROOF PL. 3/16" x 62 7/16" x	10'-4 13/16"	A36		[325]
1	RS02			ROOF PL. 3/16" x 62 7/16" x	10'-4 9/16"	A36		[316]

BILL OF MATERIALS LISTED FOR (1) TANK - (2) TANKS REQUIRED.
NOTE 1.- CUTTING RADIUS IS 5'-2 7/16"
NOTE 2.- TOTAL WEIGHT PLATES SHOWN = 641 LBS

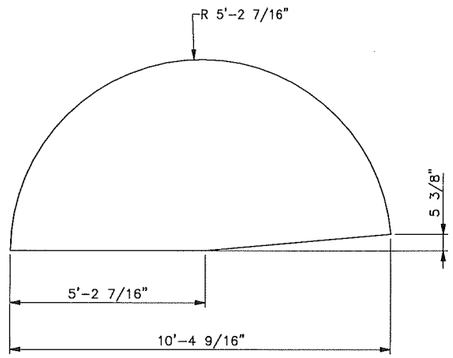

RS02 (1 REQD)

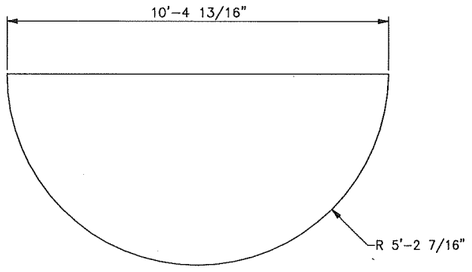

RS01 (1 REQD)

RAW MATERIAL					
QTY	MK	PLATES	DESCRIPTION	CUT LENGTH	WEIGHT
1	RRAW-01	rs01	PL. 3/16" x 96" x 17'-1 5/8"	603 3/16"	[1049]

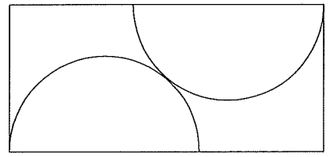

SEE RAW MATERIAL TABLE

REV.	BY	DATE	DESCRIPTION
1	EJ	03/23/2015	REVISED TITLE BLOCK
0	EJ	02/16/2015	INITIAL ISSUE

BMT ACQUISITION, LLC
ENGINEERS - FABRICATORS - CONSTRUCTORS
8301 BROADWAY BLVD SE
ALBUQUERQUE, NM 87105-7453
PHONE: 505-563-4800
FAX: 505-563-4799
http://www.bmt-tank.com

T-110
&
T-116

ROOF PLATE DETAILS
6,000 GAL. WATER STORAGE TANKS
(10.17'DIA. X 11'HGT.) AWWA-D100-11

CUSTOMER: FLITEWAY TECH., INC
PROJECT: EDB INTERIM MEASURE

DRAWN:	JOB No.:
EJ	30883
CHECKED: GAV	
DATE: 02/16/2015	SHEET No.: RL02
REVISION: 1	

WORK INSTRUCTIONS								
RECV	CUT ROLL	FIT	WELDED	READY TO COAT	SENT TO VENDOR	COATING COMPLETE	READY TO SHIP	SHIPPED

BILL OF MATERIALS								
QTY	SHPG MARK	ASSY QTY	ASSY MARK	DESCRIPTION	LENGTH	SPEC MATL	REMARKS	LBS WEIGHT
2	TM01			ANGLE 2" x 2" x 1/4" x	18'-0"	A36	ROLL	[101]

BILL OF MATERIALS LISTED FOR (1) TANK - (2) TANKS REQUIRED.
NOTE 1: ALL ROLLED MEMBERS ARE CUT FROM 20'-0" STOCK LENGTHS.

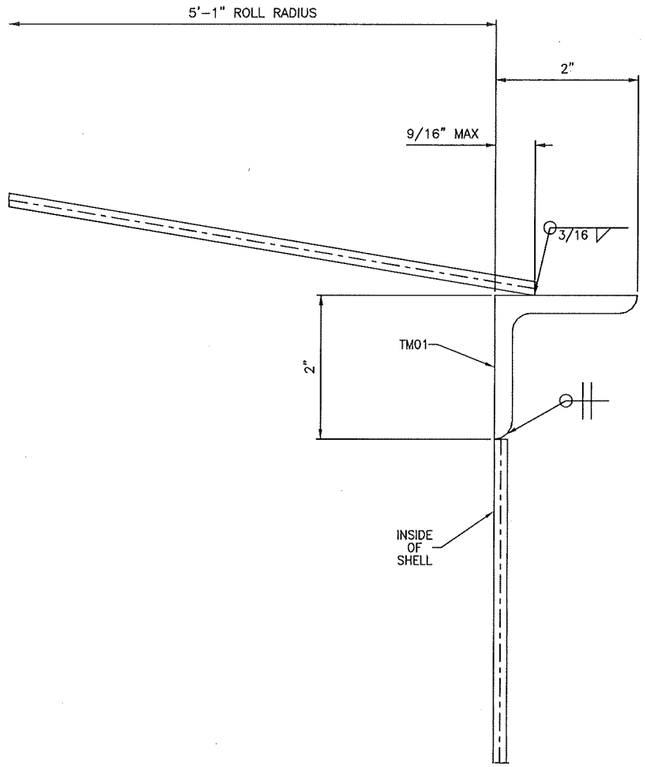

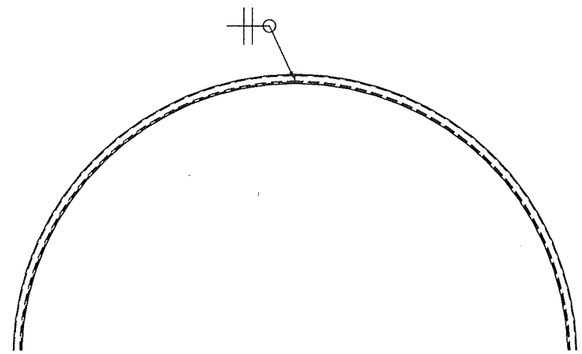

SEGMENT TO SEGMENT WELDING DETAIL

REV.	BY	DATE	DESCRIPTION
1	EJ	03/23/2015	REVISED TITLE BLOCK
0	EJ	02/16/2015	INITIAL ISSUE

BMT ACQUISITION, LLC
ENGINEERS - FABRICATORS - CONSTRUCTORS

8301 BROADWAY BLVD SE
ALBUQUERQUE, NM 87105-7453
PHONE: 505-563-4800
FAX: 505-563-4799
http://www.bmt-tank.com

T-110
&
T-116

TOP MEMBER
DETAIL
6,000 GAL. WATER STORAGE TANKS
(10.17'DIA. X 11'HGT.) AWWA-D100-11
CUSTOMER: FLITEWAY TECH., INC
PROJECT: EDB INTERIM MEASURE

DRAWN: EJ	JOB No.: 30883
CHECKED: GAV	
DATE: 02/16/2015	SHEET No.: TM01
REVISION: 1	

WORK INSTRUCTIONS								
RECV	CUT ROLL	FIT	WELDED	READY TO COAT	SENT TO VENDOR	COATING COMPLETE	READY TO SHIP	SHIPPED

BILL OF MATERIALS								
QTY	SHPG MARK	ASSY QTY	ASSY MARK	DESCRIPTION	LENGTH	SPEC MATL	REMARKS	LBS WEIGHT
1	SR01A			SHELL PL. 0.2500" x 71" x	31'-11 15/16"	A36	ROLL	[1933]
1	SR02A			SHELL PL. 0.1875" x 59" x	31'-11 3/4"	A36	ROLL	[1204]

BILL OF MATERIALS LISTED FOR (1) TANK - (2) TANKS REQUIRED.
NOTE 1: DIMENSIONS SHOWN ARE BEFORE ROLLING.
NOTE 2: ALL DETAIL DIMENSIONS ARE ROUNDED TO THE NEAREST 1/16".
NOTE 3: ROLL ALL SHELL PLATES TO 5'-1" INSIDE RADIUS.
NOTE 4: FABRICATION TOLERANCE FOR BEVEL ANGLE AT PLATE EDGE IS -5', +5'.
NOTE 5: 1/8" DEDUCTED FROM LENGTH FOR WELD GAP.
NOTE 6: TOTAL WEIGHT PLATES SHOWN = 3137 LBS
NOTE 7: THE LENGTH OF THE PLATES IS CALCULATED USING THE CENTER OF DIAMETER OF THE TANK (ALIGN CENTERS).

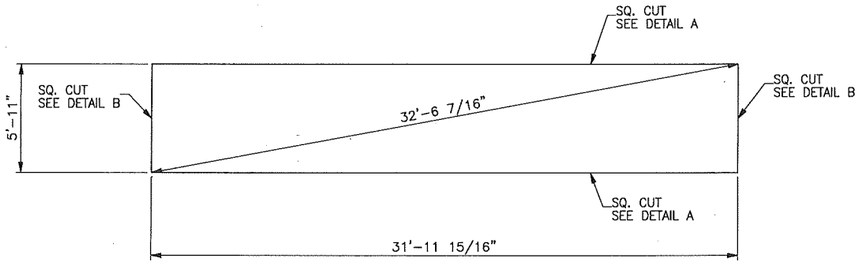

MK. SR01A (1 REQ'D)

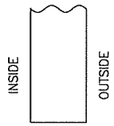

DETAIL A

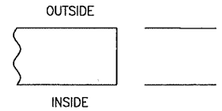

DETAIL B

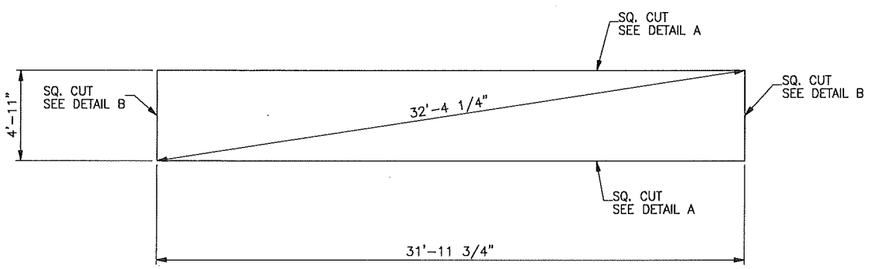

MK. SR02A (1 REQ'D)

REV.	BY	DATE	DESCRIPTION
1	EJ	03/23/2015	REVISED TITLE BLOCK
0	EJ	02/16/2015	INITIAL ISSUE

BMT ACQUISITION, LLC
ENGINEERS - FABRICATORS - CONSTRUCTORS

8301 BROADWAY BLVD SE
ALBUQUERQUE, NM 87105-7453
PHONE: 505-563-4800
FAX: 505-563-4799
http://www.bmt-tank.com

T-110
&
T-116

SHELL COURSE PLATES
6,000 GAL. WATER STORAGE TANKS
(10.17'DIA. X 11'HGT.) AWWA-D100-11

CUSTOMER: FLITEWAY TECH., INC

PROJECT: EDB INTERIM MEASURE

DRAWN: EJ	JOB No.: 30883
CHECKED: GAV	
DATE: 02/16/2015	SHEET No.: PL01
REVISION: 1	

NOTES

1.– AFTER INSTALLATION, AIR TEST REPAD WELDS TO 15 PSI PER API–650–5.3.4.
2.– AFTER THE REINFORCING PAD(S) HAVE BEEN TESTED, THE 1/4" DRILLED AND TAPED HOLE(S) MUST REMAIN OPEN (NO PLUGS, GREASE, PAINT OR ANY OTHER FOREIGN MATERIAL PLUGGING THE 1/4" TEST HOLE).
3.– GASKETED FACES SHALL BE MACHINE FINISHED TO PROVIDE A MINIMUM GASKET BEARING WIDTH OF 3/4".
4.– BOLT HOLES TO STRADDLE TANKS VERTICAL CENTERLINE.

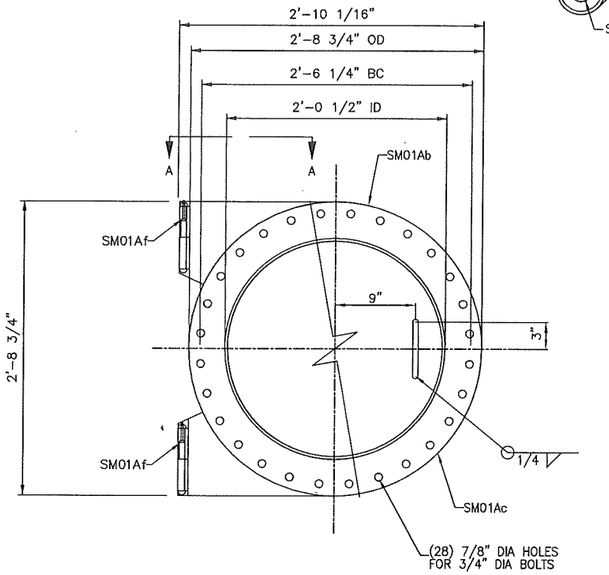

FLANGE/COVER ASSY

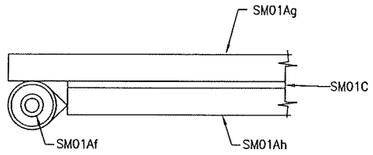

SECTION A–A

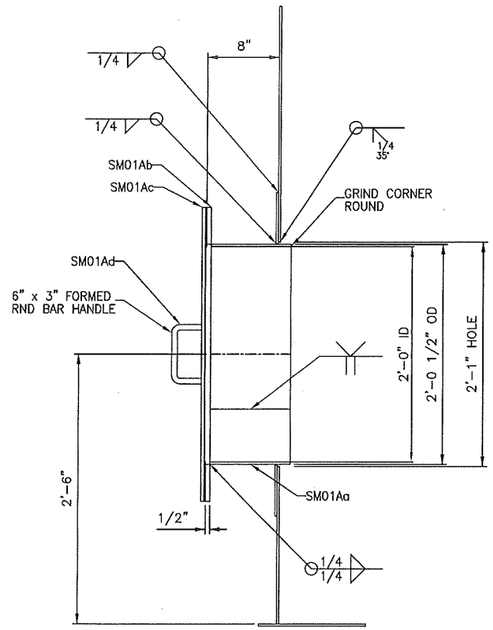

24" SHELL MANWAY, MK. SM01A

DETAIL FOR MANWAY

K

WORK INSTRUCTIONS								
RECV	CUT ROLL	FIT	WELDED	READY TO COAT	SENT TO VENDOR	COATING COMPLETE	READY TO SHIP	SHIPPED

BILL OF MATERIALS								
QTY	SHPG MARK	ASSY QTY	ASSY MARK	DESCRIPTION	LENGTH	SPEC MATL	REMARKS	LBS WEIGHT
1	SM01A			24" SHELL MANWAY				[224]
		1	SM01Aa	PL. 1/4" x 9" x	6'–4 3/8"	A36	ROLL	46
		1	SM01Ab	FLANGE PL 1/2" x 24 1/2" ID x 32 3/4" OD		A36		52
		1	SM01Ac	COVER PL 3/8" x 32 3/4" OD		A36		90
		2	SM01Ad	RND BAR 5/8" DIA x	1'–0"	A36	BEND	2
		4	SM01Ae	MACHINE BOLT 3/4" DIA W/HN (SHIPPING) x	2"	A325	W/ H. NUTS	2
		2	SM01Af	NARROW–PROFILE WELD–ON LIFT–OFF HINGE		A36	MC#3636A6	4
		2	SM01Ag	PL 1/2" x 9 1/4" x	1'–5 1/2"	A36		16
		2	SM01Ah	PL 3/8" x 9 1/4" x	1'–4 3/8"	A36		12
28	SM01B			MACHINE BOLT 3/4" DIA W/HN (SERVICE) x	2"	A325	W/ H. NUTS	[16]
1	SM01C			GASKET 1/8" THK x 24" ID x 32 3/4" OD		NEOPRENE		[1]
1	SM01D			REPAD PL. 0.2500" x 24 13/16" ID x 36" OD		A36	ROLL	[36]

BILL OF MATERIALS LISTED FOR (1) TANK – (2) TANK REQUIRED.

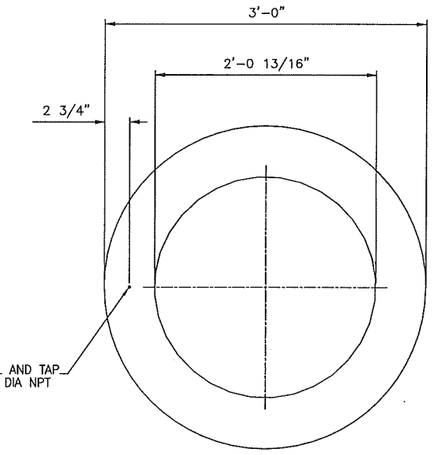

ROLL TO 5'–1 1/4" RAD

MK. SM01B

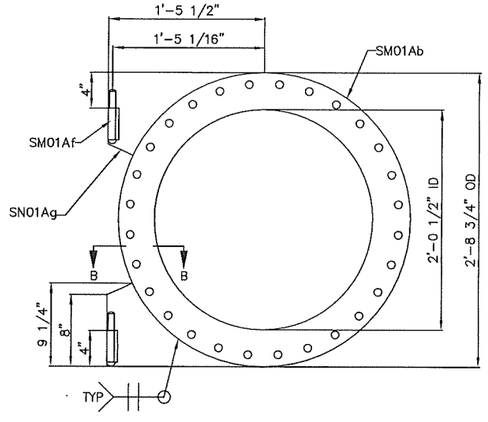

MK. SM01Ab & SM01Ag

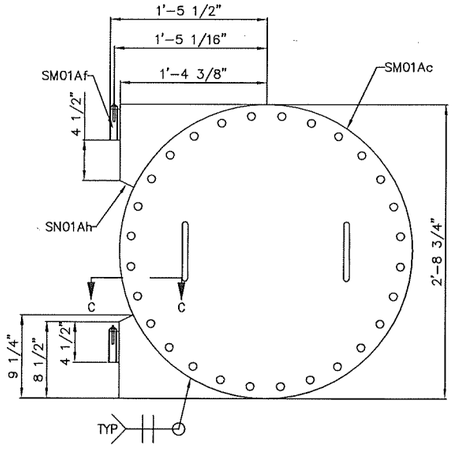

MK. SM01Ac & SM01Ah

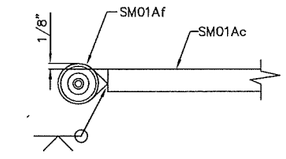

SECTION C–C

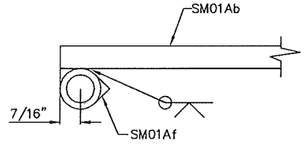

SECTION B–B

REV.	BY	DATE	DESCRIPTION
1	EJ	03/23/2015	REVISED TITLE BLOCK
0	EJ	02/16/2015	INITIAL ISSUE

BMT ACQUISITION, LLC
ENGINEERS – FABRICATORS – CONSTRUCTORS

8301 BROADWAY BLVD SE
ALBUQUERQUE, NM 87105–7453
PHONE: 505–563–4800
FAX: 505–563–4799
http://www.bmt–tank.com

T–110 & T–116

24" SHELL MANWAY W/HINGE
6,000 GAL. WATER STORAGE TANKS
(10.17'DIA. X 11'HGT.) AWWA–D100–11

CUSTOMER: FLITEWAY TECH., INC

PROJECT: EDB INTERIM MEASURE

DRAWN:	JOB No.:
EJ	30883
CHECKED: GAV	
DATE: 02/16/2015	SHEET No.: SM01
REVISION: 1	

WORK INSTRUCTIONS								
RECV	CUT ROLL	FIT	WELDED	READY TO COAT	SENT TO VENDOR	COATING COMPLETE	READY TO SHIP	SHIPPED

BILL OF MATERIALS								
QTY	SHPG MARK	ASSY QTY	ASSY MARK	DESCRIPTION	LENGTH	SPEC MATL	REMARKS	LBS WEIGHT
1	SN01A			6" SHELL NOZZLE				[31]
		1	SN01Aa	6" SCH 80 PIPE x	5 3/4"	A53-B		14
		1	SN01Ab	6" - 150# R.F. S.O. FLANGE		A105		17
1	SN01B			REPAD PL. 0.2500" x 6 3/4" ID x 15 3/4" OD		A36	ROLL	[12]

BILL OF MATERIALS LISTED FOR (1) TANK - (2) TANKS REQUIRED.

NOTES:
1.- AFTER INSTALLATION, AIR TEST REPAD WELDS TO 15 PSI PER API-650 PARA 7.3.4.
2.- AFTER THE REINFORCING PAD(S) HAVE BEEN TESTED, THE 0" DRILLED AND TAPPED HOLE(S) MUST REMAIN OPEN (NO PLUGS, GREASE, PAINT OR ANY OTHER FOREIGN MATERIAL PLUGGING THE 0" TEST HOLE).

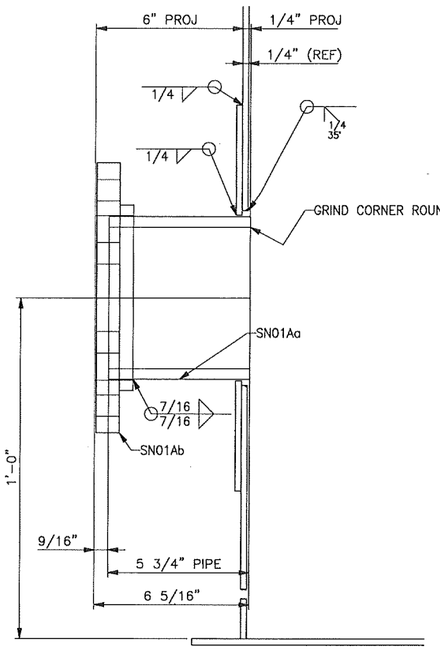

6" NOZZLE, MK. SN01A

6 5/8" NOZZLE OD
7 1/8" HOLE OPENING

DETAIL FOR NOZZLE E

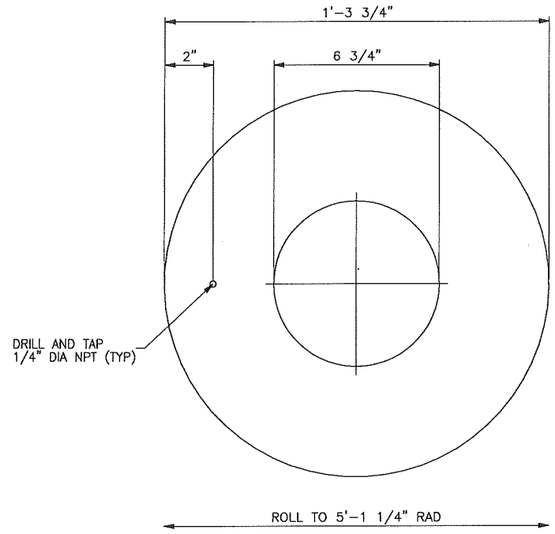

MK. SN01AB

REV.	BY	DATE	DESCRIPTION
2	MEM	04/14/2015	REVISED FLANGE FACE
1	EJ	03/23/2015	REVISED DWG REVISED BOM & TITLE BLOCK
0	EJ	02/16/2015	INITIAL ISSUE

BMT ACQUISITION, LLC
ENGINEERS - FABRICATORS - CONSTRUCTORS

8301 BROADWAY BLVD SE
ALBUQUERQUE, NM 87105-7453
PHONE: 505-563-4800
FAX: 505-563-4799
http://www.bmt-tank.com

T-110
&
T-116

6" DISCHARGE NOZZLE
6,000 GAL. WATER STORAGE TANKS
(10.17'DIA. X 11'HGT.) AWWA-D100-11

CUSTOMER: FLITEWAY TECH., INC

PROJECT: EDB INTERIM MEASURE

DRAWN: EJ	JOB No.: 30883
CHECKED: GAV	
DATE: 02/16/2015	SHEET No.: SN01
REVISION: 2	

WORK INSTRUCTIONS								
RECV	CUT ROLL	FIT	WELDED	READY TO COAT	SENT TO VENDOR	COATING COMPLETE	READY TO SHIP	SHIPPED

BILL OF MATERIALS								
QTY	SHPG MARK	ASSY QTY	ASSY MARK	DESCRIPTION	LENGTH	SPEC MATL	REMARKS	LBS WEIGHT
1	SN02A			4" SHELL NOZZLE				[20]
		1	SN02Aa	4" SCH 80 PIPE x	5 3/4"	A53-B		8
		1	SN02Ab	4" - 150# R.F. S.O. FLANGE		A105		12
1	SN02B			REPAD PL. 0.1875" x 4 5/8" ID x 8" OD		A36	ROLL	[2]

BILL OF MATERIALS LISTED FOR (1) TANK - (2) TANKS REQUIRED.

NOTES:
1.- AFTER INSTALLATION, AIR TEST REPAD WELDS TO 15 PSI PER API-650 PARA 7.3.4.
2.- AFTER THE REINFORCING PAD(S) HAVE BEEN TESTED, THE 0" DRILLED AND TAPPED HOLE(S) MUST REMAIN OPEN (NO PLUGS, GREASE, PAINT OR ANY OTHER FOREIGN MATERIAL PLUGGING THE 0" TEST HOLE).

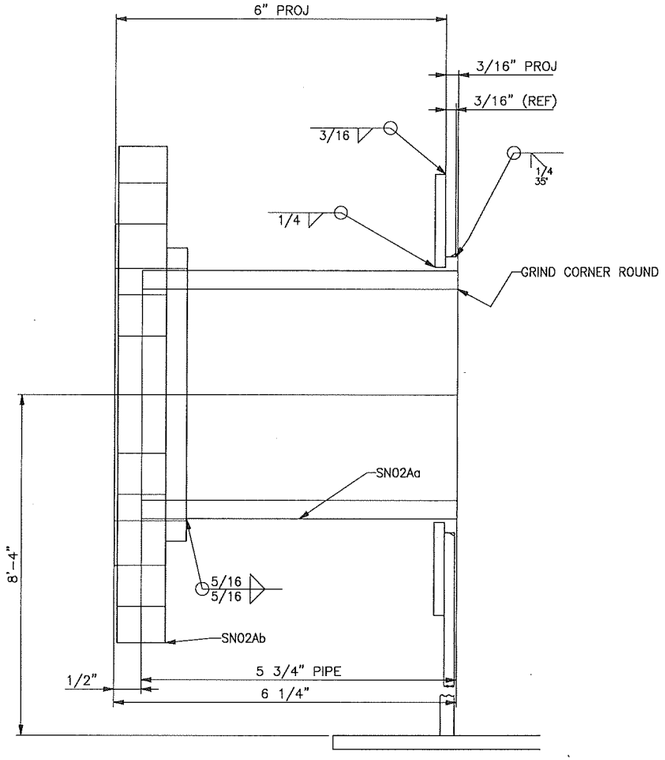

4" NOZZLE, MK. SN02A

4 1/2" NOZZLE OD
5" HOLE OPENING

DETAIL FOR NOZZLE G

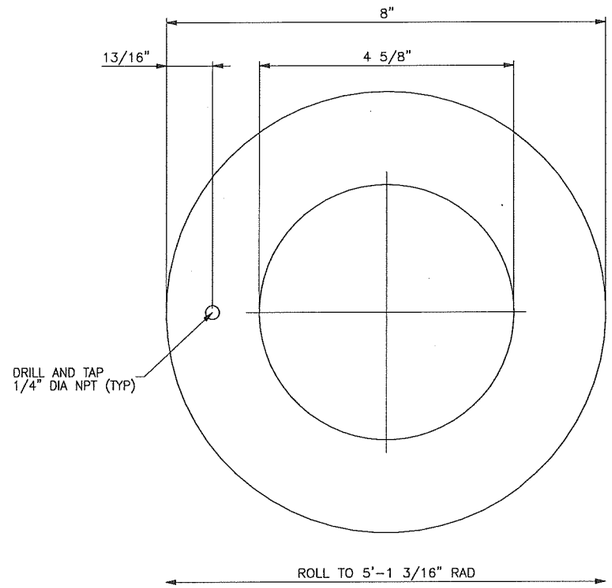

MK. SN02AB

REV.	BY	DATE	DESCRIPTION
2	MEM	04/14/2015	REVISE FLANGE FACE
1	EJ	03/23/2015	REVISE DWG REVISED BOM & TITLE BLOCK
0	EJ	02/16/2015	INITIAL ISSUE

BMT ACQUISITION, LLC
ENGINEERS - FABRICATORS - CONSTRUCTORS

8301 BROADWAY BLVD SE
ALBUQUERQUE, NM 87105-7453
PHONE: 505-563-4800
FAX: 505-563-4799
http://www.bmt-tank.com

T-110
&
T-116

4" LEVEL NOZZLE
6,000 GAL. WATER STORAGE TANKS
(10.17'DIA. X 11'HGT.) AWWA-D100-11

CUSTOMER:
FLITEWAY TECH., INC

PROJECT:
EDB INTERIM MEASURE

DRAWN:	JOB No.:
EJ	30883
CHECKED: GAV	
DATE: 02/16/2015	SHEET No.: SN02
REVISION: 2	

WORK INSTRUCTIONS								
RECV	CUT ROLL	FIT	WELDED	READY TO COAT	SENT TO VENDOR	COATING COMPLETE	READY TO SHIP	SHIPPED

BILL OF MATERIALS								
QTY	SHPG MARK	ASSY QTY	ASSY MARK	DESCRIPTION	LENGTH	SPEC MATL	REMARKS	LBS WEIGHT
1	SN03A			2" SHELL NOZZLE				[9]
		1	SN03Aa	2" SCH 160 PIPE x	5 3/4"	A53-B		4
		1	SN03Ab	2" - 150# R.F. S.O. FLANGE		A105		5

BILL OF MATERIALS LISTED FOR (1) TANK - (2) TANKS REQUIRED.

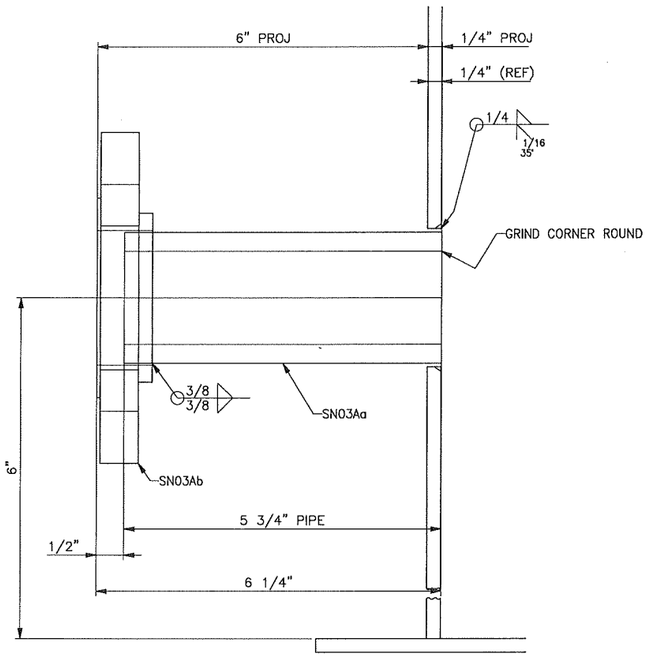

2" NOZZLE, MK. SN03A

2 3/8" NOZZLE OD
2 1/2" HOLE OPENING

DETAIL FOR NOZZLE F

REV.	BY	DATE	DESCRIPTION
2	MEM	04/14/2015	REVISE FLANGE FACE
1	EJ	03/23/2015	REVISE TITLE BLOCK
0	EJ	02/16/2015	INITIAL ISSUE

BMT ACQUISITION, LLC
ENGINEERS - FABRICATORS - CONSTRUCTORS

8301 BROADWAY BLVD SE
ALBUQUERQUE, NM 87105-7453
PHONE: 505-563-4800
FAX: 505-563-4799
http://www.bmt-tank.com

T-110
&
T-116

2" DRAIN NOZZLE
6,000 GAL. WATER STORAGE TANKS
(10.17'DIA. X 11'HGT.) AWWA-D100-11

CUSTOMER: FLITEWAY TECH., INC

PROJECT: EDB INTERIM MEASURE

DRAWN:	JOB No.:
EJ	30883
CHECKED: GAV	
DATE: 02/16/2015	SHEET No.:
REVISION: 2	SN03

WORK INSTRUCTIONS								
RECV	CUT ROLL	FIT	WELDED	READY TO COAT	SENT TO VENDOR	COATING COMPLETE	READY TO SHIP	SHIPPED

BILL OF MATERIALS								
QTY	SHPG MARK	ASSY QTY	ASSY MARK	DESCRIPTION	LENGTH	SPEC MATL	REMARKS	LBS WEIGHT
1	SN04A			4" SHELL NOZZLE				[20]
		1	SN04Aa	4" SCH 80 PIPE x	5 13/16"	A53-B		8
		1	SN04Ab	4" - 150# R.F. S.O. FLANGE		A105		12
1	SN04B			REPAD PL. 0.2500" x 4 5/8" ID x 8" OD		A36	ROLL	[3]

BILL OF MATERIALS LISTED FOR (1) TANK - (2) TANKS REQUIRED.

NOTES:
1.- AFTER INSTALLATION, AIR TEST REPAD WELDS TO 15 PSI PER API-650 PARA 7.3.4.
2.- AFTER THE REINFORCING PAD(S) HAVE BEEN TESTED, THE 0" DRILLED AND TAPPED HOLE(S) MUST REMAIN OPEN (NO PLUGS, GREASE, PAINT OR ANY OTHER FOREIGN MATERIAL PLUGGING THE 0" TEST HOLE).

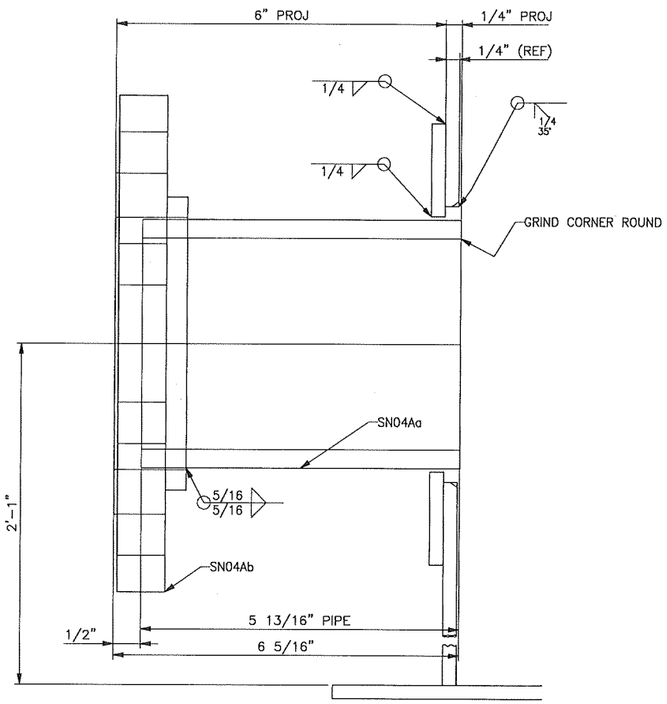

4" NOZZLE, MK. SN04A

4 1/2" NOZZLE OD
5" HOLE OPENING

DETAIL FOR NOZZLE H

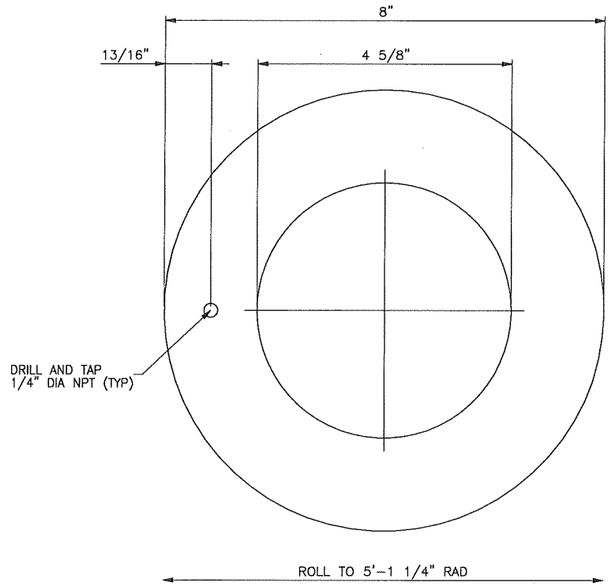

MK. SN04AB

REV.	BY	DATE	DESCRIPTION
2	MEM	04/14/2015	REVISE FLANGE FACE
1	EJ	03/23/2015	REVISE DWG REVISED BOM & TITLE BLOCK
0	EJ	02/16/2015	INITIAL ISSUE

BMT ACQUISITION, LLC
ENGINEERS - FABRICATORS - CONSTRUCTORS

8301 BROADWAY BLVD SE
ALBUQUERQUE, NM 87105-7453
PHONE: 505-563-4800
FAX: 505-563-4799
http://www.bmt-tank.com

T-110
&
T-116

4" LEVEL NOZZLE
6,000 GAL. WATER STORAGE TANKS
(10.17'DIA. X 11'HGT.) AWWA-D100-11

CUSTOMER: FLITEWAY TECH., INC

PROJECT: EDB INTERIM MEASURE

DRAWN:	JOB No.:
EJ	30883
CHECKED: GAV	
DATE: 02/16/2015	SHEET No.: SN04
REVISION: 2	

WORK INSTRUCTIONS								
RECV	CUT ROLL	FIT	WELDED	READY TO COAT	SENT TO VENDOR	COATING COMPLETE	READY TO SHIP	SHIPPED

BILL OF MATERIALS								
QTY	SHPG MARK	ASSY QTY	ASSY MARK	DESCRIPTION	LENGTH	SPEC MATL	REMARKS	LBS WEIGHT
1	SN05A			2" SHELL NOZZLE				[9]
		1	SN05Aa	2" SCH 160 PIPE x	5 3/4"	A53-B		4
		1	SN05Ab	2" - 150# R.F. S.O. FLANGE		A105		5

BILL OF MATERIALS LISTED FOR (1) TANK - (2) TANKS REQUIRED.

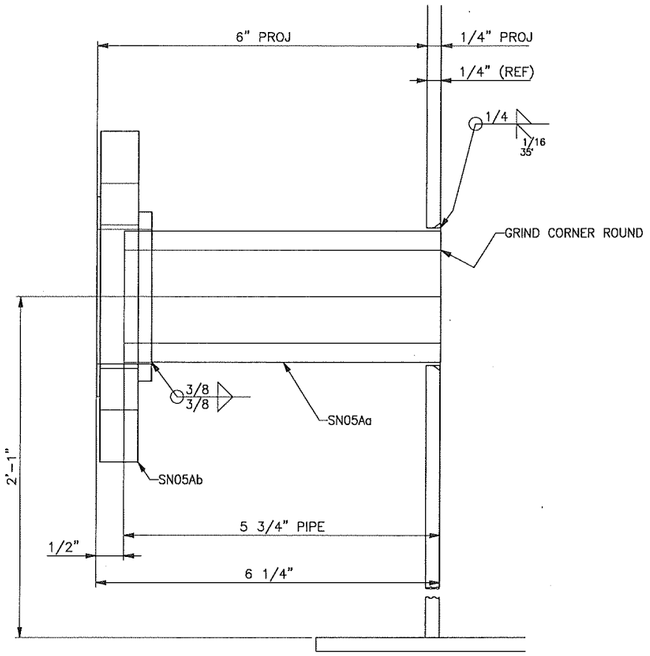

2" NOZZLE, MK. SN05A

2 3/8" NOZZLE OD
2 1/2" HOLE OPENING

DETAIL FOR NOZZLE J

REV.	BY	DATE	DESCRIPTION
2	MEM	04/14/2015	REVISE FLANGE FACE
1	EJ	03/23/2015	REVISE DWG REVISED BOM & TITLE BLOCK
0	EJ	02/16/2015	INITIAL ISSUE

BMT ACQUISITION, LLC
ENGINEERS - FABRICATORS - CONSTRUCTORS

8301 BROADWAY BLVD SE
ALBUQUERQUE, NM 87105-7453
PHONE: 505-563-4800
FAX: 505-563-4799
http://www.bmt-tank.com

T-110
&
T-116

2" LEVEL NOZZLE
6,000 GAL. WATER STORAGE TANKS
(10.17'DIA. X 11'HGT.) AWWA-D100-11

CUSTOMER:
FLITEWAY TECH., INC

PROJECT:
EDB INTERIM MEASURE

DRAWN: EJ	JOB No.: 30883
CHECKED: GAV	
DATE: 02/16/2015	SHEET No.: SN05
REVISION: 2	

WORK INSTRUCTIONS								
RECV	CUT ROLL	FIT	WELDED	READY TO COAT	SENT TO VENDOR	COATING COMPLETE	READY TO SHIP	SHIPPED

BILL OF MATERIALS								
QTY	SHPG MARK	ASSY QTY	ASSY MARK	DESCRIPTION	LENGTH	SPEC MATL	REMARKS	LBS WEIGHT
1	SN06A			4" SHELL NOZZLE				[20]
		1	SN06Aa	4" SCH 80 PIPE x	5 3/4"	A53-B		8
		1	SN06Ab	4" – 150# R.F. S.O. FLANGE		A105		12
1	SN06B			REPAD PL. 0.1875" x 4 5/8" ID x 10" OD		A36	ROLL	[4]

BILL OF MATERIALS LISTED FOR (1) TANK – (2) TANKS REQUIRED.

NOTES:
1.– AFTER INSTALLATION, AIR TEST REPAD WELDS TO 15 PSI PER API–650 PARA 7.3.4.
2.– AFTER THE REINFORCING PAD(S) HAVE BEEN TESTED, THE 0" DRILLED AND TAPPED HOLE(S) MUST REMAIN OPEN (NO PLUGS, GREASE, PAINT OR ANY OTHER FOREIGN MATERIAL PLUGGING THE 0" TEST HOLE).

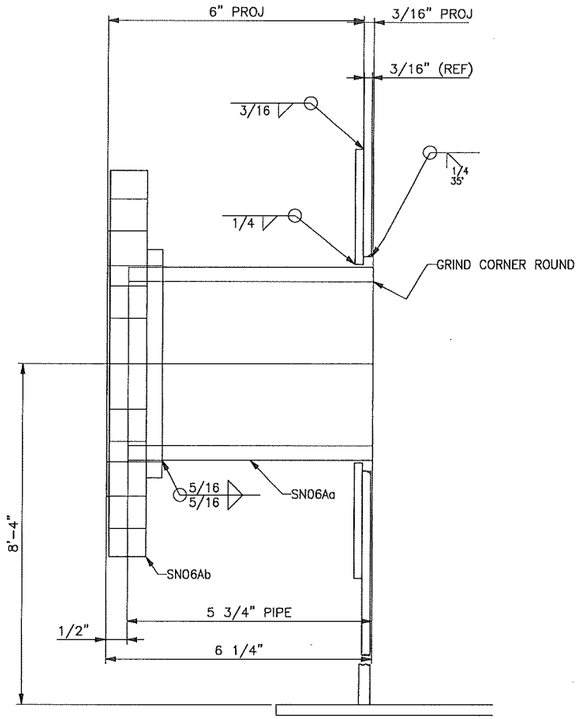

4" NOZZLE, MK. SN06A

4 1/2" NOZZLE OD
5" HOLE OPENING

DETAIL FOR NOZZLE K

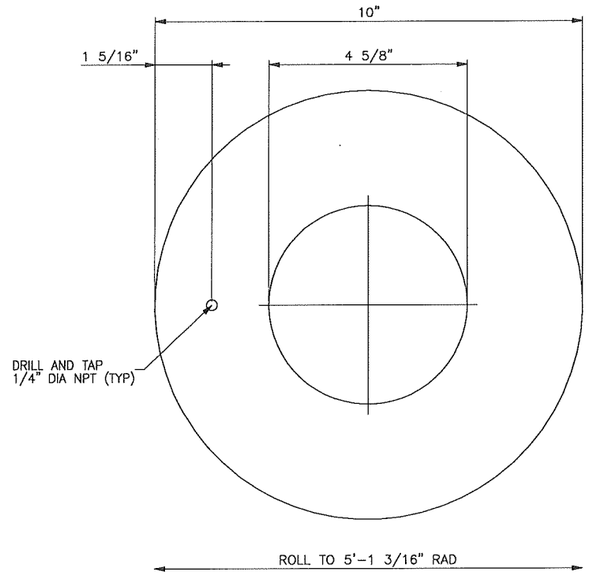

MK. SN06AB

REV.	BY	DATE	DESCRIPTION
2	MEM	04/14/2015	REVISE FLANGE FACE
1	EJ	03/23/2015	REVISE DWG REVISED BOM & TITLE BLOCK
0	EJ	02/16/2015	INITIAL ISSUE

BMT ACQUISITION, LLC
ENGINEERS – FABRICATORS – CONSTRUCTORS

8301 BROADWAY BLVD SE
ALBUQUERQUE, NM 87105–7453
PHONE: 505–563–4800
FAX: 505–563–4799
http://www.bmt–tank.com

T–110
&
T–116

4" SPARE NOZZLE
6,000 GAL. WATER STORAGE TANKS
(10.17'DIA. X 11'HGT.) AWWA–D100–11

CUSTOMER: FLITEWAY TECH., INC

PROJECT: EDB INTERIM MEASURE

DRAWN:	JOB No.:
EJ	30883
CHECKED: GAV	
DATE: 02/16/2015	SHEET No.: SN06
REVISION: 2	

WORK INSTRUCTIONS								
RECV	CUT ROLL	FIT	WELDED	READY TO COAT	SENT TO VENDOR	COATING COMPLETE	READY TO SHIP	SHIPPED

BILL OF MATERIALS								
QTY	SHPG MARK	ASSY QTY	ASSY MARK	DESCRIPTION	LENGTH	SPEC MATL	REMARKS	LBS WEIGHT
1	SN07A			4" SHELL NOZZLE				[20]
		1	SN07Aa	4" SCH 80 PIPE x	5 13/16"	A53-B		8
		1	SN07Ab	4" – 150# R.F. S.O. FLANGE		A105		12
1	SN07B			REPAD PL. 0.2500" x 4 5/8" ID x 10" OD		A36	ROLL	[5]

BILL OF MATERIALS LISTED FOR (1) TANK – (2) TANKS REQUIRED.

NOTES:
1.– AFTER INSTALLATION, AIR TEST REPAD WELDS TO 15 PSI PER API–650 PARA 7.3.4.
2.– AFTER THE REINFORCING PAD(S) HAVE BEEN TESTED, THE 0" DRILLED AND TAPPED HOLE(S) MUST REMAIN OPEN (NO PLUGS, GREASE, PAINT OR ANY OTHER FOREIGN MATERIAL PLUGGING THE 0" TEST HOLE).

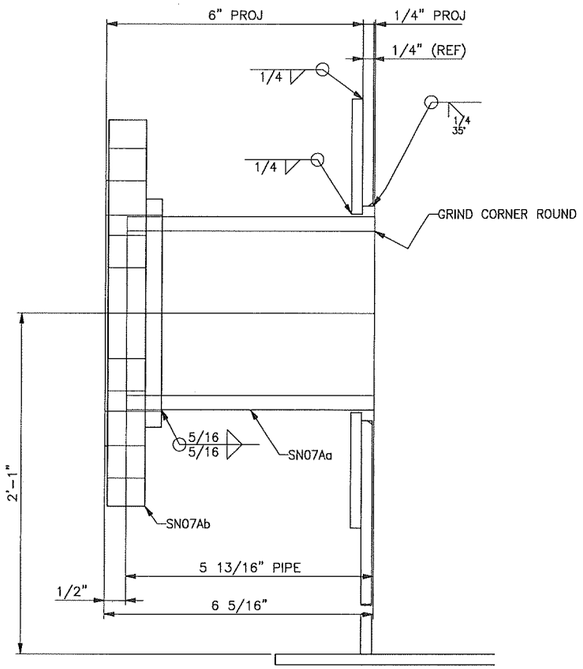

4" NOZZLE, MK. SN07A

4 1/2" NOZZLE OD
5" HOLE OPENING

DETAIL FOR NOZZLE L

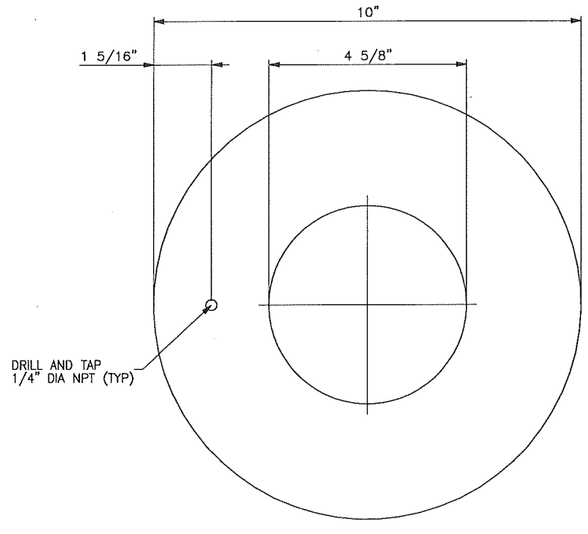

MK. SN07AB

REV.	BY	DATE	DESCRIPTION
2	MEM	04/14/2015	REVISE FLANGE FACE
1	EJ	03/23/2015	RESISE DWG REVISED BOM & TITLE BLOCK
0	EJ	02/16/2015	INITIAL ISSUE

BMT ACQUISITION, LLC
ENGINEERS – FABRICATORS – CONSTRUCTORS

8301 BROADWAY BLVD SE
ALBUQUERQUE, NM 87105–7453
PHONE: 505–563–4800
FAX: 505–563–4799
http://www.bmt-tank.com

T–110
&
T–116

4" SPARE NOZZLE
6,000 GAL. WATER STORAGE TANKS
(10.17'DIA. X 11'HGT.) AWWA–D100–11

CUSTOMER: FLITEWAY TECH., INC

PROJECT: EDB INTERIM MEASURE

DRAWN:	JOB No.:
EJ	30883
CHECKED: GAV	
DATE: 02/16/2015	SHEET No.: SN07
REVISION: 2	

WORK INSTRUCTIONS								
RECV	CUT ROLL	FIT	WELDED	READY TO COAT	SENT TO VENDOR	COATING COMPLETE	READY TO SHIP	SHIPPED

BILL OF MATERIALS								
QTY	SHPG MARK	ASSY QTY	ASSY MARK	DESCRIPTION	LENGTH	SPEC MATL	REMARKS	LBS WEIGHT
1	SN08A			6" SHELL NOZZLE				[31]
		1	SN08Aa	6" SCH 80 PIPE x	5 3/4"	A53-B		14
		1	SN08Ab	6" – 150# R.F. S.O. FLANGE		A105		17
1	SN08B			REPAD PL. 0.2500" x 6 3/4" ID x 15 3/4" OD		A36	ROLL	[12]

BILL OF MATERIALS LISTED FOR (1) TANK – (2) TANKS REQUIRED.

NOTES:
1.– AFTER INSTALLATION, AIR TEST REPAD WELDS TO 15 PSI PER API-650 PARA 7.3.4.
2.– AFTER THE REINFORCING PAD(S) HAVE BEEN TESTED, THE 0" DRILLED AND TAPPED HOLE(S) MUST REMAIN OPEN (NO PLUGS, GREASE, PAINT OR ANY OTHER FOREIGN MATERIAL PLUGGING THE 0" TEST HOLE).

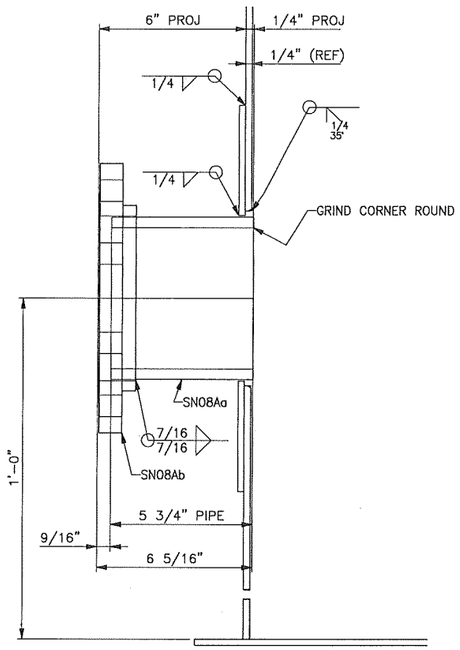

6" NOZZLE, MK. SN08A

6 5/8" NOZZLE OD
7 1/8" HOLE OPENING

DETAIL FOR NOZZLE M

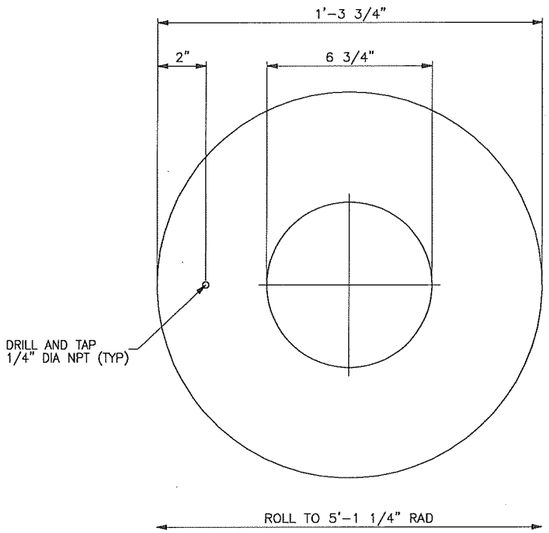

MK. SN08AB

REV.	BY	DATE	DESCRIPTION
2	MEM	04/14/2015	REVISE FLANGE FACE
1	EJ	03/23/2015	REVISE DWG REVISED BOM & TITLE BLOCK
0	EJ	02/16/2015	INITIAL ISSUE

BMT ACQUISITION, LLC
ENGINEERS – FABRICATORS – CONSTRUCTORS

8301 BROADWAY BLVD SE
ALBUQUERQUE, NM 87105-7453
PHONE: 505-563-4800
FAX: 505-563-4799
http://www.bmt-tank.com

T-110
&
T-116

6" SPARE NOZZLE
6,000 GAL. WATER STORAGE TANKS
(10.17'DIA. X 11'HGT.) AWWA-D100-11

CUSTOMER:
FLITEWAY TECH., INC

PROJECT:
EDB INTERIM MEASURE

DRAWN: EJ	JOB No.: 30883
CHECKED: GAV	
DATE: 02/16/2015	SHEET No.: SN08
REVISION: 2	

WORK INSTRUCTIONS								
RECV	CUT ROLL	FIT	WELDED	READY TO COAT	SENT TO VENDOR	COATING COMPLETE	READY TO SHIP	SHIPPED

BILL OF MATERIALS								
QTY	SHPG MARK	ASSY QTY	ASSY MARK	DESCRIPTION	LENGTH	SPEC MATL	REMARKS	LBS WEIGHT
1	RN01A			6" ROOF NOZZLE				[27]
		1	RN01Aa	6" SCH 40 PIPE x	6 5/16"	A53-B		10
		1	RN01Ab	6" - 150# R.F. S.O. FLANGE		A105		17

BILL OF MATERIALS LISTED FOR (1) TANK - (2) TANKS REQUIRED.

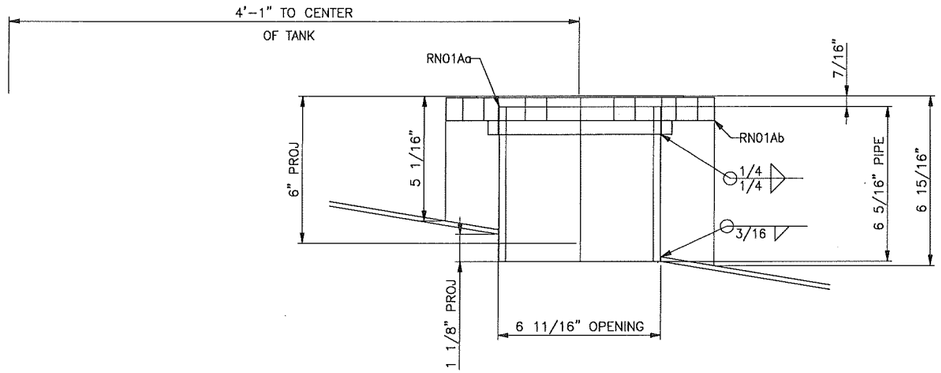

6" NOZZLE, MK. RN01A
DETAIL FOR NOZZLE
A

REV.	BY	DATE	DESCRIPTION
2	MEM	04/14/2015	REVISE FLANGE FACE
1	EJ	03/23/2015	REVISED DWG. REVISED B.O.M. & TITLE BLOCK
0	EJ	02/16/2015	INITIAL ISSUE

BMT ACQUISITION, LLC
ENGINEERS - FABRICATORS - CONSTRUCTORS

8301 BROADWAY BLVD SE
ALBUQUERQUE, NM 87105-7453
PHONE: 505-563-4800
FAX: 505-563-4799
http://www.bmt-tank.com

T-110
&
T-116

6" FILL NOZZLE
6,000 GAL. WATER STORAGE TANKS
(10.17'DIA. X 11'HGT.) AWWA-D100-11

CUSTOMER:
FLITEWAY TECH., INC

PROJECT:
EDB INTERIM MEASURE

DRAWN: EJ	JOB No.: 30883
CHECKED: GAV	
DATE: 02/16/2015	SHEET No.: RN01
REVISION: 2	

WORK INSTRUCTIONS								
RECV	CUT ROLL	FIT	WELDED	READY TO COAT	SENT TO VENDOR	COATING COMPLETE	READY TO SHIP	SHIPPED

BILL OF MATERIALS								
QTY	SHPG MARK	ASSY QTY	ASSY MARK	DESCRIPTION	LENGTH	SPEC MATL	REMARKS	LBS WEIGHT
1	RN02A			6" ROOF NOZZLE				[27]
		1	RN02Aa	6" SCH 40 PIPE x	6 5/16"	A53-B		10
		1	RN02Ab	6" - 150# R.F. S.O. FLANGE		A105		17

BILL OF MATERIALS LISTED FOR (1) TANK - (2) TANKS REQUIRED.

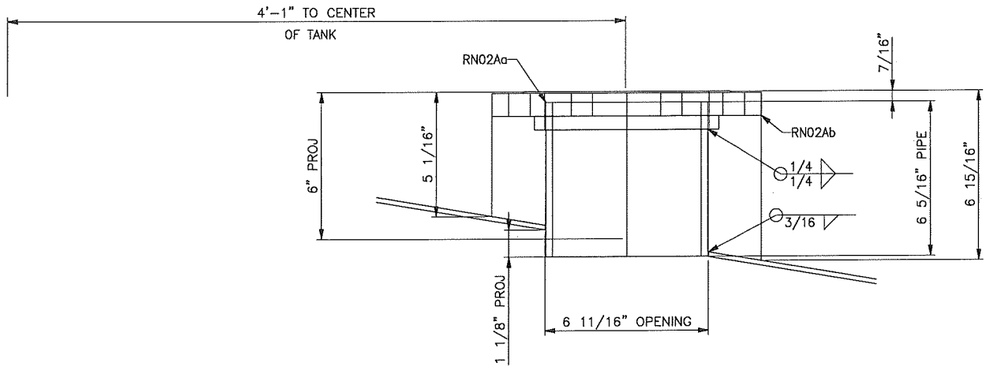

6" NOZZLE, MK. RN02A
DETAIL FOR NOZZLE
B

REV.	BY	DATE	DESCRIPTION
2	MEM	04/14/2015	REVISE FLANGE FACE
1	EJ	03/23/2015	REVISED DWG. REVISED B.O.M. & TITLE BLOCK
0	EJ	02/16/2015	INITIAL ISSUE

BMT ACQUISITION, LLC
ENGINEERS - FABRICATORS - CONSTRUCTORS

8301 BROADWAY BLVD SE
ALBUQUERQUE, NM 87105-7453
PHONE: 505-563-4800
FAX: 505-563-4799
http://www.bmt-tank.com

T-110
&
T-116

6" FILL NOZZLE
6,000 GAL. WATER STORAGE TANKS
(10.17'DIA. X 11'HGT.) AWWA-D100-11

CUSTOMER:
FLITEWAY TECH., INC

PROJECT:
EDB INTERIM MEASURE

DRAWN: EJ	JOB No.: 30883
CHECKED: GAV	
DATE: 02/16/2015	SHEET No.: RN02
REVISION: 2	

WORK INSTRUCTIONS								
RECV	CUT ROLL	FIT	WELDED	READY TO COAT	SENT TO VENDOR	COATING COMPLETE	READY TO SHIP	SHIPPED

BILL OF MATERIALS								
QTY	SHPG MARK	ASSY QTY	ASSY MARK	DESCRIPTION	LENGTH	SPEC MATL	REMARKS	LBS WEIGHT
1	RN03A			6" ROOF NOZZLE				[27]
		1	RN03Aa	6" SCH 40 PIPE x	6 5/16"	A53-B		10
		1	RN03Ab	6" – 150# R.F. S.O. FLANGE		A105		17

BILL OF MATERIALS LISTED FOR (1) TANK – (2) TANKS REQUIRED.

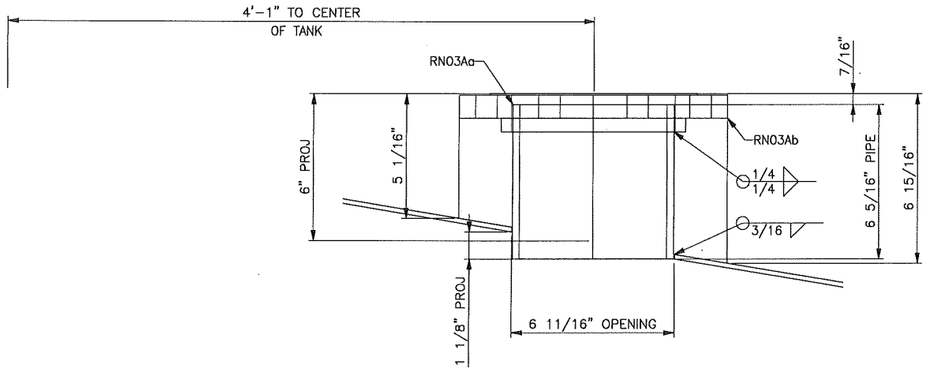

6" NOZZLE, MK. RN03A
DETAIL FOR NOZZLE
C

REV.	BY	DATE	DESCRIPTION
2	MEM	04/14/2015	REVISE FLANGE FACE
1	EJ	03/23/2015	REVISED DWG. REVISED B.O.M. & TITLE BLOCK
0	EJ	02/16/2015	INITIAL ISSUE

BMT ACQUISITION, LLC
ENGINEERS – FABRICATORS – CONSTRUCTORS

8301 BROADWAY BLVD SE
ALBUQUERQUE, NM 87105-7453
PHONE: 505-563-4800
FAX: 505-563-4799
http://www.bmt-tank.com

T-110
&
T-116

6" VENT NOZZLE
6,000 GAL. WATER STORAGE TANKS
(10.17'DIA. X 11'HGT.) AWWA-D100-11

CUSTOMER:
FLITEWAY TECH., INC

PROJECT:
EDB INTERIM MEASURE

DRAWN: EJ	JOB No.: 30883
CHECKED: GAV	
DATE: 02/16/2015	SHEET No.: RN03
REVISION: 2	

WORK INSTRUCTIONS								
RECV	CUT ROLL	FIT	WELDED	READY TO COAT	SENT TO VENDOR	COATING COMPLETE	READY TO SHIP	SHIPPED

BILL OF MATERIALS								
QTY	SHPG MARK	ASSY QTY	ASSY MARK	DESCRIPTION	LENGTH	SPEC MATL	REMARKS	LBS WEIGHT
1	RN04A			6" ROOF NOZZLE				[27]
		1	RN04Aa	6" SCH 40 PIPE x	6 5/16"	A53-B		10
		1	RN04Ab	6" ~ 150# R.F. S.O. FLANGE		A105		17

BILL OF MATERIALS LISTED FOR (1) TANK - (2) TANKS REQUIRED.

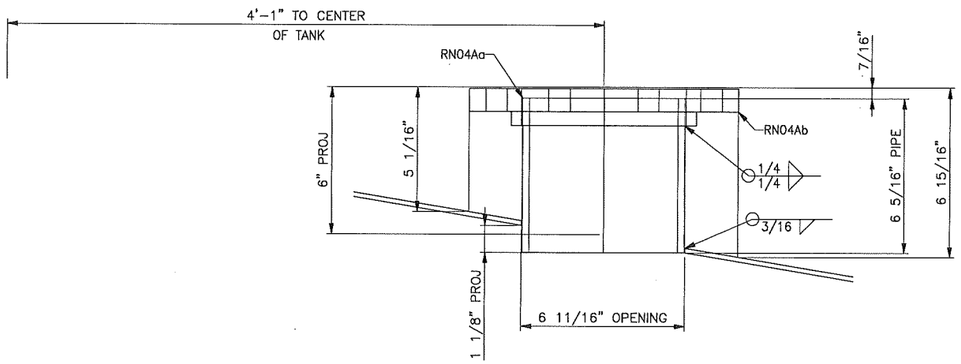

6" NOZZLE, MK. RN04A
DETAIL FOR NOZZLE
D

REV.	BY	DATE	DESCRIPTION
2	MEM	04/14/2015	REVISE FLANGE FACE
1	EJ	03/23/2015	REVISED DWG. REVISED B.O.M. & TITLE BLOCK
0	EJ	02/16/2015	INITIAL ISSUE

BMT ACQUISITION, LLC
ENGINEERS - FABRICATORS - CONSTRUCTORS
8301 BROADWAY BLVD SE
ALBUQUERQUE, NM 87105-7453
PHONE: 505-563-4800
FAX: 505-563-4799
http://www.bmt-tank.com

T-110
&
T-116

6" SPARE NOZZLE
6,000 GAL. WATER STORAGE TANKS
(10.17'DIA. X 11'HGT.) AWWA-D100-11

CUSTOMER:
FLITEWAY TECH., INC

PROJECT:
EDB INTERIM MEASURE

DRAWN:	JOB No.:
EJ	30883
CHECKED: GAV	
DATE: 02/16/2015	SHEET No.: RN04
REVISION: 2	

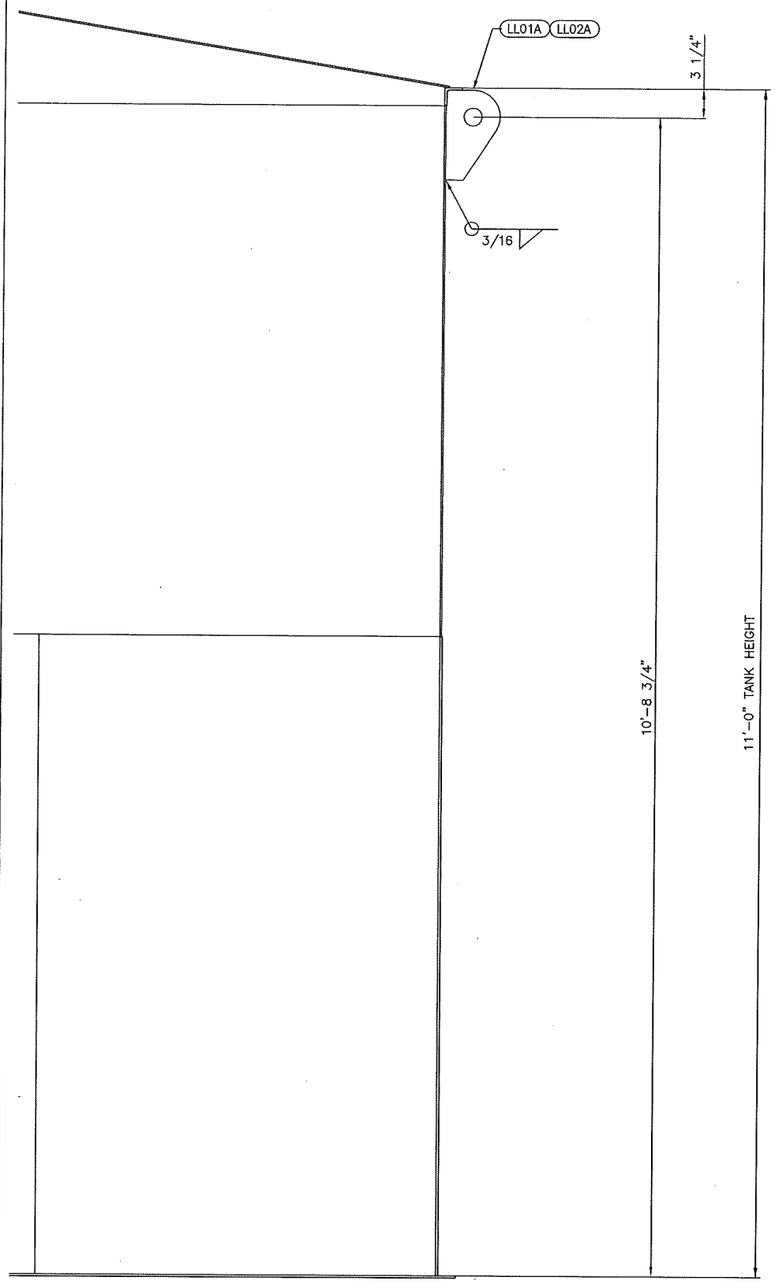

ELEVATION
TYP ELEV FOR ALL LIFTING LUGS

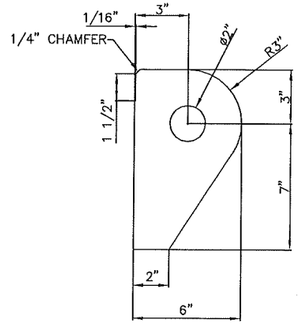

LL01A & LL02A

WORK INSTRUCTIONS

RECV	CUT ROLL	FIT	WELDED	READY TO COAT	SENT TO VENDOR	COATING COMPLETE	READY TO SHIP	SHIPPED

BILL OF MATERIALS

QTY	SHPG MARK	ASSY QTY	ASSY MARK	DESCRIPTION	LENGTH	SPEC MATL	REMARKS	LBS WEIGHT
1	LL01A			LIFTING LUG				[6]
		1	LL01Aa	FB 1/2" x 6" x	10"	A36		6
1	LL02A			LIFTING LUG				[6]
		1	LL02Aa	FB 1/2" x 6" x	10"	A36		6

BILL OF MATERIALS LISTED FOR (1) TANK – (2) TANK REQUIRED.

NOTE:

1.– LIFTING LUG CAPACITY = 17,000 LBS/EACH

REV.	BY	DATE	DESCRIPTION
1	EJ	03/23/2015	REVISED TITLE BLOCK
0	EJ	02/16/2015	INITIAL ISSUE

BMT ACQUISITION, LLC
ENGINEERS – FABRICATORS – CONSTRUCTORS

8301 BROADWAY BLVD SE
ALBUQUERQUE, NM 87105–7453
PHONE: 505–563–4800
FAX: 505–563–4799
http://www.bmt-tank.com

T–110
&
T–116

LIFTING LUGS
6,000 GAL. WATER STORAGE TANK
(10.17'DIA. X 11'HGT.) AWWA–D100–11

CUSTOMER:
FLITEWAY TECH., INC

PROJECT:
EDB INTERIM MEASURE

DRAWN: EJ	JOB No.: 30883
CHECKED: GAV	
DATE: 02/16/2015	SHEET No.: LL01
REVISION: 1	

AWWA-D-100
BMT ACQUISITION, LLC
ALBUQUERQUE, NM

APPENDIX	AWWA D-100	YEAR COMPLETED	2015
EDITION	11TH EDITION	NOMINAL HEIGHT	11FT
NOMINAL DIAMETER	10.17FT	DESIGN LIQUID LEVEL	10.08FT
MAXIMUM CAPACITY	6123.0 GALS	DESIGN METAL TEMP.	25'F
DES. SPEC. GRAVITY	1.0	MAX. OPERATING TEMP.	100'F
MANUFACTURER'S #	30883	PURCHASERS TANK #	T-110

FABRICATED BY BMT ACQUISITION, LLC

COURSES	THK.	MATERIAL
SHELL RING 1	1/4"	A36
SHELL RING 2	3/16"	A36
ROOF	3/16"	A36
BOTTOM	1/4"	A36

T-110 TANK ONLY

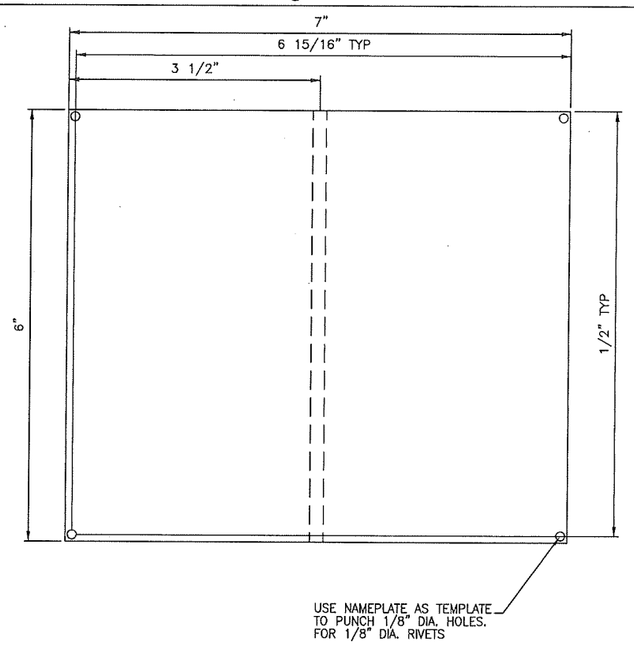

WORK INSTRUCTIONS

RECV	CUT ROLL	FIT	WELDED	READY TO COAT	SENT TO VENDOR	COATING COMPLETE	READY TO SHIP	SHIPPED

BILL OF MATERIALS

QTY	SHPG MARK	ASSY QTY	ASSY MARK	DESCRIPTION	LENGTH	SPEC MATL	REMARKS	LBS WEIGHT
1	NP01A			NAMEPLATE ASSEMBLY				[6]
		1	NP01Aa	PL. 3/16" x 6" x	7"	A36		3
		1	NP01Ab	PL. 3/16" x 3" x	6"	A36		2
		4	NP01Ac	1/8" DIA. RIVETS				0
		1	NP01Ad	NAME PLATE NAMEPLATE		SS		1
2	NP01B			GROUNDING LUG				[4]
		1	NP01Ba	PL. 3/8" x 4" x	4"	A36		2

BILL OF MATERIALS LISTED FOR (1) TANK - (2) TANKS REQUIRED.

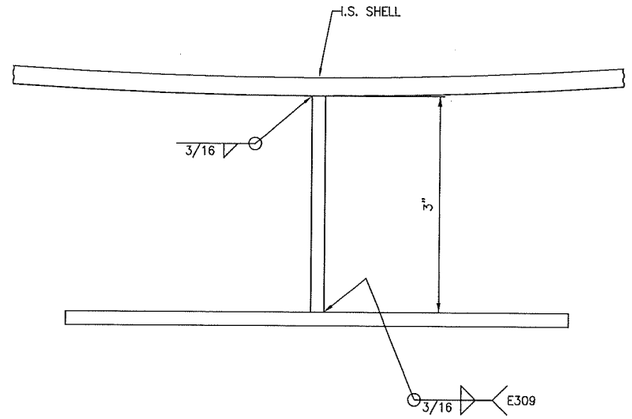

NAMEPLATE BRACKET

AWWA-D-100
BMT ACQUISITION, LLC
ALBUQUERQUE, NM

APPENDIX	AWWA D-100	YEAR COMPLETED	2015
EDITION	11TH EDITION	NOMINAL HEIGHT	11FT
NOMINAL DIAMETER	10.17FT	DESIGN LIQUID LEVEL	10.08FT
MAXIMUM CAPACITY	6123.0 GALS	DESIGN METAL TEMP.	25'F
DES. SPEC. GRAVITY	1.0	MAX. OPERATING TEMP.	100'F
MANUFACTURER'S #	30883	PURCHASERS TANK #	T-116

FABRICATED BY BMT ACQUISITION, LLC

COURSES	THK.	MATERIAL
SHELL RING 1	1/4"	A36
SHELL RING 2	3/16"	A36
ROOF	3/16"	A36
BOTTOM	1/4"	A36

T-116 TANK ONLY

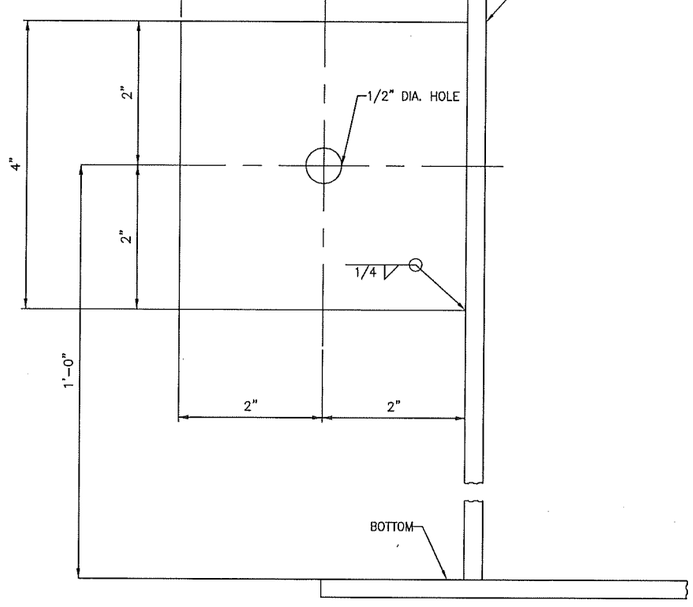

GROUNDING LUG
(2) REQ'D

REV.	BY	DATE	DESCRIPTION
1	EJ	03/23/2015	REVISED TITLE BLOCK
0	EJ	02/16/2015	INITIAL ISSUE

BMT ACQUISITION, LLC
ENGINEERS - FABRICATORS - CONSTRUCTORS
8301 BROADWAY BLVD SE
ALBUQUERQUE, NM 87105-7453
PHONE: 505-563-4800
FAX: 505-563-4799
http://www.bmt-tank.com

T-110 & T-116

NAMEPLATE & G. LUGS
6,000 GAL. WATER STORAGE TANKS
(10.17'DIA. X 11'HGT.) AWWA-D100-11

CUSTOMER: FLITEWAY TECH., INC
PROJECT: EDB INTERIM MEASURE

DRAWN:	JOB No.:
EJ	30883
CHECKED: GAV	
DATE: 02/16/2015	SHEET No.: NP01
REVISION: 1	

BMT 30883

TANK CALCULATIONS

6,000 Gal. Water Storage Tanks
T-102 & T-108
(10.17´Dia. x 11´Hgt.) AWWA-D100
For
EDB Interim Measure
Kirtland, AFB

PROJECT ENGINEER

CB&I

☑ FOR APPROVAL ONLY
BROWN-MINNEAPOLIS TANK
ENGINEERING DIVISION

DESIGN ENGINEER

BMT Acquisition, LLC

BROWN-MINNEAPOLIS TANK
ENGINEERS - FABRICATORS - CONSTRUCTORS

10.17´Dia. x 11´ Hgt - FBSSCRT
6000 Gal. Water Tanks

Customer:
Fliteway Technologies, Inc.
Job Number:
30883
Date: 02-18-2015 Rev.: 0

Standard Compliant Errors

Standard Compliant Errors

BROWN-MINNEAPOLIS TANK
ENGINEERS - FABRICATORS - CONSTRUCTORS

10.17´Dia. x 11´ Hgt - FBSSCRT
6000 Gal. Water Tanks

Customer:
Fliteway Technologies, Inc.
Job Number:
30883
Date: 02-18-2015 Rev.: 0

Comments

Comments
Shell
Joint efficiency for all shell courses = 85%. X-rays are required. Quantity of x-rays shall be per Sec. 11.5.
Roof
Roof is butt welded
Wind
Anchorage of the tank for wind is not required
Seismic
Tank is self-anchored
Available freeboard is adequate.
Tank is stable against sliding.
Anchor Bolt and Anchor Chair
Tank is not anchored

BROWN-MINNEAPOLIS TANK
ENGINEERS - FABRICATORS - CONSTRUCTORS

10.17´Dia. x 11´ Hgt - FBSSCRT
6000 Gal. Water Tanks

Customer:
Fliteway Technologies, Inc.
Job Number:
30883
Date: 02-18-2015 Rev.: 0

Design Data

Tank Diameter	10'- 2.0000" (Inside)
Tank Height	11'- 0.0000"
High Liquid Level	10'- 1.0000"
Normal Liquid Level	10'- 1.0000"
Low Liquid Level	0'- 0.0000"
Total Capacity	6,123 gallons
	146 barrels
Working Capacity	6,123 gallons
	146 barrels

Design Standard	AWWA D-100-11
Design Metal Temperature	25 °F
Operating Temperature	100 °F
Design Temperature	100 °F
Roof Live Load	20.00 psf
Roof Design Snow Load	25.00 psf
Additional Roof Loads	0.00 psf
Wind:	
Velocity	100 mph
Importance Factor	1.15
Exposure	C
Seismic:	
Site Class	D
Importance Factor	1.50
Use Group	III
Ss Value	47.00 %
S_1 Value	14.00 %
Vertical Acceleration	0.00 g
Transitional Period (T_L)	6
Specific Gravity	1.000

BROWN-MINNEAPOLIS TANK
ENGINEERS - FABRICATORS - CONSTRUCTORS

Internal Pressure (Design)	Atmospheric
(Operating)	Atmospheric
External Pressure (Design)	Atmospheric
(Operating)	Atmospheric

Corrosion Allowance:

Bottom	0.0000 in
Shell Courses 1 - 1	0.0000 in
Courses 2 - 2	0.0000 in
Roof	0.0000 in
Compression Ring	0.0000 in

All Calculations are to be in the Corroded Condition

10.17´Dia. x 11´ Hgt - FBSSCRT
6000 Gal. Water Tanks

Customer:
Fliteway Technologies, Inc.
Job Number:
30883
Date: 02-18-2015 Rev.: 0

Summary

Total Weight of Tank: 4,748 lbs
Total Operating Weight: 55,826 lbs
Total Testing Weight: 55,826 lbs

Bottom

Flat Bottom:
0.2500 in (A36) PL (weight: 884 lbs)

Outside projection = 2.0000 in

Tank bottom is butt welded.

Shell

Shell Course 01: 0.2500 in (A36) PL x 71.0000 in wide (weight: 1,929 lbs)

Shell Course 02: 0.1875 in (A36) PL x 59.0000 in wide (weight: 1,203 lbs)

Self-Supporting Cone Roof

0.1875 in (A36) PL (weight: 630 lbs)

Roof Slope: 2.0000 in 12 ø: 9.4623° Roof Rise: 0.8472 ft

Roof is butt welded

Compression Ring

L2 x2 x1/4 per Detail d (A36)
Weight: 102 lbs

2 inches Vertical leg of rim angle is butt welded to the top of the shell with the horizontal leg turned out

10.17´Dia. x 11´ Hgt - FBSSCRT
6000 Gal. Water Tanks

Customer:
Fliteway Technologies, Inc.
Job Number:
30883
Date: 02-18-2015 Rev.: 0

Shell Nozzles

24"Dia. Shell Manway - K

24" API-650 Shell Manhole w/Blind Flange
Elevation: 30.0000 in
Orientation: 0.0000°

Nozzle Neck: Plate
Material Grade: A36
Wall Thickness: 0.2500 in

Flange Material:
A36

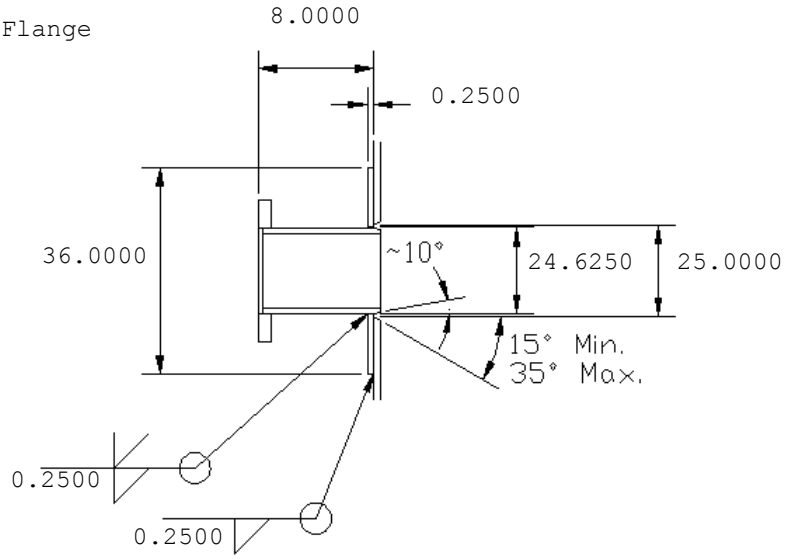

Reinforcing Pad Material:
A36

Flange Thickness: 0.5000 in
Machining Allowance: 0.1875 in

Blind Flange Material Grade: A36

Thickness: 0.3750 in

4"Discharge Nozzle - F

4" 150# SO Flanged Nozzle
Elevation: 6.0000 in
Orientation: 135.0000°

Nozzle Neck: SCH80 Pipe
Material Grade: A53-B
Wall Thickness: 0.3370 in

Flange Material:
A105

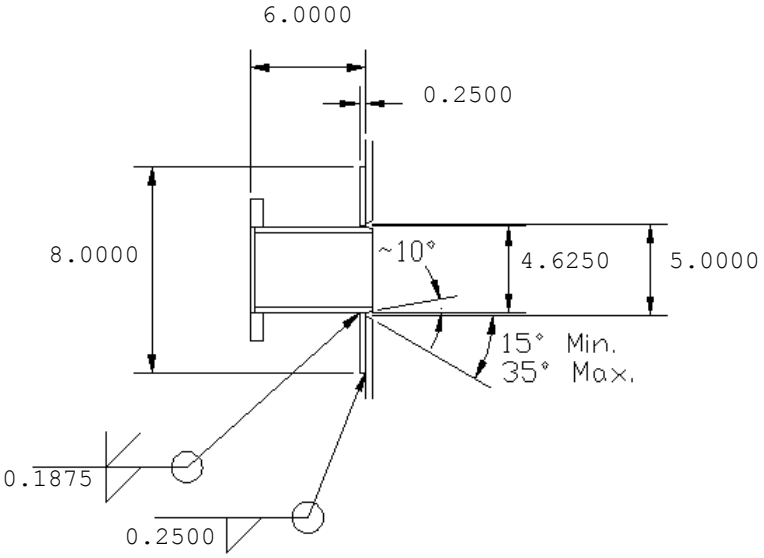

Reinforcing Pad Material:
A36

BROWN-MINNEAPOLIS TANK
ENGINEERS - FABRICATORS - CONSTRUCTORS

10.17´Dia. x 11´ Hgt - FBSSCRT
6000 Gal. Water Tanks

Customer:
Fliteway Technologies, Inc.
Job Number:
30883
Date: 02-18-2015 Rev.: 0

4" Discharge Nozzle - G

4" 150# SO Flanged Nozzle
Elevation: 6.0000 in
Orientation: 180.0000°

Nozzle Neck: SCH80 Pipe
Material Grade: A53-B
Wall Thickness: 0.3370 in

Flange Material:
A105

Reinforcing Pad Material:
A36

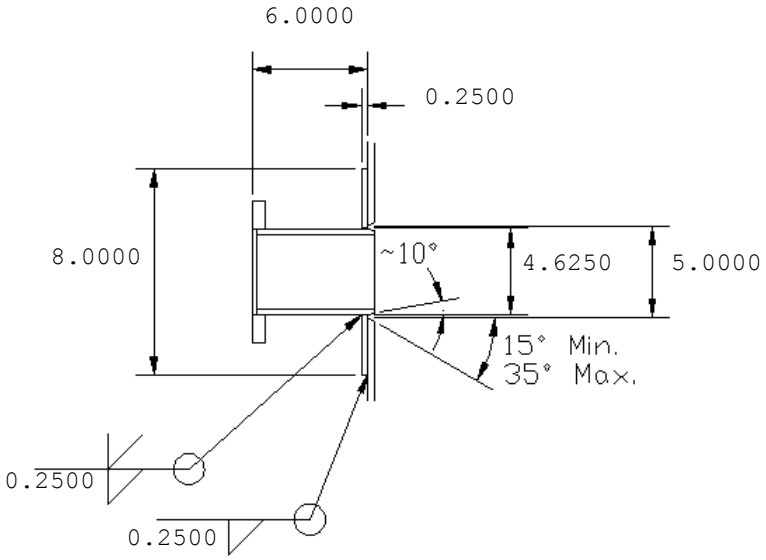

2" Drain Nozzle - H

2" 150# SO Flanged Nozzle
Elevation: 6.0000 in
Orientation: 90.0000°

Nozzle Neck: 160 Pipe
Material Grade: A53-B
Wall Thickness: 0.3430 in

Flange Material:
A105

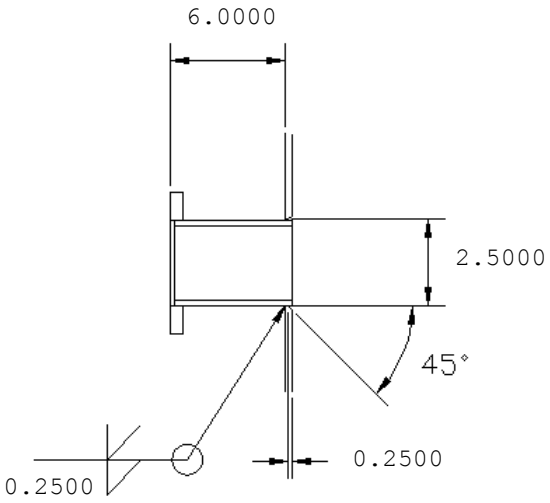

BROWN-MINNEAPOLIS TANK
ENGINEERS - FABRICATORS - CONSTRUCTORS

2" Level Nozzle - I

2" 150# SO Flanged Nozzle
Elevation: 6.0000 in
Orientation: 315.0000°

Nozzle Neck: 160 Pipe
Material Grade: A53-B
Wall Thickness: 0.3430 in

Flange Material:
A105

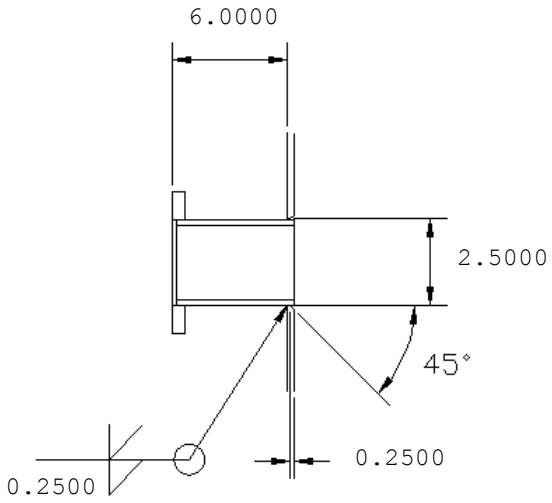

2" Level Nozzle - J

2" 150# SO Flanged Nozzle
Elevation: 10.0000 in
Orientation: 330.0000°

Nozzle Neck: 160 Pipe
Material Grade: A53-B
Wall Thickness: 0.3430 in

Flange Material:
A105

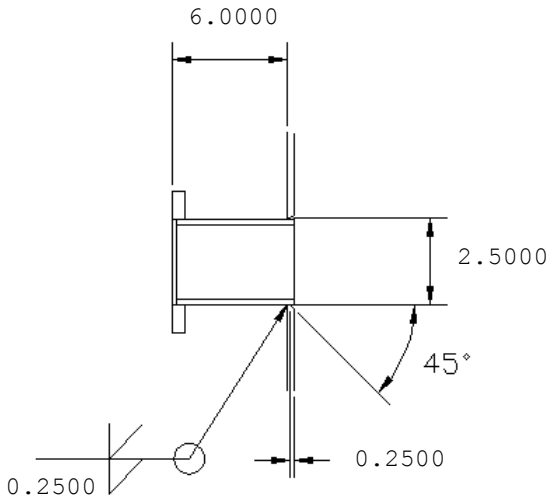

10.17´Dia. x 11´ Hgt - FBSSCRT
6000 Gal. Water Tanks

Customer:
Fliteway Technologies, Inc.
Job Number:
30883
Date: 02-18-2015 Rev.: 0

4" Spare Nozzle - L

4" 150# SO Flanged Nozzle
Elevation: 10.0000 in
Orientation: 45.0000°

Nozzle Neck: SCH80 Pipe
Material Grade: A53-B
Wall Thickness: 0.3370 in

Flange Material:
A105

Reinforcing Pad Material:
A36

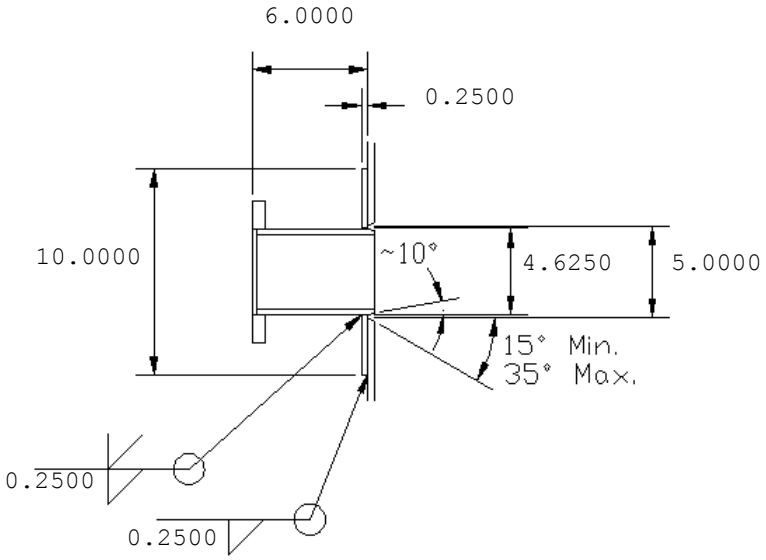

BROWN-MINNEAPOLIS TANK
ENGINEERS - FABRICATORS - CONSTRUCTORS

Bottom Design

Flat Bottom

Material Grade: A36
Thickness (tb): 0.2500 in
Corrosion Allowance (CA): 0.0000 in

Minimum required outside projection = 1.0000 in

Actual outside projection (p) = 2.0000 in

Minimum thickness per Section 3.10 = 0.2500 in

Tank bottom is butt welded.

Shell Design

Per Eq. 3-40

$$t = \frac{2.6\ hp\ D\ G}{sE} + CA$$

where
Diameter (D) = 10.1667 ft
Specific Gravity (G) = 1.000
Joint Efficiency (E) = 0.85

Shell Course 01

Material Grade:	A36	
Allowable Stress (s):		psi
Shell Height:	5.9167	ft
Corrosion Allowance (CA):	0.0000	in
Liquid Height (hp):	10.0833	ft

$$t = \frac{(2.6)(10.0833)(10.1667)(1.0000)}{(15000.0000)(0.8500)} + 0.0000 = 0.0209 \text{ in}$$

(Per Table 16 - min. t = 0.1875 in)
Actual t = 0.2500 in

Shell Course 02

Material Grade:	A36	
Allowable Stress (s):		psi
Shell Height:	4.9167	ft
Corrosion Allowance (CA):	0.0000	in
Liquid Height (hp):	4.1667	ft

$$t = \frac{(2.6)(4.1667)(10.1667)(1.0000)}{(15000.0000)(0.8500)} + 0.0000 = 0.0086 \text{ in}$$

(Per Table 16 - min. t = 0.1875 in)
Actual t = 0.1875 in

10.17´Dia. x 11´ Hgt - FBSSCRT
6000 Gal. Water Tanks

Customer:
Fliteway Technologies, Inc.
Job Number:
30883
Date: 02-18-2015 Rev.: 0

Self-Supporting Cone Roof (Sec. 3.6.2)(per API-650)

Material Grade:	A36
Roof Thickness (t_r):	0.1875 in
Corrosion Allowance (CA):	0.0000 in
Tank Diameter (D):	10.1667 ft

Roof is butt welded

Roof Slope: 2.0000 in 12
ø: 9.4623°
Roof Rise: 0.8472 ft

Live Load (L_v):	20.0000 lbf/ft²
Snow Load (S):	25.0000 lbf/ft²
Dead Load (D_L):	7.6575 lbf/ft²
Ext. Pressure (P_e):	0.0000 lbf/ft²

Per R.1(e)(1), $T = D_L + (L_v \text{ or } S) + 0.4P_e =$
$7.6575 + 25.0000 + (0.4)(0.0000) = 32.6575$ lbf/ft²

Per R.1(e)(2), $T = D_L + 0.4(L_v \text{ or } S) + P_e =$
$7.6575 + (0.4)(25.0000) + 0.0000 = 17.6575$ lbf/ft²

Use greater of (1) or (2), T = 32.6575 lbf/ft²

Minimum thickness per AWWA D-100 Section 3.10 =0.1792 in

Per 5.10.5.1:

$$t_r = \frac{D}{400.0000 \sin ø}\sqrt{\left\{\frac{T}{45.0000}\right\}} + CA =$$

$$\frac{10.1667}{400.0000 \sin(9.4623)}\sqrt{\left\{\frac{32.6575}{45.0000}\right\}} + 0.0000 = 0.1317 \text{ in}$$

Per 5.10.5.2:

$$A_r = \frac{D^2}{3000.0000 \sin ø}\left\{\frac{T}{45.0000}\right\} =$$

$$\frac{(10.1667)^2}{3000.0000 \sin(9.4623)}\left\{\frac{32.6575}{45.0000}\right\} = 0.1521 \text{ in}^2$$

Compression Ring

L2 x2 x1/4 per Detail d

2 inches Vertical leg of rim angle is butt welded to the top of the shell with the horizontal leg turned out

Material: A36

API-650 Figure F-2

R_c = 61.0000 in

Roof Angle (ø) = 9.4623°

$R_2 = R_c/(\sin ø) = 61.0000/(\sin 9.4623) = 371.0485$ in

t_h = 0.1875 in

$w_h = 0.3 \sqrt{(R_2 t_h)} = 0.3 \sqrt{(371.0485 * 0.1875)} = 2.5023$ in
not to exceed 12.0000 in
therefore w_h = 2.5023 in

Available area from roof $(A_r) = t_h w_h = 0.1875 * 2.5023 = 0.4692$ in²

t_c = 0.1875 in

$w_c = 0.6 \sqrt{(R_c t_c)} = 0.6 \sqrt{(61.0000 * 0.1875)} = 2.0292$ in

Distance from top of angle to top of shell (b) = 2.0000 in
Available area from shell $(A_s) = (w_c - b)t_c = (2.0292 - 2.0000) * 0.1875 = 0.0055$ in²

t_a = 0.2500 in
Horizontal projection of angle (a_1) = 1.7500 in
Maximum horizontal projection = $16t_a = 16 * 0.2500 = 4.0000$ in
therefore a_1 = 1.7500 in
Vertical projection of angle (a_2) = 2.0000 in
Maximum vertical projection = w_c = 2.0292 in
therefore a_2 = 2.0000 in
Available area from compression ring $(A_c) = (a_1 + a_2)t_a =$
$(1.7500 + 2.0000)0.2500 = 0.9375$ in²

Total available area $(A_t) = A_r + A_s + A_c = 0.4692 + 0.0055 + 0.9375 = 1.4121$ in²

Wind Calculations

Wind velocity (V) = 100 mph
Tank diameter (D) = 10.1667 ft
Tank height (H) = 11.0000 ft
Importance factor (I) = 1.15
Exposure C

Calculation are in the corroded condition

Calculate average shell thickness:

For each shell course, WT = W x T

(Shell courses are numbered from bottom to top)

Shell Course	W (ft)	Tactual (in)	WT
Angle	0.1667	0.2500	0.0417
2	4.9167	0.1875	0.9219
1	5.9167	0.2500	1.4792
Total:	11.0000		2.4427

Average thickness (t) = WT/W = 2.4427/11.0000 = 0.2221 in

Determine Pw per 3.1.4

For Shell:
Centroid of shell C_s = 5.5000 ft
z = C_s but not less than 15.0000 ft
z = 15.00 ft from bottom of tank
Per ASCE7, zg = 900.0000 ft
α = 9.50
K_z = 2.01 (15.00/900.0000)^(2/9.50) = 0.8489
Per Eq. 3-2, $q_z = 0.00256 K_z I V^2$ = (0.00256)(0.8489)(1.1500)(100.0000)² = 24.9911 lbf/ft²
Per Table 2, C_f = 0.60
G = 1.00
Per Eq. 3-1, $P_w = q_z G C_f$ = (24.9911)(1.00)(0.6000) = 14.9947 lbf/ft²
but not less than 30.0000C_f = (30.00)(0.6000) = 18.0000 lbf/ft²
Therefore, P_{ws} = 18.0000 lbf/ft²

For roof:
Roof height H_r = 0.8472 ft
Centroid of roof $C_r = H + H_r/3 = 11.0000 + 0.8472/3 = 11.2824$ ft
$z = C_r$ but not less than 15.0000 ft
z = 15.00 ft from bottom of tank
Per ASCE7, z_g = 900.0000 ft
$\alpha = 9.50$
$K_z = 2.01\ (15.00/900.0000)^{(2/9.50)} = 0.8489$
Per Eq. 3-2, $q_z = 0.00256 K_z I V^2 = (0.00256)(0.8489)(1.1500)(100.0000)^2 = 24.9911$ lbf/ft²
Per Table 2, C_f = 0.60
G = 1.00
Per Eq. 3-1, $P_w = q_z G C_f = (24.9911)(1.00)(0.60) = 14.9947$ lbf/ft²
but not less than $30.0000 C_f = (30.00)(0.60) = 18.0000$ lbf/ft²
Therefore, P_{wr} = 18.0000 lbf/ft²

Overturning moment:
Roof exposed area, A_r = 4.3067 ft²
Overturning Moment (Mw) = $P_{ws} D H C_s + P_{wr} A_r C_r$ =
$= (18.0000)(10.1667)(11.0000)(5.5000) +$
$(18.0000)(4.3067)(11.2824) = 11946.1216$ ft-lbs

Check for tank stability without anchors:
Weight of shell and roof supported by shell (DL) = 3864.0380 lbs
MDL = DL * D/3 = 3864.0380 * 10.1667 / 3 = 13094.7955 ft-lbs

Anchorage of the tank for wind is not required

Determine if intermediate wind girder is required:

For distance 11.0000 ft from top of tank, average thickness (t) = 0.2221 in

Per Eq. 3-36: $h = \dfrac{10625000 t}{Paw (D/t)^{1.5}} =$

$\dfrac{(10625000)(0.2221)}{(18.0000)(10.1667/0.2221)^{1.5}} = 423.1418$ ft

h > H

Wind girder is not required. Iteration requirements of 3.5.2.1 have been met.

Customer:
Fliteway Technologies, Inc.
Job Number:
30883
Date: 02-18-2015 Rev.: 0

Weights

	New (lbf)	Corroded (lbf)
Product:	51078.2212	51078.2212
Total Shell Plates:	3131.9433	3131.9433
Total Bottom Plates:	884.0854	884.0854
Total Roof Plates:	630.2076	630.2076
Total Live Load:	1623.5925	1623.5925
Total Snow Load:	2029.4907	2029.4907
Total Additional Dead Load:	0.0000	0.0000
Shell Insulation:	0.0000	0.0000
Roof Insulation:	0.0000	0.0000
Total Rafters:	0.0000	0.0000
Total Roof and Framing:	630.2076	630.2076
Total Shell Appurtenances:	0.0000	0.0000
Total Roof Appurtenances:	0.0000	0.0000
Total Roof Appurtenances acting on Shell	0.0000	0.0000
Live Load acting on Shell:	1623.5925	1623.5925
Snow Load acting on Shell:	2029.4907	2029.4907
Total of Roof acting on Shell:	630.2076	630.2076
Total of Roof Structural acting on Shell:	0.0000	0.0000
Total Compression Ring and Shell Stiffener	101.8871	101.8871

Seismic Calculations

Tank diameter (D): 10.1667 ft
Product Height (H): 10.0833 ft
Specific Gravity (G): 1.0000

Tank is self-anchored

Mapped spectral response acceleration (S_s): 0.4700 g
Mapped spectral response acceleration (S_1): 0.1400 g

Vertical earthquake acceleration coefficient (A_v): 0.0625 g

Site Class per Table 25 : D
Seismic Use Group per 13.2.1 : III

From Table 26, F_a = 1.4240
From Table 27, F_v = 2.2400
From Table 24, I_E = 1.5000
From Table 28, R_i = 2.5000
From Table 28, R_c = 1.5000

Scaling factor per 13.2.7.3, U = 2/3

Per Eq. 13-7, $S_{DS} = UF_aS_s = (2/3)(1.4240)(0.4700) = 0.4462$
Per Eq. 13-8, $S_{D1} = UF_vS_1 = (2/3)(2.2400)(0.1400) = 0.2091$

$q = 32.2000\ ft/s^2$

13.5.1 First Mode Sloshing Wave Period

Per Eq. 13-22: $T_c = 2\pi \sqrt{\frac{D}{\{3.68g \tanh\left(\frac{3.68H}{D}\right)\}}} =$

$$2\pi \sqrt{\frac{10.1667}{\{(3.68)(32.2000)\tanh\left(\frac{(3.68)(10.0833)}{10.1667}\right)\}}} = 1.8417$$

Per Eq. 13-9, $S_{ai} = S_{DS} = 0.4462$

Impulsive spectral acceleration parameter:

Per Eq. 13-17: $A_i = \frac{S_{ai} I_E}{1.4 R_i} = \frac{(0.4462)(1.50)}{1.4(2.5000)} = 0.1912$

and $A_i \geq \frac{0.36 S_1 I_E}{R_i} = \frac{0.36(0.1400)(1.50)}{2.5000} = 0.0302$

Therefore, $A_i = 0.1912$

Convective spectral acceleration parameter:

From Figure 19, $T_L = 6.0000$
Per 13.2.7.3.2, $K = 1.5$

$T_c \leq T_L$, Per Eq. 13-12

$S_{ac} = \frac{K S_{D1}}{T_c} = \frac{(1.5)(0.2091)}{1.8417} = 0.1703$

However, $S_{ac} \leq S_{DS}$
Therefore, $S_{ac} = 0.1703$

Per Eq. 13-18, $A_c = \frac{S_{ac} I_E}{1.4 R_c} = \frac{(0.1703)(1.5000)}{(1.4)(1.5000)} = 0.1216$

Per 13.5.2.2.1

D/H = 10.1667/10.0833 = 1.0083

Weights:
W_s = 3234 lbs
W_f = 884 lbs
W_r = Roof weight = 630 lbs
W_T = 51078 lbs

D/H < 1.333

Per Eq. 13-25, $W_i = (1.0 - 0.218 D/H) W_T = (1.0 - 0.218 * 1.0083)(51078) = 39851$ lbs

Per Eq. 13-26, $W_c = 0.230 D/H \tanh(3.67 H/D) W_T =$
$(0.230)(1.0083)[\tanh(3.67/1.0083)](51078) = 11829$ lbs

Per 13.5.3.1, Eq. 13-31

$$V_f = \sqrt{\{[A_i(W_s + W_r + W_f + W_i)]^2 + [A_c W_c]^2\}} = \sqrt{\{[(0.1912)(3234 + 630 + 884 + 39851)]^2 + [(0.1216)(11829)]^2\}} = 8649 \text{ lbs}$$

Per 13.5.2.2.2

$D/H < 1.333$

Per Eq. 13-29, $X_i = [0.5 - 0.094D/H]H = [0.5 - (0.094)(1.0083)](10.0833) = 4.0860$ ft

Per Eq. 13-30, $$X_c = \left[1.0 - \frac{\cosh(3.67H/D) - 1}{3.67H/D \sinh(3.67H/D)}\right] H =$$

$$\left[1.0 - \frac{\cosh(3.67/1.0083) - 1}{(3.67/1.0083)\sinh(3.67/1.0083)}\right](10.0833) = 7.4549 \text{ ft}$$

Per 13.5.3.2.2

$D/H < 1.333$

Per Eq. 13-34, $X_{imf} = [0.500 + 0.600D/H]H = [0.500 + (0.060)(1.0083)](10.0833) = 5.6517$ ft

Per Eq. 13-35, $$X_{cmf} = \left[1.0 - \frac{\cosh(3.67H/D) - 1.937}{3.67H/D \sinh(3.67H/D)}\right] H =$$

$$\left[1.0 - \frac{\cosh(3.67/1.0083) - 1.937}{(3.67/1.0083)\sinh(3.67/1.0083)}\right](10.0833) = 7.5913 \text{ ft}$$

Per 13.5.2.1, Eq. 13-23

$$M_s = \sqrt{\{[A_i(W_iX_i + W_sX_s + W_rH_t)]^2 + [A_c(W_cX_c)]^2\}} = \sqrt{\{[0.1912(39851*4.0860 + 3234*4.8461 + 630*11.0000)]^2 + [0.1216(11829*7.4549)]^2\}} = 37046 \text{ ft-lbs}$$

Per 13.5.2.2, Eq. 13-32

$$M_{mf} = \sqrt{\{[A_i(W_iX_{imf} + W_sX_s + W_rH_t)]^2 + [A_c(W_cX_{cmf})]^2\}} = \sqrt{\{[0.1912(39851*5.6517 + 3234*4.8461 + 630*11.0000)]^2 + [0.1216(11829*7.5913)]^2\}} = 48633 \text{ ft-lbs}$$

Self-anchored tank (new condition)

Per 13.5.4.2.1

W_s = 3234 lbs
w_{rs} = 19.7313 lbf/ft
t_b = 0.2500 in
t_s = 0.2500 in
$w_t = W_s/(\pi D) + w_{rs} = 3234/(\pi * 10.1667) + 19.7313 = 120.9798$ lbf/ft

Per Eq. 13-37,
$w_L = 7.9 t_b \sqrt{(F_y HG)} =$
$(7.9)(0.2500)\sqrt{[(36000.0000)(10.0833)(1.0000)]} = 1189.9273$ lbf/ft
$\leq 1.28HDG = (1.28)(10.0833)(10.1667)(1.0000) = 131.2178$ lbf/ft
therefore, $w_L = 131.2178$ lbf/ft

$$J \text{ per Eq. 13-36} = \frac{M_s}{D^2[w_t(1.0 - 0.4A_v) + w_L]} =$$

$$\frac{37046}{(10.1667)^2[120.9798(1.0 - (0.4)(0.0625)) + 131.2178]} = 1.438$$

Shell compression per Eq. 13-40 where J > 0.785

$$\sigma_c = \left[\frac{w_t(1 + 0.4A_v) + w_L}{0.607 - 0.18667(J)^{2.3}} - w_L \right] \frac{1}{12t_s} =$$

$$\left[\frac{120.9798(1 + (0.4)(0.0625)) + 131.2178}{0.607 - 0.18667(1.44)^{2.3}} - 131.2178 \right] \frac{1}{(12)(0.2500)}$$

$$= 438.8808 \text{ psi}$$

Allowable Compression Stresses in Shell per 13.5.4.2.4

$R = 12D/2 = 12 * 10.1667/2 = 61.0000$ in
$(t/R)_c$ for Material Class 2 = 0.0035372 (per 3.4.3.1)

For new condition:
$t/R = 0.2500/61.0000 = 0.0041$

$(t/R)c < t/R \leq 0.125$
Per Eq. 3-13, $F_L = 6925.00 + 886000(t/R)^2 =$
$6925.00 + 886000(0.0041)^2 = 10556.1475$ psi

$P = 0.4330HG = (0.4330)(10.0833)(1.0000) = 4.3661$ psi
$E = 29000000$ psi

$(P/E)(R/t)^2 = (4.3661/29000000)(61.0000/0.2500)^2 = 0.0090$

For $(P/E)(R/t)^2 \leq 0.064$ per Eq. 13-50
$\Delta Cc = 0.72[(P/E)(R/t)^2]^{0.84}$
$= 0.72[(0.0090)^2]^{0.84} = 0.0137$

Per Eq. 13-49
$\Delta\sigma_{cr} = \Delta C_c E t/R = (0.0137)(29000000)(0.2500)/61.0000 = 1630.8670$

Per Eq. 13-47
$\sigma_e = 1.333(\sigma_a + \Delta\sigma_{cr}/2) =$
$1.333(10556.1475 + 1630.8670/2) = 15158.3176$ psi

Freeboard requirements per 13.5.4.4

For $T_c \leq T_L$ per Eq. 13-55
$A_f = KS_{D1}/T_c = (1.5)(0.2091)/1.8417 = 0.1703$

Per Eq. 13-52, Wave Height : $\delta_s = 0.5DA_f = (0.5)(10.1667)(0.1703) = 0.8656$ ft

Available freeboard is adequate.

Per Table 29, minimum freeboard $= 1.0\delta_s = (1.0)(0.8656) = 0.8656$ ft

Tank resistance to sliding per Eq. 13-57
$V_s = \tan 30(W_s + W_r + W_f + W_p)(1.0 - 0.4A_v) =$
$\tan 30(3234 + 630 + 884 + 51078)(1.0 - 0.4 * 0.0625) = 31426$ lbs
$V_f = 8649$ lbs

Tank is stable against sliding.

Hoop Stress per 13.5.4.2.3

G = 1.00
D = 10.1667 ft
H = 10.0833 ft
Ai = 0.1912
Ac = 0.1216
Av = 0.0625
D/H = 1.0083

Shell Course 01

Y = 10.0833 ft

For D/H < 1.333 and Y ≥ 0.75D, Eq. 13-45

$N_i = 1.39A_iGD^2 = (1.39)(0.1912)(1.00)(10.1667)^2 = 27.4734$ lbf/in

Eq. 13-46

$$N_c = \frac{0.98A_cGD^2\cosh[3.68(H - Y)/D]}{\cosh[3.68H/D]} =$$

$$\frac{(0.98)(0.1216)(1.0000)(10.1667)^2\cosh[3.68(10.0833 - 10.0833)/10.1667]}{\cosh[(3.68)(10.0833/10.1667)]}$$

$$= 0.6401 \text{ lbf/in}$$

$N_h = 2.60DYG = (2.60)(10.1667)(10.0833)(1.00) = 266.5361$ lbf/in

Shell thickness (t) = 0.2500 in

Per Eq. 13-42, $\sigma_s = [\sqrt{\{N_i^2 + N_c^2 + (A_vN_h)^2\}}]/(t) =$
$[\sqrt{\{(27.4734)^2 + (0.6401)^2 + (0.0625 * 266.5361)^2\}}]/(0.2500)$
$= 128.5240$ psi

$\sigma_T = N_h/t + \sigma_s = 266.5361/(0.2500) + 128.5240 = 1194.6684$ psi

Allowable stress = 1.333SE = (1.333)(15000.0000)(0.8500) = 16995.7500 psi

Minimum required thickness = $(\sigma_T * t)/Sa =$
$(1194.6684 * 0.2500)/16995.7500 = 0.0176$ in

Shell Course 02

Y = 4.1667 ft

For D/H < 1.333 and Y < 0.75D, Eq. 13-44

$$N_i = 2.77 A_i G D^2 \left[\frac{Y}{0.75D} - 0.5 \left(\frac{Y}{0.75D} \right)^2 \right] =$$

$$(2.77)(0.1912)(1.00)(10.1667)^2 \left[\frac{4.1667}{(0.75)(10.1667)} - 0.5 \left(\frac{4.1667}{(0.75)(10.1667)} \right)^2 \right]$$

$$= 21.7433 \text{ lbf/in}$$

Eq. 13-46

$$N_c = \frac{0.98 A_c G D^2 \cosh[3.68(H - Y)/D]}{\cosh[3.68H/D]} =$$

$$\frac{(0.98)(0.1216)(1.0000)(10.1667)^2 \cosh[3.68(10.0833 - 4.1667)/10.1667]}{\cosh[(3.68)(10.0833/10.1667)]}$$

$$= 2.7623 \text{ lbf/in}$$

$N_h = 2.60DYG = (2.60)(10.1667)(4.1667)(1.00) = 110.1389$ lbf/in

Shell thickness (t) = 0.1875 in

Per Eq. 13-42, $\sigma_s = [\sqrt{\{N_i^2 + N_c^2 + (A_v N_h)^2\}}]/(t) =$
$[\sqrt{\{(21.7433)^2 + (2.7623)^2 + (0.0625 * 110.1389)^2\}}]/(0.1875)$
$= 122.5201$ psi

$\sigma_T = N_h/t + \sigma_s = 110.1389/(0.1875) + 122.5201 = 709.9275$ psi

Allowable stress = 1.333SE = (1.333)(15000.0000)(0.8500) = 16995.7500 psi

Minimum required thickness = $(\sigma_T * t)/Sa =$
$(709.9275 * 0.1875)/16995.7500 = 0.0078$ in

Shell Nozzles

2" Drain Nozzle - H

Description: 2" 150# SO Flanged Nozzle
Elevation: 6.0000 in
Orientation: 90.0000°
Corrosion Allowance: Cn = 0.0000 in

Nozzle Neck: 160 Pipe
Material Grade: A53-B
Outside Diameter: d = 2.3750 in
Wall Thickness: t_n = 0.3430 in
Outside Projection: Po = 6.0000 in
Inside Projection: Pi = 0.0000 in

Flange Material Grade: A105

Calculate Required Shell Thickness at Nozzle

For Design: tr = 2.6000 * (9.5833 + 0.0000) * 10.1667 * 1.0000/[0.8500 * 15000.0000]
= 0.0199 in

Hoop Stress at Nozzle

Y = 9.5833 ft

D/H < 1.333 and Y ≥ 0.75D

Per Eq. 13-45, $N_i = 1.39A_iGD^2 = (1.39)(0.1912)(1.00)(10.1667)^2 = 27.4734$ lbf/in

Per Eq. 13-46, $N_c = \dfrac{0.98AcGD^2\cosh[3.68(H - Y)/D]}{\cosh[3.68H/D]} =$

$$\frac{(0.98)(0.1216)(1.0000)(10.1667)^2\cosh[3.68(10.0833 - 9.5833)/10.1667]}{\cosh[(3.68)(10.0833/10.1667)]}$$

= 0.6506 lbf/in

$N_h = 2.60DYG = (2.60)(10.1667)(9.5833)(1.00) = 253.3194$ lbf/in

Shell thickness: t = 0.2500 in

Per Eq. 13-42, $\sigma_T = [N_h + \sqrt{\{N_i^2 + N_c^2 + (A_vN_h)^2\}}]/t =$
$[253.3194 + \sqrt{\{(27.4734)^2 + (0.6506)^2 + (0.0625 * 253.3194)^2\}}]/0.2500$
= 1140.1228 psi

BROWN-MINNEAPOLIS TANK
ENGINEERS - FABRICATORS - CONSTRUCTORS

Allowable stress: Sa = 16995.7500 psi

Minimum required thickness = (σ_T * t)/Sa =
(1140.1228 * 0.2500)/16995.7500 = 0.0168 in

Required shell thickness for Nozzle Calculations: t_r = 0.0199 in

Reinforcement of Nozzle for Design:
Diameter of Hole in Shell: D_1 = 2.3750 in
Required Area: $A_r = t_r D_s$ = 0.0199 * 2.3750 = 0.0472 in²

Available Reinforcement from shell:
Diameter of Shell available: D_s = 2.3750 in
Shell corrosion allowance: C_s = 0.0000 in
Available Area: $A_{as} = 2(D_s - D_1/2)(t - C_s - t_r)$ =
2 * (2.3750 - 2.3750/2)* (0.2500 - 0.0000 - 0.0199) = 0.5466 in²

Check nozzle attachment strength paths:
Required strength: $W_r = (A_r - A_{as})S_a$ =
(0.0472 - 0.5466) * 15000.0000 = -7490.6413 lbs

Nozzle neck:
Allowable stress: S_n = 15000.0000 psi

Outside fillet weld:
Weld size: W_o = 0.2500 in
Allowable stress: S_o = 15000.0000 psi

Shell Groove weld:
Weld size: W_g = 0.2500 in
Allowable stress: S_g = 15000.0000 psi

Check attachment strength: Outside fillet weld, Groove weld
W_a = {0.60 * S_o * π * d * 0.707(W_o) +
0.850 * 0.70 * S_g * π * d * (W_g - C_s)}/2 =
{0.60 * 15000.0000 * π * 2.3750 * 0.707(0.2500) +
0.850 * 0.70 * 15000.0000 * π * 2.3750 * (0.2500 - 0.0000)}/2 =
14258.5110 lbs

Check attachment strength: Nozzle neck, Outside fillet weld
W_a = {0.80 * 0.875 * S_n * π * (t_n - C_n) * (d - t_n - C_n) +
0.60 * S_o * π * d * 0.707(W_o)}/2 =
{0.80 * 0.875 * 15000.0000 * π * (0.3430 - 0.0000) * (2.3750 - 0.3430 - 0.0000) +
0.60 * 15000.0000 * π * 2.3750 * 0.707(0.2500)}/2 =
17429.9947 lbs

Nozzle reinforcement calculations are not required.

2" Level Nozzle - I

Description: 2" 150# SO Flanged Nozzle
Elevation: 6.0000 in
Orientation: 315.0000°
Corrosion Allowance: Cn = 0.0000 in

Nozzle Neck: 160 Pipe
Material Grade: A53-B
Outside Diameter: d = 2.3750 in
Wall Thickness: t_n = 0.3430 in
Outside Projection: Po = 6.0000 in
Inside Projection: Pi = 0.0000 in

Flange Material Grade: A105

Calculate Required Shell Thickness at Nozzle

For Design: tr = 2.6000 * (9.5833 + 0.0000) * 10.1667 * 1.0000/[0.8500 * 15000.0000]
= 0.0199 in

Hoop Stress at Nozzle

Y = 9.5833 ft

D/H < 1.333 and Y ≥ 0.75D

Per Eq. 13-45, $N_i = 1.39A_iGD^2 = (1.39)(0.1912)(1.00)(10.1667)^2 = 27.4734$ lbf/in

Per Eq. 13-46, $N_c = \dfrac{0.98A_cGD^2\cosh[3.68(H - Y)/D]}{\cosh[3.68H/D]} =$

$$\frac{(0.98)(0.1216)(1.0000)(10.1667)^2\cosh[3.68(10.0833 - 9.5833)/10.1667]}{\cosh[(3.68)(10.0833/10.1667)]}$$

= 0.6506 lbf/in

$N_h = 2.60DYG = (2.60)(10.1667)(9.5833)(1.00) = 253.3194$ lbf/in

Shell thickness: t = 0.2500 in

Per Eq. 13-42, $\sigma_T = [N_h + \sqrt{\{N_i^2 + N_c^2 + (A_vN_h)^2\}}]/t =$
$[253.3194 + \sqrt{\{(27.4734)^2 + (0.6506)^2 + (0.0625 * 253.3194)^2\}}]/0.2500$
= 1140.1228 psi

Allowable stress: Sa = 16995.7500 psi

Minimum required thickness = $(\sigma_T * t)/Sa =$
$(1140.1228 * 0.2500)/16995.7500 = 0.0168$ in

Required shell thickness for Nozzle Calculations: t_r = 0.0199 in

Reinforcement of Nozzle for Design:
Diameter of Hole in Shell: D_1 = 2.3750 in
Required Area: $A_r = t_r D_s$ = 0.0199 * 2.3750 = 0.0472 in²

Available Reinforcement from shell:
Diameter of Shell available: D_s = 2.3750 in
Shell corrosion allowance: C_s = 0.0000 in
Available Area: $A_{as} = 2(D_s - D_1/2)(t - C_s - t_r)$ =
2 * (2.3750 - 2.3750/2)* (0.2500 - 0.0000 - 0.0199) = 0.5466 in²

Check nozzle attachment strength paths:
Required strength: $W_r = (A_r - A_{as})S_a$ =
(0.0472 - 0.5466) * 15000.0000 = -7490.6413 lbs

Nozzle neck:
Allowable stress: S_n = 15000.0000 psi

Outside fillet weld:
Weld size: W_o = 0.2500 in
Allowable stress: S_o = 15000.0000 psi

Shell Groove weld:
Weld size: W_g = 0.2500 in
Allowable stress: S_g = 15000.0000 psi

Check attachment strength: Outside fillet weld, Groove weld
W_a = {0.60 * S_o * π * d * 0.707(W_o) +
0.850 * 0.70 * S_g * π * d * (W_g - C_s)}/2 =
{0.60 * 15000.0000 * π * 2.3750 * 0.707(0.2500) +
0.850 * 0.70 * 15000.0000 * π * 2.3750 * (0.2500 - 0.0000)}/2 =
14258.5110 lbs

Check attachment strength: Nozzle neck, Outside fillet weld
W_a = {0.80 * 0.875 * S_n * π * (t_n - C_n) * (d - t_n - C_n) +
0.60 * S_o * π * d * 0.707(W_o)}/2 =
{0.80 * 0.875 * 15000.0000 * π * (0.3430 - 0.0000) * (2.3750 - 0.3430 - 0.0000) +
0.60 * 15000.0000 * π * 2.3750 * 0.707(0.2500)}/2 =
17429.9947 lbs

Nozzle reinforcement calculations are not required.

2" Level Nozzle - J

Description: 2" 150# SO Flanged Nozzle
Elevation: 10.0000 in
Orientation: 330.0000°
Corrosion Allowance: Cn = 0.0000 in

Nozzle Neck: 160 Pipe
Material Grade: A53-B
Outside Diameter: d = 2.3750 in
Wall Thickness: t_n = 0.3430 in
Outside Projection: Po = 6.0000 in
Inside Projection: Pi = 0.0000 in

Flange Material Grade: A105

Calculate Required Shell Thickness at Nozzle

For Design: tr = 2.6000 * (9.2500 + 0.0000) * 10.1667 * 1.0000/[0.8500 * 15000.0000]
= 0.0192 in

Hoop Stress at Nozzle

Y = 9.2500 ft

D/H < 1.333 and Y ≥ 0.75D

Per Eq. 13-45, $N_i = 1.39A_iGD^2 = (1.39)(0.1912)(1.00)(10.1667)^2 = 27.4734$ lbf/in

Per Eq. 13-46, $N_c = \dfrac{0.98AcGD^2\cosh[3.68(H - Y)/D]}{\cosh[3.68H/D]} =$

$$\frac{(0.98)(0.1216)(1.0000)(10.1667)^2\cosh[3.68(10.0833 - 9.2500)/10.1667]}{\cosh[(3.68)(10.0833/10.1667)]}$$

= 0.6695 lbf/in

$N_h = 2.60DYG = (2.60)(10.1667)(9.2500)(1.00) = 244.5083$ lbf/in

Shell thickness: t = 0.2500 in

Per Eq. 13-42, $\sigma_T = [N_h + \sqrt{\{N_i^2 + N_c^2 + (A_vN_h)^2\}}]/t =$
$[244.5083 + \sqrt{\{(27.4734)^2 + (0.6695)^2 + (0.0625 * 244.5083)^2\}}]/0.2500$
= 1103.7958 psi

Allowable stress: Sa = 16995.7500 psi

Minimum required thickness = $(\sigma_T * t)/Sa =$
(1103.7958 * 0.2500)/16995.7500 = 0.0162 in

Required shell thickness for Nozzle Calculations: t_r = 0.0192 in

BROWN-MINNEAPOLIS TANK
ENGINEERS - FABRICATORS - CONSTRUCTORS

Reinforcement of Nozzle for Design:
Diameter of Hole in Shell: D_1 = 2.3750 in
Required Area: $A_r = t_r D_s$ = 0.0192 * 2.3750 = 0.0455 in²

Available Reinforcement from shell:
Diameter of Shell available: D_s = 2.3750 in
Shell corrosion allowance: C_s = 0.0000 in
Available Area: $A_{as} = 2(D_s - D_1/2)(t - C_s - t_r)$ =
2 * (2.3750 - 2.3750/2)* (0.2500 - 0.0000 - 0.0192) = 0.5482 in²

Check nozzle attachment strength paths:
Required strength: $W_r = (A_r - A_{as})S_a$ =
(0.0455 - 0.5482) * 15000.0000 = -7539.8799 lbs

Nozzle neck:
Allowable stress: S_n = 15000.0000 psi

Outside fillet weld:
Weld size: W_o = 0.2500 in
Allowable stress: S_o = 15000.0000 psi

Shell Groove weld:
Weld size: W_g = 0.2500 in
Allowable stress: S_g = 15000.0000 psi

Check attachment strength: Outside fillet weld, Groove weld
W_a = {0.60 * S_o * π * d * 0.707(W_o) +
0.850 * 0.70 * S_g * π * d * (W_g - C_s)}/2 =
{0.60 * 15000.0000 * π * 2.3750 * 0.707(0.2500) +
0.850 * 0.70 * 15000.0000 * π * 2.3750 * (0.2500 - 0.0000)}/2 =
14258.5110 lbs

Check attachment strength: Nozzle neck, Outside fillet weld
W_a = {0.80 * 0.875 * S_n * π * (t_n - C_n) * (d - t_n - C_n) +
0.60 * S_o * π * d * 0.707(W_o)}/2 =
{0.80 * 0.875 * 15000.0000 * π * (0.3430 - 0.0000) * (2.3750 - 0.3430 - 0.0000) +
0.60 * 15000.0000 * π * 2.3750 * 0.707(0.2500)}/2 =
17429.9947 lbs

Nozzle reinforcement calculations are not required.

24"Dia. Shell Manway - K

Description: 24" API-650 Shell Manhole w/Blind Flange
Elevation: 30.0000 in
Orientation: 0.0000°
Corrosion Allowance: Cn = 0.0000 in

Nozzle Neck: Plate
Material Grade: A36
Outside Diameter: d = 24.5000 in
Wall Thickness: t_n = 0.2500 in
Outside Projection: Po = 8.0000 in
Inside Projection: Pi = 0.0000 in

Reinforcing Pad:
Material Grade: A36
Thickness: tp = 0.2500 in
Outside Diameter: Dp = 36.0000 in

Flange Material Grade: A36

Thickness: 0.5000 in
Machining Allowance: 0.1875 in

Blind Flange Material Grade: A36

Thickness: 0.3750 in

Calculate Required Shell Thickness at Nozzle

For Design: tr = 2.6000 * (7.5833 + 0.0000) * 10.1667 * 1.0000/[0.8500 * 15000.0000]
= 0.0157 in

Hoop Stress at Nozzle

Y = 7.5833 ft

D/H < 1.333 and Y < 0.75D

Per Eq. 13-44, $N_i = 2.77 A_i G D^2 \left[\frac{Y}{0.75D} - 0.5 \left(\frac{Y}{0.75D} \right)^2 \right] =$

$(2.77)(0.1912)(1.00)(10.1667)^2 \left[\frac{7.5833}{(0.75)(10.1667)} - 0.5 \left(\frac{7.5833}{(0.75)(10.1667)} \right)^2 \right]$

= 27.3737 lbf/in

Per Eq. 13-46, $N_c = \frac{0.98AcGD^2\cosh[3.68(H - Y)/D]}{\cosh[3.68H/D]} =$

$$\frac{(0.98)(0.1216)(1.0000)(10.1667)^2\cosh[3.68(10.0833 - 7.5833)/10.1667]}{\cosh[(3.68)(10.0833/10.1667)]}$$

$= 0.9206$ lbf/in

$N_h = 2.60DYG = (2.60)(10.1667)(7.5833)(1.00) = 200.4528$ lbf/in

Shell thickness: $t = 0.2500$ in

Per Eq. 13-42, $\sigma_T = [N_h + \sqrt{\{N_i^2 + N_c^2 + (A_vN_h)^2\}}]/t =$
$[200.4528 + \sqrt{\{(27.3737)^2 + (0.9206)^2 + (0.0625 * 200.4528)^2\}}]/0.2500$
$= 922.2740$ psi

Allowable stress: Sa = 16995.7500 psi

Minimum required thickness = $(\sigma_T * t)/Sa =$
$(922.2740 * 0.2500)/16995.7500 = 0.0136$ in

Required shell thickness for Nozzle Calculations: $t_r = 0.0157$ in

Reinforcement of Nozzle for Design:
Diameter of Hole in Shell: $D_1 = 24.5000$ in
Required Area: $A_r = t_rD_s = 0.0157 * 24.5000 = 0.3852$ in²

Available Reinforcement from shell:
Diameter of Shell available: $D_s = 24.5000$ in
Shell corrosion allowance: $C_s = 0.0000$ in
Available Area: $A_{as} = 2(D_s - D_1/2)(t - C_s - t_r) =$
$2 * (24.5000 - 24.5000/2)* (0.2500 - 0.0000 - 0.0157) = 5.7398$ in²

Available Reinforcement from nozzle neck per Sec. 3.13:
Reduction factor: F_n 1.0000

Available Reinforcement from outside projection:
Projection: L_o = lesser of P_o or $4t_n = 1.0000$ in
Available Area: $A_{ano} = 2F_nL_o(t_n - C_n) =$
$2 * 1.0000 * 1.0000 * (0.2500 - 0.0000) = 0.5000$ in²

Available Reinforcement from portion in shell:
Available Area: $A_{an} = 2F_n(t - C_s)(t_n - C_n) =$
$2 * 1.0000 * (0.2500 - 0.0000) * (0.2500 - 0.0000) = 0.1250$ in²

Available Reinforcement from reinforcing pad:

Reduction factor: $F_p = 1.0000$

Reinforcing pad outside limit: L_{po} = 36.0000 in
Reinforcing pad inside diameter: L_{pi} = 24.6250 in
Available Area: $A_{arp} = F_p(L_{po} - L_{pi})(t_p)$ =
1.0000 * (36.0000 - 24.6250) * 0.2500 = 2.8438 in²

Total available area of reinforcement: A_{at} = 9.2086 in²

Check nozzle attachment strength paths:

Required strength: $W_r = (A_r - A_{as})S_a$ =
(0.3852 - 5.7398) * 15000.0000 = -80319.4869 lbs

Nozzle neck:
Allowable stress: S_n = 15000.0000 psi

Outside fillet weld:
Weld size: W_o = 0.2500 in
Allowable stress: S_o = 15000.0000 psi

Shell Groove weld:
Weld size: W_g = 0.2500 in
Allowable stress: S_g = 15000.0000 psi

Reinforcing pad fillet weld:
Weld size: W_p = 0.2500 in
Allowable stress: S_p = 15000.0000 psi

Check attachment strength: Outside fillet weld, Groove weld

$W_a = \{0.60 * S_o * \pi * d * 0.707(W_o) +$
$0.850 * 0.70 * S_g * \pi * d * (W_g - C_s)\}/2 =$
$\{0.60 * 15000.0000 * \pi * 24.5000 * 0.707(0.2500) +$
$0.850 * 0.70 * 15000.0000 * \pi * 24.5000 * (0.2500 - 0.0000)\}/2 =$
147087.7972 lbs

Check attachment strength: Repad fillet weld, Groove weld

$W_a = \{0.60 * S_p * \pi * D_p * 0.707(W_p) +$
$0.850 * 0.70 * S_g * \pi * d * (W_g - C_s)\}/2 =$
$\{0.60 * 15000.0000 * \pi * 36.0000 * 0.707(0.2500) +$
$0.850 * 0.70 * 15000.0000 * \pi * 24.5000 * (0.2500 - 0.0000)\}/2 =$
175823.3562 lbs

Check attachment strength: Nozzle neck, Repad fillet weld

$W_a = \{0.80 * 0.875 * S_n * \pi * (t_n - C_n) * (d - t_n - C_n) +$
$0.60 * S_p * \pi * D_p * 0.707(W_p)\}/2 =$
$\{0.80 * 0.875 * 15000.0000 * \pi * (0.2500 - 0.0000) * (24.5000 - 0.2500 - 0.0000) +$
$0.60 * 15000.0000 * \pi * 36.0000 * 0.707(0.2500)\}/2 =$
189945.7969 lbs

4" Discharge Nozzle - G

Description: 4" 150# SO Flanged Nozzle
Elevation: 6.0000 in
Orientation: 180.0000°
Corrosion Allowance: Cn = 0.0000 in

Nozzle Neck: SCH80 Pipe
Material Grade: A53-B
Outside Diameter: d = 4.5000 in
Wall Thickness: t_n = 0.3370 in
Outside Projection: Po = 6.0000 in
Inside Projection: Pi = 0.0000 in

Reinforcing Pad:
Material Grade: A36
Thickness: tp = 0.2500 in
Outside Diameter: Dp = 8.0000 in

Flange Material Grade: A105

Calculate Required Shell Thickness at Nozzle

For Design: tr = 2.6000 * (9.5833 + 0.0000) * 10.1667 * 1.0000/[0.8500 * 15000.0000]
= 0.0199 in

Hoop Stress at Nozzle

Y = 9.5833 ft

D/H < 1.333 and Y ≥ 0.75D

Per Eq. 13-45, $N_i = 1.39AiGD^2 = (1.39)(0.1912)(1.00)(10.1667)^2 = 27.4734$ lbf/in

Per Eq. 13-46, $N_c = \frac{0.98AcGD^2\cosh[3.68(H - Y)/D]}{\cosh[3.68H/D]} =$

$$\frac{(0.98)(0.1216)(1.0000)(10.1667)^2\cosh[3.68(10.0833 - 9.5833)/10.1667]}{\cosh[(3.68)(10.0833/10.1667)]}$$

= 0.6506 lbf/in

$N_h = 2.60DYG = (2.60)(10.1667)(9.5833)(1.00) = 253.3194$ lbf/in

Shell thickness: t = 0.2500 in

Per Eq. 13-42, $\sigma_T = [N_h + \sqrt{\{N_i^2 + N_c^2 + (A_vN_h)^2\}}]/t =$
$[253.3194 + \sqrt{\{(27.4734)^2 + (0.6506)^2 + (0.0625 * 253.3194)^2\}}]/0.2500$
= 1140.1228 psi

Allowable stress: Sa = 16995.7500 psi

Minimum required thickness = (σ_T * t)/Sa =
(1140.1228 * 0.2500)/16995.7500 = 0.0168 in

Required shell thickness for Nozzle Calculations: t_r = 0.0199 in

Reinforcement of Nozzle for Design:
Diameter of Hole in Shell: D_1 = 4.5000 in
Required Area: $A_r = t_r D_s$ = 0.0199 * 4.5000 = 0.0894 in²

Available Reinforcement from shell:
Diameter of Shell available: D_s = 4.5000 in
Shell corrosion allowance: C_s = 0.0000 in
Available Area: $A_{as} = 2(D_s - D_1/2)(t - C_s - t_r)$ =
2 * (4.5000 - 4.5000/2)* (0.2500 - 0.0000 - 0.0199) = 1.0356 in²

Available Reinforcement from nozzle neck per Sec. 3.13:

Reduction factor: F_n 1.0000

Available Reinforcement from outside projection:
Projection: L_o = lesser of P_o or $4t_n$ = 1.3480 in
Available Area: $A_{ano} = 2F_nL_o(t_n - C_n)$ =
2 * 1.0000 * 1.3480 * (0.3370 - 0.0000) = 0.9086 in²

Available Reinforcement from portion in shell:
Available Area: $A_{an} = 2F_n(t - C_s)(t_n - C_n)$ =
2 * 1.0000 * (0.2500 - 0.0000) * (0.3370 - 0.0000) = 0.1685 in²

Available Reinforcement from reinforcing pad:

Reduction factor: F_p = 1.0000

Reinforcing pad outside limit: L_{po} = 8.0000 in
Reinforcing pad inside diameter: L_{pi} = 4.6250 in
Available Area: $A_{arp} = F_p(L_{po} - L_{pi})(t_p)$ =
1.0000 * (8.0000 - 4.6250) * 0.2500 = 0.8438 in²

Total available area of reinforcement: A_{at} = 2.9564 in²

Check nozzle attachment strength paths:
Required strength: $W_r = (A_r - A_{as})S_a$ =
(0.0894 - 1.0356) * 15000.0000 = -14192.7941 lbs

Nozzle neck:
Allowable stress: S_n = 15000.0000 psi

Outside fillet weld:
Weld size: W_o = 0.2500 in
Allowable stress: S_o = 15000.0000 psi

Shell Groove weld:
Weld size: W_g = 0.2500 in
Allowable stress: S_g = 15000.0000 psi

Reinforcing pad fillet weld:
Weld size: W_p = 0.2500 in
Allowable stress: S_p = 15000.0000 psi

Check attachment strength: Outside fillet weld, Groove weld

$$W_a = \{0.60 * S_o * \pi * d * 0.707(W_o) + 0.850 * 0.70 * S_g * \pi * d * (W_g - C_s)\}/2 =$$
$$\{0.60 * 15000.0000 * \pi * 4.5000 * 0.707(0.2500) + 0.850 * 0.70 * 15000.0000 * \pi * 4.5000 * (0.2500 - 0.0000)\}/2 =$$
27016.1260 lbs

Check attachment strength: Repad fillet weld, Groove weld

$$W_a = \{0.60 * S_p * \pi * D_p * 0.707(W_p) + 0.850 * 0.70 * S_g * \pi * d * (W_g - C_s)\}/2 =$$
$$\{0.60 * 15000.0000 * \pi * 8.0000 * 0.707(0.2500) + 0.850 * 0.70 * 15000.0000 * \pi * 4.5000 * (0.2500 - 0.0000)\}/2 =$$
35761.7309 lbs

Check attachment strength: Nozzle neck, Repad fillet weld

$$W_a = \{0.80 * 0.875 * S_n * \pi * (t_n - C_n) * (d - t_n - C_n) + 0.60 * S_p * \pi * D_p * 0.707(W_p)\}/2 =$$
$$\{0.80 * 0.875 * 15000.0000 * \pi * (0.3370 - 0.0000) * (4.5000 - 0.3370 - 0.0000) + 0.60 * 15000.0000 * \pi * 8.0000 * 0.707(0.2500)\}/2 =$$
43129.0021 lbs

4" Spare Nozzle - L

Description: 4" 150# SO Flanged Nozzle
Elevation: 10.0000 in
Orientation: 45.0000°
Corrosion Allowance: Cn = 0.0000 in

Nozzle Neck: SCH80 Pipe
Material Grade: A53-B
Outside Diameter: d = 4.5000 in
Wall Thickness: t_n = 0.3370 in
Outside Projection: Po = 6.0000 in
Inside Projection: Pi = 0.0000 in

Reinforcing Pad:
Material Grade: A36
Thickness: tp = 0.2500 in
Outside Diameter: Dp = 10.0000 in

Flange Material Grade: A105

Calculate Required Shell Thickness at Nozzle

For Design: tr = 2.6000 * (9.2500 + 0.0000) * 10.1667 * 1.0000/[0.8500 * 15000.0000]
= 0.0192 in

Hoop Stress at Nozzle

Y = 9.2500 ft

D/H < 1.333 and Y ≥ 0.75D

Per Eq. 13-45, $N_i = 1.39AiGD^2 = (1.39)(0.1912)(1.00)(10.1667)^2 = 27.4734$ lbf/in

Per Eq. 13-46, $N_c = \frac{0.98AcGD^2\cosh[3.68(H - Y)/D]}{\cosh[3.68H/D]} =$

$$\frac{(0.98)(0.1216)(1.0000)(10.1667)^2\cosh[3.68(10.0833 - 9.2500)/10.1667]}{\cosh[(3.68)(10.0833/10.1667)]}$$

= 0.6695 lbf/in

$N_h = 2.60DYG = (2.60)(10.1667)(9.2500)(1.00) = 244.5083$ lbf/in

Shell thickness: t = 0.2500 in

Per Eq. 13-42, $\sigma_T = [N_h + \sqrt{\{N_i^2 + N_c^2 + (A_vN_h)^2\}}]/t =$
$[244.5083 + \sqrt{\{(27.4734)^2 + (0.6695)^2 + (0.0625 * 244.5083)^2\}}]/0.2500$
= 1103.7958 psi

Allowable stress: Sa = 16995.7500 psi

Minimum required thickness = (σ_T * t)/Sa =
(1103.7958 * 0.2500)/16995.7500 = 0.0162 in

Required shell thickness for Nozzle Calculations: t_r = 0.0192 in

Reinforcement of Nozzle for Design:
Diameter of Hole in Shell: D_1 = 4.5000 in
Required Area: $A_r = t_r D_s$ = 0.0192 * 4.5000 = 0.0863 in²

Available Reinforcement from shell:
Diameter of Shell available: D_s = 4.5000 in
Shell corrosion allowance: C_s = 0.0000 in
Available Area: $A_{as} = 2(D_s - D_1/2)(t - C_s - t_r)$ =
2 * (4.5000 - 4.5000/2)* (0.2500 - 0.0000 - 0.0192) = 1.0387 in²

Available Reinforcement from nozzle neck per Sec. 3.13:

Reduction factor: F_n 1.0000

Available Reinforcement from outside projection:
Projection: L_o = lesser of P_o or $4t_n$ = 1.3480 in
Available Area: $A_{ano} = 2F_nL_o(t_n - C_n)$ =
2 * 1.0000 * 1.3480 * (0.3370 - 0.0000) = 0.9086 in²

Available Reinforcement from portion in shell:
Available Area: $A_{an} = 2F_n(t - C_s)(t_n - C_n)$ =
2 * 1.0000 * (0.2500 - 0.0000) * (0.3370 - 0.0000) = 0.1685 in²

Available Reinforcement from reinforcing pad:

Reduction factor: F_p = 1.0000

Reinforcing pad outside limit: L_{po} = 9.0000 in
Reinforcing pad inside diameter: L_{pi} = 4.6250 in
Available Area: $A_{arp} = F_p(L_{po} - L_{pi})(t_p)$ =
1.0000 * (9.0000 - 4.6250) * 0.2500 = 1.0938 in²

Total available area of reinforcement: A_{at} = 3.2095 in²

Check nozzle attachment strength paths:
Required strength: $W_r = (A_r - A_{as})S_a$ =
(0.0863 - 1.0387) * 15000.0000 = -14286.0882 lbs

Nozzle neck:
Allowable stress: S_n = 15000.0000 psi

Outside fillet weld:
Weld size: W_o = 0.2500 in
Allowable stress: S_o = 15000.0000 psi

Shell Groove weld:
Weld size: W_g = 0.2500 in
Allowable stress: S_g = 15000.0000 psi

Reinforcing pad fillet weld:
Weld size: W_p = 0.2500 in
Allowable stress: S_p = 15000.0000 psi

Check attachment strength: Outside fillet weld, Groove weld

$$W_a = \{0.60 * S_o * \pi * d * 0.707(W_o) + 0.850 * 0.70 * S_g * \pi * d * (W_g - C_s)\}/2 =$$
$$\{0.60 * 15000.0000 * \pi * 4.5000 * 0.707(0.2500) + 0.850 * 0.70 * 15000.0000 * \pi * 4.5000 * (0.2500 - 0.0000)\}/2 =$$
27016.1260 lbs

Check attachment strength: Repad fillet weld, Groove weld

$$W_a = \{0.60 * S_p * \pi * D_p * 0.707(W_p) + 0.850 * 0.70 * S_g * \pi * d * (W_g - C_s)\}/2 =$$
$$\{0.60 * 15000.0000 * \pi * 10.0000 * 0.707(0.2500) + 0.850 * 0.70 * 15000.0000 * \pi * 4.5000 * (0.2500 - 0.0000)\}/2 =$$
40759.2194 lbs

Check attachment strength: Nozzle neck, Repad fillet weld

$$W_a = \{0.80 * 0.875 * S_n * \pi * (t_n - C_n) * (d - t_n - C_n) + 0.60 * S_p * \pi * D_p * 0.707(W_p)\}/2 =$$
$$\{0.80 * 0.875 * 15000.0000 * \pi * (0.3370 - 0.0000) * (4.5000 - 0.3370 - 0.0000) + 0.60 * 15000.0000 * \pi * 10.0000 * 0.707(0.2500)\}/2 =$$
48126.4906 lbs

4"Discharge Nozzle - F

Description: 4" 150# SO Flanged Nozzle
Elevation: 6.0000 in
Orientation: 135.0000°
Corrosion Allowance: Cn = 0.0000 in

Nozzle Neck: SCH80 Pipe
Material Grade: A53-B
Outside Diameter: d = 4.5000 in
Wall Thickness: t_n = 0.3370 in
Outside Projection: Po = 6.0000 in
Inside Projection: Pi = 0.0000 in

Reinforcing Pad:
Material Grade: A36
Thickness: tp = 0.2500 in
Outside Diameter: Dp = 8.0000 in

Flange Material Grade: A105

Calculate Required Shell Thickness at Nozzle

For Design: tr = 2.6000 * (9.5833 + 0.0000) * 10.1667 * 1.0000/[0.8500 * 15000.0000]
= 0.0199 in

Hoop Stress at Nozzle

Y = 9.5833 ft

D/H < 1.333 and Y ≥ 0.75D

Per Eq. 13-45, $N_i = 1.39AiGD^2 = (1.39)(0.1912)(1.00)(10.1667)^2 = 27.4734$ lbf/in

Per Eq. 13-46, $N_c = \frac{0.98AcGD^2\cosh[3.68(H - Y)/D]}{\cosh[3.68H/D]} =$

$$\frac{(0.98)(0.1216)(1.0000)(10.1667)^2\cosh[3.68(10.0833 - 9.5833)/10.1667]}{\cosh[(3.68)(10.0833/10.1667)]}$$

= 0.6506 lbf/in

$N_h = 2.60DYG = (2.60)(10.1667)(9.5833)(1.00) = 253.3194$ lbf/in

Shell thickness: t = 0.2500 in

Per Eq. 13-42, $\sigma_T = [N_h + \sqrt{\{N_i^2 + N_c^2 + (A_vN_h)^2\}}]/t =$
$[253.3194 + \sqrt{\{(27.4734)^2 + (0.6506)^2 + (0.0625 * 253.3194)^2\}}]/0.2500$
= 1140.1228 psi

Allowable stress: Sa = 16995.7500 psi

Minimum required thickness = (σ_T * t)/Sa =
(1140.1228 * 0.2500)/16995.7500 = 0.0168 in

Required shell thickness for Nozzle Calculations: t_r = 0.0199 in

Reinforcement of Nozzle for Design:
Diameter of Hole in Shell: D_1 = 4.5000 in
Required Area: $A_r = t_r D_s$ = 0.0199 * 4.5000 = 0.0894 in²

Available Reinforcement from shell:
Diameter of Shell available: D_s = 4.5000 in
Shell corrosion allowance: C_s = 0.0000 in
Available Area: $A_{as} = 2(D_s - D_1/2)(t - C_s - t_r)$ =
2 * (4.5000 - 4.5000/2)* (0.2500 - 0.0000 - 0.0199) = 1.0356 in²

Available Reinforcement from nozzle neck per Sec. 3.13:

Reduction factor: F_n 1.0000

Available Reinforcement from outside projection:
Projection: L_o = lesser of P_o or $4t_n$ = 1.3480 in
Available Area: $A_{ano} = 2F_nL_o(t_n - C_n)$ =
2 * 1.0000 * 1.3480 * (0.3370 - 0.0000) = 0.9086 in²

Available Reinforcement from portion in shell:
Available Area: $A_{an} = 2F_n(t - C_s)(t_n - C_n)$ =
2 * 1.0000 * (0.2500 - 0.0000) * (0.3370 - 0.0000) = 0.1685 in²

Available Reinforcement from reinforcing pad:

Reduction factor: F_p = 1.0000

Reinforcing pad outside limit: L_{po} = 8.0000 in
Reinforcing pad inside diameter: L_{pi} = 4.6250 in
Available Area: $A_{arp} = F_p(L_{po} - L_{pi})(t_p)$ =
1.0000 * (8.0000 - 4.6250) * 0.2500 = 0.8438 in²

Total available area of reinforcement: A_{at} = 2.9564 in²

Check nozzle attachment strength paths:
Required strength: $W_r = (A_r - A_{as})S_a$ =
(0.0894 - 1.0356) * 15000.0000 = -14192.7941 lbs

Nozzle neck:
Allowable stress: S_n = 15000.0000 psi

Outside fillet weld:
Weld size: W_o = 0.1875 in
Allowable stress: S_o = 15000.0000 psi

Shell Groove weld:
Weld size: W_g = 0.2500 in
Allowable stress: S_g = 15000.0000 psi

Reinforcing pad fillet weld:
Weld size: W_p = 0.2500 in
Allowable stress: S_p = 15000.0000 psi

Check attachment strength: Outside fillet weld, Groove weld

$$W_a = \{0.60 * S_o * \pi * d * 0.707(W_o) + 0.850 * 0.70 * S_g * \pi * d * (W_g - C_s)\}/2 =$$
$$\{0.60 * 15000.0000 * \pi * 4.5000 * 0.707(0.1875) + 0.850 * 0.70 * 15000.0000 * \pi * 4.5000 * (0.2500 - 0.0000)\}/2 =$$
24205.0387 lbs

Check attachment strength: Repad fillet weld, Groove weld

$$W_a = \{0.60 * S_p * \pi * D_p * 0.707(W_p) + 0.850 * 0.70 * S_g * \pi * d * (W_g - C_s)\}/2 =$$
$$\{0.60 * 15000.0000 * \pi * 8.0000 * 0.707(0.2500) + 0.850 * 0.70 * 15000.0000 * \pi * 4.5000 * (0.2500 - 0.0000)\}/2 =$$
35761.7309 lbs

Check attachment strength: Nozzle neck, Repad fillet weld

$$W_a = \{0.80 * 0.875 * S_n * \pi * (t_n - C_n) * (d - t_n - C_n) + 0.60 * S_p * \pi * D_p * 0.707(W_p)\}/2 =$$
$$\{0.80 * 0.875 * 15000.0000 * \pi * (0.3370 - 0.0000) * (4.5000 - 0.3370 - 0.0000) + 0.60 * 15000.0000 * \pi * 8.0000 * 0.707(0.2500)\}/2 =$$
43129.0021 lbs

10.17´Dia. x 11´ Hgt - FBSSCRT
6000 Gal. Water Tanks

Customer:
Fliteway Technologies, Inc.
Job Number:
30883
Date: 02-18-2015 Rev.: 0

Foundation Loads

Dead Load = 121 lbf/ft
Dead Load + Live Load = 172 lbf/ft
Dead Load + Snow Load = 185 lbf/ft
Wind Load + Dead Load = 268 lbf/ft

(Wind Foundation Moment = 11,946 ft-lbs)
(Wind Horizontal Force = 2,091 lbs)

Seismic Load + Dead Load (ringwall foundation) = 580 lbf/ft
Seismic Load + Dead Load (slab foundation) = 723 lbf/ft

(Note: For Seismic the dead load has a portion of the vertical acceleration added to it and includes a portion of the snow load)
(Seismic Overturning Moment (ringwall) (M_{rw}) = 37,046 ft-lbs)
(Seismic Overturning Moment (slab) (M_s) = 48,633 ft-lbs)

(Seismic Horizontal Force = 8,649 lbs)

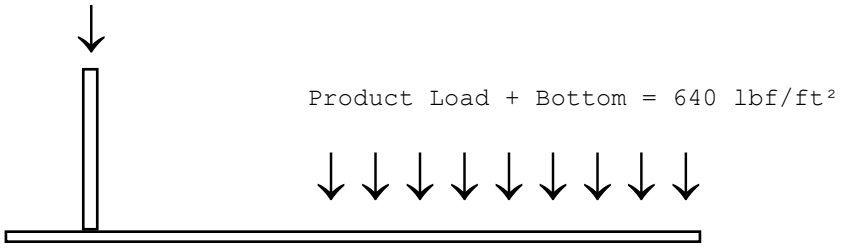

Total Weight of Tank: 4,748 lbs
Total Operating Weight: 55,826 lbs
Total Testing Weight: 55,826 lbs

BROWN-MINNEAPOLIS TANK
ENGINEERS - FABRICATORS - CONSTRUCTORS

BROWN-MINNEAPOLIS TANK
ENGINEERS - FABRICATORS - CONSTRUCTORS

BMT 30883

TANK PAINT SCHEDULE

FOR

6,000 Gal. Water Tanks
T-102 & T-108
For
EDB Interim Measure Project
Kirtland AFB
Albuquerque, New Mexico

☑ FOR APPROVAL ONLY
BROWN-MINNEAPOLIS TANK
ENGINEERING DIVISION

8301 Broadway Blvd. SE, Albuquerque, NM 87105 • (505) 563-4800 • Fax (505) 563-4799

BROWN-MINNEAPOLIS TANK
ENGINEERS - FABRICATORS - CONSTRUCTORS

COATING SCHEDULE

EDB Interim Measure Project
6,000 Gal. Water Tanks T-102 and T-108
Kirtland AFB, Albuquerque, NM

INTERIOR TANK PAINT SYSTEM:

TYPE OF PAINT	NO. OF COATS	D.F.T.
1st Coat – Sherwin-Williams MACROPOXY Fast Curing Epoxy (Mill White) (Shop Applied)	One	3 to 5 Mils
2nd Coat – Sherwin-Williams MACROPOXY Fast Curing Epoxy (Light Blue) (Shop Applied)	One	3 to 5 Mils

TOTAL (Min) . . . . 6 to 10 MILS

METHOD OF APPLICATION: AIRLESS SPRAY, APPLICATION.
SURFACE PREPARATION: SSPC-SP10, "NEAR WHITE METAL BLAST CLEANING" (SEE DETAILS ON PAGE-2)

---------- * ----------

EXTERIOR TANK PAINT SYSTEM:

TYPE OF PAINT	NO. OF COATS	D.F.T.
1st Coat Sherwin-Williams Recoatable Epoxy Primer (Light Gray) (Shop Applied)	One	4 to 6 Mils
2nd Coat – Sherwin-Williams ACROLON 218 HS Acrylic Polyurethane (Color: TBD) (Shop Applied)	One	3 to 6 Mils

TOTAL (Min) . . . . .7 to12 MILS

METHOD OF APPLICATION: AIRLESS SPRAY, APPLICATION.
SURFACE PREPARATION: SSPC-SP6, "COMMERCIAL BLAST CLEANING" (SEE DETAILS ON PAGE-2)

Color Selection: _____ Date of Approval: _____

BROWN-MINNEAPOLIS TANK
ENGINEERS - FABRICATORS - CONSTRUCTORS

SURFACE PREPARATION

INTERIOR:

The interior surfaces of the tank will be cleaned by sandblasting in the shop to remove mil scale in accordance with SSPC-SP10, Near White Blast Cleaning. Prepared surfaces will be coated with 3 to 5 mils of **Sherwin-Williams, MACROPOXY 646 Epoxy** (Mill White), followed by a finish coat of **Sherwin-Williams MACROPOXY 646 Epoxy** (Light Blue) of 3 to 5 mils for a total dry film thickness of 6 to 10 mils (DFT).

EXTERIOR:

The exterior surfaces of the tank will be cleaned by sandblasting to remove mil scale in accordance with SSPC-SP6, Commercial Blast Cleaning. Shop prepared surfaces will be coated with 4 to 6 mils of **Sherwin-Williams, Recoatable Epoxy Primer** (Light Gray), followed by a finish coat of **Sherwin-Williams, ACROLON 218 HS Acrylic Polyurethane** of 3 to 6 mils (color to be selected by the owner per Sherwin-Williams color chart) for a total dry film thickness of 7 to 12 mils (DFT).

NOTES:

- Application of two (2) or three (3) coat build-up system for tank structure surfaces will follow coat manufacturer's recommendation for drying time between coats of paint.

- Measurement of dry film thickness to be in accordance with SSPC-PA_2, excluding Section 5.2.2, Maximum Thickness.

REV-0; 2/18/2015

Protective & Marine Coatings

Classified Drinking Water System Component ANSI/NSF 61 3JGH Water Quality

MACROPOXY® 646 PW
POTABLE WATER EPOXY

PART A	B58WX610	MILL WHITE
PART A	B58LX600	LIGHT BLUE
PART B	B58VX600	HARDENER
PART B	B58VX605	OAP HARDENER

Revised 5/11

PRODUCT INFORMATION

4.56

PRODUCT DESCRIPTION

MACROPOXY 646 PW EPOXY is a high solids, high build, fast drying, polyamide epoxy classified by UL to ANSI/NSF 61 as a tank lining for potable water storage tanks. The high solids content ensures adequate protection of sharp edges, corners, and welds. B58VX605 Hardener contains Opti-Check OAP pigment technology for rapid holiday detection with safe blue light inspection lamps.

- Low VOC
- Low odor
- Outstanding application properties

PRODUCT CHARACTERISTICS

Finish:	Semi-Gloss
Color:	Mill White and Light Blue
Volume Solids:	72% ± 2%, mixed
Weight Solids:	85% ± 2%, mixed
VOC (EPA Method 24): mixed	Unreduced: <250 g/L; 2.08 lb/gal Reduced 10%: <300 g/L; 2.50 lb/gal
Mix Ratio:	1:1 by volume

Recommended Spreading Rate per coat:

	Standard Min.	Standard Max.	AWWA Min.	AWWA Max.
Wet mils (microns)	**7.0** 175	**13.5** 340	**4.2** 105	**8.3** 208
Dry mils (microns)	**5.0** 125	**10*** 250*	**3.0** 75	**6.0*** 150*
~Coverage sq ft/gal (m^2/L)	**116** 2.8	**232** 5.6	**192** 4.7	**384** 9.4
Theoretical coverage **sq ft/gal** (m^2/L) @ 1 mil/25 micron dft	**1152** (28.2)			

NOTE: Brush or roll application may require multiple coats to achieve maximum film thickness and uniformity of appearance.

* See Recommended Systems on reverse side

Drying Schedule @ 7.0 mils wet (175 microns):

	@ 40°F/4.5°C	@ 77°F/25°C *50% RH*	@ 100°F/38°C
To touch:	4-5 hours	2 hours	1.5 hours
To handle:	48 hours	8 hours	4.5 hours
To recoat:			
minimum:	48 hours	8 hours	4.5 hours
maximum:	1 year	1 year	1 year
Cure for immersion:	14 days	7 days	4 days
Pot Life:	10 hours	4 hours	2 hours
Sweat-in-Time:	30 minutes	30 minutes	15 minutes

If maximum recoat time is exceeded, abrade surface before recoating.

Drying time is temperature, humidity, and film thickness dependent.

For **Potable Water Service**, allow a minimum cure time of 7 days at 77°F (25°C) prior to placing in service. Sterilize and rinse per AWWA C652.

Shelf Life:	36 months, unopened Store indoors at 40°F (4.5°C) to 100°F (38°C).
Flash Point:	91°F (33°C), TCC, mixed
Reducer/Clean Up:	Reducer R7K15

RECOMMENDED USES

Potable Water Tank Restrictions
Water Contact Temp: 23°C
Standard Cure; Tanks >= 1,500 gal: 2 cts
Standard Cure; Pipe >= 49.2"
Forced Cure; Tanks >= 100 gal: 2 cts
Forced Cure, Pipe >= 15"; 2 cts
Forced Cure; Maximum DFT: 6 mils/ct, 2 cts

- Conforms to AWWA D102 ICS #1, #2, and #5, and OCS #5***
- Meets or exceeds the performance requirements of SSPC Paint Spec 22

***Refer to respective systems

PERFORMANCE CHARACTERISTICS

Substrate*: Steel

Surface Preparation*: SSPC-SP10/NACE 2

System Tested*:

1 ct. Macropoxy 646 PW Fast Cure @ 6.0 mils (150 microns) dft

*unless otherwise noted below

Test Name	Test Method	Results
Abrasion Resistance	ASTM D4060, CS17 wheel, 1000 cycles, 1 kg load	84 mg loss
Adhesion	ASTM D4541	1,037 psi
Corrosion Weathering[1]	ASTM D5894, 36 cycles, 12,000 hours	Rating 10 per ASTM D714 for blistering; Rating 9 per ASTM D610 per rusting
Direct Impact Resistance	ASTM D2794	30 in. lb.
Dry Heat Resistance	ASTM D2485	250°F (121°C)
Flexibility	ASTM D522, 180° bend, 3/4" mandrel	Passes
Humidity Resistance	ASTM D4585, 6000 hours	No blistering, cracking, or rusting
Immersion[2]	5 year potable water	Rating 10 per ASTM D610 for Rusting; Rating 10 per ASTM D714 for Blistering
Immersion	18 months fresh and salt water	Passes, no rusting, blistering, or loss of adhesion
Pencil Hardness	ASTM D3363	3H
Water Vapor Permeance	ASTM D1653, Method B	1.16 grains/day

Epoxy coatings may darken or discolor following application and curing.

Footnotes:

[1] Zinc Clad II Plus Primer

[2] Galvapac/2 cts Macropoxy 646 PW

continued on back

Protective & Marine Coatings

Classified Drinking Water System Component ANSI/NSF 61 3JGH Water Quality

MACROPOXY® 646 PW
POTABLE WATER EPOXY

PART A	B58WX610	MILL WHITE
PART A	B58LX600	LIGHT BLUE
PART B	B58VX600	HARDENER
PART B	B58VX605	OAP HARDENER

PRODUCT INFORMATION

4.56

RECOMMENDED SYSTEMS

	Dry Film Thickness / ct. Mils	(Microns)
Immersion, Steel:		
***AWWA D102: Inside Coating System No. 1**		
minimum AWWA	8.0	(200)
1 ct. Macropoxy 646 PW	3.0	(75)
1 ct. Macropoxy 646 PW	5.0	(125)
***AWWA D102: Inside Coating System No. 2**		
minimum AWWA	12.0	(300)
1 ct. Macropoxy 646 PW	3.0	(75)
1 ct. Macropoxy 646 PW	4.0	(100)
1 ct. Macropoxy 646 PW	5.0	(125)
***AWWA D102: Inside Coating System No. 3**		
minimum AWWA	10.0	(250)
1 ct. Zinc Clad II LV or Plus	2.0	(50)
1 ct. Macropoxy 646 PW	3.0	(75)
1 ct. Macropoxy 646 PW	5.0	(125)
***AWWA D102: Inside Coating System No. 5**		
minimum AWWA	10.0	(250)
1 ct. Corothane I Galvapac	2.0	(50)
2 cts. Macropoxy 646 PW	4.0	(100)
Steel, forced cure (100 gallon minimum tank size or 15" or greater pipe diameter):		
2 cts. Macropoxy 646 PW	5.0-6.0	(125-150)
•12 mils maximum film thickness •Curing requirements		
•Flash 2 hours @ 75°F (24°C)		
•24 hours @ 150°F (66°C)		
•24 hours @ 75°F (24°C)		
Atmospheric, Steel:		
***AWWA D102: Outside Coating System No. 5**		
minimum	6.0	(150)
1 ct. Macropoxy 646 PW	2.0	(50)
1 ct. Macropoxy 646 PW	2.0	(50)
1 ct. Acrolon 218HS	2.0	(50)
***AWWA D102: Outside Coating System No. 6**		
minimum	6.0	(150)
1 ct. Corothane I GalvaPac PW	2.0	(50)
1 ct. Macropoxy 646 PW	2.0	(50)
1 ct. Acrolon 218HS	2.0	(50)
Concrete/Masonry, smooth:		
2 cts.Macropoxy 646 PW	3.0-6.0	(75-150)

Refer to UL.com for maximum dft restrictions

The systems listed above are representative of the product's use, other systems may be appropriate.

DISCLAIMER

The information and recommendations set forth in this Product Data Sheet are based upon tests conducted by or on behalf of The Sherwin-Williams Company. Such information and recommendations set forth herein are subject to change and pertain to the product offered at the time of publication. Consult your Sherwin-Williams representative to obtain the most recent Product Data Information and Application Bulletin.

SURFACE PREPARATION

Surface must be clean, dry, and in sound condition. Remove all oil, dust, grease, dirt, loose rust, and other foreign material to ensure adequate adhesion.

Refer to product Application Bulletin for detailed surface preparation information.

Minimum recommended surface preparation:

Iron & Steel
- Atmospheric: SSPC-SP2/3
- Immersion: SSPC-SP10/NACE 2, 2-3 mil (50-75 micron) profile

Concrete & Masonry
- Immersion: SSPC-SP13/NACE 6-4.3.1 or 4.3.2, or ICRI No. 310.2, CSP 1-3

Surface Preparation Standards

	Condition of Surface	ISO 8501-1 BS7079:A1	Swedish Std. SIS055900	SSPC	NACE
White Metal		Sa 3	Sa 3	SP 5	1
Near White Metal		Sa 2.5	Sa 2.5	SP 10	2
Commercial Blast		Sa 2	Sa 2	SP 6	3
Brush-Off Blast		Sa 1	Sa 1	SP 7	4
Hand Tool Cleaning	Rusted	C St 2	C St 2	SP 2	-
	Pitted & Rusted	D St 2	D St 2	SP 2	-
Power Tool Cleaning	Rusted	C St 3	C St 3	SP 3	-
	Pitted & Rusted	D St 3	D St 3	SP 3	-

TINTING

Do not Tint.

APPLICATION CONDITIONS

Temperature:	40°F (4.5°C) minimum, 110°F (43°C) maximum (air, surface, and material) At least 5°F (2.8°C) above dew point
Relative humidity:	85% maximum

Refer to product Application Bulletin for detailed application information.

ORDERING INFORMATION

Packaging:
- Part A: 1 gallon (3.78L) and 5 gallon (18.9L) containers
- Part B: 1 gallon (3.78L) and 5 gallon (18.9L) containers

Weight: 12.7 ± 0.2 lb/gal ; 1.5 Kg/L mixed, may vary by color

SAFETY PRECAUTIONS

Refer to the MSDS sheet before use.

Published technical data and instructions are subject to change without notice. Contact your Sherwin-Williams representative for additional technical data and instructions.

WARRANTY

The Sherwin-Williams Company warrants our products to be free of manufacturing defects in accord with applicable Sherwin-Williams quality control procedures. Liability for products proven defective, if any, is limited to replacement of the defective product or the refund of the purchase price paid for the defective product as determined by Sherwin-Williams. NO OTHER WARRANTY OR GUARANTEE OF ANY KIND IS MADE BY SHERWIN-WILLIAMS, EXPRESSED OR IMPLIED, STATUTORY, BY OPERATION OF LAW OR OTHERWISE, INCLUDING MERCHANTABILITY AND FITNESS FOR A PARTICULAR PURPOSE.

Protective & Marine Coatings

Classified
Drinking Water System Component
ANSI/NSF 61
3JGH
Water Quality

MACROPOXY® 646 PW
POTABLE WATER EPOXY

PART A	B58WX610	MILL WHITE
PART A	B58LX600	LIGHT BLUE
PART B	B58VX600	HARDENER
PART B	B58VX605	OAP HARDENER

Revised 5/11

APPLICATION BULLETIN

4.56

SURFACE PREPARATIONS

Surface must be clean, dry, and in sound condition. Remove all oil, dust, grease, dirt, loose rust, and other foreign material to ensure adequate adhesion.

Carbon Steel, Immersion Service:
Clean and degrease the surface prior to abrasive blasting per SSPC-SP 1 Solvent Cleaning. Methods described in SSPC-SP 1 include solvents, alkali, detergent/water, emulsions, and steam. The surface shall be abrasive blasted to SSPC-SP10/NACE No. 2 Near-White Blast Cleaning with a 2-3 mil (50-75 micron) profile. The anchor pattern shall be sharp with no evidence of a polished surface. The finished surface shall be free of all visible oil, grease, dust, dirt, mill scale, rust, coating, oxides, corrosion products, and other foreign matter with no more than 5% staining. After blasting, all dust and loose residue should be removed from the surface by acceptable means. Coat steel the same day as it is prepared and prior to the formation of rust.

Iron & Steel, Atmospheric Service:
Minimum surface preparation is Hand Tool Clean per SSPC-SP2. Remove all oil and grease from surface by Solvent Cleaning per SSPC-SP1. For better performance, use Commercial Blast Cleaning per SSPC-SP6/NACE 3, blast clean all surfaces using a sharp, angular abrasive for optimum surface profile (2 mils / 50 microns). Prime any bare steel within 8 hours or before flash rusting occurs.

Ductile Iron, Immersion Service:
Refer to National Association of Pipe Fabricators Surface Preparations Standard NAPF 500-03 as follows:

a. NAPF 500-03-01 "Solvent Cleaning"
b. NAPF 500-03-02 "Hand Tool Cleaning"
c. NAPF 500-03-03 "Power Tool Cleaning"
d. NAPF 500-03-04 "Abrasive Blast Cleaning of Ductile Iron Pipe".

Concrete and Masonry
For surface preparation, refer to SSPC-SP13/NACE 6, or ICRI No. 310.2, CSP 1-3. Surfaces should be thoroughly clean and dry. Concrete and mortar must be cured at least 28 days @ 75°F (24°C). Remove all loose mortar and foreign material. Surface must be free of laitance, concrete dust, dirt, form release agents, moisture curing membranes, loose cement and hardeners. Fill bug holes, air pockets and other voids with Steel-Seam FT910.

Follow the standard methods listed below when applicable:
ASTM D4258 Standard Practice for Cleaning Concrete.
ASTM D4259 Standard Practice for Abrading Concrete.
ASTM D4260 Standard Practice for Etching Concrete.
ASTM F1869 Standard Test Method for Measuring Moisture Vapor Emission Rate of Concrete.
SSPC-SP 13/Nace 6 Surface Preparation of Concrete.
ICRI No. 310.2 Concrete Surface Preparation.

Concrete, Immersion Service:
For surface preparation, refer to SSPC-SP13/NACE 6, Section 4.3.1 or 1.3.2 or ICRI No. 310.2, CSP 1-3.

Previously Painted Surfaces:
If in sound condition, clean the surface of all foreign material. Scarify the surface to create the desired surface profile. Apply coatings on a test area, allowing paint to dry one week before testing adhesion. If adhesion is poor, or if this product attacks the previous finish, removal of the previous coating may be necessary.

Surface Preparation Standards

	Condition of Surface	ISO 8501-1 BS7079:A1	Swedish Std. SIS055900	SSPC	NACE
White Metal		Sa 3	Sa 3	SP 5	1
Near White Metal		Sa 2.5	Sa 2.5	SP 10	2
Commercial Blast		Sa 2	Sa 2	SP 6	3
Brush-Off Blast		Sa 1	Sa 1	SP 7	4
Hand Tool Cleaning	Rusted	C St 2	C St 2	SP 2	-
	Pitted & Rusted	D St 2	D St 2	SP 2	-
Power Tool Cleaning	Rusted	C St 3	C St 3	SP 3	-
	Pitted & Rusted	D St 3	D St 3	SP 3	-

APPLICATION CONDITIONS

Temperature:	40°F (4.5°C) minimum, 110°F (43°C) maximum (air, surface, and material) At least 5°F (2.8°C) above dew point
Relative humidity:	85% maximum

APPLICATION EQUIPMENT

The following is a guide. Changes in pressures and tip sizes may be needed for proper spray characteristics. Always purge spray equipment before use with listed reducer. Any reduction must be compliant with existing VOC regulations and compatible with the existing environmental and application conditions.

Reducer/Clean Up ..... Reducer R7K15

Airless Spray
Pump.....30:1
Pressure.....2800 - 3000 psi
Hose.....1/4" ID
Tip .....017" - .023"
Filter .....60 mesh
Reduction.....As needed up to 10% by volume

Brush
Brush.....Nylon/Polyester or Natural Bristle
Reduction.....As needed up to 10% by volume

Roller
Cover .....3/8" woven with solvent resistant core
Reduction.....As needed up to 10% by volume

Recommended Spreading Rate per coat:

	Standard	AWWA
Wet mils (microns):	7.0 (175) - 13.5 (340)	4.2 (105) - 8.3 (208)
Dry mils (microns):	5.0 (125) - 10.0* (250)	3.0 (75) - 6.0* (150)
Coverage:	116 (2.8) - 232 (5.6) sq ft/gal (m^2/L)	192 (4.7) - 384 (9.4)

*See recommended systems on Product Information page

If specific application equipment is not listed above, equivalent equipment may be substituted.

continued on back

Protective & Marine Coatings

Classified
Drinking Water System Component
ANSI/NSF 61
3JGH
Water Quality

MACROPOXY® 646 PW
POTABLE WATER EPOXY

PART A	B58WX610	MILL WHITE
PART A	B58LX600	LIGHT BLUE
PART B	B58VX600	HARDENER
PART B	B58VX605	OAP HARDENER

APPLICATION BULLETIN

4.56

APPLICATION PROCEDURES

Surface preparation must be completed as indicated.

Mix contents of each component thoroughly with low speed power agitation. Make certain no pigment remains on the bottom of the can. Then combine one part by volume of Part A with one part by volume of Part B. Thoroughly agitate the mixture with power agitation. Allow the material to sweat-in as indicated prior to application. Re-stir before using.

If reducer solvent is used, add only after both components have been thoroughly mixed, after sweat-in.

Apply paint at the recommended film thickness and spreading rate as indicated below:

Recommended Spreading Rate per coat:

	Standard		AWWA	
	Min.	Max.	Min.	Max.
Wet mils (microns)	**7.0** 175	**13.5** 340	**4.2** 105	**8.3** 208
Dry mils (microns)	**5.0** 125	**10*** 250*	**3.0** 75	**6.0*** 150*
~Coverage sq ft/gal (m^2/L)	**116** 2.8	**232** 5.6	**192** 4.7	**384** 9.4
Theoretical coverage **sq ft/gal** (m^2/L) @ 1 mil/25 micron dft	**1152** (28.2)			

NOTE: Brush or roll application may require multiple coats to achieve maximum film thickness and uniformity of appearance.

* See Recommended Systems on reverse side

Drying Schedule @ 7.0 mils wet (175 microns):

	@ 40°F/4.5°C	@ 77°F/25°C *50% RH*	@ 100°F/38°C
To touch:	4-5 hours	2 hours	1.5 hours
To handle:	48 hours	8 hours	4.5 hours
To recoat:			
minimum:	48 hours	8 hours	4.5 hours
maximum:	1 year	1 year	1 year
Cure for immersion:	14 days	7 days	4 days
Pot Life:	10 hours	4 hours	2 hours
Sweat-in-Time:	30 minutes	30 minutes	15 minutes

If maximum recoat time is exceeded, abrade surface before recoating.

Drying time is temperature, humidity, and film thickness dependent.

For **Potable Water Service**, allow a minimum cure time of 7 days at 77°F (25°C) prior to placing in service. Sterilize and rinse per AWWA C652.

Application of coating above maximum or below minimum recommended spreading rate may adversely affect coating performance.

CLEAN UP INSTRUCTIONS

Clean spills and spatters immediately with Reducer R7K15. Clean tools immediately after use with Reducer R7K15.

DISCLAIMER

The information and recommendations set forth in this Product Data Sheet are based upon tests conducted by or on behalf of The Sherwin-Williams Company. Such information and recommendations set forth herein are subject to change and pertain to the product offered at the time of publication. Consult your Sherwin-Williams representative to obtain the most recent Product Data Information and Application Bulletin.

PERFORMANCE TIPS

Stripe coat all crevices, welds, and sharp angles to prevent early failure in these areas.

When using spray application, use a 50% overlap with each pass of the gun to avoid holidays, bare areas, and pinholes. If necessary, cross spray at a right angle

Spreading rates are calculated on volume solids and do not include an application loss factor due to surface profile, roughness or porosity of the surface, skill and technique of the applicator, method of application, various surface irregularities, material lost during mixing, spillage, over thinning, climatic conditions, and excessive film build.

Excessive reduction of material can affect film build, appearance, adhesion and UL ANSI/ NSF 61 approval.

Do not mix previously catalyzed material with new.

Do not apply the material beyond recommended pot life.

In order to avoid blockage of spray equipment, clean equipment before use or before periods of extended downtime with Reducer R7K15.

Tinting is not recommended for immersion service.

Quik-Kick Epoxy Accelerator is acceptable for atmospheric use.

Do not use Quik-Kick Epoxy Accelerator for immersion ser-vice when UL certification is required.

Insufficient ventilation, incomplete mixing, miscatalyzation, and external heaters may cause premature yellowing.

Excessive film build, poor ventilation, and cool temperatures may cause solvent entrapment and premature coating failure.

For Immersion Service: (if required) Holiday test in accordance with ASTM D5162 for steel, or ASTM D4787 for concrete.

Guidance on techniques and required equipment to inspect a coating system incorporating Opti-Check OAP Technology can be found in SSPC-TU 11.

Refer to Product Information sheet for additional performance characteristics and properties.

SAFETY PRECAUTIONS

Refer to the MSDS sheet before use.

Published technical data and instructions are subject to change without notice. Contact your Sherwin-Williams representative for additional technical data and instructions.

WARRANTY

The Sherwin-Williams Company warrants our products to be free of manufacturing defects in accord with applicable Sherwin-Williams quality control procedures. Liability for products proven defective, if any, is limited to replacement of the defective product or the refund of the purchase price paid for the defective product as determined by Sherwin-Williams. NO OTHER WARRANTY OR GUARANTEE OF ANY KIND IS MADE BY SHERWIN-WILLIAMS, EXPRESSED OR IMPLIED, STATUTORY, BY OPERATION OF LAW OR OTHERWISE, INCLUDING MERCHANTABILITY AND FITNESS FOR A PARTICULAR PURPOSE.

MATERIAL SAFETY DATA SHEET

B58WX610
06 00

DATE OF PREPARATION
May 8, 2011

SECTION 1 — PRODUCT AND COMPANY IDENTIFICATION

PRODUCT NUMBER
B58WX610
PRODUCT NAME
MACROPOXY® 646 PW Potable Water Epoxy (Part A), Mill White
MANUFACTURER'S NAME
THE SHERWIN-WILLIAMS COMPANY
101 Prospect Avenue N.W.
Cleveland, OH 44115

Telephone Numbers and Websites

Product Information	www.sherwin-williams.com
Regulatory Information	(216) 566-2902 www.paintdocs.com
Medical Emergency	(216) 566-2917
Transportation Emergency*	(800) 424-9300
**for Chemical Emergency ONLY (spill, leak, fire, exposure, or accident)*	

SECTION 2 — COMPOSITION/INFORMATION ON INGREDIENTS

% by Weight	CAS Number	Ingredient	Units	Vapor Pressure
3	**100-41-4**	**Ethylbenzene**		
		ACGIH TLV	100 PPM	7.1 mm
		ACGIH TLV	125 PPM STEL	
		OSHA PEL	100 PPM	
		OSHA PEL	125 PPM STEL	
14	**1330-20-7**	**Xylene**		
		ACGIH TLV	100 PPM	5.9 mm
		ACGIH TLV	150 PPM STEL	
		OSHA PEL	100 PPM	
		OSHA PEL	150 PPM STEL	
10	**68410-23-1**	**Polyamide**		
		ACGIH TLV	Not Available	
		OSHA PEL	Not Available	
8	**14807-96-6**	**Talc**		
		ACGIH TLV	2 mg/m3 as Resp. Dust	
		OSHA PEL	2 mg/m3 as Resp. Dust	
35	**13463-67-7**	**Titanium Dioxide**		
		ACGIH TLV	10 mg/m3 as Dust	
		OSHA PEL	10 mg/m3 Total Dust	
		OSHA PEL	5 mg/m3 Respirable Fraction	

SECTION 3 — HAZARDS IDENTIFICATION

ROUTES OF EXPOSURE
INHALATION of vapor or spray mist.
EYE or SKIN contact with the product, vapor or spray mist.

HMIS Codes

Health	3*
Flammability	3
Reactivity	0

EFFECTS OF OVEREXPOSURE
EYES: Irritation.
SKIN: Prolonged or repeated exposure may cause irritation.
INHALATION: Irritation of the upper respiratory system.

May cause nervous system depression. Extreme overexposure may result in unconsciousness and possibly death.
Prolonged overexposure to hazardous ingredients in Section 2 may cause adverse chronic effects to the following organs or systems:
- the liver
- the urinary system
- the reproductive system

SIGNS AND SYMPTOMS OF OVEREXPOSURE

Headache, dizziness, nausea, and loss of coordination are indications of excessive exposure to vapors or spray mists.
Redness and itching or burning sensation may indicate eye or excessive skin exposure.

MEDICAL CONDITIONS AGGRAVATED BY EXPOSURE

May cause allergic skin reaction in susceptible persons or skin sensitization.

CANCER INFORMATION

For complete discussion of toxicology data refer to Section 11.

SECTION 4 — FIRST AID MEASURES

EYES: Flush eyes with large amounts of water for 15 minutes. Get medical attention.
SKIN: Wash affected area thoroughly with soap and water.
Remove contaminated clothing and launder before re-use.
INHALATION: If affected, remove from exposure. Restore breathing. Keep warm and quiet.
INGESTION: Do not induce vomiting. Get medical attention immediately.

SECTION 5 — FIRE FIGHTING MEASURES

FLASH POINT	LEL	UEL	FLAMMABILITY CLASSIFICATION
85 °F PMCC	1.0	7.0	RED LABEL -- Flammable, Flash below 100 °F (38 °C)

EXTINGUISHING MEDIA

Carbon Dioxide, Dry Chemical, Foam

UNUSUAL FIRE AND EXPLOSION HAZARDS

Closed containers may explode when exposed to extreme heat.
Application to hot surfaces requires special precautions.
During emergency conditions overexposure to decomposition products may cause a health hazard. Symptoms may not be immediately apparent. Obtain medical attention.

SPECIAL FIRE FIGHTING PROCEDURES

Full protective equipment including self-contained breathing apparatus should be used.
Water spray may be ineffective. If water is used, fog nozzles are preferable. Water may be used to cool closed containers to prevent pressure build-up and possible autoignition or explosion when exposed to extreme heat.

SECTION 6 — ACCIDENTAL RELEASE MEASURES

STEPS TO BE TAKEN IN CASE MATERIAL IS RELEASED OR SPILLED

Remove all sources of ignition. Ventilate the area.
Remove with inert absorbent.

SECTION 7 — HANDLING AND STORAGE

STORAGE CATEGORY

DOL Storage Class IC

PRECAUTIONS TO BE TAKEN IN HANDLING AND STORAGE

Contents are FLAMMABLE. Keep away from heat, sparks, and open flame.
During use and until all vapors are gone: Keep area ventilated - Do not smoke - Extinguish all flames, pilot lights, and heaters - Turn off stoves, electric tools and appliances, and any other sources of ignition.
Consult NFPA Code. Use approved Bonding and Grounding procedures.
Keep container closed when not in use. Transfer only to approved containers with complete and appropriate labeling. Do not take internally. Keep out of the reach of children.

SECTION 8 — EXPOSURE CONTROLS/PERSONAL PROTECTION

PRECAUTIONS TO BE TAKEN IN USE

Use only with adequate ventilation.
Avoid contact with skin and eyes. Avoid breathing vapor and spray mist.
Wash hands after using.
This coating may contain materials classified as nuisance particulates (listed "as Dust" in Section 2) which may be present at hazardous levels only during sanding or abrading of the dried film. If no specific dusts are listed in Section 2, the applicable limits for nuisance dusts are ACGIH TLV 10 mg/m3 (total dust), 3 mg/m3 (respirable fraction), OSHA PEL 15 mg/m3 (total dust), 5 mg/m3 (respirable fraction).

VENTILATION

Local exhaust preferable. General exhaust acceptable if the exposure to materials in Section 2 is maintained below applicable exposure limits. Refer to OSHA Standards 1910.94, 1910.107, 1910.108.

RESPIRATORY PROTECTION

If personal exposure cannot be controlled below applicable limits by ventilation, wear a properly fitted organic vapor/particulate respirator approved by NIOSH/MSHA for protection against materials in Section 2.
When sanding or abrading the dried film, wear a dust/mist respirator approved by NIOSH/MSHA for dust which may be generated from this product, underlying paint, or the abrasive.

PROTECTIVE GLOVES

Wear gloves which are recommended by glove supplier for protection against materials in Section 2.

EYE PROTECTION

Wear safety spectacles with unperforated sideshields.

OTHER PRECAUTIONS

This product must be mixed with other components before use. Before opening the packages, READ AND FOLLOW WARNING LABELS ON ALL COMPONENTS.

Intentional misuse by deliberately concentrating and inhaling the contents can be harmful or fatal.

SECTION 9 — PHYSICAL AND CHEMICAL PROPERTIES

PRODUCT WEIGHT	12.41 lb/gal	1487 g/l
SPECIFIC GRAVITY	1.49	
BOILING POINT	277 - 292 °F	136 - 144 °C
MELTING POINT	Not Available	
VOLATILE VOLUME	29%	
EVAPORATION RATE	Slower than ether	
VAPOR DENSITY	Heavier than air	
SOLUBILITY IN WATER	N.A.	

VOLATILE ORGANIC COMPOUNDS (VOC Theoretical - As Packaged)

2.09 lb/gal	251 g/l	Less Water and Federally Exempt Solvents
2.09 lb/gal	251 g/l	Emitted VOC

SECTION 10 — STABILITY AND REACTIVITY

STABILITY — Stable

CONDITIONS TO AVOID

None known.

INCOMPATIBILITY

None known.

HAZARDOUS DECOMPOSITION PRODUCTS

By fire: Carbon Dioxide, Carbon Monoxide

HAZARDOUS POLYMERIZATION

Will not occur

SECTION 11 — TOXICOLOGICAL INFORMATION

CHRONIC HEALTH HAZARDS

Reports have associated repeated and prolonged overexposure to solvents with permanent brain and nervous system damage.

Ethylbenzene is classified by IARC as possibly carcinogenic to humans (2B) based on inadequate evidence in humans and sufficient evidence in laboratory animals. Lifetime inhalation exposure of rats and mice to high ethylbenzene concentrations resulted in increases in certain types of cancer, including kidney tumors in rats and lung and liver tumors in mice. These effects were not observed in animals exposed to lower concentrations. There is no evidence that ethylbenzene causes cancer in humans.

IARC's Monograph No. 93 reports there is sufficient evidence of carcinogenicity in experimental rats exposed to titanium dioxide but inadequate evidence for carcinogenicity in humans and has assigned a Group 2B rating. In addition, the IARC summary concludes, "No significant exposure to titanium dioxide is thought to occur during the use of products in which titanium is bound to other materials, such as paint."

TOXICOLOGY DATA

CAS No.	Ingredient Name			
100-41-4	**Ethylbenzene**			
		LC50 RAT	4HR	Not Available
		LD50 RAT		3500 mg/kg
1330-20-7	**Xylene**			
		LC50 RAT	4HR	5000 ppm
		LD50 RAT		4300 mg/kg
68410-23-1	**Polyamide**			
		LC50 RAT	4HR	Not Available
		LD50 RAT		8000. mg/kg
14807-96-6	**Talc**			
		LC50 RAT	4HR	Not Available
		LD50 RAT		Not Available
13463-67-7	**Titanium Dioxide**			
		LC50 RAT	4HR	Not Available
		LD50 RAT		Not Available

SECTION 12 — ECOLOGICAL INFORMATION

ECOTOXICOLOGICAL INFORMATION

No data available.

SECTION 13 — DISPOSAL CONSIDERATIONS

WASTE DISPOSAL METHOD

Waste from this product may be hazardous as defined under the Resource Conservation and Recovery Act (RCRA) 40 CFR 261.
Waste must be tested for ignitability to determine the applicable EPA hazardous waste numbers.
Incinerate in approved facility. Do not incinerate closed container. Dispose of in accordance with Federal, State/Provincial, and Local regulations regarding pollution.

SECTION 14 — TRANSPORT INFORMATION

Multi-modal shipping descriptions are provided for informational purposes and do not consider container sizes. The presence of a shipping description for a particular mode of transport (ocean, air, etc.), does not indicate that the product is packaged suitably for that mode of transport. All packaging must be reviewed for suitability prior to shipment, and compliance with the applicable regulations is the sole responsibility of the person offering the product for transport.

US Ground (DOT)

5 Liters (1.3 Gallons) and Less may be Classed as CONSUMER COMMODITY, ORM-D
Larger Containers are Regulated as:
UN1263, PAINT, 3, PG III, (ERG#128)

DOT (Dept of Transportation) Hazardous Substances & Reportable Quantities

Ethyl benzene 1000 lb RQ
Xylenes (isomers and mixture) 100 lb RQ

Bulk Containers may be Shipped as (check reportable quantities):

RQ, UN1263, PAINT, 3, PG III, (XYLENES (ISOMERS AND MIXTURE)), (ERG#128)

Canada (TDG)

UN1263, PAINT, CLASS 3, PG III, LIMITED QUANTITY, (ERG#128)

IMO

5 Liters (1.3 Gallons) and Less may be Shipped as Limited Quantity.
UN1263, PAINT, CLASS 3, PG III, (29 C c.c.), EmS F-E, S-E, ADR (D/E)

IATA/ICAO

UN1263, PAINT, 3, PG III

SECTION 15 — REGULATORY INFORMATION

SARA 313 *(40 CFR 372.65C)* SUPPLIER NOTIFICATION

CAS No.	CHEMICAL/COMPOUND	% by WT	% Element
100-41-4	Ethylbenzene	3	
1330-20-7	Xylene	14	

CALIFORNIA PROPOSITION 65

WARNING: This product contains chemicals known to the State of California to cause cancer and birth defects or other reproductive harm.

TSCA CERTIFICATION

All chemicals in this product are listed, or are exempt from listing, on the TSCA Inventory.

SECTION 16 — OTHER INFORMATION

This product has been classified in accordance with the hazard criteria of the Canadian Controlled Products Regulations (CPR) and the MSDS contains all of the information required by the CPR.

The above information pertains to this product as currently formulated, and is based on the information available at this time. Addition of reducers or other additives to this product may substantially alter the composition and hazards of the product. Since conditions of use are outside our control, we make no warranties, express or implied, and assume no liability in connection with any use of this information.

Protective & Marine Coatings

RECOATABLE EPOXY PRIMER

PART G	B67A5	LIGHT GRAY
PART G	B67H5	TAN
PART G	B67R5	RED OXIDE
PART H	B67V5	HARDENER

Revised 5/11

PRODUCT INFORMATION

4.45

PRODUCT DESCRIPTION

RECOATABLE EPOXY PRIMER is a rust inhibitive high build catalyzed polyamide/bisphenol A epoxy primer designed for fast dry and quick or extended recoatability.

- Meets Class A requirements for Slip Coefficient, .50 (Red Oxide only)
- Long pot life
- High build coating for economical application
- One year recoatability
- Low temperature application - down to 35°F (1.5°C)
- Corrosion resistant (contains zinc phosphate)
- Outstanding application properties

PRODUCT CHARACTERISTICS

Finish:	Flat
Color:	Red Oxide, Tan, Light Gray
Volume Solids:	65% ± 2%, mixed
Weight Solids:	81% ± 2%, mixed
VOC (EPA Method 24): mixed	Unreduced: <320 g/L; 2.67 lb/gal Reduced 5%: <340 g/L; 2.88 lb/gal
Mix Ratio:	1:1 by volume

Recommended Spreading Rate per coat:

	Minimum	Maximum
Wet mils (microns)	**6.0** (150)	**9.0** (225)
Dry mils (microns)	**4.0*** (100)	**6.0*** (150)
~Coverage sq ft/gal (m^2/L)	**175** (4.3)	**260** (6.4)
Theoretical coverage **sq ft/gal** (m^2/L) @ 1 mil / 25 microns dft	**1040** (25.5)	

*See Performance Tips section

NOTE: Brush or roll application may require multiple coats to achieve maximum film thickness and uniformity of appearance.

Drying Schedule @ 6.0 mils wet (150 microns):

	@ 35°F/1.5°C	@ 77°F/25°C *50% RH*	@ 120°F/49°C
To touch:	1 hour	15 minutes	10 minutes
Tack free:	2 hours	30 minutes	15 minutes
To recoat:			
minimum:	6 hours	2 hours	30 minutes
maximum:	1 year	1 year	1 year
To cure:	14 days	14 days	2 days
Pot Life:	8+ hours	8 hours	3 hours
Sweat-in-time:	1 hour	30 minutes	10 minutes

If maximum recoat time is exceeded, abrade surface before recoating.

Drying time is temperature, humidity, and film thickness dependent.

Shelf Life:	36 months, unopened Store indoors at 40°F (4.5°C) to 100°F (38°C).
Flash Point:	80°F (27°C), PMCC, mixed
Reducer/Clean Up:	
Below 80°F (27°C):	Reducer #54, R7K54
Above 80°F (27°C):	Reducer #100, R7K100 or R7K104
In California:	Reducer R7K111

RECOMMENDED USES

For use as a shop or field applied epoxy primer where a variable recoat window is required due to construction schedules, distribution logistics and environmental considerations. Affords flexibility in projects when completion schedules cannot be specified.

- Primer for structural steel
- Paper mills
- Power plants
- Suitable for use in USDA inspected facilities
- Marine applications
- Storage tanks

PERFORMANCE CHARACTERISTICS

Substrate*: Steel

Surface Preparation*: SSPC-SP6/NACE 3

System Tested*:

1 ct. Recoatable Epoxy Primer @ 5.0 mils (125 microns) dft

*unless otherwise noted below

Test Name	Test Method	Results
Abrasion Resistance	ASTM D4060, CS17 wheel, 1000 cycles, 1 kg load	200 mg loss
Accelerated Weathering - QUV[1]	ASTM D4587, QUV-A, 5,000 hours	Passes
Adhesion	ASTM D4541	1050 psi
Corrosion Weathering	ASTM D5894, 13 cycles, 4,368 hours	Rating 10 per ASTM D714 for Blistering; Rating 7 per ASTM D610 for Rusting
Direct Impact Resistance	ASTM D2794	160 in. lbs.
Dry Heat Resistance	ASTM D2485	250°F (121°C) (discolors)
Flexibility	ASTM D522, 180° bend, 1" mandrel	Passes
Moisture Condensation Resistance	ASTM D4585, 100°F (38°C), 2000 hours	Passes, no cracking or delamination
Pencil Hardness	ASTM D3363	3H
Salt Fog Resistance[1]	ASTM B117, 5,600 hours	Passes, no cracking or delamination
Slip Coefficient, Red Oxide	AISC Specification for Structural Joints Using ASTM A325 or ASTM A490 Bolts	Class A, 0.50

Epoxy coatings may darken or yellow following application and curing.

Provides performance comparable to products formulated to federal specifications: Mil-P-23377, Mil-P-53022

Footnotes:

[1] Acrolon 218 HS topcoat

continued on back

Protective & Marine Coatings RECOATABLE EPOXY PRIMER

PART G	B67A5	LIGHT GRAY
PART G	B67H5	TAN
PART G	B67R5	RED OXIDE
PART H	B67V5	HARDENER

PRODUCT INFORMATION

4.45

RECOMMENDED SYSTEMS

		Dry Film Thickness / ct. Mils	(Microns)
Steel, catalyzed epoxy topcoat:			
1 ct.	Recoatable Epoxy Primer	4.0-6.0	(100-150)
2 cts.	Tile-Clad HS Epoxy	2.5-4.0	(63-100)
Steel, polyurethane topcoat:			
1 ct.	Recoatable Epoxy Primer	4.0-6.0	(100-150)
1-2 cts.	Hi-Solids Polyurethane	3.0-4.0	(75-100)
Steel, acrylic epoxy topcoat:			
1 ct.	Recoatable Epoxy Primer	4.0-6.0	(100-150)
2 cts.	Water Based Catalyzed Epoxy	2.5-3.0	(63-75)
Steel, acrylic topcoat:			
1 ct.	Recoatable Epoxy Primer	4.0-6.0	(100-150)
2 cts.	DTM Acrylic Coating	2.5-4.0	(63-100)
Galvanized:			
1 ct.	Recoatable Epoxy Primer	4.0-6.0	(100-150)
2 cts.	Tile-Clad HS Epoxy	2.5-4.0	(63-100)

The systems listed above are representative of the product's use, other systems may be appropriate.

DISCLAIMER

The information and recommendations set forth in this Product Data Sheet are based upon tests conducted by or on behalf of The Sherwin-Williams Company. Such information and recommendations set forth herein are subject to change and pertain to the product offered at the time of publication. Consult your Sherwin-Williams representative to obtain the most recent Product Data Information and Application Bulletin.

SURFACE PREPARATION

Surface must be clean, dry, and in sound condition. Remove all oil, dust, grease, dirt, loose rust, and other foreign material to ensure adequate adhesion.

Refer to product Application Bulletin for detailed surface preparation information.

Minimum recommended surface preparation:

Iron & Steel: SSPC-SP6/NACE 3, 2 mil (50 micron) profile

Galvanizing: SSPC-SP1

Surface Preparation Standards

	Condition of Surface	ISO 8501-1 BS7079:A1	Swedish Std. SIS055900	SSPC	NACE
White Metal		Sa 3	Sa 3	SP 5	1
Near White Metal		Sa 2.5	Sa 2.5	SP 10	2
Commercial Blast		Sa 2	Sa 2	SP 6	3
Brush-Off Blast		Sa 1	Sa 1	SP 7	4
Hand Tool Cleaning	Rusted	C St 2	C St 2	SP 2	-
	Pitted & Rusted	D St 2	D St 2	SP 2	-
Power Tool Cleaning	Rusted	C St 3	C St 3	SP 3	-
	Pitted & Rusted	D St 3	D St 3	SP 3	-

TINTING

Do not tint.

APPLICATION CONDITIONS

Temperature:

air and surface: 35°F (1.6°C) minimum, 140°F (60°C) maximum

material: 50°F (10°C) minimum
At least 5°F (2.8°C) above dew point

Relative humidity: 85% maximum

Refer to product Application Bulletin for detailed application information.

ORDERING INFORMATION

Packaging:

Part G: 1 gallon (3.78L) and 5 gallon (18.9L) containers

Part H: 1 gallon (3.78L) and 5 gallon (18.9L) containers

Weight: 13.26 ± 0.2 lb/gal ; 1.6 Kg/L, mixed

SAFETY PRECAUTIONS

Refer to the MSDS sheet before use.

Published technical data and instructions are subject to change without notice. Contact your Sherwin-Williams representative for additional technical data and instructions.

WARRANTY

The Sherwin-Williams Company warrants our products to be free of manufacturing defects in accord with applicable Sherwin-Williams quality control procedures. Liability for products proven defective, if any, is limited to replacement of the defective product or the refund of the purchase price paid for the defective product as determined by Sherwin-Williams. NO OTHER WARRANTY OR GUARANTEE OF ANY KIND IS MADE BY SHERWIN-WILLIAMS, EXPRESSED OR IMPLIED, STATUTORY, BY OPERATION OF LAW OR OTHERWISE, INCLUDING MERCHANTABILITY AND FITNESS FOR A PARTICULAR PURPOSE.

Protective & Marine Coatings

RECOATABLE EPOXY PRIMER

PART G	B67A5	LIGHT GRAY
PART G	B67H5	TAN
PART G	B67R5	RED OXIDE
PART H	B67V5	HARDENER

Revised 5/11

APPLICATION BULLETIN

4.45

SURFACE PREPARATIONS

Surface must be clean, dry, and in sound condition. Remove all oil, dust, grease, dirt, loose rust, and other foreign material to ensure adequate adhesion.

Iron & Steel (atmospheric service)
Remove all oil and grease from surface by Solvent Cleaning per SSPC-SP1. Minimum surface preparation is Commercial Blast Cleaning per SSPC-SP6/NACE 3. For better performance, use Near White Metal Blast Cleaning per SSPC-SP10/NACE 2. Blast clean all surfaces using a sharp, angular abrasive for optimum surface profile (2 mils / 50 microns). Prime any bare steel the same day as it is cleaned.

Galvanized Steel
Allow to weather a minimum of six months prior to coating. Solvent Clean per SSPC-SP1. When weathering is not possible, or the surface has been treated with chromates or silicates, first Solvent Clean per SSPC-SP1 and apply a test patch. Allow paint to dry at least one week before testing adhesion. If adhesion is poor, brush blasting per SSPC-SP7 is necessary to remove these treatments. Rusty galvanizing requires a minimum of Hand Tool Cleaning per SSPC-SP2, prime the area the same day as cleaned.

Previously Painted Surfaces
If in sound condition, clean the surface of all foreign material. Smooth, hard or glossy coatings and surfaces should be dulled by abrading the surface. Apply a test area, allowing paint to dry one week before testing adhesion. If adhesion is poor, or if this product attacks the previous finish, removal of the previous coating may be necessary. If paint is peeling or badly weathered, clean surface to sound substrate and treat as a new surface as above.

Surface Preparation Standards

	Condition of Surface	ISO 8501-1 BS7079:A1	Swedish Std. SIS055900	SSPC	NACE
White Metal		Sa 3	Sa 3	SP 5	1
Near White Metal		Sa 2.5	Sa 2.5	SP 10	2
Commercial Blast		Sa 2	Sa 2	SP 6	3
Brush-Off Blast		Sa 1	Sa 1	SP 7	4
Hand Tool Cleaning	Rusted	C St 2	C St 2	SP 2	-
	Pitted & Rusted	D St 2	D St 2	SP 2	-
Power Tool Cleaning	Rusted	C St 3	C St 3	SP 3	-
	Pitted & Rusted	D St 3	D St 3	SP 3	-

APPLICATION CONDITIONS

Temperature:	
air and surface:	35°F (1.6°C) minimum, 140°F (60°C) maximum
material:	50°F (10°C) minimum At least 5°F (2.8°C) above dew point
Relative humidity:	85% maximum

APPLICATION EQUIPMENT

The following is a guide. Changes in pressures and tip sizes may be needed for proper spray characteristics. Always purge spray equipment before use with listed reducer. Any reduction must be compliant with existing VOC regulations and compatible with the existing environmental and application conditions.

Reducer/Clean Up
Below 80°F (27°C) .....Reducer #54, R7K54
Above 80°F (27°C).....Reducer #100, R7K100 or R7K104
In California.....Reducer R7K111

Airless Spray
Pressure.....2400 psi
Hose.....1/4" ID
Tip .....017"
Filter.....60 mesh
Reduction.....As needed up to 5% by volume

Brush
Brush.....Natural Bristle
Reduction.....Not recommended

Roller
Cover .....3/8" - 1/2" woven with solvent resistant core
Reduction.....Not recommended

Plural Component Spray ...Acceptable
Refer to April 2010 Technical Bulletin - "Application Guidelines for Macropoxy 646 & Recoatable Epoxy Primer Utilizing Plural Component Equipment"

If specific application equipment is not listed above, equivalent equipment may be substituted.

continued on back

Protective & Marine Coatings RECOATABLE EPOXY PRIMER

PART G	B67A5	LIGHT GRAY
PART G	B67H5	TAN
PART G	B67R5	RED OXIDE
PART H	B67V5	HARDENER

APPLICATION BULLETIN

4.45

APPLICATION PROCEDURES

Surface preparation must be completed as indicated.

Mix contents of each component thoroughly with low speed power agitation. Make certain no pigment remains on the bottom of the cans. Then combine one part by volume of Part G with one part by volume of Part H. Thoroughly agitate the mixture with power agitation. Allow the material to sweat-in as indicated. Re-stir before using.

If reducer solvent is used, add only after both components have been thoroughly mixed, after sweat-in.

Apply paint at the recommended film thickness and spreading rate as indicated below:

Recommended Spreading Rate per coat:

	Minimum	Maximum
Wet mils (microns)	**6.0** (150)	**9.0** (225)
Dry mils (microns)	**4.0*** (100)	**6.0*** (150)
~Coverage sq ft/gal (m^2/L)	**175** (4.3)	**260** (6.4)
Theoretical coverage **sq ft/gal** (m^2/L) @ 1 mil / 25 microns dft	**1040** (25.5)	

*See Performance Tips section

NOTE: Brush or roll application may require multiple coats to achieve maximum film thickness and uniformity of appearance.

Drying Schedule @ 6.0 mils wet (150 microns):

	@ 35°F/1.5°C	@ 77°F/25°C *50% RH*	@ 120°F/49°C
To touch:	1 hour	15 minutes	10 minutes
Tack free:	2 hours	30 minutes	15 minutes
To recoat:			
minimum:	6 hours	2 hours	30 minutes
maximum:	1 year	1 year	1 year
To cure:	14 days	14 days	2 days

If maximum recoat time is exceeded, abrade surface before recoating.

Drying time is temperature, humidity, and film thickness dependent.

Pot Life:	8+ hours	8 hours	3 hours
Sweat-in-time:	1 hour	30 minutes	10 minutes

Application of coating above maximum or below minimum recommended spreading rate may adversely affect coating performance.

CLEAN UP INSTRUCTIONS

Clean spills and spatters immediately with Reducer #54, R7K54. Clean tools immediately after use with Reducer #54, R7K54. Follow manufacturer's safety recommendations when using any solvent.

DISCLAIMER

The information and recommendations set forth in this Product Data Sheet are based upon tests conducted by or on behalf of The Sherwin-Williams Company. Such information and recommendations set forth herein are subject to change and pertain to the product offered at the time of publication. Consult your Sherwin-Williams representative to obtain the most recent Product Data Information and Application Bulletin.

PERFORMANCE TIPS

Stripe coat all crevices, welds, and sharp angles to prevent early failure in these areas.

When using spray application, use a 50% overlap with each pass of the gun to avoid holidays, bare areas, and pinholes. If necessary, cross spray at a right angle.

Spreading rates are calculated on volume solids and do not include an application loss factor due to surface profile, roughness or porosity of the surface, skill and technique of the applicator, method of application, various surface irregularities, material lost during mixing, spillage, overthinning, climatic conditions, and excessive film build.

Excessive reduction of material can affect film build, appearance, and adhesion.

Do not apply the material beyond recommended pot life.

Do not mix previously catalyzed material with new.

In order to avoid blockage of spray equipment, clean equipment before use or before periods of extended downtime with Reducer #54, R7K54.

Material must be at least 50°F (10°C) prior to catalyzing.

Quik-Kick Epoxy Accelerator is acceptable for use. See data page 4.99 for details.

When coating over aluminum and galvanizing, recommended dft is 2-4 mils (50-100 microns).

Refer to Product Information sheet for additional performance characteristics and properties.

SAFETY PRECAUTIONS

Refer to the MSDS sheet before use.

Published technical data and instructions are subject to change without notice. Contact your Sherwin-Williams representative for additional technical data and instructions.

WARRANTY

The Sherwin-Williams Company warrants our products to be free of manufacturing defects in accord with applicable Sherwin-Williams quality control procedures. Liability for products proven defective, if any, is limited to replacement of the defective product or the refund of the purchase price paid for the defective product as determined by Sherwin-Williams. NO OTHER WARRANTY OR GUARANTEE OF ANY KIND IS MADE BY SHERWIN-WILLIAMS, EXPRESSED OR IMPLIED, STATUTORY, BY OPERATION OF LAW OR OTHERWISE, INCLUDING MERCHANTABILITY AND FITNESS FOR A PARTICULAR PURPOSE.

MATERIAL SAFETY DATA SHEET

B67A5
17 00

DATE OF PREPARATION
May 8, 2011

SECTION 1 — PRODUCT AND COMPANY IDENTIFICATION

PRODUCT NUMBER
B67A5

PRODUCT NAME
Recoatable Epoxy Primer (Part G), Light Gray

MANUFACTURER'S NAME
THE SHERWIN-WILLIAMS COMPANY
101 Prospect Avenue N.W.
Cleveland, OH 44115

Telephone Numbers and Websites

Product Information	www.sherwin-williams.com
Regulatory Information	(216) 566-2902 www.paintdocs.com
Medical Emergency	(216) 566-2917
Transportation Emergency*	(800) 424-9300
**for Chemical Emergency ONLY (spill, leak, fire, exposure, or accident)*	

SECTION 2 — COMPOSITION/INFORMATION ON INGREDIENTS

% by Weight	CAS Number	Ingredient	Units	Vapor Pressure
2	100-41-4	**Ethylbenzene**		
		ACGIH TLV	100 PPM	7.1 mm
		ACGIH TLV	125 PPM STEL	
		OSHA PEL	100 PPM	
		OSHA PEL	125 PPM STEL	
12	1330-20-7	**Xylene**		
		ACGIH TLV	100 PPM	5.9 mm
		ACGIH TLV	150 PPM STEL	
		OSHA PEL	100 PPM	
		OSHA PEL	150 PPM STEL	
3	2807-30-9	**2-Propoxyethanol**		
		ACGIH TLV	Not Available	1.3 mm
		OSHA PEL	Not Available	
7	68410-23-1	**Polyamide**		
		ACGIH TLV	Not Available	
		OSHA PEL	Not Available	
47	14808-60-7	**Quartz**		
		ACGIH TLV	0.025 mg/m3 as Resp. Dust	
		OSHA PEL	0.1 mg/m3 as Resp. Dust	
14	13463-67-7	**Titanium Dioxide**		
		ACGIH TLV	10 mg/m3 as Dust	
		OSHA PEL	10 mg/m3 Total Dust	
		OSHA PEL	5 mg/m3 Respirable Fraction	
2	1314-13-2	**Zinc Oxide**		
		ACGIH TLV	10 mg/m3 as Dust	
		OSHA PEL	10 mg/m3 Total Dust	
		OSHA PEL	5 mg/m3 Respirable Fraction	

SECTION 3 — HAZARDS IDENTIFICATION

ROUTES OF EXPOSURE
INHALATION of vapor or spray mist.
EYE or SKIN contact with the product, vapor or spray mist.

EFFECTS OF OVEREXPOSURE
EYES: Irritation.
SKIN: Prolonged or repeated exposure may cause irritation.
INHALATION: Irritation of the upper respiratory system.

HMIS Codes

Health	3*
Flammability	3
Reactivity	0

May cause nervous system depression. Extreme overexposure may result in unconsciousness and possibly death.
Prolonged overexposure to hazardous ingredients in Section 2 may cause adverse chronic effects to the following organs or systems:

- the liver
- the urinary system
- the reproductive system

SIGNS AND SYMPTOMS OF OVEREXPOSURE

Headache, dizziness, nausea, and loss of coordination are indications of excessive exposure to vapors or spray mists.
Redness and itching or burning sensation may indicate eye or excessive skin exposure.

MEDICAL CONDITIONS AGGRAVATED BY EXPOSURE

May cause allergic skin reaction in susceptible persons or skin sensitization.

CANCER INFORMATION

For complete discussion of toxicology data refer to Section 11.

SECTION 4 — FIRST AID MEASURES

EYES: Flush eyes with large amounts of water for 15 minutes. Get medical attention.
SKIN: Wash affected area thoroughly with soap and water.
If irritation persists or occurs later, get medical attention.
Remove contaminated clothing and launder before re-use.
INHALATION: If affected, remove from exposure. Restore breathing. Keep warm and quiet.
INGESTION: Do not induce vomiting. Get medical attention immediately.

SECTION 5 — FIRE FIGHTING MEASURES

FLASH POINT	LEL	UEL	FLAMMABILITY CLASSIFICATION
80 °F PMCC	1.0	15.8	RED LABEL -- Flammable, Flash below 100 °F (38 °C)

EXTINGUISHING MEDIA

Carbon Dioxide, Dry Chemical, Foam

UNUSUAL FIRE AND EXPLOSION HAZARDS

Closed containers may explode when exposed to extreme heat.
Application to hot surfaces requires special precautions.
During emergency conditions overexposure to decomposition products may cause a health hazard. Symptoms may not be immediately apparent. Obtain medical attention.

SPECIAL FIRE FIGHTING PROCEDURES

Full protective equipment including self-contained breathing apparatus should be used.
Water spray may be ineffective. If water is used, fog nozzles are preferable. Water may be used to cool closed containers to prevent pressure build-up and possible autoignition or explosion when exposed to extreme heat.

SECTION 6 — ACCIDENTAL RELEASE MEASURES

STEPS TO BE TAKEN IN CASE MATERIAL IS RELEASED OR SPILLED

Remove all sources of ignition. Ventilate the area.
Remove with inert absorbent.

SECTION 7 — HANDLING AND STORAGE

STORAGE CATEGORY

DOL Storage Class IC

PRECAUTIONS TO BE TAKEN IN HANDLING AND STORAGE

Contents are FLAMMABLE. Keep away from heat, sparks, and open flame.
During use and until all vapors are gone: Keep area ventilated - Do not smoke - Extinguish all flames, pilot lights, and heaters - Turn off stoves, electric tools and appliances, and any other sources of ignition.
Consult NFPA Code. Use approved Bonding and Grounding procedures.
Keep container closed when not in use. Transfer only to approved containers with complete and appropriate labeling. Do not take internally. Keep out of the reach of children.

SECTION 8 — EXPOSURE CONTROLS/PERSONAL PROTECTION

PRECAUTIONS TO BE TAKEN IN USE

Use only with adequate ventilation.
Avoid contact with skin and eyes. Avoid breathing vapor and spray mist.
Wash hands after using.
This coating may contain materials classified as nuisance particulates (listed "as Dust" in Section 2) which may be present at hazardous levels only during sanding or abrading of the dried film. If no specific dusts are listed in Section 2, the applicable limits for nuisance dusts are ACGIH TLV 10 mg/m3 (total dust), 3 mg/m3 (respirable fraction), OSHA PEL 15 mg/m3 (total dust), 5 mg/m3 (respirable fraction).

VENTILATION

Local exhaust preferable. General exhaust acceptable if the exposure to materials in Section 2 is maintained below applicable exposure limits. Refer to OSHA Standards 1910.94, 1910.107, 1910.108.

RESPIRATORY PROTECTION

If personal exposure cannot be controlled below applicable limits by ventilation, wear a properly fitted organic vapor/particulate respirator approved by NIOSH/MSHA for protection against materials in Section 2.

When sanding or abrading the dried film, wear a dust/mist respirator approved by NIOSH/MSHA for dust which may be generated from this product, underlying paint, or the abrasive.

PROTECTIVE GLOVES

Wear gloves which are recommended by glove supplier for protection against materials in Section 2.

EYE PROTECTION

Wear safety spectacles with unperforated sideshields.

OTHER PROTECTIVE EQUIPMENT

Use of barrier cream on exposed skin is recommended.

OTHER PRECAUTIONS

This product must be mixed with other components before use. Before opening the packages, READ AND FOLLOW WARNING LABELS ON ALL COMPONENTS.

Intentional misuse by deliberately concentrating and inhaling the contents can be harmful or fatal.

SECTION 9 — PHYSICAL AND CHEMICAL PROPERTIES

PRODUCT WEIGHT	14.59 lb/gal	1748 g/l
SPECIFIC GRAVITY	1.76	
BOILING POINT	277 - 308 °F	136 - 153 °C
MELTING POINT	Not Available	
VOLATILE VOLUME	35%	
EVAPORATION RATE	Slower than ether	
VAPOR DENSITY	Heavier than air	
SOLUBILITY IN WATER	N.A.	

VOLATILE ORGANIC COMPOUNDS (VOC Theoretical - As Packaged)

2.56 lb/gal	307 g/l	Less Water and Federally Exempt Solvents
2.56 lb/gal	307 g/l	Emitted VOC

SECTION 10 — STABILITY AND REACTIVITY

STABILITY — Stable

CONDITIONS TO AVOID

None known.

INCOMPATIBILITY

None known.

HAZARDOUS DECOMPOSITION PRODUCTS

By fire: Carbon Dioxide, Carbon Monoxide

HAZARDOUS POLYMERIZATION

Will not occur

SECTION 11 — TOXICOLOGICAL INFORMATION

CHRONIC HEALTH HAZARDS

Reports have associated repeated and prolonged overexposure to solvents with permanent brain and nervous system damage.

Ethylbenzene is classified by IARC as possibly carcinogenic to humans (2B) based on inadequate evidence in humans and sufficient evidence in laboratory animals. Lifetime inhalation exposure of rats and mice to high ethylbenzene concentrations resulted in increases in certain types of cancer, including kidney tumors in rats and lung and liver tumors in mice. These effects were not observed in animals exposed to lower concentrations. There is no evidence that ethylbenzene causes cancer in humans.

Crystalline Silica (Quartz, Cristobalite) is listed by IARC and NTP. Long term exposure to high levels of silica dust, which can occur only when sanding or abrading the dry film, may cause lung damage (silicosis) and possibly cancer.

IARC's Monograph No. 93 reports there is sufficient evidence of carcinogenicity in experimental rats exposed to titanium dioxide but inadequate evidence for carcinogenicity in humans and has assigned a Group 2B rating. In addition, the IARC summary concludes, "No significant exposure to titanium dioxide is thought to occur during the use of products in which titanium is bound to other materials, such as paint."

TOXICOLOGY DATA

CAS No.	Ingredient Name			
100-41-4	**Ethylbenzene**			
		LC50 RAT	4HR	Not Available
		LD50 RAT		3500 mg/kg
1330-20-7	**Xylene**			
		LC50 RAT	4HR	5000 ppm
		LD50 RAT		4300 mg/kg
2807-30-9	**2-Propoxyethanol**			
		LC50 RAT	4HR	Not Available
		LD50 RAT		3090 mg/kg
68410-23-1	**Polyamide**			
		LC50 RAT	4HR	Not Available
		LD50 RAT		Not Available
14808-60-7	**Quartz**			
		LC50 RAT	4HR	Not Available
		LD50 RAT		Not Available
13463-67-7	**Titanium Dioxide**			
		LC50 RAT	4HR	Not Available
		LD50 RAT		Not Available
1314-13-2	**Zinc Oxide**			
		LC50 RAT	4HR	Not Available
		LD50 RAT		Not Available

SECTION 12 — ECOLOGICAL INFORMATION

ECOTOXICOLOGICAL INFORMATION

No data available.

SECTION 13 — DISPOSAL CONSIDERATIONS

WASTE DISPOSAL METHOD

Waste from this product may be hazardous as defined under the Resource Conservation and Recovery Act (RCRA) 40 CFR 261.
Waste must be tested for ignitability to determine the applicable EPA hazardous waste numbers.
Incinerate in approved facility. Do not incinerate closed container. Dispose of in accordance with Federal, State/Provincial, and Local regulations regarding pollution.

SECTION 14 — TRANSPORT INFORMATION

Multi-modal shipping descriptions are provided for informational purposes and do not consider container sizes. The presence of a shipping description for a particular mode of transport (ocean, air, etc.), does not indicate that the product is packaged suitably for that mode of transport. All packaging must be reviewed for suitability prior to shipment, and compliance with the applicable regulations is the sole responsibility of the person offering the product for transport.

US Ground (DOT)

5 Liters (1.3 Gallons) and Less may be Classed as CONSUMER COMMODITY, ORM-D
Larger Containers are Regulated as:
UN1263, PAINT, 3, PG III, (ERG#128)

DOT (Dept of Transportation) Hazardous Substances & Reportable Quantities

Ethyl benzene 1000 lb RQ
Xylenes (isomers and mixture) 100 lb RQ

Bulk Containers may be Shipped as (check reportable quantities):

RQ, UN1263, PAINT, 3, PG III, (XYLENES (ISOMERS AND MIXTURE)),
(ERG#128)

Canada (TDG)

UN1263, PAINT, CLASS 3, PG III, LIMITED QUANTITY, (ERG#128)

IMO

5 Liters (1.3 Gallons) and Less may be Shipped as Limited Quantity.
UN1263, PAINT, CLASS 3, PG III, (27 C c.c.), EmS F-E, S-E, ADR (D/E)

IATA/ICAO

UN1263, PAINT, 3, PG III

SECTION 15 — REGULATORY INFORMATION

SARA 313 *(40 CFR 372.65C)* SUPPLIER NOTIFICATION

CAS No.	CHEMICAL/COMPOUND	% by WT	% Element
100-41-4	Ethylbenzene	2	
1330-20-7	Xylene	12	
	Zinc Compound	6	3.3
	Glycol Ethers	3	

CALIFORNIA PROPOSITION 65

WARNING: This product contains chemicals known to the State of California to cause cancer and birth defects or other reproductive harm.

TSCA CERTIFICATION

All chemicals in this product are listed, or are exempt from listing, on the TSCA Inventory.

SECTION 16 — OTHER INFORMATION

This product has been classified in accordance with the hazard criteria of the Canadian Controlled Products Regulations (CPR) and the MSDS contains all of the information required by the CPR.

The above information pertains to this product as currently formulated, and is based on the information available at this time. Addition of reducers or other additives to this product may substantially alter the composition and hazards of the product. Since conditions of use are outside our control, we make no warranties, express or implied, and assume no liability in connection with any use of this information.

Protective & Marine Coatings

ACROLON™ 218 HS
ACRYLIC POLYURETHANE

PART A	B65-600	GLOSS SERIES
PART A	B65-650	SEMI-GLOSS SERIES
PART B	B65V600	HARDENER

Revised 5/11

PRODUCT INFORMATION

5.22

PRODUCT DESCRIPTION

ACROLON 218 HS is a low VOC, polyester modified, aliphatic, acrylic polyurethane formulated specifically for in-shop applications. Also suitable for industrial applications. A fast drying, urethane that provides color and gloss retention for exterior exposure.

- Can be used directly over organic zinc rich primers (epoxy zinc primer and moisture cure urethane zinc primer)
- Color and gloss retention for exterior exposure
- Fast dry
- Outstanding application properties

PRODUCT CHARACTERISTICS

Finish:	Gloss or Semi-Gloss
Color:	Wide range of colors available
Volume Solids:	65% ± 2%, mixed, may vary by color
Weight Solids:	78% ± 2%, mixed, may vary by color
VOC (EPA Method 24):	Unreduced: <300 g/L; 2.5 lb/gal
mixed	Reduced 10% with R7K15: <340 g/L; 2.8 lb/gal
mixed	Reduced 9% with MEK, R6K10: <340 g/L; 2.8 lb/gal
Mix Ratio:	6:1 by volume, 1 gallon or 5 gallon mixes premeasured components

Recommended Spreading Rate per coat:

	Minimum	Maximum
Wet mils (microns)	**4.5** (112.5)	**9.0** (225)
Dry mils (microns)	**3.0** (75)	**6.0** (150)
~Coverage sq ft/gal (m^2/L)	**175** (4.3)	**346** (8.5)
Theoretical coverage **sq ft/gal** (m^2/L) @ 1 mil / 25 microns dft	**1040** (25.5)	

NOTE: Brush or roll application may require multiple coats to achieve maximum film thickness and uniformity of appearance.

Drying Schedule @ 6.0 mils wet (150 microns):

	@ 35°F/1.7°C	@ 77°F/25°C *50% RH*	@ 120°F/49°C
To touch:	4 hours	30 minutes	20 minutes
To handle:	18 hours	6 hours	4 hours
To recoat:			
minimum:	18 hours	8 hours	6 hours
maximum:	3 months	3 months	3 months
To cure:	14 days	7 days	5 days
Pot Life: (reduced 5% with Reducer R7K15)	4 hours	2 hours	45 minutes
Sweat-in-Time:		None	

If maximum recoat time is exceeded, abrade surface before recoating. Drying time is temperature, humidity, and film thickness dependent.
Paint temperature must be at least 40°F (4.5°C) minimum.

Shelf Life:	Part A - 36 months, unopened Part B - 24 months, unopened Store indoors at 40°F (4.5°C) to 100°F (38°C).
Flash Point:	55°F (13°C), Seta, mixed
Reducer/Clean Up:	
Spray:	Reducer R7K15, MEK R6K10, or R7K111
Brush / Roll:	Reducer #132, R7K132 or R7K111

RECOMMENDED USES

Specifically formulated for in-shop applications.
For use over prepared metal and masonry surfaces in industrial environments such as:

- Structural steel
- Rail cars and locomotives
- Conveyors
- Bridges
- Tank exteriors
- Pipelines
- Ships
- Wind Towers - onshore and offshore
- Offshore platforms - exploration and production
- Suitable for use in USDA inspected facilities
- Conforms to AWWA D102 Outside Coating Systems #4 (OCS-4), #5 (OCS-5) & #6 (OCS-6)
- Acceptable for use in high performance architectural applications

PERFORMANCE CHARACTERISTICS

Substrate*: Steel
Surface Preparation*: SSPC-SP10/NACE 2
System Tested*:
1 ct. Macropoxy 646 @ 6.0 mils (150 microns) dft
1 ct. Acrolon 218 HS Gloss @ 4.0 mils (100 microns) dft
*unless otherwise noted below

Test Name	Test Method	Results
Abrasion Resistance[1]	ASTM D4060, CS17 wheel, 1000 cycles, 1 kg load	43 mg loss
Adhesion	ASTM D4541	975 psi
Corrosion Weathering[2]	ASTM D5894, 9 cycles, 3024 hours	Rating 10 per ASTM D610, for rusting; Rating 10 per ASTM D714, for blistering
Direct Impact Resistance[1]	ASTM D2794	50 in. lb.
Dry Heat Resistance[1]	ASTM D2485, Method A	200°F (93°C)
Flexibility[1]	ASTM D522, 180° bend, 1/8" mandrel	Passes
Humidity Resistance[2]	ASTM D4585, 100°F (38°C), 1500 hours	Rating 10 per ASTM D610, for rusting; Rating 10 per ASTM D714, for blistering
Pencil Hardness	ASTM D3363	3H
Salt Fog Resistance[2]	ASTM B117, 7000 hours	Rating 10 per ASTM D610, for rusting; Rating 9 per ASTM D714, for blistering

Meets the requirements of SSPC Paint No. 36, Level 3.

Complies with ISO 12944-5 C5I and C5M requirements.

Footnotes:
[1] Finish coat only tested
[2] Primer — Zinc-Clad II Plus
Intermediate — Macropoxy 646
Finish — Acrolon 218 HS

continued on back

Protective & Marine Coatings

ACROLON™ 218 HS
ACRYLIC POLYURETHANE

PART A	B65-600	GLOSS SERIES
PART A	B65-650	SEMI-GLOSS SERIES
PART B	B65V600	HARDENER

PRODUCT INFORMATION

5.22

RECOMMENDED SYSTEMS

		Dry Film Thickness / ct. Mils	(Microns)
Steel:			
1 ct.	Macropoxy 646	5.0-10.0	(125-250)
1-2 cts.	Acrolon 218 HS Polyurethane	3.0-6.0	(75-150)
Steel:			
1 ct.	Zinc Clad II Plus	3.0-5.0	(75-125)
1 ct.	Macropoxy 646	5.0-10.0	(125-250)
1-2 cts.	Acrolon 218 HS Polyurethane	3.0-6.0	(75-150)
Steel:			
1 ct.	Zinc Clad IV	3.0-5.0	(75-125)
1-2 cts.	Acrolon 218 HS Polyurethane	3.0-6.0	(75-150)
Steel:			
1 ct.	Corothane I-GalvaPac Zinc Primer	3.0-4.0	(75-100)
1-2 cts.	Acrolon 218 HS Polyurethane	3.0-6.0	(75-150)
Steel:			
1 ct.	Epoxy Mastic Aluminum II	6.0	(150)
1-2 cts.	Acrolon 218 HS Polyurethane	3.0-6.0	(75-150)
Steel:			
1 ct.	Recoatable Epoxy Primer	4.0-6.0	(100-150)
1-2 cts.	Acrolon 218 HS Polyurethane	3.0-6.0	(75-150)
Concrete/Masonry:			
1 ct.	Kem Cati-Coat HS Epoxy Filler/Sealer	10.0-20.0	(250-500)
1-2 cts.	Acrolon 218 HS Polyurethane	3.0-6.0	(75-150)
Aluminum/Galvanizing:			
1 ct.	DTM Wash Primer	0.7-1.3	(18-32)
1-2 cts.	Acrolon 218 HS Polyurethane	3.0-6.0	(75-150)
ISO 12944 C5M System:			
1 ct.	Zinc Clad III HS	3.0-5.0	(75-125)
1 ct.	Tower Guard Epoxy	5.0-11.5	(125-287.5)
1 ct.	Acrolon 218 HS	3.0-6.0	(75-150)

The systems listed above are representative of the product's use, other systems may be appropriate.

DISCLAIMER

The information and recommendations set forth in this Product Data Sheet are based upon tests conducted by or on behalf of The Sherwin-Williams Company. Such information and recommendations set forth herein are subject to change and pertain to the product offered at the time of publication. Consult your Sherwin-Williams representative to obtain the most recent Product Data Information and Application Bulletin.

SURFACE PREPARATION

Surface must be clean, dry, and in sound condition. Remove all oil, dust, grease, dirt, loose rust, and other foreign material to ensure adequate adhesion.

Refer to product Application Bulletin for detailed surface preparation information.

Minimum recommended surface preparation:

* Iron & Steel: SSPC-SP6/NACE 3, 1-2 mil (25-50 micron) profile
* Galvanizing: SSPC-SP1
* Concrete & Masonry: SSPC-SP13/NACE 6, or ICRI No. 310.2, CSP 1-3

* Primer required

Surface Preparation Standards

	Condition of Surface	ISO 8501-1 BS7079:A1	Swedish Std. SIS055900	SSPC	NACE
White Metal		Sa 3	Sa 3	SP 5	1
Near White Metal		Sa 2.5	Sa 2.5	SP 10	2
Commercial Blast		Sa 2	Sa 2	SP 6	3
Brush-Off Blast		Sa 1	Sa 1	SP 7	4
Hand Tool Cleaning	Rusted	C St 2	C St 2	SP 2	-
	Pitted & Rusted	D St 2	D St 2	SP 2	-
Power Tool Cleaning	Rusted	C St 3	C St 3	SP 3	-
	Pitted & Rusted	D St 3	D St 3	SP 3	-

TINTING

Tint Part A with Maxitoner Colorants.

- Extra white tints at 100% tint strength
- Ultradeep base tints at 150% tint strength

Five minutes minimum mixing on a mechanical shaker is required for complete mixing of color.

APPLICATION CONDITIONS

Temperature:	35°F (1.7°C) minimum, 120°F (49°C) maximum (air and surface) 40°F (4.5°C) minimum, 120°F (49°C) maximum (material) At least 5°F (2.8°C) above dew point
Relative humidity:	85% maximum

Refer to product Application Bulletin for detailed application information.

ORDERING INFORMATION

Packaging:	1 gallon (3.78L) mix:	5 gallon (18.9L) mix:
Part A:	.86 gal (3.25L)	4.29 gal (16.2L)
Part B:	.14 gal (0.53L)	0.71 gal (2.7L)
(premeasured components)		

Weight: 11.2 ± 0.2 lb/gal ; 1.3 Kg/L mixed, may vary with color

SAFETY PRECAUTIONS

Refer to the MSDS sheet before use.

Published technical data and instructions are subject to change without notice. Contact your Sherwin-Williams representative for additional technical data and instructions.

WARRANTY

The Sherwin-Williams Company warrants our products to be free of manufacturing defects in accord with applicable Sherwin-Williams quality control procedures. Liability for products proven defective, if any, is limited to replacement of the defective product or the refund of the purchase price paid for the defective product as determined by Sherwin-Williams. NO OTHER WARRANTY OR GUARANTEE OF ANY KIND IS MADE BY SHERWIN-WILLIAMS, EXPRESSED OR IMPLIED, STATUTORY, BY OPERATION OF LAW OR OTHERWISE, INCLUDING MERCHANTABILITY AND FITNESS FOR A PARTICULAR PURPOSE.

Protective & Marine Coatings

ACROLON™ 218 HS
ACRYLIC POLYURETHANE

PART A	B65-600	GLOSS SERIES
PART A	B65-650	SEMI-GLOSS SERIES
PART B	B65V600	HARDENER

Revised 5/11

APPLICATION BULLETIN

5.22

SURFACE PREPARATIONS

Surface must be clean, dry, and in sound condition. Remove all oil, dust, grease, dirt, loose rust, and other foreign material to ensure adequate adhesion.

Iron & Steel
Remove all oil and grease from surface by Solvent Cleaning per SSPC-SP1. Minimum surface preparation is Commercial Blast Cleaning per SSPC-SP6/NACE 3. For better performance, use Near White Metal Blast Cleaning per SSPC-SP10/NACE 2. Blast clean all surfaces using a sharp, angular abrasive for optimum surface profile (1-2 mils / 25-50 microns). Prime any bare steel the same day as it is cleaned or before flash rusting occurs.

Aluminum
Remove all oil, grease, dirt, oxide and other foreign material by Solvent Cleaning per SSPC-SP1. Primer required.

Galvanized Steel
Allow to weather a minimum of six months prior to coating. Solvent Clean per SSPC-SP1. When weathering is not possible, or the surface has been treated with chromates or silicates, first Solvent Clean per SSPC-SP1 and apply a test patch. Allow paint to dry at least one week before testing adhesion. If adhesion is poor, brush blasting per SSPC-SP7 is necessary to remove these treatments. Rusty galvanizing requires a minimum of Hand Tool Cleaning per SSPC-SP2, prime the area the same day as cleaned or before flash rusting occurs. Primer required.

Concrete and Masonry
For surface preparation, refer to SSPC-SP13/NACE 6, or ICRI No. 310.2, CSP 1-3. Surfaces should be thoroughly clean and dry. Concrete and mortar must be cured at least 28 days @ 75°F (24°C). Remove all loose mortar and foreign material. Surface must be free of laitance, concrete dust, dirt, form release agents, moisture curing membranes, loose cement and hardeners. Fill bug holes, air pockets and other voids with Steel-Seam FT910. Primer required.

Follow the standard methods listed below when applicable:
ASTM D4258 Standard Practice for Cleaning Concrete.
ASTM D4259 Standard Practice for Abrading Concrete.
ASTM D4260 Standard Practice for Etching Concrete.
ASTM F1869 Standard Test Method for Measuring Moisture Vapor Emission Rate of Concrete.
SSPC-SP 13/Nace 6 Surface Preparation of Concrete.
ICRI No. 310.2 Concrete Surface Preparation.

Surface Preparation Standards

	Condition of Surface	ISO 8501-1 BS7079:A1	Swedish Std. SIS055900	SSPC	NACE
White Metal		Sa 3	Sa 3	SP 5	1
Near White Metal		Sa 2.5	Sa 2.5	SP 10	2
Commercial Blast		Sa 2	Sa 2	SP 6	3
Brush-Off Blast		Sa 1	Sa 1	SP 7	4
Hand Tool Cleaning	Rusted	C St 2	C St 2	SP 2	-
	Pitted & Rusted	D St 2	D St 2	SP 2	-
Power Tool Cleaning	Rusted	C St 3	C St 3	SP 3	-
	Pitted & Rusted	D St 3	D St 3	SP 3	-

APPLICATION CONDITIONS

Temperature:	35°F (1.7°C) minimum, 120°F (49°C) maximum (air and surface) 40°F (4.5°C) minimum, 120°F (49°C) maximum (material) At least 5°F (2.8°C) above dew point
Relative humidity:	85% maximum

APPLICATION EQUIPMENT

The following is a guide. Changes in pressures and tip sizes may be needed for proper spray characteristics. Always purge spray equipment before use with listed reducer. Any reduction must be compliant with existing VOC regulations and compatible with the existing environmental and application conditions.

Reducer/Clean Up:
Spray.....Reducer R7K15, MEK R6K10, or R7K111
Brush/Roll .....Reducer #132, R7K132, or R7K111
If reducer is used, reduce at time of catalyzation.

Airless Spray
Pressure.....2500 - 2800 psi
Hose.....3/8" ID
Tip .....013" - .017"
Filter.....60 mesh
Reduction.....As needed up to 10% by volume with R7K15 or R7K111, or up to 9% with MEK, R6K10*

Conventional Spray
Gun .....Binks 95
Cap 63P
Atomization Pressure.....50 - 70 psi
Fluid Pressure.....20 - 25 psi
Reduction.....As needed up to 10% by volume with R7K15 or R7K111, or up to 9% with MEK, R6K10*

Brush
Brush.....Natural Bristle
Reduction.....As needed up to 10% by volume*

Roller
Cover .....3/8" woven with solvent resistant core
Reduction.....As needed up to 10% by volume*

If specific application equipment is not listed above, equivalent equipment may be substituted.

* Note: Reducing more than maximum recommended level will result in exceed VOC exceeding 340g/L

continued on back

Protective & Marine Coatings

ACROLON™ 218 HS
ACRYLIC POLYURETHANE

PART A	B65-600	GLOSS SERIES
PART A	B65-650	SEMI-GLOSS SERIES
PART B	B65V600	HARDENER

APPLICATION BULLETIN

5.22

APPLICATION PROCEDURES

Surface preparation must be completed as indicated.

Mix contents of each component thoroughly with low speed power agitation. Make certain no pigment remains on the bottom of the can. Then combine six parts by volume of Part A with one part by volume of Part B (premeasured components). Thoroughly agitate the mixture with power agitation. Re-stir before using.

If reducer is used, add only after both components have been thoroughly mixed.

Apply paint at the recommended film thickness and spreading rate as indicated below:

Recommended Spreading Rate per coat:

	Minimum	Maximum
Wet mils (microns)	**4.5** (112.5)	**9.0** (225)
Dry mils (microns)	**3.0** (75)	**6.0** (150)
~Coverage sq ft/gal (m^2/L)	**175** (4.3)	**346** (8.5)
Theoretical coverage **sq ft/gal** (m^2/L) @ 1 mil / 25 microns dft	**1040** (25.5)	

NOTE: Brush or roll application may require multiple coats to achieve maximum film thickness and uniformity of appearance.

Drying Schedule @ 6.0 mils wet (150 microns):

	@ 35°F/1.7°C	@ 77°F/25°C *50% RH*	@ 120°F/49°C
To touch:	4 hours	30 minutes	20 minutes
To handle:	18 hours	6 hours	4 hours
To recoat:			
minimum:	18 hours	8 hours	6 hours
maximum:	3 months	3 months	3 months
To cure:	14 days	7 days	5 days
Pot Life: (reduced 5% with Reducer R7K15)	4 hours	2 hours	45 minutes
Sweat-in-Time:		None	

If maximum recoat time is exceeded, abrade surface before recoating.
Drying time is temperature, humidity, and film thickness dependent.
Paint temperature must be at least 40°F (4.5°C) minimum.

Application of coating above maximum or below minimum recommended spreading rate may adversely affect coating performance.

CLEAN UP INSTRUCTIONS

Clean spills and spatters immediately with Reducer #132, R7K132. Clean tools immediately after use with Reducer #132, R7K132. Follow manufacturer's safety recommendations when using any solvent.

DISCLAIMER

The information and recommendations set forth in this Product Data Sheet are based upon tests conducted by or on behalf of The Sherwin-Williams Company. Such information and recommendations set forth herein are subject to change and pertain to the product offered at the time of publication. Consult your Sherwin-Williams representative to obtain the most recent Product Data Information and Application Bulletin.

PERFORMANCE TIPS

Stripe coat all crevices, welds, and sharp angles to prevent early failure in these areas.

When using spray application, use a 50% overlap with each pass of the gun to avoid holidays, bare areas, and pinholes. If necessary, cross spray at a right angle.

Spreading rates are calculated on volume solids and do not include an application loss factor due to surface profile, roughness or porosity of the surface, skill and technique of the applicator, method of application, various surface irregularities, material lost during mixing, spillage, overthinning, climatic conditions, and excessive film build.

Excessive reduction of material can affect film build, appearance, and adhesion.

Do not apply the material beyond recommended pot life.

Do not mix previously catalyzed material with new.

In order to avoid blockage of spray equipment, clean equipment before use or before periods of extended downtime with Reducer #15, R7K15 or MEK, R6K10.

Mixed coating is sensitive to water. Use water traps in all air lines. Moisture contact can reduce pot life and affect gloss and color.

Quick-Thane Urethane Accelerator is acceptable for use. See data page 5.97 for details.

E-Z Roll Urethane Defoamer is acceptable for use. See data page 5.99 for details.

Refer to Product Information sheet for additional performance characteristics and properties.

SAFETY PRECAUTIONS

Refer to the MSDS sheet before use.

Published technical data and instructions are subject to change without notice. Contact your Sherwin-Williams representative for additional technical data and instructions.

WARRANTY

The Sherwin-Williams Company warrants our products to be free of manufacturing defects in accord with applicable Sherwin-Williams quality control procedures. Liability for products proven defective, if any, is limited to replacement of the defective product or the refund of the purchase price paid for the defective product as determined by Sherwin-Williams. NO OTHER WARRANTY OR GUARANTEE OF ANY KIND IS MADE BY SHERWIN-WILLIAMS, EXPRESSED OR IMPLIED, STATUTORY, BY OPERATION OF LAW OR OTHERWISE, INCLUDING MERCHANTABILITY AND FITNESS FOR A PARTICULAR PURPOSE.

MATERIAL SAFETY DATA SHEET

B65T654
12 00

DATE OF PREPARATION
May 8, 2011

SECTION 1 — PRODUCT AND COMPANY IDENTIFICATION

PRODUCT NUMBER
B65T654

PRODUCT NAME
ACROLON™ 218 HS Polyurethane - Semi-Gloss (Part A), Ultradeep/Clear Tint Base

MANUFACTURER'S NAME
THE SHERWIN-WILLIAMS COMPANY
101 Prospect Avenue N.W.
Cleveland, OH 44115

Telephone Numbers and Websites

Product Information	www.sherwin-williams.com
Regulatory Information	(216) 566-2902 www.paintdocs.com
Medical Emergency	(216) 566-2917
Transportation Emergency*	(800) 424-9300
**for Chemical Emergency ONLY (spill, leak, fire, exposure, or accident)*	

SECTION 2 — COMPOSITION/INFORMATION ON INGREDIENTS

% by Weight	CAS Number	Ingredient	Units	Vapor Pressure
0.2	**100-41-4**	**Ethylbenzene**		
		ACGIH TLV	100 PPM	7.1 mm
		ACGIH TLV	125 PPM STEL	
		OSHA PEL	100 PPM	
		OSHA PEL	125 PPM STEL	
1	**1330-20-7**	**Xylene**		
		ACGIH TLV	100 PPM	5.9 mm
		ACGIH TLV	150 PPM STEL	
		OSHA PEL	100 PPM	
		OSHA PEL	150 PPM STEL	
1	**64742-94-5**	**Medium Aromatic Hydrocarbons**		
		ACGIH TLV	Not Available	0.12 mm
		OSHA PEL	Not Available	
0.2	**91-20-3**	**Naphthalene**		
		ACGIH TLV	10 PPM	1 mm
		ACGIH TLV	15 PPM STEL	
		OSHA PEL	10 PPM	
		OSHA PEL	15 PPM STEL	
7	**78-93-3**	**Methyl Ethyl Ketone**		
		ACGIH TLV	200 PPM	70 mm
		ACGIH TLV	300 PPM STEL	
		OSHA PEL	200 PPM	
		OSHA PEL	300 PPM STEL	
10	**123-86-4**	**n-Butyl Acetate**		
		ACGIH TLV	150 PPM	10 mm
		ACGIH TLV	200 PPM STEL	
		OSHA PEL	150 PPM	
		OSHA PEL	200 PPM STEL	
7	**108-65-6**	**1-Methoxy-2-Propanol Acetate**		
		ACGIH TLV	Not Available	1.8 mm
		OSHA PEL	Not Available	
21	**14808-60-7**	**Quartz**		
		ACGIH TLV	0.025 mg/m3 as Resp. Dust	
		OSHA PEL	0.1 mg/m3 as Resp. Dust	
5	**112926-00-8**	**Amorphous Precipitated Silica**		
		ACGIH TLV	10 mg/m3 as Dust	
		OSHA PEL	6 mg/m3 as Dust	

SECTION 3 — HAZARDS IDENTIFICATION

HMIS Codes

Health	2*
Flammability	3
Reactivity	0

ROUTES OF EXPOSURE

INHALATION of vapor or spray mist.
EYE or SKIN contact with the product, vapor or spray mist.

EFFECTS OF OVEREXPOSURE

EYES: Irritation.
SKIN: Prolonged or repeated exposure may cause irritation.
INHALATION: Irritation of the upper respiratory system.

May cause nervous system depression. Extreme overexposure may result in unconsciousness and possibly death.
Prolonged overexposure to hazardous ingredients in Section 2 may cause adverse chronic effects to the following organs or systems:

- the liver
- the urinary system
- the hematopoietic (blood-forming) system
- the reproductive system

SIGNS AND SYMPTOMS OF OVEREXPOSURE

Headache, dizziness, nausea, and loss of coordination are indications of excessive exposure to vapors or spray mists.
Redness and itching or burning sensation may indicate eye or excessive skin exposure.

MEDICAL CONDITIONS AGGRAVATED BY EXPOSURE

May cause allergic respiratory and/or skin reaction in susceptible persons or sensitization. This effect may be delayed several hours after exposure.
Persons sensitive to isocyanates will experience increased allergic reaction on repeated exposure.

CANCER INFORMATION

For complete discussion of toxicology data refer to Section 11.

SECTION 4 — FIRST AID MEASURES

EYES: Flush eyes with large amounts of water for 15 minutes. Get medical attention.
SKIN: Wash affected area thoroughly with soap and water.
Remove contaminated clothing and launder before re-use.
INHALATION: If any breathing problems occur during use, **LEAVE THE AREA** and get fresh air. If problems remain or occur later, **IMMEDIATELY** get medical attention.
INGESTION: Do not induce vomiting. Get medical attention immediately.

SECTION 5 — FIRE FIGHTING MEASURES

FLASH POINT	LEL	UEL	FLAMMABILITY CLASSIFICATION
55 °F PMCC	0.8	13.1	RED LABEL -- Flammable, Flash below 100 °F (38 °C)

EXTINGUISHING MEDIA

Carbon Dioxide, Dry Chemical, Foam

UNUSUAL FIRE AND EXPLOSION HAZARDS

Closed containers may explode when exposed to extreme heat.
Application to hot surfaces requires special precautions.
During emergency conditions overexposure to decomposition products may cause a health hazard. Symptoms may not be immediately apparent. Obtain medical attention.

SPECIAL FIRE FIGHTING PROCEDURES

Full protective equipment including self-contained breathing apparatus should be used.
Water spray may be ineffective. If water is used, fog nozzles are preferable. Water may be used to cool closed containers to prevent pressure build-up and possible autoignition or explosion when exposed to extreme heat.

SECTION 6 — ACCIDENTAL RELEASE MEASURES

STEPS TO BE TAKEN IN CASE MATERIAL IS RELEASED OR SPILLED

Remove all sources of ignition. Ventilate the area.
Remove with inert absorbent.

SECTION 7 — HANDLING AND STORAGE

STORAGE CATEGORY

DOL Storage Class IB

PRECAUTIONS TO BE TAKEN IN HANDLING AND STORAGE

Contents are FLAMMABLE. Keep away from heat, sparks, and open flame.
During use and until all vapors are gone: Keep area ventilated - Do not smoke - Extinguish all flames, pilot lights, and heaters - Turn off stoves, electric tools and appliances, and any other sources of ignition.
Consult NFPA Code. Use approved Bonding and Grounding procedures.

Keep container closed when not in use. Transfer only to approved containers with complete and appropriate labeling. Do not take internally. Keep out of the reach of children.

SECTION 8 — EXPOSURE CONTROLS/PERSONAL PROTECTION

PRECAUTIONS TO BE TAKEN IN USE

NO PERSON SHOULD USE THIS PRODUCT, OR BE IN THE AREA WHERE IT IS BEING USED, IF THEY HAVE CHRONIC (LONG-TERM) LUNG OR BREATHING PROBLEMS OR IF THEY EVER HAD A REACTION TO ISOCYANATES.

Use only with adequate ventilation.

Avoid contact with skin and eyes. Avoid breathing vapor and spray mist.

Wash hands after using.

This coating may contain materials classified as nuisance particulates (listed "as Dust" in Section 2) which may be present at hazardous levels only during sanding or abrading of the dried film. If no specific dusts are listed in Section 2, the applicable limits for nuisance dusts are ACGIH TLV 10 mg/m3 (total dust), 3 mg/m3 (respirable fraction), OSHA PEL 15 mg/m3 (total dust), 5 mg/m3 (respirable fraction).

VENTILATION

Local exhaust preferable. General exhaust acceptable if the exposure to materials in Section 2 is maintained below applicable exposure limits. Refer to OSHA Standards 1910.94, 1910.107, 1910.108.

RESPIRATORY PROTECTION

Where overspray is present, a positive pressure air supplied respirator (TC19C NIOSH/MSHA approved) should be worn. If unavailable, a properly fitted organic vapor/particulate respirator approved by NIOSH/MSHA for protection against materials in Section 2 may be effective. Follow respirator manufacturers directions for use. Wear the respirator for the whole time of spraying and until all vapors and mists are gone. **NO PERSONS SHOULD BE ALLOWED IN THE AREA WHERE THIS PRODUCT IS BEING USED UNLESS EQUIPPED WITH THE SAME RESPIRATOR PROTECTION RECOMMENDED FOR THE PAINTERS.**

When sanding or abrading the dried film, wear a dust/mist respirator approved by NIOSH/MSHA for dust which may be generated from this product, underlying paint, or the abrasive.

PROTECTIVE GLOVES

To prevent skin contact, wear gloves which are recommended by glove supplier for protection against materials in Section 2.

EYE PROTECTION

Wear safety spectacles with unperforated sideshields.

OTHER PROTECTIVE EQUIPMENT

Use barrier cream on exposed skin.

OTHER PRECAUTIONS

This product must be mixed with other components before use. Before opening the packages, READ AND FOLLOW WARNING LABELS ON ALL COMPONENTS.

Intentional misuse by deliberately concentrating and inhaling the contents can be harmful or fatal.

SECTION 9 — PHYSICAL AND CHEMICAL PROPERTIES

PRODUCT WEIGHT	10.14 lb/gal	1215 g/l
SPECIFIC GRAVITY	1.22	
BOILING POINT	174 - 415 °F	78 - 212 °C
MELTING POINT	Not Available	
VOLATILE VOLUME	38%	
EVAPORATION RATE	Slower than ether	
VAPOR DENSITY	Heavier than air	
SOLUBILITY IN WATER	N.A.	

VOLATILE ORGANIC COMPOUNDS (VOC Theoretical - As Packaged)

2.77 lb/gal	332 g/l	Less Water and Federally Exempt Solvents
2.77 lb/gal	332 g/l	Emitted VOC

SECTION 10 — STABILITY AND REACTIVITY

STABILITY — Stable

CONDITIONS TO AVOID

None known.

INCOMPATIBILITY

None known.

HAZARDOUS DECOMPOSITION PRODUCTS

By fire: Carbon Dioxide, Carbon Monoxide

HAZARDOUS POLYMERIZATION

Will not occur

SECTION 11 — TOXICOLOGICAL INFORMATION

CHRONIC HEALTH HAZARDS

Methyl Ethyl Ketone may increase the nervous system effects of other solvents.

Reports have associated repeated and prolonged overexposure to solvents with permanent brain and nervous system damage.

Ethylbenzene is classified by IARC as possibly carcinogenic to humans (2B) based on inadequate evidence in humans and sufficient evidence in laboratory animals. Lifetime inhalation exposure of rats and mice to high ethylbenzene concentrations resulted in increases in

certain types of cancer, including kidney tumors in rats and lung and liver tumors in mice. These effects were not observed in animals exposed to lower concentrations. There is no evidence that ethylbenzene causes cancer in humans.

Crystalline Silica (Quartz, Cristobalite) is listed by IARC and NTP. Long term exposure to high levels of silica dust, which can occur only when sanding or abrading the dry film, may cause lung damage (silicosis) and possibly cancer.

TOXICOLOGY DATA

CAS No.	Ingredient Name			
100-41-4	**Ethylbenzene**			
		LC50 RAT	4HR	Not Available
		LD50 RAT		3500 mg/kg
1330-20-7	**Xylene**			
		LC50 RAT	4HR	5000 ppm
		LD50 RAT		4300 mg/kg
64742-94-5	**Medium Aromatic Hydrocarbons**			
		LC50 RAT	4HR	Not Available
		LD50 RAT		Not Available
91-20-3	**Naphthalene**			
		LC50 RAT	4HR	Not Available
		LD50 RAT		Not Available
78-93-3	**Methyl Ethyl Ketone**			
		LC50 RAT	4HR	Not Available
		LD50 RAT		2740 mg/kg
123-86-4	**n-Butyl Acetate**			
		LC50 RAT	4HR	2000 ppm
		LD50 RAT		13100 mg/kg
108-65-6	**1-Methoxy-2-Propanol Acetate**			
		LC50 RAT	4HR	Not Available
		LD50 RAT		8500 mg/kg
14808-60-7	**Quartz**			
		LC50 RAT	4HR	Not Available
		LD50 RAT		Not Available
112926-00-8	**Amorphous Precipitated Silica**			
		LC50 RAT	4HR	Not Available
		LD50 RAT		4999. mg/kg

SECTION 12 — ECOLOGICAL INFORMATION

ECOTOXICOLOGICAL INFORMATION

No data available.

SECTION 13 — DISPOSAL CONSIDERATIONS

WASTE DISPOSAL METHOD

Waste from this product may be hazardous as defined under the Resource Conservation and Recovery Act (RCRA) 40 CFR 261.
Waste must be tested for ignitability to determine the applicable EPA hazardous waste numbers.
Incinerate in approved facility. Do not incinerate closed container. Dispose of in accordance with Federal, State/Provincial, and Local regulations regarding pollution.

SECTION 14 — TRANSPORT INFORMATION

Multi-modal shipping descriptions are provided for informational purposes and do not consider container sizes. The presence of a shipping description for a particular mode of transport (ocean, air, etc.), does not indicate that the product is packaged suitably for that mode of transport. All packaging must be reviewed for suitability prior to shipment, and compliance with the applicable regulations is the sole responsibility of the person offering the product for transport.

US Ground (DOT)

5 Liters (1.3 Gallons) and Less may be Classed as CONSUMER COMMODITY, ORM-D
Larger Containers are Regulated as:
UN1263, PAINT, 3, PG II, (ERG#128)

DOT (Dept of Transportation) Hazardous Substances & Reportable Quantities

Xylenes (isomers and mixture) 100 lb RQ

Bulk Containers may be Shipped as (check reportable quantities):

UN1263, PAINT, 3, PG II, (ERG#128)

Canada (TDG)

UN1263, PAINT, CLASS 3, PG II, (ERG#128)

IMO

5 Liters (1.3 Gallons) and Less may be Shipped as Limited Quantity.
UN1263, PAINT, CLASS 3, PG II, (13 C c.c.), EmS F-E, S-E, ADR (D/E)

IATA/ICAO

UN1263, PAINT, 3, PG II

SECTION 15 — REGULATORY INFORMATION

SARA 313 *(40 CFR 372.65C)* SUPPLIER NOTIFICATION

CAS No.	CHEMICAL/COMPOUND	% by WT	% Element
100-41-4	Ethylbenzene	0.1	
1330-20-7	Xylene	1	
91-20-3	Naphthalene	0.1	

CALIFORNIA PROPOSITION 65

WARNING: This product contains chemicals known to the State of California to cause cancer and birth defects or other reproductive harm.

TSCA CERTIFICATION

All chemicals in this product are listed, or are exempt from listing, on the TSCA Inventory.

SECTION 16 — OTHER INFORMATION

This product has been classified in accordance with the hazard criteria of the Canadian Controlled Products Regulations (CPR) and the MSDS contains all of the information required by the CPR.

The above information pertains to this product as currently formulated, and is based on the information available at this time. Addition of reducers or other additives to this product may substantially alter the composition and hazards of the product. Since conditions of use are outside our control, we make no warranties, express or implied, and assume no liability in connection with any use of this information.

SHER-KEM™ ENAMEL COLOR SELECTOR

for fabricators and job shops

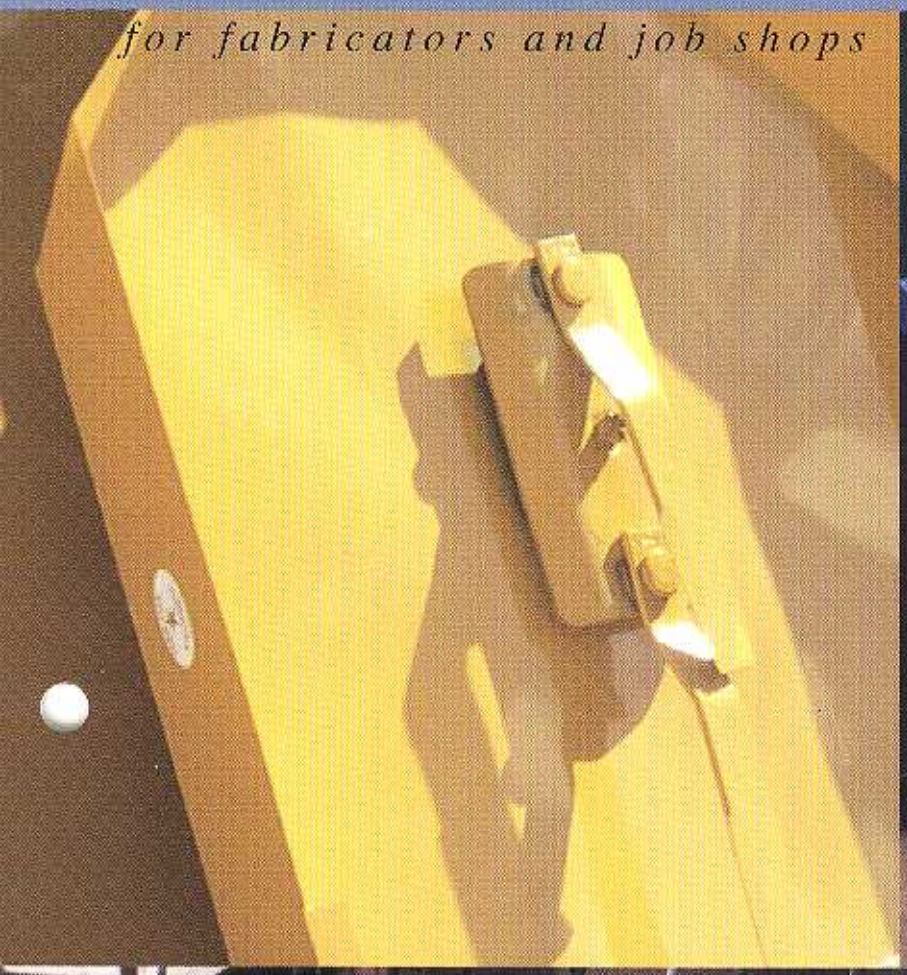

SHERWIN WILLIAMS

Heavy Equipment Colors

Extra White* SW 7401

Stardust White SW 7409

Implement Yellow* SW 7402

•Equipment Agricultural Yellow SW 7410

•Green Tractor SW 7415

•Equipment Green SW 7420

Equipment Yellow* SW 7403

Equipment Tan SW 7411

Motor Blue SW 7416

Blue Ribbon SW 7421

Implement Orange* SW 7404

•Heavy Equipment Orange SW 7412

•Allen Red SW 7417

•Machinery Red SW 7422

International Red* SW 7405

•Power Orange SW 7413

Frame Grey SW 7418

Industrial Charcoal SW 7423

Enviro Green* SW 7406

Architectural Bronze SW 7414

Dark Grey SW 7419

Dull Black SW 7424

Equipment Blue* SW 7407

Raven Black* SW 7408

*Package Colors

These colors approximate as closely as possible the actual paint colors.

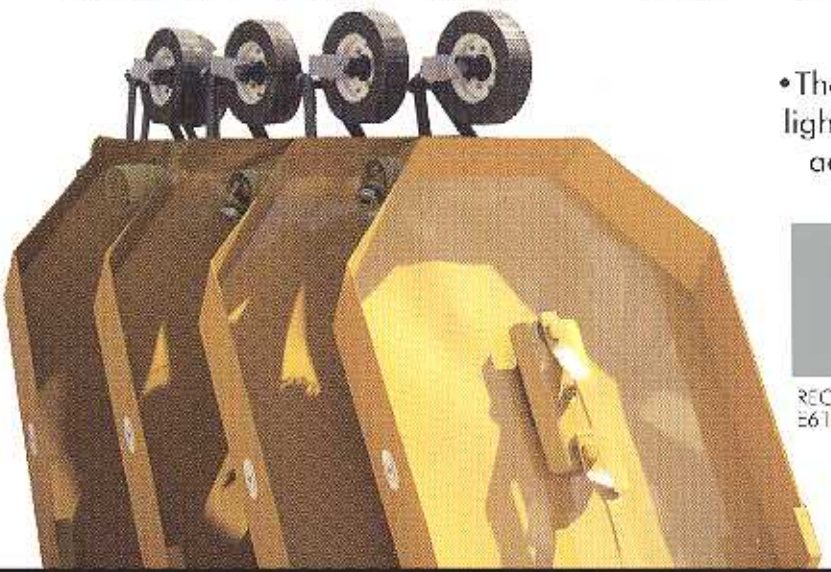

•These colors require a light colored primer to achieve final color.

RECOMMENDED PRIMER E61A400

General Metal Colors

Snobs White SW 7425	Bone White SW 7433	White Metal SW 7441	Machinery White SW 7447
HD Beige SW 7426	Beach Sand SW 7434	Surrey Beige SW 7442	Container Tan SW 7448
•Ultra Orange SW 7427	•General Orange SW 7435	Red Metal SW 7443	Driftwood SW 7449
Outdoor Green SW 7428	Rock Green SW 7436	Fence Green SW 7444	Pastel Blue SW 7450
•Bright Blue SW 7429	Legal Blue SW 7437	Electric Blue SW 7445	Navy Blue SW 7451
ANSI 70 Grey SW 7430	Overnight Grey SW 7438	New Rim Grey SW 7446	Wheel Grey SW 7452
ANSI 61 Grey SW 7431	All Grey SW 7439		
ANSI 49 Grey SW 7432	Wheel Black SW 7440		

At Sherwin-Williams, our combination of products and services makes it easy and fast to get the best metal
We supply spray equipment and parts, metal prep cleaners, primers and topcoat finishes that protect
enhance your products....adding lasting value to what you finish.

METAL CONTAINER COLORS

Packer Beige SW 7453

Clay SW 7459

•Federal Yellow SW 7454

•Container Orange SW 7460

Container Red SW 7455

Burgundy SW 7461

Container Brown SW 7456

Packer Brown SW 7462

WM Green SW 7457

Meridian Green SW 7463

Forest Green SW 7458

Container Green SW 7464

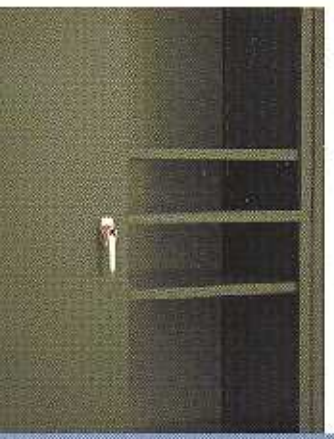

BFI Blue SW 7465

Warm White Gloss SW 7466

The colors featured in this selector provide a full range of clean, brilliant colors for HEAVY EQUIPMENT, GENERAL METALS, and METAL CONTAINER market applications. They represent the latest OEM (original equipment manufacturer) colors allowing you to select the color that's right for a specific job and customer. Custom colors can also be blended and matched at your local Sherwin-Williams store using the latest Sher Color™ computerized color matching technology. Sher-Color gives you the fastest most accurate color matching. Ask for **SHER-KEM™** HIGH GLOSS METAL FINISHING ENAMEL in one of our new factory applied colors.

Container Grey SW 7467

Gloss Black SW 7468

finishing solutions.
endure and

SHER-KEM™ Enamel Color Selector.
Offering colors that brand your products as the very best.

SHER-KEM HIGH GLOSS METAL FINISHING ENAMEL is designed as a premium topcoat that provides a long lasting bright finish. It's a super smooth finish with superior color brilliance and distinctness of image, creating a mirror like quality. It stands up to harsh environments with superior resistance to ultraviolet light exposure, petroleum based fuels, and surface abrasion. This factory applied finish is now available at your local Sherwin-Williams store, in the COLORS YOU WANT.

SHER-KEM™ *HIGH GLOSS METAL FINISHING ENAMEL*

Sherwin-Williams' comprehensive line of proven production finishes are backed by the largest distribution system in the industry, expert advice, fast delivery, and computerized color matching.

There's a location near you. For more information about our products and services, contact your local Sherwin-Williams store or representative.

Call 1 800 521 5979 to have a rep contact you.

www.sherwin-williams.com

SHERWIN WILLIAMS.

SHER-KEM™ ENAMEL COLOR SELECTOR

for fabricators and job shops

www.sherwin-williams.com

2005807
©2006 The Sherwin-Williams Company

BROWN-MINNEAPOLIS TANK
ENGINEERS - FABRICATORS - CONSTRUCTORS

DAILY COATING INSPECTION FORM

DATE: 4/30/15 M T W R F S SU | PG ___ OF ___

PROJECT / JOB #: 30883 Tank #1

LOCATION / CUSTOMER: Shop 1

DESCRIPTION OF WORK AREA

Blast interior Sp-10

HOLD POINT INSPECTIONS PREFORMED

- [✓] WEATHER AND SITE CONDITIONS
- [✓] PRE SURFACE PREP / CONDITION & CLEANLINESS
- [✓] SURFACE PREPARATION MONITORING
- [✓] POST SURFACE PREP CLEANLINESS & PROFILE
- [✓] APPLICATION MONITORING / WFT
- [ ] POST APPLICAITON
- [ ] POST CURE DFT & INTERIOR HOLIDAY TEST
- [✓] CORRECTIVE ACTION AND FINAL INSPECTION

SURFACE CONDITIONS

- [✓] NEW STEEL [ ] OLD STEEL [ ] GALV. STEEL [ ] MAINT.
- [✓] SALT CONTAMINATION: CL FE
- DEGREE OF CORROSION: Mill Scale
- [ ] PITS [ ] SHARP EDGES [ ] RUNS/SAGS [ ]MOISTURE [ ] OIL
- PAINTED SURFACE CONDITIONS:
- [ ] DRY TOUCH [ ] HANDLE [ ] RECOAT
- [ ]DRY OVERSPRAY [ ] PINHOLES [ ] HOLIDAYS
- [ ] OTHER:

AMBIENT CONDITIONS

TIME	10:15						
DRY BULB, F	61 o	o	o	o	o	o	
WET BULB, F	58 o	o	o	o	o	o	
% HUMIDITY	21 %	%	%	%	%	%	
SURFACE MIN/MAX							
WIND DIR/SPEED	3mph						

WEATHER CONDITIONS: Clear - Cool

SURFACE PREPARATION

START TIME: FINISH TIME: EST. SF

- [ ] SOLVENT CLEAN [ ] HAND TOOL [ ] POWER TOOL
- [ ] HP WASH PSI [ ] OTHER:
- [✓] ABRASIVE BLAST [✓] ABRASIVE TYPE Copper [ ] SAMPLE
- [✓] BLAST HOSE SIZE 2" [✓] NOZZLE SIZE / PSI #8
- [✓] AIR SUPPLY CFM 600 [✓] AIR SUPPLY CLEANLINESS
- [✓] WATER/OIL TRAP CHECK [✓] EQUIPMENT CONDITION CHECK

SURFACE CLEANLINESS & PROFILE MEASURMENT

- SPECIFIED SURFACE PREPARATION: SSPC SP-
- ACTUAL SURFACE PREPARATION: SSPC SP- ____
- PROFILE CHECK: ____ [ ] DISC [ ] TAPE [ ] GAUGE
- [ ] SPECIFIED ____ mils [ ] ACTUAL ____ mils
- [ ] Banana Gage BMR ____ mils

DRY FILM THICKNESS MEASURMENT

- Gage Type / Model: ____ Serial # ____
- [ ] Calibration Verified # DFT Readings ____ Est. SF ____
- Min. ____ mils Max ____ mils Ave. ____ mils

Additional Notes:

APPLICATION

START TIME: FINISH TIME: EST. SF

[ ] PRIMER [ ] INTERMEDIATE [ ] TOPCOAT [ ] TOUCHUP

Generic Type:		Qty Mixed:
Manuf:		Mix Ratio:
Prod. Name:		Mix Method:
Prod. #:		Strain/Screen [ ]
Color:		Material Temp. oF
Kit Size / Condition:		Sweat Time ____ min.
Shelf Life:		Pot Life ____ min.
Batch Numbers		Thinner #:
(A)		Qty. Added:
(B)		% Volume:
(C)		Spec. WFT: mils
Thinner		Actual WFT: mils

[ ] Airless [ ] Conventional [ ] Brush [ ] Roller [ ] Other

Pump / Pot	Hose Dia.	[ ] Air Check
Ratio / Size	Hose Lng.	[ ] SEP / Trap
GPM / CFM	Spray Gun	[ ] Filter
PSI:	Tip Sz.	[ ] Agitator

Inspector Signature

Testex Tapes

33

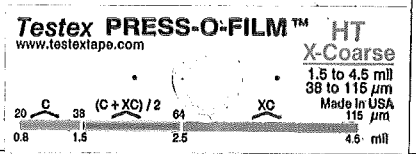

BROWN-MINNEAPOLIS TANK
ENGINEERS - FABRICATORS - CONSTRUCTORS

DAILY COATING INSPECTION FORM

DATE: 5/1/15 M T W R F S SU | PG ___ OF ___

PROJECT / JOB #: 30883 Tank #2

LOCATION / CUSTOMER: Shop 1

DESCRIPTION OF WORK AREA

Blast interior SP-10

HOLD POINT INSPECTIONS PREFORMED

- [✓] WEATHER AND SITE CONDITIONS
- [✓] PRE SURFACE PREP / CONDITION & CLEANLINESS
- [✓] SURFACE PREPARATION MONITORING
- [✓] POST SURFACE PREP CLEANLINESS & PROFILE
- [✓] APPLICATION MONITORING / WFT
- [ ] POST APPLICAITON
- [ ] POST CURE DFT & INTERIOR HOLIDAY TEST
- [✓] CORRECTIVE ACTION AND FINAL INSPECTION

SURFACE CONDITIONS

- [✓] NEW STEEL [ ] OLD STEEL [ ] GALV. STEEL [ ] MAINT.
- [✓] SALT CONTAMINATION: CL FE
- DEGREE OF CORROSION: Mill Scale
- [ ] PITS [ ] SHARP EDGES [ ] RUNS/SAGS [ ] MOISTURE [ ] OIL
- PAINTED SURFACE CONDITIONS:
- [ ] DRY TOUCH [ ] HANDLE [ ] RECOAT
- [ ] DRY OVERSPRAY [ ] PINHOLES [ ] HOLIDAYS
- [ ] OTHER:

AMBIENT CONDITIONS

TIME	1:07						
DRY BULB, F	81 o	o	o	o	o	o	
WET BULB, F	79 o	o	o	o	o	o	
% HUMIDITY	13 %	%	%	%	%	%	
SURFACE MIN/MAX							
WIND DIR/SPEED	5 NW						

WEATHER CONDITIONS: Clear - Good

SURFACE PREPARATION

START TIME: FINISH TIME: EST. SF

- [✓] SOLVENT CLEAN [ ] HAND TOOL [ ] POWER TOOL
- [ ] HP WASH ___ PSI [ ] OTHER:
- [✓] ABRASIVE BLAST [✓] ABRASIVE TYPE Copper [ ] SAMPLE
- [✓] BLAST HOSE SIZE 3/4" [✓] NOZZLE SIZE / PSI #8
- [✓] AIR SUPPLY CFM 600 [✓] AIR SUPPLY CLEANLINESS
- [✓] WATER/OIL TRAP CHECK [✓] EQUIPMENT CONDITION CHECK

SURFACE CLEANLINESS & PROFILE MEASURMENT

SPECIFIED SURFACE PREPARATION: SSPC SP-

ACTUAL SURFACE PREPARATION: SSPC SP- ___

PROFILE CHECK: ___ [ ] DISC [ ] TAPE [ ] GAUGE

[ ] SPECIFIED ___ mils [ ] ACTUAL ___ mils

[ ] Banana Gage BMR ___ mils

DRY FILM THICKNESS MEASURMENT

Gage Type / Model: ___ Serial # ___

[ ] Calibration Verified # DFT Readings ___ Est. SF

Min. ___ mils Max ___ mils Ave. ___ mils

Additional Notes:

APPLICATION

START TIME: FINISH TIME: EST. SF

[ ] PRIMER [ ] INTERMEDIATE [ ] TOPCOAT [ ] TOUCHUP

Generic Type:	Qty Mixed:
Manuf:	Mix Ratio:
Prod. Name:	Mix Method:
Prod. #:	Strain/Screen [ ]
Color:	Material Temp. ___ oF
Kit Size / Condition:	Sweat Time ___ min.
Shelf Life:	Pot Life ___ min.
Batch Numbers	Thinner #:
(A)	Qty. Added:
(B)	% Volume:
(C)	Spec. WFT: mils
Thinner	Actual WFT: mils

[ ] Airless [ ] Conventional [ ] Brush [ ] Roller [ ] Other

Pump / Pot	Hose Dia.	[ ] Air Check
Ratio / Size	Hose Lng.	[ ] SEP / Trap
GPM / CFM	Spray Gun	[ ] Filter
PSI:	Tip Sz.	[ ] Agitator

Inspector Signature

Testex Tapes

3.5

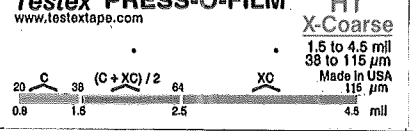

BROWN-MINNEAPOLIS TANK
ENGINEERS - FABRICATORS - CONSTRUCTORS

DAILY COATING INSPECTION FORM

DATE: 5/16/15 M T (W) R F S SU | PG ___ OF ___

PROJECT / JOB #: 30883 - 1 - 2

LOCATION / CUSTOMER: Shop / Ft. Henry

DESCRIPTION OF WORK AREA

Blast exterior SP-6
interior
Touch up exterior too.

HOLD POINT INSPECTIONS PREFORMED

- [✓] WEATHER AND SITE CONDITIONS
- [✓] PRE SURFACE PREP / CONDITION & CLEANLINESS
- [✓] SURFACE PREPARATION MONITORING
- [✓] POST SURFACE PREP CLEANLINESS & PROFILE
- [✓] APPLICATION MONITORING / WFT
- [ ] POST APPLICAITON
- [ ] POST CURE DFT & INTERIOR HOLIDAY TEST
- [✓] CORRECTIVE ACTION AND FINAL INSPECTION

SURFACE CONDITIONS

- [✓] NEW STEEL [ ] OLD STEEL [ ] GALV. STEEL [ ] MAINT.
- [✓] SALT CONTAMINATION: CL FE
- DEGREE OF CORROSION: Millscale
- [ ] PITS [ ] SHARP EDGES [ ] RUNS/SAGS [ ] MOISTURE [ ] OIL
- PAINTED SURFACE CONDITIONS:
- [ ] DRY TOUCH [ ] HANDLE [ ] RECOAT
- [ ] DRY OVERSPRAY [ ] PINHOLES [ ] HOLIDAYS
- [ ] OTHER:

AMBIENT CONDITIONS

TIME	10:00						
DRY BULB, F	63 o	o	o	o	o	o	
WET BULB, F	59 o	o	o	o	o	o	
% HUMIDITY	49 %	%	%	%	%	%	
SURFACE MIN/MAX							
WIND DIR/SPEED	12mph						

WEATHER CONDITIONS: Clear - Good

SURFACE PREPARATION

START TIME: FINISH TIME: EST. SF

- [ ] SOLVENT CLEAN [ ] HAND TOOL [ ] POWER TOOL
- [ ] HP WASH PSI [ ] OTHER:
- [✓] ABRASIVE BLAST [✓] ABRASIVE TYPE Copper [ ] SAMPLE
- [✓] BLAST HOSE SIZE 2" [✓] NOZZLE SIZE / PSI #8
- [✓] AIR SUPPLY CFM Cfm [✓] AIR SUPPLY CLEANLINESS
- [✓] WATER/OIL TRAP CHECK [✓] EQUIPMENT CONDITION CHECK

SURFACE CLEANLINESS & PROFILE MEASURMENT

- SPECIFIED SURFACE PREPARATION: SSPC SP-
- ACTUAL SURFACE PREPARATION: SSPC SP- ____
- PROFILE CHECK: ____ [ ] DISC [ ] TAPE [ ] GAUGE
- [ ] SPECIFIED ____ mils [ ] ACTUAL ____ mils
- [ ] Banana Gage BMR ____ mils

DRY FILM THICKNESS MEASURMENT

- Gage Type / Model: ____ Serial # ____
- [ ] Calibration Verified # DFT Readings ____ Est. SF
- Min. ____ mils Max ____ mils Ave. ____ mils
- Additional Notes:

APPLICATION

START TIME: FINISH TIME: EST. SF

[ ] PRIMER [ ] INTERMEDIATE [ ] TOPCOAT [ ] TOUCHUP

Generic Type:	Qty Mixed:
Manuf:	Mix Ratio:
Prod. Name:	Mix Method:
Prod. #:	Strain/Screen [ ]
Color:	Material Temp. oF
Kit Size / Condition:	Sweat Time ____ min.
Shelf Life:	Pot Life ____ min.
Batch Numbers	Thinner #:
(A)	Qty. Added:
(B)	% Volume:
(C)	Spec. WFT: mils
Thinner	Actual WFT: mils

[ ] Airless [ ] Conventional [ ] Brush [ ] Roller [ ] Other

Pump / Pot	Hose Dia.	[ ] Air Check
Ratio / Size	Hose Lng.	[ ] SEP / Trap
GPM / CFM	Spray Gun	[ ] Filter
PSI:	Tip Sz.	[ ] Agitator

Inspector Signature

Testex Tapes

3.4

Testex PRESS-O-FILM™ www.testextape.com HT X-Coarse 1.5 to 4.5 mil 38 to 115 µm Made in USA

20 C 39 (C+XC)/2 64 XC 115 µm

0.8 1.5 2.5 4.5 mil

BROWN-MINNEAPOLIS TANK
ENGINEERS - FABRICATORS - CONSTRUCTORS

DAILY COATING INSPECTION FORM

DATE: 5/11/15 (M) T W R F S SU | PG ___ OF ___

PROJECT / JOB #: 30883 Tank #2

LOCATION / CUSTOMER: Shop / Elkhorn

DESCRIPTION OF WORK AREA

Paint
Spray interior Sherwin Williams
Macropoxy 646 PW

Spray Exterior Sherwin Williams
Macropoxy 646

HOLD POINT INSPECTIONS PREFORMED

[✓] WEATHER AND SITE CONDITIONS
[✓] PRE SURFACE PREP / CONDITION & CLEANLINESS
[✓] SURFACE PREPARATION MONITORING
[✓] POST SURFACE PREP CLEANLINESS & PROFILE
[✓] APPLICATION MONITORING / WFT
[ ] POST APPLICAITON
[ ] POST CURE DFT & INTERIOR HOLIDAY TEST
[✓] CORRECTIVE ACTION AND FINAL INSPECTION

SURFACE CONDITIONS

[ ] NEW STEEL [ ] OLD STEEL [ ] GALV. STEEL [ ] MAINT.
[ ] SALT CONTAMINATION: CL ___ FE ___
DEGREE OF CORROSION:
[ ] PITS [ ] SHARP EDGES [ ] RUNS/SAGS [ ]MOISTURE [ ] OIL
PAINTED SURFACE CONDITIONS:
[ ] DRY TOUCH [ ] HANDLE [ ] RECOAT
[ ]DRY OVERSPRAY [ ] PINHOLES [ ] HOLIDAYS
[ ] OTHER:

AMBIENT CONDITIONS

TIME	0807						
DRY BULB, F	60	o	o	o	o	o	
WET BULB, F	57	o	o	o	o	o	
% HUMIDITY	21	%	%	%	%	%	
SURFACE MIN/MAX	70'						
WIND DIR/SPEED	5mph						

WEATHER CONDITIONS: Clear - Good

SURFACE PREPARATION

START TIME: ___ FINISH TIME: ___ EST. SF ___
[ ] SOLVENT CLEAN [ ] HAND TOOL [ ] POWER TOOL
[ ] HP WASH ___ PSI [ ] OTHER:
[ ] ABRASIVE BLAST [ ] ABRASIVE TYPE ___ [ ] SAMPLE
[ ] BLAST HOSE SIZE ___ [ ] NOZZLE SIZE / PSI ___
[ ] AIR SUPPLY CFM ___ [ ] AIR SUPPLY CLEANLINESS
[ ] WATER/OIL TRAP CHECK [ ] EQUIPMENT CONDITION CHECK

SURFACE CLEANLINESS & PROFILE MEASURMENT

SPECIFIED SURFACE PREPARATION: SSPC SP-
ACTUAL SURFACE PREPARATION: SSPC SP- ___
PROFILE CHECK: ___ [ ] DISC [ ] TAPE [ ] GAUGE
[ ] SPECIFIED ___ mils [ ] ACTUAL ___ mils
[ ] Banana Gage BMR ___ mils

DRY FILM THICKNESS MEASURMENT

Gage Type / Model: ___ Serial # ___
[ ] Calibration Verified # DFT Readings ___ Est. SF ___
Min. ___ mils Max ___ mils Ave. ___ mils
Additional Notes: Sherwin Williams Macropoxy
A) XM0125K5
B) XM2624BK
Reduce # 15

APPLICATION

START TIME: ___ FINISH TIME: ___ EST. SF ___
[ ] PRIMER [ ] INTERMEDIATE [ ] TOPCOAT [ ] TOUCHUP

Generic Type:		Qty Mixed:
Manuf: Sherwin Williams		Mix Ratio: 1-1
Prod. Name: Macropoxy		Mix Method: Paint Shaker
Prod. #: 646 PW		Strain/Screen [✓]
Color: White		Material Temp. ___ oF
Kit Size / Condition: 10 gallon		Sweat Time ___ min.
Shelf Life:		Pot Life ___ min.
Batch Numbers		Thinner #: 15
(A) XM0794UE		Qty. Added:
(B) XM0225LG		% Volume:
(C)		Spec. WFT: ___ mils
Thinner # 15		Actual WFT: ___ mils

[✓] Airless [ ] Conventional [ ] Brush [ ] Roller [ ] Other

Pump / Pot	Hose Dia. 1/4	[ ] Air Check
Ratio / Size	Hose Lng. 100	[✓] SEP / Trap
GPM / CFM	Spray Gun	[✓] Filter
PSI: 3000	Tip Sz. 517	[ ] Agitator

Inspector Signature

Testex Tapes

BROWN-MINNEAPOLIS TANK
ENGINEERS - FABRICATORS - CONSTRUCTORS

DAILY COATING INSPECTION FORM

DATE: 5/12/15 M T W R F S SU | PG ___ OF ___

PROJECT / JOB #: 30883 Tanks #1, #2

LOCATION / CUSTOMER: Shop / Fiteway

DESCRIPTION OF WORK AREA

Paint
Spray interior Sherwin Williams
Macropoxy 646 PW Light Blue

Spray exterior Sherwin Williams
Acrolon 218 HS White

HOLD POINT INSPECTIONS PREFORMED

- [X] WEATHER AND SITE CONDITIONS
- [X] PRE SURFACE PREP / CONDITION & CLEANLINESS
- [X] SURFACE PREPARATION MONITORING
- [X] POST SURFACE PREP CLEANLINESS & PROFILE
- [X] APPLICATION MONITORING / WFT
- [ ] POST APPLICAITON
- [ ] POST CURE DFT & INTERIOR HOLIDAY TEST
- [X] CORRECTIVE ACTION AND FINAL INSPECTION

SURFACE CONDITIONS

- [ ] NEW STEEL [ ] OLD STEEL [ ] GALV. STEEL [ ] MAINT.
- [ ] SALT CONTAMINATION: CL ___ FE ___
- DEGREE OF CORROSION:
- [ ] PITS [ ] SHARP EDGES [ ] RUNS/SAGS [ ] MOISTURE [ ] OIL
- PAINTED SURFACE CONDITIONS:
- [ ] DRY TOUCH [ ] HANDLE [ ] RECOAT
- [ ] DRY OVERSPRAY [ ] PINHOLES [ ] HOLIDAYS
- [ ] OTHER:

AMBIENT CONDITIONS

TIME	9:12						
DRY BULB, F	60 o	o	o	o	o	o	o
WET BULB, F	56 o	o	o	o	o	o	o
% HUMIDITY	40%	%	%	%	%	%	%
SURFACE MIN/MAX	73'						
WIND DIR/SPEED	2mph						

WEATHER CONDITIONS: windy - OK

SURFACE PREPARATION

START TIME: ___ FINISH TIME: ___ EST. SF ___

- [ ] SOLVENT CLEAN [ ] HAND TOOL [ ] POWER TOOL
- [ ] HP WASH ___ PSI [ ] OTHER:
- [ ] ABRASIVE BLAST [ ] ABRASIVE TYPE ___ [ ] SAMPLE
- [ ] BLAST HOSE SIZE ___ [ ] NOZZLE SIZE / PSI
- [ ] AIR SUPPLY CFM ___ [ ] AIR SUPPLY CLEANLINESS
- [ ] WATER/OIL TRAP CHECK [ ] EQUIPMENT CONDITION CHECK

SURFACE CLEANLINESS & PROFILE MEASURMENT

- SPECIFIED SURFACE PREPARATION: SSPC SP-
- ACTUAL SURFACE PREPARATION: SSPC SP- ___
- PROFILE CHECK: ___ [ ] DISC [ ] TAPE [ ] GAUGE
- [ ] SPECIFIED ___ mils [ ] ACTUAL ___ mils
- [ ] Banana Gage BMR ___ mils

DRY FILM THICKNESS MEASURMENT

Gage Type / Model: ___ Serial # ___

[ ] Calibration Verified # DFT Readings ___ Est. SF ___

Min. ___ mils Max ___ mils Ave. ___ mils

Additional Notes: Sherwin Williams Acrolon 218
A3 XM0905AN
B3 M0575XU
Reducer #15

APPLICATION

START TIME: ___ FINISH TIME: ___ EST. SF ___

[ ] PRIMER [ ] INTERMEDIATE [ ] TOPCOAT [ ] TOUCHUP

Generic Type:		Qty Mixed:
Manuf: Sherwin Williams		Mix Ratio: 1-1
Prod. Name: MacroPoxy		Mix Method: Power
Prod. #: 646 PW		Strain/Screen [X]
Color: Light Blue		Material Temp. 68 oF
Kit Size / Condition: 10 gallon		Sweat Time ___ min.
Shelf Life:		Pot Life ___ min.
Batch Numbers		Thinner #: 15
(A)		Qty. Added:
(B) XM0263-413K		% Volume:
(C)		Spec. WFT: mils
Thinner #15		Actual WFT: mils

[X] Airless [ ] Conventional [ ] Brush [ ] Roller [ ] Other

Pump / Pot	Hose Dia. 1/4	[X] Air Check
Ratio / Size	Hose Lng. 100	[X] SEP / Trap
GPM / CFM	Spray Gun	[X] Filter
PSI: 3000	Tip Sz. 5/19	[ ] Agitator

Inspector Signature

Testex Tapes

BROWN-MINNEAPOLIS TANK
ENGINEERS - FABRICATORS - CONSTRUCTORS

TANK PRESSURE TEST LOG

PROJECT:

JOB NO.: BMT # 30883 ~ 110

INSPECTOR: TERRY SHUGHART

SUMMARY OF TEST PROCEDURE:

- All tank openings will be plugged or covered.
- Tank will be air tested to 1½ times the maximum design pressure for the tank.
- Soap suds will be applied to all shell, bottom, roof and attachment welds to detect leaks.
- Any weld defects will be repaired and the tank re-tested.
- Air pressure will be released before removal of plugs and covers.

TANK NUMBER	TEST DATE	INITIAL PRESSURE AT START TIME		PRESSURE AT INTERVAL		PASS	FAIL	REPAIRS REQUIRED
		TIME	PSI	TIME	PSI			
TK 1	5-5-15	10 AM	3PSI	11 AM	3PSI	✓		NO Repairs
TANK RE-TEST (IF REQUIRED)								
	TEST DATE	INITIAL PRESSURE AT START TIME		PRESSURE AT INTERVAL		PASS	FAIL	

COMMENTS: TESTED RE PADS @ 15 PSI SOAP TEST

8301 Broadway Blvd. SE, Albuquerque, NM 87105 • (505) 563-4800 • Fax (505) 563-4799

BROWN-MINNEAPOLIS TANK
ENGINEERS - FABRICATORS - CONSTRUCTORS

TANK PRESSURE TEST LOG

PROJECT:

JOB NO.: BMT # 30883 – 116

INSPECTOR: TERRY SHUGHART

SUMMARY OF TEST PROCEDURE:

- All tank openings will be plugged or covered.
- Tank will be air tested to 1½ times the maximum design pressure for the tank.
- Soap suds will be applied to all shell, bottom, roof and attachment welds to detect leaks.
- Any weld defects will be repaired and the tank re-tested.
- Air pressure will be released before removal of plugs and covers.

TANK NUMBER	TEST DATE	INITIAL PRESSURE AT START TIME		PRESSURE AT INTERVAL		PASS	FAIL	REPAIRS REQUIRED
		TIME	PSI	TIME	PSI			
TK 2	5-7-15	8 AM	3 PSI	9:15 AM	3 PSI	✓		NO Repairs
TANK RE-TEST (IF REQUIRED)								
	TEST DATE	INITIAL PRESSURE AT START TIME		PRESSURE AT INTERVAL		PASS	FAIL	

COMMENTS: TESTED REPADS @ 15 PSI
SOAP TEST

8301 Broadway Blvd. SE, Albuquerque, NM 87105 • (505) 563-4800 • Fax (505) 563-4799

Fliteway Technologies, Inc.

Feed Pump Skid

2129 East Birchwood Ave. Cudahy, WI 53110

(414) 483-5600 1-800-236-3580 FAX (414) 483-1957

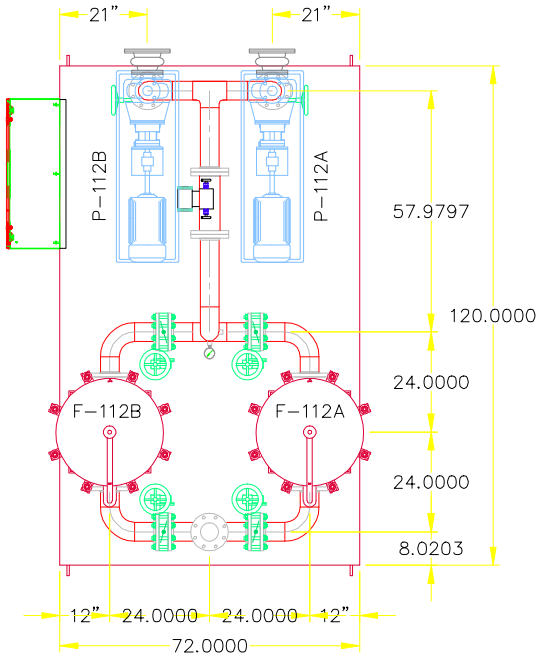

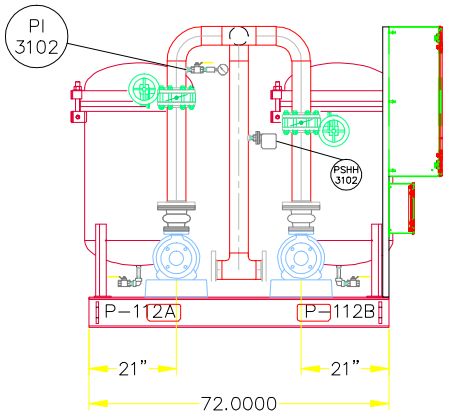

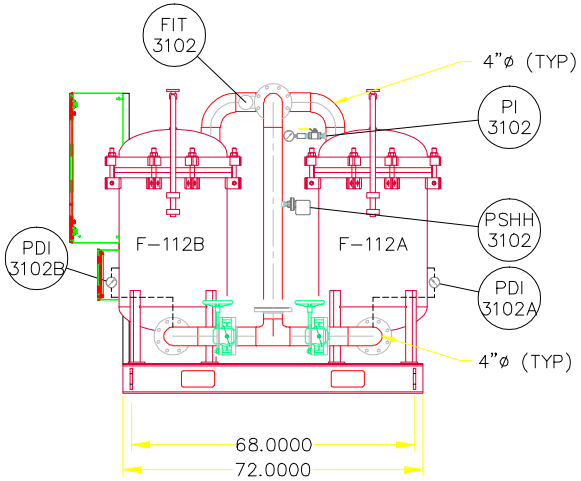

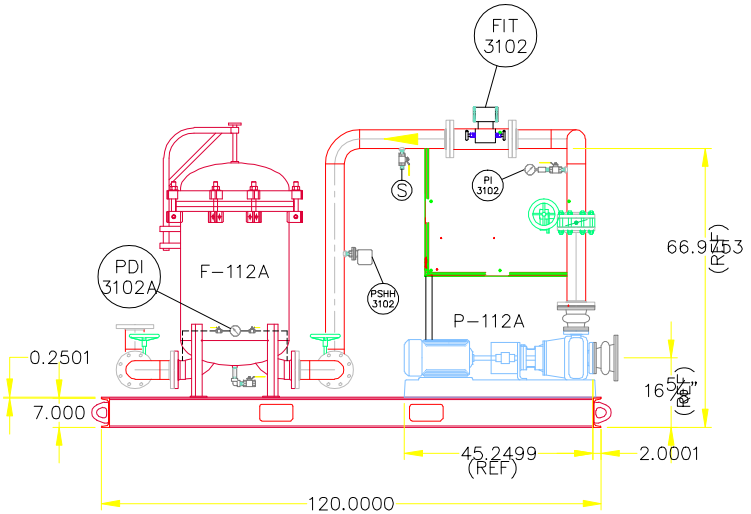

THIS DRAWING IS THE PROPERTY OF
Fliteway Technologies, Inc
2129 EAST BIRCHWOOD AVE
CUDAHY WI, 53110
414.483.5600 414.483.1957
AND IS NOT TO BE REPRODUCED
WITHOUT WRITTEN PERMISSION

6'X10' FEED PUMP SKID

CB&I WATER TREATMENT

3/19/15	SIZE	FSCM NO.	DWG NO. Q14508
	SCALE NONE		SHEET 1 OF 1

CRANE ENGINEERING SALES

February 9, 2015

Proposal No: TS14-12-11 01
Item No: Feed Pumps

MODEL:3196 STi SIZE:2x3-6 QTY: 1

i-FRAME™

Operating Conditions

SERVICE

LIQUID	Groundwater Temp. 70.0 deg F, SP.GR 1.000, Viscosity 1.000 cp, rated / max. suction pressure 0.0 / 0.0 psi g
CAPACITY Rated	200.0 gpm
HEAD	100.0 (ft)

Performance at 3500 RPM per HI 14.6 1B basis power

PUBLISHED EFFY	66.5% (CDS)
RATED EFFY	63.5% with contract seal
RATED POWER	8.4 hp (incl. Mech. seal drag 0.37). (Run out 10.7 hp)
NPSHR	10.0 ft
DISCH PRESSURE (R)	45.9 psi g (50.0 psi g @ Shut off) based on 0.0 psi g rated suction pressure
PERF. CURVE	2228-6 (Rotation CW viewed from coupling end)
SHUT OFF HEAD	115.6 ft
MIN. FLOW	Continuous Stable: 35.5 gpm Hydraulic: 35.5 gpm Thermal: N/A

Materials

CONSTRUCTION	Ductile iron
CASING	Ductile iron (max.casing pressure @ rated temperature 250.0 psi g)
ST.BOX COVER	Ductile iron
IMPELLER	Ductile iron - Open (5.3750 in rated, max=6.0620 in, min=4.0000 in)
CASING GASKETS	Aramid Fiber with EPDM and Silicate Filler
IMPELLER O-RING	Teflon
SHAFT MATERIAL	SAE 4140
SHAFT SLEEVE	316SS
LUBRICATION	Flood oil
SEAL CHAMBER	Taper bore plus with axial ribs
GLAND	316SS Flush quench and drain
BEARINGS	6207 (Inboard) 5306 (Outboard)
COUPLING	Rexnord - Omega Rex Elastomer- ES-4 (standard orange element)-S.F. 1.00
COUPLING GUARD	Carbon steel
BASEPLATE	Cast iron camber top E00025A

Sealing Method

MECHANICAL SEAL	John Crane 5611Q X(1)F(50)1XO(58)1 (Carbon vs Silicon Carbide with Viton) - (Cartridge - Single)

Flanges

150# flat face

Frame Connections

Bearing frame drain

Frame cooler access

Oil fill connection

Frame features

Ductile iron frame adapter

Inpro VBXX-D Hybrid Bearing Isolators

Premium Severe Duty Thrust Bearings

i- ALERT™ Condition Monitor

Assembly and Testing

Casing & Cover - Standard hydro test

Impeller balanced to ISO G6.3

Painting

Goulds Blue standard painting

Warranty

5 Year Extended Warranty (All the components, manufactured by ITT Goulds pumps, in the liquid end and power end are covered).

Driver : Electric motor Manufacturer : Pump mfg's Choice

FURNISHED BY	Pump mfg	MOUNTED BY	Pump mfg
RATING	15.0 hp (11.2 KW)	ENCLOSURE	TEFC - Premium Efficiency
PHASE/FREQ/VOLTS	3/60 Hz/460	SPEED	3600 RPM
INSULATION/SF	F/1.15	FRAME	254T

Freight Terms

Freight invoices received from ITT partner carriers are proprietary information and cannot be divulged for any reason. ITT will provide an ITT generated freight invoice upon request.

Weights and Measurements

TOTAL NET UNIT WEIGHT / VOLUME	**490.5 lb / 7.2 ft³**
TOTAL GROSS UNIT WEIGHT / GROSS VOLUME	**604.5 lb / 22.8 ft³**

Program Version 1.51.0.1

Drawing Revision Limit

Drawings returned with status approved as noted or revise and re-submit will be corrected and resubmitted only once. Thereafter, additional comments or revisions to these drawings will incur a charge of $250 per drawing.

Our offer does not include specific review and incorporation of any Statutory or Regulatory Requirements and the offer is limited to the requirements of the design specifications. Should any Statutory or Regulatory requirements need to be reviewed and incorporated then the Customer is responsible to identify those and provide copies for review and revision of our offer.

Our quotation is offered in accordance with our comments and exceptions identified in our proposal.

Click here to download the pump Bulletin

Click here to learn more about the new i-FRAME™

GOULDS PUMPS

OUTLINE DRAWING

Model 3196 STi
Size 2x3-6

ITT

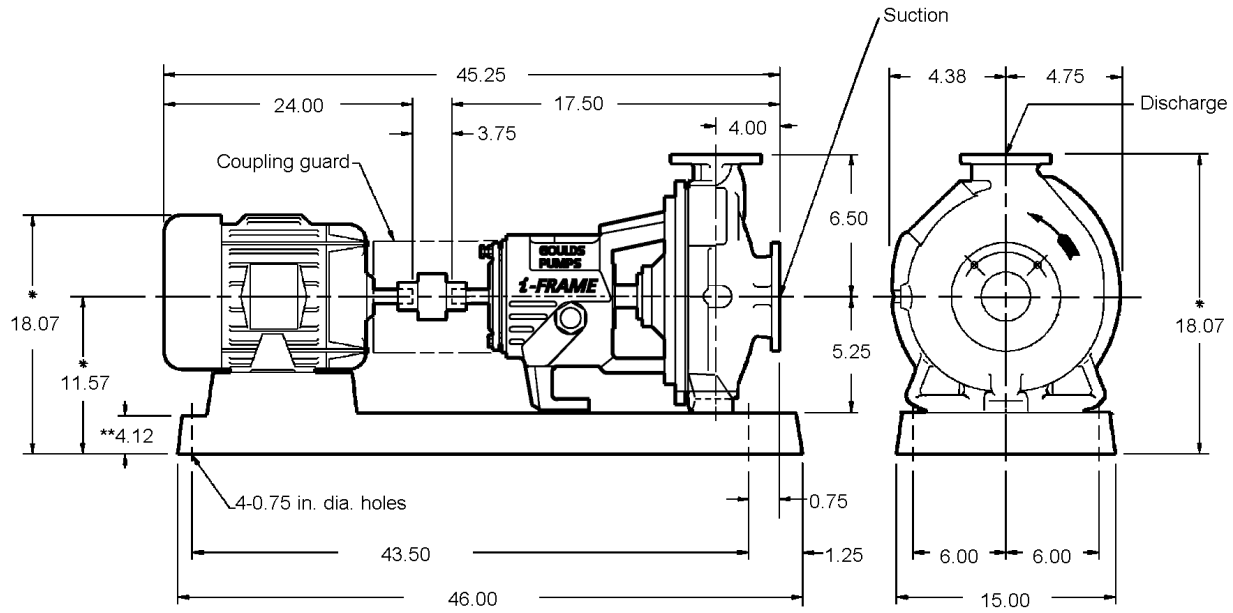

Pump Specification

SUCT.FLANGE SIZE	*3"*	DRILLING	*ANSI 150#*	FACING	*FF*	FINISH	*SERRATED*
DISCH.FLANGE SIZE	*2"*	DRILLING	*ANSI 150#*	FACING	*FF*	FINISH	*SERRATED*
PUMP ROTATION (LOOKING AT PUMP FROM MOTOR)			*CW*				
TYPE OF LUBRICATION	*FLOOD OIL*					COOLED	*NO*
TYPE OF STUFFING BOX	*TAPER BORE PLUS WITH AXIAL RIBS*					COOLED	*NO*
TYPE OF SEALING	*MECHANICAL SEAL*						

Weights and Measurements

PUMP	*95.0 lb*
MOTOR/CPLG	*270.0/5.5 lb*
BASEPLATE	*120.0 lb*
TOTAL	*490.5 lb*
GR.VOLUME w/BOX	*22.8 ft³*
GR.WEIGHT w/BOX	*604.5 lb*

Motor Specification

MOTOR BY	*PUMP MFG*	MOUNT BY	*PUMP MFG*	MFG.	*PUMP MFG'S CHOICE*
FRAME	*254T*	POWER	*15.0 hp*	RPM	*3600*
PHASE	*3*	FREQUENCY	*60 HZ*	VOLTS	*460*
INSULATION	*F*	S.F.	*1.15*		
ENCLOSURE	*TEFC - PREMIUM EFFICIENCY*				

Notes and References

- MTR DIMENSIONS ARE APPROXIMATE
- INSTALL FOUNDATION BOLTS IN PIPE SLEEVES
- ALLOW FROM 0.75 to 1.50in. FOR GROUTING. SEE INSTRUCTION BOOK FOR DETAILS.

*Tolerance is -0.50 +0

** Foundation bolt grip thickness

Auxiliary Specification

COUPLING BY	*PUMP MFG*	CPLG TYPE	*REXNORD OMEGA REX ELASTOMER- ES-4 (STANDARD ORANGE*
CPL GUARD BY	*PUMP MFG*	CPLG GUARD MATL	*CARBON STEEL*
BASEPLATE	*CAST IRON CAMBER TOP E00025A*		
MECH.SEAL	*JOHN CRANE 5611Q X(1)F(50)1XO(58)1 (CARBON VS SILICON CARBIDE WITH VITON)*		

FOR PUMP TAPPED OPENINGS REFER TO DWG.:
TTS14-12-11 01 / Feed Pumps

DRAWING IS FOR REFERENCE ONLY.
NOT CERTIFIED FOR CONSTRUCTION UNLESS SIGNED.

Customer: CRANE ENGINEERING SALES
Serial No:
Customer P.O. No:
Item No: Feed Pumps
End User: .
Service:

Copyright 2015
ITT Corp

All dimensions are in inches.
Drawing is not to scale
Weights (lbs) are approximate

DRAWING NO TS14-12-11 01/Feed Pumps

Model: 3196	Size: 2x3-6	Group: STi	60Hz	RPM: 3500	Stages: 1

Job/Inq.No. :
Purchaser : CRANE ENGINEERING SALES
End User: .
Item/Equip.No. : Feed Pumps
Service :
Order No. :

Issued by : Tom Schroeder
Quotation No. : TS14-12-11 01
Certified By :

Date : 02/09/2015
Rev. : 0

Operating Conditions

Liquid:	Groundwater	Published Efficiency:	66.5 %
Temp.:	70.0 deg F	Rated Pump Efficiency:	63.5 %
S.G./Visc.:	1.000/1.000 cp	Rated Total Power:	8.4 hp
Flow:	200.0 gpm	Non-Overloading Power:	10.7 hp
TDH:	100.0 ft	Imp. Dia. First 1 Stg(s):	5.3750 in
NPSHa:	0.0 ft	NPSHr:	10.0 ft
Solid size:		Shut off Head:	115.6 ft
% Susp. Solids (by wtg):		Vapor Press:	

Pump Performance

Suction Specific Speed:	8,473 gpm(US) ft
Min. Hydraulic Flow:	35.5 gpm
Min. Thermal Flow:	N/A
Max. Solids Size:	0.3750 in

Notes: 1. Power and efficiency losses are not reflected on the curve below.
2. Elevated temperature effects on performance are not included.

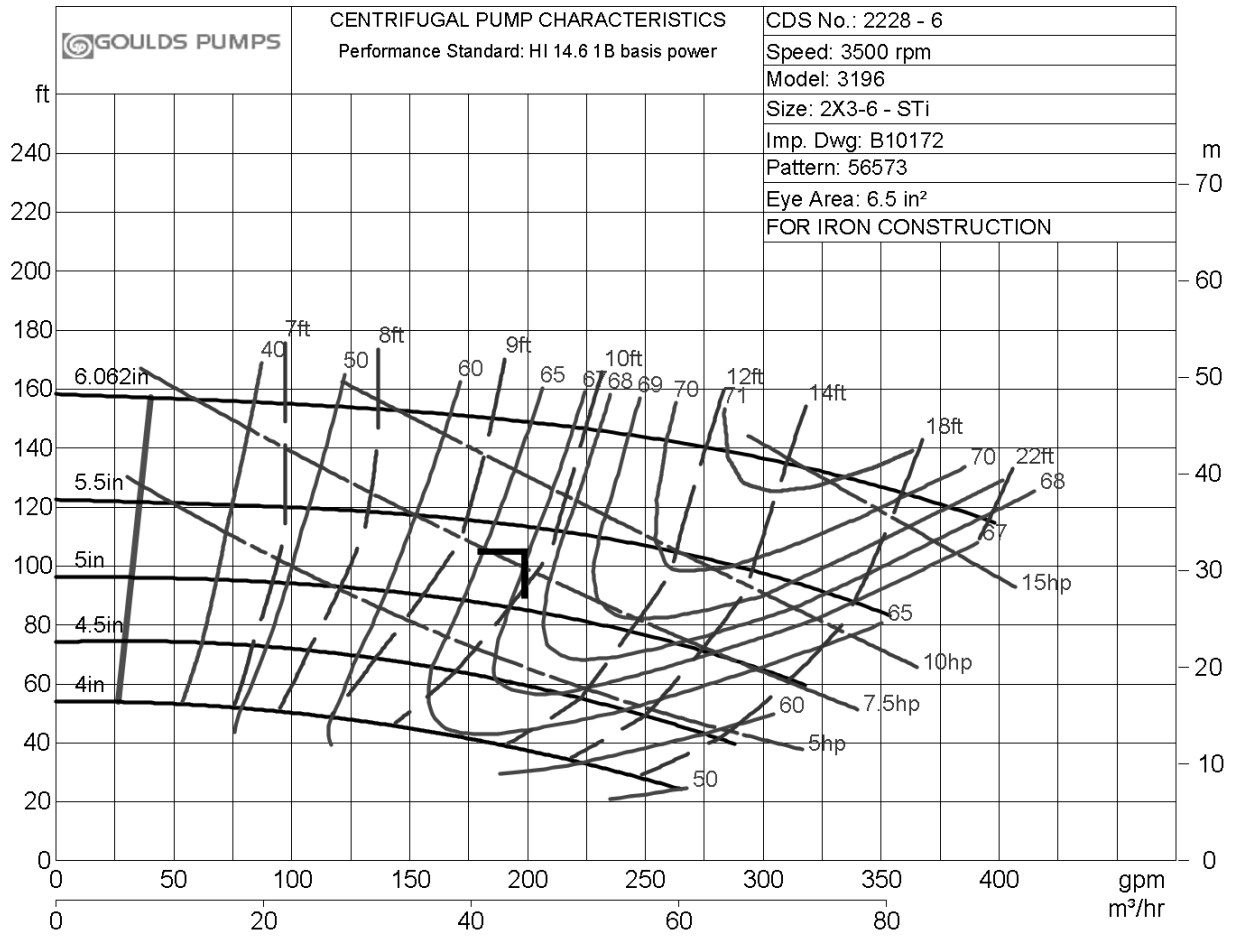

ITT

GOULDS PUMPS

Installation, Operation, and Maintenance Manual

Model 3196 i-FRAME

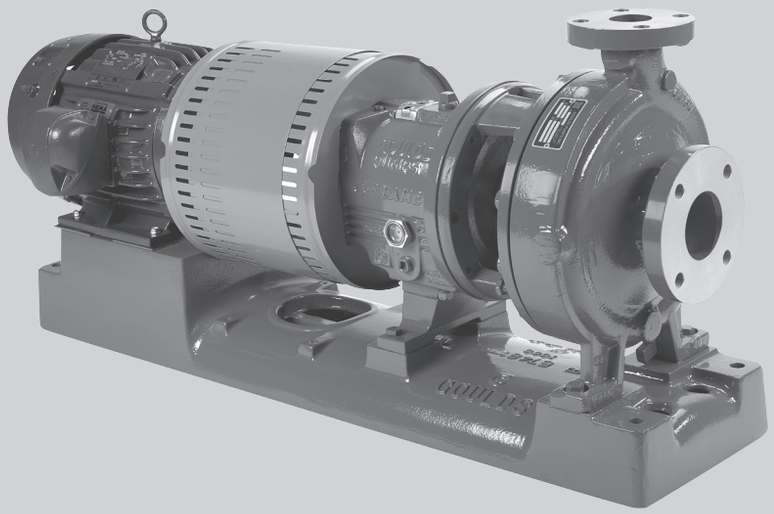

ITT

ENGINEERED FOR LIFE

Table of Contents

Introduction and Safety 4
Introduction 4
Safety 4
Safety terminology and symbols 5
Environmental safety 5
User safety 6
Ex-approved products 8
Product approval standards 8
Product warranty 9

Transportation and Storage 11
Inspect the delivery 11
Inspect the package 11
Inspect the unit 11
Transportation guidelines 11
Pump handling 11
Lifting methods 11
Storage guidelines 14
Pump storage requirements 14
Frostproofing 15

Product Description 16
General description 3196 16
Part description 3196 17
General description i-ALERT™ Condition Monitor 18
Nameplate information 19

Installation 22
Preinstallation 22
Pump location guidelines 22
Foundation requirements 22
Baseplate-mounting procedures 23
Prepare the baseplate for mounting 23
Install the baseplate using shims or wedges 23
Install the baseplate using jackscrews 24
Install the baseplate using spring mounting 27
Install the baseplate using stilt mounting 28
Baseplate-leveling worksheet 30
Install the pump, driver, and coupling 31
Pump-to-driver alignment 31
Alignment checks 31
Permitted indicator values for alignment checks 32
Alignment measurement guidelines 32
Attach the dial indicators for alignment 32
Pump-to-driver alignment instructions 33
C-face adapter 36
Grout the baseplate 36
Piping checklists 37
General piping checklist 37
Suction-piping checklist 39
Discharge piping checklist 41

Commissioning, Startup, Operation, and Shutdown 43
Preparation for startup 43
Remove the coupling guard 44
Check the rotation - Frame Mounted 46
Impeller-clearance check 46
Impeller clearances (3196 and HT 3196) 47
Impeller-clearance setting 47
Set the impeller clearance - dial indicator method (all except CV 3196) 47
Set the impeller clearance - feeler gauge method (all except CV 3196) 48
Couple the pump and driver 49
Install the coupling guard 50
Bearing lubrication 54
Shaft-sealing options 56
Mechanical seal options 56
Connection of sealing liquid for mechanical seals 56
Packed stuffing box option 57
Connection of sealing liquid for a packed stuffing box 57
Dynamic-seal option 57
Set an elastomeric face seal 58
Pump priming 58
Prime the pump with the suction supply above the pump 58
Prime the pump with the suction supply below the pump 59
Other methods of priming the pump 60
Start the pump 60
Activate the i-ALERT Condition Monitor 61
i-ALERT™ Condition Monitor routine operation 62
Pump operation precautions 62
Shut down the pump 63
Deactivate the i-ALERT™ Condition Monitor 63
Reset the i-ALERT™ Condition Monitor 64
Make the final alignment of the pump and driver 64

Maintenance 65
Maintenance schedule 65
Bearing maintenance 66
Lubricating-oil requirements 66
Regrease the grease-lubricated bearings 67
Lubricate the bearings after a shutdown period 68
Shaft seal maintenance 68
Mechanical-seal maintenance 68
Packed stuffing-box maintenance 69
Dynamic-seal maintenance 69
Disassembly 70
Disassembly precautions 70
Tools required 70
Drain the pump 71
Remove the coupling 71
Remove the back pull-out assembly 71
Remove the coupling hub 73
Impeller removal 74
Seal-chamber cover removal 76
Remove the seal-chamber cover (3196, CV 3196, HT 3196, LF 3196, 3796) 76
Remove the stuffing-box cover (3196, CV 3196, HT 3196, LF 3196, 3796) 77
Remove the dynamic seal 78
Remove the frame adapter (MTi, LTi, XLT-i, i17) 79
Remove the inboard labyrinth oil seal 79
Power-end disassembly 79

Disassemble the bearing frame 88
Guidelines for i-ALERT™ Condition Monitor disposal 89
Disassemble the C-face adapter 89
Pre-assembly inspections 90
Replacement guidelines 90
Shaft and sleeve replacement guidelines 92
Bearing-frame inspection 92
C-face adapter inspection 93
Seal chamber and stuffing box cover inspection 94
Bearings inspection 95
Bearing-housing inspection 95
Bearing fits and tolerances 97
Reassembly 98
Assemble the rotating element and the bearing frame (STi and MTi) 98
Assemble the rotating element and the bearing frame (STi and MTi with duplex bearings) 100
Assemble the rotating element and the bearing frame (LTi) 103
Assemble the rotating element and the bearing frame (XLT-i and i17) 106
Assemble the rotating element and the bearing frame (XLT-i and i17 with duplex bearings) 109
Assemble the frame 113
INPRO labyrinth oil seal description 116
Assemble the INPRO labyrinth oil seal 117
Assemble the C-face adapter 117
Shaft sealing 118
Install the impeller 124
Attach the i-ALERT™ Condition Monitor to the pump 126
Post-assembly checks 127
Install the back pull-out assembly (except HT 3196) 127
Assembly references 129
Spare parts 130
Interchangeability drawings 130
3196 interchangeability 130
Lubrication conversion 131
Frame lubrication conversion 131
Convert from greased-for-life or regreaseable to oil-lubricated bearings 132
Conversion from flood-oil to pure-oil mist 133
Convert from flood oil to regreaseable 133

Troubleshooting 134
Operation troubleshooting 134
Alignment troubleshooting 135
Assembly troubleshooting 135
i-ALERT™ Condition Monitor troubleshooting 135

Parts Listings and Cross-Sectionals 136
Parts list 136

Certification: CE or CE ATEX 145
Certificates of conformance 145

Other Relevant Documentation or Manuals 151

Local ITT Contacts 152
Regional offices 152

Introduction and Safety

Introduction

Purpose of this manual

The purpose of this manual is to provide necessary information for:

- Installation
- Operation
- Maintenance

CAUTION:
Read this manual carefully before installing and using the product. Improper use of the product can cause personal injury and damage to property, and may void the warranty.

NOTICE:
Save this manual for future reference, and keep it readily available at the location of the unit.

Requesting other information

Special versions can be supplied with supplementary instruction leaflets. See the sales contract for any modifications or special version characteristics. For instructions, situations, or events that are not considered in this manual or in the sales documents, please contact the nearest ITT representative.

Always specify the exact product type and identification code when requesting technical information or spare parts.

Safety

WARNING:

- The operator must be aware of safety precautions to prevent physical injury.
- Any pressure-containing device can explode, rupture, or discharge its contents if it is over-pressurized. Take all necessary measures to avoid over-pressurization.
- Operating, installing, or maintaining the unit in any way that is not covered in this manual could cause death, serious personal injury, or damage to the equipment. This includes any modification to the equipment or use of parts not provided by ITT. If there is a question regarding the intended use of the equipment, please contact an ITT representative before proceeding.
- This manual clearly identifies accepted methods for disassembling units. These methods must be adhered to. Trapped liquid can rapidly expand and result in a violent explosion and injury. Never apply heat to impellers, propellers, or their retaining devices to aid in their removal unless explicitly stated in this manual.
- If the pump/motor is damaged or leaking, do not operate as it may cause an electric shock, fire, explosion, liberation of toxic fumes, physical harm, or environmental damage. Correct/repair the problem prior to putting back in service.
- Do not change the service application without the approval of an authorized ITT representative.

CAUTION:
You must observe the instructions contained in this manual. Failure to do so could result in physical injury, damage, or delays.

Safety terminology and symbols

About safety messages

It is extremely important that you read, understand, and follow the safety messages and regulations carefully before handling the product. They are published to help prevent these hazards:

- Personal accidents and health problems
- Damage to the product
- Product malfunction

Hazard levels

Hazard level	Indication
DANGER:	A hazardous situation which, if not avoided, will result in death or serious injury
WARNING:	A hazardous situation which, if not avoided, could result in death or serious injury
CAUTION:	A hazardous situation which, if not avoided, could result in minor or moderate injury
NOTICE:	• A potential situation which, if not avoided, could result in undesirable conditions • A practice not related to personal injury

Hazard categories

Hazard categories can either fall under hazard levels or let specific symbols replace the ordinary hazard level symbols.

Electrical hazards are indicated by the following specific symbol:

Electrical Hazard:

These are examples of other categories that can occur. They fall under the ordinary hazard levels and may use complementing symbols:

- Crush hazard
- Cutting hazard
- Arc flash hazard

The Ex symbol

The Ex symbol indicates safety regulations for Ex-approved products when used in atmospheres that are potentially explosive or flammable.

Environmental safety

The work area

Always keep the station clean to avoid and/or discover emissions.

Waste and emissions regulations

Observe these safety regulations regarding waste and emissions:

- Appropriately dispose of all waste.
- Handle and dispose of the processed liquid in compliance with applicable environmental regulations.
- Clean up all spills in accordance with safety and environmental procedures.
- Report all environmental emissions to the appropriate authorities.

WARNING:
Do NOT send the product to the ITT manufacturer if it has been contaminated by any nuclear radiation. Inform ITT so that accurate actions can take place.

Electrical installation

For electrical installation recycling requirements, consult your local electric utility.

Recycling guidelines

Always follow local laws and regulations regarding recycling.

User safety

General safety rules

These safety rules apply:

- Always keep the work area clean.
- Pay attention to the risks presented by gas and vapors in the work area.
- Avoid all electrical dangers. Pay attention to the risks of electric shock or arc flash hazards.
- Always bear in mind the risk of drowning, electrical accidents, and burn injuries.

Safety equipment

Use safety equipment according to the company regulations. Use this safety equipment within the work area:

- Helmet
- Safety goggles, preferably with side shields
- Protective shoes
- Protective gloves
- Gas mask
- Hearing protection
- First-aid kit
- Safety devices

NOTICE:
Never operate a unit unless safety devices are installed. Also see specific information about safety devices in other chapters of this manual.

Electrical connections

Electrical connections must be made by certified electricians in compliance with all international, national, state, and local regulations. For more information about requirements, see sections dealing specifically with electrical connections.

Precautions before work

Observe these safety precautions before you work with the product or are in connection with the product:

- Provide a suitable barrier around the work area, for example, a guard rail.
- Make sure that all safety guards are in place and secure.
- Make sure that you have a clear path of retreat.
- Make sure that the product cannot roll or fall over and injure people or damage property.
- Make sure that the lifting equipment is in good condition.
- Use a lifting harness, a safety line, and a breathing device as required.
- Allow all system and pump components to cool before you handle them.
- Make sure that the product has been thoroughly cleaned.
- Disconnect and lock out power before you service the pump.
- Check the explosion risk before you weld or use electric hand tools.

Precautions during work

Observe these safety precautions when you work with the product or are in connection with the product:

CAUTION:
Read this manual carefully before installing and using the product. Improper use of the product can cause personal injury and damage to property, and may void the warranty.

- Never work alone.
- Always wear protective clothing and hand protection.
- Stay clear of suspended loads.
- Always lift the product by its lifting device.
- Beware of the risk of a sudden start if the product is used with an automatic level control.
- Beware of the starting jerk, which can be powerful.
- Rinse the components in water after you disassemble the pump.
- Do not exceed the maximum working pressure of the pump.
- Do not open any vent or drain valve or remove any plugs while the system is pressurized. Make sure that the pump is isolated from the system and that pressure is relieved before you disassemble the pump, remove plugs, or disconnect piping.
- Never operate a pump without a properly installed coupling guard.

Hazardous liquids

The product is designed for use in liquids that can be hazardous to your health. Observe these rules when you work with the product:

- Make sure that all personnel who work with biologically hazardous liquids are vaccinated against diseases to which they may be exposed.
- Observe strict personal cleanliness.
- A small amount of liquid will be present in certain areas like the seal chamber.

Wash the skin and eyes

1. Follow these procedures for chemicals or hazardous fluids that have come into contact with your eyes or your skin:

Condition	Action
Chemicals or hazardous fluids in eyes	1. Hold your eyelids apart forcibly with your fingers. 2. Rinse the eyes with eyewash or running water for at least 15 minutes. 3. Seek medical attention.
Chemicals or hazardous fluids on skin	1. Remove contaminated clothing. 2. Wash the skin with soap and water for at least 1 minute. 3. Seek medical attention, if necessary.

Ex-approved products

Follow these special handling instructions if you have an Ex-approved unit.

Personnel requirements

These are the personnel requirements for Ex-approved products in potentially explosive atmospheres:

- All work on the product must be carried out by certified electricians and ITT-authorized mechanics. Special rules apply to installations in explosive atmospheres.
- All users must know about the risks of electric current and the chemical and physical characteristics of the gas, the vapor, or both present in hazardous areas.
- Any maintenance for Ex-approved products must conform to international and national standards (for example, IEC/EN 60079-17).

ITT disclaims all responsibility for work done by untrained and unauthorized personnel.

Product and product handling requirements

These are the product and product handling requirements for Ex-approved products in potentially explosive atmospheres:

- Only use the product in accordance with the approved motor data.
- The Ex-approved product must never run dry during normal operation. Dry running during service and inspection is only permitted outside the classified area.
- Before you start work on the product, make sure that the product and the control panel are isolated from the power supply and the control circuit, so they cannot be energized.
- Do not open the product while it is energized or in an explosive gas atmosphere.
- Make sure that thermal contacts are connected to a protection circuit according to the approval classification of the product, and that they are in use.
- Intrinsically safe circuits are normally required for the automatic level-control system by the level regulator if mounted in zone 0.
- The yield stress of fasteners must be in accordance with the approval drawing and the product specification.
- Do not modify the equipment without approval from an authorized ITT representative.
- Only use parts that are provided by an authorized ITT representative.

Product approval standards

Regular standards

All standard products are approved according to CSA standards in Canada and UL standards in USA. The drive unit degree of protection follows IP68. See the nameplate for maximum submersion, according to standard IEC 60529.

All electrical ratings and performance of the motors comply with IEC 600341.

Explosion-proofing standards

All explosion-proof products for use in explosive atmospheres are designed in compliance with one or more of the following approvals:

- EN, ATEX Directive 94/9/EC
- FM According to NEC
  - Class 1 Div 1 Groups “C”, and “D”
  - Class 2 Div 1 Groups “E”, “F”, and “G”
  - Class 3 Div 1 Hazardous Locations

ATEX/IECEx:

- Group: IIC

- Category: Ex ia
- Temperature Class: T4 (for ambients up to 100ºC)
- ATEX Marking: Ex II 1 G

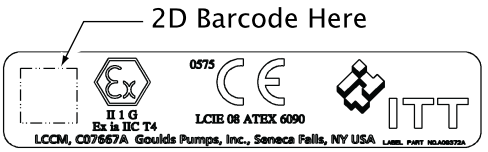

CSA certification

Intrinsically safe for:

- Class I, Div. 1, Groups A, B, C, D
- Class II, Div. 1, Groups E, F, G
- Class III
- Certified to Canadian and US requirements

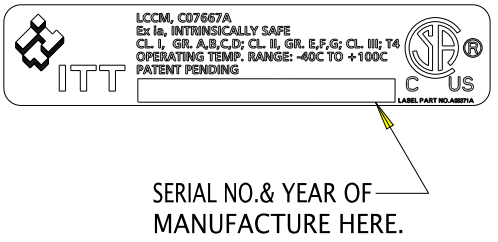

Product warranty

Coverage

ITT undertakes to remedy faults in products from ITT under these conditions:

- The faults are due to defects in design, materials, or workmanship.
- The faults are reported to an ITT representative within the warranty period.
- The product is used only under the conditions described in this manual.
- The monitoring equipment incorporated in the product is correctly connected and in use.
- All service and repair work is done by ITT-authorized personnel.
- Genuine ITT parts are used.
- Only Ex-approved spare parts and accessories authorized by ITT are used in Ex-approved products.

Limitations

The warranty does not cover faults caused by these situations:

- Deficient maintenance
- Improper installation
- Modifications or changes to the product and installation made without consulting ITT
- Incorrectly executed repair work
- Normal wear and tear

ITT assumes no liability for these situations:

- Bodily injuries
- Material damages
- Economic losses

Warranty claim

ITT products are high-quality products with expected reliable operation and long life. However, should the need arise for a warranty claim, then contact your ITT representative.

Transportation and Storage

Inspect the delivery

Inspect the package

1. Inspect the package for damaged or missing items upon delivery.
2. Note any damaged or missing items on the receipt and freight bill.
3. File a claim with the shipping company if anything is out of order.
   If the product has been picked up at a distributor, make a claim directly to the distributor.

Inspect the unit

1. Remove packing materials from the product.
   Dispose of all packing materials in accordance with local regulations.
2. Inspect the product to determine if any parts have been damaged or are missing.
3. If applicable, unfasten the product by removing any screws, bolts, or straps.
   For your personal safety, be careful when you handle nails and straps.
4. Contact your sales representative if anything is out of order.

Transportation guidelines

Pump handling

WARNING:

- Make sure that the unit cannot roll or fall over and injure people or damage property.
- These pumps might use carbon or ceramic silicon carbide components. Do not drop the pump or subject it to shock loads as this can damage the internal ceramic components.

NOTICE:

Use a forklift truck or an overhead crane with sufficient capacity to move the pallet with the pump unit on top. Failure to do so can result in equipment damage.

Lifting methods

WARNING:

- All lifting must be done in compliance with all applicable regulations/standards.
- Assembled units and their components are heavy. Failure to properly lift and support this equipment can result in serious physical injury and/or equipment damage. Lift equipment only at the specifically identified lifting points. Lifting devices such as hoist rings, shackles, slings, and spreaders must be rated, selected, and used for the entire load being lifted.
- Assembled units and their components are heavy. Failure to properly lift and support this equipment can result in serious physical injury and/or equipment damage. Lift equipment only at the specifically identified lifting points. Lifting devices such as eyebolts, slings, and spreaders must be rated, selected, and used for the entire load being lifted.
- Crush hazard. The unit and the components can be heavy. Use proper lifting methods and wear steel-toed shoes at all times.
- Do not attach sling ropes to shaft ends.

Table 1: Methods

Pump type	Lifting method
A bare pump without lifting handles	Use a suitable sling attached properly to solid points like the casing, the flanges, or the frames.
A bare pump with lifting handles	Lift the pump by the handles.
A base-mounted pump	Use slings under the pump casing and the drive unit, or under the base rails.

Pump type	Lifting method
Mounted on top of a Polyshield ANSI Combo	See separate information regarding the Polyshield ANSI Combo.

Examples

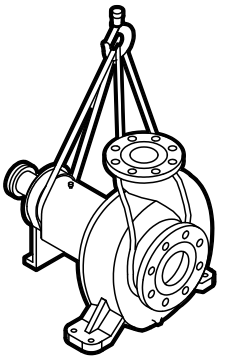

Figure 1: Example of a proper lifting method

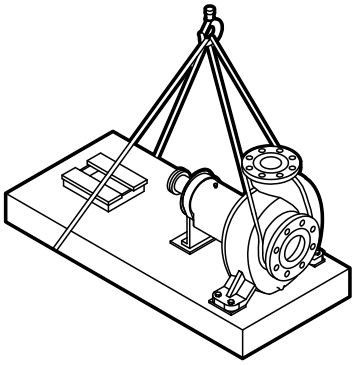

NOTICE:
Do not use this lifting method to lift a Polyshield ANSI Combo with the pump and motor mounted. Doing so may result in equipment damage.

Figure 2: Example of a proper lifting method

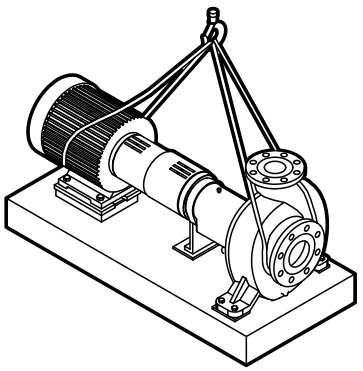

NOTICE:
Do not use this lifting method to lift a Polyshield ANSI Combo with the pump and motor mounted. Doing so may result in equipment damage.

Figure 3: Example of a proper lifting method

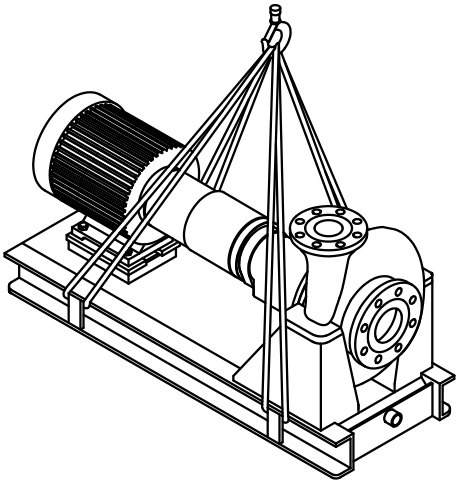

Figure 4: Example of a proper lifting method

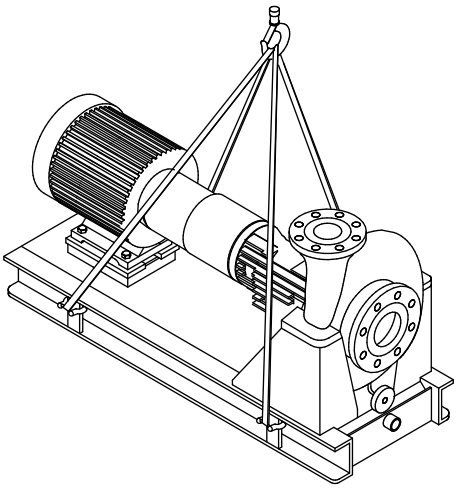

Figure 5: Example of a proper lifting method

NOTICE:
When lifting a unit that does not have a way to secure the strap on the suction flange, you must secure the strap around the frame adapter. Failure to do so may result in equipment damage.

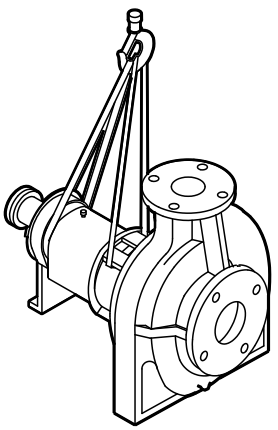

Figure 6: Example of a proper lifting method with a strap secured around the frame adapter

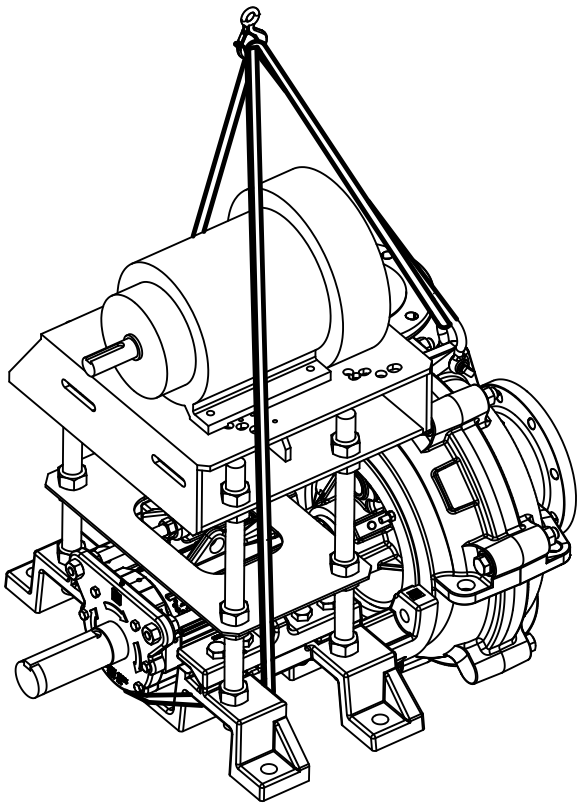

Figure 7: Example of offset overhead motor mount pump proper lifting method

Storage guidelines

Pump storage requirements

Storage requirements depend on the amount of time that you store the unit. The normal packaging is designed only to protect the unit during shipping.

Length of time in storage	Storage requirements
Upon receipt/short-term (less than six months)	• Store in a covered and dry location. • Store the unit free from dirt and vibrations.
Long-term (more than six months)	• Store in a covered and dry location. • Store the unit free from heat, dirt, and vibrations. • Rotate the shaft by hand several times at least every three months.

NOTICE:
Risk of damage to the mechanical seal or shaft sleeve on units supplied with cartridge mechanical seals. Make sure to install and tighten the centering clips and loosen the set screws in the seal locking ring.

Treat bearing and machined surfaces so that they are well preserved. Refer to drive unit and coupling manufacturers for their long-term storage procedures.

You can purchase long-term storage treatment with the initial unit order or you can purchase it and apply it after the units are already in the field. Contact your local ITT sales representative.

Frostproofing

Table 2: Situations when the pump is or is not frostproof

Situation	Condition
Operating	The pump is frostproof.
Immersed in a liquid	The pump is frostproof.
Lifted out of a liquid into a temperature below freezing	The impeller might freeze.

Product Description

General description 3196

The 3196 is a horizontal overhung, open impeller, centrifugal pump. This pump is ANSI B73.1 compliant.
The model is based on 5 power ends and 29 hydraulic sizes.

Figure 8: 3196 pump

This table shows the number of hydraulic sizes available for each drive-unit size group.

Drive-unit size group	Number of hydraulic sizes
STi	5
MTi	15
LTi	15
XLT-i	5
i-17	4

Part description 3196

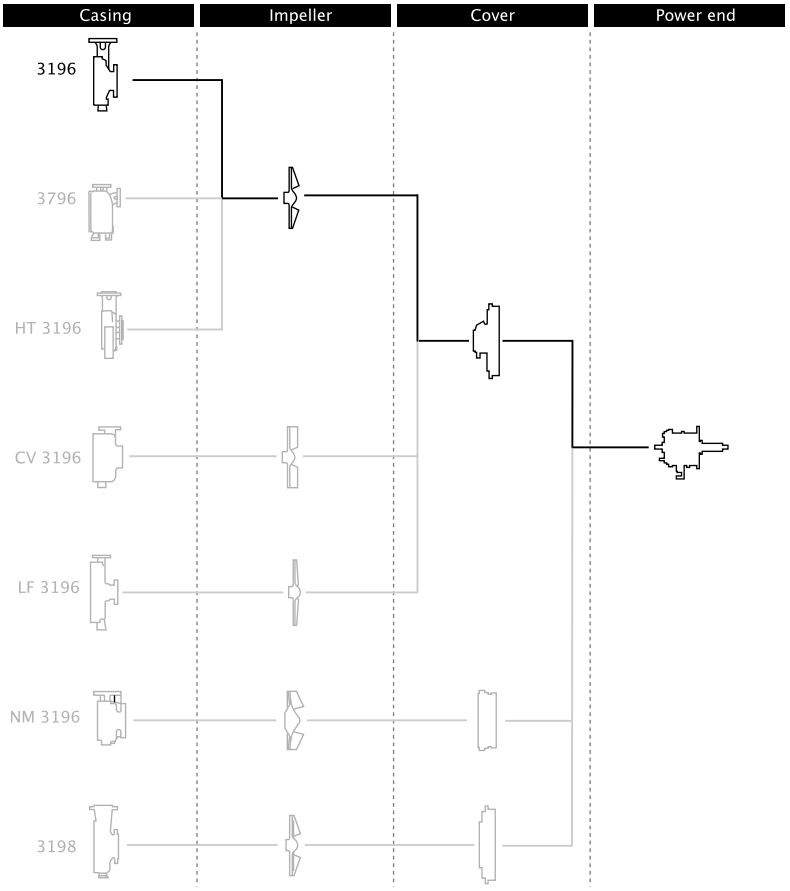

Figure 9: 3196 part description

Table 3: Casing

This table describes the pump casing parts.

Part	Description
Discharge	Top-centerline
Casing ventilation	Self venting
Gasket	Fully confined
Mounting method	Integral foot support for maximum resistance to misalignment due to piping loads.
Standard flange	ANSI flat-faced serrated flange
Optional flanges	One of the following flanges can be used: • ANSI class 150 raised-face serrated flange • ANSI class 300 flat-face serrated flange • ANSI class 300 raised-face serrated flange

Impeller

The impeller is

- fully open
- screwed onto the shaft

The threads are sealed from the pumped liquid by a Teflon O-ring for the 3196.

Cover

Standard seal

- The 3196 is available with a stuffing-box cover designed for a packing and a BigBore or a TaperBore PLUS seal chamber.

Optional seal

- a dynamic seal is available which uses a repeller to pump liquid out of the stuffing box while the pump operates. A static seal prevents leakage when the pump is shut down.

Table 4: Power end

This table describes the main parts of the power end.

Part	Description
Frame adapter	The ductile iron frame adapter has • a machined rabbet fitted to the seal chamber/ stuffing box cover • a precision dowel pin fitted to the bearing frame.

Power end	• Flood-oil lubrication is standard.
	• No machining is required to convert from oil to grease or oil-mist lubrication. Regreasable bearings and oil-mist lubrication are optional.
	• The oil level is checked through a sight glass.
	• The power end is sealed with labyrinth seals.
	• The power end is made in the following sizes:
	  • STi
	  • MTi
	  • LTi
	  • XLT-i
	  • i-17

Shaft	The shaft is available with or without a sleeve.
Bearings	The inboard bearing • carries only radial loads. • is free to float axially in the frame. • is a single-row deep-groove ball bearing The outboard bearing • is shouldered and locked to the shaft and housing to enable it to carry radial and thrust loads. • is a double-row angular-contact bearing, except for the LTi which uses a pair of single-row angular-contact ball bearings mounted back-to-back.

General description i-ALERT™ Condition Monitor

Description

The i-ALERT Condition Monitor is a compact, battery-operated monitoring device that continuously measures the vibration and temperature of the pump power end. The condition monitor uses blinking red LEDs to alert the pump operator when the pump exceeds pre-set vibration and temperature limits. This allows the pump operator to make changes to the process or the pump before a catastrophic failure occurs. The condition monitor is also equipped with a single green LED to indicate when it is operational and has sufficient battery life.

Software License Agreement

BY USING THE i-Alert™ CONDITION MONITOR, YOU AGREE TO BE BOUND BY THE TERMS AND CONDITIONS OF THE FOLLOWING LICENSE AGREEMENT. PLEASE READ THIS AGREEMENT CAREFULLY.

ITT Corporation and its subsidiaries, affiliates, either directly, or through its authorized sublicensees ("ITT") grants you a limited, non-exclusive license to use the software embedded in this device ("Software") in binary executable form in the normal operation of the i-Alert™ condition monitor for monitoring the condition of an Goulds Pump Inc. model. Title, ownership rights, and intellectual property rights in and to the Software remain in ITT or its third-party providers. You agree that this license agreement does not need to be signed for it to take effect.

You acknowledge that this Software is the property of ITT and is protected under United States of America copyright laws and international copyright treaties. You further acknowledge that the structure, organization, and code of the Software are valuable trade secrets of ITT and/or its third-party providers and that the Software in source code form remains a valuable trade

secret of ITT. You agree not to decompile, disassemble, modify, reverse assemble, reverse engineer, or reduce to human readable form the Software or any part thereof or create any derivative works based on the Software. You agree not to export or re-export the Software to any country in violation of the export control laws of the United States of America.

Alarm mode

The condition monitor enters alarm mode when either vibration or temperature limits are exceeded over two consecutive readings within a ten minute period. Alarm mode is indicated with two red flashing LEDs within two second intervals.

Temperature and vibration limits

Variable	Limit
Temperature	195°F (91°C)
Vibration	100% increase over the baseline level

Battery life

The i-ALERT Condition Monitor battery is not replaceable. You must replace the entire unit once the battery runs out of power.

The battery life is not covered as part of the standard five-year pump warranty.

This table shows the average condition monitor battery life under normal and alarm-mode operating conditions.

Condition monitor operational state	Battery life
Normal operating and environmental conditions	Three to five years
Alarm mode	One year

Nameplate information

Important information for ordering

Every pump has nameplates that provide information about the pump. The nameplates are located on the casing and the bearing frame.

When you order spare parts, identify this pump information:

- Model
- Size
- Serial number
- Item numbers of the required parts

Refer to the nameplate on the pump casing for most of the information. See Parts List for item numbers.

Nameplate types

Nameplate	Description
Pump casing	Provides information about the hydraulic characteristics of the pump. The formula for the pump size is: Discharge x Suction - Nominal Maximum Impeller Diameter in inches. (Example: 2x3-8)
Bearing frame	Provides information about the lubrication system used.
ATEX	If applicable, your pump unit might have an ATEX nameplate affixed to the pump, the baseplate, or the discharge head. The nameplate provides information about the ATEX specifications of this pump.
IECEx	If applicable, your pump unit might have the following IECEx nameplate affixed to the pump and/or baseplate. The nameplate provides information about the IECEx specifications of this pump.

Nameplate on the pump casing using English units

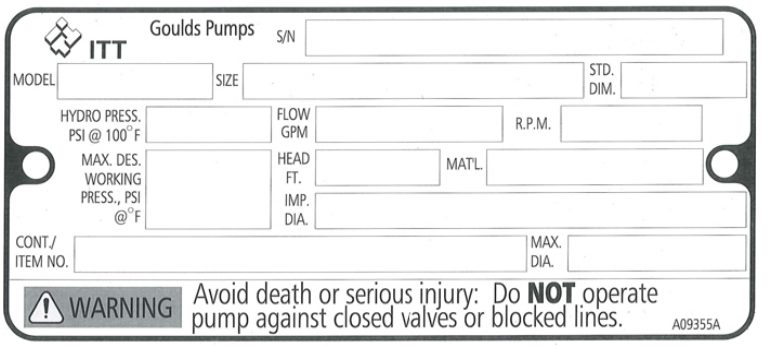

Table 5: Explanation of nameplate on the pump casing

Nameplate field	Explanation
IMPLR. DIA.	Impeller diameter, in inches
MAX. DIA.	Maximum impeller diameter, in inches
GPM	Rated pump flow, in gallons per minute
FT HD	Rated pump head, in feet
RPM	Rated pump speed, revolutions per minute
MOD.	Pump model
SIZE	Size of the pump
STD. NO.	ANSI standard designation
MAT L. CONST.	Material of which the pump is constructed
SER. NO.	Serial number of the pump
MAX DSGN PSI @ 100ºF	Maximum pressure at 100ºF according to the pump design

Nameplate on the pump casing using metric units

Table 6: Explanation of the nameplate on the pump casing

Nameplate field	Explanation
IMPLR. DIA.	Impeller diameter
MAX. DIA.	Maximum impeller diameter
M^3/HR	Rated pump flow, in cubic meters per hour
M HD	Rated pump head, in meters
RPM	Rated pump speed, in revolutions per minute
MOD.	Pump model
SIZE	Size of the pump
STD. NO.	ANSI standard designation
MAT L. CONST	Material of which the pump is constructed
SER. NO.	Serial number of the pump
MAX. DSGN KG/CM^3 @ 20°C	Kilograms per cubic centimeter at 20°C

Nameplate on the bearing frame

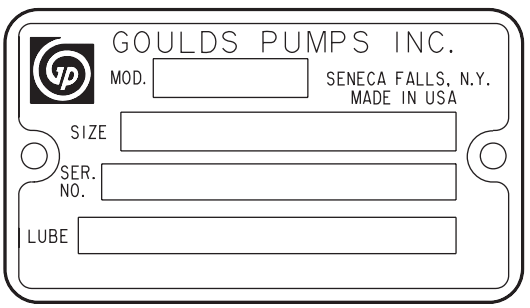

Table 7: Explanation of the nameplate on the bearing frame

Nameplate field	Explanation
BRG. O. B.	Outboard bearing designation
BRG. I. B.	Inboard bearing designation
S/N	Serial number of the pump
LUBE	Lubricant, oil or grease

ATEX nameplate

Nameplate field	Explanation
II	Group 2
2	Category 2
G/D	Pump can be used when gas and dust are present
T4	Temperature class

NOTICE:
Make sure that the code classifications on the pump are compatible with the specific environment in which you plan to install the equipment. If they are not compatible, do not operate the equipment and contact your ITT representative before you proceed.

Installation

Preinstallation

Precautions

WARNING:

- When installing in a potentially explosive environment, make sure that the motor is properly certified.
- You must earth (ground) all electrical equipment. This applies to the pump equipment, the driver, and any monitoring equipment. Test the earth (ground) lead to verify that it is connected correctly.
- Electrical Connections must be made by certified electricians in compliance with all international, national, state, and local rules.

NOTICE:

Supervision by an authorized ITT representative is recommended to ensure proper installation. Failure to do so may result in equipment damage or decreased performance.

Pump location guidelines

WARNING:

Assembled units and their components are heavy. Failure to properly lift and support this equipment can result in serious physical injury and/or equipment damage. Lift equipment only at the specifically identified lifting points. Lifting devices such as eyebolts, slings, and spreaders must be rated, selected, and used for the entire load being lifted.

Guideline	Explanation/comment
Keep the pump as close to the liquid source as practically possible.	This minimizes the friction loss and keeps the suction piping as short as possible.
Make sure that the space around the pump is sufficient.	This facilitates ventilation, inspection, maintenance, and service.
If you require lifting equipment such as a hoist or tackle, make sure that there is enough space above the pump.	This makes it easier to properly use the lifting equipment and safely remove and relocate the components to a safe location.
Protect the unit from weather and water damage due to rain, flooding, and freezing temperatures.	This is applicable if nothing else is specified.
Do not install and operate the equipment in closed systems unless the system is constructed with properly-sized safety devices and control devices.	Acceptable devices: • Pressure relief valves • Compression tanks • Pressure controls • Temperature controls • Flow controls If the system does not include these devices, consult the engineer or architect in charge before you operate the pump.
Take into consideration the occurrence of unwanted noise and vibration.	The best pump location for noise and vibration absorption is on a concrete floor with subsoil underneath.
If the pump location is overhead, undertake special precautions to reduce possible noise transmission.	Consider a consultation with a noise specialist.

Foundation requirements

Requirements

- The foundation must be able to absorb any type of vibration and form a permanent, rigid support for the unit.
- The location and size of the foundation bolt holes must match those shown on the assembly drawing provided with the pump data package.
- The foundation must weigh between two and three times the weight of the pump.

- Provide a flat, substantial concrete foundation in order to prevent strain and distortion when you tighten the foundation bolts.
- Sleeve-type and J-type foundation bolts are most commonly used. Both designs allow movement for the final bolt adjustment.

Sleeve-type bolts

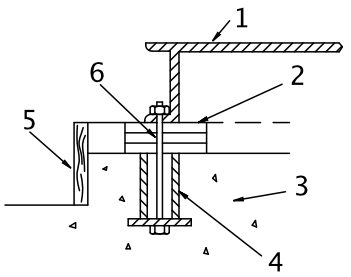

1. Baseplate
2. Shims or wedges
3. Foundation
4. Sleeve
5. Dam
6. Bolt

J-type bolts

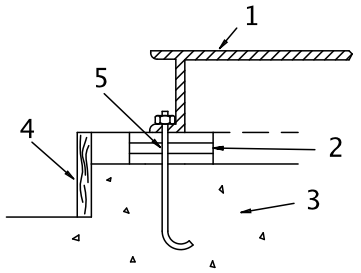

1. Baseplate
2. Shims or wedges
3. Foundation
4. Dam
5. Bolt

Baseplate-mounting procedures

Prepare the baseplate for mounting

1. Remove all the attached equipment from the baseplate.
2. Clean the underside of the baseplate completely.
3. If applicable, coat the underside of the baseplate with an epoxy primer.
   Use an epoxy primer only if you used an epoxy-based grout.
4. Remove the rust-proofing coat from the machined mounting pads using an appropriate solvent.
5. Remove water and debris from the foundation-bolt holes.

Install the baseplate using shims or wedges

Required tools:

- Two sets of shims or wedges for each foundation bolt
- Two machinist's levels

- Baseplate-leveling worksheet

This procedure is applicable to cast iron and fabricated steel baseplates.

1. If you use sleeve-type bolts, fill the bolt sleeves with packing material or rags to prevent grout from entering the bolt holes.
2. Put the sets of wedges or shims on each side of each foundation bolt.
   The sets of wedges should have a height of between 0.75 in. (19 mm) and 1.50 in. (38 mm).

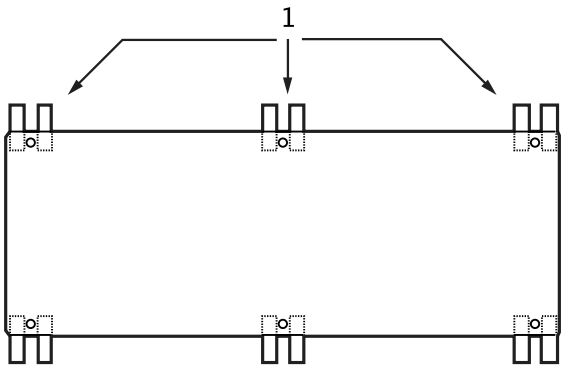

1. Shims or wedges

Figure 10: Top view

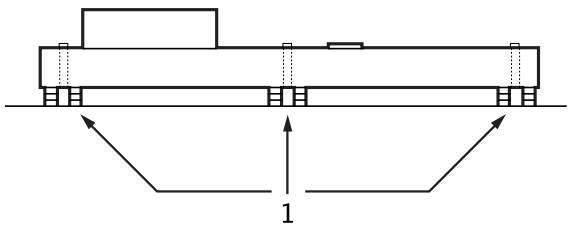

1. Shims or wedges

Figure 11: Side view

3. Lower the baseplate carefully onto the foundation bolts.
4. Put the machinist's levels across the mounting pads of the driver and the mounting pads of the pump.

NOTICE:
Remove all dirt from the mounting pads in order to make sure that you achieve the correct leveling. Failure to do so can result in equipment damage or decreased performance.

5. Level the baseplate both lengthwise and across by adding or removing shims or moving the wedges.
   These are the leveling tolerances:
   - A maximum difference of 0.125 in. (3.2 mm) lengthwise
   - A maximum difference of 0.059 in. (1.5 mm) across

   You can use the baseplate-leveling worksheet when you take the readings.
6. Hand-tighten the nuts for the foundation.

Install the baseplate using jackscrews

Tools required:

- Anti-seize compound
- Jackscrews
- Bar stock
- Two machinist's levels

- Baseplate-leveling worksheet

This procedure is applicable to the feature-fabricated steel baseplate and the advantage base baseplate.

1. Apply an anti-seize compound on the jackscrews.
   The compound makes it easier to remove the screws after you grout.
2. Lower the baseplate carefully onto the foundation bolts and perform these steps:
   a) Cut the plates from the bar stock and chamfer the edges of the plates in order to reduce stress concentrations.
   b) Put the plates between the jackscrews and the foundation surface.
   c) Use the four jackscrews in the corners in order to raise the baseplate above the foundation.
      Make sure that the distance between the baseplate and the foundation surface is between 0.75 in. (19 mm) and 1.50 in. (38 mm).
   d) Make sure that the center jackscrews do not touch the foundation surface yet.

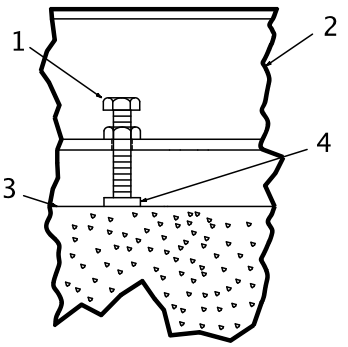

1. Jackscrew
2. Baseplate
3. Foundation
4. Plate

3. Level the driver mounting pads:

NOTICE:
Remove all dirt from the mounting pads in order to make sure that you achieve the correct leveling. Failure to do so can result in equipment damage or decreased performance.

   a) Put one machinist's level lengthwise on one of the two pads.
   b) Put the other machinist's level across the ends of the two pads.

c) Level the pads by adjusting the four jackscrews in the corners.
Make sure that the machinist's level readings are as close to zero as possible, both lengthwise and across.
Use the baseplate-leveling worksheet when you take the readings.

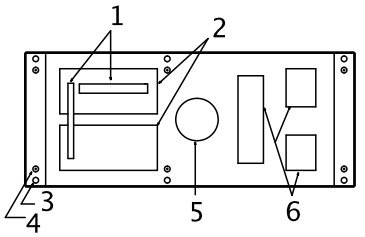

1. Machinist's levels
2. Driver's mounting pads
3. Foundation bolts
4. Jackscrews
5. Grout hole
6. Pump's mounting pads

4. Turn the center jackscrews down so that they rest on their plates on the foundation surface.
5. Level the pump mounting pads:

NOTICE:
Remove all dirt from the mounting pads in order to make sure that you achieve the correct leveling. Failure to do so can result in equipment damage or decreased performance.

a) Put one machinist's level lengthwise on one of the two pads.
b) Put the other level across the center of the two pads.
c) Level the pads by adjusting the four jackscrews in the corners.
Make sure that the machinist's level readings are as close to zero as possible, both lengthwise and across.

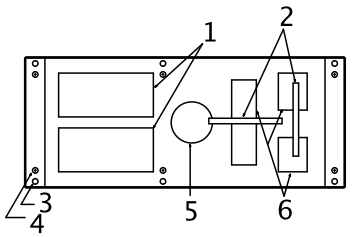

1. Driver's mounting pads
2. Machinist's levels
3. Foundation bolts
4. Jackscrews
5. Grout hole
6. Pump's mounting pads

6. Hand-tighten the nuts for the foundation bolts.
7. Check that the driver's mounting pads are level and adjust the jackscrews and the foundation bolts if necessary.
The correct level measurement is a maximum of 0.002 in./ft (0.0167 mm/m).

Install the baseplate using spring mounting

NOTICE:
The spring-mounted baseplate is designed only to support piping loads from thermal expansion. You must support the suction and discharge piping individually. Failure to do so may result in equipment damage.

The foundation pads are not provided with the baseplate. Make sure that the foundation pads are 316 stainless-steel plates, which have a 16-20 micro-inch surface finish.

Before you start this procedure, make sure that the foundation pads are correctly installed on the foundation/floor (see the manufacturer's instructions).

1. Put the baseplate on a support above the foundation/floor.
   Make sure that there is enough space between the baseplate and the foundation/floor in order to install the spring assemblies.
2. Install the lower part of the spring assembly:
   a) Screw the lower jam nut onto the spring stud.
   b) Screw the lower adjusting nut onto the spring-stud, on top of the jam nut.
   c) Set the lower adjusting nut to the correct height.
      The correct height depends on the required distance between the foundation/floor and the baseplate.
   d) Put a washer, a follower, a spring, and one more follower onto the lower adjusting nut.
3. Install the spring assembly on the baseplate:
   a) Insert the spring assembly into the baseplate's anchorage hole from below.
   b) Put a follower, a spring, another follower, and a washer onto the spring stud.
   c) Fasten the spring assembly with the upper adjusting nut by hand.
4. Thread the upper jam nut onto the spring stud by hand.
5. Repeat steps 2 through 4 for all the spring assemblies.
6. Lower the baseplate so that the spring assemblies fit into the foundation pads.
7. Level the baseplate and make the final height adjustments:
   a) Loosen the upper jam nuts and adjusting nuts.
   b) Adjust the height and level the baseplate by moving the lower adjusting nuts.
   c) When the baseplate is level, tighten the top adjusting nuts so that the top springs are not loose in their followers.
8. Fasten the lower and upper jam nuts on each spring assembly.

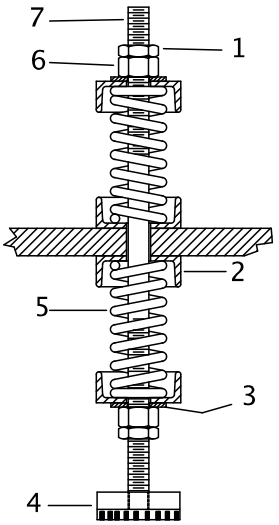

1. Upper jam nut
2. Follower
3. Washer
4. Foundation pads
5. Spring
6. Upper adjusting nut
7. Spring stud

Figure 12: Example of an installed spring assembly

Install the baseplate using stilt mounting

NOTICE:
The stilt-mounted baseplate is not designed to support static piping loads. Make sure to individually support the suction and discharge piping. Failure to do so may result in equipment damage.

1. Put the baseplate on a support above the foundation/floor.
   Make sure that there is enough space between the baseplate and the foundation/floor to install the stilts.
2. Install the lower part of the stilt assembly:
   a) Screw the lower jam nut and adjusting nut onto the stilt.
   b) Set the lower adjusting nut to the correct height.
      The correct height depends on the required distance between the foundation/floor and the baseplate.
   c) Put a washer onto the lower adjusting- nut.
3. Install the stilt assembly on the baseplate:
   a) Insert the stilt assembly into the baseplate's anchorage hole from below.
   b) Put a washer onto the stilt.
   c) Fasten the stilt assembly with the upper adjusting nut by hand.
4. Screw the upper jam nut onto the stilt by hand.
5. Repeat steps 2 through 4 for all the stilt assemblies.
6. Lower the baseplate so that the stilts fit into the foundation cups.
7. Level the baseplate and make the final height adjustments:
   a) Loosen the upper jam nuts and adjusting nuts.
   b) Adjust the height and level the baseplate by moving the lower adjusting nuts.
   c) When the baseplate is level, tighten the top adjusting nuts.
8. Fasten the lower and upper jam nuts on each stilt.

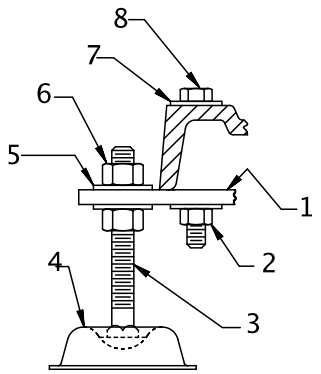

1. Mounting plate
2. Mounting nut
3. Stilt bolt
4. Foundation cups
5. Washer
6. Upper adjustment nut
7. Mounting washer
8. Mounting bolt

Figure 13: Example of an installed stilt assembly

Baseplate-leveling worksheet

Level measurements

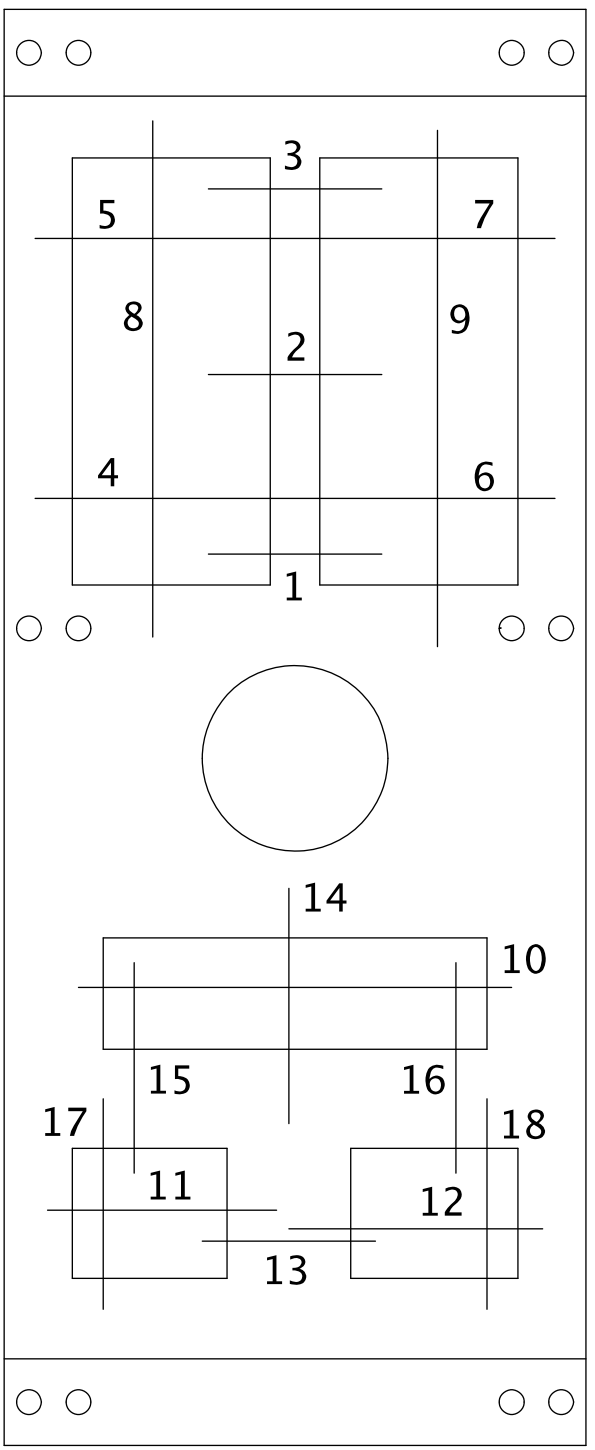

1)_____

2)_____

3)_____

4)_____

5)_____

6)_____

7)_____

8)_____

9)_____

10)_____

11)_____

12)_____

13)_____

14)_____

15)_____

16)_____

17)_____

18)_____

Install the pump, driver, and coupling

1. Mount and fasten the pump on the baseplate. Use applicable bolts.
2. Mount the driver on the baseplate. Use applicable bolts and hand tighten.
3. Install the coupling.
   See the installation instructions from the coupling manufacturer.

Pump-to-driver alignment

Precautions

WARNING:

- Follow shaft alignment procedures in order to prevent catastrophic failure of drive components or unintended contact of rotating parts. Follow the coupling installation and operation procedures from the coupling manufacturer.
- Always disconnect and lock out power to the driver before you perform any installation or maintenance tasks. Failure to disconnect and lock out driver power will result in serious physical injury.
  - Electrical connections must be made by certified electricians in compliance with all international, national, state, and local rules.
  - Refer to driver/coupling/gear manufacturers installation and operation manuals (IOM) for specific instructions and recommendations.

NOTICE:

Proper alignment is the responsibility of the installer and the user of the unit. Check the alignment of frame-mounted units before you operate the unit. Failure to do so can result in equipment damage or decreased performance.

Alignment checks

When to perform alignment checks

You must perform alignment checks under these circumstances:

- The process temperature changes.
- The piping changes.
- The pump has been serviced.

Types of alignment checks

Type of check	When it is used
Initial alignment (cold alignment) check	Prior to operation when the pump and the driver are at ambient temperature.
Final alignment (hot alignment) check	After operation when the pump and the driver are at operating temperature.

Initial alignment (cold alignment) checks

When	Why
Before you grout the baseplate	This ensures that alignment can be accomplished.
After you grout the baseplate	This ensures that no changes have occurred during the grouting process.
After you connect the piping	This ensures that pipe strains have not altered the alignment. If changes have occurred, you must alter the piping to remove pipe strains on the pump flanges.

Final alignment (hot alignment) checks

When	Why
After the first run	This ensures correct alignment when both the pump and the driver are at operating temperature.

When	Why
Periodically	This follows the plant operating procedures.

Permitted indicator values for alignment checks

NOTICE:
The specified permitted reading values are valid only at operating temperature. For cold settings, other values are permitted. You must use the correct tolerances. Failure to do so can result in misalignment and reduced pump reliability.

When dial indicators are used to check the final alignment, the pump and drive unit are correctly aligned when these conditions are true:

- The total indicator runout is a maximum of 0.002 in. (0.05 mm) at operating temperature.
- The tolerance of the indicator is 0.0005 in./in. (0.0127 mm/mm) of indicator separation at operating temperature.

Cold settings for parallel vertical alignment

Introduction

This section shows the recommended preliminary (cold) settings for electric motor-driven pumps based on different temperatures of pumped fluid. Consult driver manufacturers for recommended cold settings for other types of drivers such as steam turbines and engines.

Recommended settings for models 3196, CV 3196, and LF 3196

Pumpage temperature	Recommended setting
50°F (10°C)	0.002 in. (0.05 mm), low
150°F (65°C)	0.001 in. (0.03 mm), high
250°F (120°C)	0.005 in. (0.12 mm), high
350°F (175°C)	0.009 in. (0.23 mm), high
450°F (218°C)	0.013 in. (0.33 mm), high
550°F (228°C)	0.017 in. (0.43 mm), high
650°F (343°C)	0.021 in. (0.53 mm), high
700°F (371°C)	0.023 in. (0.58 mm), high

Alignment measurement guidelines

Guideline	Explanation
Rotate the pump coupling half and the driver coupling half together so that the indicator rods have contact with the same points on the driver coupling half.	This prevents incorrect measurement.
Move or shim only the driver in order to make adjustments.	This prevents strain on the piping installations.
Make sure that the hold-down bolts for the driver feet are tight when you take indicator measurements.	This keeps the driver stationary since movement causes incorrect measurement.
Make sure that the hold-down bolts for the driver feet are loose before you make alignment corrections.	This makes it possible to move the driver when you make alignment corrections.
Check the alignment again after any mechanical adjustments.	This corrects any misalignments that an adjustment may have caused.

Attach the dial indicators for alignment

You must have two dial indicators in order to complete this procedure.

1. Attach two dial indicators on the pump coupling half (X):
   a) Attach one indicator (P) so that the indicator rod comes into contact with the perimeter of the driver coupling half (Y).
   This indicator is used to measure parallel misalignment.

b) Attach the other indicator (A) so that the indicator rod comes into contact with the inner end of the driver coupling half.
This indicator is used to measure angular misalignment.

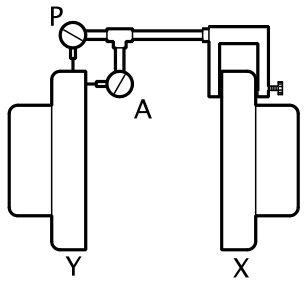

2. Rotate the pump coupling half (X) in order to check that the indicators are in contact with the driver coupling half (Y) but do not bottom out.
3. Adjust the indicators if necessary.

Pump-to-driver alignment instructions

Perform angular alignment for a vertical correction

1. Set the angular alignment indicator to zero at the top-center position (12 o'clock) of the driver coupling half (Y).
2. Rotate the indicator to the bottom-center position (6 o'clock).
3. Record the indicator reading.

When the reading value is...	Then...
Negative	The coupling halves are farther apart at the bottom than at the top. Perform one of these steps: • Add shims in order to raise the feet of the driver at the shaft end. • Remove shims in order to lower the feet of the driver at the other end.
Positive	The coupling halves are closer at the bottom than at the top. Perform one of these steps: • Remove shims in order to lower the feet of the driver at the shaft end. • Add shims in order to raise the feet of the driver at the other end.

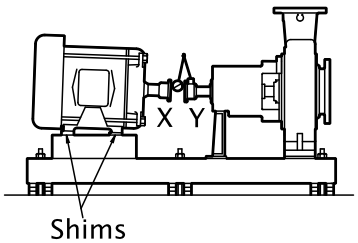

Figure 14: Side view of an incorrect vertical alignment

4. Repeat the previous steps until the permitted reading value is achieved.

Perform angular alignment for a horizontal correction

1. Set the angular alignment indicator (A) to zero on left side of the driver coupling half (Y), 90° from the top-center position (9 o'clock).
2. Rotate the indicator through the top-center position to the right side, 180° from the start position (3 o'clock).
3. Record the indicator reading.

When the reading value is...	Then...
Negative	The coupling halves are farther apart on the right side than the left. Perform one of these steps: • Slide the shaft end of the driver to the left. • Slide the opposite end to the right.
Positive	The coupling halves are closer together on the right side than the left. Perform one of these steps: • Slide the shaft end of the driver to the right. • Slide the opposite end to the left.

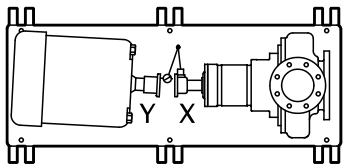

Figure 15: Top view of an incorrect horizontal alignment

4. Repeat the previous steps until the permitted reading value is achieved.

Perform parallel alignment for a vertical correction

Refer to the alignment table in "Permitted indicator values for alignment checks" (see Table of Contents for location of table) for the proper cold alignment value based on the motor temperature rise and the pump operating temperature.

Before you start this procedure, make sure that the dial indicators are correctly set up.

A unit is in parallel alignment when the parallel indicator (P) does not vary by more than 0.002 in. (0.05 mm) as measured at four points 90° apart at the operating temperature.

1. Set the parallel alignment indicator (P) to zero at the top-center position (12 o'clock) of the driver coupling half (Y).
2. Rotate the indicator to the bottom-center position (6 o'clock).
3. Record the indicator reading.

When the reading value is...	Then...
Negative	The pump coupling half (X) is lower than the driver coupling half (Y). Remove shims of a thickness equal to half of the indicator reading value under each driver foot.
Positive	The pump coupling half (X) is higher than the driver coupling half (Y). Add shims of a thickness equal to half of the indicator reading value to each driver foot.

NOTICE:

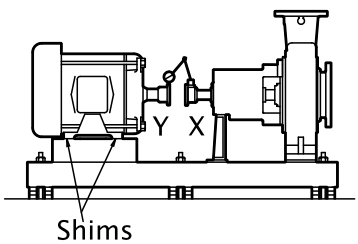

Figure 16: Side view of an incorrect vertical alignment

4. Repeat the previous steps until the permitted reading value is achieved.

NOTICE:
The specified permitted reading values are valid only at operating temperature. For cold settings, other values are permitted. You must use the correct tolerances. Failure to do so can result in misalignment and reduced pump reliability.

Perform parallel alignment for a horizontal correction

A unit is in parallel alignment when the parallel indicator (P) does not vary by more than 0.002 in. (0.05 mm) as measured at four points 90° apart at the operating temperature.

1. Set the parallel alignment indicator (P) to zero on the left side of the driver coupling half (Y), 90° from the top-center position (9 o'clock).
2. Rotate the indicator through the top-center position to the right side, 180° from the start position (3 o'clock).
3. Record the indicator reading.

When the reading value is...	Then...
Negative	The driver coupling half (Y) is to the left of the pump coupling half (X).
Positive	The driver coupling half (Y) is to the right of the pump coupling half (X).

4. Slide the driver carefully in the appropriate direction.

NOTICE: Make sure to slide the driver evenly. Failure to do so can negatively affect horizontal angular correction.

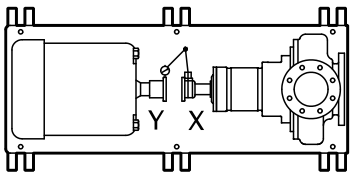

Figure 17: Top view of an incorrect horizontal alignment

5. Repeat the previous steps until the permitted reading value is achieved.

NOTICE:
The specified permitted reading values are valid only at operating temperature. For cold settings, other values are permitted. You must use the correct tolerances. Failure to do so can result in misalignment and reduced pump reliability.

Perform complete alignment for a vertical correction

A unit is in complete alignment when both the angular indicator (A) and the parallel indicator (P) do not vary by more than 0.002 in. (0.05 mm) as measured at four points 90° apart.

1. Set the angular and parallel dial indicators to zero at the top-center position (12 o'clock) of the driver coupling half (Y).
2. Rotate the indicators to the bottom-center position (6 o'clock).
3. Record the indicator readings.
4. Make corrections according to the separate instructions for angular and parallel alignment until you obtain the permitted reading values.

Perform complete alignment for a horizontal correction

A unit is in complete alignment when both the angular indicator (A) and the parallel indicator (P) do not vary by more than 0.002 in. (0.05 mm) as measured at four points 90° apart.

1. Set the angular and parallel dial indicators to zero at the left side of the driver coupling half (Y), 90° from the top-center position (9 o'clock).

2. Rotate the indicators through the top-center position to the right side, 180° from the start position (3 o'clock).
3. Record the indicator readings.
4. Make corrections according to the separate instructions for angular and parallel alignment until you obtain the permitted reading values.

C-face adapter

Intended use

The C-face adapter is a device that attaches the pump to the drive unit to minimize the axial and radial play between the two coupling halves.

Illustration

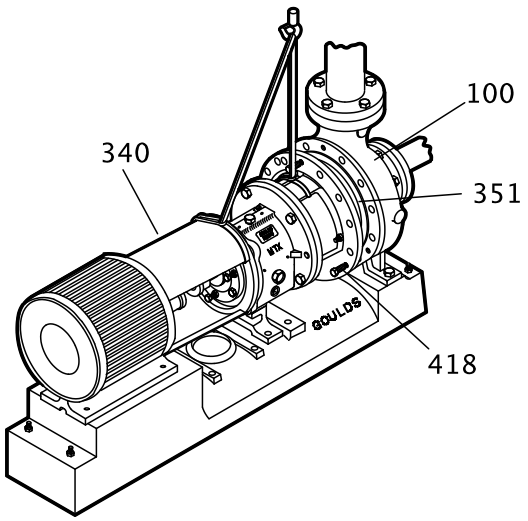

Figure 18: Example of the C-face adapter (340)

Alignment requirements

When you use a C-face adapter, you do not have to align the shaft. The rabbeted fittings of the drive unit to the adapter and the adapter to the bearing frame automatically align the shaft to within the specified limits.

Specified limits

A C-face adapter can attain a nominal alignment of 0.007 in. Total Indicated Runout (T.I.R.). However, because of the stack-up of the machining tolerances of the various parts, the alignment can be as high as 0.015 inches TIR.

If high reliability (with shaft alignments of less than 0.002 in. (0.05mm)) is required for the pump, use a foot-mounted drive unit on a precision-machined baseplate and perform a conventional alignment.

Grout the baseplate

Required equipment:

- Cleaners: Do not use an oil-based cleaner because the grout will not bond to it. See the instructions provided by the grout manufacturer.
- Grout: Non-shrink grout is recommended.

1. Clean all the areas of the baseplate that will come into contact with the grout.
2. Build a dam around the foundation.
3. Thoroughly wet the foundation that will come into contact with the grout.
4. Pour grout through the grout hole into the baseplate up to the level of the dam.

When you pour the grout, remove air bubbles from it by using one of these methods:

- Puddle with a vibrator.
- Pump the grout into place.

5. Allow the grout to set.

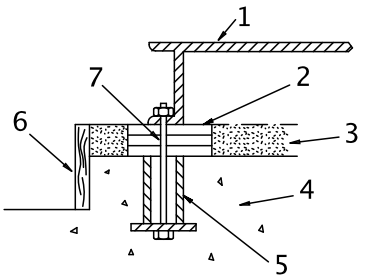

1. Baseplate
2. Shims or wedges
3. Grout
4. Foundation
5. Sleeve
6. Dam
7. Bolt

6. Fill the remainder of the baseplate with grout, and allow the grout to set for at least 48 hours.

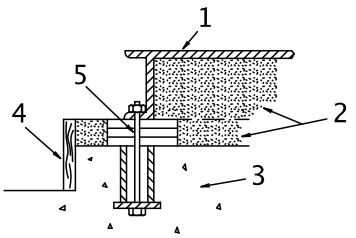

1. Baseplate
2. Grout
3. Foundation
4. Dam
5. Bolt

7. Tighten the foundation bolts.

Piping checklists

General piping checklist

Precautions

CAUTION:

- Never draw piping into place by using force at the flanged connections of the pump. This can impose dangerous strains on the unit and cause misalignment between the pump and driver. Pipe strain adversely affects the operation of the pump, which results in physical injury and damage to the equipment.
- Vary the capacity with the regulating valve in the discharge line. Never throttle the flow from the suction side. This action can result in decreased performance, unexpected heat generation, and equipment damage.

CAUTION:

Piping guidelines

Guidelines for piping are given in the Hydraulic Institute Standards available from the Hydraulic Institute at 9 Sylvan Way, Parsippany, NJ 07054-3802. You must review this document before you install the pump.

Checklist

Check	Explanation/comment	Checked
Check that all piping is supported independently of, and lined up naturally with, the pump flange.	This helps to prevent: • Strain on the pump • Misalignment between the pump and the drive unit • Wear on the pump bearings and the coupling • Wear on the pump bearings, seal, and shafting	
Keep the piping as short as possible.	This helps to minimize friction losses.	
Check that only necessary fittings are used.	This helps to minimize friction losses.	
Do not connect the piping to the pump until: • The grout for the baseplate or sub-base becomes hard. • The hold-down bolts for the pump and the driver are tightened.	—	
Make sure that all the piping joints and fittings are airtight.	This prevents air from entering the piping system or leaks that occur during operation.	
If the pump handles corrosive fluids, make sure that the piping allows you to flush out the liquid before you remove the pump.		
If the pump handles liquids at elevated temperatures, make sure that the expansion loops and joints are properly installed.	This helps to prevent misalignment due to linear expansion of the piping.	

Example: Installation for expansion

Correct	Incorrect
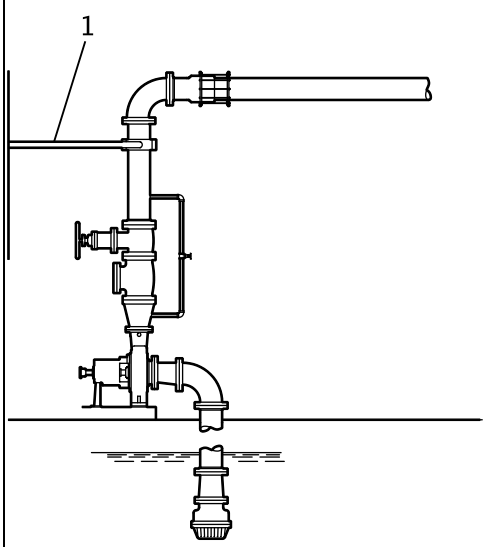 1. Expansion loop/joint	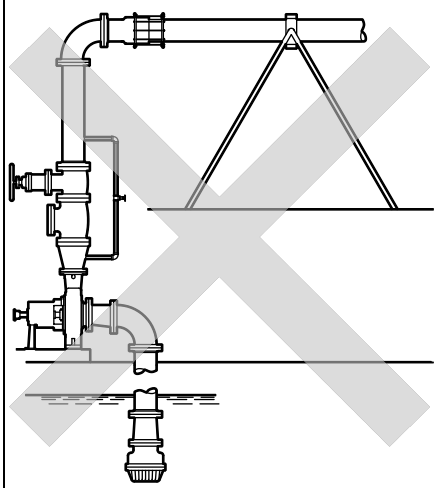

Fastening

WARNING:
- Only use fasteners of the proper size and material.
- Replace all corroded fasteners.
- Make sure that all fasteners are properly tightened and that there are no missing fasteners.

Suction-piping checklist

Performance curve reference

Net positive suction head available ($NPSH_A$) must always exceed NPSH required ($NPSH_R$) as shown on the published performance curve of the pump.

Suction-piping checks

Check	Explanation/comment	Checked
Check that the distance between the inlet flange of the pump and the closest elbow is at least five pipe diameters.	This minimizes the risk of cavitation in the suction inlet of the pump due to turbulence. See the Example sections for illustrations.	
Check that elbows in general do not have sharp bends.	See the Example sections for illustrations.	
Check that the suction piping is one or two sizes larger than the suction inlet of the pump. Install an eccentric reducer between the pump inlet and the suction piping.	The suction piping must never have a smaller diameter than the suction inlet of the pump. See the Example sections for illustrations.	
Check that the eccentric reducer at the suction flange of the pump has the following properties: • Sloping side down • Horizontal side at the top	See the example illustrations.	
When suction strainers or suction bells are used, check that they are at least three times the area of the suction piping.	Suction strainers help to prevent clogging. Mesh holes with a minimum diameter of 1/16 in. (1.6 mm) are recommended.	
If more than one pump operates from the same liquid source, check that separate suction-piping lines are used for each pump.	This recommendation helps you to achieve a higher pump performance.	
If necessary, make sure that the suction piping includes a drain valve and that it is correctly installed.	—	

Liquid source below the pump

Check	Explanation/comment	Checked
Make sure that the suction piping is free from air pockets.	This helps to prevent the occurrence of air and cavitation in the pump inlet.	
Check that the suction piping slopes upwards from the liquid source to the pump inlet.	—	
If the pump is not self-priming, check that a device for priming the pump is installed.	Use a foot valve with a diameter that is at least equivalent to the diameter of the suction piping.	

Liquid source above the pump

Check	Explanation/comment	Checked
Check that an isolation valve is installed in the suction piping at a distance of at least two times the pipe diameter from the suction inlet.	This permits you to close the line during pump inspection and maintenance. Do not use the isolation valve to throttle the pump. Throttling can cause these problems: • Loss of priming • Excessive temperatures • Damage to the pump • Voiding the warranty	
Make sure that the suction piping is free from air pockets.	This helps to prevent the occurrence of air and cavitation in the pump inlet.	
Check that the piping is level or slopes downward from the liquid source.	—	
Make sure that no part of the suction piping extends below the suction flange of the pump.	—	
Make sure that the suction piping is adequately submerged below the surface of the liquid source.	This prevents air from entering the pump through a suction vortex.	

Example: Elbow close to the pump suction inlet

Correct	Incorrect
The correct distance between the inlet flange of the pump and the closest elbow must be at least five pipe diameters. 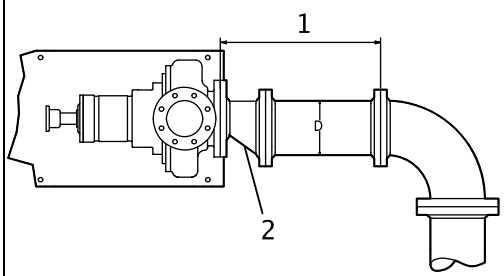 1. Enough distance to prevent cavitation 2. Eccentric reducer with a level top	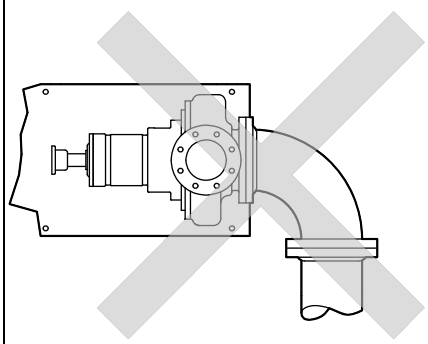

Example: Suction piping equipment

Correct	Incorrect
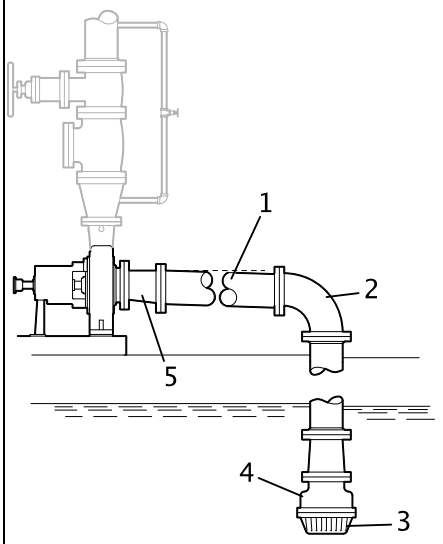	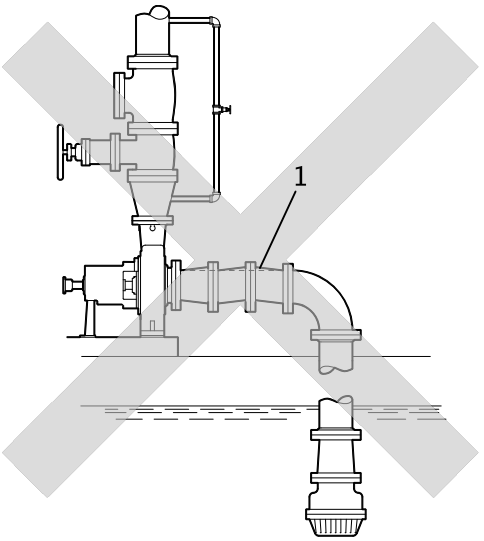
1. Suction pipe sloping upwards from liquid source 2. Long-radius elbow 3. Strainer 4. Foot valve 5. Eccentric reducer with a level top	1. Air pocket, because the eccentric reducer is not used and because the suction piping does not slope gradually upward from the liquid source

Discharge piping checklist

Checklist

Check	Explanation/comment	Checked
Check that an isolation valve is installed in the discharge line.	The isolation valve is required for: • Priming • Regulation of flow • Inspection and maintenance of the pump See Example: Discharge piping equipment for illustrations.	
Check that a check valve is installed in the discharge line, between the isolation valve and the pump discharge outlet.	The location between the isolation valve and the pump allows inspection of the check valve. The check valve prevents damage to the pump and seal due to the back flow through the pump, when the drive unit is shut off. It is also used to restrain the liquid flow. See Example: Discharge piping equipment for illustrations.	
If increasers are used, check that they are installed between the pump and the check valve.	See Example: Discharge piping equipment for illustrations.	
If quick-closing valves are installed in the system, check that cushioning devices are used.	This protects the pump from surges and water hammer.	

Example: Discharge piping equipment

Correct	Incorrect
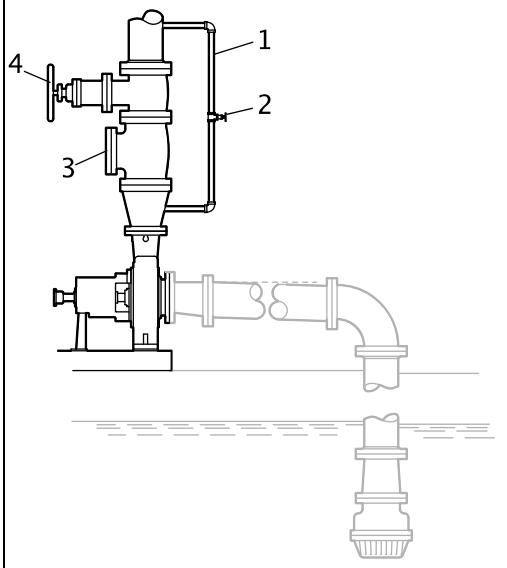	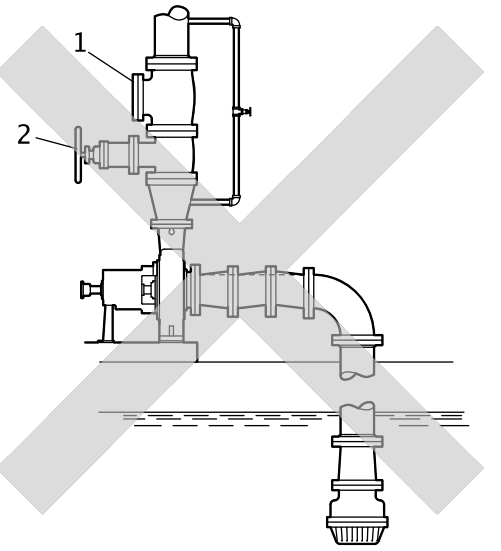
1. Bypass line 2. Shut-off valve 3. Check valve 4. Discharge isolation valve	1. Check valve (incorrect position) 2. The isolation valve should not be positioned between the check valve and the pump.

Commissioning, Startup, Operation, and Shutdown

Preparation for startup

DANGER:
Avoid death or serious injury. Explosion and/or seizure of pump can cause fire and/or burns. Never operate pump past the pressure and temperature limits shown on the nameplate on the pump.

WARNING:

- Failure to follow these precautions before you start the unit will lead to serious personal injury and equipment failure.
- Do not operate the pump below the minimum rated flows or with the suction or discharge valves closed. These conditions can create an explosive hazard due to vaporization of pumped fluid and can quickly lead to pump failure and physical injury.
- Avoid death or serious injury. Leaking fluid can cause fire and/or burns. Operating the pump above maximum rated flow shown on the pump curve leading to an increase in horsepower and vibration along with an increase in NPSHr resulting in mechanical seal and/or shaft failure and/or loss of prime.
- Avoid death or serious injury. Leaking fluid can cause fire and/or burns. Speed of pump must reach 2000 rpm for 2 pole motors and 1000 rpm for 4 pole motors within 10 seconds or an increase in vibration and rotor deflection and decrease in rotor stability leading to mechanical seal and/or shaft failure and/or pump seizure can occur.
- Never operate the pump without the coupling guard correctly installed.
- Always disconnect and lock out power to the driver before you perform any installation or maintenance tasks. Failure to disconnect and lock out driver power will result in serious physical injury.
  - Electrical connections must be made by certified electricians in compliance with all international, national, state, and local rules.
  - Refer to driver/coupling/gear manufacturers installation and operation manuals (IOM) for specific instructions and recommendations.
- Operating the pump in reverse rotation can result in the contact of metal parts, heat generation, and breach of containment.
- Avoid death or serious injury. Explosion and/or seizure of pump can cause fire and/or burns. Assure balance line is installed and either piped to the pump suction or back to the suction vessel to avoid vaporization of pumped fluid.

DANGER:
Avoid death or serious injury. Leaking fluid can cause fire and/or burns. Assure all openings are sealed off prior to filling pump.

Precautions

NOTICE:

- Verify the driver settings before you start any pump.
- Make sure that the warm-up rate does not exceed 2.5°F (1.4°C) per minute.
- Risk of damage to the mechanical seal or shaft sleeve on units supplied with cartridge mechanical seals. Prior to startup, make sure to tighten the set screws in the seal locking ring and remove the centering clips.

You must follow these precautions before you start the pump:

- Flush and clean the system thoroughly to remove dirt or debris in the pipe system in order to prevent premature failure at initial startup.

- Bring variable-speed drivers to the rated speed as quickly as possible.
- Run a new or rebuilt pump at a speed that provides enough flow to flush and cool the close-running surfaces of the stuffing-box bushing.
- If temperatures of the pumped fluid will exceed 200°F (93°C), then warm up the pump prior to operation. Circulate a small amount of fluid through the pump until the casing temperature is within 100°F (38°C) of the fluid temperature. Accomplish this by flowing fluid from pump inlet to discharge drain (optionally, the casing vent can be included in warm-up circuit but not required). Soak for (2) hours at process fluid temperature.

At initial startup, do not adjust the variable-speed drivers or check for speed governor or over-speed trip settings while the variable-speed driver is coupled to the pump. If the settings have not been verified, then uncouple the unit and refer to instructions supplied by the driver manufacturer.

Remove the coupling guard

1. Remove the nut, bolt, and washers from the slotted hole in the center of the coupling guard.
2. Slide the driver half of the coupling guard toward the pump.

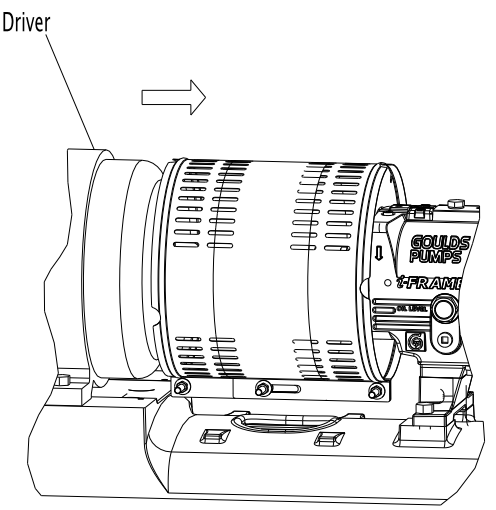

3. Remove the nut, bolt, and washers from the driver half of the coupling guard.

4. Remove the driver-side end plate.

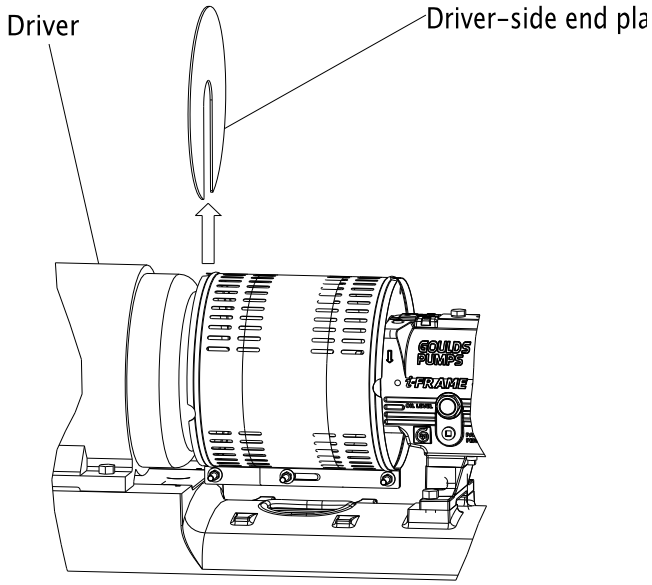

5. Remove the driver half of the coupling guard:
   a) Slightly spread the bottom apart.
   b) Lift upwards.

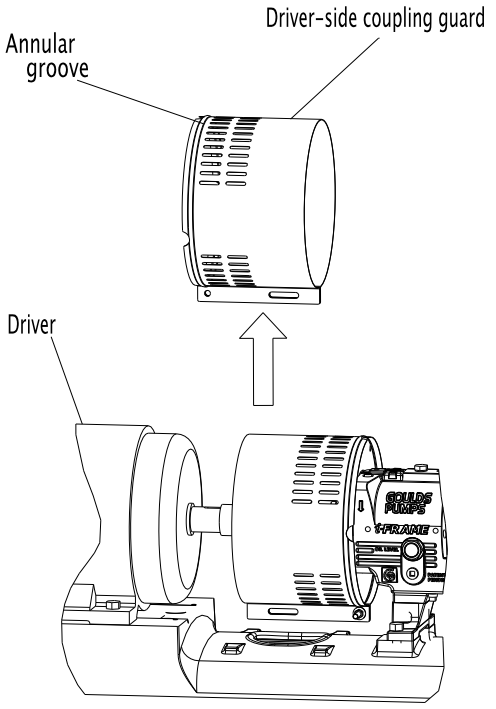

6. Remove the remaining nut, bolt, and washers from the pump half of the coupling guard. It is not necessary to remove the end plate from the pump side of the bearing housing. You can access the bearing-housing tap bolts without removing this end plate if maintenance of internal pump parts is necessary.
7. Remove the pump half of the coupling guard:
   a) Slightly spread the bottom apart.

b) Lift upwards.

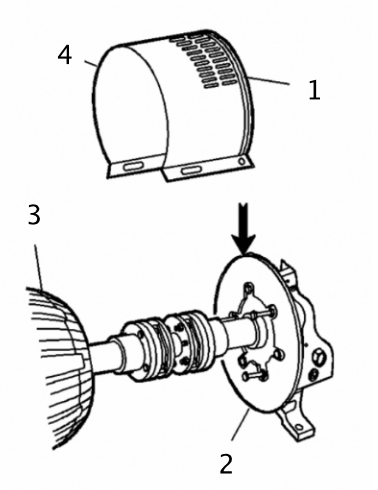

1. Annular groove
2. Pump-side end plate
3. Driver
4. Pump half of the coupling guard

Check the rotation - Frame Mounted

WARNING:

- Operating the pump in reverse rotation can result in the contact of metal parts, heat generation, and breach of containment.
- Always disconnect and lock out power to the driver before you perform any installation or maintenance tasks. Failure to disconnect and lock out driver power will result in serious physical injury.
  - Electrical connections must be made by certified electricians in compliance with all international, national, state, and local rules.
  - Refer to driver/coupling/gear manufacturers installation and operation manuals (IOM) for specific instructions and recommendations.

1. Lock out power to the driver.
2. Make sure that the coupling hubs are fastened securely to the shafts.
3. Make sure that the coupling spacer is removed.
   The pump ships with the coupling spacer removed.
4. Unlock power to the driver.
5. Make sure that everyone is clear, and then jog the driver long enough to determine that the direction of rotation corresponds to the arrow on the bearing housing or close-coupled frame.
6. Lock out power to the driver.

Impeller-clearance check

The impeller-clearance check ensures the following:

- The pump turns freely.
- The pump operates at optimal efficiency for long equipment life and low energy consumption.

Impeller clearances (3196 and HT 3196)

WARNING:
For pumpage temperatures greater than 200°F (93°C), you must increase the cold (ambient) setting according to this table. Doing so prevents the impeller from contacting the casing due to differential expansion from the higher operating temperatures. Failure to do so may result in sparks, unexpected heat generation, and equipment damage.

NOTICE:
Do not set the maximum impeller setting to more than 0.005 in. (0.13 mm) greater than the values in this table. Doing so may result in a significant decrease in performance.

Table 8: Impeller clearances
This pump requires the impeller clearances in the following table.

Service temperature	STi	MTi/LTi	XLT-i/i17
in. (mm)	in. (mm)	in. (mm)	
-20 to 200°F (-29 to 93°C)	0.005 (0.13)	0.008 (0.20)	0.015 (0.38)
Up to 250°F (121°C)	0.006 (0.15)	0.009 (0.22)	0.016 (0.41)
Up to 300°F (149°C)	0.007 (0.18)	0.010 (0.25)	0.017 (0.43)
Up to 350°F (177°C)	0.009 (0.22)	0.012 (0.30)	0.019 (0.48)
Up to 400°F (204°C)	0.010 (0.25)	0.013 (0.33)	0.020 (0.50)
Up to 450°F (232°C)	0.011 (0.28)	0.014 (0.35)	0.021 (0.53)
Up to 500°F (260°C)	0.012 (0.30)	0.015 (0.38)	0.022 (0.56)
Up to 550°F (288°C)	0.013 (0.33)	0.016 (0.41)	0.023 (0.58)
Up to 600°F (316°C)	0.014 (0.36)	0.017 (0.43)	0.024 (0.61)
Up to 650°F (343°C)	0.016 (0.40)	0.019 (0.48)	0.026 (0.66)
Up to 700°F (371°C)	0.017 (0.43)	0.020 (0.50)	0.027 (0.69)

Impeller-clearance setting

Importance of a proper impeller clearance

A proper impeller clearance ensures that the pump runs at high performance.

WARNING:
- The impeller clearance setting procedure must be followed. Improperly setting the clearance or not following any of the proper procedures can result in sparks, unexpected heat generation, and equipment damage.
- If you use a cartridge mechanical seal, you must install the centering clips and loosen the set screws before you set the impeller clearance. Failure to do so could result in sparks, heat generation, and mechanical seal damage.

Impeller clearance methods

You can set the impeller clearance with either of these methods:

- Dial indicator method
- Feeler gauge method

Set the impeller clearance - dial indicator method (all except CV 3196)

WARNING:
Always disconnect and lock out power to the driver before you perform any installation or maintenance tasks. Failure to disconnect and lock out driver power will result in serious physical injury.
- Electrical connections must be made by certified electricians in compliance with all international, national, state, and local rules.
- Refer to driver/coupling/gear manufacturers installation and operation manuals (IOM) for specific instructions and recommendations.

1. Remove the coupling guard.
2. Set the indicator so that the button contacts either the shaft end or the face of the coupling.

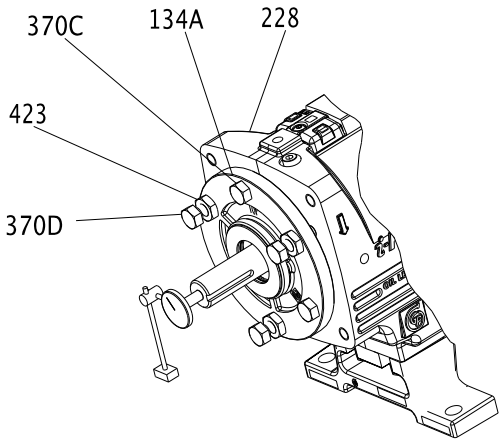

3. Loosen the jam nuts (423) on the jack bolts (370D) , and then back the bolts out about two turns.
4. Tighten the locking bolts evenly (370C), bringing the bearing housing (134A) towards the frame (228) until the impeller contacts the casing.
5. Turn the shaft to ensure that there is contact between the impeller and the casing.
6. Set the indicator to zero and loosen the locking bolt (370C) about one turn.
7. Thread in the jack bolts (370D) until the jack bolts evenly contact the bearing frame.
8. Tighten the jack bolts evenly about one flat at a time, moving the bearing housing (134A) away from the bearing frame until the indicator shows the correct clearance.
   Refer to the impeller clearance table to determine the correct clearance.
9. Tighten the bolts evenly in this order:
   a) Tighten the locking bolts (370C).
   b) Tighten the jack bolts (370D).
   Make sure to keep the indicator reading at the proper setting.
10. Make sure the shaft turns freely.

Set the impeller clearance - feeler gauge method (all except CV 3196)

WARNING:
Always disconnect and lock out power to the driver before you perform any installation or maintenance tasks. Failure to disconnect and lock out driver power will result in serious physical injury.

- Electrical connections must be made by certified electricians in compliance with all international, national, state, and local rules.
- Refer to driver/coupling/gear manufacturers installation and operation manuals (IOM) for specific instructions and recommendations.

1. Lock out the driver power and remove the coupling guard.

2. Loosen the jam nuts (423B) on the jack bolts (371A), and then back the bolts out about two turns.

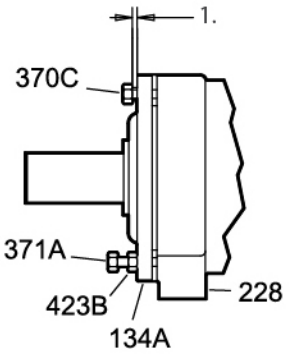

1. See impeller clearance table for distance

3. Evenly tighten the locking bolts (370C), bringing the bearing housing (134A) towards the frame (228) until the impeller contacts the casing.
4. Turn the shaft to ensure that there is contact between the impeller and the casing.
5. Use a feeler gauge to set the gap between the three locking bolts (370C) and the bearing housing (134A) to the correct impeller clearance.
   Refer to the impeller clearance table to determine the correct clearance.
6. Use the three jack bolts (370D) to evenly loosen the bearing housing (134A) until it contacts the locking bolts (370C).
7. Evenly tighten the jam nuts (423B).
8. Make sure the shaft turns freely.

Couple the pump and driver

WARNING:
Always disconnect and lock out power to the driver before you perform any installation or maintenance tasks. Failure to disconnect and lock out driver power will result in serious physical injury.

- Electrical connections must be made by certified electricians in compliance with all international, national, state, and local rules.
- Refer to driver/coupling/gear manufacturers installation and operation manuals (IOM) for specific instructions and recommendations.

Couplings must have proper certification to be used in an ATEX classified environment. Use the instructions from the coupling manufacturer in order to lubricate and install the coupling. Refer to driver/coupling/gear manufacturers IOM for specific instructions and recommendations.

Install the coupling guard

WARNING:

- Never operate a pump without a properly installed coupling guard. Personal injury will occur if you run the pump without a coupling guard.
- Electrical Connections must be made by certified electricians in compliance with all international, national, state, and local rules.
- Refer to driver/coupling/gear manufacturers IOM for specific instructions and recommendations.
- Always disconnect and lock out power to the driver before you perform any installation or maintenance tasks. Failure to disconnect and lock out driver power will result in serious physical injury.
  - Electrical connections must be made by certified electricians in compliance with all international, national, state, and local rules.
  - Refer to driver/coupling/gear manufacturers installation and operation manuals (IOM) for specific instructions and recommendations.
- The coupling used in an Ex-classified environment must be properly certified and must be constructed from a non-sparking material.

Required parts:

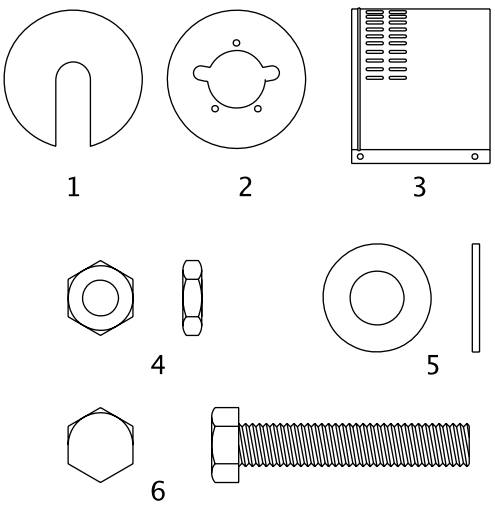

1. End plate, drive end
2. End plate, pump end
3. Guard half, 2 required
4. 3/8-16 nut, 3 required
5. 3/8 in. washer
6. 3/8-16 x 2 in. hex head bolt, 3 required

1. De-energize the motor, place the motor in a locked-out position, and place a caution tag at the starter that indicates the disconnect.
2. Put the pump-side end plate in place.
   If the pump-side end plate is already in place, make any necessary coupling adjustments and then proceed to the next step.

If the pump size is...	Then...
STi, MTi, LTi	Align the pump-side end plate to the bearing frame. You do not need to adjust the impeller.
XLT-i	1. Align the end plate on the pump side to the bearing housing so that you meet these conditions: 1. The large slots on the end plate do not touch the bearing housing tap bolts. 2. The small slots align with the impeller adjusting bolts. 2. Fasten the end plate to the bearing housing using the jam nuts on the impeller adjusting bolts. 3. Check the impeller clearance. Refer to the impeller clearance table for the correct impeller clearance.

If the pump size is...	Then...

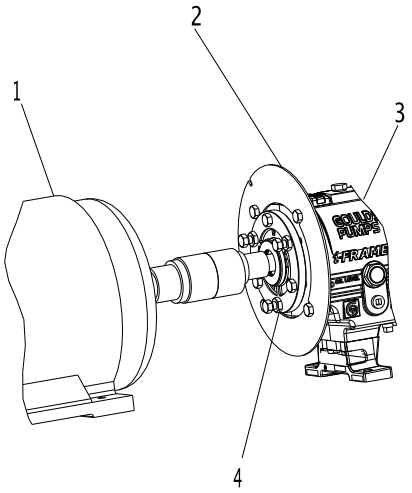

1. Driver
2. Pump end plate
3. Bearing housing
4. Jam nut

3. Put the pump-half of the coupling guard in place:
   a) Slightly spread the bottom apart.
   b) Place the coupling guard half over the pump-side end plate.

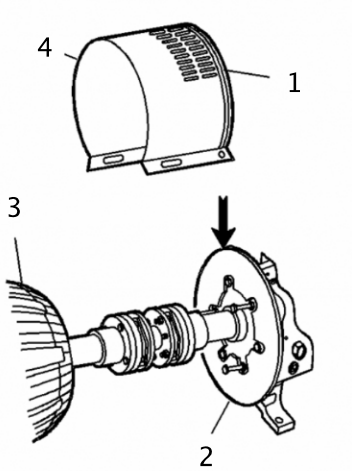

1. Annular groove
2. Pump-side end plate
3. Driver
4. Pump half of the coupling guard

The annular groove in the coupling guard half must fit around the end plate.

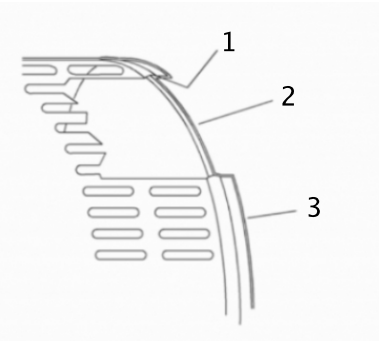

1. Annular groove
2. End plate (pump end)
3. Guard half

4. Use a bolt, a nut, and two washers to secure the coupling guard half to the end plate. Tighten securely.

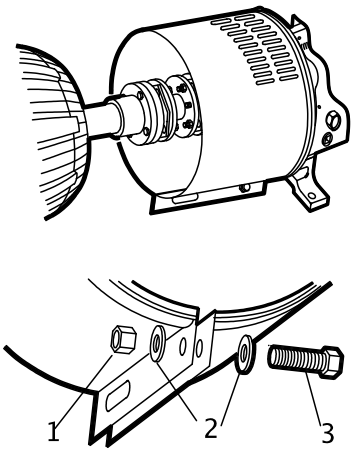

1. Nut
2. Washer
3. Bolt

5. Put the driver half of the coupling guard in place:
   a) Slightly spread the bottom apart.

b) Place the driver half of the coupling guard over the pump half of the coupling guard. The annular groove in the coupling guard half must face the motor.

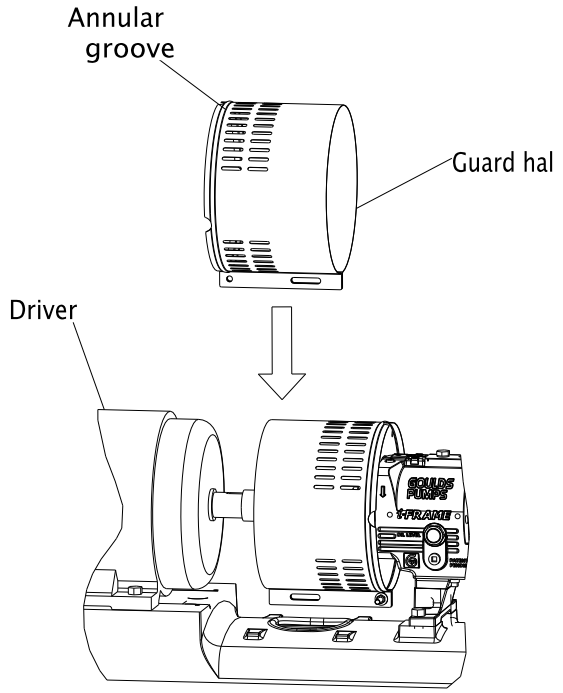

6. Place the driver-side end plate over the motor shaft.

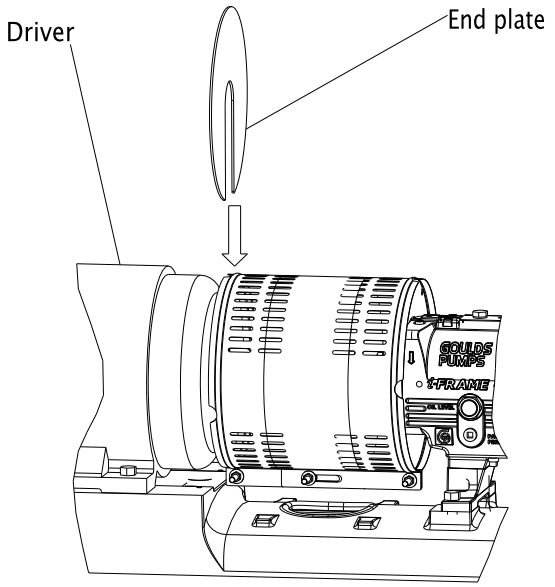

7. Place the driver-side end plate in the annular groove of the driver-half of the coupling guard.
8. Use a bolt, a nut, and two washers to secure the coupling guard half to the end plate. Hand-tighten only.
   The hole is located on the driver-side of the coupling guard half.

9. Slide the driver-half of the coupling guard towards the motor so that the coupling guard completely covers the shafts and coupling.

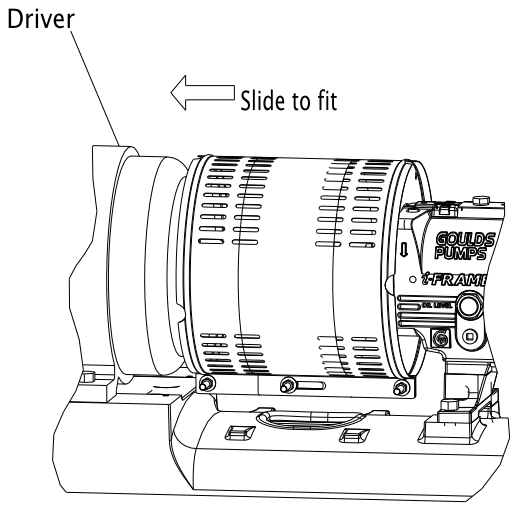

10. Use a nut, a bolt, and two washers to secure the coupling guard halves together.
11. Tighten all nuts on the guard assembly.

WARNING:
Never operate the pump without the coupling guard correctly installed.

Bearing lubrication

WARNING:
Make sure to properly lubricate the bearings. Failure to do so can result in excess heat generation, sparks, and premature failure.

NOTICE: Be certain to check the greasing on a pump that has been out of service for a long period of time and re-grease if necessary.

Pumps are shipped without oil. You must lubricate oil-lubricated bearings at the job site.

Grease-lubricated bearings are lubricated at the factory.

The bearing manufacturer fills greased-for-life bearings with grease and seals them at the factory. You do not need to lubricate or seal these bearings.

Oil volumes

Oil volume requirements

This table shows the required amount of oil for oil-lubricated bearings.

Frame	Qts.	Oz.	ml
STi	0.5	16	400
MTi	1.5	47	1400
LTi	1.5	48	1400
XLT-i and i17	3	96	3000

Lubricating-oil requirements

Oil requirements based on temperature

For the majority of operating conditions, bearing temperatures run between 120°F (49°C) and 180°F (82°C), and you can use an oil of ISO viscosity grade 68 at 100°F (38°C). If temperatures exceed 180°F (82°C), refer to the table for temperature requirements.

Temperature	Oil requirement
Bearing temperatures exceed 180°F (82°C)	Use ISO viscosity grade 100 with bearing-frame cooling or finned-tube oil cooler. The finned-tube oil cooler is standard with the HT 3196 model and optional for all other models.
Pumped-fluid temperatures exceed 350°F (177°C)	Use synthetic lubrication.

Acceptable oil for lubricating bearings

Acceptable lubricants

Examples of acceptable high quality turbine oils with rust and oxidation inhibitors.

Brand	Lubricant type
Chevron	GTS Oil 68
Exxon	Teresstic EP 68
Mobil	DTE 26 300 SSU @ 100°F (38°C)
Philips	Mangus Oil 315
Shell	Tellus Oil 68
Sunoco	Sunvis 968
Royal Purple	SYNFILM ISO VG 68 Synthetic Lube

Examples of acceptable synthetic lubricants.

Brand	Lubricant type
Castrol	Hyspin R&O 220
Chevron	GST 220
Exxon	Teresstic 220
Mobil	DTE Oil BB SHC 630
Shell	Marlina 220 Tellus 220
Sunoco	Sunvis 9220
Texaco	Regal R&O 220 Rando HD 220
Royal Purple	Synfilm GT 220 Synergy 220

Lubricate the bearings with oil

Use a high-quality turbine oil with rust and oxidation inhibitors.

1. Remove the fill plug.
2. Fill the bearing frame with oil through the filler connection, which is located on top of the bearing frame.

Fill the bearing frame with oil until the oil level reaches the middle of the sight glass (319).

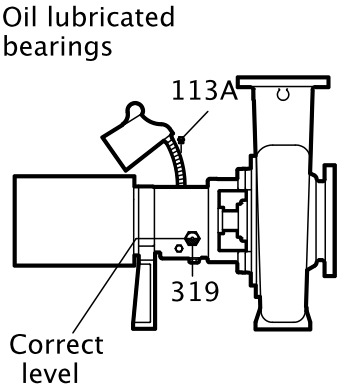

3. Replace the fill plug.

Lubricate the bearings with pure oil mist

Oil mist is an optional feature for this pump.
To lubricate bearings with pure oil mist, follow the instructions provided by the manufacturer of the oil-mist generator.
The inlet connections are on the top of the bearing frame.

Greased-for-life bearing lubrication

The bearing manufacturer fills greased-for-life bearings with grease and seals them at the factory. You do not need to lubricate or seal these bearings. Refer to the Maintenance chapter for re-greasing and maintenance procedures for these bearings.

Shaft-sealing options

In most cases, the manufacturer seals the shaft before shipping the pump. If your pump does not have a sealed shaft, see the Shaft-seal maintenance section in the Maintenance chapter.
This model uses these types of shaft seals:

- Cartridge mechanical seal
- Conventional inside-component mechanical seal
- Conventional outside-component mechanical seal
- Dynamic seal
- Packed-stuffing-box option

Mechanical seal options

Pumps are usually shipped with mechanical seals installed. If they are not, then refer to the mechanical seal manufacturer's installation instructions.
These are the mechanical seal options for this pump:

- Cartridge mechanical seal
- Conventional inside component mechanical seal
- Conventional outside component mechanical seal

Connection of sealing liquid for mechanical seals

Seal lubrication is required

Seal faces must have liquid film between them for proper lubrication. Locate the taps using the illustrations shipped with the seal.

Seal flushing methods

You can use these methods in order to flush or cool the seal:

Method	Description
Product flush	Run the piping so that the pump pushes the pumped fluid from the casing and injects it into the seal gland. If necessary, an external heat exchanger cools the pumped fluid before it enters the seal gland.
External flush	Run the piping so that the pump injects a clean, cool, compatible liquid directly into the seal gland. The pressure of the flushing liquid must be 5 to 15 psi (0.35 to 1.01 kg/cm^2) greater than the seal chamber pressure. The injection rate must be 0.5 to 2 gpm (2 to 8 lpm).
Other	You can use other methods that employ multiple gland or seal chamber connections. Refer to the mechanical seal reference drawing and piping diagrams.

Packed stuffing box option

WARNING:
Packed stuffing boxes are not allowed in an ATEX-classified environment.

The factory does not install the packing, lantern ring, or split gland.

These parts are included with the pump in the box of fittings. Before you start the pump, you must install the packing, lantern ring, and split gland according to the Packed stuffing box maintenance section in the Maintenance chapter.

Connection of sealing liquid for a packed stuffing box

WARNING:
Packed stuffing boxes are not allowed in an ATEX-classified environment.

NOTICE:
Make sure to lubricate the packing. Failure to do so may result in shortening the life of the packing and the pump.

You must use an external sealing liquid under these conditions:

- The pumped fluid includes abrasive particles.
- The stuffing-box pressure is below atmospheric pressure when the pump is running with a suction lift or when the suction source is in a vacuum. Under these conditions, packing is not cooled and lubricated and air is drawn into pump.

Conditions for application of an external liquid

Condition	Action
The stuffing box pressure is above atmospheric pressure and the pumped fluid is clean.	Normal gland leaks of 40 to 60 drops per minute is usually sufficient to lubricate and cool the packing. You do not need sealing liquid.
The stuffing box pressure is below atmospheric pressure or the pumped fluid is not clean.	An outside source of clean compatible liquid is required.
An outside source of clean compatible liquid is required.	You must connect the piping to the lantern ring connection with a 40 to 60 drops-per-minute leak rate. The pressure must be 15 psi (1.01 kg/cm^2) above the stuffing box pressure.

Dynamic-seal option

WARNING:
Dynamic seals are not allowed in an ATEX-classified environment.

The dynamic seal consists of two parts:

- Repeller seal
- Secondary seal (one of the following):
  - Graphite packing
  - Elastomenic face seal

Table 9: Dynamic seal part function

Part	Function
Repeller seal	A repeller seal prevents liquid from entering the stuffing box during operation. The repeller normally does not require a flush. However, for services that allow a build-up of solids on the repeller, you must install a flush connection. If a danger of freezing exists, then you must install a drain connection to drain the repeller chamber.

Secondary seal (graphite packing)	This secondary seal prevents leaks during pump shutdown and is comprised of the following:
	• Graphite packing – Graphite packing provides adequate life running dry but can provide longer performance if lubricated with clean water or grease.
	  • If you lubricate with clean water, then the repeller reduces both the quantity and pressure of seal water that is necessary. If the suction head is less than the repeller capability, then the stuffing box pressure is the same as the atmospheric pressure. Water pressure for the seal must be high enough to overcome static head when the pump is not operating to keep pumped fluid out of the packing. There must be enough flow to cool the packing.
	  • If you lubricate with grease, then you must use spring-loaded grease lubricators to maintain a constant supply.
	• Elastomeric face seal – The elastomeric face seal consists of an elastomer rotary fitted to the shaft and a ceramic stationary seat fitted in the gland. To set an elastomeric face seal, refer to Set an elastomeric face seal. This seal is designed to run dry, so no flush is necessary.

Set an elastomeric face seal

This procedure ensures that the elastomeric seal attains proper contact. No other adjustments are necessary.

1. Remove the gland nuts.
2. Slide the gland back on the sleeve.
3. Pull the rotary back on the sleeve until the rotary is about 1 in. (25 mm) beyond the stuffing box face.
4. Push the gland back onto the studs, pushing the rotary back along the sleeve.
5. Tighten the gland nuts.

Pump priming

Prime the pump with the suction supply above the pump

1. Slowly open the suction isolation valve.
2. Open the air vents on the suction and discharge piping until the pumped fluid flows out.
3. Close the air vents.

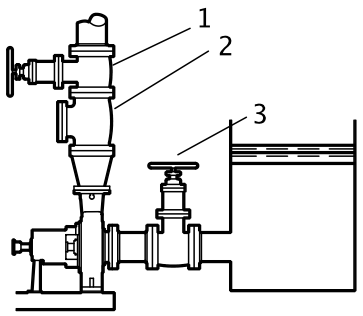

1. Discharge isolation valve
2. Check valve
3. Suction isolation valve

Prime the pump with the suction supply below the pump

Use a foot valve and an outside source of liquid in order to prime the pump. The liquid can come from one of these sources:

- A priming pump
- A pressurized discharge line
- Another outside supply

1. Close the discharge isolation valve.
2. Open the air vent valves in the casing.
3. Open the valve in the outside supply line until only liquid escapes from the vent valves.
4. Close the vent valves.
5. Close the outside supply line.

This illustration is an example of priming the pump with a foot valve and an outside supply:

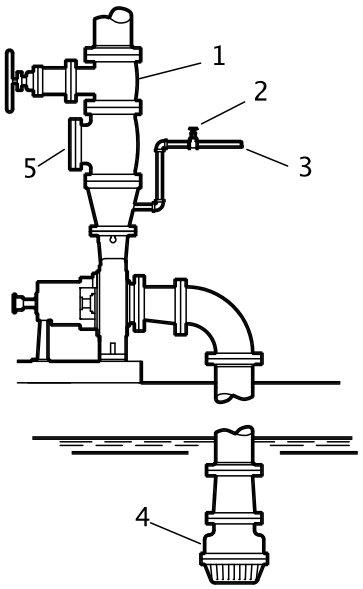

1. Discharge isolation valve
2. Shutoff valve
3. From outside supply
4. Foot valve
5. Check valve

This illustration is an example of priming the pump with a foot valve using a bypass around the check valve:

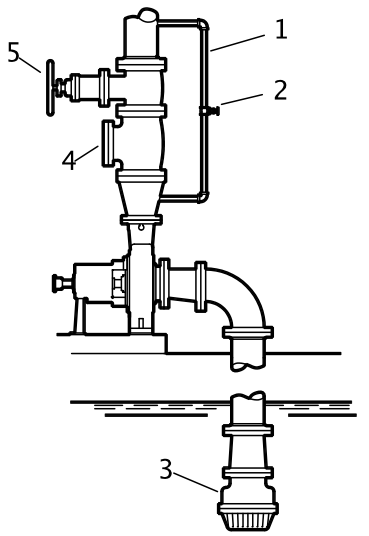

1. By-pass line
2. Shutoff valve
3. Foot valve
4. Check valve
5. Discharge isolation valve

Other methods of priming the pump

You can also use these methods in order to prime the pump:

- Prime by ejector
- Prime by automatic priming pump

Start the pump

WARNING: Immediately observe the pressure gauges. If discharge pressure is not quickly attained, stop the driver immediately, reprime, and attempt to restart the pump.

CAUTION:

- Immediately observe the pressure gauges. If discharge pressure is not quickly attained, stop the driver, reprime, and attempt to restart the pump.
- Observe the pump for vibration levels, bearing temperature, and excessive noise. If normal levels are exceeded, shut down the pump and resolve the issue.
- On pure or purge-oil mist-lubricated units, remove the viewing port plugs to verify that oil mist flowing properly. Replace the plugs.
- On frame mounted units, ensure that the oil level is correct prior to starting pump. Close coupled pumps do not have oil lubricated bearings.
- Ensure all flush and cooling systems are operating correctly prior to starting pump.

Before you start the pump, you must perform these tasks:

- Open the suction valve.
- Open any recirculation or cooling lines.

1. Fully close or partially open the discharge valve, depending on system conditions.
2. Start the driver.
3. Slowly open the discharge valve until the pump reaches the desired flow.
4. Immediately check the pressure gauge to ensure that the pump quickly reaches the correct discharge pressure.
5. If the pump fails to reach the correct pressure, perform these steps:
   a) Stop the driver.
   b) Prime the pump again.
   c) Restart the driver.
6. Monitor the pump while it is operating:
   a) Check the pump for bearing temperature, excessive vibration, and noise.
   b) If the pump exceeds normal levels, then shut down the pump immediately and correct the problem.
   A pump can exceed normal levels for several reasons. See Troubleshooting for information about possible solutions to this problem.
7. Repeat steps 5 and 6 until the pump runs properly.

Activate the i-ALERT Condition Monitor

WARNING:
Never heat the condition monitor to temperatures in excess of 300°F (149°C). Heating to these temperatures could result in death or serious injury.

CAUTION:
Always wear protective gloves. The pump and condition monitor can be hot.

By using the i-Alert™ Condition monitor, you agree to be bound by the Terms and Conditions of the *Software License Agreement* (page 18)

The condition monitor is ready for activation when the pump is running and has reached a steady flow, pressure, and temperature. This process only takes a few minutes.

1. Place a small magnet on the condition monitor over the ITT logo and then remove it, as this example shows.

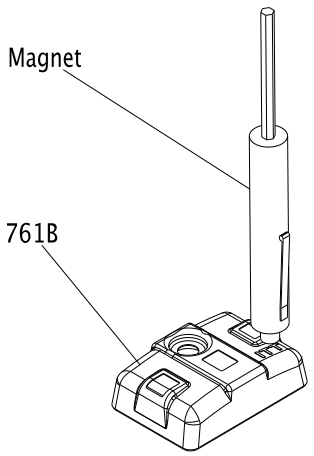

When the condition monitor is activated it:

1. Displays a series of red LEDs followed by a solid green LED.
2. Collects eight samples that are spaced one second apart.
3. Averages these readings to establish the baseline vibration level.
4. Flashes a green LED after approximately twelve seconds.

For the first ten minutes, the green LED flashes every second for five consecutive flashes and then pauses to take a vibration reading. More frequent measurements (every six seconds) are taken in this startup period so that an alarm can be immediately detected.

i-ALERT™ Condition Monitor routine operation

Measurement interval

This table shows the measurement intervals for the condition monitor during normal operation and when the monitor is in alarm mode.

Mode	Measurement interval
Normal operating mode	Five minutes
Alarm mode	Two minutes

When the condition monitor measures a reading beyond the specified temperature and vibration limits, the appropriate red LED flashes. After the process or pump condition that causes the alarm is corrected, the condition monitor returns to normal mode after one normal-level measurement.

Alarm mode

When the condition monitor is in alarm mode, you should investigate the cause of the condition and make necessary corrections in a timely manner.

Magnetic device considerations

Be careful when you use magnetic devices in close proximity of the condition monitor, such as magnetic vibration-monitoring probes or dial indicators. These magnetic devices can accidentally activate or deactivate the condition monitor resulting in improper alarm levels or loss of monitoring.

Pump operation precautions

General considerations

CAUTION:

- Vary the capacity with the regulating valve in the discharge line. Never throttle the flow from the suction side since this can result in decreased performance, unexpected heat generation, and equipment damage.
  Do not overload the driver. Driver overload can result in unexpected heat generation and equipment damage. The driver can overload in these circumstances:
  - The specific gravity of the pumped fluid is greater than expected.
  - The pumped fluid exceeds the rated flow rate.
- Do not operate pump past the maximum flow. For maximum flow refer to the pump performance curve.
- Do not overload the driver. Driver overload can result in unexpected heat generation and equipment damage. The driver can overload in these circumstances:
  - The specific gravity of the pumped fluid is greater than expected.
  - The pumped fluid exceeds the rated flow rate.
- Do not operate pump below hydraulic or thermal minimum flow. For hydraulic minimum flows refer to technical manual and pump performance curve. To calculate thermal minimum flow, refer to HI Centrifugal Pumps for Design and Application ANSI/HI 1.3-2000.
- Make sure to operate the pump at or near the rated conditions. Failure to do so can result in pump damage from cavitation or recirculation.

Operation at reduced capacity

WARNING:
Never operate any pumping system with a blocked suction and discharge. Operation, even for a brief period under these conditions, can cause confined pumped fluid to overheat, which results in a violent explosion. You must take all necessary measures to avoid this condition. If pump becomes plugged shut down and unplug prior to restarting pump.

CAUTION:

- The pump and system must be free of foreign objects. If pump becomes plugged, shut down and unplug prior to restarting pump.
- Avoid excessive vibration levels. Excessive vibration levels can damage the bearings, stuffing box or seal chamber, and the mechanical seal, which can result in decreased performance.
- Avoid increased radial load. Failure to do so can cause stress on the shaft and bearings.
- Avoid heat build-up. Failure to do so can cause rotating parts to score or seize.
- Avoid cavitation. Failure to do so can cause damage to the internal surfaces of the pump.

Operation under freezing conditions

NOTICE:
Do not expose an idle pump to freezing conditions. Drain all liquid that is inside the pump and the cooling coils. Failure to do so can cause liquid to freeze and damage the pump.

Shut down the pump

WARNING:
The pump can handle hazardous and toxic fluids. Identify the contents of the pump and observe proper decontamination procedures in order to eliminate the possible exposure to any hazardous or toxic fluids. Wear the proper personal protective equipment. Potential hazards include, but are not limited to, high temperature, flammable, acidic, caustic, explosive, and other risks. You must handle and dispose of pumped fluid in compliance with the applicable environmental regulations.

1. Slowly close the discharge valve.
2. Shut down and lock the driver to prevent accidental rotation.

Deactivate the i-ALERT™ Condition Monitor

NOTICE:
Always deactivate the condition monitor when the pump is going to be shut down for an extended period of time. Failure to do so will result in reduced battery life.

1. Touch and hold a small magnet to the condition monitor over the ITT logo until the red LEDs blink three times.
   This should take 10-15 seconds if the condition monitor is in normal operating mode and approximately five seconds if the condition monitor is in alarm mode.
2. Remove the magnet.

If the deactivation is successful, solid red LEDs will be displayed.

Reset the i-ALERT™ Condition Monitor

NOTICE:
Always reset the condition monitor when the pump is started after maintenance, system change, or down-time. Failure to do so may result in false baseline levels that could cause the condition monitor to alert in error.

1. Touch a magnet to the condition monitor over the ITT logo to turn the power on.The condition monitor begins to establish a new baseline vibration level.

Make the final alignment of the pump and driver

WARNING:
- Always disconnect and lock out power to the driver before you perform any installation or maintenance tasks. Failure to disconnect and lock out driver power will result in serious physical injury.
  - Electrical connections must be made by certified electricians in compliance with all international, national, state, and local rules.
  - Refer to driver/coupling/gear manufacturers installation and operation manuals (IOM) for specific instructions and recommendations.
- Follow shaft alignment procedures in order to prevent catastrophic failure of drive components or unintended contact of rotating parts. Follow the coupling installation and operation procedures from the coupling manufacturer.

You must check the final alignment after the pump and driver are at operating temperature. For initial alignment instructions, see the Installation chapter.

1. Run the unit under actual operating conditions for enough time to bring the pump, driver, and associated system to operating temperature.
2. Shut down the pump and the driver.
3. Remove the coupling guard.
   See Remove the coupling guard in the Maintenance chapter.
4. Check the alignment while the unit is still hot.
   See Pump-to-driver alignment in the Installation chapter.
5. Reinstall the coupling guard.
6. Restart the pump and driver.

Maintenance

Maintenance schedule

Maintenance inspections

A maintenance schedule includes these types of inspections:

- Routine maintenance
- Routine inspections
- Three-month inspections
- Annual inspections

Shorten the inspection intervals appropriately if the pumped fluid is abrasive or corrosive or if the environment is classified as potentially explosive.

Routine maintenance

Perform these tasks whenever you perform routine maintenance:

- Lubricate the bearings.
- Inspect the seal.

Routine inspections

Perform these tasks whenever you check the pump during routine inspections:

- Check the level and condition of the oil through the sight glass on the bearing frame.
- Check for unusual noise, vibration, and bearing temperatures.
- Check the pump and piping for leaks.
- Analyze the vibration.
- Inspect the discharge pressure.
- Inspect the temperature.
- Check the seal chamber and stuffing box for leaks.
  - Ensure that there are no leaks from the mechanical seal.
  - Adjust or replace the packing in the stuffing box if you notice excessive leaking.

Three-month inspections

Perform these tasks every three months:

- Check that the foundation and the hold-down bolts are tight.
- Check the packing if the pump has been left idle, and replace as required.
- Change the oil every three months (2000 operating hours) at minimum.
  - Change the oil more often if there are adverse atmospheric or other conditions that might contaminate or break down the oil.
- Check the shaft alignment, and realign as required.

Annual inspections

Perform these inspections one time each year:

- Check the pump capacity.
- Check the pump pressure.
- Check the pump power.

If the pump performance does not satisfy your process requirements, and the process requirements have not changed, then perform these steps:

1. Disassemble the pump.
2. Inspect it.

3. Replace worn parts.

Bearing maintenance

These bearing lubrication sections list different temperatures of the pumped fluid. If the pump is ATEX-certified and the temperature of the pumped fluid exceeds the permitted temperature values, then consult your ITT representative.

Bearing lubrication schedule

Type of bearing	First lubrication	Lubrication intervals
Oil-lubricated bearings	Add oil before you install and start the pump. Change the oil after 200 hours for new bearings.	After the first 200 hours, change the oil every 2000 operating hours or every three months.
Grease-lubricated bearings	Grease-lubricated bearings are initially lubricated at the factory.	Regrease bearings every 2000 operating hours or every three months.

Lubricating-oil requirements

Oil requirements based on temperature

For the majority of operating conditions, bearing temperatures run between 120°F (49°C) and 180°F (82°C), and you can use an oil of ISO viscosity grade 68 at 100°F (38°C). If temperatures exceed 180°F (82°C), refer to the table for temperature requirements.

Temperature	Oil requirement
Bearing temperatures exceed 180°F (82°C)	Use ISO viscosity grade 100 with bearing-frame cooling or finned-tube oil cooler. The finned-tube oil cooler is standard with the HT 3196 model and optional for all other models.
Pumped-fluid temperatures exceed 350°F (177°C)	Use synthetic lubrication.

Oil volumes

Oil volume requirements

This table shows the required amount of oil for oil-lubricated bearings.

Frame	Qts.	Oz.	ml
STi	0.5	16	400
MTi	1.5	47	1400
LTi	1.5	48	1400
XLT-i and i17	3	96	3000

Acceptable oil for lubricating bearings

Acceptable lubricants

Examples of acceptable high quality turbine oils with rust and oxidation inhibitors.

Brand	Lubricant type
Chevron	GTS Oil 68
Exxon	Teresstic EP 68
Mobil	DTE 26 300 SSU @ 100°F (38°C)
Philips	Mangus Oil 315
Shell	Tellus Oil 68
Sunoco	Sunvis 968
Royal Purple	SYNFILM ISO VG 68 Synthetic Lube

Examples of acceptable synthetic lubricants.

Brand	Lubricant type
Castrol	Hyspin R&O 220
Chevron	GST 220
Exxon	Teresstic 220

Brand	Lubricant type
Mobil	DTE Oil BB SHC 630
Shell	Marlina 220 Tellus 220
Sunoco	Sunvis 9220
Texaco	Regal R&O 220 Rando HD 220
Royal Purple	Synfilm GT 220 Synergy 220

Regrease the grease-lubricated bearings

NOTICE:
Make sure that the grease container, the greasing device, and the fittings are clean. Failure to do this can result in impurities entering the bearing housing when you regrease the bearings.

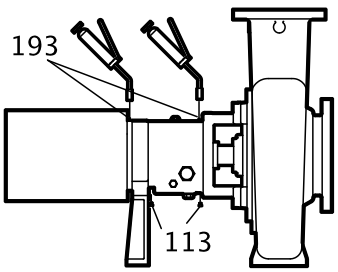

1. Wipe dirt from the grease fittings.
2. Remove the two grease-relief plugs from the bottom of the frame.
3. Fill both of the grease cavities through the fittings with a recommended grease until the fresh grease comes out of the relief holes.
4. Make sure that the frame seals are seated in the bearing housing.
   If they are not, press them in place with the drains located at the bottom.
5. Reinstall the grease-relief plugs.
6. Wipe off any excess grease.
7. Recheck the alignment.

The bearing temperature usually rises after you regrease due to an excess supply of grease. Temperatures return to normal in about two to four operating hours as the pump runs and purges the excess grease from the bearings.

Lubricating-grease requirements

Precautions

NOTICE:

- Never mix greases of different consistencies (NLGI 1 or 3 with NLGI 2) or with different thickeners. For example, never mix a lithium-based grease with a polyurea-based grease. Doing so may result in decreased performance.
- Remove the bearings and old grease if you need to change the grease type or consistency. Failure to do so may result in equipment damage or decreased performance.

Bearing temperature

Bearing temperatures are generally about 20Â°F (18Â°C) greater than bearing-housing outer surface temperatures.
This table shows the type of grease required for the operating temperature of the pump.

Bearing temperature	Type of grease
5°F to 230°F (-15°C to 110°C)	Use a lithium-based mineral-oil grease with a consistency of NLGI 2.
Exceed 350°F (177°C)	Use a high-temperature grease. Mineral-oil greases should have oxidation stabilizers and a consistency of NGLI 3.

Grease recommendations based on temperature

Most pumps use Sunoco 2EP grease. High temperature units that can pump fluids with a temperature greater than 350°F (177°C) use Mobil SCH32.
This table shows which brand of grease to use when lubricating the pump.

Brand	When temperature of pumped fluid is less than 350°F (177°C) âM M NLGI consistency 2	When temperature of pumped fluid is greater than350°F (177°C) âM M NLGI consistency 3
Mobil	Mobilux EP2	SCH32
Exxon	Unirex N2	Unirex N3
Sunoco	Mutipurpose 2EP	N/A
SKF	LGMT 2	LGMT 3

Lubricate the bearings after a shutdown period

1. Flush out the bearings and bearing frame with a light oil to remove contaminants. During flushing, make sure to rotate the shaft slowly by hand.
2. Flush the bearing housing with the proper lubricating oil to ensure oil quality after cleaning.
3. Refer to "Reassembly" section for proper bearing greasing procedure.

Shaft seal maintenance

Mechanical-seal maintenance

WARNING:
The mechanical seal used in an Ex-classified environment must be properly certified. Prior to startup, make sure that all areas that could leak pumped fluid to the work environment are closed.

CAUTION:
Never operate the pump without liquid supplied to mechanical seal. If you run a mechanical seal dry, even for a few seconds, this can cause seal damage. Physical injury can occur if a mechanical seal fails.

Cartridge-type mechanical seals

Cartridge-type mechanical seals are commonly used. Cartridge seals are preset by the seal manufacturer and require no field settings. Cartridge seals installed by the user require disengagement of the holding clips prior to operation, allowing the seal to slide into place. If the seal has been installed in the pump by ITT, these clips have already been disengaged.

Other mechanical seal types

For other types of mechanical seals, refer to the instructions provided by the seal manufacturer for installation and setting.

Reference drawing

The manufacturer supplies a reference drawing with the data package. Keep this drawing for future use when you perform maintenance and seal adjustments. The seal drawing specifies the required flush fluid and attachment points.

Before you start the pump

Check the seal and all flush piping.

Mechanical seal life

The life of a mechanical seal depends on the cleanliness of the pumped fluid. Due to the diversity of operating conditions, it is not possible to give definite indications as to the life of a mechanical seal.

Packed stuffing-box maintenance

WARNING:

- Packed stuffing boxes are not allowed in an ATEX-classified environment.
- Never attempt to replace the packing until the driver is properly locked out and the coupling spacer is removed.

Accepted leakage rate

It is not necessary to shut down or disassemble the pump to inspect the packing operation. During normal operation, the packing should leak approximately one drop per second.

Adjustment of gland

Adjust the gland if the leakage rate is greater than or less than the specified rate.

Evenly adjust each of the two gland bolts with a one-quarter (1/4) turn until the desired leakage rate is obtained. Tighten the bolts to decrease the rate. Loosen the bolts to increase the rate.

Tightening of packing

NOTICE: Never over-tighten packing to the point where less than one drop per second is observed. Over-tightening can cause excessive wear and power consumption during operation.

If you cannot tighten the packing to obtain less than the specified leakage rate, then replace the packing.

Dynamic-seal maintenance

WARNING:
Dynamic seals are not allowed in an ATEX-classified environment.

About the dynamic seal

Dynamic seal parts do not wear substantially to affect operation and do not require maintenance unless the service is particularly abrasive or corrosive.

Repeller

The dynamic repeller prevents pumpage leaks through the stuffing box when the pump operates under published acceptable conditions.

Static seal

A static seal prevents leakage when the pump is shut down. A static seal is either of the following:

- a lip seal
- an elastomeric-face seal
- graphite packing

The only maintenance that the lip seal and the elastomeric-face seal require is replacement when leakage becomes excessive.

The graphite packing should be installed as stuffing-box packing and is designed to run dry.

Disassembly

Disassembly precautions

WARNING:

- This manual clearly identifies accepted methods for disassembling units. These methods must be adhered to. Trapped liquid can rapidly expand and result in a violent explosion and injury. Never apply heat to impellers, propellers, or their retaining devices to aid in their removal unless explicitly stated in this manual.
- Always disconnect and lock out power to the driver before you perform any installation or maintenance tasks. Failure to disconnect and lock out driver power will result in serious physical injury.
  - Electrical connections must be made by certified electricians in compliance with all international, national, state, and local rules.
  - Refer to driver/coupling/gear manufacturers installation and operation manuals (IOM) for specific instructions and recommendations.
- Crush hazard. The unit and the components can be heavy. Use proper lifting methods and wear steel-toed shoes at all times.
- The pump can handle hazardous and toxic fluids. Identify the contents of the pump and observe proper decontamination procedures in order to eliminate the possible exposure to any hazardous or toxic fluids. Wear the proper personal protective equipment. Potential hazards include, but are not limited to, high temperature, flammable, acidic, caustic, explosive, and other risks. You must handle and dispose of pumped fluid in compliance with the applicable environmental regulations.
- A small amount of liquid will be present in certain areas like the seal chamber.

NOTICE:

- Avoid injury. Worn pump components can have sharp edges. Wear appropriate gloves while handling these parts.
- Make sure that all replacement parts are available before you disassemble the pump for overhaul.

Tools required

In order to disassemble the pump, you need these tools:

- Bearing puller
- Brass drift punch
- Cleaning agents and solvents
- Dial indicators
- Feeler gauges
- Hex wrenches
- Hydraulic press
- Induction heater
- Leveling blocks and shims
- Lifting sling
- Micrometer
- Rubber mallet
- Screwdriver
- Snap-ring pliers
- Torque wrench with sockets
- Wrenches

Drain the pump

CAUTION:

- Allow all system and pump components to cool before you handle them to prevent physical injury.
- If your pump is a Model NM3171, NM3196, 3198, 3298, V3298, SP3298, 4150, 4550, or 3107 there is a possible risk of static electric discharge from plastic parts that are not properly grounded. If the pumped fluid is non-conductive, drain and flush the pump with a conductive fluid under conditions that will not allow for a spark to be released to the atmosphere.

1. Close the isolation valves on the suction and discharge sides of the pump.
   You must drain the system if no valves are installed.
2. Open the drain valve.
   Do not proceed until liquid stops coming out of the drain valve. If liquid continues to flow from the drain valve, the isolation valves are not sealing properly and you must repair them before you proceed.
3. Leave the drain valve open and remove the drain plug located on the bottom of the pump housing.
   Do not reinstall the plug or close the drain valve until the reassembly is complete.
4. Drain the liquid from the piping and flush the pump if it is necessary.
5. Disconnect all auxiliary piping and tubing.
6. Remove the coupling guard.

Remove the coupling

1. Disconnect the coupling.
2. Remove the C-face adapter.
3. Remove the coupling-guard pump end-plate.

Remove the back pull-out assembly

CAUTION:
Never remove the back pull-out assembly without assistance.

1. Is your bearing frame oil lubricated?
   - If No: Proceed to step 2.
   - If Yes:
     1. Remove the bearing-frame drain plug (408A) in order to drain oil from the bearing frame.
     2. Replace the plug after the oil is drained.

3. Remove the oil reservoir, if equipped.

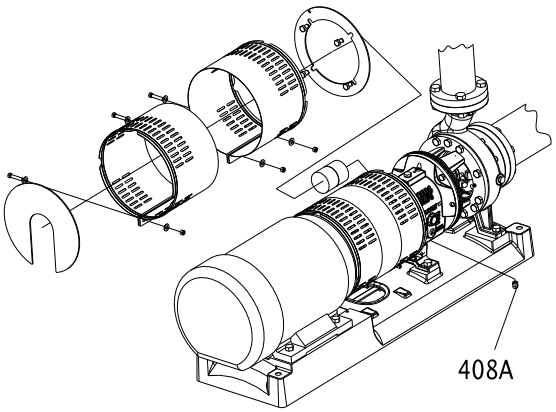

NOTICE:
Oil analysis should be part of a preventive maintenance program that determines the cause of a failure. Save the oil in a clean container for inspection.

2. Does your pump use a C-face adapter?
   - If Yes: Place one sling from the hoist through the frame adapter (108) or frame (228A) for the STi and a second sling from the hoist through the C-face adapter.
   - If No: Place a sling from the hoist through the frame adapter (108) or the frame (228A) for the STi.

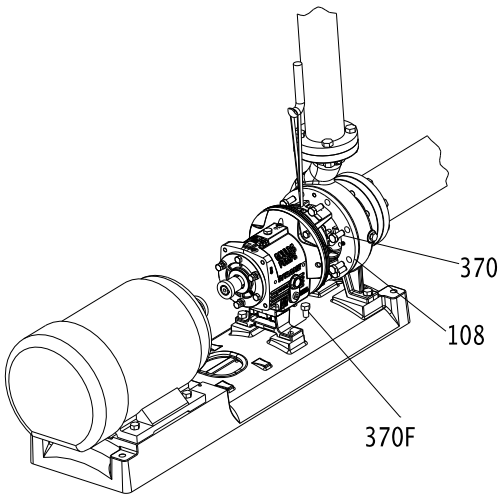

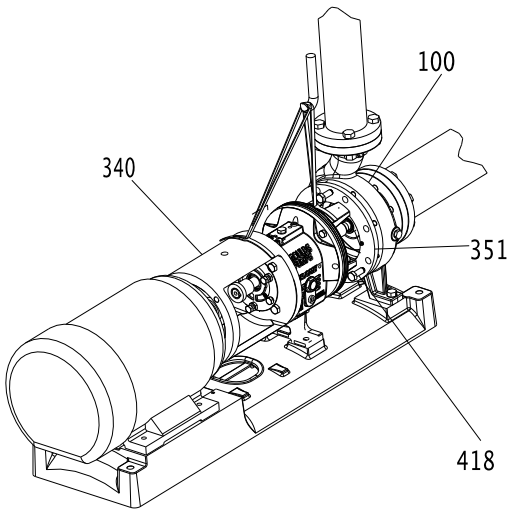

3. Remove the hold-down bolts of the bearing frame foot.
4. Remove the casing bolts.

WARNING:
- Never use heat to disassemble the pump due to the risk of an explosion from trapped liquid.

5. Tighten the jackscrews evenly, using an alternating pattern, in order to remove the back pull-out assembly.
   You can use penetrating oil if the adapter to the casing joint is corroded.
6. Remove the back pull-out assembly from the casing (100).
7. Mark and remove the shims from under the frame foot and save them for reassembly.
8. Remove and discard the casing gasket.
   You will insert a new casing gasket during reassembly.
9. Remove the jackscrews.
10. Clean all gasket surfaces.
    Clean surfaces prevent the casing gasket from partially adhering to the casing due to binders and adhesives in the gasket material.

Remove the coupling hub

1. Clamp the frame adapter securely to the workbench.
2. Remove the coupling hub.
   Mark the shaft for relocation of the coupling hub during reassembly.

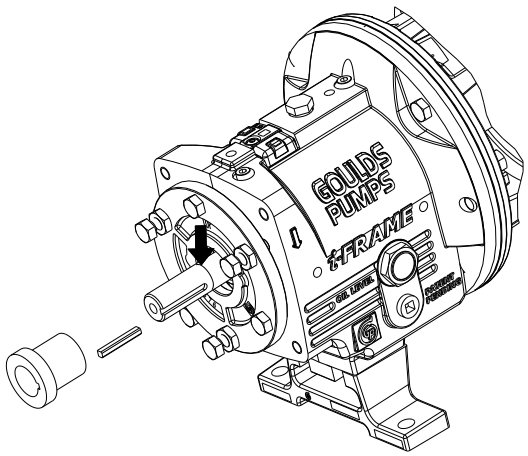

Impeller removal

Remove the impeller (STi, MTi, and LTi)

WARNING:
Never apply heat to remove an impeller. The use of heat may cause an explosion due to trapped liquid, resulting in severe physical injury and property damage.

CAUTION:
Wear heavy work gloves when you handle impellers. The sharp edges can cause physical injury.

1. Slide the shaft wrench (A05107A or A01676A) over the shaft (122) and key.
2. Rotate the impeller (101) clockwise (viewed from the impeller end of the shaft) and raise the wrench off of the work surface.
3. To loosen the impeller, quickly turn it counter-clockwise (viewed from the impeller end of the shaft) while impacting the wrench handle on the workbench or a solid block.

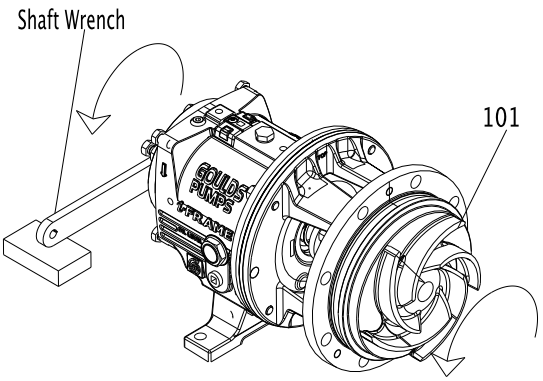

4. Repeat step 3 until the impeller becomes loose.
5. Remove and discard the impeller O-ring (412A). You will insert a new O-ring during reassembly.

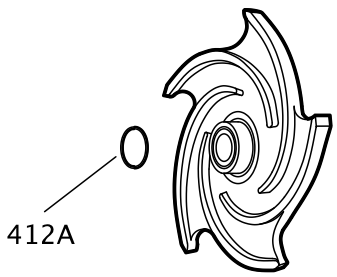

Figure 19: O-ring for models 3196, HT 3196, NM 3196, 3198, and 3796

If the impeller cannot be removed by the previous methods, cut the shaft between the gland and the frame, remove the impeller, stuffing-box cover, gland, sleeve, and shaft end as a unit. Do not apply heat.

Remove the impeller (XLT-i, and i17)

WARNING:
Never apply heat to remove an impeller. The use of heat may cause an explosion due to trapped liquid, resulting in severe physical injury and property damage.

CAUTION:
Wear heavy work gloves when you handle impellers. The sharp edges can cause physical injury.

Clamp the frame foot (241) to the workbench when you use this method to remove the impeller.

1. Remove the impeller plug (458Y) from the front of the impeller (101) and discard the Teflon gasket (428D).

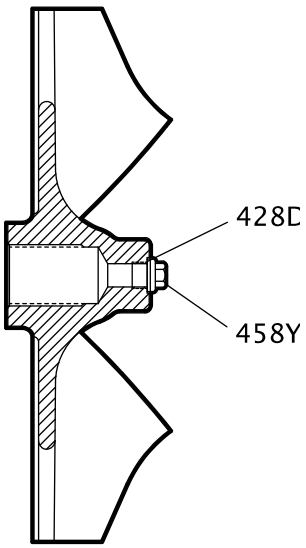

2. Spray penetrating oil through the plug hole into the cavity at the end of the shaft and let it penetrate for 15 minutes.
3. While waiting, rotate the shaft several times to distribute the oil.
4. Slide the shaft wrench (A05107A) over the shaft (122) and key.
5. Rotate the impeller clockwise (viewed from the impeller end of the shaft) and raise the wrench off of the work surface.
6. To loosen the impeller, quickly turn the impeller counter-clockwise (viewed from the impeller end of the shaft) while impacting the wrench handle on the workbench or a solid block.
7. Repeat step 6 until the impeller becomes loose.
8. If step 6 and 7 do not work then do this:
   a) Place a socket wrench over the cast nut on the impeller hub.
   b) Turn the impeller counter-clockwise (viewed from the impeller end of the shaft).

   Be sure that the impeller wrench rests on the workbench or a solid block and that the power end is secure on the work surface.
9. Remove and discard the impeller O-ring (412A).

You will insert a new O-ring during reassembly.

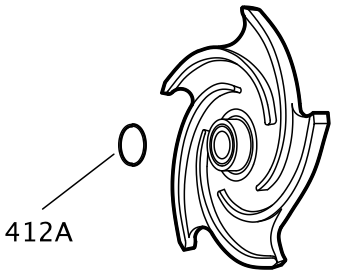

Figure 20: O-ring for models 3196 and HT 3196

If the impeller cannot be removed by the previous methods, cut the shaft between the gland and the frame, remove the impeller, stuffing-box cover, gland, sleeve, and shaft end as a unit. Do not apply heat.

Seal-chamber cover removal

Seal-chamber removal procedures

Choose from one of these procedures to remove the seal-chamber cover.

Table 10: Procedures for seal-chamber cover removal by model

Model	Procedure
3196, CV 3196, HT 3196, LF 3196, 3796	Remove the seal-chamber cover.
NM 3196, 3198	Remove the seal-chamber cover and/or backplate.

Remove the seal-chamber cover (3196, CV 3196, HT 3196, LF 3196, 3796)

1. Remove the gland stud nuts (355).
2. Remove the seal-chamber stud nuts (370H).
3. Remove the seal chamber (184).

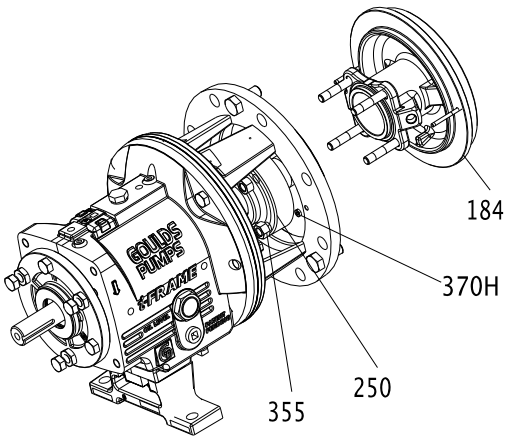

4. Remove the shaft sleeve (126) if it is used.
   The mechanical seal is attached to the sleeve.

NOTICE:
Be careful with the stationary portion of the mechanical seal that is either clamped between the backplate and the gland or seated in the seal-chamber bore. Failure to do so may result in equipment damage.

5. Remove the rotary portion of the seal from the sleeve by loosening the setscrews and sliding it off the sleeve.
   Refer to the mechanical-seal instructions for more information.
6. Remove the gland (250), the stationary portion of the seal, and the O-ring (360Q).

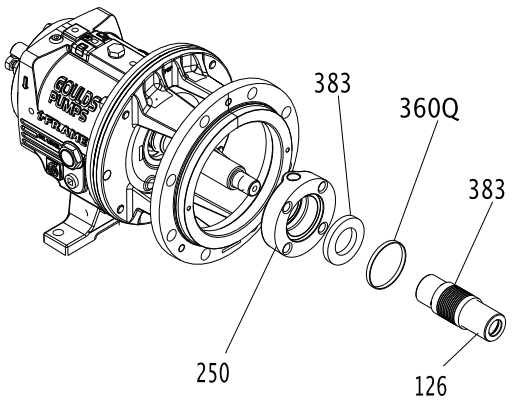

Remove the stuffing-box cover (3196, CV 3196, HT 3196, LF 3196, 3796)

1. Remove the gland nuts (355) and the gland (107).
2. Remove the stuffing-box-cover nuts (370H).
3. Remove the stuffing-box cover (184).

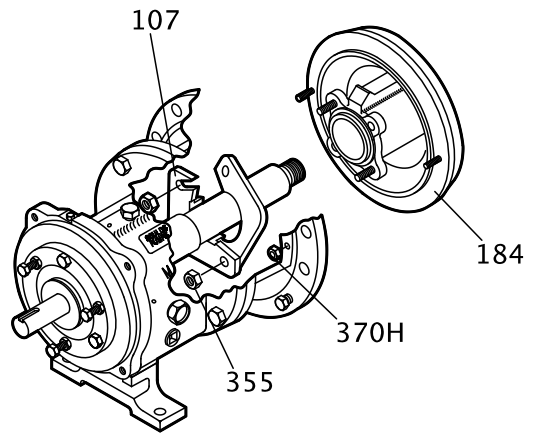

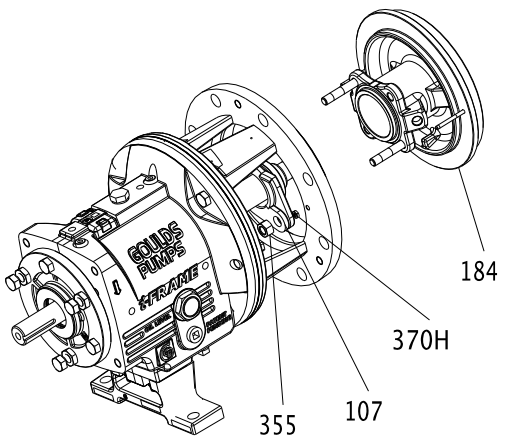

4. Remove the shaft sleeve (126).

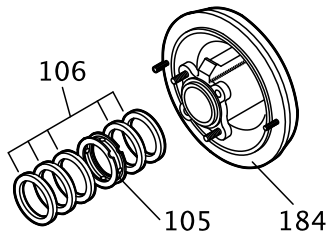

5. Remove the packing (106) and lantern ring (105) from the stuffing-box cover (184). A lantern ring does not come with self-lubricating graphite packing.

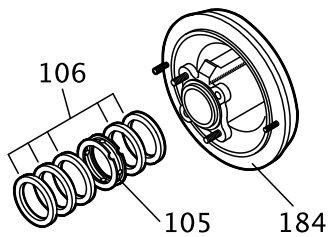

Remove the dynamic seal

1. Remove the stud nuts (370H).
2. Remove the dynamic-seal assembly.

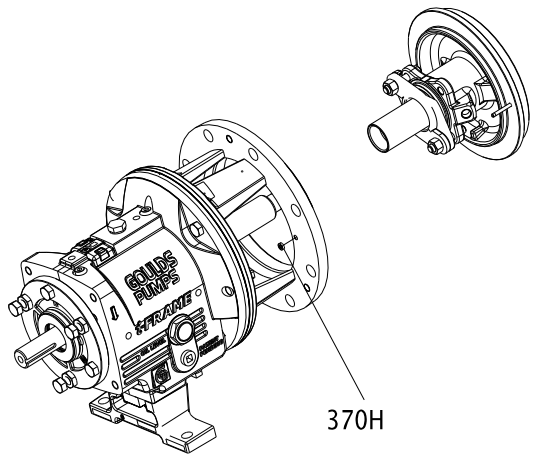

3. Remove the socket head cap screws (265).
4. Remove the packed stuffing box cover (184) and gasket (264).
5. Remove the repeller (262) from the backplate (444).

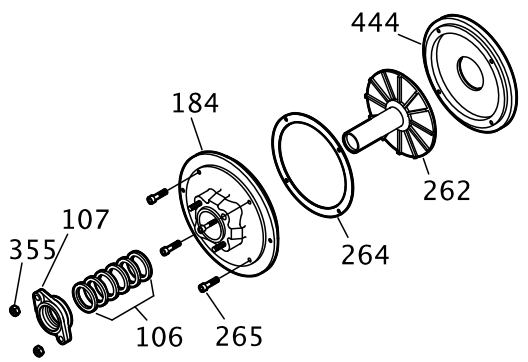

Remove the frame adapter (MTi, LTi, XLT-i, i17)

The 3198 frame adapter is not interchangeable with the adapter of any other model.

1. Remove the dowel pins (469B) and the bolts (370B).
2. Remove the frame adapter (108).
3. Remove and discard the gasket (360D).
   You will install a new gasket during reassembly.

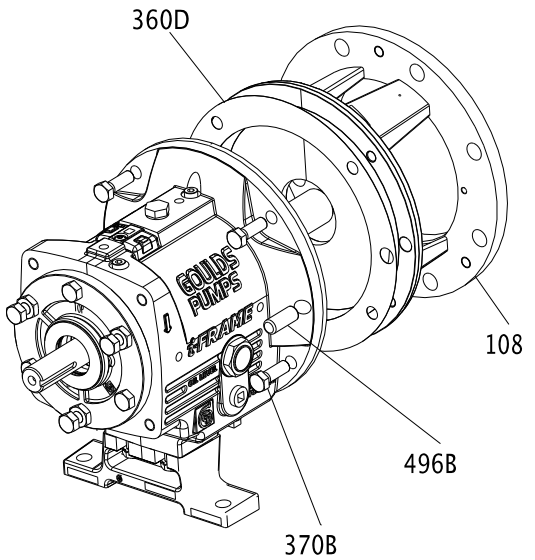

Remove the inboard labyrinth oil seal

Labyrinth oil-seal O-rings are part of the 3196 maintenance kits, and they are sold separately.

1. Determine the fit of your labyrinth oil seal.

Table 11: Labyrinth oil-seal fit

Model	Type of fit
STi	O-ring fit into the bearing-frame adapter (228A)
MTi, LTi, XLT-i and i17	O-ring fit into the frame adapter

2. Remove the O-rings (497H and 497J) and the seal (333A).

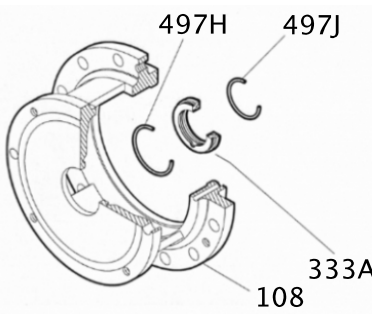

Power-end disassembly

Disassemble the power end (STi, MTi)

1. Remove the clamp screws (370C) and back off the jam nuts (423).
2. Tighten the jack screws (370D) evenly to move the bearing housing (134) out of the bearing frame (228A).

3. Remove the shaft assembly from the bearing frame (228A).

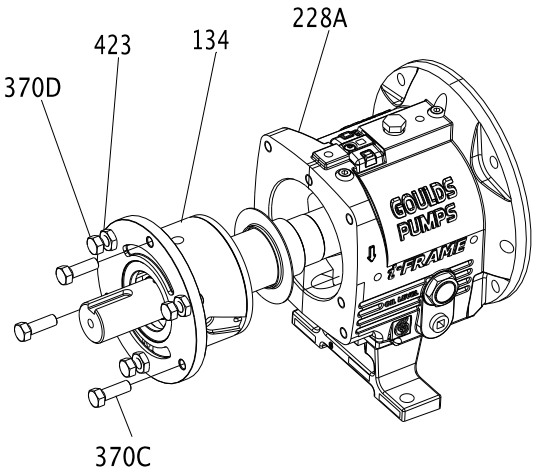

4. Remove the jack screws (370D) with nuts (423).
5. Remove the bearing housing O-ring (496) and the bearings.
6. Remove the outboard bearing retaining snap ring (361A).

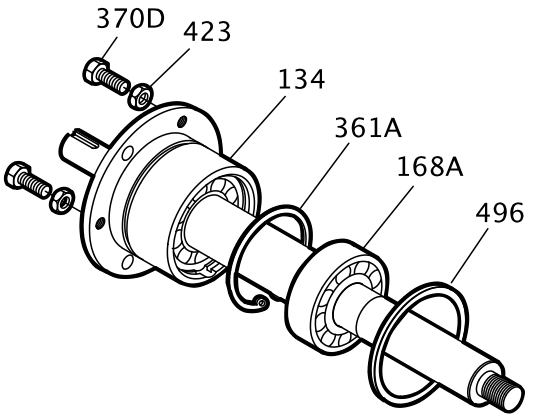

7. Remove the bearing housing (134) and bearings (112A and 168A) from the shaft (122).

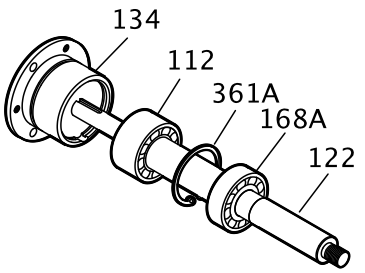

8. Remove the bearing locknut (136) and bearing lock washer (382).
9. Remove the inboard bearing (168A).
10. Remove the outboard bearing (112A).

NOTICE:
Use force only on the inner race when you press bearings off the shaft. Do not use force in situations in which you might break a part. Doing so may result in equipment damage.

NOTICE:
Save the bearings for inspection. Do not reuse the bearings. Doing so may result in decreased performance.

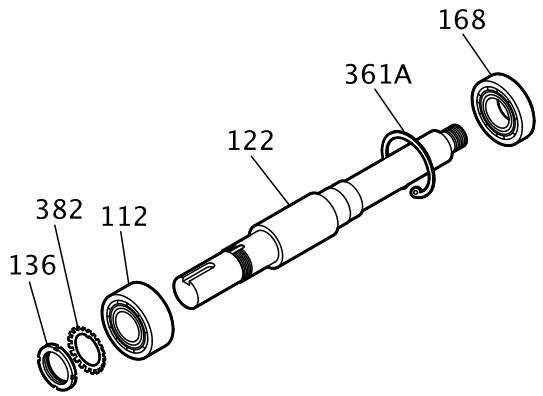

Disassemble the power end (STi and MTi with duplex bearings)

1. Remove the clamp screws (370C) and back off the jam nuts (423).
2. Tighten the jack screws (370D) evenly to move the bearing housing (134) out of the bearing frame (228A).
3. Remove the shaft assembly from the bearing frame (228A).

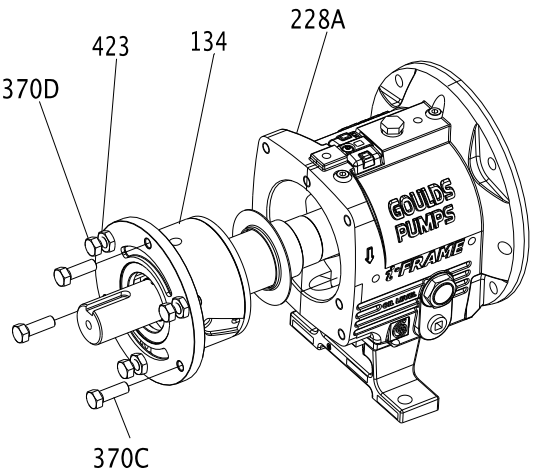

4. Remove the jack screws (370D) with the nuts (423).

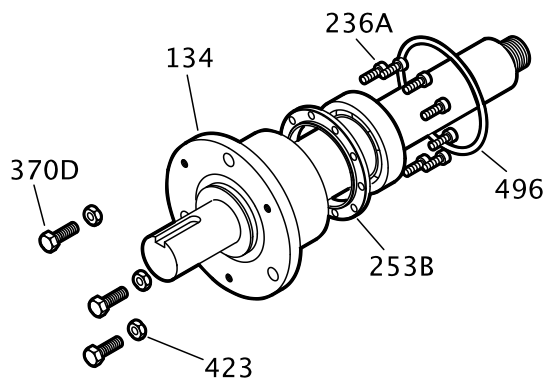

5. Remove the bearing housing O-ring (496).
6. Remove the clamp ring screws (236A) and separate the clamp ring (253B) from the bearing housing (134).
   You must remove the bearings before you can remove the clamp ring from the shaft.
7. Remove the bearing housing (134) and the bearings (112A and 168A) from the shaft (122).

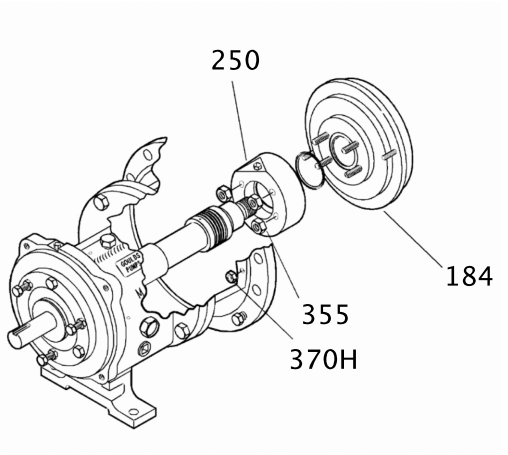

8. Remove the inboard bearing (168A).

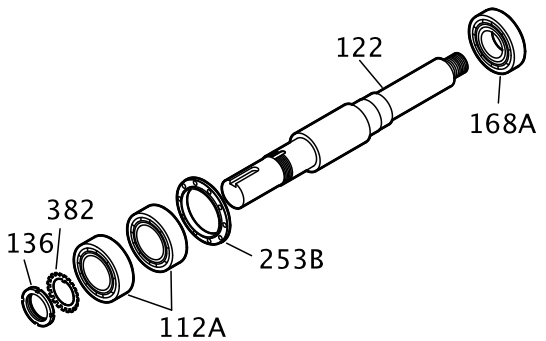

9. Remove the bearing locknut (136) and bearing lockwasher (382).
10. Remove the outboard bearings (112A).

NOTICE:
Use force only on the inner race when you press bearings off the shaft. Do not use force in situations in which you might break a part. Doing so may result in equipment damage.

NOTICE:
Save the bearings for inspection. Do not reuse the bearings. Doing so may result in decreased performance.

11. Remove the outboard labyrinth oil seal (332A) from the bearing housing (134).

Remove the O-rings (497F and 497G) if it is necessary. Labyrinth oil seal O-rings are part of the 3196 maintenance kits and they are sold separately.

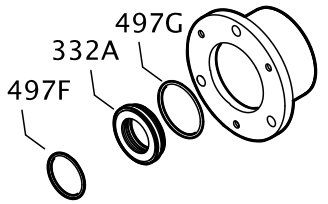

Disassemble the power end (LTi)

1. Remove the clamp screws (370C) and back off the jam nuts (423).
2. Evenly tighten the jack screws (370D) to move the bearing housing (134) out of the bearing frame (228A).
3. Remove the shaft assembly from the bearing frame (228A).

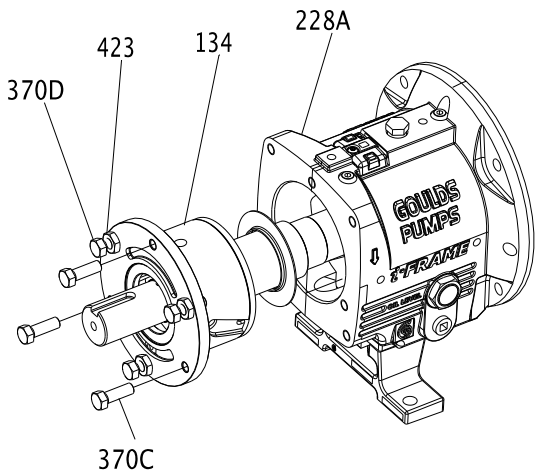

4. Remove the jack screws (370D) with the nuts (423).
5. Remove the clamp-ring screws (236A) and separate the clamp ring (253B) from the bearing housing (134).
   You must remove the bearings before you can remove the clamp ring from the shaft.

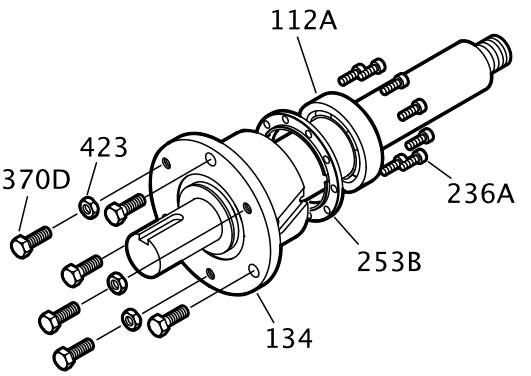

6. Remove the bearing housing (134) and the bearings (112A and 168A) from the shaft (122).

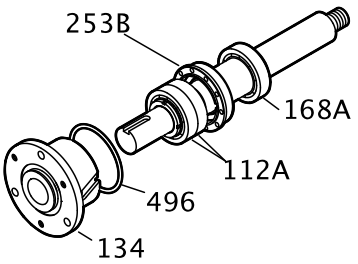

7. Remove the bearing housing O-ring (496) and the inboard bearing (168A).

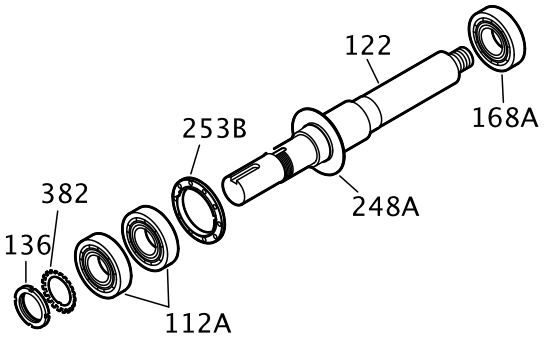

8. Remove the bearing locknut (136) and the bearing lockwasher (382).
9. Remove the outboard bearings (112A) and the clamp ring (253B).

NOTICE:
Do not remove the oil flinger unless it is damaged. Doing so may result in unnecessary shutdown time or equipment damage.

NOTICE:
Use force only on the inner race when you press bearings off the shaft. Do not use force in situations in which you might break a part. Doing so may result in equipment damage.

NOTICE:
Save the bearings for inspection. Do not reuse the bearings. Doing so may result in decreased performance.

10. Remove the outboard labyrinth oil seal (332A) from the bearing housing (134).
11. Remove the O-rings (497F and 497G) if it is necessary.

Labyrinth oil-seal O-rings are part of the 3196 maintenance kits, and they are sold separately.

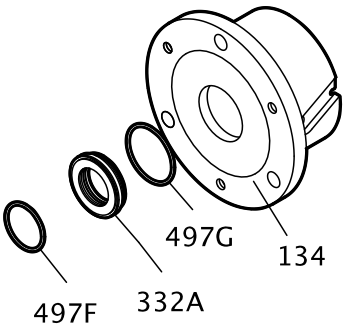

Disassemble the power end (XLT-i and i17)

1. Remove the bearing frame from the frame foot (241) using the frame-foot bolts (370F).

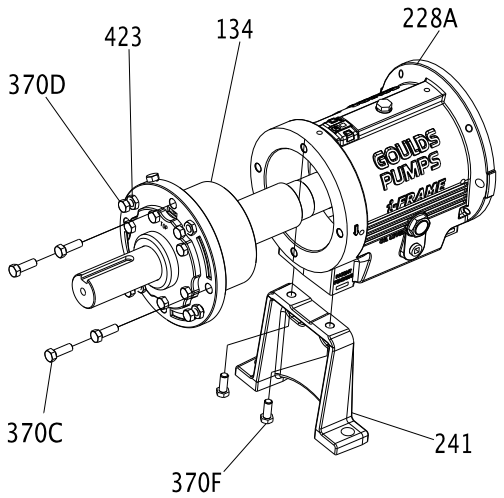

2. Remove the clamp screws (370C) and back off the jam nuts (423).
3. Tighten the jack screws (370D) evenly to move the bearing housing (134) out of the bearing frame (228A).
4. Remove the shaft assembly from the bearing frame (228A).
5. Remove the jack screws (370D), the nuts (423), and the bearing housing O-ring.
6. Remove the inboard bearing (168A).

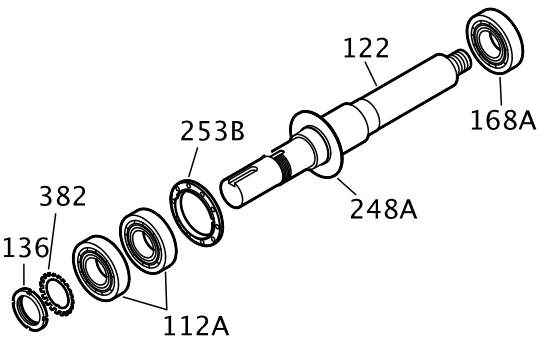

7. Remove the bolts (371C), the bearing end cover (109A), and the gasket (360C).
8. Remove the outboard labyrinth oil seal (332A) from the end cover (109A).

9. Remove the O-rings (497F and 497G) if it is necessary.
   Labyrinth oil-seal O-rings are part of the 3196 maintenance kits, and they are sold separately.

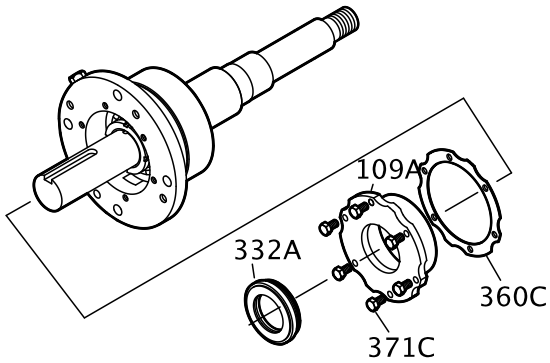

10. Remove the bearing housing (134) and the bearing (112A) from the shaft (122).

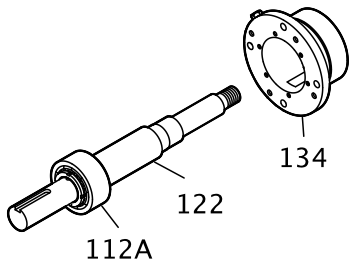

11. Remove the bearing locknut (136), the bearing lockwasher (382), and the outboard bearing (112A).

NOTICE:
Use force only on the inner race when you press bearings off the shaft. Do not use force in situations in which you might break a part. Doing so may result in equipment damage.

NOTICE:
Save the bearings for inspection. Do not reuse the bearings. Doing so may result in decreased performance.

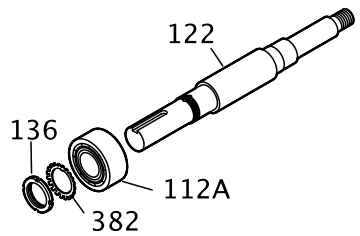

Disassemble the power end (XLT-i and i17 with duplex bearings)

1. Remove the bearing frame to frame foot (241) using the frame-foot bolts (370F).

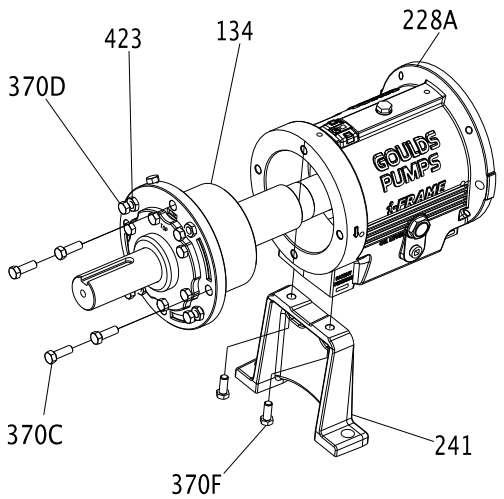

2. Remove the clamp screws (370C) and back off the jam nuts (423).
3. Tighten the jack screws (370D) evenly to move the bearing housing (134) out of the bearing frame (228A).
4. Remove the shaft assembly from the bearing frame (228A).
5. Remove the jack screws (370D) and the nuts (423).
6. Remove the bearing housing O-ring (496) and the inboard bearing (168A).

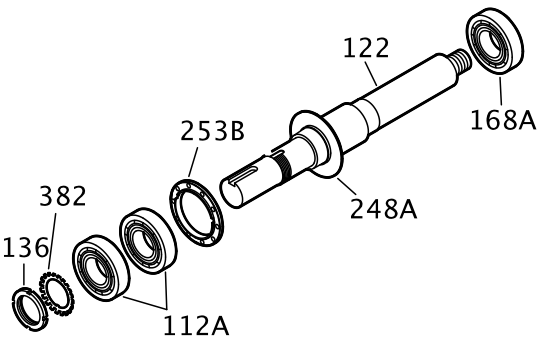

7. Remove the bolts (371C), the end cover (109A), and the gasket (360C).
8. If necessary, remove the outboard labyrinth oil seal (332A) from the end cover (109A) and remove the O-rings (497F and 497G).

Labyrinth oil-seal O-rings are part of the 3196 maintenance kits, or they are sold separately.

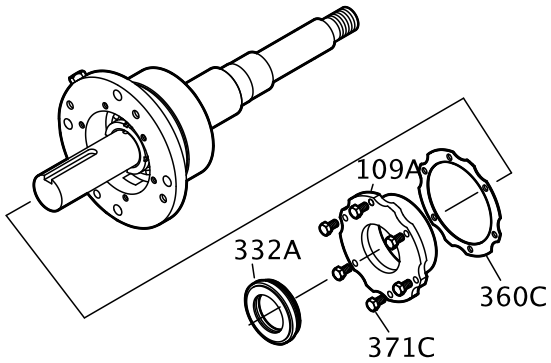

9. Remove the bearing housing (134) and bearings (112A) from the shaft (122) .

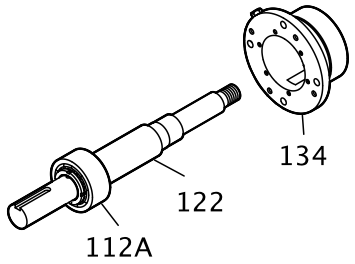

10. Remove the bearing locknut (136), the bearing lockwasher (382), and the outboard bearing (112A).

NOTICE:
Use force only on the inner race when you press bearings off the shaft. Do not use force in situations in which you might break a part. Doing so may result in equipment damage.

NOTICE:
Save the bearings for inspection. Do not reuse the bearings. Doing so may result in decreased performance.

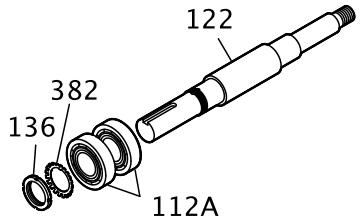

Disassemble the bearing frame

1. Remove these plugs from the bearing frame (228A).
   - oil-fill plug (113A)
   - oil-drain plug (408A)
   - sight-oiler plug (408J)
   - four oil mist/grease connection plugs (408H)
   - oil-cooler inlet and outlet plugs (408L and 408M) or oil cooler

2. For the MTi and LTi models, remove the bearing frame foot-to-frame bolts (370F) and the frame foot (241).

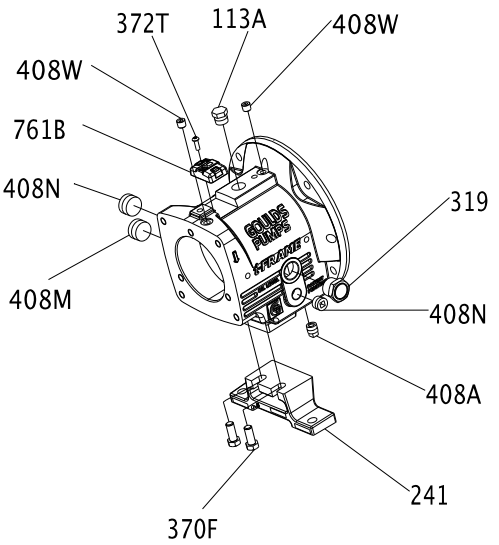

Guidelines for i-ALERT™ Condition Monitor disposal

Precautions

WARNING:
- Never heat the condition monitor to temperatures in excess of 300°F (149°C). Heating to these temperatures could result in death or serious injury.
- Never dispose of the condition monitor in a fire. This could result in death or serious injury.

Guidelines

The battery contained in the condition monitor does not contain enough lithium to qualify as reactive hazardous waste. Use these guidelines when disposing of the condition monitor.

- The condition monitor is safe for disposal in the normal municipal waste stream.
- Adhere to local laws when you dispose of the condition monitor.

Disassemble the C-face adapter

NOTICE:
You must properly support the motor with a clean, uncorroded eye bolt or a strap under both end bells. Failure to do so may result in equipment damage.

1. Loosen the motor-mounting bolts and remove the motor.

Table 12: Required number of motor-mounting bolts
This table shows the number of motor-mounting bolts.

Pump frame	Motor frame	Number of bolts
STi	All	4
MTi and LTi	143-286	4
	324-365	8

2. Loosen the bolts attached to the bearing-frame flange and remove the C-face adapter from the bearing frame.

Pre-assembly inspections

Guidelines

Before you assemble the pump parts, make sure you follow these guidelines:

- Inspect the pump parts according to the information in these pre-assembly topics before you reassemble your pump. Replace any part that does not meet the required criteria.
- Make sure that the parts are clean. Clean the pump parts in solvent in order to remove oil, grease, and dirt.

NOTICE:
Protect machined surfaces while you clean the parts. Failure to do so may result in equipment damage.

Replacement guidelines

Casing check and replacement

WARNING:
Avoid death or serious injury. Leaking fluid can cause fire and/or burns. Inspect and assure gasket sealing surfaces are not damaged and repair or replace as necessary.

Inspect the casing for cracks and excessive wear or pitting. Thoroughly clean gasket surfaces and alignment fits in order to remove rust and debris.

Repair or replace the casing if you notice any of these conditions:

- Localized wear or grooving that is greater than 1/8 in. (3.2 mm) deep
- Pitting that is greater than 1/8 in. (3.2 mm) deep
- Irregularities in the casing-gasket seat surface

Casing areas to inspect

The arrows point to the areas to inspect for wear on the casing:

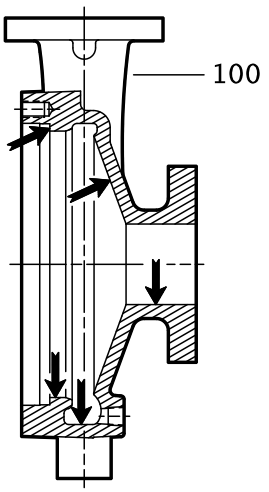

Figure 21: 3196, HT 3196, LF 3196, NM 3196, and 3198 casing

Impeller replacement

This table shows the criteria for replacing the impeller:

Impeller parts	When to replace
Impeller vanes	• When grooved deeper than 1/16 in. (1.6 mm), or • When worn evenly more than 1/32 in. (0.8 mm)
Pumpout vanes	When worn or bent more than 1/32 in. (0.8 mm)
Vane edges	When you see cracks, pitting, or corrosion damage

Impeller areas to inspect

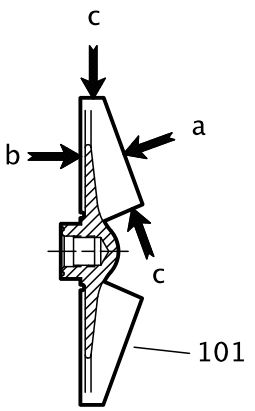

Figure 22: Areas to inspect for wear on the 3196 impeller.

Frame adapter check and replacement

- Replace the frame adapter if it has cracks or excessive corrosion damage.
- Make sure the gasket surface is clean.

Dynamic-seal repeller replacement

This table shows the criteria for replacing dynamic-seal repeller parts for the 3196, CV 3196, and LF 3196 pump models.

Dynamic seal part	When to replace
Dynamic-seal repeller vane	The grooves are deeper than 1/16 in. (1.6 mm) or are worn evenly more than 1/32 in. (0.8 mm).
Sleeve surface	The surface has grooves, pitting, or other damage.

Labyrinth seal replacement

Replace the labyrinth-seal O-ring if it has cuts and cracks.

Gaskets, O-rings, and seats replacement

WARNING:
Avoid death or serious injury. Leaking fluid can cause fire and/or burns. Replace any damaged or worn gaskets/o-rings.

- Replace all gaskets and O-rings at each overhaul and disassembly.
- Inspect the seats. They must be smooth and free of physical defects.
  In order to repair worn seats, skin cut them in a lathe while you maintain dimensional relationships with other surfaces.
- Replace parts if the seats are defective.

Shaft and sleeve replacement guidelines

Two types of sleeves

The 3198 is offered with either a metallic sleeve that uses the standard 3196 shaft or a Teflon sleeve. The Teflon sleeve requires a special shaft and a different inboard labyrinth oil seal.

Shaft measurements check

Replace the shaft (122) if any measurements exceed acceptable values. See Bearing fits and tolerances.

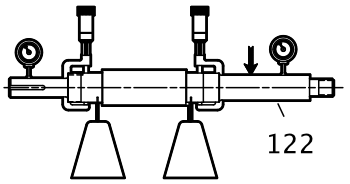

Straightness check

Replace the shaft (122) if runout exceeds the values in this table:

Table 13: Shaft runout tolerances for sleeve fit and coupling fit

	Sleeve fit in inches (millimeters)	Coupling fit in inches (millimeters)
With sleeve	0.001 (0.025)	0.001 (0.025)
Without sleeve	0.002 (0.051)	0.001 (0.025)

Shaft and sleeve check

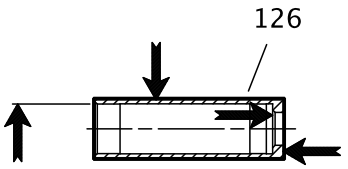

- Check the shaft and sleeve (126) surface for grooves and pitting.
- Replace the shaft and sleeve if any grooves or pits are found.

Bearing-frame inspection

Checklist

Check the bearing frame for these conditions:

- Visually inspect the bearing frame and frame foot for cracks.
- Check the inside surfaces of the frame for rust, scale, or debris. Remove all loose and foreign material.
- Make sure that all lubrication passages are clear.
- If the frame has been exposed to pumped fluid, inspect the frame for corrosion or pitting.
- Inspect the inboard-bearing bores.
  If any bores are outside the measurements in the Bearing fits and tolerances table, replace the bearing frame.

Surface inspection locations

This figure shows the areas to inspect for wear on the bearing frame outside surface.

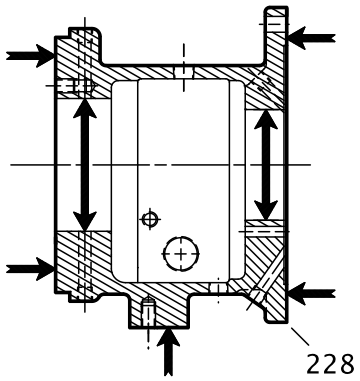

Figure 23: Outside surface inspection locations

This figure shows the areas to inspect for wear on the bearing frame inside surface.

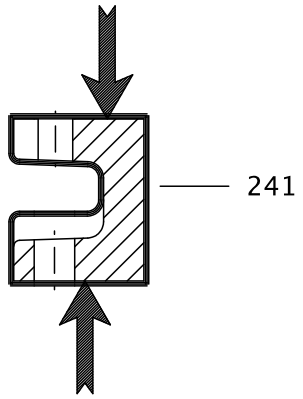

Figure 24: Inside surface inspection locations

C-face adapter inspection

Checklist

- Visually inspect the C-face adapter (340) for cracks.
- Check all surfaces for rust, scale, or debris and remove all loose and foreign material.
- Check for corrosion or pitting.

This figure shows the areas to inspect for cracks on the C-face adapter.

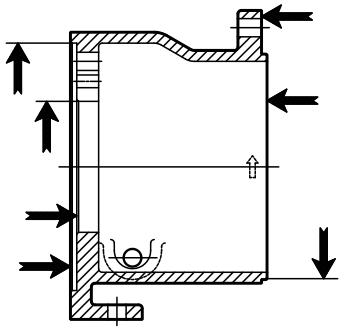

Figure 25: C-face adapter inspection locations

Seal chamber and stuffing box cover inspection

Checklist

Perform these checks when you inspect the seal chamber and stuffing box cover:

- Make sure that these surfaces are clean:
  - Seal chamber and stuffing box cover
  - Dynamic-seal backplate gasket
  - Mounting
- Make sure there is no pitting or wear greater than 1/8 in. (3.2 mm) deep. Replace the seal chamber and stuffing box cover if pitting or wear exceeds this measurement.
- Inspect the machined surfaces and mating faces noted in the figures.

These images point to the areas to inspect:

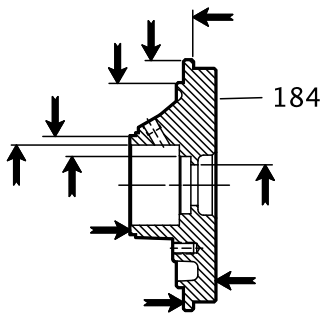

Figure 26: BigBore™ chamber

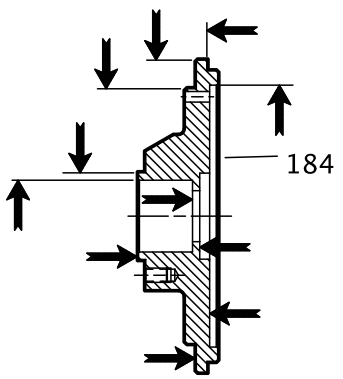

Figure 27: Stuffing box cover

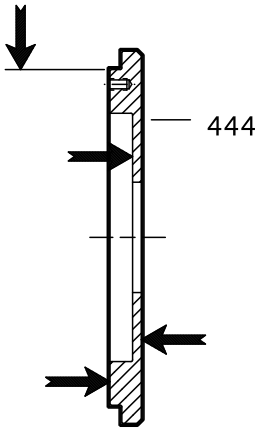

Figure 28: Dynamic-seal backplate

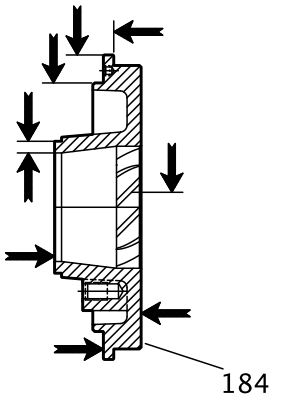

Figure 29: TaperBore™ Plus

Bearings inspection

Condition of bearings

Do not reuse bearings. The condition of the bearings provides useful information on operating conditions in the bearing frame.

Checklist

Perform these checks when you inspect the bearings:

- Inspect the bearings for contamination and damage.
- Note any lubricant condition and residue.
- Inspect the ball bearings to see if they are loose, rough, or noisy when you rotate them.
- Investigate any bearing damage to determine the cause. If the cause is not normal wear, correct the issue before you return the pump to service.

Bearing-housing inspection

Checklist

- Inspect the bearing-housing (134) bore according to the bearing fits and tolerances table.

- Replace the bearing housing if the dimensions exceed acceptable values. Reference: see Bearings fits and tolerances.
- Visually inspect the bearing housing for cracks and pits.

Checklist for specific models

This table shows bearing-housing checks that are required for specific models of pump.

Frame	Bearing-housing check
STi and MTi	Ensure that the snap-ring groove is not cracked.
LTi	Clear all grooves and holes.
XLT-i and i17	Clean the gasket surface.

Inspection locations

The following images point to the areas to inspect on the bearing housing.

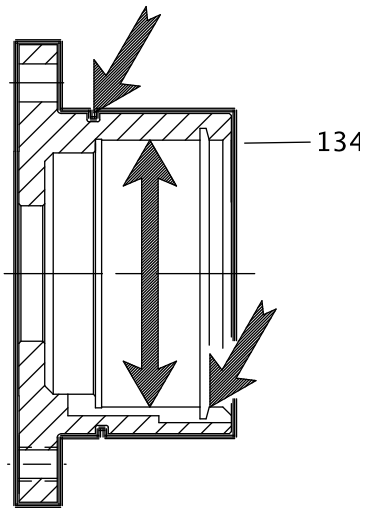

Figure 30: STi and MTi bearing housing

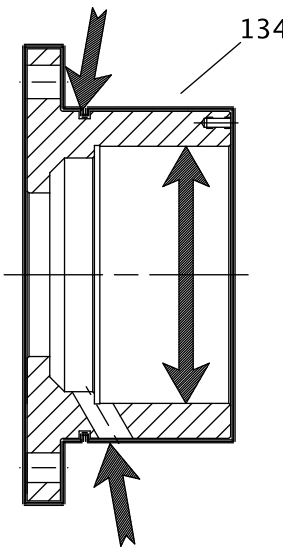

Figure 31: LTi bearing housing

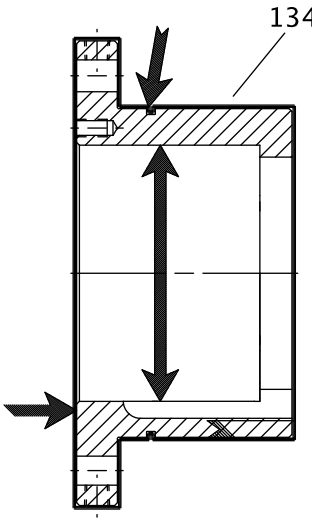

Figure 32: XLT-i and i17 bearing housing

Bearing fits and tolerances

Table 14: Bearing fits and tolerances table

This table references the bearing fits and tolerances according to the ABEC I standard.

	STi inches (millimeters)	MTi inches (millimeters)	LTi inches (millimeters)	XLT-i, i-17 inches (millimeters)
Shaft OD Inboard	1.3785 (35.014) 1.3781 (35.004)	1.7722 (45.014) 1.7718 (45.004)	2.1660 (55.016) 2.1655 (55.004)	2.5597 (65.016) 2.5592 (65.004)
Clearance	0.0010 (0.025) tight 0.0001 (0.003) tight	0.0010 (0.025) tight 0.0001 (0.003) tight	0.0012 (0.030) tight 0.0001 (0.003) tight	0.0012 (0.030) tight 0.0001 (0.003) tight
Bearing ID Inboard	1.3780 (35.001) 1.3775 (34.989)	1.7717 (45.001) 1.7712 (44.988)	2.1654 (55.001) 2.1648 (54.986)	2.5591 (65.001) 2.5585 (64.986)
Frame ID Inboard	2.8346 (72.000) 2.8353 (72.017)	3.9370 (100.000) 3.9379 (100.023)	4.7244 (120.000) 4.7253 (120.023)	5.5118 (140.000) 5.5128 (140.025)
Clearance	0.0012 (0.031) loose 0.0000 (0.000) loose	0.0015 (0.038) loose 0.0000 (0.000) loose	0.0015 (0.038) loose 0.0000 (0.000) loose	0.0017 (0.043) loose 0.0000 (0.000) loose
Bearing OD Inboard	2.8346 (72.000) 2.8341 (71.986)	3.9370 (100.000) 3.9364 (99.985)	4.7244 (120.000) 4.7238 (119.985)	5.5118 (140.000) 5.5111 (139.982)
Shaft OD Outboard	1.1815 (30.010) 1.1812 (30.002)	1.7722 (45.014) 1.7718 (45.004)	1.9690 (50.013) 1.9686 (50.003)	2.5597 (65.016) 2.5592 (65.004)
Clearance	0.0008 (0.020) tight 0.0001 (0.003) tight	0.0010 (0.025) tight 0.0001 (0.003) tight	0.0010 (0.025) tight 0.0001 (0.003) tight	0.0012 (0.030) tight 0.0001 (0.003) tight
Bearing OD Outboard	1.1811 (30.000) 1.1807 (29.990)	1.7717 (45.001) 1.7712 (44.988)	1.9685 (50.000) 1.9680 (49.987)	2.5591 (65.001) 2.5585 (64.986)
Housing OD Outboard	2.8346 (72.000) 2.8353 (72.017)	3.9370 (100.000) 3.9379 (100.022)	4.3307 (110.000) 4.3316 (110.023)	5.5118 (140.000) 5.5128 (140.025)
Clearance	0.0012 (0.031) loose 0.0000 (0.000) loose	0.0015 (0.038) loose 0.0000 (0.000) loose	0.0015 (0.038) loose 0.0000 (0.000) loose	0.0017 (0.043) loose 0.0000 (0.000) loose
Bearing OD Outboard	2.8346 (72.000) 2.8341 (71.986)	3.9370 (100.000) 3.9364 (99.985)	4.3307 (110.000) 4.3301 (109.985)	5.5118 (140.000) 5.5111 (139.982)

Reassembly

Assemble the rotating element and the bearing frame (STi and MTi)

CAUTION:
Wear insulated gloves when you use a bearing heater. Bearings get hot and can cause physical injury.

NOTICE:
Make sure that the pipe threads are clean, and that you apply thread sealant to the plugs and fittings. Failure to do so may result in equipment damage or decreased performance.

NOTICE:
Use an induction heater that heats as well as demagnetizes the bearings when you install bearings. Failure to do so may result in decreased performance.

1. Prepare the bearing frame (228) as follows (see the illustration):
   a) Install the oil-fill plug (113A).
   b) Install the oil-drain plug (408A).
   c) Install the sight glass (319).
   d) Install the sight oiler plug (408J).
   e) Install the plug for the oil-cooler inlet (408L).
   f) Install the plug for the oil-cooler outlet (408M).
   g) Install four oil-mist connection plugs (408H).
      Or: Install two grease fittings (193) and two grease-relief plugs (113).
   h) Attach the bearing-frame foot (241) and fasten the bolts (370F) by hand.

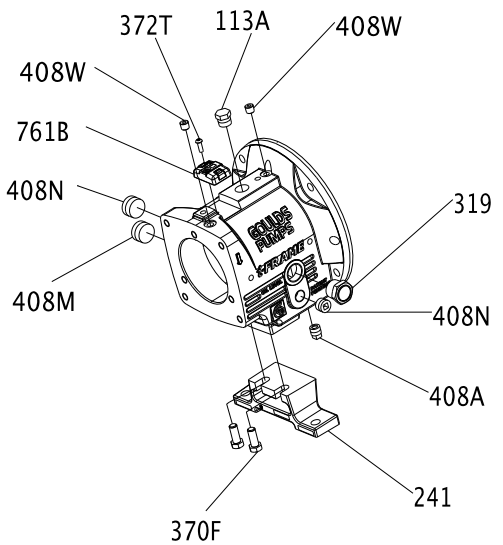

2. Install the outboard bearing (112A) on the shaft (122).
   The regreaseable bearing has a single shield. The outboard bearing is installed with the shield toward the impeller.
   a) Inspect the shaft (122) to ensure that it is clean, dimensionally correct, and is free of nicks and burrs.
   b) Lightly coat the bearing seating with a thin film of oil.
   c) Remove the bearing (112) from its packaging.
   d) Wipe the preservative from the bearing (112) bore and outer diameter.

e) Use an induction heater with a demagnetizing cycle to heat the bearing (112) to an inner ring temperature of 230 °F (110 °C).
f) Position the bearing (112) on the shaft (122) against the shoulder and snug the locknut (136) against the bearing until it is cool.
The locknut prevents the bearing from moving away from the shaft shoulder as it cools.
g) Remove the bearing locknut (136) after the bearing (112) cools.

3. Put the lockwasher (382) onto the shaft (122).
4. Thread the locknut (136) onto the shaft (122) and tighten it until it is snug.
5. Bend the tangs of the lockwasher into the slots of the locknut.
6. Put the bearing-retaining ring (361A) onto the shaft (122).
Make sure that the flat side of the ring is towards the bearing.
7. Coat the inner surfaces of the bearings with lubricant.
8. Put the inboard bearing (168) onto the shaft (122).
The regreasable bearing has a single shield. Make sure that the bearing is installed with the shield away from the impeller.

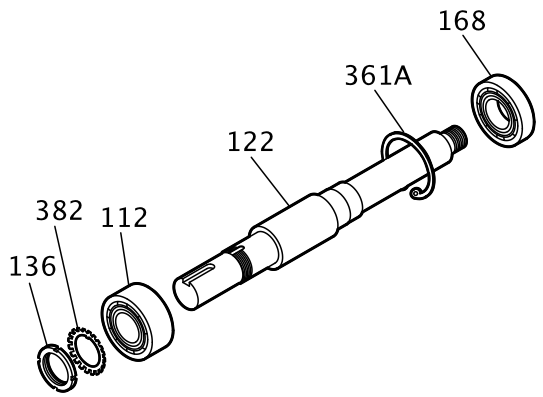

9. Prepare the shaft for assembly as follows (see the illustration):
a) Install a new O-ring (496).
b) Coat the outside of the outboard bearing (112A) with oil.
c) Coat the bore of the bearing housing (134) with oil.
d) Put the bearing housing (134) onto the shaft.
Do not use force.
e) Insert the bearing-retaining ring (361A) into the bore groove of the bearing housing (134).

NOTICE:
Ensure that the space between the ends of the retaining ring are located in the oil-return groove. Failure to do so may result in oil-flow obstruction.

Make sure that the shaft rotates freely.

f) Install the outboard labyrinth oil-seal (332A) into the bearing housing (134).
Place the drain slots of the oil seal at the bottom position (6 o'clock).
Make sure that the edges of the keyway are free from burrs. To protect the O-ring, cover the keyway lengthwise with a piece of electrical tape before you install the oil seal.

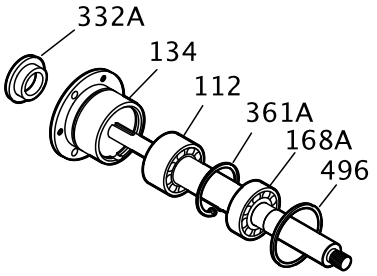

10. Install the shaft assembly into the bearing frame as follows (see the illustration):
    a) Coat the outside of the bearing housing (134) with oil.
    b) Coat all the internal surfaces of the bearing frame (228) with oil.
    c) Install the shaft assembly into the bearing frame (228).
    Make sure that the shaft rotates freely.
    d) Install the clamp bolts (370C) in the bearing housing (134) and tighten by hand.
    e) Install the jack bolts (370D) with the locknuts (423) in the bearing housing (134) and tighten by hand.

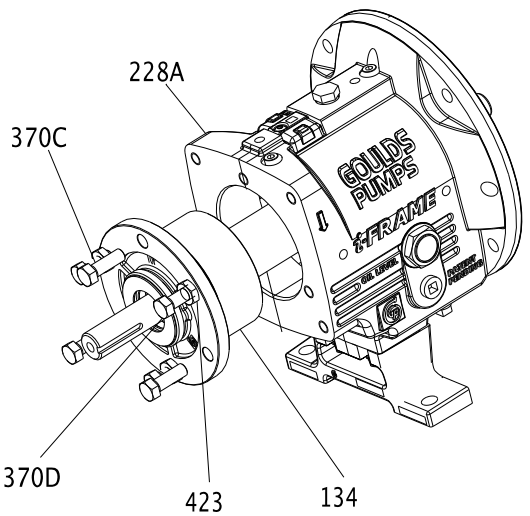

Assemble the rotating element and the bearing frame (STi and MTi with duplex bearings)

CAUTION:
- Wear insulated gloves when you use a bearing heater. Bearings get hot and can cause physical injury.
- Use care when you handle the shaft because it can be heavy. Failure to do so could result in personal injury.

NOTICE:
Make sure that the pipe threads are clean, and that you apply thread sealant to the plugs and fittings. Failure to do so may result in equipment damage or decreased performance.

NOTICE:
Use an induction heater that heats as well as demagnetizes the bearings when you install bearings. Failure to do so may result in decreased performance.

1. Prepare the bearing frame (228) as follows (see the illustration):
   a) Install the oil-fill plug (113A).
   b) Install the oil-drain plug (408A).
   c) Install the sight glass (319).
   d) Install the sight oiler plug (408J).
   e) Install the plug for the oil-cooler inlet (408L).
   f) Install the plug for the oil-cooler outlet (408M).
   g) Install four oil-mist connection plugs (408H).
      Or: Install two grease fittings (193) and two grease-relief plugs (113).
   h) Attach the bearing-frame foot (241) and fasten the bolts (370F) by hand.

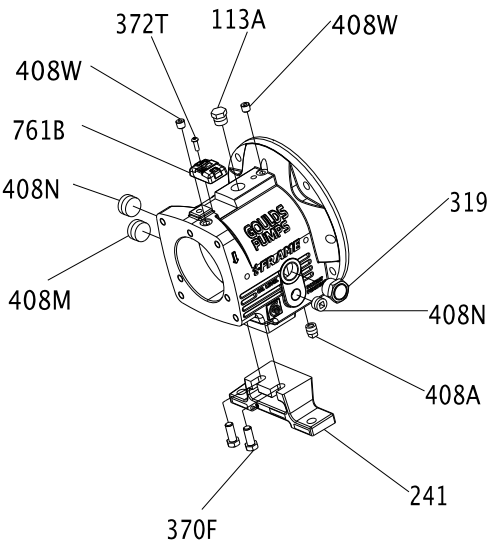

2. Install the outboard bearings (112A) on the shaft (122).
   The regreasable bearing has a single shield. Make sure that the bearing is installed with the shield away from the impeller.
   The duplex bearings are mounted back-to-back. Make sure that the orientation of the bearings are correct.
   a) Inspect the shaft (122) to ensure that it is clean, dimensionally correct, and is free of nicks and burrs.

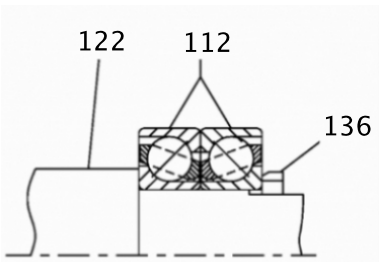

b) Lightly coat the bearing seating with a thin film of oil.
c) Remove the bearings (112) from their packaging.
d) Wipe the preservative from the bearing (112) bore and outer diameter.
e) Use an induction heater with a demagnetizing cycle to heat both bearings (112) to an inner ring temperature of 230 °F (110 °C).
f) Place both bearings (112) on the shaft (122) with the large outer races together (back-to-back).
g) Position the bearings (112) on the shaft (122) against the shoulder and snug the locknut (136) against the bearings until they are cool.
The locknut prevents the bearings from moving away from the shaft shoulder as they cool. Rotate the outer bearing rings relative to each other as they are placed on the shaft to assure good alignment.
h) Remove the bearing locknut (136) after the bearings (112) are cool.

3. Put the lockwasher (382) onto the shaft (122).
4. Thread the locknut (136) onto the shaft (122) and tighten it until it is snug.
5. Bend the tangs of the lockwasher into the slots of the locknut.
6. Place the bearing-clamp ring (253B) onto the shaft (122).
Make sure that the orientation of the bearing-clamp ring is correct.
7. Coat the inner surfaces of the bearings with lubricant.
8. Put the inboard bearing (168) onto the shaft (122).

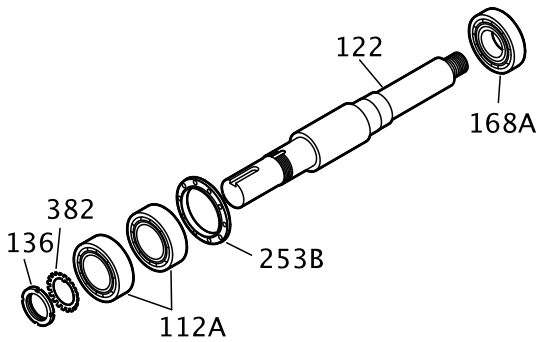

9. Install the bearing housing as follows (see the illustration):
a) Coat the outside of the outboard bearing (112A) with oil.
b) Coat the bore of the bearing housing (134) with oil.
c) Put the bearing housing (134) onto the shaft.
Do not use force.

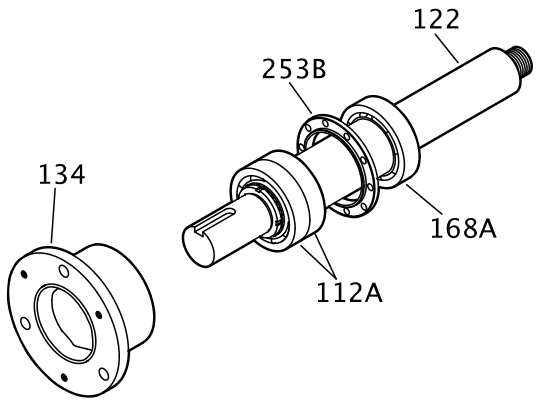

10. Prepare the shaft for assembly as follows (see the illustration):
a) Place the bearing-clamp ring (253B) onto the shaft (122).

b) Fasten the clamp-ring bolts (236A) crosswise.
See the specified torque values.
Make sure that the shaft rotates freely.
c) Install a new O-ring (496).
d) Install the outboard labyrinth oil-seal (332A) into the bearing housing (134).
Place the drain slots of the oil seal at the bottom position (6 o'clock).
Make sure that the edges of the keyway are free from burrs. To protect the O-ring, cover the keyway lengthwise with a piece of electrical tape before you install the oil seal.

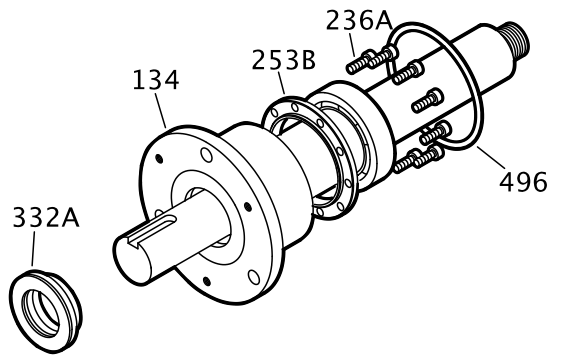

11. Install the shaft assembly into the bearing frame as follows (see the illustration):
a) Coat the outside of the bearing housing (134) with oil.
b) Coat all the internal surfaces of the bearing frame (228) with oil.
c) Install the shaft assembly into the bearing frame (228).
Make sure that the shaft rotates freely.
d) Install the clamp bolts (370C) in the bearing housing (134) and tighten by hand.
e) Install the jack bolts (370D) with the locknuts (423) in the bearing housing (134) and tighten by hand.

Assemble the rotating element and the bearing frame (LTi)

CAUTION:
Wear insulated gloves when you use a bearing heater. Bearings get hot and can cause physical injury.

NOTICE:
Make sure that the pipe threads are clean, and that you apply thread sealant to the plugs and fittings. Failure to do so may result in equipment damage or decreased performance.

NOTICE:
Use an induction heater that heats as well as demagnetizes the bearings when you install bearings. Failure to do so may result in decreased performance.

1. Prepare the bearing frame (228) as follows (see the illustration):
a) Install the oil-fill plug (113A).
b) Install the oil-drain plug (408A).
c) Install the sight glass (319).
d) Install the sight oiler plug (408J).
e) Install the plug for the oil-cooler inlet (408L).
f) Install the plug for the oil-cooler outlet (408M).

g) Install four oil-mist connection plugs (408H).
Or: Install two grease fittings (193) and two grease-relief plugs (113).

h) Attach the bearing-frame foot (241) and fasten the bolts (370F) by hand.

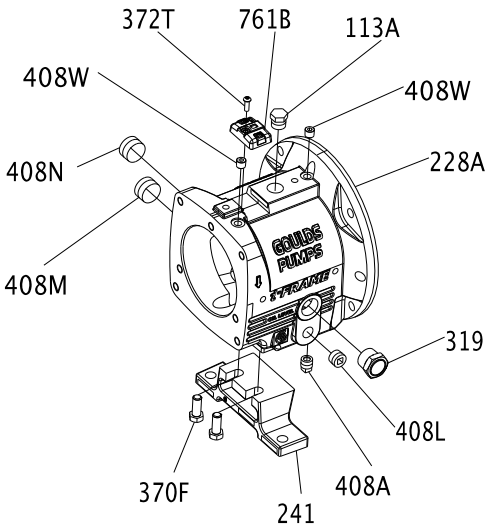

2. Install the oil flinger (248A) onto the shaft (122).

NOTICE:
The oil flinger is press fitted onto the shaft. Use a properly sized driver. Failure to do so may result in damage to the oil flinger.

3. Place the bearing-clamp ring (253B) onto the shaft (122).
Make sure that the orientation of the bearing-clamp ring is correct.
4. Install outboard bearings (112A) on shaft (122).
The regreasable bearing has a single shield. Make sure that the bearing is installed with the shield away from the impeller.
The duplex bearings are mounted back-to-back. Make sure that the orientation of the bearings are correct.
   a) Inspect the shaft (122) to ensure that it is clean, dimensionally correct, and is free of nicks and burrs.

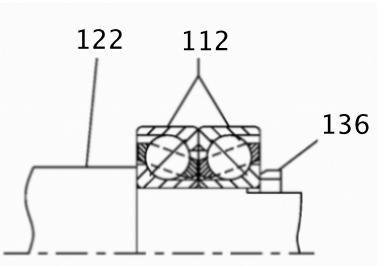

   b) Lightly coat the bearing seating with a thin film of oil.
   c) Remove the bearings (112) from their packaging.
   d) Wipe the preservative from the bearing (112) bore and outer diameter.
   e) Use an induction heater with a demagnetizing cycle to heat both bearings (112) to an inner ring temperature of 230 °F (110 °C).
   f) Place both bearings (112) on the shaft (122) with the large outer races together (back-to-back).

g) Position the bearings (112) on the shaft (122) against the shoulder and snug the locknut (136) against the bearings until they are cool.
The locknut prevents the bearings from moving away from the shaft shoulder as they cool. Rotate the outer bearing rings relative to each other as they are placed on the shaft to assure good alignment.

h) Remove the bearing locknut (136) after the bearings (112) are cool.

5. Put the lockwasher (382) onto the shaft (122).
6. Thread the locknut (136) onto the shaft (122) and tighten it until it is snug.
7. Bend the tangs of the lockwasher into the slots of the locknut.
8. Coat the inner surfaces of the bearings with lubricant.
9. Put the inboard bearing (168) onto the shaft (122).

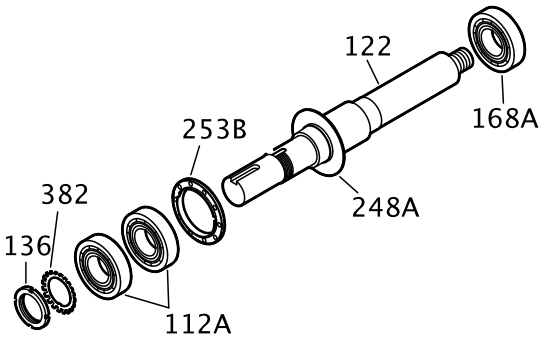

10. Install the bearing housing as follows (see the illustration):
    a) Coat the outside of the outboard bearing (112A) with oil.
    b) Coat the bore of the bearing housing (134) with oil.
    c) Put the bearing housing (134) onto the shaft.
    Do not use force.

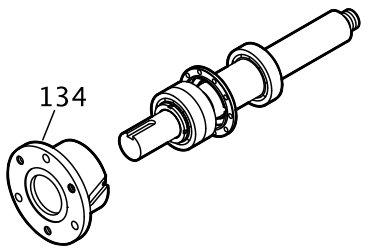

11. Prepare the shaft for assembly as follows (see the illustration):
    a) Fasten the clamp-ring bolts (236A) crosswise.
    See the specified torque values.
    Make sure that the shaft rotates freely.
    b) Install a new O-ring (496).

c) Install the outboard labyrinth oil-seal (332A) into the bearing housing (134).
Place the drain slots of the oil seal at the bottom position (6 o'clock).
Make sure that the edges of the keyway are free from burrs. To protect the O-ring, cover the keyway lengthwise with a piece of electrical tape before you install the oil seal.

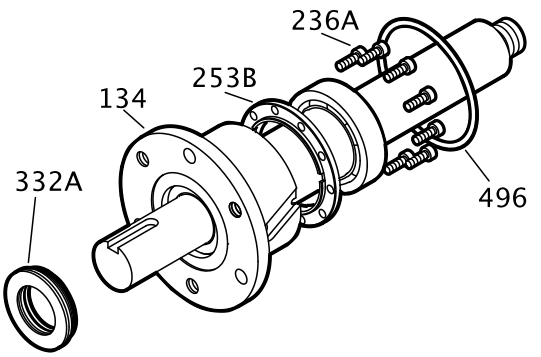

12. Install the shaft assembly into the bearing frame as follows (see the illustration):
    a) Coat the outside of the bearing housing (134) with oil.
    b) Coat all the internal surfaces of the bearing frame (228) with oil.
    c) Install the shaft assembly into the bearing frame (228).
    Make sure that the shaft rotates freely.
    d) Install the clamp bolts (370C) in the bearing housing (134) and tighten by hand.
    e) Install the jack bolts (370D) with the locknuts (423) in the bearing housing (134) and tighten by hand.

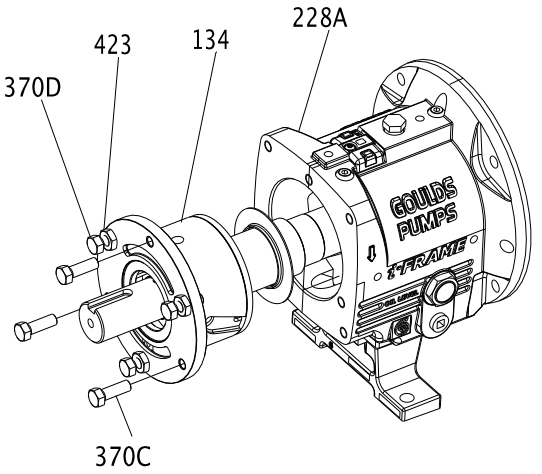

Assemble the rotating element and the bearing frame (XLT-i and i17)

CAUTION:
- Wear insulated gloves when you use a bearing heater. Bearings get hot and can cause physical injury.
- Use care when you handle the shaft because it can be heavy. Failure to do so could result in personal injury.

NOTICE:
Make sure that the pipe threads are clean, and that you apply thread sealant to the plugs and fittings. Failure to do so may result in equipment damage or decreased performance.

NOTICE:
Use an induction heater that heats as well as demagnetizes the bearings when you install bearings. Failure to do so may result in decreased performance.

1. Prepare the bearing frame (228) as follows (see the illustration):
   a) Install the oil-fill plug (113A).
   b) Install the oil-drain plug (408A).
   c) Install the sight glass (319).
   d) Install the sight oiler plug (408J).
   e) Install the plug for the oil-cooler inlet (408L).
   f) Install the plug for the oil-cooler outlet (408M).
   g) Install four oil-mist connection plugs (408H).
      Or: Install two grease fittings (193) and two grease-relief plugs (113).

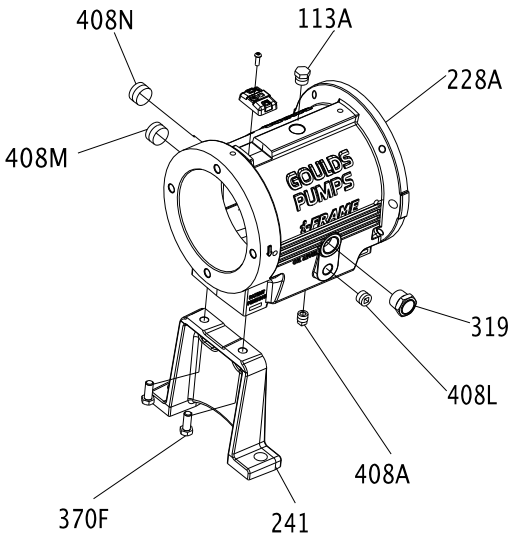

2. Install the outboard bearings (112A) on the shaft (122).
   The regreaseable bearing has a single shield. The outboard bearing is installed with the shield toward the impeller.
   a) Inspect the shaft (122) to ensure that it is clean, dimensionally correct, and is free of nicks and burrs.
   b) Lightly coat the bearing seating with a thin film of oil.
   c) Remove the bearing (112) from its packaging.
   d) Wipe the preservative from the bearing (112) bore and outer diameter.
   e) Use an induction heater with a demagnetizing cycle to heat the bearing (112) to an inner ring temperature of 230 °F (110 °C).
   f) Position the bearing (112) on the shaft (122) against the shoulder and snug the locknut (136) against the bearing until it is cool.
      The locknut prevents the bearing from moving away from the shaft shoulder as it cools.
   g) Remove the bearing locknut (136) after the bearing (112) cools.
3. Put the lockwasher (382) onto the shaft (122).
4. Thread the locknut (136) onto the shaft (122) and tighten it until it is snug.

5. Bend the tangs of the lockwasher into the slots of the locknut.

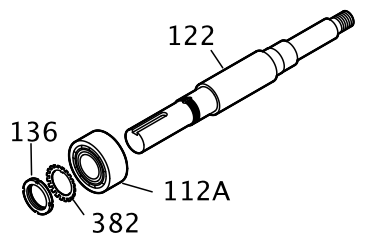

6. Install the bearing housing as follows (see the illustration):
   a) Coat the outside of the outboard bearing (112A) with oil.
   b) Coat the bore of the bearing housing (134) with oil.
   c) Put the bearing housing (134) onto the shaft.
   Do not use force.

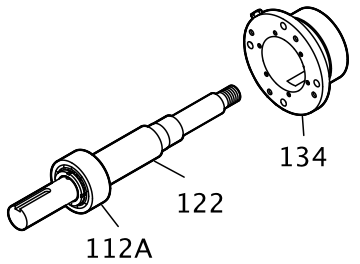

7. Fasten the gasket (360C) and the end cover (109A) with the bolts (371C).
   See the specified torque values.
   Make sure that the shaft rotates freely.

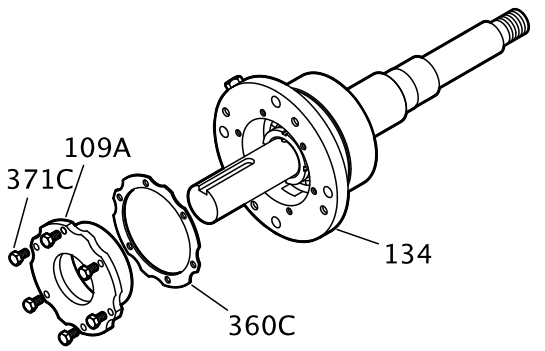

8. Install the inboard bearing as follows (see the illustration):
   a) Coat the inner surfaces of the bearings with lubricant.
   b) Put the inboard bearing (168) onto the shaft (122).
   The regreasable bearing has a single shield. Make sure that the bearing is installed with the shield away from the impeller.

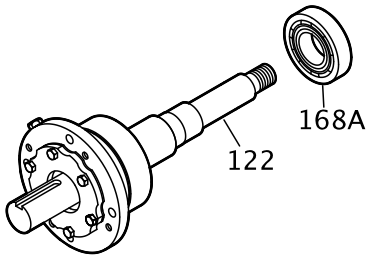

9. Install the remaining parts onto the bearing shaft as follows (see the illustration):
   a) Install a new O-ring (496).
   b) Install the outboard labyrinth oil-seal (332A) into the end cover (109A).
      Place the drain slots of the oil seal at the bottom position (6 o'clock).
      Make sure that the edges of the keyway are free from burrs. To protect the O-ring, cover the keyway lengthwise with a piece of electrical tape before you install the oil seal.

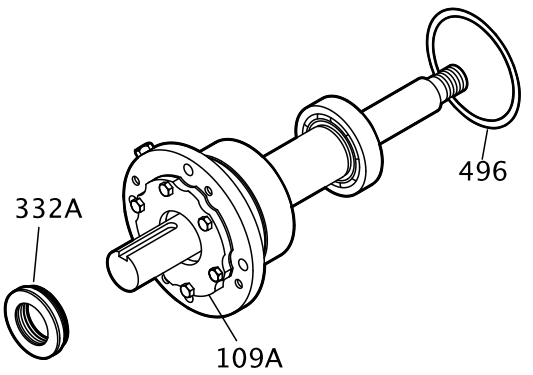

10. Install the shaft assembly into the bearing frame as follows (see the illustration):
    a) Coat the outside of the bearing housing (134) with oil.
    b) Coat all the internal surfaces of the bearing frame (228) with oil.
    c) Install the shaft assembly into the bearing frame (228).
       Make sure that the shaft rotates freely.
    d) Install the clamp bolts (370C) in the bearing housing (134) and tighten by hand.
    e) Install the jack bolts (370D) with the locknuts (423) in the bearing housing (134) and tighten by hand.
    f) Attach the bearing-frame foot (241) and fasten the bolts (370F) by hand.

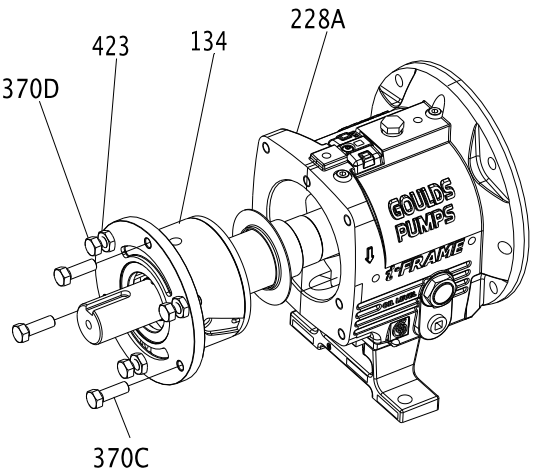

Assemble the rotating element and the bearing frame (XLT-i and i17 with duplex bearings)

CAUTION:
- Wear insulated gloves when you use a bearing heater. Bearings get hot and can cause physical injury.
- Use care when you handle the shaft because it can be heavy. Failure to do so could result in personal injury.

NOTICE:
Make sure that the pipe threads are clean, and that you apply thread sealant to the plugs and fittings. Failure to do so may result in equipment damage or decreased performance.

NOTICE:
Use an induction heater that heats as well as demagnetizes the bearings when you install bearings. Failure to do so may result in decreased performance.

1. Prepare the bearing frame (228) as follows (see the illustration):
   a) Install the oil-fill plug (113A).
   b) Install the oil-drain plug (408A).
   c) Install the sight glass (319).
   d) Install the sight oiler plug (408J).
   e) Install the plug for the oil-cooler inlet (408L).
   f) Install the plug for the oil-cooler outlet (408M).
   g) Install four oil-mist connection plugs (408H).
      Or: Install two grease fittings (193) and two grease-relief plugs (113).

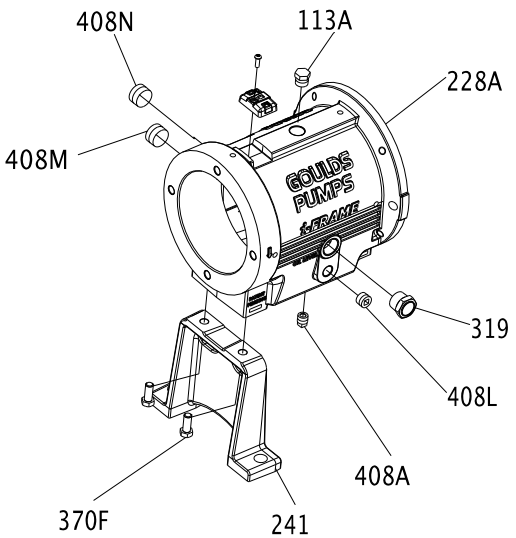

2. Install the outboard bearings (112A) on the shaft (122).
   The regreasable bearing has a single shield. Make sure that the bearing is installed with the shield away from the impeller.
   The duplex bearings are mounted back-to-back. Make sure that the orientation of the bearings are correct.
   a) Inspect the shaft (122) to ensure that it is clean, dimensionally correct, and is free of nicks and burrs.

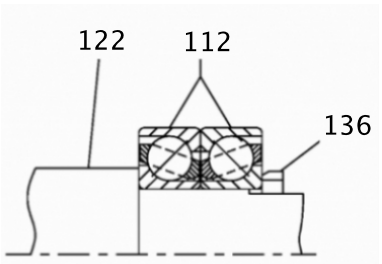

   b) Lightly coat the bearing seating with a thin film of oil.

c) Remove the bearings (112) from their packaging.
d) Wipe the preservative from the bearing (112) bore and outer diameter.
e) Use an induction heater with a demagnetizing cycle to heat both bearings (112) to an inner ring temperature of 230 °F (110 °C).
f) Place both bearings (112) on the shaft (122) with the large outer races together (back-to-back).
g) Position the bearings (112) on the shaft (122) against the shoulder and snug the locknut (136) against the bearings until they are cool.
The locknut prevents the bearings from moving away from the shaft shoulder as they cool. Rotate the outer bearing rings relative to each other as they are placed on the shaft to assure good alignment.
h) Remove the bearing locknut (136) after the bearings (112) are cool.

3. Put the lockwasher (382) onto the shaft (122).
4. Thread the locknut (136) onto the shaft (122) and tighten it until it is snug.
5. Bend the tangs of the lockwasher into the slots of the locknut.

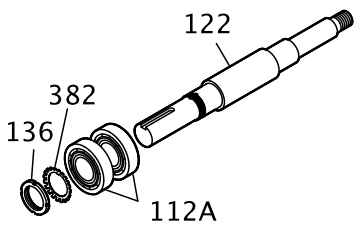

6. Install the bearing housing as follows (see the illustration):
a) Coat the outside of the outboard bearing (112A) with oil.
b) Coat the bore of the bearing housing (134) with oil.
c) Put the bearing housing (134) onto the shaft.
Do not use force.

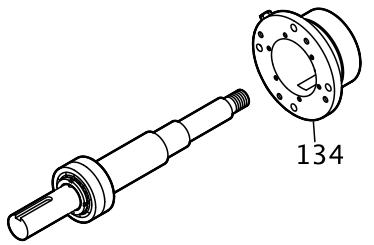

7. Fasten the gasket (360C) and the end cover (109A) with the bolts (371C).
See the specified torque values.
Make sure that the shaft rotates freely.

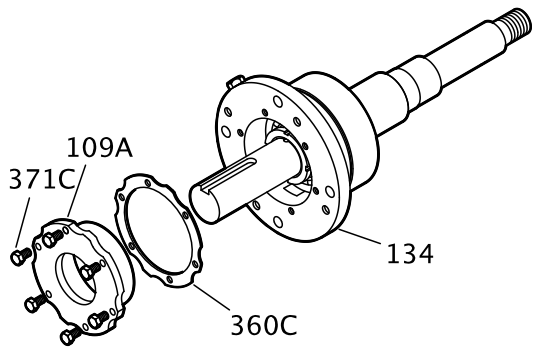

8. Install the inboard bearing as follows (see the illustration):

a) Coat the inner surfaces of the bearings with lubricant.
b) Put the inboard bearing (168) onto the shaft (122).
The regreasable bearing has a single shield. Make sure that the bearing is installed with the shield away from the impeller.

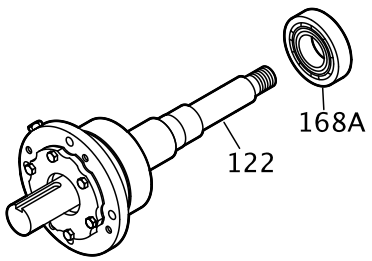

9. Install the remaining parts onto the bearing shaft as follows (see the illustration):
a) Install a new O-ring (496).
b) Install the outboard labyrinth oil-seal (332A) into the end cover (109A).
Place the drain slots of the oil seal at the bottom position (6 o'clock).
Make sure that the edges of the keyway are free from burrs. To protect the O-ring, cover the keyway lengthwise with a piece of electrical tape before you install the oil seal.

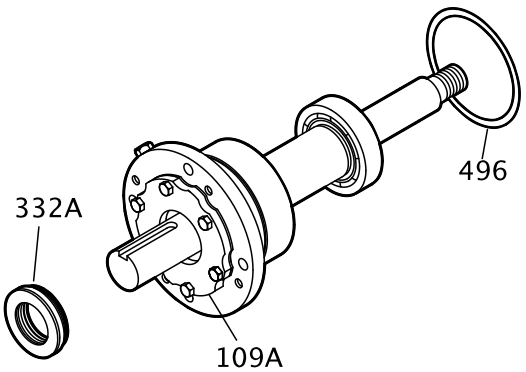

10. Install the shaft assembly into the bearing frame as follows (see the illustration):
a) Coat the outside of the bearing housing (134) with oil.
b) Coat all the internal surfaces of the bearing frame (228) with oil.
c) Install the shaft assembly into the bearing frame (228).
Make sure that the shaft rotates freely.
d) Install the clamp bolts (370C) in the bearing housing (134) and tighten by hand.
e) Install the jack bolts (370D) with the locknuts (423) in the bearing housing (134) and tighten by hand.

f) Attach the bearing-frame foot (241) and fasten the bolts (370F) by hand.

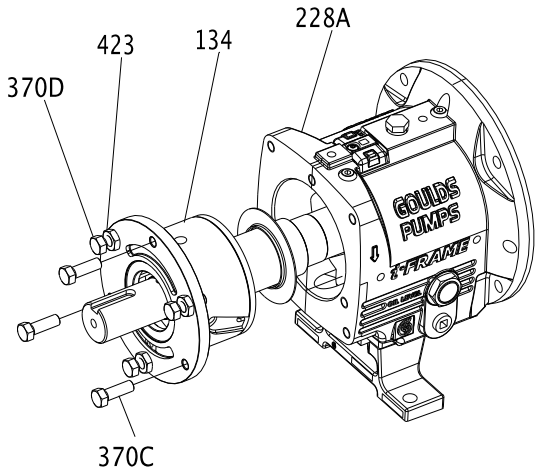

Assemble the frame

1. Support the frame assembly in a horizontal position.
2. Check the shaft-end play by moving the shaft forward and backward by hand, and note any indicator movement.
   If the total indicator reading is greater than the values in this table, then disassemble the shaft and determine the cause.

Table 15: Shaft-end play

Use this table as a reference for shaft-end play values.

Frame	Double row bearing	Duplex bearing
STi inches (millimeters)	0.0011 (0.028) 0.0019 (0.048)	0.0007 (0.018) 0.0010 (0.025)
MTi inches (millimeters)	0.0013 (0.033) 0.0021 (0.053)	0.0009 (0.023) 0.0012 (0.030)
LTi inches (millimeters)	Not applicable	0.0010 (0.025) 0.0015 (0.038)
XLT-i inches (millimeters)	0.0014 (0.036) 0.0023 (0.058)	0.0010 (0.025) 0.0015 (0.038)

Frame	Double row bearing	Duplex bearing

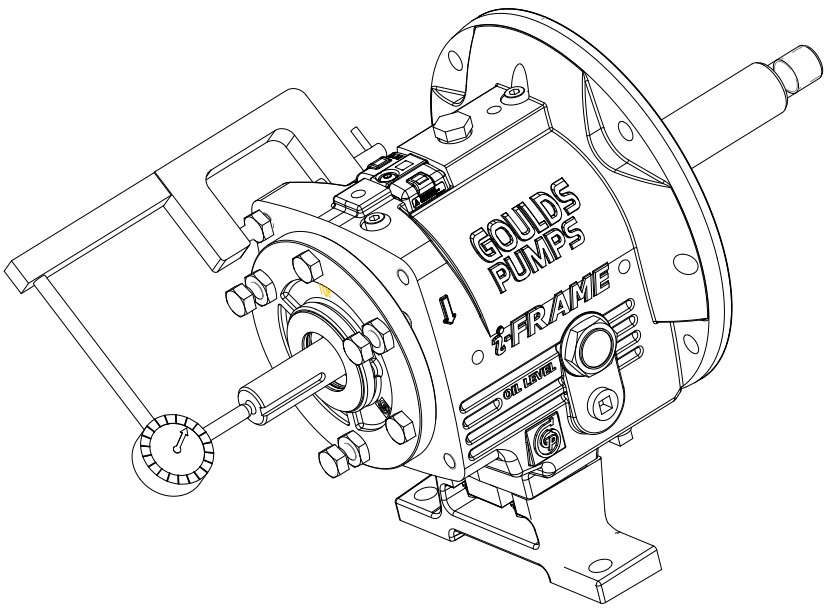

3. Check the shaft-sleeve (126) runout.
   a) Install the shaft sleeve.
   b) Thread the impeller on the shaft until hand tight.
   c) Rotate the shaft 360º.
   d) If the total indicator reading is greater than 0.002 in. (0.051 mm), then disassemble the shaft sleeve and determine the cause.
   e) Remove the impeller and shaft sleeve.

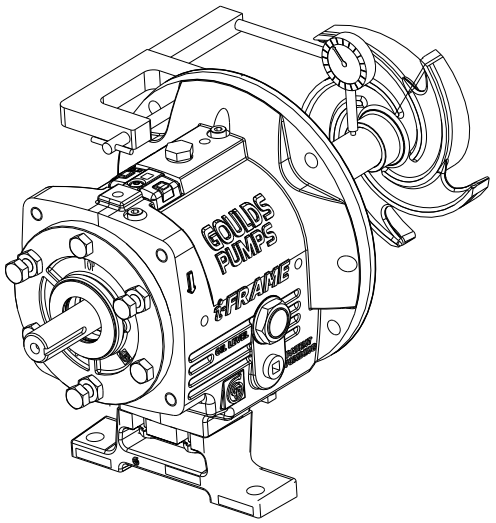

4. Check the frame-face runout by rotating the shaft so that the indicator measures the fit for 360º.
   If the total indicator reading is greater than 0.001 in. (0.025 mm), then disassemble and determine the cause.

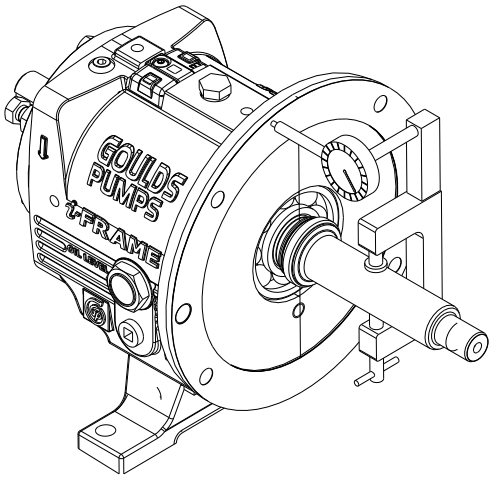

5. Place the manila gasket (360D) on the frame (228), and hold the gasket in place by inserting the dowel pins (469B) in their holes.
   The gasket is designed to fit only one way.
6. Install the frame adapter.
   a) Place the frame adapter (108) onto the frame assembly.
   b) Align the bolt holes and dowel locations on the frame adapter with the bolt holes and dowel locations on the frame.

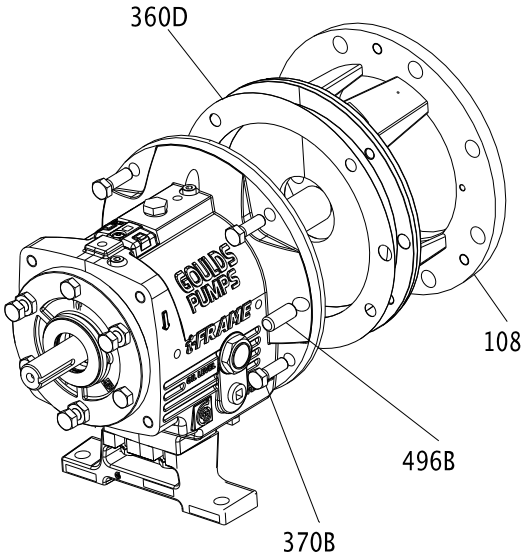

   c) Install the dowel pins (469B) and bolts (370B). Tighten the bolts in a criss-cross pattern according to the specifications in the bolt torque values table.

d) Rotate the shaft 360º to check the adapter fit.
If the total indicator reading is greater than 0.005 in. (0.13 mm), then determine the cause and correct it before you proceed.

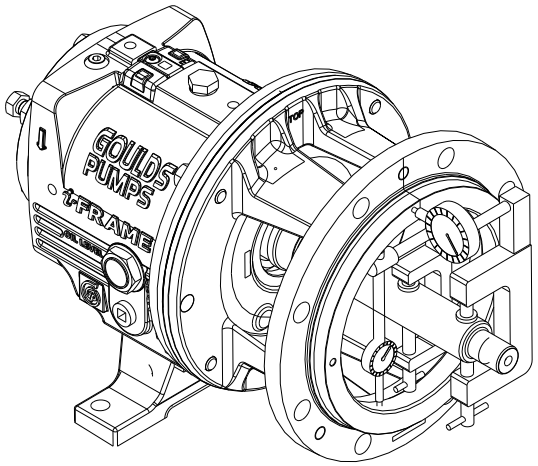

7. Install the labyrinth oil-seal (333A) into the adapter (108) and the bearing frame (228). The labyrinth oil seal is an O-ring fit.
8. Position the labyrinth oil-seal drain slots at the bottom (6 o'clock) position.
Refer to Assemble the INPRO labyrinth oil-seal for more information on the labyrinth oil-seal installation.

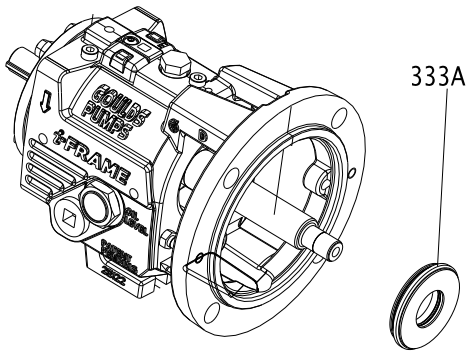

INPRO labyrinth oil seal description

Description

The INPRO VBXX-D Labyrinth Oil Seal consists of the rotor (1), the stator (2), and the VBX Ring (3). The rotor (1) fits over the shaft and is held in place by an elastomeric drive ring (4). The drive ring causes the rotor to turn with the shaft and provides a positive, static seal against the shaft. Since there is no metal-to-metal contact, there are no friction or wear concerns.

NOTICE:
The INPRO VBX is a one-piece design. Do not attempt to separate the rotor from the stator before or during installation. Doing so may result in equipment damage.

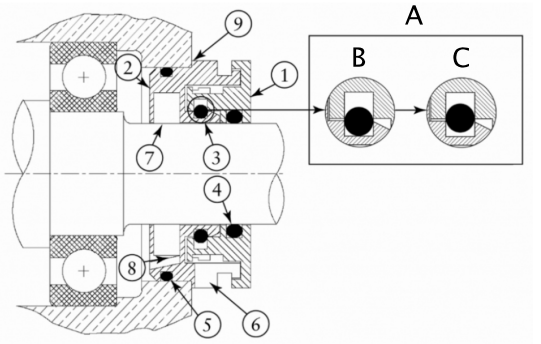

A	"VBX" O-ring action
B	Static
C	Dynamic
1	Rotor
2	Stator
3	"VBX" ring
4	Rotor drive ring
5	Stator gasket
6	Expulsion port
7	D groove
8	Lube return
9	Location shoulder

Assemble the INPRO labyrinth oil seal

1. Wrap electrical tape around the coupling end of the shaft to cover the keyway.

   NOTICE:
   The edges of the keyway can be sharp. Make sure to cover the keyway with tape. Failure to do so may result in cutting the O-ring and damaging the seal.

2. Lightly lube the shaft and the drive ring (4) with lubricant.
   Lubricant helps in the installation process. Be sure that the lubricant is compatible with the O-ring material and the pump-system standards.
3. Use an arbor press to install the outboard INPRO VBXX-D into the bearing cover with the expulsion port (6) at the 6 o'clock position.
   Press the outboard INPRO VBXX-D down to where the stator location ramp (9) starts to avoid angular misalignment. There is a nominal 0.002 in. (0.051 mm) interference fit.
4. Discard any residual material from the stator gasket (5).
5. Complete the applicable step in this table depending on the model of your pump.

Pump model	Action
STi	Press the inboard seal along the shaft into the bearing frame.
All other models	After you install the frame adapter on the bearing frame, press the inboard seal over the shaft and into the adapter.

Assemble the C-face adapter

1. Mount the pump and the motor-coupling hubs if they are not already mounted.
2. Slide the C-face adapter over the pump shaft and mount it against the bearing-frame flange using four bolts.
3. Mount the motor to the C-face adapter using either four or eight motor bolts.

Table 16: Motor-bolt torque values for C-face adapter to frame

This table contains the motor-bolt torque values for assembling the C-face adapter to a frame.

Frame	Lubricated threads	Dry threads
STi	20 ft-lb (27 Nm)	30 ft-lb (41 Nm)
MTi	20 ft-lb (27 Nm)	30 ft-lb (41 Nm)
LTi	20 ft-lb (27 Nm)	30 ft-lb (41 Nm)

Table 17: Motor-bolt torque values for C-face adapter to motor

This table contains the motor-bolt torque values for assembling the C-face adapter to a motor.

Frame	Lubricated threads	Dry threads
143TC-145TC	8 ft-lb (11 Nm)	12 ft-lb (16 Nm)
182TC-286TC	20 ft-lb (27 Nm)	30 ft-lb (41 Nm)
324TC-365TC	39 ft-lb (53 Nm)	59 ft-lb (80 Nm)

Shaft sealing

WARNING:
The mechanical seal used in an Ex-classified environment must be properly certified. Prior to startup, make sure that all areas that could leak pumped fluid to the work environment are closed.

NOTICE:
The mechanical seal must have an appropriate seal-flush system. Otherwise, excess heat generation and seal failure can occur.

Methods for sealing the shaft

These sections discuss the methods that you can use to seal the shaft.

- Seal the shaft with a dynamic seal.
- Seal the shaft with a cartridge-mechanical seal.
- Seal the shaft with a conventional inside-component mechanical seal.
- Seal the shaft with a conventional outside-component mechanical seal.
- Seal the shaft with a packed stuffing box.

Seal the shaft with a dynamic seal

1. Place the backplate (444) with the flat side down on the bench.

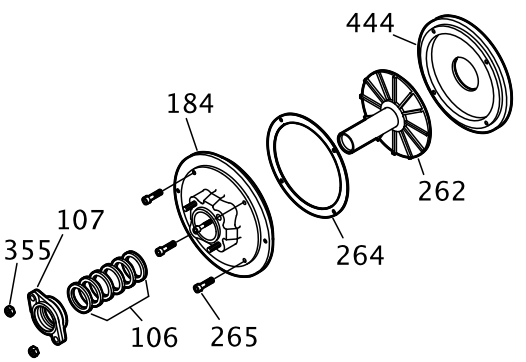

2. Place the repeller (262) in the backplate (444) with the sleeve side up.
3. Place a Teflon gasket (264) on the backplate (444) and align the holes in the gasket with the holes in the backplate.
4. Place a stuffing-box cover (184) on the backplate (444) and align the holes in the gasket with the holes in the backplate.
5. Install four socket-head capscrews (265) and tighten them securely.
6. Install a new sealing element into the gland.

7. Install a gasket (360Q) and gland (107) on the stuffing-box cover (184).
8. Install the nuts (355).
9. Install a dynamic-seal assembly and nuts (370H).

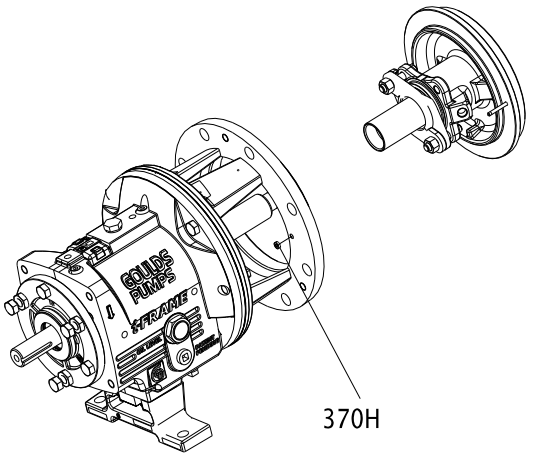

10. Check the stuffing-box-cover runout and rotate the indicator through 360 degrees. An indicator reading that is greater than 0.005 in. (0.013 mm) indicates a problem.

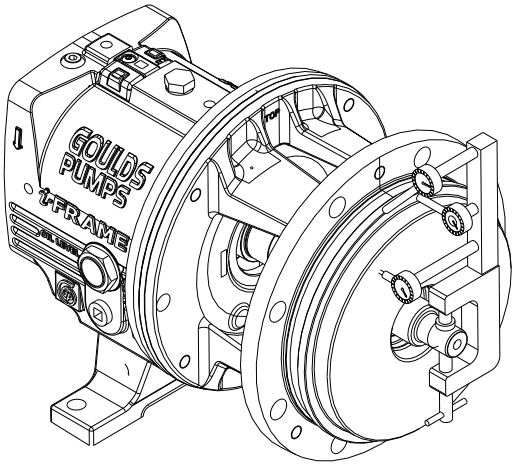

Seal the shaft with a packed stuffing box

WARNING:
Packed stuffing boxes are not allowed in an ATEX-classified environment.

Pumps are shipped without the packing, lantern ring, or split gland installed. These parts are included with the box of fittings shipped with each pump and must be installed before startup.

1. Carefully clean the stuffing-box bore.

2. Twist the packing enough to get it around the shaft.

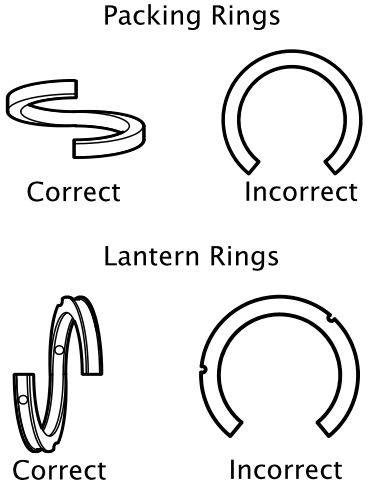

3. Insert the packing and stagger the joints in each ring by 90°.
   Install the stuffing-box parts in this order:
   a) Two packing rings
   b) One lantern ring (two-piece)
   c) Three packing rings

NOTICE:
Make sure that the lantern ring is located at the flushing connection to ensure that flush is obtained. Failure to do so may result in decreased performance.

4. Install the gland halves and evenly hand-tighten the nuts.

Seal the shaft with a cartridge mechanical seal

WARNING:
The mechanical seal used in an Ex-classified environment must be properly certified. Prior to startup, make sure that all areas that could leak pumped fluid to the work environment are closed.

NOTICE:
The mechanical seal must have an appropriate seal-flush system. Otherwise, excess heat generation and seal failure can occur.

1. Slide the cartridge seal onto the shaft or sleeve until it contacts the inboard labyrinth oil seal.
2. Assemble the seal chamber.
3. Slide the cartridge seal into the seal chamber and secure using the four studs and nuts.
4. Continue with the pump reassembly.
5. Set the impeller clearance.
   Refer to the Impeller clearance setting topic for more information.
6. Tighten the setscrews in the seal locking ring in order to secure the seal to the shaft.
7. Remove the centering clips from the seal.

Seal the shaft with a conventional inside-component mechanical seal

WARNING:
The mechanical seal used in an Ex-classified environment must be properly certified. Prior to startup, make sure that all areas that could leak pumped fluid to the work environment are closed.

NOTICE:
The mechanical seal must have an appropriate seal-flush system. Otherwise, excess heat generation and seal failure can occur.

1. Assemble the seal chamber:
   a) Install a seal-chamber cover or a backplate (184) and fasten with nuts (370H) with .

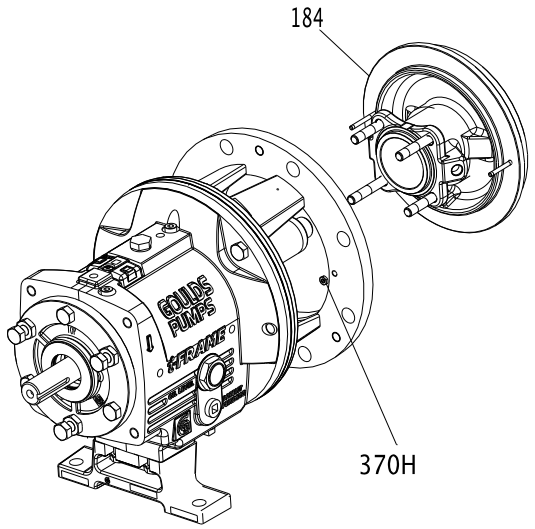

   b) Check the seal-chamber cover runout.

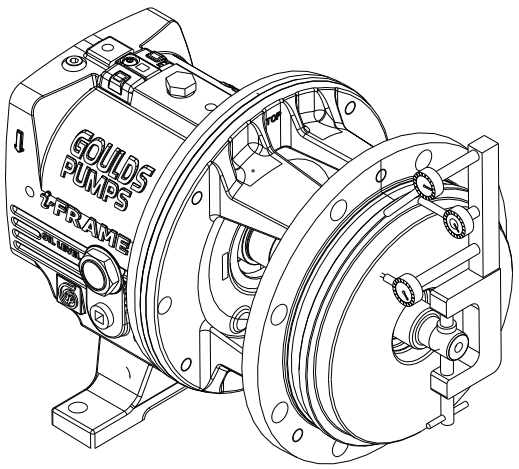

Rotate the indicator through 360º. If the total indicator reading is greater than 0.005 inches (0.13 mm), determine the cause and correct the issue before you proceed.

c) Install the shaft sleeve (126).

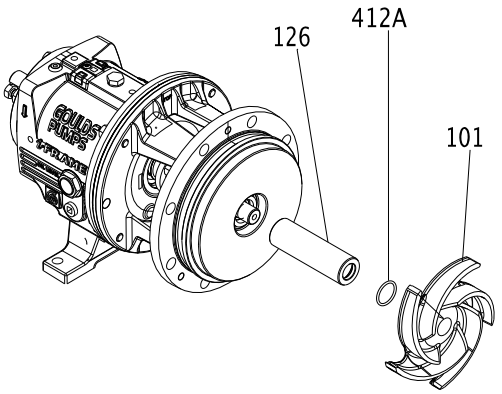

2. Mark the shaft and sleeve at the face of the seal chamber.
3. Continue the complete reassembly of the pump, except for the mechanical seal.
4. Set the impeller clearance.
   Refer to the Impeller Clearance Setting section for more information.
5. Scribe a line on the marked shaft and sleeve at the face of the seal chamber.
6. Remove the casing, the impeller, and the seal chamber.
7. If applicable, slide the gland, with the stationary seat and gland gasket installed, onto the shaft until it contacts the inboard labyrinth oil seal.
8. Install the mechanical-seal rotary unit according to the manufacturer's instructions.
   Use the scribed line and the seal-reference dimension.
9. Reinstall the seal chamber.
10. Slide the gland on the seal-chamber studs and secure them with the gland nuts.
    Tighten the nuts evenly so that the gland is seated on the seal-chamber pilot and is perpendicular to the shaft.
11. Complete the reassembly of the pump.

Seal the shaft with a conventional outside-component mechanical seal

WARNING:
The mechanical seal used in an Ex-classified environment must be properly certified. Prior to startup, make sure that all areas that could leak pumped fluid to the work environment are closed.

NOTICE:
The mechanical seal must have an appropriate seal-flush system. Otherwise, excess heat generation and seal failure can occur.

1. Assemble the seal chamber.

a) Install the seal-chamber cover or backplate (184) and fasten with nuts (370H).

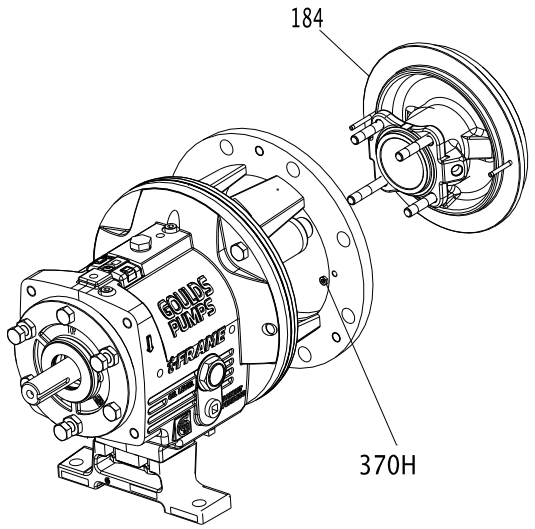

b) Check the seal-chamber cover runout.

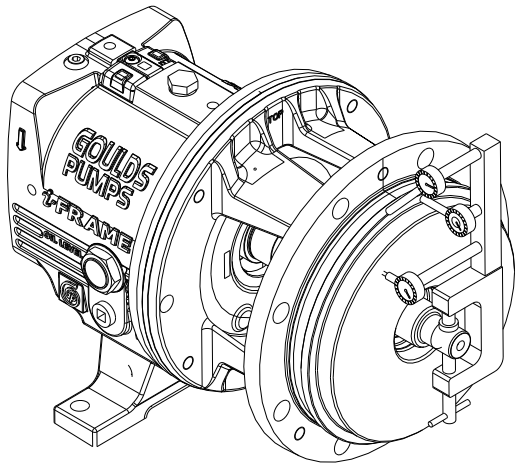

Rotate the indicator through 360 degrees. If the total indicator reading is greater than 0.005 in. (0.13 mm), determine the cause and correct the issue before you proceed.

c) Install the shaft sleeve (126).

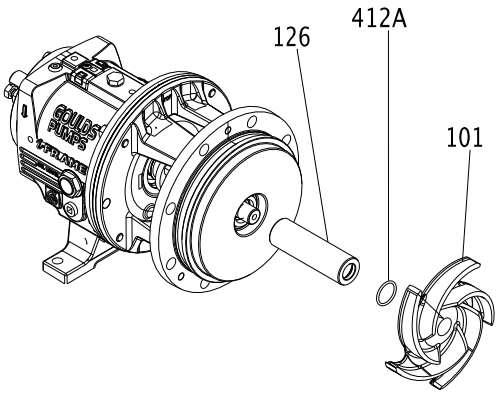

2. Mark the shaft and sleeve at the face of the seal chamber.
3. Continue the complete reassembly of the pump, except for the mechanical seal.
4. Set the impeller clearance.
   Refer to the Impeller clearance setting section for more information.
5. Scribe a line on the marked shaft and sleeve at the face of the seal chamber.
6. Remove the casing, the impeller, and the seal chamber.
7. Install the mechanical-seal rotary unit per the manufacturer's instructions.
   Use the scribed line as the seal-reference dimension. Be sure to secure the rotary unit in place using the set screws in the locking ring.
8. Install the gland, with the stationary seat and gland gaskets installed, on the seal chamber.
9. Reinstall the seal chamber.
10. Complete the reassembly of the pump.

Install the impeller

CAUTION:
Wear heavy work gloves when you handle impellers. The sharp edges can cause physical injury.

1. Install the impeller.

Pump size	Action
STi, MTi, and LTi	Install the impeller (101). Use a new impeller O-ring (412A).
XLT-i and i17	Install the impeller (101) and a Teflon washer (428D) on the plug (458Y). Use a new impeller O-ring (412A).

2. Attach a shaft wrench and a coupling key on the shaft.
   a) When the impeller (101) makes firm contact with the sleeve (126), raise the shaft wrench (counterclockwise, viewed from the impeller end of the shaft) off of the bench and slam it down (clockwise, viewed from the impeller end of shaft).

b) Apply a few sharp raps to tighten the impeller (101).

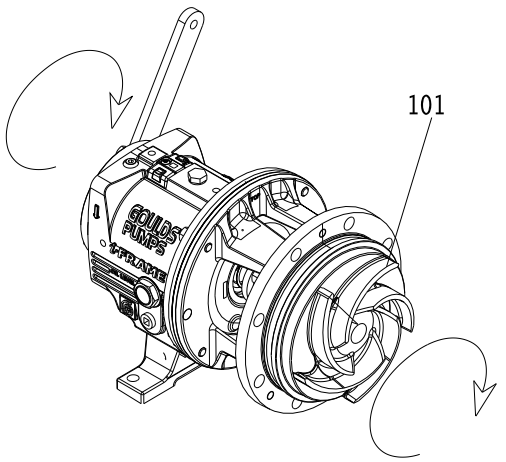

3. Loosen the clamp bolts (370C) and the jack bolts (370D).
4. Measure the gap between the impeller (101) and the seal chamber and stuffing-box cover (184) with a feeler gauge.

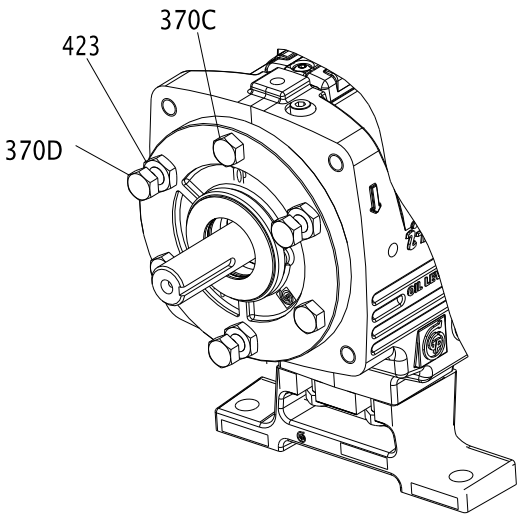

5. When you reach a 0.030 in. (0.76 mm) clearance, tighten the clamp bolts (370C), jack bolts (370D), and lock nuts (423).
   This approximates the impeller position when it is set to 0.015 in. (0.38 mm) from the casing. Perform a final impeller adjustment after you install the impeller into the casing.
6. Check the impeller (101) runout.

Check vane tip to vane tip. If the total indicator reading is greater than 0.005 in. (0.13 mm), determine the cause and correct the issue before you proceed.

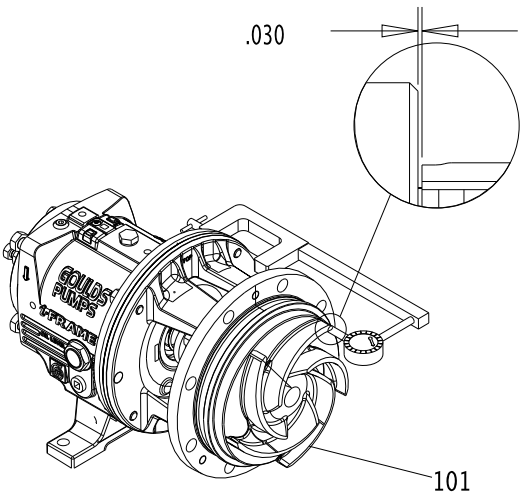

For more information on how to set the impeller clearances, refer to the Impeller-clearance checks and Impeller-clearance setting sections in Commissioning, Startup, Operation, and Shutdown.

Attach the i-ALERT™ Condition Monitor to the pump

CAUTION:
Always wear protective gloves. The pump and condition monitor can be hot.

Tools required:

- 5/32 inch hex wrench

1. Attach the condition monitor (761B) to the bearing frame (228A) using the hex-head screw (372T) provided.

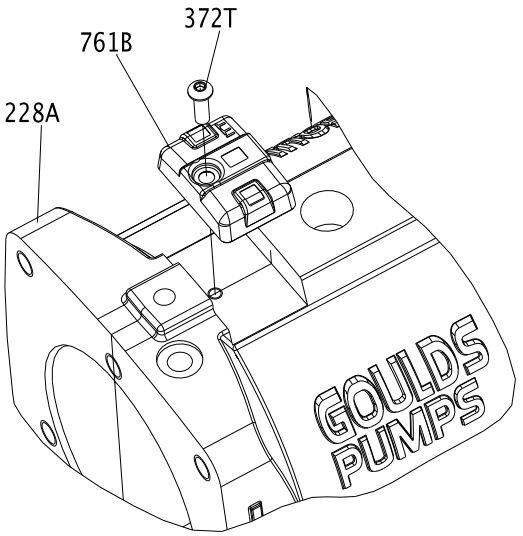

2. Tighten the hex-head screw with a 5/32 inch hex wrench to 6 ft-lbs (8 Nm).

Post-assembly checks

Perform these checks after you assemble the pump, then continue with pump startup:

- Rotate the shaft by hand in order to make sure that it rotates easily and smoothly and that there is no rubbing.
- Open the isolation valves and check the pump for leaks.

Install the back pull-out assembly (except HT 3196)

CAUTION:
Never remove the back pull-out assembly without assistance.

1. Clean the casing fit and install the casing gasket (351) on the seal chamber and stuffing-box cover.
2. Loosen the clamping bolts (370C) and jack bolts (370D) on the bearing housing.

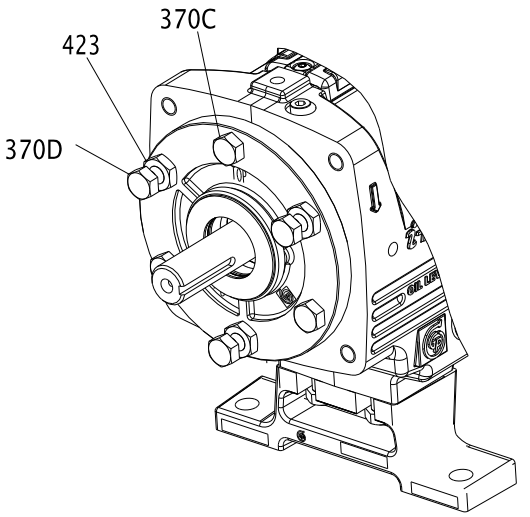

3. Install the back pull-out assembly in the casing.

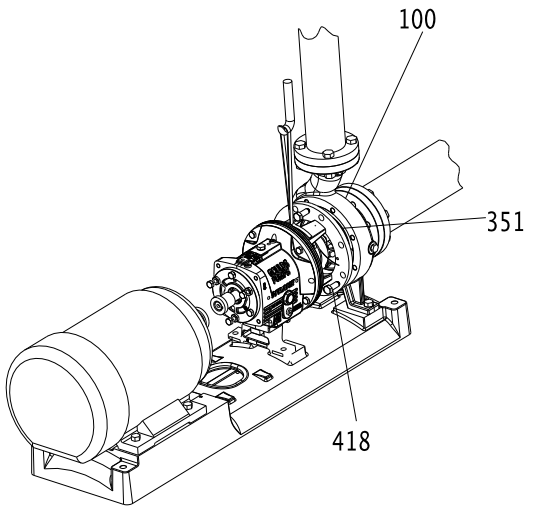

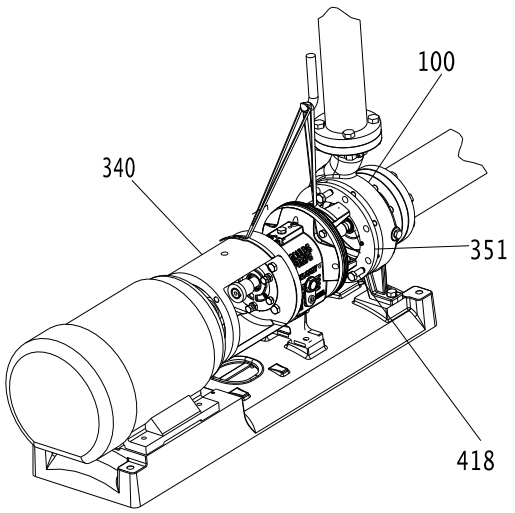

4. Install and then hand-tighten the casing bolts (370).
   Refer to the bolt torque values for information on how to tighten the casing bolts.
5. Install and tighten the casing jackscrews (418).

NOTICE:
Do not overtighten the casing jackscrews. Doing so may result in equipment damage.

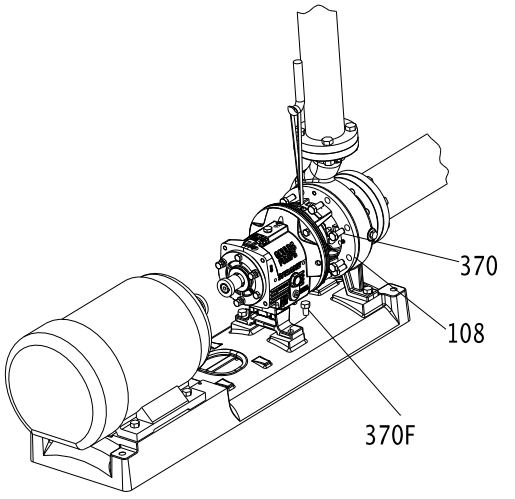

6. Reinstall the shims under the frame foot and tighten the frame foot to the baseplate.
   Make sure that you use the proper shim. Mount a dial indicator in order to measure the distance between the top of the frame and the baseplate. Make sure that the distance does not change as you tighten the frame-foot bolts.
7. Check the total clearance of the impeller in the casing.
   With new parts, an acceptable range is 0.030 in. (0.76 mm) to 0.065 in. (1.65 mm). If the impeller clearance is outside of this range, you either have the incorrect parts, an improper installation, or too much pipe strain. Determine the cause and correct the problem before you proceed.
8. Adjust the impeller clearance.
   Refer to the Impeller clearance setting section for more information.
9. Replace the auxiliary piping.
10. Fill the pump with the proper lubricant. See Lubricating-oil requirements.
11. Reinstall the coupling guard.

See Install the coupling guard for more information.

NOTICE:
Risk of damage to the mechanical seal or shaft sleeve on units supplied with cartridge mechanical seals. Prior to startup, make sure to tighten the set screws in the seal locking ring and remove the centering clips.

Assembly references

Bolt torque values

Table 18: Bolt torque, lb-ft (Nm)

This table provides the bolt torque values.

Location	Frame	3196, CV 3196, LF 3196, 3796		NM 3196		3198	
		Lube	Dry	Lube	Dry	Lube	Dry
Casing bolts (370) or casing nuts (425)	6-in. STi	Refer to the maximum torque values in lb-ft (Nm) for casing bolts table.		27 (36)	40 (53)	N/A	N/A
	8-in. STi			20 (27)	30 (40)	35 (47)	53 (71)
	MTi, LTi			27 (36)	40 (53)	35 (47)	53 (71)
	XLT-i, i17			N/A	N/A	N/A	N/A
Frame-to-adapter bolts	All	20 (27)	30 (40)	20 (27)	30 (40)	20 (27)	30 (40)
Bearing-clamp ring bolts (236A) - duplex bearing only	STi, MTi	10* (1.1)	17* (1.9)	10* (1.1)	17* (1.9)	10* (1.1)	17* (1.9)
	LTi	55* (6.2)	83* (9.4)	55* (6.2)	83* (9.4)	55* (6.2)	83* (9.4)
Bearing end cover bolts (371C)	XLT-i, i17	9 (12)	12 (16)	N/A	N/A	N/A	N/A
Dynamic seal cap-screws (265)	STi, MTi, LTi	55* (6.2)	83* (9.4)	N/A	N/A	N/A	N/A
	XLT-i, i17	9 (12)	12 (16)	N/A	N/A	N/A	N/A
* Values are in lb-in. (Nm)							

Table 19: Maximum torque values in lb-ft (Nm) for casing bolts

This table provides the maximum torque values for casing bolts.

		Models 3196, CV 3196 LF 3196, 3796 with 150 lb (68 kg) casing flanges				Model HT 3196 and all models with 300 lb (136 kg) casing flanges	
		Material specification					
		Ductile iron casing with A307 Grade B casing bolts		Alloy casing with (304SS) F593 Grade 1 or (316SS F593) Grade 2 casing bolts		Ductile iron and alloy casings with A193 grade B7 casing bolts	
Frame	Casing bolt diameter (in.)	Lube	Dry	Lube	Dry	Lube	Dry
8 in. STi	0.50	20 (27)	30 (41)	35 (47)	54 (73)	58 (79)	87 (118)
6 in. STi	0.625	39 (53)	59 (80)	71 (96)	107 (145)	115 (156)	173 (235)
MTi	0.625	39 (53)	59 (80)	71 (96)	107 (145)	115 (156)	173 (235)
LTi	0.625	39 (53)	59 (80)	71 (96)	107 (145)	115 (156)	173 (235)
XLT-i	0.625	39 (53)	59 (80)	71 (96)	107 (145)	115 (156)	173 (235)
i17	7/8	113 (153)	170 (230)	141 (191)	212 (287)	330 (447)	495 (671)

Shaft-end play

Table 20: Shaft-end play

Use this table as a reference for shaft-end play values.

Frame	Double row bearing	Duplex bearing
STi inches (millimeters)	0.0011 (0.028) 0.0019 (0.048)	0.0007 (0.018) 0.0010 (0.025)
MTi inches (millimeters)	0.0013 (0.033) 0.0021 (0.053)	0.0009 (0.023) 0.0012 (0.030)

Frame	Double row bearing	Duplex bearing
LTi inches (millimeters)	Not applicable	0.0010 (0.025) 0.0015 (0.038)
XLT-i inches (millimeters)	0.0014 (0.036) 0.0023 (0.058)	0.0010 (0.025) 0.0015 (0.038)

Bearing types

Table 21: Bearing types

Frame Double row	Inboard bearing Duplex	Outboard bearing	
STi	6207	3306	7306
MTi	6309	3309	7309
LTi	6311	Not applicable	7310
XLT-i, i17	6313	3313	7313

Spare parts

Always state the serial number and indicate the part name and item number from the relevant sectional drawing when you order spare parts. It is imperative for service reliability to have a sufficient stock of readily available spare parts.

- Impeller (101)
- Shaft (122A)
- Shaft sleeve (126)
- Outboard bearing (112A)
- Inboard bearing (168A)
- Casing gasket (351)
- Frame-to-adapter gasket (360D)
- Bearing-housing retaining ring (361A)
- Bearing lockwasher (382)
- Bearing locknut (136)
- Impeller O-ring (412A)
- Bearing-housing O-ring (496)
- Outboard labyrinth-seal rotary O-ring (497F)
- Outboard labyrinth-seal stationary O-ring (497G)
- Inboard labyrinth-seal rotary O-ring (497H)
- Inboard labyrinth-seal stationary O-ring (497J)
- Lantern ring half (105) (packed stuffing box)
- Stuffing box packing (106) (packed stuffing box)
- Packing gland (107) (packed stuffing box)
- Impeller gasket (428D) (XLT-i and i17 only)

Interchangeability drawings

3196 interchangeability

Table 22: 3196 interchangeability drawing

Description	Shaft and Bearing Frame Assembly	Adapter	Seal Chamber	Impeller	Casing	Size
Model 3196 STi 1–3/8 in. Shaft Dia. Max BHP-40 HP	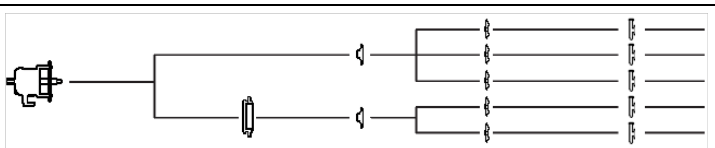					1x1.5-6 A 1.5x3-6 A 2x3-6 AC 1X1.5-8 A 1.5X3-8 A

Description	Shaft and Bearing Frame Assembly	Adapter	Seal Chamber	Impeller	Casing	Size
Model 3196 MTi 1–3/4 in. Shaft Dia. Max BHP-122 HP	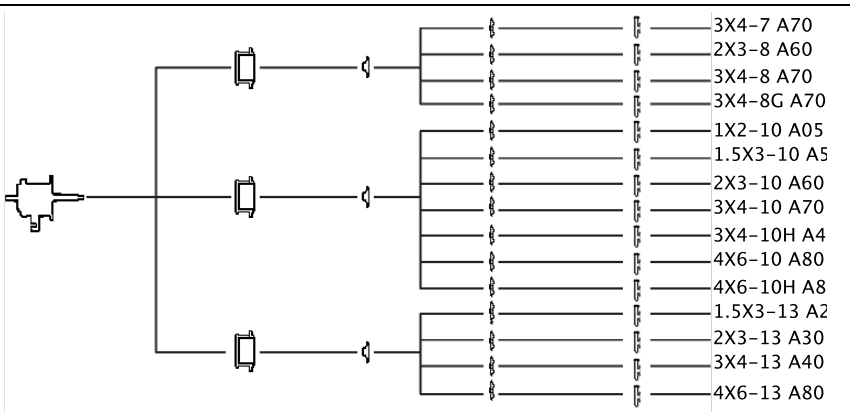					3X4-7 A70 2X3-8 A60 3X4-8 A70 3X4-8G A70 1X2-10 A05 1.5X3-10 A5 2X3-10 A60 3X4-10 A70 3X4-10H A4 4X6-10 A80 4X6-10H A8 1.5X3-13 A2 2X3-13 A30 3X4-13 A40 4X6-13 A80
Model 3196 LTi 2–1/8 in. Shaft Dia. Max BHP-200 HP	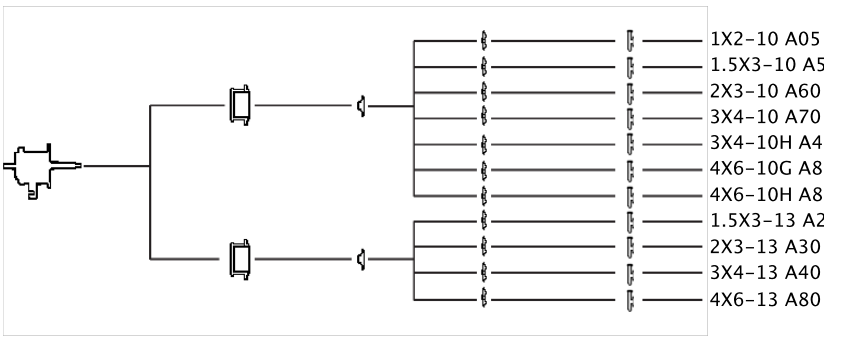					1X2-10 A05 1.5X3-10 A5 2X3-10 A60 3X4-10 A70 3X4-10H A4 4X6-10G A8 4X6-10H A8 1.5X3-13 A2 2X3-13 A30 3X4-13 A40 4X6-13 A80
Model 3196 XLT-i 2–1/2 in. Shaft Dia. Max BHP-250 HP 17 in. XLT-i has 2–3/4 in. Shaft Dia. Max BHP-350 HP	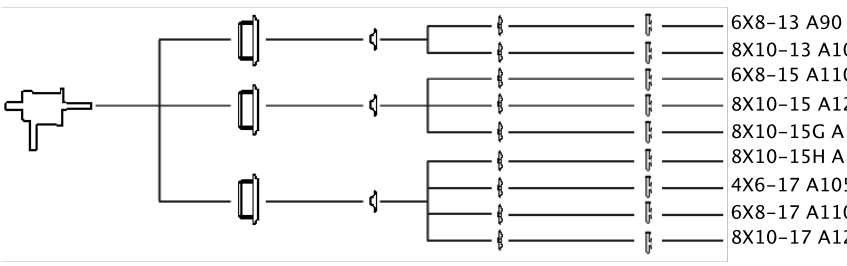					6X8-13 A90 8X10-13 A100 6X8-15 A110 8X10-15 A120 8X10-15G A12 8X10-15H A12 4X6-17 A105 6X8-17 A110 8X10-17 A120

Lubrication conversion

Frame lubrication conversion

NOTICE:

- Never mix greases of different consistencies (NLGI 1 or 3 with NLGI 2) or with different thickeners. For example, never mix a lithium-based grease with a polyurea-based grease. Doing so may result in decreased performance.
- Remove the bearings and old grease if you need to change the grease type or consistency. Failure to do so may result in equipment damage or decreased performance.

Use a grease that is suitable for high temperatures when you have frame pumpage temperatures greater than 350°F (177°C). Ensure that mineral-oil greases have oxidation stabilizers and a consistency of NLGI 3.

Table 23: Lubricating-grease requirements

Most pumps use Sunoco 2EP grease. High temperature units with a pumpage temperature greater than 350° F (177°C) use Mobil SCH32.

This table shows which brand of grease to use when lubricating the pump.

	Pumpage temperature less than 350°F (177°C)	Pumpage temperature greater than 350°F (177°C)
NGLI consistency	2	3
Mobil	Mobilux EP2	SCH32
Exxon	Unirex N2	Unirex N3
Sunoco	Mutipurpose 2EP	N/A
SKF	LGMT 2	LGMT 3

Convert from greased-for-life or regreaseable to oil-lubricated bearings

1. Remove the plug from the oil-return slot in the frame located under the radial bearing. Use this table as a guide.

Pump model	Action
STi	Remove the epoxy from the return slot.
MTi, LTi, XLT-i, and i-17	Remove the set screw installed in the oil-return hole.

2. Remove the plug from the oil-return hole in the bearing housing (134).
3. Replace both bearings with unshielded, oil-lubricated bearings.

Table 24: Bearing types

Frame Double row	Inboard bearing Duplex	Outboard bearing	
STi	6207	3306	7306
MTi	6309	3309	7309
LTi	6311	Not applicable	7310
XLT-i, i17	6313	3313	7313

4. Remove the grease fittings (193) to prevent accidental greasing. Two plugs (408H) are required to replace the two grease fittings.

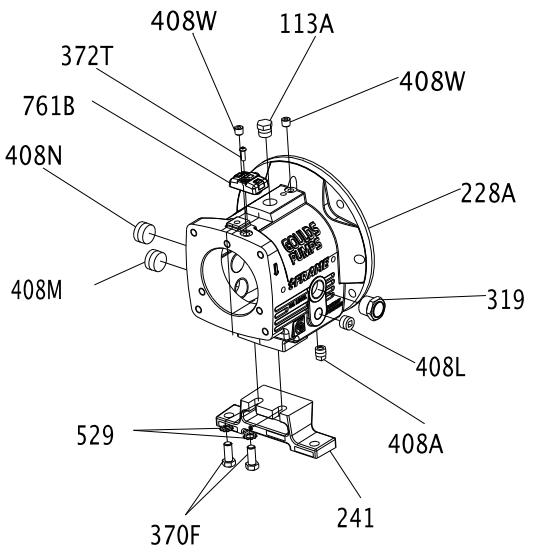

Item Number	Size	Description	Quantity
113	1/4"-18 NPT	External hex/square head pipe plug	2
113A	1/2"-14 NPT	External hex/square head pipe plug	1
193	1/4"-18 NPT	Grease fitting	2
228	- - - -	Bearing frame	1
241	- - - -	Frame foot	1
370F	1/2"	Hex cap screw	2
408A	3/8"-18 NPT	External square head pipe plug (magnetic)	1

Item Number	Size	Description	Quantity
408J	1/4"-18 NPT	External hex/square head pipe plug	1
408L	1/2"-14 NPT	Square countersunk headless pipe plug	1
408M	1" 11-1/2" NPT	Square countersunk headless pipe plug	1
529	1/2"	Light helical spring lock washer	2

Conversion from flood-oil to pure-oil mist

Consult your local ITT representative for further information on this topic.

Convert from flood oil to regreaseable

Consult your local ITT representative for further information on this topic.

Troubleshooting

Operation troubleshooting

Symptom	Cause	Remedy
The pump is not delivering liquid.	The pump is not primed.	Re-prime the pump and check that the pump and suction line are full of liquid.
	The suction line is clogged.	Remove the obstructions.
	The impeller is clogged.	Back-flush the pump in order to clean the impeller.
	The shaft is rotating in the wrong direction.	Change the rotation. The rotation must match the arrow on the bearing housing or pump casing.
	The foot valve or suction pipe opening is not submerged enough.	Consult an ITT representative for the proper submersion depth. Use a baffle in order to eliminate vortices.
	The suction lift is too high.	Shorten the suction pipe.
The pump is not producing the rated flow or head.	The gasket or O-ring has an air leak.	Replace the gasket or O-ring.
	The stuffing box has an air leak.	Replace or readjust the mechanical seal.
	The impeller is partly clogged.	Back-flush the pump in order to clean the impeller.
	The clearance between the impeller and the pump casing is excessive.	Adjust the impeller clearance.
	The suction head is not sufficient.	Make sure that the suction-line shutoff valve is fully open and that the line is unobstructed.
	The impeller is worn or broken.	Inspect and replace the impeller if necessary.
The pump starts and then stops pumping.	The pump is not primed.	Re-prime the pump and check that the pump and suction line are full of liquid.
	The suction line has air or vapor pockets.	Rearrange the piping in order to eliminate air pockets.
	The suction line has an air leak.	Repair the leak.
The bearings are running hot.	The pump and driver are not aligned properly.	Realign the pump and driver.
	There is not sufficient lubrication.	Check the lubricant for suitability and level.
	The lubrication was not cooled properly.	Check the cooling system.
The pump is noisy or vibrates.	The pump and driver are not aligned properly.	Realign the pump and driver.
	The impeller is partly clogged.	Back-flush the pump in order to clean the impeller.
	The impeller or shaft is broken or bent.	Replace the impeller or shaft as necessary.
	The foundation is not rigid.	Tighten the hold-down bolts of the pump and motor. Make sure the baseplate is properly grouted without voids or air pockets.
	The bearings are worn.	Replace the bearings.
	The suction or discharge piping is not anchored or properly supported.	Anchor the suction or discharge piping as necessary according to recommendations in the Hydraulic Institute Standards Manual.
	The pump is cavitating.	Locate and correct the system problem.
The mechanical seal is leaking excessively.	The packing gland is not adjusted properly.	Tighten the gland nuts.
	The stuffing box is not packed properly.	Check the packing and repack the box.
	The mechanical seal parts are worn.	Replace the worn parts.
	The mechanical seal is overheating.	Check the lubrication and cooling lines.
	The shaft sleeve is scored.	Machine or replace the shaft sleeve as necessary.
The motor requires excessive power.	The discharge head has dropped below the rated point and is pumping too much liquid.	Install a throttle valve. If this does not help, then trim the impeller diameter. If this does not help, then contact your ITT representative.
	The liquid is heavier than expected.	Check the specific gravity and viscosity.
	The stuffing-box packing is too tight.	Readjust the packing. If the packing is worn, then replace the packing.
	Rotating parts are rubbing against each other.	Check the parts that are wearing for proper clearances.
	The impeller clearance is too tight.	Adjust the impeller clearance.

Alignment troubleshooting

Symptom	Cause	Remedy
Horizontal (side-to-side) alignment cannot be obtained (angular or parallel).	The driver feet are bolt-bound.	Loosen the pump's hold-down bolts, and slide the pump and driver until you achieve horizontal alignment.
	The baseplate is not leveled properly and is probably twisted.	1. Determine which corners of the baseplate are high or low. 2. Remove or add shims at the appropriate corners. 3. Realign the pump and driver.

Assembly troubleshooting

Symptom	Cause	Remedy
There is excessive shaft end play.	The internal clearance of the bearings exceeds the recommended amount.	Replace the bearings with a bearing of the correct type.
	The snap ring is loose in the bearing-housing groove.	Re-seat the snap ring.
There is excessive shaft and sleeve runout.	The sleeve is worn.	Replace the sleeve.
	The shaft is bent.	Replace the shaft.
There is excessive bearing-frame flange runout.	The shaft is bent.	Replace the shaft.
	The flange of the bearing frame is distorted.	Replace the bearing-frame flange.
There is excessive frame-adapter runout.	There is corrosion on the frame adapter.	Replace the frame adapter.
	The adapter-to-frame gasket is not seated properly.	Re-seat the frame adapter and make sure that the adapter-to-frame gasket is seated properly.
There is excessive seal chamber or stuffing-box cover runout.	The seal chamber or the stuffing-box cover is not properly seated in the frame adapter.	Re-seat the seal chamber or stuffing-box cover.
	There is corrosion or wear on the seal chamber or stuffing-box cover.	Replace the seal chamber or stuffing-box cover.
There is excessive vane-tip runout of the impeller.	The vane is bent.	Replace the impeller.

i-ALERT™ Condition Monitor troubleshooting

Symptom	Cause	Remedy
There are no green or red flashing LEDs.	The battery is dead.	Replace the condition monitor.
	The unit is deactivated.	Activate the condition monitor.
	The unit is malfunctioning.	Consult your ITT representative for a warranty replacement.
The red LEDs are flashing, but the temperature and vibration are at acceptable levels.	The baseline is bad.	Check the temperature and vibration levels and reset the condition monitor.
	The unit is malfunctioning.	Consult your ITT representative for a warranty replacement.

Parts Listings and Cross-Sectionals

Parts list

Table 25: Construction material and quantity

Item	Quantity	Part name	Pump Material				
			All D.I.	D.I. With 316 SS impeller	All 316SS	All CD4MCu	All Alloy 20
100	1	Casing	1012	1012	1203	1216	1204
101	1	Impeller	1013	1203	1203	1216	1204
105	1	Lantern Ring	Teflon				
106	1 set	Stuffing Box Packing	Non-asbestos braid				
107	1	Gland—Packed Box	1203			1204	
108	1	Frame Adapter	1013				
109C	1***	Outboard Bearing End Cover	1001				
112A	1	Outboard Bearing	Double row angular contact (duplex pair for LTi)				
113	2	Plug—Grease Relief	2210				
113B	1	Plug—Oil Fill	2210				
122	1	Shaft—Without Sleeve	2229			2230	
122	1	Shaft—With Sleeve	2238				
126	1	Shaft Sleeve	2229				2230
134	1	Bearing Housing	1001				
136	1	Bearing Locknut	Steel				
168A	1	Radial Bearing	Single row ball				
184	1	Seal Chamber/Stuffing Box Cover	1012	1012	1203	1216	1204
193	2	Grease Fitting	Steel				
228	1	Bearing Frame	STi 1013, All others - 1001				
236A	10	Cap Screw—Bearing Clamp Ring	2210				
239	1	Support, Casing	–	–	2201*	2201*	2201*
241	1	Frame Foot	1001				
248	1	Oil Thrower	2210				
250	1	Gland—Mechanical Seal	Material varies				
253B	1	Bearing Clamp Ring	2210				
319	1	Sight Glass	Glass/steel				
332A	1	Outboard Labyrinth Seal w/O-rings	Brass ASTM B505-96				
333A	1	Inboard Labyrinth Seal w/O-rings	Brass ASTM B505-96				
351	1	Casing Gasket	Aramid fiber w/EPDM				
353	4	Gland Stud	2228				
355	4	Gland Stud Nut	2228				
358	1	Plug—Casing Drain	2210		2229	2230	
358Y	1 ***	Plug, Impeller	2229			2230	
360C	1 ***	Gasket—Thrust End Cover	Buna				
360D	1	Gasket—Frame-to-Adapter	Buna				
360Q	1	Gasket—Gland-to-Stuffing Box Cover	Material varies				
361A	1	Retaining Ring	Steel				
370	****	Bolt—Adapter to Case	2210		2228		
370B	4	Bolt—Frame-to-Adapter	2210				
370C	**	Clamp Bolt —Bearing Housing	2210				
370D	**	Jack Bolt—Bearing Housing	2210				
370F	2	Bolt—Frame Foot to Frame	2210				
370H	2	Stud—Stuffing Box Cover-to-Adapter	2228				
370Y	2	Bolt—Cap Casing to Support	–	–	2210*		
371C	6 ***	Cap Screw-End Cover to Bearing Housing	2210				
382	1	Bearing Lockwasher	Steel				
383	1	Mechanical Seal	Material varies				
400	1	Coupling Key	2210				

Item	Quantity	Part name	Pump Material				
			All D.I.	D.I. With 316 SS impeller	All 316SS	All CD4MCu	All Alloy 20
408A	1	Plug—Oil Drane	2210				
408H	4	Plug—Oil Mist Connection	2210				
408J	1	Plug—Oiler	2210				
408L	1	Plug—Oil Cooler Inlet	2210				
408M	1	Plug—Oil Cooler Outlet	2210				
408N	1	Plug—Sight Glass	2210				
412A	1	O-Ring, Graphoil Impeller	–	–	*		
418	3	Jack Bolt—Adapter-to-Case	2228				
423	3	Jam Nut—Bearing Housing Jack Bolt	2210				
423B	2	Hex Nut—Stuffing Box Cover to Adapter	2228				
428	1	Gasket, Plug	Teflon				
437	1	Lockwasher, Casing to Support	–	–	2210*		
458Y	1 ***	Plug, Impeller	2229			2230	
469B	2	Dowel Pin—Frame-to-Adapter	Steel				
494	1	Tube Element, Finned Cooled	304SS / Copper				
496	1	O-Ring Bearing Housing	Buna N				
412A	1	O-Ring—Impeller	Viton				
497F	1	O-Ring—Outboard Labyrinth Rotor	Viton				
497G	1	O-Ring—Outboard Labyrinth Stator	Viton				
497H	1	O-Ring—Inboard Labyrinth Rotor	Viton				
497J	1	O-Ring—Inboard Laybrinth Stator	Viton				
497L	1	O-Ring Internal (inboard)	Viton				
497N	1	O-Ring Internal (outboard)	Viton				
503	1	Adapter Ring	1013				
529	1	Lockwasher—Frame Foot-to-Bearing Frame	Steel				
555	1	Tube, Finned Cooling Assembly	304AA / Copper				
555A	1	Tube, Ftg Male (Frame Cooling)	Brass				
555B	2	Connector, Thermocouple (Frame Cooling)	Brass				
555C	2	Elbow, Female (Frame Cooling)	Brass				
555D	1	Conn TC Sealed PWR	Cast iron				
761B	1	i-ALERT™ Condition Monitor	Stainless steel/epoxy				

Table 26: Construction material and quantity (continued)

Item	Quantity	Part name	Pump Material				
			All 317SS	All Monel	All Nickel	All Hastelloy C	All Hastelloy B
100	1	Casing	1209	1119	1601	1215	1217
101	1	Impeller	1209	1119	1601	1215	1217
105	1	Lantern Ring	Teflon				
106	1 set	Stuffing Box Packing	Non-asbestos braid				
107	1	Gland—Packed Box	1209	1119	1601	1215	1217
108	1	Frame Adapter	1013				
109C	1***	Outboard Bearing End Cover	1001				
112A	1	Outboard Bearing	Double row angular contact (duplex pair for LTi)				
113	2	Plug—Grease Relief	2210				
113B	1	Plug—Oil Fill	2210				
122	1	Shaft—Less Sleeve	2232	2150	2155	2248	2247
122	1	Shaft—With Sleeve	2229				
126	1	Shaft Sleeve	2232	2150	2155	2248	2247
134	1	Bearing Housing	1001				
136	1	Bearing Locknut	Steel				
168A	1	Radial Bearing	Single row ball				
184	1	Seal Chamber/Stuffing Box Cover	1209	1119	1601	1215	1217
193	2	Grease Fitting	Steel				

Item	Quantity	Part name	Pump Material				
			All 317SS	All Monel	All Nickel	All Hastelloy C	All Hastelloy B
228	1	Bearing Frame	STi-1013, All others - 1001				
236A	10	Cap Screw—Bearing Clamp Ring	2210				
239	1	Support, Casing	–	–	–	2201*	–
241	1	Frame Foot	1001				
248	1	Oil Thrower	2210				
250	1	Gland—Mechanical Seal	Material varies				
253B	1	Bearing Clamp Ring	2210				
319	1	Sight Glass	Glass/steel				
332A	1	Outboard Labyrinth Seal w/O-rings	Brass ASTM B505-96				
333A	1	Inboard Labyrinth Seal w/O-rings	Brass ASTM B505-96				
351	1	Casing Gasket	Aramid fiber w/EPDM				
353	4	Gland Stud	2232	2150	2155	2248	2247
355	4	Gland Stud Nut	2232	2150	2155	2248	2247
358	1	Plug—Casing Drain	2232	2150	2156	2248	2247
358Y	1 ***	Plug, Impeller	2232	2150	2156	2248	2156
360C	1 ***	Gasket—Thrust End Cover	Buna				
360D	1	Gasket—Frame-to-Adapter	Buna				
360Q	1	Gasket—Gland-to-Stuffing Box Cover	Material varies				
361A	1	Retaining Ring	Steel				
370	****	Bolt—Adapter to Case	2228				
370B	4	Bolt—Frame-to-Adapter	2210				
370C	**	Clamp Bolt —Bearing Housing	2210				
370D	**	Jack Bolt—Bearing Housing	2210				
370F	2	Bolt—Frame Foot to Frame	2210				
370H	2	Stud—Stuffing Box Cover-to-Adapter	2228				
370H	2	Bolt—Cap Casing to Support	–	–	–	2210*	–
371C	6 ***	Cap Screw-End Cover to Bearing Housing	2210				
382	1	Bearing Lockwasher	Steel				
383	1	Mechanical Seal	Material varies				
400	1	Coupling Key	2210				
408A	1	Plug—Oil Drane	2210				
408H	4	Plug—Oil Mist Connection	2210				
408J	1	Plug—Oiler	2210				
408L	1	Plug—Oil Cooler Inlet	2210				
408M	1	Plug—Oil Cooler Outlet	2210				
408N	1	Plug—Sight Glass	2210				
412A	1	O-Ring, Graphoil Impeller	–	–	–	*	–
418	3	Jack Bolt—Adapter-to-Case	2228				
423	3	Jam Nut—Bearing Housing Jack Bolt	2210				
423B	2	Hex Nut—Stuffing Box Cover to Adapter	2228				
428	1	Gasket, Plug	Teflon				
437	1	Lockwasher, Casing to Support	–	–	–	2210*	–
458Y	1***	Plug, Impeller	2232	2150	2155	2248	2247
469B	2	Dowel Pin—Frame-to-Adapter	Steel				
494	1	Tube Element, Finned Cooled	304SS / Copper				
496	1	O-Ring Bearing Housing	Buna N				
412A	1	O-Ring—Impeller	Viton				
497F	1	O-Ring—Outboard Labyrinth Rotor	Viton				
497G	1	O-Ring—Outboard Labyrinth Stator	Viton				
497H	1	O-Ring—Inboard Labyrinth Rotor	Viton				
497J	1	O-Ring—Inboard Laybrinth Stator	Viton				
497L	1	O-Ring Internal (inboard)	Viton				
497N	1	O-Ring Internal (outboard)	Viton				
503	1	Adapter Ring	1013				

Item	Quantity	Part name	Pump Material				
			All 317SS	All Monel	All Nickel	All Hastelloy C	All Hastelloy B
529	1	Lockwasher—Frame Foot-to-Bearing Frame	Steel				
555	1	Tube, Finned Cooling Assembly	304AA / Copper				
555A	1	Tube, Ftg Male (Frame Cooling)	Brass				
555B	2	Connector, Thermocouple (Frame Cooling)	Brass				
555C	2	Elbow, Female (Frame Cooling)	Brass				
555D	1	Conn TC Sealed PWR	Cast iron				
761B	1	i-ALERT™ Condition Monitor	Stainless steel/epoxy				

Table 27: Construction material and quantity (continued)

Item	Quantity	Part name	Pump Material (3196, HT 3196, CV 3196, 3796)	Pump Material (NM 3196)	Pump Material (3198)
			All Titanium	Vinylester	D.I./Teflon
100	1	Casing	1220	6929	9639
101	1	Impeller	1220	6929	6944
105	1	Lantern Ring	Teflon	–	–
106	1 set	Stuffing Box Packing	Non-asbestos braid	–	–
107	1	Gland—Packed Box	1220	–	–
108	1	Frame Adapter	1013		
109C	1***	Outboard Bearing End Cover	1001		
112A	1	Outboard Bearing	Double row angluar contact (duplex pair for LTi)		
113	2	Plug—Grease Relief	2210		
113B	1	Plug—Oil Fill	2210		
122	1	Shaft—Less Sleeve	2156	2229	–
122	1	Shaft—With Sleeve	2229		6947
126	1	Shaft Sleeve	2156	2229	–
134	1	Bearing Housing	1001		
136	1	Bearing Locknut	Steel		
168A	1	Radial Bearing	Single row ball		
184	1	Seal Chamber/Stuffing Box Cover	1220	6929	9639
193	2	Grease Fitting	Steel		
228	1	Bearing Frame	STi - 1013, All others - 1001		
236A	10	Cap Screw—Bearing Clamp Ring	2210		
239	1	Support, Casing	–	–	–
241	1	Frame Foot	1001		
248	1	Oil Thrower	2210		
250	1	Gland—Mechanical Seal	Material varies		
253B	1	Bearing Clamp Ring	2210		
319	1	Sight Glass	Glass/steel		
332A	1	Outboard Labyrinth Seal w/O-rings	Brass ASTM B505-96		
333A	1	Inboard Labyrinth Seal w/O-rings	Brass ASTM B505-96		
351	1	Casing Gasket	Aramid fiber w/EPDM		
353	4	Gland Stud	2156	2229	2229
355	4	Gland Stud Nut	2156	2229	2229
358	1	Plug—Casing Drain	2156	–	–
358Y	1 ***	Plug, Impeller	2156	–	–
360C	1 ***	Gasket—Thrust End Cover	Buna		
360D	1	Gasket—Frame-to-Adapter	Buna		
360Q	1	Gasket—Gland-to-Stuffing Box Cover	Material varies		
361A	1	Retaining Ring	Steel		
370	****	Bolt—Adapter to Case	2228		
370B	4	Bolt—Frame-to-Adapter	2210		
370C	**	Clamp Bolt —Bearing Housing	2210		
370D	**l	Jack Bolt—Bearing Housing	2210		
370F	2	Bolt—Frame Foot to Frame	2210		

Item	Quantity	Part name	Pump Material (3196, HT 3196, CV 3196, 3796)	Pump Material (NM 3196)	Pump Material (3198)
			All Titanium	Vinylester	D.I./Teflon
370H	2	Stud—Stuffing Box Cover-to-Adapter	2228		
370Y	2	Bolt—Cap Casing to Support	–	–	–
371C	6 ***	Cap Screw-End Cover to Bearing Housing	2210		
382	1	Bearing Lockwasher	Steel		
383	1	Mechanical Seal	Material varies		
400	1	Coupling Key	2210		
408A	1	Plug—Oil Drane	2210		
408H	4	Plug—Oil Mist Connection	2210		
408J	1	Plug—Oiler	2210		
408L	1	Plug—Oil Cooler Inlet	2210		
408M	1	Plug—Oil Cooler Outlet	2210		
408N	1	Plug—Sight Glass	2210		
412A	1	O-Ring, Graphoil Impeller	–	–	–
418	3	Jack Bolt—Adapter-to-Case	2228		
423	3	Jam Nut—Bearing Housing Jack Bolt	2210		
423B	2	Hex Nut—Stuffing Box Cover to Adapter	2228		
428	1	Gasket, Plug	Teflon		
437	1	Lockwasher, Casing to Support	–	–	–
458Y	1 ***	Plug, Impeller	2156	–	–
469B	2	Dowel Pin—Frame-to-Adapter	Steel		
494	1	Tube Element, Finned Cooled	304SS / Copper		
496	1	O-Ring Bearing Housing	Buna N		
412A	1	O-Ring—Impeller	Viton		
497F	1	O-Ring—Outboard Labyrinth Rotor	Viton		
497G	1	O-Ring—Outboard Labyrinth Stator	Viton		
497H	1	O-Ring—Inboard Labyrinth Rotor	Viton		
497J	1	O-Ring—Inboard Laybrinth Stator	Viton		
497L	1	O-Ring Internal (inboard)	Viton		
497N	1	O-Ring Internal (outboard)	Viton		
503	1	Adapter Ring	1013		
529	1	Lockwasher—Frame Foot-to-Bearing Frame	Steel		
555	1	Tube, Finned Cooling Assembly	304AA / Copper		
555A	1	Tube, Ftg Male (Frame Cooling)	Brass		
555B	2	Connector, Thermocouple (Frame Cooling)	Brass		
555C	2	Elbow, Female (Frame Cooling)	Brass		
555D	1	Conn TC Sealed PWR	Cast iron		
761B	1	i-ALERT™ Condition Monitor	Stainless steel/epoxy		

Table 28: Key to table symbols

–	Not applicable
*	Only applicable for HT 3196
**	3 for STi, MTi, LTi 4 for XLT-i, i17
***	XLT-I and i17 only
****	4 for 6 in. STi 8 for 8 in. STi and MTi 16 for 13 in. MTi, LTi , XLT-I 24 for 15 in. XLT-I 12 for 10 in. MTi, LTi , i17

Table 29: Material-code reference

Material	Goulds material code	ASTM	Din	ISO	JIS
Cast Iron	1001	A48 CLASS 20			
Ductile Iron	1012	A395 Gr60-40-18			
Ductile Iron	1013	A536 Gr60-42-10			
CD4MCu	1041	A744 CD4MCU			
Monel	1119	A494 GrM-35-1			
316SS	1203	A744 CF-8M	1.4408		G5121 (SC514)
Alloy 20	1204	A744CN-7M	1.4500		
317SS	1209	A744CG-8M	1.4448		
Hastelloy C	1215	A494 CW-6M			
CD4MCu	1216	A744CD4MCU	9.4460		
Hastelloy B	1217	A494 N-7M			
Titanium	1220	B367 GrC-3			
Nickel	1601	A494 GrCZ100			
Monel	2150	B164 UNS N04400			
Nickel	2155	B160 UNS N02200			
Titanium	2156	B348 Gr2			
Carbon Steel	2201	A576 Gr. 1018 and 1020			
Carbon Steel	2210	A108Gr1211			
304SS	2228	A276 Type 304			
316SS	2229	A276 Type 316			
Alloy 20	2230	B473 (N08020)			
317SS	2232	A276			
4150 Steel	2237	A322Gr4150			
4140 Steel	2238	A434Gr4140			
4140 Steel	2239	A193 Gr. B7			
Alloy B-2	2247	B335 (N10665)			
Alloy C-276	2248	B574 (N10276)			
GMP-2000	6929	N/A			
PFA Lined Steel	6944	N/A			
PFA Lined 316SS	6947	N/A			
PFA Lined Ductile Iron	9639	N/A			

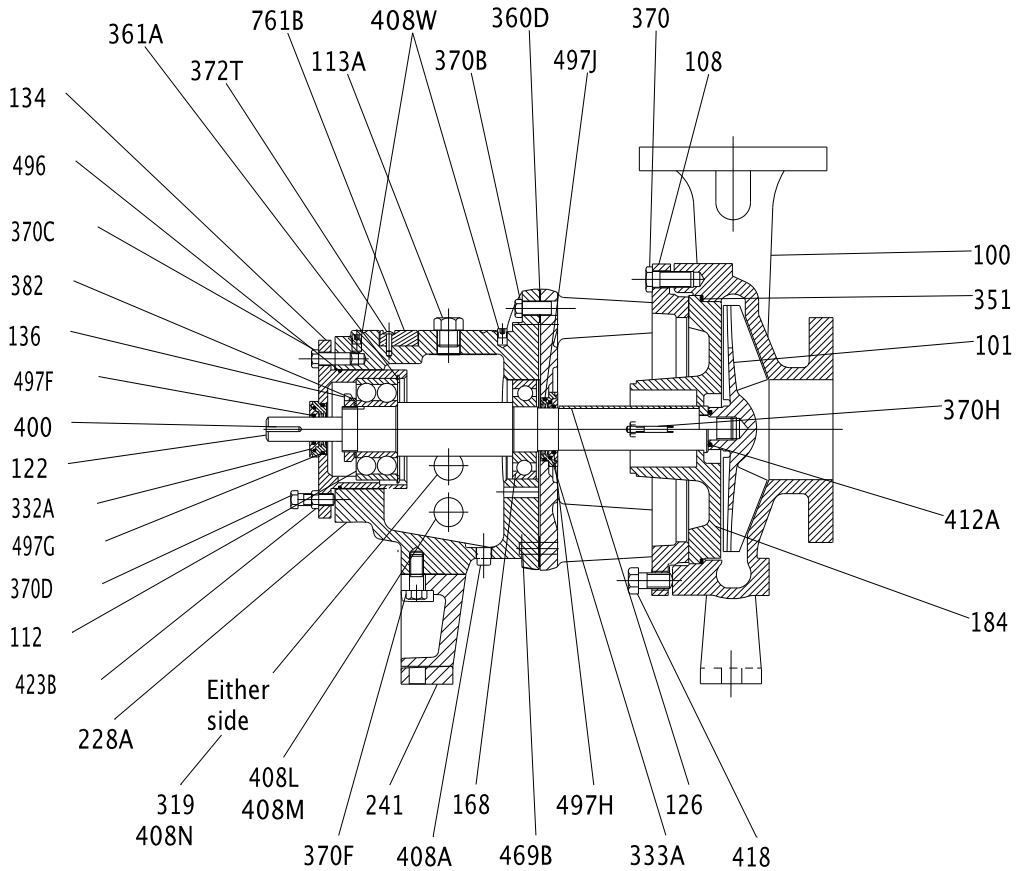

Figure 33: 3196 cross-sectional drawing

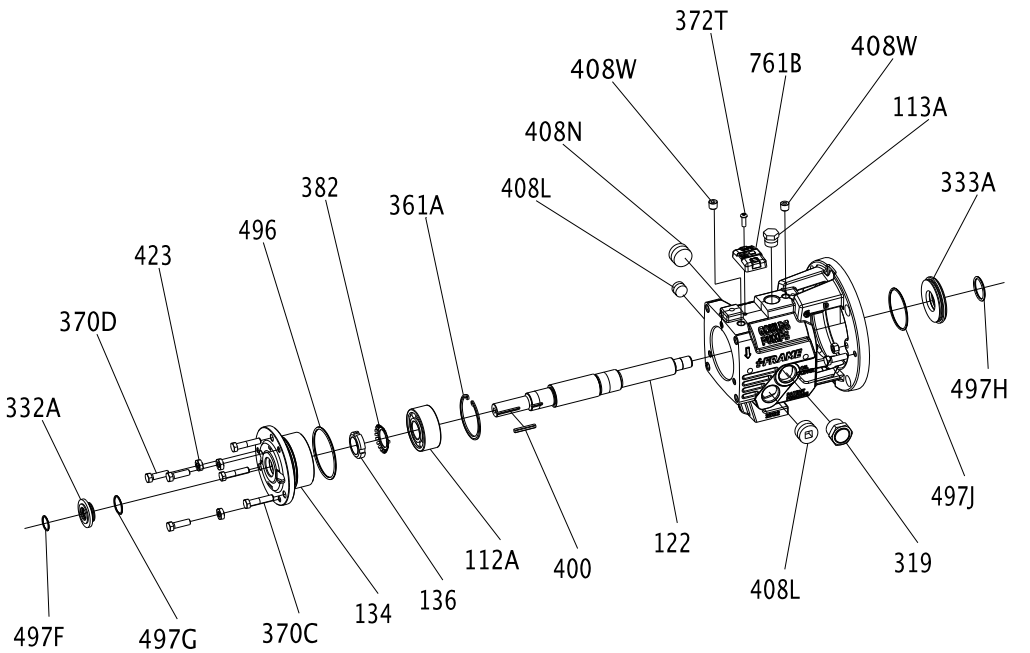

Figure 34: STi bearing-frame exploded view

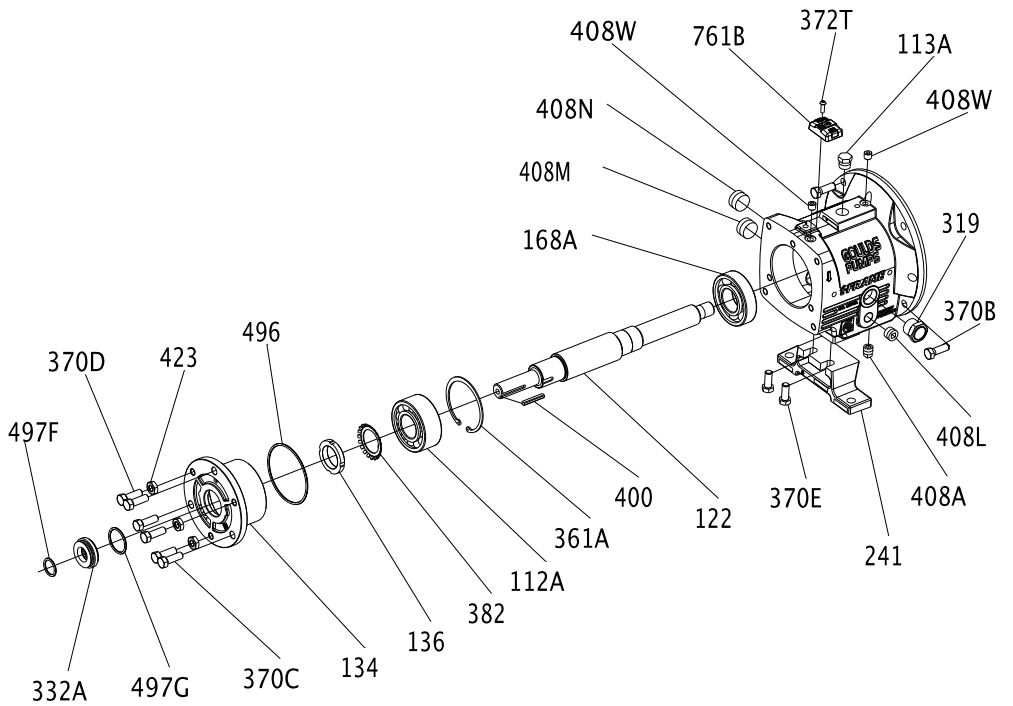

Figure 35: MTi bearing-frame exploded view

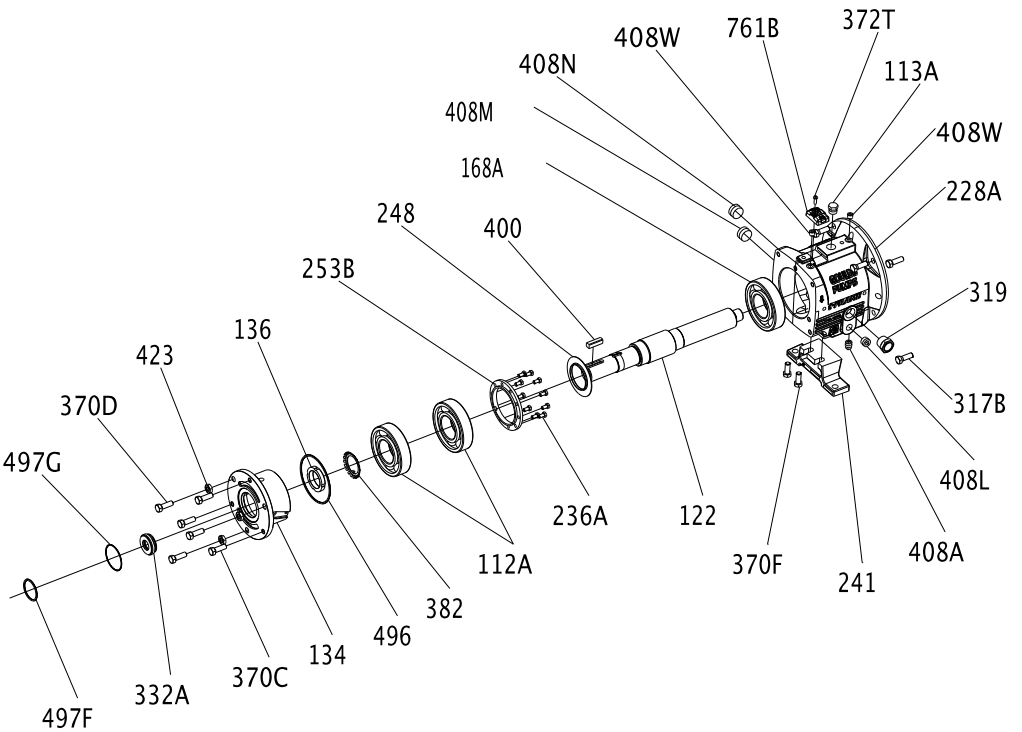

Figure 36: LTi bearing-frame exploded view

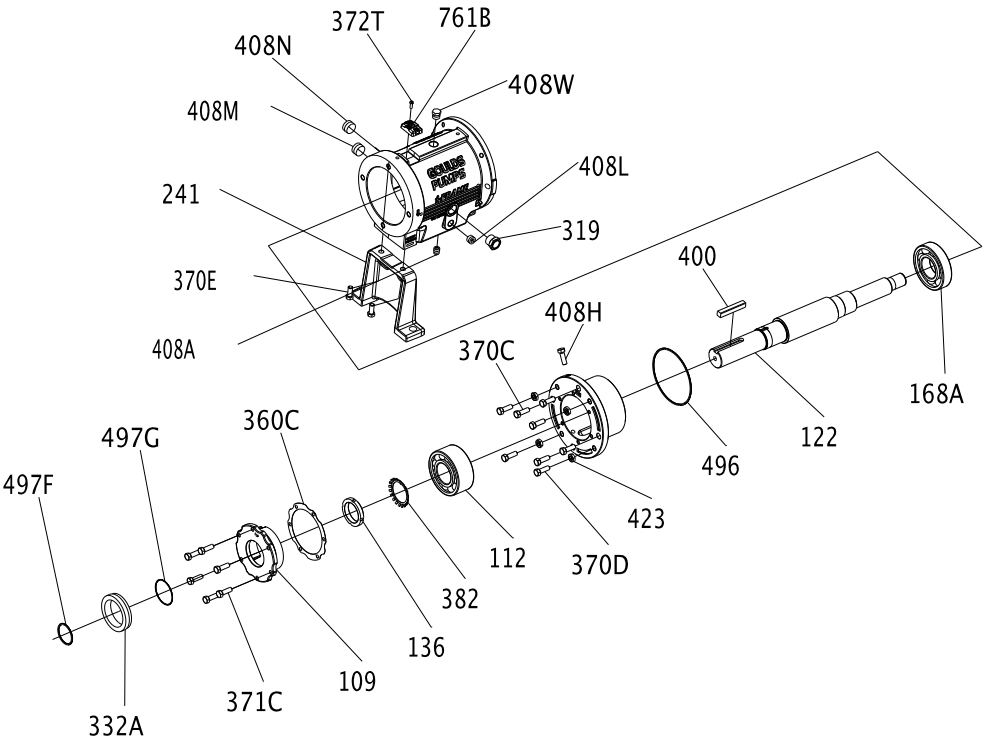

Figure 37: XLT-i bearing-frame exploded view

The finned-tube oil cooler is standard on HT 3196 and optional on all other models.

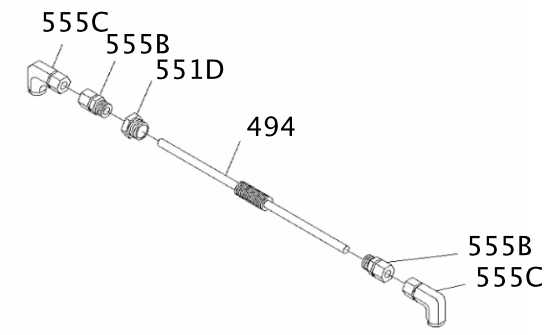

Figure 38: Finned-tube oil cooler exploded view

Certification: CE or CE ATEX

Certificates of conformance

CSA Certificate

CSA INTERNATIONAL

Certificate of Compliance

Certificate: 1992883 **Master Contract:** 236924

Project: 2254252 **Date Issued:** 2009/12/16

Issued to: **ITT Corporation**

240 Fall St
Seneca Falls, NY 13148
USA
Attention: Anthony Stavale

The products listed below are eligible to bear the CSA Mark shown with adjacent indicators 'C' and 'US' for Canada and US or with adjacent indicator 'US' for US only or without either indicator for Canada only.

C US

D. Simpson, Certifier

Issued by: D. Simpson, Certifier

PRODUCTS

CLASS 2258 03 - PROCESS CONTROL EQUIPMENT - Intrinsically Safe and Non - Incendive Systems - For Hazardous Locations

CLASS 2258 83 - PROCESS CONTROL EQUIPMENT-Intrinsically Safe and Non-Incendive - Systems-For Hazardous Locations-Certified to U.S. Standards

Class I, Division 1, Group A, B, C and D; Class II, Group E, F and G; Class III:

- Condition Monitor, Model LCCM, p/n C07667A, battery operated (non-replaceable, non-rechargeable), intrinsically safe, temperature code T4 (at max ambient of 100C).

APPLICABLE REQUIREMENTS

CAN/CSA-C22.2 No. 0-M91 - General Requirements – Canadian Electrical Code, Part II

CAN/CSA-C22.2 No.157-92 - Intrinsically Safe and Non-Incendive Equipment for Use in Hazardous Locations

UL Std No.913, Ed. 7 - Intrinsically Safe Apparatus and Associated Apparatus for Use in Class I, II and III, Division 1, Hazardous Locations

DQD 507 Rev. 2009-09-01

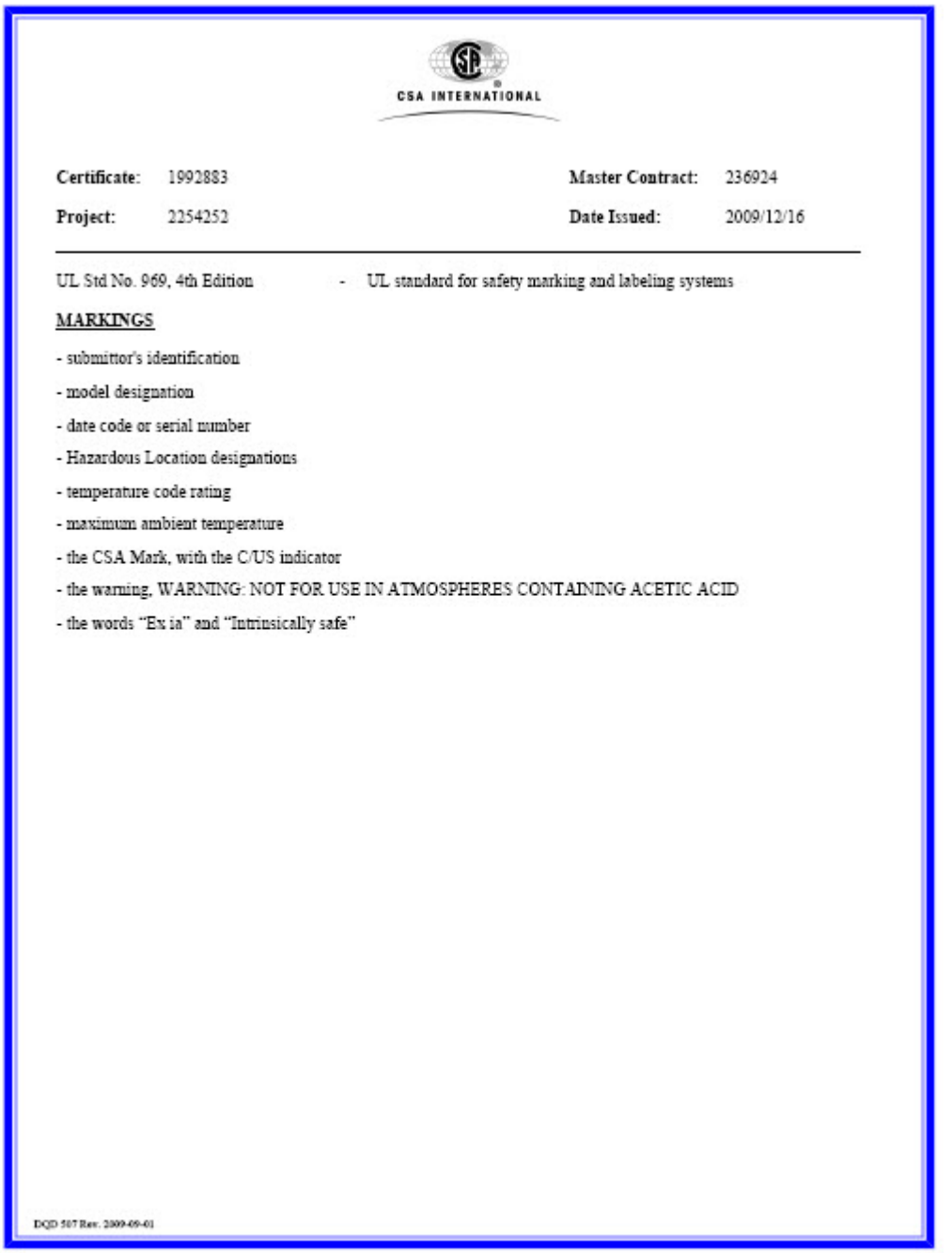

CSA INTERNATIONAL

Certificate: 1992883 **Master Contract:** 236924

Project: 2254252 **Date Issued:** 2009/12/16

UL Std No. 969, 4th Edition - UL standard for safety marking and labeling systems

MARKINGS

- submittor's identification
- model designation
- date code or serial number
- Hazardous Location designations
- temperature code rating
- maximum ambient temperature
- the CSA Mark, with the C/US indicator
- the warning, WARNING: NOT FOR USE IN ATMOSPHERES CONTAINING ACETIC ACID
- the words "Ex ia" and "Intrinsically safe"

DQD 507 Rev. 2009-09-01

ATEX notification

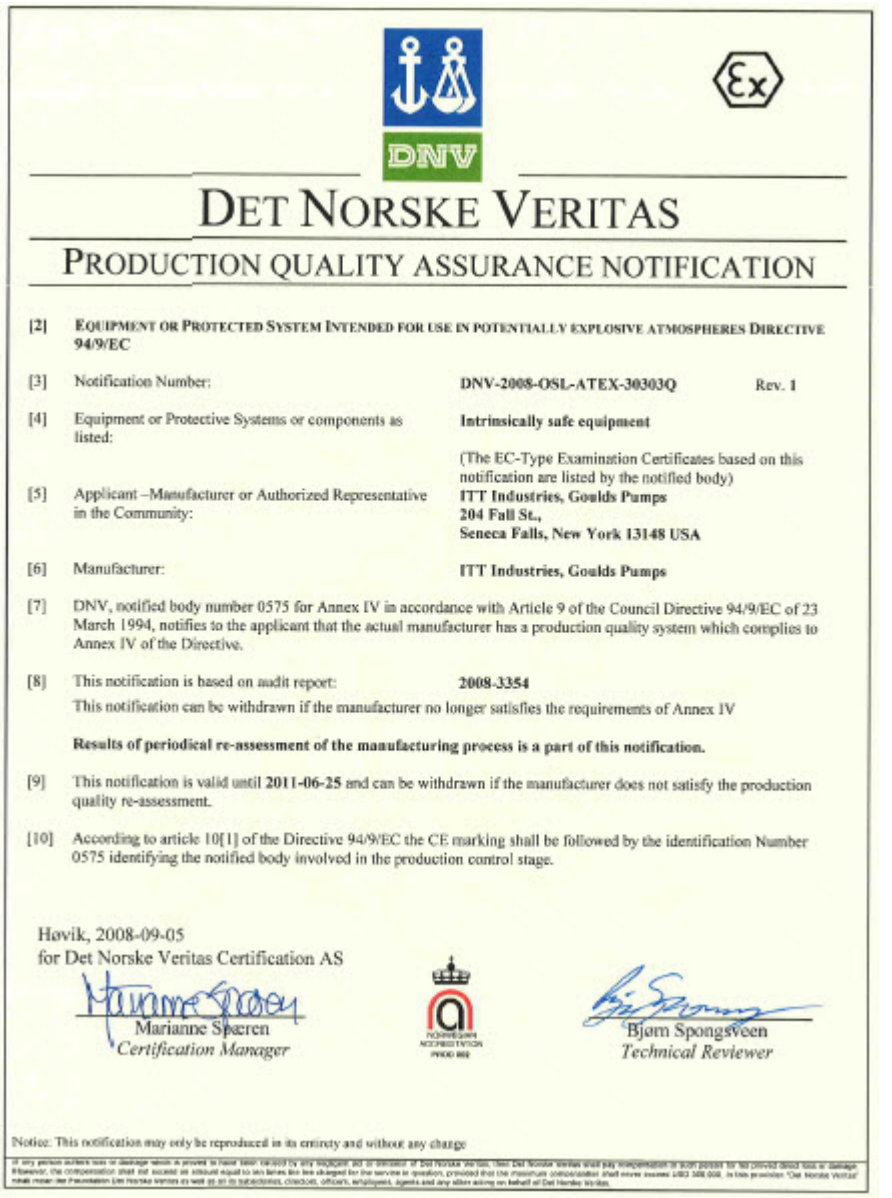

DET NORSKE VERITAS

PRODUCTION QUALITY ASSURANCE NOTIFICATION

[2] EQUIPMENT OR PROTECTED SYSTEM INTENDED FOR USE IN POTENTIALLY EXPLOSIVE ATMOSPHERES DIRECTIVE 94/9/EC

[3] Notification Number: **DNV-2008-OSL-ATEX-30303Q** Rev. 1

[4] Equipment or Protective Systems or components as listed: **Intrinsically safe equipment**

(The EC-Type Examination Certificates based on this notification are listed by the notified body)

[5] Applicant –Manufacturer or Authorized Representative in the Community: **ITT Industries, Goulds Pumps**
204 Fall St.,
Seneca Falls, New York 13148 USA

[6] Manufacturer: **ITT Industries, Goulds Pumps**

[7] DNV, notified body number 0575 for Annex IV in accordance with Article 9 of the Council Directive 94/9/EC of 23 March 1994, notifies to the applicant that the actual manufacturer has a production quality system which complies to Annex IV of the Directive.

[8] This notification is based on audit report: **2008-3354**
This notification can be withdrawn if the manufacturer no longer satisfies the requirements of Annex IV

Results of periodical re-assessment of the manufacturing process is a part of this notification.

[9] This notification is valid until **2011-06-25** and can be withdrawn if the manufacturer does not satisfy the production quality re-assessment.

[10] According to article 10[1] of the Directive 94/9/EC the CE marking shall be followed by the identification Number 0575 identifying the notified body involved in the production control stage.

Høvik, 2008-09-05
for Det Norske Veritas Certification AS

Marianne Sperren
Certification Manager

Bjørn Spongsveen
Technical Reviewer

Notice: This notification may only be reproduced in its entirety and without any change

IECEx Certificate of Conformity

IECEx Certificate of Conformity

INTERNATIONAL ELECTROTECHNICAL COMMISSION
IEC Certification Scheme for Explosive Atmospheres
for rules and details of the IECEx Scheme visit www.iecex.com

Certificate No.: IECEx LCI 08.0038 Issue No.:0 Certificate history:

Status: Current

Date of Issue: 2008-09-16 Page 1 of 3

Applicant:
ITT Corp.
Goulds pumps
240 Fall Street
Seneca Falls, NY 13148
United States of America

Electrical Apparatus: **Condition Monitor**
Optional accessory:

Type of Protection: **ia**

Marking:
ITT Corp.
Goulds pumps
240 Fall Street
Seneca Falls, NY 13148
U.S.A.
Condition Monitor
Type : LCCM, p/n C07667A
Ex ia IIC T4
Tamb : -40°C à 100°C

Approved for issue on behalf of the IECEx Certification Body: Marc Gillaux

Position: Ex Certification Manager

Signature: (for printed version)

Date: le 16 Septembre 2008

1. This certificate and schedule may only be reproduced in full.
2. This certificate is not transferable and remains the property of the issuing body.
3. The Status and authenticity of this certificate may be verified by visiting the Official IECEx Website.

Certificate issued by:

Laboratoire Central des Industries Electriques (LCIE)
33 Avenue du General Leclerc
FR-92260 Fontenay-aux-Roses
France

IECEx Certificate of Conformity

Certificate No.: IECEx LCI 08.0038

Date of Issue: 2008-09-16 Issue No.: 0

Page 2 of 3

Manufacturer: ITT Corp.
Goulds pumps
240 Fall Street
Seneca Falls, NY 13148
United States of America

Manufacturing location(s):

This certificate is issued as verification that a sample(s), representative of production, was assessed and tested and found to comply with the IEC Standard list below and that the manufacturer's quality system, relating to the Ex products covered by this certificate, was assessed and found to comply with the IECEx Quality system requirements. This certificate is granted subject to the conditions as set out in IECEx Scheme Rules, IECEx 02 and Operational Documents as amended.

STANDARDS:
The electrical apparatus and any acceptable variations to it specified in the schedule of this certificate and the identified documents, was found to comply with the following standards:

IEC 60079-0 : 2004 Edition: 4.0	Electrical apparatus for explosive gas atmospheres - Part 0: General requirements
IEC 60079-11 : 2006 Edition: 5	Explosive atmospheres - Part 11: Equipment protection by intrinsic safety "i"

*This Certificate **does not** indicate compliance with electrical safety and performance requirements other than those expressly included in the Standards listed above.*

TEST & ASSESSMENT REPORTS:
A sample(s) of the equipment listed has successfully met the examination and test requirements as recorded in

Test Report:

FR/LCI/ExTR08.0043/00

Quality Assessment Report:
NO/DNV/QAR08.0006/00

Chinese Certificate of Conformity

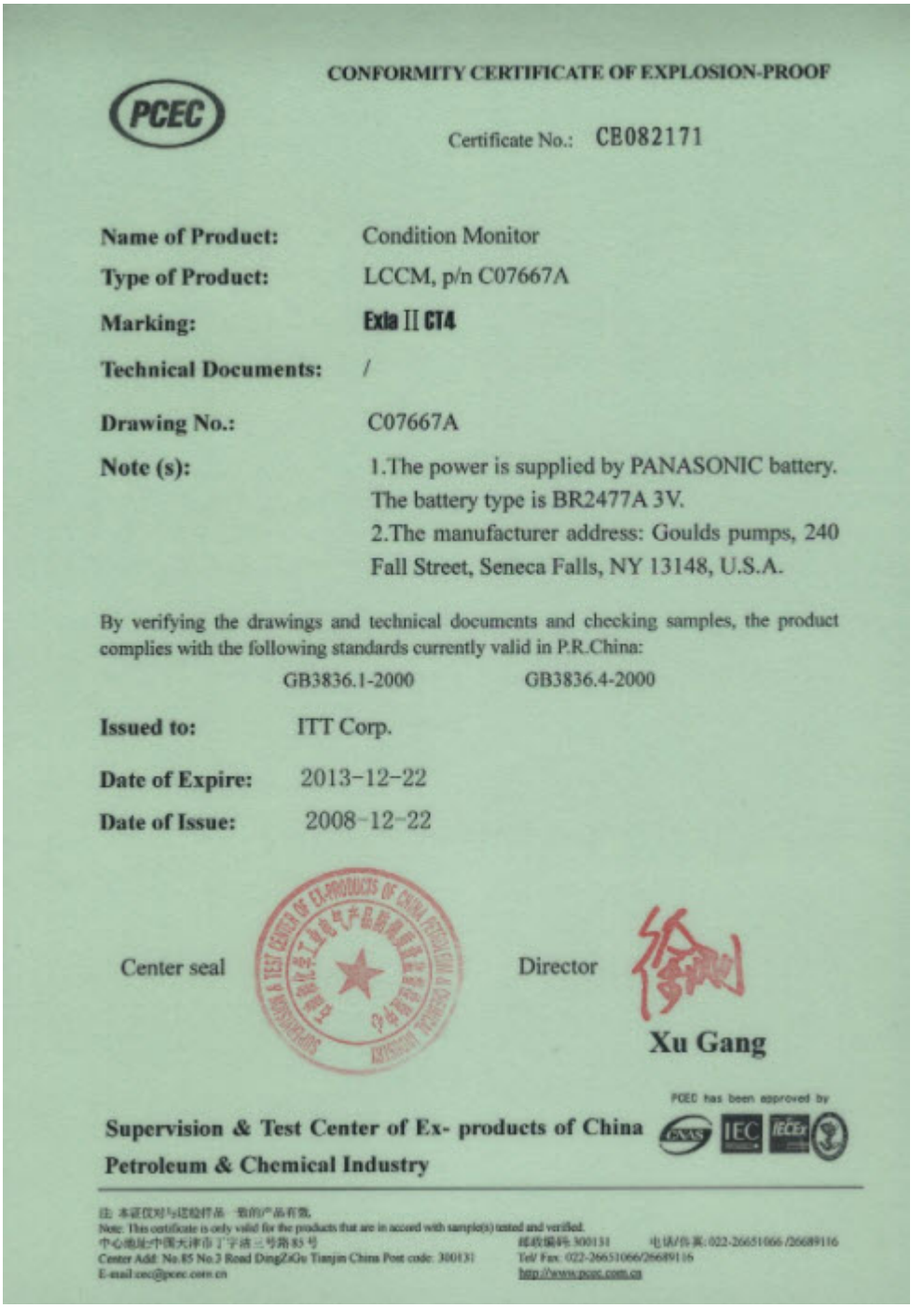

CONFORMITY CERTIFICATE OF EXPLOSION-PROOF

PCEC

Certificate No.: CB082171

Name of Product: Condition Monitor

Type of Product: LCCM, p/n C07667A

Marking: Exia II CT4

Technical Documents: /

Drawing No.: C07667A

Note (s): 1.The power is supplied by PANASONIC battery. The battery type is BR2477A 3V.
2.The manufacturer address: Goulds pumps, 240 Fall Street, Seneca Falls, NY 13148, U.S.A.

By verifying the drawings and technical documents and checking samples, the product complies with the following standards currently valid in P.R.China:

GB3836.1-2000 GB3836.4-2000

Issued to: ITT Corp.

Date of Expire: 2013-12-22

Date of Issue: 2008-12-22

Center seal

Director

Xu Gang

PCEC has been approved by

Supervision & Test Center of Ex- products of China Petroleum & Chemical Industry

Note: This certificate is only valid for the products that are in accord with sample(s) tested and verified.
Center Add: No.85 No.3 Road DingZiGu Tianjin China Post code: 300131
Tel/ Fax: 022-26651066/26689116
E-mail:cec@pcec.com.cn
http://www.pcec.com.cn

Other Relevant Documentation or Manuals

For additional documentation

For any other relevant documentation or manuals, contact your ITT representative.

Local ITT Contacts

Regional offices

Region	Address	Telephone	Fax
North America (Headquarters)	ITT - Goulds Pumps 240 Fall Street Seneca Falls, NY 13148 USA	+1 315-568-2811	+1 315-568-2418
Asia Pacific	ITT Industrial Process 10 Jalan Kilang #06-01 Singapore 159410	+65 627-63693	+65 627-63685
Europe	ITT - Goulds Pumps Millwey Rise Industrial Estate Axminster, Devon, England EX13 5HU	+44 1297-630250	+44 1297-630256
Latin America	ITT - Goulds Pumps Camino La Colina # 1448 Condominio Industrial El Rosal Huechuraba Santiago 8580000 Chile	+562 544-7000	+562 544-7001
Middle East and Africa	ITT - Goulds Pumps Achileos Kyrou 4 Neo Psychiko 115 25 Athens Greece	+30 210-677-0770	+30 210-677-5642

Visit our website for the latest version of this document and more information:
http://www.gouldspumps.com

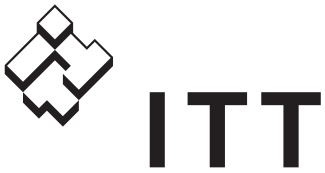

ENGINEERED FOR LIFE

240 Fall Street
Seneca Falls, NY 13148
USA
Tel. 1-800-446-8537
Fax (315) 568-2418

© 2014 ITT Corporation
The original instruction is in English. All non-English instructions are translations of the original instruction.

Form en-US.2014-07.IOM.3196.i-FRAME

ASHCROFT®
Trust the shield.™

Type 1259 Process Pressure Gauge

- *Solid front safety case*
- *Accuracy complies with ASME B40.1 Grade 2A (±0.5% of span)*
- *As-welded Bourdon tube for safety and longer life*
- *Micrometer adjustable pointer.*
- *Adjustable movement*
- *Ranges: vac to 20,000 psi*
- *Date coded socket to ensure pedigree*
- *Wetted part material printed on dial*
- *Liquid filled case option (Code L)*

The Type 1259 process gauge is offered with an as-welded Bourdon tube to ensure safety and a long life. Meeting ASME B40.1, the Type 1259 process gauge has been engineered to meet marketplace requirements.

TEMPERATURE LIMITS

	Ambient	Process	Storage
Dry	–20/200°F (–29/93°C)	–20/250°F (–29/121°C)	–40/250°F (–40/121°C)
LF (glycerin)	20/150°F (7/66°C)	20/200°F (7/93°C)	0/150°F (–18/66°C)

Note: Other than discoloration of the dial and hardening of the gasketing that may occur as ambient or process temperatures exceeds 150°F, non-liquid-filled gauges with standard glass windows, can withstand continuous operating temperatures up to 250°F (121°C). Liquid-filled gauges can withstand 200°F (93°C) but glycerin fill and acrylic window will tend to yellow. Accuracy at temperatures above or below the reference ambient temperature of 68°F (20°C) will be affected by approximately .4% per 25°F. Gauges with welded joints will withstand 750°F (450°F (232°C) with silver brazed joints) for short times without rupture, although other parts of the gauge will be destroyed and calibration will be lost. For continuous use and for process or ambient temperatures above 250°F (121°C), a diaphragm seal or capillary or siphon is recommended.

PRODUCT SPECIFICATIONS

Model Number:	1259
Accuracy:	½% full scale (Grade 2A, ASME B40.100)
Ranges:	Vacuum – 20,000 psi
Ring Type:	Cam lock, fiberglass reinforced thermoplastic
Dial Size:	4½" diameter
Case:	Solid front safety
Case Material:	Fiberglass reinforced thermoplastic
Weather Protection:	Dry Case: IP54 Liquid filled or hermetically sealed case: IP 65
Window:	Glass
Dial:	Aluminum, white background, black pressure scale.
Pointer:	Micrometer adjustable
Movement:	Adjustable 300 series ss
Bourdon Tube & Socket:	316L SS/316L SS (S)[1] K Monel/Monel (P)[1]
Conn. Size:	¼, ½ NPT
Conn. Location:	Lower
Weight (Lbs.)	2.5 (Dry) 3.5 (Liquid Filled)

PRODUCT OPTIONS

Fill:	Glycerin
Hermetic Seal:	XLJ
Flush Mounting Ring:	X56, X57
Shatter Proof Glass Window:	XSG
Window Acrylic:	XPD

[1] Joints welded

Dimensions

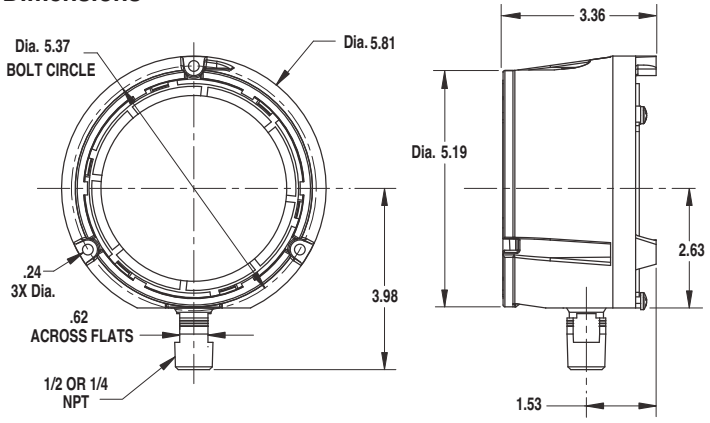

ISO 9001
REGISTERED FIRM

BULLETIN PR-1259

All specifications are subject to change without notice.
All sales subject to standard terms and conditions.
© 2014 Ashcroft Inc. 11/14

Ashcroft Inc., 250 East Main Street, Stratford, CT 06614 USA
Tel: 203-378-8281 • Fax: 203-385-0408
email: info@ashcroft.com • www.ashcroft.com

ASHCROFT®
Trust the shield.™

Type 1259 Process Pressure Gauge

PSI RANGES
Pressure – psi
Range
0/15
0/30
0/60
0/100
0/160
0/200
0/300
0/400
0/600
0/800
0/1000
0/1500
0/2000
0/3000
0/4000
0/6000
0/10,000
0/20,000
Vacuum
30/0 in.Hg
34/0 ftH_20
Compound
30˝Hg/15 psi
30˝Hg/30 psi
30˝Hg/60 psi
30˝Hg/100 psi
30˝Hg/150 psi
30˝Hg/300 psi

METRIC RANGES	
Pressure – kg/cm² and bar	
Range	**(Outer Scale) psi**
0/1	0/14
0/1.6	0/22
0/2.5	0/35
0/4	0/55
0/6	0/85
0/10	0/140
0/16	0/220
0/25	0/350
0/40	0/550
0/60	0/850
0/100	1400
0/160	2200
0/250	3500
0/400	5500
0/600	8500
0/1000	14,000
0/1600	22,000
Vacuum	**Outer Scale**
–1/0	30˝Hg
Compound	
–1/0/1.5	30˝Hg/20
–1/0/3	30˝Hg/40
–1/0/5	30˝Hg/70
–1/0/9	30˝Hg/125
–1/0/15	30˝Hg/215
–1/0/24	30˝Hg/340

METRIC RANGES	
Pressure – kPa	
Range	**(Outer Scale) psi**
0/100	0/14
0/160	0/22
0/250	0/35
0/400	0/55
0/600	0/85
0/1000	0/140
0/1600	0/220
0/2500	0/350
0/4000	0/550
0/6000	0/850
0/10,000	1400
0/16,000	2200
0/25,000	3500
0/40,000	5500
0/60,000	8500
0/100,000	14,000
0/160,00	22,000
Vacuum	**Outer Scale**
–100/0	30˝Hg
Compound	
–100/0/150	30˝Hg/20
–100/0/300	30˝Hg/40
–100/0/500	30˝Hg/70
–100/0/900	30˝Hg/125
–100/0/1500	30˝Hg/215
–100/0/2400	30˝Hg/340

Pressure – mPa	
Range	**(Outer Scale) psi**
0/0.1	0/14
0/0.16	0/22
0/0.25	0/35
0/0.4	0/55
0/0.6	0/85
0/1	0/140
0/1.6	0/220
0/2.5	0/350
0/4	0/550
0/6	0/850
Vacuum	**Outer Scale**
–0.1/0	30˝Hg
Compound	
–0.1/0/0.15	30˝Hg/20
–0.1/0/0.3	30˝Hg/40
–0.1/0/0.5	30˝Hg/70
–0.1/0/0.9	30˝Hg/125
–0.1/0/1.5	30˝Hg/215
–0.1/0/2.4	30˝Hg/340

Order Coding Example

45	1259	S	S	04	L	OPTIONAL X VARIATIONS	100	#

SIZE	TYPE	SYSTEM (TUBE & SOCKET)	CASE DESIGN SOLID FRONT	PROCESS CONNECTION SIZE	CONNECTION LOCATION	OPTIONS (X VARIATIONS)[1]	RANGE	ENGINEERING UNITS
(45) 4½	**1259**	**(S)** 316L[2] **(P)** K-Monel 500 tube, Monel 400 socket[2] [2] Max pressure 30,000psi	**(S)** Dry (IP54) **(SL)** Liquid filled (glycerin standard) (IP65)	**(02)** 1/4 NPT male **(04)** 1/2 NPT male	**(L)** Lower	**(LJ)** Hermetically Sealed, IP65 **(NH)** St. St. Wired Tag **(PD)** Acrylic window **(SG)** Safety glass **(56)** Flush mounting ring [1] Others on request	See above	**(#)** PSI **(BR)**) Bar **(KG)** Kilograms/CM2 **(KP)** Kilopascal **(IMV)** Inches of Mercury Vacuum

ISO 9001
REGISTERED FIRM

BULLETIN PR-1259

All specifications are subject to change without notice.
All sales subject to standard terms and conditions.
© 2014 Ashcroft Inc. 11/14

Ashcroft Inc., 250 East Main Street, Stratford, CT 06614 USA
Tel: 203-378-8281 • Fax: 203-385-0408
email: info@ashcroft.com • www.ashcroft.com

REVISIONS					
REV	DESCRIPTION	ECN	DATE	BY	APPROVED
F	Updated Top plate closure, pre cuts	-	6/25/13	S	-
-	-	-	-	-	-

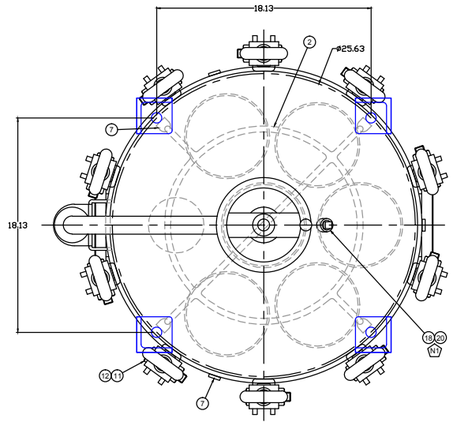

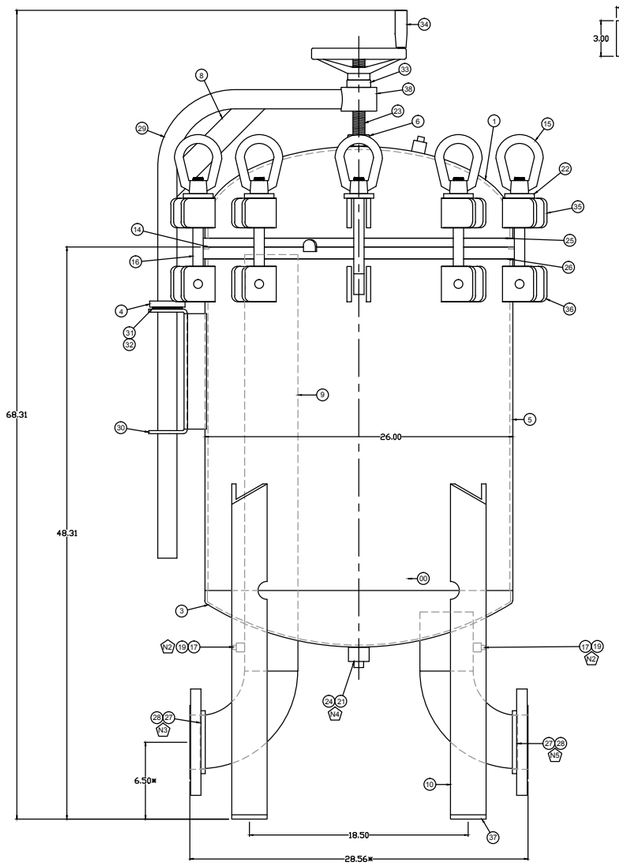

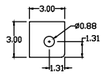

Balloon	Part #	Description	Quantity
38	3RDC	3" ROUND ROD CARBON A36 20FT	2
37	PL-C-144	Plate,Feet,3x3x.375,SA-36	4
36	PL-C-134-NC	Ear,Shell,MR,C/S,SA-36	10
35	PL-C-135-NC	Ear,LID,MR,C/S,SA-36	10
34	KW-30748	Handle Wheel,Aluminum,8"OD,	1
33	1"TB-HD	1" THRUST BEARING, HEAVY DUT	1
32	DTBR	WASHER THRUST TRD 2840	2
31	DTB	DAVIT THRUST BEARINGS TORRIN	1
30	DLBRC	BRACKET DAVIT LIFT 1/4" HR	1
29	DLAC	DAVIT LIFT ARM CARBON	1
28	4FC	4" RFSO FLANGE CARBON 150#	2
27	4-90-C	4" 90 DEGREE CARBON ELBOW LR	2
26	26TPC6D4	TOP PLATE.26.75"OD,1"T,6 Bag	1
25	HR-26.75-C-PART	Head Ring,26.75"OD,SA-36	1
24	1PPC	1" PIPE PLUG CARBON	1
23	FTS-1X8-C-ZP	Full Thread Stud,1"-8x8"L	1
22	.375SQW	.375" X 2" X 2.5" SQUARE WAS	10
21	1HCC	1" HALF COUPLING CARBON 3000	1
20	.50HCC	Coupler,Half,.50",3000 class	1
19	.25HCC	Coupler,Half,.25",3000 class	2
18	.50PPC	1/2 PIPE PLUG CARBON	1
17	.25PPC	1/4 PIPE PLUG CARBON STEEL	2
16	REM	ROD END 7/8"-9 X 9",4140 All	10
15	ENM	EYE NUT 7/8-9,C1045	10
14	CB26LB	O Ring,Buna,LR6/C26	1
13	BT-LR-2-SR-S	Basket,LR Style,#2,9/64"Perf	6 Not Shown
12	.75NLN	.75-10 NYLON LOCK NUT ZINC P	10
11	.75HB	.75-10 X 3.5" GR5 HEX HEAD S	10
10	3ANG.375C	3"X3" ANGLE 3/8" A36 CARBN 2	111.75
9	4P-SCH40-C	Pipe,4",Sch.40,SA53-B,Type E	40.19
8	.375X2HRC	3/8" X 2" SA36 HR CARBON 20'	10.5
7	PL-C-142	Plate Tab,.25" x 1",SA-36	7
6	HN-1-2H-PF	Hex Nut,1"-8,2H,Plain Finish	1
5	2628RTC.1875	Plate Roll & Tack,SA-36	1
4	PL-C-116	Plate,Donut,3"OD,1.75"ID	1
3	26H1F5-.1875	Head,F&D,26"OD,.1875"t	1
2	HD-26-C-102	Hold Down,MR,SA-36 or Equiv.	1
1	26HFC-.25-NB	HEAD,2:1 Elip,26"OD,.25"WT	1

MARK	QTY	SERVICE	SIZE	TYPE	WALL THICKNESS	WELD DETAIL	NUMBER	PURPOSE
N5	1	Outlet	4"	RFSO	150□	H, U		
N4	1	Drain	1"	NPT	3000□	B		
N3	1	Inlet	4"	RFSO	150□	H, U		
N2	2	Gauge	.25"	NPT	3000□	B		
N1	1	Vent	.5"	NPT	3000□	B	-	-
NOZZLE SCHEDULE							□IGS USED	

APPROVALS		DATE
Approved By	-	-
Checked By	-	-
Drawn By	□S	6/21/13

FINISH INFO	
Prep Sandblast Interior□	SP 7 (Closure)
Prep Sandblast Exterior□	SP 7 (Closure)
Finish Sandblast Interior□	SP 7 (Rough)
Finish Sandblast Exterior□	SP 7 (Rough)
Paint Interior□	Black Epoxy
Paint Exterior□	Black Epoxy

DESIGN INFO	
M.A.W.P.□	150 psig @ 300° F
M.A.E.P.□	0
M.D.M.T.□	-20° F @ 150 psig
Hydro Test Pressure□	195 psig
Radiography□	None
Corrosion Allowance□	None
Weight□	-
Element□	(6) □2 Filter Bag

GENERAL TOLERANCES (unless otherwise noted)	
*	□/- .125" (Critical)
XX.XXXX	□/- .0625"
XX.XXX	□/- .125"
XX.XX	□/- .25"
XX.X	□/- .5"
ANGULAR TOLERANCE : 3°	
GENERAL NOTES	
1) All dimensions are in inches unless otherwise noted 2) No heat treatment or impact testing.	

PENTAIR
9449 South 550 West
Winamac, IN. 46996
Phone□574-278-7161 / Fax□574-278-7131

Part Number□ LR6304FAC15

Dwg No.	Revision
2273	F

THIS DOCUMENT IS SOLELY THE PROPERTY OF PENTAIR. REPRODUCTION, USE DISCLOSURE, OR TRANSMISSION OF THIS DOCUMENT OR DETAILS CONTAINED HEREIN, IN PART OR IN WHOLE, IS PROHIBITED WITHOUT WRITTEN CONSENT OF PENTAIR ENGINEERING. THIS DOCUMENT AND ANY COPIES SHALL BE RETURNED TO PENTAIR UPON WRITTEN REQUEST.

Scale□Not to Scale | AutoCAD Format | Sheet 1 of 1

****WARNING-SAFETY INFORMATION****

1. The housings in this catalog, if improperly used, can cause serious injury or death
2. Always wear proper protective clothing for the liquid being filtered. Check your M.S.D.S. for any instructions or suggestions.
3. Do not run housing in excess of the rated pressure or temperature found on the housing tank label.
4. Check chemical compatibility of selected o-ring and housing material before housing installation.
5. Do not open housing when the system is under pressure; always relieve all pressure through housing before opening of housing lid.
6. *Stop all flow of liquid before opening of lid*.
7. Bolt housing to floor, as tipping may occur when lid is opened.

Do not operate over 150 PSI working pressure

MODEL **LR2**: maximum flow rate of **400** gallons per minute
MODEL **LR3**: maximum flow rate of **600** gallons per minute
MODEL **LR4**: maximum flow rate of **800** gallons per minute
MODEL **LR6**: maximum flow rate of **1200** gallons per minute
MODEL **LR8**: maximum flow rate of **1600** gallons per minute
MODEL **LR12**: maximum flow rate of **2000** gallons per minute
MODEL **LR17**: maximum flow rate of **3500** gallons per minute

RECEIVING INSTRUCTIONS:

1. Uncrate the housing(s) and discard any shipping materials
2. Place housing in the desired location on a flat surface, securing the four support legs to the base.

INSTALLATION INSTRUCTIONS:

*** flow to the housing should be turned off***

1. Place housing on pipe connections
   a. N.P.T./Coupling style – We do not recommend using any type of liquid sealant due to contamination of the pipe that may occur.
   b. Flange style – put a small amount of clean, heavy oil on one side of the gaskets, place oiled side down onto existing flanges to hold gaskets.
2. Please note the labeling of the inlet and outlet connections for proper installation. Tighten housing with proper tension to seal housing onto existing pipe or flange. Note: housing has been factory pressure tested to assure a leak proof vessel. If leaking occurs, check for improper connections.
3. Remove lid from housing by turning eye nuts until loosened and swing them down. Using the Lid Lift Handle, swing the lid until full view of the inner housing area is gained.
4. Check inner housing and pipe connections for foreign material and discard any items that have entered during shipping or unpacking.
5. Make sure that the strainer baskets are pushed fully into housing grooves. If using a filter bag, seat bag fully into strainer basket to assure a leak-proof seal between bag and basket. For best results, bag should be fully extended into the basket.
6. Close lid and alternately tighten the eye nuts until lid is fully seated onto the O-ring gasket.
7. Housing is now ready for start-up.

START-UP OF HOUSING

1. Loosen vent plug to allow air to escape from housing.
2. Slowly open the inlet to gradually fill the housing body.
3. When housing body is full (liquid escapes from top vent), close the vent.
4. Open the outlet connection and fully open the inlet connection. Housing is now operating properly.

REMOVAL OF SPENT ELEMENT:

1. When the housing reaches your pre-determined differential pressure, stop flow to the housing and relieve housing pressure through housing drain. Remove enough liquid to show top of basket flange.
2. Loosen eye nuts on housing and, using the Lid Lift Handle, swing the lid to gain full access to the inside of housing.
3. If using a liquid bag, pull the element out of the basket and discard the element in accordance with any required local and federal laws.
4. Remove filter baskets and clean thoroughly.
5. Housing debris and sludge should be removed to prolong filter efficiencies.
6. Replace filter baskets and bags into housings as noted in Installation Instructions above.

RECOMMENDED MAINTENANCE:

Periodic checks should be made on all housing lid and basket o-rings to ensure no cuts or damage has incurred that would cause the housing not to seal. If housing parts become damaged or worn, replace immediately.

OPTIONAL REPLACEMENT PARTS LIST

CB*LB	Buna Lid O-ring
LLHM	Lid Lift Handle
ENM	Eye Nut
REM	Rod End
CBAM	Clevis Bolt Assembly
PER APPLICATION **	Filter Bags
PER APPLICATION **	Filter Basket

* Insert outside diameter of housing model #
** Full line of replacement bags and baskets are available

Fliteway Technologies, Inc.

Feed Pump VFD - Control Panel

2129 East Birchwood Ave. Cudahy, WI 53110

(414) 483-5600 1-800-236-3580 FAX (414) 483-1957

FEED PUMP SKID

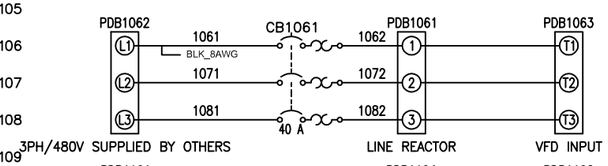

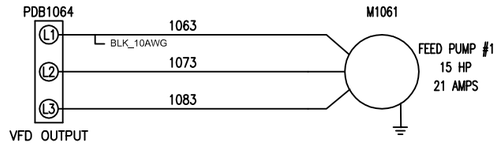

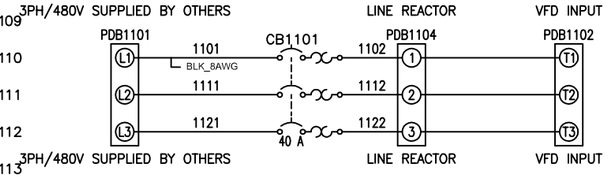

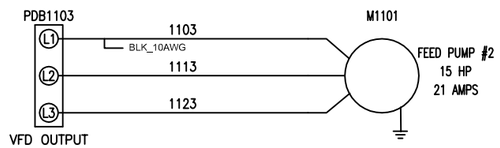

HIGH VOLTAGE PANEL

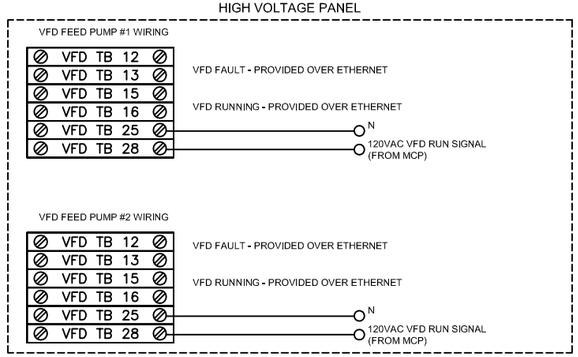

LOW VOLTAGE JUNCTION BOX

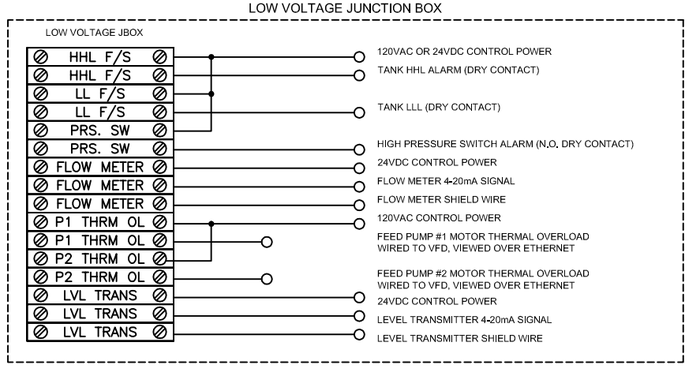

TREAT WATER PUMP SKID

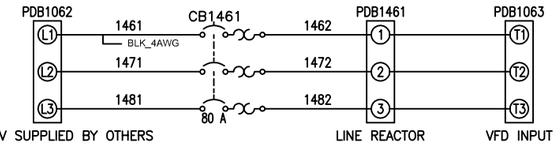

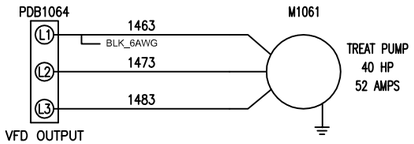

HIGH VOLTAGE PANEL

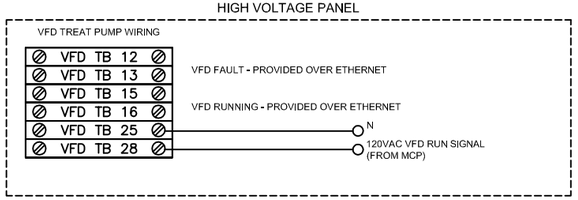

LOW VOLTAGE JUNCTION BOX

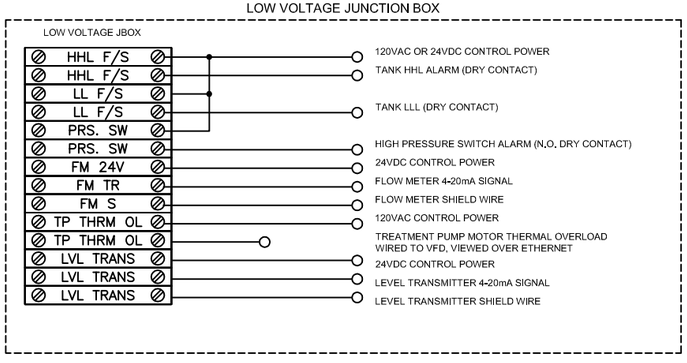

THIS PRINT AND ITS CONTENTS ARE THE PROPERTY OF FLITEWAY AND MUST NOT BE USED FOR ANY PURPOSE NOT AUTHORIZED BY FLITEWAY. DO NOT DISCLOSE, REPRODUCE OR OTHERWISE USE THIS PRINT OR ITS CONTENTS IN ANY MANNER DETRIMENTAL TO THE INTEREST OF FLITEWAY WITHOUT FLITEWAY'S PRIOR WRITTEN CONSENT. FLITEWAY RESERVES ALL RIGHTS OF DESIGN AND INVENTION TO THE EXTENT PERMITTED BY LAW.

CAD SYSTEM	UNITS
ACADE	IN
SCALE	FORMAT
1:1	D

Fliteway Technologies, Inc.
2129 East Birchwood Ave.
Cudahy, WI 53110

DRAWN BY	Q #	DESCRIPTION
Josh	Q14508	AS BUILT

DESIGNED FOR: CB&I Federal Services

Drawing Number

PLOTTED : 09-16-2015

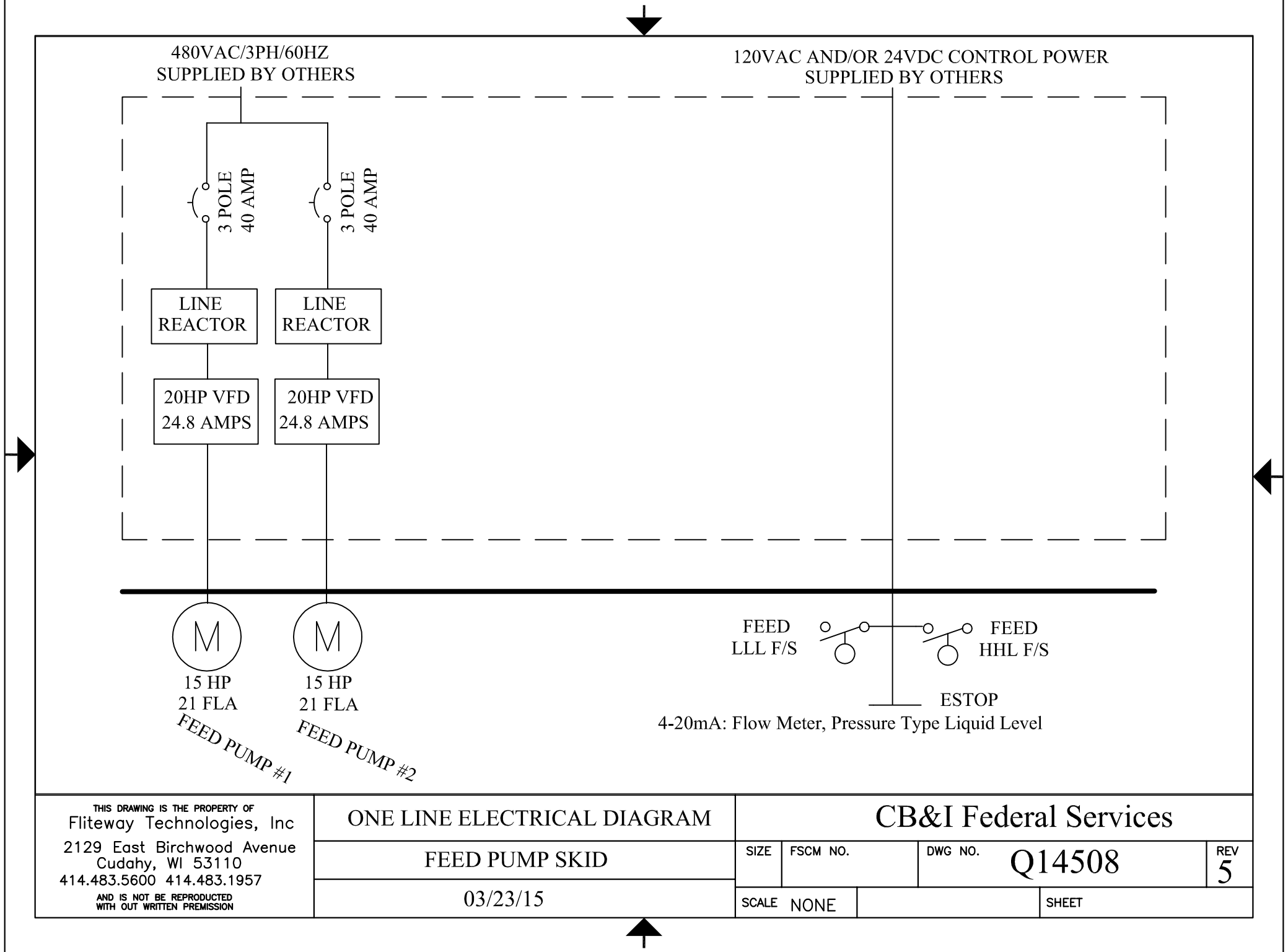

THIS DRAWING IS THE PROPERTY OF
Fliteway Technologies, Inc
2129 East Birchwood Avenue
Cudahy, WI 53110
414.483.5600 414.483.1957
AND IS NOT BE REPRODUCTED
WITH OUT WRITTEN PREMISSION

ONE LINE ELECTRICAL DIAGRAM

FEED PUMP SKID

03/23/15

CB&I Federal Services

SIZE	FSCM NO.	DWG NO.	REV
		Q14508	5

SCALE NONE

SHEET

Allen-Bradley

PowerFlex 700 Adjustable Frequency AC Drive

Topic	Page
Product Overview	2
Certifications and Specifications	7
Design Considerations	12
Drive, Fuse and Circuit Breaker Ratings	24
Cable Recommendations	33
Power Wiring	34
I/O Wiring	44
Mounting	49
Dimensions and Weights	53
PowerFlex 700 Packaged Drives	77
Drive Options	78

LISTEN. THINK. SOLVE.®

Allen-Bradley • Rockwell Software

Rockwell Automation

Additional Resources

These documents contain additional information concerning related products from Rockwell Automation.

Resource	Description
PowerFlex 700 Adjustable Frequency AC Drive Installation Instructions – Frames 0…6, publication 20B-IN0019	Provides detailed information about installation and start-up.
PowerFlex 700 Adjustable Frequency AC Drive Installation Instructions – Frames 7…10, publication 20B-IN0014	
PowerFlex 700 Standard Control User Manual, publication 20B-UM001	Provides detailed information on: • Parameters and programming • Faults, alarms, and troubleshooting
PowerFlex 700 Vector Control User Manual (v4.001 & up), publication 20B-UM002	
PowerFlex 70 and PowerFlex 700 Reference Manual, publication PFLEX-RM001	Provides detailed application specific information for programming and configuring the PowerFlex 700 drive.
PowerFlex 70 Enhanced Control and PowerFlex 700 Vector Control Reference Manual, publication PFLEX-RM004	
Wiring and Grounding Guidelines for Pulse Width Modulated (PWM) AC Drives, publication DRIVES-IN001	Provides basic information needed to properly wire and ground PWM AC drives.
Safety Guidelines for the Application, Installation and Maintenance of Solid State Control, publication SGI-1.1	Provides general guidelines for the application, installation, and maintenance of solid-state control.
Preventive Maintenance of Industrial Control and Drive System Equipment, publication DRIVES-TD001	Provides a guide to performing preventive maintenance.
Guarding Against Electrostatic Damage, publication 8000-4.5.2	Provides practices for guarding against electrostatic damage (ESD).
Product Certifications website, http://ab.com	Provides declarations of conformity, certificates, and other certification details.

You can view or download publications at http://www.rockwellautomation.com/literature/. To order paper copies of technical documentation, contact your local Allen-Bradley distributor or Rockwell Automation sales representative.

Product Overview

The PowerFlex 700 AC drive offers outstanding performance in an easy-to-use drive that you have come to expect from Rockwell Automation. This world-class performance comes in a small and competitively priced package. The PowerFlex 700 AC drive is designed to control three-phase induction motors in applications with requirements ranging from the simplest speed control to the most demanding torque control. The drive has volts per hertz, sensorless vector and vector control. Vector control includes Allen-Bradley's patented Force™ Technology which provides world class motor control.

Flexible Packaging and Mounting

- **IP20, NEMA / UL Type 1** – For conventional mounting inside or outside a control cabinet. Conduit plate is removable for easy installation and replacement without disturbing conduit.
- **IP54, NEMA / UL Type 12** – Stand-alone, wall mount drives are available for dust tight applications with power ratings from 75 to 200 Hp (Frames 5 & 6).
- **IP54, NEMA / UL Type 12** – Flange mount drives with an IP00, NEMA / UL Type Open front. These can be installed in a user supplied cabinet to meet IP54, NEMA / UL Type 12. This allows the majority of heat to be exhausted out the back of the cabinet while keeping the cabinet protected. Power ratings range from 75 to 700 Hp (Frames 5...10).
- **Zero Stacking**™ – Frame 0...6 drives can be mounted next to each other with no reduction of surrounding air temperature rating (50°C). This unique bookshelf design also allows access to one drive without disturbing another.

Space Saving Hardware Features

- **Integral EMC Filtering** plus built-in DC bus choke common mode cores and common mode capacitors provides a compact, all-in-one package solution for meeting EMC requirements, including CE in Europe. Frames 0...6 only (Frames 7...10 meet CE when installed per recommendations).
- **Internal Communications** allow the user to integrate the drive into the manufacturing process. Status indicators for all internal communication options are visible on the cover for easy setup and monitoring of drive communications. Users can easily manage information from shop floor to top floor and seamlessly integrate their complete system as they control, configure and collect data.
- **Integral Dynamic Brake Transistor** delivers a cost effective means of switching regenerative energy without costly external chopper circuits. These internal transistors are available in power ratings from 0.5 to 200 Hp.
- **Internal Dynamic Brake Resistor** (up to 25 Hp) requires no extra panel space, and supplies a large amount of braking torque for short periods.

Easy to Use Human Interface Tools

The PowerFlex 7-Class AC drives provide common Human Interface tools that are familiar and easy to use. These include the LCD Human Interface modules and PC-based configuration tools.

- LCD Human Interface modules provide:
  - Large and easy to read 7 line x 21 character backlit display
  - Variety of languages (English, French, German, Italian, Spanish, Portuguese, Dutch)
  - Alternate function keys for shortcuts to common tasks
  - “Calculator-like” number pad for fast and easy data entry (Full Numeric version only)
  - Control keys for local start, stop, speed, and direction
  - Remote versions for panel mount application

Outstanding Control and Performance

Multiple motor control algorithms allow performance matched to the application need:

- **Volts/Hertz** for simple Fan and Pump applications.
- **Sensorless Vector** for high torque production over a wide speed range.
- **Vector** for outstanding torque regulation and excellent low speed/zero speed performance (w/Vector Control cassette).

The PowerFlex 700 drive's Vector Control uses Allen-Bradley's patented Force™ Technology which provides excellent low-speed performance - whether it is operated with or without feedback. While this industry-leading control provides the highest level of drive performance, it is as easy to use as any general purpose drive available.

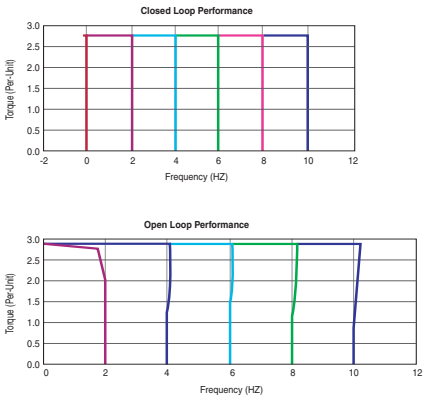

Drives Features

- Fast-acting **Current Limit** and **Bus Voltage Regulation** result in maximum accel/decel without tripping.
- **High speed analog inputs** improve drive response to torque or speed commands.
- **Programming flexibility** allows parameters to be linked within the drive.
- **Flying Start** delivers smooth and instantaneous connection into rotating loads, regardless of commanded direction, without the need for any speed feedback.
- **Integral Process PI Control** can eliminate the need for a separate process loop controller.
- **Inertia Ride-Through** offers tripless operation during a prolonged power outage by using the rotating energy stored in high inertia, low-friction loads.
- **Position Indexer/Speed Profiler** uses a 16 step indexer to provide point-to-point positioning or velocity profiling based on encoder counts, digital inputs, parameter levels or time.
- **TorqProve**™ assures control of the load when transferring control between the drive and a mechanical brake.
- **Speed Regulation** - Open Loop or Closed Loop
  - **Slip Compensation** delivers a minimum 0.5% speed regulation without feedback hardware.
  - **Droop** allows drives to load share without fighting each other.
  - **Encoder Feedback** provides up to 0.001% speed regulation for the tightest application requirements.
- **Torque Regulation** - Open Loop or Closed Loop
  - **Open Loop** torque regulation provides ±5% regulation.
  - **Encoder Feedback** provides ±2% regulation and the ability to hold full load at zero speed.

Unsurpassed Capability in Network Communications

PowerFlex drives are fully compatible with the wide variety of Allen-Bradley DPI™ communication adapters, offering the following benefits:

BACnet®	ControlNet™	DeviceNet™	EtherNet/IP™	LonWorks™	Modbus RTU	PROFIBUS™	Remote I/O(1)	RS485 DF1	USB	Description
	✔	✔	✔							**(Unconnected Messaging)** permits other network devices (e.g. PanelView™) to communicate directly to a drive without routing the communication through the network scanner.
✔	✔	✔	✔					✔	✔	**Adapter Routing** - Plug PC into one drive and talk to all other Allen-Bradley drives on same network, without being routed through network scanner.
✔	✔	✔	✔	✔	✔	✔	✔	✔	✔	Access to 100% of all parameters over the network.
✔		✔	✔			✔				**AutoBaud** capability makes initial connections less problematic.
		✔								**Change of State** significantly reduces network traffic by configuring control messages to be sent only upon customer defined states. Very flexible configuration for each node (Example: "reference must change by more than 5%").
		✔	✔							**Peer Control** provides master-slave type control between drives, where one or more slave drives (consumers) can run based on the status of a master drive (producer), which can also significantly reduce network traffic.
		✔								**ADR (Automatic Device Replacement)** saves significant time and effort when replacing a drive, by allowing the scanner to be configured to automatically detect a new drive and download the required parameter settings.
✔	✔	✔	✔	✔	✔	✔	✔	✔	✔	**Flexible Fault Configuration** - Adapters can be programmed to take fault based actions as ramp to stop, coast-to-stop and hold last state, as well as send user configurable logic control and speed reference values. In addition, different actions can be taken based on whether the network experienced a serious problem (broken cable etc.) versus network idle condition (PLC set to "Program").

(1) This item has Silver Series status. For information, refer to http://www.ab.com/silver.

Catalog Number Explanation

20B	D	2P1	A	3	A	Y	N	A	E	C	0	NN	AD
a	*b*	*c1…c5*	*d*	*e*	*f*	*g*	*h*	*i*	*j*	*k*	*l*	*m*	*n*

a

Drive	
Code	Type
20B	PowerFlex 700

b

Voltage Rating				
Code	Voltage	Ph.	Prechg.	Frames
B	240V AC	3	-	0…6
C	400V AC	3	-	0…10
D	480V AC	3	-	0…10
E	600V AC	3	-	0…6
F	690V AC	3	-	5…6
H	540V DC	-	N	5…6, 10
J	650V DC	-	N	5…6, 10
N	325V DC	-	Y	5…6
P	540V DC	-	Y	5…9
R	650V DC	-	Y	5…9
T	810V DC	-	Y	5…6
W	932V DC	-	Y	5…6

c1

ND Rating				
208/240V, 60 Hz Input				
Code	208V Amps	240V Amps	Hp	Frame
2P2	2.5	2.2	0.5	0
4P2	4.8	4.2	1.0	0
6P8	7.8	6.8	2.0	1
9P6	11	9.6	3.0	1
015	17.5	15.3	5.0	1
022	25.3	22	7.5	1
028	32.2	28	10	2
042	48.3	42	15	3
052	56	52	20	3
070	78.2	70	25	4
080	92	80	30	4
104	120	104	40	5
130	130	130	50	5
154	177	154	60	6
192	221	192	75	6
260	260	260	100	6

c2

ND Rating			
400V, 50 Hz Input			
Code	Amps	kW	Frame
1P3	1.3	0.37	0
2P1	2.1	0.75	0
3P5	3.5	1.5	0
5P0	5.0	2.2	0
8P7	8.7	4.0	0
011	11.5	5.5	0
015	15.4	7.5	1
022	22	11	1
030	30	15	2
037	37	18.5	2
043	43	22	3
056	56	30	3
072	72	37	3
085	85	45	4
105	105	55	5
125	125	55	5
140	140	75	5
170	170	90	6
205	205	110	6
260	260	132	6
292	292	160	7
325	325	180	7
365	365	200	8
415	415	240	8
481	481	280	8
535	535	300	8
600	600	350	8
730	730	400	9
875	875	500	10

c3

ND Rating			
480V, 60 Hz Input			
Code	Amps	Hp	Frame
1P1	1.1	0.5	0
2P1	2.1	1.0	0
3P4	3.4	2.0	0
5P0	5.0	3.0	0
8P0	8.0	5.0	0
011	11	7.5	0
014	14	10	1
022	22	15	1
027	27	20	2
034	34	25	2
040	40	30	3
052	52	40	3
065	65	50	3
077	77	60	4
096	96	75	5
125	125	100	5
156	156	125	6
180	180	150	6
248	248	200	6
292	292	250	7
325	325	250	7
365	365	300	8
415	415	350	8
481	481	400	8
535	535	450	8
600	600	500	8
730	730	600	9
875	875	700	10

c4

ND Rating			
600V, 60 Hz Input			
Code	Amps	Hp	Frame
1P7	1.7	1.0	0
2P7	2.7	2.0	0
3P9	3.9	3.0	0
6P1	6.1	5.0	0
9P0	9.0	7.5	0
011	11	10	1
017	17	15	1
022	22	20	2
027	27	25	2
032	32	30	3
041	41	40	3
052	52	50	3
062	62	60	4
077	77	75	5
099	99	100	5
125	125	125	6
144	144	150	6

20B	D	2P1	A	3	A	Y	N	A	E	C	0	NN	AD
a	*b*	*c1…c5*	*d*	*e*	*f*	*g*	*h*	*i*	*j*	*k*	*l*	*m*	*n*

c5

ND Rating			
690V, 50 Hz Input			
Code	Amps	kW	Frame
052	52	45	5
060	60	55	5
082	82	75	5
098	98	90	6
119	119	110	6
142	142	132	6

d

Enclosure	
Code	Enclosure
A	IP20, NEMA/UL Type 1
F ♠	Open/Flange Mount Front: IP00, NEMA/UL Type Open Back/Heatsink: IP54, NEMA Type 12
N ♣	Open/Flange Mount Front: IP00, NEMA/UL Type Open Back/Heatsink: IP54, NEMA 12
G ♠	Stand-Alone/Wall Mount IP54, NEMA/UL Type 12
U	Roll-In Front: IP00, NEMA/UL Type Open Back/Heatsink: IP54, NEMA 12 Frames 8 & 9 Only

♠ Only available for Frame 5 & Frame 6 drives, 400…690V.

♣ Only available for Frames 7…10.

e

HIM	
Code	Operator Interface
0	Blank Cover
3	LCD Display, Full Numeric Keypad
J ♦	Remote (Panel Mount), IP66, NEMA/UL Type 12 Full Numeric LCD HIM
K ♦	Remote (Panel Mount), IP66, NEMA/UL Type 12 Prog. Only LCD HIM

♦ Available with Frames 5…6 Stand-Alone IP54 drives (Enclosure Code "G").

f

Documentation	
Code	Type
A	Manual
N	No Manual
Q	No Shipping Package (Internal Use Only)

g

Brake	
Code	w/Brake IGBT ‡
Y	Yes
N	No

‡ Brake IGBT is standard on Frames 0-3, optional on Frames 4-6 and not available on Frames 7…10.

h

Internal Braking Resistor	
Code	w/Resistor
Y	Yes ★
N	No

★ Not available for Frame 3 drives or larger.

i

Emission		
Code	CE Filter §	CM Choke
A	Yes	Yes
B #	Yes	No
N	No	No

§ Note: 600V class drives below 77 Amps (Frames 0-4) are declared to meet the Low Voltage Directive. It is the responsibility of the user to determine compliance to the EMC directive. Frames 7…10, 400/480V AC drives (Voltage Rating codes "C" and "D") meet CE certification requirements when installed per recommendations.

Only available for 208…240V Frame 0-3 drives.

j

Comm Slot	
Code	Network Type
C	ControlNet (Coax)
D	DeviceNet
E	EtherNet/IP
N	None

k

Control & I/O		
Code	Control	I/O Volts
A	Standard ♦	24V DC/AC
B	Standard ♦	115V AC
C	Vector Δ	24V DC
D	Vector Δ	115V AC
N	Standard	None

Δ Vector Control Option utilizes DPI Only.

♦ Frame 0…6 drives only.

l

Feedback	
Code	Type
0	None
1	Encoder, 12V/5V

m

Future Use

n

Special Firmware (Frames 0…6 Only)	
Code	Type
AD ♦	60 Hz Maximum
AE ♦	Cascading Fan/Pump Control
AX ♦	82 Hz Maximum
BA ♦	Pump Off (for pump jack)

♦ Must be used with Vector Control option C or D (Position k). Positions m-n are only required when custom firmware is supplied.

Certifications and Specifications

Certifications

Certification [1]	Description	Frames			
		0…4		5…6	7…10
		230…480V	600V		
ABS	American Bureau of Shipping MA Certificate 08-HS303172B-3-PDA for auxiliary services on AB Classed vessels and offshore platforms	✔		✔	
CE	Certified by Rockwell Automation to be in conformity with the essential requirements of the applicable European Directives and the standards referenced below have been applied:				
	2006/95/EC (Low Voltage Directive) EN 50178 Electronic Equipment for use in Power Installations	✔	✔	✔	✔
	2004/108/EC (EMC Directive) EN 61800-3 Adjustable Speed electrical power drive systems - Part 3: EMC requirements and specific test methods.	✔		✔	✔[2]
RCM	Certified by Rockwell Automation to be in conformity with the requirements of the applicable Australian legislation and the standards referenced: IEC 61800-3.	✔		✔	✔
c-UL-us	Listed to UL508C and C22.2 No. 14. Packaged drives may be listed to UL508A.	✔	✔	✔	✔
EAC	Low Voltage TR CU 004/2011 EMC TR CU 020/2011	✔	✔	✔	✔
EPRI /SEMIF47	EPRI Quality Star Certificates SEMIF47.115 and SEMIF47.127 for SEMI F47 compliance, only 480V units tested	✔		✔	
Functional Safety	EC-Type-Examination Certificate TUV 05 ATEX 7153 for directive 94/9/EC: Safe turn off of certified ATEX motors used in Group II Category (2) GD potentially explosive atmospheres.	✔	✔	✔	✔
Korean KC Registration	KCC-REM-RAA-20B Refer to the certificate of registration for specific drive catalog numbers that have this certification.	✔	✔	✔	✔
Lloyd's Register	Lloyd's Register Type Approval Certificate 08-HS303172B-3-PDA (marine certification)	✔		✔	
Trentec	Tested by Trentec to be compliant with AC156 Acceptance Criteria for Seismic Qualification Testing of Nonstructural Components and 2003 International Building Code for worst-case seismic level for USA excluding site class F	✔	✔	✔	
Designed to Meet Applicable Requirements	CMAA Specification #70 (Crane Manufacturers of America Assoc.)	✔	✔	✔	✔
	NFPA 70 – US National Electrical Code	✔	✔	✔	✔
	NEMA ICS 7.1 – Safety Standards for Construction and Guide for Selection, Installation, and Operation of Adjustable Speed Drive Systems	✔	✔	✔	✔
	IEC 61800-2 – Adjustable Speed Electrical Power Drive Systems - Part 2: General Requirements - Rating specifications for low voltage adjustable frequency AC power drive systems.	✔	✔	✔	✔

(1) See the product certifications website, http://www.rockwellautomation.com/products/certification for declarations of conformity, certificates, and other certification details.

(2) Frames 7…10 provided as IP00 or NEMA / UL Open style must be installed in a supplementary enclosure which provides adequate attenuation of radiated emissions in order to be compliant with EN 61800-3.

Environmental

Category	Specification				
Environment	Altitude:	1000 m (3300 ft) max. without derating			
	Maximum Surrounding Air Temperature without Derating - IP20, NEMA / UL Type Open: Frames 0…6 Frames 7…10	 0…50 °C (32…122 °F), typical. See Installation Instructions for details. 0…40 °C (32…104 °F) for chassis (heatsink) 0…65 °C (32…149 °F) for control (front of backplane)			
	Storage Temperature (all const.):	-40…70 °C (-40…158 °F)			
	Atmosphere:	**Important:** Drive **must not** be installed in an area where the ambient atmosphere contains volatile or corrosive gas, vapors or dust. If the drive is not going to be installed for a period of time, it must be stored in an area where it will not be exposed to a corrosive atmosphere.			
	Relative Humidity:	5 to 95% non-condensing			
	Shock:	15G peak for 11ms duration (±1.0 ms)			
	Vibration:	0.152 mm (0.006 in.) displacement, 1G peak			
	Surrounding Environment Pollution Degree Pollution Degree 1 & 2: Pollution Degree 3 & 4: (See page 11 for descriptions of each pollution degree rating.)	 All enclosures acceptable. Enclosure that meets or exceeds IP54, NEMA / UL Type 12 required.			
	Sound:	Frame	Fan Velocity	Sound Level	Note: Sound pressure level is measured at 2 meters.
		0	30 CFM	58 dB	
		1	30 CFM	59 dB	
		2	50 CFM	57 dB	
		3	120 CFM	61 dB	
		4	190 CFM	59 dB	
		5	200 CFM	71 dB	
		6	300 CFM	72 dB	
		7	756 CFM	74 dB	
		8	1200 CFM	78 dB	
		9	2800 CFM	82 dB	
		10 Inv.	1850 CFM	78 dB	
		10 Cnv.	1200 CFM	78 dB	

Technical Specifications

Category	Specification						
Protection	**Drive**	200…208V	240V	380/400V	480V	600V Frames 0…4	600/690V Frames 5…6
	AC Input Overvoltage Trip:	285V AC	285V AC	570V AC	570V AC	716V AC	818V AC
	AC Input Undervoltage Trip:	120V AC	138V AC	233V AC	280V AC	345V AC	345V AC
	Bus Overvoltage Trip:	405V DC	405V DC	810V DC	810V DC	1013V DC	1162V DC
	Bus Undervoltage Shutoff/Fault:	153V DC	153V DC	305V DC	305V DC	381V DC	437V DC
	Nominal Bus Voltage:	281V DC	324V DC	540V DC	648V DC	810V DC	932V DC
	All Drives						
	Heat Sink Thermistor:	Monitored by microprocessor overtemp trip					
	Drive Overcurrent Trip Software Overcurrent Trip: Hardware Overcurrent Trip:	 200% of rated current (typical) 220…300% of rated current (dependent on drive rating)					
	Line transients:	up to 6000 volts peak per IEEE C62.41-1991					
	Control Logic Noise Immunity:	Showering arc transients up to 1500V peak					
	Power Ride-Thru:	15 milliseconds at full load					
	Logic Control Ride-Thru:	0.5 seconds minimum, 2 seconds typical					
	Ground Fault Trip:	Phase-to-ground on drive output					
	Short Circuit Trip:	Phase-to-phase on drive output					
Electrical	Voltage Tolerance:	See page 12 for full power and operating range					
	Input Frequency Tolerance:	47…63 Hz					
	Input Phases:	Three-phase input provides full rating for all drives. Single-phase operation possible on certain drives and provides 50% of rated current (see Installation Instructions for details). Frames 0…7: Drive can be supplied as 6 pulse or 18 pulse in an engineered package.					
	Displacement Power Factor:	0.98 across entire speed range					
	Efficiency:	97.5% at rated amps, nominal line volts					
	Maximum Short Circuit Rating:	200,000 Amps symmetrical					
	Actual Short Circuit Rating:	Determined by AIC rating of installed fuse/circuit breaker					
	Drive to Motor Power Ratio Minimum Maximum	 Recommended not less than 1:2 ratio Recommended not greater than 2:1 ratio					

Category	Specification	
Control	Method:	Sine coded PWM with programmable carrier frequency. Ratings apply to all drives (refer to the *Derating Guidelines* in the PowerFlex Reference Manual). The drive can be supplied as 6 pulse or 18 pulse in a configured package.
	Carrier Frequency:	2, 4, 8, and 10 kHz. Drive rating based on 4 kHz. See the Input Protection Device tables in the Installation Instructions for exceptions.
	Output Voltage Range:	0 to rated motor voltage
	Output Frequency Range:	Standard Control – 0 to 400 Hz., Vector Control – 0 to 420 Hz
	Frequency Accuracy Digital Input: Analog Input:	 Within ±0.01% of set output frequency Within ±0.4% of maximum output frequency
	Frequency Control:	Speed Regulation - w/Slip Compensation (Volts per Hertz Mode) 0.5% of base speed across 40:1 speed range, 40:1 operating range 10 rad/sec bandwidth
		Speed Regulation - w/Slip Compensation (Sensorless Vector Mode) 0.5% of base speed across 80:1 speed range, 80:1 operating range 20 rad/sec bandwidth
		Speed Regulation - w/Feedback (Sensorless Vector Mode) 0.1% of base speed across 80:1 speed range, 80:1 operating range 20 rad/sec bandwidth
	Speed Control:	Speed Regulation - w/o Feedback (Vector Control Mode) 0.1% of base speed across 120:1 speed range, 120:1 operating range 50 rad/sec bandwidth
		Speed Regulation - w/Feedback (Vector Control Mode) 0.001% of base speed across 120:1 speed range, 1000:1 operating range, 250 rad/sec bandwidth
	Torque Regulation:	Torque Regulation - w/o Feedback ±5%, 600 rad/sec bandwidth
		Torque Regulation - w/Feedback ±2%, 2500 rad/sec bandwidth
	Selectable Motor Control:	Sensorless Vector with full tuning. Standard V/Hz with full custom capability. PF700 adds Vector Control.
	Stop Modes:	Multiple programmable stop modes including - Ramp, Coast, DC-Brake, Ramp-to-Hold and S-curve.
	Accel/Decel:	Two independently programmable accel and decel times. Each time may be programmed from 0…3600 seconds in 0.1 second increments.
	Intermittent Overload:	110% Overload capability for up to 1 minute, 150% Overload capability for up to 3 seconds.
	Current Limit Capability:	Proactive Current Limit programmable from 20…160% of rated output current. Independently programmable proportional & integral gain.
	Motor Overload Protection Frames 0…6 Standard Control: Frames 0…6 Vector Control: Frames 7…10 Vector Control:	 PowerFlex 700 drives with standard control, identified by an N, A, or B in position 15 of the catalog number, only provide Class 10 motor overload protection according to NEC article 430. They do not provide speed sensitive overload protection, thermal memory retention and motor over-temperature sensing according to NEC article 430.126 (A) (2). If such protection is needed in the end-use product, it must be provided by additional means. PowerFlex 700 drives with vector control, identified by a C or D in position 15 of the catalog number, provide class 10 motor overload protection according to NEC article 430 and motor over-temperature protection according to NEC article 430.126 (A) (2). UL 508C File E59272. Class 10 motor overload protection according to NEC article 430 and motor over-temperature protection according to NEC article 430.126 (A)(2). UL 508C File E59272.

Category	Specification					
Control (continued)	Digital/Analog Input Latency	Signal		Motor Control	Latency	
					Min.	Max	Typical
		Digital Input	Start	FVC	8.4 ms	10.4 ms	8.4 ms
				SVC	9.2 ms	16.0 ms	9.2 ms
			Stop	FVC	10.0 ms	12.4 ms	10.4 ms
				SVC	10.0 ms	12.0 ms	10.4 ms
		Analog Input	Torque 4 kHz PWM	FVC	772 µs	1.06 ms	840 µs
			Torque 2 kHz PWM	FVC	1.008 ms	1.46 ms	1.256 ms
			Speed	FVC	4.6 ms	8.6 ms	4.8 ms
			Speed	SVC	4.8 ms	12.4 ms	6.4 ms
Encoder	Type:	Incremental, dual channel					
	Supply:	12V, 250 mA. 12V, 10 mA minimum inputs isolated with differential transmitter, 250 kHz maximum.					
	Quadrature:	90°, ±27 degrees at 25 degrees C.					
	Duty Cycle:	50%, +10%					
	Requirements:	Encoders must be line driver type, quadrature (dual channel) or pulse (single channel), 8…15V DC output (4…6V DC when jumpers are in 5V position), single-ended or differential and capable of supplying a minimum of 10 mA per channel. Maximum input frequency is 250 kHz. The Encoder Interface Board accepts 12V DC square-wave with a minimum high state voltage of 7.0V DC. With the jumpers in the 5V position, the encoder will accept a 5V DC square-wave with a minimum high state voltage of 3.0V DC. In either jumper position, the maximum low state voltage is 0.4V DC.					

Pollution Degree Ratings According to EN 61800-5-1

Pollution Degree	Description
1	No pollution or only dry, non-conductive pollution occurs. The pollution has no influence.
2	Normally, only non-conductive pollution occurs. Occasionally, however, a temporary conductivity caused by condensation is to be expected, when the drive is out of operation.
3	Conductive pollution or dry non-conductive pollution occurs, which becomes conductive due to condensation, which is to be expected.
4	The pollution generates persistent conductivity caused, for example, by conductive dust, rain or snow.

Design Considerations

Input Voltage Tolerance

Drive Rating	Nominal Line Voltage	Nominal Motor Voltage	Drive Full Power Range	Drive Operating Range
200…240	200	200*	200…264	180…264
	208	208	208…264	
	240	230	230…264	
380…480	380	380*	380…528	342…528
	400	400	400…528	
	480	460	460…528	
500…600 (Frames 0…4 Only)	600	575*	575…660	432…660
500…690 (Frames 5 & 6 Only)	600	575*	575…660	475…759
	690	690	690…759	475…759

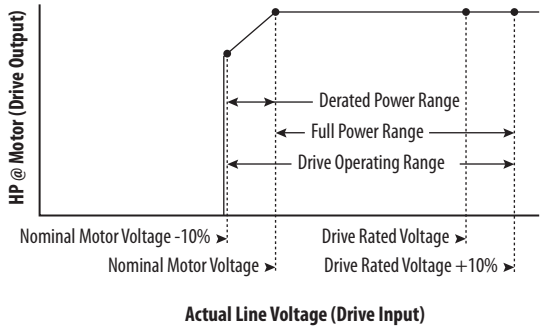

Drive Full Power Range = Nominal Motor Voltage to Drive Rated Voltage +10%.
Rated current is available across the entire Drive Full Power Range

Drive Operating Range = Lowest* Nominal Motor Voltage –10% to Drive Rated Voltage +10%.
Drive Output is linearly derated when Actual Line Voltage is less than the Nominal Motor Voltage

EXAMPLE Calculate the maximum power of a 5 Hp, 460V motor connected to a 480V rated drive supplied with 342V Actual Line Voltage input.

- Actual Line Voltage / Nominal Motor Voltage = 74.3%
- 74.3% × 5 Hp = 3.7 Hp
- 74.3% × 60 Hz = 44.6 Hz

At 342V Actual Line Voltage, the maximum power the 5 Hp, 460V motor can produce is 3.7 Hp at 44.6 Hz.

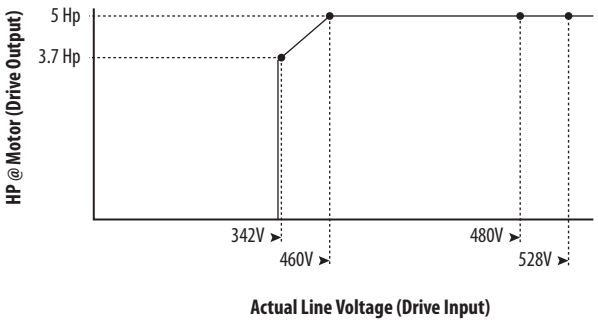

Approximate Watts Loss

The following tables list the watts loss data for drives running at full load, full speed and default carrier frequency.

Internal watts are those dissipated by the control structure of the drive and will be dissipated into the cabinet regardless of mounting style. External watts are those dissipated directly through the heatsink and will be outside the cabinet for flange mount and inside the cabinet for other mounting types.

Watts Loss – Frames 0...6

Voltage	ND Hp/kW	External Watts	Internal Watts	Total Watts Loss[1]
IP20, NEMA / UL Type 1				
240V	0.5	9	37	46
	1	22	39	61
	2	38	39	77
	3	57	41	98
	5	97	82	179
	7.5	134	74	208
	10	192	77	269
	15	276	92	368
	20	354	82	436
	25	602	96	698
	30	780	96	876
	40	860	107	967
	50	1132	138	1270
	60	1296	200	1496
	75	1716	277	1993
	100	1837	418	2255
400V	0.37	11	42	53
	0.75	19	44	63
	1.5	31	45	76
	2.2	46	46	93
	4	78	87	164
	5.5	115	79	194
	7.5	134	84	218
	11	226	99	326
	15	303	91	394
	18.5	339	102	441
	22	357	103	459
	30	492	117	610
	37	568	148	717
	45	722	207	930
	55	821	286	1107
	55	1130	397	1527
	90	1402	443	1845
	110	1711	493	2204
	132	1930	583	2513

Voltage	ND Hp/kW	External Watts	Internal Watts	Total Watts Loss[1]
480V	0.5	11	42	53
	1	19	44	63
	2	31	45	76
	3	46	46	93
	5	78	87	164
	7.5	115	79	194
	10	134	84	218
	15	226	99	326
	20	303	91	394
	25	339	102	441
	30	357	103	459
	40	492	117	610
	50	568	148	717
	60	722	207	930
	75	821	286	1107
	100	1130	397	1527
	125	1402	443	1845
	150	1711	493	2204
	200	1930	583	2513
600V	0.5	9	37	46
	1	14	40	54
	2	25	40	65
	3	41	42	83
	5	59	83	142
	7.5	83	75	157
	10	109	77	186
	15	177	93	270
	20	260	83	343
	25	291	95	385
	30	324	95	419
	40	459	109	569
	50	569	141	710
	60	630	195	825
	75	1053	308	1361
	100	1467	407	1874
	125	1400	500	1900
	150	1668	612	2280
690V	45	894	141	1034
	55	1056	195	1251
	75	1105	308	1412
	90	1389	407	1796
	110	1283	500	1783
	132	1592	612	2204

Voltage	ND Hp/kW	External Watts	Internal Watts	Total Watts Loss(1)
IP54, NEMA / UL Type 12				
480V	75	873	234	1107
	100	1237	290	1527
	125	1563	282	1845
	150	1874	330	2204
	200	2100	413	2513
600V	75	1091	270	1361
	100	1537	337	1874
	125	1584	316	1900
	150	1895	385	2280

(1) Worst case condition including Vector Control board, HIM, and Communication Module.

Watts Loss – Frames 7…10

Voltage	Frame	Hp Rating		Dissipation (Watts)(1)					
				AC Input			DC Input		
		ND	HD	External	Internal	Total	External	Internal	Total
IP20, NEMA / UL Type 1									
400/480V	7	250	200	3422	514	3936	3098	497	3595
		250	250	4224	618	4842	3848	599	4447
	8	300	250	3125	569	3694	2698	547	3245
		350	300	3588	681	4269	3091	655	3746
		400	350	4284	850	5133	3692	816	4510
		450	400	4850	1000	5850	4178	965	5143
		500	450	5278	2010	7288	4506	1969	6475
	9	600	500	8740	2270	11010	7752	2218	9970
	10	700	600	8595	2339	10934	7470	2280	9750

(1) Worst case condition including Vector Control board, HIM, and Communication Module.

Derating Guidelines

Altitude and Efficiency

Frame	Type	Derate
All	Altitude	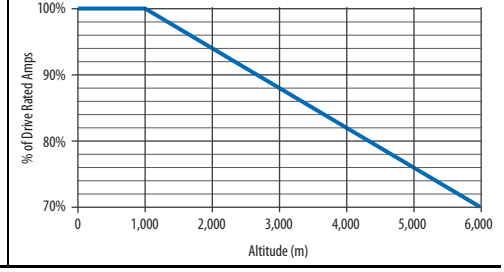

Frame	Type	Derate
All	Efficiency (typical)	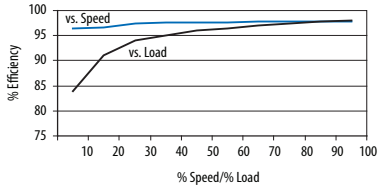

Ambient Temperature/Load – 240V AC

240 Volt Power Rating			Derating — — — 2 kHz ····· 4 kHz ———
ND Hp	**HD Hp**	**Cont. Amps**	
0.5…5.0	0.33…3.0	2.2…15.3	None
10…15	7.5…10	28…42	None
25	20	70	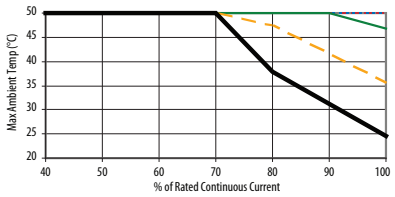
40	30	104 (80)	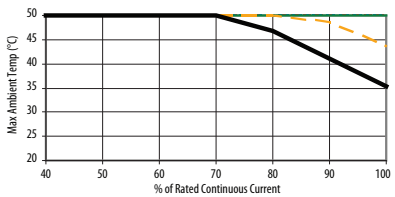
60	50	154 (130)	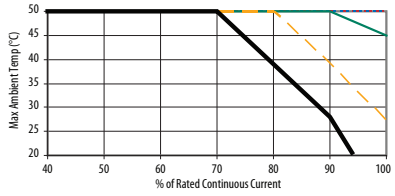
100	75	260 (205)	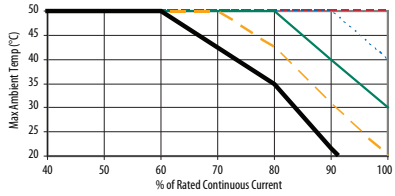

240 Volt Power Rating			Derating — — — 2 kHz ····· 4 kHz ———
ND Hp	**HD Hp**	**Cont. Amps**	
7.5	5.0	22	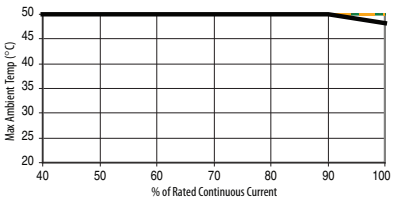
20	15	52	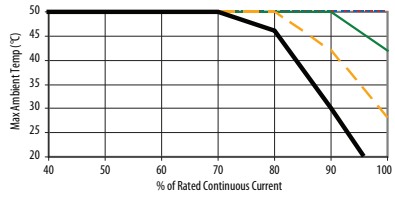
30	25	80	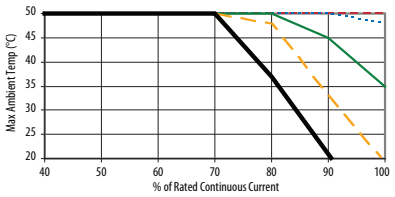
50	40	130 (104)	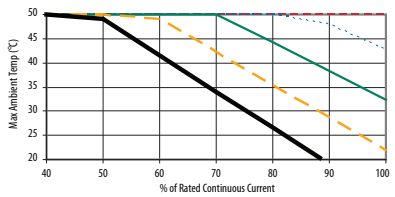
75	60	192 (154)	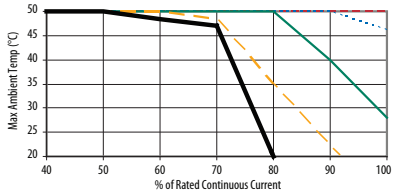

Ambient Temperature/Load – 400V AC

400 Volt Power Rating			Derating
ND kW	HD kW	Cont. Amps	2 kHz, 4 kHz, 6 kHz, 8 kHz, 10 kHz
0.37…7.5	0.25…5.5	1.3…15.4	None
15	11	30	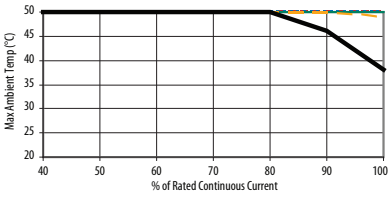
22	18.5	43	None
37	30	72	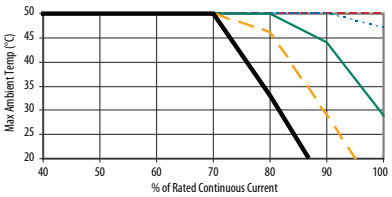
55	45	105 (85)	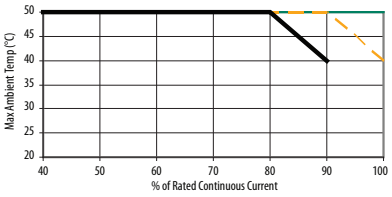
90	75	170 (140)	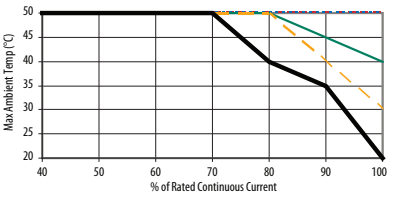
132	110	260 (205)	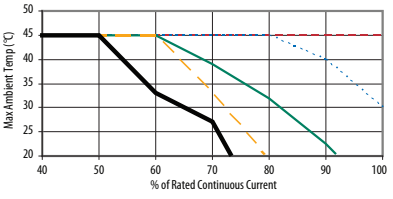

400 Volt Power Rating			Derating
ND kW	HD kW	Cont. Amps	2 kHz, 4 kHz, 6 kHz, 8 kHz, 10 kHz
11	7.5	22	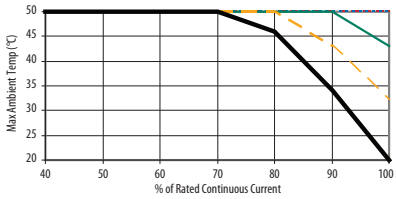
18.5	15	37	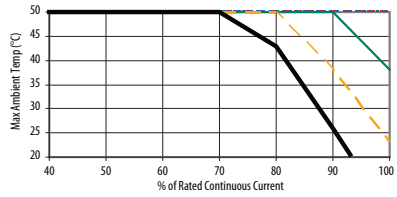
30	22	56	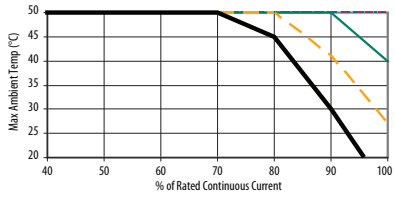
45	37	85 (72)	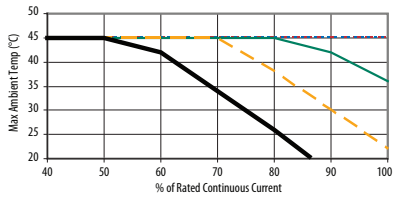
75	55	140 (105)	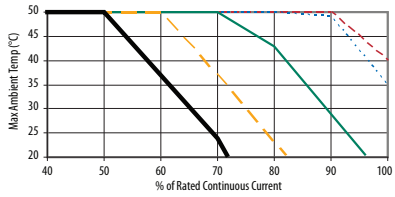
110	90	205 (170)	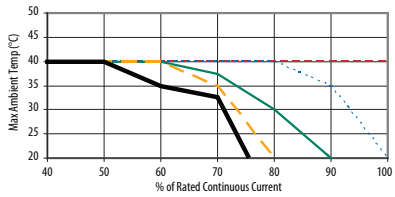
160	150	292 (263)	see 480 Volt, 292 (263) Amp on page 18
180	180	325 (325)	see 480 Volt, 325 (325) Amp on page 19
200	180	365 (325)	see 480 Volt, 365 (325) Amp on page 19
240	200	415 (365)	see 480 Volt, 415 (365) Amp on page 19
280	240	481 (415)	see 480 Volt, 481 (415) Amp on page 19
300	280	535 (481)	see 480 Volt, 535 (481) Amp on page 19
350	300	600 (535)	see 480 Volt, 600 (535) Amp on page 19
400	350	730 (600)	see 480 Volt, 730 (600) Amp on page 19
500	400	875 (700)	see 480 Volt, 875 (700) Amp on page 19

Ambient Temperature/Load – 480V AC

480 Volt Power Rating			Derating
ND Hp	HD Hp	Cont. Amps	2 kHz 4 kHz 6 kHz 8 kHz 10 kHz
0.5…10	0.33…7.5	1.1…14	None
20	15	27	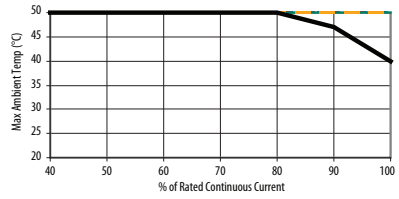
30	25	40	None
50	40	65	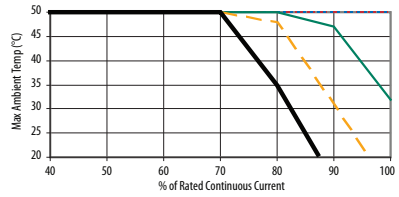
75	60	96 (77)	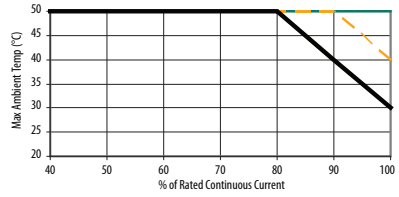
125	100	156 (125)	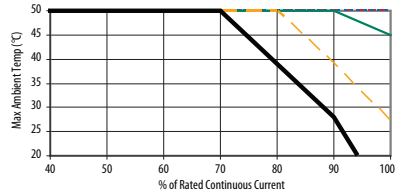
200	150	248 (180)	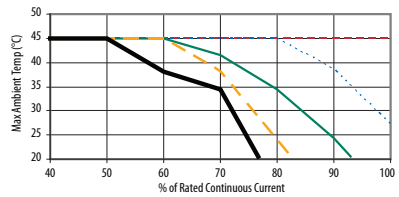

480 Volt Power Rating			Derating
ND Hp	HD Hp	Cont. Amps	2 kHz 4 kHz 6 kHz 8 kHz 10 kHz
15	10	22	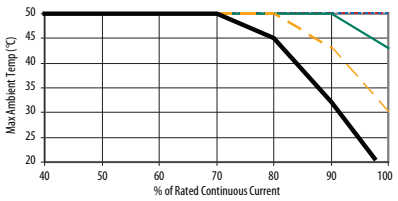
25	20	34	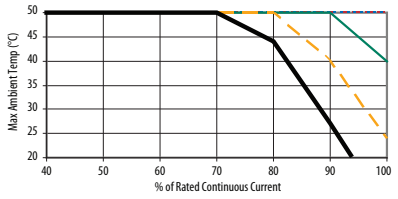
40	30	52	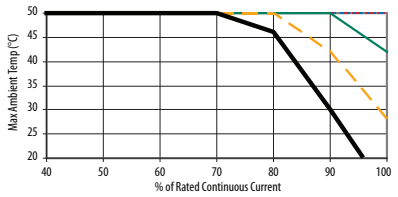
60	50	77 (65)	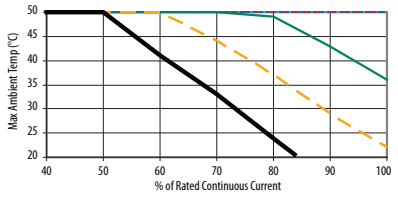
100	75	125 (96)	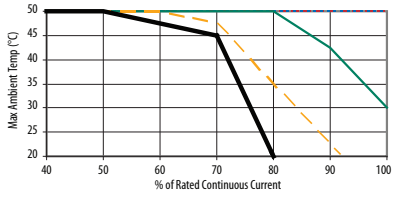
150	125	180 (156)	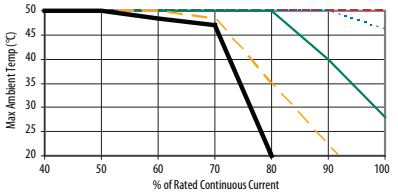
250	200	292 (263)	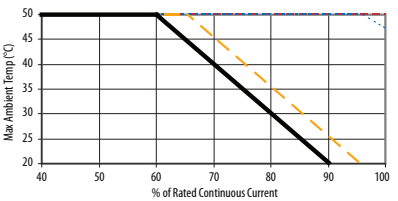

480 Volt Power Rating			Derating
ND Hp	HD Hp	Cont. Amps	2 kHz, 4 kHz, 6 kHz, 8 kHz, 10 kHz
250	250	325 (325)	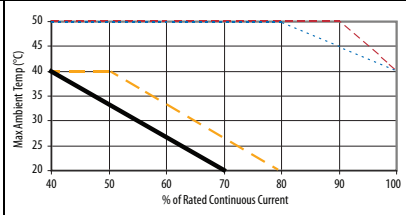
350	300	415 (365)	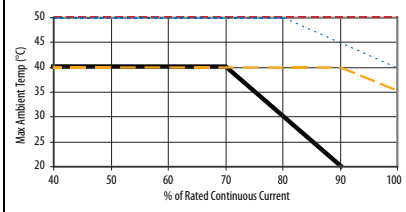
450	400	535 (481)	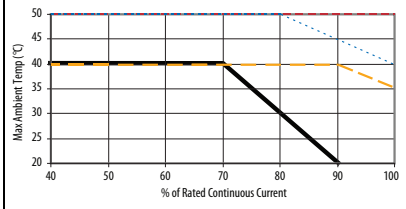
600	500	730 (600)	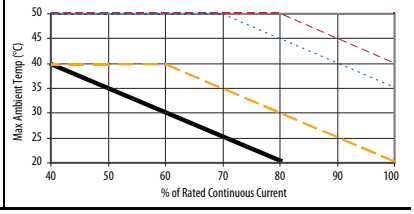

480 Volt Power Rating			Derating
ND Hp	HD Hp	Cont. Amps	2 kHz, 4 kHz, 6 kHz, 8 kHz, 10 kHz
300	250	365 (325)	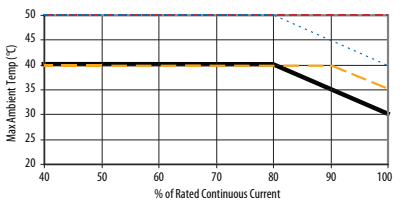
400	350	481 (415)	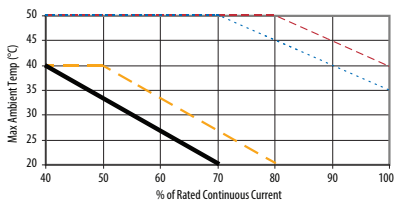
500	450	600 (535)	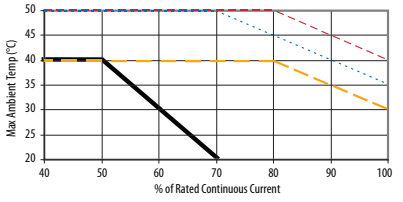
700	600	875 (700)	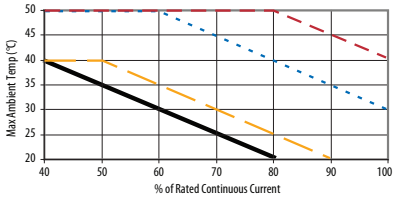

Ambient Temperature/Load – 600V AC

600 Volt Power Rating			Derating — — — 2 kHz ····· 4 kHz ———
ND Hp	**HD Hp**	**Cont. Amps**	
1.0…2.0	0.5…1.0	1.7…2.7	None
5.0	3.0	6.1	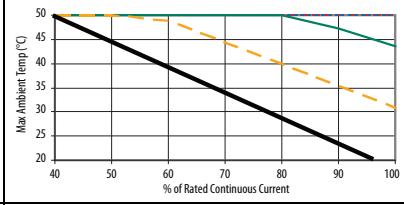
10	7.5	11	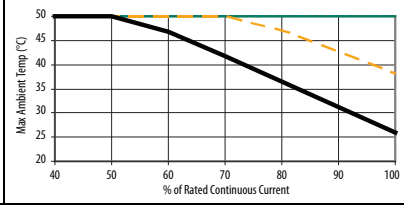
20	15	22	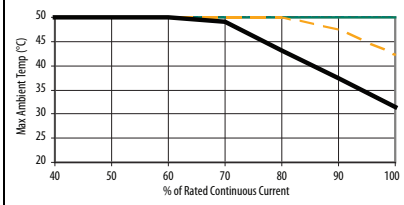
30	25	32	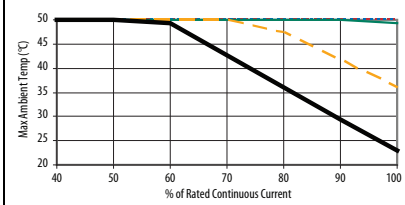
50	40	52	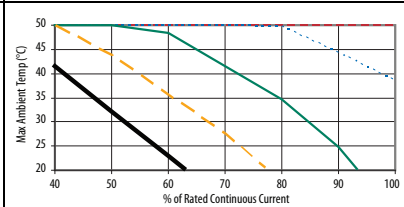
75	60	77 (63)	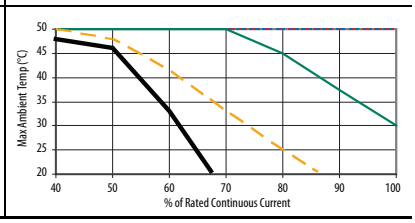

600 Volt Power Rating			Derating — — — 2 kHz ····· 4 kHz ———
ND Hp	**HD Hp**	**Cont. Amps**	
3.0	2.0	3.9	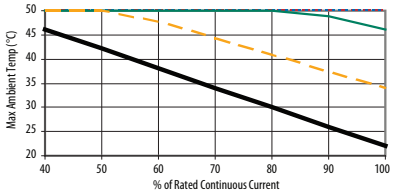
7.5	5.0	9	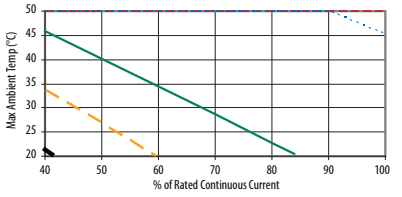
15	10	17	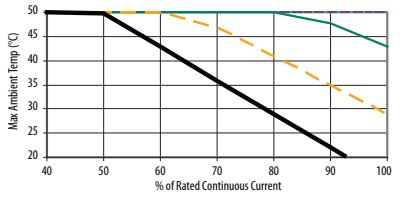
25	20	27	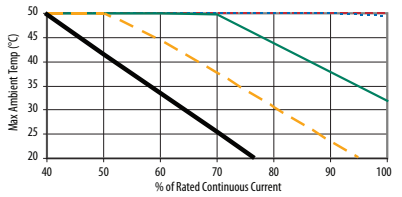
40	30	41	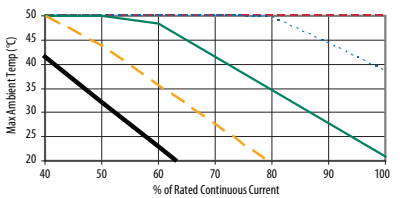
60	50	62	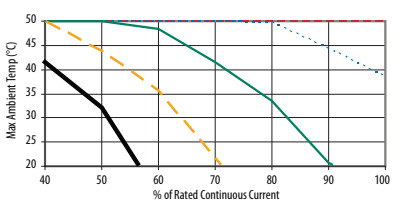
100	75	99 (77)	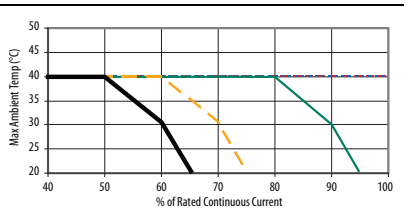

600 Volt Power Rating			Derating
ND Hp	HD Hp	Cont. Amps	2 kHz 4 kHz
125	100	125 (99)	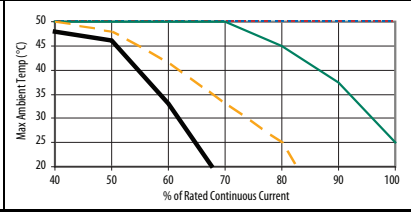

600 Volt Power Rating			Derating
ND Hp	HD Hp	Cont. Amps	2 kHz 4 kHz
150	125	144 (125)	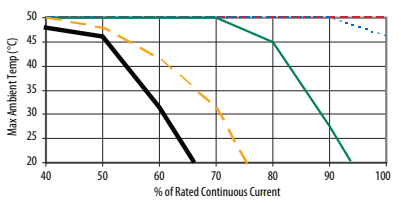

Ambient Temperature/Load – 690V AC

690 Volt Power Rating			Derating
ND kW	HD kW	Cont. Amps	2 kHz 4 kHz 6 kHz 8 kHz 10 kHz
45…55	37.5…45	52…60 (46…52)	None
90	75	98 (82)	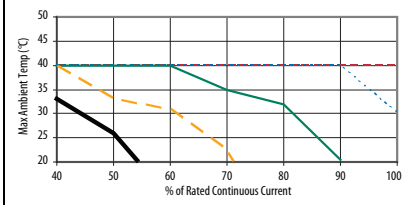
132	110	142 (119)	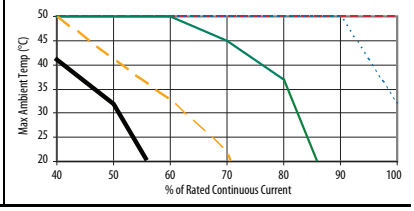

690 Volt Power Rating			Derating
ND kW	HD kW	Cont. Amps	2 kHz 4 kHz 6 kHz 8 kHz 10 kHz
75	55	82 (60)	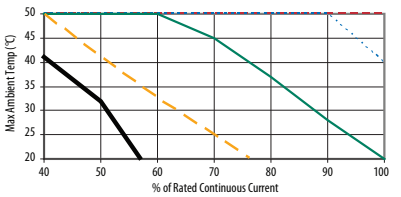
110	90	119 (98)	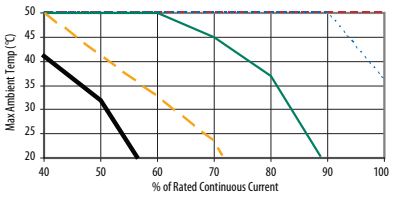

Single-Phase Input Power

The PowerFlex 700 drive is typically used with a three-phase input supply. Single-phase operation is possible with output current derated by 50% (at maximum ambient temperature of 25 °C) of the three-phase ratings.

208/240 Volt Single-Phase AC Input Ratings

240V Single-Phase AC Input						208V Single-Phase AC Input						
Drive Catalog Number	Frame	Hp Rating	Input Amps	Three-Phase Output		Drive Catalog Number	Frame	Hp Rating	Input Amps	Three-Phase Output		Temp.
				V AC	Amps					V AC	Amps	°C
20BB2P2	0	0.25	1.5	0-230	1.1	20BB2P2	0	0.25	1.7	0-200	1.3	25
20BB4P2	0	0.5	2.8	0-230	2.1	20BB4P2	0	0.5	3.2	0-200	2.4	25
20BB6P8	1	1	5.1	0-230	3.4	20BB6P8	1	1	5.9	0-200	3.9	25
20BB9P6	1	1.5	7.2	0-230	4.8	20BB9P6	1	1.5	8.3	0-200	5.5	25
20BB015	1	2.5	11.9	0-230	7.7	20BB015	1	2.5	13.6	0-200	8.8	25
20BB022	1	3.75	17.3	0-230	11	20BB022	1	3.75	19.9	0-200	12.7	25
20BB028	2	5	22.2	0-230	14	20BB028	2	5	25.7	0-200	16.1	25
20BB042	3	7.5	33.4	0-230	21	20BB042	3	7.5	38.5	0-200	24.2	25
20BB052	3	10	41.3	0-230	26	20BB052	3	10	44.6	0-200	28	25
20BB070	4	12.5	55.6	0-230	35	20BB070	4	12.5	62.3	0-200	39.1	25
20BB080	4	15	63.6	0-230	40	20BB080	4	15	73.3	0-200	46	25
20BB104	5	20	84.6	0-230	52	20BB104	5	20	97.9	0-200	60	25
20BB130	5	25	105.7	0-230	65	20BB130	5	25	106.1	0-200	65	25
20BB154	6	30	125.2	0-230	77	20BB154	6	30	144.4	0-200	88.5	25
20BB192	6	37.5	156.1	0-230	96	20BB192	6	37.5	180.3	0-200	110.5	25
20BB260	6	50	211.4	0-230	130	20BB260	6	50	212.1	0-200	130	25

380…480 Volt Single-Phase AC Input Ratings

480V Single-Phase AC Input						380…400V Single-Phase AC Input						
Drive Catalog Number	Frame	Hp Rating	Input Amps	Three-Phase Output		Drive Catalog Number	Frame	kW Rating	Input Amps	Three-Phase Output		Temp.
				V AC	Amps					V AC	Amps	°C
20BD1P1	0	0.25	0.7	0-460	0.6	20BC1P3	0	0.2	1	0-400	0.7	25
20BD2P1	0	0.5	1.4	0-460	1.1	20BC2P1	0	0.4	1.6	0-400	1.1	25
20BD3P4	0	1	2.3	0-460	1.7	20BC3P5	0	0.75	2.7	0-400	1.8	25
20BD5P0	0	1.5	3.4	0-460	2.5	20BC5P0	0	1.1	3.9	0-400	2.5	25
20BD8P0	0	2.5	6	0-460	4	20BC8P7	0	2	6.9	0-400	4.4	25
20BD011	0	3.75	8.2	0-460	5.5	20BC011	0	2.75	9.3	0-400	5.8	25
20BD014	1	5	10.9	0-460	7	20BC015	1	3.75	12.5	0-400	7.7	25
20BD022	1	7.5	17.3	0-460	11	20BC022	1	5.5	17.8	0-400	11	25
20BD027	2	10	21.4	0-460	13.5	20BC030	2	7.5	24.6	0-400	15	25
20BD034	2	12.5	27	0-460	17	20BC037	2	9.25	30.3	0-400	18.5	25
20BD040	3	15	31.8	0-460	20	20BC043	3	11	35.2	0-400	21.5	25
20BD052	3	20	41.3	0-460	26	20BC056	3	15	45.9	0-400	28	25
20BD065	3	25	51.6	0-460	32.5	20BC072	3	18.5	59.7	0-400	36	25
20BD077	4	30	62.6	0-460	38.5	20BC085	4	22.5	70.5	0-400	42.5	25
20BD096	5	37.5	78.1	0-460	48	20BC105	5	27.5	87	0-400	52.5	25
20BD125	5	50	101.6	0-460	62.5	20BC125	5	27.5	103.6	0-400	62.5	25
–	–	–	–	–	–	20BC140	5	37.5	117.4	0-400	70	25
20BD156	6	62.5	126.8	0-460	78	20BC170	6	45	142.6	0-400	85	25
20BD180	6	75	146.4	0-460	90	20BC205	6	55	171.9	0-400	102.5	25
20BD248	6	100	201.6	0-460	124	20BC260	6	66	220.6	0-400	130	25

600…690 Volt Single-Phase AC Input Rating

600V Single-Phase AC Input						690V Single-Phase AC Input						Temp.
Drive Catalog Number	Frame	Hp Rating	Input Amps	Three-Phase Output		Drive Catalog Number	Frame	kW Rating	Input Amps	Three-Phase Output		
				V AC	Amps					V AC	Amps	°C
20BE1P7	0	0.5	1.1	0-575	0.9	–	–	–	–	–	–	25
20BE2P7	0	1	1.8	0-575	1.4	–	–	–	–	–	–	25
20BE3P9	0	1.5	2.6	0-575	2	–	–	–	–	–	–	25
20BE6P1	0	2.5	4.6	0-575	3.1	–	–	–	–	–	–	25
20BE9P0	0	3.75	6.7	0-575	4.5	–	–	–	–	–	–	25
20BE011	1	5	8.5	0-575	5.5	–	–	–	–	–	–	25
20BE017	1	7.5	13.3	0-575	8.5	–	–	–	–	–	–	25
20BE022	2	10	17.5	0-575	11	–	–	–	–	–	–	25
20BE027	2	12.5	21.4	0-575	13.5	–	–	–	–	–	–	25
20BE032	3	15	25.4	0-575	16	–	–	–	–	–	–	25
20BE041	3	20	32.6	0-575	20.5	–	–	–	–	–	–	25
20BE052	3	25	41.3	0-575	26	20BF052	5	22.5	43.1	0-690	26	25
20BE062	4	30	50.4	0-575	31	20BF060	5	27.5	49.9	0-690	30	25
20BE077	5	37.5	62.6	0-575	38.5	20BF082	5	37.5	68.4	0-690	41	25
20BE099	5	50	80.5	0-575	49.5	20BF098	5	45	82	0-690	49	25
20BE125	6	62.5	101.6	0-575	62.5	20BF119	6	55	100	0-690	59.5	25
20BE144	6	75	117.1	0-575	72	20BF142	6	66	120.2	0-690	71	25

Drive, Fuse and Circuit Breaker Ratings

The PowerFlex 700 can be installed with input fuses or an input circuit breaker. National and local industrial safety regulations and/or electrical codes can determine additional requirements for these installations.

The tables on the following pages provide recommended AC line input fuse and circuit breaker information. See Fusing and Circuit Breakers below for UL and IEC requirements. Sizes listed are the recommended sizes based on 40 °C (104 °F) and the U.S. NEC. Other country, state, or local codes can require different ratings. Tables with DC link fuse recommendations for DC input drives are also provided.

Fusing

The recommended fuse types are listed below. If available current ratings do not match those listed in the tables provided, choose the next higher fuse rating.

- IEC – BS88 (British Standard) Parts 1 & 2, EN60269-1, Parts 1 & 2[(1)], type gG or equivalent must be used.
- UL – UL Class CC, T, RK1 or J must be used for Frames 0...6.
  UL Class T, RK1, J, or L must be used for Frames 7...10.

Circuit Breakers

The "non-fuse" listings in the following tables include inverse time circuit breakers, instantaneous trip circuit breakers (motor circuit protectors) and 140M self-protected combination motor controllers (Frames 0...6 only). If one of these is chosen as the desired protection method, the following requirements apply:

- IEC – Both types of circuit breakers and 140M self-protected combination motor controllers (Frames 0...6 only) are acceptable for IEC installations.
- UL – Only inverse time circuit breakers and the specified 140M self-protected combination motor controllers (Frames 0...6 only) are acceptable for UL installations.

(1) Typical designations include, but may not be limited to the following; Parts 1 & 2: AC, AD, BC, BD, CD, DD, ED, EFS, EF, FF, FG, GF, GG, GH.

208 Volt AC Input Protection Devices – Frames 0…6

Drive Catalog Number	Frame	Hp Rating		PWM Freq.	Temp. (11)	Input Ratings		Output Amps			Dual Element Time Delay Fuse		Non-Time Delay Fuse		Circuit Breaker (3)	Motor Circuit Protector (4)	140M Motor Protector with Adjustable Current Range (5)(6)			
		ND	HD	kHz	°C	Amps	kVA	Cont.	1 Min.	3 Sec.	Min. (1)	Max. (2)	Min. (1)	Max. (2)	Max. (8)	Max. (8)	Available Catalog Numbers - 140… (7)			Min. Enclosure Vol. (in.3) (14)
20BB2P2	0	0.5	0.33	4	50	1.9	0.7	2.5	2.8	3.8	3	6	3	10	15	3	M-C2E-B25	M-D8E-B25	–	7269
20BB4P2	0	1	0.75	4	50	3.7	1.3	4.8	5.6	7	6	10	6	17.5	15	7	M-C2E-B63	M-D8E-B63	–	7269
20BB6P8	1	2	1.5	4	50	6.8	2.4	7.8	10.4	13.8	10	15	10	30	30	15	M-C2E-C10	M-D8E-C10	M-F8E-C10	7269
20BB9P6	1	3	2	4	50	9.5	3.4	11	12.1	17	12	20	12	40	40	15	M-C2E-C16	M-D8E-C16	M-F8E-C16	7269
20BB015	1	5	3	4	50	15.7	5.7	17.5	19.3	26.3	20	35	20	70	70	30	M-C2E-C20	M-D8E-C20	M-F8E-C20	7269
20BB022	1	7.5	5	4	50	23	8.3	25.3	27.8	38	30	50	30	100	100	30	–	M-D8E-C25	M-F8E-C25	7269
20BB028	2	10	7.5	4	50	29.6	10.7	32.2	38	50.6	40	70	40	125	125	50	–	–	M-F8E-C32	7269
20BB042	3	15	10	4	50	44.5	16	48.3	53.1	72.5	60	100	60	175	175	70	–	–	M-F8E-C45	13630
20BB052	3	20	15	4	50	51.5	17.1	56	64	86	80	125	80	200	200	100	–	–	–	–
20BB070	4	25	20	4	50	72	25.9	78.2	93	124	90	175	90	300	300	100	–	–	–	–
20BB080	4	30	25	4	50	84.7	30.5	92	117	156	110	200	110	350	350	150	–	–	–	–
20BB104 (12)	5	40	–	4	50	113	40.7	120	132	175	150	250	150	475	350	150	–	–	–	–
		–	30	4	50	84.7	30.5	92	138	175	125	200	125	350	300	150	–	–	–	–
20BB130 (12)	5	50	–	4	50	141	44.1	130	143	175	175	275	175	500	375	250	–	–	–	–
		–	40	4	50	113	35.3	104	156	175	125	225	125	400	300	150	–	–	–	–
20BB154 (12)	6	60	–	4	50	167	60.1	177	195	266	225	350	225	500	500	250	–	–	–	–
		–	50	4	50	141	50.9	150	225	300	200	300	200	500	450	250	–	–	–	–
20BB192 (12)	6	75	–	4	50	208	75	221	243	308	300	450	300	600	600	400	–	–	–	–
		–	60	4	50	167	60.1	177	266	308	225	350	225	500	500	250	–	–	–	–
20BB260 (12)	6	100	–	2	45	255	91.9	260	286	390	300	575	300	750	750	400	–	–	–	–
		–	75	2	50	199	71.7	205	305	410	225	450	225	600	600	400	–	–	–	–

See page 29 for notes.

240 Volt AC Input Protection Devices – Frames 0…6

Drive Catalog Number	Frame	Hp Rating		PWM Freq.	Temp. (11)	Input Ratings		Output Amps			Dual Element Time Delay Fuse		Non-Time Delay Fuse		Circuit Breaker (3)	Motor Circuit Protector (4)	140M Motor Protector with Adjustable Current Range (5)(6)			
		ND	HD	kHz	°C	Amps	kVA	Cont.	1 Min.	3 Sec.	Min. (1)	Max. (2)	Min. (1)	Max. (2)	Max. (8)	Max. (8)	Available Catalog Numbers - 140… (7)			Min. Enclosure Vol. (in.3) (14)
20BB2P2	0	0.5	0.33	4	50	1.7	0.7	2.2	2.4	3.3	3	6	3	10	15	3	M-C2E-B25	M-D8E-B25	–	7269
20BB4P2	0	1	0.75	4	50	3.3	1.4	4.2	4.8	6.4	5	8	5	15	15	7	M-C2E-B63	M-D8E-B63	–	7269
20BB6P8	1	2	1.5	4	50	5.9	2.4	6.8	9	12	10	15	10	25	25	15	M-C2E-C10	M-D8E-C10	M-F8E-C10	7269
20BB9P6	1	3	2	4	50	8.3	3.4	9.6	10.6	14.4	12	20	12	35	35	15	M-C2E-C10	M-D8E-C10	M-F8E-C10	7269
20BB015	1	5	3	4	50	13.7	5.7	15.3	16.8	23	20	30	20	60	60	30	M-C2E-C16	M-D8E-C16	M-F8E-C16	7269
20BB022	1	7.5	5	4	50	19.9	8.3	22	24.2	33	25	50	25	80	80	30	–	M-D8E-C25	M-F8E-C25	7269
20BB028	2	10	7.5	4	50	25.7	10.7	28	33	44	35	60	35	100	100	50	–	–	M-F8E-C32	7269
20BB042	3	15	10	4	50	38.5	16	42	46.2	63	50	90	50	150	150	50	–	–	M-F8E-C45	13630
20BB052	3	20	15	4	50	47.7	19.8	52	63	80	60	100	60	200	200	100	–	–	–	–
20BB070	4	25	20	4	50	64.2	26.7	70	78	105	90	150	90	275	275	100	–	–	–	–
20BB080	4	30	25	4	50	73.2	30.5	80	105	140	100	180	100	300	300	100	–	–	–	–
20BB104 (12)	5	40	–	4	50	98	40.6	104	115	175	125	225	125	400	300	150	–	–	–	–
		–	30	4	50	73	30.5	80	120	160	100	175	100	300	300	100	–	–	–	–
20BB130 (12)	5	50	–	4	50	122	50.7	130	143	175	175	275	175	500	375	250	–	–	–	–
		–	40	4	50	98	40.6	104	156	175	125	225	125	400	300	150	–	–	–	–
20BB154 (12)	6	60	–	4	50	145	60.1	154	169	231	200	300	200	600	450	250	–	–	–	–
		–	50	4	50	122	50.7	130	195	260	175	275	175	500	375	250	–	–	–	–
20BB192 (12)	6	75	–	4	50	180	74.9	192	211	288	225	400	225	600	575	250	–	–	–	–
		–	60	4	50	145	60.1	154	231	308	200	300	200	600	450	250	–	–	–	–
20BB260 (12)	6	100	–	2	45	233	96.7	260	286	390	300	575	300	750	750	300	–	–	–	–
		–	75	2	50	169	70.1	205	305	410	225	450	225	600	600	250	–	–	–	–

See page 29 for notes.

400 Volt AC Input Protection Devices – Frames 0…6

Drive Catalog Number	Frame	kW Rating		PWM Freq.	Temp.	Input Ratings		Output Amps			Dual Element Time Delay Fuse		Non-Time Delay Fuse		Circuit Breaker (3)	Motor Circuit Protector (4)	140M Motor Protector with Adjustable Current Range(5)(6)			
		ND	HD	kHz	°C	Amps	kVA	Cont.	1 Min.	3 Sec.	Min. (1)	Max. (2)	Min. (1)	Max. (2)	Max. (8)	Max. (8)	Available Catalog Numbers - 140… (7)			Min. Enclosure Vol. (in.^{3}) (14)
20BC1P3	0	0.37	0.25	4	50 (11)	1.1	0.77	1.3	1.4	1.9	3	3	3	6	15	3	M-C2E-B16	–	–	7269
20BC2P1	0	0.75	0.55	4	50 (11)	1.8	1.3	2.1	2.4	3.2	3	6	3	8	15	3	M-C2E-B25	M-D8E-B25	–	7269
20BC3P5	0	1.5	0.75	4	50 (11)	3.2	2.2	3.5	4.5	6	6	7	6	12	15	7	M-C2E-B40	M-D8E-B40	–	7269
20BC5P0	0	2.2	1.5	4	50 (11)	4.6	3.2	5	5.5	7.5	6	10	6	20	20	7	M-C2E-B63	M-D8E-B63	–	7269
20BC8P7	0	4	2.2	4	50 (11)	7.9	5.5	8.7	9.9	13.2	15	17.5	15	30	30	15	M-C2E-C10	M-D8E-C10	M-F8E-C10	7269
20BC011	0	5.5	4	4	50 (11)	10.8	7.5	11.5	13	17.4	15	25	15	45	45	15	M-C2E-C16	M-D8E-C16	M-F8E-C16	7269
20BC015	1	7.5	5.5	4	50 (11)	14.4	10	15.4	17.2	23.1	20	30	20	60	60	20	M-C2E-C20	M-D8E-C20	M-F8E-C20	7269
20BC022	1	11	7.5	4	50 (11)	20.6	14.3	22	24.2	33	30	45	30	80	80	30	–	M-D8E-C25	M-F8E-C25	7269
20BC030	2	15	11	4	50 (11)	28.4	19.7	30	33	45	35	60	35	120	120	50	–	–	M-F8E-C32	7269
20BC037	2	18.5	15	4	50 (11)	35	24.3	37	45	60	45	80	45	125	125	50	–	–	M-F8E-C45	7269
20BC043	3	22	18.5	4	50 (11)	40.7	28.2	43	56	74	60	90	60	150	150	60	–	–	–	–
20BC056	3	30	22	4	50 (11)	53	36.7	56	64	86	70	125	70	200	200	100	–	–	–	–
20BC072	3	37	30	4	50 (10)(11)	68.9	47.8	72	84	112	90	150	90	250	250	100	–	–	–	–
20BC085 (12)	4	45	–	4	45 (11)	81.4	56.4	85	94	128	110	200	110	300	300	150	–	–	–	–
		–	37	4	45 (11)	68.9	47.8	72	108	144	90	175	90	275	300	100	–	–	–	–
20BC105 (12)	5	55	–	4	50 (9)	100.5	69.6	105	116	158	125	225	125	400	300	150	–	–	–	–
		–	45	4	50 (9)	81.4	56.4	85	128	170	110	175	110	300	300	150	–	–	–	–
20BC125 (12)	5	55	–	4	50 (9)	121.1	83.9	125	138	163	150	275	150	500	375	250	–	–	–	–
		–	45	4	50 (9)	91.9	63.7	96	144	168	125	200	125	375	375	150	–	–	–	–
20BC140 (12)	5	75	–	4	40 (9)	136	93.9	140	154	190	200	300	200	400	400	250	–	–	–	–
		–	55	4	40 (9)	101	69.6	105	157	190	150	225	150	300	300	150	–	–	–	–
20BC170 (12)	6	90	–	4	50 (9)	164	126	170	187	255	250	375	250	600	500	250	–	–	–	–
		–	75	4	50 (9)	136	103	140	210	280	200	300	200	550	400	250	–	–	–	–
20BC205 (12)	6	110	–	4	40 (9)	199	148	205	220	289	250	450	250	600	600	400	–	–	–	–
		–	90	4	40 (9)	164	126	170	255	313	250	375	250	600	500	250	–	–	–	–
20BC260 (12)	6	132	–	2	45 (9)	255	177	260	286	390	350	550	350	750	750	400	–	–	–	–
		–	110	2	50 (9)	199	138	205	308	410	250	450	250	600	600	400	–	–	–	–

See page 29 for notes.

400 Volt AC Input Protection Devices – Frames 7…10

Drive Catalog Number (12)	Frame	kW Rating		PWM Freq.	Temp. (16)	Input Ratings		Output Amps			Dual Element Time Delay Fuse		Non-Time Delay Fuse		Circuit Breaker (3)	Motor Circuit Protector (4)
		ND	HD	kHz	°C	Amps	kVA	Cont.	1 Min.	3 Sec.	Min. (1)	Max. (2)	Min. (1)	Max. (2)	Max. (8)	Max. (8)
20BC292	7	160		4	40	293	203	292	322	438	375	650	375	850	850	400
			150	4	40	264	183	263	395	526	350	550	350	550	750	400
20BC325	7	180		4	40	326	226	325	358	488	425	700	425	950	950	600
			180	4	40	326	226	325	488	650	425	700	425	950	950	600
20BC365	8	200		2	40	366	253	365	402	548	475	800	475	1000	1000	600
			180	2	40	326	226	325	488	650	425	700	425	950	950	600
20BC415	8	240		2	40	416	288	415	457	623	525	900	525	1200	1200	600
			200	2	40	366	253	365	548	730	475	800	475	1000	1000	600
20BC481	8	280		2	40	483	334	481	530	722	600	1000	600	1400	1400	700
			240	2	40	416	288	415	623	830	525	900	525	1200	1200	600
20BC535	8	300		2	40	537	372	535	589	803	700	1200	700	1600	1600	700
			280	2	40	483	334	481	722	962	600	1000	600	1400	1400	700
20BC600	8	350		2	40	602	417	600	660	900	750	1300	750	1800	1800	800
			300	2	40	537	371	535	803	1070	700	1200	700	1600	1600	700
20BC730	9	400		2	40	702	486	730	803	1095	900	1500	900	2100	2100	900
			350	2	40	602	417	600	900	1200	750	1300	750	1800	1800	800
20BC875	10	500		2	40	877	608	875	963	1313	1100	1900	1100	2600	2600	1200
			400	2	40	877	486	700	1050	1400	900	1500	900	2100	2100	900

See page 29 for notes.

480 Volt AC Input Protection Devices – Frames 0…6

Drive Catalog Number	Frame	Hp Rating		PWM Freq.	Temp.	Input Ratings		Output Amps			Dual Element Time Delay Fuse		Non-Time Delay Fuse		Circuit Breaker (3)	Motor Circuit Protector (4)	140M Motor Protector with Adjustable Current Range (5)(6)			
		ND	HD	kHz	°C	Amps	kVA	Cont.	1 Min.	3 Sec.	Min. (1)	Max. (2)	Min. (1)	Max. (2)	Max. (8)	Max. (8)	Available Catalog Numbers - 140… (7)			Min. Enclosure Vol. (in.3) (14)
20BD1P1	0	0.5	0.33	4	50 (11)	0.9	0.7	1.1	1.2	1.6	3	3	3	6	15	3	M-C2E-B16	–	–	7269
20BD2P1	0	1	0.75	4	50 (11)	1.6	1.4	2.1	2.4	3.2	3	6	3	8	15	3	M-C2E-B25	–	–	7269
20BD3P4	0	2	1.5	4	50 (11)	2.6	2.2	3.4	4.5	6	4	8	4	12	15	7	M-C2E-B40	M-D8E-B40	–	7269
20BD5P0	0	3	2	4	50 (11)	3.9	3.2	5	5.5	7.5	6	10	6	20	20	7	M-C2E-B63	M-D8E-B63	–	7269
20BD8P0	0	5	3	4	50 (11)	6.9	5.7	8	8.8	12	10	15	10	30	30	15	M-C2E-C10	M-D8E-C10	M-F8E-C10	7269
20BD011	0	7.5	5	4	50 (11)	9.5	7.9	11	12.1	16.5	15	20	15	40	40	15	M-C2E-C16	M-D8E-C16	M-F8E-C16	7269
20BD014	1	10	7.5	4	50 (11)	12.5	10.4	14	16.5	22	17.5	30	17.5	50	50	20	M-C2E-C16	M-D8E-C16	M-F8E-C16	7269
20BD022	1	15	10	4	50 (11)	19.9	16.6	22	24.2	33	25	50	25	80	80	30	–	M-D8E-C25	M-F8E-C25	7269
20BD027	2	20	15	4	50 (11)	24.8	20.6	27	33	44	35	60	35	100	100	50	–	–	M-F8E-C32	7269
20BD034	2	25	20	4	50 (11)	31.2	25.9	34	40.5	54	40	70	40	125	125	50	–	–	M-F8E-C45	7269
20BD040	3	30	25	4	50 (11)	36.7	30.5	40	51	68	50	90	50	150	150	50	–	–	M-F8E-C45	13630
20BD052	3	40	30	4	50 (11)	47.7	39.7	52	60	80	60	110	60	200	200	70	–	–	–	–
20BD065	3	50	40	4	50 (11)	59.6	49.6	65	78	104	80	125	80	250	250	100	–	–	–	–
20BD077 (12)	4	60	–	4	50 (11)	72.3	60.1	77	85	116	100	170	100	300	300	100	–	–	–	–
		–	50	4	50 (11)	59.6	49.6	65	98	130	80	125	80	250	250	100	–	–	–	–
20BD096 (12)	5	75	–	4	50 (9)	90.1	74.9	96	106	144	125	200	125	350	350	125	–	–	–	–
		–	60	4	50 (9)	72.3	60.1	77	116	154	100	170	100	300	300	100	–	–	–	–
20BD125 (12)	5	100	–	4	50 (9)	117	97.6	125	138	163	150	250	150	500	375	150	–	–	–	–
		–	75	4	50 (9)	90.1	74.9	96	144	168	125	200	125	350	350	125	–	–	–	–
20BD156 (12)	6	125	–	4	50 (9)	147	122	156	172	234	200	350	200	600	450	250	–	–	–	–
		–	100	4	50 (9)	131	109	125	188	250	175	250	175	500	375	250	–	–	–	–
20BD180 (12)	6	150	–	4	50 (9)	169	141	180	198	270	225	400	225	600	500	250	–	–	–	–
		–	125	4	50 (9)	147	122	156	234	312	200	350	200	600	450	250	–	–	–	–
20BD248 (12)	6	200	–	2	45 (9)	233	194	248	273	372	300	550	300	700	700	400	–	–	–	–
		–	150	2	50 (9)	169 (17)	141	180	270	360	225	400	225	600	500	250	–	–	–	–

See page 29 for notes.

480 Volt AC Input Protection Devices – Frames 7…10

Drive Catalog Number (12)	Frame	Hp Rating		PWM Freq.	Temp. (16)	Input Ratings		Output Amps			Dual Element Time Delay Fuse		Non-Time Delay Fuse		Circuit Breaker (3)	Motor Circuit Protector (4)
		ND	HD	kHz	°C	Amps	kVA	Cont.	1 Min.	3 Sec.	Min. (1)	Max. (2)	Min. (1)	Max. (2)	Max. (8)	Max. (8)
20BD292	7	250		4	40	281	233	292	322	438	375	650	375	850	850	400
			200	4	40	253	210	263	395	526	350	550	350	550	750	400
20BD325	7	250		4	40	313	260	325	358	488	425	700	425	950	950	600
			250	4	40	313	260	325	488	650	425	700	425	950	950	600
20BD365	8	300		2	40	351	292	365	402	548	475	800	475	1000	1000	600
			250	2	40	313	260	325	488	650	425	700	425	950	950	600
20BD415	8	350		2	40	399	331	415	457	623	525	900	525	1200	1200	600
			300	2	40	351	291	365	548	730	475	800	475	1000	1000	600
20BD481	8	400		2	40	462	384	481	530	722	600	1000	600	1400	1400	700
			350	2	40	399	331	415	623	830	525	900	525	1200	1200	600
20BD535	8	450		2	40	514	427	535	589	803	700	1200	700	1600	1600	700
			400	2	40	462	384	481	722	962	600	1000	600	1400	1400	700
20BD600	8	500		2	40	577	479	600	660	900	750	1300	750	1800	1800	800
			450	2	40	514	427	535	803	1070	700	1200	700	1600	1600	700
20BD730	9	600		2	40	673	559	730	803	1095	900	1500	900	2100	2100	900
			500	2	40	577	479	600	900	1200	750	1300	750	1800	1800	800
20BD875	10	700		2	40	841	699	875	963	1313	1100	1900	1100	2600	2600	1200
			600	2	40	673	559	700	1050	1400	900	1500	900	2100	2100	900

See page 29 for notes.

600 Volt AC Input Protection Devices – Frames 0…6 [13]

Drive Catalog Number	Frame	Hp Rating		PWM Freq.	Temp. [11]	Input Ratings		Output Amps			Dual Element Time Delay Fuse		Non-Time Delay Fuse		Circuit Breaker [3]	Motor Circuit Protector [4]	140M Motor Protector with Adjustable Current Range [5][6]			
		ND	HD	kHz	°C	Amps	kVA	Cont.	1 Min.	3 Sec.	Min. [1]	Max. [2]	Min. [1]	Max. [2]	Max. [8]	Max. [8]	Available Catalog Numbers - 140… [7]			Min. Enclosure Vol. (in.^{3}) [14]
20BE1P7	0	1	0.5	4	50	1.3	1.4	1.7	2	2.6	2	4	2	6	15	3	M-C2E-B16	–	–	7269
20BE2P7	0	2	1	4	50	2.1	2.1	2.7	3.6	4.8	3	6	3	10	15	3	M-C2E-B25	–	–	7269
20BE3P9	0	3	2	4	50	3	3.1	3.9	4.3	5.9	6	9	6	15	15	7	M-C2E-B40	M-D8E-B40	–	7269
20BE6P1	0	5	3	4	50	5.3	5.5	6.1	6.7	9.2	9	12	9	20	20	15	–	M-D8E-B63	–	7269
20BE9P0	0	7.5	5	4	50	7.8	8.1	9	9.9	13.5	10	20	10	35	30	15	–	M-D8E-C10	M-F8E-C10	7269
20BE011	1	10	7.5	4	50	9.9	10.2	11	13.5	18	15	25	15	40	40	15	–	M-D8E-C10	M-F8E-C10	7269
20BE017	1	15	10	4	50	15.4	16	17	18.7	25.5	20	40	20	60	50	20	–	M-D8E-C16	M-F8E-C16	7269
20BE022	2	20	15	4	50	20.2	21	22	25.5	34	30	50	30	80	80	30	–	–	M-F8E-C25	7269
20BE027	2	25	20	4	50	24.8	25.7	27	33	44	35	60	35	100	100	50	–	–	M-F8E-C25	7269
20BE032	3	30	25	4	50	29.4	30.5	32	40.5	54	40	70	40	125	125	50	–	–	M-F8E-C32	13630
20BE041	3	40	30	4	50	37.6	39.1	41	48	64	50	90	50	150	150	100	–	–	–	–
20BE052	3	50	40	4	50	47.7	49.6	52	61.5	82	60	110	60	200	200	100	–	–	–	–
20BE062	4	60	50	2	50	58.2	60.5	62	78	104	80	125	80	225	225	100	–	–	–	–
20BE077 [12]	5	75	–	2	50 [9]	72.3	75.1	77	85	116	90	150	90	300	300	100	–	–	–	–
		–	60	2	50 [9]	58.2	60.5	63	94	126	90	125	90	250	250	100	–	–	–	–
20BE099 [12]	5	100	–	2	40 [9]	92.9	96.6	99	109	126	125	200	125	375	375	150	–	–	–	–
		–	75	2	40 [9]	72.3	75.1	77	116	138	100	175	100	300	300	100	–	–	–	–
20BE125 [12]	6	125	–	2	50 [9]	117	122	125	138	188	150	250	150	375	375	250	–	–	–	–
		–	100	2	50 [9]	93	96.6	99	149	198	125	200	125	375	375	150	–	–	–	–
20BE144 [12]	6	150	–	2	50 [9]	135	141	144	158	216	175	300	175	400	400	250	–	–	–	–
		–	125	2	50 [9]	117	122	125	188	250	150	275	150	375	375	250	–	–	–	–

See page 29 for notes.

690 Volt AC Input Protection Devices – Frames 0…6 [13]

Drive Catalog Number [12]	Frame	kW Rating		PWM Freq.	Temp. [11]	Input Ratings		Output Amps			Dual Element Time Delay Fuse		Non-Time Delay Fuse		Circuit Breaker [3]	Motor Circuit Protector [4]
		ND	HD	kHz	°C	Amps	kVA	Cont.	1 Min.	3 Sec.	Min. [1]	Max. [2]	Min. [1]	Max. [2]	Max. [8]	Max. [8]
20BF052	5	45	–	4	50 [9]	46.9	56.1	52	57	78	60	110	60	175	175	–
		–	37.5	4	50 [9]	40.1	48	46	69	92	50	90	50	150	150	–
20BF060	5	55	–	4	50 [9]	57.7	68.9	60	66	90	80	125	80	225	225	–
		–	45	4	50 [9]	46.9	56.1	52	78	104	60	110	60	175	175	–
20BF082	5	75	–	2	50 [9]	79	94.4	82	90	123	100	200	100	375	375	–
		–	55	2	50 [9]	57.7	68.9	60	90	120	80	125	80	225	225	–
20BF098	5	90	–	2	40 [9]	94.7	113	98	108	127	125	200	125	375	375	–
		–	75	2	40 [9]	79	94.4	82	123	140	100	200	100	375	375	–
20BF119	6	110	–	2	50 [9]	115	137	119	131	179	150	250	150	400	–	–
		–	90	2	50 [9]	94.7	113	98	147	196	125	200	125	375	–	–
20BF142	6	132	–	2	50 [9]	138	165	142	156	213	175	300	175	450	–	–
		–	110	2	50 [9]	115	137	119	179	238	150	250	150	400	–	–

See page 29 for notes.

Notes

(1) Minimum protection device size is the lowest rated device that supplies maximum protection without nuisance tripping.

(2) Maximum protection device size is the highest rated device that supplies drive protection. For US NEC, minimum size is 125% of motor FLA. Ratings shown are maximum.

(3) Circuit Breaker - inverse time breaker. For US NEC, minimum size is 125% of motor FLA. Ratings shown are maximum.

(4) Motor Circuit Protector - instantaneous trip circuit breaker. For US NEC minimum size is 125% of motor FLA. Ratings shown are maximum.

(5) Bulletin 140M with adjustable current range must have the current trip set to the minimum range that the device will not trip.

(6) Manual Self-Protected (Type E) Combination Motor Controller, UL listed for 208 Wye or Delta, 240 Wye or Delta, 480Y/277 or 600Y/ 347. Not UL listed for use on 480V or 600V Delta/Delta, corner ground, or high-resistance ground systems.

(7) The AIC ratings of the Bulletin 140M Motor Protector Circuit Breakers can vary. See Bulletin 140M Motor Protection Circuit Breakers Application Ratings.

(8) Maximum allowable rating by US NEC. Exact size must be chosen for each installation.

(9) UL Type 12/IP54 (flange mount) heat sink ambient temperature rating is 40° C/ambient of unprotected drive portion (inside enclosure) is 55° C. The ambient temperature for the UL Type 12/IP54 stand-alone drives is 40° C.

(10) Must remove top label and vent plate, drive enclosure rating is IP00, NEMA / UL Type Open.

(11) Frames 0…4 temperature rating is for NEMA / UL Type Open. The adhesive top label must be removed to operate drive at this temperature. Frames 5 & 6 do not have a top label.

(12) Drives have dual current ratings; one for normal duty applications, and one for heavy duty applications. The drive can be operated at either rating.

(13) Note: 600V class drives below 77 Amps (Frames 0…4) are declared to meet the Low Voltage Directive. It is the responsibility of the user to determine compliance to the EMC directive.

(14) When using a Manual Self-Protected (Type E) Combination Motor Controller, the drive must be installed in a ventilated or non-ventilated enclosure with the minimum volume specified in this column. Application specific thermal considerations can require a larger enclosure.

(15) Frame 7…10 drives are CE Certified for use with 400V AC and 480V AC center grounded neutral power supply systems only. It is the responsibility of the user to determine compliance to the EMC directive.

(16) Temperature rating is for IP20, NEMA / UL Type 1. For IP00, NEMA Type Open the temperature rating is 65 °C for the control board and 40 °C for the heat sink entry air.

(17) Input current on the drive can be lower than the output current due to the power factor correction in the drive.

325 Volt DC Input Protection Devices – Frames 0…6

Drive Catalog Number	Frame	Hp Rating		PWM Freq.	Temp. (1)	DC Input Ratings	Output Amps			Fuse	Non-Time Delay Fuse (2)(11)
		ND	HD	kHz	°C	Amps	Cont.	1 Min.	3 Sec.		
20BB2P2	0	0.5	0.33	4	50	2	2.2	2.4	3.3	5	JKS-5
20BB4P2	0	1	0.75	4	50	3.8	4.2	4.8	6.4	10	JKS-10
20BB6P8	1	2	1.5	4	50	6.9	6.8	9	12	15	HSJ15
20BB9P6	1	3	2	4	50	9.7	9.6	10.6	14.4	20	HSJ20
20BB015	1	5	3	4	50	16	15.3	16.8	23	30	HSJ30
20BB022	1	7.5	5	4	50	23.3	22	24.2	33	45	HSJ45
20BB028	2	10	7.5	4	50	30	28	33	44	60	HSJ60
20BB042	3	15	10	4	50	45	42	46.2	63	90	HSJ90
20BB052	3	20	15	4	50	55	52	63	80	100	HSJ100
20BB070	4	25	20	4	50	75.3	70	78	105	150	HSJ150
20BB080	4	30	25	4	50	86.8	80	105	140	175	HSJ175
20BN104 (3)	5	40	–	4	50	114.1	104	115	175	200	HSJ200
		–	30	4	50	85.8	80	120	160	200	HSJ200
20BN130 (3)	5	50	–	4	50	142.6	130	143	175	200	HSJ200
		–	40	4	50	114.1	104	156	175	200	HSJ200
20BN154 (3)	6	60	–	4	50	169	154	169	231	300	HSJ300
		–	50	4	50	142.6	130	195	260	300	HSJ300
20BN192 (3)	6	75	–	4	50	210.6	192	211	288	350	HSJ350
		–	60	4	50	169	154	231	308	350	HSJ350
20BN260 (3)	6	100	–	2	45	285.3	260	286	390	400	HSJ400
		–	75	2	50	210.6	205	305	410	400	HSJ400

See page 32 for notes.

540 Volt DC Input Protection Devices – Frames 0…6

Drive Catalog Number	Frame	kW Rating		PWM Freq.	Temp.[1]	DC Input Ratings	Output Amps			Fuse	Non-Time Delay Fuse[2][11]
		ND	HD	kHz	°C	Amps	Cont.	1 Min.	3 Sec.		
20BC1P3	0	0.37	0.25	4	50	1.3	1.3	1.4	1.9	3	JKS-3
20BC2P1	0	0.75	0.55	4	50	2.1	2.1	2.4	3.2	6	JKS-6
20BC3P5	0	1.5	0.75	4	50	3.7	3.5	4.5	6	8	JKS-8
20BC5P0	0	2.2	1.5	4	50	5.3	5	5.5	7.5	10	JKS-10
20BC8P7	0	4	3	4	50	9.3	8.7	9.9	13.2	15	HSJ15
20BC011	0	5.5	4	4	50	12.6	11.5	13	17.4	20	HSJ20
20BC015	1	7.5	5.5	4	50	16.8	15.4	17.2	23.1	25	HSJ25
20BC022	1	11	7.5	4	50	24	22	24.2	33	40	HSJ40
20BC030	2	15	11	4	50	33.2	30	33	45	50	HSJ50
20BC037	2	18.5	15	4	50	40.9	37	45	60	70	HSJ70
20BC043	3	22	18.5	4	50	47.5	43	56	74	90	HSJ90
20BC056	3	30	22	4	50	61.9	56	64	86	100	HSJ100
20BC072	3	37	30	4	50[7]	80.5	72	84	112	125	HSJ125
20BC085[3][5]	4	45	–	4	45	95.1	85	94	128	150	HSJ150
		–	37	4	45	80.5	72	108	144	175	HSJ175
20BH105[3][5]	5	55	–	4	50[4]	120.2	105	116	158	175	HSJ175
		–	45	4	50[4]	95.1	85	128	170	200	HSJ200
20BH140[3][5]	5	75	–	4	40[4]	159	140	154	190	225	HSJ225
		–	55	4	40[4]	120.2	105	158	190	225	HSJ225
20BH170[3][5]	6	90	–	4	50[4]	192.3	170	187	255	300	HSJ300
		–	75	4	50[4]	159	140	210	280	300	HSJ300
20BH205[3][5]	6	110	–	4	40[4]	226	205	220	289	350	HSJ350
		–	90	4	40[4]	192.3	170	255	313	350	HSJ350
20BH260[3][5]	6	132	–	2	45[4]	298	260	286	390	500	HSJ500
		–	110	2	50[4]	226	205	305	410	500	HSJ500

See page 32 for notes.

540 Volt DC Input with Precharge – Frames 7…10

Drive Catalog Number	Frame	kW Rating		PWM Freq.	Temp.	DC Input Ratings		Output Amps			Fuse	Non-Time Delay Fuse[2][11]
		ND	HD	kHz	°C	Amps	kW	Cont.	1 Min.	3 Sec.		
20BP292	7	160		4	40	342	185	292	322	438	500	170M6608[10]
			150	4	40	309	166	263	395	526	630	170M6610[10]
20BP325	7	180		4	40	381	206	325	358	488	630	170M6610[10]
			180	4	40	381	206	325	488	650	800	170M6612[10]
20BP365	8	200		2	40	428	231	365	402	548	630	170M6610[10]
			180	2	40	381	206	325	488	650	800	170M6612[10]
20BP415	8	240		2	40	487	262	415	457	623	800	170M6612[10]
			200	2	40	428	231	365	548	730	900	170M6613[10]
20BP481	8	280		2	40	564	304	481	530	722	900	170M6613[10]
			240	2	40	487	262	415	623	830	1000	170M6614[10]
20BP535	8	300		2	40	627	338	535	589	803	1000	170M6614[10]
			280	2	40	564	304	481	722	962	1100	170M6615[10]
20BP600	8	350		2	40	703	379	600	660	900	1100[8]	170M6615[10]
			300	2	40	627	338	535	803	1070	1200[8]	170M6616[10]
20BP730	9	400		2	40	855	461	730	803	1095	1200[9]	170M6616[10]
			350	2	40	703	379	600	900	1200	1400[9]	170M6617[10]
20BH875 No Precharge	10	500		2	40	1025	553	875	963	1313	2 x 800	170M6612[10]
			400	2	40	820	443	700	1050	1400	2 x 800	170M6612[10]

See page 32 for notes.

650 Volt DC Input Protection Devices – Frames 0…6

Drive Catalog Number	Frame	Hp Rating		PWM Freq.	Temp.[1]	DC Input Ratings	Output Amps			Fuse	Non-Time Delay Fuse[2][11]
		ND	HD	kHz	°C	Amps	Cont.	1 Min.	3 Sec.		
20BD1P1	0	0.5	0.33	4	50	1.0	1.1	1.2	1.6	3	JKS-3
20BD2P1	0	1	0.75	4	50	1.9	2.1	2.4	3.2	6	JKS-6
20BD3P4	0	2	1.5	4	50	3.0	3.4	4.5	6.0	6	JKS-6
20BD5P0	0	3	2	4	50	4.5	5.0	5.5	7.5	10	JKS-10
20BD8P0	0	5	3	4	50	8.1	8.0	8.8	12	15	HSJ15
20BD011	0	7.5	5	4	50	11.1	11	12.1	16.5	20	HSJ20
20BD014	1	10	7.5	4	50	14.7	14	16.5	22	30	HSJ30
20BD022	1	15	10	4	50	23.3	22	24.2	33	40	HSJ40
20BD027	2	20	15	4	50	28.9	27	33	44	50	HSJ50
20BD034	2	25	20	4	50	36.4	34	40.5	54	60	HSJ60
20BD040	3	30	25	4	50	42.9	40	51	68	80	HSJ80
20BD052	3	40	30	4	50	55.7	52	60	80	90	HSJ90
20BD065	3	50	40	4	50	69.7	65	78	104	100	HSJ100
20BD077[3]	4	60	–	4	50	84.5	77	85	116	150	HSJ150
		–	50	4	50	69.7	65	98	130	150	HSJ150
20BR096[3][6]	5	75	–	4	50[4]	105.3	96	106	144	175	HSJ175
		–	60	4	50[4]	84.5	77	116	154	175	HSJ175
20BR125[3][6]	5	100	–	4	50[4]	137.1	125	138	163	200	HSJ200
		–	75	4	50[4]	105.3	96	144	168	200	HSJ200
20BR156[3][6]	6	125	–	4	50[4]	171.2	156	172	234	300	HSJ300
		–	100	4	50[4]	137.1	125	188	250	300	HSJ300
20BR180[3][6]	6	150	–	4	50[4]	204	180	198	270	400	HSJ400
		–	125	4	50[4]	171.2	156	234	312	400	HSJ400
20BR248[3][6]	6	200	–	2	45[4]	272	248	273	372	400	HSJ400
		–	150	2	50[4]	204	180	270	360	400	HSJ400

See page 32 for notes.

650 Volt DC Input with Precharge – Frames 7…10

Drive Catalog Number	Frame	Hp Rating		PWM Freq.	Temp.	DC Input Ratings		Output Amps			Fuse	Non-Time Delay Fuse[2][11]
		ND	HD	kHz	°C	Amps	kW	Cont.	1 Min.	3 Sec.		
20BR292	7	250		4	40	328	212	292	322	438	500	170M6608[10]
			200	4	40	296	191	263	395	526	630	170M6610[10]
20BR325	7	250		4	40	365	236	325	358	488	550	170M6609[10]
			250	4	40	365	236	325	488	650	800	170M6612[10]
20BR365	8	300		2	40	410	265	365	402	548	630	170M6610[10]
			250	2	40	365	236	325	488	650	800	170M6612[10]
20BR415	8	350		2	40	466	302	415	457	623	700	170M6611[10]
			300	2	40	410	265	365	548	730	800	170M6612[10]
20BR481	8	400		2	40	540	350	481	530	722	800	170M6619[10]
			350	2	40	466	302	415	623	830	900	170M6613[10]
20BR535	8	450		2	40	601	389	535	589	803	900	170M6613[10]
			400	2	40	540	350	481	722	962	1000	170M6614[10]
20BR600	8	500		2	40	674	436	600	660	900	1000[8]	170M6614[10]
			450	2	40	601	389	535	803	1070	1200[8]	170M6616[10]
20BR730	9	600		2	40	820	533	730	803	1095	1200[9]	170M6616[10]
			500	2	40	674	436	600	900	1200	1400[9]	170M6617[10]
20BJ875 No Precharge	10	700		2	40	983	636	875	963	1313	1400	2 x 170M6611[10]
			600	2	40	786	509	700	1050	1400	1600	2 x 170M6612[10]

See page 32 for notes.

810 Volt DC Input Protection Devices – Frames 0…6

Drive Catalog Number	Frame	Hp Rating		PWM Freq.	Temp.[1]	DC Input Ratings	Output Amps			Fuse	Non-Time Delay Fuse[2][11]
		ND	HD	kHz	°C	Amps	Cont.	1 Min.	3 Sec.		
20BE1P7	0	1	0.75	4	50	1.5	1.7	2	2.6	3	JKS-3
20BE2P7	0	2	1.5	4	50	2.4	2.7	3.6	4.8	6	JKS-6
20BE3P9	0	3	2	4	50	3.5	3.9	4.3	5.9	6	JKS-6
20BE6P1	0	5	3	4	50	6.2	6.1	6.7	9.2	10	JKS-10
20BE9P0	0	7.5	5	4	50	9.1	9	9.9	13.5	15	HSJ15
20BE011	0	10	7.5	4	50	11.5	11	13.5	18	20	HSJ20
20BE017	1	15	10	4	50	18	17	18.7	25.5	30	HSJ30
20BE022	2	20	15	4	50	23.6	22	25.5	34	40	HSJ40
20BE027	2	25	20	4	50	29	27	33	44	50	HSJ50
20BE032	3	30	25	4	50	34.3	32	40.5	54	60	HSJ60
20BE041	3	40	30	4	50	43.9	41	48	64	70	HSJ70
20BE052	3	50	40	4	50	55.7	52	61.5	82	90	HSJ90
20BE062	4	60	50	2	50	68	62	78	104	125	HSJ125
20BT099[3]	5	100	–	2	40	108.6	99	109	126	150	HSJ150
		–	75	2	40	84.5	77	116	138	150	HSJ150
20BT144[3]	6	150	–	2	50	158	144	158	216	250	HSJ250
		–	125	2	50	137.1	125	188	250	250	HSJ250

932 Volt DC Input Protection Devices – Frames 0…6

Drive Catalog Number	Frame	kW Rating		PWM Freq.	Temp.[1]	DC Input Ratings	Output Amps			Fuse	Non-Time Delay Fuse[2][11]
		ND	HD	kHz	°C	Amps	Cont.	1 Min.	3 Sec.		
20BW052[3]	5	45	–	2	50[4]	58.2	52	57	78	100	170M3691
		–	37.5	2	50[4]	46.9	46	69	92	100	170M3691
20BW098[3]	5	90	–	2	50[4]	110.7	98	108	127	160	170M3693
		–	75	2	50[4]	92.3	82	123	140	160	170M3693
20BW142[3]	6	132	–	2	50[4]	162.2	142	156	213	250	170M3695
		–	110	2	40[4]	134.9	119	179	238	315	170M3696

Notes

(1) Frames 0…4 temperature rating is for NEMA / UL Type Open. The adhesive top label must be removed to operate drive at this temperature. Frames 5 & 6 do not have a top label.

(2) The power source to common bus inverters must be derived from AC voltages 600V or less, as defined in NFPA70; Art 430-18 (NEC). Battery supplies or MG sets are not included. The following devices were validated to break current of the derived power DC Bus.
Disconnects: Allen-Bradley Bulletin 1494, 30-400A; 194, 30-400A; or ABB OESA, 600 & 800A; OESL, all sizes.
Fuses: Bussmann Type JKS, all sizes; Type 170M, Case Sizes 1, 2 and 3, or Ferraz Shawmut Type HSJ, all sizes. For any other devices, please contact the factory.

(3) Drives have dual current ratings; one for normal duty applications, and one for heavy duty applications. The drive can be operated at either rating.

(4) UL Type 12/IP54 (flange mount) heatsink ambient temperature rating is 40 °C/ambient of unprotected drive portion (inside enclosure) is 55 °C. The ambient temperature for the UL Type 12/IP54 stand-alone drives is 40 °C.

(5) Also applies to "P" voltage class.

(6) Also applies to "J" voltage class.

(7) Must remove top label and vent plate, drive enclosure rating is IP00, NEMA / UL Type Open.

(8) Two 630A Bussmann 170M6608 can also be used.

(9) Two 700A Bussmann 170M6611 can also be used.

(10) Bussmann or equivalent.

(11) See Fuse Certification and Test Data in PowerFlex AC Drives in Common Bus Configurations Application Guidelines, publication DRIVES-AT002, for fuse self-certification and test data for Bussmann 170M and JKS fuses recommended for the DC bus fusing.

Cable Recommendations

Power Cable Types Acceptable for 200…600 Volt Installations

A variety of cable types are acceptable for drive installations. For many installations, unshielded cable is adequate, provided it can be separated from sensitive circuits. As an approximate guide, allow a spacing of 0.3 meters (1 foot) for every 10 meters (32.8 feet) of length. In all cases, long parallel runs must be avoided. Do not use cable with an insulation thickness less than or equal to 15 mils (0.4mm/0.015 in.). Use Copper wire only. Wire gauge requirements and recommendations are based on 75° C. Do not reduce wire gauge when using higher temperature wire. See table below.

Location	Rating/Type	Description
Standard (Option 1)	600V, 90° C (194° F) XHHW2/RHW-2 Anixter B209500-B209507, Belden 29501-29507, or equivalent	• Four tinned copper conductors with XLP insulation. • Copper braid/aluminum foil combination shield and tinned copper drain wire. • PVC jacket.
Standard (Option 2)	Tray rated 600V, 90° C (194° F) RHH/RHW-2 Anixter OLF-7xxxxx or equivalent	• Three tinned copper conductors with XLPE insulation. • 5 mil single helical copper tape (25% overlap min.) with three bare copper grounds in contact with shield. • PVC jacket.
Class I & II; Division I & II	Tray rated 600V, 90° C (194° F) RHH/RHW-2 Anixter 7V-7xxxx-3G or equivalent	• Three bare copper conductors with XLPE insulation and impervious corrugated continuously welded aluminum armor. • Black sunlight resistant PVC jacket overall. • Three copper grounds on #10 AWG and smaller.

Unshielded

THHN, THWN or similar wire is acceptable for drive installation in dry environments provided adequate free air space and/or conduit fill rates limits are provided. **Do not use THHN or similarly coated wire in wet areas**. Any wire chosen must have a minimum insulation thickness of 15 Mils and should not have large variations in insulation concentricity.

Shielded/Armored Cable

Shielded cable contains all of the general benefits of multi-conductor cable with the added benefit of a copper braided shield that can contain much of the noise generated by a typical AC drive. Strong consideration for shielded cable should be given in installations with sensitive equipment such as weigh scales, capacitive proximity switches and other devices that may be affected by electrical noise in the distribution system. Applications with large numbers of drives in a similar location, imposed EMC regulations or a high degree of communications/ networking are also good candidates for shielded cable.

Shielded cable may also help reduce shaft voltage and induced bearing currents for some applications. In addition, the increased impedance of shielded cable may help extend the distance that the motor can be located from the drive without the addition of motor protective devices such as terminator networks.

Consideration should be given to all of the general specifications dictated by the environment of the installation, including temperature, flexibility, moisture characteristics and chemical resistance. In addition, a braided shield should be included and be specified by the cable manufacturer as having coverage of at least 75%. An additional foil shield can greatly improve noise containment.

A good example of recommended cable is Belden® 295xx (xx determines gauge). This cable has four (4) XLPE insulated conductors with a 100% coverage foil and an 85% coverage copper braided shield (with drain wire) surrounded by a PVC jacket.

Other types of shielded cable are available, but the selection of these types may limit the allowable cable length. Particularly, some of the newer cables twist 4 conductors of THHN wire and wrap them tightly with a foil shield. This construction can greatly increase the cable charging current required and reduce the overall drive performance. Unless specified in the individual distance tables as tested with the drive, these cables are not recommended and their performance against the lead length limits supplied is not known.

Maximum Motor Cable Lengths

For information on maximum motor cable lengths, refer to the Wiring and Grounding Guidelines for Pulse Width Modulated (PWM) AC Drives, publication DRIVES-IN001.

Power Wiring

The PowerFlex 700 has the following built in protective features to help simplify installation:

- Ground fault protection during start up and running ensures reliable operation
- Electronic motor overload protection increases motor life
- Removable MOV to ground and common mode capacitors to ground ensure compatibility with ungrounded systems. These devices must be disconnected if the drive is installed on a resistive grounded distribution system, an ungrounded distribution system, a B phase grounded distribution system or impedance grounded system. These devices must also be disconnected if the drive power source is a regenerative unit (such as a bus supply and brake) or is DC fed from an active converter.
- 6 kV transient protection provides increased robustness for 380...480V system voltages

There are many other factors that must be considered for optimal performance in any given application. The block diagram below highlights the primary installation considerations. Consult the Wiring and Grounding Guidelines for Pulse Width Modulated (PWM) AC Drives, publication DRIVES-IN001 for detailed recommendations on input power conditioning, dynamic braking, reflected wave protection and motor cable types.

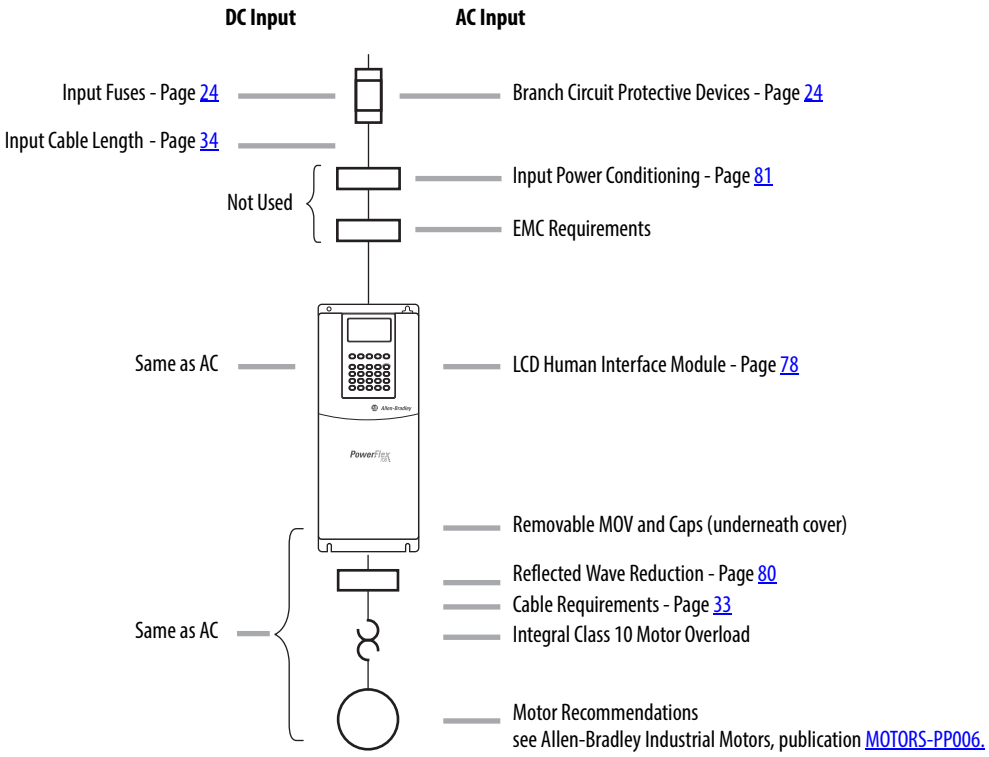

Terminal Blocks

Terminal Block Specifications

Refer to pages 36...38 for typical locations.

No.	Name	Frame	Description	Wire Size Range - See Note (3)		Torque	
				Maximum	Minimum	Maximum	Recommended
❶	Power Terminal Block	0 & 1	Input power and motor connections	4.0 mm^2 (12 AWG)	0.5 mm^2 (22 AWG)	1.7 N•m (15 lb.•in.)	0.8 N•m (7 lb.•in.)
		2	Input power and motor connections	10.0 mm^2 (8 AWG)	0.8 mm^2 (18 AWG)	1.7 N•m (15 lb.•in.)	1.4 N•m (12 lb.•in.)
		3	Input power and motor connections	25.0 mm^2 (3 AWG)	2.5 mm^2 (14 AWG)	3.6 N•m (32 lb.•in.)	1.8 N•m (16 lb.•in.)
			BR1, 2 terminals	10.0 mm^2 (8 AWG)	0.8 mm^2 (18 AWG)	1.7 N•m (15 lb.•in.)	1.4 N•m (12 lb.•in.)
		4	Input power and motor connections	35.0 mm^2 (3 AWG)	10.0 mm^2 (14 AWG)	4.0 N•m (35 lb.•in.)	4.0 N•m (35 lb.•in.)
		5 75 Hp, 480V 100 Hp, 600V	Input power, DC+, DC–, BR1, 2, PE, motor connections	50.0 mm^2 (1 AWG)	4.0 mm^2 (8 AWG)	See Note (5)	
		5 100 Hp	Input power, DC+, DC– and motor	70.0 mm^2 (2/0 AWG)	10.0 mm^2 (8 AWG)		
			BR1, 2, PE terminals	50.0 mm^2 (1/0 AWG)	4.0 mm^2 (12 AWG)		
		6	Input power, DC+, DC–, BR1, 2, PE, motor connections	150.0 mm^2 (300 MCM) *see Note* (4)	2.5 mm^2 (14 AWG)	6.0 N•m (52 lb.•in.)	6.0 N•m (52 lb.•in.)
		7	Input power, DC+, DC–, PE, motor connections	150.0 mm^2 (300 MCM) *see Note* (4)	2.5 mm^2 (14 AWG)	2.7 N•m (24 lb.•in.)	2.7 N•m (24 lb.•in.)
		8 & 9	Input power, DC+, DC–, PE, motor connections	300.0 mm^2 (600 MCM) *see Note* (4)	2.5 mm^2 (14 AWG)	10.0 N•m (87 lb.•in.)	10.0 N•m (87 lb.•in.)
		10	Input power, DC+, DC–, PE, motor connections	300.0 mm^2 (600 MCM) *see Note* (4)	2.5 mm^2 (14 AWG)	10.0 N•m (87 lb.•in.)	10.0 N•m (87 lb.•in.)
❷	SHLD Terminal	0…6	Terminating point for wiring shields	—	—	1.6 N•m (14 lb.•in.)	1.6 N•m (14 lb.•in.)
❸	AUX Terminal Block	0…4	Auxiliary control voltage PS+, PS– (1)(2)	1.5 mm^2 (16 AWG)	0.2 mm^2 (24 AWG)	—	—
		5…6		4.0 mm^2 (12 AWG)	0.5 mm^2 (22 AWG)	0.6 N•m (5.3 lb.•in.)	0.6 N•m (5.3 lb.•in.)
		7…10		4.0 mm^2 (12 AWG)	0.049 mm^2 (30 AWG)	0.6 N•m (5.3 lb.•in.)	0.6 N•m (5.3 lb.•in.)
❹	I/O Terminal Block	0…6	Signal & control connections	2.5 mm^2 (14 AWG)	0.30 mm^2 (22 AWG)	0.6 N•m (5.3 lb.•in.)	0.6 N•m (5.3 lb.•in.)
		7…10		4.0 mm^2 (12 AWG)	0.049 mm^2 (30 AWG)	0.6 N•m (5.3 lb.•in.)	0.6 N•m (5.3 lb.•in.)
❺	Encoder Terminal Block	0…10	Encoder power & signal connections	0.75 mm^2 (18 AWG)	0.196 mm^2 (24 AWG)	0.6 N•m (5.3 lb.•in.)	0.6 N•m (5.3 lb.•in.)
❻	Fan Terminal Block	5…6	User supplied fan voltage	4.0 mm^2 (12 AWG)	0.5 mm^2 (22 AWG)	0.6 N•m (5.3 lb.•in.)	0.6 N•m (5.3 lb.•in.)
		7		4.0 mm^2 (12 AWG)	0.5 mm^2 (22 AWG)	0.9 N•m (8.0 lb.•in.)	0.6 N•m (5.3 lb.•in.)
		8…10		4.0 mm^2 (12 AWG)	0.5 mm^2 (22 AWG)	0.6 N•m (5.3 lb.•in.)	0.6 N•m (5.3 lb.•in.)

(1) External control power: UL Installation-300V DC, ±10%, Non UL Installation-270…600V DC, ±10% (0…3 Frame-40W, 165 mA, 5 Frame-80W, 90 mA).

(2) An Auxiliary Control Power Supply such as the 20-24V-AUX can be used with 400/480 and 600/690 Volt drives with Vector Control. However, consult the factory before using an auxiliary power supply in these instances. **Important:** The Auxiliary Control Power Supply Must Not be used with any Standard Control drive or any 200/240V PowerFlex 700 drive, Standard or Vector Control.

(3) **Maximum/minimum sizes that the terminal block will accept -** these are not recommendations**.**

(4) If may be necessary to connect multiple wires in parallel to these terminals using multiple lugs.

(5) Refer to the terminal block label inside the drive.

Typical Terminal Block Location

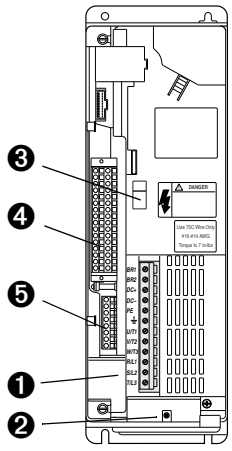

Frames 0…1

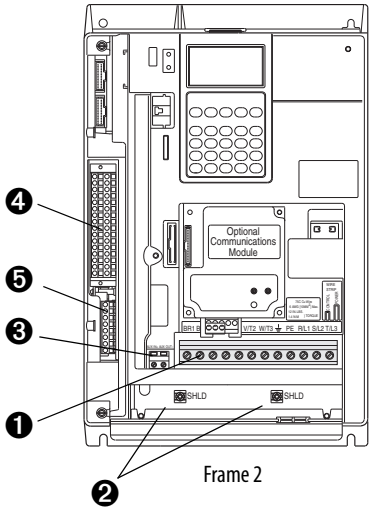

Frame 2

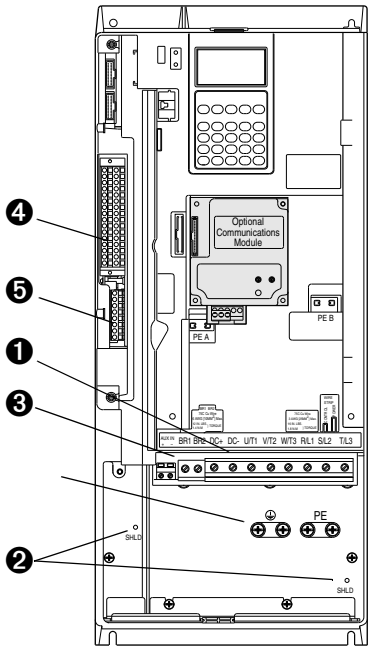

Frames 3…4

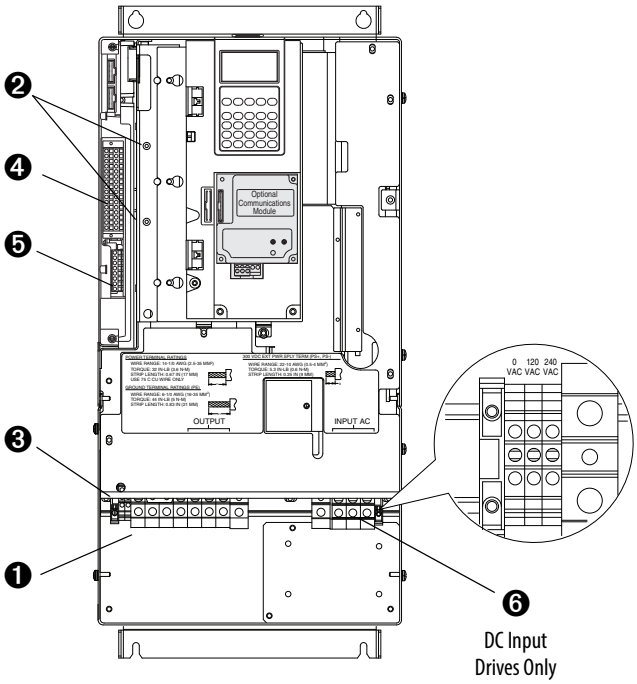

Frame 5

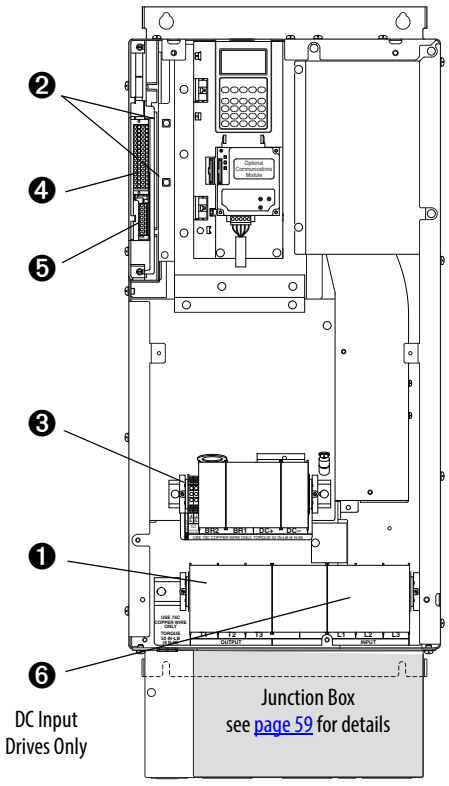

Frame 6

⏚ / PE

Typical Terminal Block Locations (continued)

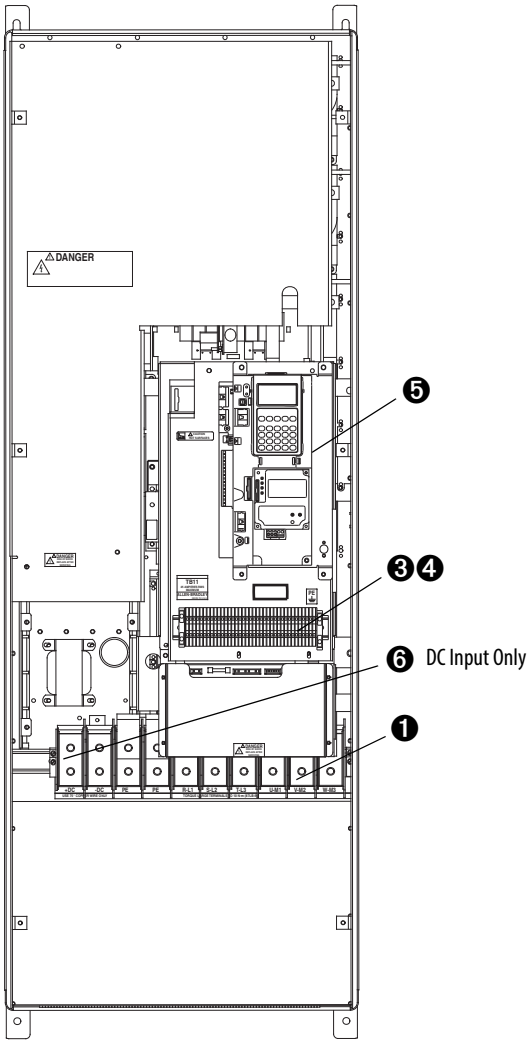

Frame 7

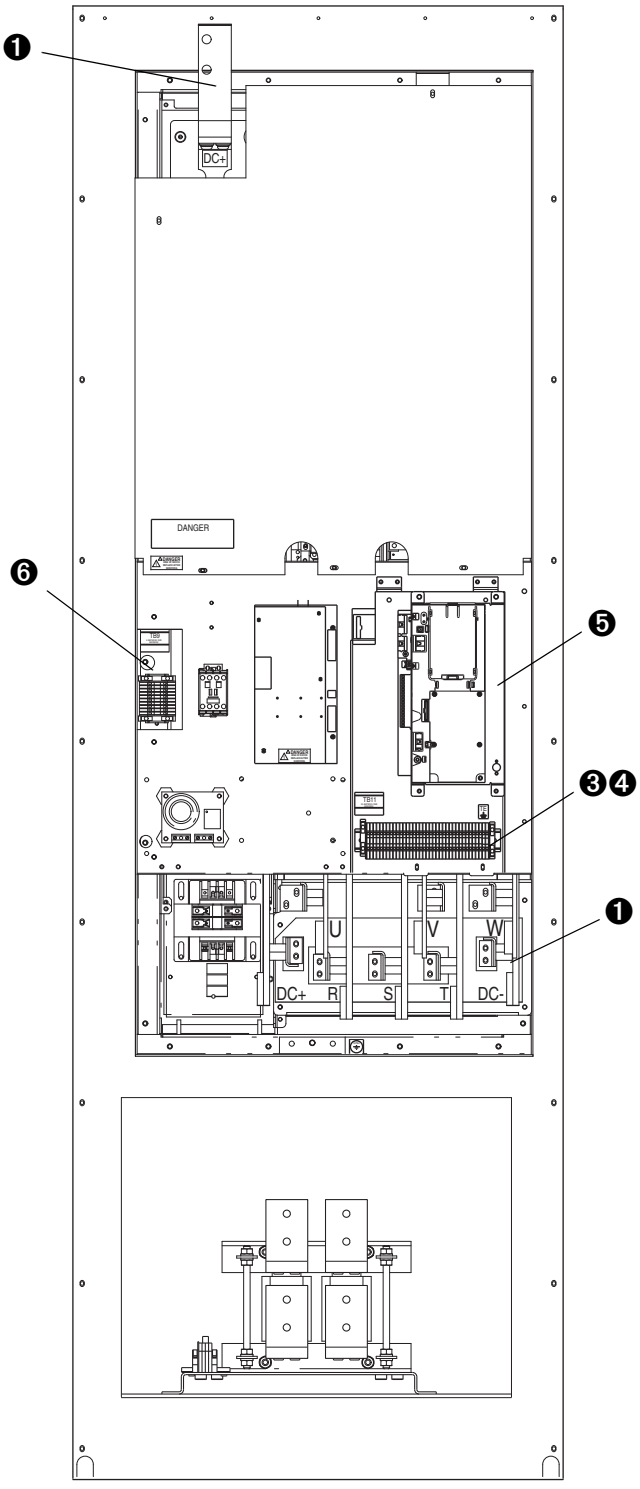

Frames 8…9

Typical Terminal Block Locations (continued)

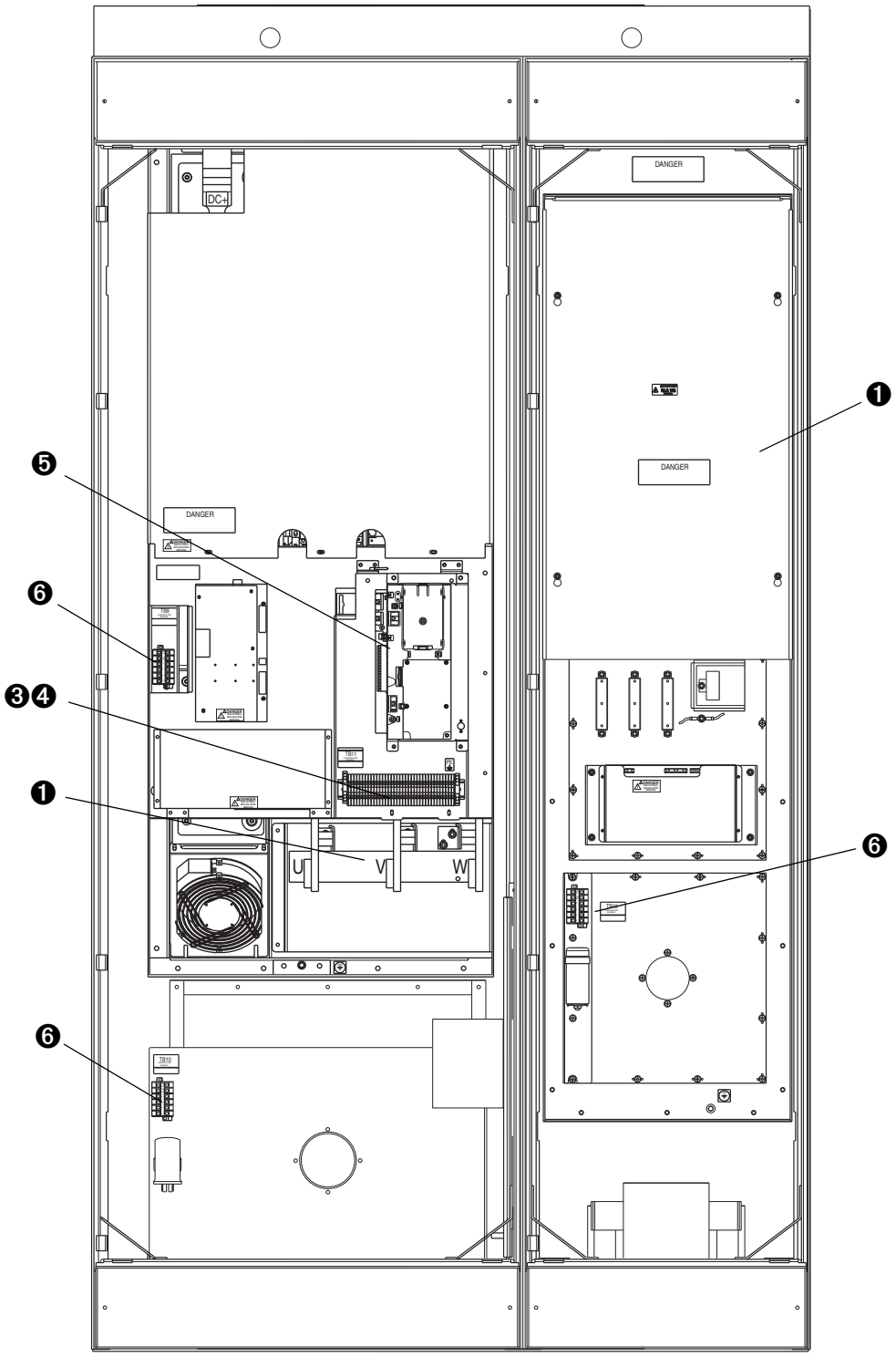

Frame 10
AC Input shown, DC Input Drives utilize the Inverter (Left) Bay only

Power Terminals

<table>
<tr><th>Frame</th><th>Terminal Block</th><th></th></tr>
<tr><td>0…1</td><td> 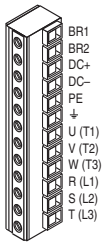
</td><td rowspan="3">* Note:
Shaded BR1 & BR2 Terminals will only be present on drives ordered with the Brake Option.</td></tr>
<tr><td>2</td><td> 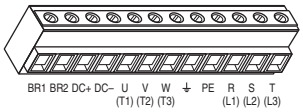
</td></tr>
<tr><td>3…4</td><td> 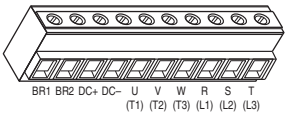
</td></tr>
<tr><td></td><td>AC Input</td><td>DC Input</td></tr>
<tr><td>5</td><td>75 Hp, Normal Duty
 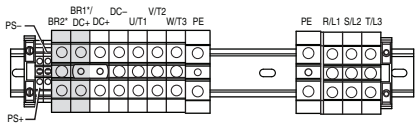
</td><td>75 Hp, Normal Duty
 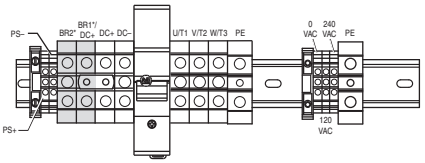
</td></tr>
<tr><td></td><td>100 Hp, Normal Duty
 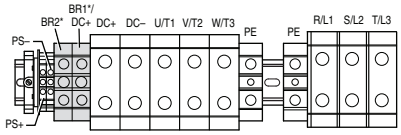
</td><td>100 Hp, Normal Duty
 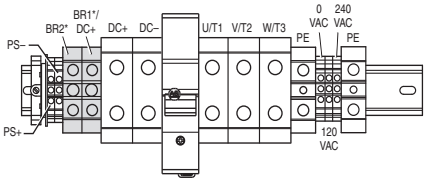
</td></tr>
<tr><td>6</td><td>125…200 Hp, Normal Duty
 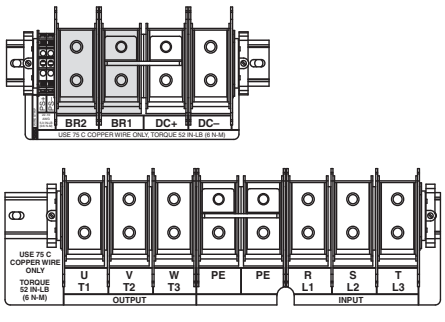
</td><td>125…200 Hp, Normal Duty
 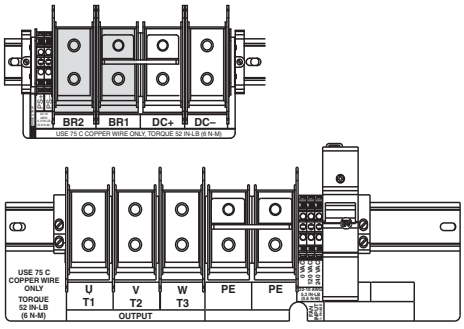
</td></tr>
</table>

Frame	Terminal Block	
	AC Input	**DC Input**
7	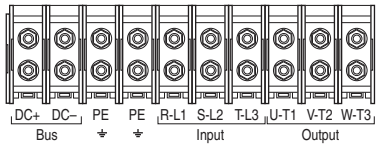	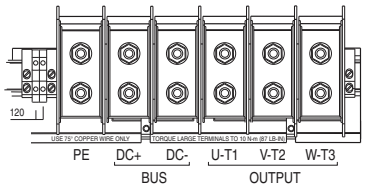
8…9	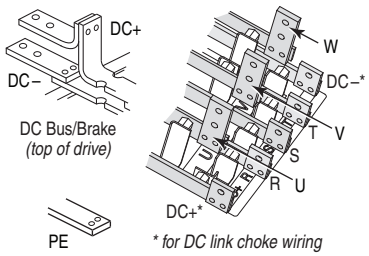	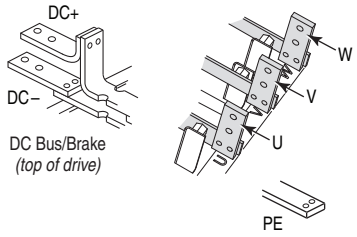
10	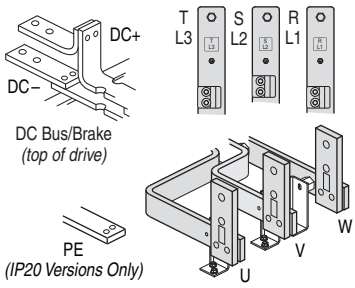	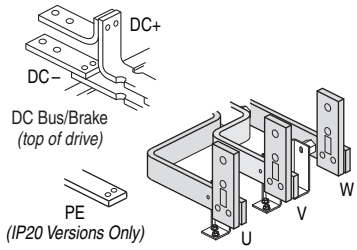

Fan Circuit Power Supply

Some drives utilize a fan transformer to power the internal fan(s). This transformer is sized specifically for the internal fan(s) and must not be used to power other circuitry. If your line voltage is different than the voltage class specified on the drive nameplate, changing the transformer taps will be required.

Frames 5…6 Fan Connections

Drive Type	Enclosure	**Rating** (120V AC)	No. of Fans	Connect at …
DC Input	IP00, NEMA / UL Type Open	100 VA (Frame 5) 138 VA (Frame 6)	1	Power Terminal Block Requires user supplied 120 or 240V AC. See page 36 for TB locations and terminal designations.
	IP20, NEMA / UL Type 1 IP54, NEMA / UL Type 12	100 VA (Frame 5) 138 VA (Frame 6)	1	
AC Input	IP00, NEMA / UL Type Open	100 VA (Frame 5) 138 VA (Frame 6)	1	N/A (Connected internally) A transformer matches the input line voltage to the internal fan voltage. If line voltage is different than the voltage class specified on the drive nameplate, the transformer taps may require changing. The transformer is behind the Power Terminal Block. Access is gained by releasing the terminal block from the rail and removing the transformer cover plate. 1. Locate the small metal tab at the bottom of the end terminal block. 2. Press the tab-in and pull the top of the block out. Repeat for the next block if desired. 3. Remove the transformer cover plate. 4. Select the appropriate transformer tap. 5. Replace cover and terminal block.
	IP20, NEMA / UL Type 1 IP54, NEMA / UL Type 12	100 VA (Frame 5) 138 VA (Frame 6)	1	
	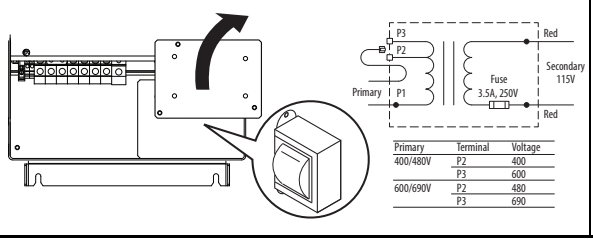			

Frame 7

Drive Type	Enclosure	Rating *(120VAC)*	No. of Fans	Connect at . . .
DC Input	IP00, NEMA / UL Type Open	250 VA	1	Power Terminal Block Requires user supplied 120V AC. See page 40 for location.
	IP20, NEMA / UL Type 1	250 VA	1	
AC Input	IP00, NEMA / UL Type Open	250 VA	1	N/A (Connected internally)
	IP20, NEMA / UL Type 1	250 VA	1	

Frame 8

Drive Type	Enclosure	Rating (120VAC)	No. of Fans	Connect at . . .
DC Input	IP00, NEMA / UL Type Open	500 VA	1	TB9 Requires user supplied 120V AC. See page 37 for TB location and page 42 for terminal designations.
	IP20, NEMA / UL Type 1	500 VA	1	
AC Input	IP00, NEMA / UL Type Open	500 VA	1	TB9 A transformer matches the input line voltage to the internal fan voltage. If line voltage is different than the voltage class specified on the drive nameplate, the transformer taps may require changing. 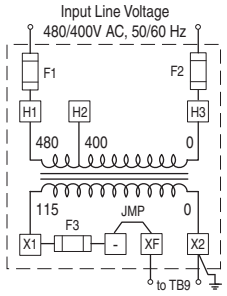
	IP20, NEMA / UL Type 1	500 VA	1	

Frame 9

Drive Type	Enclosure	Rating (120VAC)	No. of Fans	Connect at . . .
DC Input	IP00, NEMA / UL Type Open	500 VA	2	**TB9** Requires user supplied 120V AC for cap. bank fan and phase monitor. **Blower Terminal Block** Three-phase power must be supplied to the Blower TB. See page 37 for TB locations and page 42 for terminal designations.
	IP20, NEMA / UL Type 1	500 VA	2	
AC Input	IP00, NEMA / UL Type Open	500 VA	2	**TB9** A transformer matches the input line voltage to the internal voltage used for the capacitor fan and phase detector module. If the line voltage is different than the voltage class specified on the drive nameplate, the transformer taps may require changing. 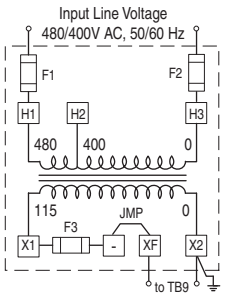
	IP20, NEMA / UL Type 1	500 VA	2	

Frame 9 Blower Operation

Frame 9 drives use a single-phase capacitor bank fan and a three-phase blower for cooling. Proper phasing must be supplied to terminals R, S, and T of the Power Terminal Block (AC drives) or the Blower Terminal Block (DC drives) to assure correct blower rotation. To verify this, a Phase Monitor is used.

Frame 10

Drive Type	Enclosure	Rating *(120VAC)*	No. of Fans	Connect at . . .
DC Input	IP00, NEMA / UL Type Open	1000 VA	2	TB9 & 10 Requires user supplied 120V AC. See page 38 for TB locations and page 42 for terminal designations.
	IP20, NEMA / UL Type 1	1000 VA	2	
AC Input	IP00, NEMA / UL Type Open	1000 VA	3	TB9, 10 & 12 Requires user supplied 120V AC. See page 38 for TB locations and page 42 for terminal designations.
	IP20, NEMA / UL Type 1	1000 VA	3	TB9, 10 & 12 A transformer matches the input line voltage to the internal fan voltage. If line voltage is different than the voltage class specified on the drive nameplate, the transformer taps may require changing. 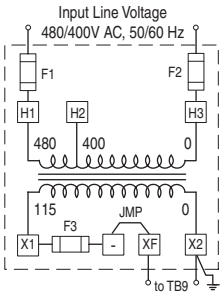

Fan/Blower Terminal Blocks - Frames 8…10

TB9, TB10

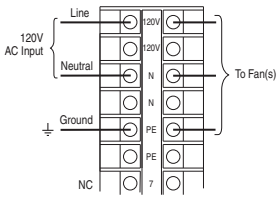

Frames 8…10

Blower TB

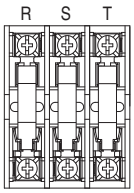

Frame 9 Only

TB12

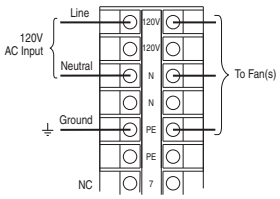

Frame 10, AC Input, IP20 Only

Fan Transformer Specifications/Fusing

Frame	Rating	Recommended Fuses	
		Primary (Quantity 2)	Secondary (Quantity 1)
8…9	500 VA	2.8A, 600V AC, KLDR/ATQR Type	6.25A, 250V AC, Time Delay
10	1000 VA	6A, 600V AC, KLDR/ATQR Type	9A, 250V AC, Time Delay

Three-Phase Blower Fusing

Frame	Recommended Fuses (Quantity 3)
9	5A, 600V AC, Time Delay

Additional Frame 10 Wiring Requirement for IP00 AC Input Drives

The Inverter and Converter sections of Frame 10 AC Input IP00, NEMA / UL Type Open drives are shipped separately. Once installed, the following connections are required.

1. DC Link Choke Wiring
   DC link chokes are supplied loose for customer mounting and wiring in IP00 drives. Refer to DC Link Chokes – Frames 8...10 below.
2. Thermistor Wiring
   Thermistor wiring is coiled loose in the Converter section for shipping. Locate the wire (labeled "To INV") and route through the enclosure wall. Connect it to the mating connector above the HIM cradle.
3. Ground the drive chassis.

DC Link Chokes – Frames 8…10

DC Link Chokes are supplied with Frame 8...10 AC input drives.

Frame	Type	DC Link Choke is supplied …
8…9	IP00, NEMA / UL Type Open	Mounted and wired
	IP20, NEMA / UL Type 1	Mounted and wired
	IP00, NEMA / UL Type Open Roll-In	Loose without cables
10	IP00, NEMA / UL Type Open	Loose without cables
	IP20, NEMA / UL Type 1	Mounted and wired

I/O Wiring

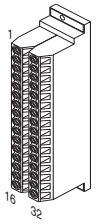

Standard Control Option – Frames 0…6 (1)

No.	Signal	Factory Default	Description
1	Anlg Volts In 1 (–)	(3)	Isolated (4), bipolar, differential, ±10V, 11 bit & sign, 88k ohm input impedance.
2	Anlg Volts In 1 (+)		
3	Anlg Volts In 2 (–)	(3)	Isolated (5), bipolar, differential, ±10V, 11 bit & sign, 88k ohm input impedance.
4	Anlg Volts In 2 (+)		
5	Pot Common	–	For (+) and (–) 10V pot references.
6	Anlg Volts Out 1 (–)	(3)	Bipolar, ±10V, 11 bit & sign, 2k ohm minimum load.
7	Anlg Volts Out 1 (+)		
8	Anlg Current Out 1 (–)	(3)	4-20mA, 11 bit & sign, 400 ohm maximum load.
9	Anlg Current Out 1 (+)		
10	Reserved for Future Use		
11	Digital Out 1 – N.C. (2)	Fault	Max. Resistive Load: 240V AC/30V DC – 1200VA, 150W Max. Current: 5A, Min. Load: 10mA Max. Inductive Load: 240V AC/30V DC – 840VA, 105W Max. Current: 3.5A, Min. Load: 10mA
12	Digital Out 1 Common		
13	Digital Out 1 – N.O. (2)	NOT Fault	
14	Digital Out 2 – N.C. (2)	NOT Run	
15	Digital Out 2 Common		
16	Digital Out 2 – N.O. (2)	Run	
17	Anlg Current In 1 (–)	(3)	Isolated (4), 4-20 mA, 11 bit & sign, 124 ohm input impedance.
18	Anlg Current In 1 (+)		
19	Anlg Current In 2 (–)	(3)	Isolated (5), 4-20 mA, 11 bit & sign, 124 ohm input impedance.
20	Anlg Current In 2 (+)		
21	–10V DC Pot Ref.	–	2k ohm minimum.
22	+10V DC Pot Ref.	–	
23	Reserved for Future Use		
24	+24V DC (6)	–	Drive supplied logic input power. (6)
25	Digital In Common	–	
26	24V Common (6)	–	Common for internal power supply.
27	Digital In 1	Stop - CF	115V AC, 50/60 Hz - Control & I/O Cat. No. option B Opto isolated Low State: less than 30V AC High State: greater than 100V AC, 5.0 mA 24V AC/DC, 50/60 Hz - Control & I/O Cat. No. option A Opto isolated Low State: less than 5V AC/DC High State: greater than 20V AC/DC, 11.2 mA DC Digital Input Impedance: 35k ohm
28	Digital In 2	Start	
29	Digital In 3	Auto/Man.	
30	Digital In 4	Speed Sel 1	
31	Digital In 5	Speed Sel 2	
32	Digital In 6	Speed Sel 3	

Vector Control Option – Frames 0…6 (1)

Signal	Factory Default	Description
Analog In 1 (–) (7)	(3)	Isolated (9), bipolar, differential, ±10V/0-20 mA, 11 bit & sign. For 0-20 mA, a jumper must be installed at terminals 17 & 18 (or 19 & 20). 88k ohm input impedance when configured for volt. & 95.3 ohm for current
Analog In 1 (+) (7)		
Analog In 2 (–) (7)		
Analog In 2 (+) (7)		
Pot Common	–	For (+) and (–) 10V pot references.
Analog Out 1 (–)	(3)	Single-ended bipolar (current output is not bipolar), ±10V/0-20 mA, 11 bit & sign, Voltage mode - limit current to 5 mA. Current mode - max. load is 400 ohms.
Analog Out 1 (+)		
Analog Out 2 (–)		
Analog Out 2 (+)		
HW PTC Input 1	–	1.8k ohm PTC, Internal 3.32k ohm pull-up resistor
Digital Out 1 – N.C. (2)	Fault	Max. Resistive Load: 240V AC/30V DC – 1200VA, 150W Max. Current: 5A, Min. Load: 10 mA Max. Inductive Load: 240V AC/30V DC – 840VA, 105W Max. Current: 3.5A, Min. Load: 10 mA
Digital Out 1 Common		
Digital Out 1 – N.O. (2)	NOT Fault	
Digital Out 2 – N.C. (2)	NOT Run	
Digital Out 2/3 Com.		
Digital Out 3 – N.O. (2)	Run	
Current In Jumper (7) – Analog In 1		Placing a jumper across terminals 17 & 18 (or 19 & 20) configures that analog input for current.
Current In Jumper (7) – Analog In 2		
–10V DC Pot Ref.	–	2k ohm minimum load.
+10V DC Pot Ref.	–	
HW PTC Input 2	–	See above
+24V DC (6)	–	Drive supplied logic input power. (6)
Digital In Common	–	
24V Common (6)	–	Common for internal power supply.
Digital In 1 (8)	Stop - CF	115V AC, 50/60 Hz - Control & I/O Cat. No. option D Opto isolated Low State: less than 30V AC High State: greater than 100V AC, 5.7 mA 24V DC - Control & I/O Cat. No. option C Opto isolated Low State: less than 5V DC High State: greater than 20V DC, 10 mA DC Digital Input Impedance: 21k ohm
Digital In 2 (8)	Start	
Digital In 3 (8)	Auto/Man.	
Digital In 4 (8)	Speed Sel 1	
Digital In 5 (8)	Speed Sel 2	
Digital In 6/Hardware Enable (8), see pg. 46	Speed Sel 3	

(1) Refer to the catalog number position "k" to determine your control option (A or B = standard control option, C or D = vector control option).

(2) Contacts in unpowered state. Any relay programmed as Fault or Alarm energizes (picks up) when power is applied to drive and deenergize (drop out) when a fault or alarm exists. Relays selected for other functions energize only when that condition exists and deenergizes when condition is removed.

(3) These inputs/outputs are dependant on a number of parameters.

(4) Differential Isolation - External source must be maintained at less than 160V with respect to PE. Input provides high common mode immunity.

(5) Differential Isolation - External source must be less than 10V with respect to PE.

(6) 150 mA maximum load designed to power digital inputs only. Not present on 115V versions.

(7) **Important:** 0…20 mA operation requires a jumper at terminals 17 & 18 (or 19 & 20). Drive damage can occur if jumper is not installed.

(8) A 10k ohm, 2 watt burden resistor must be installed on each digital input when using a triac type device. The resistor is installed between each digital input and neutral /common.

(9) Differential Isolation - External source must be maintained at less than 160V with respect to PE. Input provides high common mode immunity.

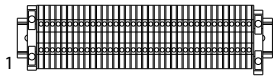

Vector Control Option – Frames 7…10

No.	Signal	Factory Default	Description
1	Analog In 1 (–) (1)	(3)	Isolated (4), bipolar, differential, ±10V/4-20mA, 11 bit & sign, 88k ohm input impedance. For 4-20mA, a jumper must be installed at terminals 17 & 18 (or 19 & 20).
2	Analog In 1 (+) (1)		
3	Analog In 2 (–) (1)		
4	Analog In 2 (+) (1)		
5	Pot Common	–	For (+) and (–) 10V pot references.
6	Analog Out 1 (–)	(3)	Bipolar (current output is not bipolar), ±10V/4-20mA, 11 bit & sign, voltage mode - limit current to 5 mA. Current mode - max. load resistance is 400 ohms.
7	Analog Out 1 (+)		
8	Analog Out 2 (–)		
9	Analog Out 2 (+)		
10	HW PTC Input 1	–	1.8k ohm PTC, Internal 3.32k ohm pull-up resistor
11	Digital Out 1 – N.C. (2)	Fault	Max. Resistive Load: 240V AC/30V DC – 1200VA, 150W Max. Current: 5A, Min. Load: 10mA Max. Inductive Load: 240V AC/30V DC – 840VA, 105W Max. Current: 3.5A, Min. Load: 10mA
12	Digital Out 1 Common		
13	Digital Out 1 – N.O. (2)	NOT Fault	
14	Digital Out 2 – N.C. (2)	NOT Run	
15	Digital Out 2/3 Com.		
16	Digital Out 3 – N.O. (2)	Run	
17	Current In Jumper (1) – Analog In 1		Placing a jumper across terminals 17 & 18 (or 19 & 20) configures that analog input for current.
18			
19	Current In Jumper (1) – Analog In 2		
20			
21	–10V Pot Reference	–	2k ohm minimum load.
22	+10V Pot Reference	–	
23	HW PTC Input 2	–	See above
24	+24V DC (5)	–	Drive supplied logic input power. (5)
25	Digital In Common	–	
26	24V Common (5)	–	Common for internal power supply.
27	Digital In 1	Stop - CF	115V AC, 50/60 Hz - Control & I/O Cat. No. option D Opto isolated Low State: less than 30V AC High State: greater than 100V AC 24V DC - Control & I/O Cat. No. option C Opto isolated Low State: less than 5V DC High State: greater than 20V DC 11.2 mA DC
28	Digital In 2	Start	
29	Digital In 3	Auto/Man.	
30	Digital In 4	Speed Sel 1	
31	Digital In 5	Speed Sel 2	
32	Digital In 6/Hardware Enable, see pg. 46	Speed Sel 3	
33	Digital Out 4 – N.C.	Fault	Dedicated fault output - Not user configurable. Relay energizes (picks up) when power is applied to the drive and deenergizes (drops out) when a fault exists. See Terminals 11-16 for specs.
34	Digital Out 4 Common		
35	Digital Out 4 – N.O.	NOT Fault	
PS+	Aux. Control Power (+)		
PS-	Aux. Control Power (–)		
PE	PE Ground		PE Ground
PE	PE Ground		PE Ground

(1) **Important:** 0…20mA operation requires a jumper at terminals 17 & 18 (or 19 & 20). Drive damage can occur if jumper is not installed.

(2) Contacts in unpowered state. Any relay programmed as Fault or Alarm energizes (picks up) when power is applied to the drive and deenergizes (drops out) when a fault or alarm exists. Relays selected for other functions energize only when that condition exists and deenergize when condition is removed.

(3) These inputs/outputs are dependant on a number of parameters.

(4) Differential Isolation - External source must be maintained at less than 160V with respect to PE. Input provides high common mode immunity.

(5) 150mA maximum Load. Not present on 115V versions.

Hardware Enable Circuitry (Vector Control Only)

By default, the user can program a digital input as an Enable input. The status of this input is interpreted by drive software. If the application requires the drive to be disabled without software interpretation, a "dedicated" hardware enable configuration can be utilized. This is done by removing a jumper and wiring the enable input to "Digital In 6."

Encoder Interface Option (Vector Control Only)

Encoder Terminal Designations

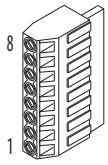

No.	Description (refer to specifications on page 11)	
8	+12V (1) DC Power	Internal power source 250 mA.
7	+12V (1) DC Return (Common)	
6	Encoder Z (NOT)	Pulse, marker or registration input. (2)
5	Encoder Z	
4	Encoder B (NOT)	Quadrature B input.
3	Encoder B	
2	Encoder A (NOT)	Single channel or quadrature A input.
1	Encoder A	

(1) Jumper selectable +5/12V is available on 20B-ENC-1 Encoder Boards.

(2) Z channel can be used as a pulse input while A & B are used for encoder.

Sample Encoder Wiring

I/O	Connection Example
Encoder Power –Internal Drive Power Internal (drive) 12V DC, 250mA (1)	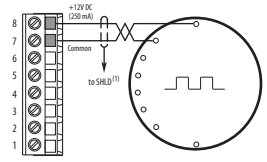
Encoder Signal –Single-Ended, Dual Channel (2)	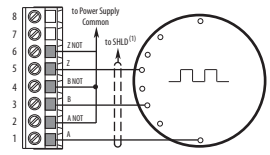

I/O	Connection Example
Encoder Power –External Power Source	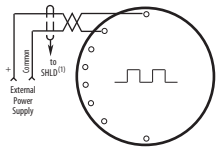
Encoder Signal –Differential, Dual Channel	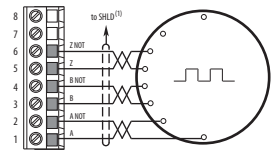

(1) SHLD connection is on drive chassis (see page 36).

(2) Example applies to 20B-ENC-1 only.

I/O Wiring Examples – Standard & Vector Control Options

Input/Output	Connection Example	Required Parameter Changes
Potentiometer Unipolar Speed Reference (1) 10k Ohm Pot. Recommended (2k Ohm Minimum)	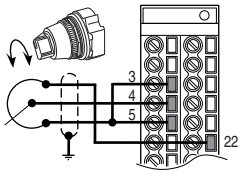	• Adjust Scaling: Parameters 91/92 and 325/326 • View Results: Parameter 002
Joystick Bipolar Speed Reference (1) ±10V Input	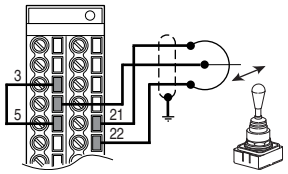	• Set Direction Mode: Parameter 190 = "1, Bipolar" • Adjust Scaling: Parameters 91/92 and 325/326 • View Results: Parameter 002
Analog Input Bipolar Speed Reference ±10V Input	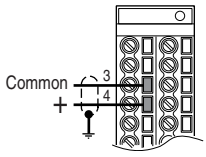	• Set Direction Mode: Parameter 190 = "1, Bipolar" • Adjust Scaling: Parameters 91/92 and 325/326 • View Results: Parameter 002
Analog Voltage Input Unipolar Speed Reference 0 to +10V Input	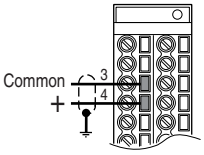	• Configure Input with parameter 320 • Adjust Scaling: Parameters 91/92 and 325/326 • View results: Parameter 002
Analog Current Input Unipolar Speed Reference **Standard** 4-20 mA Input	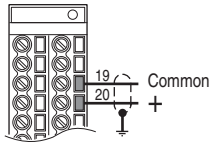	• Configure Input for Current: Parameter 320, Bit 1 = "1, Current" • Adjust Scaling: Parameters 91/92 and 325/326 • View Results: Parameter 002
Analog Current Input Unipolar Speed Reference **Vector** 0-20 mA Input	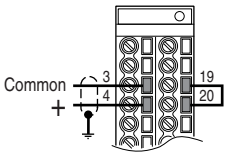	• Configure Input for Current: Parameter 320 and add jumper at appropriate terminals • Adjust Scaling: Parameters 91/92 and 325/326 • View results: Parameter 002
Analog Input, PTC **Vector** PTC OT set > 5V PTC OT cleared < 4V PTC Short < 0.2V	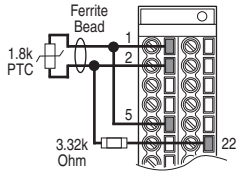	• Set Fault Config 1: Parameter 238, bit 7 = "Enabled" • Set Alarm Config 1: Parameter 259, bit 11 = "Enabled" • View Drive Alarm 1: Parameter 211, bit 11 = "True"
HW PTC Input Series B Only PTC OT set > 5V PTC OT cleared < 4V PTC Short < 0.2V	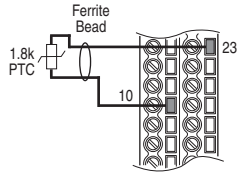	• Set Fault Config 1: Parameter 238, bit 13 = "Enabled" • Set Alarm Config 1: Parameter 259, bit 18 = "Enabled" • View Status: Drive Alarm 1: Parameter 211, bit 18 = "True"

(1) Refer to the PowerFlex 700 User Manual for important bipolar wiring information.

Input/Output	Connection Example	Required Parameter Changes
Analog Output ±10V, 0-20 mA Bipolar +10V Unipolar *(shown)* Standard Control 4-20 mA Unipolar *(use term. 8 & 9)*	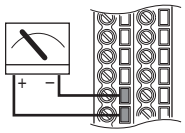	• Configure with Parameter 340 • Select Source Value: Parameter 384, [Digital Out1 Sel] • Adjust Scaling: Parameters 343/344
2-Wire Control Non-Reversing(1) 24V DC internal supply	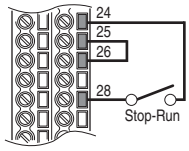	• Disable Digital Input:#1: Parameter 361 = "0, Unused" • Set Digital Input #2: Parameter 362 = "7, Run" • Set Direction Mode: Parameter 190 = "0, Unipolar"
2-Wire Control Reversing(1) External supply (I/O Board dependent)	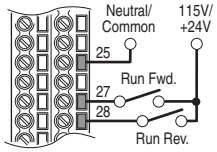	• Set Digital Input:#1: Parameter 361 = "8, Run Forward" • Set Digital Input #2: Parameter 362 = "9, Run Reverse"
3-Wire Control Internal supply	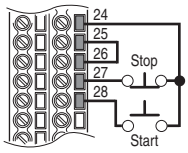	• No Changes Required
3-Wire Control External supply (I/O Board dependent). Requires 3-wire functions only ([Digital In1 Sel]). Using 2-wire selections will cause a type 2 alarm.	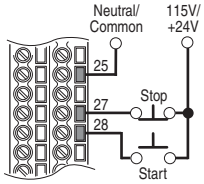	• No Changes Required •
Digital Input PLC Output Card (Board dependent).	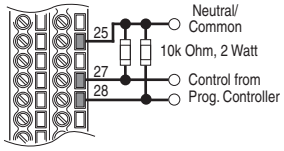	• No Changes Required •
Digital Output Relays shown in powered state with drive faulted. See page 44. Standard Control 1 relay at terminals 14-16. Vector Control 2 relays at terminals 14-16.	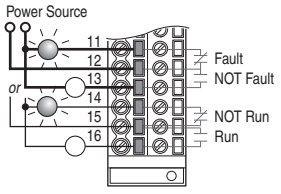	• Select Source to Activate: Parameters 380/384
Enable Input	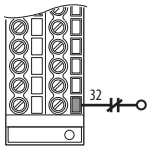	• Standard Control Configure with parameter 366 • Vector Control Configure with parameter 366 For dedicated hardware Enable: Remove Jumper J10 (see page 46)

(1) **Important:** Programming inputs for 2 wire control deactivates all HIM Start buttons.

Mounting

Frame/Rating Cross Reference

AC Input

	208/240		400V		480V		600V		690V	
Frame	**ND Hp**	**HD Hp**	**ND kW**	**HD kW**	**ND Hp**	**HD Hp**	**ND Hp**	**HD Hp**	**ND kW**	**HD kW**
0	0.5	0.33	0.37	0.25	0.5	0.33	1	0.5	–	–
	1	0.75	0.75	0.55	1	0.75	2	1	–	–
	–	–	1.5	0.75	2	1.5	3	2	–	–
	–	–	2.2	1.5	3	2	5	3	–	–
	–	–	4	2.2	5	3	7.5	5	–	–
	–	–	5.5	4	7.5	5	–	–	–	–
1	2	1.5	7.5	5.5	10	7.5	10	7.5	–	–
	3	2	11	7.5	15	10	15	10	–	–
	5	3	–	–	–	–	–	–	–	–
	7.5	5	–	–	–	–	–	–	–	–
2	10	7.5	15	11	20	15	20	15	–	–
	–	–	18.5	15	25	20	25	20	–	–
3	15	10	22	18.5	30	25	30	25	–	–
	20	15	30	22	40	30	40	30	–	–
	–	–	37	30	50	40	50	40	–	–
4	25	20	45	37	60	50	60	50	–	–
	30	25	–	–	–	–	–	–	–	–
5	40	30	55	45	75	60	75	60	45	37.5
	50	40	75	55	100	75	100	75	55	45
	–	–	–	–	–	–	–	–	75	55
	–	–	–	–	–	–	–	–	90	75
6	60	50	90	75	125	100	125	100	110	90
	75	60	110	90	150	125	150	125	132	110
	100	75	132	110	200	150	–	–	–	–
7	–	–	160	150	250	200	–	–	–	–
	–	–	180	180	250	250	–	–	–	–
8	–	–	200	180	300	250	–	–	–	–
	–	–	240	200	350	300	–	–	–	–
	–	–	280	240	400	350	–	–	–	–
	–	–	300	280	450	400	–	–	–	–
	–	–	350	300	500	450	–	–	–	–
9	–	–	400	350	600	500	–	–	–	–
10	–	–	500	400	700	600	–	–	–	–

DC Input

	325V		540V		650V		810V		932V	
Frame	**ND Hp**	**HD Hp**	**ND kW**	**HD kW**	**ND Hp**	**HD Hp**	**ND Hp**	**HD Hp**	**ND kW**	**HD kW**
0	0.5	0.33	–	–	0.5	0.33	1	0.75	–	–
	1	0.75	–	–	1	0.75	2	1.5	–	–
	–	–	–	–	2	1.5	3	2	–	–
	–	–	–	–	3	2	5	3	–	–
	–	–	–	–	5	3	7.5	5	–	–
	–	–	–	–	7.5	5	10	7.5	–	–
1	2	1.5	0.37	0.25	10	7.5	15	10	–	–
	3	2	0.75	0.55	15	10	–	–	–	–
	5	3	1.5	0.75	–	–	–	–	–	–
	7.5	5	2.2	1.5	–	–	–	–	–	–
	–	–	4	2.2	–	–	–	–	–	–
	–	–	5.5	4	–	–	–	–	–	–
	–	–	7.5	5.5	–	–	–	–	–	–
	–	–	11	7.5	–	–	–	–	–	–
2	10	7.5	15	11	20	15	20	15	–	–
	–	–	18.5	15	25	20	25	20	–	–
3	15	10	22	18.5	30	25	30	25	–	–
	20	15	30	22	40	30	40	30	–	–
	–	–	37	30	50	40	50	40	–	–
4	25	20	45	37	60	50	60	50	–	–
	30	25	–	–	–	–	–	–	–	–
5	40	30	55	45	75	60	100	75	45	37.5
	50	40	–	–	100	75	–	–	90	75
6	60	50	75	55	125	100	150	125	132	110
	75	60	90	75	150	125	–	–	–	–
	100	75	110	90	–	–	–	–	–	–
	–	–	132	110	200	150	–	–	–	–
7	–	–	160	150	250	200	–	–	–	–
	–	–	180	180	250	250	–	–	–	–
8	–	–	200	180	300	250	–	–	–	–
	–	–	240	200	350	300	–	–	–	–
	–	–	280	240	400	350	–	–	–	–
	–	–	300	280	450	400	–	–	–	–
	–	–	350	300	500	450	–	–	–	–
9	–	–	400	350	600	500	–	–	–	–
10	–	–	500	400	700	600	–	–	–	–

Operating Temperatures

PowerFlex 700 drives are designed to operate at 0°to 40° C ambient. To operate the drive in installations between 41° and 50° C, see the information below and refer to pages 25...32 for exceptions.

Acceptable Surrounding Air Temperature & Required Actions

Enclosure Rating	Temperature Range	Drive
IP20, NEMA / UL Type 1 (with Top Label) (1)	0…40 °C (0…104 °F)	Frames 0…4, All Ratings
	0…50 °C (0…122 °F)	Frames 5…6, Most Ratings (2)
IP20, NEMA / UL Type Open (Top Label Removed) (1)	0…50 °C (0…122 °F)	Frames 0…6, Most Ratings (2)
	0…45 °C (0…113 °F)	20BC072 Only
IP00, NEMA / UL Type Open (Top Label & Vent Plate Removed)	0…50 °C (0…122 °F)	20BC072 Only (3)
Flange Mount Front: IP00, NEMA / UL Type Open Back/Heat Sink: IP54, NEMA / UL Type 12	0…55 °C (0…131 °F) Front (Inside Encl.) 0…40 °C (0…104 °F) Back (External)	Frames 5…6
Stand-alone/Wall Mount IP54, NEMA / UL Type 12	0…40 °C (0…104 °F)	Frames 5…6
IP20, NEMA / UL Type 1	0…40 °C (0…104 °F)	Frames 7…10
IP00, NEMA / UL Type Open/Flange Mount Front: IP00, NEMA / UL Type Open Back/Heat Sink: IP54, NEMA12	0…65 °C (0…149 °F) Control Board 0…40 °C (0…104 °F) Heat Sink Entry Air	Frames 7…10
Roll In Front: IP00, NEMA / UL Type Open Back/Heat Sink: IP54, NEMA12	0…65 °C (0…149 °F) Control Board 0…40 °C (0…104 °F) Heat Sink Entry Air	Frames 8…9

(1) Removing the adhesive top label from the drive changes the NEMA / UL enclosure rating from Type 1 to Open. Frames 5 and 6 do not have a top label.

(2) Refer to pages 25…32 for exceptions.

(3) To remove vent plate (see page 53 for location), lift top edge of plate from the chassis. Rotate the plate out from the back plate.

Minimum Mounting Clearances

Frames 0…6

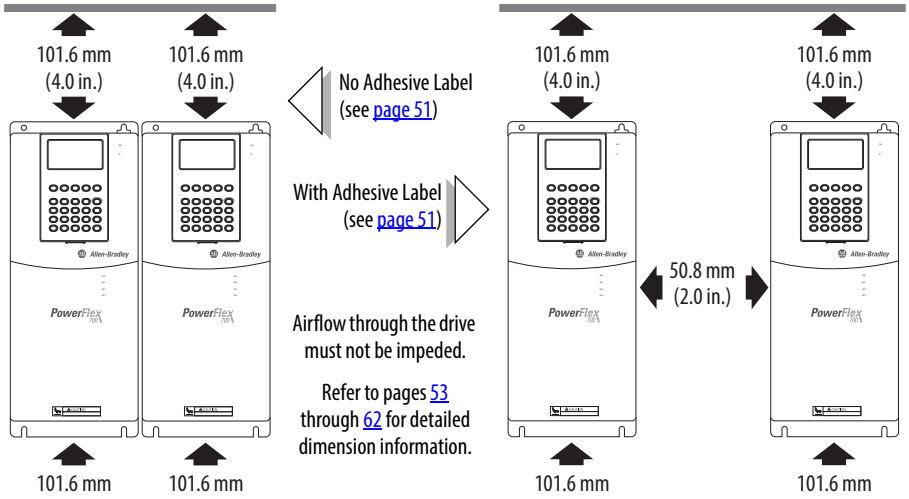

Specified vertical clearance requirements (indicated above) are intended to be from the drive to the closest object that can restrict airflow through the drive heat sink and chassis. The drive must be mounted in a vertical orientation as shown and must make full contact with the mounting surface. Do not use standoffs or spacers. In addition, inlet air temperature must not exceed the product specification.

Frames 7…10

The drive must be mounted with sufficient space at the top, sides, and front of the cabinet to allow for proper heat dissipation.

Frame	Recommendations
7	Minimum of 152 mm (6.0 in.) at the top and bottom of the enclosure and 102 mm (4.0 in.) on the sides. Flange Mount - Minimum of 152 mm (6.0 in.) at the back of the enclosure (flange mount surface to wall).
8…10	Minimum of 152 mm (6.0 in.) at the top of the enclosure. Additionally, allow a minimum of 102 mm (4.0 in.) on each side OR 152 mm (6.0 in.) in the back. Flange Mount - Minimum of 102 mm (4.0 in.) on each side.

Dimensions and Weights

Frames 0…3 – IP20, NEMA / UL Type 1

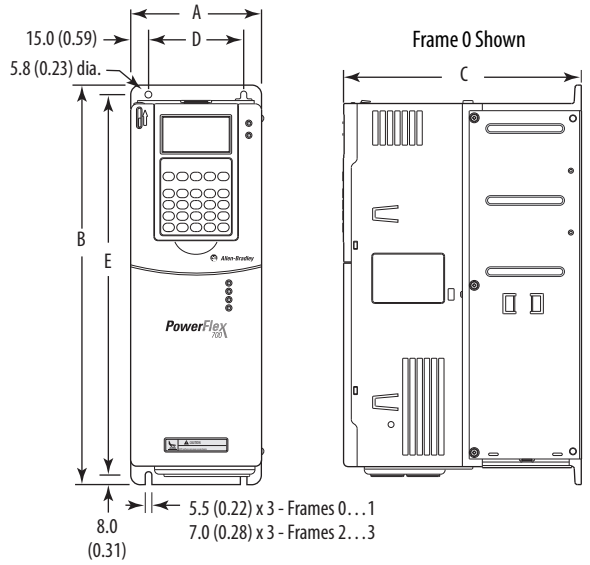

Frame	A	B	C	D	E	Weight (1) kg (lbs.)	
						Drive	Drive & Packaging
0	110.0 (4.33)	336.0 (13.23)	200.0 (7.87)	80.0 (3.15)	320.0 (12.60)	5.22 (11.5)	8.16 (18)
1	135.0 (5.31)	336.0 (13.23)	200.0 (7.87)	105.0 (4.13)	320.0 (12.60)	7.03 (15.5)	9.98 (22)
2	222.0 (8.74)	342.5 (13.48)	200.0 (7.87)	192.0 (7.56)	320.0 (12.60)	12.52 (27.6)	15.20 (33.5)
3	222.0 (8.74)	517.5 (20.37)	200.0 (7.87)	192.0 (7.56)	495.0 (19.49)	18.55 (40.9)	22.68 (50)

(1) Weights include HIM and Standard I/O.

Dimensions are in millimeters and (inches)

.

Frame 0

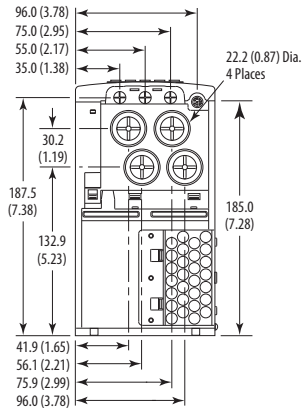

Frame 1

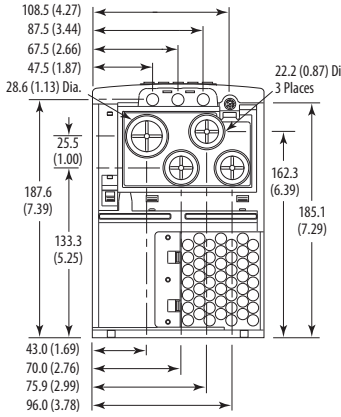

Frame 2

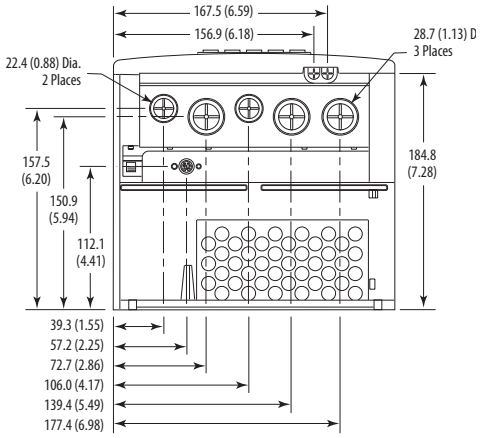

Frame 3
All *except* 50 Hp, 480V (37 kW, 400V)

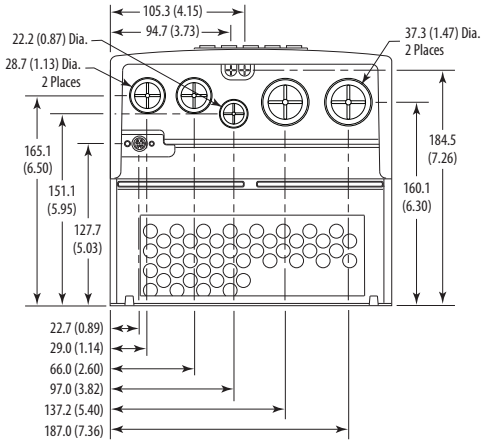

Frame 3
50 Hp, 480V (37 kW, 400V) Normal Duty Drive

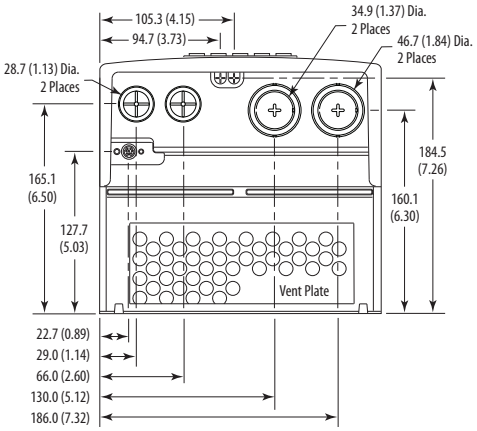

Frame 4 – IP20, NEMA / UL Type 1

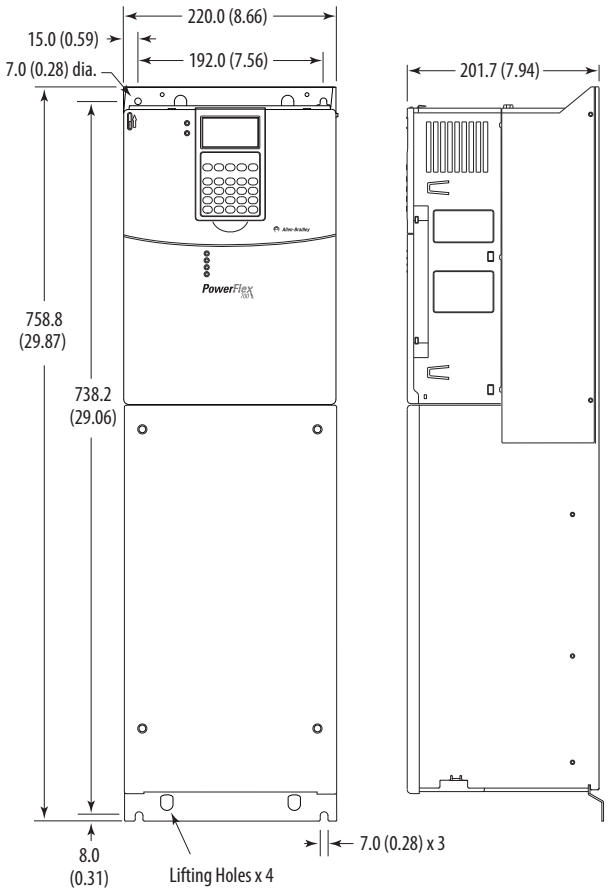

Dimensions are in millimeters and (inches)

Frame	Approx. Weight (1) kg (lbs.)	
	Drive	Drive & Packaging
4	24.49 (54.0)	29.03 (64.0)

(1) Weights include HIM and Standard I/O.

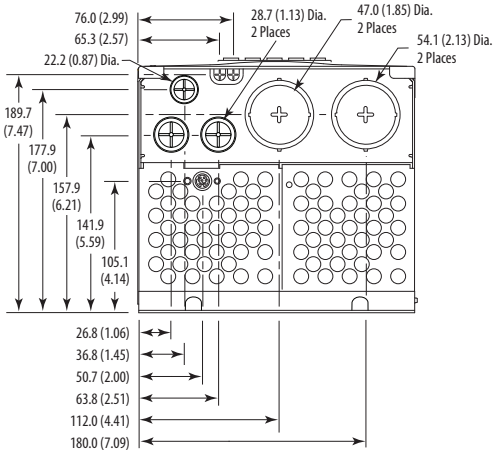

Frame 5 – IP20, NEMA / UL Type 1

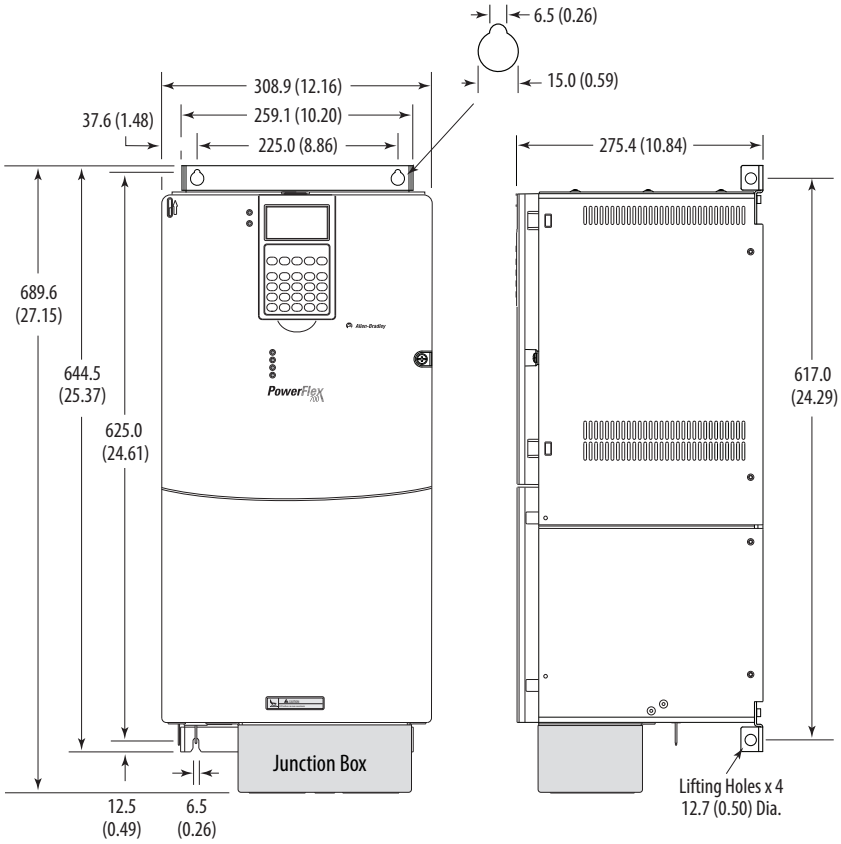

Dimensions are in millimeters and (inches)

Frame	Approx. Weight (1) kg (lbs.)	
	Drive	Drive & Packaging
5	37.19 (82.0)	49.50 (109.0)

(1) Weights include HIM and Standard I/O. Add 2.70 kg (6.0 lbs.) for the 20BC140 drive.

30 kW, 208V (40 Hp, 240V)
55 kW, 400V (75 Hp, 480V)
45/55/75 kW, 690V (75 Hp, 600V)

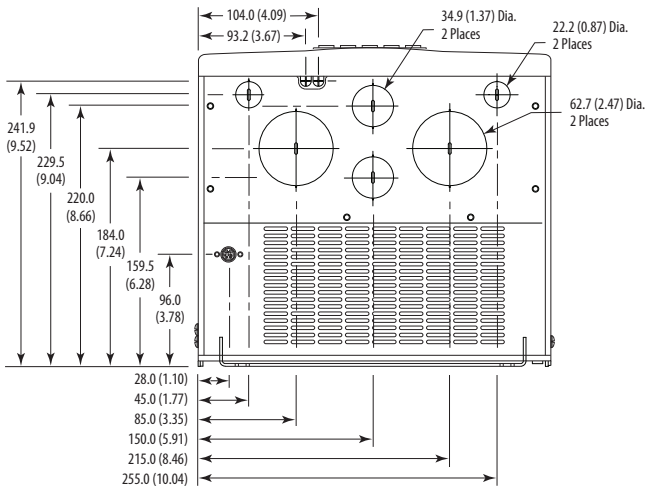

37 kW, 208V (50 Hp, 240V)
75 kW, 400V (100 Hp, 480V)
90kW, 690V (100 Hp, 600V)

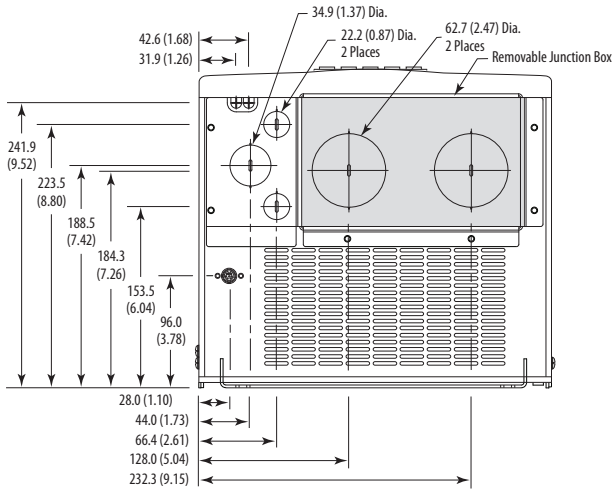

Frame 5 – IP54, NEMA Type 12 Standalone (400…690V drives only)

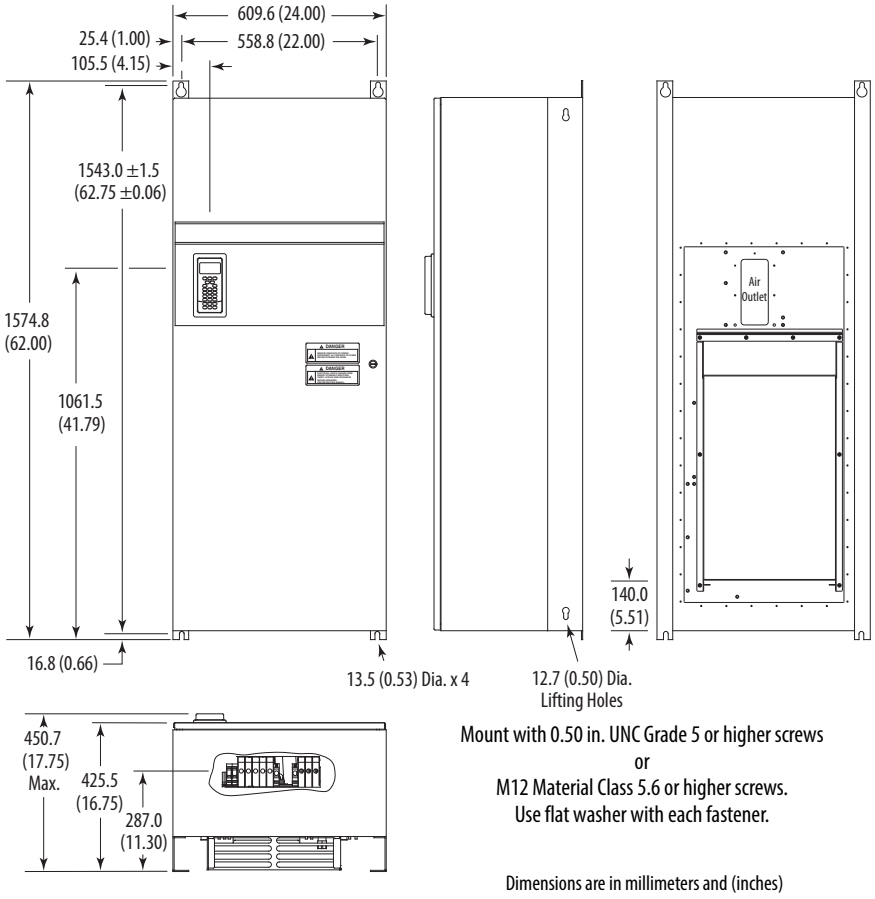

Frame	Description	Approx. Weight (1) kg (lbs.)	
		Drive	Drive & Packaging
5	Standalone	102.51 (226.0)	154.68 (341.0)

(1) Weights include HIM and Standard I/O.

Frame 5 – IP54, NEMA Type 12 Flange Mount (400…690V drives only)

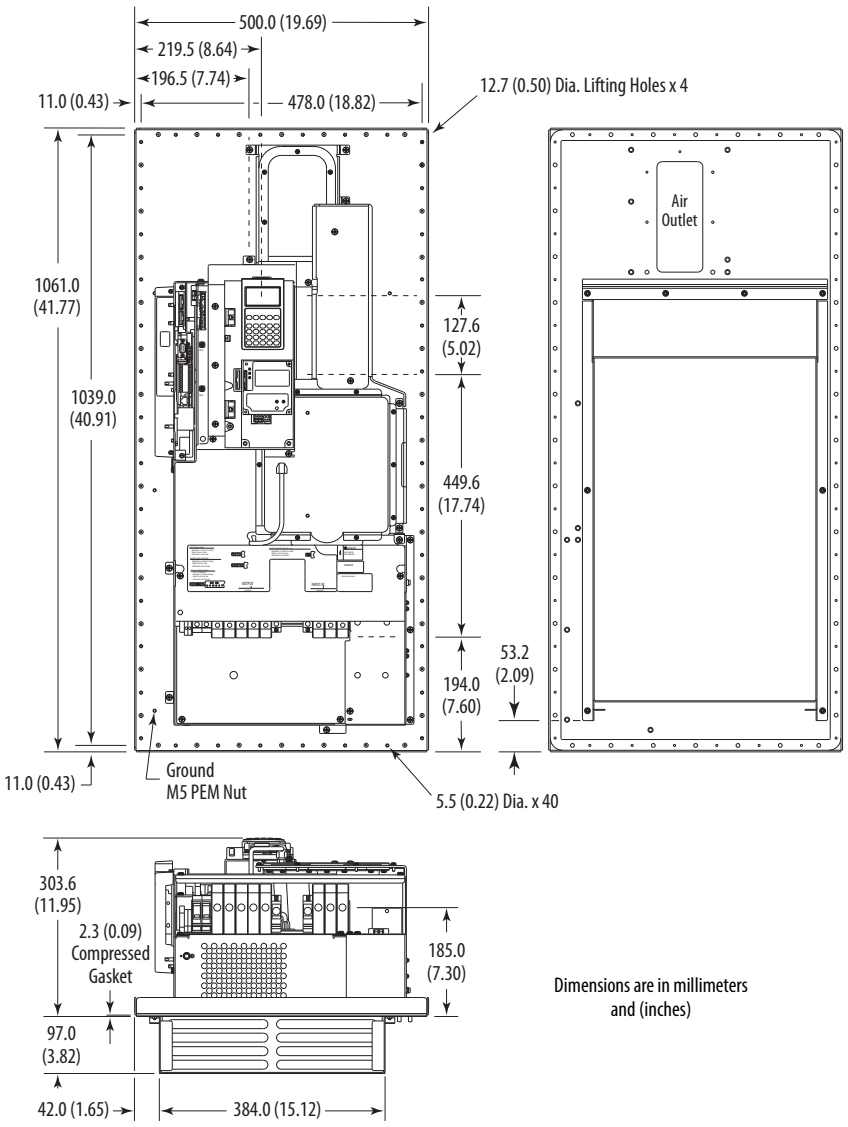

Frame	Description	Approx. Weight (1) kg (lbs.)	
		Drive	Drive & Packaging
5	Flange Mount	61.69 (136.0)	81.65 (180.0)

(1) Weights include HIM and Standard I/O.

Frame 5 – Flange Mount Cutout

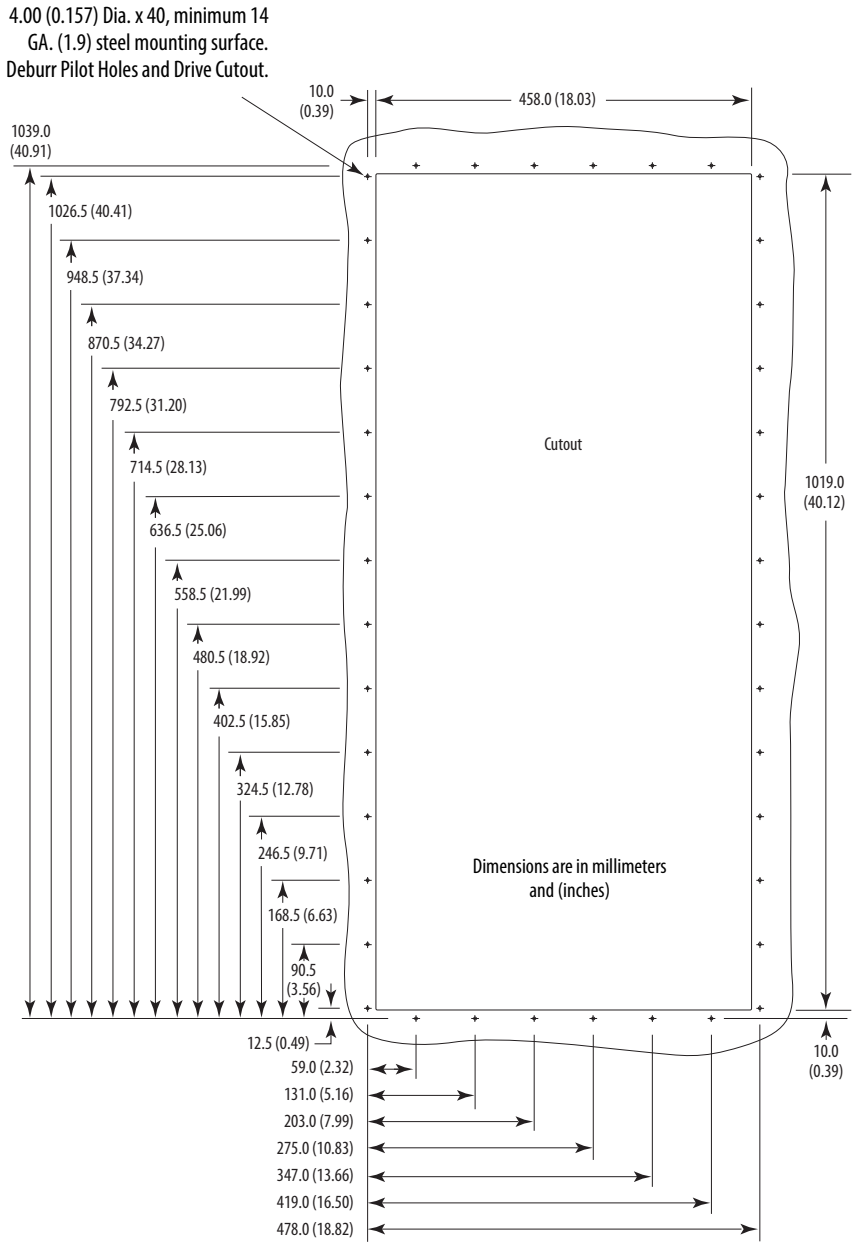

Frame 6 – IP20, NEMA / UL Type 1

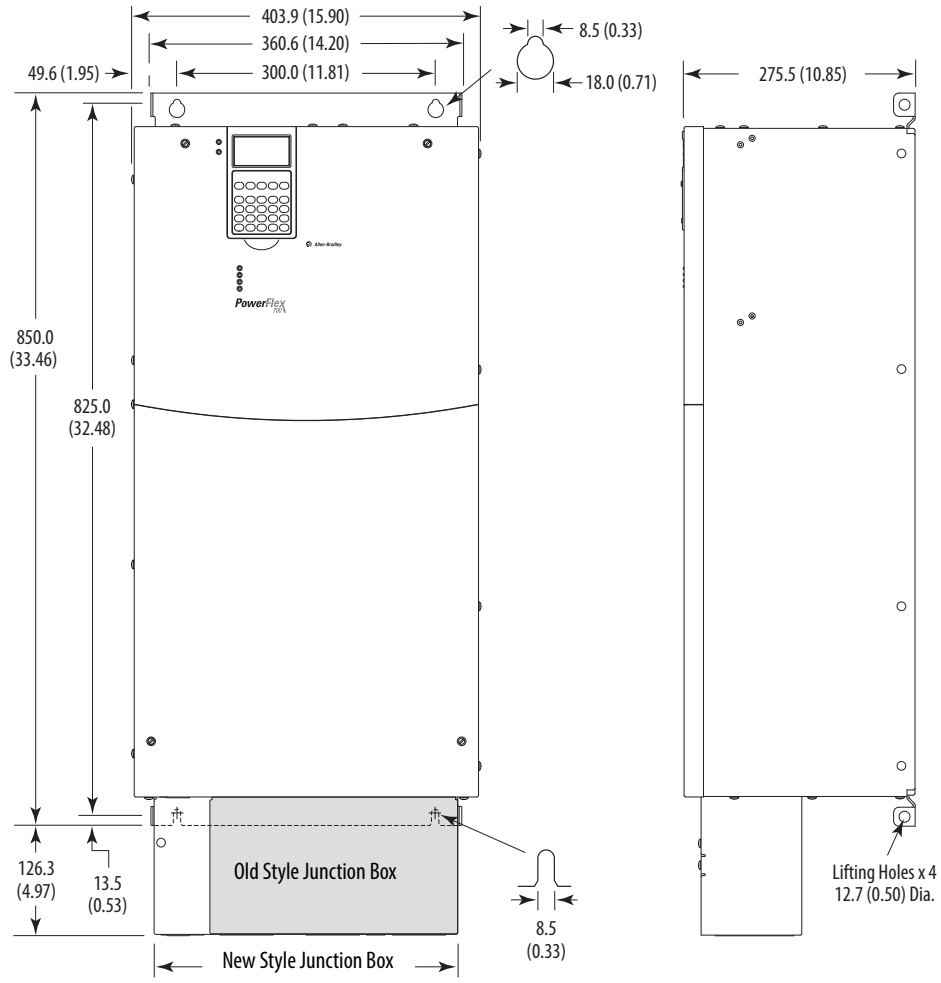

Junction Box can be removed if drive is mounted in a cabinet

Dimensions are in millimeters and (inches)

Frame	Approx. Weight (1) kg (lbs.)	
	Drive	Drive & Packaging
6	71.44 (157.5)	100.9 (222.0)

(1) Weights include HIM and Standard I/O. Add 13.60 kg (30.0 lbs.) for; 20BB260, 20BC260 and 20BD248.

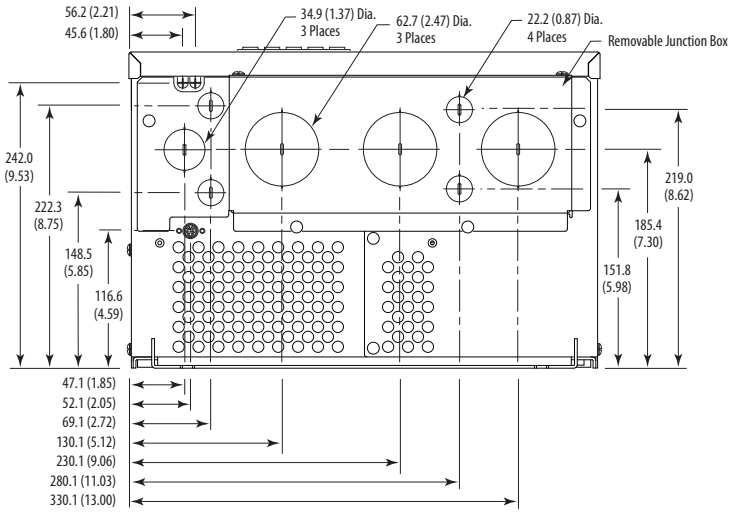

Frame 6 – IP54, NEMA Type 12 Standalone (400…690V drives only)

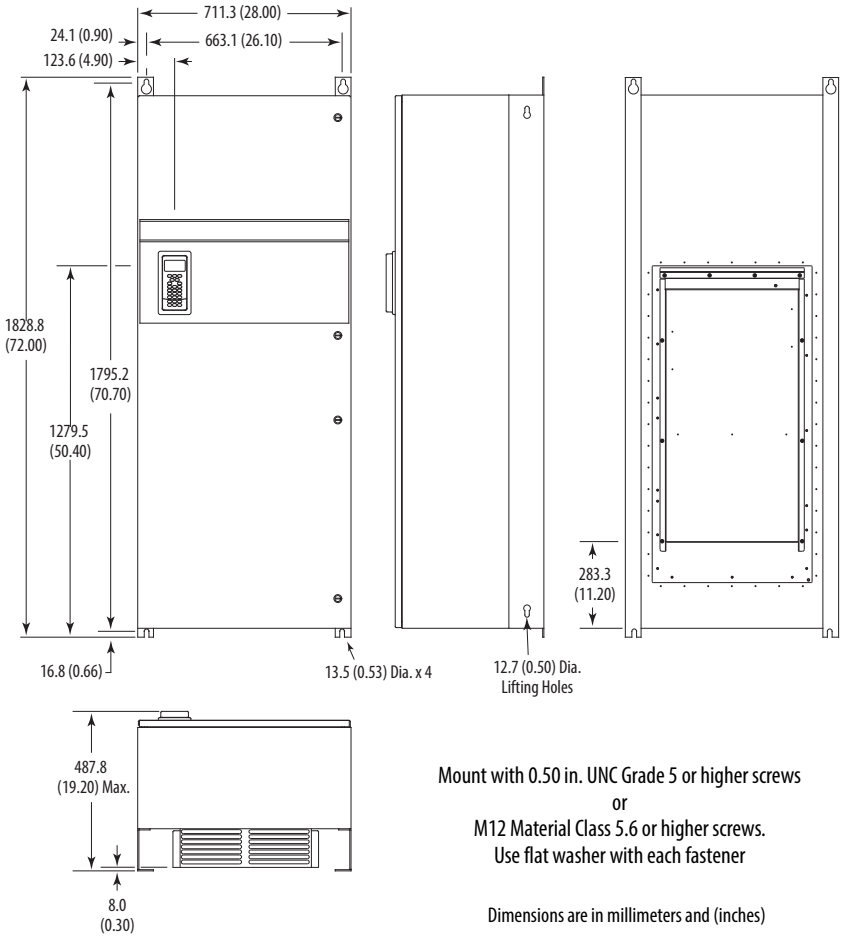

Frame	Description	Approx. Weight [1] kg (lbs.)	
		Drive	Drive & Packaging
6	Standalone	176.90 (390.0)	229.07 (505.0)

(1) Weights include HIM and Standard I/O.

Frame 6 – IP54, NEMA Type 12 Flange Mount (400…690V drives only)

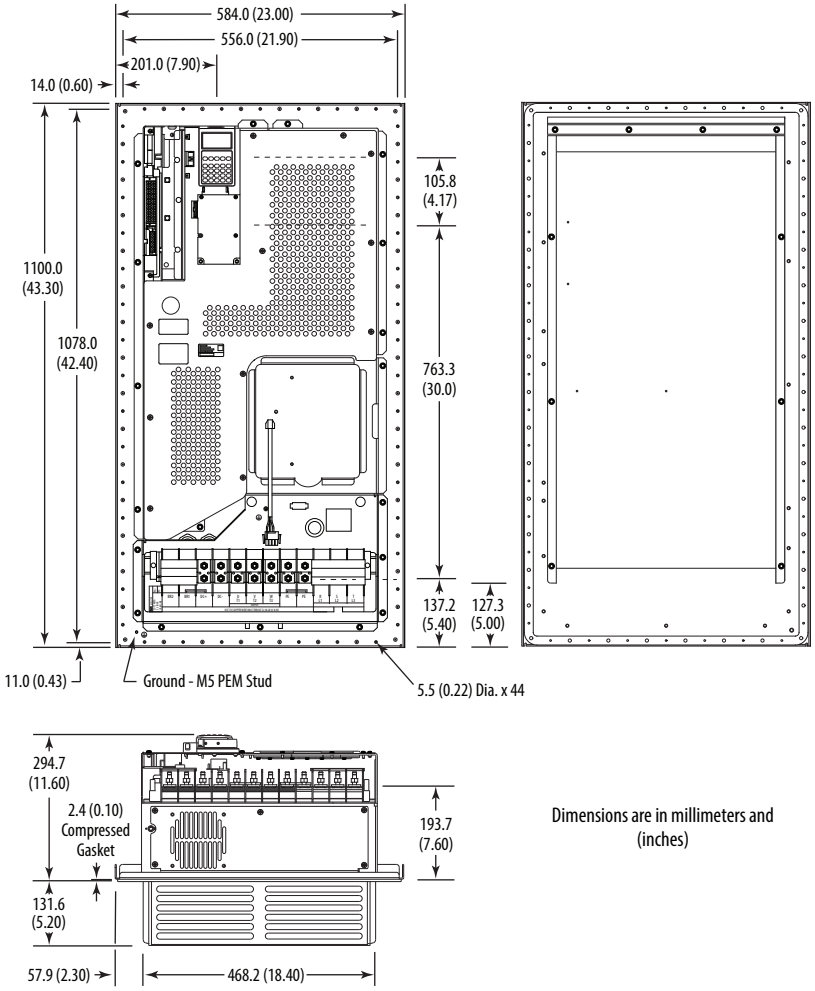

Dimensions are in millimeters and (inches)

Frame	Description	Approx. Weight (1) kg (lbs.)	
		Drive	Drive & Packaging
6	Flange Mount	99.79 (220.0)	119.75 (264.0)

(1) Weights include HIM and Standard I/O.

Frame 6 – Flange Mount Cutout

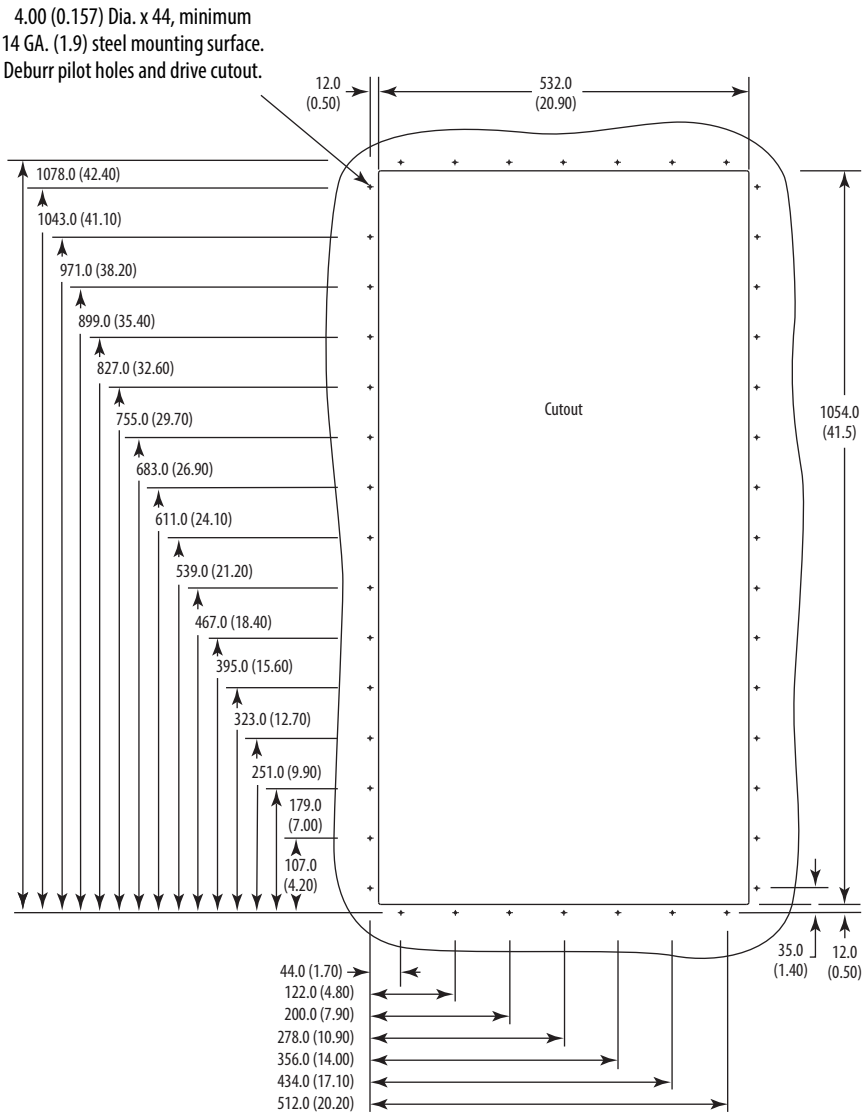

Dimensions are in millimeters and (inches)

Frame 7 – IP20, NEMA / UL Type 1

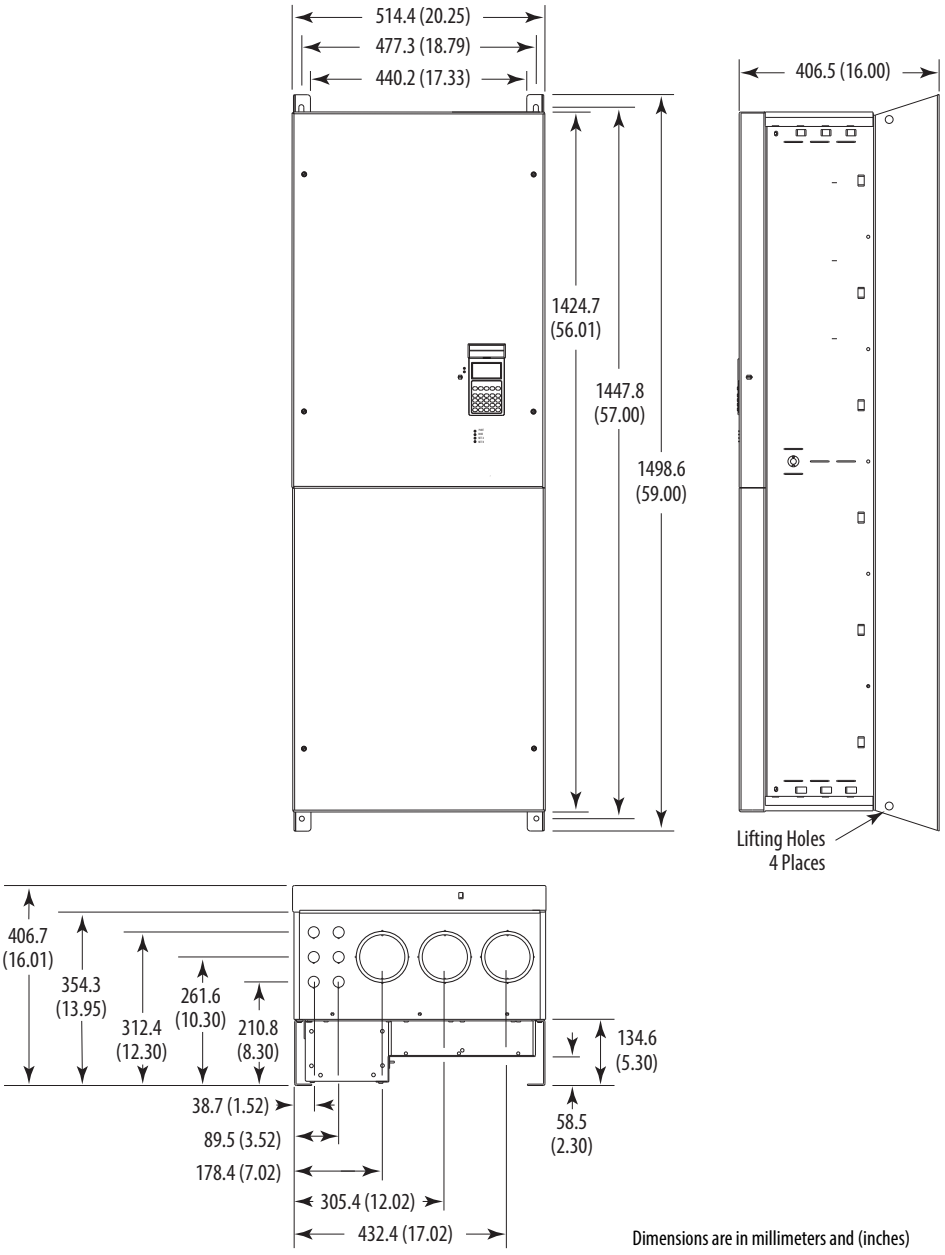

Dimensions are in millimeters and (inches)

Approx. Weight kg (lbs.)	
Drive	**Drive & Packaging**
170 (375)	196 (433)

Frame 7 – IP00, NEMA / UL Type Open

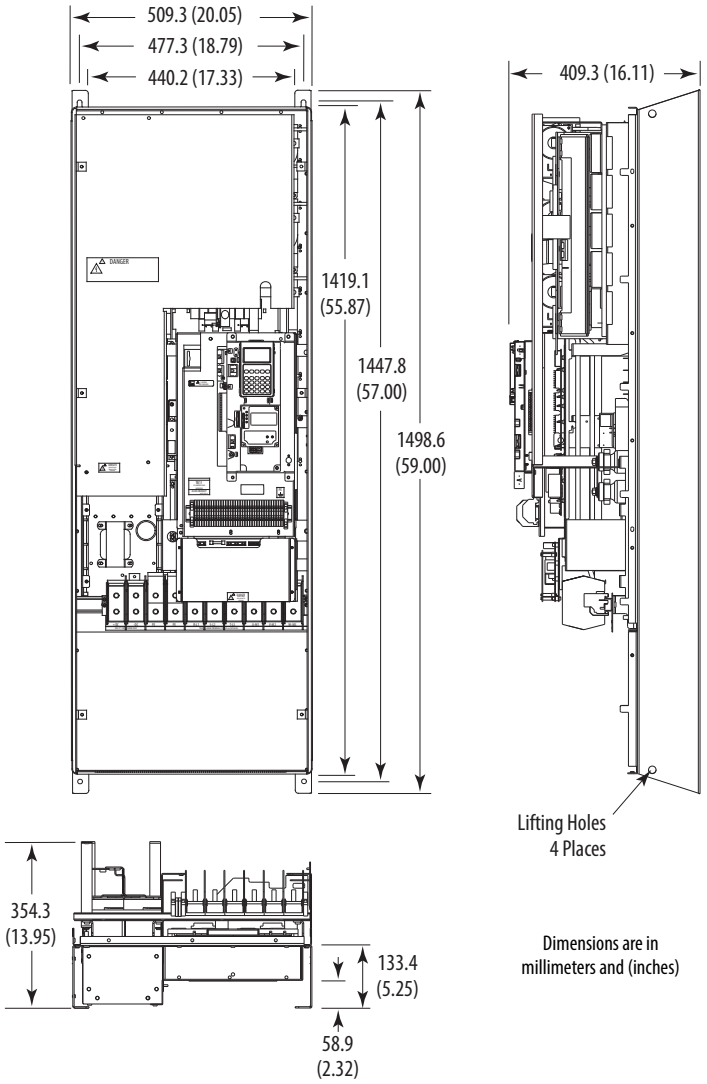

Approx. Weight kg (lbs.)	
Drive	**Drive & Packaging**
147 (324)	173 (382)

Frame 7 – Flange Mount Cutout

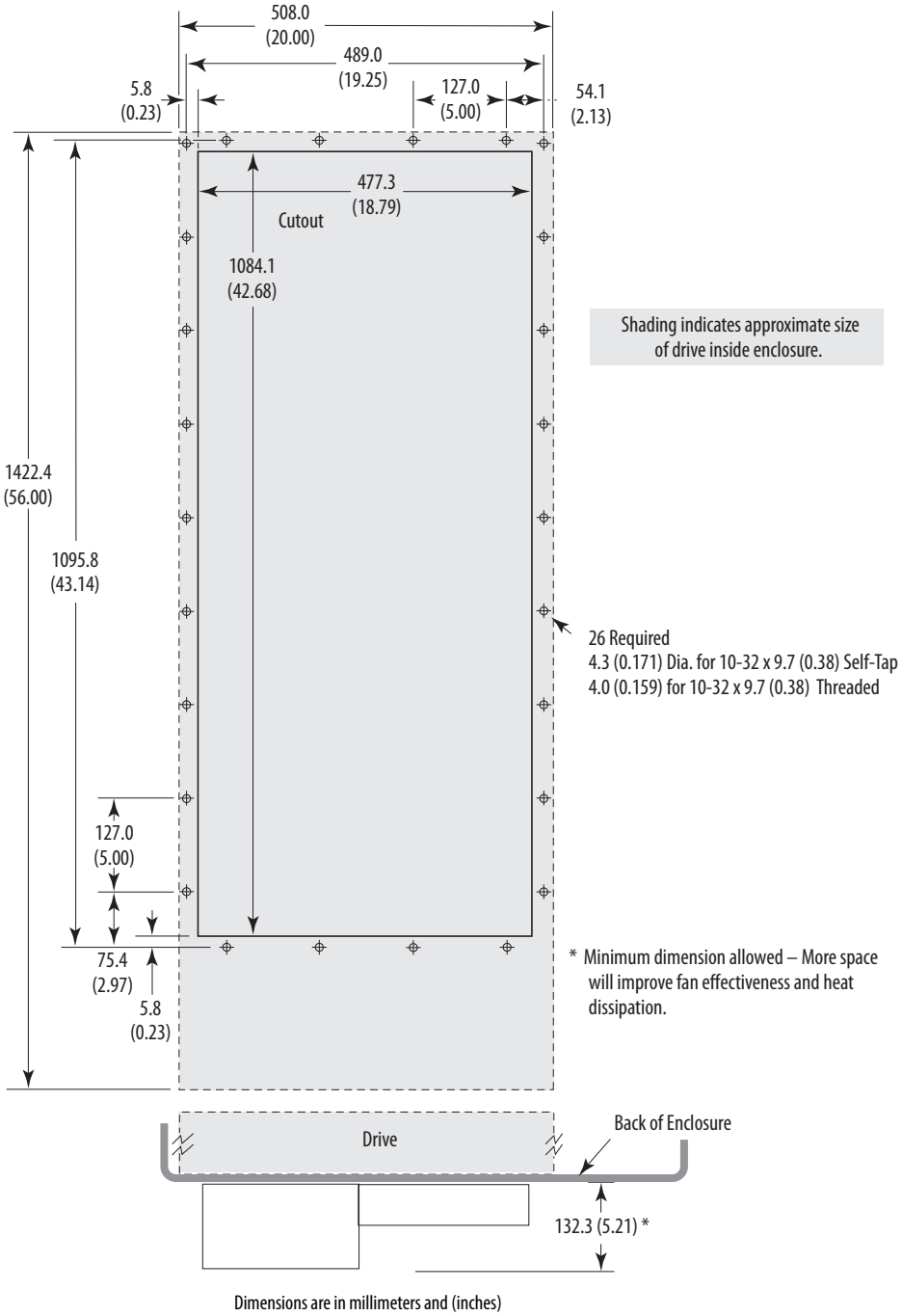

IMPORTANT Use gasket kit catalog number SK-G1-GASKET1-F7 with user supplied IP54, NEMA / UL Type 12 enclosure.

Frames 8…9 – IP20, NEMA / UL Type 1

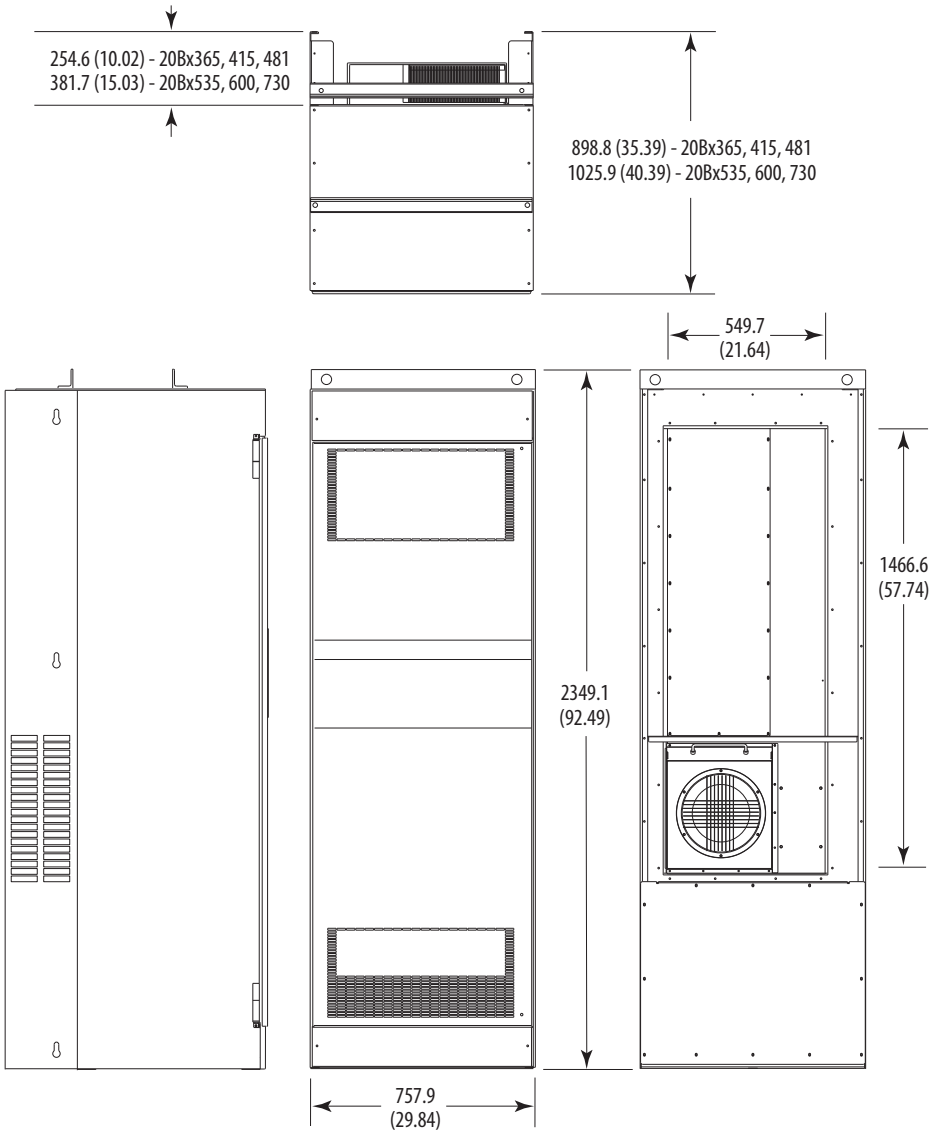

Dimensions are in millimeters and (inches)

Approx. Weight kg (lbs.)		
Frame	**Drive**	**Drive & Packaging**
8	509 (1122)	556 (1225)
9	526 (1159)	603 (1262)

Frames 8…9 – IP00, NEMA / UL Type Open

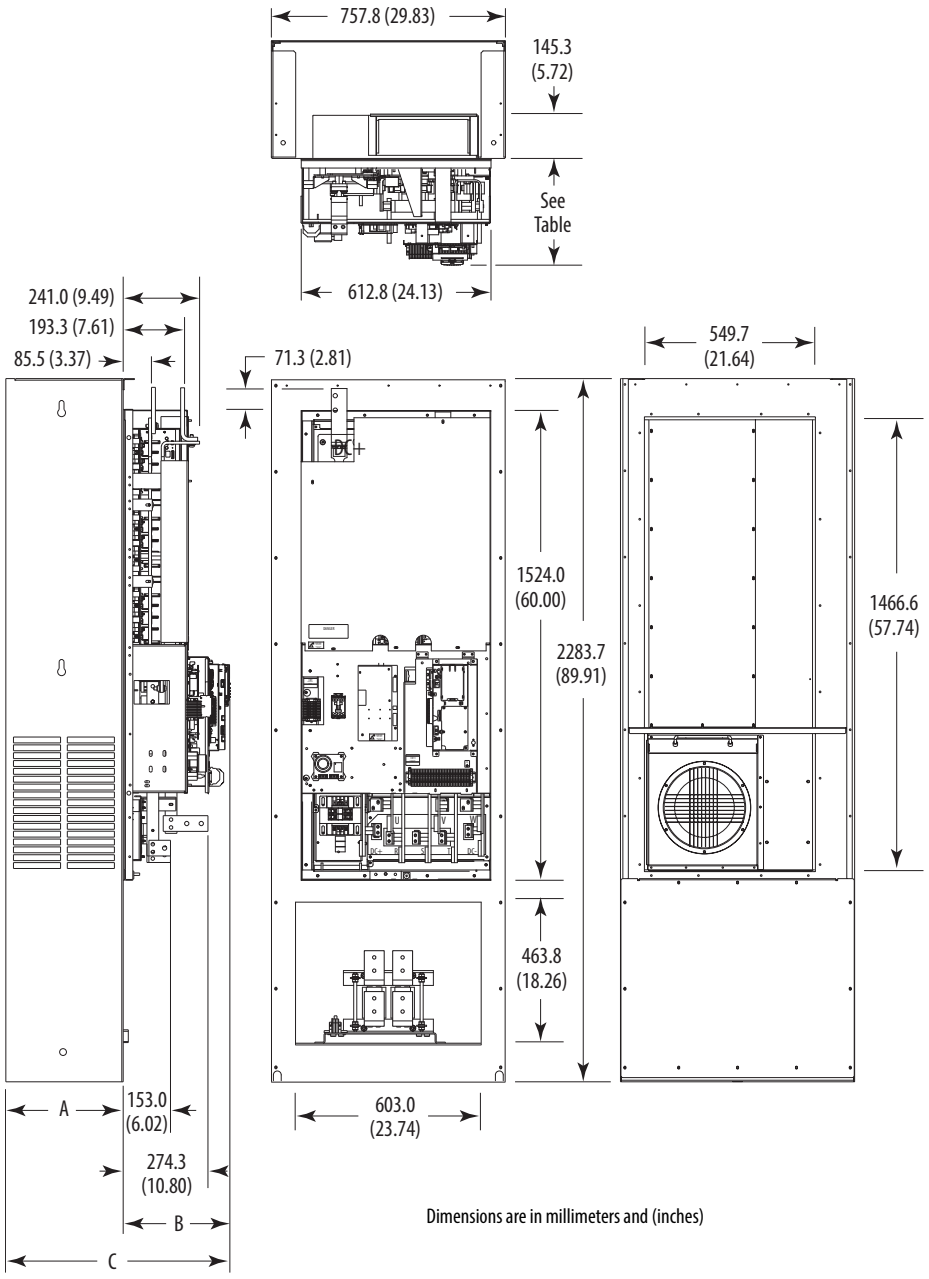

Dimensions are in millimeters and (inches)

Frame	Cat. No.	A	B	C	Approx. Weight kg (lbs.)	
					Drive	Drive & Packaging
8	20Bx365, 415, 481	254.6 (10.02)	345.3 (13.59)	599.4 (23.60)	384 (847)	431 (950)
	20Bx535, 600	381.7 (15.03)	345.5 (13.60)	726.6 (28.61)	384 (847)	431 (950)
9	20Bx730	381.1 (15.00)	345.3 (13.60)	771.9 (30.39)	401 (884)	448 (987)

Frames 8…9 – Converting an IP00 Drive for Flange Mounting

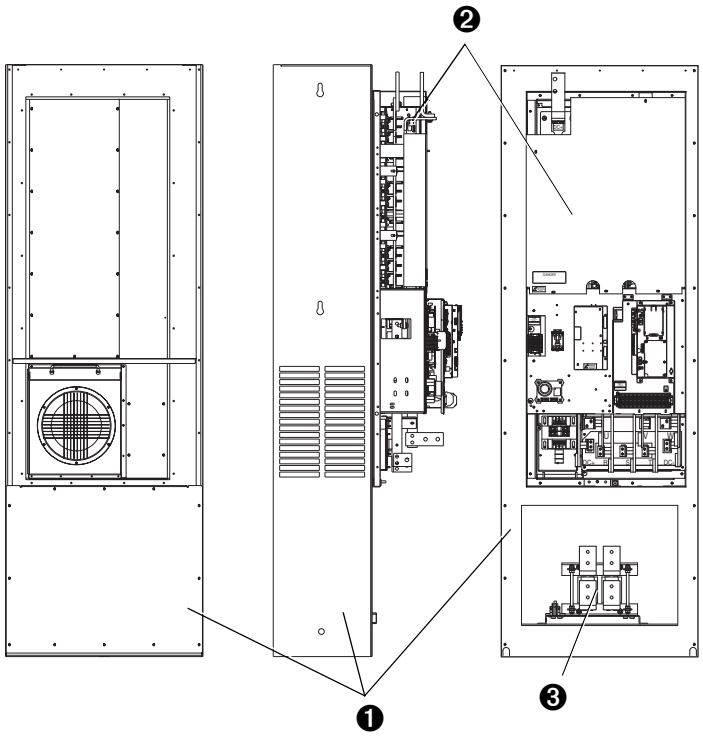

No.	Component
❶	Remove these IP00 enclosure components.
❷	Drive assembly to be flange mounted.
❸	DC link choke - mounts separately in enclosure (see page 72 for dimensions) and is wired directly to drive.

Frames 8…9 Roll-In – IP00, NEMA / UL Type Open

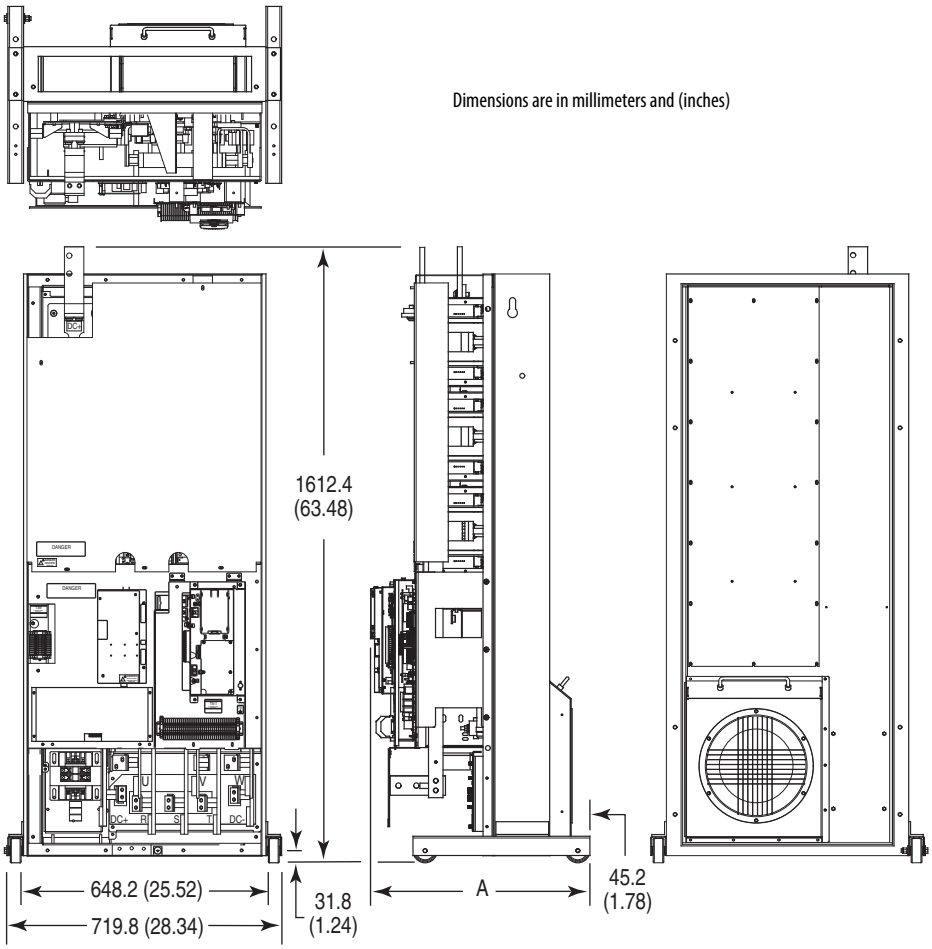

Frame	Cat. No.	A	Approx. Weight kg (lbs.)	
			Drive	Drive & Packaging
8	20Bx365, 415, 481	574.8 (22.63)	250 (552)	297 (655)
8	20Bx535, 600	574.8 (22.63)	250 (552)	297 (655)
9	20Bx730	594.3 (23.40)	267 (589)	314 (692)

Frames 8…9 Roll-In Mounting Considerations

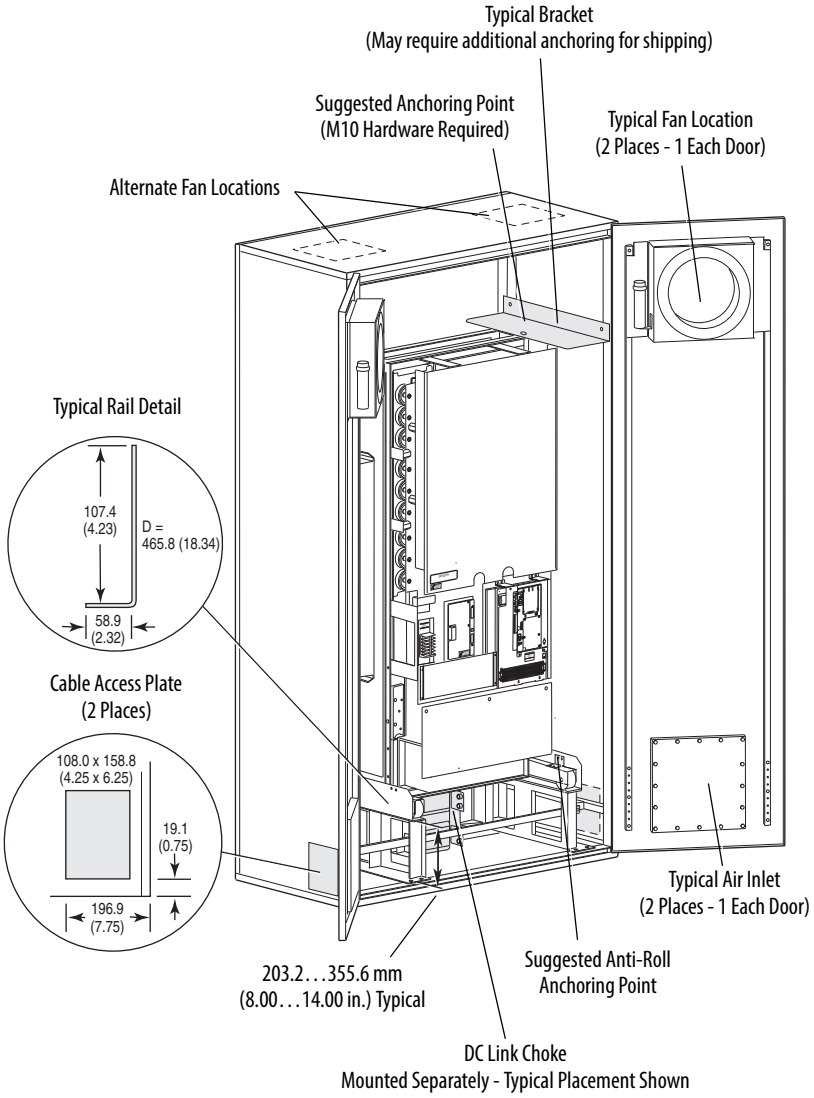

IMPORTANT This information illustrates how an open roll-in style drive could be mounted in a user supplied enclosure. Illustrations are intended only to identify structural mounting points and hardware shapes. You must design and fabricate steel components based on the actual mounting configuration, calculated loads and enclosure specifications. Minimum thickness of all parts = 4.6 mm (0.18 in.).

Frames 8…9 Flange Mount Cutout

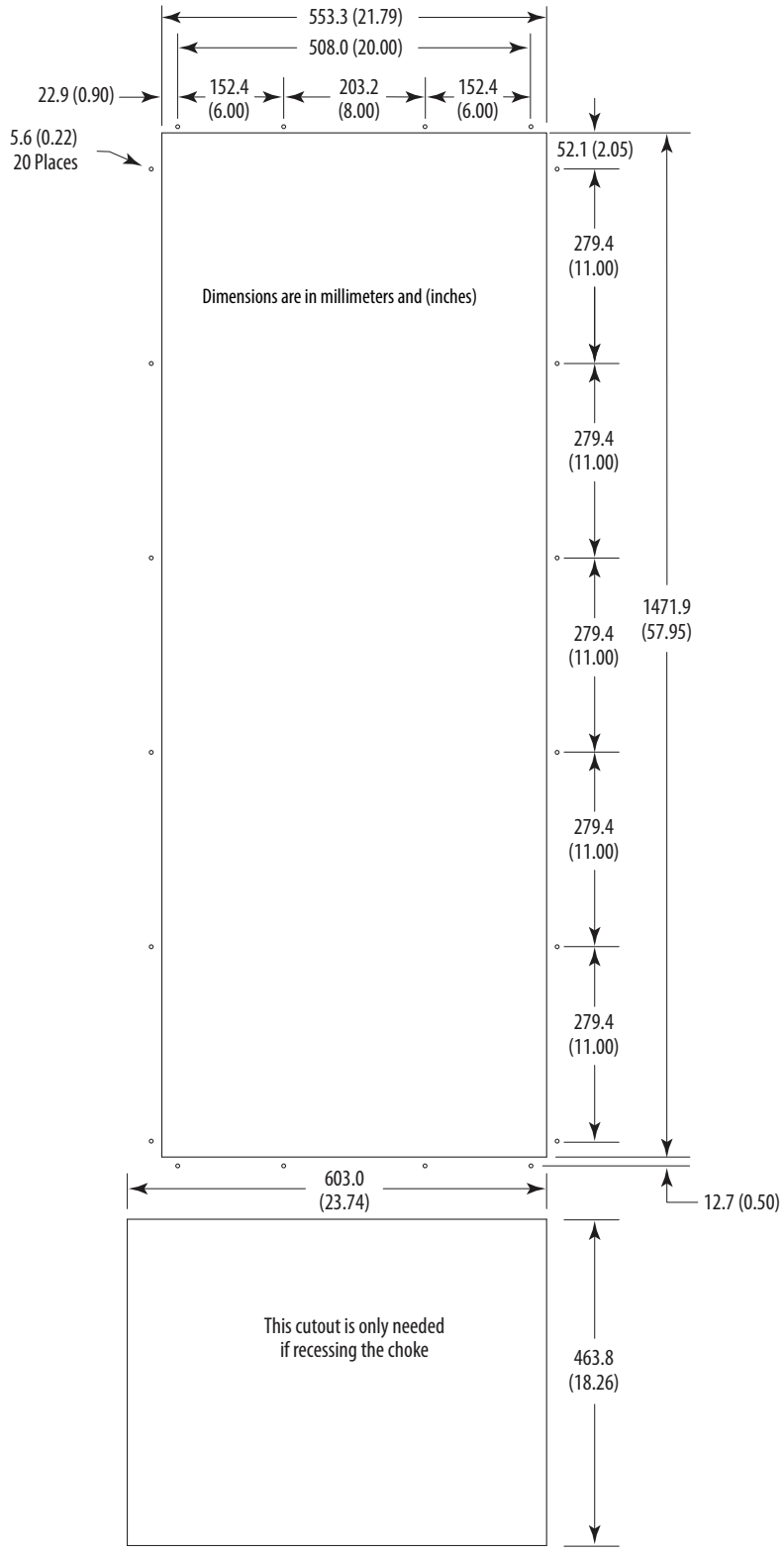

IMPORTANT Use gasket kit catalog number SK-G1-GASKET1-F89 with user supplied IP54, NEMA / UL Type 12 enclosure.

DC Link Chokes

Frame 8

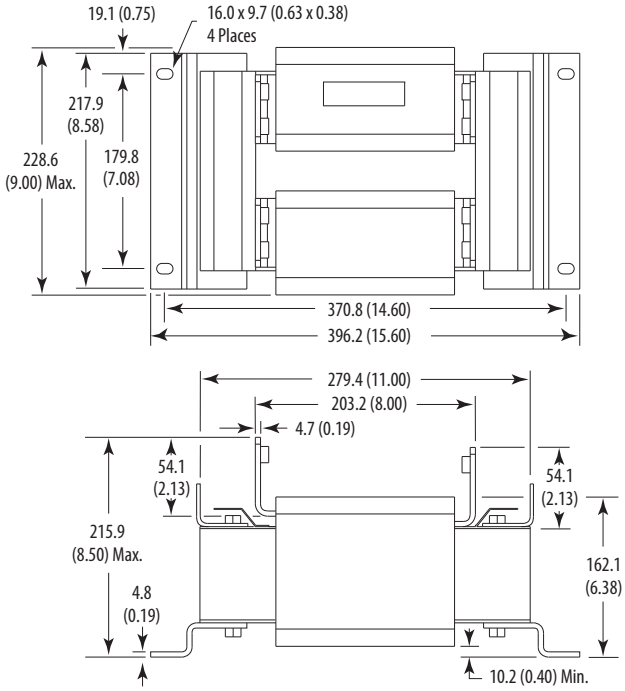

Frame 9

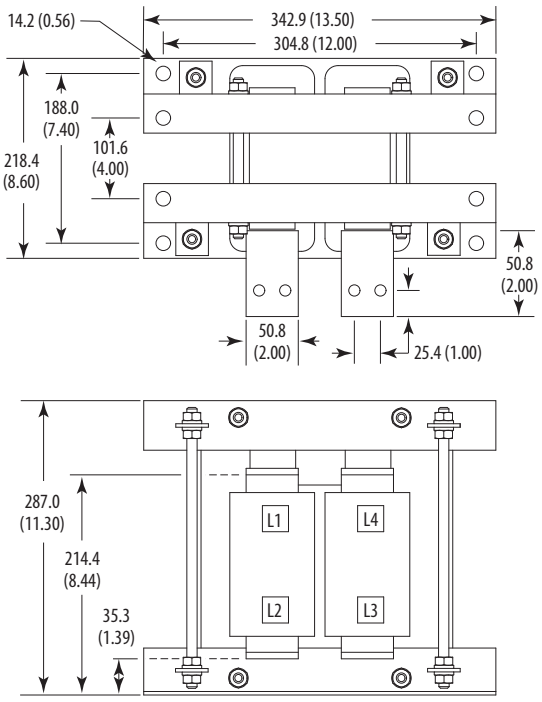

Frame 10

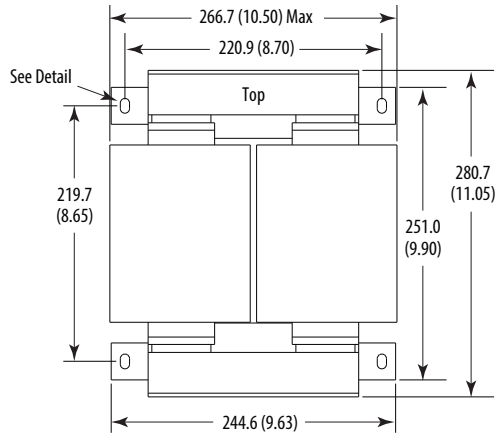

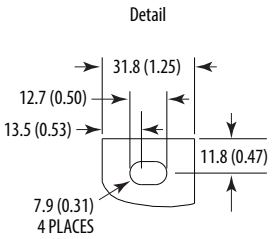

Dimensions are in millimeters and (inches)

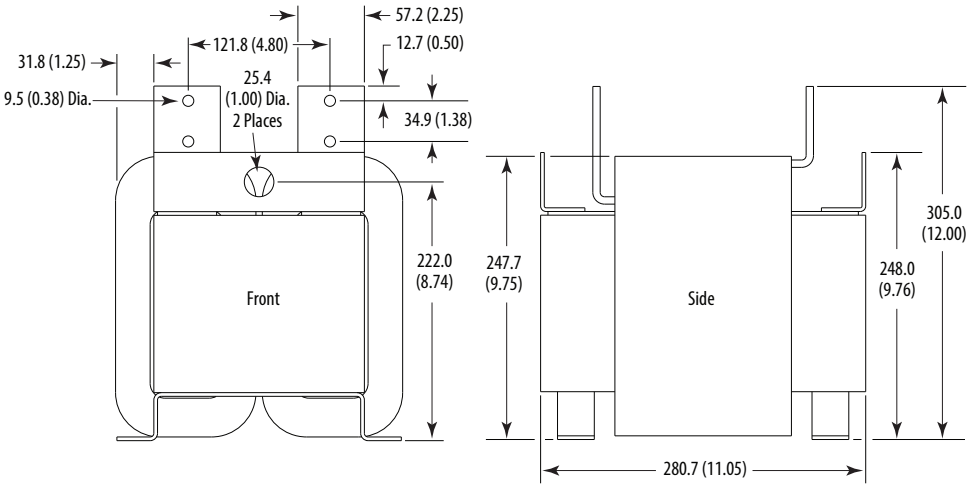

Frame 10 – IP20, NEMA / UL Type 1
AC Input Shown, for DC Input Dimensions use the Inverter (Left) Bay

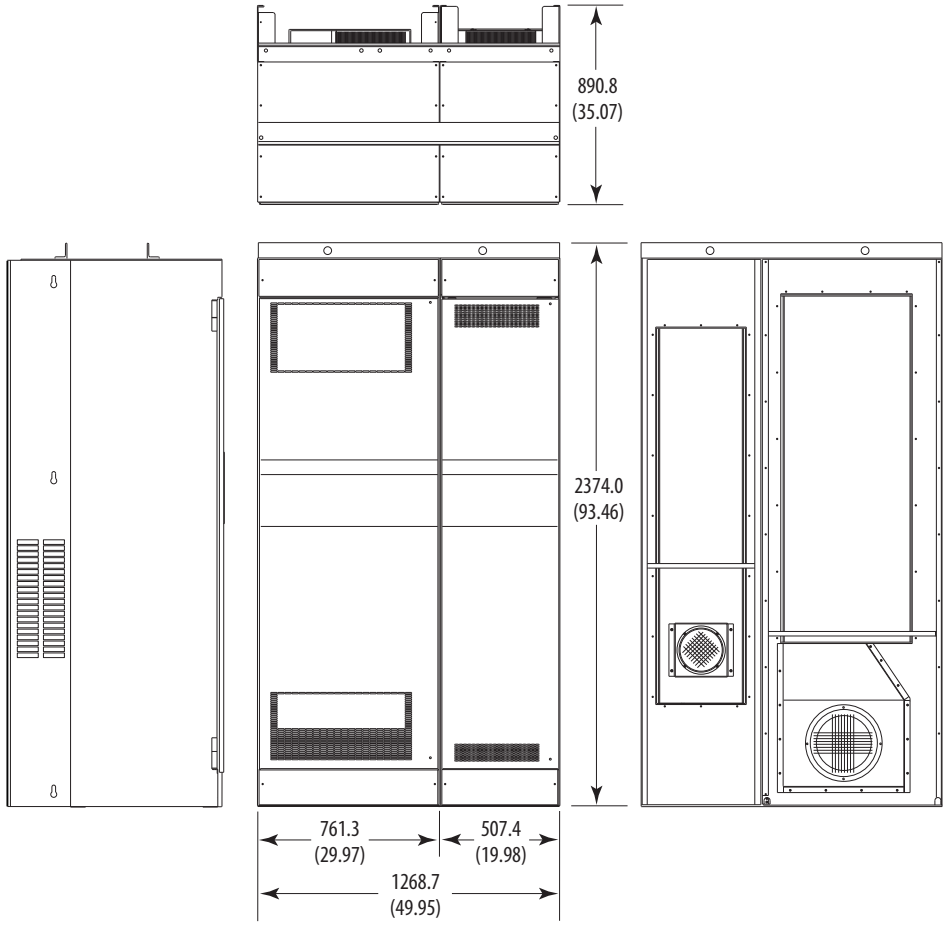

Dimensions are in millimeters and (inches)

Approx. Weight kg (lbs.)		
Type	**Drive**	**Drive & Packaging**
DC Input	468 (1032)	515 (1135)
AC Input	867 (1912)	958 (2112)

Frame 10 – IP00, NEMA / UL Type Open

AC Input Shown, for DC Input Dimensions use the Inverter (Left) Bay

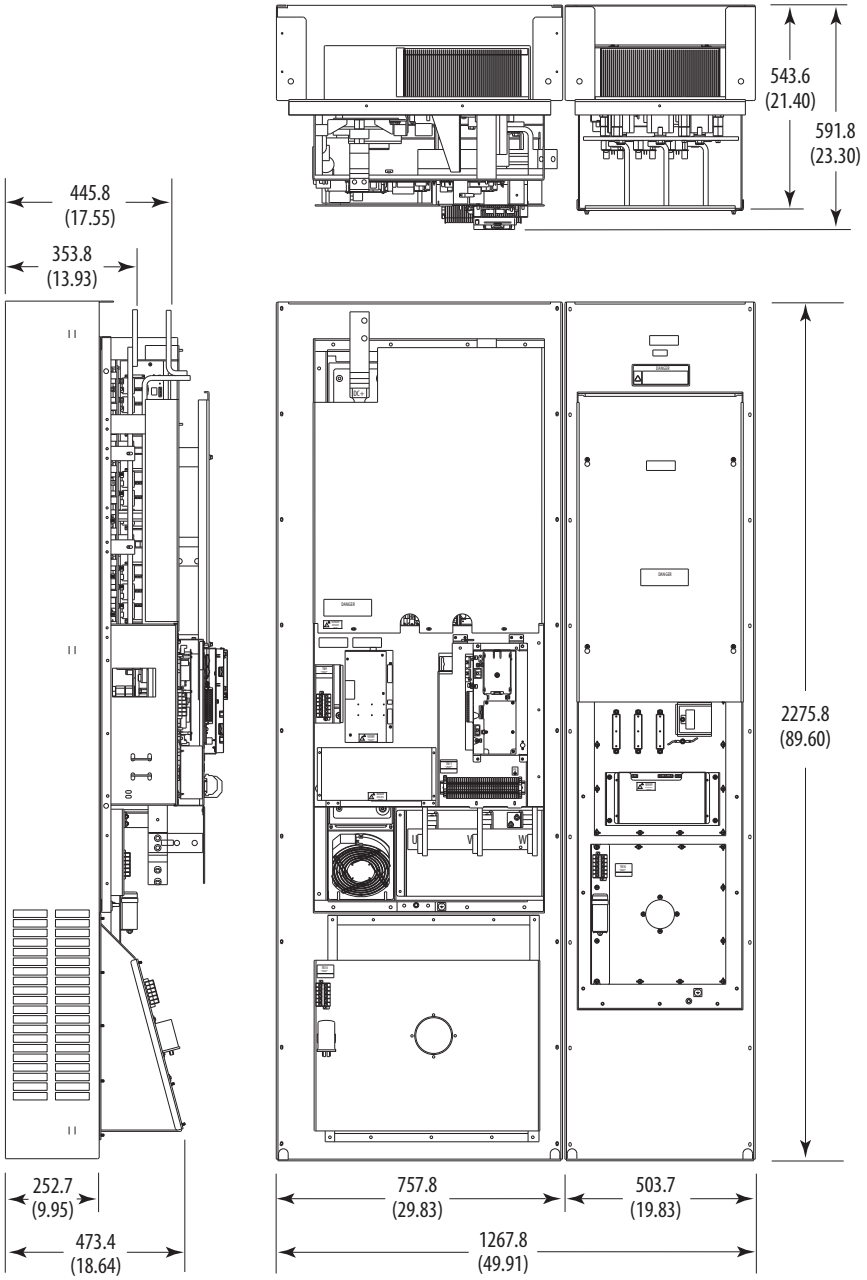

Dimensions are in millimeters and (inches)

Approx. Weight kg (lbs.)		
Type	**Drive**	**Drive & Packaging**
DC Input	305 (672)	352 (775)
AC Input	532 (1172)	623 (1372)

Frame 10 – Flange Mount Cutout

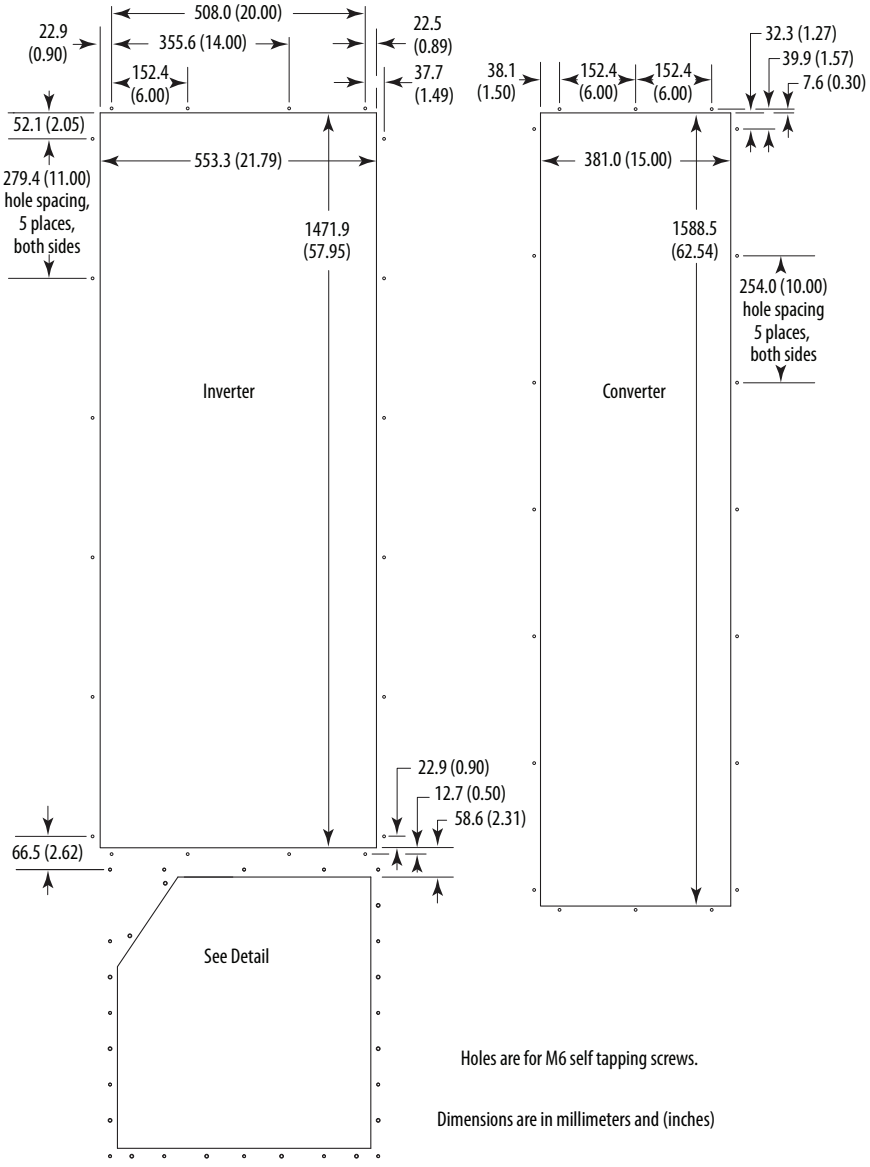

IMPORTANT Backplate and extension are a single piece. Drive chassis can be removed from backplate to mount in user supplied IP54, NEMA / UL Type 12 enclosure.

Frame 10 – Flange Mount Cutout Detail

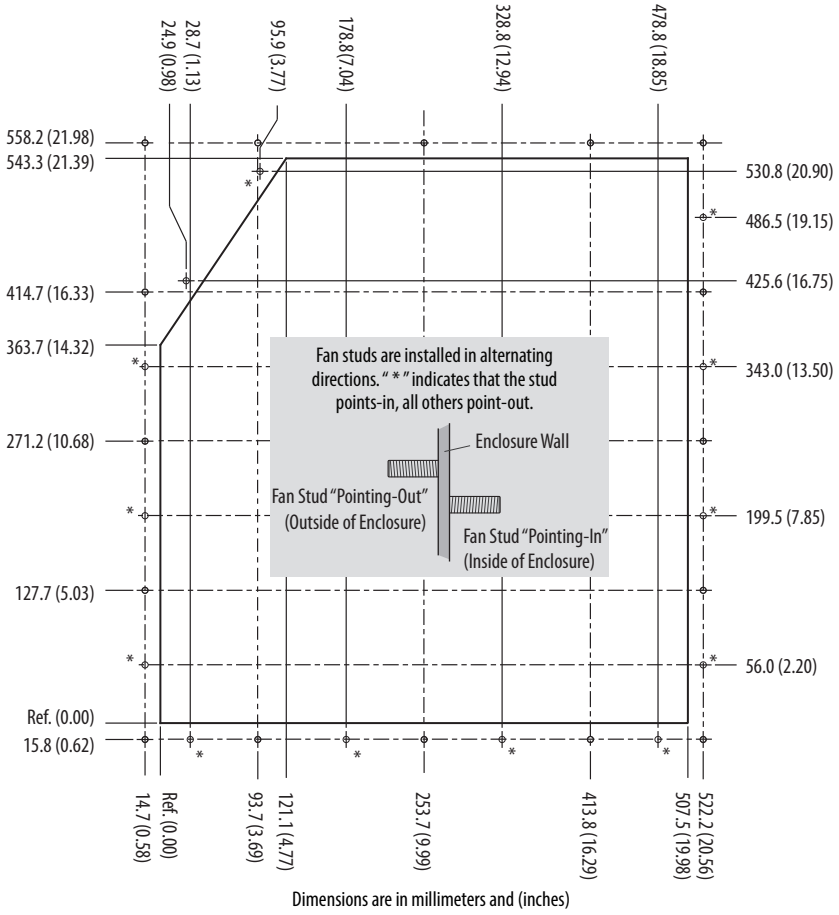

IMPORTANT Backplate and extension are a single piece. Drive chassis can be removed from backplate to mount in user supplied IP54, NEMA / UL Type 12 enclosure.

PowerFlex 700 Packaged Drives

Product Description

PowerFlex 700 Packaged Drives are ideal for global Original Equipment Manufacturers (OEM) and end users with special installation needs. This program simplifies installation and start-up by allowing users to order drive packages that combine operator interface, control, communications and power options in pre-configured assemblies. Designed to meet customer demands for space savings, application flexibility and reliability, Packaged PowerFlex 700 AC drives offer a number of commonly requested pre-engineered options, as well as more complex custom-engineered packages.

Benefits

- Simplified installation and start-up by use of common options assembled at the factory.
- Drive functionality exceeds options offered with a standard drive.
- Multiple packaging options specific to customer needs.
- Pre-engineered options for easy order entry, consistent manufacturing, high quality and reduced deliveries.
- Selectable configurations to meet application requirements.

Features

- Standard PowerFlex 700 AC drives and drive-related options.
- Six pulse and multi-pulse.
- Tuned harmonic filters.
- Enclosure options: Type 1, Type 12 (fan and filter or convection/AC), and Type 4 (indoor).
- Pre-engineered options.
- Custom/engineered solutions.
- UL panel recognition from the factory for pre-engineered options.

Options

- Drive Input Protection
- Input/Output Contactors
- Input/Output Line Reactors
- Bypass
- Control Power
- Control Interface and Feedback
- Communication
- Human Interface Module (HIM)
- Motor Interface
- Door Mounted Operator Devices

Please contact your local distributor or sales office for product availability.

Drive Options

Human Interface Modules

Description	Cat. No.
No HIM (Blank Plate), Handheld/Local (Drive Mount)	20-HIM-A0
LCD Display, Full Numeric Keypad, Handheld/Local (Drive Mount)	20-HIM-A3
Enhanced, LCD, Full Numeric Keypad, Handheld/Local (Drive Mount)	20-HIM-A6
Remote (Panel Mount) LCD Display, Full Numeric Keypad (1) (2)	20-HIM-C3S
Enhanced, LCD, Full Numeric Keypad ?‡	20-HIM-C6S

(1) IP66, NEMA Type 4X/12 - For indoor use only.

(2) Includes a 1202-C30 interface cable (3 meters) for connection to drive.

Human Interface Module Accessories

Description	Cat. No.
Bezel Kit for LCD HIMs, NEMA Type 1 (1)	20-HIM-B1
PowerFlex HIM Interface Cable, 1 m (39 in) (2)	20-HIM-H10
Comm Option Cable Kit (Male-Male) 0.33 Meters (1.1 Feet) 1 Meter (3.3 Feet) 3 Meter (9.8 Feet) 9 Meter (29.5 Feet)	 1202-C03 1202-C10 1202-C30 1202-C90
Cable Kit (Male-Female) (3) 0.33 Meters (1.1 Feet) 1 Meter (3.3 Feet) 3 Meter (9.8 Feet) 9 Meter (29.5 Feet)	 1202-H03 1202-H10 1202-H30 1202-H90
DPI Cable Kit with Connectors, Tools and 100 m (328 ft.) Cable	1202-CBL-KIT-100M
DPI Cable Connector Kit	1202-TB-KIT-SET
DPI/SCANport™ One toTwo Port Splitter Cable	1203-S03

(1) Includes a 1202-C30 interface cable (3 meters) for connection to drive.

(2) Required only when HIM is used as handheld or remote.

(3) Required in addition to 20-HIM-H10 for distances up to a total maximum of 10 Meters (32.8 Feet).

Communication Option Kits and Accessories

Description	Cat. No.
BACnet® MS/TP RS485 Communication Adapter	20-COMM-B
ControlNet Communication Adapter (Coax)	20-COMM-C
DeviceNet Communication Adapter	20-COMM-D
EtherNet/IP™ Communication Adapter	20-COMM-E
Dual-port EtherNet/IP™ Communication Adapter	20-COMM-ER (2)
HVAC Communication Adapter (Only Modbus RTU can be used)	20-COMM-H
CANopen® Communication Adapter	20-COMM-K
LonWorks® Communication Adapter	20-COMM-L
Modbus/TCP Communication Adapter	20-COMM-M
PROFIBUS™ DP Communication Adapter	20-COMM-P
ControlNet Communication Adapter (Fiber)	20-COMM-Q
Remote I/O Communication Adapter	20-COMM-R (3)
RS485 DF1 Communication Adapter	20-COMM-S
External Communications Kit Power Supply	20-XCOMM-AC-PS1
DPI External Communications Kit	20-XCOMM-DC-BASE
External DPI I/O Option Board (1)	20-XCOMM-IO-OPT1
Compact I/O™ Module (3 Channel)	1769-SM1
Serial Null Modem Adapter	1203-SNM
Smart Self-powered Serial Converter (RS232) includes 1203-SFC and 1202-C10 Cables	1203-SSS
Universal Serial Bus™ (USB) Converter includes 2 m USB, 20-HIM-H10 & 22-HIM-H10 Cables	1203-USB

(1) For use only with DPI External Communications Kits 20-XCOMM-DC-BASE.

(2) Contact your local Rockwell Automation sales office or Allen-Bradley distributor for availability.

(3) This item has Silver Series status. For information, refer to http://www.ab.com/silver.

Feedback Options

Description	Cat. No.
12V/5V Encoder (1)	20B-ENC-1

(1) Vector Control only.

Other Options

Description	Cat. No.
Removable I/O Terminal Block	SK-G9-TB1-S1
Removable Encoder Terminal Block	SK-G9-TB1-ENC1

PowerFlex 700 Control Option Kits

Control with I/O	Factory Installed Cat. Code # (2)	Cat. No.
Vector Control - 24V DC with: (1)		
60 Hz Maximum	NNAD	20B-VECT-C0AD
82 Hz Maximum	NNAX	20B-VECTB-C0AX
Cascading Fan/Pump Control	NNAE	20B-VECT-C0AE
Pump Off (for Pump Jack)	NNBA	20B-VECTB-C0BA
Vector Control - 115V AC(1)	D (3)	20B-VECTB-D0
Vector Control - 115V AC with:(1)		
60 Hz Maximum	NNAD	20B-VECT-D0AD
82 Hz Maximum	NNAX	20B-VECTB-D0AX
Cascading Fan/Pump Control	NNAE	20B-VECT-D0AE
Pump Off (for Pump Jack)	NNBA	20B-VECT-D0BA

(1) Vector Control option utilizes DPI Only.

(2) This code is entered at the end of the drive catalog number (positions 17…20).

(3) This code is entered at position 15 of the drive catalog number.

Internal Dynamic Brake Resistor Kits

These resistors have a limited duty cycle. Refer to the PowerFlex Dynamic Braking Selection Guide to determine if an internal resistor will be sufficient for your application. An external resistor may be required.

Drive Input Voltage	Brake Resistance Ohms	Frame	Cat. No.
208…240V AC	62	0	20BB-DB1-0
	62	1 (except 7.5 Hp)	20BB-DB1-1
	22	1 (7.5 Hp)	20BB-DB2-1
	22	2	20BB-DB1-2
380…600V AC	115	0	20BD-DB1-0
	115	1	20BD-DB1-1
	68	2	20BD-DB1-2

Terminators

Description (1)	Cat. No.
for use with 3.7 kW (5 Hp) & below drives	1204-TFA1
for use with 1.5 kW (2 Hp) & up drives	1204-TFB2

(1) Refer to Appendix A of the Wiring and Grounding Guidelines for Pulse Width Modulated (PWM) AC Drives, publication Drives-IN001 for selection information.

Reflected Wave Reduction Modules w/Common Mode Choke

Description (1)	Cat. No.
17A with Common Mode Choke	1204-RWC-17-A

(1) Refer to Appendix A of the Wiring and Grounding Guidelines for Pulse Width Modulated (PWM) AC Drives, publication Drives-IN001 for selection information.

Isolation Transformers

For installations that have specific types of AC supply configurations or require drive protection due to AC line disturbances, isolation transformers are available.

IP32 (NEMA/UL Type 3R)

Motor Rating kW (Hp)	240V, 60 Hz, Three-Phase, 240V Primary & 240V Secondary	460V, 60 Hz, Three-Phase, 460V Primary & 460V Secondary	575V, 60 Hz, Three-Phase, 575V Primary & 575V Secondary
	Cat. No.	Cat. No.	Cat. No.
0.25 (0.33)	1321-3TW005-AA	1321-3TW005-BB	–
0.37 (0.5)	1321-3TW005-AA	1321-3TW005-BB	–
0.55 (0.75)	1321-3TW005-AA	1321-3TW005-BB	–
0.75 (1.0)	1321-3TW005-AA	1321-3TW005-BB	1321-3TW005-CC
1.1 (1.5)	1321-3TW005-AA	1321-3TW005-BB	–
1.5 (2.0)	1321-3TW005-AA	1321-3TW005-BB	1321-3TW005-CC
2.2 (3.0)	1321-3TW005-AA	1321-3TW005-BB	1321-3TW005-CC
4.0 (5.0)	1321-3TW007-AA	1321-3TW007-BB	1321-3TW007-CC
5.5 (7.5)	1321-3TW011-AA	1321-3TW011-BB	1321-3TW011-CC
7.5 (10)	1321-3TW014-AA	1321-3TW014-BB	1321-3TW014-CC
11 (15)	1321-3TW020-AA	1321-3TW020-BB	1321-3TW020-CC
15 (20)	1321-3TW027-AA	1321-3TW027-BB	1321-3TW027-CC
18.5 (25)	1321-3TW034-AA	1321-3TW034-BB	1321-3TW034-CC
22 (30)	1321-3TW040-AA	1321-3TW040-BB	1321-3TW040-CC
30 (40)	1321-3TW051-AA	1321-3TW051-BB	1321-3TW051-CC
37 (50)	1321-3TH063-AA	1321-3TH063-BB	1321-3TH063-CC
45 (60)	1321-3TH075-AA	1321-3TH075-BB	1321-3TH075-CC
55 (75)	1321-3TH093-AA	1321-3TH093-BB	1321-3TH093-CC
75 (100)	–	1321-3TH118-BB	1321-3TH118-CC
90 (125)	–	1321-3TH145-BB	1321-3TH145-CC
110 (150)	–	1321-3TH175-BB	1321-3TH175-CC
149 (200)	–	1321-3TH220-BB	1321-3TH220-CC
187 (250)	–	1321-3TH275-BB	1321-3TH275-CC
224 (300)	–	1321-3TH330-BB	1321-3TH330-CC
261 (350)	–	1321-3TH440-BB	1321-3TH440-CC
298 (400)	–	1321-3TH440-BB	1321-3TH440-CC
336 (450)	–	1321-3TH550-BB	1321-3TH550-CC
373 (500)	–	1321-3TH550-BB	1321-3TH550-CC
448 (600)	–	1321-3TH660-BB	1321-3TH660-CC
485 (650)	–	–	1321-3TH770-CC
522 (700)	–	1321-3TH770-BB	1321-3TH770-CC

Input/Output Line Reactors

For impedance matching, protection from AC line disturbances or motor protection, reactors are available for both the input and output sides of the drive.

240V, 60 Hz, Three-Phase, 3% Impedance

			Input Line Reactor[1]		Output Line Reactor[1]	
			IP00 (Open Style)	IP11 (NEMA/UL Type 1)	IP00 (Open Style)	IP11 (NEMA/UL Type 1)
Drive Cat. No.	Duty	Hp	Cat. No.	Cat. No.	Cat. No.	Cat. No.
20BB2P2	Heavy Duty	0.33	1321-3R2-D	1321-3RA2-D	1321-3R2-D	1321-3RA2-D
20BB2P2	Normal Duty	0.5	1321-3R2-D	1321-3RA2-D	1321-3R2-D	1321-3RA2-D
20BB4P2	Heavy Duty	0.75	1321-3R4-A	1321-3RA4-A	1321-3R4-A	1321-3RA4-A
20BB4P2	Normal Duty	1	1321-3R4-A	1321-3RA4-A	1321-3R4-A	1321-3RA4-A
20BB6P8	Heavy Duty	1.5	1321-3R8-B	1321-3RA8-B	1321-3R8-A	1321-3RA8-A
20BB6P8	Normal Duty	2	1321-3R8-A	1321-3RA8-A	1321-3R8-A	1321-3RA8-A
20BB9P6	Heavy Duty	2	1321-3R8-A	1321-3RA8-A	1321-3R12-A	1321-3RA12-A
20BB9P6	Normal Duty	3	1321-3R12-A	1321-3RA12-A	1321-3R12-A	1321-3RA12-A
20BB015	Heavy Duty	3	1321-3R12-A	1321-3RA12-A	1321-3R18-A	1321-3RA18-A
20BB015	Normal Duty	5	1321-3R18-A	1321-3RA18-A	1321-3R18-A	1321-3RA18-A
20BB022	Heavy Duty	5	1321-3R18-A	1321-3RA18-A	1321-3R25-A	1321-3RA25-A
20BB022	Normal Duty	7.5	1321-3R25-A	1321-3RA25-A	1321-3R25-A	1321-3RA25-A
20BB028	Heavy Duty	7.5	1321-3R25-A	1321-3RA25-A	1321-3R35-A	1321-3RA35-A
20BB028	Normal Duty	10	1321-3R35-A	1321-3RA35-A	1321-3R35-A	1321-3RA35-A
20BB042	Heavy Duty	10	1321-3R35-A	1321-3RA35-A	1321-3R45-A	1321-3RA45-A
20BB042	Normal Duty	15	1321-3R45-A	1321-3RA45-A	1321-3R45-A	1321-3RA45-A
20BB052	Heavy Duty	15	1321-3R45-A	1321-3RA45-A	1321-3R55-A	1321-3RA55-A
20BB052	Normal Duty	20	1321-3R55-A	1321-3RA55-A	1321-3R55-A	1321-3RA55-A
20BB070	Heavy Duty	20	1321-3R55-A	1321-3RA55-A	1321-3R80-A	1321-3RA80-A
20BB070	Normal Duty	25	1321-3R80-A	1321-3RA80-A	1321-3R80-A	1321-3RA80-A
20BB080	Heavy Duty	25	1321-3R80-A	1321-3RA80-A	1321-3R80-A	1321-3RA80-A
20BB080	Normal Duty	30	1321-3R80-A	1321-3RA80-A	1321-3R80-A	1321-3RA80-A
20BB104	Heavy Duty	30	1321-3R80-A	1321-3RA80-A	1321-3R80-A	1321-3RA80-A
20BB104	Normal Duty	40	1321-3R100-A	1321-3RA100-A	1321-3R100-A	1321-3RA100-A
20BB130	Heavy Duty	40	1321-3R100-A	1321-3RA100-A	1321-3R100-A	1321-3RA100-A
20BB130	Normal Duty	50	1321-3R130-A	1321-3RA130-A	1321-3R130-A	1321-3RA130-A
20BB154	Heavy Duty	50	1321-3R130-A	1321-3RA130-A	1321-3R130-A	1321-3RA130-A
20BB154	Normal Duty	60	1321-3R160-A	1321-3RA160-A	1321-3R160-A	1321-3RA160-A
20BB192	Heavy Duty	60	1321-3R160-A	1321-3RA160-A	1321-3R160-A	1321-3RA160-A
20BB192	Normal Duty	75	1321-3R200-A	1321-3RA200-A	1321-3R200-A	1321-3RA200-A
20BB260	Heavy Duty	75	1321-3R200-A	1321-3RA200-A	1321-3R200-A	1321-3RA200-A
20BB260	Normal Duty	100	1321-3RB250-A	1321-3RAB250-A	1321-3RB250-A	1321-3RAB250-A

(1) Input line reactors were sized based on the NEC fundamental motor amps. Output line reactors were sized based on the VFD rated output currents.

240V, 60 Hz, Three-Phase, 5% Impedance

			Input Line Reactor[1]		Output Line Reactor[1]	
			IP00 (Open Style)	IP11 (NEMA/UL Type 1)	IP00 (Open Style)	IP11 (NEMA/UL Type 1)
Drive Cat. No.	Duty	Hp	Cat. No.	Cat. No.	Cat. No.	Cat. No.
20BB2P2	Heavy Duty	0.33	1321-3R2-A	1321-3RA2-A	1321-3R2-A	1321-3RA2-A
20BB2P2	Normal Duty	0.5	1321-3R2-A	1321-3RA2-A	1321-3R2-A	1321-3RA2-A
20BB4P2	Heavy Duty	0.75	1321-3R4-B	1321-3RA4-B	1321-3R4-B	1321-3RA4-B
20BB4P2	Normal Duty	1	1321-3R4-B	1321-3RA4-B	1321-3R4-B	1321-3RA4-B
20BB6P8	Heavy Duty	1.5	1321-3R8-B	1321-3RA8-B	1321-3R8-B	1321-3RA8-B
20BB6P8	Normal Duty	2	1321-3R8-B	1321-3RA8-B	1321-3R8-B	1321-3RA8-B
20BB9P6	Heavy Duty	2	1321-3R8-B	1321-3RA8-B	1321-3R12-B	1321-3RA12-B
20BB9P6	Normal Duty	3	1321-3R12-B	1321-3RA12-B	1321-3R12-B	1321-3RA12-B
20BB015	Heavy Duty	3	1321-3R12-B	1321-3RA12-B	1321-3R18-B	1321-3RA18-B
20BB015	Normal Duty	5	1321-3R18-B	1321-3RA18-B	1321-3R18-B	1321-3RA18-B
20BB022	Heavy Duty	5	1321-3R18-B	1321-3RA18-B	1321-3R25-B	1321-3RA25-B
20BB022	Normal Duty	7.5	1321-3R25-B	1321-3RA25-B	1321-3R25-B	1321-3RA25-B
20BB028	Heavy Duty	7.5	1321-3R25-B	1321-3RA25-B	1321-3R35-B	1321-3RA35-B
20BB028	Normal Duty	10	1321-3R35-B	1321-3RA35-B	1321-3R35-B	1321-3RA35-B
20BB042	Heavy Duty	10	1321-3R35-B	1321-3RA35-B	1321-3R45-B	1321-3RA45-B
20BB042	Normal Duty	15	1321-3R45-B	1321-3RA45-B	1321-3R45-B	1321-3RA45-B
20BB052	Heavy Duty	15	1321-3R45-B	1321-3RA45-B	1321-3R55-B	1321-3RA55-B
20BB052	Normal Duty	20	1321-3R55-B	1321-3RA55-B	1321-3R55-B	1321-3RA55-B
20BB070	Heavy Duty	20	1321-3R55-B	1321-3RA55-B	1321-3R80-B	1321-3RA80-B
20BB070	Normal Duty	25	1321-3R80-B	1321-3RA80-B	1321-3R80-B	1321-3RA80-B
20BB080	Heavy Duty	25	1321-3R80-B	1321-3RA80-B	1321-3R80-B	1321-3RA80-B
20BB080	Normal Duty	30	1321-3R80-B	1321-3RA80-B	1321-3R80-B	1321-3RA80-B
20BB104	Heavy Duty	30	1321-3R80-B	1321-3RA80-B	1321-3R80-B	1321-3RA80-B
20BB104	Normal Duty	40	1321-3R100-B	1321-3RA100-B	1321-3R100-B	1321-3RA100-B
20BB130	Heavy Duty	40	1321-3R100-B	1321-3RA100-B	1321-3R100-B	1321-3RA100-B
20BB130	Normal Duty	50	1321-3R130-B	1321-3RA130-B	1321-3R130-B	1321-3RA130-B
20BB154	Heavy Duty	50	1321-3R130-B	1321-3RA130-B	1321-3R130-B	1321-3RA130-B
20BB154	Normal Duty	60	1321-3R160-B	1321-3RA160-B	1321-3R160-B	1321-3RA160-B
20BB192	Heavy Duty	60	1321-3R160-B	1321-3RA160-B	1321-3R160-B	1321-3RA160-B
20BB192	Normal Duty	75	1321-3R200-B	1321-3RA200-B	1321-3R200-B	1321-3RA200-B
20BB260	Heavy Duty	75	1321-3R200-B	1321-3RA200-B	1321-3R200-B	1321-3RA200-B
20BB260	Normal Duty	100	1321-3RB250-B	1321-3RAB250-B	1321-3RB250-B	1321-3RAB250-B

(1) Input line reactors were sized based on the NEC fundamental motor amps. Output line reactors were sized based on the VFD rated output currents.

480V, 60 Hz, Three-Phase, 3% Impedance

			Input Line Reactor[1]		Output Line Reactor[1]	
			IP00 (Open Style)	IP11 (NEMA/UL Type 1)	IP00 (Open Style)	IP11 (NEMA/UL Type 1)
Drive Cat. No.	Duty	Hp	Cat. No.	Cat. No.	Cat. No.	Cat. No.
20BD1P1	Heavy Duty	0.33	1321-3R1-C	1321-3RA1-C	1321-3R2-B	1321-3RA2-B
20BD1P1	Normal Duty	0.5	1321-3R1-C	1321-3RA1-C	1321-3R2-B	1321-3RA2-B
20BD2P1	Heavy Duty	0.75	1321-3R2-A	1321-3RA2-A	1321-3R2-A	1321-3RA2-A
20BD2P1	Normal Duty	1	1321-3R2-A	1321-3RA2-A	1321-3R2-A	1321-3RA2-A
20BD3P4	Heavy Duty	1.5	1321-3R4-C	1321-3RA4-C	1321-3R4-B	1321-3RA4-B
20BD3P4	Normal Duty	2	1321-3R4-B	1321-3RA4-B	1321-3R4-B	1321-3RA4-B
20BD5P0	Heavy Duty	2	1321-3R4-B	1321-3RA4-B	1321-3R8-C	1321-3RA8-C
20BD5P0	Normal Duty	3	1321-3R8-C	1321-3RA8-C	1321-3R8-C	1321-3RA8-C
20BD8P0	Heavy Duty	3	1321-3R8-C	1321-3RA8-C	1321-3R8-B	1321-3RA8-B
20BD8P0	Normal Duty	5	1321-3R8-B	1321-3RA8-B	1321-3R8-B	1321-3RA8-B
20BD011	Heavy Duty	5	1321-3R8-B	1321-3RA8-B	1321-3R12-B	1321-3RA12-B
20BD011	Normal Duty	7.5	1321-3R12-B	1321-3RA12-B	1321-3R12-B	1321-3RA12-B
20BD014	Heavy Duty	7.5	1321-3R12-B	1321-3RA12-B	1321-3R18-B	1321-3RA18-B
20BD014	Normal Duty	10	1321-3R18-B	1321-3RA18-B	1321-3R18-B	1321-3RA18-B
20BD022	Heavy Duty	10	1321-3R18-B	1321-3RA18-B	1321-3R25-B	1321-3RA25-B
20BD022	Normal Duty	15	1321-3R25-B	1321-3RA25-B	1321-3R25-B	1321-3RA25-B
20BD027	Heavy Duty	15	1321-3R25-B	1321-3RA25-B	1321-3R25-B	1321-3RA25-B
20BD027	Normal Duty	20	1321-3R35-B	1321-3RA35-B	1321-3R25-B	1321-3RA25-B
20BD034	Heavy Duty	20	1321-3R35-B	1321-3RA35-B	1321-3R35-B	1321-3RA35-B
20BD034	Normal Duty	25	1321-3R35-B	1321-3RA35-B	1321-3R35-B	1321-3RA35-B
20BD040	Heavy Duty	25	1321-3R35-B	1321-3RA35-B	1321-3R45-B	1321-3RA45-B
20BD040	Normal Duty	30	1321-3R45-B	1321-3RA45-B	1321-3R45-B	1321-3RA45-B
20BD052	Heavy Duty	30	1321-3R45-B	1321-3RA45-B	1321-3R55-B	1321-3RA55-B
20BD052	Normal Duty	40	1321-3R55-B	1321-3RA55-B	1321-3R55-B	1321-3RA55-B
20BD065	Heavy Duty	40	1321-3R55-B	1321-3RA55-B	1321-3R80-B	1321-3RA80-B
20BD065	Normal Duty	50	1321-3R80-B	1321-3RA80-B	1321-3R80-B	1321-3RA80-B
20BD077	Heavy Duty	50	1321-3R80-B	1321-3RA80-B	1321-3R80-B	1321-3RA80-B
20BD077	Normal Duty	60	1321-3R80-B	1321-3RA80-B	1321-3R80-B	1321-3RA80-B
20BD096	Heavy Duty	60	1321-3R80-B	1321-3RA80-B	1321-3R80-B	1321-3RA80-B
20BD096	Normal Duty	75	1321-3R100-B	1321-3RA100-B	1321-3R100-B	1321-3RA100-B
20BD125	Heavy Duty	75	1321-3R100-B	1321-3RA100-B	1321-3R100-B	1321-3RA100-B
20BD125	Normal Duty	100	1321-3R130-B	1321-3RA130-B	1321-3R130-B	1321-3RA130-B
20BD156	Heavy Duty	100	1321-3R130-B	1321-3RA130-B	1321-3R130-B	1321-3RA130-B
20BD156	Normal Duty	125	1321-3R160-B	1321-3RA160-B	1321-3R160-B	1321-3RA160-B
20BD180	Heavy Duty	125	1321-3R160-B	1321-3RA160-B	1321-3R160-B	1321-3RA160-B
20BD180	Normal Duty	150	1321-3R200-B	1321-3RA200-B	1321-3R200-C	1321-3RA200-C

continued

			Input Line Reactor[1]		Output Line Reactor[1]	
			IP00 (Open Style)	IP11 (NEMA/UL Type 1)	IP00 (Open Style)	IP11 (NEMA/UL Type 1)
Drive Cat. No.	Duty	Hp	Cat. No.	Cat. No.	Cat. No.	Cat. No.
20BD248	Heavy Duty	150	1321-3R200-B	1321-3RA200-B	1321-3R200-C	1321-3RA200-C
20BD248	Normal Duty	200	1321-3RB250-B	1321-3RAB250-B	1321-3RB250-B	1321-3RAB250-B
20BD292	Heavy Duty	200	1321-3RB250-B	1321-3RAB250-B	1321-3RB250-B	1321-3RAB250-B
20BD292	Normal Duty	250	1321-3RB320-B	1321-3RAB320-B	1321-3RB320-B	1321-3RAB320-B
20BD325	Heavy Duty	250	1321-3RB320-B	1321-3RAB320-B	1321-3RB320-B	1321-3RAB320-B
20BD325	Normal Duty	250	1321-3RB320-B	1321-3RAB320-B	1321-3RB320-B	1321-3RAB320-B
20BD365	Heavy Duty	250	1321-3RB320-B	1321-3RAB320-B	1321-3RB320-B	1321-3RAB320-B
20BD365	Normal Duty	300	1321-3RB400-B	1321-3RAB400-B	1321-3RB400-B	1321-3RAB400-B
20BD415	Heavy Duty	300	1321-3RB400-B	1321-3RAB400-B	1321-3RB400-B	1321-3RAB400-B
20BD415	Normal Duty	350	1321-3RB400-B	1321-3RAB400-B	1321-3RB400-B	1321-3RAB400-B
20BD481	Heavy Duty	350	1321-3RB400-B	1321-3RAB400-B	1321-3RB400-B	1321-3RAB400-B
20BD481	Normal Duty	400	1321-3R500-B	1321-3RA500-B	1321-3R500-B	1321-3RA500-B
20BD535	Heavy Duty	400	1321-3R500-B	1321-3RA500-B	1321-3R500-B	1321-3RA500-B
20BD535	Normal Duty	450	1321-3R500-B	1321-3RA500-B	1321-3R500-B	1321-3RA500-B
20BD600	Heavy Duty	450	1321-3R500-B	1321-3RA500-B	1321-3R500-B	1321-3RA500-B
20BD600	Normal Duty	500	1321-3R600-B	1321-3RA600-B	1321-3R600-B	1321-3RA600-B
20BD730	Heavy Duty	500	1321-3R600-B	1321-3RA600-B	1321-3R600-B	1321-3RA600-B
20BD730	Normal Duty	600	1321-3R750-B	1321-3RA750-B	1321-3R750-B	1321-3RA750-B
20BD875	Heavy Duty	600	1321-3R750-B	1321-3RA750-B	1321-3R600-B	1321-3RA600-B
20BD875	Normal Duty	700	1321-3R850-B	1321-3RA850-B	1321-3R850-B	1321-3RA850-B

(1) Input line reactors were sized based on the NEC fundamental motor amps. Output line reactors were sized based on the VFD rated output currents.

480V, 60 Hz, Three-Phase, 5% Impedance

			Input Line Reactor[1]		Output Line Reactor[1]	
			IP00 (Open Style)	IP11 (NEMA/UL Type 1)	IP00 (Open Style)	IP11 (NEMA/UL Type 1)
Drive Cat. No.	Duty	Hp	Cat. No.	Cat. No.	Cat. No.	Cat. No.
20BD1P1	Heavy Duty	0.33	1321-3R1-B	1321-3RA1-B	1321-3R2-C	1321-3RA2-C
20BD1P1	Normal Duty	0.5	1321-3R1-B	1321-3RA1-B	1321-3R2-C	1321-3RA2-C
20BD2P1	Heavy Duty	0.75	1321-3R2-C	1321-3RA2-C	1321-3R2-B	1321-3RA2-B
20BD2P1	Normal Duty	1	1321-3R2-B	1321-3RA2-B	1321-3R2-B	1321-3RA2-B
20BD3P4	Heavy Duty	1.5	1321-3R4-D	1321-3RA4-D	1321-3R4-D	1321-3RA4-D
20BD3P4	Normal Duty	2	1321-3R4-D	1321-3RA4-D	1321-3R4-D	1321-3RA4-D
20BD5P0	Heavy Duty	2	1321-3R4-D	1321-3RA4-D	1321-3R8-D	1321-3RA8-D
20BD5P0	Normal Duty	3	1321-3R8-D	1321-3RA8-D	1321-3R8-D	1321-3RA8-D
20BD8P0	Heavy Duty	3	1321-3R8-D	1321-3RA8-D	1321-3R8-C	1321-3RA8-C
20BD8P0	Normal Duty	5	1321-3R8-C	1321-3RA8-C	1321-3R8-C	1321-3RA8-C
20BD011	Heavy Duty	5	1321-3R8-C	1321-3RA8-C	1321-3R12-C	1321-3RA12-C
20BD011	Normal Duty	7.5	1321-3R12-C	1321-3RA12-C	1321-3R12-C	1321-3RA12-C
20BD014	Heavy Duty	7.5	1321-3R12-C	1321-3RA12-C	1321-3R18-C	1321-3RA18-C
20BD014	Normal Duty	10	1321-3R18-C	1321-3RA18-C	1321-3R18-C	1321-3RA18-C
20BD022	Heavy Duty	10	1321-3R18-C	1321-3RA18-C	1321-3R25-C	1321-3RA25-C
20BD022	Normal Duty	15	1321-3R25-C	1321-3RA25-C	1321-3R25-C	1321-3RA25-C
20BD027	Heavy Duty	15	1321-3R25-C	1321-3RA25-C	1321-3R25-C	1321-3RA25-C
20BD027	Normal Duty	20	1321-3R35-C[2]	1321-3RA35-C[2]	1321-3R25-C	1321-3RA25-C
20BD034	Heavy Duty	20	1321-3R35-C[2]	1321-3RA35-C[2]	1321-3R35-C	1321-3RA35-C
20BD034	Normal Duty	25	1321-3R35-C	1321-3RA35-C	1321-3R35-C	1321-3RA35-C
20BD040	Heavy Duty	25	1321-3R35-C	1321-3RA35-C	1321-3R45-C	1321-3RA45-C
20BD040	Normal Duty	30	1321-3R45-C	1321-3RA45-C	1321-3R45-C	1321-3RA45-C
20BD052	Heavy Duty	30	1321-3R45-C	1321-3RA45-C	1321-3R55-C	1321-3RA55-C
20BD052	Normal Duty	40	1321-3R55-C	1321-3RA55-C	1321-3R55-C	1321-3RA55-C
20BD065	Heavy Duty	40	1321-3R55-C	1321-3RA55-C	1321-3R80-C	1321-3RA80-C
20BD065	Normal Duty	50	1321-3R80-C	1321-3RA80-C	1321-3R80-C	1321-3RA80-C
20BD077	Heavy Duty	50	1321-3R80-C	1321-3RA80-C	1321-3R80-C	1321-3RA80-C
20BD077	Normal Duty	60	1321-3R80-C	1321-3RA80-C	1321-3R80-C	1321-3RA80-C
20BD096	Heavy Duty	60	1321-3R80-C	1321-3RA80-C	1321-3R80-C	1321-3RA80-C
20BD096	Normal Duty	75	1321-3R100-C	1321-3RA100-C	1321-3R100-C	1321-3RA100-C
20BD125	Heavy Duty	75	1321-3R100-C	1321-3RA100-C	1321-3R100-C	1321-3RA100-C
20BD125	Normal Duty	100	1321-3R130-C	1321-3RA130-C	1321-3R130-C	1321-3RA130-C
20BD156	Heavy Duty	100	1321-3R130-C	1321-3RA130-C	1321-3R130-C	1321-3RA130-C
20BD156	Normal Duty	125	1321-3R160-C	1321-3RA160-C	1321-3R160-C	1321-3RA160-C
20BD180	Heavy Duty	125	1321-3R160-C	1321-3RA160-C	1321-3R160-C	1321-3RA160-C
20BD180	Normal Duty	150	1321-3R200-C	1321-3RA200-C	1321-3R200-C[2]	1321-3RA200-C[2]

continued

Drive Cat. No.	Duty	Hp	Input Line Reactor[1]		Output Line Reactor[1]	
			IP00 (Open Style)	IP11 (NEMA/UL Type 1)	IP00 (Open Style)	IP11 (NEMA/UL Type 1)
			Cat. No.	Cat. No.	Cat. No.	Cat. No.
20BD248	Heavy Duty	150	1321-3R200-C	1321-3RA200-C	1321-3R200-C[2]	1321-3RA200-C[2]
20BD248	Normal Duty	200	1321-3RB250-C	1321-3RAB250-C	1321-3RB250-C	1321-3RAB250-C
20BD292	Heavy Duty	200	1321-3RB250-C	1321-3RAB250-C	1321-3RB250-C	1321-3RAB250-C
20BD292	Normal Duty	250	1321-3RB320-C	1321-3RAB320-C	1321-3RB320-C	1321-3RAB320-C
20BD325	Heavy Duty	250	1321-3RB320-C	1321-3RAB320-C	1321-3RB320-C	1321-3RAB320-C
20BD325	Normal Duty	250	1321-3RB320-C	1321-3RAB320-C	1321-3RB320-C	1321-3RAB320-C
20BD365	Heavy Duty	250	1321-3RB320-C	1321-3RAB320-C	1321-3RB320-C	1321-3RAB320-C
20BD365	Normal Duty	300	1321-3RB400-C	1321-3RAB400-C	1321-3RB400-C	1321-3RAB400-C
20BD415	Heavy Duty	300	1321-3RB400-C	1321-3RAB400-C	1321-3RB400-C	1321-3RAB400-C
20BD415	Normal Duty	350	1321-3R500-C	1321-3RA500-C	1321-3RB400-C	1321-3RAB400-C
20BD481	Heavy Duty	350	1321-3R500-C	1321-3RA500-C	1321-3RB400-C	1321-3RAB400-C
20BD481	Normal Duty	400	1321-3R500-C	1321-3RA500-C	1321-3R500-C	1321-3RA500-C
20BD535	Heavy Duty	400	1321-3R500-C	1321-3RA500-C	1321-3R500-C	1321-3RA500-C
20BD535	Normal Duty	450	1321-3R600-C	1321-3RA600-C	1321-3R500-C	1321-3RA500-C
20BD600	Heavy Duty	450	1321-3R600-C	1321-3RA600-C	1321-3R500-C	1321-3RA500-C
20BD600	Normal Duty	500	1321-3R600-C	1321-3RA600-C	1321-3R600-C	1321-3RA600-C
20BD730	Heavy Duty	500	1321-3R600-C	1321-3RA600-C	1321-3R600-C	1321-3RA600-C
20BD730	Normal Duty	600	1321-3R750-E	1321-3RA750-E	1321-3R750-E	1321-3RA750-E
20BD875	Heavy Duty	600	1321-3R750-E	1321-3RA750-E	1321-3R750-E	1321-3RA750-E
20BD875	Normal Duty	700	1321-3R850-C	1321-3RA850-C	1321-3R850-C	1321-3RA850-C

(1) Input line reactors were sized based on the NEC fundamental motor amps. Output line reactors were sized based on the VFD rated output currents.

(2) 4% impedance.

600V, 60 Hz, Three-Phase, 3% Impedance

			Input Line Reactor[1]		Output Line Reactor[1]	
			IP00 (Open Style)	IP11 (NEMA/UL Type 1)	IP00 (Open Style)	IP11 (NEMA/UL Type 1)
Drive Cat. No.	Duty	Hp	Cat. No.	Cat. No.	Cat. No.	Cat. No.
20BE1P7	Heavy Duty	0.5	1321-3R1-C	1321-3RA1-C	1321-3R2-B	1321-3RA2-B
20BE1P7	Normal Duty	1	1321-3R2-B	1321-3RA2-B	1321-3R2-B	1321-3RA2-B
20BE2P7	Heavy Duty	1	1321-3R2-B	1321-3RA2-B	1321-3R4-D	1321-3RA4-D
20BE2P7	Normal Duty	2	1321-3R4-D	1321-3RA4-D	1321-3R4-D	1321-3RA4-D
20BE3P9	Heavy Duty	2	1321-3R4-D	1321-3RA4-D	1321-3R4-C	1321-3RA4-C
20BE3P9	Normal Duty	3	1321-3R4-C	1321-3RA4-C	1321-3R4-C	1321-3RA4-C
20BE6P1	Heavy Duty	3	1321-3R4-C	1321-3RA4-C	1321-3R8-C	1321-3RA8-C
20BE6P1	Normal Duty	5	1321-3R8-C	1321-3RA8-C	1321-3R8-C	1321-3RA8-C
20BE9P0	Heavy Duty	5	1321-3R8-C	1321-3RA8-C	1321-3R12-C	1321-3RA12-C
20BE9P0	Normal Duty	7.5	1321-3R12-C	1321-3RA12-C	1321-3R12-C	1321-3RA12-C
20BE011	Heavy Duty	7.5	1321-3R12-C	1321-3RA12-C	1321-3R12-B	1321-3RA12-B
20BE011	Normal Duty	10	1321-3R12-B	1321-3RA12-B	1321-3R12-B	1321-3RA12-B
20BE017	Heavy Duty	10	1321-3R12-B	1321-3RA12-B	1321-3R18-B	1321-3RA18-B
20BE017	Normal Duty	15	1321-3R18-B	1321-3RA18-B	1321-3R18-B	1321-3RA18-B
20BE022	Heavy Duty	15	1321-3R18-B	1321-3RA18-B	1321-3R25-B	1321-3RA25-B
20BE022	Normal Duty	20	1321-3R25-B	1321-3RA25-B	1321-3R25-B	1321-3RA25-B
20BE027	Heavy Duty	20	1321-3R25-B	1321-3RA25-B	1321-3R35-C	1321-3RA35-C
20BE027	Normal Duty	25	1321-3R35-C	1321-3RA35-C	1321-3R35-C	1321-3RA35-C
20BE032	Heavy Duty	25	1321-3R35-C	1321-3RA35-C	1321-3R35-B	1321-3RA35-B
20BE032	Normal Duty	30	1321-3R35-B	1321-3RA35-B	1321-3R35-B	1321-3RA35-B
20BE041	Heavy Duty	30	1321-3R35-B	1321-3RA35-B	1321-3R45-B	1321-3RA45-B
20BE041	Normal Duty	40	1321-3R45-B	1321-3RA45-B	1321-3R45-B	1321-3RA45-B
20BE052	Heavy Duty	40	1321-3R45-B	1321-3RA45-B	1321-3R55-B	1321-3RA55-B
20BE052	Normal Duty	50	1321-3R55-B	1321-3RA55-B	1321-3R55-B	1321-3RA55-B
20BE062	Heavy Duty	50	1321-3R55-B	1321-3RA55-B	1321-3R80-B	1321-3RA80-B
20BE062	Normal Duty	60	1321-3R80-B	1321-3RA80-B	1321-3R80-B	1321-3RA80-B
20BE077	Heavy Duty	60	1321-3R80-B	1321-3RA80-B	1321-3R80-B	1321-3RA80-B
20BE077	Normal Duty	75	1321-3R80-B	1321-3RA80-B	1321-3R80-B	1321-3RA80-B
20BE099	Heavy Duty	75	1321-3R80-B	1321-3RA80-B	1321-3R80-B	1321-3RA80-B
20BE099	Normal Duty	100	1321-3R100-B	1321-3RA100-B	1321-3R100-B	1321-3RA100-B
20BE125	Heavy Duty	100	1321-3R100-B	1321-3RA100-B	1321-3R100-B	1321-3RA100-B
20BE125	Normal Duty	125	1321-3R130-B	1321-3RA130-B	1321-3R130-B	1321-3RA130-B
20BE144	Heavy Duty	125	1321-3R130-B	1321-3RA130-B	1321-3R130-B	1321-3RA130-B
20BE144	Normal Duty	150	1321-3R160-B	1321-3RA160-B	1321-3R160-B	1321-3RA160-B

(1) Input line reactors were sized based on the NEC fundamental motor amps. Output line reactors were sized based on the VFD rated output currents.

600V, 60 Hz, Three-Phase, 5% Impedance

			Input Line Reactor[1]		Output Line Reactor[1]	
			IP00 (Open Style)	IP11 (NEMA/UL Type 1)	IP00 (Open Style)	IP11 (NEMA/UL Type 1)
Drive Cat. No.	Duty	Hp	Cat. No.	Cat. No.	Cat. No.	Cat. No.
20BE1P7	Heavy Duty	0.5	1321-3R1-B	1321-3RA1-B	1321-3R2-C	1321-3RA2-C
20BE1P7	Normal Duty	1	1321-3R2-C	1321-3RA2-C	1321-3R2-C	1321-3RA2-C
20BE2P7	Heavy Duty	1	1321-3R2-C	1321-3RA2-C	1321-3R4-D[2]	1321-3RA4-D[2]
20BE2P7	Normal Duty	2	1321-3R4-D[2]	1321-3RA4-D[2]	1321-3R4-D[2]	1321-3RA4-D[2]
20BE3P9	Heavy Duty	2	1321-3R4-D[2]	1321-3RA4-D[2]	1321-3R4-D	1321-3RA4-D
20BE3P9	Normal Duty	3	1321-3R4-D	1321-3RA4-D	1321-3R4-D	1321-3RA4-D
20BE6P1	Heavy Duty	3	1321-3R4-D	1321-3RA4-D	1321-3R8-D	1321-3RA8-D
20BE6P1	Normal Duty	5	1321-3R8-D	1321-3RA8-D	1321-3R8-D	1321-3RA8-D
20BE9P0	Heavy Duty	5	1321-3R8-D	1321-3RA8-D	1321-3R12-C[2]	1321-3RA12-C[2]
20BE9P0	Normal Duty	7.5	1321-3R12-C[2]	1321-3RA12-C[2]	1321-3R12-C[2]	1321-3RA12-C[2]
20BE011	Heavy Duty	7.5	1321-3R12-C[2]	1321-3RA12-C[2]	1321-3R12-C	1321-3RA12-C
20BE011	Normal Duty	10	1321-3R12-C	1321-3RA12-C	1321-3R12-C	1321-3RA12-C
20BE017	Heavy Duty	10	1321-3R12-C	1321-3RA12-C	1321-3R18-C	1321-3RA18-C
20BE017	Normal Duty	15	1321-3R18-C	1321-3RA18-C	1321-3R18-C	1321-3RA18-C
20BE022	Heavy Duty	15	1321-3R18-C	1321-3RA18-C	1321-3R25-C[2]	1321-3RA25-C[2]
20BE022	Normal Duty	20	1321-3R25-C[2]	1321-3RA25-C[2]	1321-3R25-C[2]	1321-3RA25-C[2]
20BE027	Heavy Duty	20	1321-3R25-C[2]	1321-3RA25-C[2]	1321-3R35-C[2]	1321-3RA35-C[2]
20BE027	Normal Duty	25	1321-3R35-C[2]	1321-3RA35-C[2]	1321-3R35-C[2]	1321-3RA35-C[2]
20BE032	Heavy Duty	25	1321-3R35-C[2]	1321-3RA35-C[2]	1321-3R35-C[2]	1321-3RA35-C[2]
20BE032	Normal Duty	30	1321-3R35-C[2]	1321-3RA35-C[2]	1321-3R35-C[2]	1321-3RA35-C[2]
20BE041	Heavy Duty	30	1321-3R35-C[2]	1321-3RA35-C[2]	1321-3R45-C	1321-3RA45-C
20BE041	Normal Duty	40	1321-3R45-C	1321-3RA45-C	1321-3R45-C	1321-3RA45-C
20BE052	Heavy Duty	40	1321-3R45-C	1321-3RA45-C	1321-3R55-C	1321-3RA55-C
20BE052	Normal Duty	50	1321-3R55-C	1321-3RA55-C	1321-3R55-C	1321-3RA55-C
20BE062	Heavy Duty	50	1321-3R55-C	1321-3RA55-C	1321-3R80-C	1321-3RA80-C
20BE062	Normal Duty	60	1321-3R80-C	1321-3RA80-C	1321-3R80-C	1321-3RA80-C
20BE077	Heavy Duty	60	1321-3R80-C	1321-3RA80-C	1321-3R80-C	1321-3RA80-C
20BE077	Normal Duty	75	1321-3R80-C	1321-3RA80-C	1321-3R80-C	1321-3RA80-C
20BE099	Heavy Duty	75	1321-3R80-C	1321-3RA80-C	1321-3R80-C	1321-3RA80-C
20BE099	Normal Duty	100	1321-3R100-C	1321-3RA100-C	1321-3R100-C	1321-3RA100-C
20BE125	Heavy Duty	100	1321-3R100-C	1321-3RA100-C	1321-3R100-C	1321-3RA100-C
20BE125	Normal Duty	125	1321-3R130-C[2]	1321-3RA130-C[2]	1321-3R130-C[2]	1321-3RA130-C[2]
20BE144	Heavy Duty	125	1321-3R130-C[2]	1321-3RA130-C[2]	1321-3R130-C[2]	1321-3RA130-C[2]
20BE144	Normal Duty	150	1321-3R160-C[2]	1321-3RA160-C[2]	1321-3R160-C[2]	1321-3RA160-C[2]

(1) Input line reactors were sized based on the NEC fundamental motor amps. Output line reactors were sized based on the VFD rated output currents.

(2) 4% impedance.

Important User Information

Read this document and the documents listed in the additional resources section about installation, configuration, and operation of this equipment before you install, configure, operate, or maintain this product. Users are required to familiarize themselves with installation and wiring instructions in addition to requirements of all applicable codes, laws, and standards.

Activities including installation, adjustments, putting into service, use, assembly, disassembly, and maintenance are required to be carried out by suitably trained personnel in accordance with applicable code of practice.

If this equipment is used in a manner not specified by the manufacturer, the protection provided by the equipment may be impaired.

In no event will Rockwell Automation, Inc. be responsible or liable for indirect or consequential damages resulting from the use or application of this equipment.

The examples and diagrams in this manual are included solely for illustrative purposes. Because of the many variables and requirements associated with any particular installation, Rockwell Automation, Inc. cannot assume responsibility or liability for actual use based on the examples and diagrams.

No patent liability is assumed by Rockwell Automation, Inc. with respect to use of information, circuits, equipment, or software described in this manual.

Reproduction of the contents of this manual, in whole or in part, without written permission of Rockwell Automation, Inc., is prohibited.

Documentation Feedback

Your comments will help us serve your documentation needs better. If you have any suggestions on how to improve this document, complete this form, publication RA-DU002, available at http://www.rockwellautomation.com/literature/.

Allen-Bradley, Rockwell Software, Rockwell Automation, and LISTEN. THINK. SOLVE are trademarks of Rockwell Automation, Inc.
Trademarks not belonging to Rockwell Automation are property of their respective companies.

Rockwell Otomasyon Ticaret A.Ş., Kar Plaza İş Merkezi E Blok Kat:6 34752 İçerenköy, İstanbul, Tel: +90 (216) 5698400

www.rockwellautomation.com

Power, Control and Information Solutions Headquarters

Americas: Rockwell Automation, 1201 South Second Street, Milwaukee, WI 53204-2496 USA, Tel: (1) 414.382.2000, Fax: (1) 414.382.4444
Europe/Middle East/Africa: Rockwell Automation NV, Pegasus Park, De Kleetlaan 12a, 1831 Diegem, Belgium, Tel: (32) 2 663 0600, Fax: (32) 2 663 0640
Asia Pacific: Rockwell Automation, Level 14, Core F, Cyberport 3, 100 Cyberport Road, Hong Kong, Tel: (852) 2887 4788, Fax: (852) 2508 1846

Publication 20B-TD001H-EN-P - July 2014
Supersedes Publication 20B-TD001G-EN-P - July 2013

Copyright © 2014 Rockwell Automation, Inc. All rights reserved. Printed in the U.S.A.

Allen-Bradley

1321 Power Conditioning Products

Don't Ignore the Cost of Power Line Disturbance

Topic	Page
Product Overview	2
1321-3R and 3RA Series Line Reactors	3
1321 Reflective Wave Reduction (RWR) Devices	12
1321-3TH/3TW Series Three-Phase Isolation Transformers	16
1321-M Common Mode Chokes	21
1321-DC DC Link Chokes	24

Additional Resources

These documents contain additional information concerning related products from Rockwell Automation.

Resource	Description
Wiring and Grounding Guidelines for Pulse Width Modulated (PWM) AC Drives, publication DRIVES-IN001	Provides basic information needed to properly wire and ground PWM AC drives.
Safety Guidelines for the Application, Installation and Maintenance of Solid State Control, publication SGI-1.1	Provides general guidelines for the application, installation, and maintenance of solid-state control.

You can view or download publications at http://www.rockwellautomation.com/literature/. To order paper copies of technical documentation, contact your local Allen-Bradley distributor or Rockwell Automation sales representative.

For Allen-Bradley Drives Technical Support:

Title	Online at…
Allen-Bradley Drives Technical Support	www.ab.com/support/abdrives or call (1) 262.512.8176

Product Overview

Allen-Bradley reactors help keep equipment running longer by absorbing many of the power line disturbances which can shut down your drive. Allen-Bradley isolation transformers can provide both voltage change and isolation for your variable speed drive. These designs are harmonic compensated and IGBT protected to assure optimum performance in the presence of harmonics.

1321-3R and 3RA Series Line Reactors

Applying Allen-Bradley Line Reactors

At the Input of the Drive

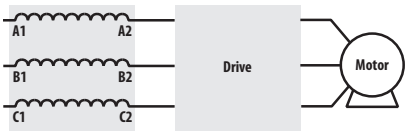

At the input of a drive, line reactors help protect against surges or spikes on the incoming power lines and help reduce harmonic distortion.

- Eliminate Nuisance Tripping
- Extend Semiconductor Life
- Reduce Harmonic Distortion
- Improve True Power Factor
- Reduce Voltage Notching
- Meet IEEE-519 or EN-61800

At the Output of the Drive

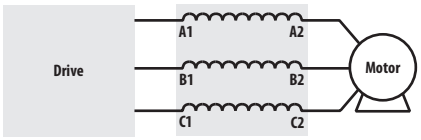

In long motor lead applications, Allen-Bradley load reactors located between the drive and motor help reduce dv/dt and motor terminal peak voltages. The use of a load reactor also helps protect the drive from surge currents caused by rapid changes in the load.

- Protect Motors from Long Lead Effects
- Reduce Output Voltage dv/dt
- Extend Semiconductor Life
- Reduce Surge Currents
- Reduce Motor Temperature
- Reduce Audible Motor Noise

With Multiple Drives

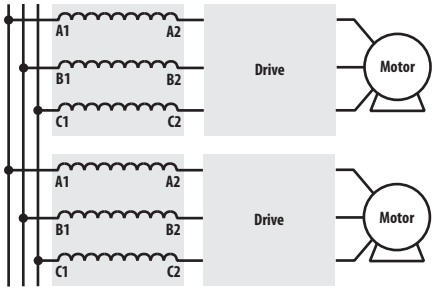

Multiple drives on a common power line should each have their own line reactor. Individual line reactors provide filtering between each drive to help reduce any crosstalk while providing optimum surge protection for each drive.

With Multiple Motors

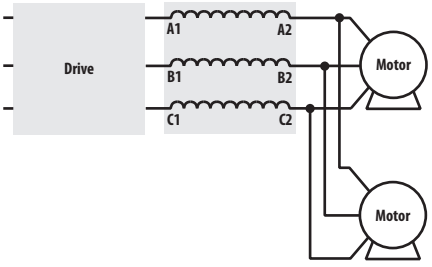

When more than one motor is controlled by a single drive, a single line reactor can typically be used between the drive and all the motors. Size the line reactor based on the total motor/load horsepower.

With Single-Phase Input

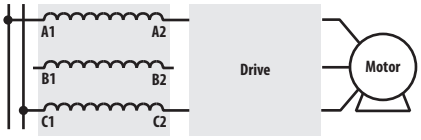

A three-phase reactor can be used for single-phase applications by routing each of the two input power conductors to the outside two coils, and leaving the center coil disconnected. The sum of the inductance of the two coils is the total inductance applied to the circuit. Contact Rockwell Automation Technical Support for assistance in specifying the proper reactor.

Selecting the Correct Impedance Rating

Why is the Right Impedance Rating Important?

Selecting the correct impedance rating is critical for your job. An impedance value too low may not limit peak current. Too high of an impedance may reduce input voltage. Allen-Bradley line reactors offer two impedance ratings.

3% Impedance Rated Reactors to Reduce Nuisance Trips

Allen-Bradley line reactors rated at 3% are typically sufficient to absorb line spikes and motor current surges and will help prevent nuisance tripping of drive and circuit breakers in most applications.

5% Impedance Rated Reactors to Reduce Harmonic Content

Allen-Bradley reactors rated at 5% are best for reducing harmonic current and frequencies. These line reactors help comply with IEEE-519 (not normally used as load reactors).

Voltage Spike Protection

Voltage spikes on AC power lines can cause elevation of the DC bus voltage which may cause the drive to trip on an overvoltage condition.

3% impedance reactors are very effective at protecting drives against voltage spikes and nuisance tripping. Allen-Bradley line reactors absorb these line spikes protecting the drive from nuisance tripping and damage.

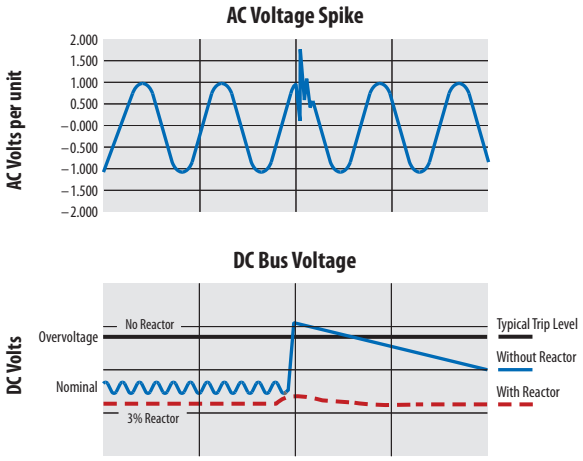

Motor Protection

Allen-Bradley load reactors can help protect motors from high peak voltages.

For IGBT drive applications with long drive-to-motor lead lengths, Allen-Bradley load reactors can help protect against fast dv/dt rise times.

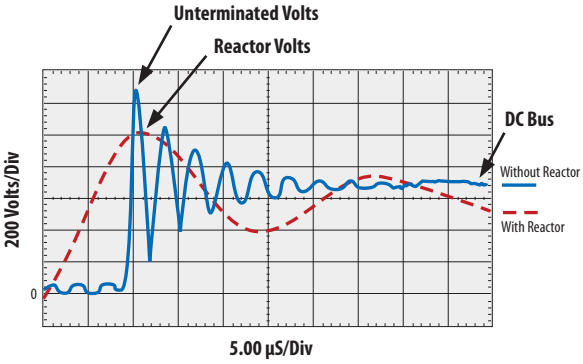

Catalog Number Explanation

Position Number

1-4		*6*	7	8		10
1321	–	3	R	4	–	B
a		*b*	*c*	*d*		*e*

a

Product	
Code	**Type**
1321	1321 Power Component

b

Phases	
Code	**Description**
3	Three-Phase

c

Device	
Code	**Description**
R	Reactor, Open
RA, RB	Reactor, NEMA 1
RAB	Reactor, NEMA 1, Cabinet Style 2 Only

d

Fundamental Amps	
Code	**Amps**
1	1
2	2
4	4
8	8
12	12
18	18
25	25
35	35
45	45
55	55
80	80
100	100
130	130
160	160
200	200
250	250
320	320
400	400
500	500
600	600
750	750
850	850
1000	1000

e

Inductance Rating	
Code	**Description**
A	Each reactor current rating has four inductance ratings also available. See the IP00 dimension table.
B	
C	
D	

Common Specifications

Specification		Rating
Material	Enclosures	IP11 (NEMA/UL Type 1) — Sheet steel in accordance with UL, NEMA requirements
		IP00 (Open) or IP20 (Open - with finger safe terminals)
	Terminations	1-45 Amp (fundamental) Ratings – Finger guard IP20 terminal block
		80-160 Amp (fundamental) Ratings – Solid copper box lugs
		200-400 Amp (fundamental) Ratings – Copper tab terminals
		401 Amps and Above – Copper tab terminals
Harmonic Compensation	All line reactors are compensated for the additional currents and high frequencies caused by the presence of harmonics	
General Protection	Impedance	3% or 5% based on the fundamental current ratings
	Overload Rating	200% of fundamental current for 30 minutes 300% of fundamental current for 1 minute
	dv/dt Protection	Meets NEMA MG-1, part 31
Electrical	Max. Rated Voltage	600V AC (units with terminal blocks) 690V AC (units with box lugs or tab terminals)
	Max. Switching Freq.	20 kHz
	Fundamental Frequency	Line/Load - 50/60 Hz
	Temperature Rise	135 degrees C average
	Dielectric Strength	3,000 Volts rms (4,243 volts peak)
	Inductance Curve (Typical)	100% at 100% current 100% at 150% current 50% at 350% current (minimum)
	Inductance Tolerance	±10%
	Insulation System	Class N (200 degrees C)
	Impregnation	High bond strength solventless epoxy, 200 degrees C, UL94HB recognized
Environmental	Ambient Temperature	45 degrees C (maximum)
	Altitude	1000 meters (3280 feet)
Agency Approvals	UL-508	File E180243 Component Listed (1-2400 amps) File E180243 UL Listed NEMA Type 1 units (1-2400 amps) Note: Short Circuit rating not required under Exception No.1 of UL508A SB4.2.1 effective 4/25/06
	CSA C22.2, Class N, 200 °C	File LR29753-13 CSA Certified (1 amp - 2400 amps) File E66214, Type 200-18, UL Recognized Insulation System
	CE	TUV certified to EN61558-2-20:2000

Termination

Allen-Bradley reactors rated 45 Amps (fundamental) and below are supplied with an integral mounted terminal block. Reactors rated from 55 to 160 Amps (fundamental) are supplied with box lugs. Reactors rated 200 to 400 Amps (fundamental) will be supplied with front facing copper tabs. Above 400 Amps (fundamental), side facing copper tabs are used. The "3R" and "3RA" designations for the 1321 line reactors indicate the following: 3R = Open Enclosure Line Reactor and 3RA = NEMA 1 Enclosure Line Reactor.

Typical Termination Types and Specifications

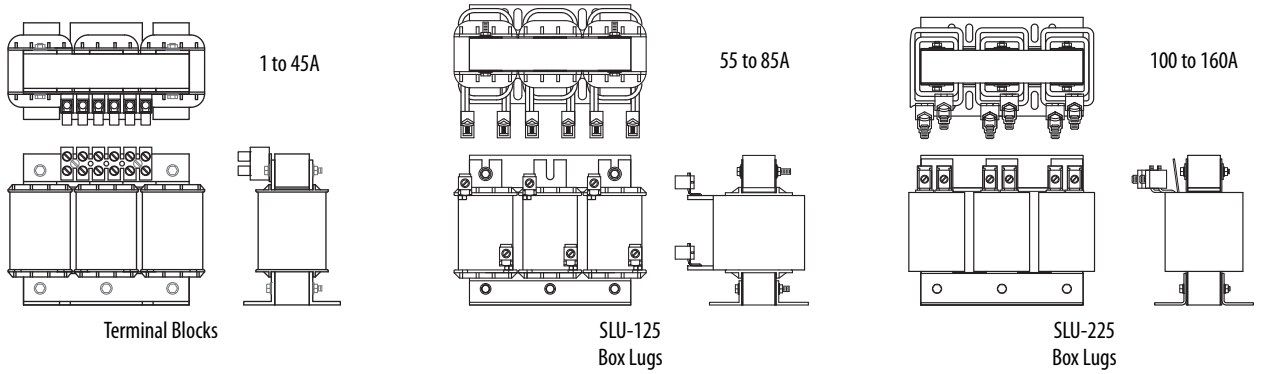

Reactor Catalog Number		Termination	Max./Min. Wire Size	Max. Torque
IP00 (Open) or IP20	IP11 (NEMA/UL Type 1)	Type	mm^2 (AWG)	Nm (lb.-in.)
1321-3R1-A to 1321-3R8-D	1321-3RA1-A to 1321-3RA8-D	20A Terminal Block	2.1/0.3 (14/22)	0.51 (4.5)
1321-3R12-A to 1321-3R35-B	1321-3RA12-A to 1321-3RA35-B	65A Terminal Block	16.0/0.3 (5/22)	1.81 (16)
1321-3R35-C to 1321-3R45-C	1321-3RA35-C to 1321-3RA45-C	85A Terminal Block	21.2/0.8 (4/18)	2.26 (20)
1321-3R55-A to 1321-3R80-C	1321-3RA55-A to 1321-3RA80-C	SLU-125 Box Lug	50.0/10.0 (0/6)	5.09 (45)
1321-3R100-A to 1321-3R160-C	1321-3RA100-A to 1321-3RA160-C	SLU-225 Box Lug	120.0-27.0 (0000/2)	16.95 (150)

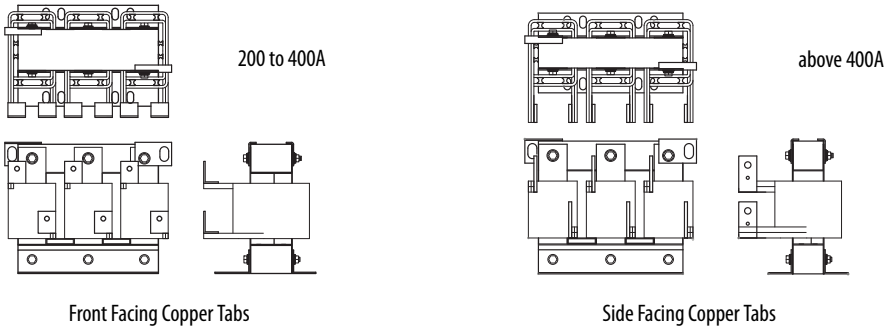

Reactor Catalog Number		Termination	Contact Surface (H x W)	Hole Diameter	Thickness
IP00 (Open) or IP20	IP11 (NEMA/UL Type 1)	Type	mm (in.)	mm (in.)	mm (in.)
1321-3R200-A to 1321-3R200-C	1321-3RA200-A to 1321-3RA200-C	Front Facing Copper Tab	41.3 x 25.4 (1.63 x 1.0)	10.36 (0.408)	3.18 (0.125)
1321-3R250-B to 1321-3RB250-C	1321-3RAB250-A to 1321-3RAB250-C	Front Facing Copper Tab	57.2 x 19.1 (2.25 x 0.75)	10.31 (0.406)	4.75 (0.187)
1321-3RB320-A to 1321-3R400-A	1321-3RAB320-A to 1321-3RA400-A	Front Facing Copper Tab	44.5 x 38.1 (1.75 x 1.5)	10.31 (0.406)	3.18 (0.125)
1321-3R500-A	1321-3RA500-A	Side Facing Copper Tab	44.5 x 38.1 (1.75 x 1.5)	10.31 (0.406)	3.18 (0.125)
1321-3R500-B to 1321-3R500-C	–	Front Facing Copper Tab	76.2 x 38.1 (3.00 x 1.5)	13.49 & 6.35 (0.531 & 0.25)	6.35 (0.25)
–	1321-3RA500-B	Side Facing Copper Tab	44.5 x 38.1 (1.75 x 1.5)	10.31 (0.406)	3.18 (0.125)

Mounting Dimensions and Weights

IMPORTANT The dimensions and weights provided on the following pages are for estimating purposes only. Conduit entry locations for floor mounted enclosures are the responsibility of the installer. Contact your Allen-Bradley Sales Office if certified drawings are required for planning and installation.

IP11 (NEMA/UL Type 1)

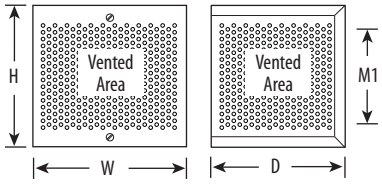

Cabinet 1 – Wall Mounted

Catalog Number 1321- …	Unit	Dimensions in mm (in.) and Weights in kg (lbs.)				
		H	W	D	M1	Weight (Cabinet Only)
3RA1-A to 3RA18-B	Cabinet 1	203 (8.0)	203 (8.0)	152 (6.0)	140 (5.5)	3.2 (7)

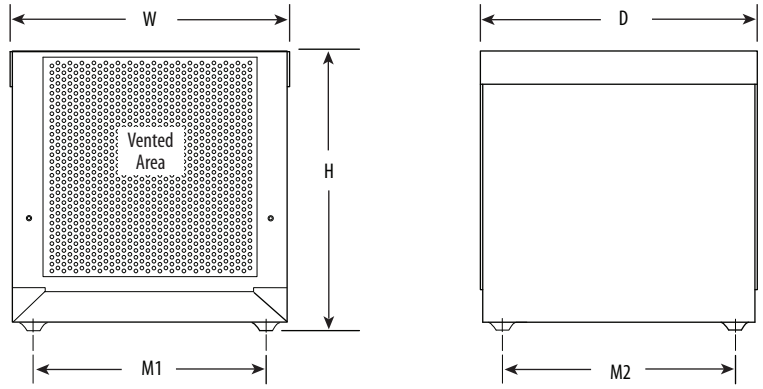

Cabinet 2 – Floor Mounted

Catalog Number 1321- …	Unit	Dimensions in mm (in.) and Weights in kg (lbs.)					
		H	W	D	Feet M1	Feet M2	Weight (Cabinet Only)
3RA18-C to 3RAB250-A	Cabinet 2	330 (13.0)	336 (13.2)	332 (13.1)	279 (11.0)	279 (11.0)	8.2 (18)

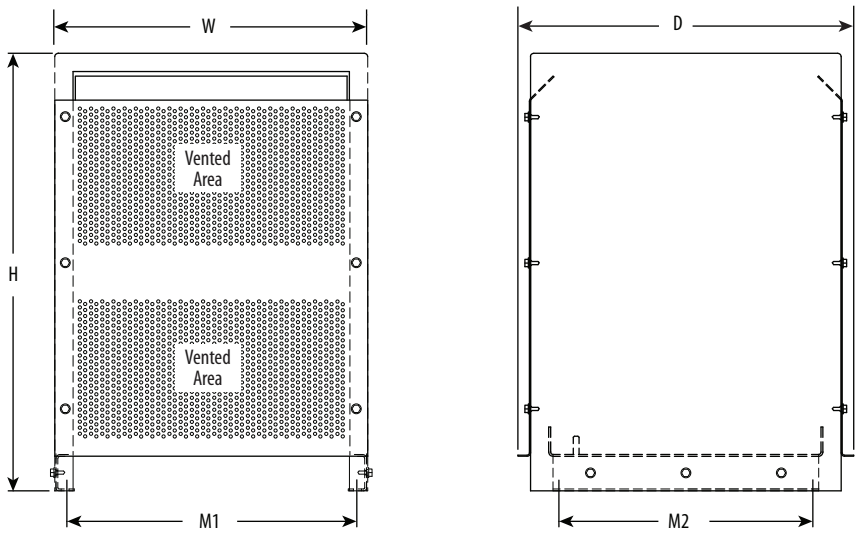

Cabinet 3 – Floor Mounted

Catalog Number 1321- …	Unit	Dimensions in mm (in.) and Weights in kg (lbs.)					
		H	W	D	Feet M1	Feet M2	Weight (Cabinet Only)
3RA250-B to 3RA500-A	Cabinet 3	610 (24.0)	429 (16.9)	467 (18.4)	406 (16.0)	343 (13.5)	12.2 (27)

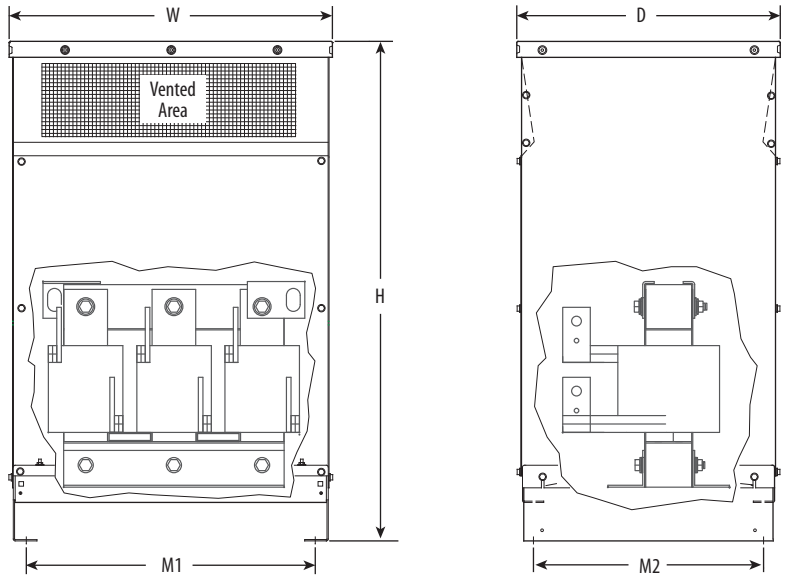

Cabinets 4 & 5 – Floor Mounted

Catalog Number 1321- …	Unit	Dimensions in mm (in.) and Weights in kg (lbs.)					
		H	W	D	Feet M1	Feet M2	Weight (1) (Cabinet Only)
3RA500-B to 3RA600-C	Cabinet 4	1194 (47.0)	674 (26.6)	633 (24.9)	592 (23.3)	552 (21.8)	72.1 (159)
3RA750-A to 3RA850-B 3RA850-C to 3RA1000-C	Cabinet 5	1194 (47.0)	776 (30.6)	633 (24.9)	694 (27.3)	552 (21.8)	72.1 (159)

(1) For total weight - add enclosure weight to specific reactor weight.

IP00/Open

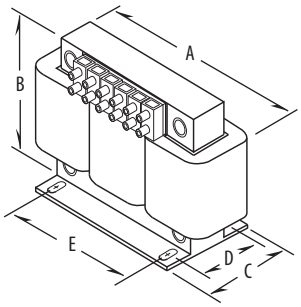

IP00 /Open, 45 Amps (fundamental) and Below

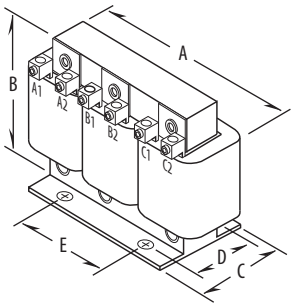

IP00/Open, 80 Amps (fundamental) and Above

Sizing Guidelines

Fundamental amps are used for sizing the reactor to be equal to or slightly higher than the total motor FLA. Sizing reactors to drive ampere ratings alone may result in mis-sizing the reactor.

Catalog Number	Fundamental Amps	Inductance - mH (Based on Fundamental Amps)	Watts Loss	Dimensions in mm (in.) and Weight in kg (lbs.)					
				A	B	C	D[1]	E	Weight
1321-3R1-A	1	100.0	14	112 (4.40)	104 (4.10)	79 (3.10)	60 (2.35)	37 (1.44)	1.8 (4)
1321-3R1-B		50.0	14.8	112 (4.40)	104 (4.10)	71 (2.80)	50 (1.98)	37 (1.44)	1.8 (4)
1321-3R1-C		36.0	12	112 (4.40)	104 (4.10)	71 (2.80)	50 (1.98)	37 (1.44)	1.4 (3)
1321-3R1-D		18.0	5	112 (4.40)	104 (4.10)	71 (2.80)	50 (1.98)	37 (1.44)	1.4 (3)
1321-3R2-A	2	12.0	7.5	112 (4.40)	104 (4.10)	71 (2.80)	50 (1.98)	37 (1.44)	1.8 (4)
1321-3R2-B		20.0	11.3	112 (4.40)	104 (4.10)	71 (2.80)	50 (1.98)	37 (1.44)	1.8 (4)
1321-3R2-C		32.0	16	112 (4.40)	104 (4.10)	71 (2.80)	50 (1.98)	37 (1.44)	1.8 (4)
1321-3R2-D		6.0	10.7	112 (4.40)	104 (4.10)	64 (2.50)	44 (1.73)	37 (1.44)	1.4 (3)
1321-3R4-A	4	3.0	14.5	112 (4.40)	104 (4.10)	71 (2.80)	50 (1.98)	37 (1.44)	1.8 (4)
1321-3R4-B		6.5	20	112 (4.40)	104 (4.10)	71 (2.80)	50 (1.98)	37 (1.44)	1.8 (4)
1321-3R4-C		9.0	20	112 (4.40)	104 (4.10)	86 (3.40)	60 (2.35)	37 (1.44)	2.3 (5)
1321-3R4-D		12.0	21	112 (4.40)	104 (4.10)	86 (3.40)	66 (2.60)	37 (1.44)	2.7 (6)
1321-3R8-A	8	1.5	19.5	152 (6.00)	121 (4.75)	76 (3.00)	53 (2.10)	51 (2.00)	3.2 (7)
1321-3R8-B		3.0	29	152 (6.00)	121 (4.75)	76 (3.00)	53 (2.10)	51 (2.00)	3.6 (8)
1321-3R8-C		5.0	25.3	152 (6.00)	121 (4.75)	86 (3.40)	67 (2.62)	51 (2.00)	5.0 (11)
1321-3R8-D		7.5	28	152 (6.00)	121 (4.75)	86 (3.40)	63 (2.48)	51 (2.00)	5.9 (13)
1321-3R12-A	12	1.25	26	152 (6.00)	127 (5.00)	84 (3.30)	53 (2.10)	51 (2.00)	4.1 (9)
1321-3R12-B		2.5	31	152 (6.00)	127 (5.00)	84 (3.30)	53 (2.10)	51 (2.00)	4.5 (10)
1321-3R12-C		4.2	41	152 (6.00)	127 (5.00)	99 (3.90)	70 (2.75)	51 (2.00)	8.2 (18)
1321-3R18-A	18	0.8	36	152 (6.00)	135 (5.30)	81 (3.20)	53 (2.10)	51 (2.00)	4.1 (9)
1321-3R18-B		1.5	43	152 (6.00)	135 (5.30)	89 (3.50)	63 (2.48)	51 (2.00)	5.5 (12)
1321-3R18-C		2.5	43	206 (8.10)	155 (6.10)	102 (4.00)	66 (2.60)	76 (3.00)	7.3 (16)
1321-3R25-A	25	0.5	48	183 (7.20)	147 (5.80)	89 (3.50)	60 (2.35)	76 (3.00)	5.0 (11)
1321-3R25-B		1.2	52	183 (7.20)	147 (5.80)	89 (3.50)	60 (2.35)	76 (3.00)	6.4 (14)
1321-3R25-C		2.0	61	183 (7.20)	147 (5.80)	109 (4.30)	79 (3.10)	76 (3.00)	9.1 (20)
1321-3R35-A	35	0.4	49	183 (7.20)	147 (5.80)	102 (4.00)	66 (2.60)	76 (3.00)	6.4 (14)
1321-3R35-B		0.8	54	183 (7.20)	147 (5.80)	102 (4.00)	70 (2.75)	76 (3.00)	7.3 (16)
1321-3R35-C		1.2	54	229 (9.00)	188 (7.40)	119 (4.70)	80 (3.16)	76 (3.00)	14.0 (30)

continued

Catalog Number	Fundamental Amps	Inductance - mH (Based on Fundamental Amps)	Watts Loss	Dimensions in mm (in.) and Weight in kg (lbs.)					
				A	B	C	D[1]	E	Weight
1321-3R45-A	45	0.3	54	229 (9.00)	188 (7.40)	119 (4.70)	80 (3.16)	76 (3.00)	10.0 (22)
1321-3R45-B		0.7	62	229 (9.00)	188 (7.40)	119 (4.70)	80 (3.16)	76 (3.00)	13.0 (28)
1321-3R45-C		1.2	65	229 (9.00)	185 (7.30)	135 (5.30)	93 (3.66)	76 (3.00)	18.0 (39)
1321-3R55-A	55	0.25	64	229 (9.00)	185 (7.30)	135 (5.30)	80 (3.16)	76 (3.00)	11.0 (24)
1321-3R55-B		0.5	67	229 (9.00)	178 (7.00)	135 (5.30)	80 (3.16)	76 (3.00)	12.0 (26)
1321-3R55-C		0.85	71	229 (9.00)	178 (7.00)	152 (6.00)	99 (3.91)	76 (3.00)	16.0 (35)
1321-3R80-A	80	0.2	82	229 (9.00)	183 (7.20)	160 (6.30)	88 (3.47)	92 (3.63)	11.3 (25)
1321-3R80-B		0.4	86	229 (9.00)	183 (7.20)	165 (6.50)	88 (3.47)	92 (3.63)	14.9 (33)
1321-3R80-C		0.7	96	274 (10.80)	216 (8.50)	173 (6.80)	106 (4.16)	92 (3.63)	28.0 (61)
1321-3R100-A	100	0.15	94	229 (9.00)	185 (7.30)	165 (6.50)	84 (3.30)	92 (3.63)	13.1 (29)
1321-3R100-B		0.3	84	229 (9.00)	185 (7.30)	173 (6.80)	93 (3.66)	92 (3.63)	16.8 (37)
1321-3R100-C		0.45	108	274 (10.80)	210 (8.30)	156 (6.20)	106 (4.16)	92 (3.63)	34.0 (74)
1321-3R130-A	130	0.1	108	229 (9.00)	178 (7.00)	118 (4.70)	80 (3.16)	76 (3.00)	13.1 (29)
1321-3R130-B		0.2	180	229 (9.00)	183 (7.20)	173 (6.80)	93 (3.66)	92 (3.63)	19.5 (43)
1321-3R130-C		0.3	128	279 (11.00)	216 (8.50)	156 (6.20)	106 (4.16)	92 (3.63)	29.0 (64)
1321-3R160-A	160	0.075	116	229 (9.00)	183 (7.20)	173 (6.80)	80 (3.16)	92 (3.63)	18.6 (41)
1321-3R160-B		0.15	149	274 (10.80)	211 (8.30)	152 (6.00)	88 (3.47)	92 (3.63)	23.0 (50)
1321-3R160-C		0.23	138	292 (11.50)	216 (8.50)	229 (9.00)	119 (4.69)	92 (3.63)	30.0 (67)
1321-3R200-A	200	0.055	124	229 (9.00)	191 (7.50)	185 (7.30)	106 (4.16)	76 (3.00)	17.2 (38)
1321-3R200-B[1]		0.110	168	229 (9.00)	191 (7.50)	211 (8.30)	112 (4.41)	76 (3.00)	24.5 (54)
1321-3R200-C[1]		0.185	146	274 (10.80)	211 (8.30)	254 (10.00)	150 (5.91)	92 (3.63)	45.4 (100)
1321-3RB250-A[1]	250	0.045	154	229 (9.00)	191 (7.50)	229 (9.00)	106 (4.19)	76 (3.00)	21.3 (47)
1321-3RB250-B[1]		0.090	231	274 (10.80)	216 (8.50)	229 (9.00)	131 (5.16)	117 (4.60)	36.3 (80)
1321-3RB250-C[1]		0.150	219	366 (14.40)	284 (11.20)	262 (10.30)	148 (5.82)	117 (4.60)	57.0 (125)
1321-3RB320-A[1]	320	0.040	224	274 (10.80)	229 (9.00)	211 (8.30)	131 (5.16)	117 (4.60)	36.3 (80)
1321-3RB320-B[1]		0.075	264	274 (10.80)	229 (9.00)	254 (10.00)	149 (5.88)	117 (4.60)	46.3 (102)
1321-3RB320-C[1]		0.125	351	366 (14.40)	286 (11.30)	267 (10.50)	181 (7.13)	117 (4.60)	72.6 (160)
1321-3RB400-A[1]	400	0.030	231	274 (10.80)	254 (10.00)	254 (10.00)	131 (5.16)	117 (4.60)	38.1 (84)
1321-3RB400-B[1]		0.060	333	381 (15.00)	286 (11.30)	292 (11.50)	172 (6.76)	117 (4.60)	53.5 (118)
1321-3RB400-C[1]		0.105	293	366 (14.40)	286 (11.30)	318 (12.50)	184 (7.26)	117 (4.60)	67.6 (149)
1321-3R500-A[1]	500	0.025	266	274 (10.80)	229 (9.00)	267 (10.50)	140 (5.50)	117 (4.60)	42.2 (93)
1321-3R500-B[1]		0.050	340	366 (14.40)	292 (11.50)	292 (11.50)	172 (6.76)	117 (4.60)	53.5 (118)
1321-3R500-C[1]		0.085	422	366 (14.40)	292 (11.50)	338 (13.30)	248 (9.76)	117 (4.60)	95.3 (210)
1321-3R600-A[1]	600	0.020	307	366 (14.40)	292 (11.50)	254 (10.00)	134 (5.26)	117 (4.60)	54.4 (120)
1321-3R600-B[1]		0.040	414	366 (14.40)	286 (11.30)	305 (12.00)	203 (8.00)	117 (4.60)	79.4 (175)
1321-3R600-C[1]		0.065	406	366 (14.40)	286 (11.30)	381 (15.00)	235 (9.26)	117 (4.60)	122.5 (270)
1321-3R750-A[1]	750	0.015	427	366 (14.40)	292 (11.50)	279 (11.00)	168 (6.63)	183 (7.20)	63.5 (140)
1321-3R750-B[1]		0.029	630	366 (14.40)	292 (11.50)	318 (12.50)	204 (8.01)	183 (7.20)	86.2 (190)
1321-3R750-C[1]		0.048	552	366 (14.40)	368 (14.50)	356 (14.00)	235 (9.26)	183 (7.20)	120.2 (265)
1321-3R750-E[1]		0.060	810	366 (14.40)	368 (14.50)	381 (15.00)	276 (10.88)	183 (7.20)	147.4 (325)
1321-3R850-A[1]	850	0.015	799	451 (17.80)	394 (15.50)	368 (14.50)	191 (7.50)	183 (7.20)	88.0 (195)
1321-3R850-B[1]		0.027	756	451 (17.80)	394 (15.50)	394 (15.50)	208 (8.20)	183 (7.20)	98.0 (215)
1321-3R850-C[1]		0.042	758	451 (17.80)	400 (15.80)	445 (17.50)	208 (8.20)	183 (7.20)	143.0 (315)
1321-3R1000-B[1]	1000	0.022	964	514 (20.25)	425 (16.80)	330 (13.00)	216 (8.50)	183 (7.20)	185.0 (408)
1321-3R1000-C[1]		0.038	960	514 (20.25)	425 (16.80)	381 (15.00)	273 (10.76)	183 (7.20)	267.2 (589)

(1) Removable lifting rings are supplied with the unit.

1321 Reflective Wave Reduction (RWR) Devices

Description of Reflected Wave Phenomenon

The inverter section of a drive does not produce sinusoidal voltage, but rather a series of voltage pulses created from the DC bus. These pulses travel down the motor cables to the motor and then reflected back to the drive. The reflection is dependant on the rise time of the drive output voltage, cable characteristics, cable length and motor impedance. If the voltage reflection is combined with another subsequent pulse, peak voltages can be at a destructive level. A single IGBT drive output may have reflected wave transient voltage stresses of up to twice (2 pu or per unit) the DC bus voltage between its own output wires. Multiple drive output wires in a single conduit or wire tray further increase output wire voltage stress between multi-drive output wires that are touching. Drive #1 may have a (+) 2 pu stress while drive #2 may simultaneously have a (–) 2 pu stress.

Refer to the Wiring & Grounding Guidelines for PWM Drives (publication DRIVES-IN001) for details.

Applying RWR Devices

At the Output of the Drive

In long motor lead applications, an Allen-Bradley 1321 RWR located between the drive and motor helps to reduce dv/dt and motor terminal peak voltages. The use of an RWR device also helps protect the drive from surge currents caused by rapid changes in the load.

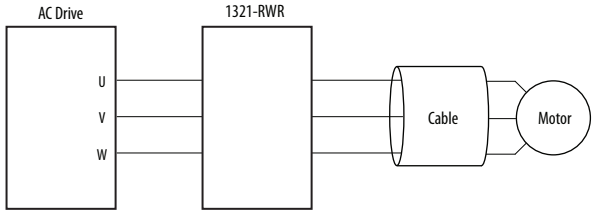

- Protect Motors from Long Lead Effects
- Reduce Output Voltage dv/dt
- Extend Semiconductor Life
- Reduce Surge Currents
- Reduce Motor Temperature
- Reduce Audible Motor Noise

Motor Protection

Allen-Bradley Reflective Wave Reduction devices can help protect motors from high peak voltages.

For IGBT drive applications with long drive-to-motor lead lengths, Allen-Bradley RWR devices can help protect against fast dv/dt rise times.

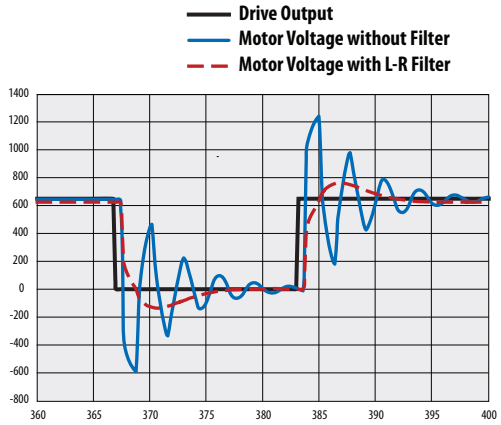

Catalog Number Explanation

IMPORTANT 1321-RWR products replace existing 1204-RWR products. However, 1204-RWRC modules (RWR and Common Mode Choke assembly) are still available.

Position	1-8	9	11	12
	1321 – RWR	8	– D	P
	a	b	c	d

a

Product	
Code	Type
1321-RWR	Reflective Wave Reduction Device

b1

Rating	
400-480V ac	
Code	Fundamental Amps
8	8
12	12
18	18
25	25
35	35
45	45
55	55
80	80
100	100
130	130
160	160
200	200
250	250
320	320

b2

Rating	
600V ac	
Code	Fundamental Amps
8	8
12	12
18	18
25	25
35	35
45	45
55	55
80	80
100	100
130	130
160	160
200	200
250	250

c

Voltage Rating	
Code	Voltage
D	400/480V ac
E	600V ac

d

Enclosure	
Code	Description
P	Panel Mount
A	NEMA/UL Type 1 ∗
W	NEMA/UL Type 3R ∗

∗ Not available

Specifications

Specification		Rating
Material	Enclosures	IP00 (Open)
	Terminations	1-45 Amp (fundamental) Ratings – Finger guard IP20 terminal block
		80-160 Amp (fundamental) Ratings – Solid copper box lugs
		200-400 Amp (fundamental) Ratings – Copper tab terminals
		401 Amps and Above – Copper tab terminals
Harmonic Compensation	All line reactors are compensated for the additional currents and high frequencies caused by the presence of harmonics	
General Protection	Impedance	3%
	Overload Rating	300% of fundamental current for (1) minute
IGBT Protection	First turn triple insulated offering protection up to 16kV	16,000 Volts per Microsecond dv/dt Protection 20 kHz Maximum Switching Frequency
Electrical	Max. Rated Voltage	600V AC, 50/60 Hz frequency
	Max. Switching Freq.	4 kHz
	Temperature Rise	115 degrees C.
	Dielectric Strength	4,000 Volts rms (5,600 volts peak)
	Inductance Curve	100% at 100% current, 100% at 150% current, 50% at 350% current
	Insulation System	Class H (180 degrees C or better)
	Impregnation	High bond strength epoxy impregnation, 4,000V high dielectric strength
Environmental	Ambient Temperature	45 degrees C.
	U.L. Listed	UL-508 - IP00, IP20, and IP11
	International	Conforms to VDE 0550
	CE	Not certified

Termination

Allen-Bradley 1321 RWR devices rated 45 Amps (fundamental) and below are supplied with an integral mounted terminal block. Devices rated from 55 to 160 Amps (fundamental) are supplied with box lugs. Devices rated 200 to 400 Amps (fundamental) can be supplied with box lugs or copper tabs. Above 400 Amps (fundamental), solid copper tabs are used.

Approximate Dimensions, Weights, Wire Size and Terminal Blocks

The dimensions and weights provided on the following page is for estimating purposes only. Contact your Allen-Bradley Sales Office if certified drawings are required for planning and installation.

RWR Catalog No. x = D (400V), E (600V)	Fund. Amps	Cont. Amps	Wire Size	Watts Loss		Figure (see page 15)	Dimensions *mm (in.)*					Weight
			mm^2 (AWG)	400V	600V		A	B	C	D	E	kg (lbs.)
1321-RWR8-xP	8	12	2.5-4.0 (14-12)	389	536	1	282.6 (11.13)	298.5 (11.75)	171.5 (6.75)	7.4 (0.29)	7.4 x 11.6 (0.29 x 0.46)	4.8 (10.5)
1321-RWR12-xP	12	18	2.5-4.0 (14-12)	391	406	1	282.6 (11.13)	298.5 (11.75)	174.6 (6.88)	7.4 (0.29)	7.4 x 11.6 (0.29 x 0.46)	5.7 (12.5)
1321-RWR18-xP	18	27	2.5-4.0 (14-12)	403	551	1	282.6 (11.13)	298.5 (11.75)	174.6 (6.88)	7.4 (0.29)	7.4 x 11.6 (0.29 x 0.46)	7.3 (16)
1321-RWR25-xP	25	37.5	6.0 (10)	412	562	1	282.6 (11.13)	298.5 (11.75)	193.7 (7.63)	7.4 (0.29)	7.4 x 11.6 (0.29 x 0.46)	7.7 (17)
1321-RWR35-xP	35	52.5	10.0-16.0 (8-6)	414	429	1	282.6 (11.13)	298.5 (11.75)	193.7 (7.63)	7.4 (0.29)	7.4 x 11.6 (0.29 x 0.46)	8.8 (19.5)
1321-RWR45-xP	45	67.5	16.0 (6)	422	572	2	319.1 (12.56)	392.1 (15.44)	158.8 (6.25)	10.5 (0.41)	10.3 x 17.9 (0.41 x 0.70)	17.5 (38.5)
1321-RWR55-xP	55	82.5	25.0 (4)	427	577	2	320.7 (12.63)	392.1 (15.44)	158.8 (6.25)	10.5 (0.41)	10.3 x 17.9 (0.41 x 0.70)	18.4 (40.5)
1321-RWR80-xP	80	120	35.0-50.0 (2-1/0)	446	341	2	322.3 (12.69)	395.3 (15.56)	177.8 (7.00)	10.5 (0.41)	10.3 x 17.9 (0.41 x 0.70)	20.4 (45)
1321-RWR100-xP	100	150	50.0-70.0 (1/0-2/0)	444	339	2	320.7 (12.63)	393.7 (15.50)	187.3 (7.38)	10.5 (0.41)	10.3 x 17.9 (0.41 x 0.70)	22.5 (49.5)
1321-RWR130-xP	130	195	70.0-120.0 (2/0-4/0)	630	495	2	317.5 (12.50)	390.5 (15.38)	187.3 (7.38)	10.5 (0.41)	10.3 x 17.9 (0.41 x 0.70)	24.5 (54)
1321-RWR160-xP	160	240	120.0 (4/0)	599	464	3	355.6 (14.00)	438.2 (17.25)	250.8 (9.88)	10.5 (0.41)	10.3 x 25.8 (0.41 x 1.02)	30.8 (68)
1321-RWR200-xP	200	300	120.0-185.0 (4/0-350 MCM)	618	612	2	317.5 (12.50)	393.7 (15.50)	214.3 (8.44)	10.5 (0.41)	10.3 x 17.9 (0.41 x 0.70)	29.9 (66)
1321-RWR250-xP	250	375	185.0 (350 MCM)	681	546	3	358.8 (14.13)	439.8 (17.31)	225.4 (8.88)	10.5 (0.41)	10.3 x 25.8 (0.41 x 1.02)	41.7 (92)
1321-RWR320-DP	320	480	240.0 (500 MCM)	489	NA	3	358.8 (14.13)	438.2 (17.25)	250.8 (9.88)	10.5 (0.41)	10.3 x 25.8 (0.41 x 1.02)	52.2 (115)

1321-RWR Assembly Components

400/480V

Reactor	Resistor Ohms	Resistor Watts	Wire Size (AWG)
1321-3R8-B	50	250	14-12
1321-3R12-B	50	250	14-12
1321-3R18-B	50	250	14-12
1321-3R25-B	50	250	10
1321-3R35-B	50	250	8-6
1321-3R45-B	50	250	6
1321-3R55-B	50	250	4
1321-3R80-B	50	250	2-1/0
1321-3R100-B	50	250	1/0-2/0
1321-3R130-B	50	300	2/0-4/0
1321-3R160-B	50	300	4/0
1321-3R200-B	50	300	4/0-350 MCM
1321-3RB250-B	50	300	350 MCM
1321-3R320-B	50	300	500 MCM

600V

Reactor	Resistor Ohms	Resistor Watts	Wire Size (AWG)
1321-3R8-B	50	375	14-12
1321-3R12-B	50	375	14-12
1321-3R18-B	50	375	14-12
1321-3R25-B	50	375	10
1321-3R35-B	50	375	8-6
1321-3R45-B	50	375	6
1321-3R55-B	50	375	4
1321-3R80-B	50	375	2-1/0
1321-3R100-B	50	375	1/0-2/0
1321-3R130-B	50	420	2/0-4/0
1321-3R160-B	50	420	4/0
1321-3R200-B	50	420	4/0-350 MCM
1321-3RB250-B	50	420	350 MCM

Dimension Reference

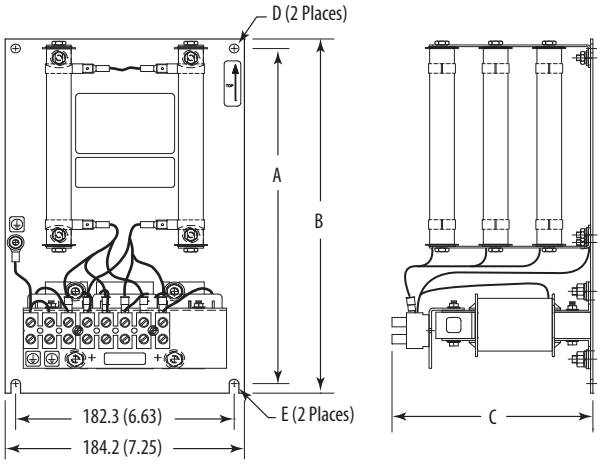

Figure 1

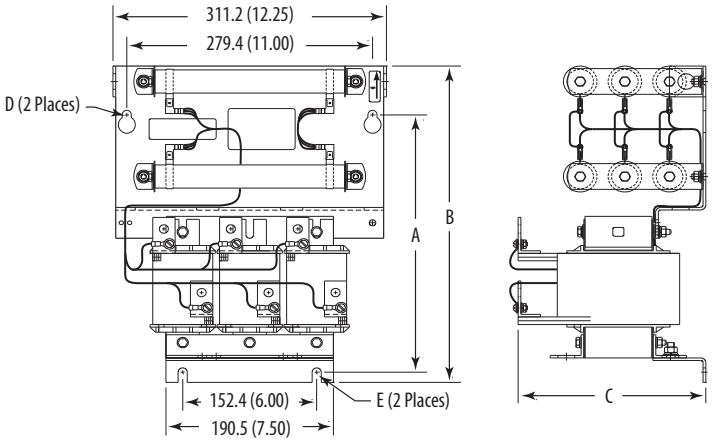

Figure 2

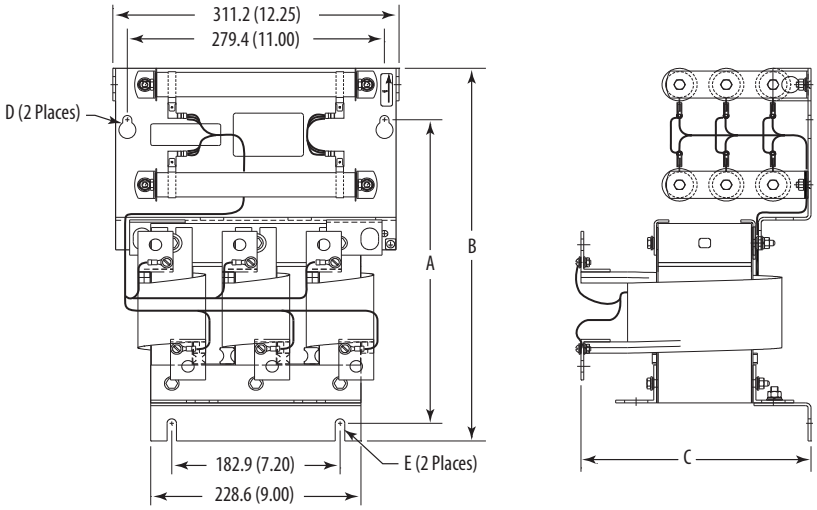

Figure 3

Terminal Block Details

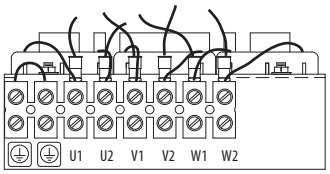

Figure 1

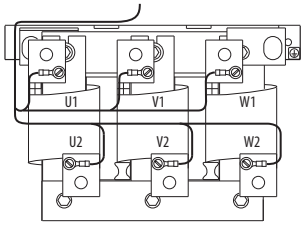

Figures 2 & 3

1321-3TH/3TW Series Three-Phase Isolation Transformers

Allen-Bradley 1321 Isolation Transformers are designed to meet the standard horsepower, voltage ratings and harmonics of the Allen-Bradley variable speed drives.

Catalog Number Explanation

Position	1-4	6	7	8	9	11	12
	1321	– 3	T	W	005	– A	A
	a	b	c	d	e	f	g

a

Product	
Code	Type
1321	Power Component

b

Phases	
Code	Description
3	Three-Phase

c

Device	
Code	Description
T	Transformer

d

Mounting	
Code	Description
W	Wall
H	Floor

e

Rating	
Code	kVA
005	5
007	7.5
011	11
014	14
020	20
027	27
034	34
040	40
051	51
063	63
075	75
093	93
118	118
145	145
175	175
220	220
275	275
330	330
440	440
550	550
660	660
770	770
880	880

f

Primary Voltage	
Code	Voltage
A	230V ac
B	460V ac
C	575V ac
X	208V ac

g

Secondary Voltage	
Code	Voltage
A	230V ac
B	460V ac
C	575V ac
X	208V ac

Specifications

Specification		Rating
Electrical	General	Delta primary, wye secondary, 60 Hz, Aluminum wound, Neutral terminal available for customer use
	Standard Voltage Taps	5.0-175 kVA 1-5.0% FCAN & FCBN
		220-880 kVA 1-2.5% FCAN & FCBN
	Insulation System	Class 220
		150 degrees C Rise Over 40 degrees C Ambient
		Peak 40 degrees C Ambient with 30 degrees C 24 Hour Avg.
	Efficiency	98% (2% losses)
Environmental	Elevation	Up to 1,000 Meters. Above 1,000 Meters, consult factory for derating
	U.L. Listed	File E112313
Construction	Enclosure	NEMA/UL Type 3R (IP32)
		Heavy duty ventilated enclosure with metal screens protecting all vents and finished in ANSI 61 grey
	Termination	Transformers up to 75kVA have integral high and low voltage lugs installed, suitable for copper or aluminum cable installation
	Conduit Entry	Standard knockouts on all enclosures
	Mounting	5-51 kVA units suitable for either floor or wall mounting. 63-75 kVA units suitable for floor, wall or ceiling mounting with mounting kit 1321-3TWM2 (Style NH3). Larger units are floor mount only
General	Impedance	4-6% impedance (nominal)
	Short Circuit Capability	Meets UL short circuit withstand capability
	Overload Rating	Windings designed to withstand overcurrent of 150% of rated load for 60 Seconds or 200% of rated load for 30 Seconds
	Duty Cycle	(1) start every (2) hours
	Thermostats	Thermostats with 1 N.C contact in each coil, wired in series and integral on all units
	K Factor	4
	Custom Options (consult factory for operating information)	50 Hz units
		Electrostatic shield (60dB attenuation typical)
		NEMA/UL Type 2 or IP20 (NEMA/UL Type 1)
		Core and coil construction (open)
		Additional HP or kVA sizes, voltages, extra primary taps, copper wound units, etc.

Approximate Mounting Dimensions

IP32, NEMA/UL Type 3R - Styles NH3 through NH4

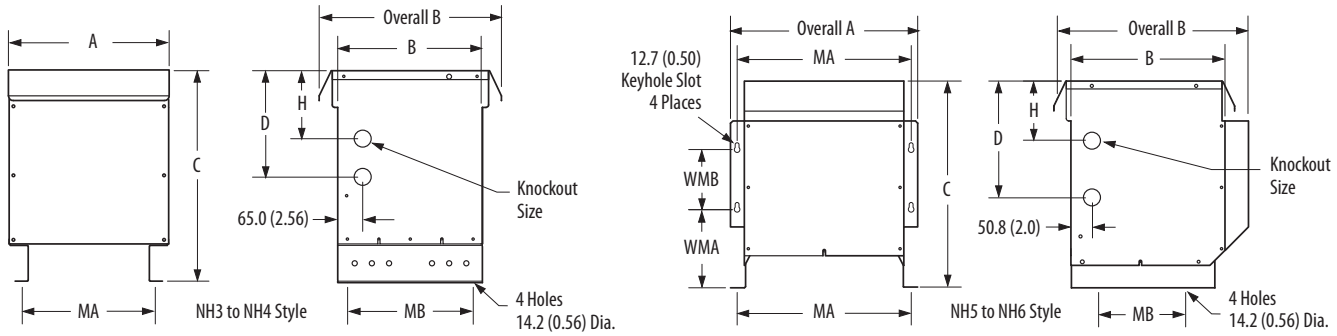

Dimensions in mm (in.)

Style	A	Overall A	B	Overall B	C	D	H	K	MA	MB	WMB	WMA
NH3	660.4 (26.00)	–	533.4 (21.00)	635.0 (25.00)	66.0 (38.00)	609.6 (24.00)	355.6 (14.00)	50.8 x 76.2 (2.00 x 3.00)	546.1 (21.50)	482.6 (19.00)	–	–
NH4	812.8 (32.00)	–	647.7 (25.50)	749.3 (29.50)	68.0 (41.00)	609.6 (24.00)	304.8 (12.00)	50.8 x 76.2 (2.00 x 3.00)	596.9 (23.50)	596.9 (23.50)	–	–
NH5 (1)	425.5 (16.75)	492.8 (19.40)	381.0 (15.00)	513.1 (20.20)	546.1 (21.50)	304.8 (12.00)	152.4 (6.00)	35.1 x 44.4 (1.38 x 1.75)	457.2 (18.00)	228.6 (9.00)	177.8 (7.00)	184.4 (7.26)
NH6 (1)	546.1 (21.50)	607.1 (23.90)	495.3 (19.50)	730.3 (28.75)	730.3 (28.75)	431.8 (17.00)	215.9 (8.50)	35.1 x 44.4 (1.38 x 1.75)	577.9 (22.75)	228.6 (9.00)	203.2 (8.00)	247.1 (9.73)

(1) Enclosure Styles NH1 and NH2 are replaced by NH5 and NH6 through 1321-3TH005 - 1321-3TH051 ratings.

IP32, NEMA/UL Type 3R -Styles NJ1 through NJ6

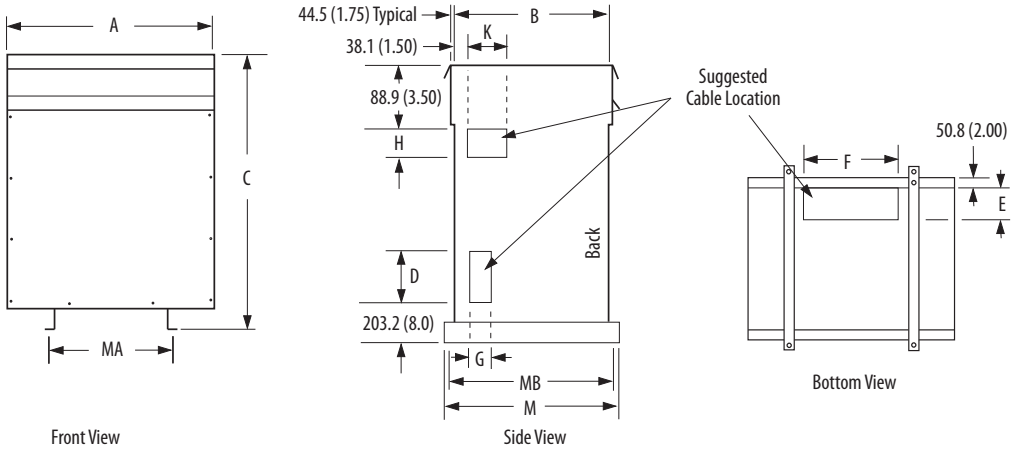

Dimensions in mm (in.)

Style	A	B	C	D	E	F	G	H	K	M	MA	MB
NJ1	1003.3 (39.50)	762.0 (30.00)	1308.1 (51.50)	254.0 (10.00)	190.5 (7.50)	546.1 (21.50)	203.2 (8.00)	165.1 (6.50)	342.9 (13.50)	863.6 (34.00)	609.6 (24.00)	812.8 (32.00)
NJ2	1239.1 (48.50)	836.6 (34.00)	1498.6 (59.00)	330.2 (13.00)	215.9 (8.50)	635.0 (25.00)	228.6 (9.00)	215.9 (8.50)	393.7 (15.50)	965.2 (38.00)	698.5 (27.50)	914.4 (36.00)
NJ3	1308.1 (51.50)	990.6 (39.00)	1676.4 (66.00)	406.4 (16.00)	241.3 (9.50)	800.1 (31.50)	254.0 (10.00)	292.1 (11.50)	457.2 (18.00)	1092.2 (43.00)	863.6 (34.00)	1041.4 (41.00)
NJ6	1625.6 (64.00)	1016.0 (40.00)	1727.2 (68.00)	406.4 (16.00)	266.7 (10.50)	952.5 (37.50)	279.4 (11.00)	292.1 (11.50)	457.2 (18.00)	1117.6 (44.00)	1016.0 (40.00)	1066.8 (42.00)

Wiring Diagrams, Ratings and Weights

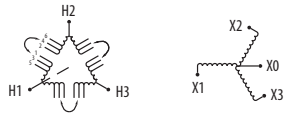

Wiring Diagram 1

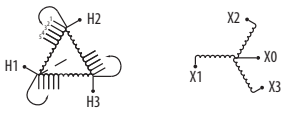

Wiring Diagram 2

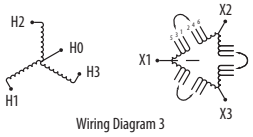

Wiring Diagram 3

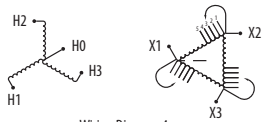

Wiring Diagram 4

kVA	Catalog Number	Style	Primary Voltage	Secondary Voltage	Wiring Diagram	Weight kg (lbs.)
5	1321-3TW005-AA	NH5	230	230	1	63.5 (140)
	1321-3TW005-AB	NH5	230	460	3	63.5 (140)
	1321-3TW005-AC	NH5	230	575	3	63.5 (140)
	1321-3TW005-BA	NH5	460	230	1	63.5 (140)
	1321-3TW005-BB	NH5	460	460	1	63.5 (140)
	1321-3TW005-BC	NH5	460	575	3	63.5 (140)
	1321-3TW005-CA	NH5	575	230	1	63.5 (140)
	1321-3TW005-CB	NH5	575	460	1	63.5 (140)
	1321-3TW005-CC	NH5	575	575	1	63.5 (140)
	1321-3TW005-XX	NH5	208	208	1	63.5 (140)
40	1321-3TW040-AA	NH6	230	230	2	145.2 (320)
	1321-3TW040-AB	NH6	230	460	4	145.2 (320)
	1321-3TW040-AC	NH6	230	575	4	145.2 (320)
	1321-3TW040-BA	NH6	460	230	2	145.2 (320)
	1321-3TW040-BB	NH6	460	460	2	145.2 (320)
	1321-3TW040-BC	NH6	460	575	4	145.2 (320)
	1321-3TW040-CA	NH6	575	230	2	145.2 (320)
	1321-3TW040-CB	NH6	575	460	2	145.2 (320)
	1321-3TW040-CC	NH6	575	575	2	145.2 (320)
51	1321-3TW051-AA	NH6	230	230	2	190.5 (420)
	1321-3TW051-AB	NH6	230	460	4	190.5 (420)
	1321-3TW051-AC	NH6	230	575	4	190.5 (420)
	1321-3TW051-BA	NH6	460	230	2	190.5 (420)
	1321-3TW051-BB	NH6	460	460	2	190.5 (420)
	1321-3TW051-BC	NH6	460	575	4	190.5 (420)
	1321-3TW051-CA	NH6	575	230	2	190.5 (420)
	1321-3TW051-CB	NH6	575	460	2	190.5 (420)
	1321-3TW051-CC	NH6	575	575	2	190.5 (420)
63	1321-3TH063-AA	NH3	230	230	2	244.9 (540)
	1321-3TH063-AB	NH3	230	460	4	244.9 (540)
	1321-3TH063-AC	NH3	230	575	4	244.9 (540)
	1321-3TH063-BA	NH3	460	230	2	244.9 (540)
	1321-3TH063-BB	NH3	460	460	2	244.9 (540)
	1321-3TH063-BC	NH3	460	575	4	244.9 (540)
	1321-3TH063-CA	NH3	575	230	2	244.9 (540)
	1321-3TH063-CB	NH3	575	460	2	244.9 (540)
	1321-3TH063-CC	NH3	575	575	2	244.9 (540)
75	1321-3TH075-AA	NH3	230	230	2	263.1 (580)
	1321-3TH075-AB	NH3	230	460	4	263.1 (580)
	1321-3TH075-AC	NH3	230	575	4	263.1 (580)
	1321-3TH075-BA	NH3	460	230	2	263.1 (580)
	1321-3TH075-BB	NH3	460	460	2	263.1 (580)
	1321-3TH075-BC	NH3	460	575	4	263.1 (580)
	1321-3TH075-CA	NH3	575	230	2	263.1 (580)
	1321-3TH075-CB	NH3	575	460	2	263.1 (580)
	1321-3TH075-CC	NH3	575	575	2	263.1 (580)
93	1321-3TH093-AA	NH3	230	230	2	285.8 (630)
	1321-3TH093-AB	NH3	230	460	4	285.8 (630)
	1321-3TH093-AC	NH3	230	575	4	285.8 (630)
	1321-3TH093-BA	NH3	460	230	2	285.8 (630)
	1321-3TH093-BB	NH3	460	460	2	285.8 (630)
	1321-3TH093-BC	NH3	460	575	4	285.8 (630)
	1321-3TH093-CA	NH3	575	230	2	285.8 (630)
	1321-3TH093-CB	NH3	575	460	2	285.8 (630)
	1321-3TH093-CC	NH3	575	575	2	285.8 (630)
118	1321-3TH118-AA	NH3	230	230	2	328.9 (725)
	1321-3TH118-AB	NH3	230	460	4	328.9 (725)
	1321-3TH118-AC	NH3	230	575	4	328.9 (725)
	1321-3TH118-BA	NH3	460	230	2	328.9 (725)
	1321-3TH118-BB	NH3	460	460	2	328.9 (725)
	1321-3TH118-BC	NH3	460	575	4	328.9 (725)
	1321-3TH118-CA	NH3	575	230	2	328.9 (725)
	1321-3TH118-CB	NH3	575	460	2	328.9 (725)
	1321-3TH118-CC	NH3	575	575	2	328.9 (725)
145	1321-3TH145-AA	NH4	230	230	2	408.2 (900)
	1321-3TH145-AB	NH4	230	460	4	408.2 (900)
	1321-3TH145-AC	NH4	230	575	4	408.2 (900)
	1321-3TH145-BA	NH4	460	230	2	408.2 (900)
	1321-3TH145-BB	NH4	460	460	2	408.2 (900)
	1321-3TH145-BC	NH4	460	575	4	408.2 (900)
	1321-3TH145-CA	NH4	575	230	2	408.2 (900)
	1321-3TH145-CB	NH4	575	460	2	408.2 (900)
	1321-3TH145-CC	NH4	575	575	2	408.2 (900)

continued

kVA	Catalog Number	Style	Primary Voltage	Secondary Voltage	Wiring Diagram	Weight kg (lbs.)
175	1321-3TH175-AA	NH4	230	230	2	453.6 (1000)
	1321-3TH175-AB	NH4	230	460	4	453.6 (1000)
	1321-3TH175-AC	NH4	230	575	4	453.6 (1000)
	1321-3TH175-BA	NH4	460	230	2	453.6 (1000)
	1321-3TH175-BB	NH4	460	460	2	453.6 (1000)
	1321-3TH175-BC	NH4	460	575	4	453.6 (1000)
	1321-3TH175-CA	NH4	575	230	2	453.6 (1000)
	1321-3TH175-CB	NH4	575	460	2	453.6 (1000)
	1321-3TH175-CC	NH4	575	575	2	453.6 (1000)
220	1321-3TH220-AA	NJ1	230	230	2	589.7 (1300)
	1321-3TH220-AB	NJ1	230	460	4	589.7 (1300)
	1321-3TH220-AC	NJ1	230	575	4	589.7 (1300)
	1321-3TH220-BA	NJ1	460	230	2	589.7 (1300)
	1321-3TH220-BB	NJ1	460	460	2	589.7 (1300)
	1321-3TH220-BC	NJ1	460	575	4	589.7 (1300)
	1321-3TH220-CA	NJ1	575	230	2	589.7 (1300)
	1321-3TH220-CB	NJ1	575	460	2	589.7 (1300)
	1321-3TH220-CC	NJ1	575	575	2	589.7 (1300)
275	1321-3TH275-AA	NJ1	230	230	2	680.4 (1500)
	1321-3TH275-AB	NJ1	230	460	4	680.4 (1500)
	1321-3TH275-AC	NJ1	230	575	4	680.4 (1500)
	1321-3TH275-BA	NJ1	460	230	2	680.4 (1500)
	1321-3TH275-BB	NJ1	460	460	2	680.4 (1500)
	1321-3TH275-BC	NJ1	460	575	4	680.4 (1500)
	1321-3TH275-CA	NJ1	575	230	2	680.4 (1500)
	1321-3TH275-CB	NJ1	575	460	2	680.4 (1500)
	1321-3TH275-CC	NJ1	575	575	2	680.4 (1500)
330	1321-3TH330-AA	NJ1	230	230	2	771.1 (1700)
	1321-3TH330-AB	NJ1	230	460	4	771.1 (1700)
	1321-3TH330-AC	NJ1	230	575	4	771.1 (1700)
	1321-3TH330-BA	NJ1	460	230	2	771.1 (1700)
	1321-3TH330-BB	NJ1	460	460	2	771.1 (1700)
	1321-3TH330-BC	NJ1	460	575	4	771.1 (1700)
	1321-3TH330-CA	NJ1	575	230	2	771.1 (1700)
	1321-3TH330-CB	NJ1	575	460	2	771.1 (1700)
	1321-3TH330-CC	NJ1	575	575	2	771.1 (1700)
440	1321-3TH440-AA	NJ2	230	230	1	907.2 (2000)
	1321-3TH440-AB	NJ2	230	460	3	907.2 (2000)
	1321-3TH440-AC	NJ2	230	575	3	907.2 (2000)
	1321-3TH440-BA	NJ2	460	230	1	907.2 (2000)
	1321-3TH440-BB	NJ2	460	460	1	907.2 (2000)
	1321-3TH440-BC	NJ2	460	575	3	907.2 (2000)
	1321-3TH440-CA	NJ2	575	230	1	907.2 (2000)
	1321-3TH440-CB	NJ2	575	460	1	907.2 (2000)
	1321-3TH440-CC	NJ2	575	575	1	907.2 (2000)
550	1321-3TH550-AA	NJ2	230	230	1	1134.0 (2500)
	1321-3TH550-AB	NJ2	230	460	3	1134.0 (2500)
	1321-3TH550-AC	NJ2	230	575	3	1134.0 (2500)
	1321-3TH550-BA	NJ2	460	230	1	1134.0 (2500)
	1321-3TH550-BB	NJ2	460	460	1	1134.0 (2500)
	1321-3TH550-BC	NJ2	460	575	3	1134.0 (2500)
	1321-3TH550-CA	NJ2	575	230	1	1134.0 (2500)
	1321-3TH550-CB	NJ2	575	460	1	1134.0 (2500)
	1321-3TH550-CC	NJ2	575	575	1	1134.0 (2500)
660	1321-3TH660-AA	NJ3	230	230	1	1360.8 (3000)
	1321-3TH660-AB	NJ3	230	460	3	1360.8 (3000)
	1321-3TH660-AC	NJ3	230	575	3	1360.8 (3000)
	1321-3TH660-BA	NJ3	460	230	1	1360.8 (3000)
	1321-3TH660-BB	NJ3	460	460	1	1360.8 (3000)
	1321-3TH660-BC	NJ3	460	575	3	1360.8 (3000)
	1321-3TH660-CA	NJ3	575	230	1	1360.8 (3000)
	1321-3TH660-CB	NJ3	575	460	1	1360.8 (3000)
	1321-3TH660-CC	NJ3	575	575	1	1360.8 (3000)
770	1321-3TH770-AA	NJ3	230	230	1	1587.6 (3500)
	1321-3TH770-AB	NJ3	230	460	3	1587.6 (3500)
	1321-3TH770-AC	NJ3	230	575	3	1587.6 (3500)
	1321-3TH770-BA	NJ3	460	230	1	1587.6 (3500)
	1321-3TH770-BB	NJ3	460	460	1	1587.6 (3500)
	1321-3TH770-BC	NJ3	460	575	3	1587.6 (3500)
	1321-3TH770-CA	NJ3	575	230	1	1587.6 (3500)
	1321-3TH770-CB	NJ3	575	460	1	1587.6 (3500)
	1321-3TH770-CC	NJ3	575	575	1	1587.6 (3500)
880	1321-3TH880-AA	NJ6	230	230	1	1678.3 (3700)
	1321-3TH880-AB	NJ6	230	460	3	1678.3 (3700)
	1321-3TH880-AC	NJ6	230	575	3	1678.3 (3700)
	1321-3TH880-BA	NJ6	460	230	1	1678.3 (3700)
	1321-3TH880-BB	NJ6	460	460	1	1678.3 (3700)
	1321-3TH880-BC	NJ6	460	575	3	1678.3 (3700)
	1321-3TH880-CA	NJ6	575	230	1	1678.3 (3700)
	1321-3TH880-CB	NJ6	575	460	1	1678.3 (3700)
	1321-3TH880-CC	NJ6	575	575	1	1678.3 (3700)

1321-M Common Mode Chokes

1321-M Common Mode Chokes can be installed with 1305, 1336 PLUS II, 1336 IMPACT™ and PowerFlex® 70/700 AC drives. When installed at the drive output the common mode choke helps to guard against interference with other electrical equipment (Programmable Controllers, sensors, analog circuits, etc.). In addition, reducing the PWM carrier frequency reduces the effects and lowers the risk of common mode noise interference.

Catalog Number Explanation

Position	1-4		6		7
	1321	–	M		009
	a		b		c

a

Product	
Code	Type
1321	Power Component

b

Device	
Code	Description
M	Common Mode Choke

c

Current Rating	
Code	Amps
001 ∗	1
009	9
048	48
180	180
670	670

∗ Same core as 1321-M009. Can be used in place of the M009, M048 or M180 if the terminal block and windings typical of those ratings are not desired.

Ratings

Choke Type	Used With	Ratings	Catalog Number
Open Style, 9A (with terminal strip)	All Drives	Communication Cables, Analog Signal Cables, etc.	1321-M001
	PowerFlex 70/700	0.37-1.5 kW (0.5-2 HP) 230V 0.37-4 kW (0.5-5 HP) 480V	1321-M009
	1305 and 1336 PLUS II	0.37-2.2 kW (0.5-2 HP) 230V 0.37-3.7 kW (0.5-5 HP) 480V	
	1336 IMPACT	0.37-3.7 kW (0.5-5 HP) 480V	
Open Style, 48A	PowerFlex 70/700	2.2-11 kW (3-15 HP) 230V 5.5-22 kW (7.5-30 HP) 480V 5.5-30 kW (7.5-40 HP) 600V	1321-M048
	1336 PLUS II	2.2-11 kW (3-15 HP) 230V 5.5-22 kW (7.5-30 HP) 480V 0.75-30 kW (1-40 HP) 600V	
	1336 IMPACT	5.5-22 kW (7.5-30 HP) 480V 5.5-30 kW (7.5-40 HP) 600V	
Open Style, 180A	PowerFlex 70/700	15-45 kW (20-60 HP) 230V 30-110 kW (40-150 HP) 480V 37-110 kW (50-150 HP) 600V	1321-M180
	1336 PLUS II	15-45 kW (20-60 HP) 230V 30-112 kW (40-150 HP) 480V 37-112 kW (50-150 HP) 600V	
	1336 IMPACT	30-112 kW (40-150 HP) 480V 37-93 kW (50-125 HP) 600V	
Open Style, 670A	PowerFlex 70/700	55-66 kW (75-100 HP) 230V 110-350 kW (150-500 HP) 480V 132-223 kW (200-300 HP) 600V	1321-M670
	1336 PLUS II	56-93 kW (75-125 HP) 230V 112-448 kW (150-600 HP) 480V 149-448 kW (200-600 HP) 600V	
	1336 IMPACT	112-448 kW (150-600 HP) 480V 149-448 kW (200-600 HP) 600V	

Approximate Mounting Dimensions

1321-M001

Dimensions are in mm (in.)

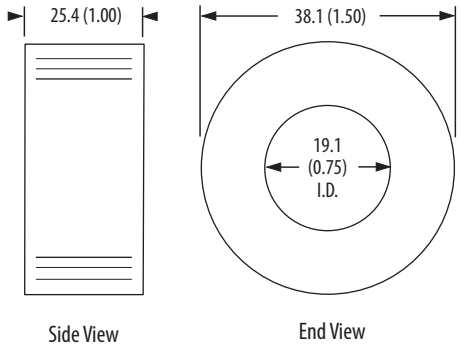

1321-M009

Dimensions are in mm (in.)

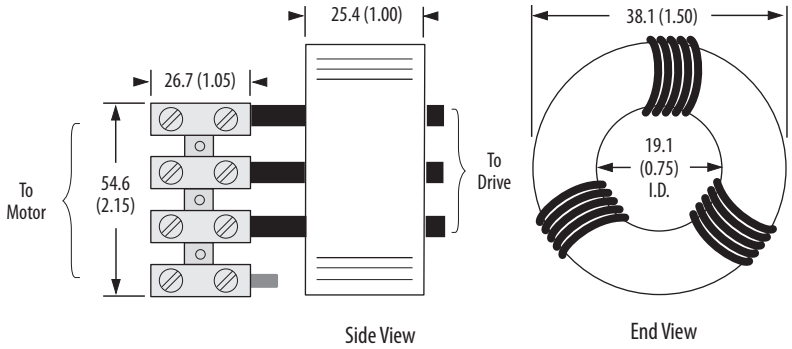

1321-M048

Dimensions are in mm (in.)

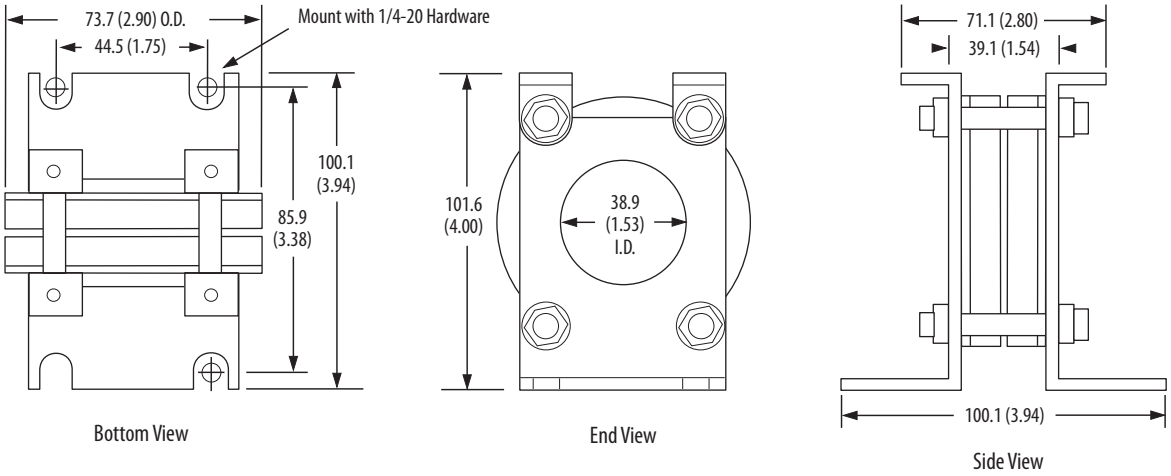

1321-M180

Dimensions are in mm (in.)

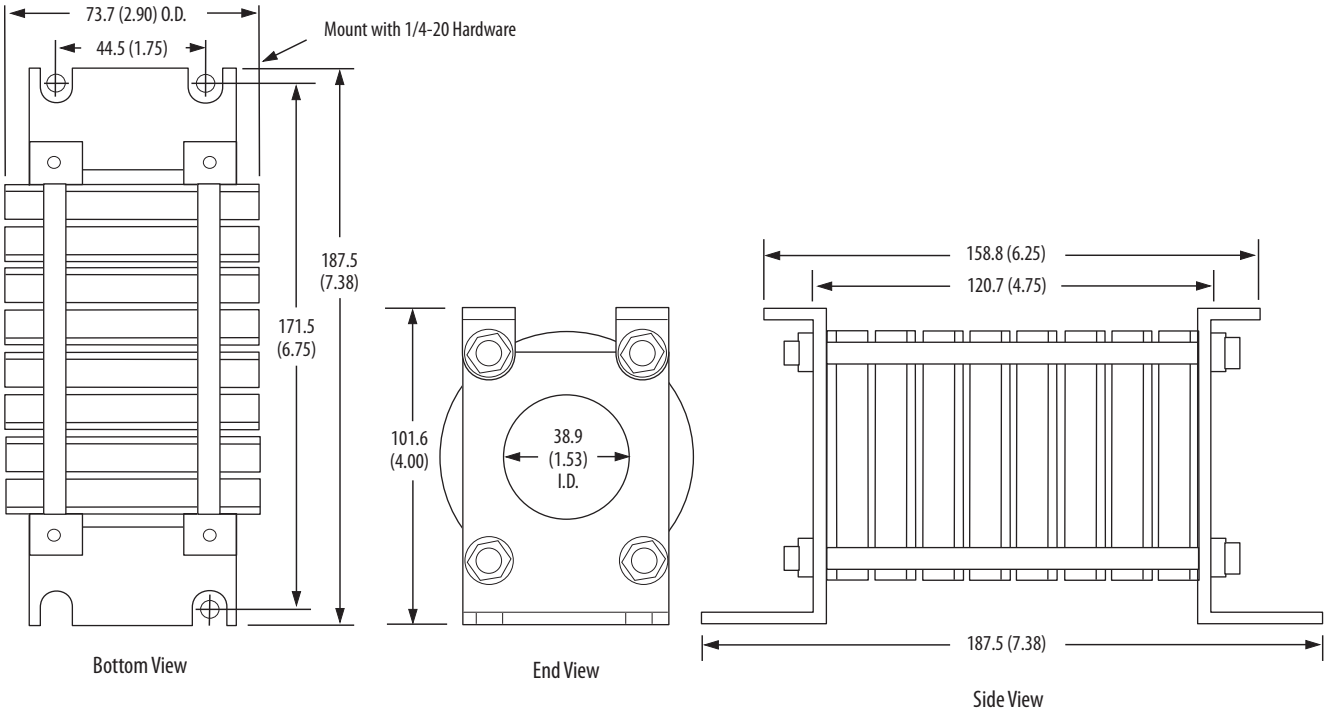

1321-M670

Dimensions are in mm (in.)

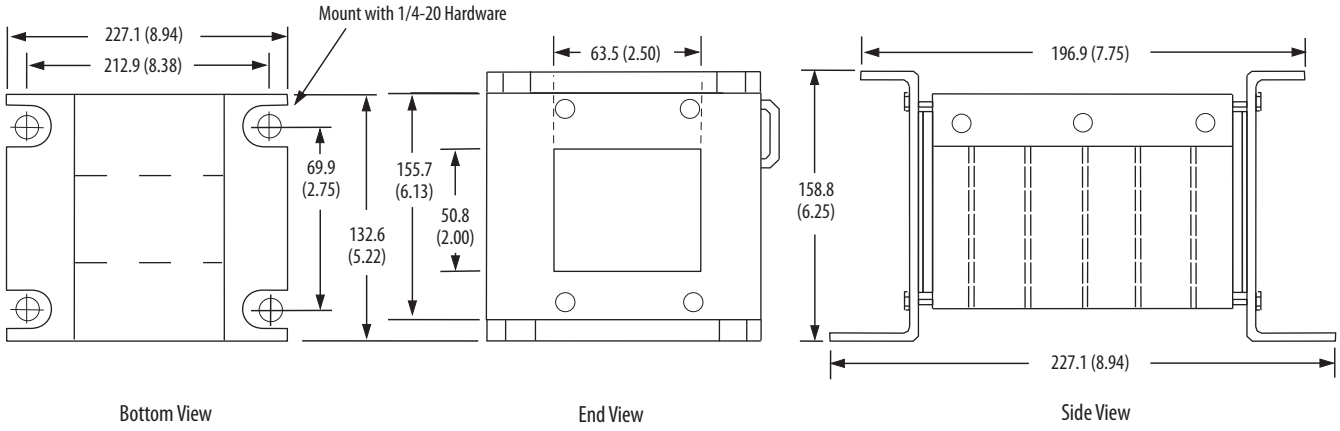

1321-DC DC Link Chokes

1321-DC DC Link Chokes can be installed with Frame C PowerFlex® 40 and all PowerFlex 400 drives. Add DC Link Chokes in series with the internal DC Bus to:

- Reduce AC Input Line Harmonics
- Help meet IEEE-519 limits
- Absorb Voltage/Current Spikes
- Reduce AC Ripple on DC Bus
- Reduce dV/dT and dI/dT rates
- Solve nuisance overvoltage tripping
- Reduce DC Bus Transient Overvoltage

Catalog Number Explanation

Position	1-4	6	7	8	9
	1321	– DC	12	–	1
	a	b	c		d

a

Product	
Code	Type
1321	Power Component

b

Device	
Code	Description
DC	DC Link Choke

c

Current Rating	
Code	Amps
9	9
12	12
18	18
25	25
32	32
40	40

d

Inductance Rating	
Code	Description
1	Each DC Link Choke current rating may have more than one inductance rating. Refer to *Ratings* on page 25 for specific values.
2	
3	
4	

Specifications

Specification	Rating
General	UL-508 component recognized (File E180243)
	1000 Volts DC maximum
	For ripple frequency of 300 Hz or 360 Hz
	50 degrees C temperature rise
	Suitable for 40 degrees C ambient temperature
	Class B insulation system (130 degrees C)
	Suitable for ripple current of 10% peak-to-peak
	Touchsafe terminals in many ratings

Special Features

- Solid copper box lug type terminals on most sizes
- Specially constructed and epoxy impregnated for low noise
- Customized ratings also available - contact the factory for custom mounting, inductance, current or ripple requirements

Ratings

Catalog Number	Type	DC Amps	mH	Watts	Lug Size	Torque
1321-DC9-2	Open Style	9	3.22	7	22-14	4.5
1321-DC12-1	Open Style	12	1	5	22-14	4.5
1321-DC12-2	Open Style	12	2.1	7	18-4	20
1321-DC18-1	Open Style	18	0.65	5	18-4	20
1321-DC18-4	Open Style	18	3.75	17	18-4	20
1321-DC25-4	Open Style	25	1.75	13	18-4	20
1321-DC32-1	Open Style	32	0.85	11	18-4	20
1321-DC32-2	Open Style	32	1.62	14	18-4	20
1321-DC32-3	Open Style	32	2.68	21	18-4	20
1321-DC40-2	Open Style	40	0.75	15	18-4	20
1321-DC40-4	Open Style	40	2	29	18-4	20

Approximate Mounting Dimensions

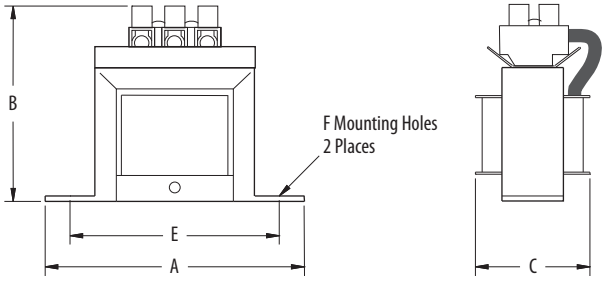

Figure 1

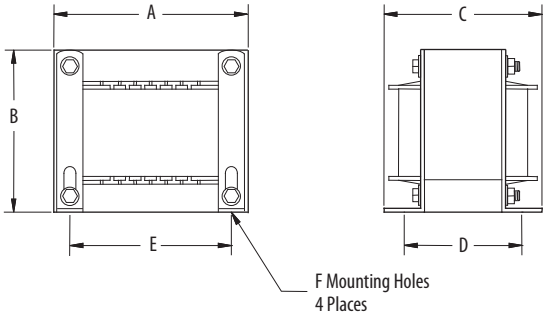

Figure 2

Catalog Number	Figure	Dimensions in mm (in.)					
		A	B	C	D	E	F
1321-DC9-2	1	95.3 (3.75)	82.6 (3.25)	50.8 (2)	(NA)	79.5 (3.13)	47.5 DIA. (0.187 DIA.)
1321-DC12-1	1	95.3 (3.75)	82.6 (3.25)	44.5 (1.75)	(NA)	79.5 (3.13)	47.5 DIA. (0.187 DIA.)
1321-DC12-2	2	96.8 (3.81)	114.3 (4.5)	71.6 (2.82)	50.8 (2)	79.5 (3.13)	5.2 x 8.3 (0.203 x 0.328)
1321-DC18-1	1	95.3 (3.75)	82.6 (3.25)	50.8 (2)	(NA)	79.5 (3.13)	47.5 DIA. (0.187 DIA.)
1321-DC18-4	2	117.6 (4.63)	133.4 (5.25)	101.6 (4)	63.5 (2.5)	95.3 (3.75)	5.2 x 8.3 (0.203 x 0.328)
1321-DC25-4	2	96.8 (3.81)	114.3 (4.5)	76.2 (3)	63.5 (2.5)	79.5 (3.13)	5.2 x 8.3 (0.203 x 0.328)
1321-DC32-1	2	96.8 (3.81)	114.3 (4.5)	84.3 (3.32)	63.5 (2.5)	79.5 (3.13)	5.2 x 8.3 (0.203 x 0.328)
1321-DC32-2	2	117.6 (4.63)	133.4 (5.25)	108.0 (4.25)	76.2 (3)	95.3 (3.75)	5.2 x 8.3 (0.203 x 0.328)
1321-DC32-3	2	117.6 (4.63)	133.4 (5.25)	133.4 (5.25)	101.6 (4)	95.3 (3.75)	5.2 x 8.3 (0.203 x 0.328)
1321-DC40-2	2	96.8 (3.81)	114.3 (4.5)	95.3 (3.75)	76.2 (3)	79.5 (3.13)	5.2 x 8.3 (0.203 x 0.328)
1321-DC40-4	2	165.1 (6.5)	166.4 (6.55)	152.4 (6)	85.9 (3.38)	134.9 (5.31)	7.1 x 13.2 (0.28 x 0.52)

Important User Information

Solid-state equipment has operational characteristics differing from those of electromechanical equipment. Safety Guidelines for the Application, Installation and Maintenance of Solid State Controls (publication SGI-1.1 available from your local Rockwell Automation sales office or online at http://www.rockwellautomation.com/literature/) describes some important differences between solid-state equipment and hard-wired electromechanical devices. Because of this difference, and also because of the wide variety of uses for solid-state equipment, all persons responsible for applying this equipment must satisfy themselves that each intended application of this equipment is acceptable.

In no event will Rockwell Automation, Inc. be responsible or liable for indirect or consequential damages resulting from the use or application of this equipment.

The examples and diagrams in this publication are included solely for illustrative purposes. Because of the many variables and requirements associated with any particular installation, Rockwell Automation, Inc. cannot assume responsibility or liability for actual use based on the examples and diagrams.

No patent liability is assumed by Rockwell Automation, Inc. with respect to use of information, circuits, equipment, or software described in this manual.

Reproduction of the contents of this manual, in whole or in part, without written permission of Rockwell Automation, Inc., is prohibited.

Documentation Feedback

Your comments will help us serve your documentation needs better. If you have any suggestions on how to improve this document, complete this form, publication RA-DU002, available at http://www.rockwellautomation.com/literature/.

Allen-Bradley, Rockwell Software, Rockwell Automation, and LISTEN. THINK. SOLVE are trademarks of Rockwell Automation, Inc.
Trademarks not belonging to Rockwell Automation are property of their respective companies.

Rockwell Otomasyon Ticaret A.Ş., Kar Plaza İş Merkezi E Blok Kat:6 34752 İçerenköy, İstanbul, Tel: +90 (216) 5698400

www.rockwellautomation.com

Power, Control and Information Solutions Headquarters
Americas: Rockwell Automation, 1201 South Second Street, Milwaukee, WI 53204-2496 USA, Tel: (1) 414.382.2000, Fax: (1) 414.382.4444
Europe/Middle East/Africa: Rockwell Automation NV, Pegasus Park, De Kleetlaan 12a, 1831 Diegem, Belgium, Tel: (32) 2 663 0600, Fax: (32) 2 663 0640
Asia Pacific: Rockwell Automation, Level 14, Core F, Cyberport 3, 100 Cyberport Road, Hong Kong, Tel: (852) 2887 4788, Fax: (852) 2508 1846

Publication 1321-TD001O-EN-P - September 2012
Supersedes Publication 1321-TD001N-EN-P - October 2008

Copyright © 2012 Rockwell Automation, Inc. All rights reserved. Printed in the U.S.A.

User Manual

Allen-Bradley

Dual-Port EtherNet/IP Communication Adapter

Catalog Number 20-COMM-ER

Important User Information

Solid state equipment has operational characteristics differing from those of electromechanical equipment. *Safety Guidelines for the Application, Installation and Maintenance of Solid State Controls* (Publication SGI-1.1 available from your local Rockwell Automation sales office or online at http://www.rockwellautomation.com/literature) describes some important differences between solid state equipment and hard-wired electromechanical devices. Because of this difference, and also because of the wide variety of uses for solid state equipment, all persons responsible for applying this equipment must satisfy themselves that each intended application of this equipment is acceptable.

In no event will Rockwell Automation, Inc. be responsible or liable for indirect or consequential damages resulting from the use or application of this equipment.

The examples and diagrams in this manual are included solely for illustrative purposes. Because of the many variables and requirements associated with any particular installation, Rockwell Automation, Inc. cannot assume responsibility or liability for actual use based on the examples and diagrams.

No patent liability is assumed by Rockwell Automation, Inc. with respect to use of information, circuits, equipment, or software described in this manual.

Reproduction of the contents of this manual, in whole or in part, without written permission of Rockwell Automation, Inc. is prohibited.

Throughout this manual, when necessary we use notes to make you aware of safety considerations.

WARNING: Identifies information about practices or circumstances that can cause an explosion in a hazardous environment, which may lead to personal injury or death, property damage, or economic loss.

Important: Identifies information that is critical for successful application and understanding of the product.

ATTENTION: Identifies information about practices or circumstances that can lead to personal injury or death, property damage, or economic loss. Attentions help you identify a hazard, avoid a hazard, and recognize the consequences.

Shock Hazard labels may be located on or inside the equipment (e.g., drive or motor) to alert people that dangerous voltage may be present.

Burn Hazard labels may be located on or inside the equipment (e.g., drive or motor) to alert people that surfaces may be at dangerous temperatures.

Allen-Bradley, Rockwell Software, and TechConnect are trademarks of Rockwell Automation, Inc.

Trademarks not belonging to Rockwell Automation are property of their respective companies.

Preface

About This Manual 7
Conventions Used in This Manual 7
Rockwell Automation Support 8
Additional Resources 8

Chapter 1

Getting Started

Components 11
Features 12
Compatible Products 13
Required Equipment 13
Equipment Shipped with the Adapter 13
User-Supplied Equipment 13
Safety Precautions 15
Quick Start 16

Chapter 2

Installing the Adapter

EMC Conformance 17
Preparing for an Installation 18
Setting the Web Pages Switch 19
Connecting the Adapter to the Drive or SMC 20
Connecting the Adapter to the Network 23
Applying Power 24
Start-Up Status Indications 24
Configuring and Verifying Key Drive Parameters 26
Commissioning the Adapter 26

Chapter 3

Configuring the Adapter

Configuration Tools 27
Using the PowerFlex 7-Class HIM 28
Using an LED HIM 28
Using an LCD HIM 28
Using BOOTP 29
Configure the Adapter Using a BOOTP Server 29
Setting the IP Address, Subnet Mask, and Gateway Address 32
Disable the BOOTP Feature 32
Set an IP Address Using Parameters 32
Set a Subnet Mask Using Parameters 33
Set a Gateway Address Using Parameters 33
Setting the Data Rate 34
Setting the I/O Configuration 35
Selecting Master-Slave or Peer-to-Peer 36
Setting a Master-Slave Hierarchy 36
Setting the Adapter to Transmit Peer-to-Peer Data 37
Setting the Adapter to Receive Peer-to-Peer Data 38
Setting the Reference Adjustment 41
Setting a Fault Action 41

Changing the Fault Action 42
Setting the Fault Configuration Parameters 42
Setting Web Access Control 42
Resetting the Adapter 43
Viewing the Adapter Status Using Parameters 44
Updating the Adapter Firmware 44

Chapter 4

Configuring the I/O

Using RSLinx Classic Software 47
ControlLogix Controller Example 48
Adding the Bridge to the I/O Configuration 49
Using RSLogix 5000 Device Add-on Profiles, Version 16.00 or Later 51
Using the RSLogix 5000 Classic Profile, Versions 13.00...15.00 . . . 60
Using the RSLogix 5000 Generic Profile, All Versions 62
Limitations Using a MicroLogix 1100/1400 Controller 68
MicroLogix 1100/1400 Controller Example 68
Configuring Parameters for Network I/O 69
Creating RSLogix 500 Project, Version 7.00 or Later 70

Chapter 5

Using the I/O

About I/O Messaging 79
Understanding the I/O Image 80
ControlLogix Controller Image 80
MicroLogix 1100/1400 Controller Image 82
Using Logic Command/Status 84
Using Reference/Feedback 84
PowerFlex 7-Class Drives 85
Using Datalinks 86
Rules for Using Datalinks 86
Using 16-Bit Datalinks to Read/Write 32-Bit Parameters 86
Example Ladder Logic Program Information 87
Functions of the Example Programs 87
Logic Command/Status Words 88
ControlLogix Controller Example 88
Creating Ladder Logic Using the RSLogix 5000 Device Add-on Profiles, Version 16.00 or Later 88
Creating Ladder Logic Using the RSLogix 5000 Classic Profile, Versions 1300...15.00 89
Creating Ladder Logic Using the RSLogix 5000 Generic Profile, All Versions 90
MicroLogix 1100/1400 Controller Example 96
Drive and Adapter Parameter Settings 96
Understanding Controller Data Table Addresses 97

Chapter 6

Using Explicit Messaging

About Explicit Messaging 106
Performing Explicit Messages 106
ControlLogix Controller Examples 108
Explicit Messaging Using RSLogix 5000 Software, Version 15.00 or Later 108
Explicit Messaging Using RSLogix 5000 Software, All Versions.. 121
MicroLogix 1100/1400 Controller Examples..... 124
MicroLogix 1100/1400 Controller Explicit Messaging Using the Read/Write Parameter Service..... 125
MicroLogix 1100/1400 Controller Explicit Messaging Using the Generic Get/Set Attribute Service 130

Chapter 7

Troubleshooting

Understanding the Status Indicators..... 143
Port Status Indicator 144
Network Status Indicator..... 145
Link (LS1, LS2) Status Indicator 145
NET A Status Indicator 145
Hardware Reset via Node Switches 146
Viewing Adapter Diagnostic Items..... 146
Viewing and Clearing Events..... 149

Chapter 8

Viewing the Adapter Web Pages

Accessing the Adapter Web Home Page..... 153
Viewing the Web Pages 153
Title Bar on Adapter Web Pages 154
Navigation Pane on Adapter Web Pages..... 155
Process Display Home Page 156
Browse DPI Device Folder 156
Diagnostics Web Page 157
Diagnostic Overview link 157
Network Setting Link..... 158
EtherNet/IP Statistics Link 159
Ring Statistics link..... 159
Crash Display Link 160
Heap Statistics Display link 160
Administrative Web Pages 160
Device Identity Link 161
Network Configuration Link 161
Email Configuration Link..... 162
Password Configuration 165

Chapter 9

Using the Adapter in a DPI External Comms Kit (20-XCOMM-DC-BASE)

Installing the Adapter 167

Appendix A

Specifications

Communications. 169
Electrical 169
Mechanical 170
Environmental. 170
Regulatory Compliance. 170

Appendix B

Adapter Parameters

About Parameter Numbers. 171
Parameter List 171

Appendix C

EtherNet/IP Objects

Supported Data Types 182
Identity Object. 182
Assembly Object 183
Register Object. 184
Parameter Object 185
Parameter Group Object. 188
Device Level Ring Object 189
Quality of Service Object 190
PCCC Object 190
DPI Device Object 196
DPI Parameter Object 198
DPI Fault Object. 204
DPI Alarm Object. 206
DPI Diagnostic Object 207
DPI Time Object 209
TCP/IP Interface Object 211
Ethernet Link Object. 213

Appendix D

Logic Command/Status Words

PowerFlex 70/70EC, PowerFlex 700/700VC, and PowerFlex 700H Drives 215
Logic Command Word 215
Logic Status Word. 216
PowerFlex 700S Drives 217
Logic Command Word (Phase II Control) 217
Logic Status Word (Phase II Control) 218
SMC Flex Controllers /SMC-50 Controllers 219
Logic Status Word. 219
Logic Command Word (Control) 220

Glossary. 221

Index 231

Preface

About This Manual

Topic	Page
Conventions Used in This Manual	7
Rockwell Automation Support	7
Additional Resources	8

This manual provides information about the adapter and using it with PowerFlex 7-Class (Architecture-Class) drives or Bulletin 150 SMC Soft Starters. The adapter can be used with other products that support a DPI™ adapter, such as the DPI External Comms Kit (20-XCOMM-DC-BASE). See the documentation for your product for specific information about how it works with the adapter.

Conventions Used in This Manual

The following conventions are used throughout this manual:

- Parameter names are shown in the format **Parameter xx - [*]**. The xx represents the parameter number. The * represents the parameter name—for example **Parameter 01 - [DPI Port]**.
- Menu commands are shown in bold type face and follow the format **Menu > Command**. For example, if you read 'Select **File > Open**', you should click the **File** menu and then click the **Open** command.
- The firmware revision number (FRN) is displayed as FRN *X.xxx*, where '*X*' is the major revision number and '*xxx*' is the minor revision number.
- The screen images in this manual resulted from using the following software:
  - RSLinx® Classic software, version 2.51
  - RSLogix 5000 software, version 16

  Different versions of the software may have screens that vary in appearance, and differences in procedures.

Rockwell Automation Support

Rockwell Automation offers support services worldwide, with over 75 sales and support offices, over 500 authorized distributors, and over 250 authorized systems integrators located through the United States alone. In addition, Rockwell Automation representatives are in every major country in the world.

Local Product Support

Contact your local Rockwell Automation representative for the following:

- Sales and order support
- Product technical training

- Warranty support
- Support service agreements

Technical Product Assistance

For technical assistance, please review the information in Chapter 7, Troubleshooting, first. If you still have problems, then access the Allen-Bradley Technical Support website at www.ab.com/support/abdrives or contact Rockwell Automation.

Additional Resources

These documents contain additional information concerning related products from Rockwell Automation.

Resource	Description
Industrial Automation wiring and grounding guidelines, publication 1770-4.1	Provides general guidelines for installing a Rockwell Automation industrial system.
Product certifications website, http://www.ab.com	Provides declarations of conformity, certificates, and other certification details.
Industrial Security Best Practices, publication SECUR-AT001	Provides further information and guidelines on product and system security.
PowerFlex 7-Class DPI (Drive Peripheral Interface) Network Communication Adapter Installation Instructions, publication 20COMM-IN004	Information on the installation of PowerFlex® 20-COMM-x Network Communication Adapters.
EtherNet/IP Media Planning and Installation Manual, ODVA publication 148 (1)	Information on the planning, installation, and techniques used to implement an EtherNet/IP network.
EtherNet/IP Network Infrastructure Guidelines, ODVA publication 35 (1)	
Ethernet Design Considerations Reference Manual, publication ENET-RM002	
Connected Components Workbench website http://www.ab.com/support/abdrives/webupdate/software.html, and online help	Information on the Connected Components Workbench™ software tool—and includes a link for **free** software download.
PowerFlex 20-HIM-A3/-A5/-C3S/-C5S HIM Quick Reference, publication 20HIM-QR001	Information on the use of the PowerFlex 20-HIM-A3, 20-HIM-A5, 20-HIM-C3S, and 20-HIM-C5S HIMs.
PowerFlex 20-HIM-A6/-C6S HIM (Human Interface Module) User Manual, publication 20HIM-UM001	Information on the installation and use of the PowerFlex 20-HIM-A6 and 20-HIM-C6S HIMs.
PowerFlex 70 User Manual, publication 20A-UM001 PowerFlex 70/700 Reference Manual, publication PFLEX-RM001 PowerFlex 70EC/700VC Reference Manual, publication PFLEX-RM004	Information on installing, programming, and technical data of PowerFlex 70 and PowerFlex 70EC drives.
PowerFlex 700 Series A User Manual, publication 20B-UM001 PowerFlex 700 Series B User Manual, publication 20B-UM002 PowerFlex 70/700 Reference Manual, publication PFLEX-RM001 PowerFlex 70EC/700VC Reference Manual, publication PFLEX-RM004	Information on installing, programming, and technical data of PowerFlex 700/700VC Series A and PowerFlex 700VC Series B drives.
PowerFlex 700H Installation Instructions, publication PFLEX-IN006 PowerFlex 700H Programming Manual, publication 20C-PM001	Information on installing, programming, and technical data of PowerFlex 700H drives.

Resource	Description
PowerFlex 700S w/Phase I Control Installation Manual (Frames 1…6), publication 20D-IN024 PowerFlex 700S w/Phase I Control Installation Manual (Frames 9 and 10), publication PFLEX-IN006 PowerFlex 700S w/Phase I Control User Manual (All Frame Sizes), publication 20D-UM001 PowerFlex 700S w/Phase I Control Reference Manual, publication PFLEX-RM002 PowerFlex 700S w/Phase II Control Installation Manual (Frames 1…6), publication 20D-IN024 PowerFlex 700S w/Phase II Control Installation Manual (Frames 9…14), publication PFLEX-IN006 PowerFlex 700S w/Phase II Control Programming Manual (All Frame Sizes), publication 20D-PM001 PowerFlex 700S w/Phase II Control Reference Manual, publication PFLEX-RM003	Information on installing, programming, and technical data of PowerFlex 700S drives.
PowerFlex 700L User Manual, publication 20L-UM001	Information on installing, programming, and technical data of PowerFlex 700L Liquid-Cooled AC drives.
SMC Flex Smart Motor Controller User Manual, publication 150-UM008	Information on installing, programming, and technical data of SMC Flex State Smart Motor Controller.
SMC-50 Solid-State Smart Motor Controller User Manual, publication 150-UM011	Information on installing, programming, and technical data of SMC-50 Solid-State Smart Motor Controller.
PowerFlex Digital DC Drive User Manual, publication 20P-UM001	Information on installing, programming, and technical data of PowerFlex Digital DC drives.
Getting Results with RSLinx Guide, publication LINX-GR001and online help (1)	Information on using RSLinx Classic software.
RSLogix Emulate 5/500 Getting Results Guide, publication EMULAT-GR002 and online help	Information on how to install and navigate the RSLogix Emulate software for ladder logic programming with Allen-Bradley® PLC-5® and SLC™ 500 processors.
RSLogix 500 Getting Results Guide, publication LG500-GR002 and online help (1)	Information on using RSLogix 500 software tool.
RSLogix 5000 PIDE Autotuner Getting Results Guide, publication PIDE-GR001 and online help (1)	Information on using RSLogix 5000 software tool.
EtherNet/IP Modules in Logix5000 Control Systems User Manual, publication ENET-UM001	Information on using the ControlLogix® 1756-ENBT or 1756-EN2T EtherNet/IP communication modules with your Logix5000 controller and communicating with various devices on the EtherNet/IP network.
Enhanced and Ethernet PLC-5 Programmable Controllers User Manual, publication 1785-UM012	Information to help design, operate and maintain an Enhanced and Ethernet PLC-5 programmable controller system.
MicroLogix 1100 Programmable Controllers User Manual, publication 1763-UM001 MicroLogix 1400 Programmable Controllers User Manual, publication 1766-UM001	Information to install, wire, and troubleshoot the MicroLogix™ 1100 and MicroLogix 1400 controllers respectively.
Web Updates http://www.ab.com/support/abdrives/webupdate/	Flash Update Files, Product Help Files, Control Bar Files, GSD Files, EDS File links, DriveTools SP / Drive AOP Database Files, and other downloads to keep your Allen-Bradley brand drive products up to date

(1) Use this link to the ODVA EtherNet/IP library: http://odva.org/Home/ODVATECHNOLOGIES/EtherNetIP/EtherNetIPLibrary/tabid/76/Default.aspx

Documentation can be obtained online at http://literature.rockwellautomation.com. To order paper copies of technical documentation, contact your local Rockwell Automation distributor or sales representative.

To find your local Rockwell Automation distributor or sales representative, visit http://www.rockwellautomation.com/locations.

For information such as firmware updates or answers to drive-related questions, go to the Drives Service & Support web site at http://www.ab.com/support/abdrives and click on the Downloads or Knowledgebase link.

Notes:

Getting Started

The adapter is intended for installation in a PowerFlex 7-Class drive or Bulletin 150 SMC soft starter and is used for network communication.

Topic	Page
Components	11
Features	12
Compatible Products	13
Required Equipment	13
Safety Precautions	15
Quick Start	16

Components

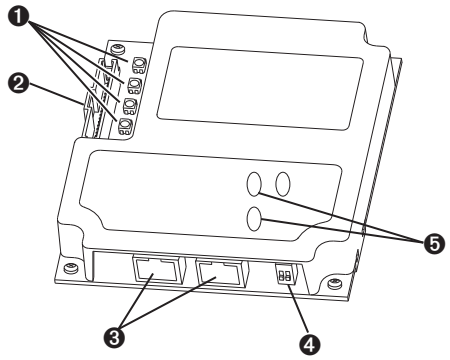

Item	Part	Description
1	Status Indicators	Four status indicators that indicate the status of the DPI, the adapter, and network connection. See Chapter 7, Troubleshooting.
2	DPI Connector	A 20-pin, single-row shrouded male header. An Internal Interface cable is connected to this connector and a connector on the drive.
3	Ethernet Connector	RJ-45 connector for the Ethernet network cable. The connector is CAT-5 compliant to ensure reliable data transfer on 100Base-TX Ethernet connections.
4	Web Pages Switch (SW4)	Enables or disables the adapter web pages. See Setting the Web Pages Switch on page 19.
5	Address/mode switches	Set IP address or DHCP/BootP mode.

Features

The features of the adapter include the following:

- Typical mounting in a PowerFlex 7-Class drive or SMC soft starter.
- Captive screws to secure and ground the adapter to the drive.
- Compatibility with various configuration tools to configure the adapter and connected host drive, including the following tools:
  - PowerFlex HIM (Human Interface Module) on the drive or SMC, if available
  - Connected Components Workbench software, version 1.02 or later
  - DriveExplorer software, version 2.01 or later
  - DriveExecutive software, version 3.01 or later
  - RSLogix5000 version16 and later with Drives Add-on Profile version 4.05 and later

  Additionally, you can use a BOOTP/DHCP server to configure the network address for the adapter.
- Status indicators that report the status of the drive communications, the adapter, and network. They are visible when the drive cover is open or closed.
- Parameter-configured I/O (Logic Command/Reference and up to four pairs of Datalinks) to accommodate application requirements.
- Explicit Messaging support.
- Master-Slave or Peer-to-Peer hierarchy that can be configured to transmit data to and from either a controller or another PowerFlex drive or SMC on the network.
- User-defined fault actions to determine how the adapter and connected PowerFlex drive respond to the following:
  - I/O messaging communication disruptions (Comm Flt Action)
  - Controllers in idle mode (Idle Flt Action)
- Web pages, viewed by using a web browser, that show information about the adapter, its connected host drive, and DPI devices connected to the drive.
- Configurable e-mail messaging to desired addresses when selected drive faults occur and/or are cleared, and/or when the adapter takes a communication or idle fault action.
- Access to any PowerFlex drive or SMC and its connected peripherals on the network to which the adapter is connected.
- Device Level Ring (DLR) or Star Topology support with Quality of Service (QoS) support.

Compatible Products

At the time of publication, the adapter is compatible with the following products:

- PowerFlex 70/70EC drives
- PowerFlex 700/700VC drives
- PowerFlex 700H drives
- PowerFlex 700S drives
- PowerFlex 7000/7000-2 drives
- PowerFlex 700L drives
- PowerFlex Digital DC drives
- DPI External Comms Kit
- SMC™-50
- SMC™ Flex

Note: The adapter is not compatible with PowerFlex 750 series drives.

Required Equipment

Some of the equipment that is required for use with the adapter is shipped with the adapter, but some you must supply yourself.

Equipment Shipped with the Adapter

When you unpack the adapter, verify that the package includes the following:

- ❑ One 20-COMM-ER EtherNet/IP adapter
- ❑ One 2.54 cm (1 in.) long and one 15.24 cm (6 in.) long Internal Interface cable (only one cable is needed to connect the adapter to the drive; for which cable to use, see Figure 3 - on page 2-21)
- ❑ One PowerFlex 7-Class DPI (Drive Peripheral Interface) Network Communication Adapter Installation Instructions, publication 20COMM-IN004
- ❑ One LED Identification Label for use with Bulletin 150 SMC Flex and Bulletin 700 PowerFlex drives

User-Supplied Equipment

To install and configure the adapter, you must supply the following:

- ❑ A small flathead screwdriver
- ❑ Ethernet cable (for details, see the EtherNet/IP Media Planning and Installation Manual, ODVA publication 148 available on the ODVA website at http://odva.org/Home/ODVATECHNOLOGIES/EtherNetIP/EtherNetIPLibrary/tabid/76/Default.aspx)
- ❑ Ethernet switch (for details, see the Ethernet Design Considerations Reference Manual, publication ENET-RM002)
- ❑ Configuration tool, such as the following:
  - PowerFlex 20-HIM-xx HIM

– Connected Components Workbench software, version 1.02 or later

Connected Components Workbench is the recommended stand-alone software tool for use with PowerFlex drives. You can obtain a **free copy** by:

- Internet download at http://www.ab.com/support/abdrives/webupdate/software.html
- Requesting a DVD at http://www.ab.com/onecontact/controllers/micro800/

Your local distributor may also have copies of the DVD available.

Connected Components Workbench software cannot be used to configure SCANport-based drives or Bulletin 160 drives.

– DriveExplorer software, version 2.01 or later

This software tool has been discontinued and is now available as **freeware** at http://www.ab.com/support/abdrives/webupdate/software.html. There are no plans to provide future updates to this tool and the download is being provided 'as-is' for users that lost their DriveExplorer CD, or need to configure legacy products not supported by Connected Components Workbench software.

– DriveExecutive software, version 3.01 or later

A Lite version of DriveExecutive software ships with RSLogix 5000, RSNetWorx MD, FactoryTalk AssetCentre, and ItelliCENTER software. All other versions are purchasable items:

- 9303-4DTE01ENE Drive Executive software
- 9303-4DTS01ENE DriveTools SP Suite (includes DriveExecutive and DriveObserver software)
- 9303-4DTE2S01ENE DriveExecutive software upgrade to DriveTools SP Suite (adds DriveObserver software)

DriveExecutive software updates (patches, and so forth) can be obtained at http://www.ab.com/support/abdrives/webupdate/software.html. It is highly recommended that you periodically check for and install the latest update.

– BOOTP server, version 2.1 or higher, for network setup only

❑ Controller configuration software, such as RSLogix 5/500/5000

❑ A computer connection to the EtherNet/IP network

Safety Precautions

Please read the following safety precautions carefully.

ATTENTION: Risk of injury or death exists. The PowerFlex drive may contain high voltages that can cause injury or death. Remove all power from the PowerFlex drive or SMC, and then verify power has been discharged before installing or removing an adapter.

ATTENTION: Risk of injury or equipment damage exists. Only personnel familiar with drive and power products and the associated machinery should plan or implement the installation, start up, configuration, and subsequent maintenance of the product using an adapter. Failure to comply may result in injury and/or equipment damage.

ATTENTION: Risk of equipment damage exists. The adapter contains electrostatic discharge (ESD) sensitive parts that can be damaged if you do not follow ESD control procedures. Static control precautions are required when handling the adapter. If you are unfamiliar with static control procedures, see Guarding Against Electrostatic Damage, publication 8000-4.5.2.

ATTENTION: Risk of injury or equipment damage exists. If the adapter is transmitting control I/O to the drive, the drive may fault when you reset the adapter. Determine how your drive will respond before resetting an adapter.

ATTENTION: Risk of injury or equipment damage exists. **Parameters 21 - [Comm Flt Action]**, **24 - [Idle Flt Action]**, and **43 - [Peer Flt Action]** let you determine the action of the adapter and connected drive if communication is disrupted or the controller is idle. By default, these parameters fault the drive. You may configure these parameters so that the drive continues to run, however, precautions should be taken to ensure that the settings of these parameters do not create a risk of injury or equipment damage. When commissioning the drive, verify that your system responds correctly to various situations (for example, a disconnected cable or a controller in idle state).

ATTENTION: Risk of injury or equipment damage exists. When a system is configured for the first time, there may be unintended or incorrect machine motion. Disconnect the motor from the machine or process during initial system testing.

ATTENTION: Risk of injury or equipment damage exists. The examples in this publication are intended solely for purposes of example. There are many variables and requirements with any application. Rockwell Automation, Inc. does not assume responsibility or liability (to include intellectual property liability) for actual use of the examples shown in this publication.

Quick Start

This section is provided to help experienced users quickly start using the adapter. If you are unsure how to complete a step, refer to the referenced chapter.

Step	Action	See
1	Review the safety precautions for the drive or SMC	Drive or SMC User Manual
2	Review the safety precautions for the adapter	Throughout this manual
3	Verify that the power control device is properly installed.	Drive or SMC User Manual
4	Install the adapter. a. Verify that the power control device is not powered. b. Connect the adapter to the device with the Internal Interface cable. c. Use the captive screws to secure and ground the adapter to the device. d. Connect the adapter to the network with an Ethernet cable. **NOTE:** When installing the adapter in the DPI External Comms Kit—see the 20-XCOMM-DC-BASE Installation Instructions, publication 20COMM-IN001, supplied with the kit.	PowerFlex 7-Class DPI Network Communication Adapter Installation Instructions, publication 20COMM-IN004, and Chapter 2, Installing the Adapter
5	Apply power to the adapter. a. Verify that the adapter is installed correctly. b. The adapter receives power from the drive or SMC. Apply power to the device. The status indicators should be green. If they flash red, there is a problem. See Chapter 7, Troubleshooting. c. Configure and verify key drive or SMC parameters.	Chapter 2, Installing the Adapter
6	Configure the adapter for your application. Set adapter parameters for the following functions as required by your application: • IP address, subnet mask, and gateway address • Data rate • I/O configuration • Master-Slave or Peer-to-Peer hierarchy • Fault actions	Chapter 3, Configuring the Adapter
7	Configure the controller to communicate with the adapter. Use a controller configuration tool, such as RSLogix software, to configure the master on the network to recognize the adapter and drive or SMC.	Chapter 4, Configuring the I/O
8	Create a ladder logic program. Use a controller configuration tool, such as RSLogix software, to create a ladder logic program that enables you to do the following: • Control the connected device, via the adapter, by using I/O. • Monitor or configure the device or SMC by using explicit messages.	Chapter 5, Using the I/O Chapter 6, Using Explicit Messaging

Installing the Adapter

This chapter provides instructions for installing the adapter in a PowerFlex 7-Class drive.

Topic	Page
Preparing for an Installation	18
Setting the Web Pages Switch	19
Connecting the Adapter to the Drive or SMC	20
Connecting the Adapter to the Network	23
Applying Power	24
Commissioning the Adapter	26

EMC Conformance

For all PowerFlex 70 and 700 drive installations that require CE conformance per EN61800-3, a ferrite core must be installed on each EtherNet/IP cable connected to the drive.

These ferrites are not required for installation on SMC products.

A ferrite core such as FAIR-RITE part number 2643803802 needs to be installed according to the following diagram.

Note: the cable is wrapped 4 times around each core.

Figure 1 - Ferrite Core Installation

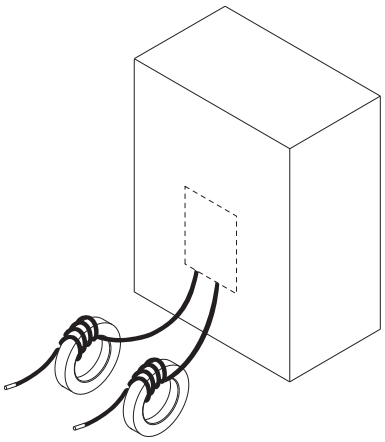

Preparing for an Installation

Before installing the adapter, do the following:

- Make sure the Ethernet switch is the correct type. A 'managed' switch that supports IGMP snooping is usually recommended. An 'unmanaged' switch can be used instead if RSLogix 5000 software, version 18.00 or later, is used and all devices on the network are configured for 'unicast' I/O. For more details, see the following documents:
  - EtherNet/IP Media Planning and Installation Manual, ODVA publication 148
  - EtherNet/IP Network Infrastructure Guidelines, ODVA publication 35
  - Ethernet Design Considerations Reference Manual, publication ENET-RM002

- Understand IGMP Snooping/Ethernet Switches

  The 20-COMM-ER adapter is a multicast device. In most situations, an IGMP snooping (managed) switch is required. If more than one or two 20-COMM-ER adapters are connected to the switch, a managed switch is required—otherwise the drive may fault on a DPI Port x network loss. The 20-COMM-ER, RSLogix 5000 software, version 18.00 or later, and a ControlLogix or CompactLogix controller will support unicast. Unicast setup is required when adding the drive to the I/O. When all adapters are set up as unicast devices, then an IGMP snooping (managed) switch is not needed.

  Much of EtherNet/IP implicit (I/O) messaging uses IP multicast to distribute I/O control data, which is consistent with the CIP producer/consumer model. Historically, most switches have treated multicast packets the same as broadcast packets. That is, all multicast packets are re-transmitted to all ports.

  IGMP snooping constrains the flooding of multicast traffic by dynamically configuring switch ports so that multicast traffic is forwarded only to ports associated with a particular IP multicast group.

  Switches that support IGMP snooping (managed switches) 'learn' which ports have devices that are part of a particular multicast group and only forward the multicast packets to the ports that are part of the multicast group.

  Be careful as to what level of support a switch has of IGMP snooping. Some layer 2 switches that support IGMP snooping require a router (which could be a layer 3 switch) to send out IGMP polls to learn what devices are part of the multicast group. Some layer 2 switches can use IGMP snooping without a router sending polls. If your control system is a standalone network or is required to continue performing if the router is out of service, make sure the switch you are using supports IGMP snooping without a router being present.

- See Appendix A for the number of CIP connections supported by the 20-COMM-ER adapter.
- Verify that you have all required equipment. See Required Equipment on page 13.

Setting the Web Pages Switch

To use the adapter web pages, the Web Pages Switch must be set to its 'Enable Web' position. For information to enable or disable web pages for an adapter, see Setting Web Access Control on page 42.

ATTENTION: Risk of equipment damage exists. The adapter contains electrostatic discharge (ESD) sensitive parts that can be damaged if you do not follow ESD control procedures. Static control precautions are required when handling the adapter. If you are unfamiliar with static control procedures, see Guarding Against Electrostatic Damage, publication 8000-4.5.2.

Important: A new switch setting is recognized only when power is applied to the adapter, or the adapter is reset. If you change a switch setting, cycle power or reset the adapter to apply the change.

Set the Web Pages Switch (SW4 in Figure 2) to enable or disable the adapter web pages. By default, the adapter web pages are disabled. For complete details on adapter web pages, see Viewing the Adapter Web Pages on page 153.

Figure 2 - Setting Web Pages Switch (only Series B Adapter)

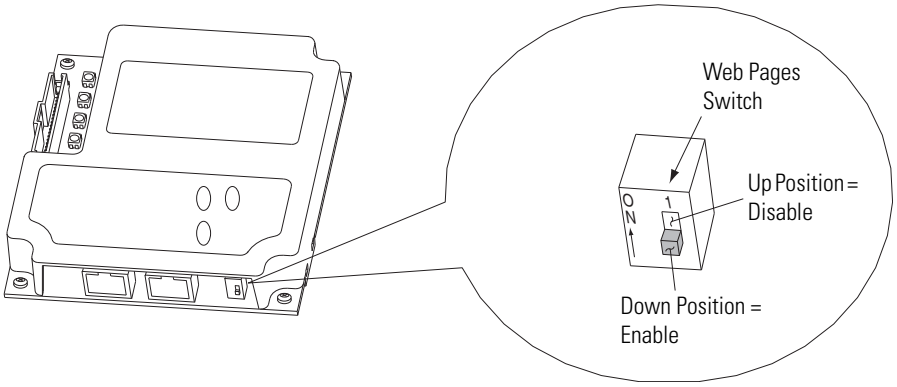

Setting	Description
Down (OFF) position	Web server enabled
Up (ON) position	Web server disabled (as shipped)

Connecting the Adapter to the Drive or SMC

ATTENTION: Risk of injury or death exists. The PowerFlex drive or SMC may contain high voltages that can cause injury or death. Remove **ALL** power from the drive or SMC, and then verify power has been discharged before installing or removing the adapter.

1. Remove **ALL** power from the drive or SMC.
2. Use static control precautions.
3. Remove the drive or SMC cover or open the drive door.
4. Connect the Internal Interface cable to the DPI port on the drive and then to the DPI connector on the adapter (see Figure 3).
5. Secure and ground the adapter to the drive or SMC (see Figure 4) by doing the following:
   - On a PowerFlex 70 drive, fold the Internal Interface cable behind the adapter and mount the adapter on the drive using the four captive screws.
   - On an SMC Flex, put the wire lug between the mounting screw and 20-COMM-ER board

Important: Tighten all screws to properly ground the adapter. Recommended torque is 0.9 N•m (8.0 lb•in).

Figure 3 - DPI Ports and Internal Interface Cables

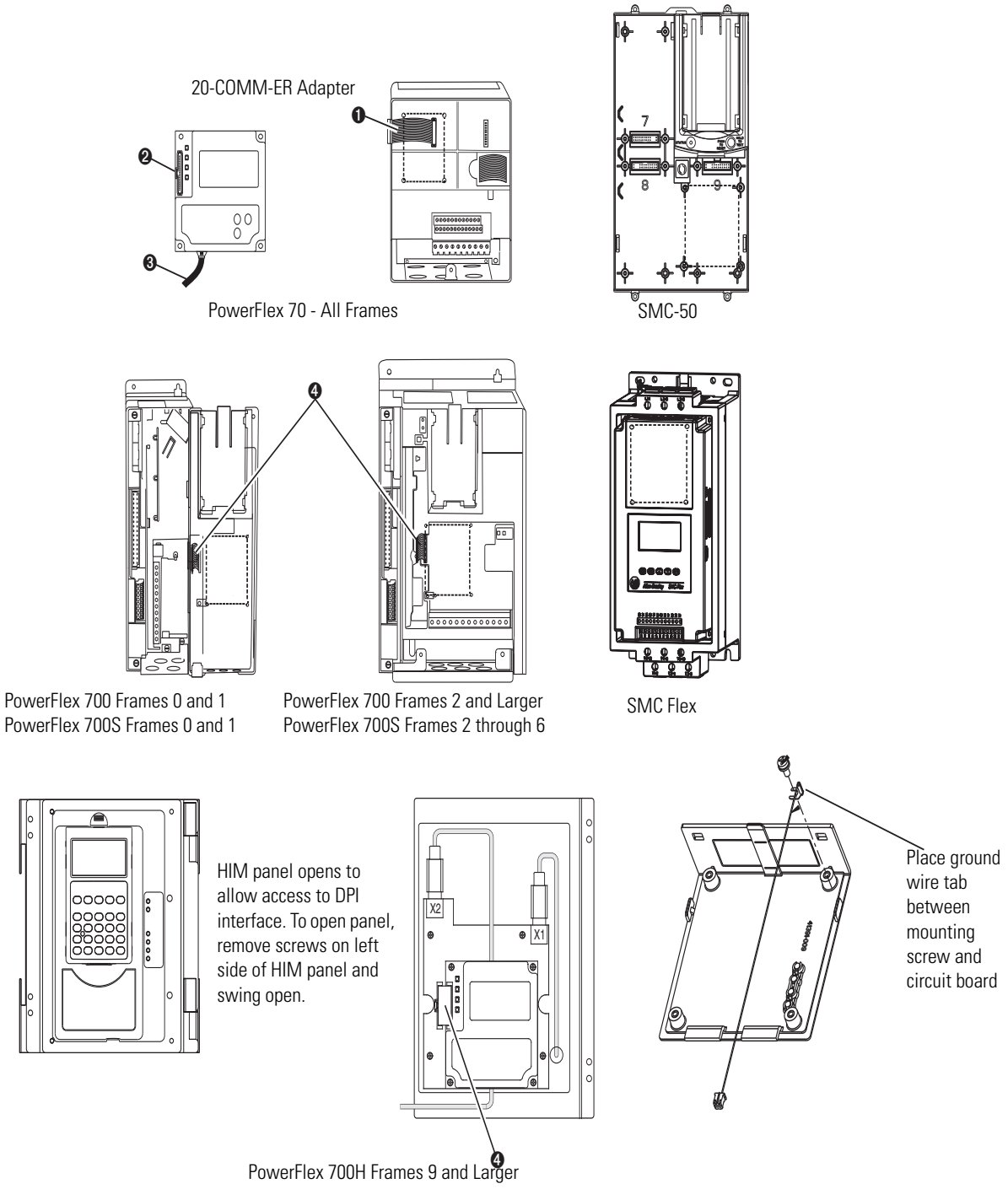

Item	Description
❶	15.24 cm (6 in.) Internal Interface cable
❷	DPI Connector
❸	Ethernet cable
❹	2.54 cm (1 in.) Internal Interface cable

Figure 4 - Mounting and Grounding the Adapter

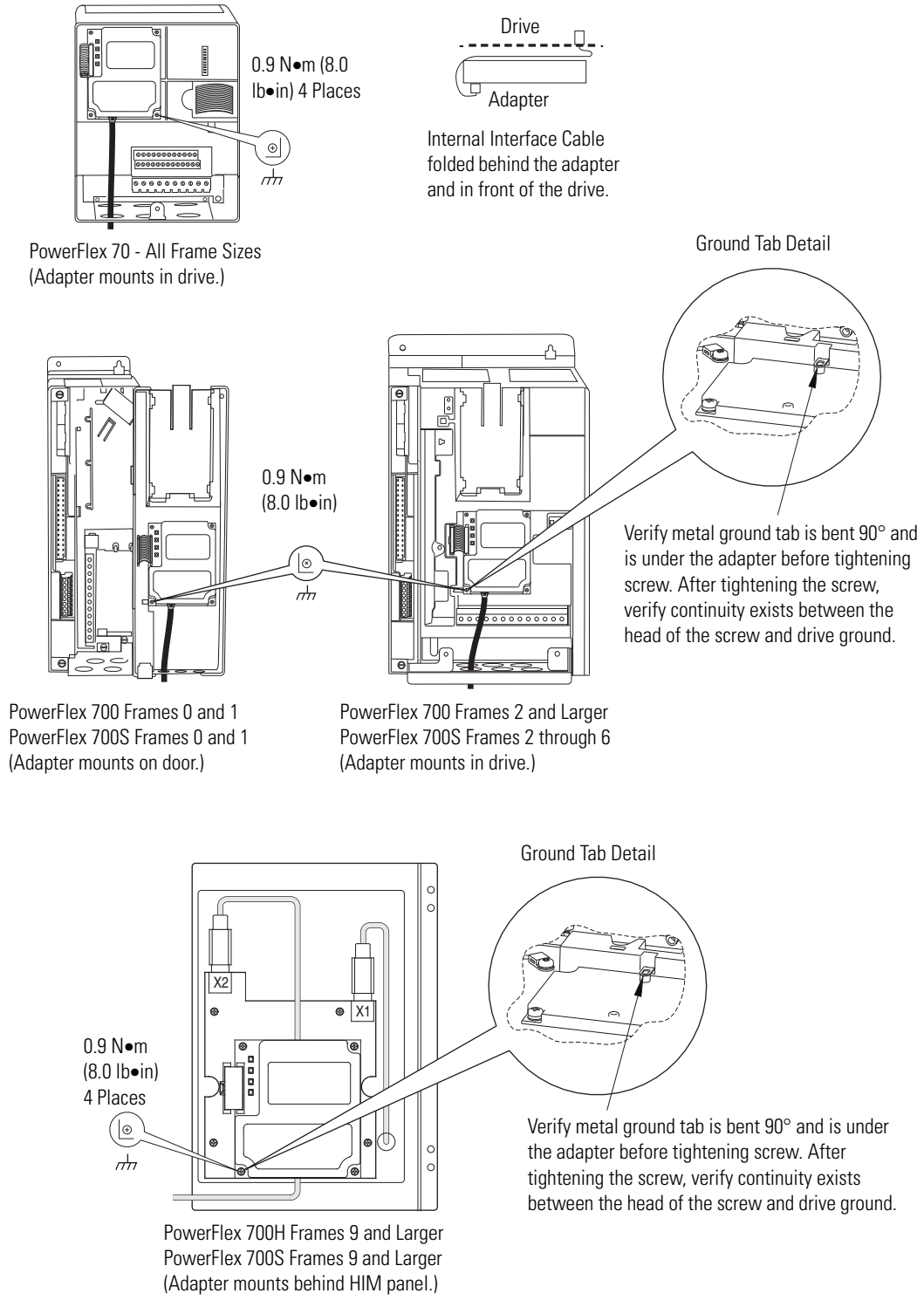

Connecting the Adapter to the Network

ATTENTION: Risk of injury or death exists. The PowerFlex drive may contain high voltages that can cause injury or death. Remove power from the drive, and then verify power has been discharged before installing or removing the adapter.

1. Remove power from the drive.
2. Use static control precautions.
3. Connect one end of an Ethernet cable to the network. See Figure 5 for an example of wiring to an EtherNet/IP network.

Figure 5 - Connecting the Ethernet Cable in a Linear Topology Network

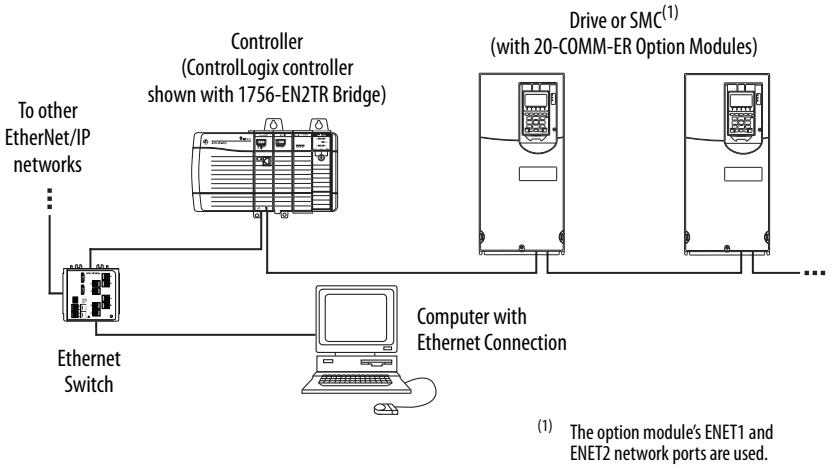

Figure 6 - Connecting the Ethernet Cable in a DLR Topology Network

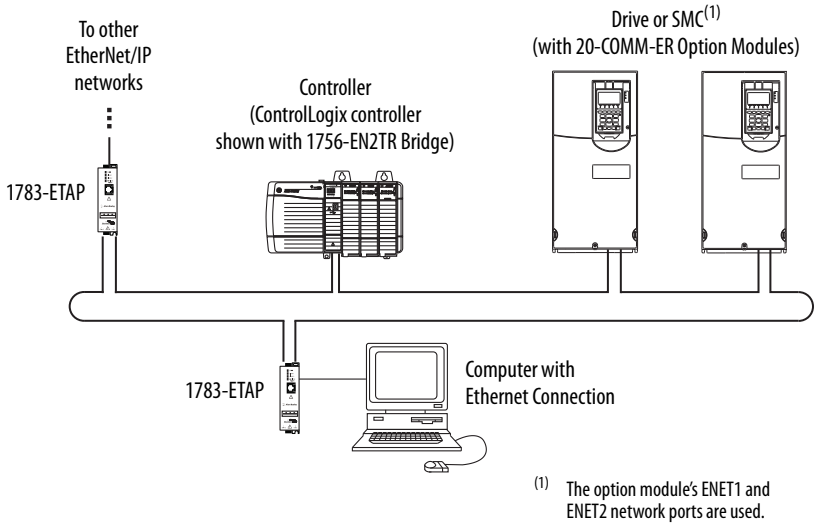

4. For Linear or DLR Network Topology, route the other end of the Ethernet cable from the network through the bottom of the first drive, and insert its cable plug into the option module ENET1 network port.

To connect to the second drive, attach another Ethernet cable between the first drive's option module ENET2 network port and the second drive's option module ENET1 network port.

To connect additional drives, repeat these daisy-chain connections in the same way.

5. Route the other end of the Ethernet cable through the bottom of the PowerFlex drive (Figure 4) and insert its Ethernet cable plug into the mating adapter receptacle.

Applying Power

ATTENTION: Risk of equipment damage, injury, or death exists. Unpredictable operation may occur if you fail to verify that parameter settings are compatible with your application. Verify that settings are compatible with your application before applying power to the drive.

Install the device cover or close the drive door, and apply power to the device. The adapter receives its power from the connected device. When you apply power to the adapter for the first time, its topmost PORT status indicator should be steady green or flashing green after an initialization. If it is red, there is a problem. See Chapter 7, Troubleshooting.

Start-Up Status Indications

After power has been applied, the status indicators for the device and communications adapter can be viewed on the front of the device (Figure 7). Possible start-up status indications are shown in Table 1.

Figure 7 - Drive and Adapter Status Indicators (location will vary by device)

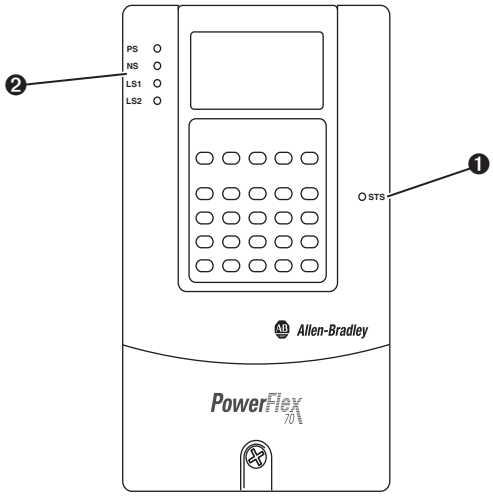

Table 1 - Drive and Adapter Start-Up Status Indications

Item	Name	Color	State	Description
			Drive STS Indicator	
❶	STS (Status) refer to drive or SMC manual for status indication information)	Green	Flashing	Device ready but not running, and no faults are present.
			Steady	Device running, no faults are present.
		Yellow	Flashing, device stopped	An inhibit condition exists – the drive cannot be started. Check device Parameter 214 - [Start Inhibits].
			Flashing, device running	An intermittent type 1 alarm condition is occurring. Check device Parameter 211 - [Drive Alarm 1].
			Steady, device running	A continuous type 1 alarm condition exists. Check device Parameter 211 - [Drive Alarm 1].
		Red	Flashing	A fault has occurred.
			Steady	A non-resettable fault has occurred.
			Adapter Status Indicators	
❷	PS	Off	Steady	No power
		Orange	Flashing	Requesting DPI I/O Connections
			Steady	Peripheral is Connected to an incompatible product or no DPI ping events are detected.
		Green	Flashing	Normal Operation (DPI connected) - No I/O, or PLC in Program
			Steady	Normal Operation (DPI connected) - I/O Operational
		Red	Flashing	DPI Problem, Bad CRC of Adapter Parameters or Flash Program
			Steady	DPI Failure or Failed power-on diagnostic test (hardware failure)
		Green/ Red	Flashing	Flash update in progress
	NS	Off	Steady	No power OR no IP Address
		Green	Flashing	An IP address is configured, but no CIP connections are established, and an Exclusive Owner connection has not timed out
			Steady	At least one CIP connection (any transport class) is established, and an Exclusive Owner connection has not timed out
		Red	Flashing	Connection has timed out see the “The EtherNet Adaptation of CIP” Specification sections 9-4.4 for detailed behavior description
			Steady	Duplicate IP Address detected
		Orange	Steady	Adapter Failure (used in conjunction with PS orange)
		Green/ Red	Flashing	Self-test on power up
	LS1	Off	Steady	No Network Activity
		Green	Flashing	Network activity at 100 Mbps
		Yellow	Flashing	Network activity at 10 Mbps
	LS2	Off	Steady	No Network Activity
		Green	Flashing	Network activity at 100 Mbps
		Yellow	Flashing	Network activity at 10 Mbps

After verifying correct operation, close or install the drive cover. For more details on status indicator operation, see page 144 and page 145.

Configuring and Verifying Key Drive Parameters

The PowerFlex 7-Class drive can be separately configured for the control and Reference functions in various combinations. For example, you could set the drive to have its control come from a peripheral or terminal block with the Reference coming from the network. Or you could set the drive to have both its control and Reference come from the network.

The following steps in this section assume that the drive will receive the Logic Command and Reference from the network.

1. Use drive Parameter 090 - [Speed Ref A Sel] to set the drive speed Reference to '22' (DPI Port 5).
2. If hard-wired discrete digital inputs are not used to control the drive, verify that unused digital input drive Parameters 361 - [Dig In1 Sel] and 362 - [Dig In2 Sel] are set to '0' (Not Used).
3. Verify that drive Parameter 213 - [Speed Ref Source] is reporting that the source of the Reference to the drive is '22' (DPI Port 5).

   This ensures that any Reference commanded from the network can be monitored by using drive Parameter 002 - [Commanded Speed]. If a problem occurs, this verification step provides the diagnostic capability to determine whether the drive/adapter or the network is the cause.

Commissioning the Adapter

To commission the adapter, you must set a unique IP address on the network. After installing the adapter and applying power, you can set the IP address by using a BOOTP/DHCP server or adapter parameters. See Setting the IP Address, Subnet Mask, and Gateway Address on page 32 for details.

By default, the adapter is configured so that you must set the IP address using a BOOTP/DHCP server or by setting the adapter to a valid address, 1-254, via the rotary switches on the adapter. An invalid address 0 or >254 will cause the module to defer to the addressing mode selected by parameter 3 [BOOTP/DHCP]. If disabled, the adapter will use the address information stored in the adapters database. If that address is invalid, the adapter will try to contact a DHCP server on the network. To use adapter parameters, you must disable the BOOTP feature. For details, see Disable the BOOTP Feature on page 32.

Important: New settings for some adapter parameters (for example, **Parameters 04 - [IP Addr Cfg 1]** through **07 - [IP Addr Cfg 4]**) are recognized only when power is applied to the adapter or it is reset. After you change parameter settings, cycle power or reset the adapter.

Configuring the Adapter

This chapter provides instructions and information for setting the parameters in the adapter.

Topic	Page
Configuration Tools	27
Using the PowerFlex 7-Class HIM	28
Using BOOTP	29
Setting the IP Address, Subnet Mask, and Gateway Address	32
Setting the Data Rate	34
Setting the I/O Configuration	35
Selecting Master-Slave or Peer-to-Peer	36
Setting the Reference Adjustment	41
Setting a Fault Action	41
Setting Web Access Control	42
Resetting the Adapter	43
Viewing the Adapter Status Using Parameters	44
Updating the Adapter Firmware	44

For a list of parameters, see Appendix B, Adapter Parameters. For definitions of terms in this chapter, see the .

Configuration Tools

The adapter stores parameters and other information in its own nonvolatile storage (NVS) memory. You must, therefore, access the adapter to view and edit its parameters. The following tools can be used to access the adapter parameters.

Tool	See
PowerFlex 7-Class HIM	page 28
BOOTP/DHCP server	page 29
Connected Components Workbench software, version 1.02 or later	http://www.ab.com/support/abdrives/webupdate/software.html, or online help (installed with the software)

Using the PowerFlex 7-Class HIM

If your drive has either an LED or LCD HIM (Human Interface Module), it can be used to access parameters in the adapter as shown below. It is recommended that you read through the steps for your HIM before performing the sequence. For additional information, see the drive documentation or the PowerFlex 7-Class HIM Quick Reference, publication 20HIM-QR001.

Using an LED HIM

Step	Example Screens
1. Press the ALT key and then the Device Sel (Sel) key to display the Device Screen. 2. Press the ▲ or ▼ key to scroll to the adapter. Letters represent files in the drive, and numbers represent ports. The adapter is usually connected to port 5. The adapter is usually connected to port 5. 3. Press the ↵ (Enter) key to enter your selection. A parameter database is constructed, and then the first parameter is displayed. 4. Edit the parameters using the same techniques that you use to edit drive parameters.	

Using an LCD HIM

Step	Example Screens
1. In the main menu, press the ▲ or ▼ key to scroll to **Device Select**. 2. Press the ↵ (Enter) key to enter your selection. 3. Press the ▲ or ▼ key to scroll to the adapter (20-COMM-ER). 4. Press the ↵ (Enter) key to select the adapter. A parameter database is constructed, and then the main menu for the adapter is displayed. 5. Edit the parameters using the same techniques that you use to edit drive parameters.	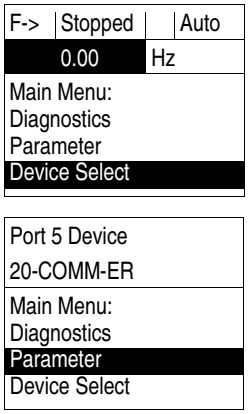

NOTE: All configuration procedures throughout this chapter use the PowerFlex 7-Class LCD HIM to access parameters in the adapter and show example LCD HIM screens.

TIP When using a PowerFlex 20-HIM-A6 or 20-HIM-C6S HIM, see its User Manual, publication 20-HIM-UM001.

SMC Flex controllers require an external HIM (A3 or A6) to program the adapter. The internal Human Interface of the SMC Flex does not allow programming of the Adapter.

Using BOOTP

The IP address, subnet mask and gateway address can be configured multiple ways depending on the setting of the three rotary switches on the adapter. The switches are read on power up or reset.

1. If the switches are set to an address from 1...254, that value will be used as the LSB of the IP address 192.168.1.xxx
2. If the switches are set to an invalid number (000 or a value greater than 254), the unit will check if DHCP is enabled. If DHCP is enabled, the unit requests an address from a DHCP server.
   If DHCP is not enabled and switches are set to an illegal value, the adapter will use the IP address (along with other TCP configurable parameters) stored in nonvolatile memory. If the unit finds that the stored IP configuration is not usable (set to 0), then the unit will revert to the out-of-box behavior of DHCP being enabled.
3. Any other switch setting will cause the adapter to use the IP address data set in the adapter's database parameters.

By default, the adapter is configured so that you can set its IP address, subnet mask, and gateway address by using a BOOTP or a DHCP server. There is a variety of BOOTP servers available. The following instructions use Rockwell Automation's BOOTP Server, version 2.3 or later, a **free** standalone program that incorporates the functionality of standard BOOTP utilities with a graphical interface. It is available from http://www.software.rockwell.com/support/download/detail.cfm?ID=3390. See the Readme file and online Help for directions and more information.

TIP If desired, you can disable BOOTP and configure the IP address, subnet mask, and gateway address with adapter parameters. For details, see Setting the IP Address, Subnet Mask, and Gateway Address on page 32.

Configure the Adapter Using a BOOTP Server

1. On the adapter label, note the adapter's hardware Ethernet Address (MAC), which will be used in step 6.
2. On a computer connected to the EtherNet/IP network, start the BOOTP software.

The BOOTP Server window appears.

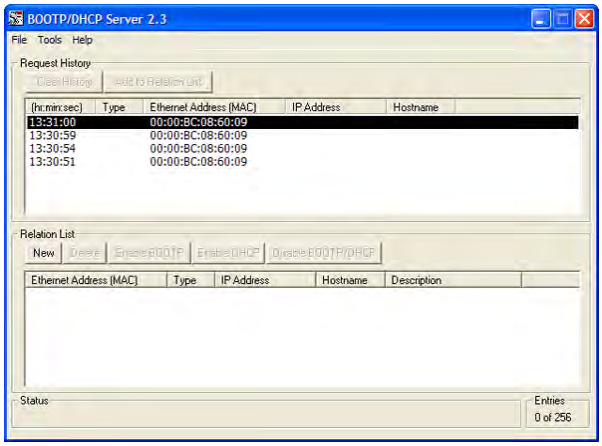

3. Select **Tools > Network Settings** to display the Network Settings window.

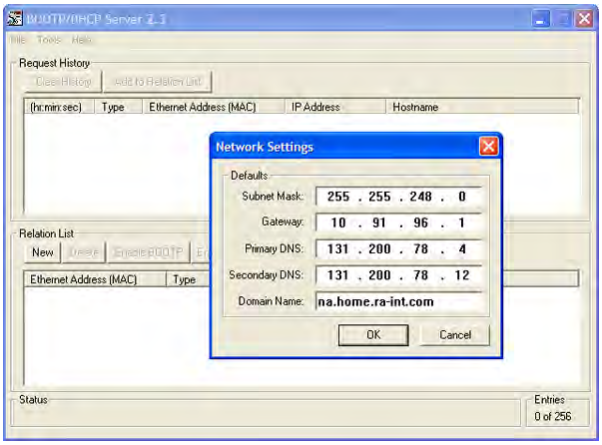

To properly configure devices on your EtherNet/IP network, you must configure settings in the BOOTP software to match the network.

4. Edit the following:

Box	Type
Subnet Mask (1)	The subnet mask for the adapter's network.
Gateway (1)	The IP address of the gateway device on the adapter's network.
Primary DNS	The address of the primary DNS server to be used on the local end of the link for negotiating with remote devices.
Secondary DNS	Optional — the address of the secondary DNS server to be used on the local end of the link for negotiating with remote devices when the primary DNS server is unavailable.
Domain Name	The text name corresponding to the numeric IP address that was assigned to the server that controls the network.

(1) For definitions of these terms, refer to the .

5. Click **OK** to apply the settings.

Devices on the network issuing BOOTP requests appear in the BOOTP Request History list.

6. In the BOOTP Request History list, either double-click the adapter's Ethernet Address (MAC) noted in Step 1, or click **New** in the Relation List.

   The New Entry dialog box appears.

   In the first case, the Ethernet Address (MAC) is automatically entered. In the latter case, you must manually enter it.

7. Edit the following:

Box	Type
IP Address	A unique IP address for the adapter
Host Name	Optional
Description	Optional

8. Click **OK** to apply the settings.

   The adapter appears in the Relation List with the new settings.

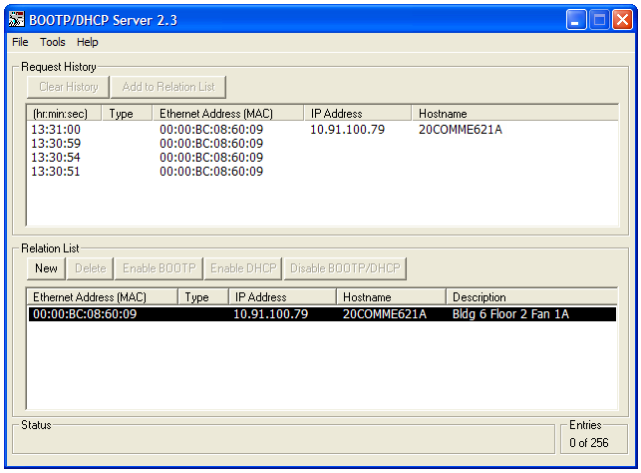

9. To assign this configuration to the adapter permanently, select the device in the Relation List and click **Disable BOOTP/DHCP**.

   When power is cycled on the adapter, it will use the configuration you assigned it and not issue new BOOTP requests.

TIP To enable BOOTP for an adapter that has had BOOTP disabled, first select the adapter in the Relation List, then click **Enable BOOTP**, and lastly reset the adapter or power cycle the drive.

10. Select **File > Save** to save the Relation List.

Setting the IP Address, Subnet Mask, and Gateway Address

By default, the adapter is configured so that you set its IP address, subnet mask, and gateway address using a BOOTP/DHCP server. To use adapter parameters instead, you must disable BOOTP/DHCP and then set the associated adapter parameters.

The IP address can be set using the rotary switches on the adapter to an address from 1...254 that will be used as the lower byte of the IP address 192.168.1.xxx. The Subnet mask will be set to 255.255.255.0.

If the rotary switches are set to any invalid address (0 or >254), the address programmed in the adapter's internal data base will be used.

Disable the BOOTP Feature

1. Set the value of **Parameter 03 - [BOOTP/DHCP]** to '0' (Disabled).

Port 5 Device
20-COMM-ER
Parameter #: 03 BOOTP 0 Disabled

Value	Setting
0	Disabled
1	Enabled (Default)

Note: The internal port used by the adapter is different for different products. The examples here show port 5, used by the SMC Flex and drive products. The SMC-50 uses port 4.

2. Reset the adapter; see Resetting the Adapter on page 43.

After disabling the BOOTP/DHCP feature, you can then configure the IP address, subnet mask, and gateway address using adapter parameters.

Set an IP Address Using Parameters

1. Verify that **Parameter 03 - [BOOTP/DHCP]** is set to '0' (Disabled).

2. Set the value of **Parameters 04 - [IP Addr Cfg 1]** through **07 - [IP Addr Cfg 4]** to a unique IP address.

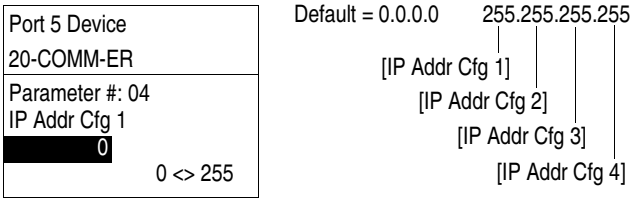

3. Reset the adapter; see Resetting the Adapter on page 43.

The Network status indicator will be steady green or flashing green if the IP address is correctly configured, and is connected to an operating ethernet network.

Set a Subnet Mask Using Parameters

1. Verify that **Parameter 03 - [BOOTP/DHCP]** is set to '0' (Disabled).
2. Set the value of **Parameters 08 - [Subnet Cfg 1]** through **11 - [Subnet Cfg 4]** to the desired value for the subnet mask.

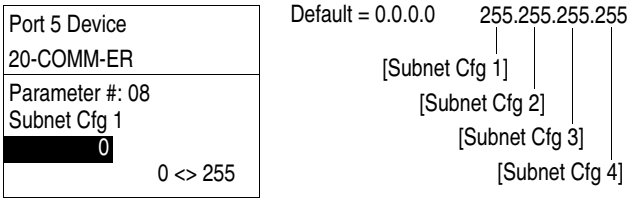

3. Reset the adapter; see Resetting the Adapter on page 43.

Set a Gateway Address Using Parameters

1. Verify that **Parameter 03 - [BOOTP]** is set to '0' (Disabled).
2. Set the value of **Parameters 12 - [Gateway Cfg 1]** through **15 - [Gateway Cfg 4]** to the IP address of the gateway device.

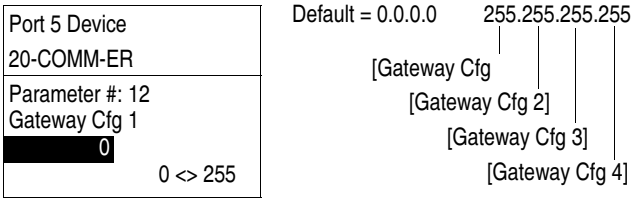

3. Reset the adapter; see Resetting the Adapter on page 43.

Setting the Data Rate

By default, the adapter is set to autodetect, so it automatically detects the data rate and duplex setting used on the network. If you need to set a specific data rate and duplex setting, the value of **Parameter 16 - [EN P1 Rate Config]** determines the Ethernet data rate and duplex setting that the adapter will use to communicate. For definitions of data rate and duplex, see Glossary on page 221.

1. Set the value of **Parameter 16 - [EN P1 Rate Config]** to the data rate at which your network is operating.

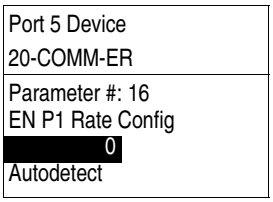

Value	Data Rate
0	Autodetect (default)
1	10 Mbps Full
2	10 Mbps Half
3	100 Mbps Full
4	100 Mbps Half

TIP Auto detection of baud rate and duplex works properly only if the device (usually a switch) on the other end of the cable is also set to automatically detect the baud rate/duplex. If one device has the baud rate/duplex hard-coded, the other device must be hard-coded to the same settings.

2. Reset the adapter; see Resetting the Adapter on page 43.

By default, the adapter is set to autodetect, so it automatically detects the data rate and duplex setting used on the network. If you need to set a specific data rate and duplex setting, the value of **Parameter 18 - [EN P2 Rate Config]** determines the Ethernet data rate and duplex setting that the adapter will use to communicate. For definitions of data rate and duplex, see Glossary on page 221.

1. Set the value of **Parameter 18 - [ENEN P2 Rate Config]** to the data rate at which your network is operating.

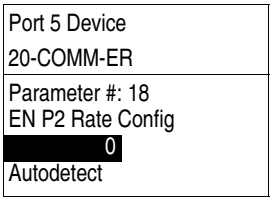

Value	Data Rate
0	Autodetect (default)
1	10 Mbps Full
2	10 Mbps Half
3	100 Mbps Full
4	100 Mbps Half

TIP Auto detection of baud rate and duplex works properly only if the device (usually a switch) on the other end of the cable is also set to automatically detect the baud rate/duplex. If one device has the baud rate/duplex hard-coded, the other device must be hard-coded to the same settings.

2. Reset the adapter; see Resetting the Adapter on page 43.

Setting the I/O Configuration

The I/O configuration determines the data that is sent to and from the drive. Logic Command/Status, Reference/Feedback, and Datalinks may be enabled or disabled. (Datalinks allow you to read/write directly to parameters in the drive using implicit I/O.) A '1' enables the I/O and a '0' disables the I/O.

1. Set the bits in **Parameter 25 - [DPI I/O Cfg]**.

Port 5 Device
20-COMM-ER
Parameter #: 25 DPI I/O Cfg x x x x x x x x x x x 0 0 0 0 **1** Cmd/Ref b00

Bit	Description
0	Logic Command/Reference (Default)
1	Datalink A
2	Datalink B
3	Datalink C
4	Datalink D
5...15	Not Used

   Bit 0 is the right-most bit. It is highlighted above and equals '1'.

2. If a controller is used to control the drive, set adapter **Parameters 37 - [M-S Input]** and **38 - [M-S Output]** for Master-Slave Hierarchy.

   For details, see Setting a Master-Slave Hierarchy (Scanner-to-Drive Communication) on page 36.

3. If Logic Command/Reference is enabled, configure the parameters in the drive to accept the Logic Command and Reference from the adapter.

   For example, set Parameter 90 - [Speed Ref A Sel] in a PowerFlex 70 or 700 drive to '22' (DPI Port 5) so that the drive uses the Reference from the adapter. Also, verify that the mask parameters (for example, Parameter 276 - [Logic Mask]) in the drive are configured to receive the desired logic from the adapter. See the documentation for your drive for details.

   The the SMC devices do not currently use the reference data sent in the IO frame. No reference configuration is required. Refer to the applicable SMC user manual for the latest reference configuration information.

4. If you enabled one or more Datalinks, configure parameters in the drive to determine the source and destination of data in the Datalink(s).

   When using Datalinks, up to 8 [Data In xx] parameters and/or up to 8 [Data Out xx] parameters must be assigned to point to the appropriate parameters for your application. See Chapter 4 for an example.

5. Reset the adapter; see Resetting the Adapter on page 43.

The adapter is ready to receive I/O. You must now configure the adapter to receive I/O from a master or peer device. See Selecting Master-Slave or Peer-to-Peer. If you select a Master-Slave hierarchy, you must also configure the master to communicate with the adapter. See Chapter 4, Configuring the I/O.

Selecting Master-Slave or Peer-to-Peer

A hierarchy determines the type of device with which the adapter exchanges data. In a Master-Slave hierarchy, the adapter exchanges data with a master, such as a scanner or bridge (1756-ENBT, 1756-EN2T, 1747-L5-xxx, and so forth). In a Peer-to-Peer hierarchy, the adapter exchanges data with one or more EtherNet/IP adapters in other devices. (The devices must have compatible Logic Command/Status words.)

For both Master-Slave and Peer-to-Peer hierarchies, the devices exchanging data must be on the same IP subnet. See 'IP Addresses' in the for information about IP subnets.

Setting a Master-Slave Hierarchy (Scanner-to-Drive Communication)

1. Enable the desired I/O in **Parameter 25 - [DPI I/O Cfg]**.

   See Setting the I/O Configuration on page 35.

2. Set the bits in **Parameter 37 - [M-S Input]**.

   This parameter determines the data received from the master by the device. A '1' enables the I/O and a '0' disables the I/O.

Port 5 Device 20-COMM-ER
Parameter #: 37 M-S Input x x x x x x x x x x x 0 0 0 0 **1** Cmd/Ref b00

Bit	Description
0	Logic Command/Reference (Default)
1	Datalink A Input
2	Datalink B Input
3	Datalink C Input
4	Datalink D Input
5...15	Not Used

   Bit 0 is the right-most bit. It is highlighted above and equals '1'.

3. Set the bits in **Parameter 38 - [M-S Output]**.

   This parameter determines the data transmitted from the device to the scanner. A '1' enables the I/O and a '0' disables the I/O.

Port 5 Device 20-COMM-ER
Parameter #: 38 M-S Output x x x x x x x x x x x 0 0 0 0 **1** Status/Fdbk b00

Bit	Description
0	Status/Feedback (Default)
1	Datalink A Output
2	Datalink B Output
3	Datalink C Output
4	Datalink D Output
5...15	Not Used

   Bit 0 is the right-most bit. It is highlighted above and equals '1'.

4. Reset the adapter; see Resetting the Adapter on page 43.

The adapter is ready to receive I/O from the master (that is, scanner). You must now configure the scanner to recognize and transmit I/O to the adapter. See Chapter 4, Configuring the I/O.

Setting the Adapter to Transmit Peer-to-Peer Data (Drive-to-Drive Communication)

1. Verify that **Parameter 53 - [Peer Out Enable]** is set to '0' (Off).

   This parameter must be Off while you configure peer output parameters.

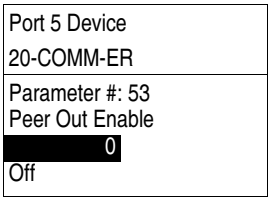

Value	Setting
0	Off (Default)
1	On

2. Set **Parameter 51 - [Peer A Output]** to select the source of the data to output to the network.

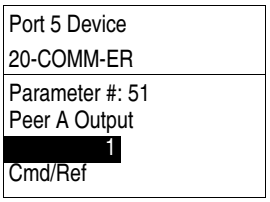

Value	Description
0	Off (Default)
1	Logic Command/Reference
2…5	Datalink A, B, C, or D Input
6…9	Datalink A, B, C, or D Output

3. If desired, set **Parameter 52 - [Peer B Output]** to select an additional source of the data to output to the network.

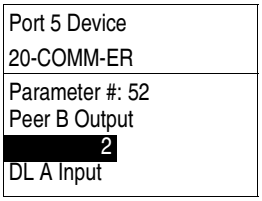

Value	Description
0	Off (Default)
1	Logic Command/Reference
2…5	Datalink A, B, C, or D Input
6…9	Datalink A, B, C, or D Output

4. Set **Parameters 54 - [Peer Out Time]** and **55 - [Peer Out Skip]** to establish the minimum and maximum intervals between peer messages.

Because the adapter transmits peer messages when a change-of-state condition occurs, minimum and maximum intervals are required.

– The minimum interval ensures that the adapter does not transmit messages on the network too often, thus minimizing network traffic. Set it with **Parameter 54 - [Peer Out Time]**.

– The maximum interval ensures that the adapter transmits messages often enough so that the receiving adapter(s) can receive recent data and verify that communications are working or, if communications are not working, can timeout. The maximum interval is the value of **Parameter 54 - [Peer Out Time]** multiplied by the value of **Parameter 55 - [Peer Out Skip]**.

In the example below, the minimum interval is set to 2.00 seconds (**Parameter 54 - [Peer Out Time]**), and the maximum interval is set to 4.00 seconds (2.00 x ‘2’ setting of **Parameter 55 - [Peer Out Skip]**).

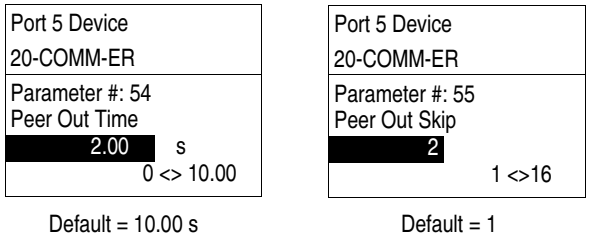

5. Set **Parameter 53 - [Peer Out Enable]** to ‘1’ (On).

The adapter will transmit the data selected in **Parameters 51 - [Peer A Output]** and **52 - [Peer B Output]** to the network. Another adapter must be configured to receive the peer I/O data.

Setting the Adapter to Receive Peer-to-Peer Data

1. Verify that **Parameter 49 - [Peer Inp Enable]** is set to ‘0’ (Off).

This parameter must be Off while you configure the peer input parameters.

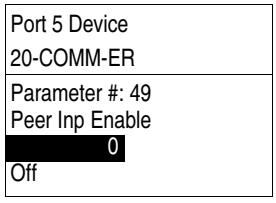

Value	Setting
0	Off (Default)
1	On

2. Set **Parameters 44 - [Peer Inp Addr 1]** through **47 - [Peer Inp Addr 4]** to the IP address of the node from which you want to receive data.

Valid nodes must have 20-COMM-ER adapters connected to drives with compatible Logic Command/Status words.

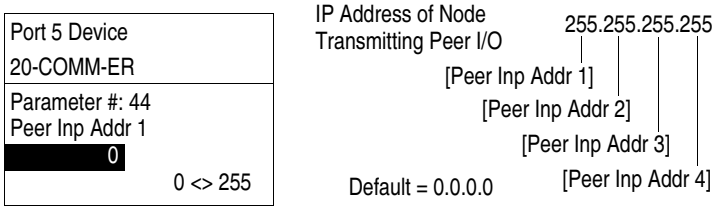

3. Set **Parameter 40 - [Peer A Input]** to select the destination of the data that is input to the drive as Peer A.

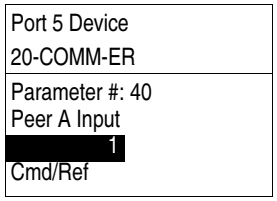

Value	Description
0	Off (Default)
1	Logic Command/Reference
2…5	Datalink A, B, C, or D Input

Data is used from the least significant word in the event of a mismatch in Reference or Datalink sizes.

4. If desired, set **Parameter 41 - [Peer B Input]** to select the destination of the data to input to the device as Peer B.

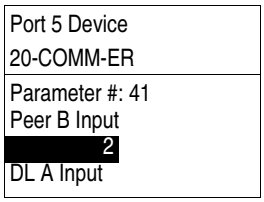

Value	Description
0	Off (Default)
1	Logic Command/Reference
2…5	Datalink A, B, C, or D Input

5. If the adapter receives a Logic Command, set the bits in **Parameter 42 - [Peer Cmd Mask]** that the device should use.

The bit definitions for the Logic Command word will depend on the drive to which the adapter is connected. See Appendix D or the device documentation.

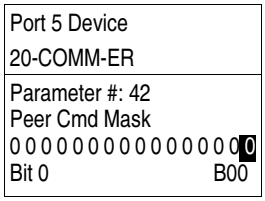

Value	Description
0	Ignore this command bit. (Default)
1	Use this command bit.

If the adapter receives a Logic Command from both a master device and a peer device, each command bit must have only one source. The source of command bits set to ‘0’ will be the master device. The source of command bits set to ‘1’ will be the peer device.

6. Reset the adapter (see Resetting the Adapter on page 43) so that changes to **Parameter 42 - [Peer Cmd Mask]** take effect.
7. Set **Parameter 48 - [Peer Inp Timeout]** to the maximum amount of time the adapter will wait for a message before timing out.

Important: This value must be greater than the product of **Parameter 54 - [Peer Out Time]** multiplied by **Parameter 55 - [Peer Out Skip]** in the adapter from which you are receiving I/O.

For example, if the value of **Parameter 54 - [Peer Out Time]** is 2.00 seconds and the value of **Parameter 55 - [Peer Out Skip]** is 2 (see example screen in step 4 on page 37), then **Parameter 48 - [Peer Inp Timeout]** needs to have a value greater than 4.00, such as 5.00 in the example screen below.

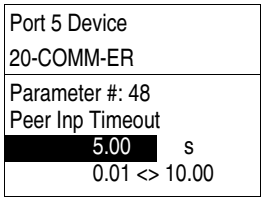

Default = 10.00 s

8. Set **Parameter 43 - [Peer Flt Action]** to the action that the adapter will take if it times out.

ATTENTION: Risk of injury or equipment damage exists. **Parameter 43 - [Peer Flt Action]** lets you determine the action of the adapter and connected device if peer communication is disrupted. By default, this parameter faults the device. You can set this parameter so that the device continues to run, however, precautions should be taken to ensure that the setting of this parameter does not create a hazard of injury or equipment damage. When commissioning the device, verify that your system responds correctly to various situations (for example, a disconnected cable).

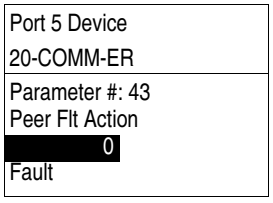

Value	Description
0	Fault (Default)
1	Stop
2	Zero Data
3	Hold Last
4	Send Flt Cfg

For more details, see Setting a Fault Action on page 41.

9. Set **Parameter 49 - [Peer Inp Enable]** to '1' (On).

The adapter is now configured to receive peer I/O from the specified node. Ensure that the specified node is configured to transmit peer I/O.

Setting the Reference Adjustment

A Reference Adjustment is a percent scaling factor for the Reference from the network. It can be set from 0.00...200.00% to allow the drive's Reference to either match the network Reference (= 100.00%), scale below the network Reference (< 100.00%), or scale above the network Reference (> 100.00%).

The SMC controllers do not currently use the reference data sent in the IO frame. No Reference configuration is required. Refer to the applicable SMC user manual for the latest reference configuration information.

ATTENTION: To guard against equipment damage and/or personal injury, note that changes to adapter **Parameter 39 - [Ref Adjust]** take effect immediately. A drive receiving its Reference from the adapter will receive the newly scaled Reference, resulting in a change of speed.

If the adapter is receiving a Reference, set **Parameter 39 - [Ref Adjust]** to the desired scaling factor.

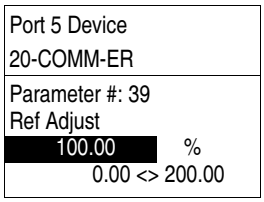

Default = 100.00%

The adjustment takes effect as soon as it is entered.

Setting a Fault Action

By default, when I/O communication is disrupted (for example, a cable is disconnected) or the controller is idle (in program mode or faulted), the drive responds by faulting if it is using I/O from the network. You can configure a different response to these events:

- Disrupted I/O communication by using **Parameter 23 - [Comm Flt Action]**
- An idle controller by using **Parameter 24 - [Idle Flt Action]**

ATTENTION: Risk of injury or equipment damage exists. **Parameters 23 - [Comm Flt Action]** and **24 - [Idle Flt Action]** let you determine the action of the adapter and connected device if I/O communication is disrupted or the controller is idle. By default, these parameters fault the device. You can set these parameters so that the device continues to run, however, precautions should be taken to ensure that the settings of these parameters do not create a risk of injury or equipment damage. When commissioning the device, verify that your system responds correctly to various situations (for example, a disconnected cable or faulted controller).

Changing the Fault Action

Set the values of **Parameters 23 - [Comm Flt Action]** and **24 - [Idle Flt Action]** to any of these desired responses.

Value	Action	Description
0	Fault	The device is faulted and stopped. (Default)
1	Stop	The device is stopped, but not faulted.
2	Zero Data	The device is sent 0 for output data. This does not command a stop.
3	Hold Last	The device continues in its present state.
4	Send Flt Cfg	The device is sent the data that you set in the fault configuration parameters (**Parameters 27 - [Flt Cfg Logic]** through **36 - [Flt Cfg D2 In]**).

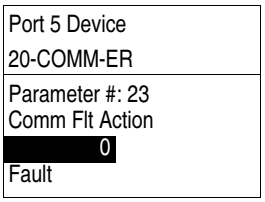

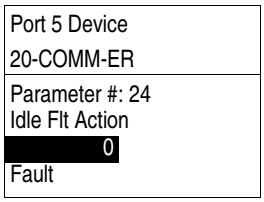

Changes to these parameters take effect immediately. A reset is not required.

If communication is disrupted and then is re-established, the drive will automatically take commands from the network again.

Setting the Fault Configuration Parameters

If you set **Parameter 23 - [Comm Flt Action]** or **24 - [Idle Flt Action]** to 'Send Flt Cfg', the values in the following parameters are sent to the drive after an I/O communications fault and/or idle fault occurs. You must set these parameters to values required by your application.

Parameter	Description
27 - [Flt Cfg Logic]	A 16-bit value sent to the device for Logic Command.
28 - [Flt Cfg Ref]	A 32-bit value (0…4294967295) sent to the device as a Reference or Datalink. **Important:** If the device uses a 16-bit Reference or 16-bit Datalinks, the most significant word of the value must be set to zero (0) or a fault will occur.
29 - [Flt Cfg x1 In] through **36 - [Flt Cfg x2 In]**	

Changes to these parameters take effect immediately. A reset is not required.

Setting Web Access Control

By using a web browser to access the IP address set for the adapter, you can view the adapter's web pages for information about the adapter, its connected device, and other DPI devices connected to the device, such as HIMs or converters. Additionally, the adapter can be configured to automatically send e-mail messages

to desired addresses when selected device faults occur and/or are cleared, and/or when the adapter takes a communication or idle fault action. For more details on the adapter's web pages, refer to Chapter 8, Viewing the Adapter Web Pages.

By default, the adapter web pages are disabled. See Figure 2 and set the Web Pages Switch (SW4) to the 'Enable Web' (up) position. **Parameter 56 [Web Enabled]** reflects the position of the web enable DIP switch on the adapter.

Important: For a change to the switch setting to take effect, the adapter must be reset (see Resetting the Adapter on page 43).

Bit 0 of **Parameter 57 - [Web Features]** is used to protect the configured settings for e-mail messaging. By default, settings are not protected and the user can make changes. To protect the configured settings, set the value of E-mail Cfg Bit 0 to '0' (Disabled). You can unprotect the configuration by changing Bit 0 back to '1' (Enabled). E-mail messaging will always remain active regardless of whether or not its settings are protected—unless e-mail messaging was **never** configured. For more information about configuring adapter e-mail messaging or to stop e-mail messages, see Email Configuration Link on page 162.

Port 5 Device 20-COMM-ER
Parameter #: 57 Web Features x x x x x x x x x x x x x x x **1** E-mail Cfg b00

Bit	Description
0	E-mail Cfg (Default = 0 = Disabled)
1…7	Not Used

Bit 0 is the right-most bit. It is highlighted above and equals '1'.

Changes to this parameter take effect immediately. A reset is not required.

Resetting the Adapter

Changes to switch settings and some adapter parameters require that you reset the adapter before the new settings take effect. You can reset the adapter by power cycling the drive or by using **Parameter 22- [Reset Module]**.

ATTENTION: Risk of injury or equipment damage exists. If the adapter is transmitting control I/O to the drive, the drive may fault when you reset the adapter. Determine how your drive will respond before resetting a connected adapter.

Set **Parameter 22 - [Reset Module]** to '1' (Reset Module).

Port 5 Device 20-COMM-ER
Parameter #: 22 Reset Module **1** Reset Module

Value	Description
0	Ready (Default)
1	Reset Module
2	Set Defaults

When you enter '1' (Reset Module), the adapter will be immediately reset. When you enter '2' (Set Defaults), the adapter will set all adapter parameters to their factory-default values. After performing a Set Defaults, enter '1' (Reset Module) so that the new values take effect. The value of this parameter will be restored to '0' (Ready) after the adapter is reset.

Viewing the Adapter Status Using Parameters

The following parameters provide information about the status of the adapter. You can view these parameters at any time.

Parameter	Description
17 - [EN P1 Rate Act]	The data rate used on port 1 of the adapter
19 - [EN P2 Rate Act]	The data rate used on port 2 of the adapter
20 - [Ref/Fdbk Size]	The size of the Reference/Feedback. It will either be 16 bits or 32 bits. It is set in the device and the adapter automatically uses the correct size.
21 - [Datalink Size]	The size of the Datalinks. It will either be 16 bits or 32 bits. It is set in the device and the adapter automatically uses the correct size.
26 - [DPI I/O Act]	The Reference/Feedback and Datalinks used by the adapter. This value is the same as **Parameter 25 - [DPI I/O Cfg]** unless the parameter was changed and the adapter was not reset. Bit Definition: Not Used | Not Used | Not Used | Datalink D | Datalink C | Datalink B | Datalink A | Cmd/Ref Default: x | x | x | 0 | 0 | 0 | 0 | 1 Bit: 7 | 6 | 5 | 4 | 3 | 2 | 1 | 0 0 = I/O disabled 1 = I/O enabled
50 - [Peer Inp Status]	The status of the consumed peer input connection. Values 0 = Off 1 = Waiting 2 = Running 3 = Faulted

Updating the Adapter Firmware

The adapter firmware can be updated over the network or serially through a direct connection from a computer to the drive using a 1203-USB or 1203-SSS serial converter.

When updating firmware over the network, you can use the Allen-Bradley ControlFLASH software tool, the built-in update capability of DriveExplorer Full software, or the built-in update capability of DriveExecutive software.

When updating firmware through a direct serial connection from a computer to a drive, you can use the same Allen-Bradley software tools described above, or you can use terminal emulation software set to the X-modem protocol.

If using a direct serial connection, you can use DriveExplorer Lite software.

To obtain a firmware update for this adapter, go to http://www.ab.com/support/abdrives/webupdate. This website contains all firmware update files and associated Release Notes that describe the following items:

- Firmware update enhancements and anomalies
- How to determine the existing firmware revision
- How to update firmware using DriveExplorer, DriveExecutive, ControlFLASH, or HyperTerminal software

Configuring the I/O

This chapter provides instructions on how to configure a Rockwell Automation ControlLogix or MicroLogix 1100/1400 controller to communicate with the adapter and connected PowerFlex drive.

Topic	Page
Using RSLinx Classic Software	47
ControlLogix Controller Example	48
MicroLogix 1100/1400 Controller Example	68

Using RSLinx Classic Software

RSLinx Classic software, in all its variations (Lite, Gateway, OEM, and so forth), is used to provide a communication link between the computer, network, and controller. RSLinx Classic software requires its network-specific driver to be configured before communication is established with network devices. To configure the RSLinx driver, follow this procedure.

1. Start RSLinx Classic software and select **Communications > Configure Drivers** to display the Configure Drivers screen.
2. From the Available Driver Types pull-down menu, choose EtherNet/IP Driver.
3. Click **Add New...** to display the Add New RSLinx Driver screen.
4. Use the default name or type a new name and click **OK**. The 'Configure driver:' screen appears.
5. Depending on your application, select either the browse local or remote subnet option.
6. Click **OK**.

The Configure Drivers screen reappears with the new driver in the Configured Drivers list.

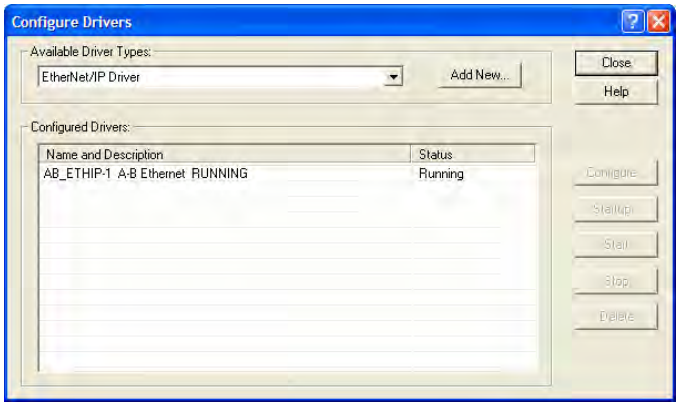

7. Click **Close** to close the Configure Drivers screen.
8. Keep RSLinx running and verify that the computer recognizes the drive.
   a. Select **Communications > RSWho**.
   b. In the menu tree, click '+' next to the Ethernet driver.

   If the 'EtherNet/IP driver' cannot see your drive, as an alternative, use either the 'Ethernet devices' or 'Remote Devices via Linx Gateway' RSLinx driver.

ControlLogix Controller Example

After the adapter is configured, the connected drive and adapter will be a single node on the network. This section provides the steps needed to configure a simple EtherNet/IP network (see Figure 8). In our example, we will configure a ControlLogix controller with 1756-ENBT (Series A) bridge to communicate with a drive using Logic Command/Status, Reference/Feedback, and 16 Datalinks (8 to read and 8 to write) over the network.

Figure 8 - Example ControlLogix EtherNet/IP Network

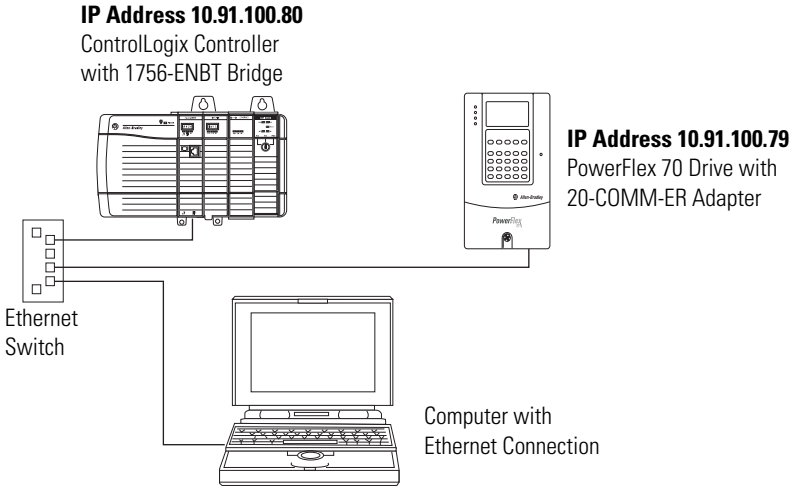

Adding the Bridge to the I/O Configuration

To establish communications between the controller and adapter over the network, you must first add the ControlLogix controller and its bridge to the I/O configuration. This procedure is similar for all RSLogix 5000 versions.

1. Start RSLogix 5000 software.
2. Select **File > New** to display the New Controller screen.

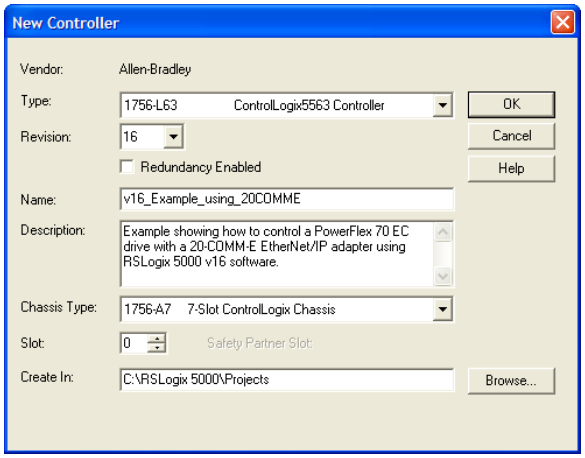

   a. Choose the appropriate choices for the fields in the screen to match your application.
   b. Click **OK**.

      The RSLogix 5000 window reappears with the treeview in the left pane.

3. In the treeview, right-click the I/O Configuration folder and choose **New Module...**

The Select Module screen appears.

4. Expand the Communications group to display all of the available communication modules.

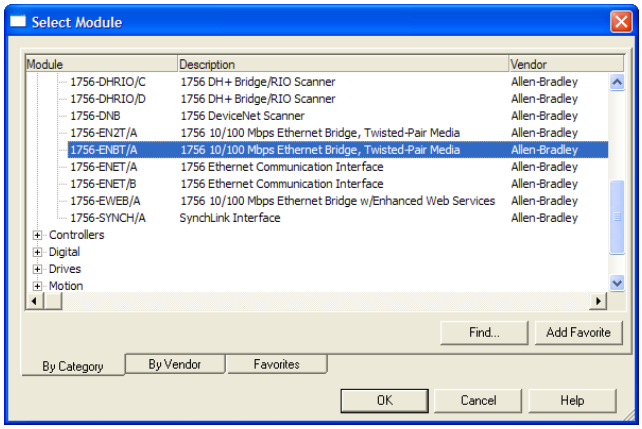

5. In the list, select the EtherNet/IP bridge used by your controller.

In this example, we use a 1756-ENBT EtherNet/IP Bridge (Series A), so the 1756-ENBT/A option is selected.

6. Click **OK**.
7. In the Select Major Revision pop-up dialog box, select the major revision of its firmware.
8. Click **OK**.

The bridge's New Module screen appears.

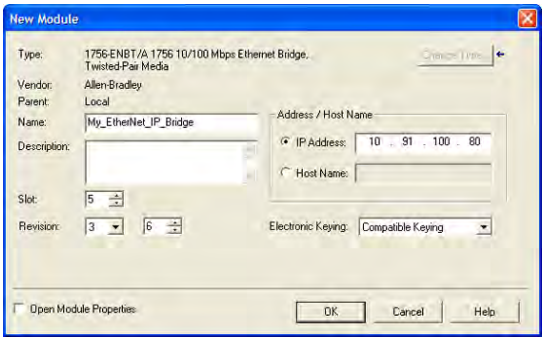

9. Edit the following:

Box	Setting
Name	A name to identify the EtherNet/IP bridge.
Description	Optional – description of the EtherNet/IP bridge.
IP Address	The IP address of the EtherNet/IP bridge.
Host Name	Not used.
Slot	The slot of the EtherNet/IP bridge in the rack.
Revision	The minor revision of the firmware in the bridge. (You already set the major revision by selecting the bridge series in step 5.)
Electronic Keying	**Compatible Keying**. The 'Compatible Keying' setting for Electronic Keying ensures the physical module is consistent with the software configuration before the controller and bridge make a connection. Therefore, be sure that you have set the correct revision in this screen. See the online Help for additional information on this and other Electronic Keying settings. If keying is not required, select 'Disable Keying'. Disable keying is recommended.
Open Module Properties	When this box is checked, clicking **OK** opens additional module properties screens to further configure the bridge. When unchecked, clicking **OK** closes the bridge's New Module screen. For this example, uncheck this box.

10. Click **OK**.

The bridge is now configured for the EtherNet/IP network, added to the RSLogix 5000 project, and appears in the I/O Configuration folder. In our example, a 1756-ENBT bridge appears under the I/O Configuration folder with its assigned name.

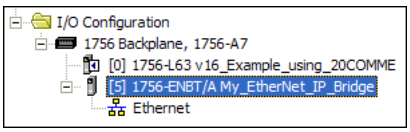

For convenience, keep the project open. Later in this chapter the project will need to be downloaded to the controller.

There are three ways to add the adapter into the I/O configuration:

- Device Add-on Profiles (RSLogix 5000 software, version 16.00 or later)
- Classic Profile (RSLogix 5000 software, versions 13.00...15.00)
- Generic Profile (RSLogix 5000 software, all versions)

These are described in separate sections below. If your version of RSLogix 5000 software supports device Add-on Profiles, we recommend that you use this method.

Using RSLogix 5000 Device Add-on Profiles, Version 16.00 or Later

When compared to using the RSLogix 5000 Classic Profile (versions 13.00...15.00) or Generic Profile (all versions), the RSLogix 5000 device Add-on Profiles provide the following advantages:

- Profiles for specific drives that provide descriptive controller tags for basic control I/O words (Logic Command/Status and Reference/Feedback) **and** Datalinks. Additionally, Datalinks automatically take the name of the drive parameter to which they are assigned. These profiles virtually eliminate I/O mismatch errors and substantially reduce drive configuration time.

- New Drive tab eliminates the need for a separate drive software configuration tool.

- Drive configuration settings are saved as part of the RSLogix 5000 software, version 16.00 or later, project file (.ACD) and also downloaded to the controller.

- Unicast connection (RSLogix 5000 software, version 18.00 or later)

- Device Add-on Profiles can be updated anytime. When a new drive is used or to benefit from new updates for Add-on Profiles, you will need the newest Add-on Profile update. Go to www.ab.com/support/abdrives/webupdate to download the latest RSLogix 5000 device Add-on Profile. To determine your device Add-on Profile version, see Allen-Bradley Knowledgebase document #65882.

Add the Drive/Adapter to the I/O Configuration

To transmit data between the bridge and the drive, you must add the drive as a child device to the parent bridge. In this example, RSLogix 5000 software, version 16.00 is used with device Add-on Profile version 4.05 or later.

1. In the treeview, right-click on the bridge and choose **New Module...** to display the Select Module screen.

   In our example, we right-click on the 1756-ENBT/A bridge. Expand the Drives group to display all of the available drives with their communication adapters.

TIP If the PowerFlex drive is not shown, go to www.ab.com/support/abdrives/webupdate and download the latest RSLogix 5000 device Add-on Profile.

2. From the list, select the drive and its connected adapter.

   For this example, we selected 'PowerFlex 70 EC-E'.

3. Click **OK**.

   The drive's New Module screen appears.

4. On the General tab, edit the following data about the drive/adapter.

Box	Setting
Name	A name to identify the drive.
Description	Optional – description of the drive/adapter.
IP Address	The IP address of the adapter.

5. On the New Module screen in the Module Definition section, click **Change...** to launch the Module Definition screen and begin the drive/adapter configuration process.

   In this example, Datalinks are used to do the following.

Read...	Write to...
Output Current (Parameter 3)	Accel Time 1 (Parameter 140)
DC Bus Voltage (Parameter 12)	Decel Time 1 (Parameter 142)
Fault 1 Code (Parameter 243)	High Resolution Reference (Parameter 308)

TIP To get the latest RSLogix 5000 device Add-on Profile, go to www.ab.com/support/abdrives/webupdate.

6. In the Module Definition screen, edit the following information.

Box	Setting
Revision	The major and minor revision of the firmware (database) in the drive. If the drive's major and minor revision is not available, the drive database is not installed on your computer. To get the correct database revision, use one of the following buttons at the bottom left of the Module Definition screen: • **Create Database:** Creates a database from an online network drive. Clicking this button displays an RSLinx software RSWho window. Browse to the online drive (for this example, PowerFlex 70 EC), select it, and click **OK**. The database will be uploaded and stored on the computer. Thereafter, close the Module Definition screen and then re-open it to display the new revision. • **Web Update:** When a drive is not available online, opens the Allen-Bradley Drives Web Updates website to download a specific database file. After downloading the file, close the Module Definition screen and then re-open it to display the new revision. • **Match Drive:** Use this button when the drive being added to the network matches the drive profile (revision, rating, configuration settings, and so forth) of an existing online network drive. Click this button to conveniently create a duplicate drive profile from the online drive, and automatically load this identical information into the Module Definition screen. This eliminates the need to manually enter the information each time a new drive with a matching profile is added to the network.
Electronic Keying	**Compatible Module**. The 'Compatible Module' setting for Electronic Keying ensures that the physical module is consistent with the software configuration before the controller and bridge make a connection. Therefore, be sure that you have set the correct revision in this screen. See the online Help for additional information on this and other Electronic Keying settings. If keying is not required, select 'Disable Keying'. Drives do not require keying, and so 'Disable Keying' is recommended.
Drive Rating	The voltage and current rating of the drive. If the drive rating is not listed, the drive database is not installed on your computer. To get the correct drive rating, use the **Create Database**, **Web Update**, or **Match Drive** button described above.
Connection	**Parameters via Datalinks.** When selecting 'Parameters via Datalinks' (default), the controller tags for the Datalinks use the drive parameter names to which they are assigned. When selecting 'Datalinks', the controller tags for the Datalinks have non-descriptive UserDefinedData[n] names like those used in RSLogix 5000 software, version 15.00.
Data Format	**Parameters.** When the Connection field is set to 'Parameters via Datalinks', 'Parameters' is automatically selected. When the Connection field is set to 'Datalinks', you must select the number of Datalinks required for your application in the 'Data Format' field.
Datalink A, B, C, D	In the Input Data column, assigns selected drive parameters to be READ by the controller. In the Output Data column, assigns selected drive parameters to be WRITTEN by the controller.
Sort Input/ Output selection…	When this box is checked, sorts the Input Data and Output Data assigned parameters by name and then by number, and enables parameter search by name. When unchecked, sorts the assigned parameters by parameter number and then by name, and enables parameter search by number.
Use Network Reference	Conveniently selects the speed reference for the drive to come from the network. This box is checked by default.

When a 32-bit parameter is selected for Input Data or Output Data for a drive with 16-bit Datalinks, two contiguous Datalinks (for example, x1 and x2, where x = A, B, C or D) are automatically assigned as a pair to

represent that parameter. See Datalink examples in the screen shown on the previous page. For more information on Datalinks, see Using Datalinks on page 86.

On the Module Definition screen, notice that the automatically-assigned controller tags DriveStatus, OutputFreq, DriveLogicRslt, and CommandedFreq are always used.

When a Datalink is enabled, the following 20-COMM-ER adapter I/O parameters are automatically set:

- **Parameter 25 - [DPI I/O Cfg]** turns on the enabled Datalink bit so the 20-COMM-ER adapter will communicate that Datalink's information with the drive.
- **Parameter 37 - [M-S Input]** turns on the enabled Datalink bit so the 20-COMM-ER adapter will input that Datalink's information from the controller.
- **Parameter 38 - [M-S Output]** turns on the enabled Datalink bit so the 20-COMM-ER adapter will output that Datalink's information to the controller.

7. Click **OK** on the Module Definition screen to save the drive and adapter configuration and close the screen.

The drive's New Module screen reappears.

8. On the New Module screen, click the Connection tab.

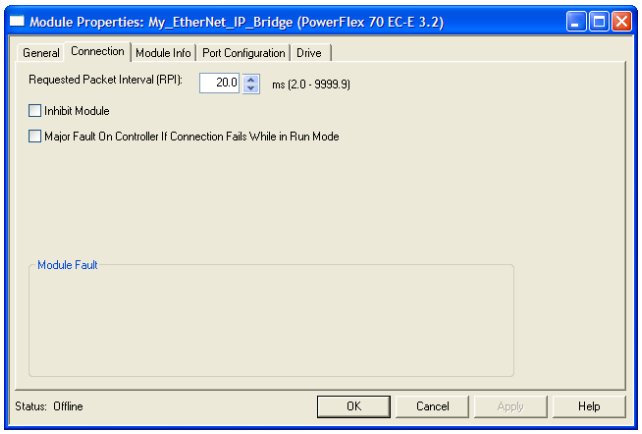

Screen for RSLogix 5000 software, version 16.00 or 17.00

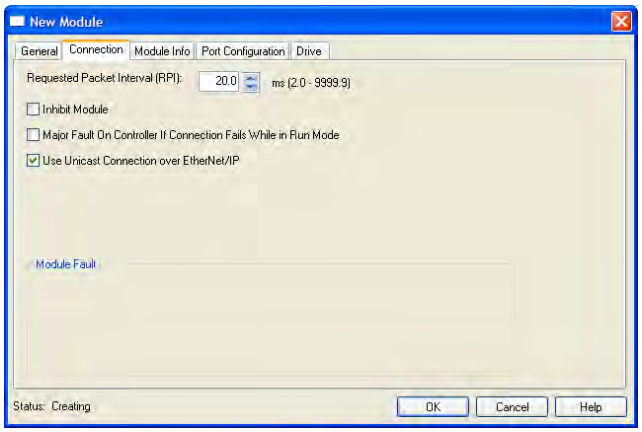

Screen for RSLogix 5000 software, version 18.00 or later

9. In the 'Requested Packet Interval (RPI)' box, set the value to 5.0 milliseconds or greater.

This value determines the maximum interval that a controller should use to move data to and from the adapter. To conserve bandwidth, use higher values for communicating with low priority devices.

The 'Inhibit Module' box, when checked, inhibits the module from communicating with the RSLogix 5000 project. When the 'Major Fault on ...' box is checked, a major controller fault will occur when the module's connection fails while the controller is in the Run Mode. For this example, leave the 'Inhibit Module' and 'Major Fault On ...' boxes unchecked.

Important: Unicast support has been added to RSLogix 5000 software, version 18.00 or later. However, to also support unicast, the controller firmware must be version 18.00 or later. Unicast is recommended whenever possible. For the benefits of unicast operation, see Preparing for an Installation on page 18.

10. On the New Module screen, click the Port Configuration tab.

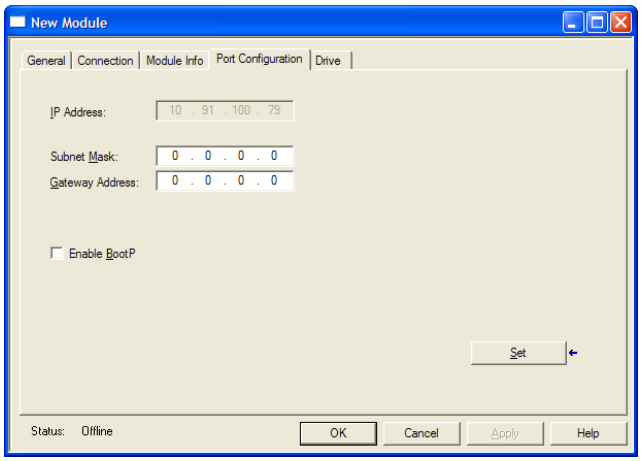

11. In the Port Configuration tab screen, edit the following information.

Box	Setting
IP Address	The IP address of the adapter that was already set in the General tab. This field is not configurable (grayed out).
Subnet Mask	The Subnet Mask configuration setting of the network. This setting must match the setting of other devices on the network (for example, 255.255.255.0).
Gateway Address	The Gateway Address configuration setting of the network. This setting must match the setting of other devices on the network (for example, 10.91.100.1).
Enable BootP	When this box is checked, BOOTP is enabled in the adapter and will ignore the IP address set in the General tab. When unchecked, the controller uses the set IP address. This is another method to enable/disable BOOTP in the adapter. For this example, leave this box unchecked.

12. Click **Set** to save the Port Configuration information which sets the corresponding offline Subnet Cfg x and Gateway Cfg x parameters in the adapter.

13. Click **OK** on the New Module screen.

The new node (‘My_PowerFlex_70_EC_Drive’ in this example) now appears under the bridge (‘My_EtherNet_IP_Bridge’ in this example) in the I/O Configuration folder. If you double-click the Controller Tags, you will see that module-defined data types and tags have been automatically created (Figure 9). Note that all tag names are defined and Datalinks include the assigned drive parameter name. After you save and download the configuration, these tags allow you to access the Input and Output data of the drive via the controller’s ladder logic.

Figure 9 - Controller Tags

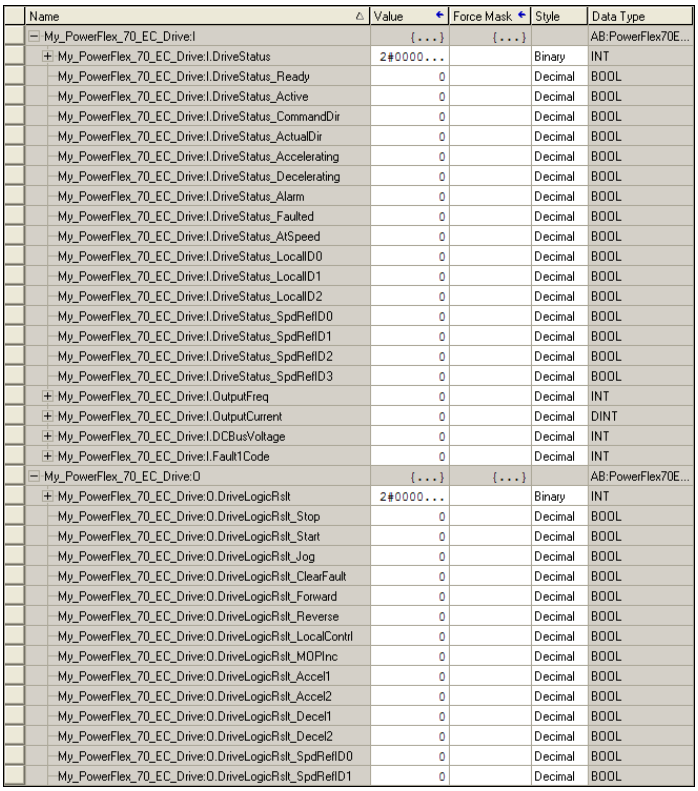

Name	Value	Force Mask	Style	Data Type
My_PowerFlex_70_EC_Drive:I	{...}	{...}		AB:PowerFlex70E...
My_PowerFlex_70_EC_Drive:I.DriveStatus	2#0000...		Binary	INT
My_PowerFlex_70_EC_Drive:I.DriveStatus_Ready	0		Decimal	BOOL
My_PowerFlex_70_EC_Drive:I.DriveStatus_Active	0		Decimal	BOOL
My_PowerFlex_70_EC_Drive:I.DriveStatus_CommandDir	0		Decimal	BOOL
My_PowerFlex_70_EC_Drive:I.DriveStatus_ActualDir	0		Decimal	BOOL
My_PowerFlex_70_EC_Drive:I.DriveStatus_Accelerating	0		Decimal	BOOL
My_PowerFlex_70_EC_Drive:I.DriveStatus_Decelerating	0		Decimal	BOOL
My_PowerFlex_70_EC_Drive:I.DriveStatus_Alarm	0		Decimal	BOOL
My_PowerFlex_70_EC_Drive:I.DriveStatus_Faulted	0		Decimal	BOOL
My_PowerFlex_70_EC_Drive:I.DriveStatus_AtSpeed	0		Decimal	BOOL
My_PowerFlex_70_EC_Drive:I.DriveStatus_LocalID0	0		Decimal	BOOL
My_PowerFlex_70_EC_Drive:I.DriveStatus_LocalID1	0		Decimal	BOOL
My_PowerFlex_70_EC_Drive:I.DriveStatus_LocalID2	0		Decimal	BOOL
My_PowerFlex_70_EC_Drive:I.DriveStatus_SpdRefID0	0		Decimal	BOOL
My_PowerFlex_70_EC_Drive:I.DriveStatus_SpdRefID1	0		Decimal	BOOL
My_PowerFlex_70_EC_Drive:I.DriveStatus_SpdRefID2	0		Decimal	BOOL
My_PowerFlex_70_EC_Drive:I.DriveStatus_SpdRefID3	0		Decimal	BOOL
My_PowerFlex_70_EC_Drive:I.OutputFreq	0		Decimal	INT
My_PowerFlex_70_EC_Drive:I.OutputCurrent	0		Decimal	DINT
My_PowerFlex_70_EC_Drive:I.DCBusVoltage	0		Decimal	INT
My_PowerFlex_70_EC_Drive:I.Fault1Code	0		Decimal	INT
My_PowerFlex_70_EC_Drive:O	{...}	{...}		AB:PowerFlex70E...
My_PowerFlex_70_EC_Drive:O.DriveLogicRslt	2#0000...		Binary	INT
My_PowerFlex_70_EC_Drive:O.DriveLogicRslt_Stop	0		Decimal	BOOL
My_PowerFlex_70_EC_Drive:O.DriveLogicRslt_Start	0		Decimal	BOOL
My_PowerFlex_70_EC_Drive:O.DriveLogicRslt_Jog	0		Decimal	BOOL
My_PowerFlex_70_EC_Drive:O.DriveLogicRslt_ClearFault	0		Decimal	BOOL
My_PowerFlex_70_EC_Drive:O.DriveLogicRslt_Forward	0		Decimal	BOOL
My_PowerFlex_70_EC_Drive:O.DriveLogicRslt_Reverse	0		Decimal	BOOL
My_PowerFlex_70_EC_Drive:O.DriveLogicRslt_LocalContrl	0		Decimal	BOOL
My_PowerFlex_70_EC_Drive:O.DriveLogicRslt_MOPInc	0		Decimal	BOOL
My_PowerFlex_70_EC_Drive:O.DriveLogicRslt_Accel1	0		Decimal	BOOL
My_PowerFlex_70_EC_Drive:O.DriveLogicRslt_Accel2	0		Decimal	BOOL
My_PowerFlex_70_EC_Drive:O.DriveLogicRslt_Decel1	0		Decimal	BOOL
My_PowerFlex_70_EC_Drive:O.DriveLogicRslt_Decel2	0		Decimal	BOOL
My_PowerFlex_70_EC_Drive:O.DriveLogicRslt_SpdRefID0	0		Decimal	BOOL
My_PowerFlex_70_EC_Drive:O.DriveLogicRslt_SpdRefID1	0		Decimal	BOOL

Save the I/O Configuration to the Controller

After adding the bridge and drive/adapter to the I/O configuration, you must download the configuration to the controller. You should also save the configuration to a file on your computer.

1. In the RSLogix 5000 window, select **Communications > Download**.

The Download dialog box appears.

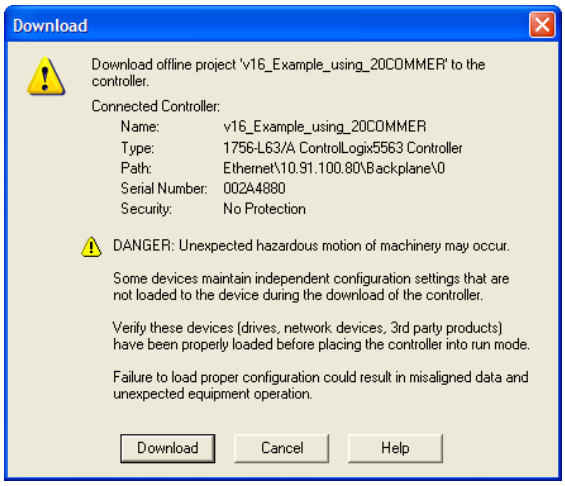

TIP If a message box reports that RSLogix 5000 software is unable to go online, select **Communications > Who Active** to find your controller in the Who Active screen. After finding and selecting the controller, click **Set Project Path** to establish the path. If your controller does not appear, you need to add or configure the EtherNet/IP driver with RSLinx software. See Using RSLinx Classic Software on page 47 and RSLinx online help for details.

2. Click **Download** to download the configuration to the controller.

   When the download is successfully completed, RSLogix 5000 software goes into the Online mode and the I/O Not Responding box in the upper-left of the window should be flashing green. Also, a yellow warning symbol ⚠ should be displayed on the I/O Configuration folder in the treeview and on the drive profile.

   If the controller was in Run Mode before clicking **Download**, RSLogix 5000 software prompts you to change the controller mode back to Remote Run. In this case, choose the appropriate mode for your application. If the controller was in Program Mode before clicking **Download**, this prompt will not appear.

3. Select **File > Save**.

   If this is the first time you saved the project, the Save As dialog box appears.

   a. Navigate to a folder.

   b. Type a file name.

   c. Click **Save** to save the configuration to a file on your computer.

   To be sure that the present project configuration values are saved, RSLogix 5000 software prompts you to upload them. Click **Yes** to upload and save the values.

Correlate the Drive with the Controller

You must now correlate the drive settings to the RSLogix 5000 project I/O settings so that they match. This requires loading the project I/O settings into the drive.

1. In the treeview under I/O Configuration, right-click on the drive profile (for this example, My_PowerFlex_70_EC_Drive) and choose **Properties**.

2. Click the Drive tab.

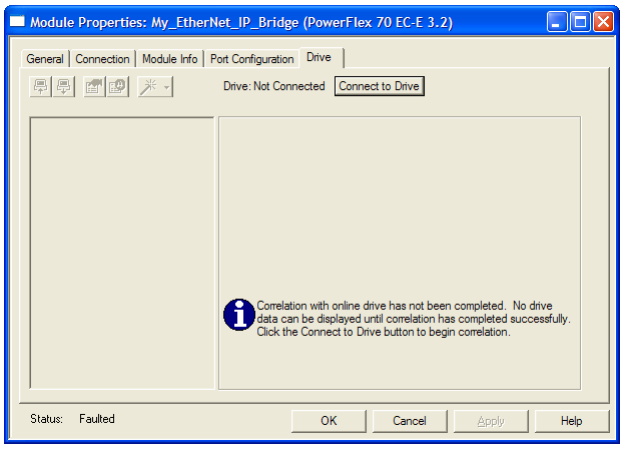

3. Click **Connect to Drive** to begin the correlation process.

   After the drive configuration data has been verified, a pop-up dialog box appears, which synchronizes ports from the online drive to the project to be sure that correct Datalinks are assigned.

4. Click OK.

   If the Differences Found screen appears—which is typical, click **Download**. This will download the project settings from the controller to the drive and its connected adapter. If **Upload** is clicked, the drive and adapter settings are uploaded to the controller.

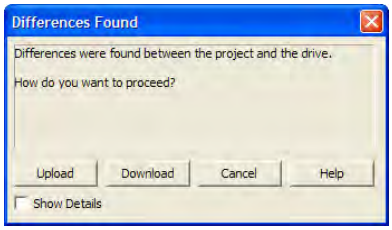

TIP On subsequent connections to the drive (after initial download), click **Upload**.

5. When the Reset Comm Module screen appears, click **Yes** to reset the communication adapter so that the new I/O settings take effect.

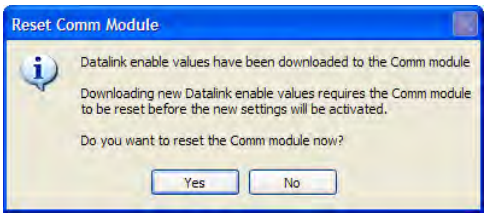

   After resetting the communication module, which may take up to a minute to complete, the I/O OK box in the upper-left of the RSLogix 5000 window should now be steady green and the yellow warning symbols ⚠ in

the treeview under the I/O Configuration folder and drive profile should be gone.

TIP If the yellow warning symbol ⚠ for your drive remains displayed, first try power cycling the drive. Otherwise, double-click the drive under the I/O tree and click the Connection tab to find the cause of the problem.

6. The Module Properties Drive Tab screen re-appears.

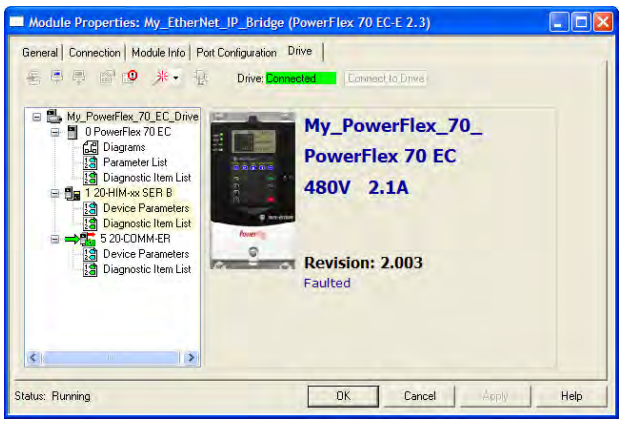

You can view the drive's Parameter List, Diagnostic Items List, and lists for any connected peripheral, including the 20-COMM-ER. While connected to the drive, you can dynamically change values of parameters. Diagnostic items and diagram views can be used for troubleshooting. Table 24 on page 147 provides diagnostic items for troubleshooting the adapter.

7. Click **OK** when finished to close the Module Properties screen for the drive.

Using the RSLogix 5000 Classic Profile, Versions 13.00…15.00

When compared to using the RSLogix 5000 Generic Profile (all versions), the RSLogix 5000 Classic Profile provides these advantages:

- Profiles for specific drives (Figure 10) that provide descriptive controller tags for basic control I/O words (Logic Command/Status and Reference/Feedback). The controller tags for Datalinks, however, have non-descriptive UserDefinedData[n] names.

- Improved I/O configuration—no I/O assembly configuration required. Basic control I/O is defined, but Datalinks still need to be configured/mapped.

- The Setup tab includes a DriveExecutive icon link to conveniently launch DriveExecutive software (when installed on computer) to match the adapter I/O configuration with the controller, and to assign the Datalink parameters in the drive. This reduces I/O mismatches.

TIP Since the RSLogix 5000 Classic Profile has been significantly improved upon by RSLogix 5000 Device Add-on Profiles, version 16.00 or later, we recommend using RSLogix 5000 Device Add-on Profiles to take advantage of its benefits (more intuitive, time saving, and less likely to make I/O configuration errors).

Figure 10 - Classic Profile Screens for Drives

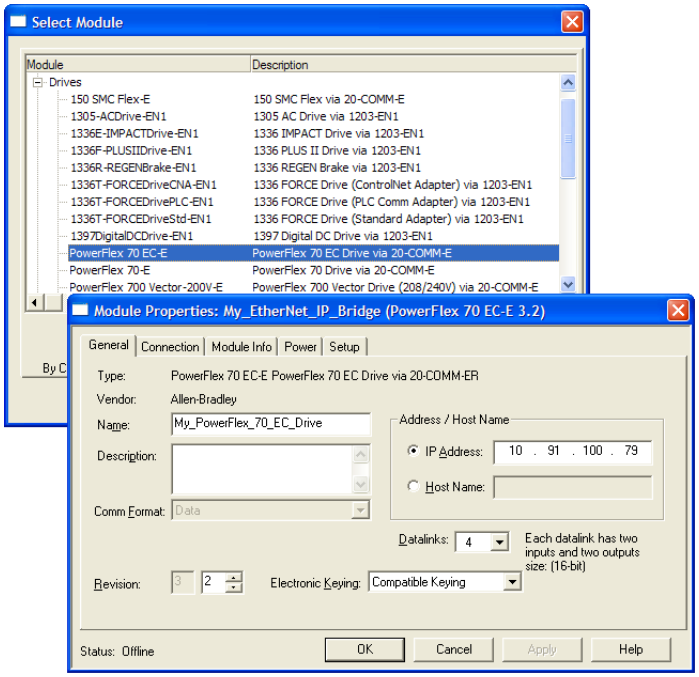

When Datalinks are used, you must enable the desired Datalinks and assign names to their non-descriptive controller tags. When a Datalink is enabled, you must set the following adapter I/O parameters:

- **Parameter 25 - [DPI I/O Cfg]** turns on the enabled Datalink bit so the 20-COMM-ER adapter will communicate that Datalink's information with the drive.

- **Parameter 37 - [M-S Input]** turns on the enabled Datalink bit so the 20-COMM-ER adapter will input that Datalink's information from the controller.

- **Parameter 38 - [M-S Output]** turns on the enabled Datalink bit so the 20-COMM-ER adapter will output that Datalink's information to the controller.

When using Datalinks, up to 8 [Data In xx] parameters and/or up to 8 [Data Out xx] parameters must be assigned to point to the appropriate drive parameters for your application.

Using the RSLogix 5000 Generic Profile, All Versions

We recommend that you use the basic RSLogix 5000 Generic Profile for only the following reasons:

- A specific drive profile in other versions of RSLogix 5000 software is unavailable.
- Users are already familiar with a drive Generic Profile and do not want to convert an existing project to a Classic Profile, versions 13.00...15.00, or to a device Add-on Profile (RSLogix 5000 software, version 16.00 or later).
- A project must maintain specific revision level control.
- The controller cannot be taken offline. RSlogix 5000 software, version 16.00 or later, enables the drive Generic Profile to be added while the controller is online and in the Run mode.

Add the Drive/Adapter to the I/O Configuration

To transmit data between the bridge and the drive, you must add the drive as a child device to the parent bridge.

1. In the treeview, right-click the bridge and select **New Module...** to display the Select Module screen.

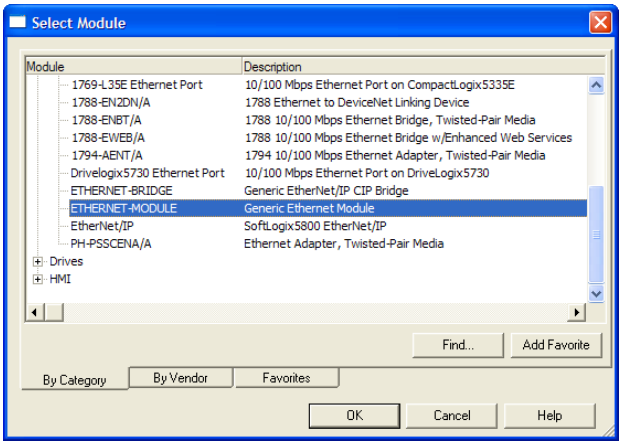

In our example, we right-click on the 1756-ENBT/A bridge.

2. Expand the Communications group to display all of the available communication modules.

3. Select "ETHERNET-MODULE" from the list to configure the drive and its connected 20-COMM-ER adapter.
4. Click **OK**.

The drive's New Module screen appears.

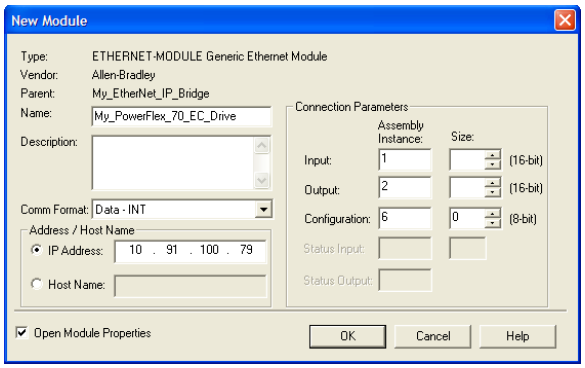

5. Edit the following information about the drive and adapter.

Box	Setting
Name	A name to identify the drive and adapter.
Description	Optional – description of the drive/adapter.
Comm Format	**Data - INT** (This setting formats the data in 16-bit words.)
IP Address	The IP address of the adapter.
Open Module Properties	When this box is checked, clicking **OK** opens additional module properties screens to further configure the drive/adapter. When unchecked, clicking **OK** closes the drive's New Module screen. For this example, check this box.

6. Under Connection Parameters, edit the following information.

Box	Assembly Instance	Size
Input	**1** (This value is required.)	The value will vary based on your application (setting of **Parameters 25 - [DPI I/O Cfg]** and **38 - [M-S Output]**) and the size (16-bit or 32-bit) of the Reference/Feedback and Datalinks in the drive. See Table 2, Table 3, or Table 4 on page 64.
Output	**2** (This value is required.)	The value will vary based on your application (setting of **Parameters 25 - [DPI I/O Cfg]** and **37 - [M-S Input]**) and the size (16-bit or 32-bit) of the Reference/Feedback and Datalinks in the drive. See Table 2, Table 3, or Table 4 on page 64.
Configuration	**6** (This value is required.)	**0** (This value is required.)

The following tables define the number of 16-bit words that you need to enter for the Input Size and Output Size boxes depending on your configuration.

Table 2 - Devices with 16-bit Reference/Feedback and 16-bit Datalinks

These products include the following:

- PowerFlex 70 drives with standard or enhanced control
- PowerFlex 700 drives with standard control
- PowerFlex 700H drives
- SMC Flex smart motor controllers
- SMC-50 smart motor controllers

Logic Command/ Status	Ref/Fdbk (16-bit)	Datalinks (16-bit)				User Configured Settings				
		A	B	C	D	Size in Words		Par. 23 - [DPI I/O Cfg]	Par. 35 - [M-S Input]	Par. 36 - [M-S Output]
						Input	Output			
✔	✔					4	2	...0 0001	...0 0001	...0 0001
✔	✔	✔				6	4	...0 0011	...0 0011	...0 0011
✔	✔	✔	✔			8	6	...0 0111	...0 0111	...0 0111
✔	✔	✔	✔	✔		10	8	...0 1111	...0 1111	...0 1111
✔	✔	✔	✔	✔	✔	12	10	...1 1111	...1 1111	...1 1111

Table 3 - Devices with 16-bit Reference/Feedback and 32-bit Datalinks

These products include the following:

- PowerFlex 700 drives with vector control
- PowerFlex 700L drives with 700 control
- PowerFlex Digital DC drives
- SMC Controllers

Logic Command/ Status	Ref/Fdbk (16-bit)	Datalinks (32-bit)				User Configured Settings				
		A	B	C	D	Size in Words		Par. 23 - [DPI I/O Cfg]	Par. 35 - [M-S Input]	Par. 36 - [M-S Output]
						Input	Output			
✔	✔					4	2	...0 0001	...0 0001	...0 0001
✔	✔	✔				8	6	...0 0011	...0 0011	...0 0011
✔	✔	✔	✔			12	10	...0 0111	...0 0111	...0 0111
✔	✔	✔	✔	✔		16	14	...0 1111	...0 1111	...0 1111
✔	✔	✔	✔	✔	✔	20	18	...1 1111	...1 1111	...1 1111

Table 4 - Drives with 32-bit Reference/Feedback and 32-bit Datalinks

These products include the following:

- PowerFlex 700S drives with Phase I or Phase II control
- PowerFlex 700L drives with 700S control
- PowerFlex 753 drives
- PowerFlex 755 drives

Logic Command/ Status	Ref/Fdbk (32-bit)	Datalinks (32-bit)				User Configured Settings				
		A	B	C	D	Size in Words		Par. 23 - [DPI I/O Cfg]	Par. 35 - [M-S Input]	Par. 36 - [M-S Output]
						Input	Output			
✔	✔					6	4	...0 0001	...0 0001	...0 0001
✔	✔	✔				10	8	...0 0011	...0 0011	...0 0011
✔	✔	✔	✔			14	12	...0 0111	...0 0111	...0 0111
✔	✔	✔	✔	✔		18	16	...0 1111	...0 1111	...0 1111
✔	✔	✔	✔	✔	✔	22	20	...1 1111	...1 1111	...1 1111

TIP For instructions on configuring the I/O for the adapter using **Parameter 25 - [DPI I/O Cfg]** and its Master-Slave Hierarchy using **Parameters 37 - [M-S Input]** and **38 - [M-S Output]**, see Setting the I/O Configuration on page 35.

When using Datalinks, up to 8 [Data In xx] parameters and/or up to 8 [Data Out xx] parameters must be assigned to point to the appropriate device parameters for your application.

7. After setting the information in the device's New Module screen, click **OK**.

The Module Properties screen appears.

8. Click the Connection tab.

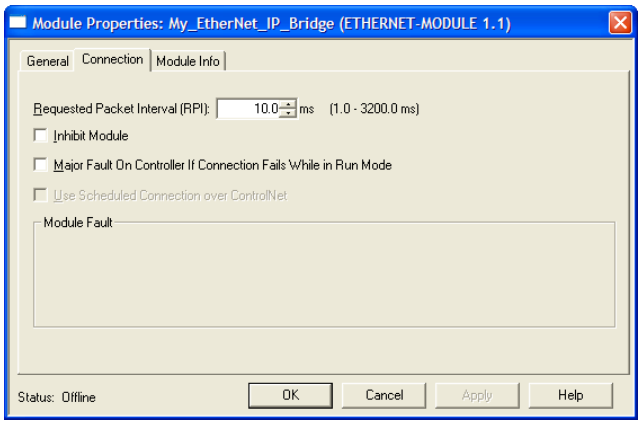

9. In the 'Requested Packet Interval (RPI)' box, set the value to 5.0 ms or greater.

This value determines the maximum interval that a controller should use to move data to and from the adapter. To conserve bandwidth, use higher values for communicating with low priority devices. For this example, leave the 'Inhibit Module' and 'Major Fault …' boxes unchecked.

10. Click **OK**.

The new node ('My_PowerFlex_70_EC_Drive' in this example) now appears under the bridge ('My_EtherNet_IP_Bridge' in this example) in the I/O Configuration folder. If you double-click the Controller Tags, you will see that module-defined data types and tags have been automatically created (Figure 11). After you save and download the configuration, these tags allow you to access the Input and Output data of the drive via the controller's ladder logic.

For this example, all Datalinks (A, B, C, and D) are enabled. The Input Size is set to 12 words and the Output Size is set to 10 words. Also, the following adapter I/O parameters are set to the following values.

Adapter Parameter No.	Setting
25 - [DPI I/O Cfg]	xxxx xxxx xxx1 1111
37 - [M-S Input]	xxxx xxxx xxx1 1111
38 - [M-S Output]	xxxx xxxx xxx1 1111

11. Reset the adapter (see Resetting the Adapter on page 43) or power cycle the device.

For the device speed reference and Datalink parameter values and the adapter setup parameter values, see Drive and Adapter Parameter Settings on page 90.

Figure 11 - Controller Tags

Name	Value	Force Mask	Style	Data Type
+ My_PowerFlex_70_EC_Drive:C	{...}	{...}		AB:ETHERNET_...
− My_PowerFlex_70_EC_Drive:I	{...}	{...}		AB:ETHERNET_...
− My_PowerFlex_70_EC_Drive:I.Data	{...}	{...}	Decimal	INT[12]
+ My_PowerFlex_70_EC_Drive:I.Data[0]	0		Decimal	INT
+ My_PowerFlex_70_EC_Drive:I.Data[1]	0		Decimal	INT
+ My_PowerFlex_70_EC_Drive:I.Data[2]	0		Decimal	INT
+ My_PowerFlex_70_EC_Drive:I.Data[3]	0		Decimal	INT
+ My_PowerFlex_70_EC_Drive:I.Data[4]	0		Decimal	INT
+ My_PowerFlex_70_EC_Drive:I.Data[5]	0		Decimal	INT
+ My_PowerFlex_70_EC_Drive:I.Data[6]	0		Decimal	INT
+ My_PowerFlex_70_EC_Drive:I.Data[7]	0		Decimal	INT
+ My_PowerFlex_70_EC_Drive:I.Data[8]	0		Decimal	INT
+ My_PowerFlex_70_EC_Drive:I.Data[9]	0		Decimal	INT
+ My_PowerFlex_70_EC_Drive:I.Data[10]	0		Decimal	INT
+ My_PowerFlex_70_EC_Drive:I.Data[11]	0		Decimal	INT
− My_PowerFlex_70_EC_Drive:O	{...}	{...}		AB:ETHERNET_...
− My_PowerFlex_70_EC_Drive:O.Data	{...}	{...}	Decimal	INT[10]
+ My_PowerFlex_70_EC_Drive:O.Data[0]	0		Decimal	INT
+ My_PowerFlex_70_EC_Drive:O.Data[1]	0		Decimal	INT
+ My_PowerFlex_70_EC_Drive:O.Data[2]	0		Decimal	INT
+ My_PowerFlex_70_EC_Drive:O.Data[3]	0		Decimal	INT
+ My_PowerFlex_70_EC_Drive:O.Data[4]	0		Decimal	INT
+ My_PowerFlex_70_EC_Drive:O.Data[5]	0		Decimal	INT
+ My_PowerFlex_70_EC_Drive:O.Data[6]	0		Decimal	INT
+ My_PowerFlex_70_EC_Drive:O.Data[7]	0		Decimal	INT
+ My_PowerFlex_70_EC_Drive:O.Data[8]	0		Decimal	INT
+ My_PowerFlex_70_EC_Drive:O.Data[9]	0		Decimal	INT

Save the I/O Configuration to the Controller

After adding the bridge and drive/adapter to the I/O configuration, you must download the configuration to the controller. You should also save the configuration to a file on your computer.

TIP When using RSLogix 5000 software, version 16.00 or later, you can add the I/O configuration of a Generic Profile while the controller is online and in the Run mode.

1. In the RSLogix 5000 window, select **Communications > Download**.

The Download dialog box appears.

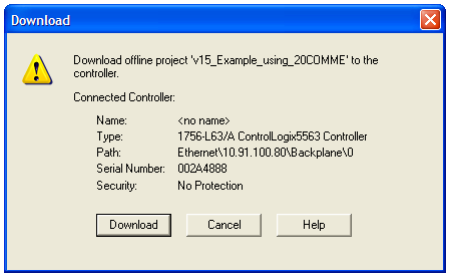

TIP If a message box reports that RSLogix 5000 software is unable to go online, select **Communications > Who Active** to find your controller in the Who Active screen. After finding and selecting the controller, click **Set Project Path** to establish the path. If your controller does not appear, you need to add or configure the EtherNet/IP driver with RSLinx software. See Using RSLinx Classic Software on page 47 and RSLinx online help for details.

2. Click **Download** to download the configuration to the controller.

   When the download is successfully completed, RSLogix 5000 software goes into the Online mode and the I/O OK box in the upper-left of the screen should be steady green.

3. Select **File > Save**.

   If this is the first time you saved the project, the Save As dialog box appears. Navigate to a folder, type a file name, and click **Save** to save the configuration to a file on your computer.

   To be sure that the present project configuration values are saved, RSLogix 5000 software prompts you to upload them. Click **Yes** to upload and save the values.

4. Configure any Datalinks in the drive (for example, Datalink parameters 300...317 in PowerFlex 70 drives) that were enabled in the controller and adapter during I/O configuration (Table 2, Table 3, or Table 4).

   Each Datalink being used must be assigned to a specific parameter in the drive or connected peripheral. If this is not done, the controller will receive or send placeholder data instead of actual drive or peripheral parameter values.

5. Place the controller in Remote Run or Run Mode.

Limitations Using a MicroLogix 1100/1400 Controller

Controlling I/O with explicit messages is relatively complex compared to normal implicit I/O control.

ControlLogix and CompactLogix controllers with EtherNet/IP provide the easiest and most integrated form of implicit I/O control for a device. RSLogix 5000 software, version 16.00 or later, for ControlLogix and CompactLogix controllers contains integrated profiles for PowerFlex drives that, with a few clicks of the mouse, automatically create all controller tags and an implicit connection at the specified Requested Packet Interval to control the drive. This connection is monitored at both ends to verify that the controller and drive are communicating. A watchdog will cause a drive fault if the drive does not respond within approximately 100 milliseconds. Therefore, using a ControlLogix or CompactLogix controller is by far the much preferred method of controlling drives on EtherNet/IP.

If you are not using either of these type of controllers, then devices on EtherNet/IP can be controlled with explicit messages using MicroLogix 1100/1400 controllers with the following limitations:

- An explicit message is a much slower form of control and is non-deterministic. This means that you cannot guarantee how long the device will take to start up or stop when the command is given. Therefore, all equipment used in this manner should be subject to a risk assessment, taking into account the mechanical and electrical implementation.
- A timeout value (in seconds) in the EtherNet/IP adapter will issue a device fault if a message is not received from the controller within the specified time. However, the controller has no way of detecting a loss of communication to the device until the next cycle of explicit messages. This is another factor in the risk assessment.
- Any additional devices to be controlled will require additional explicit messages for their control, and they need to be carefully sequenced. Most controllers have small communication queues (see the User Manual), which need to be carefully managed if messages are not to be lost.
- Each controller has a limited number of communication connections (see its User Manual for maximum connections), which will limit the number of drives that can be connected.

In summary, unlike a ControlLogix or CompactLogix controller, programming a MicroLogix 1100/1400 controller by using RSLogix 500 software with explicit messages is more difficult, and produces a more complex program.

MicroLogix 1100/1400 Controller Example

After the adapter is configured, the connected drive and adapter will be a single node on the network. This section provides the steps needed to configure a simple EtherNet/IP network (see Figure 12). In our example, we will configure a MicroLogix 1100 controller to communicate with a drive using Logic Command/Status, Reference/Feedback, and Datalinks over the network.

Figure 12 - Example MicroLogix 1100/1400 Controller EtherNet/IP Network

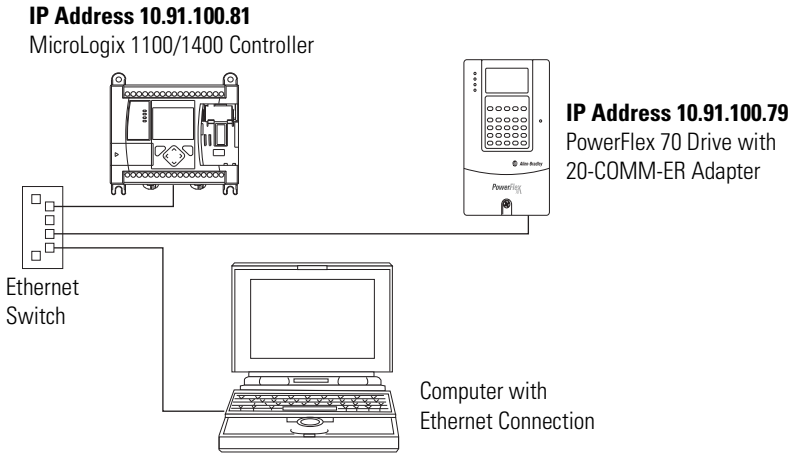

TIP Information for PowerFlex 750-Series drives has been added where applicable.

Configuring Parameters for Network I/O

Because the I/O for the drive is message-based, there is no need to configure any I/O inside the RSLogix 500 project, version 7.00 or later, until using the I/O as described in Chapter 5.

However, to get the adapter to operate with the I/O created in Chapter 5, we need to configure the adapter to accept the I/O and drive to point to the appropriate Datalinks.

1. For this example, the following adapter I/O parameters are set to the following values.

Adapter Parameter No.	Setting
25 - [DPI I/O Cfg]	xxxx xxxx xxx1 1111
37 - [M-S Input]	xxxx xxxx xxx1 1111
38 - [M-S Output]	xxxx xxxx xxx1 1111

2. Reset the adapter (see Resetting the Adapter on page 43) or power cycle the drive.

For the drive speed reference and Datalink parameter values and the adapter setup parameter values, refer to Drive and Adapter Parameter Settings on page 96.

Creating RSLogix 500 Project, Version 7.00 or Later

To transmit (read and write) data between the controller and drive, you must create message instructions that allocate data table addresses in the controller for Logic Command/Status, Reference/Feedback, and Datalinks.

Select the Controller

1. Start RSLogix 500 software.

   The RSLogix 500 window appears.

2. Select **File > New** to display the Select Processor Type screen.

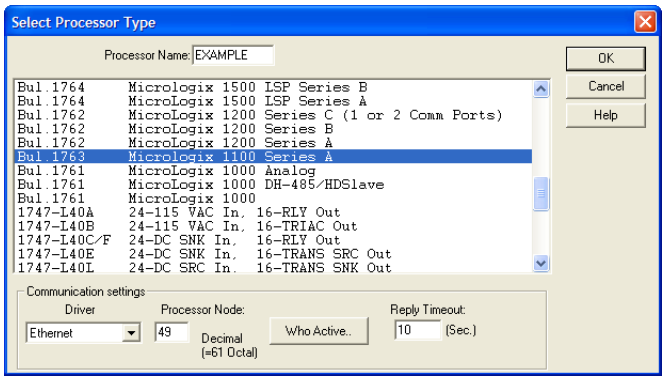

3. Assign a name for the processor.
4. In the list, select the MicroLogix 1100.
5. Choose the appropriate choices for the fields in the screen to match your application.
6. Click **OK**.

   The RSLogix 500 project window appears.

Create MicroLogix 1100/1400 Ladder Logic for the Control Timeout

1. In the RSLogix 500 project window treeview under Program Files double-click on LAD 2.
2. Insert a ladder rung.
3. Double-click on the rung to display the rung editor.
4. Enter **MSG MGxx:n**, where:

   xx is an unused data file number (for example, MG10:n), and
   n is an unused element of the data file chosen for xx (for example, MG10:0)
5. Press **Enter**.
6. Insert another separate rung.
7. Double-click on the rung to display the rung editor.
8. Enter **BST XIC MGxx:n/DN NXB XIC MGxx:n/ER BND OTU MGxx:n/EN**, where:

   xx and n must correspond to the assigned data file number and element (for example, MG10:0) for the message created in steps 2…5.

Important: The information must be entered with appropriate numbers for ‘xx’ and ‘n’ for your application, and with spaces and forward slashes exactly as shown.

9. Press **Enter**.
10. In the MSG instruction (Figure 13), double-click Setup Screen to launch the message configuration screen (Figure 14).

Figure 13 - MicroLogix 1100/1400 Ladder Logic for the Control Timeout

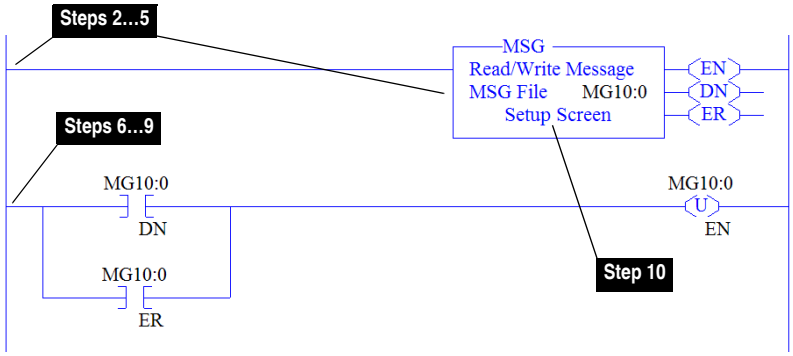

11. Configure the General tab fields by entering or verifying the information shown in the message configuration screen.

Figure 14 - MicroLogix 1100/1400 Message Configuration Screens for the Control Timeout

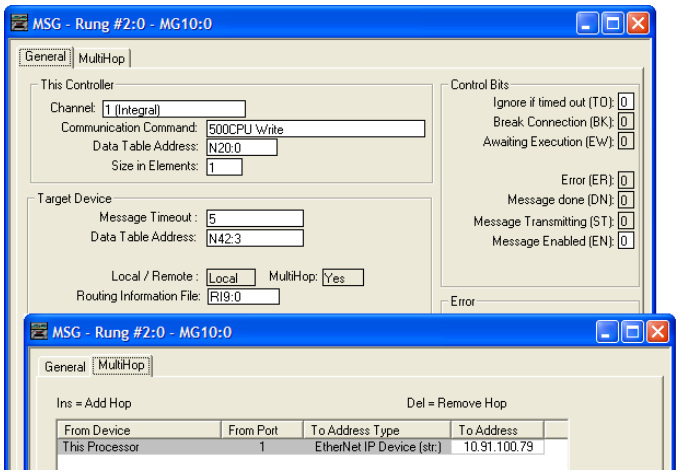

General Tab Box	Setting
This Controller (data for MicroLogix 1100)	
Channel	**1 (integral)**. Controller port to which the network is connected.
Communication Command	**500CPU Write**. The controller type and command type for the controller to read or write data. Because the MicroLogix 1100 is part of the SLC-500 controller family, the '500CPU' controller type was selected. The 'Write' command type was selected to write the control timeout value to the drive.
Data Table Address (1)	**N20:0**. An unused controller data table address containing the control timeout value to be written.
Size in Elements (2)	**1**. Number of elements (words) to be transferred. Each element size is a 16-bit integer.
Target Device (data for adapter/drive)	
Message Timeout	**5**. Message timeout duration in seconds.
Data Table Address (3)	**N42:3**. Specific starting address of the destination file in the drive.
Routing Information File	**RI9:0**. An unused routing information file for the controller.
MultiHop Tab Box	**Setting**
To Address	**10.91.100.79.** The IP address of the adapter connected to the drive.

(1) For details on data table addresses for this example project, see Table 11…Table 14 starting on page 98.

(2) For details to determine element size for a specific drive, see Understanding Controller Data Table Addresses on page 97.

(3) For details on setting the control timeout value and its function, see N-Files on page 192. The Control Timeout (N42:3) is stored in RAM. If the 20-COMM-ER adapter is power cycled, the Control Timeout Message must be re-sent. If the Control Timeout is not changed from a non-zero value, the control message (page 75) will error out.

TIP The Control Timeout (N42:3) must be changed to a non-zero value (5…20 seconds recommended). If the Control Timeout is not changed from a non-zero value, the control message (page 75) will error out. The Control Timeout is stored in RAM. If the adapter is power cycled, the Control Timeout Message must be re-sent.

Create MicroLogix 1100/1400 Ladder Logic for the Logic Status, Feedback, and Datalink Out

1. Insert another separate rung.
2. Double-click on the rung to display the rung editor.
3. Enter **MSG MGxx:n**, where:

   xx is an unused data file number (for example, MG11:n), and
   n is an unused element of the data file chosen for xx (for example, MG11:0)
4. Press **Enter**.
5. Insert another separate rung.
6. Double-click on the rung to display the rung editor.
7. Enter **BST XIC MGxx:n/DN NXB XIC MGxx:n/ER BND OTU MGxx:n/EN**, where:

   xx and n must correspond to the assigned data file number and element (for example, MG11:0) for the message created in steps 1…4.

Important: The information must be entered with appropriate numbers for ‘xx’ and ‘n’ for your application, and with spaces and forward slashes exactly as shown.

8. Press **Enter**.
9. In the MSG instruction (Figure 15), double-click Setup Screen to launch the message configuration screen (Figure 16).

Figure 15 - MicroLogix 1100/1400 Ladder Logic for the Logic Status, Feedback, and Datalink Out

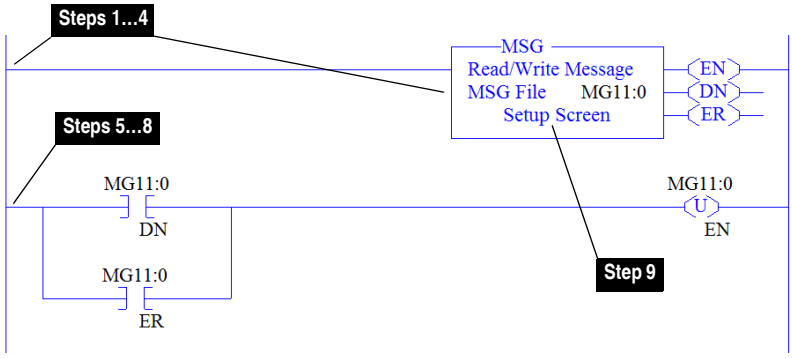

10. Configure the General tab fields by entering or verifying the information shown in the message configuration screen.

Figure 16 - MicroLogix 1100/1400 Message Configuration Screens for the Logic Status, Feedback, and Datalink Out

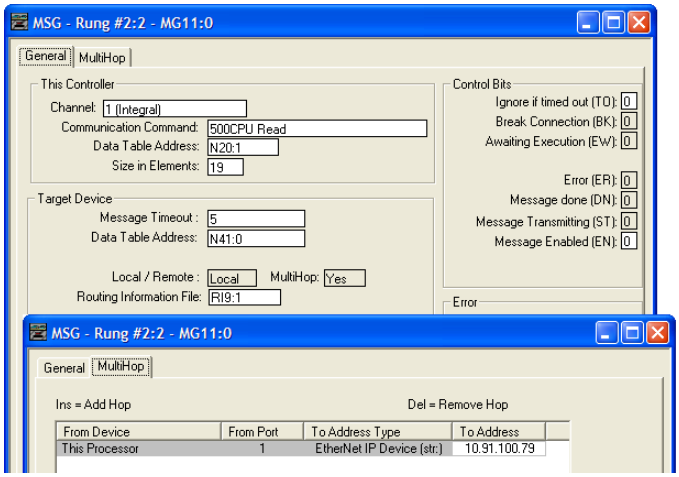

General Tab Box	Setting
This Controller (data for MicroLogix 1100)	
Channel	**1 (integral)**. Controller port to which the network is connected.
Communication Command	**500CPU Read**. The controller type and command type for the controller to read or write data. Because the MicroLogix 1100 is part of the SLC-500 controller family, the '500CPU' controller type was selected. The 'Read' command type was selected to read data from the drive.
Data Table Address (1)	**N20:1**. An unused controller data table address containing the data to be read from the drive.
Size in Elements (2)	**19**. Number of elements (words) to be transferred. Each element size is a 16-bit integer.
Target Device (data for adapter/drive)	
Message Timeout	**5**. Message timeout duration in seconds.
Data Table Address (3)	**N41:0**. Specific starting address of the source file in the drive.
Routing Information File	**RI9:1**. An unused routing information file for the controller.
MultiHop Tab Box	**Setting**
To Address	**10.91.100.79.** The IP address of the adapter connected to the drive.

(1) For details on data table addresses for this example project, see Table 11…Table 14 starting on page 98.

(2) For details to determine element size for a specific drive, see Understanding Controller Data Table Addresses on page 97.

(3) For N-File details, see N-Files on page 192.

Create MicroLogix 1100/1400 Ladder Logic for the Logic Command, Reference, and Datalink In

1. Insert another separate rung.
2. Double-click on the rung to display the rung editor.
3. Enter **MSG MGxx:n**, where:

   xx is an unused data file number (for example, MG12:n), and
   n is an unused element of the data file chosen for xx (for example, MG12:0)
4. Press **Enter**.
5. Insert another separate rung.
6. Double-click on the rung to display the rung editor.
7. Enter **BST XIC MGxx:n/DN NXB XIC MGxx:n/ER BND OTU MGxx:n/EN**, where:

   xx and n must correspond to the assigned data file number and element (for example, MG12:0) for the message created in steps 1…4.

Important: The information must be entered with appropriate numbers for ‘xx’ and ‘n’ for your application, and with spaces and forward slashes exactly as shown.

8. Press **Enter**.
9. In the MSG instruction (Figure 17), double-click Setup Screen to launch the message configuration screen (Figure 18).

Figure 17 - MicroLogix 1100/1400 Ladder Logic for the Logic Command, Reference, and Datalink In

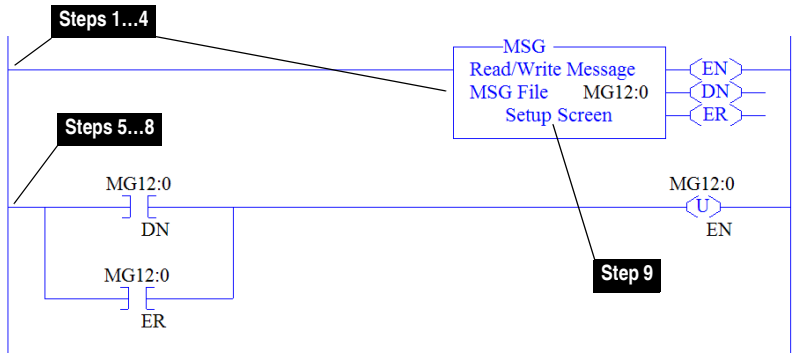

10. Configure the General tab fields by entering or verifying the information shown in the message configuration screen.

Figure 18 - MicroLogix 1100/1400 Message Configuration Screens for the Logic Command, Reference, and Datalink In

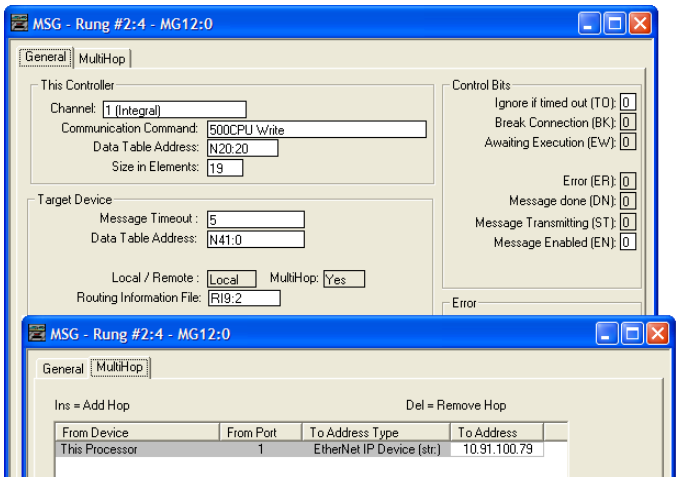

General Tab Box	Setting
This Controller (data for MicroLogix 1100)	
Channel	**1 (integral)**. Controller port to which the network is connected.
Communication Command	**500CPU Write**. The controller type and command type for the controller to read or write data. Because the MicroLogix 1100 is part of the SLC-500 controller family, the '500CPU' controller type was selected. The 'Write' command type was selected to write data to the drive.
Data Table Address (1)	**N20:20**. An unused controller data table address containing the data to be written to the drive.
Size in Elements (2)	**19**. Number of elements (words) to be transferred. Each element size is a 16-bit integer.
Target Device (data for adapter/drive)	
Message Timeout	**5**. Message timeout duration in seconds.
Data Table Address (3)	**N41:0**. Specific starting address of the destination file in the drive.
Routing Information File	**RI9:2**. An unused routing information file for the controller.
MultiHop Tab Box	**Setting**
To Address	**10.91.100.79.** The IP address of the adapter connected to the drive.

(1) For details on data table addresses for this example project, see Table 11…Table 14 starting on page 98.

(2) For details to determine element size for a specific drive, see Understanding Controller Data Table Addresses on page 97.

(3) For N-File details, see N-Files on page 192.

TIP This message will error out if the Control Timeout value is not changed from a non-zero value. Refer to page 71 for writing a value to the Control Timeout.

TIP If the controller is controlling more than one drive, it is recommended to intersperse the control I/O messaging for each drive to conserve network bandwidth and decrease response time. That is, sequence the message instructions for each drive so that its group of messages will occur at a different time than those for another drive.

Notes:

Using the I/O

This chapter provides information and examples that explain how to control, configure, and monitor a PowerFlex 7-Class drive or SMC using the configured I/O.

Topic	Page
About I/O Messaging	79
Understanding the I/O Image	80
Using Logic Command/Status	84
Using Reference/Feedback	84
Using Datalinks	86
Example Ladder Logic Program Information	87
ControlLogix Controller Example	88

ATTENTION: Risk of injury or equipment damage exists. The examples in this publication are intended solely for purposes of example. There are many variables and requirements with any application. Rockwell Automation, Inc. does not assume responsibility or liability (to include intellectual property liability) for actual use of the examples shown in this publication.

About I/O Messaging

On CIP-based networks, including EtherNet/IP, I/O connections are used to transfer the data which controls the PowerFlex drive or SMC and sets its Reference. I/O can also be used to transfer data to and from Datalinks.

The adapter provides many options for configuring and using I/O, including the following:

- Configuring the size of I/O by enabling or disabling the Logic Command/Reference and Datalinks.
- Setting a Master-Slave or Peer-to-Peer hierarchy.

Chapter 3, Configuring the Adapter, and Chapter 4, Configuring the I/O, discuss how to configure the adapter and controller on the network for these options. The defines the different options. This chapter discusses how to use I/O after you have configured the adapter and controller.

Understanding the I/O Image

The terms 'input' and 'output' are defined from the controller's point of view. Therefore, output I/O is data that is produced by the controller and consumed by the adapter. Input I/O is status data that is produced by the adapter and consumed as input by the controller. The I/O image will vary based on the following:

- Size (either 16-bit or 32-bit) of the Reference/Feedback words and Datalink words used by the device. To determine the size of the Reference/Feedback and Datalinks, view adapter **Parameters 20 - [Ref/Fdbk Size]** and **21- [Datalink Size]**. For information to access parameters, see Using the PowerFlex 7-Class HIM on page 28.

- Configuration of I/O (**Parameter 25 - [DPI I/O Cfg]**). If all I/O is not enabled, the image is truncated. The image always uses consecutive words starting at word 0.

- **ControlLogix/CompactLogix Controllers only**—The drive profile used in RSLogix 5000 software (device Add-on Profile in version 16.00 or later, Classic Profile in versions 13.00...15.00, or Generic Profile in all versions).

ControlLogix Controller Image

Since the device Add-on Profile in RSLogix 5000 software, version 16.00 or later, and the Classic Profile, versions 13.00...15.00, provide descriptive controller tags, the I/O image (tag size and location) is automatically configured based on the device being used. When using the Generic Profile (page 62) in RSLogix 5000 software, however, controller tags are not descriptive or defined.

The ControlLogix controller I/O image changes depending on the size of the device's Reference/Feedback and Datalinks. Table , Table , and Table show the I/O image when using various PowerFlex 7-Class drives, and all Datalinks enabled.

Table 5 - ControlLogix Controller I/O Image for Devices with 16-bit Reference/ Feedback and 16-bit Datalinks – Using Generic Profile

These products include the following:

- PowerFlex 70 drives with standard or enhanced control
- PowerFlex 700 drives with standard control
- PowerFlex 700H drives
- SMC Flex smart motor controllers
- SMC-50 smart motor controllers

Word	Output I/O
0	Logic Command
1	Reference
2	Datalink In A1
3	Datalink In A2
4	Datalink In B1
5	Datalink In B2
6	Datalink In C1
7	Datalink In C2
8	Datalink In D1
9	Datalink In D2

Word	Input I/O
0	Pad Word
1	Pad Word
2	Logic Status
3	Feedback
4	Datalink Out A1
5	Datalink Out A2
6	Datalink Out B1
7	Datalink Out B2
8	Datalink Out C1
9	Datalink Out C2
10	Datalink Out D1
11	Datalink Out D2

Table 6 - ControlLogix Controller I/O Image for Devices with 16-bit Reference/ Feedback and 32-bit Datalinks – Using Generic Profile

These products include the following:

- PowerFlex 700 drives with vector control
- PowerFlex 700L drives with 700 control
- PowerFlex Digital DC drives
- SMC-50 smart motor controllers

Word	Output I/O
0	Logic Command
1	Reference
2	Datalink In A1 (LSW)
3	Datalink In A1 (MSW)
4	Datalink In A2 (LSW)
5	Datalink In A2 (MSW)
6	Datalink In B1 (LSW)
7	Datalink In B1 (MSW)
8	Datalink In B2 (LSW)
9	Datalink In B2 (MSW)
10	Datalink In C1 (LSW)
11	Datalink In C1 (MSW)
12	Datalink In C2 (LSW)
13	Datalink In C2 (MSW)
14	Datalink In D1 (LSW)
15	Datalink In D1 (MSW)
16	Datalink In D2 (LSW)
17	Datalink In D2 (MSW)

Word	Input I/O
0	Pad Word
1	Pad Word
2	Logic Status
3	Feedback
4	Datalink Out A1 (LSW)
5	Datalink Out A1 (MSW)
6	Datalink Out A2 (LSW)
7	Datalink Out A2 (MSW)
8	Datalink Out B1 (LSW)
9	Datalink Out B1 (MSW)
10	Datalink Out B2 (LSW)
11	Datalink Out B2 (MSW)
12	Datalink Out C1 (LSW)
13	Datalink Out C1 (MSW)
14	Datalink Out C2 (LSW)
15	Datalink Out C2 (MSW)
16	Datalink Out D1 (LSW)
17	Datalink Out D1 (MSW)
18	Datalink Out D2 (LSW)
19	Datalink Out D2 (MSW)

Table 7 - ControlLogix Controller I/O Image for Drives with 32-bit Reference/ Feedback and 32-bit Datalinks – Using Generic Profile

These products include the following:

- PowerFlex 700S drives with Phase I or Phase II control
- PowerFlex 700L drives with 700S control
- PowerFlex 753 drives
- PowerFlex 755 drives

Word	Output I/O
0	Logic Command
1	Not Used
2	Reference (LSW)
3	Reference (MSW)
4	Datalink In A1 (LSW)
5	Datalink In A1 (MSW)
6	Datalink In A2 (LSW)
7	Datalink In A2 (MSW)
8	Datalink In B1 (LSW)
9	Datalink In B1 (MSW)
10	Datalink In B2 (LSW)
11	Datalink In B2 (MSW)
12	Datalink In C1 (LSW)
13	Datalink In C1 (MSW)
14	Datalink In C2 (LSW)
15	Datalink In C2 (MSW)
16	Datalink In D1 (LSW)
17	Datalink In D1 (MSW)
18	Datalink In D2 (LSW)
19	Datalink In D2 (MSW)

Word	Input I/O
0	Pad Word
1	Pad Word
2	Logic Status
3	Not Used
4	Feedback (LSW)
5	Feedback (MSW)
6	Datalink Out A1 (LSW)
7	Datalink Out A1 (MSW)
8	Datalink Out A2 (LSW)
9	Datalink Out A2 (MSW)
10	Datalink Out B1 (LSW)
11	Datalink Out B1 (MSW)
12	Datalink Out B2 (LSW)
13	Datalink Out B2 (MSW)
14	Datalink Out C1 (LSW)
15	Datalink Out C1 (MSW)
16	Datalink Out C2 (LSW)
17	Datalink Out C2 (MSW)
18	Datalink Out D1 (LSW)
19	Datalink Out D1 (MSW)
20	Datalink Out D2 (LSW)
21	Datalink Out D2 (MSW)

MicroLogix 1100/1400 Controller Image

The I/O image for these controllers always has 19 words of output and 19 words of input. However, depending on the size of the device's Reference/Feedback and Datalinks, specific words in the I/O image may not be used. Table 8, Table 9, and Table 10 show the I/O image when using various PowerFlex 7-Class drives, and all Datalinks enabled.

Table 8 - MicroLogix 1100/1400 I/O Image for PowerFlex 70/ 700/700H Drives and SMC Flex (16-bit Reference/Feedback and 16-bit Datalinks)

Word	Output I/O
0	Logic Command
1	Not used
2	Reference (MSW)
3	Not used
4	Datalink In A1 (MSW)
5	Not used
6	Datalink In A2 (MSW)
7	Not used
8	Datalink In B1 (MSW)
9	Not used
10	Datalink In B2 (MSW)
11	Not used
12	Datalink In C1 (MSW)
13	Not used
14	Datalink In C2 (MSW)
15	Not used
16	Datalink In D1 (MSW)
17	Not used
18	Datalink In D2 (MSW)

Word	Input I/O
0	Logic Status
1	Not used
2	Feedback (MSW)
3	Not used
4	Datalink Out A1 (MSW)
5	Not used
6	Datalink Out A2 (MSW)
7	Not used
8	Datalink Out B1 (MSW)
9	Not used
10	Datalink Out B2 (MSW)
11	Not used
12	Datalink Out C1 (MSW)
13	Not used
14	Datalink Out C2 (MSW)
15	Not used
16	Datalink Out D1 (MSW)
17	Not used
18	Datalink Out D2 (MSW)

Table 9 - MicroLogix 1100/1400 I/O Image for PowerFlex 700 VC Drives and SMC-50 Controllers (16-bit Reference/Feedback and 32-bit Datalinks)

Word	Output I/O
0	Logic Command
1	Not used
2	Reference (MSW)
3	Datalink In A1 (LSW)
4	Datalink In A1 (MSW)
5	Datalink In A2 (LSW)
6	Datalink In A2 (MSW)
7	Datalink In B1 (LSW)
8	Datalink In B1 (MSW)
9	Datalink In B2 (LSW)
10	Datalink In B2 (MSW)
11	Datalink In C1 (LSW)
12	Datalink In C1 (MSW)
13	Datalink In C2 (LSW)
14	Datalink In C2 (MSW)
15	Datalink In D1 (LSW)
16	Datalink In D1 (MSW)
17	Datalink In D2 (LSW)
18	Datalink In D2 (MSW)

Word	Input I/O
0	Logic Status
1	Not used
2	Feedback (MSW)
3	Datalink Out A1 (LSW)
4	Datalink Out A1 (MSW)
5	Datalink Out A2 (LSW)
6	Datalink Out A2 (MSW)
7	Datalink Out B1 (LSW)
8	Datalink Out B1 (MSW)
9	Datalink Out B2 (LSW)
10	Datalink Out B2 (MSW)
11	Datalink Out C1 (LSW)
12	Datalink Out C1 (MSW)
13	Datalink Out C2 (LSW)
14	Datalink Out C2 (MSW)
15	Datalink Out D1 (LSW)
16	Datalink Out D1 (MSW)
17	Datalink Out D2 (LSW)
18	Datalink Out D2 (MSW)

Table 10 - MicroLogix 1100/1400 I/O Image for PowerFlex 700S Series Drives (32-bit Reference/Feedback and 32-bit Datalinks)

Word	Output I/O
0	Logic Command
1	Reference (LSW)
2	Reference (MSW)
3	Datalink In A1 (LSW)
4	Datalink In A1 (MSW)
5	Datalink In A2 (LSW)
6	Datalink In A2 (MSW)
7	Datalink In B1 (LSW)
8	Datalink In B1 (MSW)
9	Datalink In B2 (LSW)
10	Datalink In B2 (MSW)
11	Datalink In C1 (LSW)
12	Datalink In C1 (MSW)
13	Datalink In C2 (LSW)
14	Datalink In C2 (MSW)
15	Datalink In D1 (LSW)
16	Datalink In D1 (MSW)
17	Datalink In D2 (LSW)
18	Datalink In D2 (MSW)

Word	Input I/O
0	Logic Status
1	Feedback (LSW)
2	Feedback (MSW)
3	Datalink Out A1 (LSW)
4	Datalink Out A1 (MSW)
5	Datalink Out A2 (LSW)
6	Datalink Out A2 (MSW)
7	Datalink Out B1 (LSW)
8	Datalink Out B1 (MSW)
9	Datalink Out B2 (LSW)
10	Datalink Out B2 (MSW)
11	Datalink Out C1 (LSW)
12	Datalink Out C1 (MSW)
13	Datalink Out C2 (LSW)
14	Datalink Out C2 (MSW)
15	Datalink Out D1 (LSW)
16	Datalink Out D1 (MSW)
17	Datalink Out D2 (LSW)
18	Datalink Out D2 (MSW)

Using Logic Command/ Status

The Logic Command is a 16-bit word of control data produced by the scanner and consumed by the adapter. The Logic Status is a 16-bit word of status data produced by the adapter and consumed by the scanner.

This manual contains the bit definitions for most compatible products available at the time of publication in Appendix D, Logic Command/Status Words. For other products, see their documentation.

Using Reference/Feedback

The Reference is produced by the controller and consumed by the adapter. The Feedback is produced by the adapter and consumed by the controller. The size of the Reference/Feedback is determined by the drive and displayed using adapter **Parameter 20 - [Ref/Fdbk Size]**.

Size	Valid Values
16-bit	-32768 to 32767
32-bit	-2147483648 to 2147483647

When the Reference and Feedback are enabled and a ControlLogix controller with a device Add-on Profile or Classic Profile is used, specific controller tags are automatically created, sized (16-bit or 32-bit), and placed in the I/O image.

PowerFlex 7-Class Drives

The Reference value is an unscaled value; it is NOT in Hertz or RPM. The Reference uses a '32767' scale. The '32767' endpoint of the scale is equal to the value of drive parameter 55 - [Maximum Freq], which has a default value of 130 Hz. For all PowerFlex 70/700 drives, default scaling is 0...15123 which is equal to 0...60.0 Hz. This is based on the formula shown below. Reference scaling is limited by drive parameter 82 - [Maximum Speed]. If the default value of 60 Hz. for parameter 82 - [Maximum Speed] is changed, the speed Reference scaling also changes. To determine Reference scaling, use the following formula:

(Parameter 82 ÷ Parameter 55) * 32767 = Scaling

Using drive parameter 82 and 55 default values, speed Reference scaling is:

(60 Hz ÷ 130 Hz) * 32767 = 15123

Therefore, 0...15123 = 0...60.0 Hz.

If parameter 82 - [Maximum Speed] is changed to 90 Hz, then:

(90 Hz ÷ 130 Hz) * 32767 = 22685

Therefore, 0...22685 = 0...90.0 Hz.

A graphic representation of this Reference scaling is shown below.

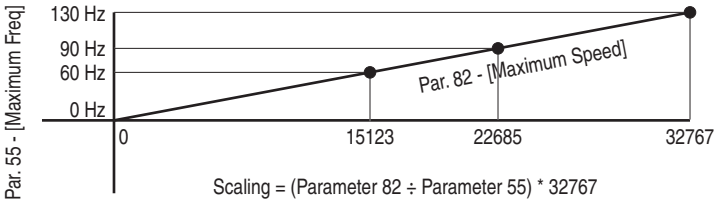

For PowerFlex 70 EC drives, firmware 2.xxx or later, or PowerFlex 700 VC drives, firmware 3.xxx or later, drive parameter 298 - [DPI Ref Select] was added to simplify scaling for the speed Reference. When drive parameter 298 - [DPI Ref Select] is set to its default '0' (Max Freq), the speed Reference scaling is as shown above. However, when parameter 298 - [DPI Ref Select] is set to '1' (Max Speed), the speed Reference scaling is equal to parameter 82 - [Max Speed]:

Parameter 82 = Scaling

Using the parameter 82 default value, speed Reference scaling is:

0...32767 = 0...60.0 Hz.

If parameter 82 - [Maximum Speed] is changed to 90 Hz, then:

90 Hz = 32767

Speed Feedback uses the same scaling as the speed Reference.

TIP For PowerFlex 700 VC drives, firmware 3.xxx or later, parameter 299 - [DPI Fdbk Select] enables you to select the feedback data coming from the drive over DPI. The default is 'Speed Fdbk' in Hz or RPM determined by parameter 079 - [Speed Units]. The data selection for parameter 299 is also displayed on the 1st line of the HIM and on DriveExplorer and DriveExecutive software screens in the drive status area of the screen.

The controller in the system sends a reference to the SMC, but it is not used for control purposes in the current release.

The SMC products use the feedback to send motor current information.

Using Datalinks

A Datalink is a mechanism used by PowerFlex drives and SMCs to transfer data to and from the controller. Datalinks allow a device parameter value to be read or written without using an Explicit Message. When enabled, each Datalink occupies two 16-bit or 32-bit words in both the input and output image. Use adapter **Parameter 21 - [Datalink Size]** to determine whether the drive uses 16-bit or 32-bit words for Datalinks.

Rules for Using Datalinks

- Each set of Datalink parameters in a device can be used by only one adapter. If more than one adapter is connected to a single device, multiple adapters cannot use the same Datalink.
- Parameter settings in the device determine the data passed through the Datalink mechanism. See the documentation for your device.
- When you use a Datalink to change a value, the value is NOT written to the Nonvolatile Storage (NVS). The value is stored in volatile memory and lost when the device loses power. Therefore, use Datalinks when you need to change a value of a parameter frequently.

Using 16-Bit Datalinks to Read/Write 32-Bit Parameters

This subsection only pertains to the SMC Flex and PowerFlex 70 (SC or EC), PowerFlex 700 (SC), and PowerFlex 700H drives which use 16-bit Datalinks. To read or write a 32-bit parameter using 16-bit Datalinks, typically both Datalinks of a pair (A, B, C, D) are set to the same 32-bit parameter. For example, to read parameter 10 - [Elapsed Run Time] in a PowerFlex 70 drive, both Datalink A1 Out (Parameter 310) and Datalink A2 Out (Parameter 311) are set to '10'. Datalink A1 Out will contain the least significant word (LSW) and Datalink A2 Out will contain the most significant word (MSW).

32-bit data is stored in binary as follows:

MSW	2^{31} through 2^{16}
LSW	2^{15} through 2^{0}

In this example, the parameter 10 - [Elapsed Run Time] value of 6553.9 Hrs is read as '6553.9' in Datalink A1 Out (Parameter 310) and Datalink A2 Out (Parameter 311).

Datalink	Word	Parameter	Data (Hex)
A1 Out	LSW	10	0003
A2 Out	MSW	10	0001

Conversion Example:

Parameter 010 - [Elapsed Run Time] = 6553.9 Hrs
MSW = $0001_{hex} = 0001_{binary} = 2^{16} = 65536$
LSW = 0003_{hex} =3
Engineering Value = 65536 + 3 = 65539
Parameter 10 Displayed Value = 6553.9 Hrs

Regardless of the Datalink combination, Datalink x1 Out will always contain the LSW and Datalink x2 Out will always contain the MSW. In the following example, the PowerFlex 70 drive parameter 242 - [Power Up Marker] contains a value of 88.4541 hours.

Datalink	Word	Parameter	Data (Hex)
A2 Out	MSW	242	000D
B1 Out	LSW	242	7F3D

Conversion Example:

Parameter 242 - [Power Up Marker] = 88.4541 hours
MSW = $000D_{hex} = 1101_{binary} = 2^{19} + 2^{18} + 2^{16} = 851968$
LSW = $7F3D_{hex} = 32573$
Engineering Value = 851968 + 32573 = 884541
Parameter 242 Displayed Value = 88.4541 Hrs

Example Ladder Logic Program Information

The example ladder logic programs in the sections of this chapter are intended for and operate PowerFlex 7-Class drives and SMC Flex controllers.

Functions of the Example Programs

The example programs enable you to do the following:

- Receive Logic Status information from the drive.
- Send a Logic Command to control the drive (for example, start, stop).
- Send a Reference to the drive and receive Feedback from the drive.
- Send/receive Datalink data to/from the drive.

Logic Command/Status Words

These examples use the Logic Command word and Logic Status word for PowerFlex 70/700 drives. See Appendix D to view details. The definition of the bits in these words may vary if you are using a different DPI device. See the documentation for your device.

ControlLogix Controller Example

Creating Ladder Logic Using the RSLogix 5000 Device Add-on Profiles, Version 16.00 or Later

Because the device Add-on Profile automatically created descriptive controller tags (Figure 9) for the entire I/O image in Chapter 4, you can use these tags to directly control and monitor the device without creating any ladder logic program. However, if you intend to use Human Machine Interface devices (PanelView, and so forth) to operate the device and view its status, you will need to create descriptive user-defined Program tags (Figure 19) and a ladder logic program that will pass the Controller tag data to the Program tags.

Figure 19 - ControlLogix Program Tags for Device Add-on Profile Ladder Logic Program Example

Name	Style	Data Type
Command_Clear_Faults	Decimal	BOOL
Command_Forward_Reverse	Decimal	BOOL
Command_Jog	Decimal	BOOL
Command_Start	Decimal	BOOL
Command_Stop	Decimal	BOOL
⊞ Speed_Feedback	Decimal	DINT
⊞ Speed_Reference	Decimal	DINT
Status_Active	Decimal	BOOL
Status_At_Speed	Decimal	BOOL
Status_Faulted	Decimal	BOOL
Status_Forward	Decimal	BOOL
Status_Ready	Decimal	BOOL
Status_Reverse	Decimal	BOOL

An example ladder logic program that uses the automatically created descriptive Controller tags and passes their data to the user-defined Program tags is shown in Figure 20 and Figure 21. Note that the prefix for the device Controller tags is determined by the name assigned when configuring the I/O (Chapter 4).

Figure 20 - ControlLogix Example Ladder Logic Program Using a Device Add-on Profile for Logic Status/Feedback

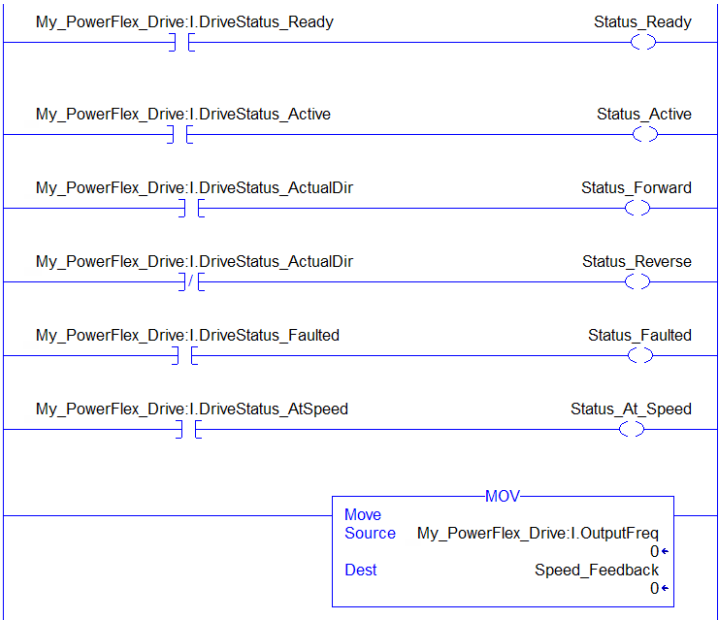

Figure 21 - ControlLogix Example Ladder Logic Program Using a Device Add-on Profile for Logic Command/Reference

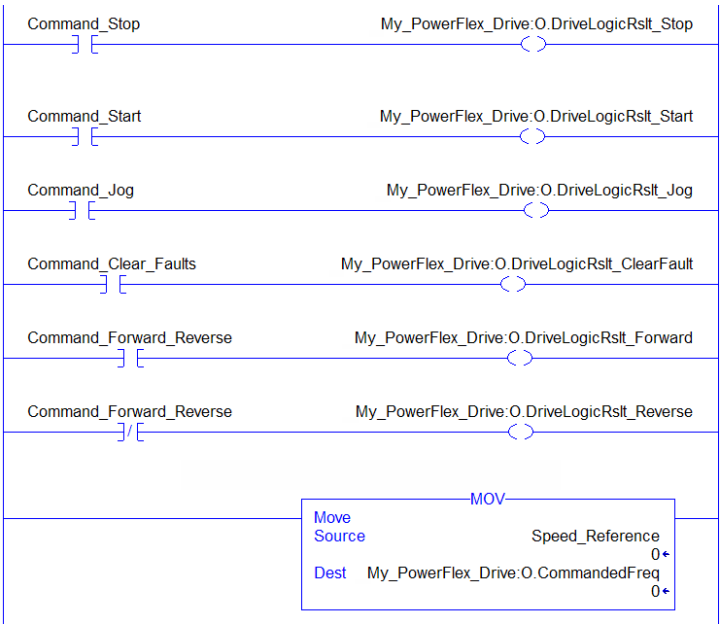

Creating Ladder Logic Using the RSLogix 5000 Classic Profile, Versions 1300…15.00

Since the RSLogix 5000 Classic Profile has been significantly improved upon by RSLogix 5000 device Add-on Profiles, version 16.00 or later, we highly

recommended using the RSLogix 5000 device Add-on Profiles to take advantage of their benefits (more intuitive, time saving, and less likely to make ladder logic program errors).

Creating Ladder Logic Using the RSLogix 5000 Generic Profile, All Versions

Drive and Adapter Parameter Settings

The following drive and adapter settings were used for the example ladder logic program in this section.

Device	Parameter	Value	Description
PowerFlex 70 EC Drive	90 - [Speed Ref A Sel]	22 (DPI Port 5)	Assigns 20-COMM-ER to be used for the Reference.
	300 - [Data In A1]	140	Points to Par. 140 - [Accel Time 1]
	301 - [Data In A2]	142	Points to Par. 142 - [Decel Time 1]
	302 - [Data In B1]	100	Points to Par. 100 - [Jog Speed]
	303 - [Data In B2]	155	Points to Par. 155 - [Stop Mode A]
	304 - [Data In C1]	101	Points to Par. 101 - [Preset Speed 1]
	305 - [Data In C2]	102	Points to Par. 102 - [Preset Speed 2]
	306 - [Data In D1]	103	Points to Par. 103 - [Preset Speed 3]
	307 - [Data In D2]	104	Points to Par. 104 - [Preset Speed 4]
	310 - [Data Out A1]	140	Points to Par. 140 - [Accel Time 1]
	311 - [Data Out A2]	142	Points to Par. 142 - [Decel Time 1]
	312 - [Data Out B1]	100	Points to Par. 100 - [Jog Speed]
	313 - [Data Out B2]	155	Points to Par. 155 - [Stop Mode A]
	314 - [Data Out C1]	101	Points to Par. 101 - [Preset Speed 1]
	315 - [Data Out C2]	102	Points to Par. 102 - [Preset Speed 2]
	316 - [Data Out D1]	103	Points to Par. 103 - [Preset Speed 3]
	317 - [Data Out D2]	104	Points to Par. 104 - [Preset Speed 4]
20-COMM-ER Adapter	04 - [IP Addr Cfg 1] ⋮ 07 - [IP Addr Cfg 4]	10.91.100.79	IP address for the adapter.
	08 - [Subnet Cfg 1] ⋮ 11 - [Subnet Cfg 4]	255.255.248.0	Subnet mask for the adapter.
	23 - [DPI I/O Cfg]	xxx1 1111	Enables Cmd/Ref and Datalinks A…D.
	35 - [M-S Input]	xxx1 1111	Configures the I/O Data to be transferred from the controller on the network to the drive.
	36 - [M-S Output]	xxx1 1111	Configures the I/O Data to be transferred from the drive to the controller on the network.

TIP Data In parameters are inputs into the device that come from controller outputs (for example, data to write to a device parameter). Data Out parameters are outputs from the device that go to controller inputs (for example, data to read a device parameter).

Controller Tags

When you add the adapter and drive to the I/O configuration (Chapter 4), RSLogix 5000 software automatically creates generic (non-descriptive) controller tags for them. In this example program, the following controller tags are used.

Figure 22 - ControlLogix Controller Tags for Drive Generic Profile Example Ladder Logic Program

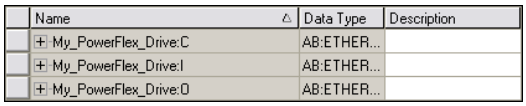

Name	Data Type	Description
⊞ My_PowerFlex_Drive:C	AB:ETHER...	
⊞ My_PowerFlex_Drive:I	AB:ETHER...	
⊞ My_PowerFlex_Drive:O	AB:ETHER...	

You can expand the Input and Output tags to reveal the input and output configuration.

Figure 23 - ControlLogix Input Image for Drive Generic Profile Example Ladder Logic Program

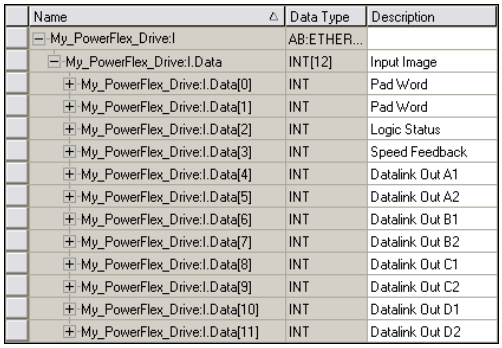

Name	Data Type	Description
⊟ My_PowerFlex_Drive:I	AB:ETHER...	
⊟ My_PowerFlex_Drive:I.Data	INT[12]	Input Image
⊞ My_PowerFlex_Drive:I.Data[0]	INT	Pad Word
⊞ My_PowerFlex_Drive:I.Data[1]	INT	Pad Word
⊞ My_PowerFlex_Drive:I.Data[2]	INT	Logic Status
⊞ My_PowerFlex_Drive:I.Data[3]	INT	Speed Feedback
⊞ My_PowerFlex_Drive:I.Data[4]	INT	Datalink Out A1
⊞ My_PowerFlex_Drive:I.Data[5]	INT	Datalink Out A2
⊞ My_PowerFlex_Drive:I.Data[6]	INT	Datalink Out B1
⊞ My_PowerFlex_Drive:I.Data[7]	INT	Datalink Out B2
⊞ My_PowerFlex_Drive:I.Data[8]	INT	Datalink Out C1
⊞ My_PowerFlex_Drive:I.Data[9]	INT	Datalink Out C2
⊞ My_PowerFlex_Drive:I.Data[10]	INT	Datalink Out D1
⊞ My_PowerFlex_Drive:I.Data[11]	INT	Datalink Out D2

PowerFlex 70 Drive
16-bit Speed Feedback and Datalinks

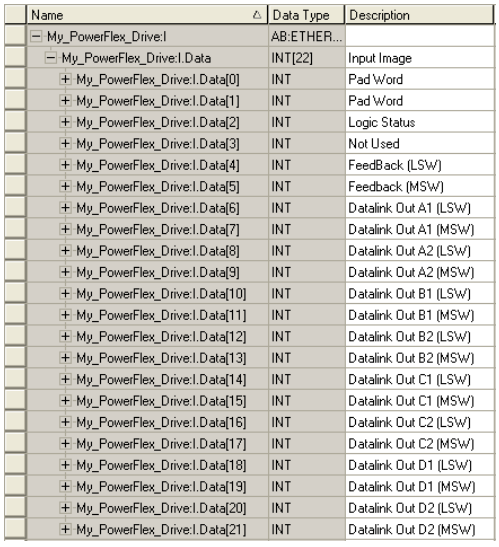

Name	Data Type	Description
⊟ My_PowerFlex_Drive:I	AB:ETHER...	
⊟ My_PowerFlex_Drive:I.Data	INT[22]	Input Image
⊞ My_PowerFlex_Drive:I.Data[0]	INT	Pad Word
⊞ My_PowerFlex_Drive:I.Data[1]	INT	Pad Word
⊞ My_PowerFlex_Drive:I.Data[2]	INT	Logic Status
⊞ My_PowerFlex_Drive:I.Data[3]	INT	Not Used
⊞ My_PowerFlex_Drive:I.Data[4]	INT	FeedBack (LSW)
⊞ My_PowerFlex_Drive:I.Data[5]	INT	Feedback (MSW)
⊞ My_PowerFlex_Drive:I.Data[6]	INT	Datalink Out A1 (LSW)
⊞ My_PowerFlex_Drive:I.Data[7]	INT	Datalink Out A1 (MSW)
⊞ My_PowerFlex_Drive:I.Data[8]	INT	Datalink Out A2 (LSW)
⊞ My_PowerFlex_Drive:I.Data[9]	INT	Datalink Out A2 (MSW)
⊞ My_PowerFlex_Drive:I.Data[10]	INT	Datalink Out B1 (LSW)
⊞ My_PowerFlex_Drive:I.Data[11]	INT	Datalink Out B1 (MSW)
⊞ My_PowerFlex_Drive:I.Data[12]	INT	Datalink Out B2 (LSW)
⊞ My_PowerFlex_Drive:I.Data[13]	INT	Datalink Out B2 (MSW)
⊞ My_PowerFlex_Drive:I.Data[14]	INT	Datalink Out C1 (LSW)
⊞ My_PowerFlex_Drive:I.Data[15]	INT	Datalink Out C1 (MSW)
⊞ My_PowerFlex_Drive:I.Data[16]	INT	Datalink Out C2 (LSW)
⊞ My_PowerFlex_Drive:I.Data[17]	INT	Datalink Out C2 (MSW)
⊞ My_PowerFlex_Drive:I.Data[18]	INT	Datalink Out D1 (LSW)
⊞ My_PowerFlex_Drive:I.Data[19]	INT	Datalink Out D1 (MSW)
⊞ My_PowerFlex_Drive:I.Data[20]	INT	Datalink Out D2 (LSW)
⊞ My_PowerFlex_Drive:I.Data[21]	INT	Datalink Out D2 (MSW)

PowerFlex 700S-Series Drive
32-bit Speed Feedback and Datalinks

Figure 24 - ControlLogix Output Image for Drive Generic Profile Example Ladder Logic Program

Name	Data Type	Description
My_PowerFlex_Drive:O	AB:ETHER...	
My_PowerFlex_Drive:O.Data	INT[10]	Output Image
My_PowerFlex_Drive:O.Data[0]	INT	Logic Command
My_PowerFlex_Drive:O.Data[1]	INT	Speed Reference
My_PowerFlex_Drive:O.Data[2]	INT	Datalink In A1
My_PowerFlex_Drive:O.Data[3]	INT	Datalink In A2
My_PowerFlex_Drive:O.Data[4]	INT	Datalink In B1
My_PowerFlex_Drive:O.Data[5]	INT	Datalink In B2
My_PowerFlex_Drive:O.Data[6]	INT	Datalink In C1
My_PowerFlex_Drive:O.Data[7]	INT	Datalink In C2
My_PowerFlex_Drive:O.Data[8]	INT	Datalink In D1
My_PowerFlex_Drive:O.Data[9]	INT	Datalink In D2

PowerFlex 70 Drive
16-bit Speed Reference and Datalinks

Name	Data Type	Description
My_PowerFlex_Drive:O	AB:ETHER...	
My_PowerFlex_Drive:O.Data	INT[20]	Output Image
My_PowerFlex_Drive:O.Data[0]	INT	Logic Command
My_PowerFlex_Drive:O.Data[1]	INT	Not Used
My_PowerFlex_Drive:O.Data[2]	INT	Reference (LSW)
My_PowerFlex_Drive:O.Data[3]	INT	Reference (MSW)
My_PowerFlex_Drive:O.Data[4]	INT	Datalink In A1 (LSW)
My_PowerFlex_Drive:O.Data[5]	INT	Datalink In A1 (MSW)
My_PowerFlex_Drive:O.Data[6]	INT	Datalink In A2 (LSW)
My_PowerFlex_Drive:O.Data[7]	INT	Datalink In A2 (MSW)
My_PowerFlex_Drive:O.Data[8]	INT	Datalink In B1 (LSW)
My_PowerFlex_Drive:O.Data[9]	INT	Datalink In B1 (MSW)
My_PowerFlex_Drive:O.Data[10]	INT	Datalink In B2 (LSW)
My_PowerFlex_Drive:O.Data[11]	INT	Datalink In B2 (MSW)
My_PowerFlex_Drive:O.Data[12]	INT	Datalink In C1 (LSW)
My_PowerFlex_Drive:O.Data[13]	INT	Datalink In C1 (MSW)
My_PowerFlex_Drive:O.Data[14]	INT	Datalink In C2 (LSW)
My_PowerFlex_Drive:O.Data[15]	INT	Datalink In C2 (MSW)
My_PowerFlex_Drive:O.Data[16]	INT	Datalink In D1 (LSW)
My_PowerFlex_Drive:O.Data[17]	INT	Datalink In D1 (MSW)
My_PowerFlex_Drive:O.Data[18]	INT	Datalink In D2 (LSW)
My_PowerFlex_Drive:O.Data[19]	INT	Datalink In D2 (MSW)

PowerFlex 700S-Series Drive
32-bit Speed Reference and Datalinks

Program Tags

To use the Controller tags that are automatically created, you need to create the following Program tags for this example program.

Figure 25 - ControlLogix Program Tags for Drive Generic Profile Example Ladder Logic Program

Name	Style	Data Type
Command_Clear_Faults	Decimal	BOOL
Command_Forward_Reverse	Decimal	BOOL
Command_Jog	Decimal	BOOL
Command_Start	Decimal	BOOL
Command_Stop	Decimal	BOOL
Speed_Feedback	Decimal	DINT
Speed_Reference	Decimal	DINT
Status_Active	Decimal	BOOL
Status_At_Speed	Decimal	BOOL
Status_Faulted	Decimal	BOOL
Status_Forward	Decimal	BOOL
Status_Ready	Decimal	BOOL
Status_Reverse	Decimal	BOOL

For information on speed Reference and Feedback scaling, see PowerFlex 7-Class Drives on page 85.

Figure 26 - ControlLogix Example Ladder Logic Program Using a Drive Generic Profile for Logic Status/Feedback

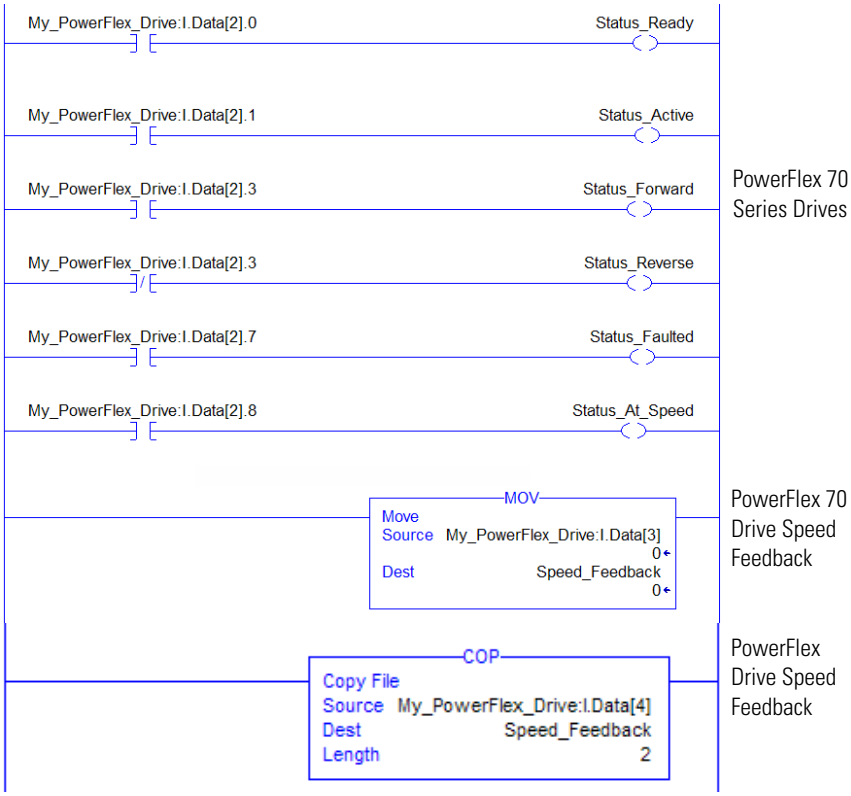

Figure 27 - ControlLogix Example Ladder Logic Program Using a Drive Generic Profile for Logic Command/Reference

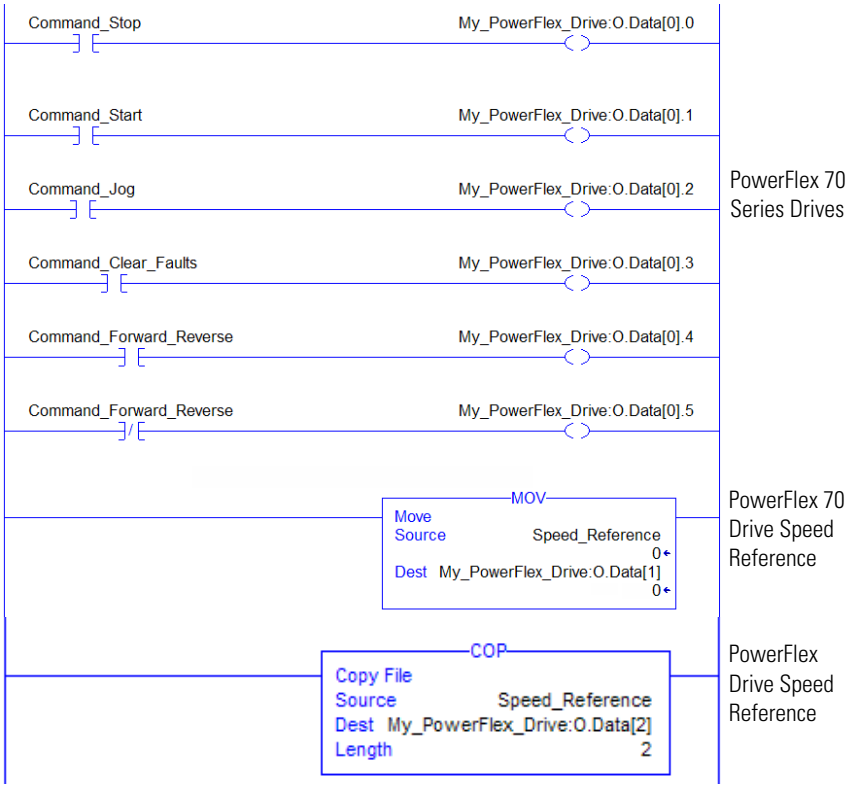

Example Datalink Data

The Datalink data used in the example program is shown in Figure 28. Note that to describe the parameters to which the Datalinks are assigned, you may want to add descriptions to the automatically-created generic controller tags or create a User Defined Data Types (UDDT).

Figure 28 - ControlLogix Example Datalinks for Ladder Logic Program Using a Drive Generic Profile

Name	Value	Data Type	Description
My_PowerFlex_Drive:I	{...}	AB:ETHER...	
My_PowerFlex_Drive:I.Data	{...}	INT[12]	Input Image
My_PowerFlex_Drive:I.Data[0]	0	INT	Pad Word
My_PowerFlex_Drive:I.Data[1]	0	INT	Pad Word
My_PowerFlex_Drive:I.Data[2]	0	INT	Logic Status
My_PowerFlex_Drive:I.Data[3]	0	INT	Speed Feedback
My_PowerFlex_Drive:I.Data[4]	50	INT	Datalink Out A1
My_PowerFlex_Drive:I.Data[5]	50	INT	Datalink Out A2
My_PowerFlex_Drive:I.Data[6]	100	INT	Datalink Out B1
My_PowerFlex_Drive:I.Data[7]	1	INT	Datalink Out B2
My_PowerFlex_Drive:I.Data[8]	200	INT	Datalink Out C1
My_PowerFlex_Drive:I.Data[9]	300	INT	Datalink Out C2
My_PowerFlex_Drive:I.Data[10]	400	INT	Datalink Out D1
My_PowerFlex_Drive:I.Data[11]	500	INT	Datalink Out D2
My_PowerFlex_Drive:O	{...}	AB:ETHER...	
My_PowerFlex_Drive:O.Data	{...}	INT[10]	Output Image
My_PowerFlex_Drive:O.Data[0]	0	INT	Logic Command
My_PowerFlex_Drive:O.Data[1]	0	INT	Speed Reference
My_PowerFlex_Drive:O.Data[2]	50	INT	Datalink In A1
My_PowerFlex_Drive:O.Data[3]	50	INT	Datalink In A2
My_PowerFlex_Drive:O.Data[4]	100	INT	Datalink In B1
My_PowerFlex_Drive:O.Data[5]	1	INT	Datalink In B2
My_PowerFlex_Drive:O.Data[6]	200	INT	Datalink In C1
My_PowerFlex_Drive:O.Data[7]	300	INT	Datalink In C2
My_PowerFlex_Drive:O.Data[8]	400	INT	Datalink In D1
My_PowerFlex_Drive:O.Data[9]	500	INT	Datalink In D2

PowerFlex 70 Drive

Name	Value	Data Type	Description
My_PowerFlex_Drive:I	{...}	AB:ETHER...	
My_PowerFlex_Drive:I.Data	{...}	INT[22]	Input Image
My_PowerFlex_Drive:I.Data[0]	0	INT	Pad Word
My_PowerFlex_Drive:I.Data[1]	0	INT	Pad Word
My_PowerFlex_Drive:I.Data[2]	1295	INT	Logic Status
My_PowerFlex_Drive:I.Data[3]	0	INT	Not Used
My_PowerFlex_Drive:I.Data[4]	25000	INT	Feedback (LSW)
My_PowerFlex_Drive:I.Data[5]	0	INT	Feedback (MSW)
My_PowerFlex_Drive:I.Data[6]	-26970	INT	Datalink Out A1 (LSW)
My_PowerFlex_Drive:I.Data[7]	17432	INT	Datalink Out A1 (MSW)
My_PowerFlex_Drive:I.Data[8]	15562	INT	Datalink Out A2 (LSW)
My_PowerFlex_Drive:I.Data[9]	5457	INT	Datalink Out A2 (MSW)
My_PowerFlex_Drive:I.Data[10]	0	INT	Datalink Out B1 (LSW)
My_PowerFlex_Drive:I.Data[11]	16840	INT	Datalink Out B1 (MSW)
My_PowerFlex_Drive:I.Data[12]	0	INT	Datalink Out B2 (LSW)
My_PowerFlex_Drive:I.Data[13]	0	INT	Datalink Out B2 (MSW)
My_PowerFlex_Drive:I.Data[14]	0	INT	Datalink Out C1 (LSW)
My_PowerFlex_Drive:I.Data[15]	0	INT	Datalink Out C1 (MSW)
My_PowerFlex_Drive:I.Data[16]	0	INT	Datalink Out C2 (LSW)
My_PowerFlex_Drive:I.Data[17]	0	INT	Datalink Out C2 (MSW)
My_PowerFlex_Drive:I.Data[18]	0	INT	Datalink Out D1 (LSW)
My_PowerFlex_Drive:I.Data[19]	0	INT	Datalink Out D1 (MSW)
My_PowerFlex_Drive:I.Data[20]	0	INT	Datalink Out D2 (LSW)
My_PowerFlex_Drive:I.Data[21]	0	INT	Datalink Out D2 (MSW)
My_PowerFlex_Drive:O	{...}	AB:ETHER...	
My_PowerFlex_Drive:O.Data	{...}	INT[20]	Output Image
My_PowerFlex_Drive:O.Data[0]	0	INT	Logic Command
My_PowerFlex_Drive:O.Data[1]	0	INT	Not Used
My_PowerFlex_Drive:O.Data[2]	25000	INT	Reference (LSW)
My_PowerFlex_Drive:O.Data[3]	0	INT	Reference (MSW)
My_PowerFlex_Drive:O.Data[4]	0	INT	Datalink In A1 (LSW)
My_PowerFlex_Drive:O.Data[5]	16680	INT	Datalink In A1 (MSW)
My_PowerFlex_Drive:O.Data[6]	4430	INT	Datalink In A2 (LSW)
My_PowerFlex_Drive:O.Data[7]	1909	INT	Datalink In A2 (MSW)
My_PowerFlex_Drive:O.Data[8]	-2621	INT	Datalink In B1 (LSW)
My_PowerFlex_Drive:O.Data[9]	16664	INT	Datalink In B1 (MSW)
My_PowerFlex_Drive:O.Data[10]	0	INT	Datalink In B2 (LSW)
My_PowerFlex_Drive:O.Data[11]	0	INT	Datalink In B2 (MSW)

PowerFlex 700S-Series Drive

For PowerFlex 7-Class drives, the scaling may need to be multiplied by 10 or 100, depending on the parameter. For more information, see Using Datalinks on page 86.

MicroLogix 1100/1400 Controller Example

Drive and Adapter Parameter Settings

The following drive and adapter settings were used for the example ladder logic program in this section.

Device	Parameter	Value	Description
PowerFlex 70 EC Drive	90 - [Speed Ref A Sel]	22 (DPI Port 5)	Assigns 20-COMM-ER to be used for the Reference.
	300 - [Data In A1]	140	Points to Par. 140 - [Accel Time 1]
	301 - [Data In A2]	142	Points to Par. 142 - [Decel Time 1]
	302 - [Data In B1]	100	Points to Par. 100 - [Jog Speed]
	303 - [Data In B2]	155	Points to Par. 155 - [Stop Mode A]
	304 - [Data In C1]	101	Points to Par. 101 - [Preset Speed 1]
	305 - [Data In C2]	102	Points to Par. 102 - [Preset Speed 2]
	306 - [Data In D1]	103	Points to Par. 103 - [Preset Speed 3]
	307 - [Data In D2]	104	Points to Par. 104 - [Preset Speed 4]
	310 - [Data Out A1]	140	Points to Par. 140 - [Accel Time 1]
	311 - [Data Out A2]	142	Points to Par. 142 - [Decel Time 1]
	312 - [Data Out B1]	100	Points to Par. 100 - [Jog Speed]
	313 - [Data Out B2]	155	Points to Par. 155 - [Stop Mode A]
	314 - [Data Out C1]	101	Points to Par. 101 - [Preset Speed 1]
	315 - [Data Out C2]	102	Points to Par. 102 - [Preset Speed 2]
	316 - [Data Out D1]	103	Points to Par. 103 - [Preset Speed 3]
	317 - [Data Out D2]	104	Points to Par. 104 - [Preset Speed 4]
20-COMM-ER Adapter	04 - [IP Addr Cfg 1] ⋮ 07 - [IP Addr Cfg 4]	10.91.100.79	IP address for the adapter.
	08 - [Subnet Cfg 1] ⋮ 11 - [Subnet Cfg 4]	255.255.248.0	Subnet mask for the adapter.
	23 - [DPI I/O Cfg]	xxx1 1111	Enables Cmd/Ref and Datalinks A…D.
	35 - [M-S Input]	xxx1 1111	Configures the I/O Data to be transferred from the controller on the network to the drive.
	36 - [M-S Output]	xxx1 1111	Configures the I/O Data to be transferred from the drive to the controller on the network.

TIP Data In parameters are inputs into the drive that come from controller outputs (for example, data to write to a drive parameter). Data Out parameters are outputs from the drive that go to controller inputs (for example, data to read a drive parameter).

TIP When using a drive that has 16-bit Datalinks (PowerFlex 70, PowerFlex 700, and PowerFlex 700H drives) to transfer a 32-bit parameter, two contiguous drive Datalink parameters (for example, Data Out A1/A2, B1/B2, etc.) are required. To determine if a parameter is a 32-bit parameter, see the Parameter section in the drive documentation and look for a symbol in the 'No.' column. (All parameters in PowerFlex 700 Series B drives are 32-bit parameters.) For example, parameter 3 - [Output Current] in a PowerFlex 70 EC drive is a 32-bit parameter. When using a drive that has 32-bit Datalinks (PowerFlex 700 VC and PowerFlex 700S), only one drive Datalink parameter is required to transfer any parameter.

Understanding Controller Data Table Addresses

Because MicroLogix 1100/1400 controllers are 16-bit platforms and are used with the 32-bit 20-COMM-ER adapter, the data will be transposed from the least-significant word (LSW) to the most-significant word (MSW) in the controller.

When the I/O was configured (Chapter 4), an available data table address (N20) was used. Figure 29 shows the entire data file address structure for this example.

Figure 29 - Data File Table for Example Ladder Logic Program

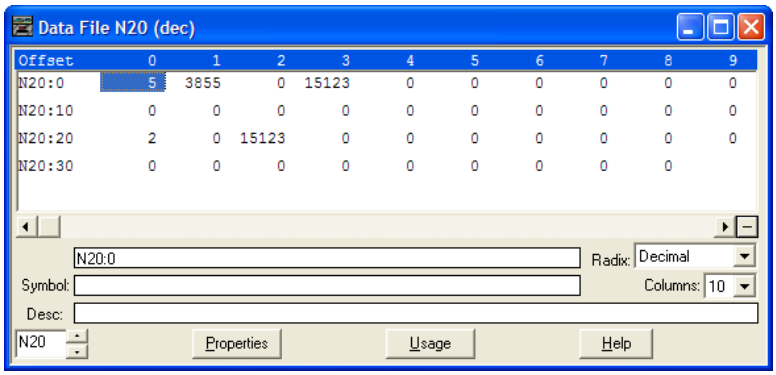

Important: The N20:0 data table address in this example is used to set a control timeout value (in seconds) which determines how long it will take the adapter to detect a communication loss. Enter a valid value (1…32767) for N20:0. A value of zero (0) is not valid, because it disables the timeout and all I/O connections (Logic Command/Status, Reference/Feedback, and Datalinks) intended for the drive will not execute. A timeout value of 5…20 seconds is recommended.

Depending on the drive you are using, Table 11, Table 12, Table 13, or Table 14 show the I/O definitions as they relate to the N20 data table (Figure 29) being used in this example.

When using PowerFlex 70 or 70 EC, PowerFlex 700, PowerFlex 700VC drives, or SMC Flex controllers—which all contain INT (16-bit format) data types, you will read from and write to the MSW data table address in the controller.

When using PowerFlex 700 VC drives or SMC-50 controllers, which contain DINT (32-bit format) data types, you will read from and write to the LSW data table address in the controller.

When using PowerFlex 700S drives, which contain both DINT (32-bit format) and REAL (floating point format) data types, you will always read from and write to the LSW data table address in the controller first. Then if the data value exceeds 16 bits, the remaining value will be in the MSW data table address.

Table 11 - Controller Data Table Addresses for PowerFlex 70/70 EC, PowerFlex 700 Drives, and SMC Flex Controllers

Data Table Address	Description
N20:1	Logic Status (see Appendix D)
N20:2	Reserved
N20:3	Speed Feedback
N20:4	Value of parameter assigned to Parameter 310 [Data Out A1] LSW
N20:5	Value of parameter assigned to Parameter 310 [Data Out A1] MSW
N20:6	Value of parameter assigned to Parameter 311 [Data Out A2] LSW
N20:7	Value of parameter assigned to Parameter 311 [Data Out A2] MSW
N20:8	Value of parameter assigned to Parameter 312 [Data Out B1] LSW
N20:9	Value of parameter assigned to Parameter 312 [Data Out B1] MSW
N20:10	Value of parameter assigned to Parameter 313 [Data Out B2] LSW
N20:11	Value of parameter assigned to Parameter 313 [Data Out B2] MSW
N20:12	Value of parameter assigned to Parameter 314 [Data Out C1] LSW
N20:13	Value of parameter assigned to Parameter 314 [Data Out C1] MSW
N20:14	Value of parameter assigned to Parameter 315 [Data Out C2] LSW
N20:15	Value of parameter assigned to Parameter 315 [Data Out C2] MSW
N20:16	Value of parameter assigned to Parameter 316 [Data Out D1] LSW
N20:17	Value of parameter assigned to Parameter 316 [Data Out D1] MSW
N20:18	Value of parameter assigned to Parameter 317 [Data Out D2] LSW
N20:19	Value of parameter assigned to Parameter 317 [Data Out D2] MSW
N20:20	Logic Command (see Appendix D)
N20:21	Reserved
N20:22	Speed Reference
N20:23	Value of parameter assigned to Parameter 300 [Data In A1] LSW
N20:24	Value of parameter assigned to Parameter 300 [Data In A1] MSW
N20:25	Value of parameter assigned to Parameter 301 [Data In A2] LSW
N20:26	Value of parameter assigned to Parameter 301 [Data In A2] MSW
N20:27	Value of parameter assigned to Parameter 302 [Data In B1] LSW
N20:28	Value of parameter assigned to Parameter 302 [Data In B1] MSW
N20:29	Value of parameter assigned to Parameter 303 [Data In B2] LSW
N20:30	Value of parameter assigned to Parameter 303 [Data In B2] MSW
N20:31	Value of parameter assigned to Parameter 304 [Data In C1] LSW
N20:32	Value of parameter assigned to Parameter 304 [Data In C1] MSW
N20:33	Value of parameter assigned to Parameter 305 [Data In C2] LSW
N20:34	Value of parameter assigned to Parameter 305 [Data In C2] MSW
N20:35	Value of parameter assigned to Parameter 306 [Data In D1] LSW
N20:36	Value of parameter assigned to Parameter 306 [Data In D1] MSW
N20:37	Value of parameter assigned to Parameter 307 [Data In D2] LSW
N20:38	Value of parameter assigned to Parameter 307 [Data In D2] MSW

Table 12 - Controller Data Table Addresses for PowerFlex 700 VC Drives and SMC-50 Controllers

Data Table Address	Description
N20:1	Logic Status (see Appendix D)
N20:2	Reserved
N20:3	Speed Feedback
N20:4	Value of parameter assigned to Parameter 310 [Data Out A1] LSW
N20:5	Value of parameter assigned to Parameter 310 [Data Out A1] MSW
N20:6	Value of parameter assigned to Parameter 311 [Data Out A2] LSW
N20:7	Value of parameter assigned to Parameter 311 [Data Out A2] MSW
N20:8	Value of parameter assigned to Parameter 312 [Data Out B1] LSW
N20:9	Value of parameter assigned to Parameter 312 [Data Out B1] MSW
N20:10	Value of parameter assigned to Parameter 313 [Data Out B2] LSW
N20:11	Value of parameter assigned to Parameter 313 [Data Out B2] MSW
N20:12	Value of parameter assigned to Parameter 314 [Data Out C1] LSW
N20:13	Value of parameter assigned to Parameter 314 [Data Out C1] MSW
N20:14	Value of parameter assigned to Parameter 315 [Data Out C2] LSW
N20:15	Value of parameter assigned to Parameter 315 [Data Out C2] MSW
N20:16	Value of parameter assigned to Parameter 316 [Data Out D1] LSW
N20:17	Value of parameter assigned to Parameter 316 [Data Out D1] MSW
N20:18	Value of parameter assigned to Parameter 317 [Data Out D2] LSW
N20:19	Value of parameter assigned to Parameter 317 [Data Out D2] MSW
N20:20	Logic Command (see Appendix D)
N20:21	Reserved
N20:22	Speed Reference
N20:23	Value of parameter assigned to Parameter 300 [Data In A1] LSW
N20:24	Value of parameter assigned to Parameter 300 [Data In A1] MSW
N20:25	Value of parameter assigned to Parameter 301 [Data In A2] LSW
N20:26	Value of parameter assigned to Parameter 301 [Data In A2] MSW
N20:27	Value of parameter assigned to Parameter 302 [Data In B1] LSW
N20:28	Value of parameter assigned to Parameter 302 [Data In B1] MSW
N20:29	Value of parameter assigned to Parameter 303 [Data In B2] LSW
N20:30	Value of parameter assigned to Parameter 303 [Data In B2] MSW
N20:31	Value of parameter assigned to Parameter 304 [Data In C1] LSW
N20:32	Value of parameter assigned to Parameter 304 [Data In C1] MSW
N20:33	Value of parameter assigned to Parameter 305 [Data In C2] LSW
N20:34	Value of parameter assigned to Parameter 305 [Data In C2] MSW
N20:35	Value of parameter assigned to Parameter 306 [Data In D1] LSW
N20:36	Value of parameter assigned to Parameter 306 [Data In D1] MSW
N20:37	Value of parameter assigned to Parameter 307 [Data In D2] LSW
N20:38	Value of parameter assigned to Parameter 307 [Data In D2] MSW

Table 13 - Controller Data Table Addresses for PowerFlex 700S Drives with Phase I Control

Data Table Address	Description
N20:1	Logic Status (see Appendix D)
N20:2	Speed Feedback LSW
N20:3	Speed Feedback MSW
N20:4	Value of parameter assigned to Parameter 724/725 [Data Out A1] LSW
N20:5	Value of parameter assigned to Parameter 724/725 [Data Out A1] MSW
N20:6	Value of parameter assigned to Parameter 726/727 [Data Out A2] LSW
N20:7	Value of parameter assigned to Parameter 726/727 [Data Out A2] MSW
N20:8	Value of parameter assigned to Parameter 728/729 [Data Out B1] LSW
N20:9	Value of parameter assigned to Parameter 728/729 [Data Out B1] MSW
N20:10	Value of parameter assigned to Parameter 730/731 [Data Out B2] LSW
N20:11	Value of parameter assigned to Parameter 730/731 [Data Out B2] MSW
N20:12	Value of parameter assigned to Parameter 732/733 [Data Out C1] LSW
N20:13	Value of parameter assigned to Parameter 732/733 [Data Out C1] MSW
N20:14	Value of parameter assigned to Parameter 734/735 [Data Out C2] LSW
N20:15	Value of parameter assigned to Parameter 734/735 [Data Out C2] MSW
N20:16	Value of parameter assigned to Parameter 736/737 [Data Out D1] LSW
N20:17	Value of parameter assigned to Parameter 736/737 [Data Out D1] MSW
N20:18	Value of parameter assigned to Parameter 738/739 [Data Out D2] LSW
N20:19	Value of parameter assigned to Parameter 738/739 [Data Out D2] MSW
N20:20	Logic Command (see Appendix D)
N20:21	Speed Reference LSW
N20:22	Speed Reference MSW
N20:23	Value of parameter assigned to Parameter 707/708 [Data In A1] LSW
N20:24	Value of parameter assigned to Parameter 707/708 [Data In A1] MSW
N20:25	Value of parameter assigned to Parameter 709/710 [Data In A2] LSW
N20:26	Value of parameter assigned to Parameter 709/710 [Data In A2] MSW
N20:27	Value of parameter assigned to Parameter 711/712 [Data In B1] LSW
N20:28	Value of parameter assigned to Parameter 711/712 [Data In B1] MSW
N20:29	Value of parameter assigned to Parameter 713/714 [Data In B2] LSW
N20:30	Value of parameter assigned to Parameter 713/714 [Data In B2] MSW
N20:31	Value of parameter assigned to Parameter 715/716 [Data In C1] LSW
N20:32	Value of parameter assigned to Parameter 715/716 [Data In C1] MSW
N20:33	Value of parameter assigned to Parameter 717/718 [Data In C2] LSW
N20:34	Value of parameter assigned to Parameter 717/718 [Data In C2] MSW
N20:35	Value of parameter assigned to Parameter 719/720 [Data In D1] LSW
N20:36	Value of parameter assigned to Parameter 719/720 [Data In D1] MSW
N20:37	Value of parameter assigned to Parameter 721/722 [Data In D2] LSW
N20:38	Value of parameter assigned to Parameter 721/722 [Data In D2] MSW

Table 14 - Controller Data Table Addresses for PowerFlex 700S Drives with Phase II Control

Data Table Address	Description
N20:1	Logic Status (see Appendix D)
N20:2	Speed Feedback LSW
N20:3	Speed Feedback MSW
N20:4	Value of parameter assigned to Parameter 660 [DPI Data Out A1] LSW
N20:5	Value of parameter assigned to Parameter 660 [DPI Data Out A1] MSW
N20:6	Value of parameter assigned to Parameter 661 [DPI Data Out A2] LSW
N20:7	Value of parameter assigned to Parameter 661 [DPI Data Out A2] MSW
N20:8	Value of parameter assigned to Parameter 662 [DPI Data Out B1] LSW
N20:9	Value of parameter assigned to Parameter 662 [DPI Data Out B1] MSW
N20:10	Value of parameter assigned to Parameter 663 [DPI Data Out B2] LSW
N20:11	Value of parameter assigned to Parameter 663 [DPI Data Out B2] MSW
N20:12	Value of parameter assigned to Parameter 664 [DPI Data Out C1] LSW
N20:13	Value of parameter assigned to Parameter 664 [DPI Data Out C1] MSW
N20:14	Value of parameter assigned to Parameter 665 [DPI Data Out C2] LSW
N20:15	Value of parameter assigned to Parameter 665 [DPI Data Out C2] MSW
N20:16	Value of parameter assigned to Parameter 666 [DPI Data Out D1] LSW
N20:17	Value of parameter assigned to Parameter 666 [DPI Data Out D1] MSW
N20:18	Value of parameter assigned to Parameter 667 [DPI Data Out D2] LSW
N20:19	Value of parameter assigned to Parameter 667 [DPI Data Out D2] MSW
N20:20	Logic Command (see Appendix D)
N20:21	Speed Reference LSW
N20:22	Speed Reference MSW
N20:23	Value of parameter assigned to Parameter 651 [DPI Data In A1] LSW
N20:24	Value of parameter assigned to Parameter 651 [DPI Data In A1] MSW
N20:25	Value of parameter assigned to Parameter 652 [DPI Data In A2] LSW
N20:26	Value of parameter assigned to Parameter 652 [DPI Data In A2] MSW
N20:27	Value of parameter assigned to Parameter 653 [DPI Data In B1] LSW
N20:28	Value of parameter assigned to Parameter 653 [DPI Data In B1] MSW
N20:29	Value of parameter assigned to Parameter 654 [DPI Data In B2] LSW
N20:30	Value of parameter assigned to Parameter 654 [DPI Data In B2] MSW
N20:31	Value of parameter assigned to Parameter 655 [DPI Data In C1] LSW
N20:32	Value of parameter assigned to Parameter 655 [DPI Data In C1] MSW
N20:33	Value of parameter assigned to Parameter 656 [DPI Data In C2] LSW
N20:34	Value of parameter assigned to Parameter 656 [DPI Data In C2] MSW
N20:35	Value of parameter assigned to Parameter 657 [DPI Data In D1] LSW
N20:36	Value of parameter assigned to Parameter 657 [DPI Data In D1] MSW
N20:37	Value of parameter assigned to Parameter 658 [DPI Data In D2] LSW
N20:38	Value of parameter assigned to Parameter 658 [DPI Data In D2] MSW

You can use the controller data table addresses to directly control and monitor the drive without creating any ladder logic program. However, if you intend to use Human Machine Interface devices (PanelView, and so forth) to operate the drive and view its status, you will need to create descriptive controller data table addresses (Table 15 and Table 16) and a ladder logic program that will pass that data to the data table addresses used for messaging.

Table 15 - Controller and Program Data Table Address Descriptions for Example Logic Status/Feedback Ladder Logic Program

Description	Controller Data Table Address
Drive Ready	N20:1/0
Drive Active	N20:1/1
Actual Direction (XIO)	N20:1/3
Actual Direction (XIC)	N20:1/3
Drive Faulted	N20:1/7
Drive At Speed	N20:1/8
Speed Feedback	N20:3

Description	Program Data Table Address
Status Ready	B3:1/0
Status Active	B3:1/1
Status Forward	B3:1/3
Status Reverse	B3:1/4
Status Faulted	B3:1/7
Status At Speed	B3:1/8
Speed Feedback	B30:3

Table 16 - Program and Controller Data Table Address Descriptions for Example Logic Command/Reference Ladder Logic Program

Description	Program Data Table Address
Command Stop	B3:20/0
Command Start	B3:20/1
Command Jog	B3:20/2
Command Clear Faults	B3:20/3
Command Forward Reverse (XIO)	B3:20/4
Command Forward Reverse (XIC)	B3:20/4
Speed Reference	N30:22

Description	Controller Data Table Address
Drive Stop	N20:20/0
Drive Start	N20:20/1
Drive Jog	N20:20/2
Drive Clear Faults	N20:20/3
Drive Forward	N20:20/4
Drive Reverse	N20:20/5
Speed Reference	N20:22

An example ladder logic program that uses these descriptive controller data table addresses and passes their data to the descriptive program data table addresses is shown in Figure 30, Figure 31, Figure 32, and Figure 33.

Figure 30 - MicroLogix 1100/1400 Example Ladder Logic Program for Logic Status

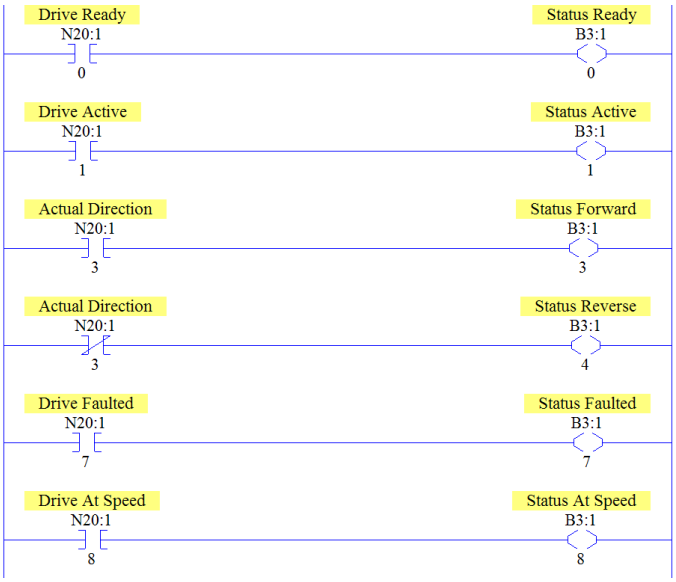

PowerFlex 70 Drives

Figure 31 - MicroLogix 1100/1400 Example Ladder Logic Program for Speed Feedback

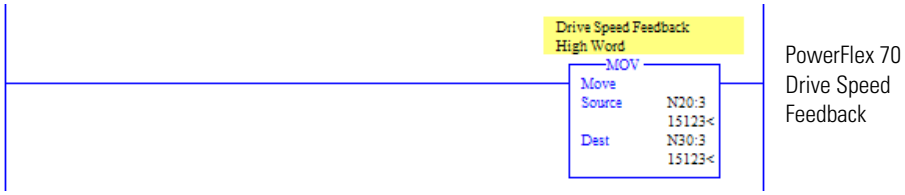

Figure 32 - MicroLogix 1100/1400 Example Ladder Logic Program for Logic Command

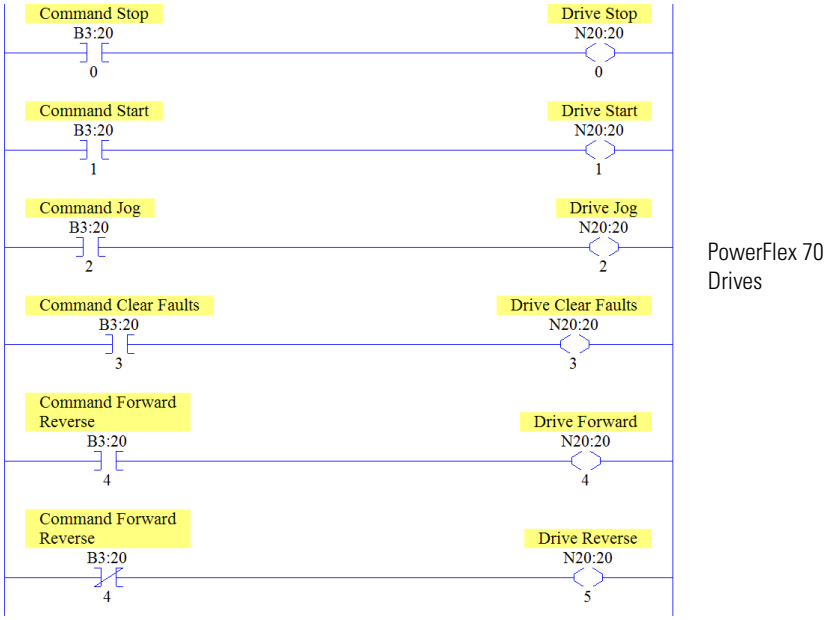

Figure 33 - MicroLogix 1100/1400 Example Ladder Logic Program for Speed Reference

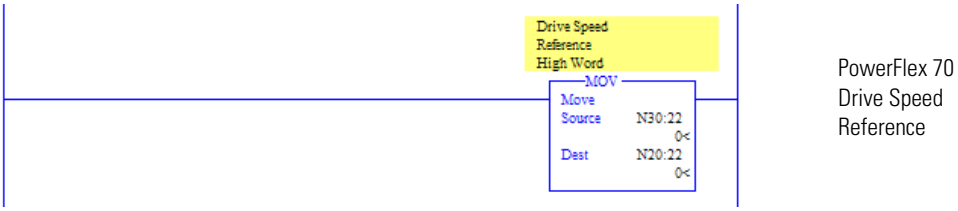

Using Explicit Messaging

This chapter provides information and examples that explain how to use Explicit Messaging to configure and monitor the adapter and connected PowerFlex 7-Class drive or SMC.

Topic	Page
About Explicit Messaging	106
Performing Explicit Messages	106
ControlLogix Controller Examples	108
MicroLogix 1100/1400 Controller Examples	124

ATTENTION: Risk of injury or equipment damage exists. The examples in this publication are intended solely for purposes of example. There are many variables and requirements with any application. Rockwell Automation, Inc. does not assume responsibility or liability (to include intellectual property liability) for actual use of the examples shown in this publication.

ATTENTION: Risk of equipment damage exists. If Explicit Messages are programmed to write parameter data to Nonvolatile Storage (NVS) frequently, the NVS will quickly exceed its life cycle and cause the drive to malfunction. Do not create a program that frequently uses Explicit Messages to write parameter data to NVS. Datalinks do not write to NVS and should be used for frequently changed parameters.

See Chapter 5 for information about the I/O Image, using Logic Command/Status, Reference/Feedback, and Datalinks.

About Explicit Messaging

Explicit Messaging is used to transfer data that does not require continuous updates. With Explicit Messaging, you can configure and monitor a slave device's parameters on the network.

Important: When an explicit message is performed, by default no connection is made since it is an 'unconnected' message. When timing of the message transaction is important, you can create a dedicated message connection between the controller and drive by checking the 'Connected' box on the Communications tab message configuration screen during message setup. These message connections are in addition to the I/O connection. However, the trade off for more message connections is decreased network performance. If your application cannot tolerate this, do not check the 'Connected' box, which is recommended.

Important: PowerFlex 7-Class drives have explicit messaging limitations. Table 17 shows the EtherNet/IP Object Class code compatibilities for these drives.

Table 17 - Explicit Messaging Class Code Compatibility with Drives

EtherNet/IP Object Class Code	PowerFlex 7-Class Drives	Explicit Messaging Function
Parameter Object 0x0F	Yes	Single parameter reads/writes
DPI Parameter Object 0x93	Yes	Single and scattered parameter reads/writes

Performing Explicit Messages

There are five basic events in the Explicit Messaging process. The details of each step will vary depending on the type of controller being used. See the documentation for your controller.

Important: There must be a request message and a response message for all Explicit Messages, whether you are reading or writing data.

Figure 34 - Explicit Message Process

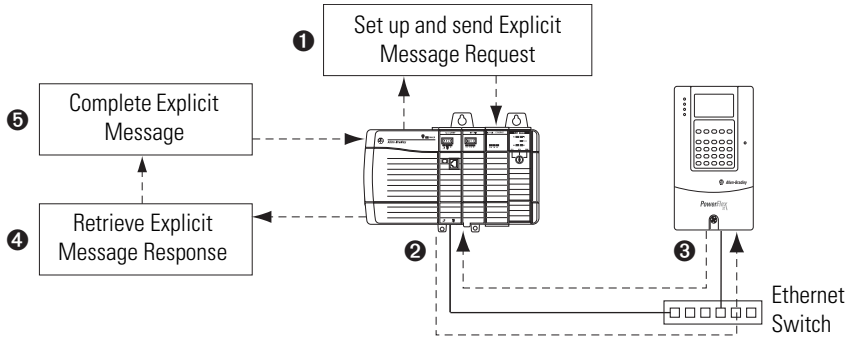

Event	Description
❶	You format the required data and set up the ladder logic program to send an Explicit Message request to the scanner or bridge module (download).
❷	The scanner or bridge module transmits the Explicit Message Request to the slave device over the network.
❸	The slave device transmits the Explicit Message Response back to the scanner. The data is stored in the scanner buffer.
❹	The controller retrieves the Explicit Message Response from the scanner's buffer (upload).
❺	The Explicit Message is complete.

For information on the maximum number of Explicit Messages that can be executed at a time, see the documentation for the scanner or bridge and/or controller that is being used.

ControlLogix Controller Examples

TIP To display the Message Configuration screen in RSLogix 5000 software, add a message instruction (MSG), create a new tag for the message (Properties: Base tag type, MESSAGE data type, controller scope), and click the ... button in the message instruction.

For supported classes, instances, and attributes, see Appendix C, EtherNet/IP Objects.

Explicit Messaging Using RSLogix 5000 Software, Version 15.00 or Later

ControlLogix Controller Example Ladder Logic Program to Read a Single Parameter

A Parameter Read message is used to read a single parameter. This read message example reads the value of parameter 003 - [Output Current] in a PowerFlex 7-Class drive.

Table 18 - Example Controller Tags to Read a Single Parameter

Operand	Controller Tags for Single Read Message	Data Type
XIC	Execute_Single_Read_Message	BOOL
MSG	Single_Read_Message	MESSAGE

Figure 35 - Example Ladder Logic to Read a Single Parameter

ControlLogix Controller – Formatting a Message to Read a Single Parameter, RSLogix 5000 Software, Version 15.00 or Later

Figure 36 - Parameter Read Single Message Configuration Screens

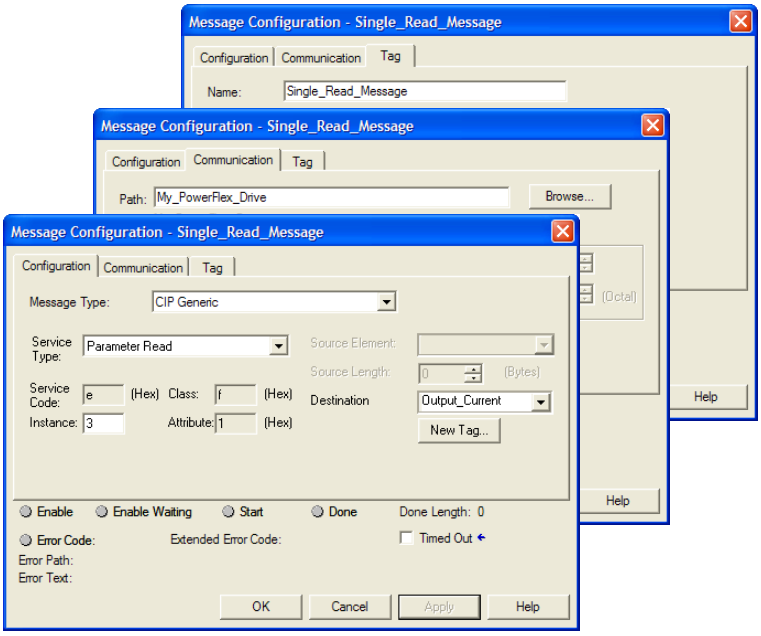

The following table identifies the data that is required in each box to configure a message to read a single parameter.

Configuration Tab	Example Value	Description
Message Type	CIP Generic	Used to access the Parameter Object in the adapter.
Service Type (1)	Parameter Read	This service is used to read a parameter value.
Service Code (1)	e (Hex.)	Code for the requested service.
Class	f (Hex.)	Class ID for the DPI Parameter Object.
Instance (2)	3 (Dec.)	Instance number is the same as parameter number.
Attribute	1 (Hex.)	Attribute number for the Parameter Value attribute.
Destination	Output_Current (4)	The tag where the data that is read is stored.
Communication Tab	**Example Value**	**Description**
Path (3)	My_PowerFlex_Drive	The path is the route that the message will follow.
Tag Tab	**Example Value**	**Description**
Name	Single_Read_Message	The name for the message.

(1) The default setting for Service Type is 'Custom', enabling entry of a Service Code not available from the Service Type pull-down menu. When choosing a Service Type other than 'Custom' from the pull-down menu, an appropriate Hex. value is automatically assigned to the Service Code box which is dimmed (unavailable).

(2) Only drive parameters (Port 0) can be read using Parameter Object Class code 0x0F. To read a parameter of a peripheral in another port, use DPI Parameter Object Class code 0x93 (see page 121).

(3) Click **Browse** to find the path, or type in the name of the device listed in the I/O Configuration folder.

(4) In this example, Output Current is a 32-bit parameter requiring the Data Type field to be set to 'DINT' when creating the controller tag. If the parameter being read is a 16-bit parameter, the tag Data Type field must be set to 'INT'. When using a PowerFlex 700S drive, Output Current is a floating point parameter requiring the Data Type field to be set to 'REAL' when creating the controller tag. See the drive documentation to determine the size of the parameter and its data type (16-bit or 32-bit integer or REAL).

ControlLogix Controller Example Ladder Logic Program to Write a Single Parameter, RSLogix 5000 Software, Version 15.00 or Later

A Parameter Write message is used to write to a single parameter. This write message example writes a value to parameter 140 - [Accel Time 1] in a PowerFlex 7-Class drive.

Table 19 - Example Controller Tags to Write a Single Parameter

Operand	Controller Tags for Single Write Message	Data Type
XIC	Execute_Single_Write_Message	BOOL
MSG	Single_Write_Message	MESSAGE

Figure 37 - Example Ladder Logic to Write a Single Parameter

Important: If the explicit message single write must be written continuously, use DPI Parameter Object Class code 0x93. This writes to RAM—not NVS (EEPROM) memory. This example single write message using Class code F writes to NVS. Over time, continuous writes will exceed the EEPROM life cycle and cause the drive to malfunction.

ControlLogix Controller – Formatting a Message to Write a Single Parameter, RSLogix 5000 Software, Version 15.00 or Later

Figure 38 - Parameter Write Single Message Configuration Screens

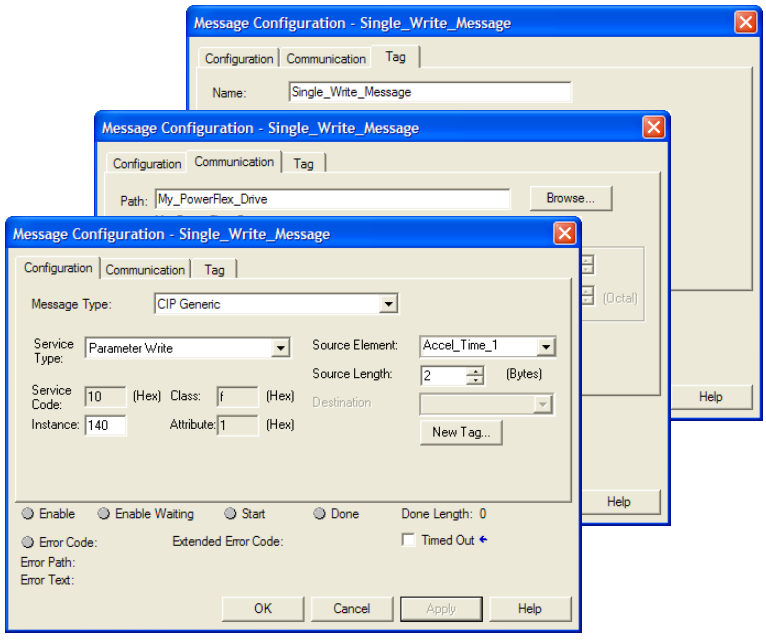

The following table identifies the data that is required in each box to configure a message to write a single parameter.

Configuration Tab	Example Value	Description
Message Type	CIP Generic	Used to access the Parameter Object in the adapter.
Service Type (1)	Parameter Write	This service is used to write a parameter value.
Service Code (1)	10 (Hex.)	Code for the requested service.
Class	f (Hex.)	Class ID for the DPI Parameter Object.
Instance (2)	140 (Dec.)	Instance number is the same as parameter number.
Attribute	1 (Hex.)	Attribute number for the Parameter Value attribute.
Source Element	Accel_Time_1 (4)	Name of the tag for any service data to be sent from the scanner or bridge to the adapter/drive.
Source Length	2 (4)	Number of bytes of service data to be sent in the message.
Communication Tab	**Example Value**	**Description**
Path (3)	My_PowerFlex_Drive	The path is the route that the message will follow.
Tag Tab	**Example Value**	**Description**
Name	Single_Write_Message	The name for the message.

(1) The default setting for Service Type is 'Custom', enabling entry of a Service Code not available from the Service Type pull-down menu. When choosing a Service Type other than 'Custom' from the pull-down menu, an appropriate Hex. value is automatically assigned to the Service Code box which is dimmed (unavailable).

(2) Only drive parameters (Port 0) can be written to using Parameter Object Class code 0x0F. To write to a parameter of a peripheral in another port, use DPI Parameter Object Class code 0x93 (see page 123).

(3) Click **Browse** to find the path, or type in the name of the device listed in the I/O Configuration folder.

(4) In this example, Accel Time 1 is a 16-bit parameter requiring the tag Data Type field to be set to 'INT' when creating the controller tag. If the parameter being written to is a 32-bit parameter, the tag Data Type field must be set to 'DINT'. Also, the Source Length field on the Message Configuration screen must correspond to the selected Data Type in bytes (for example, 4 bytes for a DINT or a REAL). When using a PowerFlex 700S drive, Accel Time 1 is a floating point number requiring the Data Type field to be set to 'REAL' when creating the controller tag. See the drive documentation to determine the size of the parameter and its data type (16-bit or 32-bit integer or REAL).

ControlLogix Controller Example Ladder Logic Program to Read Multiple Parameters, RSLogix 5000 Software, All Versions

A Scattered Read message is used to read the values of multiple parameters. Up to 22 parameters can be read. This read message example reads the values of these five parameters.

PowerFlex 7-Class Drive
• Parameter 001 - [Output Freq] • Parameter 003 - [Output Current] • Parameter 006 - [Output Voltage] • Parameter 012 - [DC Bus Voltage] • Parameter 017 - [Analog In1 Value]

See DPI Parameter Object on page 198 (Class code 0x93) for parameter numbering.

Important: See Table 17 on page 106 for limitations of PowerFlex 7-Class drives when using Class code 0x93.

Table 20 - Example Controller Tags to Read Multiple Parameters

Operand	Controller Tags for Read Multiple Message	Data Type
XIC	Execute_Scattered_Read_Message	BOOL
MSG	Scattered_Read_Message	MESSAGE

Figure 39 - Example Ladder Logic to Read Multiple Parameters

ControlLogix Controller – Formatting a Message to Read Multiple Parameters, RSLogix 5000 Software, All Versions

Figure 40 - Scattered Read Message Configuration Screens

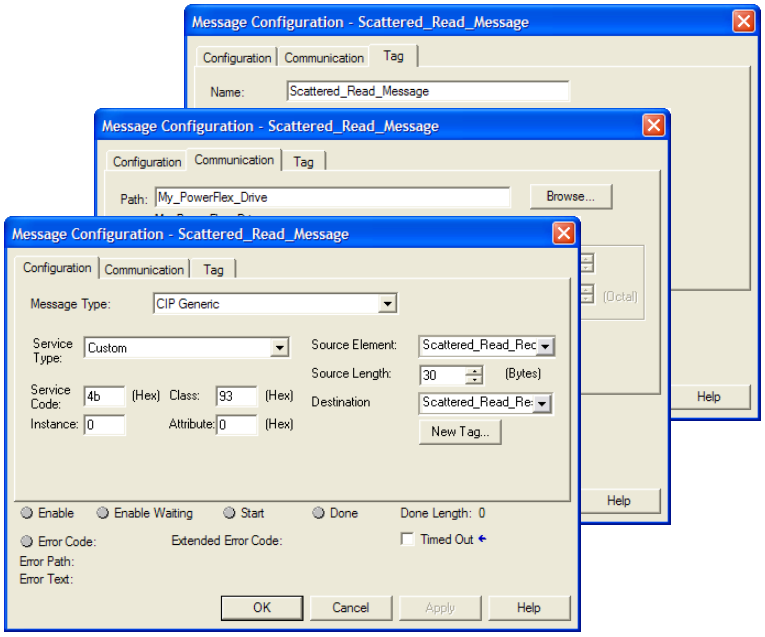

The following table identifies the data that is required in each box to configure a message to read multiple parameters.

Configuration Tab	Example Value	Description
Message Type	CIP Generic	Used to access Parameter Object in the adapter.
Service Type (1)	Custom	Required for scattered messages.
Service Code (1)	4b (Hex.)	Code for the requested service.
Class	93 or 9F (Hex.) (3)	Class ID for the DPI Parameter Object.
Instance	0 (Dec.)	Required for scattered messages.
Attribute	0 (Hex.)	Required for scattered messages.
Source Element	Scattered_Read_Request (4)	Name of the tag for any service data to be sent from scanner or bridge to the adapter/drive.
Source Length	30 (4)	Number of bytes of service data to be sent in the message.
Destination	Scattered_Read_Response	The tag where the data that is read is stored.
Communication Tab	**Example Value**	**Description**
Path (2)	My_PowerFlex_Drive	The path is the route that the message will follow.
Tag Tab	**Example Value**	**Description**
Name	Scattered_Read_Message	The name for the message.

(1) The default setting for Service Type is 'Custom', enabling entry of a Service Code not available from the Service Type pull-down menu. When choosing a Service Type other than 'Custom' from the pull-down menu, an appropriate Hex. value is automatically assigned to the Service Code box which is dimmed (unavailable).

(2) Click **Browse** to find the path, or type in the name of the device listed in the I/O Configuration folder.

(3) See Table 17 on page 106 for limitations of PowerFlex 7-Class drives when using DPI Parameter Object Class code 0x93 for explicit messaging.

(4) In this example, we are reading five parameters. Each parameter being read requires an array of three INT registers. Therefore, a controller tag was created with its Data Type field set to 'INT[15]'. Also, the Source Length field on the Message Configuration screen must correspond to the selected Data Type in bytes (for this example, 30 bytes for an INT[15] array). Scattered read messages always assume that every parameter being read is a 32-bit parameter, regardless of its actual size. Maximum length is 132 bytes or 66 words which equates to 22 parameters. For parameter numbering, see DPI Parameter Object on page 198 (Class code 0x93).

ControlLogix Controller Example Scattered Read Request Data

In this message example, we use the data structure in Figure 41 or Figure in the source tag named Scattered_Read_Request to read these five parameters.

PowerFlex 7-Class Drive
• Parameter 001 - [Output Freq] • Parameter 003 - [Output Current] • Parameter 006 - [Output Voltage] • Parameter 012 - [DC Bus Voltage] • Parameter 017 - [Analog In1 Value]

See DPI Parameter Object on page 198 (Class code 0x93) for parameter numbering.

Figure 41 - Example Scattered Read Request Data for PowerFlex 7-Class Drive

Name	Value	Data Type	Description
Scattered_Read_Request	{...}	INT[15]	
Scattered_Read_Request[0]	1	INT	Parameter Number (decimal)
Scattered_Read_Request[1]	0	INT	Pad Word
Scattered_Read_Request[2]	0	INT	Pad Word
Scattered_Read_Request[3]	3	INT	Parameter Number (decimal)
Scattered_Read_Request[4]	0	INT	Pad Word
Scattered_Read_Request[5]	0	INT	Pad Word
Scattered_Read_Request[6]	6	INT	Parameter Number (decimal)
Scattered_Read_Request[7]	0	INT	Pad Word
Scattered_Read_Request[8]	0	INT	Pad Word
Scattered_Read_Request[9]	12	INT	Parameter Number (decimal)
Scattered_Read_Request[10]	0	INT	Pad Word
Scattered_Read_Request[11]	0	INT	Pad Word
Scattered_Read_Request[12]	17	INT	Parameter Number (decimal)
Scattered_Read_Request[13]	0	INT	Pad Word
Scattered_Read_Request[14]	0	INT	Pad Word

ControlLogix Controller Example Scattered Read Response Data

The Scattered Read Request message reads the multiple parameters and returns their values to the destination tag (Scattered_Read_Response). Figure 42 or Figure shows the parameter values.

Figure 42 - Example Scattered Read Response Data for PowerFlex 7-Class Drive

Name	Value	Data Type	Description
Scattered_Read_Response	{...}	INT[15]	
Scattered_Read_Response[0]	1	INT	Parameter Number (decimal)
Scattered_Read_Response[1]	325	INT	Parameter Value LSW
Scattered_Read_Response[2]	0	INT	Parameter Value MSW
Scattered_Read_Response[3]	3	INT	Parameter Number (decimal)
Scattered_Read_Response[4]	1	INT	Parameter Value LSW
Scattered_Read_Response[5]	0	INT	Parameter Value MSW
Scattered_Read_Response[6]	6	INT	Parameter Number (decimal)
Scattered_Read_Response[7]	1187	INT	Parameter Value LSW
Scattered_Read_Response[8]	0	INT	Parameter Value MSW
Scattered_Read_Response[9]	12	INT	Parameter Number (decimal)
Scattered_Read_Response[10]	3292	INT	Parameter Value LSW
Scattered_Read_Response[11]	0	INT	Parameter Value MSW
Scattered_Read_Response[12]	17	INT	Parameter Number (decimal)
Scattered_Read_Response[13]	8318	INT	Parameter Value LSW
Scattered_Read_Response[14]	0	INT	Parameter Value MSW

In this message example, the parameters have the following values.

PowerFlex 7-Class Drive Parameter	Read Value
1 - [Output Freq]	32.5 Hz
3 - [Output Current]	0.01 Amp
6 - [Output Voltage]	118.7 VAC
12 - [DC Bus Voltage]	329.2 VDC
17 - [Analog In2 Value]	8.318 mA

ControlLogix Controller Example Ladder Logic Program to Write Multiple Parameters, RSLogix 5000 Software, All Versions

A Scattered Write message is used to write to multiple parameters. This write message example writes the following values to these five parameters.

PowerFlex 7-Class Drive Parameter	Write Value
141 - [Accel Time 2]	11.1 Sec.
143 - [Decel Time 2]	22.2 Sec.
105 - [Preset Speed 5]	33.3 Hz.
106 - [Preset Speed 6]	44.4 Hz.
107 - [Preset Speed 7]	55.5 Hz.

See DPI Parameter Object on page 198 (Class code 0x93) for parameter numbering.

Important: See Table 17 on page 106 for limitations of PowerFlex 7-Class drives when using Class code 0x93 for explicit messaging.

Table 21 - Example Controller Tags to Write Multiple Parameters

Operand	Controller Tags for Write Multiple Message	Data Type
XIC	Execute_Scattered_Write_Message	BOOL
MSG	Scattered_Write_Message	MESSAGE

Figure 43 - Example Ladder Logic to Write Multiple Parameters

Important: If the explicit message scattered write must be written continuously, then use a separate explicit message single write for each parameter using DPI Parameter Object Class code 0x93 and attribute A (10 decimal; see page 123). Attribute A writes to RAM—not NVS (EEPROM) memory. This example scattered write message using attribute 0 writes to NVS. Over time, continuous writes will exceed the EEPROM life cycle and cause the drive to malfunction.

ControlLogix Controller – Formatting a Message to Write Multiple Parameters, RSLogix 5000 Software, All Versions

Figure 44 - Scattered Write Multiple Message Configuration Screens

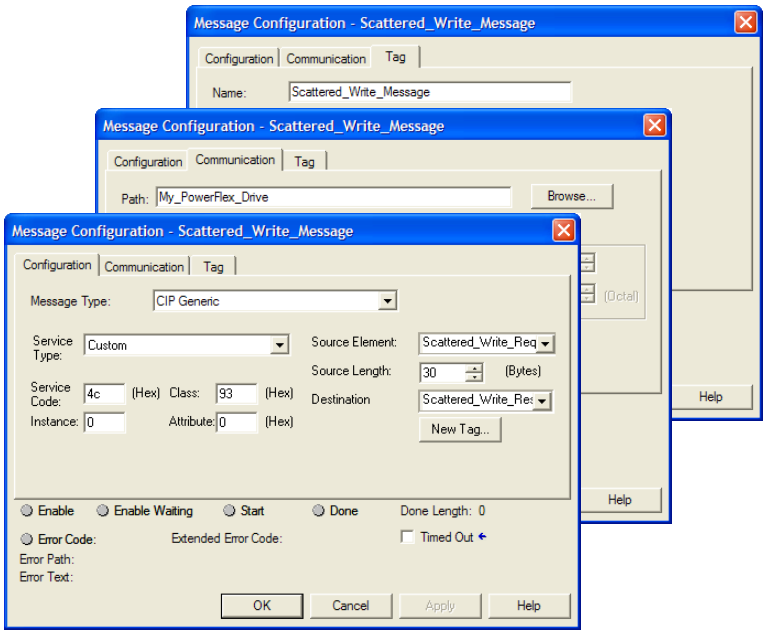

The following table identifies the data that is required in each box to configure a message to write multiple parameters.

Configuration Tab	Example Value	Description
Message Type	CIP Generic	Used to access Parameter Object in the adapter.
Service Type (1)	Custom	Required for scattered messages.
Service Code (1)	4c (Hex.)	Code for the requested service.
Class	93 or 9F (Hex.) (3)	Class ID for the DPI Parameter Object.
Instance	0 (Dec.)	Required for scattered messages.
Attribute	0 (Hex.)	Required for scattered messages.
Source Element	Scattered_Write_Request (4)	Name of the tag for any service data to be sent from scanner or bridge to the adapter/drive.
Source Length	30 (4)	Number of bytes of service data to be sent in the message.
Destination	Scattered_Write_Response	The tag where the data that is read is stored.
Communication Tab	**Example Value**	**Description**
Path (2)	My_PowerFlex_Drive	The path is the route that the message will follow.
Tag Tab	**Example Value**	**Description**
Name	Scattered_Write_Message	The name for the message.

(1) The default setting for Service Type is 'Custom', enabling entry of a Service Code not available from the Service Type pull-down menu. When choosing a Service Type other than 'Custom' from the pull-down menu, an appropriate Hex. value is automatically assigned to the Service Code box which is dimmed (unavailable).

(2) Click **Browse** to find the path, or type in the name of the device listed in the I/O Configuration folder.

(3) See Table 17 on page 106 for limitations of PowerFlex 7-Class drives when using DPI Parameter Object Class code 0x93 for explicit messaging.

(4) In this example, we are writing to five parameters. Each parameter being written to requires an array of three INT registers. Therefore, a controller tag was created with its Data Type field set to 'INT[15]'. Also, the Source Length field on the Message Configuration screen must correspond to the selected Data Type in bytes (for this example, 30 bytes for an INT[15] array). Scattered write messages always assume that every parameter being written to is a 32-bit parameter, regardless of its actual size. Maximum length is 132 bytes or 66 words which equates to 22 parameters. For parameter numbering, see DPI Parameter Object on page 198 (Class code 0x93).

ControlLogix Controller Example Scattered Write Request Data

In this message example, we use the data structure in Figure 45 or Figure in the source tag (Scattered_Write_Request) to write new values to these parameters.

PowerFlex 7-Class Drive Parameter	Write Value
141 - [Accel Time 2]	11.1 Sec.
143 - [Decel Time 2]	22.2 Sec.
105 - [Preset Speed 5]	33.3 Hz.
106 - [Preset Speed 6]	44.4 Hz.
107 - [Preset Speed 7]	55.5 Hz.

See DPI Parameter Object on page 198 (Class code 0x93) for parameter numbering.

Figure 45 shows the parameter values.

Figure 45 - Example Scattered Write Request Data for PowerFlex 7-Class Drive

Name	Value	Data Type	Description
Scattered_Write_Request	{...}	INT[15]	
Scattered_Write_Request[0]	141	INT	Parameter Number (decimal)
Scattered_Write_Request[1]	111	INT	Parameter Value LSW
Scattered_Write_Request[2]	0	INT	Parameter Value MSW
Scattered_Write_Request[3]	143	INT	Parameter Number (decimal)
Scattered_Write_Request[4]	222	INT	Parameter Value LSW
Scattered_Write_Request[5]	0	INT	Parameter Value MSW
Scattered_Write_Request[6]	105	INT	Parameter Number (decimal)
Scattered_Write_Request[7]	333	INT	Parameter Value LSW
Scattered_Write_Request[8]	0	INT	Parameter Value MSW
Scattered_Write_Request[9]	106	INT	Parameter Number (decimal)
Scattered_Write_Request[10]	444	INT	Parameter Value LSW
Scattered_Write_Request[11]	0	INT	Parameter Value MSW
Scattered_Write_Request[12]	107	INT	Parameter Number (decimal)
Scattered_Write_Request[13]	555	INT	Parameter Value LSW
Scattered_Write_Request[14]	0	INT	Parameter Value MSW

ControlLogix Controller Example Scattered Write Response Data

The results of the message appear in the destination tag named Scattered_Write_Response (Figure 46). Values of '0' indicate no errors occurred.

Figure 46 - Example Scattered Write Response Data for PowerFlex 7-Class Drive

Name	Value	Data Type	Description
Scattered_Write_Response	{...}	INT[15]	
Scattered_Write_Response[0]	141	INT	Parameter Number (decimal)
Scattered_Write_Response[1]	0	INT	Pad Word or Error Code
Scattered_Write_Response[2]	0	INT	Pad Word
Scattered_Write_Response[3]	143	INT	Parameter Number (decimal)
Scattered_Write_Response[4]	0	INT	Pad Word or Error Code
Scattered_Write_Response[5]	0	INT	Pad Word
Scattered_Write_Response[6]	105	INT	Parameter Number (decimal)
Scattered_Write_Response[7]	0	INT	Pad Word or Error Code
Scattered_Write_Response[8]	0	INT	Pad Word
Scattered_Write_Response[9]	106	INT	Parameter Number (decimal)
Scattered_Write_Response[10]	0	INT	Pad Word or Error Code
Scattered_Write_Response[11]	0	INT	Pad Word
Scattered_Write_Response[12]	107	INT	Parameter Number (decimal)
Scattered_Write_Response[13]	0	INT	Pad Word or Error Code
Scattered_Write_Response[14]	0	INT	Pad Word

ControlLogix Controller – Explanation of Request and Response Data for Read/Write Multiple Messaging, RSLogix 5000 Software, All Versions

The data structures in Figure 47 and Figure 48 use 16-bit words and can accommodate up to 22 parameters in a single message. In the Response Message, a parameter number with the high bit set indicates that the associated parameter value field contains an error code (parameter number in response data will be negative).

Important: See Table 17 on page 106 for limitations of PowerFlex 7-Class drives when using Class code 0x93 for explicit messaging.

Figure 47 - Data Structures for Scattered Read Messages

	Request (Source Data)		Response (Destination Data)
Word 0	Parameter Number	Word 0	Parameter Number
1	Pad Word	1	Parameter Value LSW
2	Pad Word	2	Parameter Value MSW
3	Parameter Number	3	Parameter Number
4	Pad Word	4	Parameter Value LSW
5	Pad Word	5	Parameter Value MSW
6	Parameter Number	6	Parameter Number
7	Pad Word	7	Parameter Value LSW
8	Pad Word	8	Parameter Value MSW
9	Parameter Number	9	Parameter Number
10	Pad Word	10	Parameter Value LSW
11	Pad Word	11	Parameter Value MSW
12	Parameter Number	12	Parameter Number
13	Pad Word	13	Parameter Value LSW
14	Pad Word	14	Parameter Value MSW
⋮		⋮	
63	Parameter Number	63	Parameter Number
64	Pad Word	64	Parameter Value LSW
65	Pad Word	65	Parameter Value MSW

Figure 48 - Data Structures for Scattered Write Messages

	Request (Source Data)		Response (Destination Data)
Word 0	Parameter Number	Word 0	Parameter Number
1	Parameter Value LSW	1	Pad Word
2	Parameter Value MSW	2	Pad Word
3	Parameter Number	3	Parameter Number
4	Parameter Value LSW	4	Pad Word
5	Parameter Value MSW	5	Pad Word
6	Parameter Number	6	Parameter Number
7	Parameter Value LSW	7	Pad Word
8	Parameter Value MSW	8	Pad Word
9	Parameter Number	9	Parameter Number
10	Parameter Value LSW	10	Pad Word
11	Parameter Value MSW	11	Pad Word
12	Parameter Number	12	Parameter Number
13	Parameter Value LSW	13	Pad Word
14	Parameter Value MSW	14	Pad Word
⋮		⋮	
63	Parameter Number	63	Parameter Number
64	Parameter Value LSW	64	Pad Word
65	Parameter Value MSW	65	Pad Word

Explicit Messaging Using RSLogix 5000 Software, All Versions

ControlLogix Controller Example Ladder Logic Program to Read a Single Parameter

A Get Attribute Single message is used to read a single parameter. This read message example reads the value of parameter 003 - [Output Current] in a PowerFlex 7-Class drive.

Important: See Table 17 on page 106 for limitations of PowerFlex 7-Class drives when using DPI Parameter Object Class code 0x93 for explicit messaging.

Table 22 - Example Controller Tags to Read a Single Parameter

Operand	Controller Tags for Single Read Message	Data Type
XIC	Execute_Single_Read_Message	BOOL
MSG	Single_Read_Message	MESSAGE

Figure 49 - Example Ladder Logic to Read a Single Parameter

ControlLogix Controller – Formatting a Message to Read a Single Parameter, RSLogix 5000 Software, All Versions

Figure 50 - Get Attribute Single Message Configuration Screens

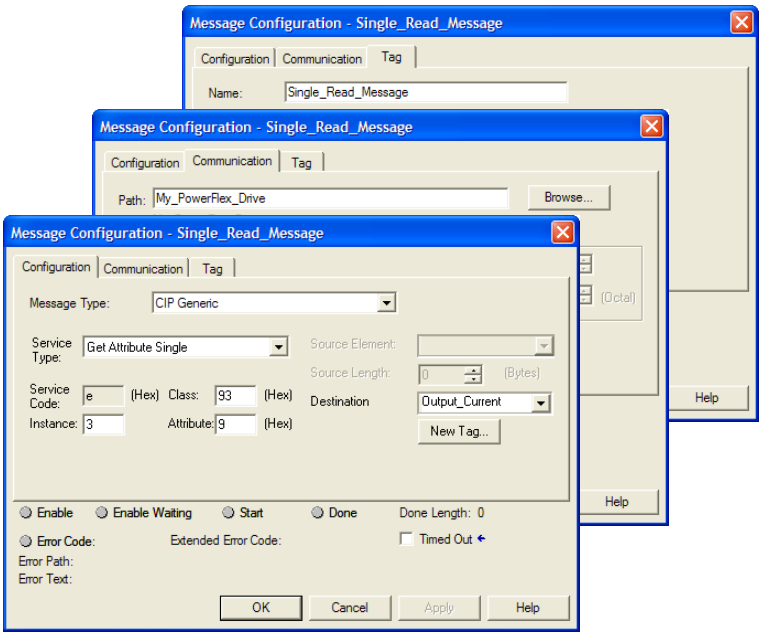

The following table identifies the data that is required in each box to configure a message to read a single parameter.

Configuration Tab	Example Value	Description
Message Type	CIP Generic	Used to access the Parameter Object in the adapter.
Service Type (1)	Get Attribute Single	This service is used to read a parameter value.
Service Code (1)	e (Hex.)	Code for the requested service.
Class	93 or 9F (Hex.) (4)	Class ID for the DPI Parameter Object.
Instance (2)	3 (Dec.)	Instance number is the same as parameter number.
Attribute	9 (Hex.)	Attribute number for the Parameter Value attribute.
Destination	Output_Current (5)	The tag where the data that is read is stored.
Communication Tab	**Example Value**	**Description**
Path (3)	My_PowerFlex_Drive	The path is the route that the message will follow.
Tag Tab	**Example Value**	**Description**
Name	Single_Read_Message	The name for the message.

(1) The default setting for Service Type is 'Custom', enabling entry of a Service Code not available from the Service Type pull-down menu. When choosing a Service Type other than 'Custom' from the pull-down menu, an appropriate Hex. value is automatically assigned to the Service Code box which is dimmed (unavailable).

(2) The instance is the parameter number in the drive (Port 0). For example, to read parameter 4 of a peripheral in Port 5 of an SMC-50 controller, the instance would be 21504 + 4 = 21508. See DPI Parameter Object on page 198 (Class code 0x93) to determine the instance number.

(3) Click **Browse** to find the path, or type in the name of the device listed in the I/O Configuration folder.

(4) See Table 17 on page 106 for limitations of PowerFlex 7-Class drives when using DPI Parameter Object Class code 0x93 for explicit messaging.

(5) In this example, Output Current is a 32-bit parameter requiring the Data Type field to be set to 'DINT' when creating the controller tag. If the parameter being read is a 16-bit parameter, the tag Data Type field must be set to 'INT'. When using a PowerFlex 700S drive, Output Current is a floating point number requiring the Data Type field to be set to 'REAL' when the creating controller tag. See the drive documentation to determine the size of the parameter and its data type (16-bit or 32-bit integer or REAL).

ControlLogix Controller Example Ladder Logic Program to Write a Single Parameter, RSLogix 5000 Software, All Versions

A Set Attribute Single message is used to write to a single parameter. This write message example writes a value to parameter 140 - [Accel Time 1] in a PowerFlex 7-Class drive.

Table 23 - Example Controller Tags to Write a Single Parameter

Operand	Controller Tags for Single Write Message	Data Type
XIC	Execute_Single_Write_Message	BOOL
MSG	Single_Write_Message	MESSAGE

Figure 51 - Example Ladder Logic to Write a Single Parameter

ControlLogix Controller – Formatting a Message to Write a Single Parameter, RSLogix 5000 Software, All Versions

Figure 52 - Set Attribute Single Message Configuration Screens

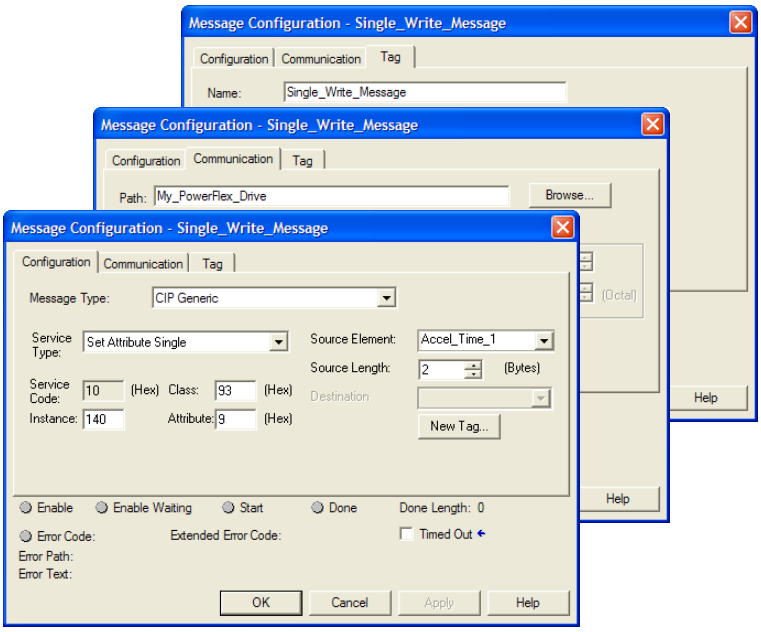

The following table identifies the data that is required in each box to configure a message to write a single parameter.

Configuration Tab	Example Value	Description
Message Type	CIP Generic	Used to access the Parameter Object in the adapter.
Service Type (1)	Set Attribute Single	This service is used to write a parameter value.
Service Code (1)	10 (Hex.)	Code for the requested service.
Class	93 or 9F (Hex.) (5)	Class ID for the DPI Parameter Object.
Instance (2)	140 (Dec.)	Instance number is the same as parameter number.
Attribute (3)	9 or A (Hex.)	Attribute number for the Parameter Value attribute.
Source Element	Accel_Time_1 (6)	Name of the tag for any service data to be sent from the scanner or bridge to the adapter/drive.
Source Length	2 (6)	Number of bytes of service data to be sent in the message.
Communication Tab	**Example Value**	**Description**
Path (4)	My_PowerFlex_Drive	The path is the route that the message will follow.
Tag Tab	**Example Value**	**Description**
Name	Single_Write_Message	The name for the message.

(1) The default setting for Service Type is 'Custom', enabling entry of a Service Code not available from the Service Type pull-down menu. When choosing a Service Type other than 'Custom' from the pull-down menu, an appropriate Hex. value is automatically assigned to the Service Code box which is dimmed (unavailable).

(2) The instance is the parameter number in the drive (Port 0). For example, to write to parameter 4 of a peripheral in Port 7 of an SMC-50 controller, the instance would be 21504 + 4 = 21508. See DPI Parameter Object on page 198 (Class code 0x93) to determine the instance number.

(3) Setting the Attribute value to '9' will write the parameter value to the drive's Nonvolatile Storage (EEPROM) memory, which retains the parameter value even after the drive is power cycled. **Important:** When set to '9', the EEPROM may quickly exceed its life cycle and cause the drive to malfunction. Setting the Attribute value to 'A' (10 decimal) will write the parameter value to temporary memory, which deletes the parameter value after the drive is power cycled. When frequent write messages are required, we recommend using the 'A' (10 decimal) setting.

(4) Click **Browse** to find the path, or type in the name of the device listed in the I/O Configuration folder.

(5) See Table 17 on page 106 for limitations of PowerFlex 7-Class drives when using DPI Parameter Object Class code 0x93 for explicit messaging.

(6) In this example, Accel Time 1 is a 16-bit parameter requiring the tag Data Type field to be set to 'INT' when creating the controller tag. If the parameter being written to is a 32-bit parameter, the tag Data Type field must be set to 'DINT'. Also, the Source Length field on the Message Configuration screen must correspond to the selected Data Type in bytes (for example, 4 bytes for a DINT or a REAL). When using a PowerFlex 700S drive, Accel Time 1 is a floating point number requiring the Data Type field to be set to 'REAL' when creating the controller tag. See the drive documentation to determine the size of the parameter and its data type (16-bit or 32-bit integer or REAL).

ControlLogix Controller Example Ladder Logic Program to Read or Write Multiple Parameters, RSLogix 5000 Software, All Versions

Because the example ladder logic rungs, configuration screens, and request/response data to read or write multiple parameters using RSLogix 5000 software, all versions, are identical to those for RSLogix 5000 software, version 15.00 or later, see the information contained on page 112 through page 119 for complete details.

MicroLogix 1100/1400 Controller Examples

When using RSLogix 500 software, version 7.10 and earlier, explicit messaging must be performed using the PCCC N-File method. For RSLogix 500 software, version 7.20 and later, the CIP messaging method has been added along with the PCCC N-File method. However, it is recommended to use the CIP method because it is easier to use and understand. For this reason, only instructions for the CIP method are provided.

The CIP messaging method provides two ways to perform explicit messaging:

- Read/Write Parameter Service simplifies setup by requiring less data to be entered in message configuration screens. However, the Read/Write Parameter Service can only be used to perform single parameter read or single parameter write explicit messages. (Multiple parameter reads or writes must be performed using the Generic Get/Set Attribute Service described below.)

Important: When performing a Write Parameter message, the data will always be written to the drive's Nonvolatile Storage (NVS). Continuous NVS writes may damage the drive's EEPROM. If continuous writes are necessary, use the Generic Set Attribute Single Service and attribute A (10 decimal; see page 133).

- Generic Get/Set Attribute Service requires more setup data to be entered in message configuration screens, but can be used to perform single parameter read or write and multiple parameter read or write explicit messages. Also, the Generic Set Attribute Service offers the choice of writing the data to the drive's Nonvolatile Storage (NVS) or the drive's Random Access Memory (RAM; for Generic Set Attribute Single service only, see page 133). Note that when selecting the data to be written to RAM, the data will be lost if the drive loses power.

For supported classes, instances, and attributes, see Appendix C, EtherNet/IP Objects.

MicroLogix 1100/1400 Controller Explicit Messaging Using the Read/Write Parameter Service

MicroLogix 1100/1400 Controller Example Ladder Logic Program to Read a Single Parameter

A Read Parameter message is used to read a single parameter. This read message example reads the value of parameter 003 - [Output Current] in a PowerFlex 7-Class drive.

Figure 53 - Example Ladder Logic to Read a Single Parameter

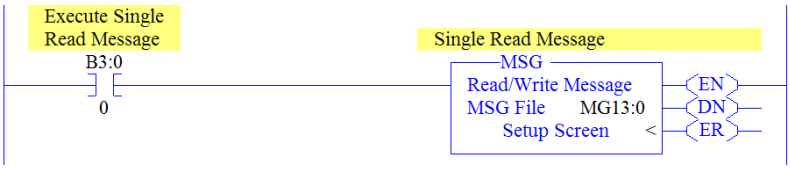

MicroLogix 1100/1400 Controller – Formatting a Message to Read a Single Parameter Using Read/Write Parameter Service

Figure 54 - Read Parameter Message Configuration Screens

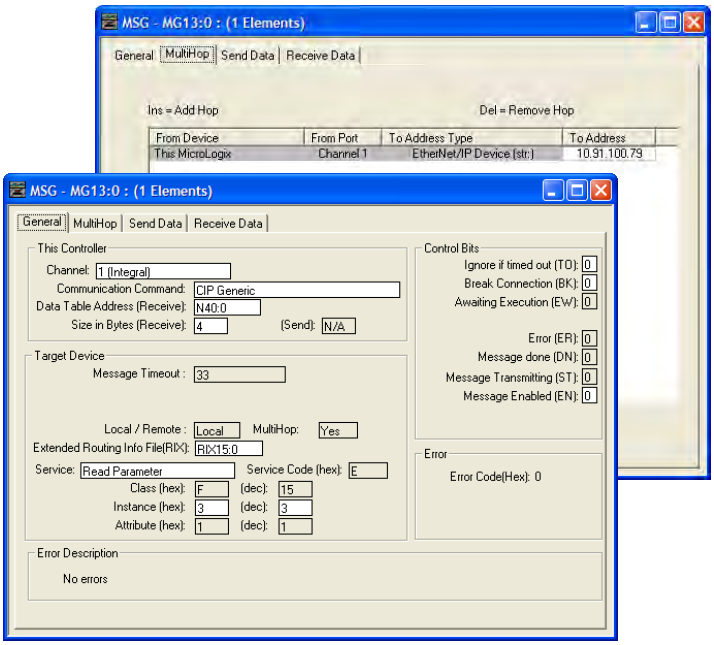

The following table identifies the data that is required in each box to configure a message to read a single parameter.

General Tab	Example Value	Description
Channel	1	Controller port to which the network is connected.
Comm… Command	CIP Generic	Used to access the Parameter Object in the adapter.
Data Table Address	N40:0	An unused controller data table address containing the message instruction. This address is the starting word of the destination file.
Size in Bytes	4 (3)	Number of bytes to be transferred. Each byte size is an 8-bit integer.
Extended Routing…	RIX15:0	An unused routing information file for the controller.
Service (1)	Read Parameter	Code for the requested service.
Instance (2)	3 (Dec.)	Instance number is the same as the parameter number.
MultiHop Tab	**Example Value**	**Description**
To Address	10.91.100.79	IP address of the adapter connected to the drive.

(1) The default setting for Service is 'Custom', enabling entry of a Service Code not available from the Service pull-down menu. When choosing a Service other than 'Custom' from the pull-down menu, an appropriate Hex. value is automatically assigned to the Service Code box which is dimmed (unavailable).

(2) Only drive parameters (Port 0) can be read using Parameter Object Class code 0x0F. To read a parameter of a peripheral in another port, use DPI Parameter Object Class code 0x93 (see page 130).

(3) In this example, Output Current is a 32-bit parameter. If the parameter being read is a 16-bit parameter, the Size in Bytes would be set to 2. When the parameter being read is a 32-bit REAL (floating point) data type, the size in bytes would be set to 4. See the drive documentation to determine the size of the parameter and its data type (16-bit or 32-bit integer or REAL).

MicroLogix 1100/1400 Controller Example Read Single Response Data

In this message example, we use the data table address in Figure 55 to store the response value (0.13 amps) that was read from drive parameter 003 - [Output Current]. To determine the data type for the parameter and its required scaling, see the specific drive documentation.

Figure 55 - Example Read Single Response Data File

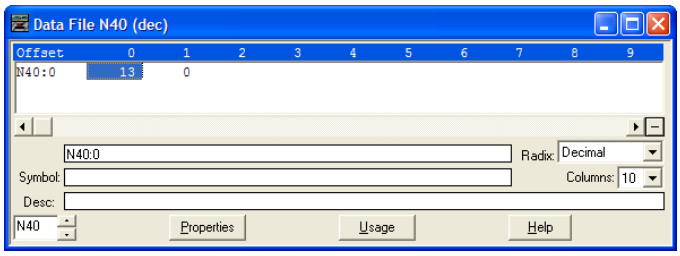

Figure 56 shows example ladder logic to correctly format the three possible data types for read messages in the MicroLogix 1100/1400 controller.

Figure 56 - Example Ladder Logic to Format Parameter Data Types for Reads

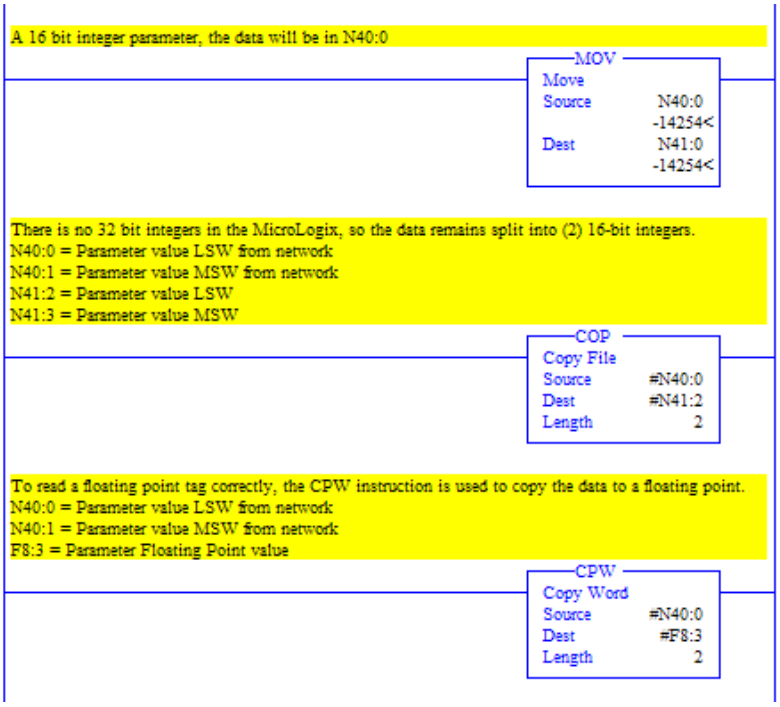

For 16-bit Integer Parameters – All PowerFlex 7-Class

For 32-bit Integer Parameters – All PowerFlex 7-Class

For 32-bit REAL (Floating Point) Parameters – PowerFlex 700S

MicroLogix 1100/1400 Controller Example Ladder Logic Program to Write a Single Parameter Using Read/Write Parameter Service

A Write Parameter message is used to write to a single parameter. This write message example writes a value to parameter 140 - [Accel Time 1] in a PowerFlex 7-Class drive.

Figure 57 - Example Ladder Logic to Write a Single Parameter

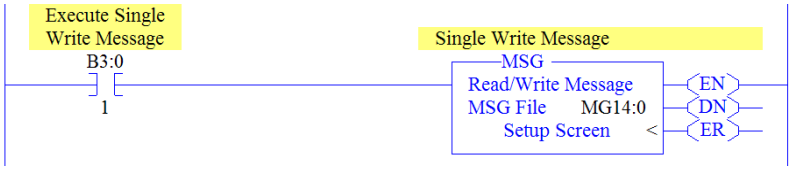

Important: If the explicit message single write must be written continuously, use DPI Parameter Object Class code 0x93 and attribute A (10 decimal; see page 133). This writes to RAM—not NVS (EEPROM) memory. This example single write message using Class code F writes to NVS. Over time, continuous writes will exceed the EEPROM life cycle and cause the drive to malfunction.

MicroLogix 1100/1400 Controller – Formatting a Message to Write a Single Parameter Using Read/Write Parameter Service

Figure 58 - Write Parameter Message Configuration Screens

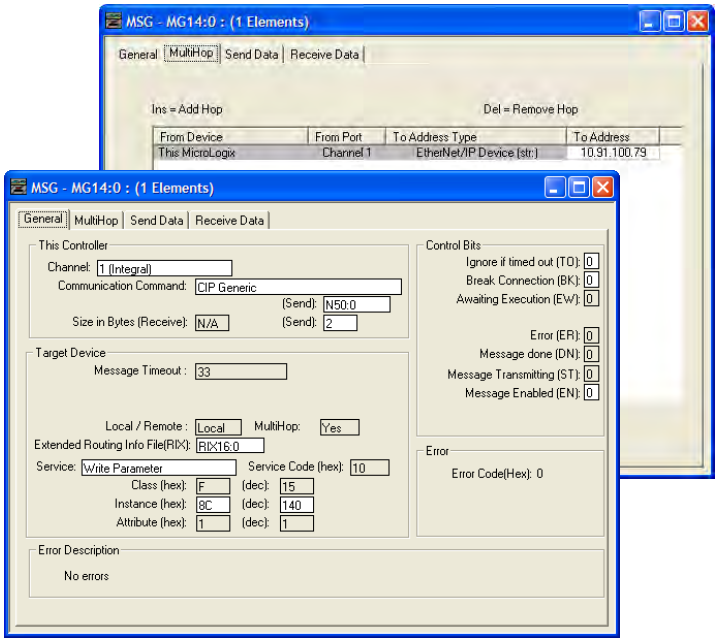

The following table identifies the data that is required in each box to configure a message to write a single parameter.

General Tab	Example Value	Description
Channel	1	Controller port to which the network is connected.
Comm... Command	CIP Generic	Used to access the Parameter Object in the adapter.
Data Table Address	N50:0	An unused controller data table address containing the message instruction. This address is the starting word of the destination file.
Size in Bytes	2 (3)	Number of bytes to be transferred. Each byte size is an 8-bit integer.
Extended Routing...	RIX16:0	An unused routing information file for the controller.
Service (1)	Write Parameter	Code for the requested service.
Instance (2)	140 (Dec.)	Instance number is the same as the parameter number.
MultiHop Tab	**Example Value**	**Description**
To Address	10.91.100.79	IP address of the adapter connected to the drive.

(1) The default setting for Service is 'Custom', enabling entry of a Service Code not available from the Service pull-down menu. When choosing a Service other than 'Custom' from the pull-down menu, an appropriate Hex. value is automatically assigned to the Service Code box which is dimmed (unavailable).

(2) Only drive parameters (Port 0) can be written to using Parameter Object Class code 0x0F. To write to a parameter of a peripheral in another port, use DPI Parameter Object Class code 0x93 (see page 133).

(3) In this example, Accel Time 1 is a 16-bit parameter. If the parameter being written to is a 32-bit parameter, the Size in Bytes would be set to 4. When the parameter being written to is a 32-bit REAL (floating point) data type, the size in bytes would be set to 4. See the drive documentation to determine the size of the parameter and its data type (16-bit or 32-bit integer or REAL).

MicroLogix 1100/1400 Controller Example Write Single Request Data

In this message example, we use the data table address in Figure 59 to store the request value (10.0 sec.) that was written to drive parameter 140 - [Accel Time 1]. To determine the data type for the parameter and its required scaling, see the specific drive documentation.

Figure 59 - Example Write Single Request Data File

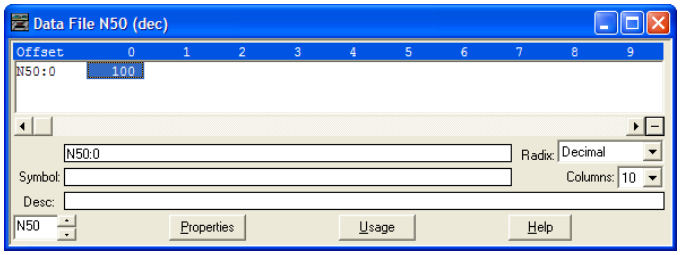

Figure 60 shows example ladder logic to correctly format the three possible data types for write messages in the MicroLogix 1100/1400 controller.

Figure 60 - Example Ladder Logic to Format Parameter Data Types for Writes

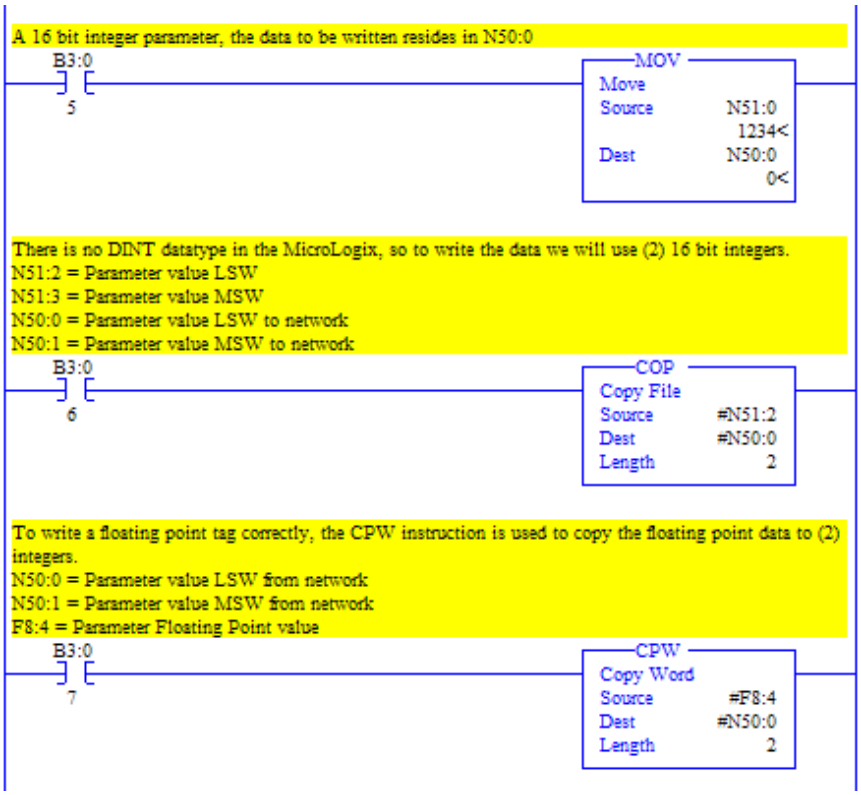

For 16-bit Integer Parameters – All PowerFlex 7-Class Drives

For 32-bit Integer Parameters – All PowerFlex 7-Class Drives

For 32-bit REAL (Floating Point) Parameters – PowerFlex 700S Drives

MicroLogix 1100/1400 Controller Explicit Messaging Using the Generic Get/Set Attribute Service

MicroLogix 1100/1400 Controller Example Ladder Logic Program to Read a Single Parameter

A Generic Get Attribute Single message is used to read a single parameter. This read message example reads the value of parameter 003 - [Output Current] in a PowerFlex 7-Class drive.

Important: See Table 17 on page 106 for limitations of PowerFlex 7-Class drives when using Class code 0x93 for explicit messaging.

Figure 61 - Example Ladder Logic to Read a Single Parameter

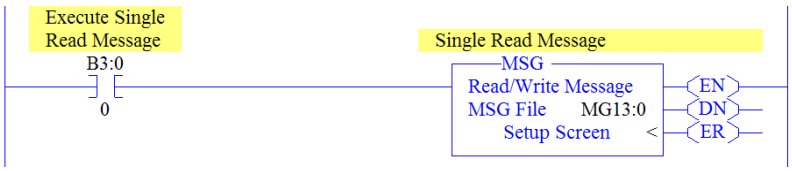

MicroLogix 1100/1400 Controller – Formatting a Message to Read a Single Parameter Using Generic Get/Set Attribute Service

Figure 62 - Generic Get Attribute Single Message Configuration Screens

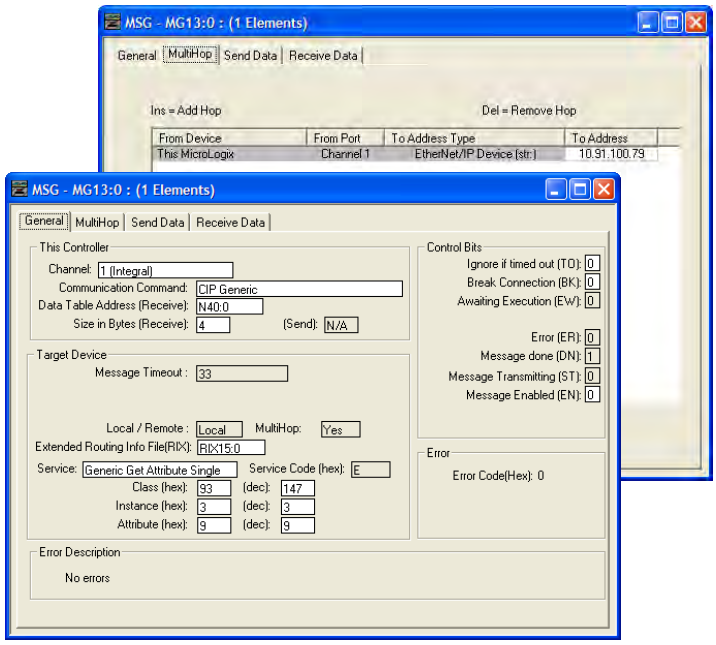

The following table identifies the data that is required in each box to configure a message to read a single parameter.

General Tab	Example Value	Description
Channel	1	Controller port to which the network is connected.
Comm… Command	CIP Generic	Used to access the Parameter Object in the adapter.
Data Table Address	N40:0	An unused controller data table address containing the message instruction. This address is the starting word of the destination file.
Size in Bytes	4 (3)	Number of bytes to be transferred. Each byte size is an 8-bit integer.
Extended Routing…	RIX15:0	An unused routing information file for the controller.
Service (1)	Generic Get Attribute Single	Code for the requested service.
Class	93 or 9F (Hex.) (4)	Class ID for the DPI Parameter Object.
Instance (2)	3 (Dec.)	Instance number is the same as the parameter number.
Attribute	9 (Dec.)	Attribute number for the Parameter Value attribute.
MultiHop Tab	**Example Value**	**Description**
To Address	10.91.100.79	IP address of the adapter connected to the drive.

(1) The default setting for Service is 'Custom', enabling entry of a Service Code not available from the Service pull-down menu. When choosing a Service other than 'Custom' from the pull-down menu, an appropriate Hex. value is automatically assigned to the Service Code box which is dimmed (unavailable).

(2) The instance is the parameter number in the drive (Port 0). For example, to read parameter 4 of a peripheral in Port 7 of an SMC-50 controller, the instance would be 21504 + 4 = 21508. See DPI Parameter Object on page 198 (Class code 0x93) to determine the instance number.

(3) In this example, Output Current is a 32-bit parameter. If the parameter being read is a 16-bit parameter, the Size in Bytes would be set to 2. When the parameter being read is a 32-bit REAL (floating point) data type, the size in bytes would be set to 4. See the drive documentation to determine the size of the parameter and its data type (16-bit or 32-bit integer or REAL).

(4) See Table 17 on page 106 for limitations of PowerFlex 7-Class drives when using DPI Parameter Object Class code 0x93 for explicit messaging.

MicroLogix 1100/1400 Controller Example Get Attribute Single Response Data

In this message example, we use the data table address in Figure 63 to store the response value (0.13 amps) that was read from drive parameter 003 - [Output Current]. To determine the data type for the parameter and its required scaling, see the specific drive documentation.

Figure 63 - Example Get Attribute Single Response Data File

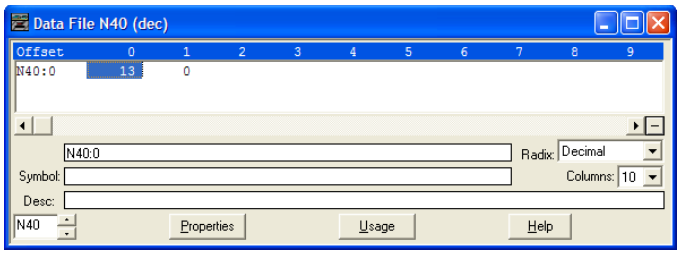

Figure 64 shows example ladder logic to correctly format the three possible data types for read messages in the MicroLogix 1100/1400 controller.

Figure 64 - Example Ladder Logic to Format Parameter Data Types for Gets

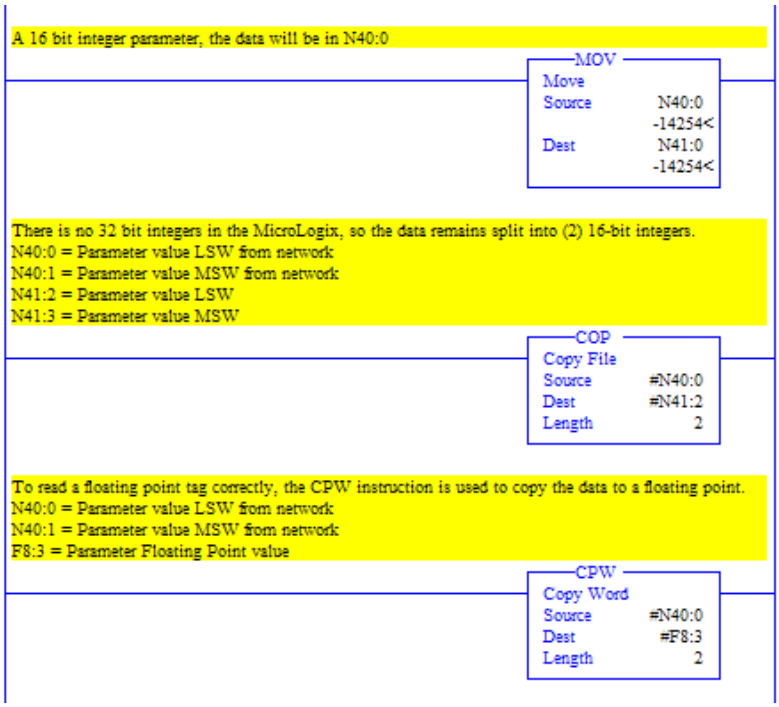

MicroLogix 1100/1400 Controller Example Ladder Logic Program to Write a Single Parameter Using Generic Get/Set Attribute Service

A Generic Set Attribute Single message is used to write to a single parameter. This write message example writes a value to parameter 140 - [Accel Time 1] in a PowerFlex 7-Class drive.

Important: See Table 17 on page 106 for limitations of PowerFlex 7-Class drives when using Class code 0x93 for explicit messaging.

Figure 65 - Example Ladder Logic to Write a Single Parameter

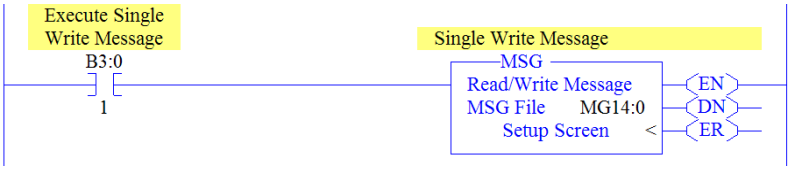

MicroLogix 1100/1400 Controller – Formatting a Message to Write a Single Parameter Using Generic Get/Set Attribute Service

Figure 66 - Generic Set Attribute Single Message Configuration Screens

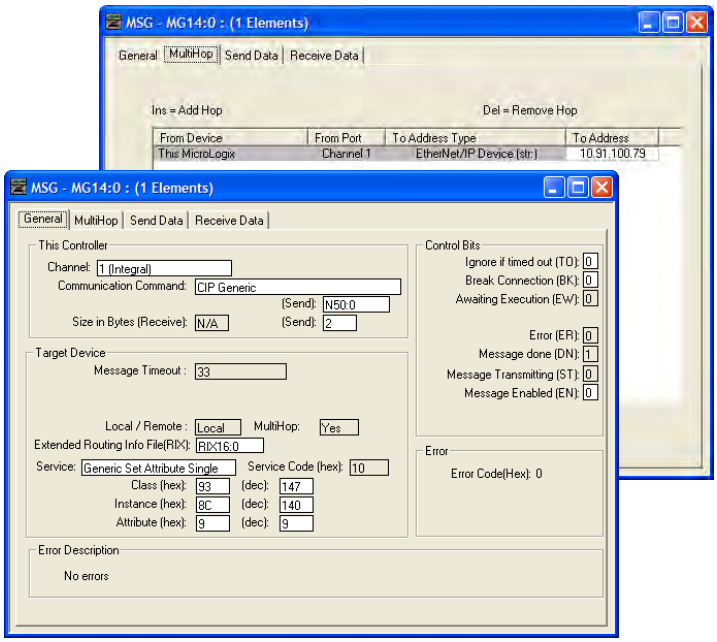

The following table identifies the data that is required in each box to configure a message to write a single parameter.

General Tab	Example Value	Description
Channel	1	Controller port to which the network is connected.
Comm… Command	CIP Generic	Used to access the Parameter Object in the adapter.
Data Table Address	N50:0	An unused controller data table address containing the message instruction. This address is the starting word of the destination file.
Size in Bytes	2 (4)	Number of bytes to be transferred. Each byte size is an 8-bit integer.
Extended Routing…	RIX16:0	An unused routing information file for the controller.
Service (1)	Generic Set Attribute Single	Code for the requested service.
Class	93 or 9F (Hex.) (5)	Class ID for the DPI Parameter Object.
Instance (2)	140 (Dec.)	Instance number is the same as the parameter number.
Attribute (3)	9 or 10 (Dec.)	Attribute number for the Parameter Value attribute.
MultiHop Tab	**Example Value**	**Description**
To Address	10.91.100.79	IP address of the adapter connected to the drive.

(1) The default setting for Service is 'Custom', enabling entry of a Service Code not available from the Service pull-down menu. When choosing a Service other than 'Custom' from the pull-down menu, an appropriate Hex. value is automatically assigned to the Service Code box which is dimmed (unavailable).

(2) The instance is the parameter number in the drive (Port 0). For example, to write to parameter 4 of a peripheral in Port 5 of an SMC-50 controller, the instance would be 21504 + 4 = 21508. See DPI Parameter Object on page 198 (Class code 0x93) to determine the instance number.

(3) Setting the Attribute value to '9' will write the parameter value to the drive's Nonvolatile Storage (EEPROM) memory, which retains the parameter value even after the drive is power cycled. **Important:** When set to '9', the EEPROM may quickly exceed its life cycle and cause the drive to malfunction. Setting the Attribute value to '10' will write the parameter value to temporary memory, which deletes the parameter value after the drive is power cycled. When frequent write messages are required, we recommend using the '10' setting.

(4) In this example, Accel Time 1 is a 16-bit parameter. If the parameter being written to is a 32-bit parameter, the Size in Bytes would be set to 4.

(5) See Table 17 on page 106 for limitations of PowerFlex 7-Class drives when using DPI Parameter Object Class code 0x93 for explicit messaging.

MicroLogix 1100/1400 Controller Example Set Attribute Single Request Data

In this message example, we use the data table address in Figure 67 to store the request value (10.0 sec.) that was written to drive parameter 140 - [Accel Time 1]. To determine the data type for the parameter and its required scaling, see the specific drive documentation.

Figure 67 - Example Set Attribute Single Request Data File

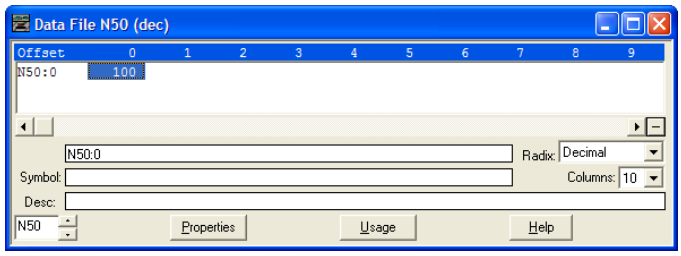

Figure 68 shows example ladder logic to correctly format the three possible data types for write messages in the MicroLogix 1100/1400 controller.

Figure 68 - Example Ladder Logic to Format Parameter Data Types for Sets

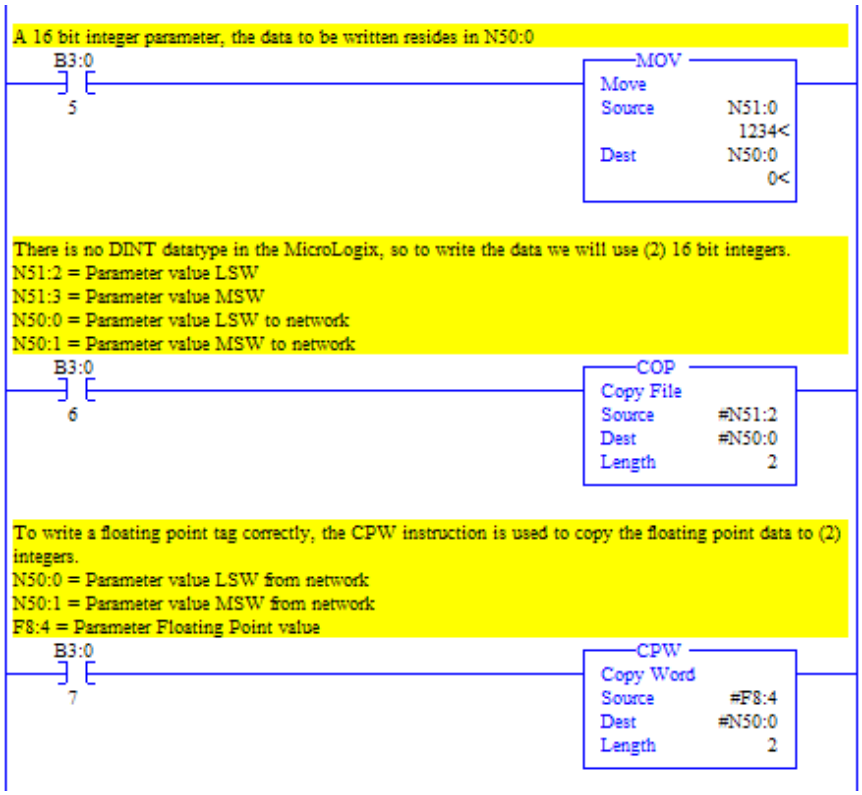

For 16-bit Integer Parameters – All PowerFlex 7-Class Drives

For 32-bit Integer Parameters – All PowerFlex 7-Class Drives

For 32-bit REAL (Floating Point) Parameters – PowerFlex 700S Drives

MicroLogix 1100/1400 Controller Example Ladder Logic Program to Read Multiple Parameters Using Generic Get/Set Attribute Service

A Custom scattered read message is used to read the values of multiple parameters. This read message example reads the values of these five parameters.

PowerFlex 7-Class Drive
• Parameter 001 - [Output Freq] • Parameter 003 - [Output Current] • Parameter 006 - [Output Voltage] • Parameter 012 - [DC Bus Voltage] • Parameter 017 - [Analog In1 Value]

See DPI Parameter Object on page 198 (Class code 0x93) for parameter numbering.

Important: See Table 17 on page 106 for limitations of PowerFlex 7-Class drives when using Class code 0x93 for explicit messaging.

Figure 69 - Example Ladder Logic to Read Multiple Parameters

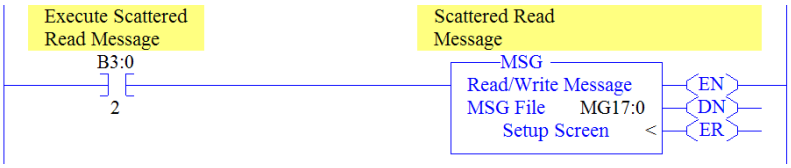

MicroLogix 1100/1400 Controller – Formatting a Message to Read Multiple Parameters Using Generic Get/Set Attribute Service

Figure 70 - Custom Scattered Read Message Configuration Screens

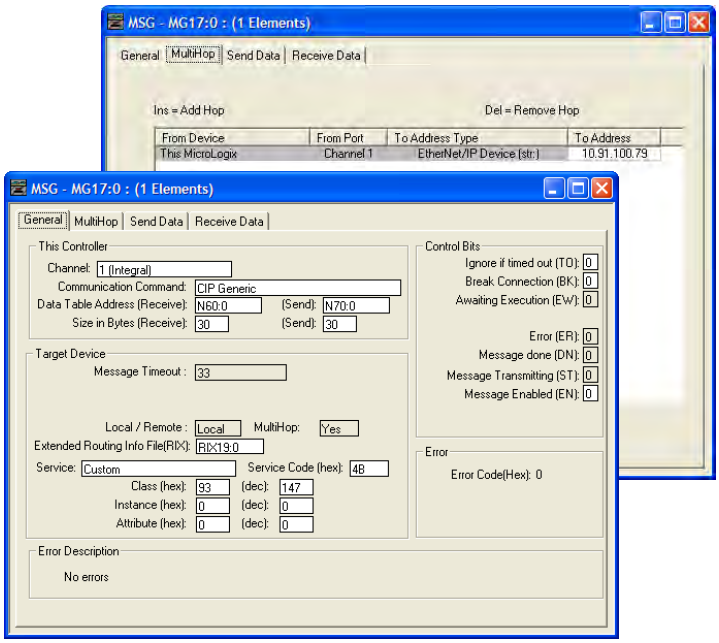

The following table identifies the data that is required in each box to configure a message to read multiple parameters.

General Tab	Example Value	Description
Channel	1	Controller port to which the network is connected.
Comm… Command	CIP Generic	Used to access the Parameter Object in the adapter.
Data Table Address	N60:0	An unused controller data table address containing the message instruction. This address is the starting word of the destination file.
Size in Bytes	30 (2)	Number of bytes to be transferred. Each byte size is an 8-bit integer.
Extended Routing…	RIX19:0	An unused routing information file for the controller.
Service (1)	Custom	Required for scattered messages.
Service Code	4B (Hex.)	Code for the requested service.
Class	93 or 9F (Hex.) (3)	Class ID for the DPI Parameter Object.
Instance	0 (Dec.)	Required for scattered messages.
Attribute	0 (Dec.)	Required for scattered messages.
MultiHop Tab	**Example Value**	**Description**
To Address	10.91.100.79	IP address of the adapter connected to the drive.

(1) The default setting for Service is 'Custom', enabling entry of a Service Code not available from the Service pull-down menu. When choosing a Service other than 'Custom' from the pull-down menu, an appropriate Hex. value is automatically assigned to the Service Code box which is dimmed (unavailable).

(2) In this example, we are reading five parameters. Each parameter being read requires three contiguous 16-bit words. Scattered read messages always assume that every parameter being read is a 32-bit parameter, regardless of its actual size. Therefore, the Size in Bytes must be set to 30. The data structure format is the same as shown on page 141. Maximum length is 66 words (132 bytes), which equates to 22 parameters. For parameter numbering, see DPI Parameter Object on page 198 (Class code 0x93).

(3) See Table 17 on page 106 for limitations of PowerFlex 7-Class drives when using DPI Parameter Object Class code 0x93 for explicit messaging.

MicroLogix 1100/1400 Controller Example Scattered Read Request Data

In this message example, we use the data table addresses in Figure 71 or Figure 71 to store the request values to be read from these drive parameters.

PowerFlex 7-Class Drive
• Parameter 001 - [Output Freq] • Parameter 003 - [Output Current] • Parameter 006 - [Output Voltage] • Parameter 012 - [DC Bus Voltage] • Parameter 017 - [Analog In1 Value]

See DPI Parameter Object on page 198 (Class code 0x93) for parameter numbering.

Figure 71 - Example Scattered Read Request Data File for PowerFlex 7-Class Drive

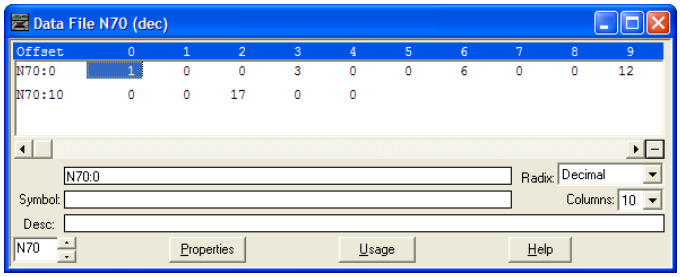

MicroLogix 1100/1400 Controller Example Scattered Read Response Data

In this message example, we use the data table addresses in Figure 72 to store the response values that were read from the requested drive parameters.

Figure 72 - Example Scattered Read Response Data File for PowerFlex 7-Class Drive

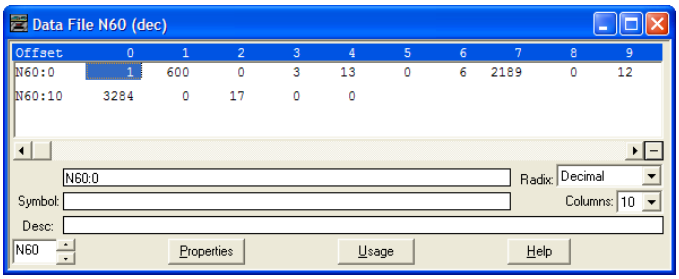

In this example, the parameters have the following values.

PowerFlex 7-Class Drive Parameter	Address	Read Value
1 - [Output Freq]	N60:1	32.5 Hz
3 - [Output Current]	N60:4	0.01 Amp
6 - [Output Voltage]	N60:7	118.7 VAC
12 - [DC Bus Voltage]	N60:10	329.2 VDC
17 - [Analog In2 Value]	N60:13	8.318 mA

MicroLogix 1100/1400 Controller Example Ladder Logic Program to Write Multiple Parameters Using Generic Get/Set Attribute Service

A Custom scattered write message is used to write to multiple parameters. This write message example writes the following values to these five parameters.

PowerFlex 7-Class Drive Parameter	Write Value
141 - [Accel Time 2]	11.1 Sec.
143 - [Decel Time 2]	22.2 Sec.
105 - [Preset Speed 5]	33.3 Hz.
106 - [Preset Speed 6]	44.4 Hz.
107 - [Preset Speed 7]	55.5 Hz.

See DPI Parameter Object on page 198 (Class code 0x93) for parameter numbering.

Important: See Table 17 on page 106 for limitations of PowerFlex 7-Class drives when using Class code 0x93 for explicit messaging.

Figure 73 - Example Ladder Logic to Write Multiple Parameters

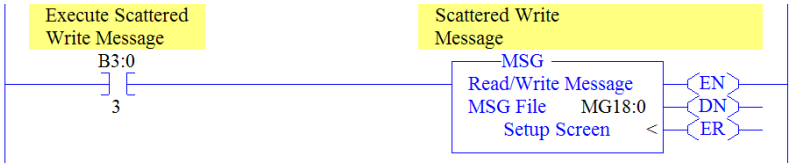

Important: If the explicit message scattered write must be written continuously, then use a separate Generic Set service explicit message single write for each parameter using DPI Parameter Object Class code 0x93 and attribute A (10 decimal; see page 133). Attribute A writes to RAM—not NVS (EEPROM) memory. This example scattered write message using attribute 0 writes to NVS. Over time, continuous writes will exceed the EEPROM life cycle and cause the drive to malfunction.

MicroLogix 1100/1400 Controller – Formatting a Message to Write Multiple Parameters Using Generic Get/Set Attribute Service

Figure 74 - Custom Scattered Write Multiple Message Configuration Screens

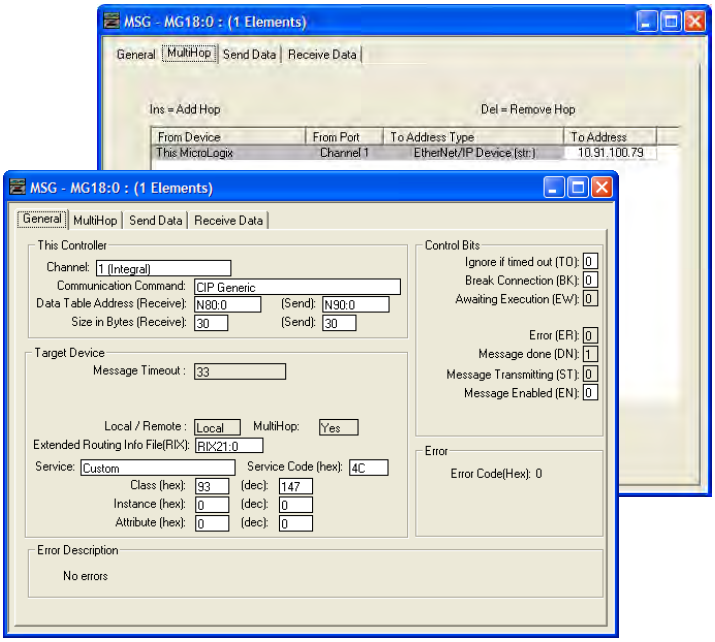

The following table identifies the data that is required in each box to configure a message to write multiple parameters.

General Tab	Example Value	Description
Channel	1	Controller port to which the network is connected.
Comm… Command	CIP Generic	Used to access the Parameter Object in the adapter.
Data Table Address	N80:0	An unused controller data table address containing the message instruction. This address is the starting word of the destination file.
Size in Bytes	30 (2)	Number of bytes to be transferred. Each byte size is an 8-bit integer.
Extended Routing…	RIX21:0	An unused routing information file for the controller.
Service (1)	Custom	Required for scattered messages.
Service Code	4C (Hex.)	Code for the requested service.
Class	93 or 9F (Hex.) (3)	Class ID for the DPI Parameter Object.
Instance	0 (Dec.)	Required for scattered messages.
Attribute	0 (Dec.)	Required for scattered messages.
MultiHop Tab	**Example Value**	**Description**
To Address	10.91.100.79	IP address of the adapter connected to the drive.

(1) The default setting for Service is 'Custom', enabling entry of a Service Code not available from the Service pull-down menu. When choosing a Service other than 'Custom' from the pull-down menu, an appropriate Hex. value is automatically assigned to the Service Code box which is dimmed (unavailable).

(2) In this example, we are writing to five parameters. Each parameter being written to requires three contiguous 16-bit words. Scattered write messages always assume that every parameter being written to is a 32-bit parameter, regardless of its actual size. Therefore, the Size in Bytes must be set to 30. The data structure format is the same as shown on page 120. Maximum length is 66 words (132 bytes), which equates to 22 parameters. For parameter numbering, see DPI Parameter Object on page 198 (Class code 0x93).

(3) See Table 17 on page 106 for limitations of PowerFlex 7-Class drives when using DPI Parameter Object Class code 0x93 for explicit messaging.

MicroLogix 1100/1400 Controller Example Scattered Write Request Data

In this message example, we use the data table addresses in Figure 75 to store the request values to be written to these drive parameters.

See DPI Parameter Object on page 198 (Class code 0x93) for parameter numbering.

Figure 75 or Figure 76 shows the parameter values.

Figure 75 - Example Scattered Write Request Data File for PowerFlex 7-Class Drive

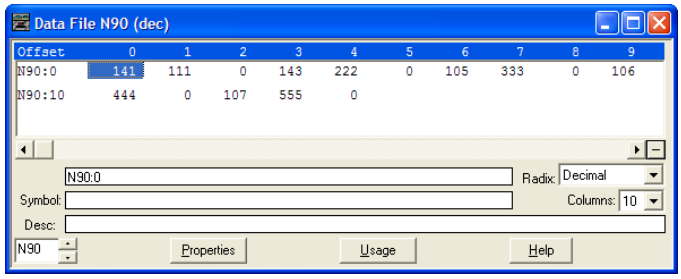

MicroLogix 1100/1400 Controller Example Scattered Write Response Data

In this message example, we use the data table addresses in Figure 76 to store the response values that were written to the requested drive parameters. Values of '0' indicate no errors occurred.

Figure 76 - Example Scattered Write Response Data File for PowerFlex 7-Class Drive

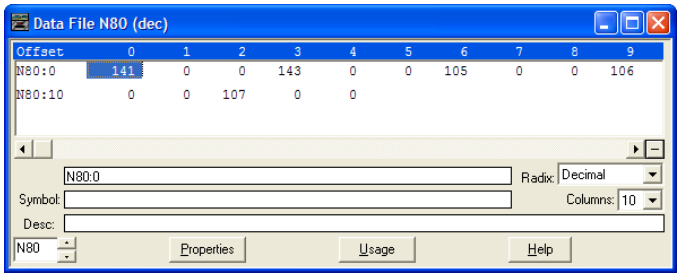

The results of the explicit message appear in the destination tag array N80 (Figure 76). Values of '0' indicate no errors occurred.

MicroLogix 1100/1400 Controller – Explanation of Request and Response Data for Read/Write Multiple Messaging

The data structures in Figure 77 and Figure 78 use 16-bit words and can accommodate up to 22 parameters in a single message. In the Response Message, a parameter number with the high bit set indicates that the associated parameter value field contains an error code (parameter number in response data will be negative).

Important: See Table 17 on page 106 for limitations of PowerFlex 7-Class drives when using Class code 0x93 for explicit messaging.

Figure 77 - Data Structures for Scattered Read Messages

	Request (Source Data)
Word 0	Parameter Number
1	Pad Word
2	Pad Word
3	Parameter Number
4	Pad Word
5	Pad Word
6	Parameter Number
7	Pad Word
8	Pad Word
9	Parameter Number
10	Pad Word
11	Pad Word
12	Parameter Number
13	Pad Word
14	Pad Word
⋮	

	Response (Destination Data)
Word 0	Parameter Number
1	Parameter Value LSW
2	Parameter Value MSW
3	Parameter Number
4	Parameter Value LSW
5	Parameter Value MSW
6	Parameter Number
7	Parameter Value LSW
8	Parameter Value MSW
9	Parameter Number
10	Parameter Value LSW
11	Parameter Value MSW
12	Parameter Number
13	Parameter Value LSW
14	Parameter Value MSW
⋮	

63	Parameter Number
64	Pad Word
65	Pad Word

63	Parameter Number
64	Parameter Value LSW
65	Parameter Value MSW

Figure 78 - Data Structures for Scattered Write Messages

	Request (Source Data)
Word 0	Parameter Number
1	Parameter Value LSW
2	Parameter Value MSW
3	Parameter Number
4	Parameter Value LSW
5	Parameter Value MSW
6	Parameter Number
7	Parameter Value LSW
8	Parameter Value MSW
9	Parameter Number
10	Parameter Value LSW
11	Parameter Value MSW
12	Parameter Number
13	Parameter Value LSW
14	Parameter Value MSW
⋮	
63	Parameter Number
64	Parameter Value LSW
65	Parameter Value MSW

	Response (Destination Data)
Word 0	Parameter Number
1	Pad Word
2	Pad Word
3	Parameter Number
4	Pad Word
5	Pad Word
6	Parameter Number
7	Pad Word
8	Pad Word
9	Parameter Number
10	Pad Word
11	Pad Word
12	Parameter Number
13	Pad Word
14	Pad Word
⋮	
63	Parameter Number
64	Pad Word
65	Pad Word

Troubleshooting

This chapter provides information for diagnosing and troubleshooting potential problems with the adapter and network.

Topic	Page
Understanding the Status Indicators	143
Port Status Indicator	144
Network Status Indicator	145
Link (LS1, LS2) Status Indicator	145
NET A Status Indicator	145
Hardware Reset via Node Switches	146
Viewing Adapter Diagnostic Items	146
Viewing and Clearing Events	149

Understanding the Status Indicators

The adapter has four status indicators. They can be viewed on the adapter or through the device cover.

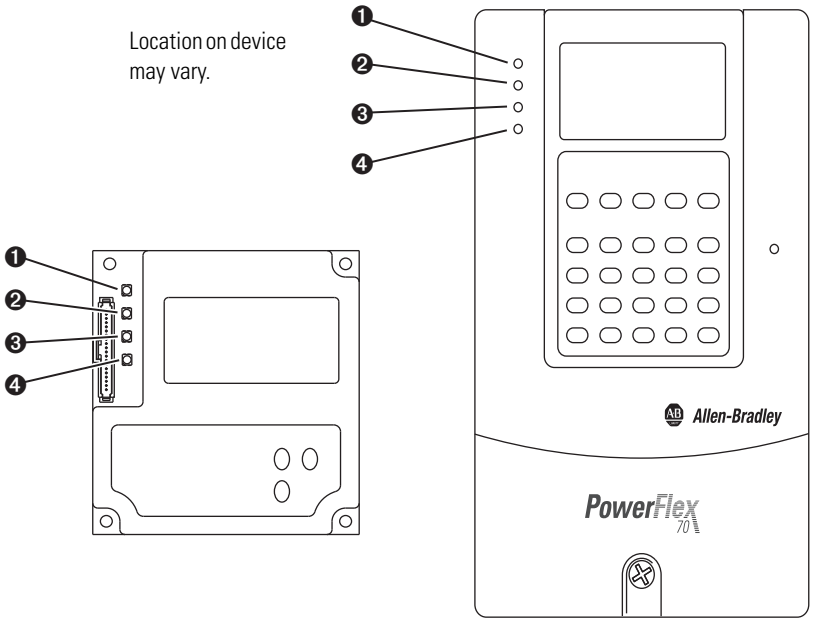

Item	Indicator Name	Description	See
❶	PS	DPI Connection Status	page 144
❷	NS	Network Status	page 145
❸	LS1	Link Status 1	page 145
❹	LS2	Link Status 2	page 145

Port Status Indicator

The LED indicates the status of the adapter's connection to the device as shown in the table below.

Status	Cause	Corrective Action
Off	No power	Securely connect the adapter to the drive using the internal interface (ribbon) cable.
Orange	Peripheral is Connected to an incompatible product, or no DPI ping events are detected.	Verify that cables are securely connected and not damaged. Replace cables if necessary. Cycle power to the device. Verify that Host is an Allen-Bradley compatible product.
Flashing Orange	Requesting DPI I/O Connections	No action required this is normal operation if No DPI IO is enabled
Flashing Green	Normal Operation (DPI connected) - No I/O, or PLC in Program	Place the scanner in RUN mode. Program the controller to recognize and transmit I/O to the adapter. Configure the adapter for the program in the controller. Normal behavior if no DPI I/O is enabled.
Green	Normal Operation (DPI connected) - I/O Operational	No action required.
Red	DPI Problem, Bad CRC of Adapter Parameters or Flash Program	Replace adapter
Flashing Red	DPI Failure or Failed power-on diagnostic test (hardware failure)	Clear faults in the adapter. Verify that all DPI cables on the drive are securely connected and not damaged. Replace cables if necessary. Verify that the DPI drive supports Datalinks. Configure the adapter to use a Datalink that is not already being used by another peripheral. Check mode switch settings. Cycle power to the device If cycling power does not correct the problem, the adapter parameter settings may have been corrupted. Reset defaults and reconfigure the adapter. If resetting defaults does not correct the problem, flash the adapter with the latest firmware release.
Flashing Green and Red	Flash update in progress	Normal during flash update process of application firmware

Network Status Indicator

The LED indicates the status of the adapter's connection to the device as shown in the table below.

Status	Cause	Corrective Action
Steady Off	No power OR No IP Address	Securely connect the adapter to the drive using the Internal Interface (ribbon) cable and to the network using an Ethernet cable. Correctly connect the Ethernet cable to the Ethernet connector. Set a unique IP address and disable BOOTP using a BOOTP server, or set a unique IP address by using adapter parameters. Apply power to the drive (or adapter if mounted in a DPI External Comms Kit).
Flashing Green	An IP address is configured, but no CIP connections are established, and an Exclusive Owner connection has not timed out	Place the controller in RUN mode, or apply power to the peer device that will send I/O. Program the controller or peer device to recognize and transmit I/O or make a messaging connection to the adapter. Configure the adapter for the program in the controller or the I/O from the peer device.
Steady Green	At least one CIP connection (any transport class) is established, and an Exclusive Owner connection has not timed out	No Action Required
Flashing Red	Connection has timed out see the "The EtherNet Adaptation of CIP" Specification sections 9-4.4 for detailed behavior description	Place the scanner in RUN mode, or apply power to the peer device that will send I/O. Check the IGMP Snooping/Ethernet Switches for correct operation. Check the amount of traffic on the network.
Steady Red	Duplicate IP Address detected	Configure the adapter to use a unique IP address and cycle power.
Orange	Adapter Failure (used in conjunction with PS orange)	Verify that cables are securely connected and not damaged. Replace cables if necessary. Cycle power to the drive. Verify that Host is a Scanport or Allen-Bradley compatible product. Replace Adapter
Flashing Green/Red	Self-test on power up	No action required

Link (LS1, LS2) Status Indicator

The LED indicates the status of the adapter's connection to the device as shown in the table below.

Status	Cause	Corrective Action
Blinking Yellow	Network at 10M Baud	Normal Operation
Blinking Green	Network at 100M Baudr	Normal Operation

NET A Status Indicator

This red/green bicolor LED indicates the status of the network connection as shown in the table below.

Status	Cause	Corrective Actions
Off	The adapter is not powered, the adapter is not properly connected to the network, the adapter needs an IP address, or BOOTP is enabled.	• Securely connect the adapter to the drive using the Internal Interface (ribbon) cable and to the network using an Ethernet cable. • Correctly connect the Ethernet cable to the Ethernet connector. • Set a unique IP address and disable BOOTP using a BOOTP server, or set a unique IP address by using adapter parameters. • Apply power to the drive (or adapter if mounted in a DPI External Comms Kit).
Steady Red	The adapter failed the duplicate IP address detection test.	• Configure the adapter to use a unique IP address and cycle power.
Flashing Red	An EtherNet/IP connection has timed out.	• Place the scanner in RUN mode, or apply power to the peer device that will send I/O. • Check the IGMP Snooping/Ethernet Switches for correct operation. • Check the amount of traffic on the network.

Status	Cause	Corrective Actions
Flashing Red/ Green	The adapter is performing a self-test.	No action required.
Flashing Green	The adapter is properly connected, has an IP address, and is connected to an EtherNet/IP network but does not have an I/O connection.	• Place the controller in RUN mode, or apply power to the peer device that will send I/O. • Program the controller or peer device to recognize and transmit I/O or make a messaging connection to the adapter. • Configure the adapter for the program in the controller or the I/O from the peer device.
Steady Green	The adapter is properly connected and communicating on the network to a controller.	No action required.

Hardware Reset via Node Switches

The special switch value of 888 allows the user to return the module to its factory default configuration. The setting of 888 shall reset all local configuration parameters on the adapter,

The setting of 888 is useful in situations where the user wishes to decommission an adapter (but may use it again later, e.g., as a spare module), or when the user wishes to commission a previously-used module that has unknown configuration parameters.

When the switches are set to 888, upon the next power up, a module shall behave as follows:

- Return to factory default settings local to the adapter.
- Cease communications on all communication ports.
- The Port Status LED shall transition to blinking red.
- The Network Status LED shall transition to off.

The purpose of the above behavior is to prevent the user from resetting the module and then never changing the switch setting from 888. Upon the next power up, the module would simply reset itself again.

Viewing Adapter Diagnostic Items

If you encounter unexpected communications problems, the adapter's diagnostic items may help you or Rockwell Automation personnel troubleshoot the problem. Adapter diagnostic items can be viewed with any of these drive configuration tools:

- LCD PowerFlex 7-Class HIM (Diagnostics/Device Items)
- Connected Components Workbench software, version 1.02 or later
- DriveExplorer software, version 2.01 or later
- DriveExecutive software, version 3.01 or later

Using the HIM to View Adapter Diagnostic Items

Step	Example Screen
1. Access parameters in the adapter. See Using the PowerFlex 7-Class HIM on page 28. 2. Press the ▲ or ▼ key to scroll to **Diagnostics**. 3. Press the ↵ (Enter) key to display the Diagnostics menu in the adapter. 4. Repeat steps 2 and 3 to enter the **Device Items** option. 5. Press the ▲ or ▼ key to scroll through the items.	Main Menu: Diagnostics Parameter Device Select Device Item # 3 Reference

Table 24 - Adapter Diagnostic Items

No.	Name	Description
1	Common Logic Cmd	The present value of the Common Logic Command being transmitted to the drive by this adapter.
2	Prod Logic Cmd	The present value of the Product Logic Command being transmitted to the drive by this adapter from the controller.
3	Reference	The present value of the Reference being transmitted to the drive by this adapter. Note that a 16-bit value will be sent as the Most Significant Word of the 32-bit field.
4	Common Logic Sts	The present value of the Common Logic Status being received from the drive by this adapter.
5	Prod Logic Sts	The present value of the Product Logic Status being received from the drive by this adapter to the controller.
6	Feedback	The present value of the Feedback being received from the drive by this adapter. Note that a 16-bit value will be sent as the Most Significant Word of the 32-bit field.
7	Datalink A1 In	The present value of respective Datalink In being transmitted to the drive by this adapter. (If not using a Datalink, this parameter should have a value of zero.)
8	Datalink A2 In	
9	Datalink B1 In	
10	Datalink B2 In	
11	Datalink C1 In	
12	Datalink C2 In	
13	Datalink D1 In	
14	Datalink D2 In	
15	Datalink A1 Out	The present value of respective Datalink Out being received from the drive by this adapter. (If the drive indicates a 16-bit datalink size, the value appears in the least significant 16 bits of this diagnostic item, and the most significant 16 bits of this diagnostic item are zero.)
16	Datalink A2 Out	
17	Datalink B1 Out	
18	Datalink B2 Out	
19	Datalink C1 Out	
20	Datalink C2 Out	
21	Datalink D1 Out	
22	Datalink D2 Out	
23	DPI Rx Errors	The present value of the DPI Receive error counter.
24	DPI Rx Error Max	The maximum value (since reset) of the DPI Receive error counter.
25	DPI Tx Errors	The present value of the DPI Transmit error counter.
26	DPI Tx Error Max	The maximum value (since reset) of the DPI Transmit error counter.
27	Boot Flash Count	Number of times the boot firmware in the adapter has been flash updated.
28	App Flash Count	Number of times the application firmware in the adapter has been flash updated.
29	M-S Input Size	Size of data transferred from the network to the drive.
30	M-S Output Size	Size of data transferred from the drive to the network.

No.	Name	Description
31 32 33 34 35 36	HW Addr 1 HW Addr 2 HW Addr 3 HW Addr 4 HW Addr 5 HW Addr 6	Decimal value of each byte in the adapter's Ethernet hardware address. 255:255:255:255:255:255 [HW Addr 1] [HW Addr 2] [HW Addr 3] [HW Addr 4] HW Addr 5] [HW Addr 6]
37 38 39 40	IP Addr Act 1 IP Addr Act 2 IP Addr Act 3 IP Addr Act 4	Value of each byte in the adapter's present IP address. A value of '0' appears if the adapter does not currently have an IP address. 255.255.255.255 [IP Addr Act 1] [IP Addr Act 2] [IP Addr Act 3] [IP Addr Act 4]
41 42 43 44	Subnet Act 1 Subnet Act 2 Subnet Act 3 Subnet Act 4	Value of each byte in the adapter's present subnet mask. A value of '0' appears if the adapter does not currently have a subnet mask. 255.255.255.255 [Subnet Act 1] [Subnet Act 2] [Subnet Act 3] [Subnet Act 4]
45 46 47 48	Gateway Act 1 Gateway Act 2 Gateway Act 3 Gateway Act 4	Value of each byte in the adapter's present gateway address. A value of '0' appears if the adapter does not currently have a gateway address. 255.255.255.255 [Gateway Act 1] [Gateway Act 2] [Gateway Act 3] [Gateway Act 4]
49	EN Rx Overruns	Number of receive buffer overruns reported by the Ethernet hardware.
50	EN Rx Packets	Number of Ethernet packets that the adapter has received.
51	EN Rx Errors	Number of receive errors reported by the Ethernet hardware.
52	EN Tx Packets	Number of Ethernet packets that the adapter has sent.
53	EN Tx Errors	Number of transmit errors reported by the Ethernet hardware.
54	Last TCP Reset	Last reason that the adapter reset or rejected a TCP/IP connection.
55	Missed IO Pkts	Number of incoming I/O connection packets that the adapter did not receive.
56	OPT Status	Operating status of optional I/O board in DPI External Comms Kit. For the meanings of the individual bits, see Viewing Adapter Diagnostic Items on page 146.
57	OPT RX Errors	Number of optional I/O board receive errors.
58	OPT FW Version	Firmware version of optional I/O board (in DPI External Comms Kit).

Viewing and Clearing Events

The adapter has an event queue to record significant events that occur in the operation of the adapter. When such an event occurs, an entry is put into the event queue. You can view the event queue with any of these drive configuration tools:

- LCD PowerFlex 7-Class HIM
- Connected Components Workbench software, version 1.02 or later
- DriveExplorer software, version 2.01 or later
- DriveExecutive software, version 1.01 or later
- Other clients using the DPI Fault object

The event queue can contain up to 32 entries. Eventually the event queue will become full, since its contents are retained through adapter resets. At that point, a new entry replaces the oldest entry. Only an event queue clear operation or adapter power cycle will clear the event queue contents.

Resetting the adapter to defaults has no effect on the event queue.

Using the HIM to View and Clear Events

Step	Example Screen
Viewing Events 1. Access parameters in the adapter. See Using the PowerFlex 7-Class HIM on page 28. 2. Press the ▲ or ▼ key to scroll to **Diagnostics**. 3. Press the ↵ (Enter) key to display the Diagnostics menu in the adapter. 4. Repeat steps 2 and 3 to enter the **Events** option and then **View Event Queue** option. 5. Press the ▲ or ▼ key to scroll through events. The most recent event is Event 1.	Main Menu: Diagnostics Parameter Device Select
Clearing Events 1. Access parameters in the adapter. See Using the PowerFlex 7-Class HIM on page 28. 2. Press the ▲ or ▼ key to scroll to **Diagnostics**. 3. Press the ↵ (Enter) key to display the Diagnostics menu in the adapter. 4. Repeat steps 2 and 3 to enter the **Events** option and then the **Clear Event** option or **Clr Event Queue** option. A message will pop up to confirm that you want to clear the message or queue. 5. Press the ↵ (Enter) key to confirm your request. If **Clr Event Queue** was selected, all event queue entries will then display 'No Event'.	Event Q: 1 E3 Ping Time Flt Dgn: Events View Event Queue Clear Event Clr Event Queue

Events

Many events in the event queue occur under normal operation. If you encounter unexpected communications problems, the events may help you or Allen-Bradley personnel troubleshoot the problem. The following events may appear in the event queue.

Table 25 - Adapter Events

Code	Event	Description
1	No Event	Empty event queue entry.
2	Device Power Up	Cold/hard boot.
3	Device Reset	Warm/soft boot.
4	Config CRC Error	Startup sequence detected corrupt NV storage.
5	App Updated	Startup sequence detected new application firmware in candidate area.
6	Boot Updated	Startup sequence detected new boot firmware in candidate area.
7	FATAL Error	A FATAL error was reported by the operating system.
8	DPI Bus Off	A bus-off condition is detected on DPI.
9	DPI Ping Timeout	No Ping message was received on DPI for longer than the maximum time allowed
10	DPI Port Invalid	The debounced DPI Pin ID is read as zero or seven after the peripheral has completed startup.
11	DPI Port Changed	The debounced DPI Pin ID has changed after the peripheral has completed startup.
12	DPI Host Reset	The drive issued a reset event.
13	DPI Baud 125K	The peripheral detects that the host is at 125 kbps.
14	DPI Baud 500K	The peripheral detects that the host is at 500 kbps.
15	DPI Host Invalid	Connected to a SCANport product and peripheral does not support a SCANport mode.
16	DPI Dup Port	Another peripheral with the same port number is already present.
17	DPI Type 0 Logon	The peripheral successfully logs in for Type 0 control.
18	DPI Type 0 Time	The peripheral has not received a Type 0 status message for longer than the maximum Type 0 time.
19	DPI DL Logon	The peripheral successfully logs into a data link.
20	DPI DL Error	The host rejects a login to a data link (e.g., data link not supported or already in use)
21	DPI DL Time	No Datalink status message is received on DPI for longer than the maximum time allowed
22	DPI Ctrl Disable	The peripheral has sent a “Soft Control Disable” command to the host.
23	DPI Ctrl Enable	The peripheral has sent a “Soft Control Enable” command to the host.
24	DPI Msg Timeout	A Client-Server message sent by the peripheral has not completed within one second.
25	DPI Manual Reset	Manual reset via DPI triggered.
31	Net Dup Address	IP address conflict.
32	Net Comm Fault	The peripheral detected a communications fault on the network.
33	Net Sent Reset	The peripheral received a reset from the network.
34	Net IO Close	An I/O connection from the network to the peripheral was closed.
35	Net Idle Fault	The peripheral is receiving "Idle" packets from the network.
36	Net IO Open	An I/O connection to the peripheral from the network has been opened.
37	Net IO Timeout	An I/O connection from the network to the Peripheral has timed out.
38	Net IO Size Err	EtherNet I/P I/O connection size mismatch error.
39	PCCC IO Close	The device sending PCCC Control messages to the Peripheral has set the PCCC Control Timeout to a value of zero.

Table 25 - Adapter Events (Continued)

Code	Event	Description
40	PCCC IO Open	The Peripheral has begun receiving PCCC Control messages (the PCCC Control Timeout was previously set to a non-zero value).
41	PCCC IO Timeout	The Peripheral has not received a PCCC control message for longer than the PCCC Control Timeout.
42	Msg Ctrl Open	The peripheral has sent a “Soft Control Enable“ command to the host.
43	Msg Ctrl Close	The peripheral has sent a “Soft Control Disable“ command to the host.
44	Msg Ctrl Timeout	A Client-Server message sent by the peripheral has not completed within one second.
45	Peer IO Open	The peripheral has received the first peer I/O message.
46	Peer IO Timeout	The Peripheral has not received a Peer I/O message for longer than the Peer I/O Timeout.
56	Email Failed	E-mail send failure.
58	Adapter Defaulted	Adapter parameters has been reset to default.
61	Net Link 1 Up	Link has been established on Eth Port 1
62	Net Link 1 Down	Link was lost on Eth Port 1.
63	Net Link 2 Up	Link has been established on Eth Port 2
64	Net Link 2 Down	Link was lost on Eth Port 2.
67	Net Ring Up	The Device Level Ring (DLR) status is Normal.
68	Net Ring Down	The Device Level Ring (DLR) status is Faulted.
69	Invalid Net Cfg	The adapter’s network address configuration parameters are invalid, or the network address provided by the BOOTP or DHCP server is invalid.
70	DHCP Response	The adapter received a response to its DHCP request.

Notes:

Viewing the Adapter Web Pages

This chapter provides instructions on how to monitor the adapter and connected PowerFlex drive by using the adapter's web interface.

Topic	Page
Accessing the Adapter Web Home Page	153
Viewing the Web Pages	153
Process Display Home Page	156
Browse DPI Device Folder	156
Diagnostics Web Page	157
Administrative Web Pages	160

Future enhancements may result in adapter web pages that look different than the examples shown in this chapter.

Accessing the Adapter Web Home Page

After configuring the adapter, you can view its web pages. These pages present information about the adapter, the device to which it is connected, and other DPI devices connected to or installed in the device such as a HIM or I/O card.

The adapter can be configured to automatically send email messages to desired addresses when selected device faults occur and/or are cleared when the adapter rakes a communication or idle fault action. Bit 0 of **Parameter 57-[Web Features]** can be used to protect the configured settings. For more details, see page 162.

Viewing the Web Pages

The adapter can be configured to automatically send e-mail messages to desired addresses when selected drive faults occur and/or are cleared, and/or when the adapter takes a communication or idle fault action.

Bit 0 of **Parameter 57 - [Web Features]** can be used to protect the configured settings. For more details, see page 162.

1. On a computer with access to the EtherNet/IP network on which the adapter/device is installed, launch a web browser such as Microsoft™ Internet Explorer, version 5.0 or later.

The computer can access the adapter web pages if it is connected to:

- The same network as the adapter.
- A network with access to the adapter's network via a gateway device (for example, a router).

2. In the Address box, type the IP address of the adapter.
3. Press ENTER.

The adapter web Home Page (Figure 79) appears.

Important: Using the browser's View >Refresh function will always re-display the adapter home page while viewing any of the adapter's web pages.

Figure 79 - Adapter Web Home Page Example

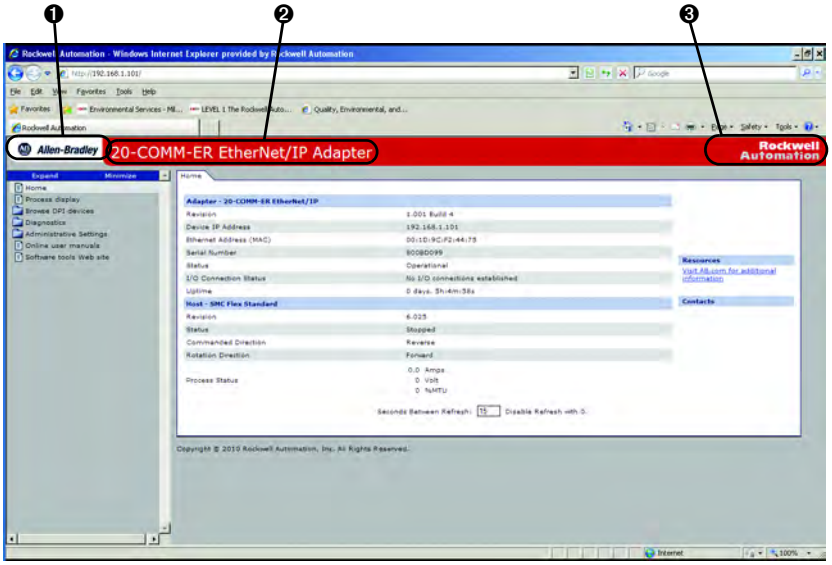

Title Bar on Adapter Web Pages

The title bar appears on the adapter Home Page and all of the adapter's other web pages. The title bar consists of three elements as shown in Figure 79.

Title Bar Element	Description
❶ Allen-Bradley logo	This logo is a hyperlink. Click it to view the ab.com web Home Page.
❷ Adapter Title	Shows the adapter type or user-configurable title.
❸ Rockwell Automation logo	This logo is a hyperlink. Click it to view the Rockwell Automation web Home Page.

Navigation Pane on Adapter Web Pages

The navigation pane appears on the left side of the adapter Home Page and all of the adapter's other web pages. The navigation pane consists of links and link folders which can be expanded or minimized. The following table shows all navigation pane links and link folders.

Navigation Pane Link/ Folder	Description
Home link	Click this link to view the adapter's Home Page (Figure 79).
Process display link	Click this link to view the host drive's Process Display pop-up window (Figure 81).
Browse DPI devices folder	Click this folder to expand and view the Port folders for all present DPI devices, including the drive, adapter, and other devices connected to the drive such as a HIM.
Diagnostics	Displays Ethernet/IP diagnostic information to aid in monitoring and troubleshooting the Ethernet/IP network.
Administrative Settings	Manage adapter settings such as password, IP address, and network configuration. Password Authorization is required to access subfolders.
Online user manuals link	Click this link to view Rockwell Automation's web page with documentation for drives, SMCs, and other devices.
Software tools Web site link	Click this link to view Allen-Bradley's web page with information about software tools such as DriveExplorer and DriveExecutive.

Figure 80 - Adapter Web Home Page Example

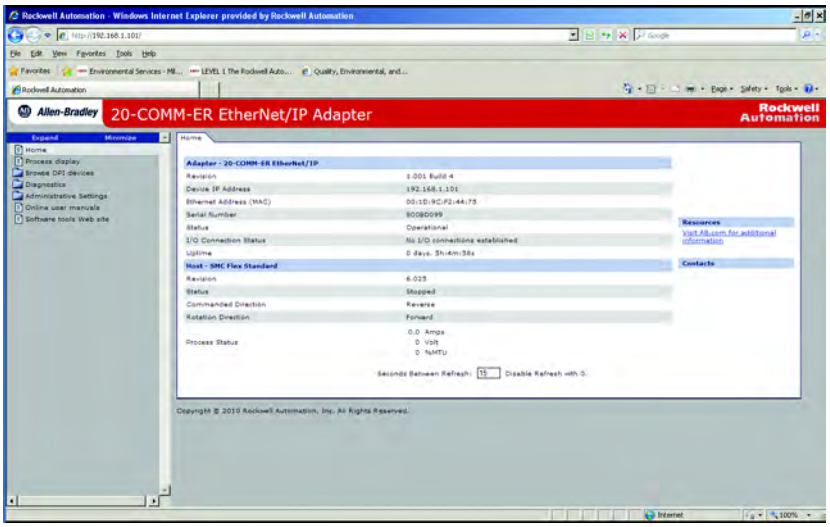

Process Display Home Page

The Process Display pop-up window dynamically shows the host drive's information. To view this window, click the 'Process display' link in the navigation pane.

Figure 81 - Example of Process Display Pop-up Window

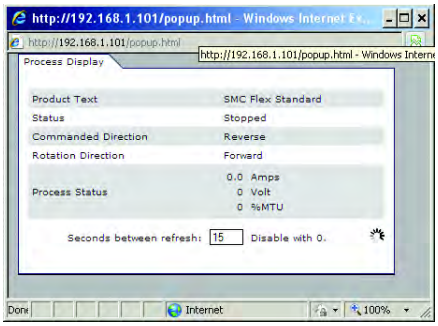

Browse DPI Device Folder

This folder gives access to the databases, fault and alarm queues and diagnostic data (if applicable) to all the devices connected to the DPI network.

Each Device on the DPI network has its own folder that has links to module information, parameters, diagnostic information, fault queues and alarm queue. The Parameters are further organized into the DPI groups defined for the specific device.

Figure 82 shows an example of an SMC-50 device acting as the DPI host on port 0 of the DPI network.

Figure 82 - Example of an SMC-50 Controller Acting as DPI Host

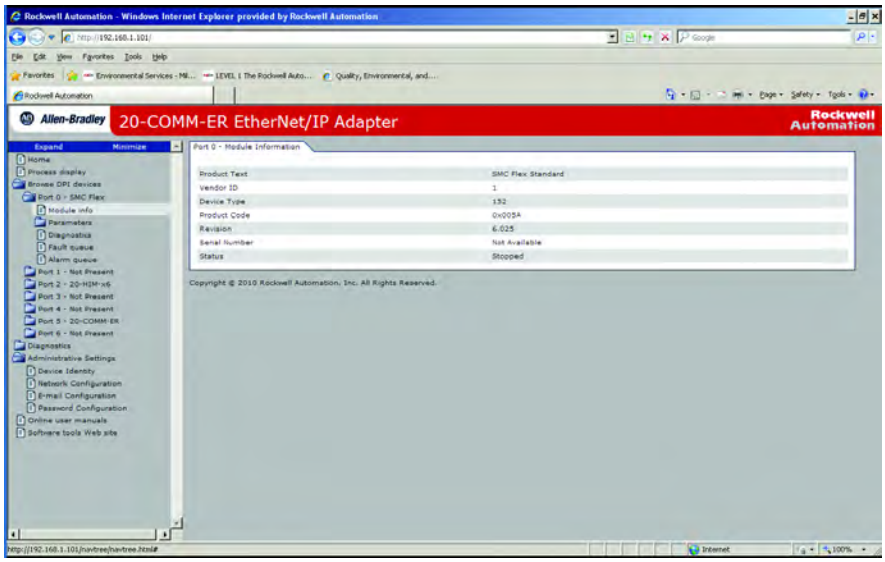

Parameters for the SMC-50 can be changed via the parameters web page by clicking on the Edit button near the bottom of the web page and entering the correct username and password when the authorization pop up window appears.

Note: PowerFlex drives on the network will not allow parameters to be changed via the Parameter Web page.

Figure 83 - Example of Parameter Web Page

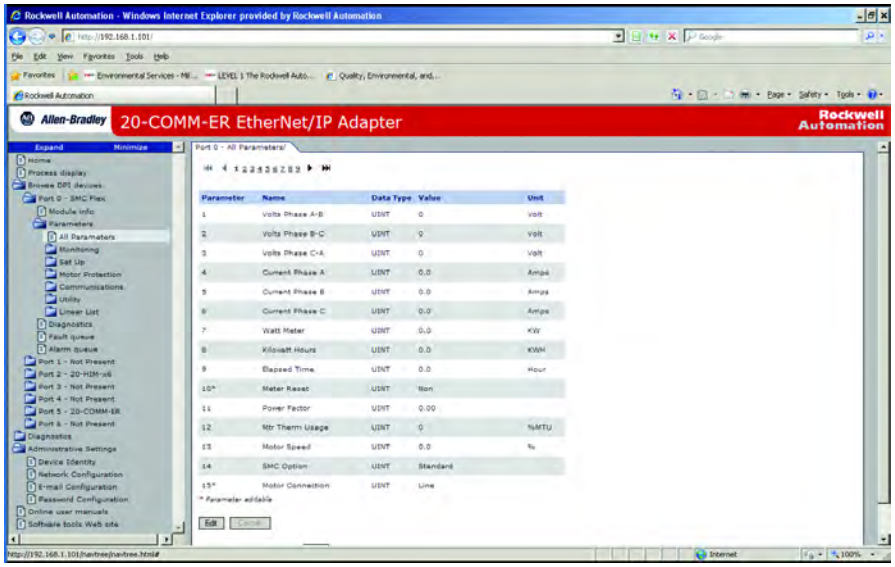

Diagnostics Web Page

The diagnostics web page provides the user with Adapter performance on the network detailing the configuration, status and traffic information about the EtherNet/IP network communications.

Diagnostic Overview link

This link provides a general overview of the Adapter's activity on the EtherNet/IP network.

Figure 84 - Diagnostic Overview Page

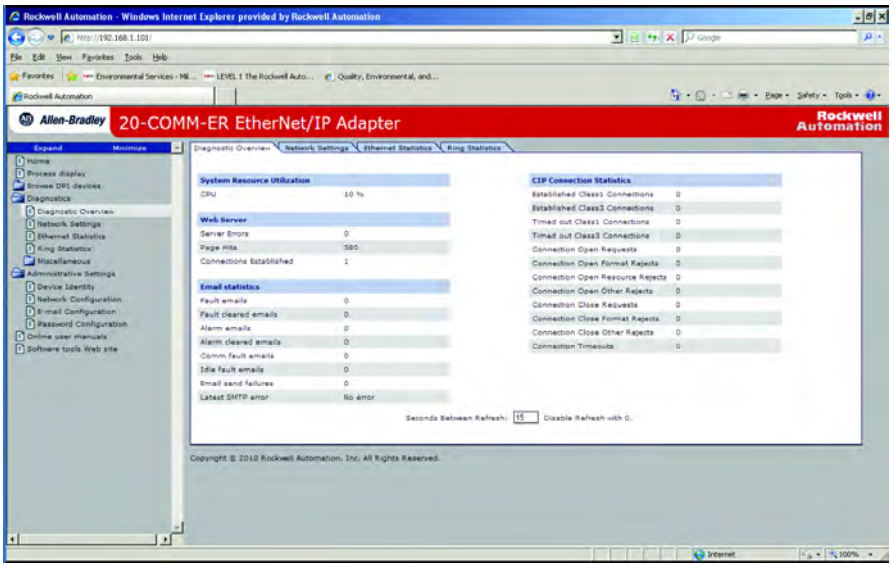

Network Setting Link

This link provides information about the adapter's Ethernet settings and network activities.

Figure 85 - Network Setting Page

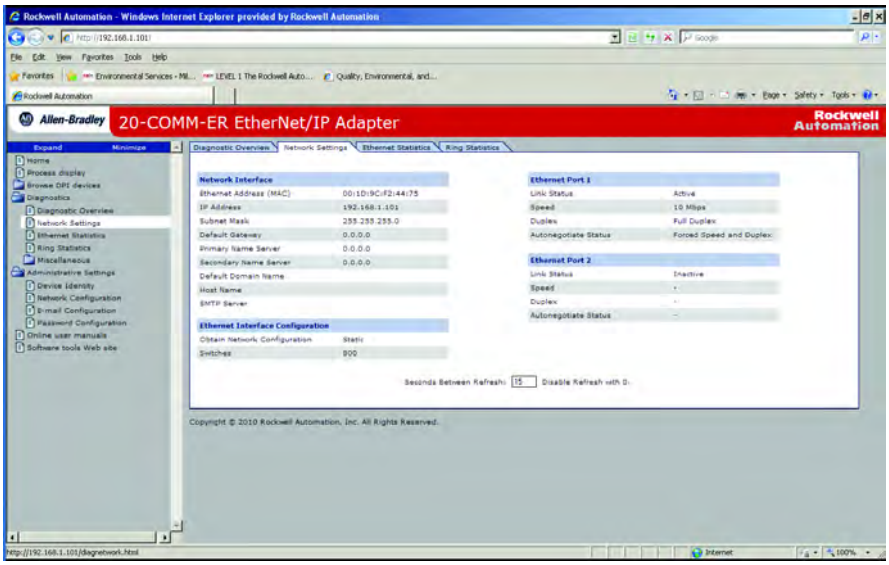

EtherNet/IP Statistics Link

This links displays information about the traffic activity on the EtherNet/IP network.

Figure 86 - EtherNet/IP Statistics Page

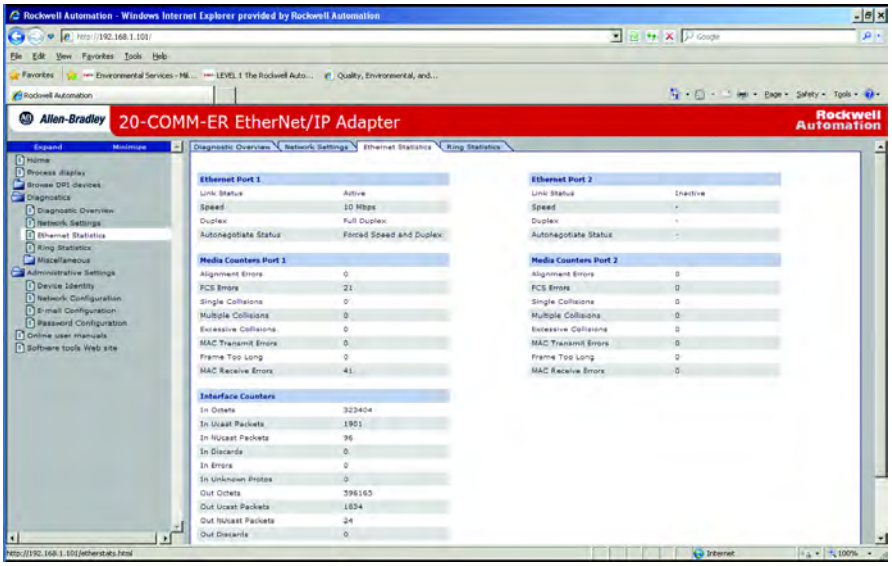

Ring Statistics link

This page displays configuration and status of the network and identifies the ring supervisor if the Ethernet network is configured as a ring.

Figure 87 - Ring Statistics Page

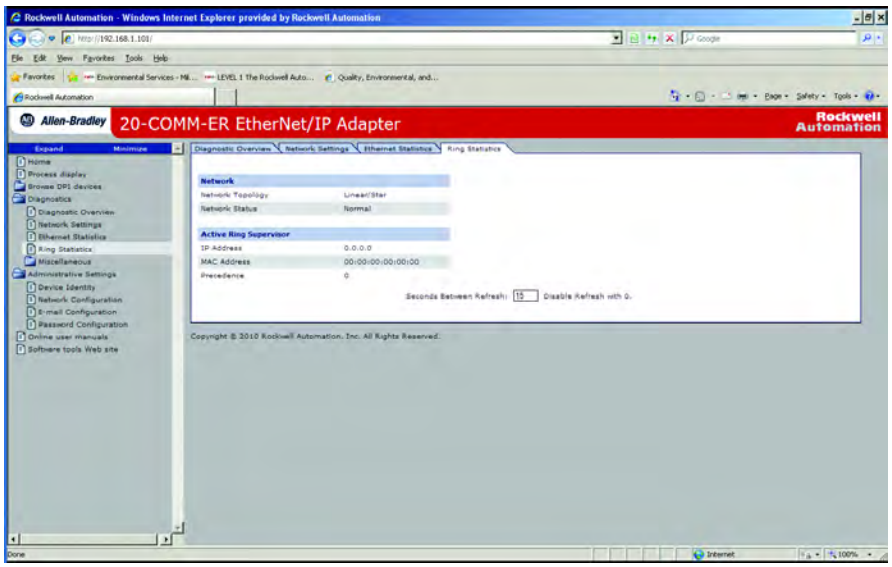

Crash Display Link

Figure 88 - Crash Display Page

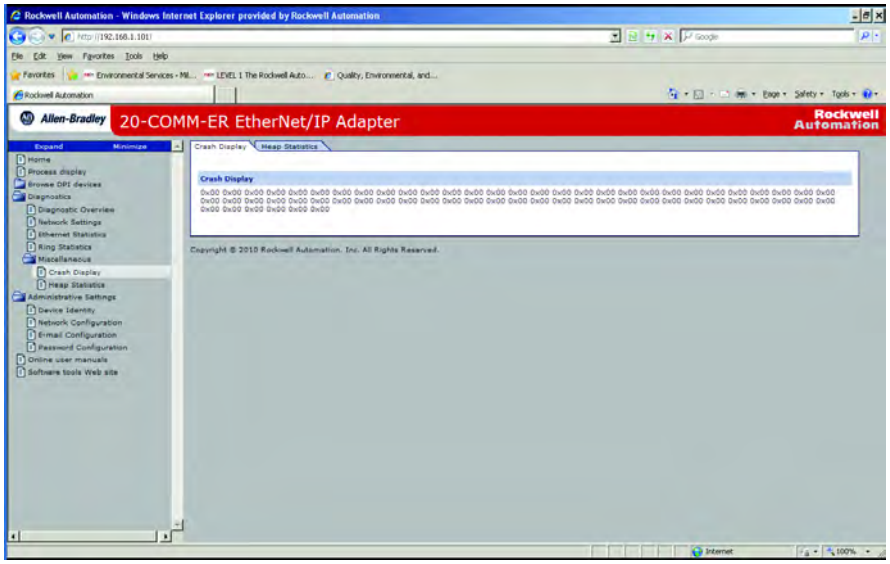

Heap Statistics Display link

Figure 89 - Heap Statistics Page

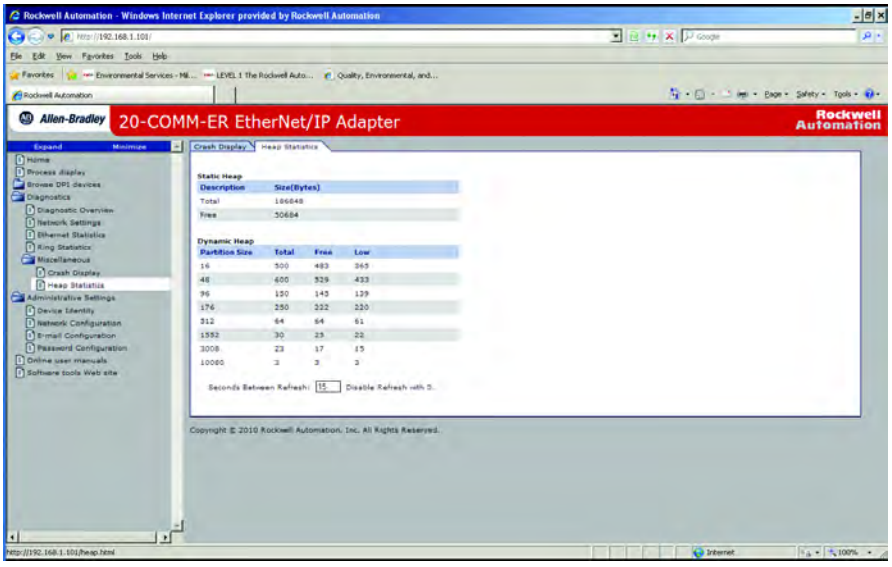

Administrative Web Pages

Administrative Web pages give the user access to the 20-COMM-ER module for the purpose of configuring the device for network operation and messaging.

Device Identity Link

The Device Identity link is used to give the Adapter an identity on the EtherNet/IP network that will be recognized by the user, software tools, and other devices on the network.

Figure 90 - Device Identity Page

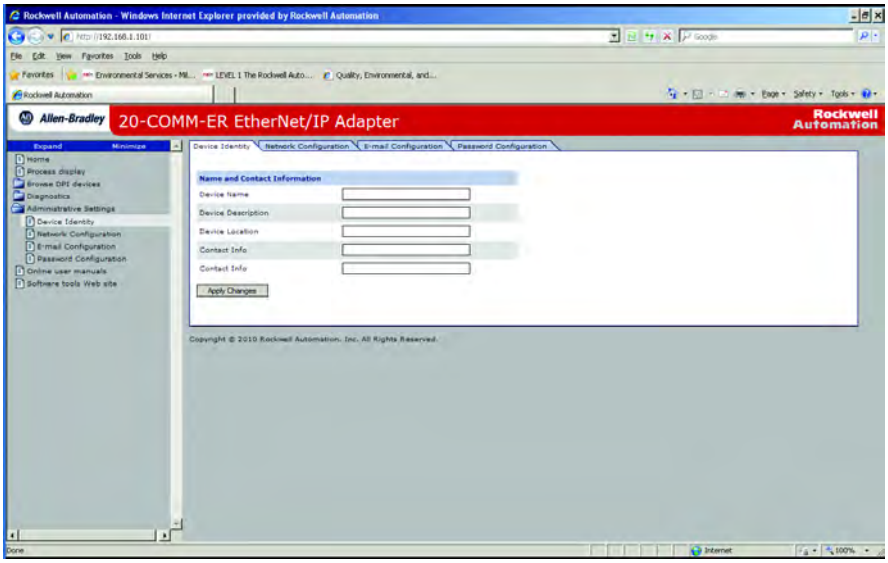

Network Configuration Link

The network configuration link allows setting of the TCP/IP layer of the Adapter, including IP address, Subnet mask, and gateway address.

Figure 91 - Network Configuration Page

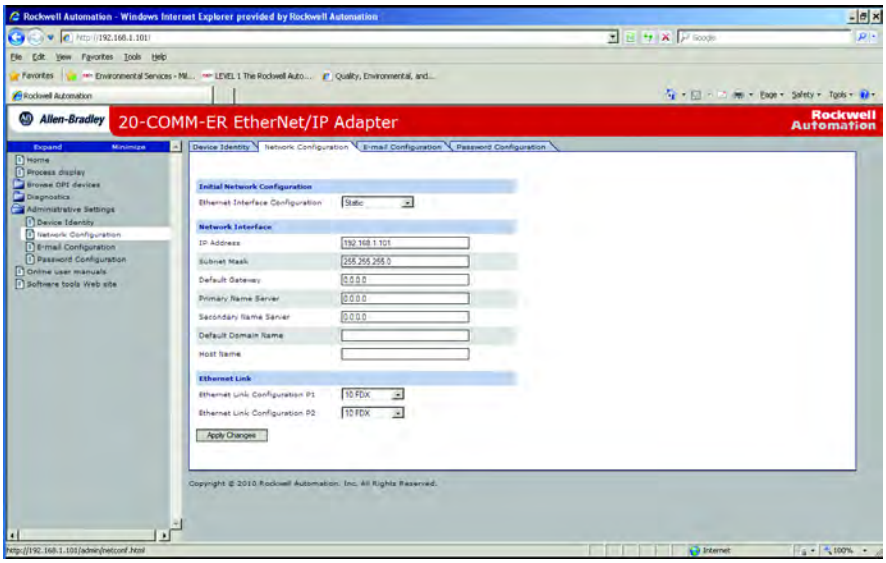

Email Configuration Link

The Configure E-mail Notification web page contains selections and data fields for configuring the adapter to automatically send email messages to desired addresses when selected types of events occur. To view this web page, click the 'Configure e-mail...' link (highlighted in Figure 92) in the navigation pane.

Figure 92 - E-mail Configuration Page

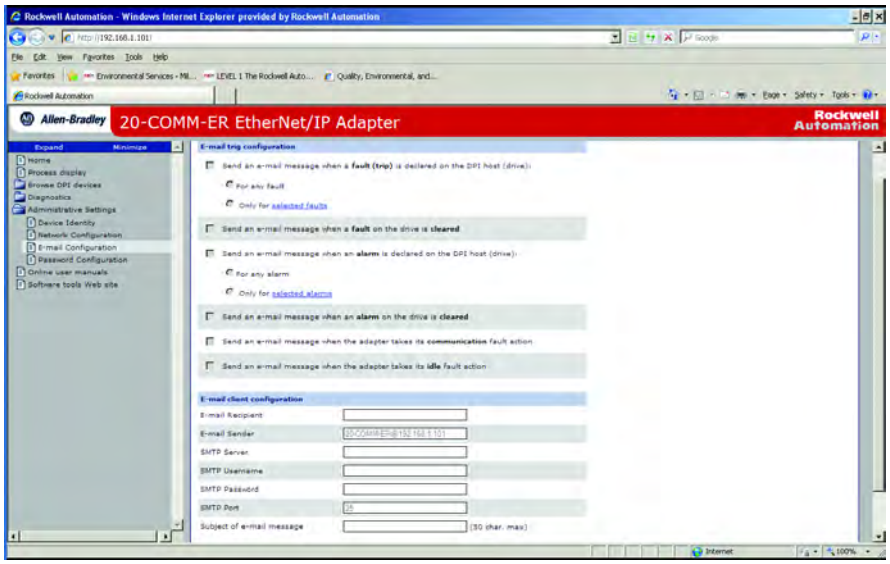

To configure email notification, perform the following steps.

1. Click the desired 'Send an e-mail message when...' check boxes you want to occur that will send email notification. If you only want email notification when selected faults/alarms occur:
   a. Click the respective fault and/or alarm radio buttons.
   b. Click the 'selected faults' link and/or 'selected alarms' link. Figure 93 shows an example faults configuration page.

Figure 93 - Example of Selected Faults Configuration Page

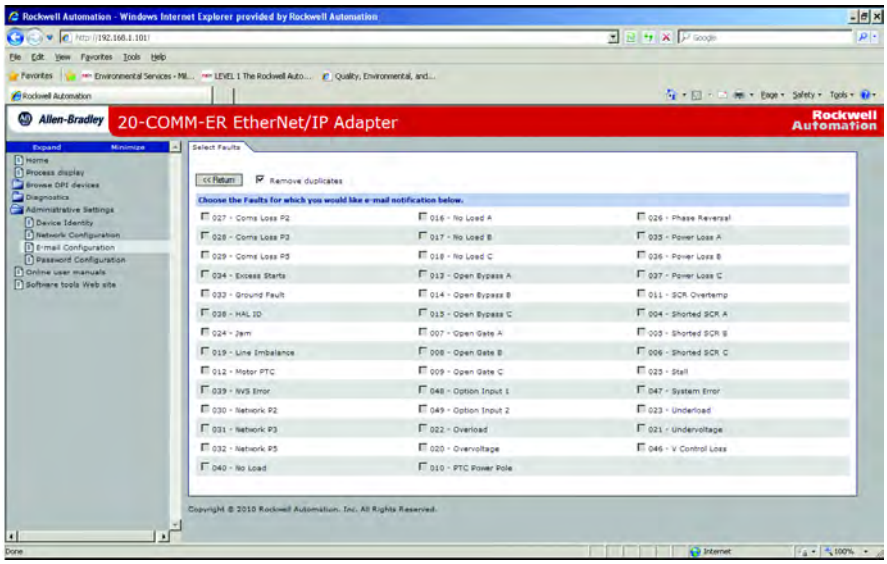

c. Click the desired fault/alarm check boxes.

d. Click **Apply Changes**.

e. Click the 'Back to E-mail Configuration Page' link.

2. Type the following information in their respective boxes.

Information	Description
'SMTP Server'	Type in the address of the mail server that will be used to deliver the email messages. (When the IP address is unknown, read the TIP shown below this table to determine the mail server address.)
'TO email recipient'	Type in addresses to where you want email messages to be sent. Multiple addresses can be used, but they must be separated by commas (comma delimited).
'Subject of e-mail message…'	Type in the desired subject text for the email message.

Figure 94 shows an example email message automatically sent by the adapter in response to selected events.

Figure 94 - Example of E-mail Message Sent by the Adapter

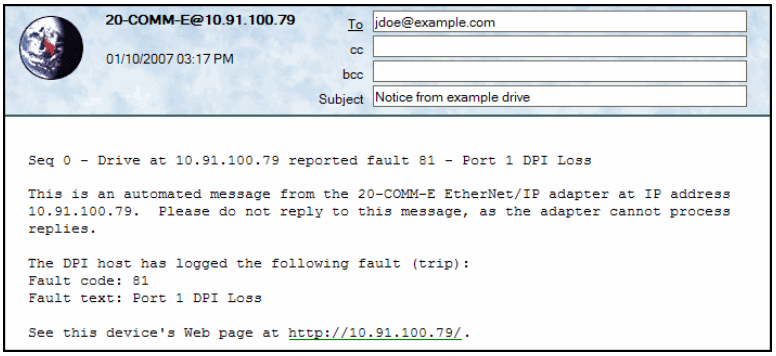

TIP To stop email messages, uncheck all of the 'Send an e-mail message when…' boxes.

Disabling the adapter web pages by setting the Web Pages Switch (SW2 in Figure 2) to the 'Disable Web' position will **not stop** the adapter from sending email messages.

Password Configuration

The Password Configuration Link allows the user to set or change a password. The factory default configuration is:

Username: Administrator

Password: <none> no password is set

Figure 95 - Password Configuration Page

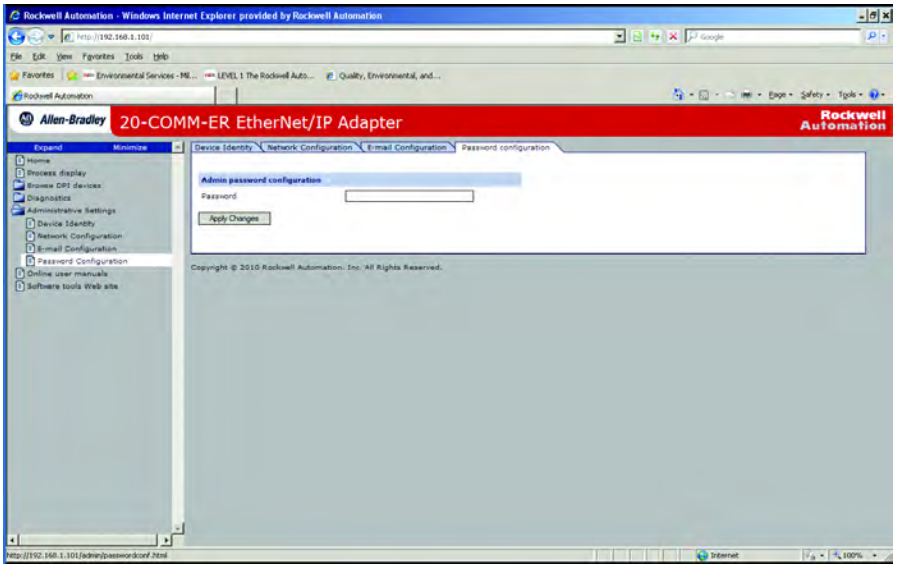

Notes:

Using the Adapter in a DPI External Comms Kit (20-XCOMM-DC-BASE)

This chapter provides information and examples that explain how to use the adapter in a DPI External Comms Kit (20-XCOMM-DC-BASE).

The adapter is typically installed in the internal communication slot on the PowerFlex 7-Class drive. However, an externally-mounted adapter may be desired when:

- The PowerFlex drive is already connected to an existing network, such as Remote I/O, and a second network is desired for a DriveExplorer or DriveExecutive software tool, data collection, and so forth.
- The PowerFlex drive is remotely located next to some I/O devices that also need to be networked. The DPI External Comms Kit has an option slot for general-purpose network I/O that a controller can use. Both the drive and I/O devices are handled as one node on the network to reduce the network node count.

Topic	Page
Installing the Adapter	167

Installing the Adapter

The adapter can be installed in a DPI External Comms Kit.

Figure 96 - Mounting and Connecting the Adapter

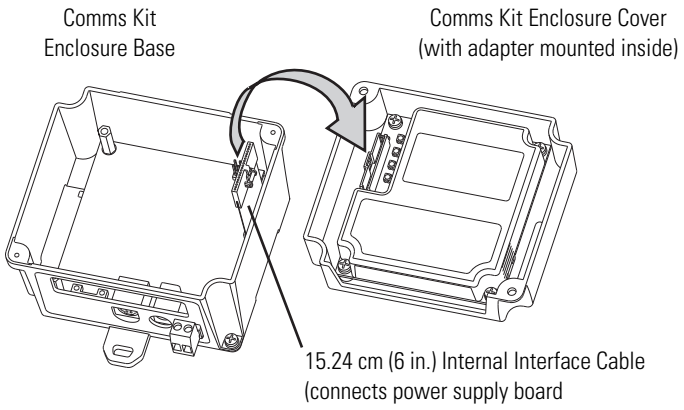

For more information, see the DPI External Communications Kit Installation Instructions, publication 20COMM-IN001.

Specifications

This appendix presents the specifications for the adapter.

Topic	Page
Communications	169
Electrical	169
Mechanical	170
Environmental	170
Regulatory Compliance	170

Communications

Network Protocol Data Rates	 EtherNet/IP 10 Mbps Full Duplex 10 Mbps Half Duplex 100 Mbps Full Duplex 100 Mbps Half Duplex
Connection Limits	30 TCP connections Two 'class 1' connections and 14 'class 3' connections are supported. The following activities use a CIP connection: • Explicit messaging where 'connected' is chosen (for example, in a checkbox in RSLogix 5000) The following activities **do not** use a CIP connection: • Explicit messaging-based control using PCCC or the Register or Assembly objects, including the PLC-5, SLC 500, and MicroLogix 1100 examples in Chapter 4 • Explicit messaging where 'connected' is **not** chosen, which is typically the default
Requested Packet Interval (RPI)	2 ms minimum
Drive Protocol Data Rates	 DPI 125 kbps or 500 kbps

Electrical

Consumption Drive Network	 482 mA at 5V DC supplied by the host (drive or DPI External Comms Kit) N/A

Mechanical

Dimensions	
Height	19 mm (0.75 inches)
Length	86 mm (3.39 inches)
Width	78.5 mm (3.09 inches)
Shipping Weight	150 g (5.2 oz.)

Environmental

Temperature	
Operating	-10…50 °C (14…122 °F)
Storage	-40…85 °C (-40…185 °F)
Relative Humidity	5…95% non-condensing
Atmosphere	**Important:** The adapter **must not** be installed in an area where the ambient atmosphere contains volatile or corrosive gas, vapors or dust. If the adapter is not going to be installed for a period of time, it must be stored in an area where it will not be exposed to a corrosive atmosphere.

Regulatory Compliance

Certification	Drive Specification	SMC Specification
UL	UL508C	UL508
cUL	CSA C22.2 No. 14-2010	CSA C22.2 No. 14-10
CE	EN61800-3	EN60947-4-2
CTick	EN61800-3	EN60947-4-2

NOTE: This is a product of category C2 according to IEC 61800-3. In a domestic environment this product may cause radio interference in which case supplementary mitigation measures may be required.

Adapter Parameters

This appendix provides information about the adapter parameters.

Topic	Page
About Parameter Numbers	171
Parameter List	171

About Parameter Numbers

The parameters in the adapter are numbered consecutively. However, depending on which configuration tool you use, they may have different numbers.

Configuration Tool	Numbering Scheme
• HIM • Connected Components Workbench software • DriveExplorer • DriveExecutive	The adapter parameters begin with parameter 01. For example, **Parameter 01 - [DPI Port]** is parameter 01 as indicated by this manual.
• Explicit Messaging	See Chapter 6, Using Explicit Messaging and Appendix C, EtherNet/IP Objects for details.

Parameter List

Parameter No.	Name and Description	Details
01	**[DPI Port]** Displays the port to which the adapter is connected. This will usually be port 5.	Default: 5 Minimum: 0 Maximum: 7 Type: Read Only
02	**[DPI Data Rate]** Displays the data rate used by the drive. This data rate is set in the drive and the adapter detects it.	Default: 0 = 125 kbps Values: 0 = 125 kbps 1 = 500 kbps Type: Read Only
03	**[BOOTP/DHCP]** Configures the adapter to use BOOTP so that you can set its IP address, subnet mask, and gateway address with a BOOTP server.	Default: 1 = Enabled Values: 0 = Disabled 1 = Enabled Type: Read/Write Reset Required: Yes

Parameter No.	Name and Description	Details
04 05 06 07	**[IP Addr Cfg 1]** **[IP Addr Cfg 2]** **[IP Addr Cfg 3]** **[IP Addr Cfg 4]** Sets the IP address bytes for the adapter's network address when **Parameter 03 - [BOOTP]** is set to '0' (Disabled). 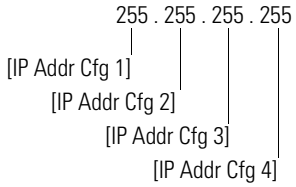	Default: 0 Default: 0 Default: 0 Default: 0 Minimum: 0 Maximum: 255 Type: Read/Write Reset Required: Yes
08 09 10 11	**[Subnet Cfg 1]** **[Subnet Cfg 2]** **[Subnet Cfg 3]** **[Subnet Cfg 4]** Sets the subnet mask bytes for the adapter's network address when **Parameter 03 - [BOOTP]** is set to '0' (Disabled). 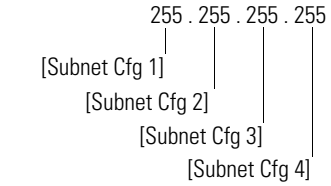	Default: 0 Default: 0 Default: 0 Default: 0 Minimum: 0 Maximum: 255 Type: Read/Write Reset Required: Yes
12 13 14 15	**[Gateway Cfg 1]** **[Gateway Cfg 2]** **[Gateway Cfg 3]** **[Gateway Cfg 4]** Sets the gateway address bytes for the adapter's network address when **Parameter 03 - [BOOTP]** is set to '0' (Disabled). 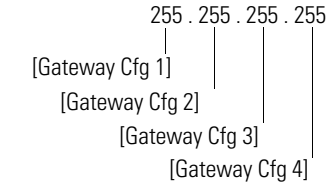	Default: 0 Default: 0 Default: 0 Default: 0 Minimum: 0 Maximum: 255 Type: Read/Write Reset Required: Yes
16	**[EN P1 Rate Cfg]** Sets the speed and duplex network data rate at which the adapter communicates. (Updates **Parameter 17 - [EN P1 Rate Act]** after a reset.)	Default: 0 = Autodetect Values: 0 = Autodetect 1 = 10 Mbps Full 2 = 10 Mbps Half 3 = 100 Mbps Full 4 = 100 Mbps Half Type: Read/Write Reset Required: Yes

Parameter No.	Name and Description	Details
17	**[EN P1 Rate Act]** Displays the actual speed and duplex network data rate used by the adapter.	Default: 0 = No Link Values: 0 = No Link 1 = 10 Mbps Full 2 = 10 Mbps Half 3 = 100 Mbps Full 4 = 100 Mbps Half Type: Read Only
18	**[EN P2 Rate Cfg]** Sets the speed and duplex network data rate at which the adapter communicates. (Updates **Parameter 19 - [EN PI Rate Act]** after a reset.)	Default: 0 = Autodetect Values: 0 = Autodetect 1 = 10 Mbps Full 2 = 10 Mbps Half 3 = 100 Mbps Full 4 = 100 Mbps Half Type: Read/Write Reset Required: Yes
19	**[EN P2 Rate Act]** Displays the actual speed and duplex network data rate used by the adapter.	Default: 0 = No Link Values: 0 = No Link 1 = 10 Mbps Full 2 = 10 Mbps Half 3 = 100 Mbps Full 4 = 100 Mbps Half Type: Read Only
20	**[Ref/Fdbk Size]** Displays the size of the Reference/Feedback. The drive determines the size of the Reference/ Feedback.	Default: 0 = 16-bit Values: 0 = 16-bit 1 = 32-bit Type: Read Only
21	**[Datalink Size]** Displays the size of each Datalink word. The drive determines the size of Datalinks.	Default: 0 = 16-bit Values: 0 = 16-bit 1 = 32-bit Type: Read Only
22	**[Reset Module]** No action if set to '0' (Ready). Resets the adapter if set to '1' (Reset Module). Restores the adapter to its factory default settings if set to '2' (Set Defaults). This parameter is a command. It will be reset to '0' (Ready) after the command has been performed.	Default: 0 = Ready Values: 0 = Ready 1 = Reset Module 2 = Set Defaults Type: Read/Write Reset Required: No

ATTENTION: Risk of injury or equipment damage exists. If the adapter is transmitting I/O that controls the drive, the drive may fault when you reset the adapter. Determine how your drive will respond before resetting a connected adapter.

Parameter No.	Name and Description	Details
23	**[Comm Flt Action]** Sets the action that the adapter and drive will take if the adapter detects that I/O communication has been disrupted. This setting is effective only if I/O that controls the drive is transmitted through the adapter. When communication is re-established, the drive will automatically receive commands over the network again.	Default: 0 = Fault Values: 0 = Fault 1 = Stop 2 = Zero Data 3 = Hold Last 4 = Send Flt Cfg Type: Read/Write Reset Required: No

ATTENTION: Risk of injury or equipment damage exists. **Parameter 23 - [Comm Flt Action]** lets you determine the action of the adapter and connected drive if I/O communication is disrupted. By default, this parameter faults the drive. You can set this parameter so that the drive continues to run, however, precautions should be taken to verify that the setting of this parameter does not create a risk of injury or equipment damage. When commissioning the drive, verify that your system responds correctly to various situations (for example, a disconnected cable).

Parameter No.	Name and Description	Details
24	**[Idle Flt Action]** Sets the action that the adapter and drive will take if the adapter detects that the controller is in program mode or faulted. This setting is effective only if I/O that controls the drive is transmitted through the adapter. When the controller is put back in Run mode, the drive will automatically receive commands over the network again.	Default: 0 = Fault Values: 0 = Fault 1 = Stop 2 = Zero Data 3 = Hold Last 4 = Send Flt Cfg Type: Read/Write Reset Required: No

ATTENTION: Risk of injury or equipment damage exists. **Parameter 24 - [Idle Flt Action]** lets you determine the action of the adapter and connected drive when the controller is idle. By default, this parameter faults the drive. You can set this parameter so that the drive continues to run, however, precautions should be taken to verify that the setting of this parameter does not create a risk of injury or equipment damage. When commissioning the drive, verify that your system responds correctly to various situations (for example, a faulted controller).

Parameter No.	Name and Description	Details
25	**[DPI I/O Cfg]** Sets the I/O that is transferred through the adapter.	Default: xxx0 0001 Bit Values: 0 = I/O Disabled 1 = I/O Enabled Type: Read/Write Reset Required: Yes

Bit Definition	Not Used	Not Used	Not Used	Datalink D	Datalink C	Datalink B	Datalink A	Cmd/Ref
Default	x	x	x	0	0	0	0	1
Bit	7	6	5	4	3	2	1	0

Parameter No.	Name and Description	Details
26	**[DPI I/O Act]** Displays the I/O that the adapter is actively transmitting. The value of this parameter will usually be equal to the value of **Parameter 25 - [DPI I/O Cfg]**.	Default: xxx0 0001 Bit Values: 0 = I/O Disabled 1 = I/O Enabled Type: Read Only Bit Definition: Not Used, Not Used, Not Used, Datalink D, Datalink C, Datalink B, Datalink A, Cmd/Ref Default: x, x, x, 0, 0, 0, 0, 1 Bit: 7, 6, 5, 4, 3, 2, 1, 0
27	**[Flt Cfg Logic]** Sets the Logic Command data that is sent to the drive if any of the following is true: • **Parameter 23 - [Comm Flt Action]** is set to '4' (Send Flt Cfg) and I/O communication is disrupted. • **Parameter 24 - [Idle Flt Action]** is set to '4' (Send Flt Cfg) and the controller is idle. • **Parameter 43 - [Peer Flt Action]** is set to '4' (Send Flt Cfg) and peer I/O communication is disrupted. The bit definitions will depend on the product to which the adapter is connected. See Appendix D or the documentation for the drive being used.	Default: 0000 0000 0000 0000 Minimum: 0000 0000 0000 0000 Maximum: 1111 1111 1111 1111 Type: Read/Write Reset Required: No
28	**[Flt Cfg Ref]** Sets the Reference data that is sent to the drive if any of the following is true: • **Parameter 23 - [Comm Flt Action]** is set to '4' (Send Flt Cfg) and I/O communication is disrupted. • **Parameter 24 - [Idle Flt Action]** is set to '4' (Send Flt Cfg) and the controller is idle. • **Parameter 43- [Peer Flt Action]** is set to '4' (Send Flt Cfg) and peer I/O communication is disrupted.	Default: 0 Minimum: 0 Maximum: 4294967295 Type: Read/Write Reset Required: No **Important:** If the drive uses a 16-bit Reference, the most significant word of this value must be set to zero (0) or a fault will occur.

Parameter No.	Name and Description	Details
29 30 31 32 33 34 35 36	**[Flt Cfg A1 In]** **[Flt Cfg A2 In]** **[Flt Cfg B1 In]** **[Flt Cfg B2 In]** **[Flt Cfg C1 In]** **[Flt Cfg C2 In]** **[Flt Cfg D1 In]** **[Flt Cfg D2 In]** Sets the data that is sent to the Datalink in the drive if any of the following is true: • **Parameter 23 - [Comm Flt Action]** is set to '4' (Send Flt Cfg) and I/O communication is disrupted. • **Parameter 24 - [Idle Flt Action]** is set to '4' (Send Flt Cfg) and the controller is idle. • **Parameter 43 - [Peer Flt Action]** is set to '4' (Send Flt Cfg) and peer I/O communication is disrupted.	Default: 0 Default: 0 Default: 0 Default: 0 Default: 0 Default: 0 Default: 0 Default: 0 Minimum: 0 Maximum: 4294967295 Type: Read/Write Reset Required: No **Important:** If the drive uses 16-bit Datalinks, the most significant word of this value must be set to zero (0) or a fault will occur.
37	**[M-S Input]** Sets the Master-Slave input data. This data is produced by the scanner and consumed by the adapter.	Default: xxx0 0001 Bit Values: 0 = I/O disabled 1 = I/O enabled Type: Read/Write Reset Required: Yes

Bit Definition	Not Used	Not Used	Not Used	Datalink D Input	Datalink C Input	Datalink B Input	Datalink A Input	Cmd/Ref
Default	x	x	x	0	0	0	0	1
Bit	7	6	5	4	3	2	1	0

38	**[M-S Output]** Sets the Master-Slave output data. This data is produced by the adapter and consumed by the Master device (for example, scanner).	Default: xxx0 0001 Bit Values: 0 = I/O disabled 1 = I/O enabled Type: Read/Write Reset Required: Yes

Bit Definition	Not Used	Not Used	Not Used	Datalink D Output	Datalink C Output	Datalink B Output	Datalink A Output	Cmd/Ref
Default	x	x	x	0	0	0	0	1
Bit	7	6	5	4	3	2	1	0

39	**[Ref Adjust]** Sets the percent scale factor for the Reference received from the network.	Default: 100.00% Minimum: 0.00% Maximum: 200.00% Type: Read/Write Reset Required: No

ATTENTION: To guard against equipment damage and/or personal injury, note that changes to **Parameter 39 - [Ref Adjust]** take effect immediately. A drive receiving its Reference from the adapter will receive the newly scaled Reference, resulting in a change of speed.

Parameter No.	Name and Description	Details
40 41	**[Peer A Input]** **[Peer B Input]** Sets the destination of the peer I/O input. The adapter receives this data from the network and sends it to the drive. **Important:** Changes to these parameters are ignored when **Parameter 49 - [Peer Inp Enable]** is set to '1' (On). **Important:** If the parameter is set to input a Logic Command, configure the mask in **Parameter 42 - [Peer Cmd Mask]** so that the desired bits from the peer device are used.	Default: 0 = Off Default: 0 = Off Values: 0 = Off 1 = Cmd/Ref 2 = Datalink A Input 3 = Datalink B Input 4 = Datalink C Input 5 = Datalink D Input Type: Read/Write Reset Required: No
42	**[Peer Cmd Mask]** Sets the mask for the Logic Command word when it is received through peer input. If the mask bit is '0' (Off), the command bit is ignored and not used. If the mask bit is '1' (On), the command bit is checked and used. **Important:** If the adapter receives a Logic Command from both a Master device and a peer device, each command bit must have only one source. The source of command bits set to '0' will be the Master device. The source of command bits set to '1' will be the peer device.	Default: 0000 0000 0000 0000 Minimum: 0000 0000 0000 0000 Maximum: 1111 1111 1111 1111 Values: 0 = Ignore bit 1 = Check bit Type: Read/Write Reset Required: Yes
43	**[Peer Flt Action]** Sets the action that the adapter and drive will take if the adapter detects that peer I/O communication has been disrupted. This setting is effective only if I/O is transmitted through the adapter.	Default: 0 = Fault Values: 0 = Fault 1 = Stop 2 = Zero Data 3 = Hold Last 4 = Send Flt Cfg Type: Read/Write Reset Required: No

ATTENTION: Risk of injury or equipment damage exists. **Parameter 43 - [Peer Flt Action]** lets you determine the action of the adapter and connected drive if the adapter is unable to communicate with the designated peer. By default, this parameter faults the drive. You can set this parameter so that the drive continues to run, however, precautions should be taken to verify that the setting of this parameter does not create a risk of injury or equipment damage. When commissioning the drive, verify that your system responds correctly to various situations (for example, a disconnected cable).

Parameter No.	Name and Description	Details
44 45 46 47	**[Peer Inp Addr 1]** **[Peer Inp Addr 2]** **[Peer Inp Addr 3]** **[Peer Inp Addr 4]** Sets the IP address bytes that specifies the device from which the adapter receives (consumes) peer I/O data. 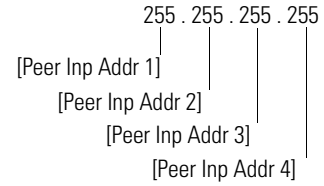 **Important:** The Peer Inp Addr must be on the same subnet as the 20-COMM-ER. See page 226 for more information. Changes to these parameters are ignored when **Parameter 49 - [Peer Inp Enable]** is set to '1' (On).	Default: 0 Default: 0 Default: 0 Default: 0 Minimum: 0 Maximum: 255 Type: Read/Write Reset Required: No
48	**[Peer Inp Timeout]** Sets the timeout for a peer I/O connection. If the time is reached without the adapter receiving (consuming) a message, the adapter will respond with the action specified in **Parameter 43 - [Peer Flt Action]**. In an adapter receiving (consuming) peer I/O, the value of this parameter must be greater than the product of the value of **Parameter 54 - [Peer Out Time]** in the adapter transmitting (producing) peer I/O multiplied by the value of **Parameter 55 - [Peer Out Skip]** in the adapter transmitting (producing) peer I/O.	Default: 10.00 Seconds Minimum: 0.01 Seconds Maximum: 10.00 Seconds Type: Read/Write Reset Required: No
49	**[Peer Inp Enable]** Determines if peer I/O input is on or off.	Default: 0 = Off Values: 0 = Off 1 = On Type: Read/Write Reset Required: No
50	**[Peer Inp Status]** Displays the status of the consumed peer I/O input connection.	Default: 0 = Off Values: 0 = Off 1 = Waiting 2 = Running 3 = Faulted Type: Read Only

Parameter No.	Name and Description	Details
51 52	**[Peer A Output]** **[Peer B Output]** Selects the source of the peer I/O output data. The adapter transmits this data to the network. **Important:** Changes to these parameters are ignored when **Parameter 53 - [Peer Out Enable]** is set to '1' (On).	Default: 0 = Off Default: 0 = Off Values: 0 = Off 1 = Cmd/Ref 2 = Datalink A Input 3 = Datalink B Input 4 = Datalink C Input 5 = Datalink D Input 6 = Datalink A Output 7 = Datalink B Output 8 = Datalink C Output 9 = Datalink D Output Type: Read/Write Reset Required: No
53	**[Peer Out Enable]** Determines if peer I/O output is on or off.	Default: 0 = Off Values: 0 = Off 1 = On Type: Read/Write Reset Required: No
54	**[Peer Out Time]** Sets the minimum time that an adapter will wait when transmitting data to a peer. **Important:** Changes to these parameters are ignored when **Parameter 53 - [Peer Out Enable]** is set to '1' (On).	Default: 10.00 Seconds Minimum: 0.01 Seconds Maximum: 10.00 Seconds Type: Read/Write Reset Required: No
55	**[Peer Out Skip]** Sets the maximum time that an adapter will wait when transmitting data to a peer. The value of **Parameter 54 - [Peer Out Time]** is multiplied by the value of this parameter to set the time. **Important:** Changes to these parameters are ignored when **Parameter 53 - [Peer Out Enable]** is set to '1' (On).	Default: 1 Minimum: 1 Maximum: 16 Type: Read/Write Reset Required: No
56	**[Web Enable]** Displays the setting of the adapter Web Pages Switch (SW2) when the adapter was last reset.	Default: 0 = Disabled Values: 0 = Disabled 1 = Enabled Type: Read Only
57	**[Web Features]** Sets the access to the Web interface and Web configurable email notification feature.	Default: xxxx xxx0 Bit Values: 0 = Disabled 1 = Enabled Type: Read/Write Reset Required: No

Bit Definition	Not Used	Not Used	Not Used	Not Used	Not Used	Not Used	Not Used	E-mail Cfg
Default	x	x	x	x	x	x	x	1
Bit	7	6	5	4	3	2	1	0

Notes:

EtherNet/IP Objects

This appendix presents information about the EtherNet/IP objects that can be accessed using Explicit Messages. For information on the format of Explicit Messages and example ladder logic programs, refer to Chapter 6, Using Explicit Messaging.

Object	Class Code		Page
	Hex.	Dec.	
Identity Object	0x01	1	182
Assembly Object	0x04	4	183
Register Object	0x07	7	184
Parameter Object	0x0F	15	185
Parameter Group Object	0x10	16	188
Device Level Ring Object	0x47	71	189
Quality of Service Object	0x48	72	190
PCCC Object	0x67	103	190

Object	Class Code		Page
	Hex.	Dec.	
DPI Device Object	0x92	146	196
DPI Parameter Object	0x93	147	198
DPI Fault Object	0x97	151	204
DPI Alarm Object	0x98	152	206
DPI Diagnostic Object	0x99	153	207
DPI Time Object	0x9B	155	209
TCP/IP Interface Object	0xF5	245	211
Ethernet Link Object	0xF6	246	213

TIP See the EtherNet/IP specification for more information about EtherNet/IP objects. Information about the EtherNet/IP specification is available on the ODVA web site (http://www.odva.org).

Supported Data Types

Data Type	Description
BOOL	8-bit value -- low bit is true or false
BOOL[n]	Array of n bits
BYTE	8-bit unsigned integer
CONTAINER	32-bit parameter value - sign extended if necessary
DINT	32-bit signed integer
DWORD	32-bit unsigned integer
INT	16-bit signed integer
LWORD	64-bit unsigned integer
REAL	32-bit floating point
SHORT_STRING	1-byte length indicator + that many characters
SINT	8-bit signed integer
STRING[n]	Array of n characters
STRUCT	Structure name only - no size in addition to elements
TCHAR	8 or 16-bit character
UDINT	32-bit unsigned integer
UINT	16-bit unsigned integer
USINT	8-bit unsigned integer
WORD	16-bit unsigned integer

Identity Object

Class Code

Hexadecimal	Decimal
0x01	1

Services

	Implemented for:		
Service Code	Class	Instance	Service Name
0x05	No	Yes	Reset
0x0E	Yes	Yes	Get_Attribute_Single
0x01	Yes	Yes	Get_Attributes_All

Instances

The number of instances depends on the number of components in the device connected to the adapter. This number of components can be read in Instance 0, Attribute 2.

Instance	Description
0	Class
1	Host
2…15	Peripherals on Ports 1…14

Class Attributes

Attribute ID	Access Rule	Name	Data Type	Description
2	Get	Max Instance	WORD	Total number of instances

Instance Attributes

Attribute ID	Access Rule	Name	Data Type	Description
1	Get	Vendor ID	WORD	1 = Allen-Bradley
2	Get	Device Type	WORD	123
3	Get	Product Code	WORD	Number identifying product name and rating
4	Get	Revision: Major Minor	STRUCT of: BYTE BYTE	 Value varies Value varies
5	Get	Status	WORD	Bit 0 = Owned Bit 8 = Minor recoverable fault Bit 10 = Major recoverable fault
6	Get	Serial Number	DWORD	Unique 32-bit number
7	Get	Product Name	SHORT_STRING	Product name and rating
8	Get	State	USINT	Always returns 3 (Operational)
9	Get	Configuration Consistency Value	UINT	For the Host (Instance #1) the CCV is determined from the Host's NVS Checksum along with 20-COMM-ER's NVS Checksum. For DPI Peripherals (Instances 2-15) the CCV is from the peripheral's NVS Checksum only.

Assembly Object

Class Code

Hexadecimal	Decimal
0x04	4

Services

	Implemented for:		
Service Code	Class	Instance	Service Name
0x0E	Yes	Yes	Get_Attribute_Single
0x10	Yes	Yes	Set_Attribute_Single

Instances

Instance	Description
1	All I/O data being read from the DPI device (read-only)
2	All I/O data written to the DPI device (read/write)
191	Input only
192	Listen only

Class Attributes

Attribute ID	Access Rule	Name	Data Type	Description
1	Get	Revision	WORD	2
2	Get	Max Instance	WORD	2
100	Set	Control Timeout	WORD	Control timeout in seconds

Instance Attributes

Attribute ID	Access Rule	Name	Data Type	Description
1	Get	Number of Members	WORD	1
2	Get	Member List	ARRAY of STRUCT: WORD WORD Packed EPATH	 Size of member data Size of member path Member path
3	Conditional [1]	Data	Array of Bits	Data to be transferred
4	Get	Size	WORD	Size of assembly data in bits

(1) For instance 1, access rule for the data attribute is Get. For instance 2, it is Get/Set.

Important: Setting an assembly object attribute can be done only when the Control Timeout (class attribute 100) has been set to a non-zero value.

Register Object

Class Code

Hexadecimal	Decimal
0x07	7

Services

Service Code	Implemented for:		Service Name
	Class	Instance	
0x0E	Yes	Yes	Get_Attribute_Single
0x10	Yes	Yes	Set_Attribute_Single

Instances

Instance	Description
1	All I/O data being read from the DPI device (read-only)
2	All I/O data written to the DPI device (read/write)
3	Logic Status and Feedback data (read-only)
4	Logic Command and Reference data (read/write)
5	Datalink A (input data from device to scanner) (read only)
6	Datalink A (output data from scanner to device) (read/write)
7	Datalink B (input data from device to scanner) (read only)
8	Datalink B (output data from scanner to device) (read/write)
9	Datalink C (input data from device to scanner) (read only)
10	Datalink C (output data from scanner to device) (read/write)
11	Datalink D (input data from device to scanner) (read only)
12	Datalink D (output data from scanner to device) (read/write)
13	Logic Status and Feedback Data (read-only)
14	Mask [1] (read/write)
15	Logic Status (read-only)
16	Logic Command (read/write)
17	Feedback (read-only)
18	Reference (read/write)

(1) The mask command word is set to the value of the first word of the data where there are ones in the second word of the data. Command = (word 1 and not word 2) or (word 1 and word 2). This only controls specified bits in the Logic Command data to the DPI product and does not change the Reference value.

Class Attributes

Attribute ID	Access Rule	Name	Data Type	Description
100	Set	Control Timeout	WORD	Control timeout in seconds

Instance Attributes

Attribute ID	Access Rule	Name	Data Type	Description
1	Get	Bad Flag	BOOL	If set to 1, then attribute 4 may contain invalid data. 0 = good 1 = bad
2	Get	Direction	BOOL	Direction of data transfer 0 = Producer Register (drive to network) 1 = Consumer Register (network to drive)
3	Get	Size	WORD	Size of register data in bits
4	Conditional (1)	Data	ARRAY of BITS	Data to be transferred

(1) For this attribute, the Access Rule is Get if Direction = 0. The Access Rule is Set if Direction = 1.

Important: Setting a Register object attribute can be done only when the Control Timeout (class attribute 100) has been set to a non-zero value.

Parameter Object

Class Code

Hexadecimal	Decimal
0x0F	15

Services

Service Code	Implemented for:		Service Name
	Class	Instance	
0x01	Yes	Yes	Get_Attributes_All
0x05	Yes	No	Reset
0x0E	Yes	Yes	Get_Attribute_Single
0x10	Yes	Yes	Set_Attribute_Single
0x4B	No	Yes	Get_Enum_String

Instances

The number of instances depends on the number of parameters in the DPI drive. The adapter parameters are appended to the list of drive parameters. The total number of parameters can be read in Instance 0, Attribute 2.

Instance	Description
0	Class Attributes
1	Drive Parameter 1 Attributes
⋮	⋮
n	Last Drive Parameter n Attributes (1)
n + 1	Adapter Parameter 1 Attributes
⋮	⋮
n + m	Last Adapter Parameter m Attributes (2)

(1) n represents the number of parameters in the drive.

(2) m represents the number of parameters in the adapter.

Class Attributes

Attribute ID	Access Rule	Name	Data Type	Description
1	Get	Revision	WORD	1
2	Get	Max Instance	WORD	Number of parameters
8	Get	Parameter Class Descriptor	WORD	0 = False, 1 = True Bit 0 = Supports parameter instances Bit 1 = Supports full attributes Bit 2 = Must do NVS save command Bit 3 = Parameters are stored in NVS
9	Get	Configuration Assembly Instance	WORD	0
10	Set	Native Language	BYTE	0 = English 1 = French 2 = Spanish 3 = Italian 4 = German 5 = Japanese 6 = Portuguese 7 = Mandarin Chinese 8 = Russian 9 = Dutch

Instance Attributes

Attribute ID	Access Rule	Name	Data Type	Description
1	(1)	Parameter Value	(2)	(3)
2	Get	Link Path Size	BYTE	0 = No link specified n = The size of Attribute 3 in bytes
3	Get	Link Path		(4)
4	Get	Descriptor	WORD	0 = False, 1 = True Bit 1 = Supports ENUMs Bit 2 = Supports scaling Bit 3 = Supports scaling links Bit 4 = Read only Bit 5 = Monitor Bit 6 = Extended precision scaling
5	Get	Data Type	BYTE	1 = WORD (16-bit) 2 = UINT (16-bit) 3 = INT (16-bit) 5 = SINT 6 = DINT 8 = USINT 9 = UDINT 11 = REAL 22 = SHORT_STRING 24 = BYTE 25 = DWORD
6	Get	Data Size	BYTE	(3)
7	Get	Parameter Name String	SHORT_STRING	(3)
8	Get	Units String	SHORT_STRING	(3)
9	Get	Help String	SHORT_STRING	Null string
10	Get	Minimum Value	(2)	(3)
11	Get	Maximum Value	(2)	(3)
12	Get	Default Value	(2)	(3)
13	Get	Scaling Multiplier	WORD	(3)
14	Get	Scaling Divisor	WORD	(3)
15	Get	Scaling Base	WORD	(3)
16	Get	Scaling Offset	WORD	(3)
17	Get	Multiplier Link	WORD	(3)
18	Get	Divisor Link	WORD	(3)
19	Get	Base Link	WORD	(3)
20	Get	Offset Link	WORD	(3)
21	Get	Decimal Precision	BYTE	(3)

(1) Access rule is defined in Bit 4 of instance attribute 4 (0 = Get/Set, 1 = Get).

(2) Specified in descriptor, data type, and data size.

(3) Value varies based on parameter instance.

(4) See the EtherNet/IP specification for a description of the link path.

Parameter Group Object

Class Code

Hexadecimal	Decimal
0x10	16

Services

Service Code	Implemented for:		Service Name
	Class	Instance	
0x0E	Yes	Yes	Get_Attribute_Single
0x10	Yes	No	Set_Attribute_Single

Instances

The number of instances depends on the number of groups in the device. A group of adapter parameters is appended to the list of groups in the device. The total number of groups can be read in Instance 0, Attribute 2.

Number	Description
0	Class Attributes
1	Drive Group 1 Attributes
⋮	⋮
n	Last Drive Group Attributes
n + 1	Adapter Group Attributes

Class Attributes

Attribute ID	Access Rule	Name	Data Type	Description
1	Get	Parameter group version	WORD	1
2	Get	Max Instance	WORD	Total number of groups
8	Set	Native Language	BYTE	0 = English 1 = French 2 = Spanish 3 = Italian 4 = German 5 = Japanese 6 = Portuguese 7 = Mandarin Chinese 8 = Russian 9 = Dutch

Instance Attributes

Attribute ID	Access Rule	Name	Data Type	Description
1	Get	Group Name String	SHORT_STRING	Group name
2	Get	Number of Members in Group	WORD	Number of parameters in group
3	Get	1st Parameter Number in Group	WORD	(1)
4	Get	2nd Parameter Number in Group	WORD	(1)
n	Get	⋮	WORD	(1)

(1) Value varies based on group instance.

Device Level Ring Object

Class Code

Hexadecimal	Decimal
0x0047	71

Services

The following common services will be implemented for the DLR Object.

Service Code	Implemented for:		Service Name
	Class	Instance	
0x01	No	Yes	Get_Attributes_All
0x0E	Yes	Yes	Get_Attribute_Single

Instances

Get_Attribute_ALL is implemented for instances and Get_Attribute_Single for both class and instance.

The adapter supports one instance of the TCP/IP Interface object.

Number	Description
0	Class Attributes
1	Object Attributes

Class Attributes

The following class attributes will be supported for the DLR Object:

Attribute ID	Access Rule	Name	Data Type	Description
1	Get	Revision	UNIT	2

Instance Attributes

A single instance (instance 1) will be supported.

Attribute ID	Access Rule	Name	Data Type	Description
1	Get	Network Topology	USINT	0 = Linear 1 = Ring
2	Get	Network Status	USINT	0 = Normal 1 = Ring Fault 2 = Unexpected Loop Detect 3 = Partial Network Fault 4 = Rapid Fault/Restore Cycle
10	Get	Active Supervisor Address	STRUCT of: UDINT Array of 6 USINT	Ring supervisor
12	Get	Capability Flags	DWORD	0x00000002

Quality of Service Object

Class Code

Hexadecimal	Decimal
0x0048	72

Services

Service Code	Implemented for:		Service Name
	Class	Instance	
0x0E	Yes	Yes	Get_Attribute_Single
0x10	No	Yes	Set_Attribute_Single

Instances

Get_Attribute_Single is implemented on both class and instance. Set_Attribute_Single is implemented on instances. Get_Attribute_All is not implemented

The adapter supports one instance of the TCP/IP Interface object.

Number	Description
0	Class Attributes
1	Object Attributes

Class Attributes

Attribute ID	Access Rule	Name	Data Type	Value
1	Get	Revision	UINT	1

Instance Attributes

Attribute ID	Access Rule	Name	Data Type	Description
1	Set	802.1Q Tag Enable	USINT	0 = Disable (default) 1 = Enable
4	Set	DSCP Urgent	USINT	Default = 55
5	Set	DSCP Scheduled	USINT	Default = 47
6	Set	DSCP High	USINT	Default = 43
7	Set	DSCP Low	USINT	Default = 31
8	Set	DSCP Explici	USINT	Default = 27

PCCC Object

Class Code

Hexadecimal	Decimal
0x67	103

Services

Service Code	Implemented for:		Service Name
	Class	Instance	
0x4B	No	Yes	Execute_PCCC
0x4C	No	Yes	Execute_DH+

Instances

Supports Instance 1.

Class Attributes

Not supported.

Instance Attributes

Not supported.

Message Structure for Execute_PCCC

Request		
Name	**Data Type**	**Description**
Length	USINT	Length of requestor ID
Vendor	UINT	Vendor number of requestor
Serial Number	UDINT	ASA serial number of requestor
Other	Product Specific	Identifier of user, task, etc. on the requestor
CMD	USINT	Command byte
STS	USINT	0
TNSW	UINT	Transport word
FNC	USINT	Function code; not used for all CMDs.
PCCC_ params	ARRAY of USINT	CMD/FNC specific parameters

Response		
Name	**Data Type**	**Description**
Length	USINT	Length of requestor ID
Vendor	UINT	Vendor number of requestor
Serial Number	UDINT	ASA serial number of requestor
Other	Product Specific	Identifier of user, task, etc. on the requestor
CMD	USINT	Command byte
STS	USINT	Status byte
TNSW	UINT	Transport word. Same value as the request.
EXT_STS	USINT	Extended status; not used for all CMDs.
PCCC_ results	ARRAY of USINT	CMD/FNC specific result data

Message Structure for Execute_DH+

Request		
Name	**Data Type**	**Description**
DLink	UINT	Destination Link ID
DSta	USINT	Destination Station number
DUser	USINT	Destination “User” number
SLink	UINT	Source Link ID
SSta	USINT	Source Station number
SUser	USINT	Source User number
CMD	USINT	Command byte
STS	USINT	0
TNSW	UINT	Transport word
FNC	USINT	Function code; not used for all CMDs
PCCC_ params	ARRAY of USINT	CMD/FNC specific parameters

Response		
Name	**Data Type**	**Description**
DLink	UINT	Destination Link ID
DSta	USINT	Destination Station number
DUser	USINT	Destination “User” number
SLink	UINT	Source Link ID
SSta	USINT	Source Station number
SUser	USINT	Source User number
CMD	USINT	Command byte
STS	USINT	Status byte
TNSW	UINT	Transport word. Same value as the request.
EXT_STS	USINT	Extended status; not used for all CMDs
PCCC_ results	ARRAY of USINT	CMD/FNC specific result data

The adapter supports the following PCCC command types:

CMD	FNC	Description
0x06	0x03	Identify host and some status
0x0F	0x67	PLC-5 typed write
0x0F	0x68	PLC-5 typed read
0x0F	0x95	Encapsulate other protocol
0x0F	0xA2	SLC 500 protected typed read with 3 address fields
0x0F	0xAA	SLC 500 protected typed write with 3 address fields
0x0F	0xA1	SLC 500 protected typed read with 2 address fields
0x0F	0xA9	SLC 500 protected typed write with 2 address fields
0x0F	0x00	Word range read
0x0F	0x01	Word range write

For more information regarding PCCC commands, see DF1 Protocol and Command Set Manual, publication 1770-6.5.16.

N-Files

<table>
<tr><th>N-File</th><th colspan="4">Description</th></tr>
<tr><td>N40</td><td colspan="4">This N-file lets you use Emulated Block Transfer messages to read and write many types of DPI messages. To use Emulated Block Transfer messages, you send a Write message to N40:0…N40:63, wait until the adapter responds with a reply message, and then read the response data in N40:0…N40:63 with a Read message.

For details about Block Transfer messages and the data required for each byte in the N-File, see the Remote I/O Adapter User Manual, publication 20COMM-UM004.

Bits 15…8 are the Most Significant Byte. Bits 7…0 are the Least Significant Byte.</td></tr>
<tr><td></td><td colspan="2">Write</td><td colspan="2">Read</td></tr>
<tr><td>Bits</td><td>15</td><td>0</td><td>15</td><td>0</td></tr>
<tr><td>N40:0</td><td>0x00</td><td>Length (in Bytes)</td><td>0x00</td><td>Length (in Bytes)</td></tr>
<tr><td>N40:1</td><td>DPI Port</td><td>0x81</td><td>Status Size</td><td>Status Type</td></tr>
<tr><td>N40:2</td><td>0x00</td><td>CIP Service</td><td colspan="2" rowspan="5">Data
(length varies based on message)</td></tr>
<tr><td>N40:3</td><td colspan="2">CIP Class</td></tr>
<tr><td>N40:4</td><td colspan="2">CIP Instance</td></tr>
<tr><td>N40:5</td><td colspan="2">CIP Attribute</td></tr>
<tr><td>N40:6
⋮
N40:63</td><td colspan="2">Data
(length varies based on message)</td></tr>
<tr><td>N41</td><td colspan="4">This N-file lets you read and write control I/O messages. You can write control I/O messages only when all of the following conditions are true:
The adapter is not receiving I/O from a scanner. For example, there is no scanner on the network, the scanner is in idle (program) mode, the scanner is faulted, or the adapter is not mapped to the scanner.
The adapter is not receiving peer I/O from another adapter.
The value of N42:3 is set to a non-zero value.</td></tr>
<tr><td></td><td colspan="2">Write</td><td colspan="2">Read</td></tr>
</table>

N-File	Description	
N41:0	Logic Command Word	Logic Status Word
N41:1	Reference (least significant word)	Feedback (least significant word)
N41:2	Reference (most significant word)	Feedback (most significant word)
N41:3	Datalink A1 (least significant word)	Datalink A1 (least significant word)
N41:4	Datalink A1 (most significant word)	Datalink A1 (most significant word)
N41:5	Datalink A2 (least significant word)	Datalink A2 (least significant word)
N41:6	Datalink A2 (most significant word)	Datalink A2 (most significant word)
N41:7	Datalink B1 (least significant word)	Datalink B1 (least significant word)
N41:8	Datalink B1 (most significant word)	Datalink B1 (most significant word)
N41:9	Datalink B2 (least significant word)	Datalink B2 (least significant word)
N41:10	Datalink B2 (most significant word)	Datalink B2 (most significant word)
N41:11	Datalink C1 (least significant word)	Datalink C1 (least significant word)
N41:12	Datalink C1 (most significant word)	Datalink C1 (most significant word)
N41:13	Datalink C2 (least significant word)	Datalink C2 (least significant word)
N41:14	Datalink C2 (most significant word)	Datalink C2 (most significant word)
N41:15	Datalink D1 (least significant word)	Datalink D1 (least significant word)
N41:16	Datalink D1 (most significant word)	Datalink D1 (most significant word)
N41:17	Datalink D2 (least significant word)	Datalink D2 (least significant word)
N41:18	Datalink D2 (most significant word)	Datalink D2 (most significant word)
N42	This N-file lets you read and write some values configuring the port.	
N42:3	Time-out (read/write): Time (in seconds) allowed between messages to the N41 file. If the adapter does not receive a message in the specified time, it performs the fault action configured in its [Comm Flt Action] parameter. A valid setting is between 1 and 32767 seconds (5. . . 20 seconds is recommended).	
N42:7	Adapter Port Number (read only): DPI port on the drive to which the adapter is connected.	
N42:8	Peer Adapters (read only): Bit field of devices having DPI Peer capabilities.	

N45	This N-file lets you read and write control I/O messages. You can write control I/O messages only when all of the following conditions are true: The adapter is not receiving I/O from a scanner. For example, there is no scanner on the network, the scanner is in idle (program) mode, the scanner is faulted, or the adapter is not mapped to the scanner. The adapter is not receiving peer I/O from another adapter. The value of N42:3 is set to a non-zero value.	
	Write	*Read*
N45:0	Logic Command (least significant)	Logic Status (least significant)
N45:1	Logic Command (most significant)	Logic Status (most significant)
N45:2	Reference (least significant)	Feedback (least significant)
N45:3	Reference (most significant)	Feedback (most significant)
N45:4	DL From Net 01 (least significant)	DL To Net 01 (least significant)
N45:5	DL From Net 01 (most significant)	DL To Net 01 (most significant)
N45:6	DL From Net 02 (least significant)	DL To Net 02 (least significant)
N45:7	DL From Net 02 (most significant)	DL To Net 02 (most significant)
N45:8	DL From Net 03 (least significant)	DL To Net 03 (least significant)
N45:9	DL From Net 03 (most significant)	DL To Net 03 (most significant)
N45:10	DL From Net 04 (least significant)	DL To Net 04 (least significant)
N45:11	DL From Net 04 (most significant)	DL To Net 04 (most significant)
N45:12	DL From Net 05 (least significant)	DL To Net 05 (least significant)
N45:13	DL From Net 05 (most significant)	DL To Net 05 (most significant)
N45:14	DL From Net 06 (least significant)	DL To Net 06 (least significant)
N45:15	DL From Net 06 (most significant)	DL To Net 06 (most significant)
N45:16	DL From Net 07 (least significant)	DL To Net 07 (least significant)
N45:17	DL From Net 07 (most significant)	DL To Net 07 (most significant)
N45:18	DL From Net 08 (least significant)	DL To Net 08 (least significant)
N45:19	DL From Net 08 (most significant)	DL To Net 08 (most significant)
N45:20	DL From Net 09 (least significant)	DL To Net 09 (least significant)
N45:21	DL From Net 09 (most significant)	DL To Net 09 (most significant)
N45:22	DL From Net 10 (least significant)	DL To Net 10 (least significant)
N45:23	DL From Net 10 (most significant)	DL To Net 10 (most significant)
N45:24	DL From Net 11 (least significant)	DL To Net 11 (least significant)
N45:25	DL From Net 11 (most significant)	DL To Net 11 (most significant)
N45:26	DL From Net 12 (least significant)	DL To Net 12 (least significant)
N45:27	DL From Net 12 (most significant)	DL To Net 12 (most significant)
N45:28	DL From Net 13 (least significant)	DL To Net 13 (least significant)
N45:29	DL From Net 13 (most significant)	DL To Net 13 (most significant)
N45:30	DL From Net 14 (least significant)	DL To Net 14 (least significant)
N45:31	DL From Net 14 (most significant)	DL To Net 14 (most significant)
N45:32	DL From Net 15 (least significant)	DL To Net 15 (least significant)
N45:33	DL From Net 15 (most significant)	DL To Net 15 (most significant)
N45:34	DL From Net 16 (least significant)	DL To Net 16 (least significant)
N45:35	DL From Net 16 (most significant)	DL To Net 16 (most significant)

Important: If your controller or HMI platform supports CIP messaging, use the CIP Parameter object to get and set parameters.

N-File	Description
N150…N199	These N-files let you read and write parameter values in DPI Port 0 (the host PowerFlex drive) as 32-bit double words. You can interpret the data in various ways (for example, 32-bit real, 32-bit integer) To read a parameter, you need to send a message with two elements. For example, to read parameter 1, read two elements beginning at N150:2. As another example, to read parameters 2…6, read ten elements beginning at N150:4.
N150:0…1	Number of parameters in the drive
N150:2…249	Drive parameters 1…124
N151:0…249	Drive parameters 125…249
N152:0…249	Drive parameters 250…374
N153:0…249	Drive parameters 375…499
⋮	⋮
N199:0…249	Drive parameters 6125…6249

N-File	Description
N201…N212	These N-files let you read and write values to DPI and Host parameters in Ports 1…14 (for example, a HIM or adapter) as 32-bit double words. You can interpret the data in various ways (for example, 32-bit real, 32-bit integer) To read a parameter, you need to send a message with two elements. For example, to read parameter 1 in the peripheral connected to DPI port 1, read two elements beginning at N201:2. As another example, to read parameters 2…6 in the peripheral connected to DPI port 5 (the adapter), read ten elements beginning at N209:4.
N201:0…1	Number of parameters in the DPI peripheral at DPI port 1
N201:2…249	Parameters 1…124 in the DPI peripheral at DPI port 1
N202:0…249	Parameters 125…249 in the DPI peripheral at DPI port 1
N203:0…1	Number of parameters in the DPI peripheral at DPI port 2
N203:2…249	Parameters 1…124 in the DPI peripheral at DPI port 2
N204:0…249	Parameters 125…249 in the DPI peripheral at DPI port 2
N205:0…1	Number of parameters in the DPI peripheral at DPI port 3
N205:2…249	Parameters 1…124 in the DPI peripheral at DPI port 3
N206:0…249	Parameters 125…249 in the DPI peripheral at DPI port 3
N207:0…1	Number of parameters in the DPI peripheral at DPI port 4
N207:2…249	Parameters 1…124 in the DPI peripheral at DPI port 4
N208:0…249	Parameters 125…249 in the DPI peripheral at DPI port 4
N209:0…1	Number of parameters in the DPI peripheral at DPI port 5
N209:2…249	Parameters 1…124 in the DPI peripheral at DPI port 5
N210:0…249	Parameters 125…249 in the DPI peripheral at DPI port 5
N211:0…1	Number of parameters in the DPI peripheral at DPI port 6
N211:2…249	Parameters 1…124 in the DPI peripheral at DPI port 6
N212:0…249	Parameters 125…249 in the DPI peripheral at DPI port 6
The following N-Files are supported only when the adapter is used with a PowerFlex 750-Series drive.	
N213:0…1	Number of parameters in the DPI peripheral at DPI port 7
N213:2…249	Parameters 1…124 in the DPI peripheral at DPI port 7
N214:0…249	Parameters 125…249 in the DPI peripheral at DPI port 7
N215:0…1	Number of parameters in the DPI peripheral at DPI port 8
N215:2…249	Parameters 1…124 in the DPI peripheral at DPI port 8
N216:0…249	Parameters 125…249 in the DPI peripheral at DPI port 8
N217:0…1	Number of parameters in the DPI peripheral at DPI port 9
N217:2…249	Parameters 1…124 in the DPI peripheral at DPI port 9
N218:0…249	Parameters 125…249 in the DPI peripheral at DPI port 9
N219:0…1	Number of parameters in the DPI peripheral at DPI port 10
N219:2…249	Parameters 1…124 in the DPI peripheral at DPI port 10
N220:0…249	Parameters 125…249 in the DPI peripheral at DPI port 10
N221:0…1	Number of parameters in the DPI peripheral at DPI port 11
N221:2…249	Parameters 1…124 in the DPI peripheral at DPI port 11
N222:0…249	Parameters 125…249 in the DPI peripheral at DPI port 11
N223:0…1	Number of parameters in the DPI peripheral at DPI port 12
N223:2…249	Parameters 1…124 in the DPI peripheral at DPI port 12
N224:0…249	Parameters 125…249 in the DPI peripheral at DPI port 12
N225:0…1	Number of parameters in the DPI peripheral at DPI port 13
N225:2…249	Parameters 1…124 in the DPI peripheral at DPI port 13
N226:0…249	Parameters 125…249 in the DPI peripheral at DPI port 13
N227:0…1	Number of parameters in the DPI peripheral at DPI port 14
N227:2…249	Parameters 1…124 in the DPI peripheral at DPI port 14
N228:0…249	Parameters 125…249 in the DPI peripheral at DPI port 14

DPI Device Object

Class Code

Hexadecimal	Decimal
0x92	146

Services

Service Code	Implemented for:		Service Name
	Class	Instance	
0x0E	Yes	Yes	Get_Attribute_Single
0x10	Yes	Yes	Set_Attribute_Single

Instances

The number of instances depends on the number of components in the device. The total number of components can be read in Instance 0, Class Attribute 4.

Instances (Hex.)	(Dec.)	Device
0x0000…0x3FFF	0…16383	Host
0x4000…0x43FF	16384…17407	Adapter
0x4400…0x47FF	17408…18431	DPI Port 1
0x4800…0x4BFF	18432…19455	DPI Port 2
0x4C00…0x4FFF	19456…20479	DPI Port 3
0x5000…0x53FF	20480…21503	DPI Port 4
0x5400…0x57FF	21504…22527	DPI Port 5
0x5800…0x5BFF	22528…23551	DPI Port 6
0x5C00…0x5FFF (1)	22552…24575	DPI Port 7
0x6000…0x63FF (1)	24576…25599	DPI Port 8
0x6400…0x67FF (1)	25600…26623	DPI Port 9
0x6800…0x6BFF (1)	26624…27647	DPI Port 10
0x6C00…0x6FFF (1)	27648…28671	DPI Port 11
0x7000…0x73FF (1)	28672…29695	DPI Port 12
0x7400…0x77FF (1)	29696…30719	DPI Port 13
0x7800…0x7BFF (1)	30720…31743	DPI Port 14

Example	Description
0	Class Attributes (Drive)
1	Drive Component 1
2	Drive Component 2
⋮	⋮
16384	Class Attributes (Adapter)
16385	Adapter Component 1
⋮	⋮

(1) These instances are supported only when the adapter is used with a PowerFlex 750-Series drive.

Class Attributes

Attribute ID	Access Rule	Name	Data Type	Description
0	Get	Family Code	BYTE	0x00 = DPI Peripheral 0x30 = PowerFlex 70 0x34 = PowerFlex 700H 0x38, 0x39, or 0x3A= PowerFlex 700 0x40 = PowerFlex 7000 0x48, 0x49, or 0x4A = PowerFlex 700S 0x5A = SMC Flex 0x68, 0x69, or 0x6A = PowerFlex 700VC 0x90 = PowerFlex 753/755 0xA0 = 20-750-xxx Option Module 0xFF = HIM
1	Get	Family Text	STRING[16]	Text identifying the device.

Attribute ID	Access Rule	Name	Data Type	Description
2	Set	Language Code	BYTE	0 = English 1 = French 2 = Spanish 3 = Italian 4 = German 5 = Japanese 6 = Portuguese 7 = Mandarin Chinese 8 = Russian 9 = Dutch
3	Get	Product Series	BYTE	1 = A 2 = B …
4	Get	Number of Components	BYTE	Number of components (for example, main control board, I/O boards, and so forth) in the device.
5	Set	User Definable Text	STRING[16]	Text identifying the device with a user-supplied name.
6	Get	Status Text	STRING[12]	Text describing the status of the device.
7	Get	Configuration Code	BYTE	Identification of variations.
8	Get	Configuration Text	STRING[16]	Text identifying a variation of a family device.
9	Get	Brand Code	WORD	0x0001 = Allen-Bradley
11	Get	NVS Checksum	WORD	Checksum of the Non-Volatile Storage in a device.
12	Get	Class Revision	WORD	2 = DPI
13	Get	Character Set Code	BYTE	0 = SCANport HIM 1 = ISO 8859-1 (Latin 1) 2 = ISO 8859-2 (Latin 2) 3 = ISO 8859-3 (Latin 3) 4 = ISO 8859-4 (Latin 4) 5 = ISO 8859-5 (Cyrillic) 6 = ISO 8859-6 (Arabic) 7 = ISO 8859-7 (Greek) 8 = ISO 8859-8 (Hebrew) 9 = ISO 8859-9 (Turkish) 10 = ISO 8859-10 (Nordic) 255 = ISO 10646 (Unicode)
14	Get	Product Option Support	BOOL[64]	
15	Get	Languages Supported	STRUCT of: BYTE BYTE[n]	 Number of Languages Language Codes (see Class Attribute 2)
16	Get	Date of Manufacture	STRUCT of: WORD BYTE BYTE	 Year Month Day
17	Get	Product Revision	STRUCT of: BYTE BYTE	 Major Firmware Release Minor Firmware Release
18	Get	Serial Number	DWORD	Value between 0x00000000 and 0xFFFFFFFF
19	Set	Language Selected	BYTE	0 = Default (HIM will prompt at start up) 1 = Language was selected (no prompt)
20	Set	Customer-Generated Firmware	STRING[36]	GUID (Globally Unique Identifier) identifying customer firmware flashed into the device.
30	Get	International Status Text	STRINGN	Text describing the status of device with support for Unicode.
31	Get/Set	International User Definable Text	STRINGN	Text identifying the device with a user-supplied name with support for Unicode.

Attribute ID	Access Rule	Name	Data Type	Description
34	Get	Key Information	STRUCT of: DWORD DWORD WORD WORD WORD BYTE BYTE BYTE BYTE BYTE BYTE[16]	 Rating Code Device Serial Number Customization Code Customization Revision Brand Code Family Code Config Code Language Code Major Revision Minor Revision Customer-Generated Firmware UUID
35	Get	NVS CRC	DWORD	A 32-bit CRC of the Non-Volatile Storage in a device.
39	Get	SI Driver Code	WORD	Code identifying the protocol between the device and host.
128	Get	Customization Code	WORD	Code identifying the customized device.
129	Get	Customization Revision Number	WORD	Revision of the customized device.
130	Get	Customization Device Text	STRING[32]	Text identifying the customized device.

Instance Attributes

Attribute ID	Access Rule	Name	Data Type	Description
3	Get	Component Name	STRING[32]	Name of the component
4	Get	Component Firmware Revision	STRUCT of: BYTE BYTE	 Major Revision Minor Revision
8	Get	Component Serial Number	DWORD	Value between 0x00000000 and 0xFFFFFFFF
9	Get	International Component Name	STRINGN	Name of the component with support for Unicode.

DPI Parameter Object

Class Code

Hexadecimal	Decimal
0x93	147

To access 'Host Config' parameters, use the HOST DPI Parameter Object (Class code 0x9F).

Instances

The number of instances depends on the number of parameters in the device. The total number of parameters can be read in Instance 0, Attribute 0.

Instances (Hex.)	(Dec.)	Device
0x0000…0x3FFF	0…16383	Host
0x4000…0x43FF	16384…17407	Adapter
0x4400…0x47FF	17408…18431	DPI Port 1
0x4800…0x4BFF	18432…19455	DPI Port 2
0x4C00…0x4FFF	19456…20479	DPI Port 3
0x5000…0x53FF	20480…21503	DPI Port 4
0x5400…0x57FF	21504…22527	DPI Port 5
0x5800…0x5BFF	22528…23551	DPI Port 6
0x5C00…0x5FFF (1)	23552…24575	DPI Port 7
0x6000…0x63FF (1)	24576…25599	DPI Port 8
0x6400…0x67FF (1)	25600…26623	DPI Port 9

Example	Description
0	Class Attributes (Drive)
1	Drive Parameter 1 Attributes
2	Drive Parameter 2 Attributes
⋮	⋮
16384	Class Attributes (Adapter)
16385	Adapter Parameter 1 Attributes
⋮	⋮

Instances (Hex.)	(Dec.)	Device
0x6800…0x6BFF (1)	26624…27647	DPI Port 10
0x6C00…0x6FFF (1)	27648…28671	DPI Port 11
0x7000…0x73FF (1)	28672…29695	DPI Port 12
0x7400…0x77FF (1)	29696…30719	DPI Port 13
0x7800…0x7BFF (1)	30720…31743	DPI Port 14

Example	Description

(1) These instances are supported only when the adapter is used with a PowerFlex 750-Series drive.

Class Attributes

Attribute ID	Access Rule	Name	Data Type	Description
0	Get	Number of Instances	WORD	Number of parameters in the device
1	Set	Write Protect Password	WORD	0 = Password disabled n = Password
2	Set	NVS Command Write	BYTE	0 = No Operation 1 = Store values in active memory to NVS 2 = Load values in NVS to active memory 3 = Load default values to active memory
3	Get	NVS Parameter Value Checksum	WORD	Checksum of all parameter values in a user set in NVS
4	Get	NVS Link Value Checksum	WORD	Checksum of parameter links in a user set in NVS
5	Get	First Accessible Parameter	WORD	First parameter available if parameters are protected by passwords. A '0' indicates all parameters are protected.
7	Get	Class Revision	WORD	2 = DPI
8	Get	First Parameter Processing Error	WORD	The first parameter that has been written with a value outside of its range. A '0' indicates no errors.
9	Set	Link Command	BYTE	0 = No Operation 1 = Clear All Parameter Links (This does not clear links to function blocks.)

Instance Attributes

Attribute ID	Access Rule	Name	Data Type	Description
6	Get	DPI Offline Read Full	STRUCT of: BOOL[32] CONTAINER CONTAINER CONTAINER STRING[16] STRING[4] WORD WORD WORD WORD WORD WORD BYTE BYTE WORD WORD CONTAINER WORD WORD WORD INT	 Descriptor Offline minimum value Offline maximum value Offline default value Parameter name Offline parameter units Online minimum parameter instance Online maximum parameter instance Online default parameter instance Multiple parameter instance Divisor parameter instance Base parameter instance Offset parameter instance Formula number Pad byte (always zero) Help instance Pad word (always a value of zero) Parameter value Multiplier Divisor Base Offset
7	Get	DPI Online Read Full	STRUCT of: BOOL[32] CONTAINER(1) CONTAINER CONTAINER CONTAINER WORD WORD STRING[4] WORD WORD WORD INT BYTE[3] BYTE STRING[16]	 Descriptor (see page 202) Parameter value Minimum value Maximum value Default value Next parameter Previous parameter Units (for example, Amp, Hz) Multiplier (2) Divisor (2) Base (2) Offset (2) Link (source of the value) (0 = no link) Always zero (0) Parameter name
8	Get	DPI Descriptor	BOOL[32]	Descriptor (see page 202)
9	Get/Set	DPI Parameter Value	Various	Parameter value in NVS. (3)
10	Get/Set	DPI RAM Parameter Value	Various	Parameter value in temporary memory. Valid only for DPI drives.
11	Get/Set	DPI Link	BYTE[3]	Link (parameter or function block that is the source of the value) (0 = no link)
12	Get	Help Object Instance	WORD	ID for help text for this parameter
13	Get	DPI Read Basic	STRUCT of: BOOL[32] CONTAINER CONTAINER CONTAINER CONTAINER STRING[16] STRING[4]	 Descriptor (see page 202) Parameter value Minimum value Maximum value Default value Parameter name Units (for example, Amp, Hz)
14	Get	DPI Parameter Name	STRING[16]	Parameter name
15	Get	DPI Parameter Alias	STRING[16]	Customer supplied parameter name.
16	Get	Parameter Processing Error	BYTE	0 = No error 1 = Value is less than the minimum 2 = Value is greater than the maximum

Attribute ID	Access Rule	Name	Data Type	Description
18	Get	International DPI Offline Parameter Text	STRUCT of: STRINGN STRINGN	 International parameter name International offline units
19	Get	International DPI Online Parameter Text	STRUCT of: STRINGN STRINGN	 International parameter name International offline units
20	Get	International DPI Online Read Full	STRUCT of: BOOL[32] CONTAINER CONTAINER CONTAINER CONTAINER WORD WORD WORD WORD WORD INT BYTE[3] BYTE BOOL[32] STRINGN STRINGN	 Descriptor Parameter value Online minimum value Online maximum value Online default value Next Previous Multiplier Divisor Base Offset Link Pad word (always zero) Extended descriptor International parameter name International online parameter units
21	Get	DPI Extended Descriptor	DWORD	Extended descriptor (see page 203)
22	Get	International DPI Offline Read Full	STRUCT of: BOOL CONTAINER CONTAINER CONTAINER WORD WORD WORD WORD WORD WORD WORD BYTE BYTE WORD WORD CONTAINER WORD WORD WORD INT BOOL[32] STRINGN STRINGN	 Descriptor Offline minimum value Offline maximum value Offline default value Online minimum parameter instance Online maximum parameter instance Online default parameter instance Multiple parameter instance Divisor parameter instance Base parameter instance Offset parameter instance Formula number Pad byte (always zero) Help instance Pad word (always a value of zero) Parameter value Multiplier Divisor Base Offset Extended DPI descriptor International DPI parameter name International DPI offline parameter units

(1) A CONTAINER is a 32-bit block of data that contains the data type used by a parameter value. If signed, the value is sign extended. Padding is used in the CONTAINER to ensure that it is always 32-bits.

(2) This value is used in the formulas used to convert the parameter value between display units and internal units. See Formulas for Converting on page 204.

(3) Do **not** continually write parameter data to NVS. See the attention on page 105.

Descriptor Attributes

Bit	Name	Description
0	Data Type (Bit 1)	Right bit is least significant bit (0). 000 = BYTE used as an array of Boolean 001 = WORD used as an array of Boolean 010 = BYTE (8-bit integer) 011 = WORD (16-bit integer) 100 = DWORD (32-bit integer) 101 = TCHAR (8-bit (not unicode) or 16-bits (unicode) 110 = REAL (32-bit floating point value) 111 = Use bits 16, 17, 18
1	Data Type (Bit 2)	
2	Data Type (Bit 3)	
3	Sign Type	0 = Unsigned 1 = Signed
4	Hidden	0 = Visible 1 = Hidden
5	Not a Link Sink	0 = Parameter can sink a link 1 = Parameter cannot sink a link
6	Not Recallable	0 = Recallable from NVS 1 = Not Recallable from NVS
7	ENUM	0 = No ENUM text 1 = ENUM text
8	Writable	0 = Read only 1 = Read/write
9	Not Writable When Enabled	0 = Writable when enabled (for example, drive running) 1 = Not writable when enabled
10	Instance	0 = Parameter value is not a Reference to another parameter 1 = Parameter value refers to another parameter
11	Uses Bit ENUM Mask	This parameter instance supports the Bit ENUM Mask attribute. For more information, see the definition of the attribute.
12	Decimal Place (Bit 0)	Number of digits to the right of the decimal point. 0000 = 0 1111 = 15
13	Decimal Place (Bit 1)	
14	Decimal Place (Bit 2)	
15	Decimal Place (Bit 3)	
16	Extended Data Type (Bit 4)	Right bit is least significant bit (16). 000 = Reserved 001 = DWORD used as an array of Boolean 010 = Reserved 011 = Reserved 100 = Reserved 101 = Reserved 110 = Reserved 111 = Reserved
17	Extended Data Type (Bit 5)	
18	Extended Data Type (Bit 6)	
19	Parameter Exists	Used to mark parameters that are not available to network tools.
20	Not Used	Reserved
21	Formula Links	Indicates the Formula Data is derived from other parameters.
22	Access Level (Bit 1)	A 3-bit field used to control access to parameter data.
23	Access Level (Bit 2)	
24	Access Level (Bit 3)	
25	Writable ENUM	ENUM text: 0 = Read Only, 1 = Read/Write
26	Not a Link Source	0 = May be the source end of a link 1 = May not be the source end of a link
27	Enhanced Bit ENUM	Parameter supports enhanced bit ENUMs.
28	Enhanced ENUM	Parameter supports enhanced ENUMs.
29	Uses DPI Limits Object	Parameter uses the DPI LImits Object.
30	Extended Descriptor	Parameter uses Extended Descriptor bits, which can be obtained by reading the DPI Extended Descriptor attribute for this parameter.
31	Always Upload/Download	Parameter shall always be included in uploads and downloads.

Extended Descriptor Attributes

Bit	Name	Description
0	Indirect Mode	0 = Analog (selects entire parameters) 1 = Digital (selects individual bits within parameters)
1	Indirect Type 0	Analog input list (Instance 0xFFFF)
2	Indirect Type 1	Digital input list (Instance 0xFFFE)
3	Indirect Type 2	Feedback list (Instance 0xFFFD)
4	Indirect Type 3	Analog output list (Instance 0xFFFC)
5	Indirect Type 4	Digital output list (Instance 0xFFFB)
6	Indirect Type 5	Undefined (Instance 0xFFFA)
7	Indirect Type 6	Undefined (Instance 0xFFF9)
8	Indirect Type 7	Undefined (Instance 0xFFF8)
9	Indirect Type 8	Undefined (Instance 0xFFF7)
10	Indirect Type 9	Undefined (Instance 0xFFF6)
11	Indirect Type 10	Undefined (Instance 0xFFF5)
12	Indirect Type 11	Undefined (Instance 0xFFF4)
13	Indirect Type 12	Undefined (Instance 0xFFF3)
14	Indirect Type 13	Undefined (Instance 0xFFF2)
15	Indirect Type 14	Parameter-specific list
16	FP Max Decimals Bit 0	These four bits are used on REAL parameters only. They indicate the maximum number of decimal places to be displayed for small values. A value of 0 indicates to not limit the number of decimal places used.
17	FP Max Decimals Bit 1	
18	FP Max Decimals Bit 2	
19	FP Max Decimals Bit 1	
20	Extended Parameter Reference	0 = Not an Extended Parameter Reference 1 = Extended Parameter Reference An Extended Parameter Reference contains a reference to another parameter. The value is formatted the same as an analog mode Indirect Selector parameter (SSpppp, where SS = slot number of device to which this Extended Parameter Reference is pointing, and pppp = number of the parameter or diagnostic item to which this Extended Parameter Reference is pointing). Note that an Extended Parameter Reference can only select parameters unlike an Indirect Selector. An Extended Parameter Reference could be used to configure a Datalink or show the source of a Reference (among other uses).
21	Uses Rating Table Object	This parameter has rating-dependent defaults and limits that can be obtained from the Rating Table Object. The Offline Read Full will include the default value for the smallest rating and limits that will accommodate the full range of values allowed in the family of devices using this particular combination of Family Code and Config Code. The Online Read Full will include the rating-dependent default and limit values for this particular combination of Family Code, Config Code, and Rating Code.
22	Writable Referenced Parameter	This bit must be zero unless the parameter is an Extended Parameter Reference. If the parameter is an Extended Parameter Reference, then: 0 = The referenced parameter may be read-only or writable. 1 = The referenced parameter must always be writable (including while running).
23	Disallow Zero	This bit must be zero unless the parameter is an Indirect Selector or Extended Parameter Reference. If the parameter is an Indirect Selector or Extended Parameter Reference, then: 0 = Allow zero 1 = Disallow zero If this bit is cleared (indicating that a value of zero is allowed), the device must support the 'Zero Text' parameter attribute so that a software tool or HIM can obtain text from the Zero Text parameter attribute. If this bit is set (indicating that a value of zero is disallowed), a software tool or HIM will not allow the user to enter a value of zero.
24	Datalink Out	This bit is used by offline tools and indicates that this is a Datalink Out parameter. Bit 20 must also be set.
25	Datalink In	This bit is used by offline tools and indicates that this is a Datalink In parameter. Bits 20 and 22 must also be set.
26	Not Writable While IO Active	This parameter cannot be written if the I/O data being exchanged between the Host and the peripheral is valid.
27	Command Parameter	This parameter commands the drive to take an action, such as 'Reset Defaults' or 'Autotune', and then returns to a value of zero. Offline software tools will not allow setting this parameter to anything other than a value of zero. If an offline file contains a Command Parameter with a non-zero value, the offline software tool will change the value to zero. Note that command parameters cannot have values that do not return to zero.

Bit	Name	Description
28	Current Value Is Default	This bit identifies a parameter that will not change if a 'Reset Defaults' is commanded. For example, if a drive contains a Language parameter that is set to German, setting defaults will leave the parameter set to German. Likewise, if the parameter is set to French, setting defaults will leave the parameter set to French.
29	Use Zero Text	If the 'Disallow Zero' bit is set, this bit must be cleared. If the 'Disallow Zero' bit is cleared, then: 0 = Use Disabled Text parameter class attribute. 1 = Use Zero Text parameter instance attribute.
30-31	Reserved	Reserved

Formulas for Converting

Display Value = ((Internal Value + Offset) x Multiplier x Base) / (Divisor x $10^{\text{Decimal Places}}$)

Internal Value = ((Display Value x Divisor x $10^{\text{Decimal Places}}$) / (Multiplier x Base)) - Offset

Common Services

Service Code	Implemented for:		Service Name
	Class	Instance	
0x0E	Yes	Yes	Get_Attribute_Single
0x10	Yes	Yes	Set_Attribute_Single

Object Specific Services

Service Code	Implemented for:		Service Name	Allocation Size (in bytes)	
	Class	Instance		Par. Number	Par. Value
0x4B	Yes	No	Get_Attributes_Scattered	2	2
0x4C	Yes	No	Set_Attributes_Scattered	2	2

The table below lists the parameters for the Get_Attributes_Scattered and Set_Attributes_Scattered object-specific service:

Name	Data Type	Description
Parameter Number	DWORD	Parameter to read or write
Parameter Value	DWORD	Parameter value to read or write (zero when reading)

DPI Fault Object

Class Code

Hexadecimal	Decimal
0x97	151

Products such as PowerFlex drives use this object for faults. Adapters use this object for events.

Services

Service Code	Implemented for:		Service Name
	Class	Instance	
0x0E	Yes	Yes	Get_Attribute_Single
0x10	Yes	Yes	Set_Attribute_Single

Instances

The number of instances depends on the maximum number of faults or events supported in the queue. The maximum number of faults/events can be read in Instance 0, Attribute 2.

Instances (Hex.)	(Dec.)	Device
0x0000…0x3FFF	0…16383	Host
0x4000…0x43FF	16384…17407	Adapter
0x4400…0x47FF	17408…18431	DPI Port 1
0x4800…0x4BFF	18432…19455	DPI Port 2
0x4C00…0x4FFF	19456…20479	DPI Port 3
0x5000…0x53FF	20480…21503	DPI Port 4
0x5400…0x57FF	21504…22527	DPI Port 5
0x5800…0x5BFF	22528…23551	DPI Port 6

Example	Description
0	Class Attributes (Drive)
1	Most Recent Drive Fault
2	Second Most Recent Drive Fault
⋮	⋮
16384	Class Attributes (Adapter)
16385	Most Recent Adapter Event
⋮	⋮

Class Attributes

Attribute ID	Access Rule	Name	Data Type	Description
1	Get	Class Revision	WORD	Revision of object
2	Get	Number of Instances	WORD	Maximum number of faults/events that the device can record in its queue
3	Set	Fault Command Write	BYTE	0 = No Operation 1 = Clear Fault/Event 2 = Clear Fault/Event Queue 3 = Reset Device
4	Get	Fault Trip Instance Read	WORD	Fault that tripped the device. For adapters, this value is always 1 when faulted.
5	Get	Fault Data List	STRUCT of: BYTE BYTE WORD[n]	Number of faults/events in the queue. A '0' indicates the fault queue is empty.
6	Get	Number of Recorded Faults	WORD	Number of faults/events in the queue. A '0' indicates the fault queue is empty.
7	Get	Fault Parameter Reference	WORD	Number of faults/events in the queue. A '0' indicates the fault queue is empty.

Instance Attributes

Attribute ID	Access Rule	Name	Data Type	Description
0	Get	Full/All Information	STRUCT of WORD STRUCT of: BYTE BYTE STRING[16] STRUCT of: LWORD BOOL[16] WORD CONTAINER[n]	Fault code Fault source DPI port DPI Device Object Fault text Fault time stamp Timer value (0 = timer not supported) BOOL[0]: (0 = invalid data, 1 = valid data) BOOL[1]: (0 = elapsed time, 1 = real time) BOOL[2…15]: Not used Reserved Reserved
1	Get	Basic Information	STRUCT of WORD STRUCT of: BYTE BYTE STRUCT of: LWORD BOOL[16]	Fault code Fault source DPI port DPI Device Object Fault time stamp Timer value (0 = timer not supported) BOOL[0]: (0 = invalid data, 1 = valid data) BOOL[1]: (0 = elapsed time, 1 = real time) BOOL[2…15]: Not used
2	Get	International Fault Text	STRINGN	Text describing the fault with support for Unicode.

DPI Alarm Object

Class Code

Hexadecimal	Decimal
0x98	152

Products such as PowerFlex drives use this object for alarms or warnings. Adapters do not support this object.

Services

Service Code	Implemented for:		Service Name
	Class	Instance	
0x0E	Yes	Yes	Get_Attribute_Single
0x10	Yes	Yes	Set_Attribute_Single

Instances

The number of instances depends on the maximum number of alarms supported by the queue. The maximum number of alarms can be read in Instance 0, Attribute 2.

Instances (Hex.)	(Dec.)	Device
0x0000…0x3FFF	0…16383	Host

Only host devices can have alarms.

Example	Description
0	Class Attributes (Drive)
1	Most Recent Alarm
2	Second Most Recent Alarm
⋮	⋮

Class Attributes

Attribute ID	Access Rule	Name	Data Type	Description
1	Get	Class Revision	WORD	Revision of object
2	Get	Number of Instances	WORD	Maximum number of alarms that the device can record in its queue
3	Set	Alarm Command Write	BYTE	0 = No Operation 1 = Clear Alarm 2 = Clear Alarm Queue 3 = Reset Device
4	Get	Fault Data List	STRUCT of: BYTE BYTE WORD[n]	Reserved
5	Get	Number of Recorded Alarms	WORD	Number of alarms in the queue. A '0' indicates the alarm queue is empty.

Instance Attributes

Attribute ID	Access Rule	Name	Data Type	Description
0	Get	Full/All Information	STRUCT of WORD STRUCT of: BYTE BYTE STRING[16] STRUCT of: LWORD BOOL[16] WORD CONTAINER[n]	Alarm code Alarm source DPI port DPI Device Object Alarm text Alarm time stamp Timer value (0 = timer not supported) BOOL[0]: (0 = invalid data, 1 = valid data) BOOL[1]: (0 = elapsed time, 1 = real time) BOOL[2…15] Reserved Reserved Reserved
1	Get	Basic Information	STRUCT of WORD STRUCT of: BYTE BYTE STRUCT of: LWORD BOOL[16]	Alarm code Alarm source DPI port DPI Device Object Alarm time stamp Timer value (0 = timer not supported) BOOL[0]: (0 = invalid data, 1 = valid data) BOOL[1]: (0 = elapsed time, 1 = real time) BOOL[2…15] Reserved
2	Get	International Alarm Text	STRINGN	Text describing the alarm with support for Unicode.

DPI Diagnostic Object

Class Code

Hexadecimal	Decimal
0x99	153

Services

Service Code	Implemented for:		Service Name
	Class	Instance	
0x0E	Yes	Yes	Get_Attribute_Single
0x10	Yes	Yes	Set_Attribute_Single

Instances

The number of instances depends on the maximum number of diagnostic items in the device. The total number of diagnostic items can be read in Instance 0, Attribute 2.

Instances (Hex.)	(Dec.)	Device
0x0000…0x3FFF	0…16383	Host
0x4000…0x43FF	16384…17407	Adapter
0x4400…0x47FF	17408…18431	DPI Port 1
0x4800…0x4BFF	18432…19455	DPI Port 2
0x4C00…0x4FFF	19456…20479	DPI Port 3
0x5000…0x53FF	20480…21503	DPI Port 4
0x5400…0x57FF	21504…22527	DPI Port 5
0x5800…0x5BFF	22528…23551	DPI Port 6

Example	Description
0	Class Attributes (Drive)
1	Drive Diagnostic Item 1
2	Drive Diagnostic Item 2
⋮	⋮
16384	Class Attributes (Adapter)
16385	Adapter Diagnostic Item1
⋮	⋮

Class Attributes

Attribute ID	Access Rule	Name	Data Type	Description
1	Get	Class Revision	WORD	1
2	Get	Number of Instances	WORD	Number of diagnostic items in the device.
3	Get	ENUM Offset	WORD	DPI ENUM object instance offset

Instance Attributes

Attribute ID	Access Rule	Name	Data Type	Description
0	Get	Full/All Information	STRUCT of:	
			BOOL[32]	Descriptor (see page 202)
			CONTAINER (1)	Value
			CONTAINER	Minimum value
			CONTAINER	Maximum value
			CONTAINER	Default value
			WORD	Pad Word
			WORD	Pad Word
			STRING[4]	Units (for example, Amp, Hz)
			WORD	Multiplier (2)
			WORD	Divisor (2)
			WORD	Base (2)
			INT	Offset (2)
			DWORD	Link (source of the value) (0 = no link)
			STRING[16]	Diagnostic name text

Attribute ID	Access Rule	Name	Data Type	Description
1	Get/Set	Value	Various	Diagnostic item value
2	Get	International Diagnostic Item Text	STRUCT of:	
			STRINGN	Diagnostic name text
			STRINGN	Diagnostic units text
3	Get	International Full Read All	STRUCT of:	
			BOOL[32]	Descriptor
			CONTAINER	Value
			CONTAINER	Minimum
			CONTAINER	Maximum
			CONTAINER	Default
			WORD	Pad Word
			WORD	Pad Word
			WORD	Multiplier
			WORD	Divisor
			WORD	Base
			INT	Offset
			DWORD	Pad
			BOOL[32]	Extended descriptor
			STRINGN	Diagnostic name text
			STRINGN	Diagnostic units text

(1) A CONTAINER is a 32-bit block of data that contains the data type used by a value. If signed, the value is sign extended. Padding is used in the CONTAINER to ensure that it is always 32-bits.

(2) This value is used in the formulas used to convert the value between display units and internal units. See Formulas for Converting on page 204.

DPI Time Object

Class Code

Hexadecimal	Decimal
0x9B	155

Services

Service Code	Implemented for:		Service Name
	Class	Instance	
0x0E	Yes	Yes	Get_Attribute_Single
0x10	Yes	Yes	Set_Attribute_Single

Instances

The number of instances depends on the number of timers in the device. Instance 1 is always reserved for a real-time clock although a device may not support it. The total number of timers can be read in Instance 0, Attribute 2.

Instances (Hex.)	(Dec.)	Device
0x0000…0x3FFF	0…16383	Host
0x4000…0x43FF	16384…17407	Adapter
0x4400…0x47FF	17408…18431	DPI Port 1
0x4800…0x4BFF	18432…19455	DPI Port 2
0x4C00…0x4FFF	19456…20479	DPI Port 3
0x5000…0x53FF	20480…21503	DPI Port 4
0x5400…0x57FF	21504…22527	DPI Port 5
0x5800…0x5BFF	22528…23551	DPI Port 6

Example	Description
0	Class Attributes (Drive)
1	Real Time Clock (Predefined) (not always supported)
2	Timer 1
3	Timer 2
⋮	⋮

Class Attributes

Attribute ID	Access Rule	Name	Data Type	Description
1	Get	Class Revision	WORD	Revision of object
2	Get	Number of Instances	WORD	Number of timers in the object, excluding the real-time clock that is predefined.
3	Get	First Device Specific Timer	WORD	Instance of the first timer that is not predefined.
4	Set	Time Command Write	BYTE	0 = No Operation 1 = Clear all timers (Does not clear the real-time clock or read only timers)
5	Get	Number of Supported Time Zones	WORD	Number of time zones described in the Time Zone List attribute.
6	Get	Time Zone List	STRUCT	Identifies a time zone.
7	Get/Set	Active Time Zone ID	WORD	The ID field of the Time Zone List structure for the desired time zone.
8	Get	Active Time Zone Data	STRUCT of: INT BYTE BYTE BYTE BYTE BYTE BYTE INT BYTE BYTE BYTE BYTE BYTE BYTE	 Standard bias Standard month Standard day of week Standard week Standard hour Standard minute Standard second Daylight offset Daylight month Daylight day of week Daylight week Daylight hour Daylight minute Daylight second
9	Get/Set	Custom Time Zone Data	STRUCT of: INT BYTE BYTE BYTE BYTE BYTE BYTE INT BYTE BYTE BYTE BYTE BYTE BYTE	 Standard bias Standard month Standard day of week Standard week Standard hour Standard minute Standard second Daylight offset Daylight month Daylight day of week Daylight week Daylight hour Daylight minute Daylight second

Instance Attributes

Attribute ID	Access Rule	Name	Data Type	Description
0	Get	Read Full	STRUCT of: STRING[16] LWORD or STRUCT BOOL[16]	 Name of the timer Elapsed time in milliseconds unless timer is a real-time clock (see attribute 2) See attribute 3
1	Get	Timer Text	STRING[16]	Name of the timer
2	Get/Set	Timer Value	LWORD -or- STRUCT of: WORD BYTE BYTE BYTE BYTE BYTE BYTE	Elapsed time in milliseconds unless the timer is a real-time clock. Real-Time Clock Data: Milliseconds (0…999) Seconds (0…59) Minutes (0…59) Hours (0…23) Days (1…31) Months (1 = January, 12 = December) Years (since 1972)
3	Get	Timer Descriptor	BOOL[16]	BOOL[0]: (0 = invalid data, 1 = valid data) BOOL[1]: (0 = elapsed time, 1 = real time) BOOL[2…15]: Not used
4	Get	International Read Full	STRUCT of: STRINGN STRUCT BOOL[16]	 International timer text Timer value Timer descriptor
5	Get	International Timer Text	STRINGN	Name of this timer
6	Get	Clock Status	BOOL[32]	Identifies clock status
8	Get/Set	Number of Leap Seconds	INT	Identifies the current number of Leap Seconds.
9	Get	Clock Options	BOOL[32]	Identifies the optional functionality available in the device's System Clock.
10	Get/Set	Clock Options Enable	BOOL[32]	Identifies which of the clock's options are enabled.

TCP/IP Interface Object

Class Code

Hexadecimal	Decimal
0xF5	245

Services

Service Code	Implemented for:		Service Name
	Class	Instance	
0x0E	Yes	Yes	Get_Attribute_Single
0x10	No	Yes	Set_Attribute_Single

Instances

Get_Attribute_All is supported for instances. The adapter supports one instance of the TCP/IP Interface object.

Number	Description
0	Class Attributes
1	Object Attributes

Class Attributes

Attribute ID	Access Rule	Name	Data Type	Description
1	Get	Revision	WORD	The revision of this object

Instance Attributes

Attribute ID	Access Rule	Name	Data Type	Description
1	Get	Status of TCP/IP Network Interface	DWORD	
2	Get	Configuration Capability	DWORD	0x000000F4
3	Get/Set	Configuration Control	DWORD	0 = Configuration from NVS 2 = Configuration from DHCP
4	Get	Physical Link Object	STRUCT of: UINT Padded EPATH	 2 words 20 F6 24 01 (Enet Link Object instance 1)
5	Get/Set	Interface Configuration	STRUCT of: UDINT UDINT UDINT UDINT UDINT STRING	 IP Address Network Mask Gateway Address Primary DNS Secondary DNS Default Domain Name for not fully qualified host names
6	Get/Set	Host Name	STRING	Host name when using DHCP
8	Get/Set	TTL Value	USINT	Time to Live value for EtherNet/IP multicast packets
9	Get/Set	Multicast Config	Struct of: USINT USINT UINT UDINT	 Allocation Control Reserved Number of multicast addresses to allocate (1-4) Multicast starting address.
10	Get/Set	SelectAcd	BOOL	Activates the use of ACD
11		LastConflictDetected	Struct of: USINT USINT[6] USINT[28]	 AcdActivity RemoteMAC ArpPdu

Ethernet Link Object

Class Code

Hexadecimal	Decimal
0xF6	246

Services

The following common services will be implemented for the Ethernet Link Object.

Service Code	Implemented for:		Service Name
	Class	Instance	
0x0E	Yes	Yes	Get_Attribute_Single
0x10	No	Yes	Set_Attribute_Single
0x4C	No	Yes	Get_and_Clear

Instances

The adapter supports one instance of the TCP/IP Interface object.

Number	Description
0	Class Attributes
1	Object Attributes Ethernet Port 1
2	Object Attributes Ethernet Port 2

Class Attributes

The following class attributes will be supported.

Attribute ID	Access Rule	Name	Data Type	Value
1	Get	Revision	UINT	3
2	Get	Max. Instance	UINT	2
3	Get	Number of Instances	UINT	2

Instance Attributes

Two instances of the Ethernet Link Object will be supported.

Attribute ID	Access Rule	Name	Data Type	Description
1	Get	Interface Speed	UDINT	10 or 100 megabits per second (Mbs)
2	Get	Interface Flags	DWORD	See EtherNet/IP specifications
3	Get	Physical Address	Array of 6 USINTs	MAC address
4	Get	Interface Counters	STRUCT of: UDINT UDINT UDINT UDINT UDINT UDINT UDINT UDINT UDINT UDINT UDINT	 In Octets In Ucast packets In NUcast packets In Discards In Errors In Unknown Protos Out Octets Out Ucast packets Out NUcast packets Out Discards Out Errors

Attribute ID	Access Rule	Name	Data Type	Description
5	Get	Media Counters	STRUCT of: DWORD DWORD DWORD DWORD DWORD DWORD DWORD DWORD DWORD DWORD DWORD DWORD	RX = Received, TX = Transmitted RX frames not having integral number of octets long RX frames not passing FCS check TX frames having one collision TX frames having multiple collisions Number of times of SQE test error message TX Frames delayed first attempt by busy medium Collisions detected later than 512 bit-times in trans. TX frames failing due to excessive collisions TX frames failing due to intern MAC sublayer TX error Times of carrier sense condition loss during trans. RX frames exceeding the maximum frame size RX frames failing due to intern MAC sublayer RX error
6	Get/Set	Interface Control	Struct of: WORD UINT	Struct of: Control Bits Forced Interface Speed
7	Get	Interface Type	USINT	2 = Twisted-pair (e.g., 10Base-T, 100Base-TX, 1000Base-T, etc.)
8	Get	Interface State	USINT	0 = Unknown interface state 1 = The interface is enabled and is ready to send and receive data 2 = The interface is disabled 3 = The interface is testing
9	Get/Set	Admin State	USINT	1 = Enable the interface (default) 2 = Disable the interface.
10	Get	Interface Label	SHORT_STRING	Instance 1: LS 1 Instance 2: LS 2

Logic Command/Status Words

This appendix presents the definitions of the Logic Command and Logic Status words that are used for some products that can be connected to the adapter. If the Logic Command/Logic Status for the product that you are using is not listed, refer to your product's documentation.

PowerFlex 70/70EC, PowerFlex 700/700VC, and PowerFlex 700H Drives

Logic Command Word

Logic Bits																	
15	14	13	12	11	10	9	8	7	6	5	4	3	2	1	0	Command	Description
															x	Stop (1)	0 = Not Stop 1 = Stop
														x		Start (1)(2)	0 = Not Start 1 = Start
													x			Jog	0 = Not Jog (Par. 100) 1 = Jog
												x				Clear Faults	0 = Not Clear Faults 1 = Clear Faults
										x	x					Direction	00 = No Command 01 = Forward Command 10 = Reverse Command 11 = Hold Direction Control
									x							Local Control	0 = No Local Control 1 = Local Control
								x								MOP Increment	0 = Not Increment 1 = Increment
						x	x									Accel Rate	00 = No Command 01 = Accel Rate 1 Command (Par. 140) 10 = Accel Rate 2 Command (Par. 141) 11 = Hold Accel Rate
				x	x											Decel Rate	00 = No Command 01 = Decel Rate 1 Command (Par. 142) 10 = Decel Rate 2 Command (Par. 143) 11 = Hold Decel Rate
	x	x	x													Reference Select (3)	000 = No Command 001 = Ref A Select (Par. 90) 010 = Ref B Select (Par. 93) 011 = Preset 3 (Par. 103) 100 = Preset 4 (Par. 104) 101 = Preset 5 (Par. 105) 110 = Preset 6 (Par. 106) 111 = Preset 7 (Par. 107)
x																MOP Decrement	0 = Not Decrement 1 = Decrement

(1) A '0 = Not Stop' condition (logic 0) must first be present before a '1 = Start' condition will start the drive. The Start command acts as a momentary Start command. A '1' will start the drive, but returning to '0' **will not** stop the drive.

(2) This Start will not function if a digital input (parameters 361…366) is programmed for 2-Wire Control (option 7, 8 or 9).

(3) This Reference Select will not function if a digital input (parameters 361…366) is programmed for 'Speed Sel 1, 2 or 3' (option 15, 16 or 17). Note that Reference Select is 'Exclusive Ownership' – see drive User Manual for more information.

Logic Status Word

Logic Bits																	
15	14	13	12	11	10	9	8	7	6	5	4	3	2	1	0	Status	Description
															x	Ready	0 = Not Ready (Par. 214) 1 = Ready
														x		Active	0 = Not Active (Running) 1 = Active
													x			Command Direction	0 = Reverse 1 = Forward
												x				Actual Direction	0 = Reverse 1 = Forward
											x					Accel	0 = Not Accelerating 1 = Accelerating
										x						Decel	0 = Not Decelerating 1 = Decelerating
									x							Alarm	0 = No Alarm (Par. 211 & 212) 1 = Alarm
								x								Fault	0 = No Fault (Par. 243) 1 = Fault
							x									At Speed	0 = Not At Reference 1 = At Reference
				x	x	x										Local Control (1)	000 = Port 0 (TB) 001 = Port 1 010 = Port 2 011 = Port 3 100 = Port 4 101 = Port 5 110 = Port 6 111 = No Local
x	x	x	x													Reference	0000 = Ref A Auto (Par. 90) 0001 = Ref B Auto (Par. 93) 0010 = Preset 2 Auto 0011 = Preset 3 Auto 0100 = Preset 4 Auto 0101 = Preset 5 Auto 0110 = Preset 6 Auto 0111 = Preset 7 Auto 1000 = Term Blk Manual 1001 = DPI 1 Manual 1010 = DPI 2 Manual 1011 = DPI 3 Manual 1100 = DPI 4 Manual 1101 = DPI 5 Manual 1110 = DPI 6 Manual 1111 = Jog Ref

(1) See 'Owners' in drive User Manual for further information.

PowerFlex 700S Drives

Logic Command Word (Phase II Control)

Logic Bits																Command	Description
15	14	13	12	11	10	9	8	7	6	5	4	3	2	1	0		
															x	Normal Stop	0 = Not Normal Stop 1 = Normal Stop
														x		Start (1)	0 = Not Start 1 = Start
													x			Jog 1	0 = Not Jog using [Jog Speed 1] (Par. 29) 1 = Jog using [Jog Speed 1] (Par. 29)
												x				Clear Fault (2)	0 = Not Clear Fault 1 = Clear Fault
										x	x					Unipolar Direction	00 = No Command 01 = Forward Command 10 = Reverse Command 11 = Hold Direction Control
									x							Reserved	
								x								Jog 2	0 = Not Jog using [Jog Speed 2] (Par. 39) 1 = Jog using [Jog Speed 2] (Par. 39)
							x									Current Limit Stop	0 = Not Current Limit Stop 1 = Current Limit Stop
						x										Coast Stop	0 = Not Coast to Stop 1 = Coast to Stop
					x											Reserved	
				x												Reserved	
			x													Spd Ref Sel0	
		x														Spd Ref Sel1	
	x															Spd Ref Sel2	
x																Reserved	

Bits			
14	13	12	
0	0	0	= Spd Ref A (Par. 27)
0	0	1	= Spd Ref B (Par. 28)
0	1	0	= Preset 2 (Par. 15)
0	1	1	= Preset 3 (Par. 16)
1	0	0	= Preset 4 (Par. 17)
1	0	1	= Preset 5 (Par. 18)
1	1	0	= Preset 6 (Par. 19)
1	1	1	= Preset 7 (Par. 20)

(1) A Not Stop condition (logic bit 0 = 0, logic bit 8 = 0, and logic bit 9 = 0) must first be present before a 1 = Start condition will start the drive.

(2) To perform this command, the value must switch from '0' to '1'.

Logic Status Word (Phase II Control)

Logic Bits																	
15	14	13	12	11	10	9	8	7	6	5	4	3	2	1	0	**Status**	**Description**
															x	Active	0 = Not Active 1 = Active
														x		Running	0 = Not Running 1 = Running
													x			Command Direction	0 = Reverse 1 = Forward
												x				Actual Direction	0 = Reverse 1 = Forward
											x					Accel	0 = Not Accelerating 1 = Accelerating
										x						Decel	0 = Not Decelerating 1 = Decelerating
									x							Jogging	0 = Not Jogging 1 = Jogging
								x								Fault	0 = No Fault (Par. 323, 324, 325) 1 = Fault
							x									Alarm	0 = No Alarm (Par. 326, 327, 328) 1 = Alarm
						x										Flash Mode	0 = Not in Flash Mode 1 = In Flash Mode
					x											Run Ready	0 = Not Ready to Run (Par. 156) 1 = Ready to Run
				x												At Limit (1)	0 = Not At Limit (Par. 304) 1 = At Limit
			x													Tach Loss Sw	0 = Not Tach Loss Sw 1 = Tach Loss Sw
		x														At Zero Spd	0 = Not At Zero Speed 1 = At Zero Speed
	x															At Setpt Spd	0 = Not At Setpoint Speed 1= At Setpoint Speed
x																Enable	0 = Not Enabled 1 = Enabled

(1) See Parameter 304 - [Limit Status] in the PowerFlex 700S drive User Manual for a description of the limit status conditions.

SMC Flex Controllers SMC-50 Controllers

Logic Status Word

Bit #																Status	Description
15	14	13	12	11	10	9	8	7	6	5	4	3	2	1	0		
															X	Enabled	1 — Control Power Applied 0 — No Control Power
														X		Running	1 — Power Applied to Motor 0 — Power **not** Applied to Motor
													X			Phasing	1 — ABC Phasing 0 — CBA Phasing
												X				Phasing Active	1 — 3-phase is valid 0 — No valid 3-phase detected
											X					Starting (Accel)	1 — Performing a Start Maneuver 0 — Not Performing a Start Maneuver
										X						Stopping (Decel)	1 — Performing a Stop Maneuver 0 — Not Performing a Stop Maneuver
									X							Alarm	1 — Alarm Present 0 — No Alarm Present
								X								Fault	1 — Fault Condition Exists 0 — No Fault Condition
							X									At Speed	1 — Full Voltage Applied 0 — Not Full Voltage Applied
						X										Start/ Isolation	1 — Start/Isolation Contactor Enabled 0 — Start/Isolation Contactor Disabled
					X											Bypass	1 — External Bypass Contactor Enabled 0 — External Bypass Contactor Disabled
				X												Ready	1 — Ready 0 — Not Ready
			X													Option 1 Input	1 — Input Active 0 — Input Inactive
		X														Option 2 Input	1 — Input Active 0 — Input Inactive
—																—	Bits 14 and 15 — Not Used

Logic Command Word (Control)

Bit #																Status	Description
15	14	13	12	11	10	9	8	7	6	5	4	3	2	1	0		
															X	Stop	1 — Stop/Inhibit 0 — No Action
														X		Start	1 — Start 0 — No Action
													X			Option #1 Input	1 — Stop Maneuver/Inhibit 0 — No Action
												X				Clear Faults	1 — Clear Faults 0 — No Action
											X					Option #2 Input	1 — Perform Option 2 function 0 — No Action
—																—	Bits 5…10 — Not Used
				X												Aux Enable	1 — Use Aux 1…Aux 4 0 — Ignore Aux 1…Aux 4
			X													Aux 1	1 — Aux 1 Active 0 — Aux 1 Inactive
		X														Aux 2	1 — Aux 2 Active 0 — Aux 2 Inactive
	X															Aux 3	1 — Aux 3 Active 0 — Aux 3 Inactive
X																Aux 4	1 — Aux 4 Active 0 — Aux 4 Inactive

A

Adapter

Devices such as drives, controllers, and computers usually require a network communication adapter to provide a communication interface between them and a network such as EtherNet/IP. An adapter reads data on the network and transmits it to the connected device. It also reads data in the device and transmits it to the network.

The 20-COMM-ER EtherNet/IP adapter connects PowerFlex 7-Class drives and SMC controllers to an EtherNet/IP network. Adapters are sometimes also called ‘cards’, ‘embedded communication options’, ‘gateways’, ‘modules’, or ‘peripherals’.

B

BOOTP (Bootstrap Protocol)

BOOTP lets the adapter configure itself dynamically at restart if the network has a BOOTP server. The BOOTP server assigns the adapter a preconfigured IP address, a subnet mask, and a gateway address; therefore, you do not have to configure these with the parameters in the adapter. BOOTP can make it easier to administer an Ethernet network. A **free version** of the Rockwell Software® BOOTP Server can be obtained at http://www.software.rockwell.com/support/download/detail.cfm?ID=3390.

Bridge

A network device that can route messages from one network to another. A bridge also refers to a communications module in a ControlLogix controller that connects the controller to a network. See also Scanner.

C

CIP (Common Industrial Protocol)

CIP is the transport and application layer protocol used for messaging over EtherNet/IP, ControlNet, and DeviceNet networks. The protocol is used for implicit messaging (real-time I/O) and explicit messaging (configuration, data collection, and diagnostics).

Connected Components Workbench Software

The recommended tool for monitoring and configuring Allen-Bradley products and network communication adapters. It can be used on computers running various Microsoft Windows operating systems. You can obtain a **free copy** of Connect Components Workbench software at http://www.ab.com/support/abdrives/webupdate/software.html.

ControlFLASH

A **free** software tool used to electronically update firmware of Allen-Bradley products and network communication adapters. ControlFLASH software is downloaded automatically when the firmware revision file for the product being

updated is downloaded from the Allen-Bradley updates website to your computer.

Controller

A controller, also called programmable logic controller, is a solid-state control system that has a user-programmable memory for storage of instructions to implement specific functions such as I/O control, logic, timing, counting, report generation, communication, arithmetic, and data file manipulation. A controller consists of a central processor, input/output interface, and memory. See also Scanner.

D

Data Rate

The speed at which data is transferred on the EtherNet/IP network. You can set the adapter to a data rate of 10 Mbps Full-Duplex, 10 Mbps Half-Duplex, 100 Mbps Full-Duplex, or 100 Mbps Half-Duplex. If another device on the network sets or auto-negotiates the data rate, you can set the adapter to automatically detect the data rate.

Datalinks

A Datalink is a type of pointer used by PowerFlex 7-Class drives and SMC controllers to transfer data to and from the controller. Datalinks allow specified parameters to be read or written to without using explicit messages. When enabled, each Datalink consumes either four bytes or eight bytes in both the input and output image table of the controller. The drive determines the size of Datalinks.

Device Level Ring (DLR)

A protocol that allows multiported EtherNet device to be connected in a ring topology, enabling broken ring connection detection and network reconfirmation to linear topology.

DLR Announce Frame

Data frame sent by the ring supervisor in a ring network to announce transition from linear to ring or ring to linear configuration.

DLR Beacon Frame

Data frame sent by the ring supervisor in a ring network used to lost connections that break the ring.

DLR Ring Supervisor

A node that sends beacon and announce frames on a ring network to monitor and maintain connectivity by re-configuring the ring while nodes are disconnected or reconnected.

DPI (Drive Peripheral Interface)

A second generation peripheral communication interface used by various Allen-Bradley drives and power products, such as PowerFlex 7-Class drives and SMC controllers. It is a functional enhancement to SCANport.

DPI Peripheral

A device that provides an interface between DPI and a network or user. Peripheral devices are also referred to as 'adapters' or 'modules'. The 20-COMM-ER adapter, 1203-USB or 1203-SSS converter, and PowerFlex 7-Class HIMs (20-HIM-xxx) are examples of DPI peripherals.

DPI Product

A device that uses the DPI communications interface to communicate with one or more peripheral devices. For example, a motor drive such as a PowerFlex 7-Class drive is a DPI product. In this manual, a DPI product is also referred to as 'drive' or 'host'.

DriveExplorer Software

A tool for monitoring and configuring Allen-Bradley products and network communication adapters. It can be used on computers running various Microsoft Windows operating systems. DriveExplorer software, version 3.xx or later, can be used to configure this adapter and PowerFlex drives. This software tool has been discontinued and is now available as **freeware** at http://www.ab.com/support/abdrives/webupdate/software.html. There are no plans to provide future updates to this tool and the download is being provided 'as-is' for users that lost their DriveExplorer CD, or need to configure legacy products not supported by Connected Components Workbench software.

DriveTools SP Software

A software suite designed for running on various Microsoft Windows operating systems. This software suite provides a family of tools, including DriveExecutive software (version 3.01 or later), that you can use to program, monitor, control, troubleshoot, and maintain Allen-Bradley products. DriveTools SP software can be used with PowerFlex 7-Class and PowerFlex 4-Class drives, and legacy drives that implement the SCANport communication interface. Information about DriveTools SP software can be accessed at http://www.ab.com/drives/drivetools.

Duplex

Duplex describes the mode of communication. 'Full-duplex' communication lets a device exchange data in both directions at the same time. 'Half-duplex' communication lets a device exchange data only in one direction at a time. The duplex used by the adapter depends on the type of duplex that other network devices, such as switches, support.

E

EDS (Electronic Data Sheet) Files

Simple text files that are used by network configuration tools to describe products so that you can easily commission them on a network. EDS files describe a product device type and revision. EDS files for many Allen-Bradley products can be found at http://www.ab.com/networks/eds.

EtherNet/IP Network

EtherNet/IP (Industrial Protocol) is an open producer-consumer communication network based on the Ethernet standard (IEEE 802.3), TCP/IP, UDP/IP, and CIP. Designed for industrial communication, both I/O and explicit messages can be transmitted over the network. Each device is assigned a unique IP address and transmits data on the network. The number of devices that an EtherNet/IP network can support depends on the class of IP address. For example, a network with a Class C IP address can have 254 nodes.

General information about EtherNet/IP and the EtherNet/IP specification are maintained by the Open DeviceNet Vendor's Association (ODVA). ODVA is online at http://www.odva.org.

Explicit Messaging

Explicit Messages are used to transfer data that does not require continuous updates. They are typically used to configure, monitor, and diagnose devices over the network.

F

Fault Action

A fault action determines how the adapter and connected drive act when a communication fault (for example, a disconnected cable) occurs or when the controller is switched out of run mode. The former uses a communication fault action, and the latter uses an idle fault action.

Fault Configuration

When communication is disrupted (for example, a cable is disconnected), the adapter and PowerFlex drive can respond with a user-defined fault configuration. The user sets the data that is sent to the drive using specific fault configuration parameters in the adapter. When a fault action parameter is set to use the fault

configuration data and a fault occurs, the data from these parameters is sent as the Logic Command, Reference, and/or Datalinks.

G

Gateway

A device on a network that connects an individual network to a system of networks. When a node needs to communicate with a node on another network, a gateway transfers the data between the two networks. You need to configure the address for the gateway device in the adapter if you want the adapter to communicate with devices that are not on its network.

H

Hardware Address

Each Ethernet device has a unique hardware address (sometimes called a MAC address) that is 48 bits. The address appears as six digits separated by colons (for example, xx:xx:xx:xx:xx:xx). Each digit has a value between 0 and 255 (0x00 and 0xFF). This address is assigned in the hardware and cannot be changed. It is required to identify the device if you are using a BOOTP server.

HIM (Human Interface Module)

A device that can be used to configure and control a drive. PowerFlex 7-Class HIMs (catalog number 20-HIM-xx) can be used to configure PowerFlex 7-Class drives and their connected peripherals.

Hold Last

When communication is disrupted (for example, a cable is disconnected), the adapter and PowerFlex drive can respond by holding last. Hold last results in the drive receiving the last data received via the network connection before the disruption. If the drive was running and using the Reference from the adapter, it will continue to run at the same Reference.

I

Idle Action

An idle action determines how the adapter and connected drive act when the controller is switched out of run mode.

I/O Data

I/O data, sometimes called ‘implicit messages’ or ‘input/output’, is time-critical data such as a Logic Command and Reference. The terms ‘input’ and ‘output’ are defined from the controller’s point of view. Output is produced by the controller and consumed by the adapter. Input is produced by the adapter and consumed by the controller.

IP Addresses

A unique IP address identifies each node on an EtherNet/IP network. An IP address consists of 32 bits that are divided into four segments of one byte each. It appears as four decimal integers separated by periods (xxx.xxx.xxx.xxx). Each 'xxx' can have a decimal value from 0 to 255. For example, an IP address could be 192.168.0.1.

An IP address has two parts: a network ID and a host ID. The class of network determines the format of the address.

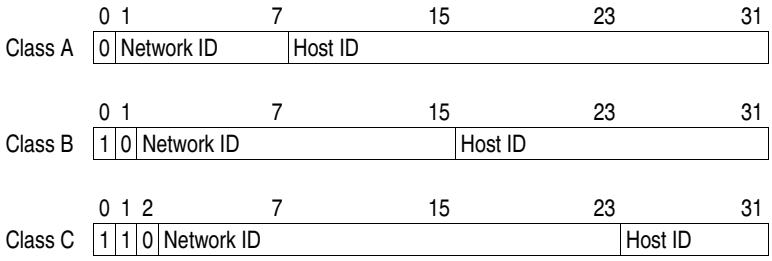

The number of devices on your EtherNet/IP network will vary depending on the number of bytes that are used for the network address. In many cases you are given a network with a Class C address, in which the first three bytes contain the network address (subnet mask = 255.255.255.0). This leaves 8 bits or 256 addresses on your network. Because two addresses are reserved for special uses (0 is an address for the network usually used by the router, and 255 is an address for broadcast messages to all network devices), you have 254 addresses to use on a Class C address block.

To ensure that each device on the Internet has a unique address, contact your network administrator or Internet Service Provider for unique fixed IP addresses. You can then set the unique IP address for the adapter by using a BOOTP server or by manually configuring parameters in the adapter. The adapter reads the values of these parameters only at powerup.

L

Logic Command/Logic Status

The Logic Command is used to control the PowerFlex 7-Class drive (for example, start, stop, and direction). It consists of one 16-bit word of output to the adapter from the network. The definitions of the bits in this word depend on the drive, and are shown in Appendix D.

The Logic Status is used to monitor the PowerFlex 7-Class drive (for example, operating state and motor direction). It consists of one 16-bit word of input from the adapter to the network. The definitions of the bits in this word depend on the drive, and are shown in Appendix D.

M

Master-Slave Hierarchy

An adapter configured for a master-slave hierarchy exchanges data with the master device. Usually, a network has one scanner which is the master device, and all other devices (for example, drives connected to EtherNet/IP adapters) are slave devices.

On a network with multiple scanners (called a multimaster hierarchy), each slave device must have a scanner specified as a master.

N

NVS (Nonvolatile Storage)

NVS is the permanent memory of a device. Devices such as the adapter and drive store parameters and other information in NVS so that they are not lost when the device loses power. NVS is sometimes called 'EEPROM'.

P

PCCC (Programmable Controller Communications Command)

PCCC is the protocol used by some controllers to communicate with devices on a network. Some software products (for example, DriveExplorer and DriveExecutive software) also use PCCC to communicate.

Peer-to-Peer Hierarchy

An adapter that is configured for a peer-to-peer hierarchy can exchange data with a device on the network that is not a scanner. This type of hierarchy can be set up so that a scanner configures or transmits data to one PowerFlex 7-Class drive which then sends the same configuration or data to other PowerFlex 7-Class drives on the network. To use a peer-to-peer hierarchy, you configure one adapter to transmit data (2 or 4 words) and one or more adapters to receive the data.

Ping

A message that is sent by a DPI product to its peripheral devices. They use the ping to gather data about the product, including whether it can receive messages and whether they can log in for control. On EtherNet/IP, a ping can be used to determine if a node exists.

PowerFlex 7-Class (Architecture Class) Drives

The Allen-Bradley PowerFlex 7-Class family of drives supports DPI and, at the time of publication, includes the PowerFlex 70, PowerFlex 700, PowerFlex 700H, PowerFlex 700S, PowerFlex 700L, and PowerFlex 7000 drives.

R

Reference/Feedback

The Reference is used to send a setpoint (for example, speed, frequency, and torque) to the drive. It consists of one word of output to the adapter from the

network. The size of the word (either a 16-bit word or 32-bit word) is determined by the drive.

Feedback is used to monitor the speed of the drive. It consists of one word of input from the adapter to the network. The size of the word (either a 16-bit word or 32-bit word) is determined by the drive.

RSLogix 5/500/5000 Software

RSLogix software is a tool for configuring and monitoring controllers to communicate with connected devices. It is a 32-bit application that runs on various Windows operating systems. Information about RSLogix software can be found at http://www.software.rockwell.com/rslogix.

S

Scanner

A scanner is a separate module (of a multi-module controller) or a built-in component (of a single-module controller) that provides communication with adapters connected to a network. See also Controller.

Status Indicators

LEDs that are used to report the status of the adapter, network, and drive. They are on the adapter and can be viewed on the front cover of the drive when the drive is powered.

Subnet Mask

An extension to the IP addressing scheme that lets you use a single network ID for multiple physical networks. A bit mask identifies the part of the address that specifies the network and the part of the address that specifies the unique node on the network. A ‘1’ in the subnet mask indicates the bit is used to specify the network. A ‘0’ in the subnet mask indicates that the bit is used to specify the node.

For example, a subnet mask on a network may appear as follows: 11111111 11111111 11111111 11000000 (255.255.255.192). This mask indicates that 26 bits are used to identify the network and 6 bits are used to identify devices on each network. Instead of a single physical Class C network with 254 devices, this subnet mask divides it into four networks with up to 62 devices each.

Switches

Network devices that provide virtual connections that help to control collisions and reduce traffic on the network. They are able to reduce network congestion by transmitting packets to an individual port only if they are destined for the connected device. In a control application, in which real time data access is critical, network switches may be required in place of hubs.

T

TCP (Transmission Control Protocol)

EtherNet/IP uses this protocol to transfer Explicit Messaging packets using IP. TCP guarantees delivery of data through the use of retries.

U

UDP (User Datagram Protocol)

EtherNet/IP uses this protocol to transfer I/O packets using IP. UDP provides a simple, but fast capability to send I/O messaging packets between devices. This protocol verifies that adapters transmit the most recent data because it does not use acknowledgements or retries.

UDDT (User-Defined Data Type)

A structure data type that you define during the development of an application (for example, to convert 32-bit REAL parameter data for written and read values to correctly display them in human readable format).

Update

The process of updating firmware in a device. The adapter and its connected PowerFlex 7-Class host drive and its peripherals can be updated using various Allen-Bradley software tools. See Updating the Adapter Firmware on page 44 for more information.

Z

Zero Data

When communication is disrupted (for example, a cable is disconnected), the adapter and drive can respond with zero data. Zero data results in the drive receiving zero as values for Logic Command, Reference, and Datalink data. If the drive was running and using the Reference from the adapter, it will stay running but at zero Reference.

A

adapter
- applying power **24**
- commissioning **26**
- compatible products **13**
- components **11**
- configuration tools **27**
- connecting to the drive **20**
- connecting to the network **23**
- definition **221**
- features **12**
- firmware updating **44**
- grounding **22**
- hardware address label **29**
- installation **17–26**
- IP address **29**, **32**
- mounting on the drive **22**
- parameters **171–179**
- resetting **43**
- specifications **169**
- using in a DPI External Comms Kit **167**
- viewing its status **44**
- web pages **153–??**

applying power to the adapter **24**
Assembly object **183**
attentions **15**

B

baud rate, *see data rate*
bit definitions of Logic Command/Status word for
- PowerFlex 70/700/700H drives **215**
- PowerFlex 700S drives **217**

BOOTP (Bootstrap Protocol)
- definition **221**
- disabling **32**
- free server application **221**
- using **29**

BOOTP parameter **171**
bridge **221**

C

cable, Ethernet **23**
cables
- DPI Internal Interface **20**, **21**

CIP (Common Industrial Protocol) **221**
classes of IP addresses **226**
Comm Flt Action parameter **174**
commissioning the adapter **26**
communications module, *see adapter*
compatible products **13**
components of the adapter **11**
configuration tools **27**
Connected Components Workbench software
- adapter configuration tool **14**, **27**
- definition/website **221**

connecting adapter to the
- drive **20**
- network **23**

ControlFLASH **221**
controller **222**
ControlLogix controller
- configuring the I/O **48**
- explicit messaging **108**
- using the I/O **88**

D

data rate
- definition **222**
- setting **34**

Datalink Size parameter **173**
Datalinks
- definition **222**
- in I/O image **80**
- using **86**

device-level ring (DLR)
- network example **23**

diagnostic items **146**
dimensions **170**
DPI
- connector on adapter **11**
- data rates **169**
- definition **223**
- Internal Interface cable **20**, **21**
- peripheral **223**
- products **13**, **223**

DPI Alarm object **206**
DPI Data Rate parameter **171**
DPI Device object **196**
DPI Diagnostic object **207**
DPI External Comms Kit - using adapter in **167**
DPI Fault object **204**

DPI I/O Act parameter **175**
DPI I/O Cfg parameter **174**
DPI Parameter object **198**
DPI Port parameter **171**
DPI Time object **209**
DriveExecutive software
  adapter configuration tool **14**, **27**
  definition/website **223**
DriveExplorer software
  adapter configuration tool **14**, **27**
  definition/website **223**
  free lite version **223**
drives, *see PowerFlex drives*
DriveTools SP software **223**
duplex communication mode
  definition **224**
  selecting **34**

E

EDS (Electronic Data Sheet) files **224**
EEPROM, *see Nonvolatile Storage (NVS)*
EMC Conformance **17**
EN Rate Act parameter **173**
EN Rate Cfg parameter **172**, **173**
environmental specifications **170**
equipment required **13**
Ethernet
  cable **23**
  connector on adapter **11**
Ethernet Link object **189**, **190**, **213**
EtherNet/IP
  data rates **169**
  example network for
    ControlLogix controller **48**
    MicroLogix 1100 controller **68**
  network definition **224**
  objects - list of **181**–??
  specification **224**
events
  clearing/viewing **149**
  list of **150**
explicit messaging
  about **106**
  configuring for
    ControlLogix controller **108**
    MicroLogix 1100/1400 controller **124**
  definition **224**
  performing **106**

F

fault action
  configuring the adapter for **41**
  definition **224**
fault configuration
  configuring the adapter for **42**
  definition **224**
faults, *see events*
features **12**
firmware revision **7**
firmware update
  definition **229**
  guidelines **44**
Flt Cfg A1-D2 In parameters **176**
Flt Cfg Logic parameter **175**
Flt Cfg Ref parameter **175**
full duplex, *see duplex*

G

gateway **225**
gateway address
  setting with BOOTP **29**
  setting with parameters **32**
Gateway Cfg 1-4 parameters **172**
grounding the adapter **22**

H

half duplex, *see duplex*
hardware address
  definition **225**
  in diagnostic item **148**
  on label **29**
HIM (Human Interface Module)
  accessing parameters with **28**
  definition **225**
  LCD model **28**
  LED model **28**

hold last
configuring the adapter for **41**
definition **225**
host IDs **226**

I

I/O
about **79**
configuring for
ControlLogix controller **48**
MicroLogix 1100/1400 controller **68**
configuring the adapter for **35**
definition **225**
understanding the I/O image **80**
using with
ControlLogix controller **88**
MicroLogix 1100/1400 controller **96**
PLC-5 controller **96**
SLC 500 controller **96**
Identity object **182**
idle action **225**
Idle Flt Action parameter **174**
installation
applying power to the adapter **24**
commissioning the adapter **26**
connecting to the drive **20**
connecting to the network **23**
preparing for **18**
Internal Interface cables
connecting to the adapter **21**
connecting to the drive **21**
illustration **21**
IP Addr Cfg 1-4 parameters **172**
IP address
definition/classes **226**
setting with BOOTP **29**
setting with parameters **32**

L

LCD HIM **28**
LED HIM **28**
LEDs, *see status indicators*
Link status indicator
troubleshooting with **145**
Logic Command/Status
bit definitions for
PowerFlex 70/700/700H drives **215**
PowerFlex 700S drives **217**
definition **226**
in I/O image for
ControlLogix controller **80**
PLC-5, SLC 500 or MicroLogix 1100 controllers **82**
using **84**

M

MAC address, *see hardware address*
manual
conventions **7**
related documentation **8**
website **8**
Master-Slave hierarchy
configuring adapter for **36**
definition **227**
mechanical dimensions **170**
messages, *see explicit messaging or I/O*
MicroLogix 1100/1400 controller
configuring the I/O **68**
explicit messaging **124**
limitations when using the I/O **68**
using the I/O **96**
mounting the adapter **22**
M-S Input parameter **176**
M-S Input parameter configurations **36**
M-S Output parameter **176**
M-S Output parameter configurations **36**

N

NET A status indicator
troubleshooting with **145**
NET B status indicator
locating **144**
network cable **23**
network IDs **226**
Network status indicator
troubleshooting with **145**
Non-Volatile Storage (NVS)
in adapter **27**
in drive **86**

Nonvolatile Storage (NVS)
definition **227**

O

objects - list of **181**–??
ODVA EtherNet/IP specification **224**

P

Parameter Group object **188**
Parameter object **185**
parameters
accessing **27**
convention **7**
list of **171**–**179**
numbering scheme **171**
restoring to factory-default settings **43**
PCCC (Programmable Controller Communications Command) **227**
PCCC object **190**
Peer A Input parameter **177**
Peer A Output parameter **179**
Peer B Input parameter **177**
Peer B Output parameter **179**
Peer Cmd Mask parameter **177**
Peer Flt Action parameter **177**
Peer Inp Addr 1-4 parameters **178**
Peer Inp Enable parameter **178**
Peer Inp Status parameter **178**
Peer Inp Timeout parameter **178**
Peer Out Enable parameter **179**
Peer Out Skip parameter **179**
Peer Out Time parameter **179**
Peer-to-Peer hierarchy
configuring adapter
to receive data **38**
to transmit data **37**
definition **227**
ping **227**
PLC-5 controller
limitations when using the I/O **68**
using the I/O **96**
PORT status indicator
locating **144**
troubleshooting with **144**
power consumption **169**
PowerFlex drives
compatible with adapter **13**
definition **227**
HIM **28**
installing adapter on **20**
preparing for an installation **18**
processor, *see controller*
programmable logic controller, *see controller*

Q

quick start **16**

R

Ref Adjust parameter **176**
Ref/Fdbk Size parameter **173**
Reference/Feedback
definition **227**
in I/O image for
ControlLogix controller **80**
PLC-5, SLC 500 or MicroLogix 1100 controllers **82**
setting an adjustment **41**
using **84**
Register object **184**
regulatory compliance **170**
related documentation **8**
requested packet interval **55**, **65**
Reset Module parameter **173**
ribbon cable, *see Internal Interface cable*
RSLinx Classic software
documentation **9**
using **47**
RSLogix 5/500/5000 software **228**

S

safety precautions **15**
scanner **228**
SLC 500 controller
limitations when using the I/O **68**
using the I/O **96**
specifications
adapter **169**
EtherNet/IP address **224**
EtherNet/IP subnet mask **228**

status indicators
definition **228**
Link **145**
NET A **145**
NET B **144**
Network **145**
normal operation **24**
PORT **144**
troubleshooting with **144**–??, **145**–??, **145**–??
understanding **143**
Subnet Cfg 1-4 parameters **172**
subnet mask
definition **228**
setting with BOOTP **29**
setting with parameters **32**
switches **228**

T

TCP (Transmission Control Protocol) **229**
TCP/IP Interface object **211**
technical support **8**
tools required **13**
troubleshooting **143**–**151**

U

UDDT (User-Defined Data Type) **229**
UDP (User Datagram Protocol) **229**

W

Web Enable parameter **179**
Web Features parameter **179**
web pages
enabling with parameter **42**
for the adapter **153**–??
website
BOOTP utility **221**
DriveExecutive software **223**
DriveExplorer software **223**
DriveTools SP software **223**
EDS files **224**
EtherNet/IP **224**
manuals **8**
ODVA (Open DeviceNet Vendor's Association) **224**
RSLogix 5/500/5000 software **228**
wiring, *see cable, Ethernet*

Z

zero data
configuring the adapter for **41**
definition **229**

U.S. Allen-Bradley Drives Technical Support - Tel: (1) 262.512.8176, Fax: (1) 262.512.2222, Email: support@drives.ra.rockwell.com, Online: www.ab.com/support/abdrives

www.rockwellautomation.com

Power, Control and Information Solutions Headquarters

Americas: Rockwell Automation, 1201 South Second Street, Milwaukee, WI 53204-2496 USA, Tel: (1) 414.382.2000, Fax: (1) 414.382.4444
Europe/Middle East/Africa: Rockwell Automation, Pegasus Park, De Kleetlaan 12a, 1831 Diegem, Belgium, Tel: (32) 2 663 0600, Fax: (32) 2 663 0640
Asia Pacific: Rockwell Automation, Level 14, Core F, Cyberport 3, 100 Cyberport Road, Hong Kong, Tel: (852) 2887 4788, Fax: (852) 2508 1846

Publication 20COMM-UM015B-EN-P - July 2013
Supercedes publication 20COMM-UM015A-EN-P — June 2013

Copyright © 2013 Rockwell Automation, Inc. All rights reserved. Printed in USA.

Series
A1F

Low Cost OEM Pressure Switch

Field Installable Weatherproof Enclosure

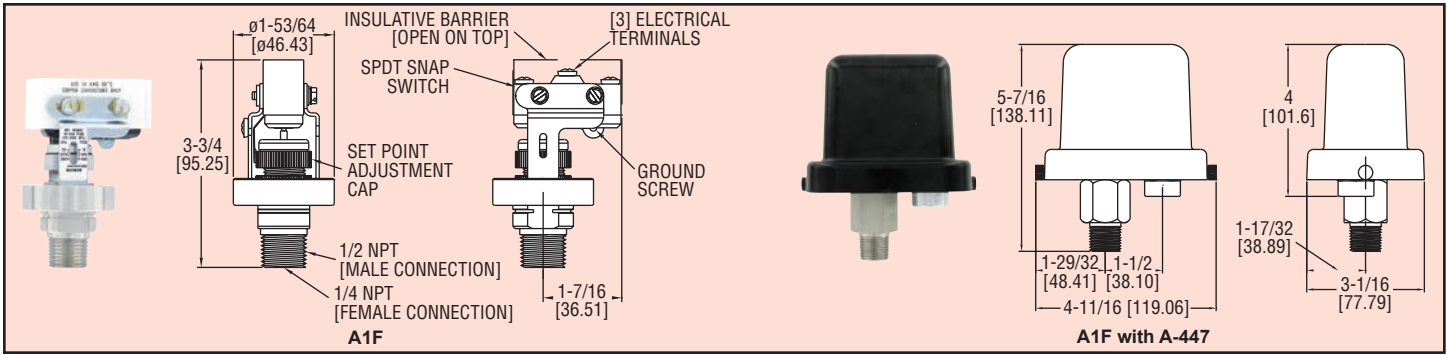

Low cost and precision made, the A1F Pressure Switch is ideal for OEM industrial applications. Wetted materials of 316 SS and fluorocarbon ensure great chemical compatibility with a wide range of process media. The open case style is perfect for panel mounting applications like pump skids. Field-installable weatherproof enclosure is available in polycarbonate offering a low cost weatherproof switch. Superior 15 A contact allows direct control of motors or pumps without the use of external relays, a true cost savings. Features include a convenient indicating scale for quick and easy field adjustment.

Model	Range	Deadband at Min Range	Deadband at Max Range
A1F-O-SS-1-1	2 to 15 (0.14 to 1.03)	2 (0.14)	3 (0.21)
A1F-O-SS-1-2	4 to 75 (0.28 to 5.17)	4 (0.27)	15 (1.0)
A1F-O-SS-1-3	8 to 225 (0.55 to 15.5)	8 (0.55)	25 (1.7)
A1F-O-SS-1-4	16 to 450 (1.1 to 31.0)	15 (1.0)	50 (3.5)

psig (bar)

ACCESSORY

A-447, Weatherproof enclosure; Easy field installation; Meets NEMA 4X, polycarbonate cover with 1/2″ NPT female conduit entry.

SPECIFICATIONS

Service: Compatible liquids and gases.
Wetted Materials: Pressure Chamber: 316 SS; Diaphragm: Fluorocarbon.
Temperature Limit: -40 to 175°F (-40 to 80°C).
Pressure Limits: 750 psig (51 bar).
Enclosure Rating: No rating for open construction. Installed properly within an optional A-447 enclosure meets NEMA 4X (IP66) standards.
Switch Type: SPDT snap switch.
Electrical Rating: 15 A @ 120/240/480 VAC; 1/8 HP @ 125 VAC; 1/4 HP @ 250 VAC.
Electrical Connection: Screw terminals.
Process Connection: 1/4″ female NPT and 1/2″ male NPT.
Mounting Orientation: Within 20° of vertical.
Set Point Adjustment: Knurled screw cap with indicating scale.
Deadband: Fixed. See deadband chart.
Weight: 10.5 oz (297 g).
Agency Approvals: CE, cUL, UL.

OPTION

Weatherproof enclosure. Optional A-447 enclosure factory installed. To order change "O" to "PC".
Example: A1F-PC-SS-1-1

Fliteway Technologies, Inc.

Treated Water Storage Tank

2129 East Birchwood Ave. Cudahy, WI 53110

(414) 483-5600 1-800-236-3580 FAX (414) 483-1957

See Groundwater Treatment Feed Tank Section

Fliteway Technologies, Inc.

Treated Water Pump Skid

2129 East Birchwood Ave. Cudahy, WI 53110

(414) 483-5600 1-800-236-3580 FAX (414) 483-1957

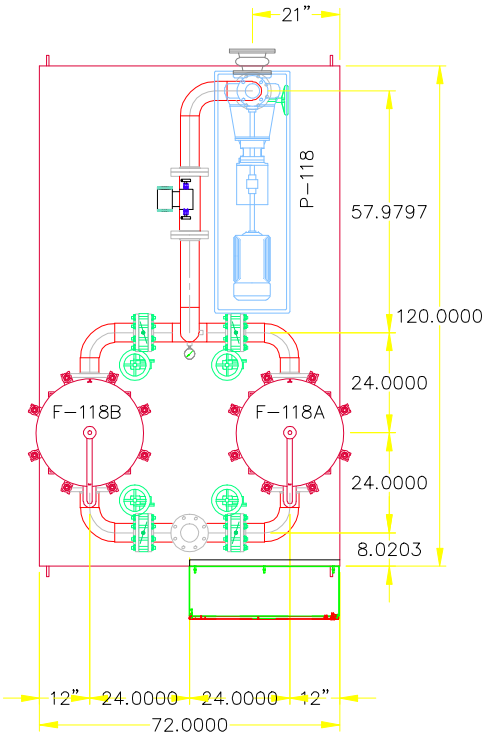

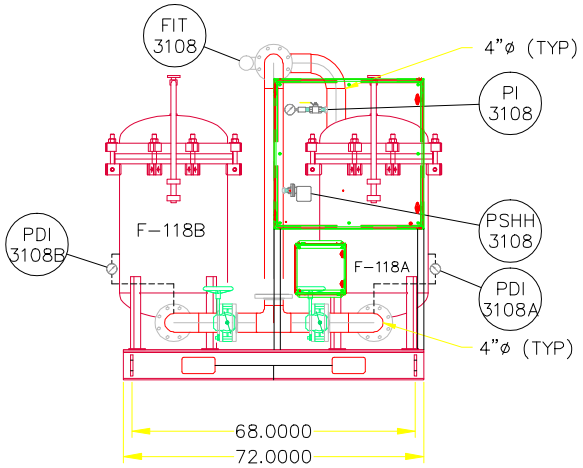

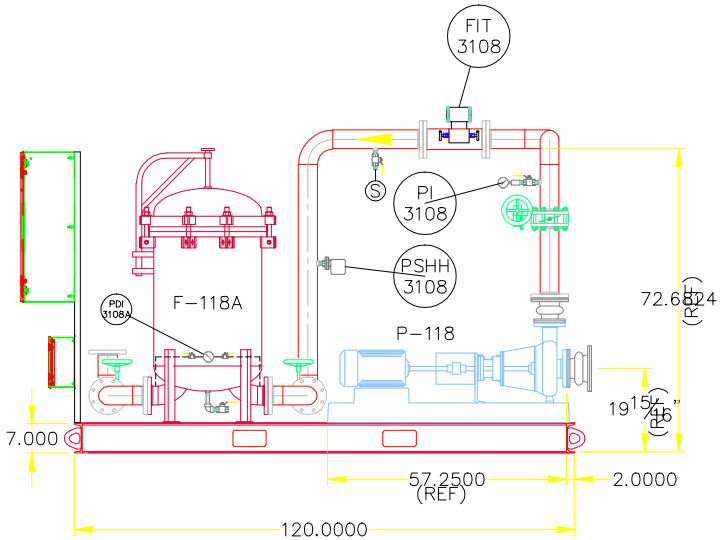

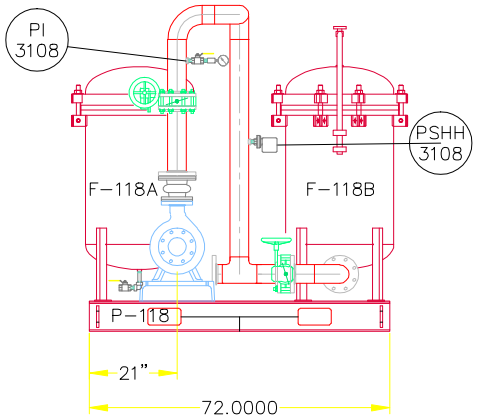

THIS DRAWING IS THE PROPERTY OF
Fliteway Technologies, Inc
2129 EAST BIRCHWOOD AVE
CUDAHY WI, 53110
414.483.5600 414.483.1957

AND IS NOT TO BE REPRODUCED
WITHOUT WRITTEN PERMISSION

3/19/15

6'X10' TREATED WATER PUMP SKID

CB&I WATER TREATMENT

SIZE	FSCM NO.	DWG NO.
		Q14508

SCALE NONE

SHEET 1 OF 1

CRANE ENGINEERING SALES

February 9, 2015

Proposal No: TS14-12-11 01
Item No: Discharge Pump

MODEL:3196 MTi SIZE:3x4-8G QTY: 1

i-FRAME™

Operating Conditions

SERVICE

LIQUID	Groundwater Temp. 70.0 deg F, SP.GR 1.000, Viscosity 1.000 cp, rated / max. suction pressure 0.0 / 0.0 psi g
CAPACITY Rated	400.0 gpm
HEAD	180.0 (ft)

Performance at 3550 RPM per HI 14.6 1B basis power

PUBLISHED EFFY	68.0% (CDS)
RATED EFFY	67.0% with contract seal
RATED POWER	27.2 hp (incl. Mech. seal drag 0.44). (Run out 33.1 hp)
NPSHR	12.6 ft
DISCH PRESSURE (R)	78.3 psi g (88.6 psi g @ Shut off) based on 0.0 psi g rated suction pressure
PERF. CURVE	1592-4 (Rotation CW viewed from coupling end)
SHUT OFF HEAD	204.8 ft
MIN. FLOW	Continuous Stable: 161.6 gpm Hydraulic: 161.6 gpm Thermal: N/A

Materials

CONSTRUCTION	Ductile iron
CASING	Ductile iron (max.casing pressure @ rated temperature 250.0 psi g)
ST.BOX COVER	Ductile iron
IMPELLER	Ductile iron - Open (7.1250 in rated, max=8.3750 in, min=5.5000 in)
CASING GASKETS	Aramid Fiber with EPDM and Silicate Filler
IMPELLER O-RING	Teflon
SHAFT MATERIAL	SAE 4140
SHAFT SLEEVE	316SS
LUBRICATION	Flood oil
SEAL CHAMBER	Taper bore plus with axial ribs
GLAND	316SS Flush quench and drain
BEARINGS	6309 (Inboard) 3309 (Outboard)
COUPLING	Rexnord - Omega Rex Elastomer- ES-10 (standard orange element)-S.F. 1.00
COUPLING GUARD	Carbon steel
BASEPLATE	Cast iron camber top B00051A

Sealing Method

MECHANICAL SEAL	John Crane 5611Q X(1)F(50)1XO(58)1 (Carbon vs Silicon Carbide with Viton) - (Cartridge - Single)

Flanges

150# flat face

Frame Connections

Bearing frame drain
Frame cooler access
Oil fill connection

Frame features

Ductile iron frame adapter
Inpro VBXX-D Hybrid Bearing Isolators
Premium Severe Duty Thrust Bearings
i- ALERT™ Condition Monitor

Assembly and Testing

Casing & Cover - Standard hydro test
Impeller balanced to ISO G6.3

Painting

Goulds Blue standard painting

Warranty

5 Year Extended Warranty (All the components, manufactured by ITT Goulds pumps, in the liquid end and power end are covered).

Driver : Electric motor Manufacturer : Pump mfg's Choice

FURNISHED BY	Pump mfg	MOUNTED BY	Pump mfg
RATING	40.0 hp (29.8 KW)	ENCLOSURE	TEFC - Premium Efficiency
PHASE/FREQ/VOLTS	3/60 Hz/460	SPEED	3600 RPM
INSULATION/SF	F/1.15	FRAME	324TS

Freight Terms

Freight invoices received from ITT partner carriers are proprietary information and cannot be divulged for any reason. ITT will provide an ITT generated freight invoice upon request.

Weights and Measurements

TOTAL NET UNIT WEIGHT / VOLUME	**1,016.0 lb / 14.8 ft³**
TOTAL GROSS UNIT WEIGHT / GROSS VOLUME	**1,204.2 lb / 38.2 ft³**

Program Version 1.51.0.1

Drawing Revision Limit

Drawings returned with status approved as noted or revise and re-submit will be corrected and resubmitted only once. Thereafter, additional comments or revisions to these drawings will incur a charge of $250 per drawing.

Our offer does not include specific review and incorporation of any Statutory or Regulatory Requirements and the offer is limited to the requirements of the design specifications. Should any Statutory or Regulatory requirements need to be reviewed and incorporated then the Customer is responsible to identify those and provide copies for review and revision of our offer.

Our quotation is offered in accordance with our comments and exceptions identified in our proposal.

Click here to download the pump Bulletin

Click here to learn more about the new i-FRAME™

GOULDS PUMPS

OUTLINE DRAWING

Model 3196 MTi
Size 3x4-8G

ITT

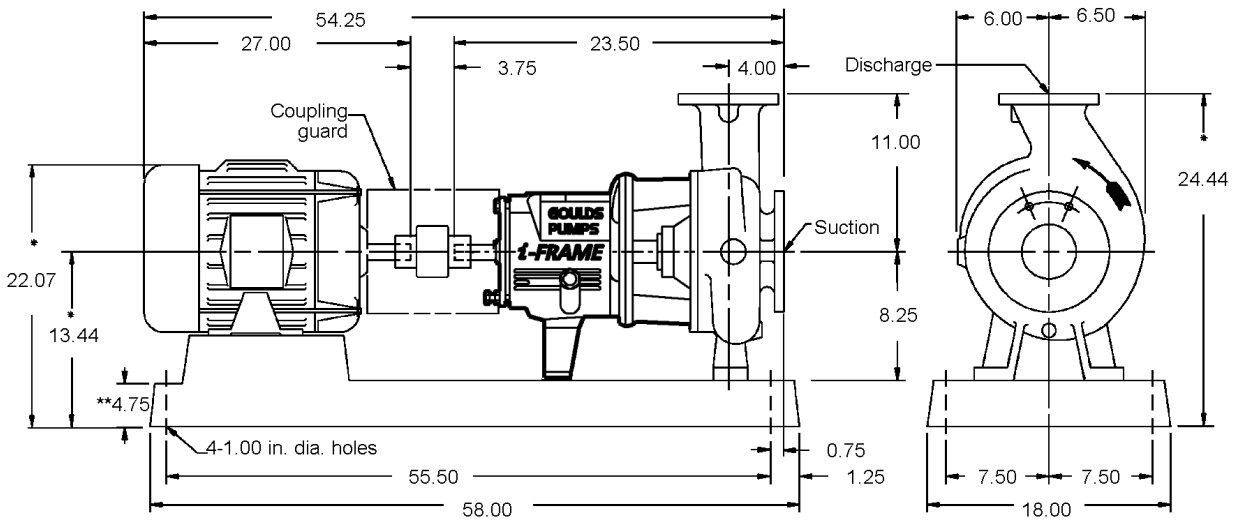

Pump Specification

SUCT.FLANGE SIZE	*4"*	DRILLING	*ANSI 150#*	FACING	*FF*	FINISH	*SERRATED*
DISCH.FLANGE SIZE	*3"*	DRILLING	*ANSI 150#*	FACING	*FF*	FINISH	*SERRATED*
PUMP ROTATION (LOOKING AT PUMP FROM MOTOR)			*CW*				
TYPE OF LUBRICATION	*FLOOD OIL*					COOLED	*NO*
TYPE OF STUFFING BOX	*TAPER BORE PLUS WITH AXIAL RIBS*					COOLED	*NO*
TYPE OF SEALING	*MECHANICAL SEAL*						

Weights and Measurements

PUMP	*240.0 lb*
MOTOR/CPLG	*560.0/11.0 lb*
BASEPLATE	*205.0 lb*
TOTAL	*1,016.0 lb*
GR.VOLUME w/BOX	*38.2 ft³*
GR.WEIGHT w/BOX	*1,204.2 lb*

Motor Specification

MOTOR BY	*PUMP MFG*	MOUNT BY	*PUMP MFG*	MFG.	*PUMP MFG'S CHOICE*
FRAME	*324TS*	POWER	*40.0 hp*	RPM	*3600*
PHASE	*3*	FREQUENCY	*60 HZ*	VOLTS	*460*
INSULATION	*F*	S.F.	*1.15*		
ENCLOSURE	*TEFC - PREMIUM EFFICIENCY*				

Notes and References

- MTR DIMENSIONS ARE APPROXIMATE
- INSTALL FOUNDATION BOLTS IN PIPE SLEEVES
- ALLOW FROM 0.75 to 1.50in. FOR GROUTING. SEE INSTRUCTION BOOK FOR DETAILS.

*Tolerance is +0 -0.5

** Foundation bolt grip thickness

Auxiliary Specification

COUPLING BY	*PUMP MFG*	CPLG TYPE	*REXNORD OMEGA REX ELASTOMER- ES-10 (STANDARD ORANGE*
CPL GUARD BY	*PUMP MFG*	CPLG GUARD MATL	*CARBON STEEL*
BASEPLATE	*CAST IRON CAMBER TOP B00051A*		
MECH.SEAL	*JOHN CRANE 5611Q X(1)F(50)1XO(58)1 (CARBON VS SILICON CARBIDE WITH VITON)*		

FOR PUMP TAPPED OPENINGS REFER TO DWG.:
TTS14-12-11 01 / Discharge Pump

DRAWING IS FOR REFERENCE ONLY.
NOT CERTIFIED FOR CONSTRUCTION UNLESS SIGNED.

Customer: CRANE ENGINEERING SALES
Serial No:
Customer P.O. No:
Item No: Discharge Pump
End User: .
Service:

Copyright 2015
ITT Corp

All dimensions are in inches.
Drawing is not to scale
Weights (lbs) are approximate

DRAWING NO TS14-12-11 01/Discharge Pump

Model: 3196	Size: 3x4-8G	Group: MTi	60Hz	RPM: 3550	Stages: 1

Job/Inq.No. :
Purchaser : CRANE ENGINEERING SALES
End User: .
Item/Equip.No. : Discharge Pump
Service :
Order No. :

Issued by : Tom Schroeder
Quotation No. : TS14-12-11 01
Certified By :

Date : 02/09/2015
Rev. : 0

Operating Conditions

Liquid:	Groundwater
Temp.:	70.0 deg F
S.G./Visc.:	1.000/1.000 cp
Flow:	400.0 gpm
TDH:	180.0 ft
NPSHa:	0.0 ft
Solid size:	
% Susp. Solids (by wtg):	

Pump Performance

Published Efficiency:	68.0 %
Rated Pump Efficiency:	67.0 %
Rated Total Power:	27.2 hp
Non-Overloading Power:	33.1 hp
Imp. Dia. First 1 Stg(s):	7.1250 in
NPSHr:	12.6 ft
Shut off Head:	204.8 ft
Vapor Press:	

Suction Specific Speed:	10,167 gpm(US) ft
Min. Hydraulic Flow:	161.6 gpm
Min. Thermal Flow:	N/A
Max. Solids Size:	0.6880 in

Notes: 1. Power and efficiency losses are not reflected on the curve below.
2. Elevated temperature effects on performance are not included.

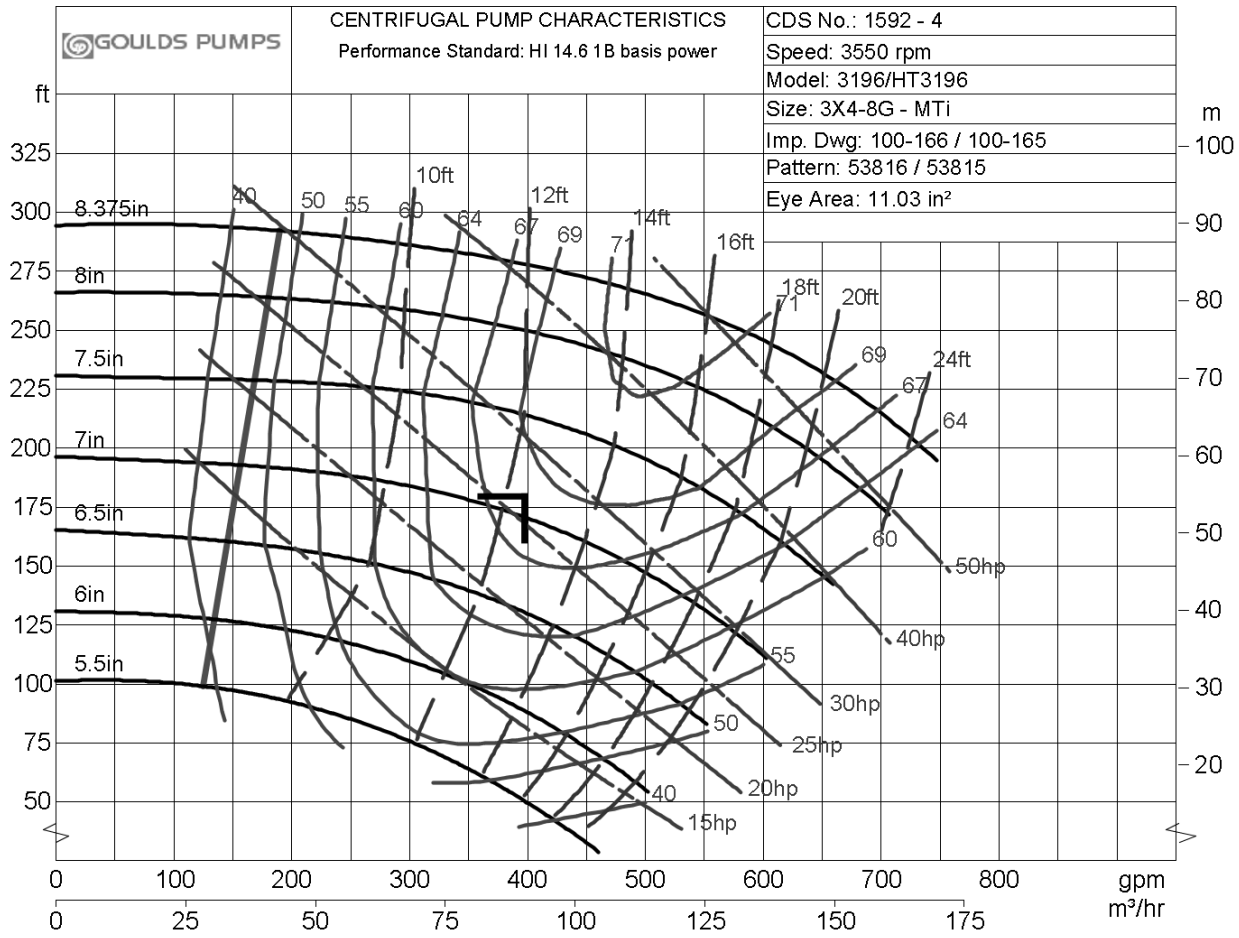

ITT

See Feed Pump Skid Section for Goulds Pump Manual

ASHCROFT®
Trust the shield.™

Type 1130 – 2″, 2½″, 3½″, 4″, 4½″, & 6″ Differential Gauge

- *Piston actuator*
- *Stainless steel case*
- *Ranges from 5 psid-150 psid*
- *Static pressures up to 6000 psi(4)*
- *Aluminum(3), brass or stainless steel bodies(1)*
- *Buna-N O-rings (others available)*
- *Superior magnets for smoother pointer motion*
- *Standard or explosion-proof reed switches available*
- *5-year warranty*

The Type 1130 uses a piston design where small migration of the process media is permissible.(1) It is recommended for high differential and high static pressures, up to 6000 psi. Body materials are available in Aluminum, Brass and Stainless Steel, with Buna, Viton or EPDM seals.(2)

NOTES:

(1) Not for use with incompatible media.

(2) Other wetted parts include stainless steel spring, Teflon piston and ceramic magnet.

(3) Aluminum bodies not to be used with water or corrosive applications.

(4) Static pressure over 3000 psi in SS only.

PRODUCT SPECIFICATIONS

Model Number:	1130
Accuracy (Ascending):	±2%
Migration:	Minor
Ranges:	0-5 psid to 150 psid
Maximum Static Pressure:	3000 psi (6000 psi for SS)
Actuator:	Piston
Case Material:	Stainless steel
Dial Size:	2″ (20), 2½″ (25), 3½″ (35), 4″ (40), 4½″ (45), 6″ (60)
Maximum Process Temp.:	175°F/80°C
Body Materials:	Aluminum (F), brass (A), stainless steel (S)
O-Rings/Diaphragm:	Buna-N
Connection Size (Female):	¼ NPT (25)
Connection Location:	In-Line (S), Lower (L), Back (B)
Window:	Glass

PRODUCT OPTIONS

Switches(1):		Available
⅛ NPT Female Adapter:	XGE	Available
Front Flange:	XFF	Available
Viton O-Rings:	XVD	Available
EPDM O-Rings:	XEM	Available
Fill(3):		
Glycerin	L	Standard
Silicone	XGV	Available
Window		
Plastic:	XPD	Available
Explosion Proof:	XEK	Available(2)
Pipe Mounting Bracket:	XTM	In-line (only)

(1) Applicable to switches:
XV1 – 1 SPST with DIN plug
XV2 – 1 SPST with terminal strip
XV3 – 2 SPST with DIN plug
XV4 – 2 SPST with terminal strip
XV5 – 1 SPDT with DIN plug
XV6 – 1 SPDT with terminal strip
XV7 – 2 SPDT with DIN plug
XV8 – 2 SPDT with terminal strip
Adjustable from 20-100% of range
Preset at 90% ascending
Terminal or DIN connected switches are not available with back connection

(2) Specify lower or back connection for gauge (not available in-line) and switch type V2, V4, V6, V8

(3) Liquid fill has an effect on accuracy that varies with range and temperature. Liquid filling may be required only in some very severe applications.

HOW TO ORDER:

25	1130	FD	25S	XXX	30#

Dial Size: 2″, 2½″, 3½″, 4″, 4½″, & 6″
Case Type Number: 1130
Body Material
Connection Size: ¼ NPTF (25)
Connection Location: In-line (S), Lower (L), Back (B)
Optional Features: see above
Standard Pressure Range

ISO 9001
REGISTERED FIRM
BULLETIN DP-1130

All specifications are subject to change without notice.
All sales subject to standard terms and conditions.
© Ashcroft Inc. 2010 09/14

Ashcroft Inc., 250 East Main Street, Stratford, CT 06614 USA
Tel: 203-378-8281 • Fax: 203-385-0408
email: info@ashcroft.com • www.ashcroft.com

Type 1130 – 2″, 2½″, 3½″, 4″, 4½″, & 6″ Differential Gauge

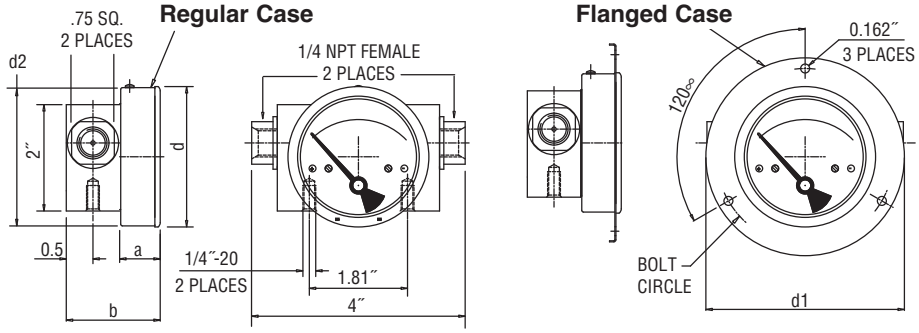

Type 1130 Dimension Drawing

Dial Size	a	b	d	d^1	d^2	Bolt Circle
2″	0.70″	1.70″	2.08″	3.11″	2.04″	2.72″
2.5″	0.75″	1.75″	2.59″	3.66″	2.55″	3.26″
3.5″	0.75″	1.75″	3.26″	4.29″	3.22″	3.89″
4″	0.75″	1.75″	4.10″	5.15″	4.01″	4.76″
4.5″	0.75″	1.75″	4.71″	5.74″	4.60″	5.35″
6″	0.75″	1.75″	6.07″	7.12″	6.00″	6.73″

Type 1130 – Standard Ranges

psi		0-5	0-8	0-10	0-15	0-20	0-25	0-30	
kPa	0-25		0-50	0-75	0-100		0-160	0-200	0-250
kg/cm²-bar	0-0.25		0-0.5	0-0.75	0-1		0-1.6	0-2	0-2.5

psi	0-40	0-50	0-60		0-80		0-100		0-150
kPa	0-300		0-400	0-500		0-600	0-700	0-900	0-1000
kg/cm²-bar	0-3		0-4	0-5		0-6	0-7	0-9	0-10

Ratings for Both Standard & Explosion Proof Switches:

SPST SWITCH
Specifications:
Contact Rating
10 VA ac (rms) or dc (max)
Switching Current
0.5 Amp ac (rms) or dc (max)
Switch Voltage
100 Vac/Vdc (max)

SPDT SWITCH
Specifications:
Contact Rating
3 VA ac (rms) or dc (max)
Switching Current
.3 Amp ac (rms) or dc (max)
Switch Voltage
30 Vac/Vdc (max)

Explosion Proof Switches Information:

Switches and electrical connections are mounted in an explosion-proof enclosure with UL, CSA, Cenelec and FM approval. The enclosure meets Class 1, Groups B, C, D, Class 2 Groups E, F, G, Class 3, NEMA 7 & 9 and IP 66. Two ¾″ electrical conduit connections.

All specifications are subject to change without notice.
All sales subject to standard terms and conditions.
© Ashcroft Inc. 2010 09/14

Ashcroft Inc., 250 East Main Street, Stratford, CT 06614 USA
Tel: 203-378-8281 • Fax: 203-385-0408
email: info@ashcroft.com • www.ashcroft.com

Fliteway Technologies, Inc.

Treated Water Pump VFD - Control Panel

2129 East Birchwood Ave. Cudahy, WI 53110

(414) 483-5600 1-800-236-3580 FAX (414) 483-1957

FEED PUMP SKID

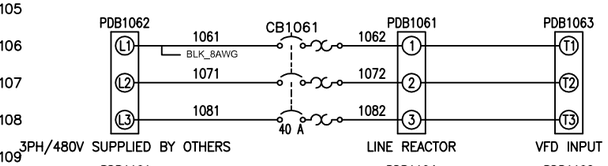

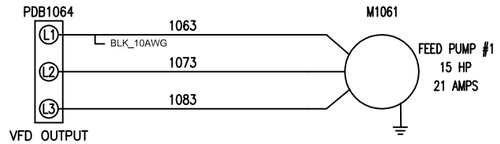

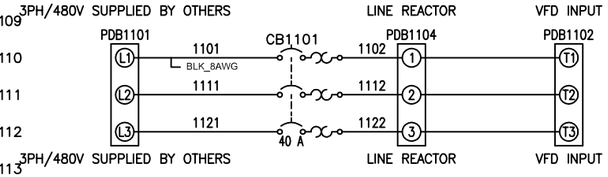

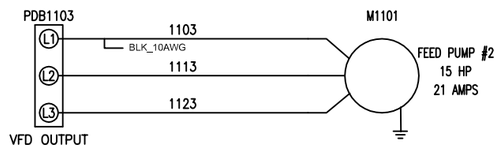

HIGH VOLTAGE PANEL

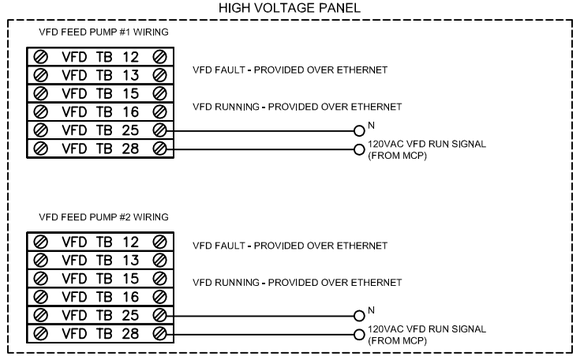

LOW VOLTAGE JUNCTION BOX

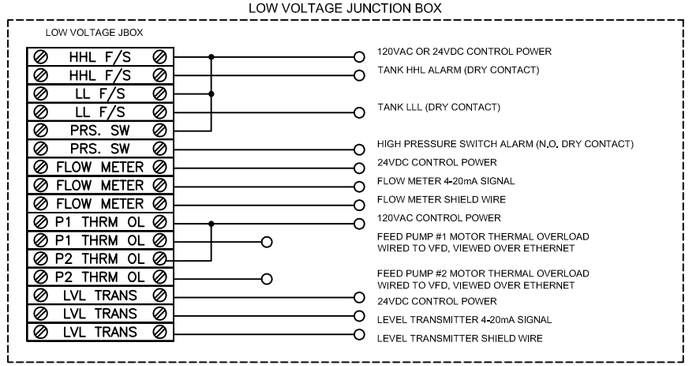

TREAT WATER PUMP SKID

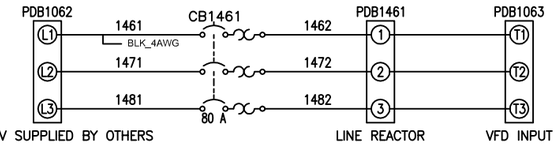

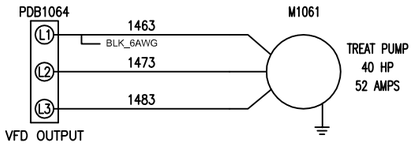

HIGH VOLTAGE PANEL

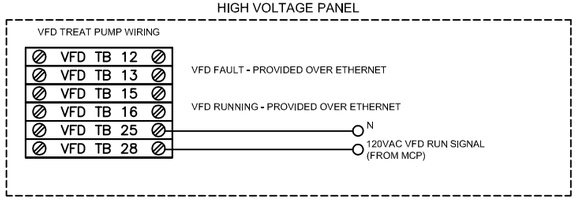

LOW VOLTAGE JUNCTION BOX

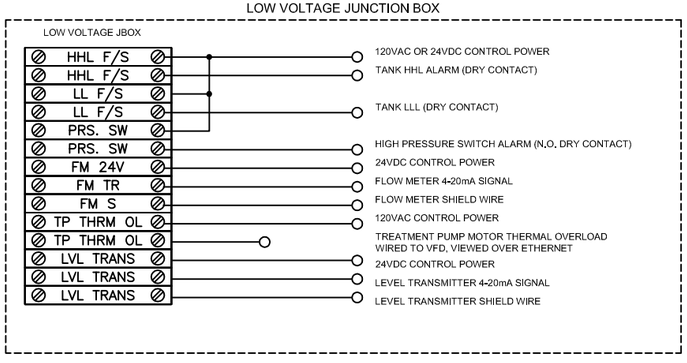

THIS PRINT AND ITS CONTENTS ARE THE PROPERTY OF FLITEWAY AND MUST NOT BE USED FOR ANY PURPOSE NOT AUTHORIZED BY FLITEWAY. DO NOT DISCLOSE, REPRODUCE OR OTHERWISE USE THIS PRINT OR ITS CONTENTS IN ANY MANNER DETRIMENTAL TO THE INTEREST OF FLITEWAY WITHOUT FLITEWAY'S PRIOR WRITTEN CONSENT. FLITEWAY RESERVES ALL RIGHTS OF DESIGN AND INVENTION TO THE EXTENT PERMITTED BY LAW.

CAD SYSTEM	UNITS
ACADE	IN
SCALE	FORMAT
1:1	D

Fliteway Technologies, Inc.
2129 East Birchwood Ave.
Cudahy, WI 53110

DRAWN BY	Q #	DESCRIPTION
Josh	Q14508	AS BUILT

DESIGNED FOR: CB&I Federal Services

Drawing Number

PLOTTED : 09-16-2015

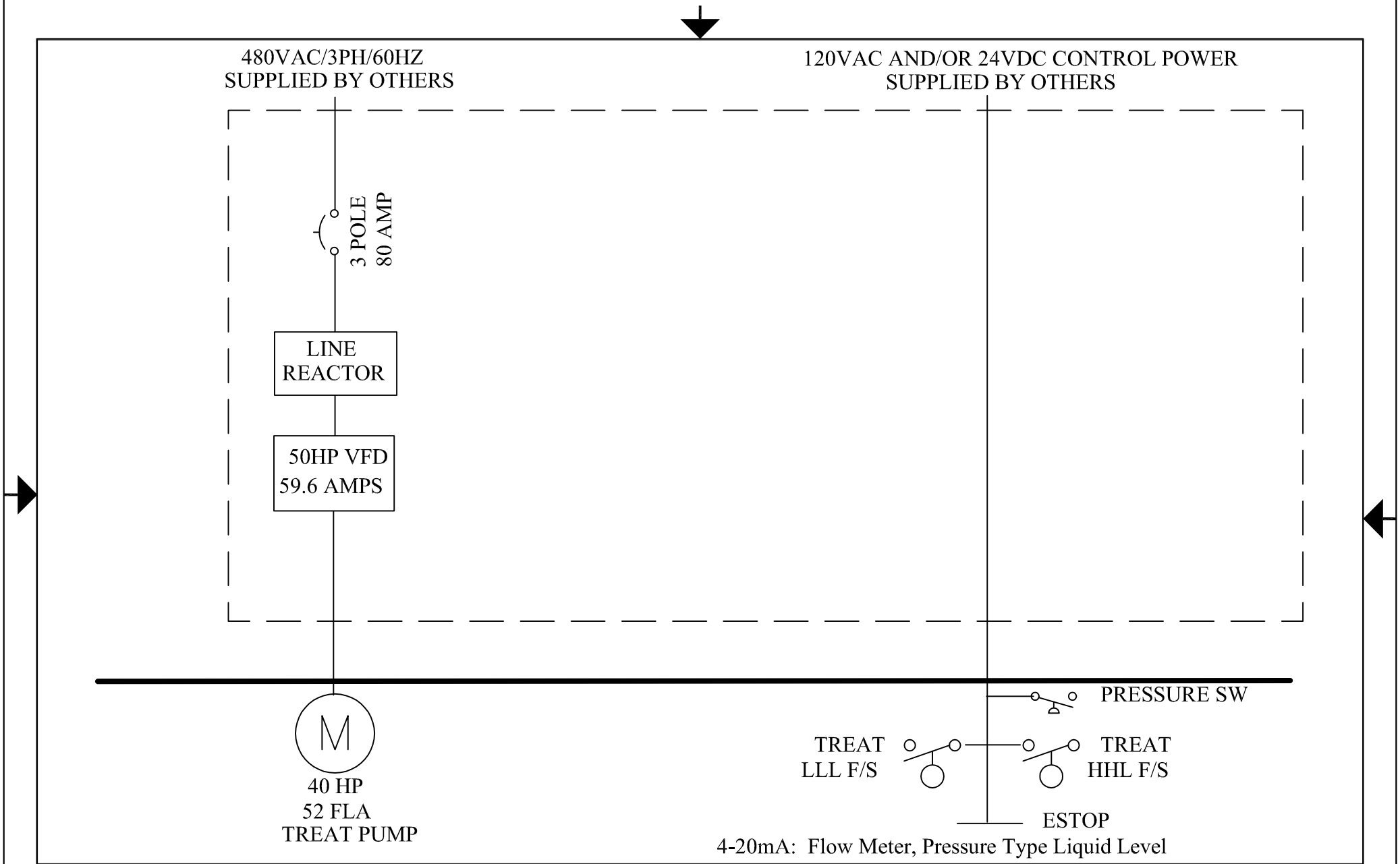

THIS DRAWING IS THE PROPERTY OF
Fliteway Technologies, Inc
2129 East Birchwood Avenue
Cudahy, WI 53110
414.483.5600 414.483.1957
AND IS NOT BE REPRODUCTED
WITH OUT WRITTEN PREMISSION

ONE LINE ELECTRICAL DIAGRAM

TREAT PUMP SKID

03/23/15

CB&I Federal Services

SIZE	FSCM NO.	DWG NO.	REV
		Q14508	5

SCALE NONE

SHEET

See Feed Pump VFD – Control Panel Section

Fliteway Technologies, Inc.

Air Compressor

2129 East Birchwood Ave. Cudahy, WI 53110

(414) 483-5600 1-800-236-3580 FAX (414) 483-1957

FEED PUMP SKID

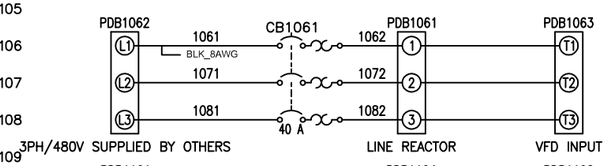

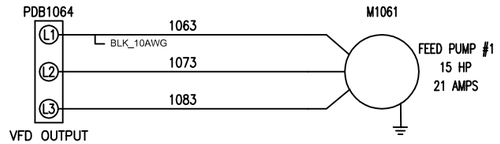

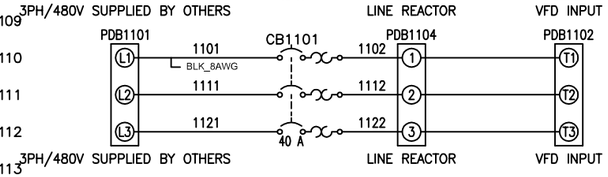

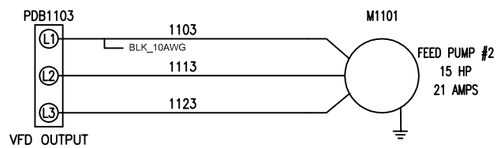

HIGH VOLTAGE PANEL

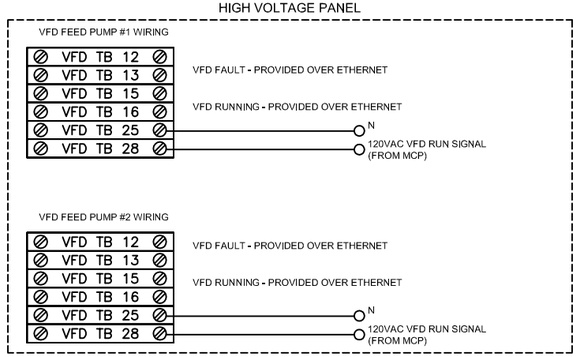

LOW VOLTAGE JUNCTION BOX

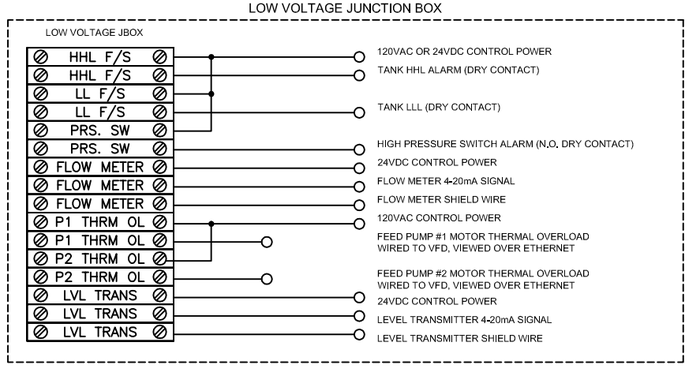

TREAT WATER PUMP SKID

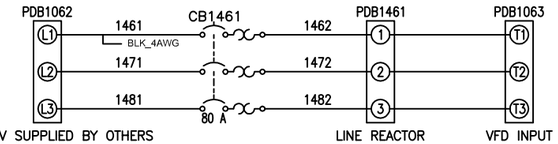

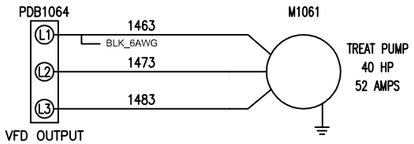

HIGH VOLTAGE PANEL

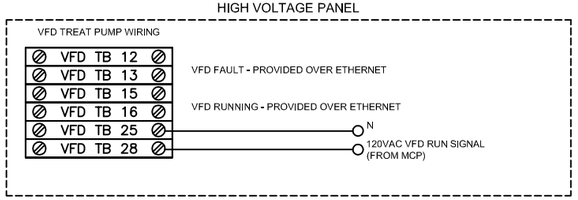

LOW VOLTAGE JUNCTION BOX

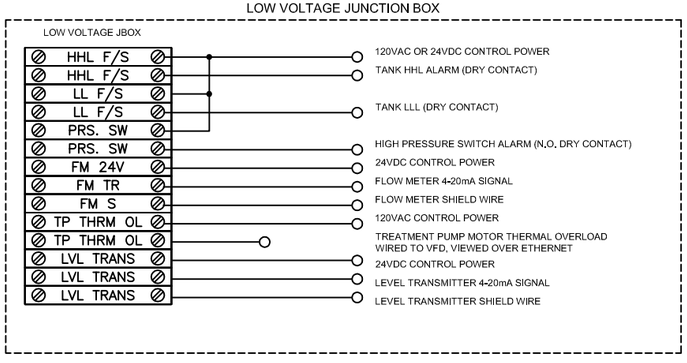

THIS PRINT AND ITS CONTENTS ARE THE PROPERTY OF FLITEWAY AND MUST NOT BE USED FOR ANY PURPOSE NOT AUTHORIZED BY FLITEWAY. DO NOT DISCLOSE, REPRODUCE OR OTHERWISE USE THIS PRINT OR ITS CONTENTS IN ANY MANNER DETRIMENTAL TO THE INTEREST OF FLITEWAY WITHOUT FLITEWAY'S PRIOR WRITTEN CONSENT. FLITEWAY RESERVES ALL RIGHTS OF DESIGN AND INVENTION TO THE EXTENT PERMITTED BY LAW.

CAD SYSTEM	UNITS
ACADE	IN
SCALE	FORMAT
1:1	D

Fliteway Technologies, Inc.
2129 East Birchwood Ave.
Cudahy, WI 53110

DRAWN BY	Q #	DESCRIPTION
Josh	Q14508	AS BUILT

DESIGNED FOR: CB&I Federal Services

Drawing Number

PLOTTED : 09-16-2015

480VAC/3PH/60HZ
SUPPLIED BY OTHERS

120VAC CONTROL POWER
SUPPLIED BY OTHERS

SELF-PROTECTED
(TYPE E) MANUAL
COMBINATION
STARTER

M

20 HP
AIR COMPRESSOR
27 FLA

AUTO-DRAIN

SOLENOID

THIS DRAWING IS THE PROPERTY OF
Fliteway Technologies, Inc
2129 East Birchwood Avenue
Cudahy, WI 53110
414.483.5600 414.483.1957
AND IS NOT BE REPRODUCTED
WITH OUT WRITTEN PREMISSION

ONE LINE ELECTRICAL DIAGRAM

COMPRESSORSKID

03/23/15

CB&I Federal Services

SIZE	FSCM NO.	DWG NO.	REV
		Q14508	5

SCALE NONE

SHEET

AC SERIES
AIR COMPRESSORS

15 through 350 SCFM

mattei®
BEST SOLUTIONS IN COMPRESSED AIR

AC SERIES HIGH-EFFICIENCY AIR COMPRESSORS

Engineered for Superior Performance & Energy Efficiency

UNBEATABLE PERFORMANCE

AC Series air compressors offer our customers the next level of sophistication. Featuring quiet {as low as 68 dB(A)} cabinet enclosures, electronic controllers, energy saving soft-start Wye-Delta motor starters, TEFC motors, air-cooled aftercoolers and optional integrated refrigerated air dryers, we invite you to experience the revolution. Mattei rotary vane air compressors are truly in a class of their own and known for their dependable operation and low maintenance. AC Series raises the bar with unbeatable performance and energy savings with package flow rates from 15 to 350 SCFM.

WE BUILD A BETTER COMPRESSOR

Founder Enea Mattei believed there was a better and more energy efficient way to generate compressed air. So, he focused his engineering on the inherent advantages of rotary vane technology and engineered in:

a) superior reliability
b) maximum mechanical & electrical efficiency
c) the most compressed air generated while consuming the least amount of electricity

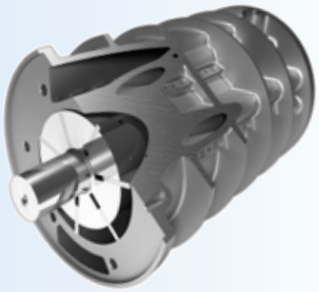

In effect, Mattei redefined the process of compressing air when he invented his first rotary vane air compressor over 50 years ago.

UNRIVALED PERFORMANCE AND DURABILITY

Today, Mattei continues to leverage advancements in technology, materials and within our exclusive airends (approximately 90% volumetric efficiency) to offer the best value in premium quality air compressors found anywhere on the planet.

Imagine “bearingless” Airends that carry a 10 Year Warranty as standard, and last up to 100,000 hours (*2-3 times the life of rotary screws*) without needing an overhaul, unrivaled super quiet operation, and the most energy stingy designs in the industry.

It’s a fact; Mattei is in a class of its own. Want to protect productivity, increase profitability, and lessen your carbon footprint?

Get your last air compressor first. Get a Mattei.

Get your last air compressor first. GET A MATTEI.

GET MORE FOR LESS

AC Series use our most advanced airend designs. Unlike typical rotary screw compressors, AC Series models use precision matched airends, direct-coupled to high efficiency motors that revolve at just 1,800 rpm, to deliver maximum energy efficiency and performance at design pressure. Thus, it is not uncommon to select a smaller HP AC Series model to meet the air demands of the customer.

For example, say you need about 130 SCFM. MATTEI can offer you our traditional 30 HP ERC Series model (129 scfm) or, we can offer you our 25 HP AC Series rated at 130 SCFM. Each produces about the same volume of air, but that 5 HP difference saves you money the moment you turn it on — that's why upgrading to an AC Series just makes sense. AC Series helps you get more air for less energy. Lower your electric bill month-after-month, year-after-year.

Get more for less. Get a MATTEI.

Figure 1:
Potential energy cost savings from lower AC Series nominal motor HP ratings for comparable SCFM production. Assumes 8,760 hours/year, 10 cents/kWh.

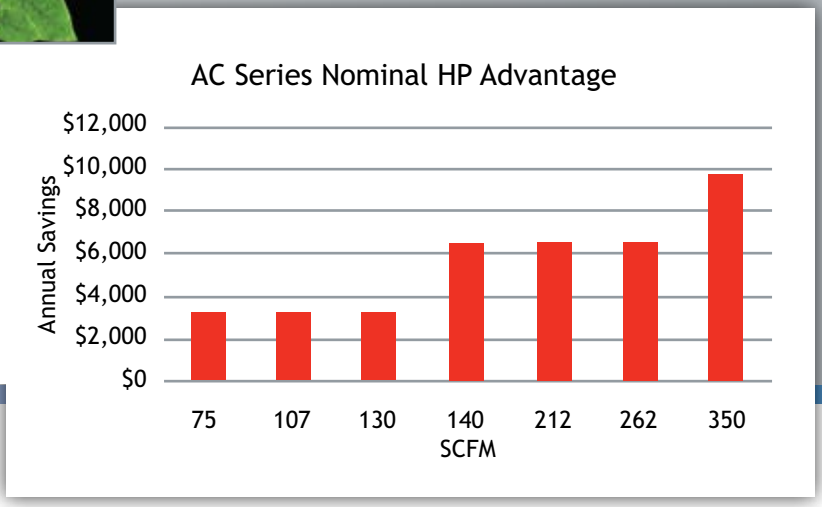

Mattei compressors are designed to give constant top performance 24 hours a day, every day of the year. Extremely rugged and reliable, AC Series is designed for outstanding performance and efficiency.

Rely on AC Series for:

- Superior SCFM/HP performance
- Unaltered performance through time
- System friendly demand adaptable controls
  - Automatic Load/No Load
  - Load matching Modulation
  - Automatic with Modulation
- No wear of the compressor's moving mechanical parts
- Compact design
- Low oil volume and consumption
- Direct coupled compressor and motor
- Slow 1,800 RPM rotational speed
- Low maintenance
- Quiet operation

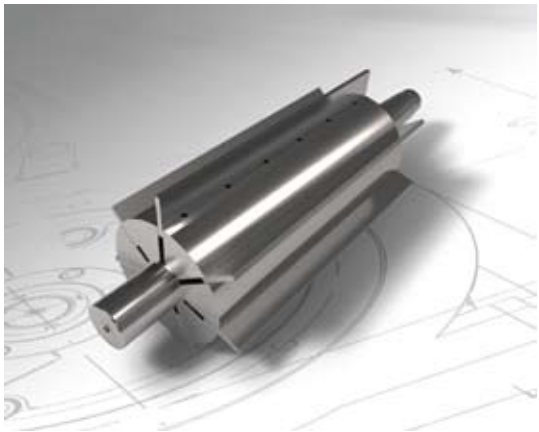

WHY MATTEI® IS YOUR BEST CHOICE

AC SERIES AIR
Sophisticated. S

SIMPLY SUPERIOR

All MATTEI air compressors retain the same heritage of innovation, durability and reliability. AC Series are highly-efficient cabinet style air compressors that raise the bar in delivering superior value, unrivaled high-capacity performance and energy efficient operation.

AC Series must be compared on an SCFM basis — not based on HP. Why? Because, AC Series uses our most advanced airends to produce more SCFM per HP than typical rotary air compressors, so to do a fair comparison, you usually need to select the next smaller size. In fact, it is not uncommon to get the same level of SCFM output from the next smaller AC Series model.

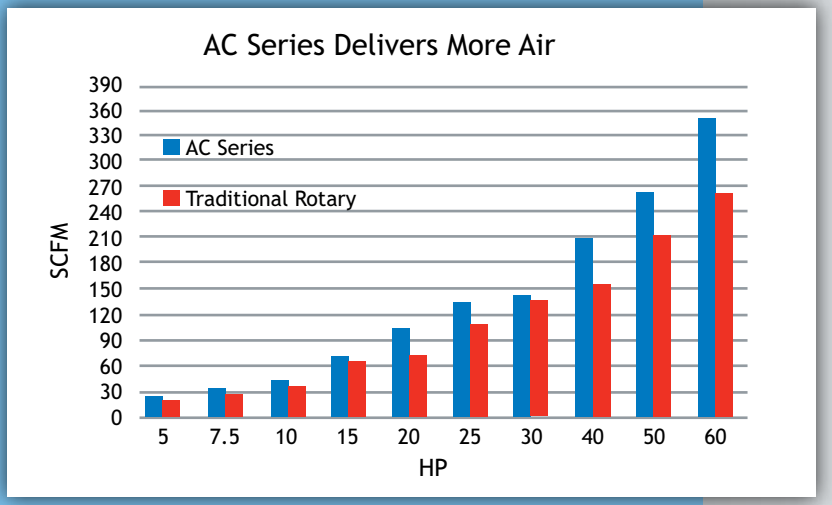

Figure 2:
AC Series uses less nominal HP to deliver more SCFM.

HOW IT WORKS

Ambient air is drawn through a filter into the compression chamber consisting of a stator in which an eccentrically arranged rotor revolves at 1,800 rpm. An air intake valve automatically adjusts incoming air volume to match your control scheme. The rotor has longitudinal slots in which the vanes slide. Zero-wear vanes ride on a thin film of oil and are held against the stator by centrifugal force. The air is compressed through the contraction in volume of each chamber formed by the vanes, the rotor and the stator wall. Sealing, cooling and lubrication are ensured by the oil injected into the chamber.

1. *Pleated oversized Air Filter*
2. *Automatic intake Valve*
3. *Oil chamber*
4. *Compression chamber*
5. *Oil filter*
6. *Rotor*
7. *Blades*
8. *Coalescing separator*
9. *Air/oil cooler (radiator)*
10. *Condensate Separator & Drain (optional)*

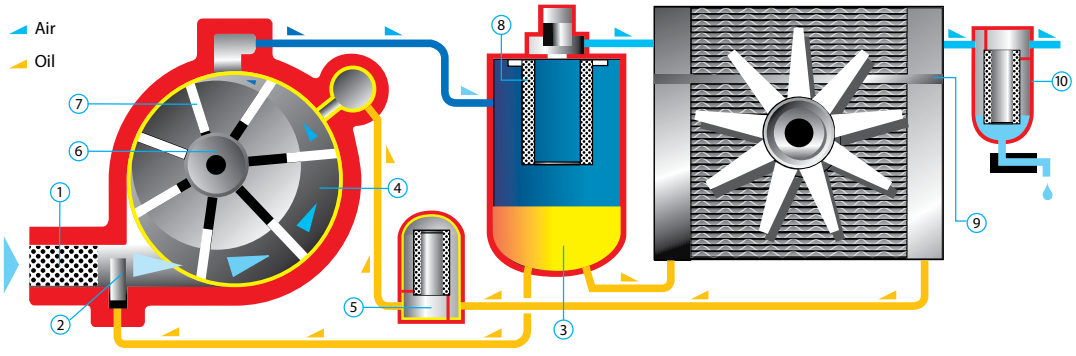

COMPRESSORS
Silent. Efficient.

Get your money's worth.
GET A MATTEI.

HIGH QUALITY COMPRESSED AIR

Mattei compressors have an exclusive and efficient oil separating system which occurs in three stages: in the initial stage most of the oil is separated in a labyrinth in the compression chamber; the flow then enters the separator chamber where a mechanical separation takes place through speed reduction and flow deviation; the last phase occurs through the separator element. Only 0.02% of the initial oil arrives to this final stage; this is the reason for which the average life of Mattei's separator element is 10,000 operating hours. Most importantly, this separating system guarantees a maximum oil residue of 3 ppm in Mattei's compressed air.

YOU GET WHAT YOU PAY FOR

It is not uncommon to get over 100,000 hours of service life out of our airends without a rebuild. MATTEI vane technology features zero-wear Meehanite™ cast iron blades that ride on a thin film of lubricant thus, preventing wear to the blade or stator wall. The heart of the unit is the rotor which is supported by two (2) white metal Babbitt bushings and spins at only 1,800 rpm.

AC Series is also friendly to your wallet and the environment. Each vane unit holds very little lubricant (typically less than half that of a screw type compressor) which saves you a small fortune on oil changes and disposal costs. The oil filter is cleanable — yes, cleanable. The highly efficient mechanical air/oil separation chamber delivers high quality air to the air/oil separator filter thus, it sees very little lubricant and provides up to 10,000 hours of service, and low 1-3 ppm oil carryover.

Get your money's worth. Get a MATTEI.

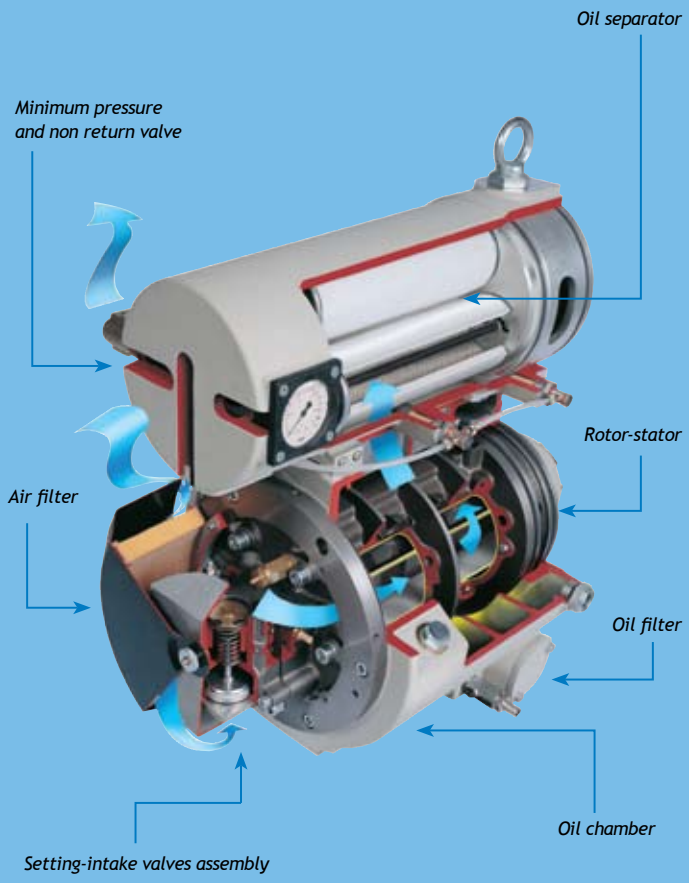

Figure 3:
Airend Construction

CAPACITY CONTROLS ADAPT TO YOUR DEMANDS

The layout and design of every air system is different. Some systems have very little air storage; some have an enormous volume of air storage. Some have small diameter air piping that is high in pressure drop; some have oversized piping to minimize pressure drop.

Thus, it is wise to select compressors with control schemes that can adapt to the demands and dynamics of your system. Mattei provides control flexibility to adapt to your system demands to help you save energy and prevent short-cycling and ambient oil misting problems created by inflexible control schemes and underutilized compressors.

Figure 4:
MATTEI Air Intake Control Valve Illustration

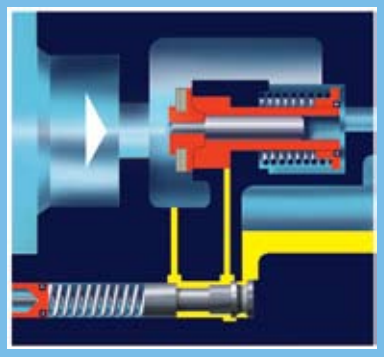

MODULATION OPERATING MODE AT CONSTANT PRESSURE

Thanks to a modulating proportional intake valve that supplies air at constant pressure, these compressors can even work without a receiver. With this regulation air delivery is automatically adapted to the system demand. Ideal for applications with little storage or continuous high air demands.

ENERGY SAVING AUTOMATIC LOAD / OFF LOAD

Load/Off Load mode maintains line pressure within a minimum/maximum pressure range, and the compressor may stop and restart according to air demand. “Load” initiates when the minimum pressure setting is reached and the compressor deliver 100% of its capacity. “Off Load” initiates when the maximum pressure setting is reached, and the intake valve closed and sump is decompressed to allow for a significant reduction of the absorbed power consumption. Should the pressure continue to remain high, the compressor will stop. Ideal for applications with adequate storage or large variations in air demand.

COMBINED ON/OFF LOAD AND MODULATION REGULATION

This regulation allows Mattei compressors to modulate within a set pressure range (for example, ± 4-5 psi). Should the air demand decrease, this regulation also allows the compressor to run off load and stop, with evident energy savings. Ideal for applications with little storage and large variations in demand

ADVANCED SYSTEM CONTROLLERS

MicroC: Standard on Models AC 4 & AC 5

Programmable microprocessor based control and protection system which controls compressor operation and adapts to the specific requirements of the air distribution system. MicroC offers a variety of programming levels and special options for controlling and analyzing system operation and faults. Advanced programming and analysis levels are protected by digital codes to avoid unintentional tampering. MicroC has an integrated memory module that stores the operational settings and data in case of power outage.

Figure 5:
MATTEI MicroC Controller

Figure 6:
MATTEI MAESTRO XS Controller

MAESTRO XS: Standard on Models AC 7 and larger

State-of-the-art computerized controller, Maestro XS automatically controls, monitors and programs the compressor's operation, and can be connected to a PC for remote control. In addition to providing all of the features found in the MicroC, Maestro XS can become master of a multi-compressor compressed air plant, thus saving on the installation of a dedicated Master controller, if connected to other compressed air packages equipped with Maestro XS controllers.

Figure 7: **AC SERIES CONTROLLER FEATURES**

			MicroC	MAESTRO XS
Electronic Controller Features	LED Display	Basic 3 character alphanumeric codes	X	–
		Full text 4 lines of 20 characters	–	X
	Operation Hour Counters	Power "On"	X	X
		Activation hours	X	X
		Run hours	X	X
		Loaded Hours	X	X
	Service Counters	Oil Change	X	X
		Separator Filter	X	X
		Automatic Restart after power failure	X	X
		Time/Day Compressor Start/Stop Settings	X	X
		Recordable Fault Events	5	20
		Alarm Coded Text with Icon based Signals	X	X
	Compressor Networking	Master & Slave Multi-Compressor Capable	–	X
		Cascade, Sequence, Equalization of Run Hours	–	X
	Optional	Expansion Module for Managing Integrated Refrigerated Air Dryer	X	X

AC SERIES PRODUCT FEATURES

		AC4-5	AC7-45
Electronic Controller	MicroC	X	–
	MAESTRO XS	–	X
	TEFC Motor	X	X
	Wye-Delta Motor Starter	X	X
System Adaptable Air Inlet Controls	Constant Pressure Modulation	X	X
	Automatic On Load/Off Load	X	X
	Combined On/Off Load and Modulation	X	X
	100,000 Hour Airend Design Life	X	X
	Direct-drive 1,800 rpm Airend	X	X
	10,000 Hour Air/Oil Separator Filter Design	X	X
	Cleanable Oil Filter	X	X
	Synthetic Rotor Oil 8000	X	X
Optional	High Efficiency Air Intake Filter Kit	X	X
	Condensate Drain & Moisture Separator Kit	X	X
	Soundproofing Intake Air Duct	X	X
	Integrated Refrigerated Air Dryer	X	X
	Integrated Oil/Water Separator	–	X
	Integrated Heat Recovery Kit	–	X

TECHNICAL FEATURES

Model[1]	Electric Motor Power		Free Air Delivery[2] LX HX HHX			Voltage	Sound Pressure Level[3]	Air Outlet	Dimensions (inches)	Wt. (net)
	HP	kW	115 PSIG	150 PSIG	175 PSIG	AC	db(A)	Rp	L x W x H	lbs.
AC 4	5	4	26	22	15	208V, 230V, 460V, 575V /3 Ph/60 Hz	67	1/2"	40 x 24 x 33	298
AC 5	7.5	5.5	36	29	24		67	1/2"	40 x 24 x 33	309
AC 7	10	7.5	49	43	42		67	3/4"	49 x 24 x 41	462
AC 11	15	11	75	66	58		67	3/4"	49 x 27 x 41	506
AC 15	20	15	107	94	85		69	1"	47 x 31 x 59	981
AC 18	25	18	130	112	91		69	1"	47 x 31 x 59	981
AC 22	30	22	140	127	110		69	1"	47 x 31 x 59	992
AC 30	40	30	212	202	173		68	2"	47 x 31 x 59	1,764
AC 37	50	37	262	244	207		68	2"	72 x 38 x 66	1,830
AC 45	60	45	350	307	254		68	2"	72 x 38 x 66	2,073

Working pressure: 109 psig for 115 psig unit; 143 psig for 150 psig unit; 167 psig for 175 unit.

[1] Models AC 7 and larger carry ULc approval [2] F.A.D. in accordance with ISO 1217:1996, annex "C" [3] According to PN8NTC2.3; value measured at 1 m distance ±3

Mattei Compressors, Inc. reserves the right to change or replace the data contained in this publication, without notice.

mattei®
BEST SOLUTIONS IN COMPRESSED AIR

COMPANY
WITH QUALITY MANAGEMENT
SYSTEM CERTIFIED BY DNV
= ISO 9001 : 2001 =

www.matteicomp.com

U.S.A.
MATTEI COMPRESSORS Inc
9635 Liberty Road, Suite E
Randallstown, MD 21133
Phone +1 410.521.7020
Fax +1 410.521.7024
e-mail: info@matteicomp.com

ITALY
ING. ENEA MATTEI SpA
Strada Padana Superiore, 307
20090 VIMODRONE (MI)
Tel + 39 02253051 - Fax +39 0225305243
e-mail: info@mattei.it

FRANCE
MATTEI COMPRESSEURS Sarl
Tel +33 1 60081212 - Fax +33 1 60085252
e-mail: info@mattei.fr

GERMANY
MATTEI KOMPRESSOREN DEUTSCHLAND GmbH
Tel +49 7151 5002560 - Fax +49 7151 5002565
e-mail: info@mattei-kompressoren.de

GREAT BRITIAN
MATTEI COMPRESSORS Ltd
Tel +44 (0)1789 450577 - Fax +44 (0)1789 450698
e-mail: info@mattei.co.uk

RUSSIAN FEDERATION
ING. ENEA MATTEI SpA
Tel +7-495-739 41 90 - Fax +7-495-739 41 90
e-mail: mattei@inbox.ru

SINGAPORE
ING. ENEA MATTEI SpA
Tel +65 6741 8187 - Fax +65 6741 6826
e-mail: mattei@singnet.com.sg

Member CAGI Compressed Air & Gas Institute

mattei® BEST SOLUTIONS IN COMPRESSED AIR	***QUOTATION*** ***ROTARY AIR COMPRESSOR*** *AC 15 LX*		Power (hp) **20**
Ing. Enea Mattei S.p.A.	Product code *GEABFSX50A*	Page *1 of 10*	Rev *01/2009/GB*

Mattei rotary vane compressors are the result of 90 years of investments in research and development to improve performance and lessen the impact on the environment. Designed for industrial continuous operation, they provide consistent performance, reliability, functionality and ease of maintenance.

The “AC 15 LX” single stage rotary vane compressor is a complete stand-alone, air cooled stationary air center powered by an electric motor. The compressor is perfectly designed down to the smallest component, assembled by skilled technicians using top quality components and has critical components machined using the most advanced technology. This attention to detail places Mattei compressors at the highest position in the market.
Blades are designed for over 100,000 hours of operation.

mattei® BEST SOLUTIONS IN COMPRESSED AIR	***QUOTATION*** ***ROTARY AIR COMPRESSOR*** *AC 15 LX*		Power (hp) **20**
Ing. Enea Mattei S.p.A.	Product code *GEABFSX50A*	Page *2 of 10*	Rev *01/2009/GB*

REFERENCE CONDITIONS according to ISO 1217 :1996 annex "E"

- Intake pressure	psia	14.5
- Air inlet temperature	°F	+ 68
- Relative humidity	%	0

PERFORMANCE

- Air end		single stage rotary vane compressor
- Nominal rotor speed	r.p.m.	1800
- Free air delivery at the working pressure (according to ISO 1217:1996 annex “C”)	cfm	107
- Maximum working pressure	psig	115
- Working pressure	psig	109
- Oil cooling		by air
- Compressed air cooling		by air
- Maximum oil carry-over	ppm	≤ 3
- Terminal power at working pressure including the fan power	kW	20.1
- Total off-load power	hp	6.3
- Compressed air outlet high temperature	K	≤ 10
- Min/max acceptable ambient temperatures	°F	34 / 104
- Sound pressure level at 1 metre (according to PNEUROP-PN8NTC 2.3)	dB(A)	69

ELECTRIC MOTOR

prime electric motor asynchronous – three phase - 4 poles – short circuit winding

- Insulation	class	F
- Efficiency complying with		EFF 2
- Protection	IP	55
- Rated power	hp	20
- Voltage as per IEC 38	Volt	460
- Frequency	Hz	60

MAIN SIZES

- Length	in.	59.5
- Width	in.	31.5
- Height	in.	47.5
- Weight	lbs	992
- Air outlet size	Rp	1”
- Condensate drain outlet size (optional)	∅ mm	10
- Water inlet-outlet size (optional)	Rp	½ “

OPERATING PRINCIPLE

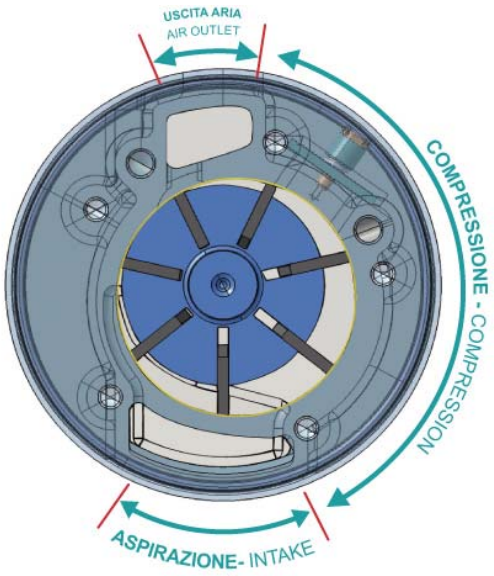

The vane compressor is a volumetric rotary compressor. It consists of a cylinder (stator) in which a rotor is mounted eccentrically between two end covers. The rotor has longitudinal slots in which the vanes slide. As the rotor turns the vanes are pushed against the stator by centrifugal force. Sealing of the moving parts, cooling and lubrication is accomplished by using a pressure differential lubrication system. There is no need for an oil pump as the oil is automatically circulated whenever the compressor is operating. An oil film on the inner surface of the stator wall prevents direct contact of the moving parts and avoids any wear. In the vane compressor there are no axial thrusts pushing the rotor against the end covers. Therefore there is no need for thrust bearings. The rotor is supported at each end by bush that has a practically unlimited lifetime. The decrease in volume of the pockets formed by the stator, rotor and vanes produces a continuous, pulse-free, compression.

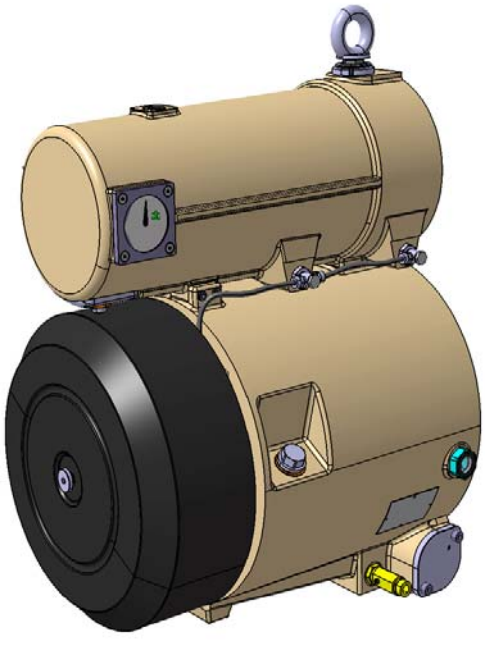

OIL SEPARATION

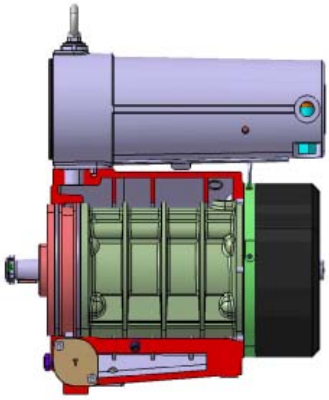

The air/oil separation occurs in different stages and ensures exceptionally low oil consumption. The main mechanical separation occurs in the oil chamber through a labyrinth path. Then it continues at the separator inlet, before the filter. This mechanical separation works via the continuous changes of direction of the air flow in the labyrinth path. The last separation occurs through the coalescing filter, removing the remaining oil vapor from the air. This particular oil separation system results in very reduced oil consumption. The large size of the filter and quality of materials ensure a long life of the filter itself.

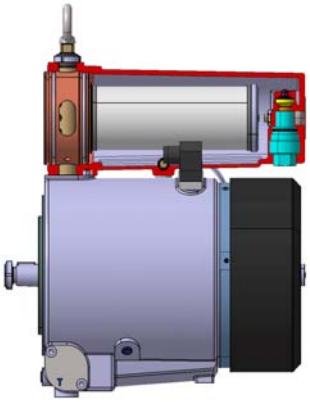

COOLING

The compressor is complete with two aluminum coolers, one for the oil and one for the compressed air. Cooling air is produced by a fan driven off the main electric motor.

A condensate separator and electronic drain with timer are available (see options). Enclosure openings and electrical connection points are supplied for powering the drain valve directly from the compressor control panel.

.

HEAT RECOVERY

As described in the previous paragraph, an air flow produced by the fan cools the oil and the compressed air. The heat removed creates a flow of hot air which can be used to heat work spaces during the winter season.

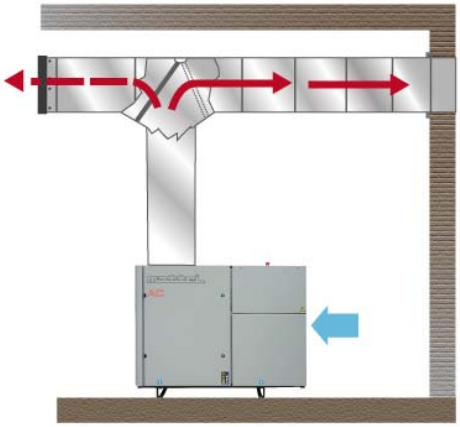

On average 1 kW installed power allows to heat about 30 cubic meters space by 1 K.

The compressor can be supplied with an “energy recovery” system upon request (see Optional equipment).

In the energy recovery system the oil passes through an oil-water heat exchanger controlled by a thermostatic valve located before the oil cooler. The heated water can then be used for industrial or sanitary purposes.

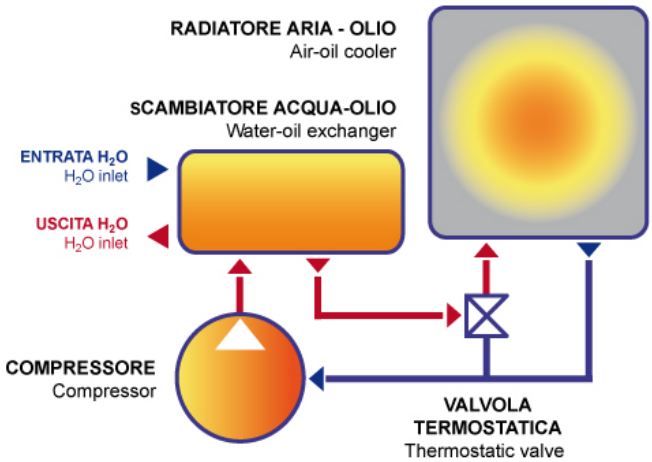

COUPLING

The compressor and the electric motor are connected by means of flexible coupling. This ensures a perfect alignment, no power absorption, silent operation and no need for maintenance.

CAPACITY REGULATION

To achieve maximum energy saving the compressor can be operated in three modes which can be selected through the control panel.

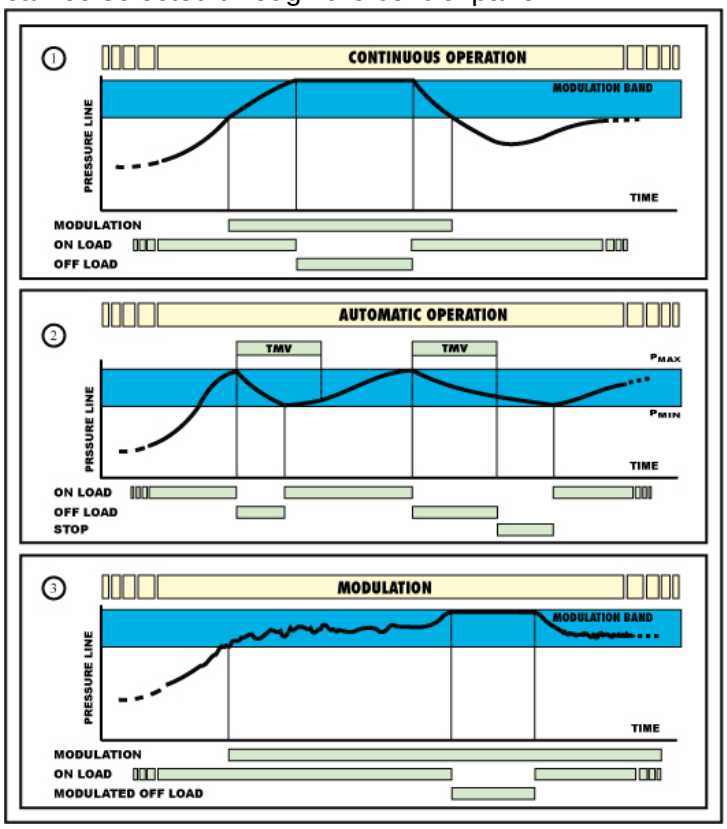

In “Continuous” operation the compressor delivers air within a preset maximum/minimum pressure range. When reaching the maximum pressure the intake valve closes. The compressor runs "off-load" and is decompressed to 21 psig to reduce the energy absorption. When the pressure decreases and reaches the minimum value, the compressor goes back to "load" and starts delivering air instantly.

In “Automatic” operation a further function is added to the previous one. This allows the compressor to stop automatically in case there is no air demand over a specific period of time.

In the ”Modulation” mode the air delivery is regulated and adjusted to the system demand by the hydraulically controlled intake system. This is a typical feature of Mattei compressors. The system includes an intake valve and a servovalve that work in conjunction to meet system demand. The compressor will have a maximum pressure that is set by the servovalve regulating system. When this is reached the intake valve closes and no more air is delivered. For pressures within 4 psi of the maximum pressure the compressor delivers a continuous and variable amount of air based on the system demand. At lower pressures the compressor delivers the maximum flow.

ELECTRIC STARTER

The metallic electric control box is IP-54 rated and includes:

- Star/delta starter
- Motor thermal overload protection relay
- 110 V transformer for auxiliary circuits
- 24 V transformer for MAESTRO^{XS} controller
- Primary and secondary circuit fuses
- Terminal board for remote start, stop and signal controls
- Emergency stop button
- Safety devices:

compressor high temperature - motor overload - low oil level - inadequate ventilation - high air and oil temperature - failure of pressure sensors - door safety switch

MICROPROCESSOR CONTROL AND PROTECTION SYSTEM " MAESTRO^{XS} "

Maestro^{XS} is a programmable system which controls the compressor operation and adapts this to the specific requirements of the air distribution system.
It has different programming levels and special options of controlling and analysing the operation and faults.
Advanced programming and analysis levels are protected by digital codes to avoid unintentional tampering.
Maestro^{XS} has an integrated memory module that stores the operational settings and data in case of an electricity cut out.

Hardware:

- Ergonomic control panel with keys for quick access to the main menu.
- Access keys to menu, start, stop and reset with “Led” indication.
- “LCD” semi-graphic display, lighted text – 8 lines for 22 letters.
- Supply 24 V AC 50/60Hz.
- Digital inputs 24 V DC.
- Digital outputs with volt free contacts up to 230V AC and up to 24V DC.
- Analog output 0-10 V DC.
- Pressure analog signals (4-20mA).
- Temperature analog signals (NTC).
- Interfaces:
  - RS485 to communicate with other “MAESTRO” devices
  - RS485 (optional) to communicate with PC supervisor and the network.

Software:

- Simple to use menu structure.
- Easily updated.
- Readouts include:
  - Analog data:
    - line pressure, separator pressure, oil chamber pressure, oil temperature, outlet air temperature.
  - General data:
    - alarms, operative messages, machine status, maximum and minimum pressure, last start and last stop.
  - Hour counter:
    - display of on/off times, operation, load, maintenance times.
  - Events storing:
    - alarm and fault recording with indication of which alarm was activated, hour of the alarm activation and machine status.

The device allows the following:

- Multilingual user interface.
- Start/stop weekly and hourly programming.
- Immediate reading on the display of compressor operational data:
  - Compressor on/off, operation and load hours
  - Line pressure and oil chamber pressure
  - Air outlet temperature and compressor oil temperature
- Programming of basic parameters (accessible by the user) for optimal compressor operation:
  - Compressor control mode: local, network (master/slave)
  - Operating mode (continuous, automatic, modulation)
  - Pressure checking (locally with pressure probe and externally by pressure switch)
  - Setting of maximum and minimum operating pressures
  - Setting of off load operating time
  - Setting of separator element change and oil change times.
- Password protected Advanced programming to insure only qualified technicians are able to change the parameters.
- Status check of controller/machine inputs and outputs to detect possible failures in the compressor electrical system and/ or in the safety and protection devices.
- Storing of up to 20 fault events.
- Storing of up to 20 last program modifications.
- Remote control for machine starting and stopping.
- Remote control, through volt free contacts, of the following machine states:
  - Compressor allowed to operate (Optional)
  - Operating compressor (Optional)
  - Compressor on load (Optional)
  - Tripped compressor. (Standard)

Note

MAESTRO^{XS} can be connected to a Mattei SuperVisor device (Optional) to allow:

- The remote monitoring through web interface.
- To signal alarms through e-mail, fax or mobile phone.

STANDARD EQUIPMENT

The compressor is supplied complete and includes:
intake air filter - air pressure gauge - minimum pressure/non return valve - safety relief valve - thermostatic valve - oil filter - oil level indicator - initial charge of Mattei Rotoroil 8000 F2 synthetic lubricant.

SOUNDPROOFING CANOPY

All components described are in a metal soundproofing enclosure. The enclosure is epoxy powder painted, lined internally with fire resistant sound abating material.

The enclosure has a pre-filter to prevent intake of large particles that could clog the radiators and the air filter.

Detachable hinged doors and panels allow easy access for the routine maintenance.

The base has openings to allow easy handling.

INSTALLATION

The compressor is supplied ready-to-use and needs no foundations.
Once placed in position, only the electrical connections and air connections have to be arranged. The electric supply should be: 3 phases + ground.
The disconnect switch and the protecting fuses are not included in the supply.
The compressor must be placed in a well ventilated area away from any heat source and the air should not contain flammable gases or solvents that could be drawn in by the compressor or the motor. In case of doubts, please contact our Technical department. If the compressor is installed in the open, a roof or other suitable covering must protect the equipment from atmospheric agents.

OPTIONAL EQUIPMENT

The compressor can be customized by purchasing specific accessories:

- **Condensate drain and separator kit** code IF54A34421 is installed externally to the soundproofing enclosure. It provides separation and draining of the condensate from the after cooler.
- **High efficiency intake filter kit** code IF54A43341 is installed in place of the standard filter. It can remove particles equal to or larger than 3 micron with a filtering efficiency 99%.
- **Heat recovery kit** code IF52A43339 to heat water for process and sanitary purposes. The kit is composed of a water/oil plate exchanger, a thermostatic valve and connecting pipes. It can be supplied already installed on compressor or as a separate component for remote operation.
- **Oil-water separator kit** code IF54A43340 installed inside the soundproofing enclosure to ensure separation of oil from the condensate water It requires the installation of the condensate drain and separator kit code IF54A34421.

PACKING
Standard packing includes: wooden shipping pallet, a polythene cover and a cardboard box.

DOCUMENTATION
The compressor is supplied complete with:
no. 1 Operating and maintenance instructions complying with Machines Directive 98/37 CE
no. 1 EC declaration of conformity
no. 1 Commissioning report
no. 1 Certificate of Conformity
no. 1 Maintenance schedule
no. 1 Wiring diagram (inside the Electric Panel)

CERTIFICATIONS
Ing. Enea Mattei S.p.A. has been certified by DNV with the Quality System Certificate, conforming to UNI EN ISO 9001 standard.

COMPANY
WITH QUALITY MANAGEMENT
SYSTEM CERTIFIED BY DNV
=ISO 9001 : 2000=

mattei® BEST SOLUTIONS IN COMPRESSED AIR	DESIGN DATA	rev	B
	1000 Series	data	Sep-09
		Compiled by	MRB/WK
		Approved by	

SERIES					AC 15 / AC 15 Plus		
VERSION					LX	HX	
Airend Nominal Pressure psi (g)					110	140	
PERFORMANCE							
				psi (g)			
Free air delivery (1)	CFM (F.A.D.)			100	106.5	95.7	
Terminal power (2)	[kW]				20.1	19.0	
	CFM (F.A.D.)			105	106.2	20.2	
	[kW]				20.6	19.5	
	CFM (F.A.D.)			110	106.0	95.2	
	[kW]				21.1	19.9	
	CFM (F.A.D.)			115	-	95.0	
	[kW]				-	20.4	
	CFM (F.A.D.)			120	-	94.8	
	[kW]				-	20.8	
	CFM (F.A.D.)			125	-	94.0	
	[kW]				-	21.2	
	CFM (F.A.D.)			130	-	94.4	
	[kW]				-	21.6	
	CFM (F.A.D.)			135	-	94.2	
	[kW]				-	22.0	
	CFM (F.A.D.)			140	-	94.0	
	[kW]				-	22.4	
	CFM (F.A.D.)			145	-	-	
	[kW]				-	-	
Off load power				[kW]	4.7	3.9	
Sound pressure level **(3) (6)**				[dB(A)]	69		
REFERENCE CONDITIONS							
Intake pressure				[psi(a)]	14.5		
Intake temperature				[°F]	68		
Relative humidity				%	0		
Nominal motor speed				rpm	1,800		
ELECTRICAL CHARACTERISTICS							
Motor rated power				[hp] / [kW]	20 / 15		
Voltage **(4)** *- Frequency*				[V/Hz]	230/60 or 460/60		
Enclosure-Insulation class					IP55-F		
Electric starting					Star delta		
Fan rated power **(6)**				[hp]	--		
Fan rated efficiency					n/a		
Auxiliary circuit voltage				[V]	110		
Supply min wire section				[AWG]	7 (x 33 ft)		
TYPE OF INTAKE CONTROL REGULATION							
Modulation					intake proportional valve		
On load, off load and stop					pressure control		
On load, off load					pressure control		
INTEGRATED DRYER (Only Plus)							
Absorbed power				[hp]	1.9		
Refrigerant					R 404 A		
Nominal dew point				[°F]	38		
TECHNICAL DATA							
Min-max allowed ambient temperature				[°F]	+34 / +104		
Outlet air temperature **(5)**					-		
AC version	AC Plus Version			[°F]	≤ 86 / 68		
Min-max oil temperature				[°F]	176÷230		
Cooling air flow rate **(6)**				[cfm]	163		
Fan residual head **(6)**				[Pa]	20		
Total recoverable heat				%	~ 95		
Oil system capacity				[gallon]	2.6		
Oil carry over				[ppm]	≤ 3		
Air outlet size					Rp 1"		
Condensate drain outlet size							
PLUS VERSION					2 X Rp ¼"		
With condensate sep. KIT **(7)**					ϕ 10		
Water inlet-outlet size					-		
With heat recovery KIT **(7)**					2 x Rp ¾"		
LxWxH		AC	AC Plus	[inch]	60 x 32 x 48		
Weight with oil		AC	AC Plus	[lb]	982	1,070	

(1)= According to ISO 1217: 1996 (annex "C")
(2)= Without dryer power (only Plus version)
(3)=According to PN8NTC2.3 measured at 1m distance
(4)= According to IEC 38
(5)= According to reference conditions indicated
(6)= Frequency 60 Hz
(7)= Optional

A TERMINI DI LEGGE LA "ING. ENEA MATTEI S.p.A." SI RISERVA LA PROPRIETA' DEL PRESENTE DISEGNO E NE VIETA L'UTILIZZAZIONE E LA RIPRODUZIONE O LA COMUNICAZIONE A TERZI SENZA IL PROPRIO BENESTARE.
THIS DRAWING CONTAINS PROPRIETARY DATA BELONGING TO "ING. ENEA MATTEI S.p.A." ANY RIPRODUCTION, UTILIZATION, EXIBIT OR LENDING IS NOT ALLOWED, WITHOUT PRIOR WRITTEN CONSENT.

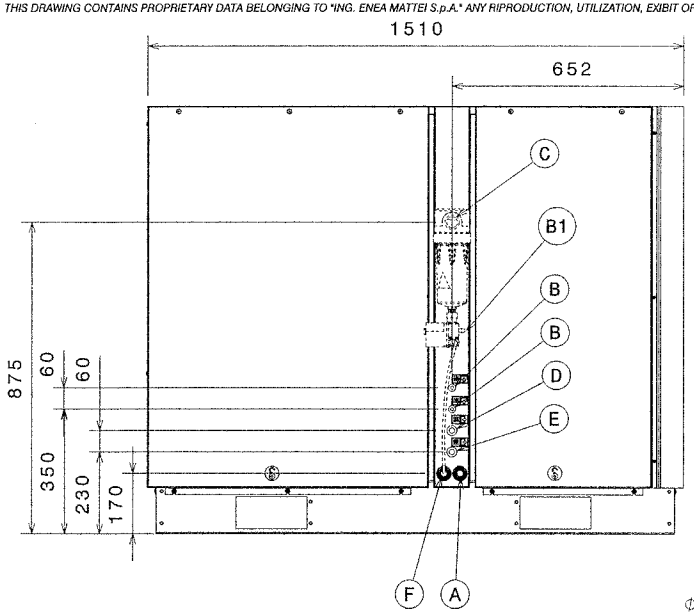

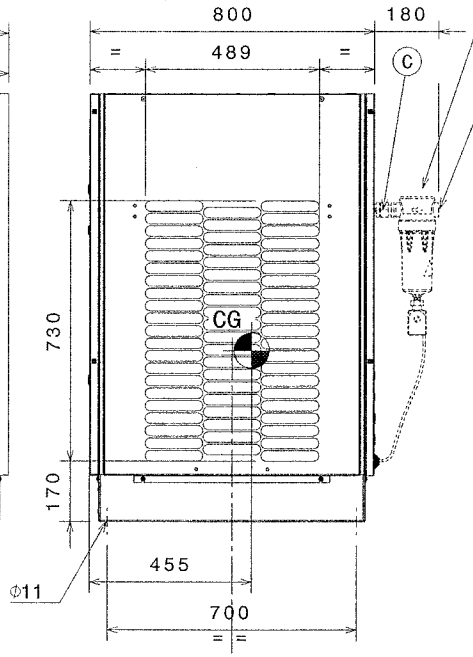

SEPARATORE DI CONDENSA (OPZ.)
CONDENSATE SEPARATOR (OPT.)

ARIA DI RAFFREDDAMENTO
COOLING AIR

OUT

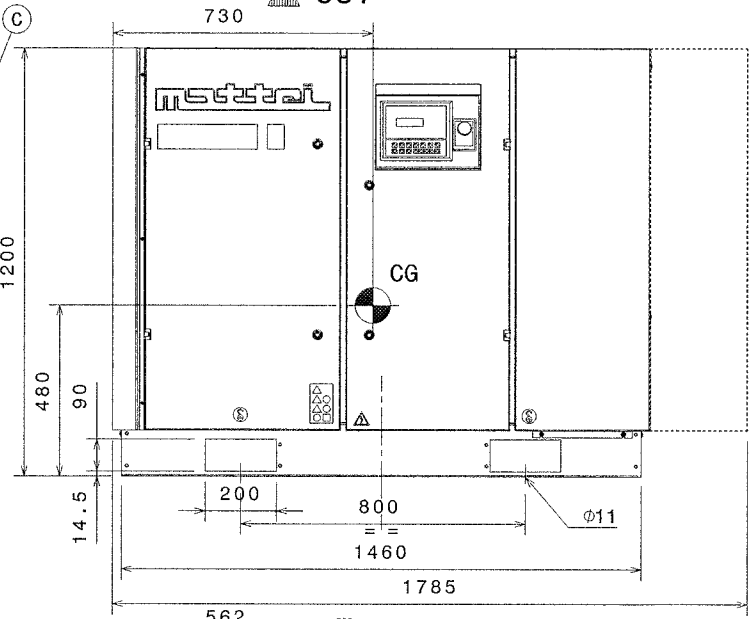

PREFILTRO
PREFILTER

IN

SERVIZIO
FOR SERVICE

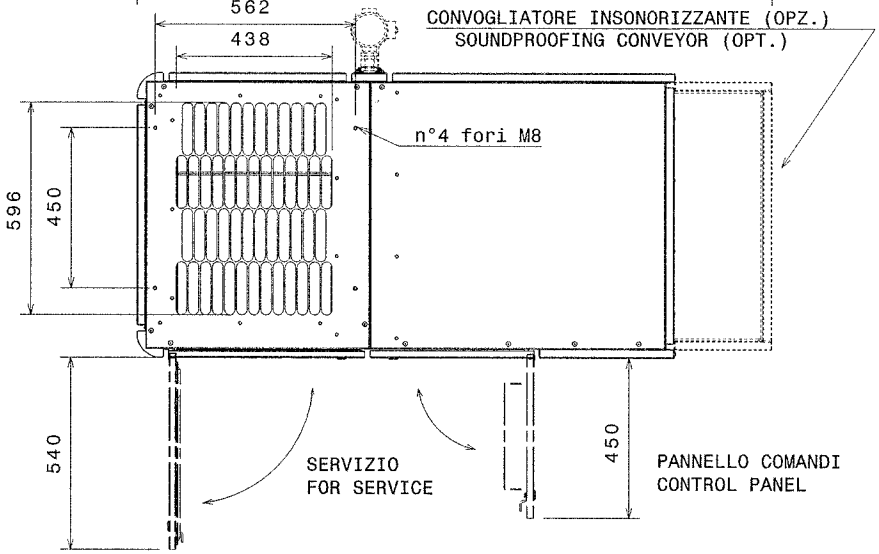

CONVOGLIATORE INSONORIZZANTE (OPZ.)
SOUNDPROOFING CONVEYOR (OPT.)

1) VERSIONE "PLUS" 2 x Rp 1/4
"PLUS" VERSION

2) CON SEPARATORE DI CONDENSA Φ10
WITH CONDENSATE SEPARATOR

3) CON KIT RECUPERO CALORE (OPZIONALE) 2 x Rp 1/2
WITH HEAT RECOVERY KIT (OPTIONAL)

ITEM	CONNECTION	SIZE
A	INGRESSO LINEA EL.SUPPLY	Φ31 MAX
B 1)	SCARICO CONDENSA CONDENSATE DRAIN	---
B1 2)	SCARICO CONDENSA CONDENSATE DRAIN	Φ10
C	USCITA ARIA AIR OUTLET	Rp 1
D 3)	ENTRATA ACQUA WATER INLET	---
E 3)	USCITA ACQUA WATER OUTLET	---
F	FORO SUPPLEMENTARE SUPPLEMENTARY HOLE	Φ31 MAX
CG	CENTRO DI GRAVITA' CENTER OF GRAVITY	

		Massa Kg Mass (con olio) (with oil)
AC 15 H-L-HH		445
= =	PLUS	485
AC 18 H-L-HH		445
= =	PLUS	485
AC 22 H-L-HH		450
= =	PLUS	490

SUPERFICIE DI CARICO LOADING AREA m2	~0,211
CARICO SULLE FONDAZIONI FLOOR LOAD max N/cm2	~2,1

DIMENSIONI PRINCIPALI-GENERAL ARRANGEMENT

DATA *date*	10.2005
DISEGN. *drawn*	TB
APPROV. *approved*	G.F.

mattei
BEST SOLUTION IN COMPRESSED AIR
ING. ENEA MATTEI S.p.A.

TITOLO *title*: AC 15-18-22 H-L-HH-plus

REV. B

SCALA *scale*: /

NO. DISEGNO *dwg.no.*: 34428

FOGLIO *sheet*: 1/1

MATTEI A3 1

AIR COMPRESSORS

Serie AC 1000

800

801a

INSTRUCTION, USE, AND MAINTENANCE MANUAL

TIEG4G-209

Translation of the original instructions in Italian

ING. ENEA MATTEI SpA
Strada Padana Superiore 307 - 20090 VIMODRONE (MI)
Tel +39 - 02253051 (16 linee) - Fax +39 - 0225305243
E-Mail: info@mattei.it - www.matteiaircompressors.com

801a

Versions

- **AC 15** (Plus)
- **AC 18** (Plus)
- **AC 22** (Plus)
- **AC 30s** (Plus)

Voltages/Frequencies

- V 230/50 - 400/50 Hz
- V 230/60 - 460/60 Hz

The present manual, written in English, is the official translation of the manual in **Italian**, chosen as reference language by Ing. ENEA MATTEI SpA.
The paper copy will be available for over 10 years after end of production of the machine to which it refers.

The content of this document cannot be used, reproduced or disclosed to third parties without the explicit written consent of **Ing. ENEA MATTEI S.p.A.**

Ing. ENEA MATTEI S.p.A. reserves the right to modify the characteristics of the machine subject of this document without prior notice.

Copyright 2008 by **Ing. ENEA MATTEI S.p.A.**

This Instruction Manual meets all the requirements of Directive 2006/42/EC.
It is to be considered valid for both the machines with the CE Marking and those without it.

Important Note
This manual should always be used together with the "MAESTRO ^{XS} User's Manual", code TECA2G-007

General Information
- Symbols in the manual Page 1.01
- Purpose of Document Page 1.02
- Required Qualifications for Operators Page 1.03
- Identification data of the Manufacturer and the Machine and the location of the nameplate “CE MARKING” Page 1.04
- General Delivery Notes - Final inspection - General Safety Warnings Page 1.05
- Settings at the Customer’s expense Page 1.09
- Instructions on how to request interventions - Instructions on how to order spare parts - The manufacturer’s address Page 1.10

General Information - SAFETY
- Dangers and residual risks and General Information Page 2.01
- Responsibilities Page 2.04
- Description of Pictograms Page 2.05

Description of Machine
- General Description of Machine Page 3.01
- Technical Data and Overall Dimensions Page 3.08

Transportation and handling Page 4.01

Installation
- Position of compressor Page 4.02
- Electrical connection Page 4.03
- Connection to the air network Page 4.04
- Dimensions of compressed air distribution piping Page 4.05
- Heat recovery Page 4.06

Safety Devices Page 5.01

Commands and control Page 5.02

Use of compressor
- Foreword Page 6.01
- Operation modes Page 6.02
- Basic Programming Menu Page 6.04
- Operational Failures Page 6.05
- Start - Stop Page 6.06

Maintenance Page 7.01
- Réguler Checksums Page 7.02
- Check of oil level - Cleaning and/or replacing the air suction filter - Cleaning the oil/air radiator Page 7.03
- Cleaning the pre-filters- Cleaning and/or replacing the oil return valves Page 7.04
- Replacing the oil filter Page 7.05
- Replacing the oil/air separator elements Page 7.06
- Oil change Page 7.08

Lubricants Page 8.01

Troubleshooting Page 9.01

The electrical motor Page 10.01

Storage - Decommissioning and dismantling Page 11.01

Condensate discharge in optional kit Page 12.01

Attachments:

Form to request Technical Service

Form to request spare parts

Parts to be replaced during maintenance

“Technical Data” Sheets

Symbols in the manual

In this manual some symbols are used that to attract the reader's attention and underline some particularly important aspects of the treatment.

The table below gives the list and describes the meaning of the different symbols used.

SYMBOL	MEANING and NOTES
098	**Danger** It indicates a danger with the risk for accident, even fatal, for the user. Pay careful attention to text block with this symbol.
!	**Warning** It warns against a possible deterioration of the machine or personal item of the user.
	Notice It shows either a notice or a note on the key functions or useful information.
	Further information This symbol introduces text blocks containing further information. This information has no direct relationship with the description of a function or with procedure development. They could be cross-references to other documents or other sections of this manual.
	Damage risk It indicates a high damage risk of a piece, for example, using a wrong tool or by mounting something with the incorrect procedure.
	Visual Check It recommends the reader to carry out a visual check. This symbol can also be found in the instructions for use. The user is required to read a measure value, to check some warning signs, etc.
	Acoustic Check It recommends the reader to carry out a sound acoustic check. This symbol can also be found in the instructions for use. The user is required to listen to an operational noise.

Purpose of Document

This manual contains the technical characteristics, the performance, the transportation and installation rules, the instructions for use, and the preventive and corrective maintenance operations of the machine manufactured by **Ing. ENEA MATTEI** S.p.A.

☞ **NOTE : This manual should be considered an integral part of the machine, and should stay with it during the entire life span of the equipment.**
Keep this manual and all of the attached documents in a place easily accessible to all staff in charge of the control or the maintenance of the machine.
Ing. ENEA MATTEI S.p.A. reserves the right to subject the supply of further copies to the repayment of charges and the acceptance of special provisions with respect to the legitimate defense of intellectual, patent, and executive identity and functional property of the product and/or its parts.
It is understood that forwarding all or part of this manual to third parties is not tolerated unless with the prior written consent of Ing. ENEA MATTEI S.p.A. for both the text, the illustrations and the diagrams attached.
Ing. ENEA MATTEI S.p.A. reserves the right to make changes without prior notice. Any change, supplement or suppression of elements, components, functions or cycles of the machine, not previously agreed upon with Ing. ENEA MATTEI S.p.A. releases the manufacturer from any responsibility whatsoever.

This manual is for the user and the service engineer of the machine, and it aims at supplying them with the basic technical data typical of the system, a technical description of the several operating groups that form it as well as the essential use procedures and the information necessary to perform preventive and corrective maintenance.

This manual is for staff with a sound knowledge of the processing technique, of mechanical and electrical diagrams, and is for both those in charge for the use of the machine and the service engineers.

This manual is an integral part of the machine and contains information that aims at granting all staff safe working conditions and guaranteeing perfect efficiency during the life span of the machine.

For a correct use of the machine, it is assumed that the working environment is adequate to current regulations concerning safety and hygiene.

Directives and Technical Standards Applied

The machine has been designed, made, and inspected in compliance with the “safety and health essential requirements” stated in attachment I to the **European Directive 2006/42/EC**.

The list below gives the reference Standards used by **Ing. ENEA MATTEI** S.p.A. to design, make, and to make the final inspection of the machine.

List of Directives and Technical Harmonized Standards

MACHINERY DIRECTIVE 2006/42/EC
ELECTROMAGNETIC COMPATIBILITY (EMC) DIRECTIVE 2004/108/EC
LOW VOLTAGE DIRECTIVE 2006/95/EC
EN 1012-1 Compressors and vacuum pumps – Safety Requirements - Compressors.

Required Qualifications for Operators

The operator in charge of the operation or the maintenance of the machine should have all the professional requirements specific to each foreseen operation.
The operator should be trained and aware of his responsibilities.
Below is the description of the professional profiles concerning the operators in charge of the machine

099

Entry Level Machine Operator (Qualification 1)
Qualified staff able to carry out simple tasks, i.e. to operate the machine with the use of controls on the push-button, and to carry out typical simple functions of adjustments, start or stop.

100

Second Level Machine Operator (Qualification 2)
Qualified staff able to carry out the task of qualification 1 and also to operate the machine with disconnected safety protections to perform specific adjustments, start or stop functions.

☞ *Important*
This qualification includes those responsibilities typically subdivided into two separate qualifications. For the operator in charge of our machines, a specialization course is held to train the operator to be able to perform all of the actions necessary to operate the machine even with some of the protections disconnected. However, this requires a certain competence by the operator and extreme care by the manager of the factory so that the said operator carries out only the established operations.

101

Mechanical Service Engineer
A qualified engineer able to operate the machine under normal conditions, to operate it with disconnected protections, to intervene on mechanical parts to carry out all adjustments, carry out maintenance and all of the necessary repairs.
This person is not empowered to carry out interventions on electrical systems with live voltage.

102

Electrical Service Engineer
A qualified engineer able to operate the machine under normal conditions, to operate it with disconnected protections. He/she is in charge of all electrical adjustments, maintenance and repair.
He/she is able to operate with live voltage inside cabins and shunt boxes.

103
A
104

The Manufacturer's Engineer
qualified engineer from the manufacturer to perform complex operations in special situations or according to that which has been agreed upon with the user.

Identification data of the Manufacturer and the Machine and the location of the nameplate "CE MARKING"

Ing. ENEA MATTEI S.p.A. is identified as the machine's manufacturer in conformity with the laws in force with the following acts:

- Declaration of conformity - CE Marking – Instruction Manual

305

A specific plate on the machine gives the following indelible information on the **CE MARKING**:

Model
Code
Serial number
Year of manufacture
Delivery
Pressure
Power
Number of runs
Dryer
Tank Capacity
Total Weight
Name and address of manufacturer

The "CE MARKING" plate has been applied at the base of the machine.

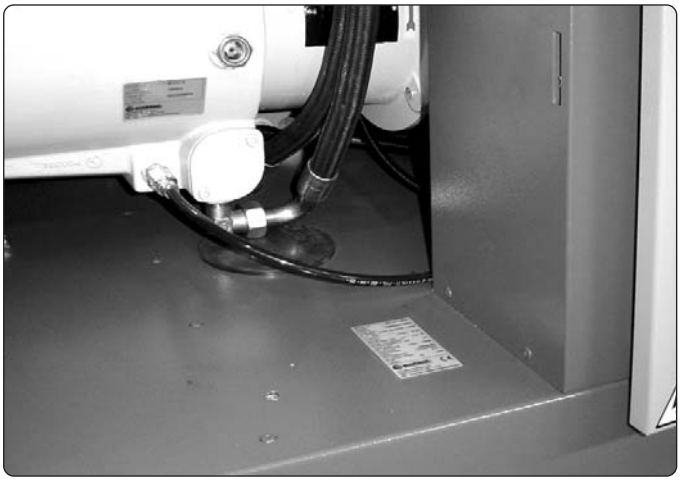

803

The relevant "**DECLARATION OF CONFORMITY**" has been attached.

It is forbidden to remove the "**CE MARKING**" plate and/or exchange it for other plates of machines of the same model supplied to the Customer or the operator.

Should the "**CE MARKING**" plate be accidentally damaged or removed from machine, the customer is required to inform the Company.

General notes on delivery

Upon receipt of the machine please check that:
The supply complies with the order speci cation.
There are no damages due to transportation or other reasons.
(In the event of damage or missing parts, please inform immediately and in detail the forwarding agent or **Ing. ENEA MATTEI S.p.A.**)

ALWAYS STATE THE MACHINE SERIAL NUMBER AS WELL AS THE PRINT NUMBER OF THIS CATALOGUE WHEN MAKING ANY REQUEST TO Ing. ENEA MATTEI S.p.A. OR ONE OF THEIR SERVICE CENTRES.

Final inspection

The manufacturer carries out the nal inspection of the machine directly, during the production phases, in compliance with the company quality system.
Ing. ENEA MATTEI S.p.A. is responsible for the machine under its original con guration.
Ing. ENEA MATTEI S.p.A. refuses any responsibility for improper use of the machine, for damages due to operations which are not described in this manual or unreasonable jobs.

Safety precautions

The nal user should comply with the instructions given by the seller, concerning:

- safety devices already installed on the machine
- instructions for correct machine installation
- correct use and periodic maintenance of all the machine components, including safety devices
- regulations of current laws

The following safety precautions de ne both the behaviour and obligations to be observed when carrying out the activities listed in the manual, the instructions for the machine use and the way how to operate under safety conditions, for the staff and the surrounding environment.

Machinary Directive
Machinary Directive means the DIRECTIVE OF THE EUROPEAN COMMUNITY COUNCIL 89/392/EC dated 14th June 1989 and its subsequent amendments that modify its content 91/368/EC dated 20th June 1991, 93/44/EC dated 14th June 1993 and 93/68/EC dated 22nd July 1993.
In June 1998 the Machinary Directive and its subsequent amendments were included into Directive 2006/42/EC without modi cations.

Machine
Machine means the functional assembly composed of: control unit, processing unit, working and resting equipment, systems (electrical, pneumatic, hydraulic, cooling, lubrication systems) and any group completing the system functionality.

Working area
Working area means the protected volume limited by guards to prevent injuries and aimed at operation during the machine processing.

Authorized staff
Authorized staff means personnel duly trained and appointed to perform the activities listed below and that make up the operating instructions for the machine.

Appointed staff
Appointed staff means the personnel who, although not participating materially in the work, supervise the work of others, for example the responsible engineer.

Transport
Transport means all those operations regarding the handling of the machinery or part of it

Installation
Installation means the mechanical, electrical and uid system integration of the machine into a production reality, in compliance with speci ed requirements.

Commissioning
Commissioning means the functional check of the machine installed.

Operation
Operation means the operating mode at which the machine produces compressed air according to all settings and controls inserted by the control device.

Decommissioning
Decommissioning means to disconnect mechanically and electrically the machine from a production line.

Dismantling
Dismantling means dismantling and eliminating the machine components.

Maintenance and repair
Maintenance and repair means the regular check and/or replacement of parts or components of the machine and any action to identify the cause of failure, ending with the machine resetting to the design operating conditions.

Improper use
Improper use means using the machine out of the limits speci ed in the technical documentation.

Applicability
The regulations should be applied when performing following activities:
- Transport, installation and setting up
- Manual operation
- Continuous operation
- Decommissioning and dismantling
- Maintenance and repair

that compose the use procedures foreseen for the machine.

Installation and commissioning

“The installation and commissioning are only permitted to authorised staff.
During installation, handle the machine components as indicated in this manual; if lifting is necessary, verify rst the correct xing of speci c devices for lifting and use adequate slings and equipment.
The machine installation should be as free as possible from any material preventing or limiting its view.
If there are any, remove xing brackets or eyebolt blocking devices, previously tted to allow the transport.
Check that all the machine safety devices are correctly xed and there are no moving or loose parts. Also check soundness of the control unit components.
Connect the machine pneumatic system to the air distribution system and carefully check that pressure is set to the correct value.
Check consistency between the voltage set on power transformers and the voltage value of the electrical supply.
Before connecting the machine electrical system, check that the mains isolator is blocked in the open position.
Verify that accident preventing guards are correctly installed and in perfect state.

The machine safety is not guaranteed in case of removal, by-pass or tampering of the safety devices on the machine.

To stop the machine during an emergency, press the emergency stop button.

Operating the machine

Only authorised and duly trained staff or at least with a suf cient technical experience should operate the machine. The staff in charge of operating the system should be aware that the knowledge and application of safety regulations is in an integral part of their job.
Unskilled personnel should not access the operating area and the machine control panel when the system is live.

Before starting the machine, carry out following operations:

- Carefully read the technical documentation;
- Get information about the operation and position of emergency stop devices on the machine;
- Know which protections and safety devices are tted on the machine, their position and operation.

It is forbidden to either disconnect or partially remove the protections and safety devices. The same applies for danger signals located in particular areas of the machine. It is strictly forbidden to access the working area and the control and power cabins during operation of the equipment (even partial) or immediately after it is switched off.
Protections and safety devices should be kept in perfect state so as to allow right operation; in case of failure they should be repaired or replaced.
The use of not authorised components and accessories for the protections and safety devices may lead to malfunctioning and dangerous situations for the operating staff.

Decommissioning and dismantling
Only authorised staff is allowed to decommission and remove the machine.
Before setting the machine out of operation it is necessary to disconnect the mains isolator and block it in the open position.
Discharge oils and uids, remove all moving parts.
Disconnect the mains isolator cable, by cutting out the power wires and then the earth wire.
Disconnect the power supply cable from the machine main switch and remove it.
Disconnect the machine pneumatic equipment from the air distribution system.
Remove the machine from the working area following the instructions given in this manual. Before lifting it, verify the correct use of lifting devices and use only suitable equipment.

Waste disposal should be performed in compliance with the laws in force in the country where the machine is installed.

- ❑ Installation, setting up and use of compressor should be carried out in compliance with the standards and the rules in force concerning safety at work.
- ❑ The owner of the machine is responsible for its good maintenance, an essential condition to ensure safe operation.
  Those machine parts that due to improper use or wear do not ensure safe operation should be quickly replaced.
- ❑ Only trained, authorised and skilled staff should perform the installation, use, maintenance and repairs.
- ❑ In case of difference between the instructions given in this manual and those foreseen by current laws concerning safety, it is recommended to apply the more restrictive ones.

Maintenance and repair
Only authorised personnel should carry out maintenance, troubleshooting and repairs.
Any maintenance and repair in progress should be signalled by a speci c sign, stating the maintenance condition and placed on the control panel until completion of the job, even if temporarily interrupted.

All operations for installation, maintenance or replacement of components on the machine or on the control unit should be performed with switched off system.
Therefore, the main switch should be on OFF (OPEN) position and blocked with the safety lock to prevent any movement to the ON position.

For compressors equipped with INVERTER, before performing any maintenance job, wait at least
5 minutes after you have disconnected the electricity supply.

Before acting, people in charge of maintenance should rst check following conditions:
• that any receiver under pressure has been exhausted.

Before intervening on pneumatic or lubricating systems and speci cally on pipes, receivers, hoses and other components under pressure, the staff in charge of maintenance should reduce the internal pressure of the plant down to the ambient pressure value.
Faulty components must be replaced with others having the same code.

If during troubleshooting it is necessary to carry out jobs with the control unit and the machine live, all precautions should be taken, as required by the safety standards to operate under dangerous voltages and with moving parts.
At the end of the maintenance and troubleshooting jobs, all disconnected safety devices should be reset.
Maintenance, repair and troubleshooting should be ended by the checking of the machine operation and of all its safety devices.

Settings to be made by customer

Unless different contractual agreements are taken, the following items are normally at customer's expense:

- ❑ room preparation (including building works, such as foundations or canalizations, etc, if required);
- ❑ anti-slip, levelled ooring;
- ❑ observing the dimensions given in the layout drawing when preparing the site and when installing the machine itself;
- ❑ preparation of auxiliary services, suitable for the system requirements (such as electricity supply, pneumatic system, etc)
- ❑ preparation of the electrical equipment conforming to 2006/95/EC Directive;
- ❑ adequate lighting complying with EN 60204-1 Standard;
- ❑ any safety devices upstream and downstream of the electrical supply lines (like differential switches, earthing systems, safety valves, etc) foreseen by the current laws in the country of installation;
- ❑ earthing equipment complying with CEI 64-8 Standard;

801a

For any kind of information on the use, maintenance, installation, etc. **Ing. ENEA MATTEI S.p.A.** is always available to meet the Purchaser's requests.

However, any enquiry should be made in clear terms, with references to this manual and always stating the data on the machine id plate.

For any communication with the service centre, always indicate the machine model, the serial number and year of manufacture, helping to identify every single machine and, when possible, specify the kind of problem or the defect found, for instance: electrical, mechanical fault or defects in the machining quality, and describe the same in the "**TECHNICAL SERVICE REQUEST FORM**" enclosed to this manual.

Please contact the nearest local service department, or refer to the headquarters in Italy.

Instructions on how to order spare parts

In the course of time a machine may need the replacement of those parts subject to wear.
The Purchaser may order the parts to be replaced.
It is compulsory to always buy original spare parts.

To order spare parts always indicate following data with the utmost accuracy:

1 Machine type and model
2 Serial number
3 Exact description of the item
4 Code and/or reference (if available)
5 Quantity

To simplify and speed up the delivery of spare parts, it is suggested to forward orders by compiling the "**SPARE PARTS REQUEST FORM**" enclosed with this manual and send it to **M.T.A. S.p.A.** or to the closest distributor.

The manufacturer's address

Any request for intervention of the technical service by the customer or explanations on technical aspects of this document should be made to:

Technical and Spare Parts Service

075 M.T.A. S.P.A. MECCANICA TECNICA ASSISTENZA

Corso Italia, 47 – 24049 VERDELLO - ZINGONIA (Bergamo) - Italy
TEL: +39 - 035/4186400 (Automatic search) FAX: +39 - 035/4186490
e-mail: info@mta.bg.it
C.P. N° 69 Zingonia

098 **To operate the machine under any operating condition, including maintenance, it is not necessary that more than one person be present.**
Using more than one person is superfluous and, in any case, not allowed for safety reasons.

! The employer should instruct the staff on the risks of accidents, on safety devices and on the general rules concerning prevention and protection, as established by the European Community Directives and by the current legislation in the country where the machine is installed.
The operator should be aware of the location and operation of all controls and of all the machine features.
The operator should also have read the entire manual.
Only skilled engineers should carry out maintenance jobs, after having duly prepared the machine.

098 **Any unauthorized tampering or replacement of one or more parts of the machine, or the adoption of accessories that modify the use of the machine and the use of different materials than those recommended in this manual, may be a potential risk of accidents.**
It is strictly forbidden for the machine to be operated by two persons contemporaneously, one inside the guards and one on the control panel.

Dangers and residual risks

During the design phase all hazardous areas have been considered and, therefore, all necessary precautions have been taken to avoid risks to people and damage to the machine components.
To guarantee both health and safety of those exposed, the machine is equipped with appropriate safety devices:

- EMERGENCY button to stop the machine immediately
- Fixed protections. located in areas with exclusive access for routine maintenance. They are xed by devices that need special tools for their removal, or they are locked with screws.
- Protection and segregation of the electrical/electronic driving equipment of the machine by metallic box, to avoid accidental contacts with live equipment in case the metallic box is open; the electric box is IP 54 protected; IP 20 is the protection degree of the internal devices against accidental contact.
- Suitable panels or protection to cover moving parts.
- Electrical devices to detect faults of the machine electrical supply and malfunction of motor electrical devices.

098 **WARNING !!!**
For compressors equipped with INVERTER, before performing any maintenance job, wait at least 5 minutes after you have disconnected the electricity supply.

098 **WARNING !!!**
Our machine IS NOT SUITABLE for use in areas with potentially explosive atmosphere.

After having carefully considered all possible risks concerning the use and maintenance of the machine, all measures have been adopted to eliminate risks and limit dangers to exposed people.
Although the machine is equipped with safety devices, the following residual risks remain, which can be eliminated or reduced by the relevant precaution:
• Risk of bruises, tearing, cuts during the handling of tools and/or elements.
• Risk of bruises during machine intervention.

Operation

- ❑ **The operator should use the personal protection devices.**
- ❑ Use the compressor only for the kind of application for which it is designed (air compression for industrial use).
- ❑ Before starting, ensure that compressor is lled with oil.
- ❑ Please refer to Section 8 of this manual for the oil type to be used.
- ❑ Never operate the compressor if there is a possibility of inhaling smoke or toxic or ammable vapours.
- ❑ Never operate the compressor at higher pressures than those indicated in the id plate.
  The air delivered by the compressor must not be used for breathing, although it is filtered and purified from oil.
- ❑ If hoses are used to distribute the air, ensure they are properly sized and suitable for the operating pressure, and not damaged or worn.
  Please remember that rubber hoses should be replaced at regular intervals.
- ❑ Never remove the oil ller plug when the machine is running or there is still pressure inside the compressor: there would be hot oil leak.
- ❑ Although it has an acceptable sound pressure level, the machine can produce a much higher noise if the room is narrow and reverberating. Please note that the continuous presence of an operator is unnecessary.
  For safey against noise, in compliance with local laws in force, and if necessary, place speci c warning signs near the machine and equip personnel with suitable protections.

Installation

Besides fulfilment of rules and regulations issued by the authorities, it is recommended to consider the following:

- ❑ The compressor will perform most ef ciently if installed in a suitable, well ventilated area and far from heat sources.
- ❑ Should any duct be installed for the suction and cooling of air, always use the data and recommendations given in Section 4 and preferably obtain expert advice during the design stage.
- ❑ In case of outdoor installation (not suggested for very cold climates) it is necessary to place the machine under a roof or covering, to protect it against weather.
- ❑ Be careful that no foreign materials clogg the radiator and cause rises of the operating temperature.
- ❑ The intake air must be clean and free from ammable vapours, which could cause res or explosions.
- ❑ As the machine is air cooled, except for machines supplied with the “Heat recovery” kit, adequate ventilation must be ensured to prevent it from overheating and thus avoiding the recirculation of the expelled hot air.
- ❑ Control and safety devices should never be tampered with.
- ❑ If one or more compressors are installed on a single pneumatic line, it is essential that each unit is equipped with a detect valve.
- ❑ Electrical connection should be conforming to current regulations. The machines should be earth connected and protected by a magneto-thermal switch against possible short circuits.
- ❑ It is essential to install a mains isolating switch upstream of the compressor.

Maintenance

The person responsible for operation of the compressor should check periodically that all instructions for operation and maintenance are followed by the operator.

098

WARNING !!!
Fill in the specific "Maintenance Sheet" supplied with the machine.

Only trained staff should carry out maintenance, with the compressor off and with no pressure inside the same. Also disconnect the compressor from the pneumatic equipment.
Cut out the electricity supply by acting on the mains isolator located upstream of the compressor electric board and indicate with a special sign that the machine MUST NOT BE RESTARTED.

098

WARNING !!!
An adequate cleaning of both the machine and the place where it is installed is highly recommended.
For cleaning DO NOT USE flammable fluids or products not complying with current regulations.
In case of doubts about the compressor operation or of any of its components, it is recommended to contact the after sales service of Ing. Enea Mattei S.p.A.

The following should be also considered:

- ❑ Before intervening on the machine, disconnect the electrical supply by means of the mains isolator.
  In fact, the machine is equipped with an automatic start system, starting the same at any time, if required by the compressed air system.
- ❑ The key for opening/closing the electric box doors should be given only to skilled personnel.
- ❑ Maintenance operations should be always carried out with compressor not operating.
- ❑ Before carrying out any job on the compressor unit, ensure through the gauge that there is no pressure inside.
- ❑ Only use suitable tools for the kind of job.
- ❑ Never use solvents and ammable products to clean the machine or individual parts.
- ❑ Never carry out weldings or other jobs requiring considerable heat near the machine, speci cally near the electrical system and the oil circuit.
- ❑ Do not make modi cations or weldings on vessels under pressure.
- ❑ Do not leave tools, rags or other loose items on the motor or on the compressor.
- ❑ The lubricating oil, especially if exhausted, may damage the skin: protect hands with gloves or speci c protecting products for the skin.
- ❑ Do not wear clothes contaminated by lubricating oil
- ❑ Absolutely avoid contaminating the ground with lubricating oil.
- ❑ To prevent pollution, store the exhausted lubricant into suitable containers and in a safe place. For oil disposal follow what suggested by internal rules and current regulations.
- ❑ In case of topping up, use the same oil as already contained in the machine.
  Mixtures are harmful for both the oil and the compressor life.
- ❑ After any maintenance, start the machine and check that all control, stop or alarm devices are working correctly; also verify that temperature and pressure values are the correct ones.
- ❑ Make checks and overhauls as foreseen in this Manual, and use only original spare parts.
  Failing to make checks or using non original spare parts may cause problems that jeopardize the machine operation and the manufacturer's warranty will be no longer valid.

Responsibilities

Ing. Enea MATTEI S.p.A. refuses any responsibility for injuries to people, animals or damages to objects, caused by:

- ❑ non-observance of the mentioned precautions;
- ❑ improper use of compressed air or of the machine in general;
- ❑ non-observance of normal safety regulations or domestic rules in the work eld;
- ❑ non-observance of the instructions during handling and transport of the machine;
- ❑ wrong machine installation;
- ❑ defects due to the electric power distribution;
- ❑ lacks in periodic maintenance;
- ❑ unauthorised jobs or modi cations;
- ❑ use of non original or unsuitable spare parts for the involved model;
- ❑ non-observance of the instructions, even if only partially;
- ❑ possible inef ciencies caused by malfunction or non-use of the compressor

098

WARNING !!!
It is recommended to use the compressed air delivered directly by compressors only for manufacturing processes. For any other use, please ALWAYS CONTACT the distributor, the technical service or the manufacturer BEFOREHAND.

801a

002

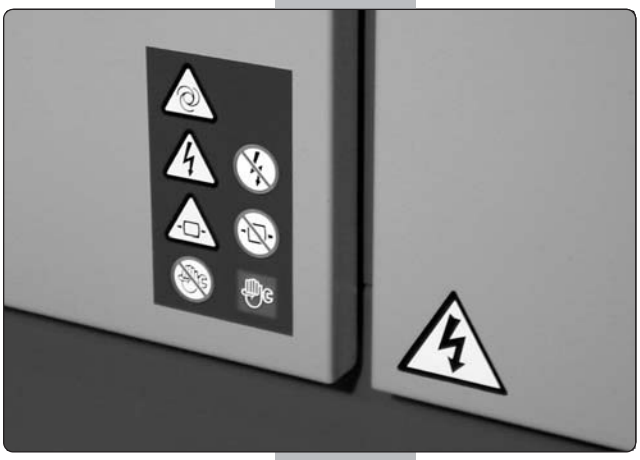

806

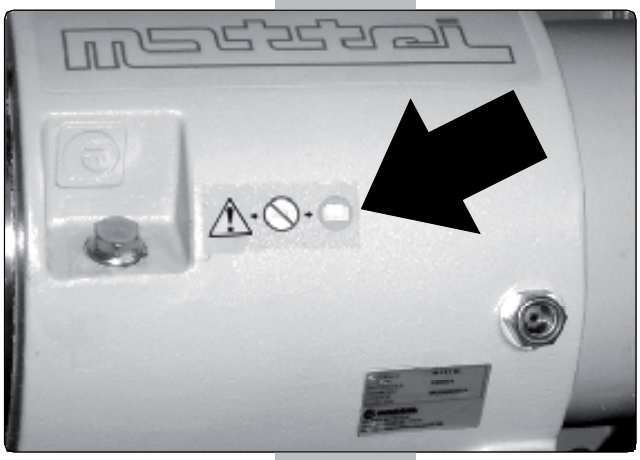

Description of Pictograms

Pictograms have been applied on the machine to explain following situations:

Danger
Obligation
Prohibition

Special indications (example: direction of rotation of the fan, etc)

Many accidents are often caused by the non-observance of the simplest safety rules or poor knowledge of the instructions given by the manufacturer.

To avoid possible danger situations, some of them are highlighted through special signs represented by suitable standardized symbols (pictograms).

Below is the list of the most common symbols applied to our machines:

Danger pictograms
These triangular signs are framed in black with a yellow background and the symbol is black.

105

Warning !
The machine is with remote control or with automatic system and may start without notice.

106

Warning !
Vessel under pressure.

107

Warning !
Risk of high temperature surface (> 70 °C)

108

Warning !
Air delivery.

109

Warning !
Risk of electrical shock.

Prohibition pictograms
These circular signs are framed in red, with white background and the symbol is black.

110

No working on the machine.

111

No pressure in the receiver.

112

No voltage.

003a

807

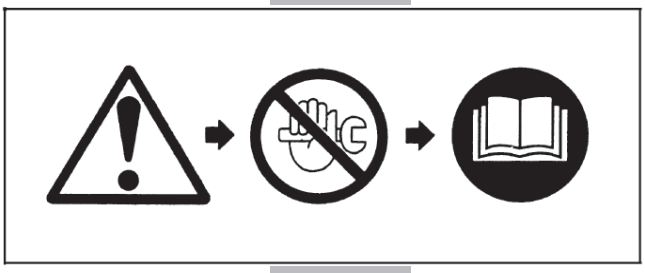
118

Description of Pictograms

Pictograms of Obligation
These are circular signs, on a blue background, and the symbol in white.

113

Read the instructions manual before carrying out any operation on the machine.

114

Use individual protective means against noise.

Pictograms of Indication
These signs may vary in shape and they give useful information.

115

Rotation direction.

116

Lifting point.

117

Possibility to carry out work.

Combination of pictograms
The above shown combination of pictograms means:
Warning ! Please refer to the Instruction Manual before starting any activity.

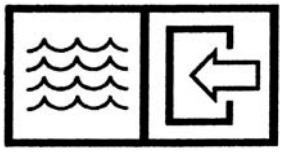
808

Water inlet

809

Water outlet

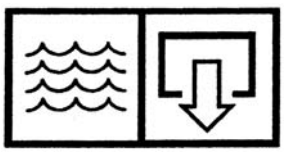
810

Condensate drain

Mattei rotary compressors of the AC Series are the result of years of investments in research and development, to improve performance continuously, and at the same be environment-friendly.
Designed for continuous industrial service, they guarantee constant performance over time, low energy consumptions, reliability, functionality and easy maintenance.
The compressor is supplied complete with all components described below and equipped with optional devices.
Unless differently required, the unit is lled with Mattei Rotoroil 8000 F2 synthetic lubricant.
For special requirements regarding lubricant, please refer to section 8 of this manual.

811a

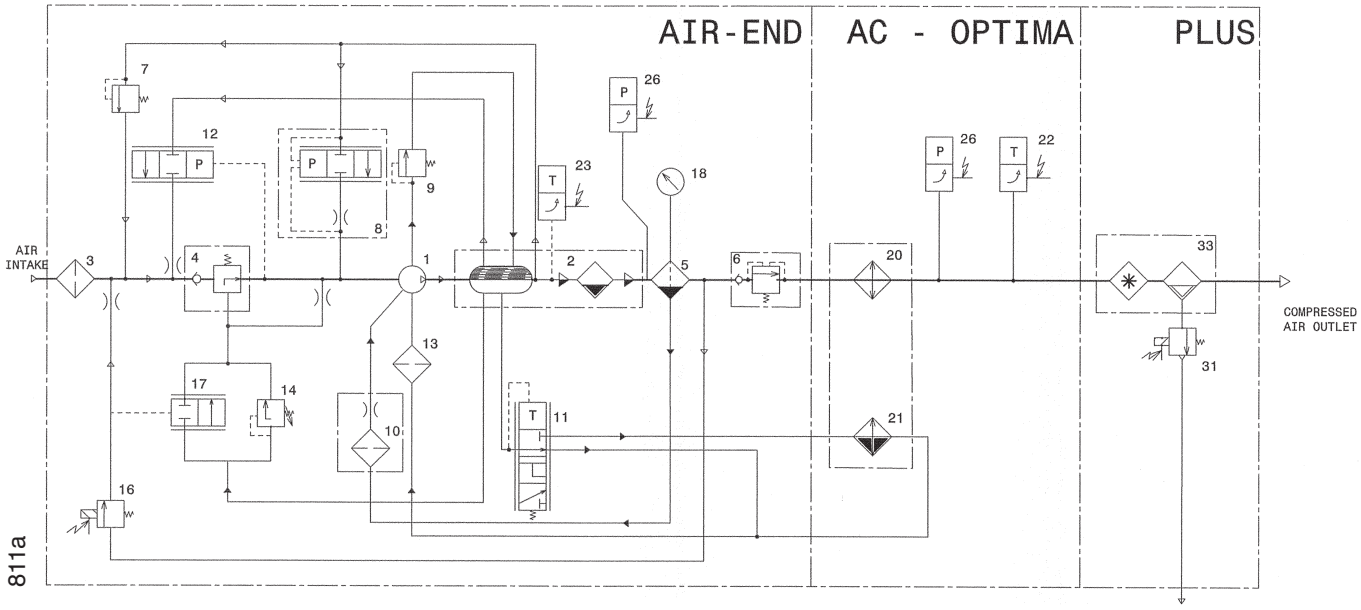

812a

1	COMPRESSORE ROTATIVO A PALETTE	1	ROTARY VANE COMPRESSOR
2	CAMERA OLIO - SEPARATORE PRIMARIO	2	OIL CHAMBER - PRIMARY SEPARATOR
3	FILTRO ASPIRAZIONE	3	INTAKE FILTER
4	VALVOLA ASPIRAZIONE	4	INTAKE VALVE
5	SEPARATORE ARIA - OLIO	5	AIR - OIL SEPARATOR
6	VALVOLA DI MINIMA PRESSIONE E NON RITORNO	6	MINIMUM PRESSURE - NON RETURN VALVE
7	VALVOLA DI SFIATO	7	RELIEF VALVE
8	VALVOLA DI SOCCORSO A VUOTO	8	VACUUM RELIEF VALVE
9	VALVOLA DI SCARICO OLIO	9	OIL RELIEF VALVE
10	VALVOLA DI RITORNO OLIO	10	OIL RETURN VALVE
11	VALVOLA TERMOSTATICA BY-PASS	11	BY-PASS THERMOSTATIC VALVE
12	VALVOLA DI SCARICO PRESSIONE	12	PRESSURE EXAUST VALVE
13	FILTRO OLIO	13	OIL FILTER
14	SERVOVALVOLA	14	SERVOVALVE
15	TERMOSTATO	15	THERMOSTAT
16	ELETTROVALVOLA DI MESSA A VUOTO	16	OFF LOAD SOLENOID VALVE
17	VALVOLA DI MESSA A VUOTO	17	OFF LOAD VALVE
18	INDICATORE DI PRESSIONE	18	PRESSURE GAUGE
19	LIVELLOSTATO OLIO	19	OIL LEVEL SWITCH
20	REFRIGERANTE ARIA	20	AIR COOLER
21	REFRIGERANTE OLIO	21	OIL COOLER
22	SONDA DI TEMPERATURA ARIA	22	AIR TEMPERATURE SENSOR
23	SONDA DI TEMPERATURA OLIO	23	OIL TEMPERATURE SENSOR
26	SONDA DI PRESSIONE	26	PRESSURE SENSOR
31	ELETTROVALVOLA DI SCARICO CONDENSA	31	CONDENSATE DRAIN SOLENOID VALVE
33	ESSICCATORE	33	AIR DRYER

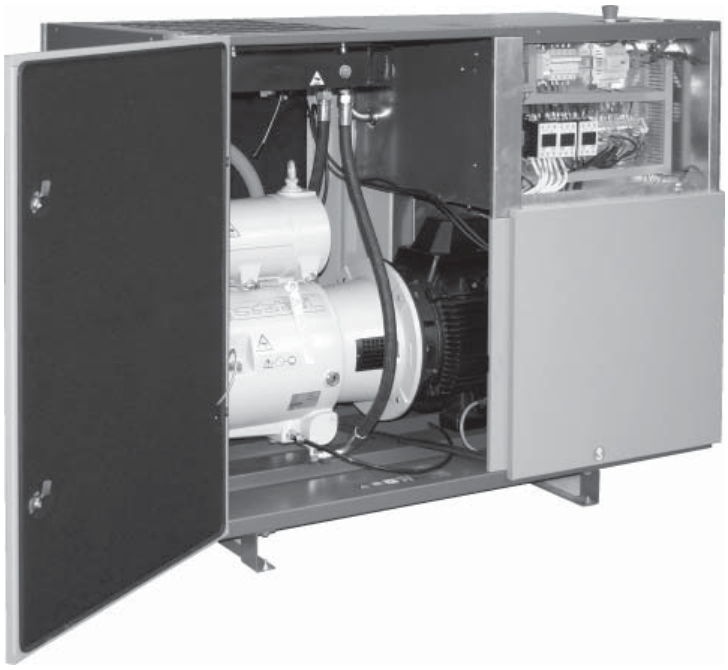

813a

All components are enclosed in a soundpro- o ng canopy in sheet stell , epoxy powder painted and lined with deadening re-resistant material.

The canopy has a pre- lter to prevent intake of gross particles that might prematurely clog the radiators and air lter.
Wide detachable panels and hinged doors allow easy access for all.

The base has openings to allow easy lifting and handling of the compressor (See Section 4).
Standard packing includes: xing on wooden pallets,protective polythene cover,and a cardboard box.

158

Compressor
The vane compressor is a volumetric rotary compressor.
It consists of a cylinder (stator) in which a rotor, mounted eccentrically and tangential with it rotates, and two end covers.
The rotor has longitudinal slots in which the vanes slide.
The vanes are pushed against the stator by centrifugal force.
Sealing of the moving parts, cooling and lubrication are provided by an ef cient injection of oil through proper ports, due to the pressure difference between the compression chamber and the oil receiver. No pump for uid circulation is needed.
An oil lm on the inner surface of the stator prevents direct contact of the moving parts and avoids any wear.
In the vane compressor there are no axial thrusts pushing the rotor against the end covers.
Therefore there is no need for thrust bearings.
The rotor is supported by white metal bearings having a practically unlimited lifetime.
The air drawn in rst passes through a lter and then through the modulating valve.
The decrease in volume of the pockets formed by the stator, rotor and vanes produces a continuous, pulse-free, compression.

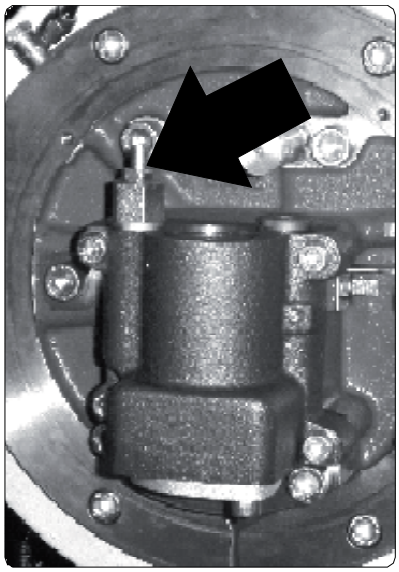

060

Intake valve
The intake valve, driven by a speci c servovalve through a hydraulic circuit using the same oil as used for lubrication, adjusts the intake air quantity to the air system requirements.

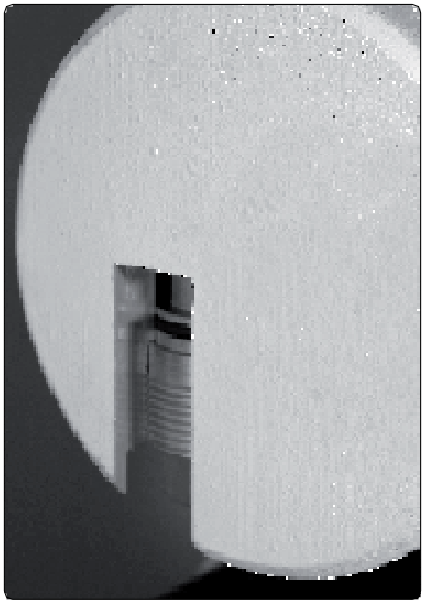

159

Minimum pressure and non return valve
Compressed air is delivered by the compressor through a valve ensuring a minimum pressure inside the oil chamber, so as to guarantee smooth operation when the compressor is delivering air. This valve also prevents the compressed air in the system from returning to the compressor.

Oil separation
The air/oil separation occurs in different stages and ensures exceptionally low oil consumptions.
The main mechanical separation occurs in the oil chamber through a labyrinth path.
This mechanical separation works via the continuous changes of direction of the air ow in the labyrinth path.
The last separation occurs through the coalescing lter, removing the remaining oil vapours from the air.
This particular oil separation system brings to a very reduced oil consumption. The large size of the lter and quality of materials ensure a long life of the lter itself.

Electric Motor
The compressor and the motor are connected by means of exible coupling. This ensures a perfect alignment, no power absorption, silent operation and no need for maintenance.
The electric motor is asynchronous, threephase, 4 poles, with short circuit winding.
- Class F isolation
- IP 55 protection degree
- Power supply according to IEC 38 standard.
- Voltage/Frequency V 230/50 - 400/50 Hz - V 230/60 - 460/60 Hz

Cooling Systems
The compressor comes with two aluminium radiators and suitable for cooling oil and compressed air, respectively.
An air ow, output from the fan inside the sound poof cabin, comes into contact with the radiators and removes the heat generated during compression.
The temperature of the output compressed air is slightly higher that the environmental temperature.
See technical characteristics attached.

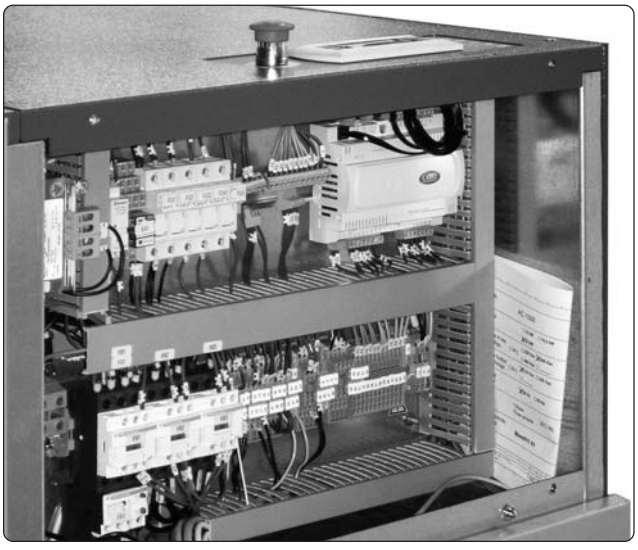

815a

The Diagram is contained in a specific document holder pocket.

Electrical Starter
The protection class is IP 54, and it includes
- Star-Delta starter
- Fan motor protection (by magneto-thermal switch)
- Main motor protection (by thermal PTC) (AC 30s version)
- 110 V transformer for auxiliary circuits
- 24 V transformer MAESTRO^{XS} control device
- Protection fuses for auxiliary and primary circuits of transformer
- Terminal board for the remote restarting of start/stop controls and signals
- Emergency push-button
- Micro-door
- Safety block:
  for high temperature in the compressor, motor overload, oil low level, insuf cient ventilation, air and oil high temperature, emergency stop, clogged separator lter, failure in the pressure sensors

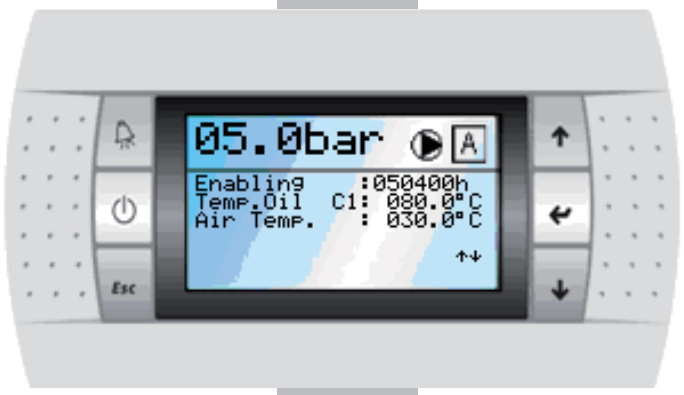

851

MAESTRO^{xs} is a programmable control unit which adapts compressor operation to the speci c requirements of the air line it is connected to. It features various programming levels and performs operating and fault controls and analysis.
Advanced programming and analysis levels are protected by digital codes to prevent unintentional access.
Maestro xs also contains a memory which saves settings and operating data even if the compressor is disconnected from the power supply or switches off due to a power cut.

Hardware Characteristics

- Microprocessor-based technology
- Ergonomic control panel with rapid access keys to main menus
- Access keys to menus, start/stop and reset keys with Led-controlled indications
- “LCD” display – text with blue leds - 8 lines - 22 types
- 24 V AC 50/60Hz Power Supply
- 24 V dc Digital Inputs
- Digital output with clean contacts up to 230Vac and until 24Vdc
- Analogue output 0-10 Vdc
- Pressure analog signals (4-20mA)
- Temperature analog signals (NPT)
- Interfaces:

❏ RS485 to communicate with other “MAESTRO xs” devices
❏ RS485 (optional) to communicate with supervising PC and lan

Software Characteristics:

- Easy use based on a menu structure
- Updating possibility
- Display of :

❏ Analogue data:

- Line pressure, pressure in the chamber, oil temperature, output air temperature

❏ General data:

- Alarms, operating messages, machine status, maximum and minimum pressure, last start and last stop

❏ Hour counter:

- Display of schedules of activation, start, loading, maintenance warns

❏ Events archive:

- Storage of alarms and blocks, with the indication of the when the alarm was activated, machine status.

The device allows for:

- User Interface in 8 languages (Italian, English, French, German, Spanish, Polish, Czech, Portuguese)
- Weekly and time schedule of starts and stops
- immediate reading on display of data relevant to the compressor operation:
  - ❏ Compressor hours of activation and line pressure of the equipment
  - ❏ Pressure oil chamber
  - ❏ Output air temperature and compressor oil temperature
  - ❏ Hours of running and hours of loading
- Programming of basic parameters for optimum operation of compressor accessible by user:
  - ❏ Control modes of compressor (Local/remote, master/slave)
  - ❏ Operation modes (Automatic, Continuous, Modulation)
  - ❏ The advanced programming of parameters, protected by “password” allows the qualified engineer to change those parameters to which the user cannot access directly
- Checking the input and output status of the gear case to detect any failure in the compressor electric equipment
- Storage of up to 20 failure events
- The check of the integrated dryer (plus models)
- The remote control by clean contacts of the machine status below:
  - ❏ Activated compressor (optional)
  - ❏ Running compressor (optional)
  - ❏ Compressor under load (optional)
  - ❏ Compressor blocked (standard)

Communication

MAESTRO^{xs}, connected to the Mattei supervision device (optional), allows for:

- Remote monitoring by web interface
- Alarm signaling by e-mail, fax or mobile phone.

WARNING !!!

The compressor has been designed to compress **AIR ONLY**.

The compression of other gases is FORBIDDEN.

098

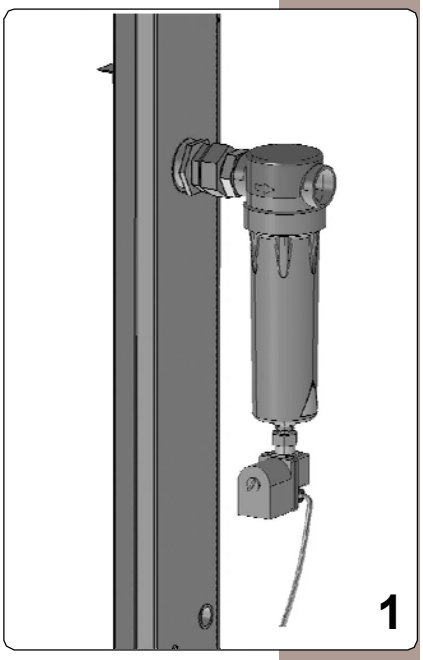

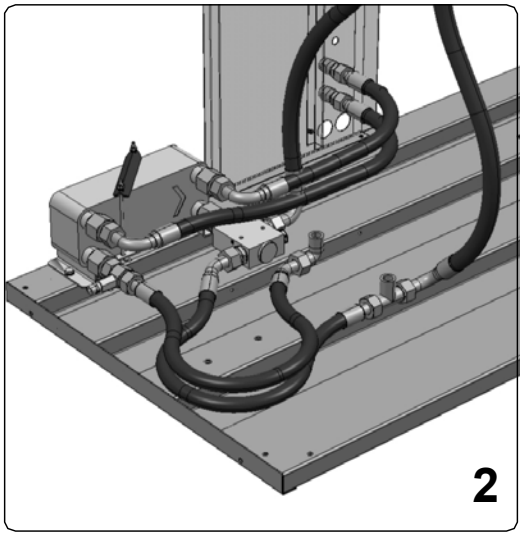

OPTIONALS ACCESSORIES

The machine can also be customized according to meet different requirements by purchasing specific accessories such as:

Separator and Condensate Drain Kit (Photo 1)

Heat Recovery Kit (Photo 2) to heat water for sanitary and processing purposes. The kit is made up of a water/oil plate exchanger, thermostatic valve and connection piping. The kit is a part of the compressor air-cooling system and in case of water shortage or reduction in its flow, the thermostatic valve duly deviates oil to the standard circuit.

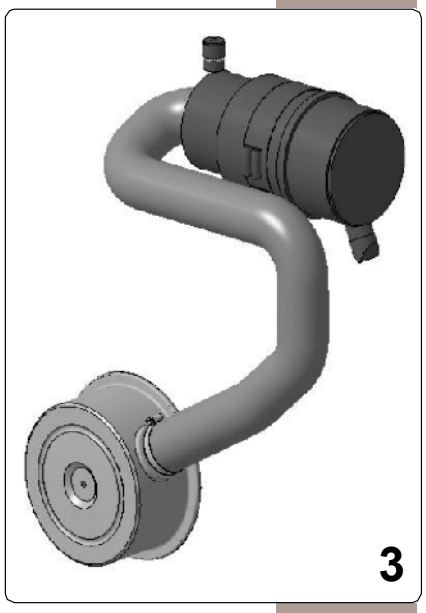

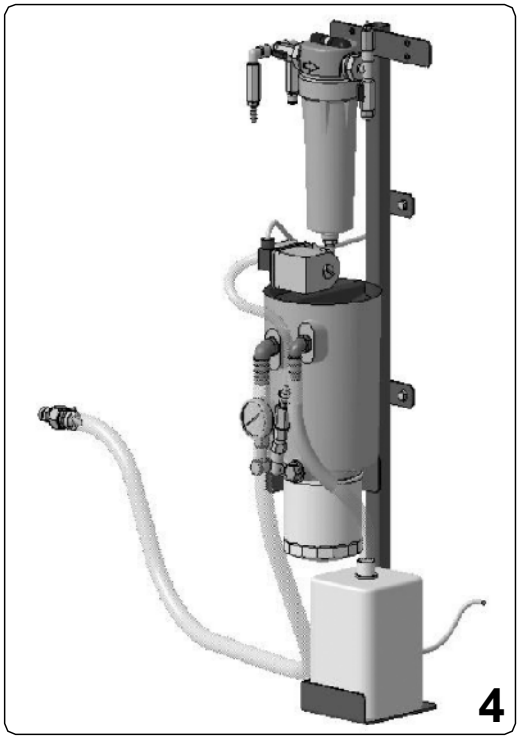

Highly Efficient Suction Filter (Photo 3) able to hold solid particles of more or equal to 3micron with a filtering efficiency of 99%.

Water/oil Separator Kit (Photo 4)

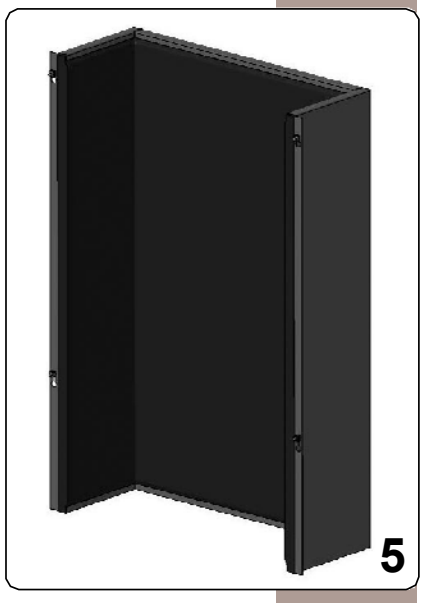

Soundproofing duct kit (Fig. 5) it reduces the sound pressure level on the intake side of the cooling air.

Built-in Dryer (versions plus)

Each AC unit (OPTIMA / MAXIMA) is supplied with a compressed air cooling radiator. Cooling produces condensation that is unloaded from specific separators and drainpipes that can be applied on the front of the machine (see this section Optional Accessories).
Many industrial applications require that the compressed air be almost completely emptied from the water vapour it contains so as to prevent any further condensation from forming inside the line pipes to which it is connected.
Hence, devices that lower the dew point by a few degrees above 0°C should be installed.
In the plus versions the setting up of the machine includes a dryer with a refrigerator cycle that guarantees an adequate compressed air quality.

The design of the compressor allows for integrating a dryer with refrigerator cycle directly installed on the machine.

An electronic controller controls the dryer, which manages its functional parameters according to the different operating load cycles.

089

WARNING!!!
For compressors in the ***plus*** version see tables "electricity supply for compressor and dryer" on page 4.03

381

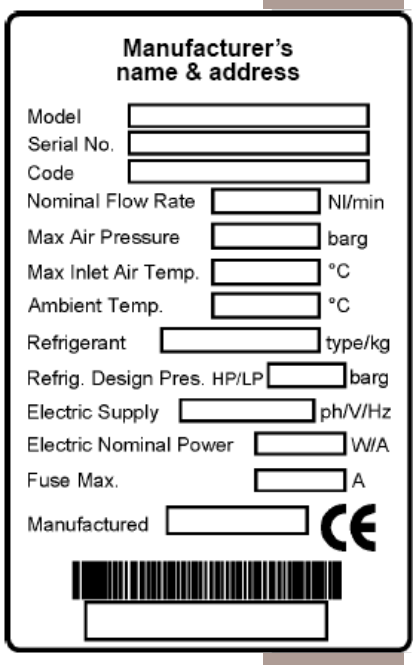

ID Plate
The product ID plate contains all the machine's essential data. Removing or tampering the id plate forfeits the right of guarantee.

Operating Mode

When the compressor is activated, the drier also starts after a preset delay.

Alarms are inserted with 5-minute delay to allow the drier to reach its operating mode.
Once this delay has elapsed, the alarms start and begin monitoring the system.

Once started, the dryer compressor group stays on until the following conditions occur:

✓ The compressor is stopped with the "STOP" push-button

✓ The dryer operating limit conditions are exceeded.

The controller manages the dryer operation by monitoring the dew point temperature that allows the system to run correctly.
The operating limits for such a parameter are as follows:

- ✔ The dew point temperature > 0°C;
- ✔ The dew point temperature < 6°C with Ambient Temperature ≤ 25°C;
- ✔ The dew point temperature < T.amb. – Δ ambient with Ambient Temperature > 25°C.

MATTEI sets the Δ ambient value.

If the dew point drops below 0°C, the controller will indicate the faulty condition [Ice Alarm] while the dryer compressor is kept active throughout the time corresponding to the parameter [Low Temperature Delay Time].
Once this time has elapsed, the dryer compressor is stopped so to prevent any ice from forming.
As soon as the temperature rises again above 0°C, the dryer compressor is re-started and the fault warning is automatically turned off.

Should the dew point temperature rise above the upper limit, the controller will indicate the fault condition [ALARM High Dew Point] for the time that corresponds to the parameter [High Temperature Delay Time].
When the set time has elapsed, the Alarm warning will stay on.
As soon as the temperature falls again within the above-mentioned operating interval, the fault warning will be automatically turned off.

NOTE:
The user can request Ing. ENEA MATTEI that the fault in the dryer corresponds to a machine BLOCK.

NOTE:
The design of the dryer prevents condensate from accumulating and ice from forming inside it.

In case of any failure in the dryer, by-passing the device is possible by disconnecting the hose linking it to the air radiator and connecting it directly to the delivery side. All joints installed are equivalent
In case of any failure in the dryer, by-passing the device is possible by disconnecting the hose linking it to the air radiator and connecting it directly to the delivery side. All joints installed are equivalent.

DOCUMENTATION
The machine comes complete with:
1 Use and Maintenance Manual complying with Machinery directive 2006/42/EC
1 CE Declaration of conformity
1 Start Report
1 Maintenance Sheet
1 Electrical Diagram (inside the control board)
Documents for the optional accessories

CERTIFICATIONS
Ing. Enea Mattei SpA has its company quality system certified according to standard UNI EN ISO 9001 by DNV while the final inspection procedures comply with standard ISO 1217.

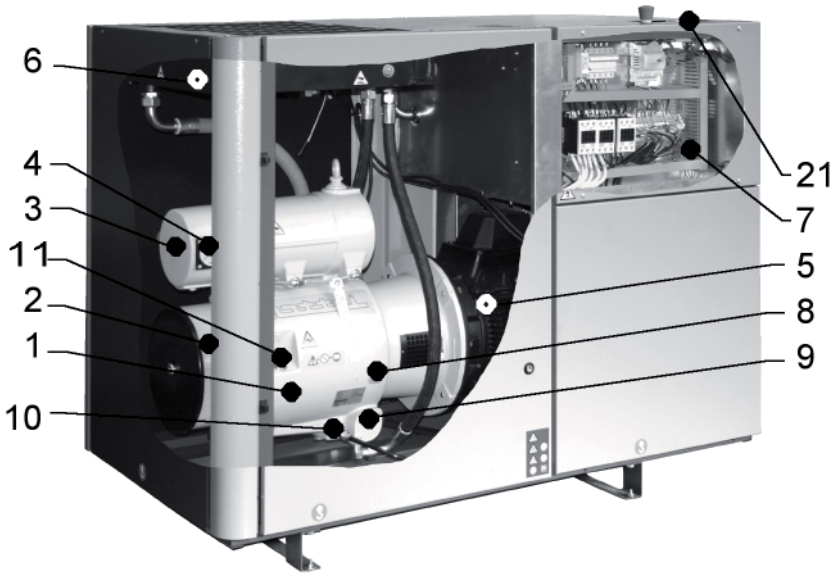

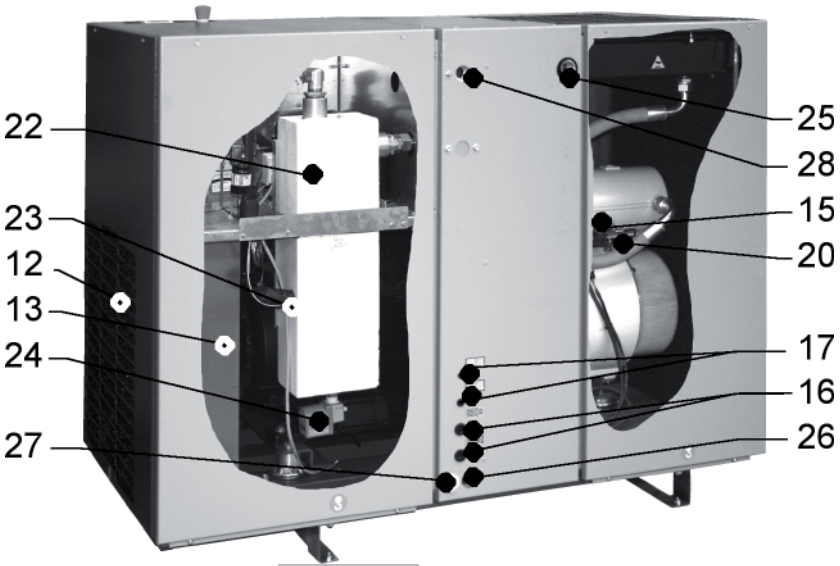

Position of main parts

1 - Compressor
2 - Air filter
3 - Air/oil separator
4 - Gauge
5 - Electric motor
6 - Air/oil radiator
7 - Electric starter
8 - Oil level indicator
9 - Oil filter cover
10 - Oil drain cock
11 - Oil filling cap
12 - Intake pre-filter
13 - Conveyor
15 - Off-load solenoid valve
16 - Arranged for water in/out connections for the heat recovery
17 - Arranged for condensate-drain connection for the dryer
20 - Oil temperature probe
21 - MAESTRO xs
22 - Dryer (2)
23 - Dewpoint probe
24 - Timed electronic drain (2)
25 - Air delivery
26 - Electricity supply
27 - Additional hole
28 - Air delivery

(**2**) - Dryer kit

Technical Data and Overall Dimensions

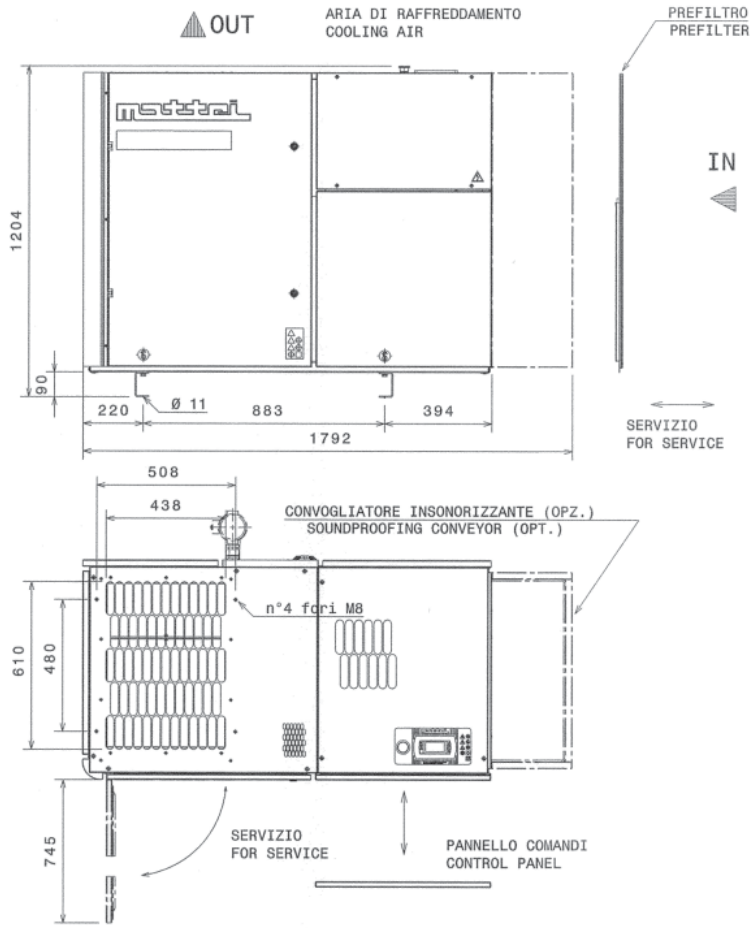

ITEM	CONNECTION	SIZE
A	INGRESSO LINEA EL.SUPPLY	Φ31 MAX
B 1)	SCARICO CONDENSA CONDENSATE DRAIN	---
B1 2)	SCARICO CONDENSA CONDENSATE DRAIN	Φ10
C	USCITA ARIA AIR OUTLET	Rp 1
D 3)	ENTRATA ACQUA WATER INLET	---
E 3)	USCITA ACQUA WATER OUTLET	---
F	FORO SUPPLEMENTARE SUPPLEMENTARY HOLE	Φ31 MAX
CG	CENTRO DI GRAVITA' CENTER OF GRAVITY	

AC 15 H-L-HH	Massa Kg Mass (con olio) (with oil)	445
= = PLUS		485
AC 18 H-L-HH		445
= = PLUS		485
AC 22 H-L-HH		450
= = PLUS		490
AC 30s H-HH		500
= = PLUS		540
SUPERFICIE DI CARICO LOADING AREA m2		~0,28
CARICO SULLE FONDAZIONI FLOOR LOAD max N/cm2		~19

1) VERSIONE "PLUS" 2 x Rp 1/4
"PLUS" VERSION

2) CON SEPARATORE DI CONDENSA Φ10
WITH CONDENSATE SEPARATOR

3) CON KIT RECUPERO CALORE (OPZIONALE) 2 x Rp 1/2
WITH HEAT RECOVERY KIT (OPTIONAL)

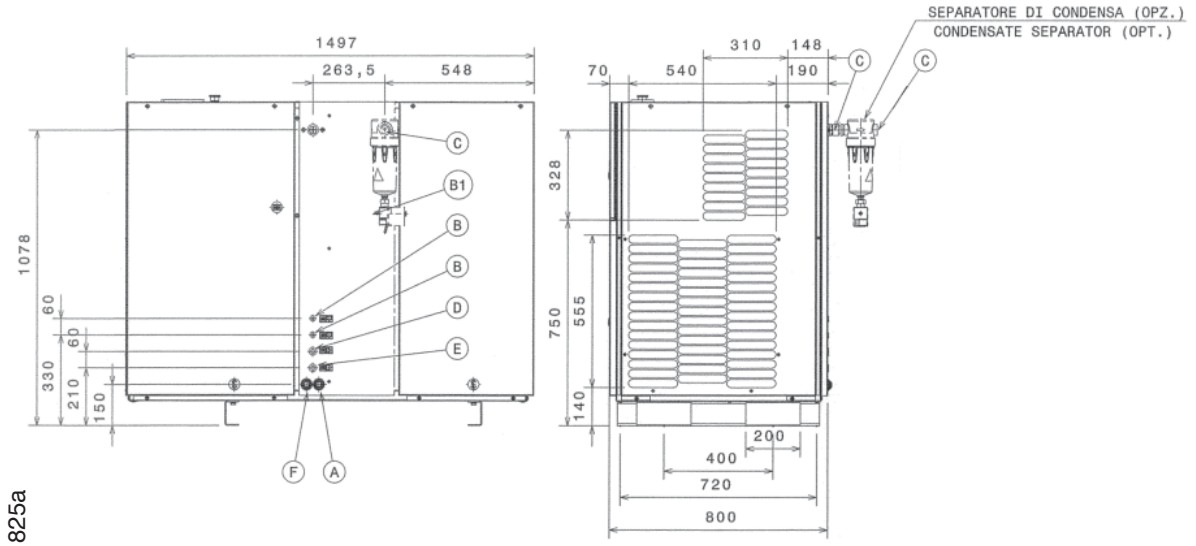

825a

003a

098

The whole area for the machine handling, including the space between the parking area for transport means and the machine installing area should be identified and inspected beforehand, to find any possible "**DANGEROUS AREAS**".

Be careful when handling, lifting and transporting the machine, not to damage it and not to damage things or cause injuries to persons.

826b

For this purpose:

❏ Verify the total mass of the machine and use a forlift truck or an adequate lifting means. Specific pictrograms indicate the lifting points.

❏ The centre of gravity is near the coupling between motor and compressor; before lifting, check (lift the unit from the ground just slightly) that lifting points are correct and there is not risk of overturning.

❏ When lifting, be careful not to damage the bearing structure (base) of the machine and the soundproof canopy.

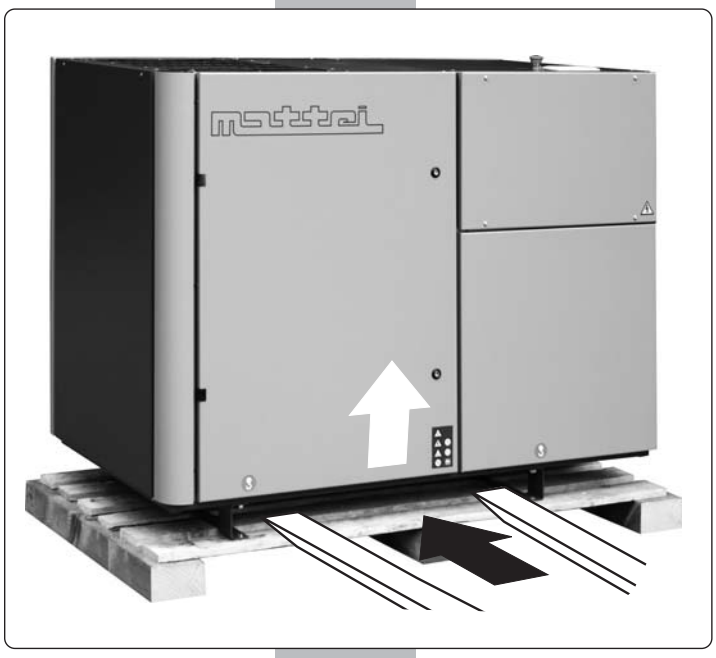

827b

During the transport, carefully fix the machine to the means used, by blocking it lengthways and sideways.

It is recommended to protect the machine from atmospheric agents with suitable covering.

Unpack the machine by removing the guards and place it on the floor by means of a forklift truck to remove the pallet.

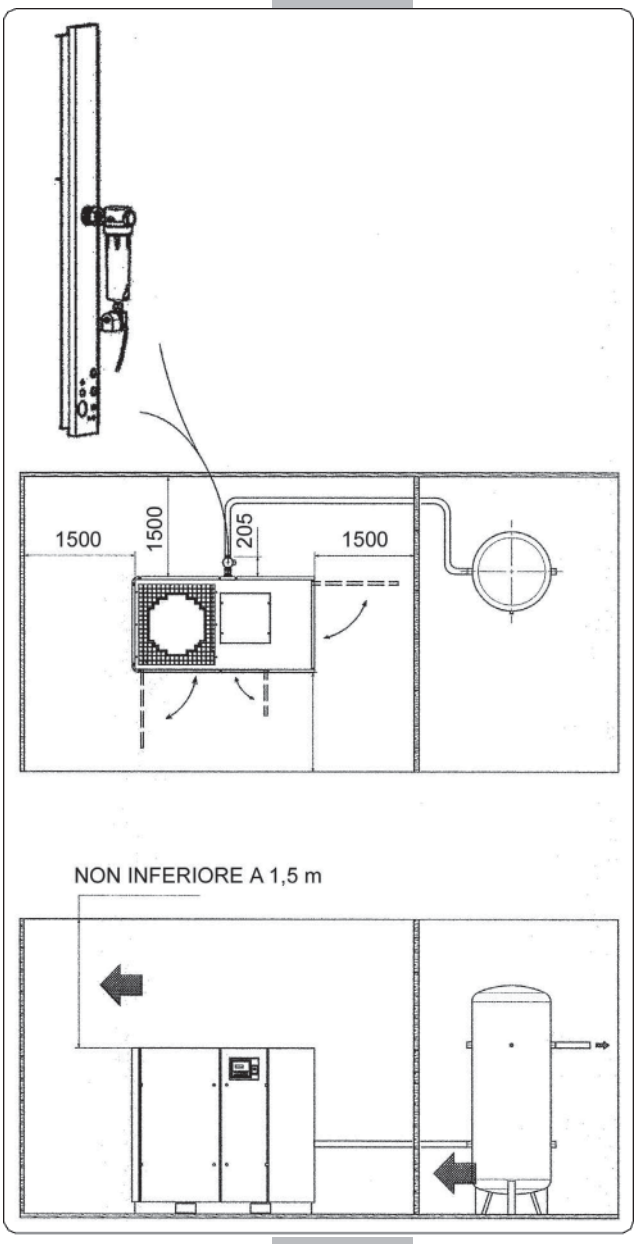

828

Position of compressor

In the section “Technical Data ”you can nd the overall dimensions, the weight,and the cooling values of the machine.
The compressor must be installed in a covered and well ventilated area ,away form heat sources.
It can be simply placed on a solid and level oor.
It does not require any type of special foundation.
Space and ventilation around the machine are essential.
An air-cooled compressor,driven by an electrical motor,produces heat equal to about 85% the absorbed power.
For the AC 1000 Series machines,having the cooling air outlet on the canopy top panel, the distance from the ceiling should not be lower than 1,5 meters.
If such a clearance is not possible, a hot air conveyor must be installed (see further on the section on ducts size and heat recovery).
The 1,5 meter distance, free from any obstructions, should be also kept on the intake end.
To make it easier to perform checks and maintenance operations on the compressor leave at least 1,5 m clearance from all other sides.

829

102

Far Electrical connection

Only qualified staff should connect the power to the electrical network and in compliance to the enforced regulations.

098

WARNING !!!

To permit safe maintenance of all the compressor parts, including the electrical board, the Customer should install an automatic line knife switch and a magnetothermal switch of an adequate size as close as possible to the machine.

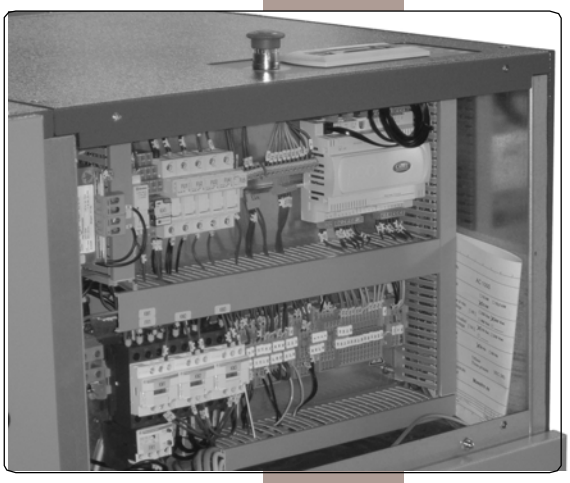

815a

The characteristics of the electrical motor start should be taken into consideration when choosing the line knife switch and the magnetothermal switch.

The size adaptation of the power cables between line knife switch and the control board of the compressor should be made using the values given on the technical sheet of section “SECTION DATA “.

All the machine auxiliary components are already connected to the control and check board and are powered with the transformer.

For further details, use the specific electrical diagram supplied with the machine or the general one attached to this Manual.

Alimentazione Compressore *Compressor Supply*			
400 Vac	50 Hz	Trifase *Three-phases*	(3F + ⏚)
460 Vac	60 Hz		
230 Vac	50 Hz	Trifase *Three-phases*	(3F + ⏚)
230 Vac	60 Hz		

Alimentazione Essiccatore *Dryer Supply*			
230 Vac	50 Hz	Monofase *Single Phase*	(1F + N + ⏚)
	60 Hz		

098

WARNING !!!

It is to be noted that the machine should ALWAYS be connected to the earthed equipment.

801a

Connection to the air distribution system

Compressed air distribution

101

Only qualified personnel should carry out the connection to the air distribution system, in compliance with the regulations in force.

The aim of distributing air is to bring compressed air from the machine to the end users, with the lowest pressure drop and energy waste.

To avoid losses and wastes, regularly check all pipings of the distribution equipment and all accessories.

Filters, regulators and other accessories should undergo proper maintenance.

The connecting pipe to the system should be exible and with a diameter not lower than the pipe leaving the machine.

A detect valve is required to isolate the machine from the air distribution system in case of maintenance.

WARNING !
The machine is equipped with a NON RETURN VALVE; if the detect valve is closed when the air distribution is operating some air under pressure could remain inside the connecting pipe !
Arrange a draining system for the piece of piping between the compressor and the detect valve.
In case there is the need to disconnect the machine, ensure that the internal pressure is exhausted before the dismantling procedure.

Near the machine, derive a exible hose from the distribution system and connect it to a blowing gun: it is needed for periodic cleaning of the radiator, the intake lter and all other machine components.

The air drawn in by compressors contains, in a variable quantity and depending on the ambient conditions, a certain quantity of water indicated as relative humidity.
After air has been compressed, it is cooled in a speci c radiator, which all versions of the Mattei compressors are supplied with.
Cooling air produces condensate of a good quantity of the water it contains.
The condensate produced is separated and drained with an automatic device (optional).

Please note that condensate should be collected and eliminated in compliance with current laws.

Dimensions of compressed air distribution pipings

We mention that the main causes for wastes are pipings with unsuitable diameter and losses due to an improper setting up of the equipment or deteriorated materials.

The pipe diameter must be duly selected so as to minimize the pressure drop between the compressor or the storage receiver and the point of use, based on the machine features, like air delivery and working pressure.

The pressure drop is proportional to the pipe length and most losses occur during the change of direction (curves, elbows) and in the valves.

With a pipe having the same diameter as the compressor outlet, the length should not exceed 50 m.
To make a check of one's own equipment, "Table 1" gives the load losses, over 100 metres straight piping, according to nominal diameters usually employed and at different air delivery and working pressure conditions.

A perfect air distribution system should limit the pressure drop from compressor to the point of use within few tenths of bar.

Table 1 – Load losses (bar) over 100 m straight piping

Pipe Diameter	Free Air Delivery [m^3/min]	PRESSURE [bar]				
		6	7	8	9	10
1"	1	0,087	0,076	0,068	0,061	0,056
	2	0,315	0,275	0,245	0,220	0,200
	3	0,666	0,583	0,518	0,467	0,424
	4	1,134	0,993	0,883	0,795	0,722
2"	4	0,038	0,033	0,030	0,027	0,024
	8	0,138	0,120	0,107	0,096	0,088
	16	0,496	0,434	0,386	0,347	0,316
	24	1,050	0,919	0,817	0,735	0,669
3"	8	0,019	0,017	0,015	0,013	0,011
	16	0,069	0,060	0,054	0,048	0,044
	32	0,248	0,217	0,193	0,174	0,158
	64	0,894	0,783	0,696	0,626	0,570
4"	16	0,018	0,015	0,014	0,012	0,011
	32	0,064	0,056	0,050	0,045	0,041
	64	0,230	0,201	0,179	0,161	0,146
	128	0,829	0,725	0,645	0,580	0,528

Heat Recovery

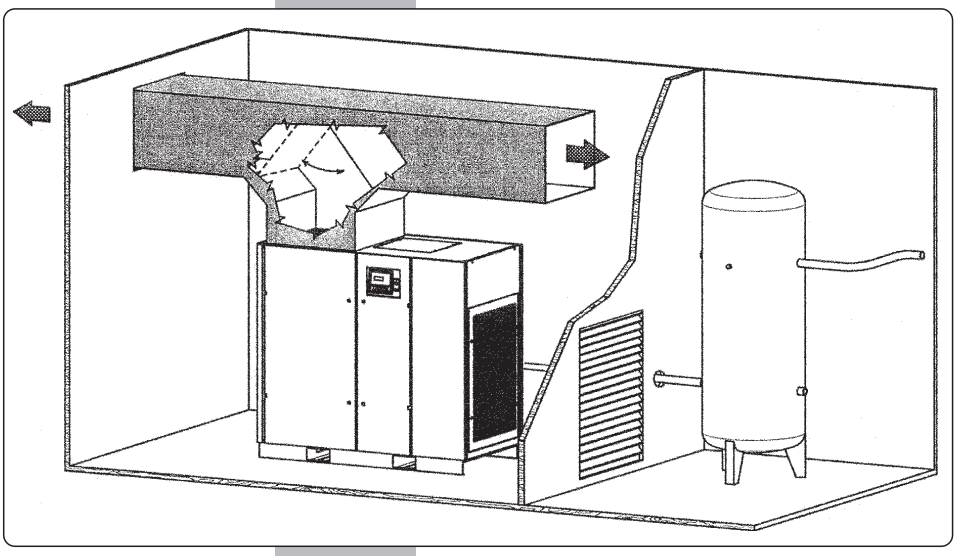

119

As mentioned in above section on Page 3.03, a fan produces an airflow that cools both the oil and the compressed air, heating up when it goes through the radiator.

The recoverable heat represents about 100% of the power installed in the AC 1000 SERIES machines.

The heat produced can be conveniently recovered and used to heat rooms.

Any duct should be adequately sized and, if necessary, shaped in such a way to allow for a correct use during Winter and the output of hot air during Summer.

The duct to recover/output hot air should be designed by a competent engineer and should limit the load loss at approximately 20 Pa.

If the duct offers greater resistance, an auxiliary extractor should be used to prevent any overheating of the machine.

As an example, a duct with a higher or equal section to the coming out of the machine (the output grid on those versions equipped with a soundproof case), made up of some 10 m of straight duct and two 90° elbows properly connected, allows the maximum tolerated limits to be maintained.

However, it should be noted that 10 Pa increase corresponds to some 2 - 3 °C increase in operating temperatures.
As for the recoverable heat, it should be noted that 1 kW of installed power allows for the heating up a volume of about 30 cubic meters by 1 K (1 kW = 860 kcal/h).

In the Section on “TECHNICAL DATA” attached to this manual the values required to realize that which is mentioned above are indicated.

012b

EMERGENCY - STOP button
The machine stops immediately when the button is pressed, while skipping the regular stop sequence provided by the STOP button.

098 This button is to be used also in an emergency situation.
Frequent stops of the compressor by means of this button **may damage its operation**.

WARNING
Please refer to the Manual of "**MAESTRO^{XS}**" Control attached to this Manual for detailed, description of keys, programming, and all of its functions.

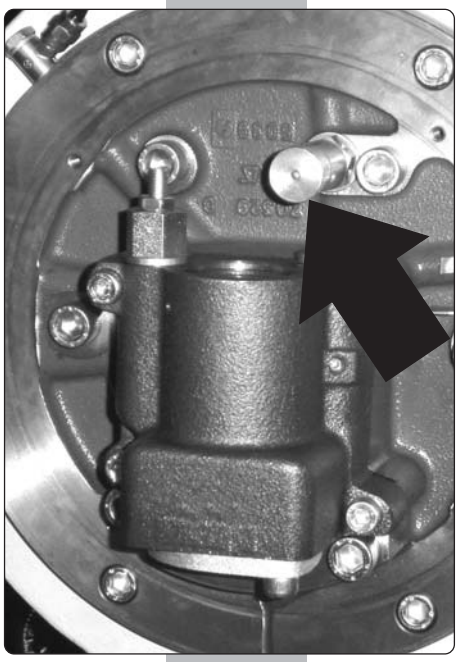
831

Safety Valve
A “SAFETY VALVE ”protects the compressor in case of air overpressure inside the chamber,while limiting the value to its own setting limit.
The safety valve is set at 12 bar for L and H version of compressors and 15 bar for HH versions.

Servovalve
Besides the operating pressure control perfomed by MAESTRO^{XS}, compressors of AC 1000 Series ,keep the modulation and off load functions by means of a “SERVOVALVE ”.
This servovalve limits the maximum operating pressure,during the CONTINUOUS mode operation by acting on the intake valve, which closes as the internal pressure increases.
The maximum operating pressure is set at its optimal value during the nal inspection and DOES NOT require any further adjustments.

Setting the Servo Valve Maximum Pressures

Version	L	H	HH
Servo valves	8 bar	10 bar	13 bar

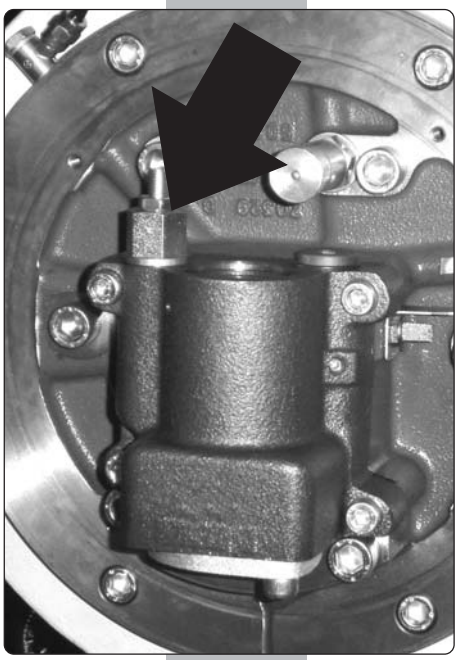
832

103

Note
Compressor operation depends on the set values; it is suggested to ask for modi cation of settings only in case of real need and with knowledge.
Only skilled personnel should make the setting.

098

WARNING !!!
DO NOT set the servovalve at HIGHER values than those used by the manufacturer, Ing. Enea Mattei S.p.A. In fact, if the machine works at higher pressures it requires more power; this could lead to overheating and machine shutdown.

851

099

MAESTRO^{xs} is a programmable device to control the machine that can adapt its operation to the speci c requirements of the network it is connected to.

It has several programming levels, with special possibilities of control/analysis of operation and of failures.
The advanced programming and analysis levels are protected by digital codes so as to prevent any unintentional tampering.
Maestro^{xs} has a storage that saves the settings made over time as well as the data on operation even if the machine is not connected to the electrical line or if voltage drops occur.
A weekly schedule of starts/stops can be set that is combined with the management of the connection to other machines so as to control any multiple installations as ef ciently as possible.
“Maestro xs” is a control device made up of two separate units:

- Display with keypad
- Data input-output device

Keypad

The buttons are backlit for enhanced clarity and, in some cases, in order to complete the information provided by the device.

852

Reset buttons: Resets any faults detected by the system. Eliminate the reason for the fault rst.

853

On / Off button: Enables and disables the compressor.

854

Esc button: Accesses the main menu and exits the current menu.

855

Up button: Moves around the various menus. Also increases the value of a variable in the edit mode.

856

Enter button: Accesses the selected menu and opens and closes the memory in the edit mode.

857

Down button: Moves around the various menus. Also decreases the value of a variable in the edit mode.

801a

Foreword

660

The user should appoint a quali ed person for operation and maintenance of the machine.

He should properly train all operators, so that they are acquainted with all needed measures to prevent any accident or injury to people.

All start and stop procedures as well as emergency ones should be known; they should be also periodically checked with the operators.

The operating and maintenance manual should be always available; in case of loss or damage, further copies can be purchased from Mattei's sales organisation.

Checks before start

Before starting the machine, ensure that:

- ❑ the electrical system complies with voltage and power of the machine and that wires are of suitable section;
- ❑ the machine is earth connected and protected against possible short circuits;
- ❑ the mains isolator is installed near the machine;
- ❑ the machine oil level is correct; with the compressor not operating and without pressure inside the chamber the oil should exceed the visual level indicator. In case of low level, top up with suitable oil of the same type as in use;
- ❑ the machine is connected to the compressed air system.

Operation Modes

Mattei compressors, to best comply with the users' need, have been designed to work in three main modes: Continuous, Automatic and Modulation.
The factory-preset mode is AUTOMATIC. To change the setting please refer to section 6.3.1 of MAESTRO^{XS} operating manual.

An overview of these three options is given below.

Continuous (Cont)

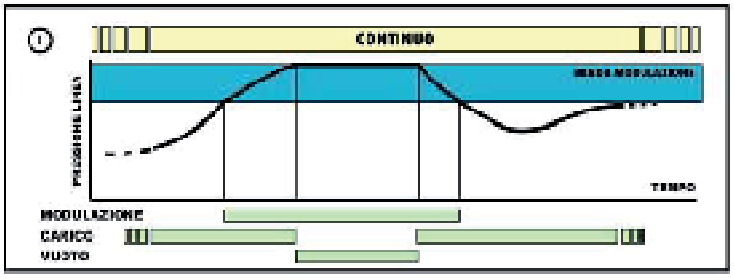

072

In this mode, the compressor delivers air within a clearly defined pressure range; maximum and minimum values are factory-set by Mattei though they can be customised using the programming functions in the [User] menu. When pressure reaches the maximum value (Pmax) the compressor is off-loaded (suction valve closed) and decompressed in order to reduce power consumption. As soon as a request for air from the network reduces pressure to the minimum value (Pmin) the compressor loads again and resumes air delivery. The compressor can be stopped at any time by pressing the stop button: the stopping procedure comprises a no-load run phase which lasts for a set time during which the compressor is decompressed.

Nota
If the unit is enabled with a line pressure greater than the set minimum pressure, the compressor does not start but waits for the pressure to fall below the minimum value.

Automatic (Auto) (**Preset** Mode)

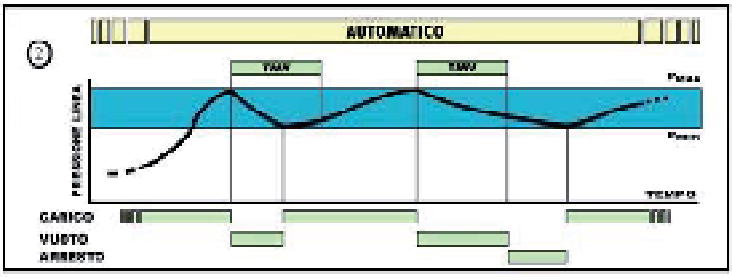

073

This mode adds another function to the previous one: the compressor can automatically stop at low or no air demand conditions. The cycle is the following. When line pressure reaches Pmax, the compressor is "off-loaded"; at this point, two things can happen:

1. if there is no demand for air it runs no-load for a certain period of time TMV (No-load Run Time) and stops when this period of time expires; it starts again as soon as line pressure falls below Pmin;
2. if line pressure falls to Pmin before TMV expires, the compressor is "recharged".

The above operating mode can be combined with a special characteristic of MATTEI rotary compressors, the MODULATION phase.

By suitably adjusting the its “servo-valve”, the compressor can modulate before reaching Pmax. This means that Pmax can only be reached in case of very low or nil demand.

Nota
If the unit is enabled with a line pressure greater than the set minimum pressure, the compressor does not start but waits for the pressure to fall below the minimum value.

Modulation

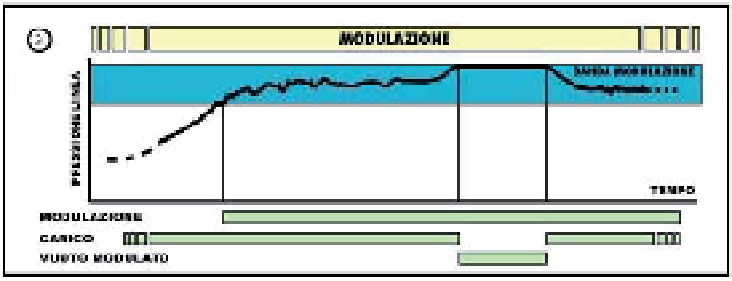

00744

All MATTEI compressors are fitted with an automatic system for adjusting pressure according to delivery pressure. The internal pressure of the compressor depends (partly) on line pressure and, consequently, on the demand for air; when the latter drops or is nil, line pressure and internal pressure increase. In Mattei compressors, the maximum pressure at which the unit runs no-load can be set (by calibrating a valve). For values slightly below maximum, the suction valve is only “partially” closed by suitably modulating machine capacity to line requirements. Maximum pressure and values slightly below this define a field or range which is known as a MODULATION BAND.
This operating mode exploits this potential. The control unit ignores the Pmax and Pmin. settings and operates the compressor without stopping except in case of an operator command.

Nota
The modulation bandwidth is typically 0.3 bar.

Suppose maximum no-load pressure is set (using the SERVO-VALVE) to 7.3 bar.

- For pressure values lower than 7 bar (7.3 - 0.3 = 7), the compressor delivers 100% of its capacity.
- For values ranging from 7 to 7.3 bar (the modulation band), the compressor delivers less than its rated capacity, suitable for line demand.

099

Upon delivery, the compressor is protected by an alphanumerical code which must be provided by Mattei and entered the first time it is switched on.
The compressor will not work if this code is not entered because, as soon as the compressor is powered, the screen shown appears with the cursor flashing in the top left-hand corner.

859

ENTERING THE CODE

Press < ↵ > to move the cursor to the first digit of the code to enter.
Press <↓> and <↑> to select the letters or numbers to enter and confirm with < ↵ >.
The cursor automatically moves on to the next position after each digit is confirmed and, if the code has been correctly entered, the first page of the menu appears [MONITOR].
If the code is entered incorrectly, instead, MAESTRO xs asks for the entire code to be re-entered.

After being entered correctly, the code will no longer be requested.
From now on, the compressor can be used and configured.

In order to communicate with the user, MAESTRO^{xs} features carious menus that allow the compressor to be monitored and programmed. These are divided by function and not all of them can be accessed by the final customer. Some of them are protected by one or more passwords.
The menus are divided according to the functions that they control.
The main menus used to manage the compressor are:

Menu	User access	Password	Menu ID
Monitor Menu	Yes	No	0
User Menu	Yes	No	1
Advanced Menu	No	Yes	2
Clock Menu	Yes	No	3
Log Menu	Yes	No	4
Network Menu	Yes	No	5
Info Menu	Yes	No	6

To simplify use of the compressor, some symbols are used to graphically represent certain functions, such as machine status and other settings.
Other symbols are used to report operating problems, special enabled functions, etc..
The various menus also use texts informing the user of the meaning of the variables and the functions they perform.
To simplify traceability of a variable, every menu is identified by a number, as shown in table 3. The same applies to the submenus and individual variables.

For a more detailed description of individual menus, please refer to the Maestro xs manual (code TE-CA2G-007) supplied with this manual.

Operational Failures

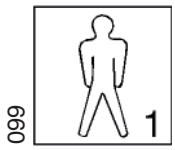

Failures can be divided as follows:
- ❑ Failures with an intervention signal (alarms)
- ❑ Failures causing the immediate stop of the compressor (blocks).

The card signals a failure by lighting of the reset button, together with a visual signal through icons and a sliding description.

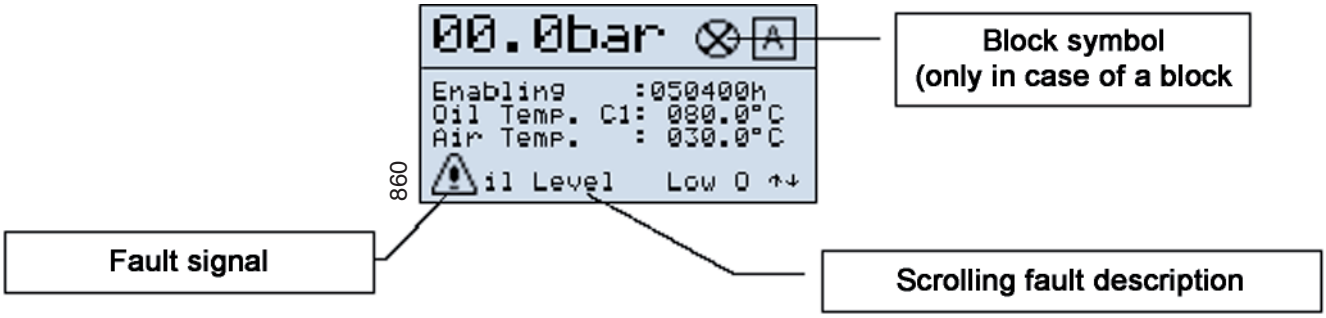

Press the “reset” key once, for more information about the kind of failure occured. A page appears that contains the information on the failure and speci cally:

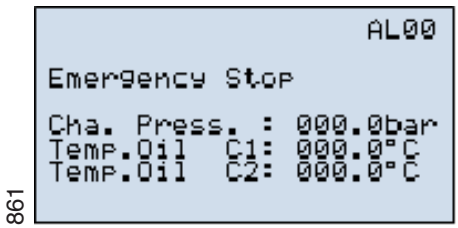

- ❑ The event code
- ❑ The working time at which the failure occurred
- ❑ The detailed description of failure to the main compressor (C1)
- ❑ The detailed description of failure to the additional compressor (C 2) when tted
- ❑ The chamber pressure at the moment of failure

All these information are stored in the incorporated historical archive together with other information, and it is possible to store up to 20 failures
When the failure number exceeds the allowed limit, the system clears the least recent failure to insert the latest one.
Press ““**Reset**” key a second time to reset the compressor operation.

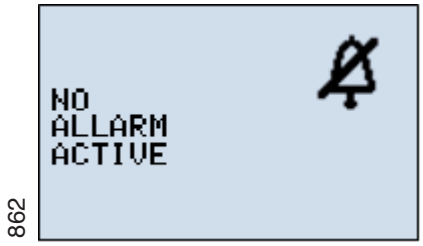

Note : for Plus versions the faults “frost alarm” and “high dewpoint” are visually signalled when the dewpoint temperature is out of the standard operating range, with automatic restoring as soon as the temperature goes back to the normal values.
See MAESTRO xs manual (code TECA2I-007) supplied together with this manual.

WARNING !!!
If the failure cause cannot be solved, the compressor will not start as the failure appears to be still active and re-displays the intervention request.

WARNING !!!
The rotation in the wrong direction can seriously damage the compressor.

099

Once all foreseen operations before starting have been performed, and which have been described in the Sections above, the Maestro page displayed to the operator is :

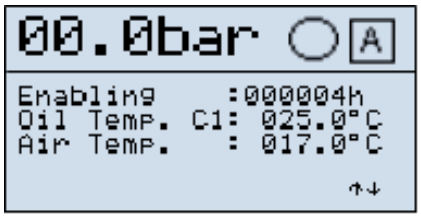

863

Starting
Press the key to switch the compressor “on”

853

The led lights with yellow colour.

The compressor is started. It starts off load (intake valve closed) and then goes on load after a pre-set time, subsequent to the star-delta switching delay

The compressor, from this moment on, delivers compressed air according to the set operation mode.

After starting, the page below appears within few seconds

864

Stop
To stop the compressor, press key

853

The yellow led of the ON key turns off.

The display shows:

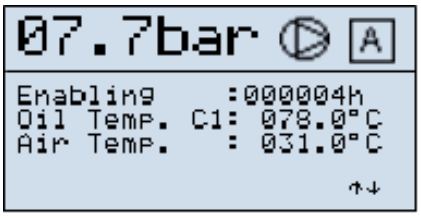

865

The compressor is unloaded (decompressed) for a preset time (basic programming).

After the motor has stopped the residual pressure inside the compressor discharges completely in approximately one minute.

The display will show the following page

866

099

The machine can be restarted according to the above sequence, but it will start again only if the internal pressure has lowered under the maximum allowed value for the re-start (preset factory data not changeable by the user)

NOTE

MAESTRO^{XS} has a control logic that prevents an excessive number of consecutives starts.

This logic is cleared by the user 's manual intervention, if he/she acts directly by turning off and on the machine manually.

WARNING

098

An excessive number of consecutive starts may damage the main motor.
Operate manually only in case of real need and wait for a reasonable amount of time before restarting the machine.

The number of starts depends now on many parameters,the rated power,the operation cycle,the working pressure,and the ambient temperature.

For any requirement,please contact MATTEI.

801a

Suggestions on maintenance

Machine cleaning

Cleaning of the equipment should be carried out at regular intervals, following the schedule in this manual.
To clean delicate parts of the machine direct the compressed air jet so that neither machining waste nor humidity can penetrate in the mechanic assemblies.
Only use lint-free cloths to clean internal and/or moving parts (in contact with lubricant).
Always use perfectlly dry air during the cleaning and at suitable pressure to avoid injuries to the operator.

Maintenance schedule

The time intervals in the maintenance tables are only reference values concerning the machine operation at the company's conditions.
Environment factors affecting these intervals are mainly: machine environment (temperature, humidity) and air pollution.

Machine lubrication

Use only the lubricant quantity needed to lubricate the involved mechanism. Carefully dry the excess oil or grease with a cloth.
Sometimes an excess or a lack of lubricant may jeopardize the machine operation.
Only recommended lubricants or well known and tested equivalent lubricants should be used for lubrication
Replacement of the exhausted oils should be made when the machine is warm. The oil temperature should range between 25 and 30 °C. (see section 8).
The draining and lling holes should not be left open for more than the time needed to replace the oil.

Jobs to be performed during maintenance

During maintenance operations pay attention to all signs that may precede a failure, and speci cally:
- presence of corrosion,
- presence of wear,
- presence of loose unions or connections,
- presence of oxidized contacts,
- after each maintenance operation, exhaust the air from the pneumatic pipings.

Minimizing downtimes after a failure

It should be noted that correctly performed maintenance interventions may minimize downtimes after a failure.
A repair made in due time prevents further deterioration.
Only use original spare parts and repair the damaged component thoroughly, by your factory or send it to the nearest authorised service centre.

098

Regular Checks
WARNING !!!

101

After the first 50 hours of operation and every 6 months or 1000 hours:
- tighten nuts and screws fixing the cables in the command and control electrical board and in the terminal board of electrical motors.

102

Within the first 300 hours of operation:
- clean the oil return valves (Page 7.04).

Weekly (or every 50 hours)
- Check the oil level
- Check and Clean the solenoid valve lter of condensate drain (with optional kit).

Monthly (or every 200 hours)
- Clean the suction lter.
- Clean the oil radiator
- Clean the air radiator
- Clean the intake pre lter

Every three months (or every 500 hours)
- Clean the oil return valves

Twice a year (or every 1.000 hours)
- Replace the suction lter
- Tighten nuts and screws xing the cables in the command and control electrical board and in the terminal board of the motor

Yearly (or every 2.000 hours)
- Replace the oil lter
- Replace the oil return valves

Oil change
Rotoroil 8000 F2:
- every 12 months or 5.000 hours

Rotoroil 8000 F4:
- every 12 months or 5.000 hours

Rotoroil 8000 FG:
- every 12 months or 1.000 hours

Replace the oil filter at every oil change.

098

WARNING !!!
In dusty environments and/or at high temperatures, maintenance operations should be carried out more frequently.
The manufacturing date is quoted on rubber hoses.
Their operating life span is 3 years, after which they should be replaced.

098

WARNING !!!
Preventive maintenance agreements are available that help the user maintain the machine in the best working and ef ciency condition.
Please refer to **Ing. ENEA MATTEI S.p.A.** / **M.T.A.** for further details.

098

WARNING !!!
For compressors equipped with INVERTER, before performing any maintenance job, wait at least 5 minutes after you have disconnected the electricity supply.

362

017

833

101

Check of oil level (Photo 1)
When the compressor is not running and without pressure in the chamber, the oil level should exceed the speci c visual indication pilot light.

When the compressor is running and on load, the oil level should be about half of the pilot light.

Cleaning and/or replacing the air suction filter (Photo 2)
Unscrew the blocking knob and remove seal.
Remove the cover and withdraw the ltering cartridge. Clean the cartridge with compressed air.
Direct the air jet to the inside of the cartridge. To reassemble apply the reverse procedure of the disassembly.
Check seal and replace it, if damaged.

Cleaning the oil/air radiator (Photos 3)
The radiator is in the machine body.
The cooling ow goes through the radiator from the inside to the outside of the machine.
Hence blow a jet of compressed air through the radiator on the side of the opening of the cooling air exhaust.
Remove any dirt that has come from the inside of the machine body.

Centrifugal fan
Considering the compressor cleaning air ow, an air current owing from bottom to top crosses the radiator.
Hence, dust will mainly deposit on the lower part.
To clean, proceed by removing the speci c door on the conveyor and blowing the radiator with a compressed air ow.

Axial fan
The same conditions as mentioned above in terms of air ow apply here too. In this case, the radiator is free from any obstruction preventing such an operation.

834a

101

Cleaning the pre-filters

The machine is equipped with a pre- lter to remove dust and is articulated by the in ow of air.

It glides on metallic guides in the side door and should be withdrawn from its housing for replacement or cleaning purposes.
It lters the suction air and washes the compressor while preventing foreign matters from entering the machine.

Frequent cleaning of panels is required. To do this, open the door from the xing locker, withdraw the panel and blow on it with a compressed air jet.

The synthetic material can be washed whenever necessary.

For washing no solvents should be used.

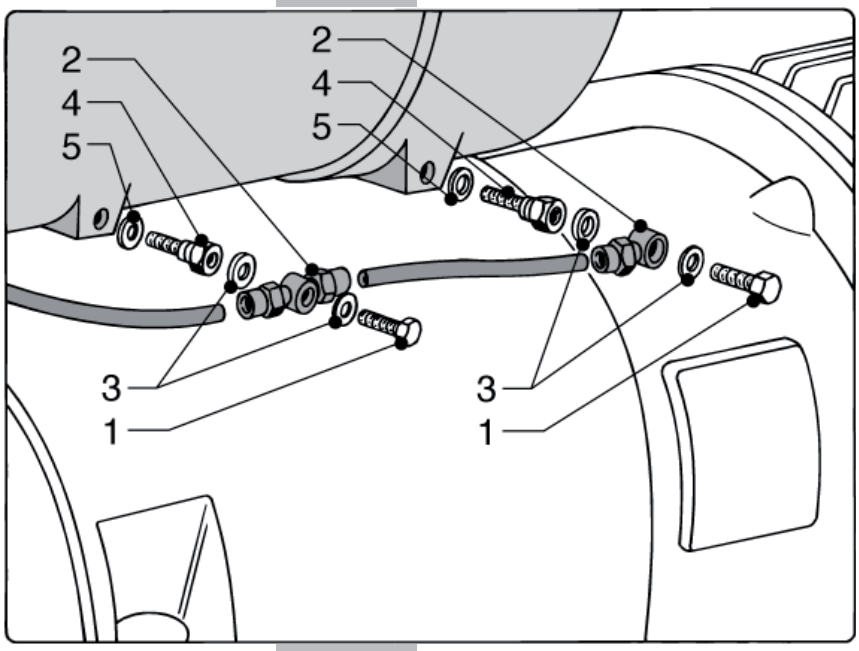

101

Cleaning and/or replacing the oil return valves

Unscrew the holed screws (1) blocking the oil return hose connections (2). Be very careful not to loosen the sealing washers (3). Unscrew and remove the oil return valves (4). Wash the valves with detergent and blow on them with some compressed air. Replace the sintered lter if it is very encrusted.
For the assembly, remember to always replace the OR-Ring (5) and proceed with the reverse procedure applied for disassembly.

044

101

Replacing the oil filter

Replace the oil filter every time the oil is changed. Once the oil has been drained (See section on the oil change), unscrew screws (Photo 1) from the filter cover and remove it after having rotated it 90° (Photo 2) in order to facilitate the grip.
Remove filter (Photo 3) from cover.
Before mounting a new filter, clean the housing.
To assemble, apply the reverse procedure while checking the condition of the OR-Ring on the cover and replace it if damaged.

047

048

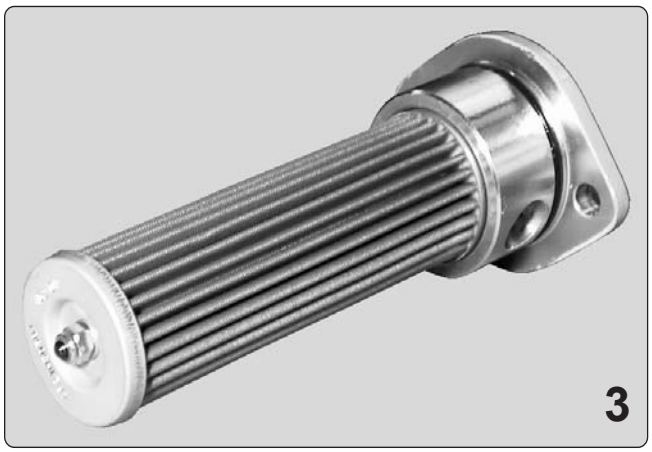

835

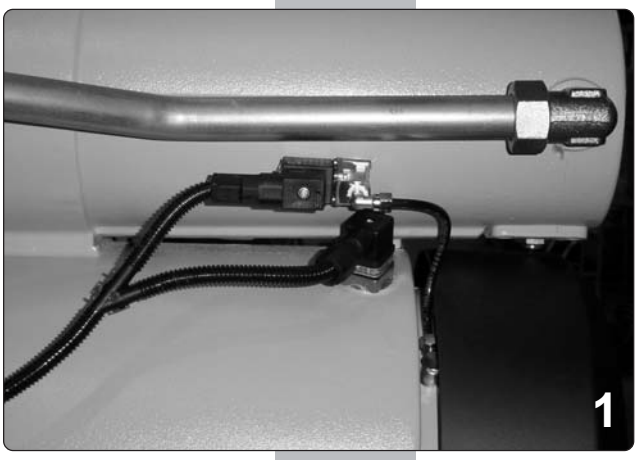

030

101

Replacing the air - oil separators elements

Under normal operating conditions, the separators should be replaced if an excessive consumption of oil or a high pressure drop through them occurs.

To accomplish this operation, proceed as shown in the subsequent photos regardless of the kind of fan used:

- Disassemble the solenoid valve connector for the off load, which is on the back of the separator body, and detach the relevant tube (photo 1).
- Proceeding as described in item 7.04 detach the small pipes of the oil return valves and the xing screws of the separator assembly (photo 2).
- Remove the delivery air tube. Loosen the ring nut (photo 3) of the holed screw (photo 4-5) xing the separator body to the oil chamber.
- Withdraw it while noting the reference notch position of the holed screw (photo 3-4):
  in the following mounting, it will have to be repositioned in the same way.

Now replace the ltering elements.

842

067

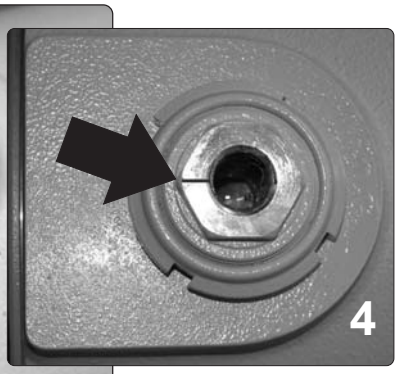

843

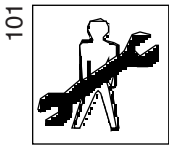

Replacing the air - oil separators

Withdraw the cover to which the separator element is xed while prizing with the suitable tools in the round groove of the cover (photo 6-7).
Loosen the ring nut, remove the sealing washer, the cover and the separator element with the relative O-ring.
Replace the element.
Replace the seal ring. Re-assemble the various parts, making especially sure that the O-rings (photo 9) are perfectly positioned in their corresponding housings.
Applying a veil of grease could help to keep them positioned during mounting.

Important: The holed screw should be re-positioned with its notch facing in the right direction (photo 3-4).

839

740

841

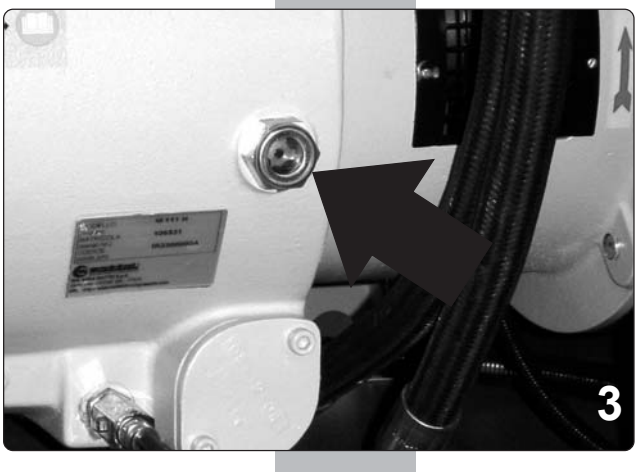

101

Foreword

As mentioned above, oil performs multiple functions that are crucial to the smooth operation of the compressor and, consequently, it is essential check both its quantity and condition at the recommended frequency.
Please refer to the speci c tables for selecting the oil types most suitable to the different operating conditions.

First change of oil

If not otherwise indicated on the speci c plate, the compressor is supplied with Rotoroil 8000 F2 oil.
The rst oil change and the rst oil lter change should take place within 5000 hours or a year.
It is to be noted that expired oil is dangerous for the smooth operation of the compressor, hence once the forecast interval for its change has elapsed, it should be replaced.
Oil replacement should be done with the machine off and with warm oil.

To drain oil, wait for the complete depressurization of the compressor, while verifying that the pressure gauge on the separator or on the tank shows that no more pressure exists inside.
Unscrew the cap of the lling gate slowly (Photo 1), while paying attention to the possible presence of foam. If necessary, wait for some minutes for the oil to demulsify.
Open the drain cock (Photo 2) and drain the oil into a suitable container.
Close the drain cock upon the operation end. Fill the oil chamber with new oil to lap the gate.
Replace the cap seal and tighten it well.
Start the compressor and let it run for some minutes, and then stop it. Check the correct level by means of the speci c indicator (Photo 3) and ll it up again, if necessary.

Using Rotoroil lubricants
It is recommended to use Mattei Rotoroil 8000 Lubricants.
The subsequent changes could be made at the forecasted intervals.
Should the machine have already worked for a long period with other oils, and should lacquers and deposits be present, then it is recommended to wash with Rotoroil 8000 F2/F4 for some 200 hours, so as to remove all residual impurities.
It is also recommended, when lling the machine up with new oil, to replace the oil lter and the ltering elements of the separator.

Lubricants are flammable products.

Observe the indications given on the containers !

During the disposal of exhausted lubricants it is necessary to comply with following environment protection rules:

• Lubricants may contaminate water and soil !
Never pour lubricants on the ground, into water, or in the sewerage system.
Any infringement of these rules can be legally prosecuted! When handling lubricants keep an oil agglomerative base near the working area.
• Recover the exhausted lubricants while separating the mineral based from synthetic lubricants. Upon disposal, please comply with current regulations concerning the disposal of exhausted oils.

Only the use of lubricants with suitable quality guarantees a safe operation of the machine.

It is forbidden to mix lubricants of a different quality, as their composition and additives are not the same.

This rule should be mainly applied to synthetic and mineral lubricant mixtures.

If other lubricants are to be used, it should be veri ed beforehand if the two products are compatible.
In case of doubts, the lubricant used up to that moment should be completely eliminated, by means of a washing procedure of the uid circuit.
To avoid any risk of contamination, the lubrication procedures should be carried out under “absolute cleanliness” conditions.
All manufacturers of lubricants mentioned in the table offer a technical information service that may answer all your questions on lubrication.

WARNING on lubricants

The correct use of suitable lubricants considerably helps to obtain the maximum performance and the elimination of failures.
During the handling of lubricants on equipments, it is essential to strictly comply with the following precautions, for sanitary protection:

- Avoid any prolonged, excessive or repeated contact of the skin with lubricating products as well as avoid inhalation of their vapours or fumes.
- Wear suitable clothing and protections to protect the skin (for instance overalls, eyeglasses or, as far as allowed by the safety rules, protection gloves) or apply a protective product.
- Clean dirty skin carefully by abundantly washing it with water and soap.
- Apply a skin cream after washing.
- Take out and change clothes and shoes soaked with oil.
- Never put oil soaked cloths in one’s pockets.

General

Several oils are available on the market and research continuously improves their characteristics and it changes the names and speci cations.

When the warranty period is over, during which the use of Mattei Rotoroil lubricant is compulsory, the user can decide to use the oil he believes most suitable or the available one, provided it is suitable for rotary vane compressors.

Only manufacturers of lubricants can recommend the most suitable oil for the kind of machine and for its speci c application.

The user should then purchase the lubricant from an oil company or a distributor that guarantees its suitability for the speci c use.

The cost of the best lubricant is a small percentage of the total running cost of the machine: it is suggested to purchase the best available on the market (see the section "**MATTEI LUBRICANTS**").

Please consider that in lubricated and injection cooled compressors the oil performs the listed tasks and it is subject to continuous working cycles; therefore, it should be highly resistant to oxidation to ensure long life.

The oil should also provide a good demulsivity.

Anti-oxidizing additives should provide low volatile substances at the compressor operating temperatures, so as to ensure protection between one oil lling and the other.

The user must adopt the kind of oil grade recommended by Mattei.

Please refer to the speci c table for the choice, according to the operating conditions.

Available oils on the market

There are several kinds of oils on the market, including:

- ❑ mineral based industrial oils;
- ❑ synthetic oils.

Mineral based industrial oils

These oils have been designed for different applications and also for some types of compressors.

In this case, too, there are standards specifying their features; please refer to DIN 51506 which classi es the oils as VB-L, VC-L e VD-L, according to their possibility of working at different temperatures.

The latter is suitable for high temperatures and it is resistant to oxidation caused by the continuous mixing with the air.

ISO 6743-3 classi es oils based on the operating temperature and pressure and, according to this rule, for rotary vane compressors ISO-L-DAH o DAJ oils are recommended, which are for medium and heavy applications.

The table indicates some typical values of the main characteristics."

Typical featuress of Industrial Oils	Measuring unit	Ambient temperature 5 ÷ 40	Ambient temperature -5 ÷ 30
Viscosity ISO VG	---	150	100
Viscosity at 40°	cSt	135 ÷ 165	90 ÷ 105
Viscosity at 100°	cSt	14 ÷ 16	10 ÷ 12
Viscosity Index		93 ÷ 100	100 ÷ 110
Pour point	°C	-10 ÷ -5	-15 ÷ -10
Flash point V.A.	°C	230 ÷ 265	250 ÷ 265
Volumes mass	Kg/m^3	940 ÷ 960	940 ÷ 960

Values in the Table are merely indicative

Synthetic oils

Many synthetic oils with different basis are available on the market (esters, glycols, etc) that sometimes have proved to be suitable and provide a longer life than mineral oils.
Normally they reduce carbon deposits, provide a high self-ignition temperature and are remarkably resistant to oxidation.
As synthetic lubricants are good detergents, to change the kind of lubricant in a machine and pass from a conventional mineral based to a synthetic one, it is necessary to carry out a thorough washing, following the supplier's instructions, to avoid damages to the machine if dirt, residues and deposits circulate.
It is also necessary to pay attention to condensate, as usually synthetic lubricants are more sensitive to water washing and their thin lm may not provide enough protection against rust.
This problem can be worsened if the compressor is not working continuously, but occasionally.
In this case, even though not suggesting its use, any responsibility for the choice is up to the user and to the lubricant supplier.

WARNING !!!
It is difficult to determine life of an oil, as there are different parameters affecting the same, among which the operating temperature and quality of the intake air are very important.
For this reason it is recommended to obtain precise guarantees from the supplier, validated by the analysis of samples taken from the machine, to determine the suitability of lubricant and its life.

MATTEI LUBRICANTS

Considering the important role of lubricant for operation of the compressor, Mattei offers special lubricants to the users and recommends their use.

These are:

- Mattei Rotoroil 8000 F2 (synthetic),
- Mattei Rotoroil 8000 F4 (synthetic),
- Mattei Rotoroil 8000 FG (synthetic, non toxic)

available in 2, 5 and 25 litres cans.

Their life can reach the hours shown in the table, depending on the operating temperature and conditions of the intake air.

MATTEI LUBRICANTS

Name	Ambient temperature	Operating hours (max.)
Rotoroil 8000 F2	From - 15° a + 45 °C	5000
Rotoroil 8000 F4	From - 30° a + 30 °C	5000
Rotoroil 8000 FG	From - 5° a + 40 °C	1000

Safety Precautions

There is a latent risk of re in almost all compressed air systems and ISO 5388 Standard explains the reasons.
In fact, in compressed air systems both oxygen and oil are always present and are combustible.
Should for any reason oil vapours form, these could burn in presence of a ame; an ignition source may start a re in case of use of excessive or unsuitable oil, or when neglecting maintenance.
Faulty maintenance has been mentioned, because a dirty radiator may cause a temperature rise, often quickly, which leads to oil damage and to the creation of deposits.
Such processes are accelerated if unsuitable oil is used.
Based on experience, res are almost never caused by the fact that the oil self-ignition temperature is reached (340-400 °C).
Usually the cause is that the oil, while decomposing, creates carbon residues that when in contact with air and high temperature, continue to oxidize and, under special conditions, may ignite. So it is essential to use suitable lubricants and carry out correct maintenance.

860

WARNING !!!

It is opportune that to prevent the risk of fires the best attention is given to the oil choice and to execution of all maintenance operations, and specifically:

- carry out regular and complete oil changes;
- ascertain that the coolling system is always ef cient, with often checks to the oil temperature;
- verify that protecting devices installed are always in perfect working order;
- keep the oil consumption under control;
- take care of the machine cleaning.

Storage and treatment of oils

Usually lubricant containers are built so as to prevent any contamination.
When the user receives the lubricant, it is under his responsibility to avoid damages or pollution to the same.

The lubricant may get damaged due to:

- dust and dirt;
- condensate, mainly due to absorbing humidity from the air;
- extreme temperatures;
- mixing with other oil types.

Please note that dirt in the oil reduces its ef ciency and causes wear of those parts it comes into contact with, therefore there is the need to increase maintenance.
Instead, condensate cancels the effect of some additives, often present in very limited quantities.
Oil containers should be stored in protected rooms, avoiding exposure to extreme temperatures.

860

WARNING !!!

Absolutely avoid the mixing of oils of a different grade and quality .
Although looking alike, they could not be compatible.
Also beware of oil leaks, not only being a waste, but also polluting, causing falls or injuries to people and also fires.

General

As mentioned in the section dedicated to protections, the command and control board controls the smooth operation of the compressor. It is possible that, due to the incorrect use of the machine, or incorrect maintenance or unforeseen conditions, etc., malfunctions occur and that
only their effects are indicated. The table below aims at helping the operator solve some dif culties should they arise while indicating their possible causes.

Problem - Cause - Solution

Below some possible failures are indicated with their causes and how to identify the correct solution.

PROBLEM	CAUSE	SOLUTION
A. Start MAESTRO^{XS} works, start is allowed but the star/triangle commutation does not take function correctly	The power supply line is insuf cient and the excessive drop of voltage following the start provokes the contactors to be released.	Check for the correct size of the supply line. Please refer to the “Installation, Use, and Maintenance Manual” in Section 4. Contact the nearest authorized service center.
MAESTRO^{XS} works, it enables the start by turning green LED on, but the compressor does not start.	Pressure inside the compressor is higher than the maximum tolerated value for the start: or for an abnormal return of the network air, or because the pressure transducer reads an incorrect value.	Check the inner pressure on the pressure gauge of the separator body and compare it with the value given by MAESTRO^{XS}. Verify the correct operation of the pressure detection system: transducer, collector and switching solenoid valves. Contact the nearest authorized service center.
	The hour programming has been enabled.	
	The compressor runs within a network with other compressors.	
B. Pressure The network pressure does not reach the required value.	The servo valve has not been correctly gauged.	Verify the setting. Contact the nearest authorized service center.
	The condensate drain solenoid valve is blocked in the open position (Optional kit separator/condensate drain).	Clean the specific filter to remove the cause of the block and then check operation. Please refer to the “Installation, Use, and Maintenance Manual”, Section 12.
	The minimum pressure valve does not function correctly.	Verify the operation. Contact the nearest authorized service center.
	Suction lter clogged.	Replace the lter. Please refer to the “Installation, Use, and Maintenance Manual” , Section 7.
	Request for air greater than the compressor maximum capacity.	Please refer to the Sales Organization of Ing. Enea Mattei S.p.A. to study equipment improvement..
The inner pressure exceeds the set value.	The servo valve has not been gauged correctly and/or the setting of the maximum pressure value in the [BASIC PROGRAM.] menu is incorrect.	Verify both the servo valve and the correct setting of operating parameters. Please refer to the “Installation, Use, and Maintenance Manual”, Sections 5 and 6.

PROBLEM	CAUSE	SOLUTION
C. Oil Excessive oil consumption; the level lowers too quickly; oil is detected within the network.	The filters of the oil return valves are clogged.	Replace filters and verify the causes of the clogging. (see Section 7)
D. Temperature The compressor stops due to its own over-heating.	The radiator or the filter of the cooling air is dirty; the environmental temperature is excessive for the compressor operation.	Verify the cause and remove the problem. (see Section 7)
The compressor stops due to the over-heating of the motor.	Excessive working pressure.	Verify the setting and re-set to the value foreseen for the machine. (see Section 7)
	The main motor cooling is insuf cient; the motor sucks too little air or too much warm air.	Verify the environmental conditions and the condition of the filtering panel. (see Sections 3 and 7)

General

The electric motor characteristics are given on the nameplate xed to the motor itself, and speci cally:

1. Model
2. Serial number
3. Protection degree
4. Insulation class
5. Maximum ambient temperature
6. Service
7. Service factor
8. Supply voltage [V]
9. Frequency [Hz]
10. Speed [rpm1]
11. Power [kW]
12. Power factor [cos _]
13. Rated intensity [A]
14. Motor weight
15. Type of bearings (front and rear)

Lubrication

The same plate also indicates the type of bearings mounted, for which it is recommended to use lithium based grease for lubrication.
Greasing (where necessary) should be carried out when the motor is running.
The lubrication intervals should never be longer than the solar year.

Cooling

The motor is equipped with a cover and fan, to guarantee proper cooling. Check that dirt does not form on this cover as it could reduce the cooling air passage.

Abnormal noises

Any vibration or abnormal noise is usually due to deterioration of the bearings. In this case it is recommended to replace the bearings rather than risking more serious problems to the motor or the machine.

Electrical checks

If the machine has been stored for a long period or in case of long stops in damp places, it is suggested to measure the winding insulation value by applying 500 V d.c. voltage for 60 seconds.
The insulation should be at least 10 MΩ (MegaOhms) in warm conditions or 100 MΩ in cold conditions.
Should these values not be detected and in case the motor has been exposed to damp, it is suggested to dry it for 24 hours in a furnace at 100-110 °C.
If no furnaces are available, please contact the manufacturer.

860

WARNING !!!
Before starting the machine, verify that the nuts locking the terminals of the power supply wires are well tightened.

Storage

The compressor is protected against corrosion and deterioration for the shipment period and for a relatively short (3 months) period of storage.
For any longer periods, please contact the manufacturer, while considering that the maximum time of 24 months.
However, it is suggested to keep the machine in a dry place, protected from atmospheric agents.
In case of damp climates, to protect both the electrical and the mechanical parts, the machine should be kept in a heated room or closed in a barrier- bag with heaters or light bulbs.
For the motor speci cally, please refer to that which has been indicated on the winding insulation.

Decommissioning

Decommissioning the machine does not imply special precautions but for the collection of the oil contained in the machine and the lubrication system components, i.e. the oil lter and the oil-air separators.

WARNING !!!

Both these elements and the oil should be collected and dumped in compliance with the current regulations on the environment in order to avoid any pollution and danger of fire.

Dismantling

Once the machine has reached the end of its technical and operating life, it can be demolished, i.e. decommissioned and put in such a condition so as not to be used any longer for the purposes it was designed and built, with the possible recycling of raw materials.

NOTE
Ing. ENEA MATTEI S.p.A. denies all responsibility for damage to people or things that may derive from the recycling of individual parts of the machine for functions or assembly situations different from the original ones.
Ing. ENEA MATTEI S.p.A. declines any acknowledgement, be it implicit or explicit, of the suitability to speci c purposes of parts of the machine reused after the nal dismantling the machine.

WARNING
The operations of deactivation and dismantling of the machine should be entrusted only to duly trained and equipped staff.

To deactivate the machine permanently, apply the following procedure:
- ❍ Drain the oil from the tank.
- ❍ Disconnect the machine from the power supply and pneumatic feed systems.
- ❍ Lift the machine with proper lifting apparatus.
- ❍ Remove the machine from its main components
- ❍ Block all moving parts of the machine.
- ❍ Dump all the machine components in controlled dumping sites

Residual risks after deactivation
After deactivating the machine, if all moving parts have been duly blocked, no residual risks exist.

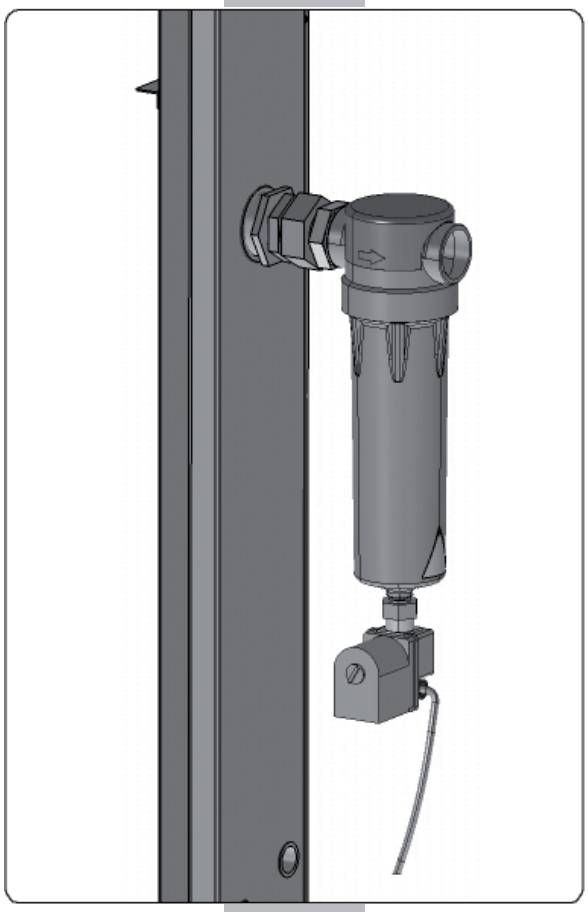

079

024

101

Cleaning the drain solenoid valve filter

Unscrew the connection and remove the drain solenoid valve.
Withdraw the solenoid valve lter using beak pliers, remove any dirt and wash with detergent.
Re-assemble in the reverse order while paying special attention to the position of the solenoid valve seal.

023

Form to request Technical Service

M.T.A. S.P.A. MECCANICA TECNICA ASSISTENZA
Corso Italia, 47 – 24049 VERDELLO - ZINGONIA (Bergamo) - Italy
TEL: +39 - 035/4186400 (Ric.Aut.) FAX: +39 - 035/4186490
e-mail: info@mta.bg.it
C.P. N° 69 Zingonia

Company _____

Address _____

Please note our request for intervention for our machine :

Modell _____ Serial Number _____

Intervention to be carried out at :

Contact Person _____

Telephone _____

Failure	**Description**
Electrical	_____
	_____
	_____
	_____
	_____
	_____
Mechanical	_____
	_____
	_____
	_____
	_____
	_____

Notes _____

_____

_____

On *(date)* _____ li, _____

Stamp and Signature

Form to request spare parts

M.T.A. S.P.A. MECCANICA TECNICA ASSISTENZA
Corso Italia, 47 – 24049 VERDELLO - ZINGONIA (Bergamo) - Italy
TEL: +39 - 035/4186400 (Ric.Aut.) FAX: +39 - 035/4186490
e-mail: info@mta.bg.it
C.P. N° 69 Zingonia

Company _____

Address _____

Please note our order no. _____ of _____ cwith required delivery on _____ for our machine :

Modell _____ Serial Number _____

Reference	Description	Quantity

Notes _____

_____

_____

On *(date)*_____ li, _____

Stamp and Signature

Parts to be replaced during maintenance

DESCRIPTION	CODE	COMPONENTS	QUANTITY
Maintenance Kit	IF57A22422	Air lter	1
		Air lter seal	1
		Oil return valve	2
		Oil return valve OR-ring	2
		Oil plug seal	2
		Oil lter OR-ring	2
		Oil lter	1
Separator oil kit	IF57A22421	Washer	3
		O-ring	6
		Separator	3
		O-ring	2
		O-ring	1
		O-ring	1
		Oil return valve	2
		Oil return valve O-ring	2
Pre lters	C098024079	Pre lter	1

Lubrificanti Mattei ROTOROIL 8000

COMPONENT	CODE	DESCRIPTION	QUANTITAY
Oil F2	BCL06FC002	Can	2 liters
	BCL06FC005	Can	5 liters
	BCL06FC025	Can	25 liters
Oil F4	BCL06SC002	Can	2 liters
	BCL06SC005	Can	5 liters
	BCL06SC025	Can	25 liters
Oil FG	BCL06AC002	Can	2 liters
	BCL06AC005	Can	5 liters
	BCL06AC025	Can	25 liters

mattei®
BEST SOLUTIONS IN COMPRESSED AIR

DESIGN DATA
SERIE 1000
SCHEDA TECNICA

TYPE / TIPO			**AC 15 / AC 15 *plus***		
VERSION / *VERSIONE*			**L**	**H**	**HH**
Air end nominal pressure [bar(g)] *Pressione nom. unità di compressione*			8	10	13
PERFORMANCES / *PRESTAZIONI*					
		bar (g)			
Air delivery / *Portata effettiva*	**[l/min]**	5	2750	-	-
Terminal power / *Potenza ai morsetti* (2)	**[kW]**		15,85		
	[l/min]	6	2740	2260	-
	[kW]		17,27	14,75	
	[l/min]	7	2710	2240	-
	[kW]		18,65	15,93	
	[l/min]	**7,5** (1)	**2700**	2230	-
	[kW]		**19,3**	16,49	
	[l/min]	8	-	2220	1910
	[kW]			17,05	16,02
	[l/min]	9	-	2210	1900
	[kW]			18,07	17,01
	[l/min]	**9,5**	-	**2200**	1895
	[kW]			**18,4**	17,28
	[l/min]	10	-	-	1890
	[kW]				17,81
	[l/min]	11	-	-	1880
	[kW]				18,52
	[l/min]	12	-	-	1875
	[kW]				19,07
	[l/min]	**12,5**	-	-	**1870**
	[kW]				**19,22**
Off load power / *Potenza assorbita a vuoto*		[kW]	3,38		
Sound pressure level **(3) (6)** / *Livello pressione acustica* **(3) (6)**		[dB(A)]	67		
REFERENCE CONDITION / *CONDIZIONI DI RIFERIMENTO*					
Intake pressure / *Pressione d'aspirazione*		[bar(a)]	1		
Intake temperature / *Temperatura aspirazione*		[°C]	20		
Relative humidity / *Umidità relativa*		%	0		
Nominal motor speed / *Velocità nominale motore*		[g/1']	1500		
ELECTRICAL CHARACTERISTICS / *CARATTERISTICHE ELETTRICHE*					
Motor rated power / *Potenza nominale motore*		[kW]	15		
Voltage **(4)** - Frequency / *Tensione* **(4)** - *Frequenza*		[V/Hz]	230/50 or / oppure 400/50		
Enclosure-Insulation class / *Grado prot.-Classe isolamento*			IP55-F		
Electric starting / *Tipo avviamento*			Star delta / *stella triangolo*		
Fan rated power **(6)** / *Potenza assorbita vent.* **(6)**		[kW]	--		
Auxiliary circuit voltage / *Tensione circuito ausiliario*		[V]	110		
Supply min wire section / *Sez. min cavo alimentazione*		[mm2]	25 or / oppure 10 (x 10 m)		
TYPE OF REGULATION / *TIPO DI REGOLAZIONE*					
Modulation / *Modulazione*			intake proportional valve / *valvola aspirazione proporzionale*		
On load, off load and stop / *Marcia a carico, a vuoto e arresto*			pressureswitch / *controllo pressostatico*		
On load, off load / *Marcia a carico, a vuoto*			pressureswitch / *controllo pressostatico*		
DRYER / *ESSICCATORE* (only Plus / *Solo Plus*)					
Absorbed power / *Potenza assorbita*		[kW]	1,05		
Gas			R 404 A		
Nominal dew point / *Punto di rugiada nominale*		[°C]	3		
OTHERS / *VARIE*					
Allowable ambient temperature / *Temp. Amb. min-max*		[°C]	+1 / +40		
Outlet air temperature **(5)** / *Temperatura uscita aria* **(5)**					
AC version / *Versione AC*	plus version / *Versione plus*	[°C]	≤ 30	20	
min-max oil temperature / *Temperatura min e max olio*		[°C]	80÷110		
Cooling air flow rate **(6)** / *Portata aria di raffreddamento* **(6)**		[m3/h]	70		
Fan residual head **(6)** / *Prevalenza residua ventilatore* **(6)**		[Pa]	20		
Total recoverable heat / *Calore totale recuperabile*		%	~ 95		
Oil system capacity / *Capacità circuito olio*		[l]	10		
Oil carry over / *Residuo olio nell'aria compressa*		[ppm]	≤ 3		
Air outlet size / *Attacco uscita aria*			Rp 1"		
Condensate drain outlet size / *Attacco scarico di condensa*			--		
plus version / *versione plus*			2 x Rp ¼		
with condensate sep. KIT **(7)** / *con KIT separ. condensa* **(7)**			ø 10		
Water inlet-outlet size / *Attacco ingresso-uscita acqua*			--		
With heat recovery kit **(7)** / *con KIT recupero calore* **(7)**			2 x Rp ½		
LxWxH / LxLxA		[mm]	1510 x 800 x 1200		
Weight with oil / *Peso con olio* AC	AC *plus*	[kg]	450	490	

(1)= According to ISO 1217 (annex "C") / *Secondo ISO 1217 (annesso "C")*
(2)= Whitout dryer power (only Plus version) / *Esclusa potenza essiccatore (versioni Plus)*
(3)= According to PN8NTC2.3 measured at 1m distance / *Secondo PN8NTC2.3 misurato alla distanza di 1m*
(4)= According to CEI 38 / *Secondo CEI 38*
(5)= According to reference conditions indicated / *Alle condizioni di riferimento indicate*
(6)= Frequency 50 Hz / *Frequenza 50 Hz*
(7)= Optional / *Opzionale*

mattei®
BEST SOLUTIONS IN COMPRESSED AIR

DESIGN DATA
SERIE 1000
SCHEDA TECNICA

TYPE / TIPO			**AC 15 / AC 15 *plus***		
VERSION / *VERSIONE*			**LX**	**HX**	
Air end nominal pressure [bar(g)] *Pressione nom. unità di compressione*			8	10	
PERFORMANCES / *PRESTAZIONI*					
		bar (g)			
Air delivery / *Portata effettiva*	**[l/min]**	5	3070	-	
Terminal power / *Potenza ai morsetti* (2)	**[kW]**		18,15		
	[l/min]	6	3050	2720	
	[kW]		19,77	17,96	
	[l/min]	7	3020	2700	
	[kW]		21,35	19,39	
	[l/min]	**7,5 (1)**	**3010**	2690	
	[kW]		**22,1**	20,07	
	[l/min]	8	-	2680	
	[kW]			20,75	
	[l/min]	9	-	2660	
	[kW]			21,99	
	[l/min]	**9,5**	-	**2650**	
	[kW]			**22,4**	
	[l/min]	10	-	-	
	[kW]				
	[l/min]	11	-	-	
	[kW]				
	[l/min]	12	-	-	
	[kW]				
	[l/min]	**12,5**	-	-	
	[kW]				
Off load power / *Potenza assorbita a vuoto*		[kW]	3,38		
Sound pressure level **(3) (6)** / *Livello pressione acustica* **(3) (6)**		[dB(A)]	69		
REFERENCE CONDITION / *CONDIZIONI DI RIFERIMENTO*					
Intake pressure / *Pressione d'aspirazione*		[bar(a)]	1		
Intake temperature / *Temperatura aspirazione*		[°C]	20		
Relative humidity / *Umidità relativa*		%	0		
Nominal motor speed / *Velocità nominale motore*		[g/1']	1750		
ELECTRICAL CHARACTERISTICS / *CARATTERISTICHE ELETTRICHE*					
Motor rated power / *Potenza nominale motore*		[kW]	15		
Voltage **(4)** - Frequency / *Tensione* **(4)** - *Frequenza*		[V/Hz]	230/60 or / oppure 460/60		
Enclosure-Insulation class / *Grado prot.-Classe isolamento*			IP55-F		
Electric starting / *Tipo avviamento*			Star delta / *stella triangolo*		
Fan rated power **(6)** / *Potenza assorbita vent.* **(6)**		[kW]	--		
Auxiliary circuit voltage / T*ensione circuito ausiliario*		[V]	110		
Supply min wire section / *Sez. min cavo alimentazione*		[mm2]	25 or / oppure 10 (x 10 m)		
TYPE OF REGULATION / *TIPO DI REGOLAZIONE*					
Modulation / *Modulazione*			intake proportional valve / *valvola aspirazione proporzionale*		
On load, off load and stop / *Marcia a carico, a vuoto e arresto*			pressureswitch / *controllo pressostatico*		
On load, off load / *Marcia a carico, a vuoto*			pressureswitch / *controllo pressostatico*		
DRYER / *ESSICCATORE* (Only plus / *Solo plus*)					
Absorbed power / *Potenza assorbita*		[kW]	--		
Gas			R 404 A		
Nominal dew point / *Punto di rugiada nominale*		[°C]	3		
OTHERS / *VARIE*					
Allowable ambient temperature / *Temp. Amb. min-max*		[°C]	+1 / +40		
Outlet air temperature **(5)** / *Temperatura uscita aria* **(5)**					
AC version / *Versione AC*	plus version / *Versione plus*	[°C]	≤ 30	20	
min-max oil temperature / *Temperatura min e max olio*		[°C]	80÷110		
Cooling air flow rate **(6)** / *Portata aria di raffreddamento* **(6)**		[m3/h]	77		
Fan residual head **(6)** / *Prevalenza residua ventilatore* **(6)**		[Pa]	20		
Total recoverable heat / *Calore totale recuperabile*		%	~ 95		
Oil system capacity / *Capacità circuito olio*		[l]	10		
Oil carry over / *Residuo olio nell'aria compressa*		[ppm]	≤ 3		
Air outlet size / *Attacco uscita aria*			Rp 1"		
Condensate drain outlet size / *Attacco scarico di condensa*			--		
plus version / *versione plus*			2 x Rp ¼		
with condensate sep. KIT **(7)** / *con KIT separ. condensa* **(7)**			ø 10		
Water inlet-outlet size / *Attacco ingresso-uscita acqua*			--		
With heat recovery kit **(7)** / *con KIT recupero calore* **(7)**			2 x Rp ½		
LxWxH / LxLxA		[mm]	1510 x 800 x 1200		
Weight with oil / *Peso con olio* AC	AC *plus*	[kg]	450	490	

(1)= According to ISO 1217 (annex "C") / *Secondo ISO 1217 (annesso "C")*
(2)= Whitout dryer power (only Plus version) / *Esclusa potenza essiccatore (versioni Plus)*
(3)= According to PN8NTC2.3 measured at 1m distance / *Secondo PN8NTC2.3 misurato alla distanza di 1m*
(4)= According to CEI 38 / *Secondo CEI 38*
(5)= According to reference conditions indicated / *Alle condizioni di riferimento indicate*
(6)= Frequency 60 Hz / *Frequenza 60 Hz*
(7)= Optional / *Opzionale*

mattei®
BEST SOLUTIONS IN COMPRESSED AIR

DESIGN DATA
SERIE 1000
SCHEDA TECNICA

TYPE / TIPO			**AC 18 / AC 18 *plus***		
VERSION / *VERSIONE*			**L**	**H**	**HH**
Air end nominal pressure [bar(g)] *Pressione nom. unità di compressione*			8	10	13
PERFORMANCES / *PRESTAZIONI*					
		bar (g)			
Air delivery / *Portata effettiva*	**[l/min]**	5	3340	-	-
Terminal power / *Potenza ai morsetti* (2)	**[kW]**		19,05		
	[l/min]	6	3320	2710	-
	[kW]		20,76	17,08	
	[l/min]	7	3290	2690	-
	[kW]		22,42	18,44	
	[l/min]	**7,5** (1)	**3280**	2680	-
	[kW]		**23,2**	19,09	
	[l/min]	8	-	2670	2310
	[kW]			19,73	18,67
	[l/min]	9	-	2650	2300
	[kW]			20,91	19,82
	[l/min]	**9,5**	-	**2640**	2290
	[kW]			**21,3**	20,13
	[l/min]	10	-	-	2280
	[kW]				20,76
	[l/min]	11	-	-	2270
	[kW]				21,58
	[l/min]	12	-	-	2262
	[kW]				22,22
	[l/min]	**12,5**	-	-	**2260**
	[kW]				**22,4**
Off load power / *Potenza assorbita a vuoto*		[kW]	4,09		
Sound pressure level **(3) (6)** / *Livello pressione acustica* **(3) (6)**		[dB(A)]	67		
REFERENCE CONDITION / *CONDIZIONI DI RIFERIMENTO*					
Intake pressure / *Pressione d'aspirazione*		[bar(a)]	1		
Intake temperature / *Temperatura aspirazione*		[°C]	20		
Relative humidity / *Umidità relativa*		%	0		
Nominal motor speed / *Velocità nominale motore*		[g/1']	1500		
ELECTRICAL CHARACTERISTICS / *CARATTERISTICHE ELETTRICHE*					
Motor rated power / *Potenza nominale motore*		[kW]	18,5		
Voltage **(4)** - Frequency / *Tensione* **(4)** - *Frequenza*		[V/Hz]	230/50 or / oppure 400/50		
Enclosure-Insulation class / *Grado prot.-Classe isolamento*			IP55-F		
Electric starting / *Tipo avviamento*			Star delta / *stella triangolo*		
Fan rated power **(6)** / *Potenza assorbita vent.* **(6)**		[kW]	--		
Auxiliary circuit voltage / T*ensione circuito ausiliario*		[V]	110		
Supply min wire section / *Sez. min cavo alimentazione*		[mm2]	25 or / oppure 10 (x 10 m)		
TYPE OF REGULATION / *TIPO DI REGOLAZIONE*					
Modulation / *Modulazione*			intake proportional valve / *valvola aspirazione proporzionale*		
On load, off load and stop / *Marcia a carico, a vuoto e arresto*			pressureswitch / *controllo pressostatico*		
On load, off load / *Marcia a carico, a vuoto*			pressureswitch / *controllo pressostatico*		
DRYER / *ESSICCATORE* (Only plus / *Solo plus*)					
Absorbed power / *Potenza assorbita*		[kW]	1,05		
Gas			R 404 A		
Nominal dew point / *Punto di rugiada nominale*		[°C]	3		
OTHERS / *VARIE*					
Allowable ambient temperature / *Temp. Amb. min-max*		[°C]	+1 / +40		
Outlet air temperature **(5)** / *Temperatura uscita aria* **(5)**					
AC version / *Versione AC*	plus version / *Versione plus*	[°C]	≤ 30	20	
min-max oil temperature / *Temperatura min e max olio*		[°C]	80÷110		
Cooling air flow rate **(6)** / *Portata aria di raffreddamento* **(6)**		[m3/h]	70		
Fan residual head **(6)** / *Prevalenza residua ventilatore* **(6)**		[Pa]	20		
Total recoverable heat / *Calore totale recuperabile*		%	~ 95		
Oil system capacity / *Capacità circuito olio*		[l]	10		
Oil carry over / *Residuo olio nell'aria compressa*		[ppm]	≤ 3		
Air outlet size / *Attacco uscita aria*			Rp 1"		
Condensate drain outlet size / *Attacco scarico di condensa*			--		
plus version / *versione plus*			2 x Rp ¼		
with condensate sep. KIT **(7)** / *con KIT separ. condensa* **(7)**			ø 10		
Water inlet-outlet size / *Attacco ingresso-uscita acqua*			--		
With heat recovery kit **(7)** / *con KIT recupero calore* **(7)**			2 x Rp ½		
LxWxH / LxLxA		[mm]	1510 x 800 x 1200		
Weight with oil / *Peso con olio* AC	AC *plus*	[kg]	450	490	

(1)= According to ISO 1217 (annex "C") / *Secondo ISO 1217 (annesso "C")*
(2)= Whitout dryer power (only Plus version) / *Esclusa potenza essiccatore (versioni Plus)*
(3)= According to PN8NTC2.3 measured at 1m distance / *Secondo PN8NTC2.3 misurato alla distanza di 1m*
(4)= According to CEI 38 / *Secondo CEI 38*
(5)= According to reference conditions indicated / *Alle condizioni di riferimento indicate*
(6)= Frequency 50 Hz / *Frequenza 50 Hz*
(7)= Optional / *Opzionale*

mattei®
BEST SOLUTIONS IN COMPRESSED AIR

DESIGN DATA
SERIE 1000
SCHEDA TECNICA

TYPE / TIPO			**AC 18 / AC 18 *plus***		
VERSION / *VERSIONE*			**LX**	**HX**	
Air end nominal pressure [bar(g)] *Pressione nom. unità di compressione*			8	10	
PERFORMANCES / *PRESTAZIONI*					
		bar (g)			
Air delivery / *Portata effettiva*	**[l/min]**	5	3740	-	
Terminal power / *Potenza ai morsetti* (2)	**[kW]**		21,76		
	[l/min]	6	3720	3270	
	[kW]		23,71	20,76	
	[l/min]	7	3685	3240	
	[kW]		25,60	22,42	
	[l/min]	**7,5 (1)**	**3670**	3225	
	[kW]		**26,5**	23,21	
	[l/min]	8	-	3210	
	[kW]			23,99	
	[l/min]	9	-	3190	
	[kW]			25,43	
	[l/min]	**9,5**	-	**3180**	
	[kW]			**25,9**	
	[l/min]	10	-	-	
	[kW]				
	[l/min]	11	-	-	
	[kW]				
	[l/min]	12	-	-	
	[kW]				
	[l/min]	**12,5**	-	-	
	[kW]				
Off load power / *Potenza assorbita a vuoto*		[kW]	4,09		
Sound pressure level **(3) (6)** / *Livello pressione acustica* **(3) (6)**		[dB(A)]	69		
REFERENCE CONDITION / *CONDIZIONI DI RIFERIMENTO*					
Intake pressure / *Pressione d'aspirazione*		[bar(a)]	1		
Intake temperature / *Temperatura aspirazione*		[°C]	20		
Relative humidity / *Umidità relativa*		%	0		
Nominal motor speed / *Velocità nominale motore*		[g/1']	1750		
ELECTRICAL CHARACTERISTICS / *CARATTERISTICHE ELETTRICHE*					
Motor rated power / *Potenza nominale motore*		[kW]	18,5		
Voltage **(4)** - Frequency / *Tensione* **(4)** - *Frequenza*		[V/Hz]	230/60 or / oppure 460/60		
Enclosure-Insulation class / *Grado prot.-Classe isolamento*			IP55-F		
Electric starting / *Tipo avviamento*			Star delta / *stella triangolo*		
Fan rated power **(6)** / *Potenza assorbita vent.* **(6)**		[kW]	--		
Auxiliary circuit voltage / T*ensione circuito ausiliario*		[V]	110		
Supply min wire section / *Sez. min cavo alimentazione*		[mm2]	25 or / oppure 10 (x 10 m)		
TYPE OF REGULATION / *TIPO DI REGOLAZIONE*					
Modulation / *Modulazione*			intake proportional valve / *valvola aspirazione proporzionale*		
On load, off load and stop / *Marcia a carico, a vuoto e arresto*			pressureswitch / *controllo pressostatico*		
On load, off load / *Marcia a carico, a vuoto*			pressureswitch / *controllo pressostatico*		
DRYER / *ESSICCATORE* (Only plus / *Solo plus*)					
Absorbed power / *Potenza assorbita*		[kW]	--		
Gas			R 404 A		
Nominal dew point / *Punto di rugiada nominale*		[°C]	3		
OTHERS / *VARIE*					
Allowable ambient temperature / *Temp. Amb. min-max*		[°C]	+1 / +40		
Outlet air temperature **(5)** / *Temperatura uscita aria* **(5)**					
AC version / *Versione AC*	plus version / *Versione plus*	[°C]	≤ 30	20	
min-max oil temperature / *Temperatura min e max olio*		[°C]	80÷110		
Cooling air flow rate **(6)** / *Portata aria di raffreddamento* **(6)**		[m3/h]	77		
Fan residual head **(6)** / *Prevalenza residua ventilatore* **(6)**		[Pa]	20		
Total recoverable heat / *Calore totale recuperabile*		%	~ 95		
Oil system capacity / *Capacità circuito olio*		[l]	10		
Oil carry over / *Residuo olio nell'aria compressa*		[ppm]	≤ 3		
Air outlet size / *Attacco uscita aria*			Rp 1"		
Condensate drain outlet size / *Attacco scarico di condensa*			--		
plus version / *versione plus*			2 x Rp ¼		
with condensate sep. KIT **(7)** / *con KIT separ. condensa* **(7)**			ø 10		
Water inlet-outlet size / *Attacco ingresso-uscita acqua*			--		
With heat recovery kit **(7)** / *con KIT recupero calore* **(7)**			2 x Rp ½		
LxWxH / LxLxA		[mm]	1510 x 800 x 1200		
Weight with oil / *Peso con olio*	AC / AC *plus*	[kg]	450	490	

(1)= According to ISO 1217 (annex "C") / *Secondo ISO 1217 (annesso "C")*
(2)= Whitout dryer power (only Plus version) / *Esclusa potenza essiccatore (versioni Plus)*
(3)= According to PN8NTC2.3 measured at 1m distance / *Secondo PN8NTC2.3 misurato alla distanza di 1m*
(4)= According to CEI 38 / *Secondo CEI 38*
(5)= According to reference conditions indicated / *Alle condizioni di riferimento indicate*
(6)= Frequency 60 Hz / *Frequenza 60 Hz*
(7)= Optional / *Opzionale*

mattei®
BEST SOLUTIONS IN COMPRESSED AIR

DESIGN DATA
SERIE 1000
SCHEDA TECNICA

TYPE / TIPO			**AC 22 / AC 22 *plus***		
VERSION / *VERSIONE*			**L**	**H**	**HH**
Air end nominal pressure [bar(g)] *Pressione nom. unità di compressione*			8	10	13
PERFORMANCES / *PRESTAZIONI*					
		bar (g)			
Air delivery / *Portata effettiva*	**[l/min]**	5	3820	-	-
Terminal power / *Potenza ai morsetti* (2)	**[kW]**		21,27		
	[l/min]	6	3800	3290	-
	[kW]		23,17	20,68	
	[l/min]	7	3765	3260	-
	[kW]		25,02	22,34	
	[l/min]	**7,5 (1)**	**3750**	3250	-
	[kW]		**25,9**	23,12	
	[l/min]	8	-	3230	2630
	[kW]			23,90	19,75
	[l/min]	9	-	3210	2610
	[kW]			25,33	20,97
	[l/min]	**9,5**	-	**3200**	2605
	[kW]			**25,8**	21,30
	[l/min]	10	-	-	2600
	[kW]				21,96
	[l/min]	11	-	-	2580
	[kW]				22,83
	[l/min]	12	-	-	2575
	[kW]				23,51
	[l/min]	**12,5**	-	-	**2570**
	[kW]				**23,7**
Off load power / *Potenza assorbita a vuoto*		[kW]	5,03		
Sound pressure level **(3) (6)** / *Livello pressione acustica* **(3) (6)**		[dB(A)]	67		
REFERENCE CONDITION / *CONDIZIONI DI RIFERIMENTO*					
Intake pressure / *Pressione d'aspirazione*		[bar(a)]	1		
Intake temperature / *Temperatura aspirazione*		[°C]	20		
Relative humidity / *Umidità relativa*		%	0		
Nominal motor speed / *Velocità nominale motore*		[g/1']	1500		
ELECTRICAL CHARACTERISTICS / *CARATTERISTICHE ELETTRICHE*					
Motor rated power / *Potenza nominale motore*		[kW]	22		
Voltage **(4)** - Frequency / *Tensione* **(4)** - *Frequenza*		[V/Hz]	230/50 or / oppure 400/50		
Enclosure-Insulation class / *Grado prot.-Classe isolamento*			IP55-F		
Electric starting / *Tipo avviamento*			Star delta / *stella triangolo*		
Fan rated power **(6)** / *Potenza assorbita vent.* **(6)**		[kW]	--		
Auxiliary circuit voltage / T*ensione circuito ausiliario*		[V]	110		
Supply min wire section / *Sez. min cavo alimentazione*		[mm2]	35 or / oppure 16 (x 10 m)		
TYPE OF REGULATION / *TIPO DI REGOLAZIONE*					
Modulation / *Modulazione*			intake proportional valve / *valvola aspirazione proporzionale*		
On load, off load and stop / *Marcia a carico, a vuoto e arresto*			pressureswitch / *controllo pressostatico*		
On load, off load / *Marcia a carico, a vuoto*			pressureswitch / *controllo pressostatico*		
DRYER / *ESSICCATORE* (Only Plus / *Solo Plus*)					
Absorbed power / *Potenza assorbita*		[kW]	1,05		
Gas			R 404 A		
Nominal dew point / *Punto di rugiada nominale*		[°C]	3		
OTHERS / *VARIE*					
Allowable ambient temperature / *Temp. Amb. min-max*		[°C]	+1 / +40		
Outlet air temperature **(5)** / *Temperatura uscita aria* **(5)**					
AC version / *Versione AC*	plus version / *Versione plus*	[°C]	≤ 30	20	
min-max oil temperature / *Temperatura min e max olio*		[°C]	80÷110		
Cooling air flow rate **(6)** / *Portata aria di raffreddamento* **(6)**		[m3/h]	70		
Fan residual head **(6)** / *Prevalenza residua ventilatore* **(6)**		[Pa]	20		
Total recoverable heat / *Calore totale recuperabile*		%	~ 95		
Oil system capacity / *Capacità circuito olio*		[l]	10		
Oil carry over / *Residuo olio nell'aria compressa*		[ppm]	≤ 3		
Air outlet size / *Attacco uscita aria*			Rp 1"		
Condensate drain outlet size / *Attacco scarico di condensa*			--		
plus version / *versione plus*			2 x Rp ¼		
with condensate sep. KIT **(7)** / *con KIT separ. condensa* **(7)**			ø 10		
Water inlet-outlet size / *Attacco ingresso-uscita acqua*			--		
With heat recovery kit **(7)** / *con KIT recupero calore* **(7)**			2 x Rp ½		
LxWxH / LxLxA		[mm]	1510 x 800 x 1200		
Weight with oil / *Peso con olio* AC	AC *plus*	[kg]	450	490	

(1)= According to ISO 1217 (annex "C") / *Secondo ISO 1217 (annesso "C")*
(2)= Whitout dryer power (only Plus version) / *Esclusa potenza essiccatore (versioni Plus)*
(3)= According to PN8NTC2.3 measured at 1m distance / *Secondo PN8NTC2.3 misurato alla distanza di 1m*
(4)= According to CEI 38 / *Secondo CEI 38*
(5)= According to reference conditions indicated / *Alle condizioni di riferimento indicate*
(6)= Frequency 50 Hz / *Frequenza 50 Hz*
(7)= Optional / *Opzionale*

mattei®
BEST SOLUTIONS IN COMPRESSED AIR

DESIGN DATA
SERIE 1000
SCHEDA TECNICA

TYPE / TIPO			**AC 22 / AC 22 PLUS**		
VERSION / *VERSIONE*			**LX**	**HX**	
Air end nominal pressure [bar(g)] *Pressione nom. unità di compressione*			8	10	
PERFORMANCES / *PRESTAZIONI*					
		bar (g)			
Air delivery / *Portata effettiva*	**[l/min]**	5	4030	-	
Terminal power / *Potenza ai morsetti* (2)	**[kW]**		23,08		
	[l/min]	6	4000	3700	
	[kW]		25,14	23,57	
	[l/min]	7	3970	3670	
	[kW]		27,15	25,45	
	[l/min]	**7,5 (1)**	**3950**	3650	
	[kW]		**28,1**	26,35	
	[l/min]	8	-	3640	
	[kW]			27,24	
	[l/min]	9	-	3610	
	[kW]			28,87	
	[l/min]	**9,5**	-	**3600**	
	[kW]			**29,4**	
	[l/min]	10	-	-	
	[kW]				
	[l/min]	11	-	-	
	[kW]				
	[l/min]	12	-	-	
	[kW]				
	[l/min]	**12,5**	-	-	
	[kW]				
Off load power / *Potenza assorbita a vuoto*		[kW]	5,03		
Sound pressure level **(3) (6)** / *Livello pressione acustica* **(3) (6)**		[dB(A)]	69		
REFERENCE CONDITION / *CONDIZIONI DI RIFERIMENTO*					
Intake pressure / *Pressione d'aspirazione*		[bar(a)]	1		
Intake temperature / *Temperatura aspirazione*		[°C]	20		
Relative humidity / *Umidità relativa*		%	0		
Nominal motor speed / *Velocità nominale motore*		[g/1']	1750		
ELECTRICAL CHARACTERISTICS / *CARATTERISTICHE ELETTRICHE*					
Motor rated power / *Potenza nominale motore*		[kW]	22		
Voltage **(4)** - Frequency / *Tensione* **(4)** - *Frequenza*		[V/Hz]	230/60 or / oppure 460/60		
Enclosure-Insulation class / *Grado prot.-Classe isolamento*			IP55-F		
Electric starting / *Tipo avviamento*			Star delta / *stella triangolo*		
Fan rated power **(6)** / *Potenza assorbita vent.* **(6)**		[kW]	--		
Auxiliary circuit voltage / T*ensione circuito ausiliario*		[V]	110		
Supply min wire section / *Sez. min cavo alimentazione*		[mm2]	35 or / oppure 16 (x 10 m)		
TYPE OF REGULATION / *TIPO DI REGOLAZIONE*					
Modulation / *Modulazione*			intake proportional valve / *valvola aspirazione proporzionale*		
On load, off load and stop / *Marcia a carico, a vuoto e arresto*			pressureswitch / *controllo pressostatico*		
On load, off load / *Marcia a carico, a vuoto*			pressureswitch / *controllo pressostatico*		
DRYER / *ESSICCATORE* (Only Plus / *Solo Plus*)					
Absorbed power / *Potenza assorbita*		[kW]	--		
Gas			R 404 A		
Nominal dew point / *Punto di rugiada nominale*		[°C]	3		
OTHERS / *VARIE*					
Allowable ambient temperature / *Temp. Amb. min-max*		[°C]	+1 / +40		
Outlet air temperature **(5)** / *Temperatura uscita aria* **(5)**					
AC version / *Versione AC*	plus version / *Versione plus*	[°C]	≤ 30	20	
min-max oil temperature / *Temperatura min e max olio*		[°C]	80÷110		
Cooling air flow rate **(6)** / *Portata aria di raffreddamento* **(6)**		[m3/h]	77		
Fan residual head **(6)** / *Prevalenza residua ventilatore* **(6)**		[Pa]	20		
Total recoverable heat / *Calore totale recuperabile*		%	~ 95		
Oil system capacity / *Capacità circuito olio*		[l]	10		
Oil carry over / *Residuo olio nell'aria compressa*		[ppm]	≤ 3		
Air outlet size / *Attacco uscita aria*			Rp 1"		
Condensate drain outlet size / *Attacco scarico di condensa*					
plus version / *versione plus*			2 x Rp ¼		
with condensate sep. KIT **(7)** / *con KIT separ. condensa* **(7)**			ø 10		
Water inlet-outlet size / *Attacco ingresso-uscita acqua*					
With heat recovery kit **(7)** / *con KIT recupero calore* **(7)**			2 x Rp ½		
LxWxH / LxLxA		[mm]	1510 x 800 x 1200		
Weight with oil / *Peso con olio* AC	AC *plus*	[kg]	450	490	

(1)= According to ISO 1217 (annex "C") / *Secondo ISO 1217 (annesso "C")*
(2)= Whitout dryer power (only Plus version) / *Esclusa potenza essiccatore (versioni Plus)*
(3)= According to PN8NTC2.3 measured at 1m distance / *Secondo PN8NTC2.3 misurato alla distanza di 1m*
(4)= According to CEI 38 / *Secondo CEI 38*
(5)= According to reference conditions indicated / *Alle condizioni di riferimento indicate*
(6)= Frequency 60 Hz / *Frequenza 60 Hz*
(7)= Optional / *Opzionale*

mattei®
BEST SOLUTIONS IN COMPRESSED AIR

DESIGN DATA
SERIE 1000
SCHEDA TECNICA

TYPE / TIPO			**AC 30s / AC 30s *plus***	
VERSION / *VERSIONE*			H	HH
Air end nominal pressure [bar(g)] *Pressione nom. unità di compressione*			9,5	12,5
PERFORMANCES / *PRESTAZIONI*				
		bar (g)		
Portata effettiva / *Free air delivery* (1)	**[l/min]**	5	-	-
Potenza ai morsetti / *Terminal power (2)*	**[kW]**		-	-
	[l/min]	6	-	-
	[kW]		-	-
	[l/min]	7	4260	-
	[kW]		28	-
	[l/min]	**7,5**	4240	-
	[kW]		29	-
	[l/min]	8	4225	-
	[kW]		30	-
	[l/min]	9	4195	3600
	[kW]		31,5	28
	[l/min]	**9,5**	4185	3595
	[kW]		32,5	28,7
	[l/min]	10	-	3585
	[kW]		-	29
	[l/min]	11	-	3565
	[kW]		-	30,5
	[l/min]	12	-	3555
	[kW]		-	31,4
	[l/min]	**12,5**	-	3550
	[kW]		-	31,7
Pot. Ass. a vuoto / *Off load power*	[kW]		7,5	6,7
Livello pressione acustica **(3) (6)** / *Sound pressure level* **(3) (6)**	[dB(A)]		68	
REFERENCE CONDITION / *CONDIZIONI DI RIFERIMENTO*				
Intake pressure / *Pressione d'aspirazione*	[bar(a)]		1	
Intake temperature / *Temperatura aspirazione*	[°C]		20	
Relative humidity / *Umidità relativa*	%		0	
Nominal motor speed / *Velocità nominale motore*	[g/1']		1500	
ELECTRICAL CHARACTERISTICS / *CARATTERISTICHE ELETTRICHE*				
Motor rated power / *Potenza nominale motore*	[kW]		30	
Voltage **(4)** - Frequency / *Tensione* **(4)** - *Frequenza*	[V/Hz]		400/50	
Enclosure-Insulation class / *Grado prot.-Classe isolamento*			IP55-F	
Electric starting / *Tipo avviamento*			Star delta / *stella triangolo*	
Fan rated power **(6)** / *Potenza assorbita vent.* **(6)**	[kW]		0,5	
Auxiliary circuit voltage / T*ensione circuito ausiliario*	[V]		110	
Supply min wire section / *Sez. min cavo alimentazione*	[mm2]		25 (x 10 m)	
TYPE OF REGULATION / *TIPO DI REGOLAZIONE*				
Modulation / *Modulazione*			intake proportional valve / *valvola aspirazione proporzionale*	
On load, off load and stop / *Marcia a carico, a vuoto e arresto*			pressureswitch / *controllo pressostatico*	
On load, off load / *Marcia a carico, a vuoto*			pressureswitch / *controllo pressostatico*	
DRYER / *ESSICCATORE* (Only Plus / *Solo Plus*)				
Absorbed power / *Potenza assorbita*	[kW]		1,05	
Gas			R 404 A	
Nominal dew point / *Punto di rugiada nominale*	[°C]		3	
OTHERS / *VARIE*				
Allowable ambient temperature / *Temp. Amb. min-max*	[°C]		+1 / +40	
Outlet air temperature **(5)** / *Temperatura uscita aria* **(5)**				
AC version / *Versione AC* / plus version / *Versione plus*	[°C]		≤ 30	20
min-max oil temperature / *Temperatura min e max olio*	[°C]		80÷110	
Cooling air flow rate **(6)** / *Portata aria di raffreddamento* **(6)**	[m3/h]		77	
Fan residual head **(6)** / *Prevalenza residua ventilatore* **(6)**	[Pa]		20	
Total recoverable heat / *Calore totale recuperabile*	%		~ 95	
Oil system capacity / *Capacità circuito olio*	[l]		10	
Oil carry over / *Residuo olio nell'aria compressa*	[ppm]		≤ 3	
Air outlet size / *Attacco uscita aria*			Rp 1"	
Condensate drain outlet size / *Attacco scarico di condensa*				
plus version / *versione plus*			Rp 1/4"	
with condensate sep. KIT **(7)** / *con KIT separ. condensa* **(7)**			ϕ 10	
Water inlet-outlet size / *Attacco ingresso-uscita acqua*				
With heat recovery kit **(7)** / *con KIT recupero calore* **(7)**			2 x Rp ½"	
LxWxH / LxLxA	[mm]		1510 x 800 x 1200	
Weight with oil / *Peso con olio* AC / AC *plus*	[kg]		500	540

(1)= According to ISO 1217 (annex "C") / *Secondo ISO 1217 (annesso "C")*
(2)= Whitout dryer power (only Plus version) / *Esclusa potenza essiccatore (versioni Plus)*
(3)= According to PN8NTC2.3 measured at 1m distance / *Secondo PN8NTC2.3 misurato alla distanza di 1m*
(4)= According to CEI 38 / *Secondo CEI 38*
(5)= According to reference conditions indicated / *Alle condizioni di riferimento indicate*
(6)= Frequency 50 Hz / *Frequenza 50 Hz*
(7)= Optional / *Opzionale*

17 Series General Purpose Regulator
3/4", 1", 1-1/4", and 1-1/2" Port Sizes

- **Accurate and quick response to changes in flow demand and line pressure variations**
- **Balanced valve minimizes effect of changes in inlet pressure on outlet pressure**
- **Standard relieving models allow reduction of outlet pressure even when the system is dead-ended**
- **Full flow gauge ports**
- **Low torque, non-rising adjusting knob**
- **Integral locking device on knob adjustment**
- **Can be serviced without removal from the air line**

Ordering Information. Models listed are knob adjustment, relieving type with gauge, 5 to 125 psig (0.3 to 8.5 bar) outlet pressure adjustment range*, and PTF threads.

Port Size	Model Number	Flow† scfm (dm^3/s)	Weight lbs (kg)
3/4"	R17-600-RGLA	440 (208)	2.31 (1.05)
1"	R17-800-RGLA	480 (227)	2.02 (0.92
1-1/4"	R17-A00-RGLA	400 (189)	2.68 (1.22)
1-1/2"	R17-B00-RGLA	440 (208)	2.59 (1.18)

† Typical flow with 150 psig (10 bar) inlet pressure, 90 psig (6.3 bar) set pressure and a 15 psig (1 bar) droop from set.

Alternative Models

R 1 7 - ★ ★ ★ - ★ ★ ★ ★

Port Size	Substitute
3/4″	6
1″	8
1-1/4″	A
1-1/2″	B

Option	Substitute
Not applicable	0

Adjustment	Substitute
Knob	0
T-bar	1

Diaphragm	Substitute
Relieving	R
Non relieving	N

Threads	Substitute
PTF	A
ISO Rc taper	B
BSPP (1-1/2″ ported units only)	C
ISO G parallel (not available with1-1/2″ ported units)	G

Outlet Pressure Adjustment Ranges*	Substitute
5 to 50 psig (0.3 to 3.5 bar)	E
5 to 125 psig (0.3 to 8.5 bar)	L
10 to 250 psig (0.7 to 17 bar)	S

Gauge	Substitute
With	G
Without	N

* Outlet pressure can be adjusted to pressures in excess of, and less than, those specified. Do not use these units to control pressures outside of the specified ranges.

ISO Symbols

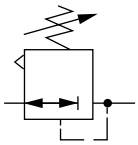

Relieving

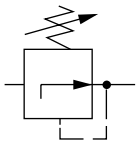

Non relieving

See Section ALE-24 for Accessories

Technical Data

Fluid: Compressed air
Maximum pressure: 300 psig (20 bar)
Operating temperature: -30° to 175°F (-34° to 80°C)*

* Air supply must be dry enough to avoid ice formation at temperatures 35°F (2°C).

Typical flow at 150 psig (10 bar) inlet pressure, 90 psig (6.3 bar) set pressure, and a droop of 15 psig (1 bar) from set: 480 scfm (227 dm^3/s)

Gauge ports:
- 1/4" PTF with PTF main ports
- R1/4 with ISO Rc, ISO G, and BSPP main ports

Materials
- Body: Aluminum
- Bonnet: Aluminum
- Bottom plug: Acetal
- Valve: Aluminum and nylon
- Elastomers: Nitrile

Typical Performance Characteristics

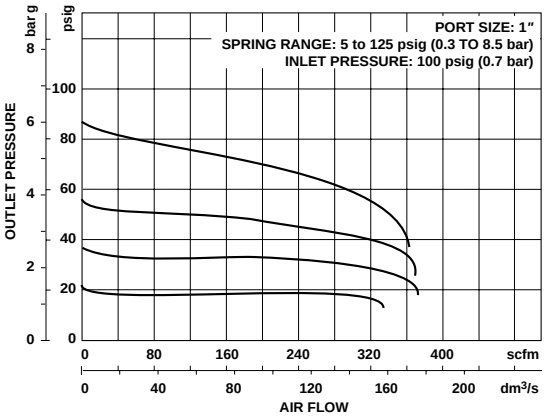

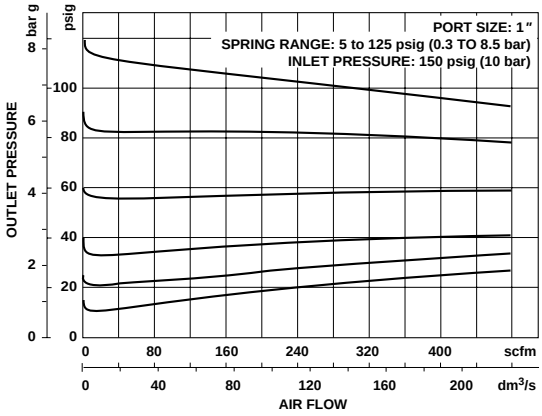

Service Kits

Item	Type	Part number
Service kit	Relieving	5578-02
	Non relieving	5578-01

Service kit contains, diaphragm, all o-rings, valve, and valve spring.

All Dimensions in Inches (mm)

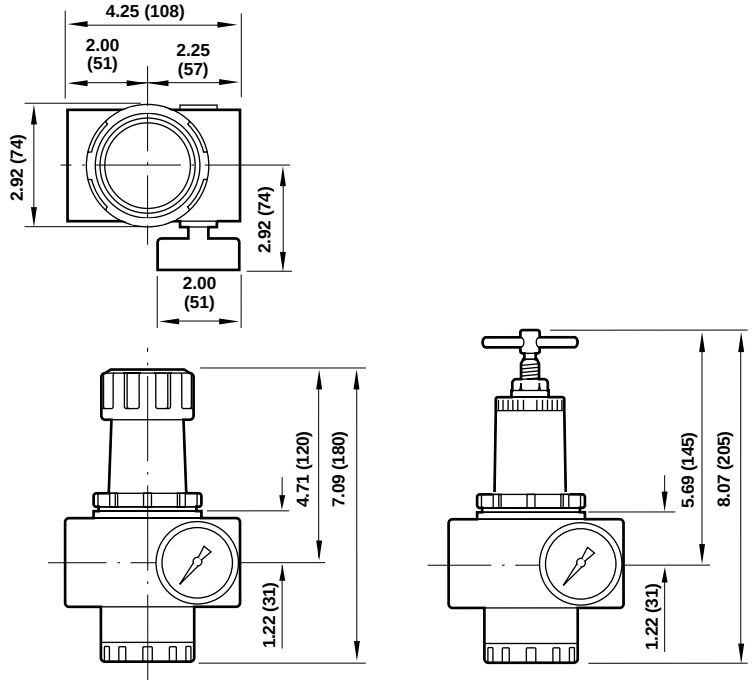

Panel mounting hole diameter: 2.28″ (58 mm)
Panel thickness: 0.06″ *to* 0.16″ (2 to 4 mm)

NORGREN

Pressure Regulator
R17 - ★★★ - ★★★★

R17
Installation & Maintenance Instructions

Port
6....3/4"
8....1"
A....1-1/4"
B....1-1/2"

Option
0....Not applicable

Adjustment Type
0....Knob
1....T-Handle

Relief Type
R....Relieving
N....Non relieving

Gauge
G....With
N....Without

Spring (Outlet Pressure Range) *
E....0,3 to 3,5 bar (5 to 50 psig)
L....0,3 to 8,5 bar (5 to 125 psig)
S....0,7 to 17 bar (10 to 250 psig)

Thread Form
A....PTF
B....ISO Rc taper
G....ISO G parallel

* Outlet pressure can be adjusted to pressures in excess of, and less than, those specified. Do not use these units to control pressures outside of the specified ranges.

TECHNICAL DATA
Fluid: Compressed air
Maximum pressure: 20 bar (300 psig)
Operating temperature: -34° to +80°C (-30° to +175°F)
* Air supply must be dry enough to avoid ice formation at temperatures +2°C (+35°F).
Typical flow at 10 bar (150 psig) inlet pressure, 6,3 bar (90 psig) set pressure, and a droop of 1 bar (15 psig) from set: 227 dm^3/s (480 scfm)
Gauge ports:
1/4" PTF with PTF main ports
Rc1/4 with ISO Rc and ISO G main ports
Materials:
Body: Aluminum
Bonnet: Aluminum
Bottom plug: Acetal
Valve: Aluminum and nylon
Elastomers: Nitrile

REPLACEMENT ITEMS
Service kit (includes items circled on exploded view)
Relieving.....5578-02
Non-relieving.....5578-01
Tamper resistant seal wire 2117-01

PANEL MOUNTING DIMENSIONS
Panel mounting hole diameter: 58 mm (2.28")
Panel thickness: 2 to 4 mm (0.06" to 0.16")

INSTALLATION
1. Shut off air pressure. Install regulator in air line -
   - with air flow in direction of arrow on body,
   - upstream of lubricators and cycling valves,
   - as close as possible to the device being serviced.
   - at any angle.
2. Connect piping to proper ports using pipe thread sealant on male threads only. Do not allow sealant to enter interior of regulator.
3. Install a pressure gauge or plug the gauge ports. Gauge ports can also be used as additional outlets for regulated air.
4. Install a Norgren general purpose filter upstream of the regulator.

ADJUSTMENT
1. Before applying inlet pressure to regulator, turn adjustment (1 or 3) counterclockwise to remove all force on regulating spring (7).
2. Apply inlet pressure, then turn adjustment (1 or 3) clockwise to increase and counterclockwise to decrease pressure setting.
3. Always approach the desired pressure from a lower pressure. When reducing from a higher to a lower setting, first reduce to some pressure less than that desired, then bring up to the desired pressure.

NOTE

With non-relieving regulators, make pressure reductions with some air flow in the system. If made under no flow (dead-end) conditions, the regulator will trap the over-pressure in the downstream line.

4. KNOB ADJUSTMENT. Push lockring on knob down to lock pressure setting. Pull lockring up to release. Install tamper resistant wire (see ***Replacement Items***) to make setting tamper resistant.
5. T-BAR ADJUSTMENT. Tighten lock nut (4) lock pressure setting.

DISASSEMBLY
1. Regulator can be disassembled without removal from air line.
2. Shut off inlet pressure. Reduce pressure in inlet and outlet lines to zero.
3. Turn adjustment (1 or 3) fully counterclockwise to remove all force on regulating spring (7).
4. Disassemble in general accordance with the item numbers on exploded view.

CLEANING
1. Clean parts with warm water and soap. Do not submerge knob type bonnets (1) in solution, as lubricant will be removed.
2. Rinse and dry parts. Blow out internal passages in body with clean, dry compressed air.
3. Inspect parts. Replace those found to be damaged.

ASSEMBLY
1. Lubricate o-rings, valve stem (15), valve bore in bottom plug (12), adjusting screw tip and adjusting screw threads inside bonnet (1, 6), threads on bonnets (1, 6) and bottom plug (12) with a light coat of good quality o-ring grease.
2. Assemble the unit as shown on the exploded view.
3. Torque Table

Item	Torque in Nm (Foot-Pounds)
1, 6 (Bonnets)	41 to 48 (30 to 35)
12 (Bottom plug)	Hand tight

WARNING
These products are intended for use in industrial compressed air systems only. Do not use these products where pressures and temperatures can exceed those listed under ***Technical Data***.

If outlet pressure in excess of the regulator pressure setting could cause downstream equipment to rupture or malfunction, install a pressure relief device downstream of the regulator. The relief pressure and flow capacity of the relief device must satisfy system requirements.

The accuracy of the indication of pressure gauges can change, both during shipment (despite care in packaging) and during the service life. If a pressure gauge is to be used with these products and if inaccurate indications may be hazardous to personnel or property, the gauge should be calibrated before initial installation and at regular intervals during use.

Before using these products with fluids other than air, for non industrial applications, or for life-support systems consult Norgren.

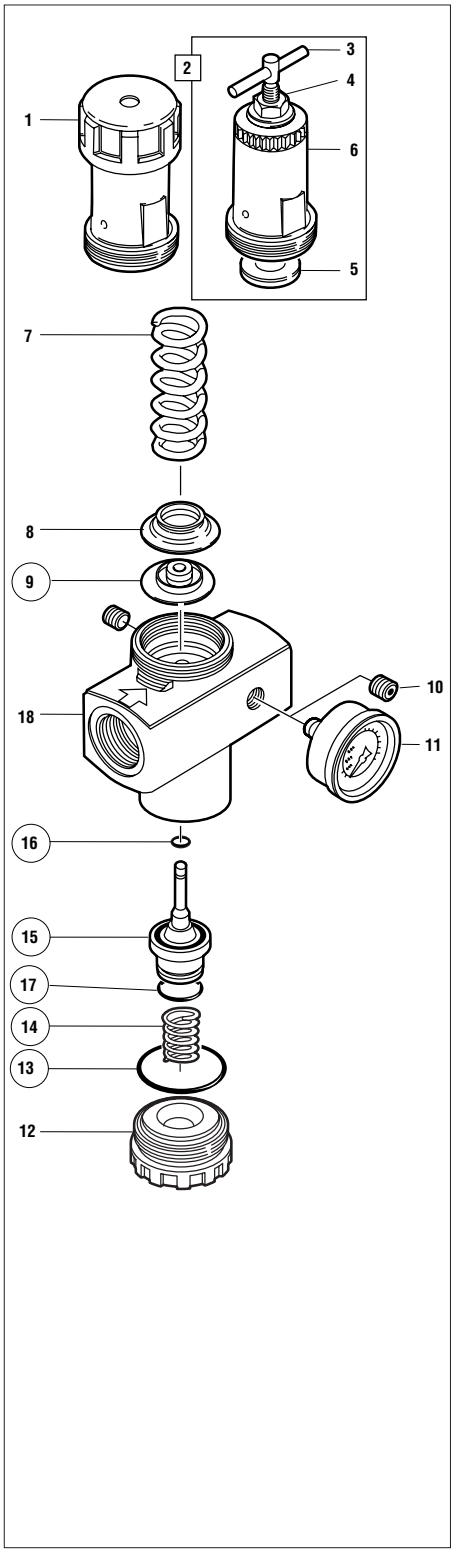

© Norgren 2001

17 Series General Purpose Filter
3/4", 1", 1-1/4", 1-1/2" Port Sizes

- **Protects air operated devices by removing liquid and solid contaminants from compressed air**
- **Screw-on bowl reduces maintenance time**
- **Can be serviced without the use of tools or removal from the air line**
- **Optional visual service indicator turns from green to red when the filter element needs to be cleaned or replaced**
- **Optional electrical service indicator also available**

Ordering Information. Models listed include automatic drain, 40 µm element, metal bowl with sight glass, and PTF threads.

Port Size	Model Numbers	Flow scfm (dm³/s)*	Weight lbs (kg)
3/4"	F17-600-A3DA	325 (153)	4.26 (1.93)
1"	F17-800-A3DA	425 (201)	4.15 (1.88)
1-1/4"	F17-A00-A3DA	425 (201)	4.39 (1.99)
1-1/2"	F17-B00-A3DA	425 (201)	4.30 (1.95)

* Typical flow with a 40 µm element at 90 psig (6.3 bar) inlet pressure and 5 psig (0.35 bar) pressure drop.

Alternative Models

F 1 7 - ★ ★ ★ - ★ ★ ★ ★

Port Size	Substitute
3/4″	6
1″	8
1-1/4″	A
1-1/2″	B

Option	Substitute
Not applicable	0

Service Indicator	Substitute
With (visual)	1
With (electrical)	4
Without	0

Threads	Substitute
PTF	A
ISO Rc taper	B
BSPP (1-1/2″ ported units only)	C
ISO G parallel (not available with 1-1/2″ ported units)	G

Bowl	Substitute
1 quart (1 liter) metal with sight glass	D
1 quart (1 liter) metal	M

Element	Substitute
5 µm	1
25 µm	2
40 µm	3
75 µm	4

Drain	Substitute
Automatic	A
Manual	M

ISO Symbols

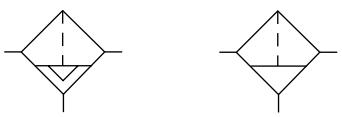

Auto Drain **Manual Drain**

See Section ALE-24 for Accessories

Technical Data

Fluid: Compressed air
Maximum pressure: 250 psig (17 bar)
Operating temperature:* -30° to 175°F (-34° to 80°C)
* Air supply must be dry enough to avoid ice formation at temperatures below 35°F (2°C)
Particle removal: 5 µm, 25 µm, 40 µm, or 75 µm filter element
Air quality: Within ISO 8573-1, Class 3 and Class 5 (particulates)
Typical flow with a 40 µm element at 90 psig (6.3 bar) inlet pressure and 5 psig (0.35 bar) pressure drop: 425 scfm (201 dm^3/s)
Nominal bowl size: 1 quart (1 liter)
Manual drain connection: Will fit 1/8-27 and 1/8-28 pipe thread.
Automatic drain connection: Will fit 1/8-27 and 1/8-28 pipe thread. - Flexible tube with 3/16" (5mm) minimum I.D. can be connected to the automatic drain. Drain may fail to operate if the tube I.D. is less than 3/16" (5mm). Avoid restrictions in the tube.
Automatic drain operating conditions (float operated):
Bowl pressure required to close drain: Greater than 5 psig (0.3 bar)
Bowl pressure required to open drain: Less than 3 psig (0.2 bar)
Minimum air flow required to close drain: 2 scfm (1 dm^3/s)
Manual operation: Depress pin inside drain outlet to drain bowl
Materials
Body: Aluminum
Bowl: Aluminum
Bowl sight glass: Pyrex
Elastomers: Neoprene and nitrile
Filter element
5 µm: Sintered bronze
25 µm: Sintered bronze
40 µm: Sintered bronze
75 µm: Stainless steel screen
An automatic drain is a two-way valve, which will close when the system is pressurized. The drain opens when the float rises due to accumulated liquid and on depressurization.

Typical Performance Characteristics

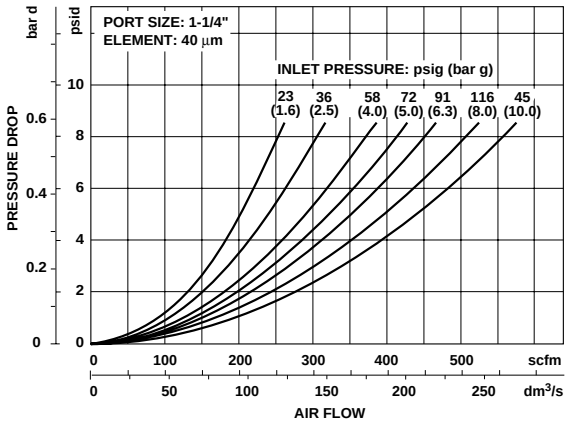

Service Kits

Item	Type	Part number
Service kits	All filters	5578-05
Replacement elements	5 µm	5311-01
	25 µm	5311-02
	40 µm	5311-03
	75 µm	5656-01
Replacement drain	Automatic	3000-10
	Manual (1/4 turn)	619-50

Service kit 5778-05 includes bowl o-ring, drain gasket, and element gasket.

All Dimensions in Inches (mm)

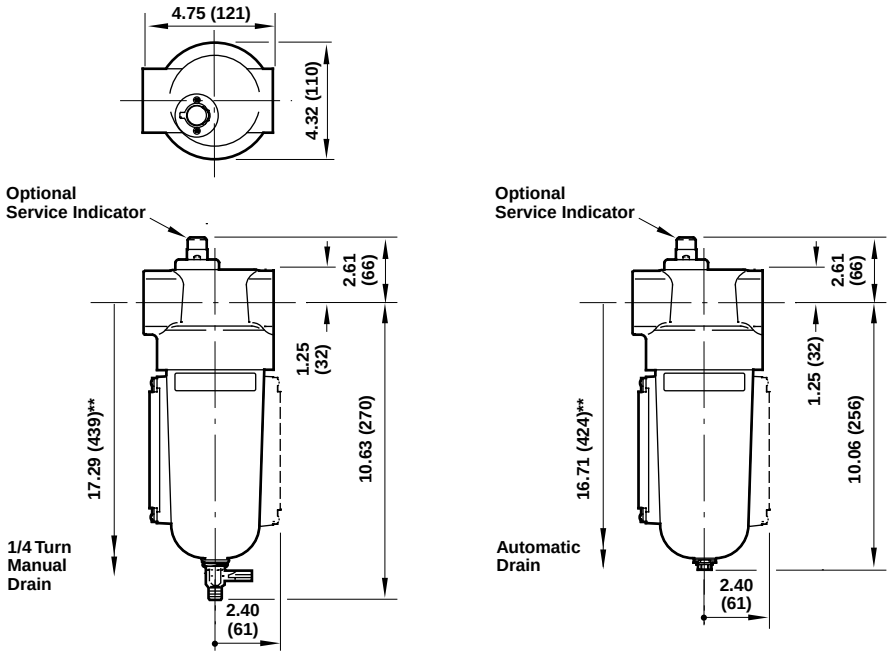

** Minimum clearance required to remove bowl

NORGREN

General Purpose Filter
F17 - ★★★ - ★★★★

F17
Installation & Maintenance Instructions

Port
6 ....3/4"
8 ....1"
A....1-1/4"
B....1-1/2"

Service Indicator
00 ..Without
01 ..With mechanical indicator
04 ..With electrical service indicator

Drain
A....Automatic
M...Manual, 1/4 turn

Element
1 ....5µm
2 ....25µm
3 ....40µm
4 ....75µm

Bowl
D...1 litre (1 quart U.S.) metal with sight glass
M ..1 litre (1 quart U.S.) metal without sight glass

Thread Form
A....PTF
B....ISO Rc taper
G....ISO G parallel

* See Norgren publication IM-900.920 for specifications and electrical wire connections of the optional electric service indicator.

TECHNICAL DATA
Fluid: Compressed air
Maximum pressure: 17 bar (250 psig)
Operating temperature:* -34° to +80°C (-30° to +175°F)
* Air supply must be dry enough to avoid ice formation at temperatures below +2°C (+35°F)
Particle removal: 5 µm, 25 µm, 40 µm, or 75 µm filter element
Air quality: Within ISO 8573-1, Class 3 and Class 5 (particulates)
Typical flow with a 40 µm element at 6,3 bar (90 psig) inlet pressure and 0,5 bar (7 psid) pressure drop:
1" ports: 236 dm^3/s (500 scfm)
Nominal bowl size: 1 litre (1 quart US)
Drain connection: 1/8" pipe thread
Automatic drain operating conditions:
Minimum pressure: 0,7 bar (10 psig).
Drain opens when bowl pressure drops below 0,2 bar (3 psig).
Minimum air flow required to close drain: 1 dm^3/s (2 scfm)
Materials:
Body: Aluminum
Bowl: Aluminum
Bowl sight glass: Pyrex
Elastomers: Neoprene and nitrile
Filter element:
5 µm: Sintered bronze
25 µm: Sintered bronze
40 µm: Sintered bronze
75 µm: Stainless steel screen

REPLACEMENT ITEMS
Service kit (includes items circled on exploded view) ...5778-05
Liquid level lens kit (20, 22 thru26) 2273-22
Filter element, 5µm (30) 5311-01
Filter element, 25µm (30) 5311-02
Filter element, 40µm (30) 5311-03
Filter element, screen, 75µm (30) 5656-01
Manual drain (14, 15, 16) 619-50
Automatic drain (17, 18, 19).....3000-10
Mechanical service Indicator (1) 5797-50
Electrical service Indicator (6) 4020-51R

INSTALLATION
1. Shut-off air pressure. Install filter in air line -
   - vertically (bowl down),
   - with air flow in direction of arrow on body,
   - upstream of regulators, lubricators, and cycling valves,
   - as close as possible to the air supply when used as a main line filter,
   - as close as possible to the device being serviced when used as a final filter.
2. Connect piping to proper ports using pipe thread sealant on male threads only. Do not allow sealant to enter interior of unit.
3. Turn bowl (27) into body until arrowhead on bowl is aligned with or to the right of the arrowhead on the body
4. Flexible tube with 3mm (0.125") minimum I.D. can be connected to the automatic drain. Avoid restrictions in the tube.

SERVICING
1. Open manual drain to expel accumulated liquids. Keep liquids below baffle (28).
2. Clean or replace filter element when dirty, when optional mechanical service indicator shows approximately all red, or when optional electrical service indicator provides an electrical output.

DISASSEMBLY
1. Filter can be disassembled without removal from air line.
2. Shut off inlet pressure. Reduce pressure in inlet and outlet lines to zero.
3. Disassemble in general accordance with the item numbers on exploded view.Do not remove the drains or the service indicators (1, 6) unless replacement is necessary. Remove and replace only if they malfunction.

CLEANING
1. Clean mechanical indicator lens (3) with warm water only. Clean electrical indicator (6) with dry, clean cloth. Clean other parts with warm water and soap.
2. Rinse and dry parts. Blow out internal passages in body (34) with clean, dry compressed air. Blow air through filter element (30) from inside to outside to remove surface contaminants.
3. Inspect parts. Replace those found to be damaged.

ASSEMBLY
1. Lubricate o-rings with o-ring grease.
2. If the 1/4 turn manual drain (14, 15, 16) was removed, lubricate the portion of the drain body (14) that contacts the bowl, and the hole in the manual drain body that accommodates the stem of drain valve (15) with o-ring grease. Press body (14,) thru hole from inside of bowl. Place retainer o-ring (16) over body (14) and position in groove. Press drain valve (15) thru hole in body (14).
3. Assemble the liquid indicator parts (20, 21, 22, 23, 24, 25) to bowl. Apply a 0,9 to 1,8 kg (2 to 4 pound) clamping force to upper and lower brackets (21) to pull brackets together. Tighten screws (20) to 0,9 to 1,1 N-m (8 to 10 inch-pounds).
4. Assemble filter as shown on the exploded view. Arrows on indicator (3, 8) and body (34) must point in same direction. Place o-ring (33) on louver (32), then press in place into body. Screw baffle (28) onto centerpost until contact is made with filter element (30).
5. Torque Table

	Torque in N-m (Inch-Pounds)
2, 7 (Screw)	2,8 to 3,9 (25 to 35)
18 (Nut), 28 (baffle)	2,3 to 2,8 (20 to 25)

6. Turn bowl (27) into body until arrowhead on bowl is aligned with or to the right of the arrowhead on the body.

CAUTION
Water vapor will pass through these units and could condense into liquid form downstream as air temperature drops. Install an air dryer if water condensation could have a detrimental effect on the application.

WARNING
These products are intended for use in industrial compressed air systems only. Do not use these products where pressures and temperatures can exceed those listed under ***Technical Data***.

Before using these products with fluids other than air, for nonindustrial applications, or for life-support systems consult Norgren.

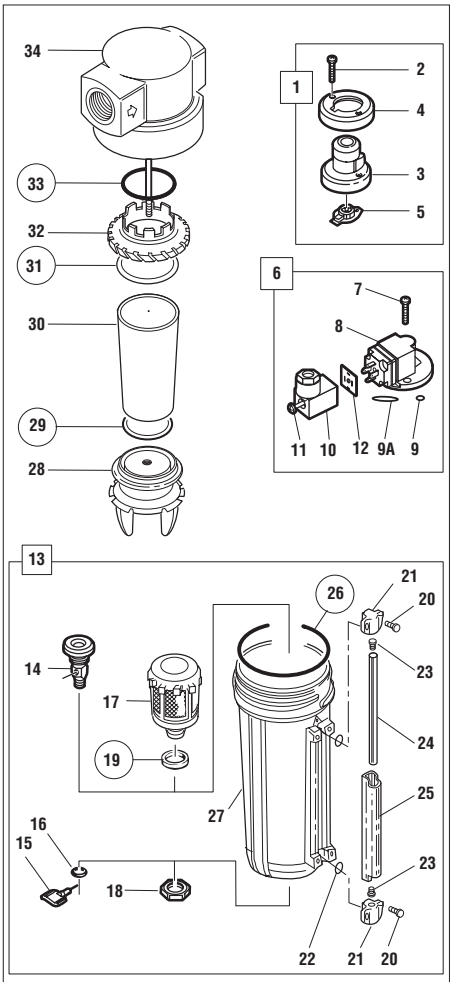

© Norgren 2001

F46 Oil Removal Filter

17 Series
Oil Removal (Coalescing) Filter
3/4″, 1″, 1 1/4″ Port Sizes

- **High efficiency oil and particle removal**
- **Screw-on bowl reduces maintenance time**
- **Can be disassembled without the use of tools or removal from the air line**
- **Standard service indicator turns from green to red when the filter element needs to be replaced**

Install an F17 filter with a 5 µm filter element upstream of the F46 filter for maximum service life.

Technical Data

Fluid: Compressed air
Maximum pressure: 17 bar (250 psig)
Operating temperature:* -20° to +65°C (0° to +150°F)

* Air supply must be dry enough to avoid ice formation at temperatures below +2°C (+35°F)

Particle removal: Down to 0,01 µm
Air quality: Within ISO 8573-1, Class 1 (particulates) and Class 2 (oil content)
Maximum remaining oil content in outlet air: 0,01ppm at +20°C (+70°F) with an inlet oil concentration of 17 ppm.
Maximum flow at 6,3 bar (90 psig) inlet pressure to maintain stated oil removal performance:

- 3/4″ ports: 42 dm^3/s (90 scfm)
- 1″ ports: 59 dm^3/s (125 scfm)
- 1 1/4″ ports: 59 dm^3/s (125 scfm)

Nominal bowl size: 1 litre (1 quart US)
Automatic drain connection: 1/8″
Automatic drain operating conditions:

- Minimum pressure: 0,7 bar (10 psig).
- Drain opens when bowl pressure drops below 0,2 bar (3 psig).
- Minimum air flow: 1 dm^3/s (2 scfm) required to close drain.

Materials:

- Body: Aluminum
- Bowl: Aluminum
- Bowl sight glass: Pyrex
- Elastomers: Neoprene and nitrile
- Filter element: Synthetic fiber and polyurethane foam

Ordering Information

See *Ordering Information* paragraphs on the following pages.

ISO Symbols

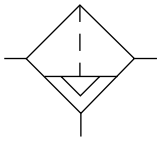

Automatic Drain

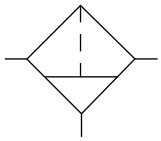

Manual Drain

Our policy is one of continuous research and development.
We reserve the right to amend, without notice, the specifications given in this document.

Typical Performance Characteristic

Inlet Pressure		Maximum Flow†	
bar	(psig)	dm³/s	(scfm)
2,5	(36)	33,0	(70)
4	(58)	44,4	(94)
6,3	(90)	60,8	(129)
8	(116)	79,8	(169)
10	(150)	96,3	(204)

† Maximum flow to maintain stated oil removal performance.

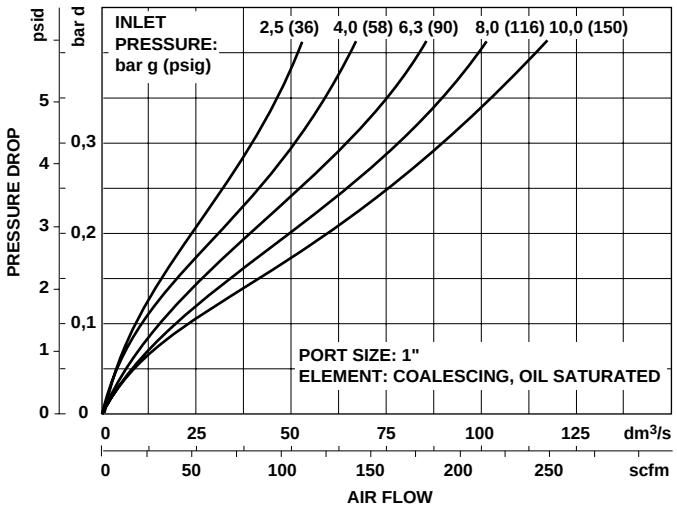

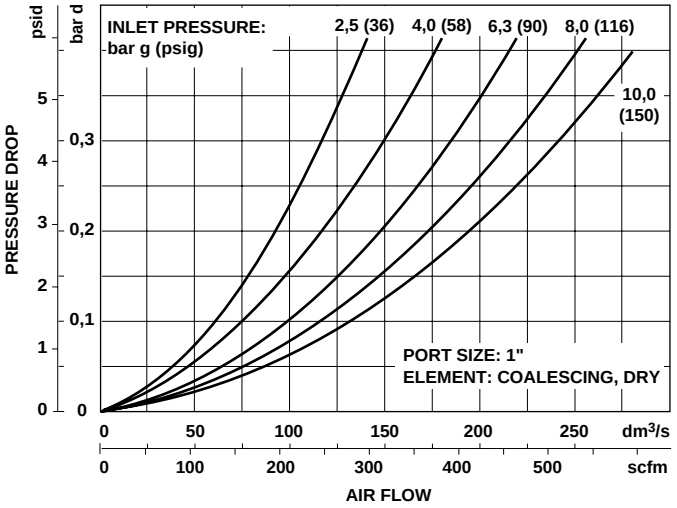

Ordering Information. Models listed include automatic drain, metal bowl with sight glass, and ISO G threads.

Port Size	Model Numbers	Maximum Flow* dm³/s (scfm)	Weight lbs (kg)
G3/4	F46-601-A0DG	42 (90)	1.86 (4.11)
G1	F46-801-A0DG	59 (125)	1.84 (4.05)
G1 1/4	F46-A01-A0DG	59 (125)	1.95 (4.29)

* Maximum flow for oil-saturated element at 6,3 bar (90 psig) inlet pressure to maintain stated oil removal performance.

Alternative Models

F 4 6 - ★ ★ ★ - ★ ★ ★ ★

Port Size	Substitute
3/4″	6
1″	8
1 1/4″	A

Option	Substitute
Not applicable	0

Service Life Indicator	Substitute
Without	0
With (visual)	1
With (electrical)	4

Threads	Substitute
PTF	A
ISO Rc taper	B
ISO G parallel	G

Bowl	Substitute
Metal with sight glass	D
Metal	M

Element	Substitute
Coalescing	0

Drain	Substitute
Automatic	A
Manual	M

Our policy is one of continuous research and development.
We reserve the right to amend, without notice, the specifications given in this document.

Accessories

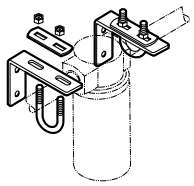	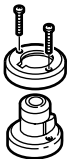	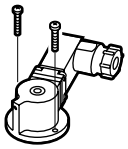
Wall Mounting Bracket	Service Life Indicator (visual)	Service Life Indicator (electrical)
3/4", 1" ports: 6212-50	5797-50	4020-51
1 1/4", ports: 6212-51		

Dimensions – mm (Inches)

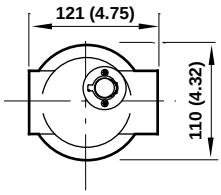

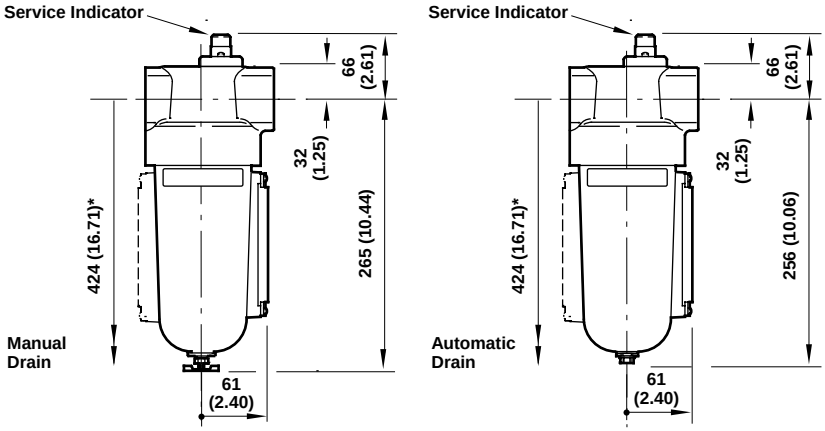

* Minimum clearance required to remove bowl.

Wall Bracket

Use 8 mm (5/16") screws to mount bracket to wall.

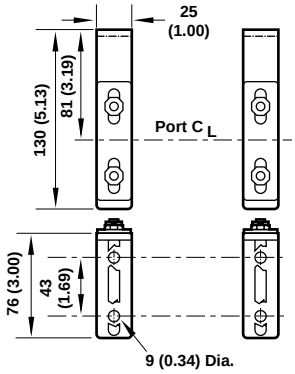

Wall Bracket Reference

Model	Part number
3/4", 1" ported units	6212-50
1 1/4", ported units	6212-51

Service Kits

Item	Type	Part number
Service kit	O-ring & gaskets	5351-04
Replacement drains	Automatic (1/8 NPT outlet)	3000-18
	Automatic (G1/8 outlet)	3000-97
	Petcock	684-01
Service life indicator	Visual	5797-50
	Electrical	4020-51

Service kit contains coalescing element, element o-ring, bowl o-ring, and drain gasket.

Our policy is one of continuous research and development.
We reserve the right to amend, without notice, the specifications given in this document.

NORGREN

Oil Removal Filter
F46 - ★★★ - ★★★★

F46
Installation & Maintenance Instructions

Port
6 ....3/4"
8 ....1"
A....1-1/4"

Service Indicator
00 ..Without
01 ..With mechanical indicator
04 ..With electrical service indicator

Drain
A....Automatic
M...Manual, 1/4 turn

Element
0 ....Coalescing

Bowl
D...1 litre (1 quart U.S.) metal with sight glass
M ..1 litre (1 quart U.S.) metal without sight glass

Thread Form
A....PTF
B....ISO Rc taper
G....ISO G parallel

* See Norgren publication IM-900.920 for specifications and electrical wire connections of the optional electric service indicator.

TECHNICAL DATA
Fluid: Compressed air
Maximum pressure: 17 bar (250 psig)
Operating temperature:* -34° to +65°C (-30° to +150°F)
* Air supply must be dry enough to avoid ice formation at temperatures below +2°C (+35°F)
Particle removal: Down to 0.01 µm
Air quality: Within ISO 8573-1, Class 1 (particulates) and Class 2 (oil content)
Maximum remaining oil content in outlet air: 0,01ppm at +20°C (+70°F) with an inlet oil concentration of 17 ppm.
Maximum flow at 6,3 bar (90 psig) inlet pressure to maintain stated oil removal performance:
3/4″ ports: 42 dm³/s (90 scfm)
1″ ports: 59 dm³/s (125 scfm)
1 1/4″ ports: 59 dm³/s (125 scfm)
Nominal bowl size: 1 litre (1 quart US)
Drain connection: 1/8" pipe thread
Automatic drain operating conditions:
Minimum pressure: 0,7 bar (10 psig).
Drain opens when bowl pressure drops below 0,2 bar (3 psig).
Minimum air flow required to close drain: 1 dm³/s (2 scfm)
Materials:
Body: Aluminum
Bowl: Aluminum
Bowl sight glass: Pyrex
Elastomers: Neoprene and nitrile
Filter element: Synthetic fiber and polyurethane foam

REPLACEMENT ITEMS
Service kit (includes items circled on exploded view) ...5351-04
Liquid level lens kit (20, 22 thru 26) 2273-22
Manual drain (14, 15, 16) 619-50
Automatic drain (17, 18, 19).....3000-18
Mechanical service Indicator (1).....5797-50
Electrical service Indicator (6) 4020-51R

INSTALLATION
1. Shut-off air pressure. Install filter in air line -
   - vertically (bowl down),
   - with air flow in direction of arrow on body,
   - upstream of regulators, lubricators, and cycling valves,
   - as close as possible to the air supply when used as a main line filter,
   - as close as possible to the device being serviced when used as a final filter.
2. Connect piping to proper ports using pipe thread sealant on male threads only. Do not allow sealant to enter interior of unit.
3. Turn bowl (27) into body until arrowhead on bowl is aligned with or to the right of the arrowhead on the body
4. Flexible tube with 3mm (0.125") minimum I.D. can be connected to the automatic drain. Avoid restrictions in the tube.
5. Install a Norgren general purpose filter with a 5 µm element upstream of the oil removal filter to obtain maximum element service life.

SERVICING
1. Open manual drain to expel accumulated liquids. Keep liquids below element (28).
2. Replace filter element when pressure drop across element exceeds 0,7 bar (10 psig). The mechanical service indicator shows approximately full red and the optional electrical service indicator provides an electrical output when pressure drop across element reaches 0,7 bar (10 psig).

DISASSEMBLY
1. Filter can be disassembled without removal from air line.
2. Shut off inlet pressure. Reduce pressure in inlet and outlet lines to zero.
3. Disassemble in general accordance with the item numbers on exploded view.Do not remove the drains or the service indicators (1, 6) unless replacement is necessary. Remove and replace only if they malfunction

CLEANING
1. Element (28) cannot be cleaned. Clean mechanical indicator lens (3) with warm water only. Clean electrical indicator (6) with dry, clean cloth. Clean other parts with warm water and soap.
2. Rinse and dry parts. Blow out internal passages in body (30) with clean, dry compressed air.
3. Inspect parts. Replace those found to be damaged.

ASSEMBLY
1. Lubricate o-rings with o-ring grease.
2. If the 1/4 turn manual drain (14, 15, 16) was removed, lubricate the portion of the drain body (14) that contacts the bowl, and the hole in the manual drain body that accommodates the stem of drain valve (15) with o-ring grease. Press body (14,) thru hole from inside of bowl. Place retainer o-ring (16) over body (14) and position in groove. Press drain valve (15) thru hole in body (14).
3. Assemble the liquid indicator parts (20, 21, 22, 23, 24, 25) to bowl. Apply a 0,9 to 1,8 kg (2 to 4 pound) clamping force to upper and lower brackets (21) to pull brackets together. Tighten screws (20) to 0,9 to 1,1 N-m (8 to 10 inch-pounds).
4. Assemble filter as shown on the exploded view. Arrows on indicator (3, 8) and body (30) must point in same direction.
5. Torque Table

	Torque in N-m (Inch-Pounds)
2, 7 (Screw)	2,8 to 3,9 (25 to 35)
18 (Nut)	2,3 to 2,8 (20 to 25)
28 (Element)	5 to 6 (45 to 55)

6. Turn bowl (27) into body until arrowhead on bowl is aligned with or to the right of the arrowhead on the body.

CAUTION
Water vapor will pass through these units and could condense into liquid form downstream as air temperature drops. Install an air dryer if water condensation could have a detrimental effect on the application.

WARNING
These products are intended for use in industrial compressed air systems only. Do not use these products where pressures and temperatures can exceed those listed under ***Technical Data***.

Before using these products with fluids other than air, for nonindustrial applications, or for life-support systems consult Norgren.

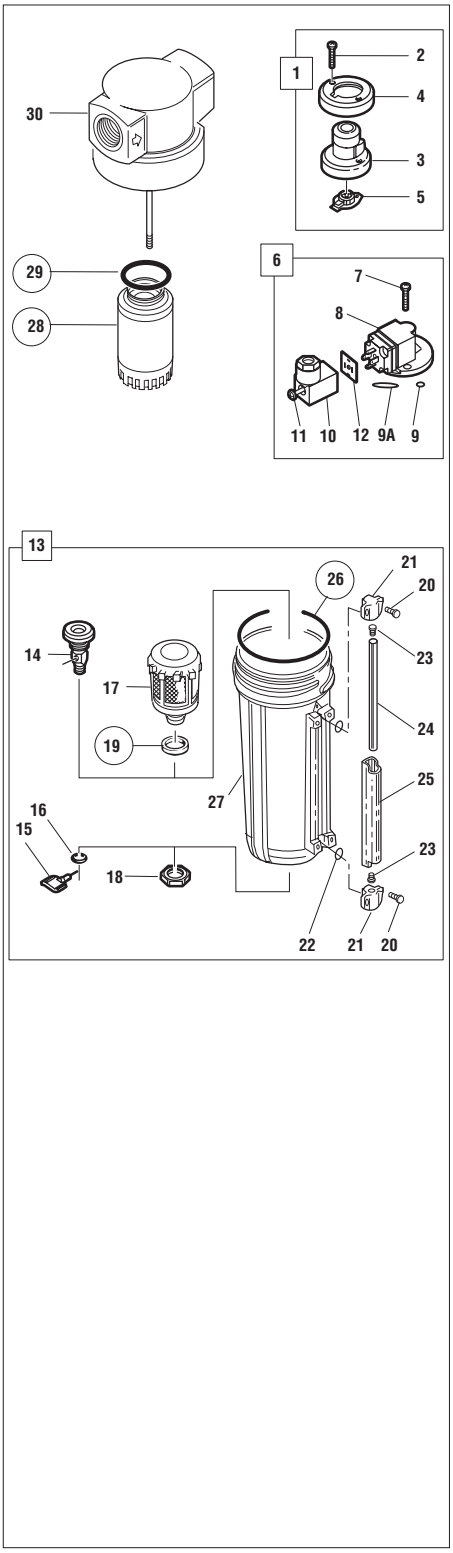

© Norgren 2001

Warning

These products are intended for use in industrial compressed air systems only. Do not use these products where *pressures* and *temperatures* can exceed those listed under **'Technical Data'**.

Before using these products with fluids other than those specified, for non-industrial applications, life-support systems, or other applications not within published specifications, consult Norgren.

Through misuse, age, or malfunction, components used in fluid power systems can fail in various modes. The system designer is warned to consider the failure modes of all component parts used in fluid power systems and to provide adequate safeguards to prevent personal injury or damage to equipment in the event of such failure.

System designers must provide a warning to end users in the system instructional manual if protection against a failure mode cannot be adequately provided.

System designers and end users are cautioned to review specific warnings found in instruction sheets packed and shipped with these products.

Water vapor will pass through these units and will condense into liquid if air temperature drops in the downstream system. Install an air dryer if water condensation could have a detrimental effect on the application.

Our policy is one of continuous research and development.
We reserve the right to amend, without notice, the specifications given in this document.

Influent and Effluent Tank Equipment

KPSI®

Level Transducers

KPSI® User's Manual

18th Edition

February 2010

©This User's Manual is a copyright product of Pressure Systems, Inc., 2009.

Permission is hereby granted to make copies and distribute verbatim copies of this manual, provided the copyright notice and this permission notice are preserved on all copies.

Our Company

Pressure Systems is an ISO9001:2000 certified U.S. manufacturer of submersible and non-submersible (above ground) pressure transducers for environmental, industrial and municipal applications. Our KPSI™ Level and Pressure Transducers have been specified in thousands of projects throughout the United States, Canada and Europe by geologists, system integrators, national engineering firms and a variety of government agencies. Typical applications include, but are not limited to, pump control, tank level monitoring, sewage lift station operation, reservoirs, weirs, flumes, site remediation, watershed management, storm water/well monitoring, pump/pipeline pressures and compressor pressures.

Website and E-Mail

You may visit our website at www.PressureSystems.com to look at our latest new product releases, application notes, product certifications and specifications, as well as Intrinsic Safety control installation drawings. E-mail your questions and comments to us: sales@PressureSystems.com.

E-commerce

Orders may be placed on-line by visiting our e-commerce site *(www.LEVELandPRESSURE.com)* or by contacting the factory or local representative.

Applicable Products

This manual provides information applicable to the use of the following KPSI Level and Pressure Transducers:

Please note: Series 500 and Series 550 (waterMONITOR) have separate manuals.

Level Transducers (Submersible)
Series 700/710/720/730/735
Series 320/330/335/340
Series 300DS
Series 705
Series 750

Pressure Transducers (Non-submersible)
Series 27/28/30

Table of Contents

1.0 Product Description 1
General Characteristics 1
Care and Handling 1
Calibration 1
Approvals 1

2.0 Product Accessories and Options 2
Nose Caps 2
810 SuperDry™ Vent Filter or 815 Aneroid Bellows 2
Sacrificial Anode 2
Absolute/Sealed Gage Transducer 3
Polyurethane & ETFE Jacketed Cable 3
Lightning Protection 4
½" Male NPT Conduit Fitting 4
Electrical Outputs 4
Reverse Signal Output 5
Temperature Output 5
Cable Hanger 5
Submersible Cable Splicing Kit 5

3.0 Installation & Maintenance Tips 6
General Installation Procedures 6
Transducer Anchors 6
Transducer Submersion 6
SuperDry™ Vent Filter (Desiccant) or 815 Aneroid Bellows Installation 6
Cable Protection 6
Bending of Cable 7
Cable Compression 7
4-20 mA Output Wiring 7
VDC Output Wiring 7
Model 750 7
Sealed-Gage Transducer Configured for Altitude Above Sea Level 7
Transducer Position Sensitivity 7
General Maintenance Tips 8
Desiccant Maintenance 8
Clogged Nose Piece or Dirty Diaphragm 8
Cleaning Your Transducer 9
Cleaning the Lightning Protection Data Line Protector 9

4.0 Warranty and Product Return Procedures 10
Restocking Policy 11

Appendix A - Drawings and Diagrams 13
Appendix B - Frequently Asked Questions 17
Appendix C - Field Checkout and Troubleshooting Techniques 20
Appendix D - Calibration Calculations 28

1.0 Product Description

General Characteristics

KPSI™ Level and Pressure Transducers use isolated-diaphragm sensors that are specifically designed for use with hostile fluids and gases. These sensors utilize a silicon pressure cell that has been fitted into a stainless steel or titanium package with an integral, compliant stainless steel or titanium barrier diaphragm. This sensor assembly is housed in a rugged 316 stainless steel or titanium case which provides for a variety of level ranges from 2.3 ft (0.75 m) H_2O through 4614 ft (1408 m) H_2O and pressure inputs from 0-1 (7 kPa) through 0-15000 psi (103 mPa). Our devices feature internal signal conditioning. Standard outputs are 4-20 mA and VDC.

All units containing active electronic components have surge and reverse polarity protection. For ease of use in the field, our transducers are permanently laser engraved with our logo and name, wiring information, part number (P/N), serial number (S/N), date of manufacture (DOM), range, excitation and output. Transducers are offered in diameters of 1.0 (25 mm) and 0.75 inches (19 mm).

Care and Handling

Our transducers are designed for rugged use. However, they need protection from over pressure and sharp impact. When lowering them into a liquid, penetrate the surface slowly and only to the depth necessary. Avoid dropping the unit from above the surface. Clean all transducers by rinsing them in a mild detergent. Direct probing of the diaphragm or attempts to remove protective screens will damage the sensor, voiding the warranty.

Calibration

All transducers are shipped with calibration information unique to each transducer. Make sure you keep each calibration report. However, should you misplace your calibration sheet, you can contact the factory and request a duplicate. All KPSI™ Transducer calibrations are traceable to the National Institute of Standards and Technology (NIST).

Approvals

Most of our products have UL and FM certification for intrinsic safety. Their respective installation control drawings can be downloaded from our website. Several of our product lines also carry ABS approval. Most products are CE compliant to EN 61326-1:2006 and EN 61326-2-3:2006. CE compliant units are labeled accordingly.

2.0 Product Accessories and Options

WARNING: POTENTIAL ELECTROSTATIC CHARGING HAZARD

In hazardous locations:

- **Avoid building up static charge on case of data protector and plastic accessories.**
- **Use damp rag to wipe data protector and plastic accessories to avoid static build up.**

Nose Caps

There are several different user-installable nose caps for the 700, 710, 720, 730, 735 submersible level transducers. The ported nose cap (Delrin) with #8-32UNC-2B threaded hole is best used where weights are required and for those installations where users may encounter sharp, protruding objects. The open-face nose cap which allows maximum contact with the liquid media is ideal for wastewater and "greasy" applications where clogging of the sensor is a concern. The piezometer nose cap allows the unit to be buried in saturated soil without damage to the sensor diaphragm. The 1/4" male NPT pressure nose cap is not only useful for calibration purposes but also allows the device to be used as a submersible or above ground pressure transducer.

WARNING: Caution must be exercised when inserting a screw into the nose cap as the maximum insertion length should not exceed 0.175".

810 SuperDry™ Vent Filter or 815 Aneroid Bellows

All submersible transducers with vented gauge format are supplied with a protective barrier that guards against moisture buildup in the cable vent tube. The 810 SuperDry™ vent filter is installed free of charge and is guaranteed to operate maintenance free for one year. We also offer the 815 Aneroid Bellows as a maintenance free option that can be used on submersibles with accuracies of: ±1%, ±0.5%, or ±0.25% FSO. These barriers ensure reliable operation and long life as they protect sensitive electronic components from mildew and prevent the formation of a liquid column in the vent tube. Any such liquid column directly affects calibration of the transducer.

Sacrificial Anodes

Our sacrificial anodes are made from a special zinc alloy formulated to guarantee continued effectiveness over long periods. Because the anodes are 95% galvanic, they will not corrode unless there is an electrolytic demand. The anode maintains a high driving potential throughout its 12 month life, is self-sluffing and always exposes new zinc for the best possible protection. For those applications where cable buoyancy is a problem, the sacrificial anode can be substituted for hanging weights.

Sacrificial Anodes provide cathodic protection against galvanic corrosion for our submersible pressure transducers. Galvanic corrosion occurs when dissimilar metals are placed in contact with an electrolyte. This condition causes a potential difference to exist between the two metals, causing electron flow between them. Corrosion of the less corrosion-resistant metal is increased and attack of the more resistant metal is decreased. The 820 Sacrificial Anode is clamped to the exterior of a one-inch bore submersible transducer. We also offer a 1" diameter pencil anode, the 825, that attaches to the nose cap of either a 3/4" or 1" bore submersible transducer.

Absolute/Sealed Gage Transducer

The sealed gage option for submersible transducers eliminates the need for a vent filter. The standard output of a sealed gauge transducer is 4 mA at 14.70 psia. Before ordering a sealed gauge transducer, the customer should determine the altitude (above sea level) of the installation and inform PSI's Customer Service of this value before order entry. During manufacture, the output of the transducer will be adjusted to compensate for the altitude difference, if applicable.

Polyurethane & ETFE Jacketed Cable

Most installations of our submersible level transducers connect our polyurethane or ETFE cable to a junction box. From this junction box (P/N 840), users typically run their own cable to the required instrumentation. Polyurethane-jacketed cable is used for most applications while ETFE material is recommended for more aggressive environments.

Specifications for our standard polyurethane and ETFE jacketed cable are as follows:

Specifications	Standard Submersible Cable	Standard Non-Submersible Cable
Weight	0.05 lbs/ft (0.07 kg/m)	0.025 lbs/ft (0.035 kg/m)
Min. OD	0.28" (7.10 mm)	0.189" (4.8 mm)
Max OD	0.31" (7.87 mm)	0.19" (4.9 mm)
Conductors	4 - 22 AWG	22 AWG
Insulation Conductors Outer jacket	PVC Polyurethane or ETFE	Color coded PVC
Shield	36 gauge spiral tinned copper wire foil shield with drain wire	Aluminum/polyester foil facing outward
Vent Tube	Polyethylene, .060" ID (1.52 mm)	Drain wire 7/32 tinned copper

- **Chemical resistance of polyurethane:** Potable Water, Wastewater, Borax, Butane, Animal Fat, Carbonic Acid, Citric Acid, Cod Liver Oil, Corn Oil, Glycerin, Glycol, Mineral Oils, Potassium Nitrate, Potassium Sulfate, Silicone Oils, Stoddard Solvent, Tannic Acid (10), Tartaric Acid, Turbine Oil.

- **Chemical resistance of ETFE:** Acetic Acid (Glacial), Acetic Anhydride, Acetone, Aluminum Chloride, Anti-Freeze, Bromine, Calcium Chloride, Calcium Hydroxide, Chlorine, Copper Chloride, Ferrous Chloride, Hydrochloric Acid, Ketones, Lacquer Thinners, Sulfuric Acid.

The vented cable termination end is specially prepared at the factory to eliminate the potential for moisture migration. Where the lead wires emerge from under the jacket, there's potting material and a shrink tube "boot", every effort should be made to leave this feature intact. Should the cable be longer than needed for the installation, it is recommended that the excess length be accommodated in a service loop and that the potted end of the cable **NOT** be shortened.

The cable attached to this instrument is specifically engineered for submersible applications. The polyurethane outer jacket provides long term reliability under most conditions. The cable should be handled carefully, however, as the jacket may be subject to cutting should it be "raked" over extremely sharp edges. To guard against water incursion should an inadvertent minor cut occur, we have incorporated an exclusive "water block" feature immediately beneath the jacket. The cable is fully shielded, with the shield connected to the metal housing at the transducer end and terminated in a drain wire at the termination or user end. The shield should always be terminated to a good earth ground, unless the transducer is installed in an area where galvanic corrosion is known to be a serious problem.

Lightning Protection

Lightning and surge protection for VDC, SDI-12 and 4-20 mA output are available. This is achieved through the use of 2 protectors, one is integral to the transducer housing and one is provided for the outside line located at the surface and grounded to a DIN-Rail. Please remember this option must be factory installed at the time of order entry or as a factory upgrade. **This option cannot be installed in the field.** Lightning protection is also available for unit only. Contact customer service for details.

Featuring quick response and low clamping voltages, these devices protect against fast rising voltage transients as well as severe current surges associated with lightning discharges up to 20,000 amperes. Following a surge, the protector automatically restores the line to normal operation and awaits the next surge without having to reset a breaker or replace a fuse. The power supply needs to be limited to 150 mA to avoid lock up of the gas tube after a suppression event. **Transducers installed with this option have a lifetime warranty *against damage due to voltage surge***.

Please note: When using the lightning protection option on 4-20 mA products, users should take into account the additional series resistance of this option when selecting the loop power supply. This option will increase total loop resistance by 88 Ohms.

½" Male NPT Conduit Fitting

Submersible level transducers can be attached to a rigid conduit and the cable run through the conduit. To achieve this, all of our submersible transducers can be fitted with an optional ½" NPT male conduit fitting (specify "Electrical Connection Option 4" when ordering) where the cable exits the transducer. This fitting can be mated to a standard rigid conduit.

Electrical Outputs

We offer the industry standard 0-5 VDC and 4-20 mA outputs. In addition we also offer a variety of voltage output ranges.

Reverse Signal Output

For some applications, it is important to know how far the water is from the top of the tank or the surface of the ground. If specified by the customer, our factory can set the transducer so that zero pressure reads full scale electrical output and maximum pressure reads zero electrical output.

Temperature Output

A temperature output option is available for most transducers having 4-20 mA pressure output. The temperature sensor requires an excitation of 9-28 VDC and is calibrated for a temperature range of -20 to 60ºC with an accuracy of ±4ºC.

Output Option 6 (4-20mA output for -20 to 60ºC) (mA Reading x 5) - 40 = Temperature ºC

Example:	Reading is 20mA	(20 x 5) - 40 = 60ºC
	Reading is 12mA	(12 x 5) - 40 = 20ºC
	Reading is 4mA	(4 x 5) - 40 = -20ºC

Cable Hanger

We can supply an optional cable hanger (P/N 12-90-0931) to help end users secure the cable. The cable hanger can be positioned anywhere on the cable by pushing the ends together. Once positioned, the cable hanger expands and provides a snug grip on the cable.

When mounting the transducer in a well casing, the cable hanger can be secured to a hook on the well plate or an eye bolt may be attached to the side of the well casing. The cable hanger loop is then secured to the eye bolt by using any number of types of fasteners. A similar technique can be used when working in stilling wells for surface water level measurement. In this case, the loop-end of the cable hanger can be attached directly to a screw or bolt bored into the still well shelf.

Submersible Cable Splicing Kit

Our field-installable cable splice kit (P/N 830) allows you to splice polyurethane and ETFE submersible cable. It is most commonly used for well applications where the more expensive ETFE cable is required for suspension in corrosive media where the liquid level is fairly shallow, but the well is hundreds of feet in depth. It is also used in emergency situations where cable must be spliced together to get an application up and running.

3.0 Installation & Maintenance Tips

WARNING: POTENTIAL ELECTROSTATIC CHARGING HAZARD

In hazardous locations:

- **Avoid building up static charge on case of data protector and plastic accessories.**
- **Use damp rag to wipe data protector and plastic accessories to avoid static build up.**

General Installation Procedures

The following is important installation and preventive maintenance information. Our Customer Service or Applications Engineering Support staff can provide additional instruction.

1. **Transducer Anchors:** Most users either suspend our submersible transducers in stilling wells or attach them to rigid conduit. This is done to prevent damage to the transducer from shock caused by water turbulence. It is not advisable to tie your transducer to a pump or to piping, as any problem with the transducer could require that the pump be pulled from the installation. This could prove to be *very expensive*. (Please refer to the Cable Anchoring Schemes drawing in **Appendix A**.)

   Some applications use our optional bracket (P/N 49-06-00PC) to clamp the transducer to a fixed object (i.e., wall, ladder, step) or require the unit to be suspended without any protective still well or attachment device. In all installations, care should be taken to ensure no damage occurs to the cable.

2. **Transducer Submersion:** Damage to submersible cable is one of the most frequent causes of transducer failure. Lower your transducer into the liquid slowly, making sure the cable does not drag over sharp edges and only to the depth necessary. Avoid dropping the unit from the surface. This does not apply to Series 27, 28, and 30 transducers.

3. **SuperDry™ Vent Filter (Desiccant) or Aneroid Bellows Installation** (For submersible transducers vented gage pressure format only) ***Always*** install a desiccant vent filter or aneroid bellows immediately after transducer installation**.** Failure to use one or the other could result in premature failure of the transducer; which would not be covered by warranty. If you use a desiccant filter, you should establish a regular maintenance schedule. You should change your vent filter when it is 75% spent (pink color). Replacement filters are available at a nominal cost from the factory. Do not remove the old vent filter until a new one is available. The most common failure mode of our transducers is moisture and corrosion damage due to lack of use or maintenance of the vent filter. This will allow air into the desiccant filter and allows the transducer to properly vent with changes in barometric pressure.

   To install/replace either the aneroid bellows or the vent filter, simply unplug the old unit from the vent tube and plug the 0.062" x 1" stainless steel connector tube (supplied with each filter or bellows) into the vent tube. (Installation and mounting instructions are supplied with each aneroid bellows and vent filter.) The diagram on page 16 shows typical vent filter and aneroid bellows hookups.

4. **Cable Protection** An inexpensive way to protect the cable from damage is to order the submersible pressure transducer with a ½" conduit attachment. Connect an inexpensive flexible 5/8" garden hose to the ½" conduit fitting with an equally inexpensive female PVC ½" NPT x 3/4" NHT swivel fitting, available at your local hardware store

5. **Bending of Cable** Our polyurethane and ETFE jacketed cables are quite flexible. Care needs to be taken to ensure that when bending the cable to suit your installation you do not crimp the vent tube inside the cable. Consequently, do not bend the cable more than a radius of 1 inch.

6. **Cable Compression** Many users require a compression fitting to secure our ETFE and polyurethane jacketed cable as it enters a junction box. Care needs to be taken that you do not over-tighten the fitting so as to damage the cable.

7. **4-20 mA Wiring** When connecting a 2-wire 4-20 mA transducer to a typical power supply and mA meter, verify that the meter has an input impedance of at least 10 Ohms. If you are unsure of the input impedance, then a 10 Ohm resistor may be placed in series with the meter and transducer. Connect the + (red) lead of the transducer to the + terminal of the power supply. If the 10 Ohm resistor is required, connect it to the - (black) lead of the transducer. Use a short length of 22 AWG or heavier wire to connect the + terminal of the meter to the resistor (if it is required) or the - (black) wire of the transducer. Connect the - terminal of the meter to the - terminal of the power supply with a length of 22 AWG or heavier wire. Connect the drain wire from the transducer to a good earth ground. (See **Appendix**, page **14** for wiring diagram.) Please refer to "**Maximum Cable Lengths and Minimum Supply Voltage**" in **Appendix C**, page **22** to verify minimum loop supply voltage requirements.

8. **VDC Wiring** To connect a 3 wire VDC output transducer to a typical power supply and the voltmeter, connect the - terminal of the power supply to the - input terminal of the meter with a length of 22 AWG or heavier wire. Connect the - excitation (black) lead of the transducer to the - input terminal of the meter. Connect the + input terminal of the meter to the signal lead (white) of the transducer. Connect the + terminal of the power supply to the + lead (red) of the transducer. Connect the drain wire to a good earth ground. (See **Appendix A**, **page 14**.)

9. **The Model 750** comes standard with a field removable diaphragm protector (one-inch or 25 mm standoff). The diaphragm protector can easily be taken off by removing six (6) fasteners located on the bottom of the unit.

10. **Sealed-Gage Transducer Configured For Altitude Above Sea Level** Since sealed-gauge transducers are normally calibrated at sea level, there may be considerable error induced when used at a higher elevation. If the transducer was calibrated without taking into consideration the difference in atmospheric pressure at sea level and the higher elevation, an offset error will occur. In order to eliminate error due to this difference, the customer must identify the elevation where the transducer will be installed. The nominal atmospheric pressure at the location is calculated and the transducer will be ranged accordingly. Not all KPSI Transducers are available in a sealed pressure format. Please refer to the appropriate datasheet for availability.

11. **Position Sensitivity** The transducer should be installed so that the diaphragm located behind the nose cap is oriented in a vertical position, otherwise the unit could exhibit an offset.

General Maintenance Tips for Submersible Transducers

1. **Desiccant Maintenance**

WARNING: POTENTIAL ELECTROSTATIC CHARGING HAZARD

In hazardous locations:

- **Avoid building up static charge on case of data protector and plastic accessories.**
- **Use damp rag to wipe data protector and plastic accessories to avoid static build up.**

If you use a desiccant vent filter, you should establish a regular maintenance schedule. You should change your vent filter when it is 75% spent (pink color). Replacement filters are available at a nominal cost from the factory. Do not remove the old vent filter until a new one is available. Remember that Pressure Systems' improved 810 SuperDry™ Vent Filter are designed to be effective for at least one year before requiring replacement.

2. **Clogged Nose Piece or Dirty Diaphragm**

Either of these conditions could result in erroneous readings from your transducer.

WARNING: NEVER attempt to clean your transducer's nose piece or diaphragm with any object. This will dent the sensor diaphragm and cause permanent damage to the transducer.

Your transducer may be cleaned in accordance with the procedures listed in step 4, below.

3. **Cleaning your transducer**

Materials required:

- Plastic bowls 8-12 inches (200-300 mm) in diameter and 4-6 inches (100 - 150 mm) deep
- Supply of clean, lint-free cleaning rags
- 32 ounce bottle of "The Works-Tub and Shower Cleaner" (a mild detergent) manufactured by Lime-O-Sol Company in Ashley, IN 46705 and available locally through Wal-Mart, K-Mart, Target, and Ace Hardware stores at $2 to $4 per bottle

Preparation: Prior to cleaning your pressure transducer, ensure that all procedures have been followed in the proper cleaning of the cable and transducer to remove any hazardous materials. The vent filter (or bellows) must be properly attached. The cable should be coiled to ensure ease of handling and it must be protected against the possibility of accidental abrasion and/or penetration of the cable jacket by sharp objects. A lead length of 1 to 1 ½ feet (0.3 - 0.45 m) of cable from the transducer should be allowed to facilitate handling during cleaning. The protective covering (or similar protective device) that is shipped with each transducer should be attached to the transducer at all times. It should only be removed prior to installation or cleaning.

Your work surface needs to be clean and free of clutter and large enough to accommodate all materials required in addition to the transducer and cable. Fill one of the bowls with fresh water, one with a mild detergent mixed with water and the last with 16 ounces (0.45 kg) of "The Works".

Cleaning:

Step 1: Holding the cable 6 inches (150 mm) from the transducer, immerse the unit in the bowl containing the mild detergent and stir for 20-30 seconds. Remove and rinse in the bowl containing the fresh water, using the same stirring motion used in the mild detergent. Rinse and wipe dry.

Step 2: Holding the body of the transducer with one hand so that you are looking at the retaining screen protecting the sensor, carefully remove the sensor nose piece by simply unscrewing it from the transducer body. *Do not touch the sensor diaphragm with your finger or any other object. Also, do not try to dry the inside portion of the transducer, as you risk damaging the pressure sensor*.

Step 3: Place the transducer in a vertical position with the sensing end facing downward in the bowl containing "The Works" solution for approximately 15-20 seconds. Rinse in the bowl containing clean water and wipe dry the external casing only. Place the protective screen in the same solution for 15-20 seconds, rinse and wipe dry.

Step 4: Holding the transducer in a vertical position so that you can see the face of the sensor, screw the protective nose piece back into place.

4. Cleaning the Lightning Protection Data Line Protector

WARNING: POTENTIAL ELECTROSTATIC CHARGING HAZARD

In hazardous locations:

- **Avoid building up static charge on case of data protector and plastic accessories.**
- **Use damp rag to wipe data protector and plastic accessories to avoid static build up.**

4.0 Warranty and Product Return Procedure

Any transducer/transmitter that is less than 2 years old (see DOM) which does not meet the product's specifications and exhibits **no obvious physical damage to the housing, sensor, or cable (cuts),** will be replaced under warranty.

Units 2-3 years old: Units that fall within this age group and exhibit no obvious physical damage to the housing, sensor, or cable (cuts), may be replaced at a discounted list price.

Units greater than 3 years old: Units that fall within this age group are not replaced under warranty.

Merchandise Return Procedures

Contact the **Applications Support Group** or the **Customer Service Department** at Pressure Systems if your transducer is not operating properly. Our staff is available for troubleshooting at **(757) 865-1243** or toll free at **1-800-328-3665** during normal working hours, Eastern time. If your transducer or accessory needs to be returned to Pressure Systems, obtain a *Returned Merchandise Authorization* (RMA) from the Customer Service Department prior to shipment. Be prepared to supply the following information when requesting the RMA:

- Part number
- Serial number
- Complete description of problems/symptoms
- **Bill To** and **Ship To** address
- Purchase order number (not required for warranty repairs)
- Customer contact and telephone number

The above information, including the RMA number, must be on the customer's shipping documents that accompany the equipment to be repaired. Pressure Systems also requests that the outside of the shipping container be labeled with the RMA number to assist in tracking the repairs. All equipment should be sent to the following address:

ATTN: KPSI TRANSDUCER REPAIR DEPARTMENT (7-digit RMA number)
Pressure Systems, Inc.
34 Research Drive
Hampton, Virginia 23666

Prior to returning to Pressure Systems, the transducer and cable must be cleaned per instructions provided on the cleaning certificate supplied when the transducer was delivered. The certificate can also be found on Pressure Systems website:

www.PressureSystems.com/cleaning.html

The completed certificate must accompany the transducer when shipped to Pressure Systems. If the transducer has been used in media other than potable water, PSI customer service must be notified at the same time an RMA number is requested. PSI reserves the right to reject any shipment deemed to be unsanitary or environmentally unsafe to handle. If these guidelines are not met, the package will be sent back unopened and at the customer's expense. ***Please***

include the attached vent filter or aneroid bellow with each returned vented gage submersible transducer.

Pressure Systems will return warranty items prepaid via UPS GROUND. If the customer desires another method of return shipment, Pressure Systems will prepay and add the shipping charges to the repair bill.

Incoming freight charges are the customer's responsibility. The customer is also responsible for shipping charges to and from Pressure Systems for all equipment not under warranty.

Once the return is received, it typically takes 5-10 working days for the technician to make a fault determination.

A cable reconnect fee will be charged when the customer requests a different length of cable.

Restocking Policy

Pressure Systems does allow standard products to be returned for credit in the event it is no longer required, providing the products are in new and unused condition. A restocking fee will be assessed depending on the model type and variety.

A **25% restocking fee** applies to the following models, providing they are vented-gage reference format and [pressure ranges above 3 psig (20 kPa) and below 100 psig (690 kPa)].

27	320	700	710
28	342	705	720
Display Meters - all models			750

A **50% restocking fee** applies to the following models. This also applies to all other models with sealed-gage and absolute pressure formats as well as vented-gage reference formats with [pressure ranges below 3 psig (20 kPa) and above 100 psig (690 kPa)].

30	335
300DS	730
330	735

NOTE: Expedite premiums and shipping charges are non-refundable.

Please consult the individual manuals for the Series 500 and Series 550 (waterMONITOR) for the restocking policy.

This page intentionally left blank.

Appendix A

Drawings and Diagrams

Wiring Diagram VDC, mA, and Temp Output 14
Cable Anchoring Schemes 15
Reference Connection Schemes 16
Submersible Cable Termination 17

Wiring Diagram VDC, mA, and Temp Output

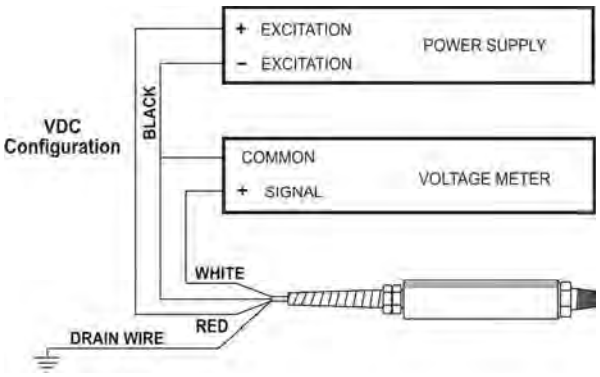

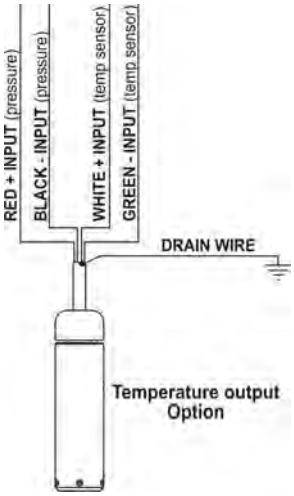

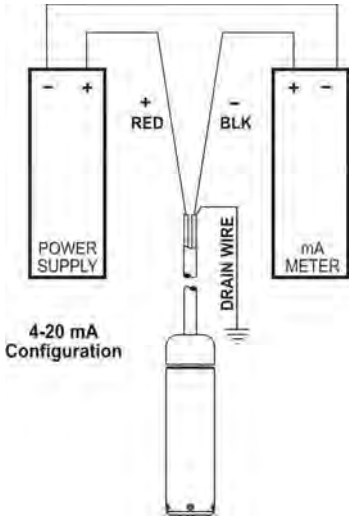

Notes:

1. These diagrams depict typical installations. Refer to your power supply and instrumentation Manufacturer for the specifics of your application.

Cable Anchoring Schemes

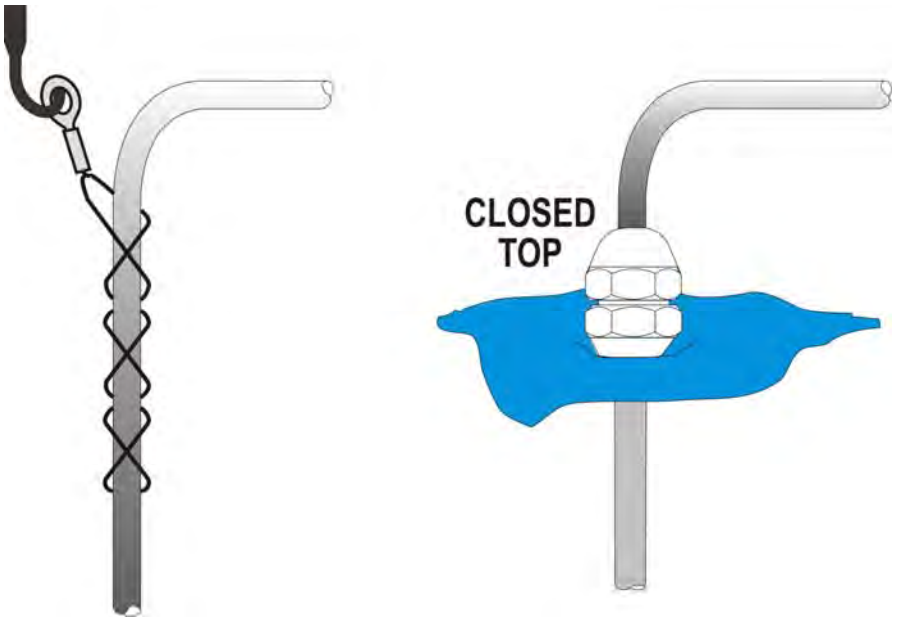

Reference Connection Schemes

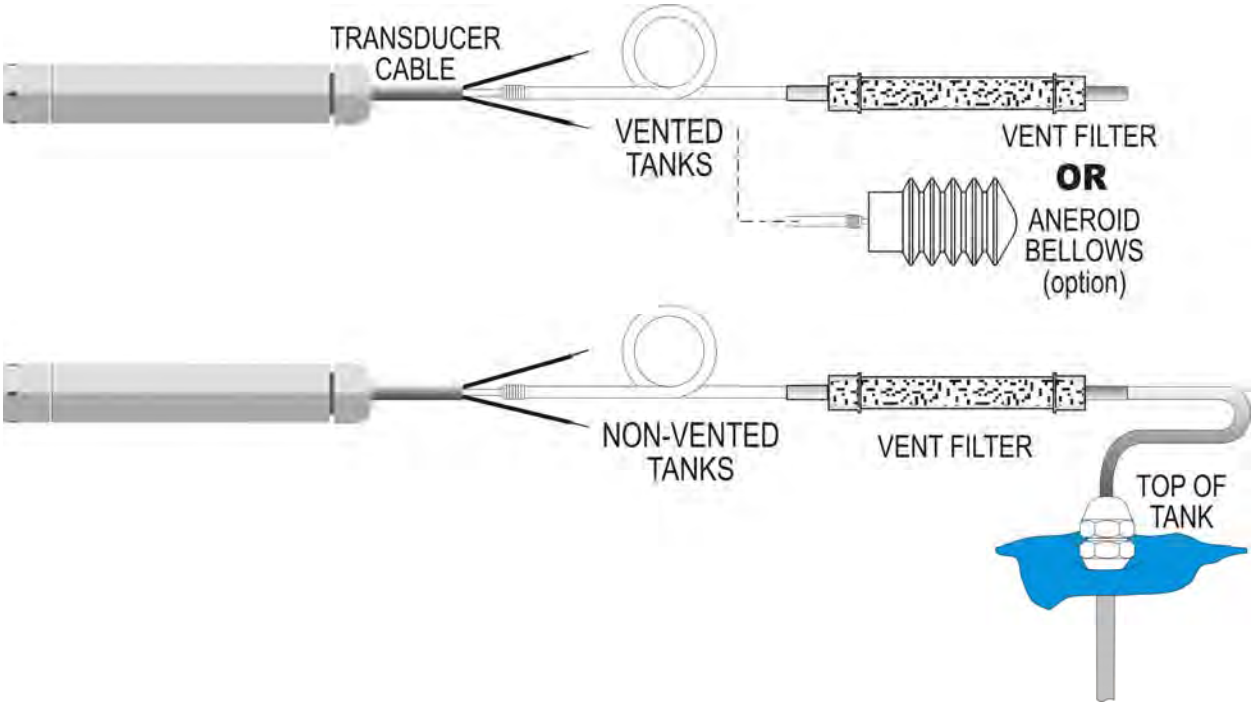

Submersible Cable Termination

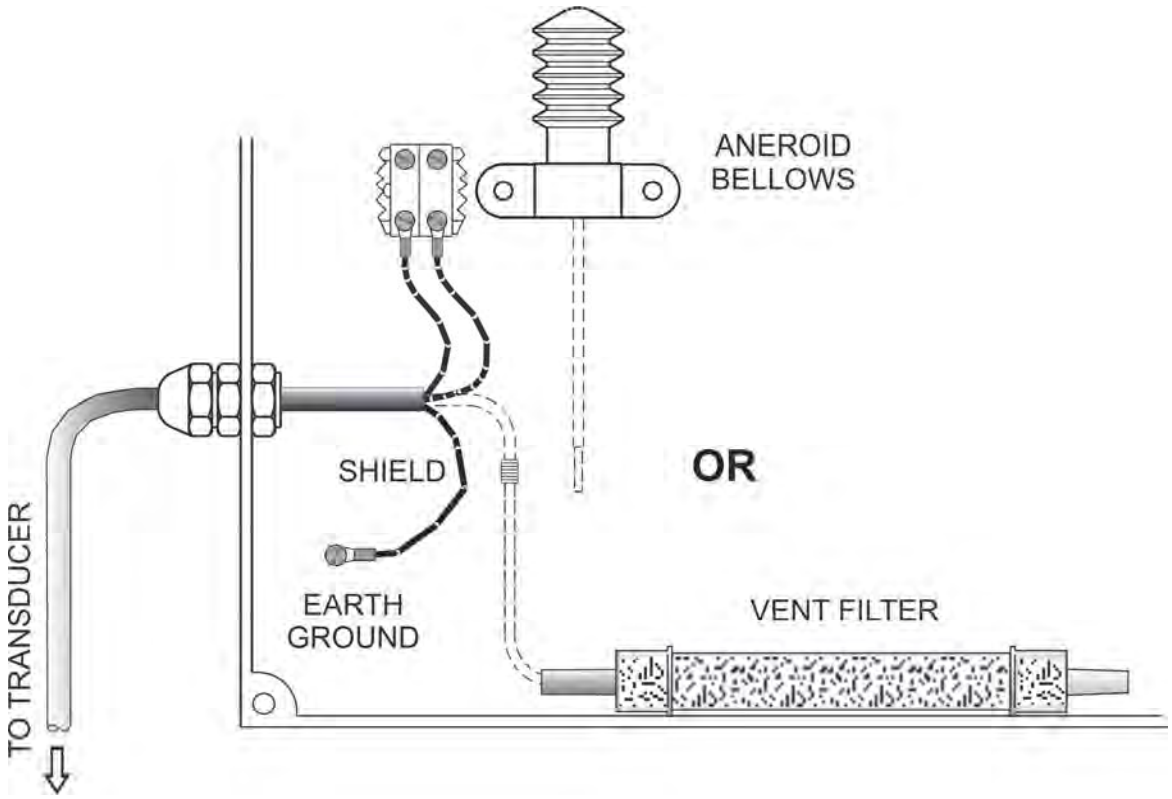

Appendix B

1. Question: What installation ideas do you have to help me get rid of electrical noise interfering with the signal?

Answer: An ounce of prevention goes a long way. Either try to eliminate the source of noise or move the transducer as far away from it as possible. We strongly encourage you to secure our cable shield to a good earth ground and that you use a 4-20 mA signal output. Armed with these precautions and the fact that many of our transducers are CE approved for electromagnetic interference, you should have few problems.

2. Question: The cable on the submersible transducer always seems to get cut and damaged. What am I doing wrong?

Answer: This is the most common problem that our users encounter. Make sure that all of your colleagues and staff understand the importance of handling the cable with care. The cable should not be bent around rough or sharp edges. Always use a cable reel during transport. Where possible, suspend the unit in a perforated 2" (50 mm) PVC pipe and thread the cable through protective conduit to the nearest junction box.

3. Question: I have an application where the transducer is frequently damaged by voltage spikes. What can be done to prevent this?

Answer: At a minimum, make sure the cable shield is connected to an earth ground as near as possible to the transducer. We can provide a surge protection kit for both our submersible and non-submersible transducers. See page 4. These kits will handle typical spikes that might come in through the power lines as well as surges that travel through the ground due to nearby lightning strikes

4. Question: How much impact shock can your submersible transducers withstand?

Answer: Our transducers are not shock tested and the lower pressure ranges can be damaged if dropped from several feet onto an unforgiving surface like concrete. We recommend that the protective shipping foam remain in place until the unit is installed.

5. Question: What is the response time of your transducer?

Answer: From initial power up, the transducer output will stabilize within a fraction of a second. The frequency response is rather low, probably less than 1 kHz, but it depends on the application, the media, plumbing, etc. Call our factory for application assistance if frequency response is critical in your application.

6. Question: How do I attach your vent filter or aneroid bellows to my cable vent tube?

Answer: The vent filter can be mounted anywhere convenient, preferably out of the weather. It can be mounted in any position and connects to the cable vent tube via the extension tube with metal connector tube provided. The aneroid bellows must be mounted in a way that its movement is not encumbered. It is provided with a mounting base.

7. Question: What is the best way to mark my cable?

Answer: Use white vinyl marking tape available from your local hardware or electronic stores. These same stores may also sell cable marking kits.

8. Question: Any ideas for preventing marine growth on your submersible transducers?

Answer: You might want to try waterproof grease. Remove the threaded nose cap to facilitate applying the grease**. Take care not to damage the diaphragm when applying the grease and not to trap air bubbles against the sensing diaphragm.**

9. Question: How many measurements can you make before the diaphragm on the sensor fails?

Answer: In normal operation - millions of cycles. We find that sensor failure is rarely due to diaphragm fatigue.

10. Question: What is the turnaround time on repairs?

Answer: Once we receive a unit into our facility it takes less than 10 working days to complete an evaluation.

11. Question: What is the longest length of cable you have attached to a submersible transducer?

Answer: Two thousand feet (610 meters).

12. Question: Why do you use 316 SS housings and sensors for your standard transducers?

Answer: It offers a good combination of corrosion resistance and reasonable cost. As an option, we do offer titanium for more aggressive environments.

13. Question: What wire gauge should I limit myself to when connecting to your 22 AWG wire?

Answer: Use 22 AWG or heavier.

14. Question: Does it make any difference if I mount the transducer in a vertical or horizontal position?

Answer: Yes. Our units will experience a certain amount of position sensitivity. You should mount it in a vertical position throughout the measurement cycle. If you lay the transducer down, the user must realize than an offset will occur.

15. Question: What happens when you freeze your transducer in a column of water?

Answer: We have frozen our transducers in a container of water in a home freezer, with no resulting damage. However, depending on the level range of the unit, over pressure of the unit is possible. In harsh environments where debris is common and ice shifts, you might expect damage to both the transducer and cable.

16. Question: Why would I choose a KPSI Transducer versus a competitor?

Answer: Reliable, long lasting products
Rapid delivery
Lightning protection lifetime warranty
Excellent pre & post sales/application support
No hassle service

Appendix C

Troubleshooting Techniques

Quick Check Procedure

The following is a quick field checkout procedure for KPSI Level and Pressure Transducers. It will be referred to throughout the troubleshooting section.

Should a problem be encountered with a transducer or transmitter, it is sometimes helpful to test the transducer independently from the rest of the system, thereby establishing where to concentrate the troubleshooting effort.

On the next page is a simple hookup diagram for the most common types of electrical output, a 0-5 VDC transducer and a 4-20 mA transmitter. In either case, the "power supply" can be a common 12 volt lantern battery, or even a 9 volt transistor radio battery, although the lifetime of a 9 volt battery will be limited. The meter should be a digital type capable of reading at least 2 digits to the right of the decimal point. Use 22 gage or heavier hookup wire or clip leads for jumpers. If your unit has other than a 0-5 VDC or 4-20 mA output, please call Applications Support at **(800) 328-3665** for assistance.

Once your transducer is correctly configured per one of the diagrams below, orient the transducer in a vertical position with the pressure port down and then read the zero output on your meter. For a 0-5 VDC output, the zero should be between 0 and 0.10 volts, and for a 4-20 mA output, between 3.80 and 4.20 mA. For Series 300, the values do not change for VDC output but the values for mA are between 3.80 and 4.20 mA. If the output is outside of these limits, you may, at your option, choose to troubleshoot the transducer per the suggested measurements shown below. Otherwise, contact our Customer Service Department at **(800) 328-3665** for a Return Material Authorization number (RMA).

If the zero output is within these limits, the problem will more than likely be found elsewhere in your system.

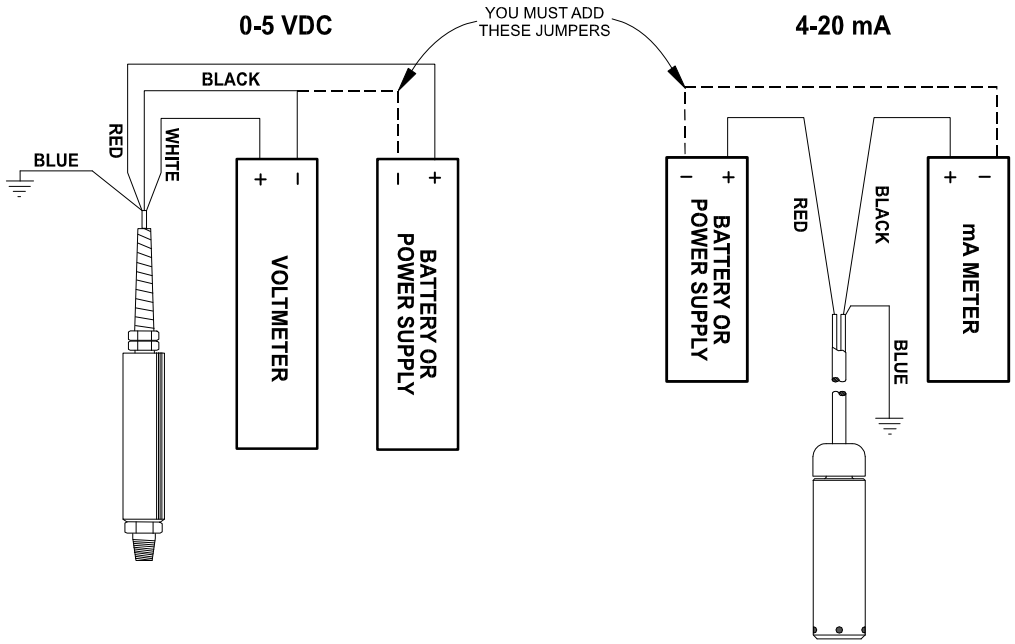

When an error is observed at a customer's installation, it is important to determine if the fault lies in the transducer or the instrument reading the transducer signal, ie. digital panel meter, programmable logic controller, etc. . To do this, a second instrument should be used to confirm the observations. The second instrument may be a handheld DMM (Digital Multi-Meter) or a dedicated milliammeter capable of reading 4-20 mA of current to a resolution of at least 0.1 mA. The diagram above illustrates the attachment of the meter in series with the black (negative signal) wire of the transducer using a 9-28 VDC power supply for transducer excitation. Some suggested power supplies are:

- 1 - 12 VDC automotive battery.
- 2 - 6 VDC lantern batteries connected in series (for a total of 12 VDC).
- 2 - 9 VDC transistor batteries connected in series (for a total of 18 VDC).

Batteries are suggested to power the transducer during testing to eliminate the possibility that line noise is passing through an improperly filtered, grounded, or damaged power supply. All measurements should be recorded and sent to Pressure Systems along with the transducer to assist in the evaluation process.

Further Measurements:

0-5 VDC	Should read:	4-20 mA	Should read:
+Excitation (white) to Shield (drain)	> 2.5 Mohms	+Excitation (red) to Shield (drain)	> 2.5 Mohms
-Excitation (black) to Shield (drain)	> 2.5 Mohms	-Excitation (black) to Shield (drain)	> 2.5 Mohms
+Output (red) to Shield (drain)	> 2.5 Mohms	Shield (drain) to Housing	< 2 ohms
Shield (blue) to Housing	< 2 ohms		

Maximum Cable Lengths and Minimum Supply Voltage

The maximum length of cable to be used with our submersible transducers is largely dependent upon the type of electrical output of the transducer. For a 0-5 VDC output, a maximum cable length of 100 feet (30 m) is recommended. A voltage output is more susceptible to electrical interference than a 4-20 mA signal. A 4-20 mA signal can be transmitted much longer distances, depending upon such factors as temperature, wire size, length of the wire, power supply, and voltage requirements of any devices to be powered. At 25ºC the 22 AWG conducting copper wire used in our polyurethane jacketed cable has a resistance of 16.45 ohms per 1000 feet (304 m).

Using Ohms Law (E=IR) where E=voltage, I=current and R =resistance, one finds that a 20 mA signal requires .329 volts to drive it along 1000 feet (304 m) of 22 AWG copper wire (E=16.45 x .020). This drop is seen on both the supply and return wire for a total loop voltage drop of 0.658 volts

To find out how much voltage is required to drive our Series 700 submersible level transducer's 4-20 mA signal 10,000 feet, just add the minimum power requirement of the 700 (9 VDC) to the resistance offered by 10,000 feet (3048 m) of our polyurethane jacketed cable (10,000÷1000 x .658=6.58). The resulting power requirement is 15.58 VDC (9 + 6.58).

Connect the cable shield (drain wire) to a good earth ground. This will protect the transducer from relatively minor transient voltages. The only exception to this rule is if high rates of electrolytic corrosion have been previously experienced with grounded submersible devices. In this case it may be better to leave the shield disconnected.

Please note: When using products with the lightning protection option on 4-20 mA products, users should take into account the additional series resistance of this option when selecting the loop power supply. This option will increase total loop resistance by 88 Ohms.

Troubleshooting Techniques

1. Symptom: ***Transducer fails to give output of any kind.***

Procedure: Isolate the problem to either the transducer or the power supply/readout. See the Quick Check Procedures (above) for this check. If it can be determined that the transducer is no longer operable, remove it from service for further analysis. If the transducer output falls within the limits described above, the fault lies somewhere else in your system.

2. Symptom: ***Transducer has failed and has been removed for analysis.***

Procedure: Inspect the cable for physical damage. Cuts in the cable jacket can result in liquid incursion into the transducer housing, which can cause permanent damage. If operational, the cable can be repaired by using a splice kit (P/N 830) supplied by Pressure Systems.

Inspect the transducer housing. It should be intact and free of corrosion. If the outer surface of the transducer is pitted, this could be an indication of galvanic corrosion caused by stray ground currents. If this is the case, the transducer will probably require replacement. If the external case exhibits none of these characteristics, carefully unscrew the nosepiece and look into the pressure sensing end of the transducer. The concentric rings of the sensing diaphragm should be visible. If they are not, it could be that residue has accumulated on the diaphragm, preventing it from responding properly to pressure changes. The transducer can be cleaned by gently swishing the transducer back and forth in a bucket of warm, soapy water until the residue softens and washes off. (See **Cleaning Your Transducer**, page 8.) ***Under no circumstances should any object or tool be used to remove residue from the sensing diaphragm or else permanent damage will be done.*** If cleaning the diaphragm does not solve the problem, the transducer should be returned to the factory for repair or replacement.

3. Symptom: ***Transducer develops a negative offset and gets worse over time (actual level exceeds specified level).***

Procedure: This may be a sign that moisture has entered the reference (vent) tube in the cable and is inside the transducer housing. This is usually the result of not maintaining the desiccant vent filter or of operating the transducer without a desiccant filter or aneroid bellows. If caught early enough, the transducer can be saved by coiling the cable and transducer in a pan and baking it in an oven at 50°C (122°F) for a minimum of 2 hours. *Be careful that the oven temperature does not exceed 50ºC (122°F)* or both the transducer and the cable can be damaged. **Alternatively**, suspend both the cable and transducer in a vertical position (with vent tube down), overnight to allow water to drain from the transducer and vent tube.

4. Symptom: ***Transducer suddenly fails during or just after a nearby lightning event.***

Procedure: This failure is usually caused by overvoltage due to ground transients resulting from a direct or indirect lightning event. These transients can travel

distances of a mile or more. The transducer may be returned to the factory for repair and optional retrofit of our ***lightning protection system.*** This system carries a lifetime warranty against transducer damage due to lightning.

5. Symptom: ***Transducer response to pressure/level input changes becomes sluggish.***

Procedure: This is usually a sign that the sensing end of the transducer has become fouled with residue. The transducer must be removed from service and the sensing diaphragm cleaned as described in Item 2, (warm, soapy water). If fouling persists, the transducer may be replaced with a Series 705 or Series 750 (non-fouling) transducer, which is specifically designed for trouble-free operation in a high residue environment.

6. Symptom: ***Output reading is within limits but "freezes" at one point.***

Procedure: In certain environments "crust" may form over the sensing diaphragm, preventing the sensor from identifying change in level. Removing the transducer from service and cleaning it (as described in Item 2) will generally solve the problem. To combat marine growth, you might try wrapping the transducer with copper wire similar to that found in wire scouring pads for cleaning dishes. Marine growth occurs on the copper and eventually erodes the copper and drops off or the copper is manually removed during routine maintenance. Alternatively, there are various companies that will impregnate/coat the 316 stainless steel with anti-fouling chemicals of coatings. Level transducers temporarily removed from the well or sump should not be stored dry, but should be stored in a bucket of fresh water in order to prevent "crust" formation.

7. Symptom: ***Readings increase very slowly over time***.

Procedure: Our cable is shipped coiled and consequently takes time to straighten when installed. Attaching a weight to the transducer (e.g., one of our sacrificial anodes) will help. To prevent cable stretch with lengths greater than 200 feet (60 m), secure the Kevlar fibers (just under the cable jacket) to your junction box or other secure object.

8. Symptom: ***No electrical output from your transducer.***

Procedure: Check all electrical connections to ensure they are correct and secure. Double check your power supply or use a battery (as described previously) to ensure the transducer is getting power. If all checks OK, the problem could be a circuit board or the sensor in your transducer. The unit must be returned to the factory for evaluation. The most probable cause of this type of failure is damage to the submersible cable jacket allowing water to leak down the cable and into the transducer housing or lightning damage.

9. Symptom: ***Formation of marine growth on a submersible transducer.***

Procedure: Certain transducer construction materials, for example, 316 stainless steel, attract marine life (snails) and algae. Clean the transducer diaphragm by

soaking it in a bucket of warm water with a non-aggressive cleaning solution. You can also coat the transducer with marine grease. This may be the most effective and inexpensive way to protect your transducer.

10. Symptom: ***Submersible transducer exhibits corrosion or pitting on body or diaphragm***

Procedure: Dissimilar metals (for example, your transducer housing and your pump housing) in an electrolytic environment (fluid in your well) can lead to *galvanic corrosion* of the metal that is nearer the anodic end of the galvanic series. Likewise, a voltage potential between the ground wire of the transducer and the ground of other equipment in the well can lead to *galvanic corrosion*. Installation of a P/N 820 or 825 sacrificial anode will help protect your transducer from *galvanic corrosion*. Our sacrificial anodes are made of a zinc alloy that, being nearer the anodic end of the galvanic series than the 316 stainless steel or titanium housing of the transducer, will corrode before the transducer.

11. Symptom: ***The transducer is buried in dirt or silt and the readings seem to be erroneous.***

Procedure: Use of a piezometer nosepiece in this application would help. This nosepiece can be easily installed in the field and features a very fine screen to keep dirt from fouling the diaphragm, but allows the diaphragm to sense moisture levels.

12. Symptom: ***Transducer has an offset error.***

Procedure: Our submersible transducers perform best when the sensing end is pointing in a downward manner. Keep in mind that you can experience offset error due to the position sensitivity or orientation change of the sensor. Offset errors are more prominent in low pressure applications with the sensing end of the transducer lying flat or pointing upward.

13. Symptom: ***I am testing a Series 700 4-20mA sensor for use with our data logger. On page A-2 of the KPSI Level and Pressure Transducers User's Manual, I see the standard 4-20mA configuration. Does the recording channel of my data logger become the mA meter?***

Procedure: Most data loggers cannot measure current (mA) directly. When this is the case a load resistor must be used to convert the current (mA) output into an appropriate voltage. If the User's Manual for your particular instrument does not illustrate a preferred method for recording current (mA) data then you should attach your transducer signal wires to your data logger in the following manner.

Transducer red wire - Data Logger Excitation Terminal
(The minimum excitation for a Series 700 Transducer is 9VDC)
Transducer black wire – Data Logger signal input (+) terminal

Attach a Load resistor between the Data Logger signal input (+) terminal and the Data Logger signal input (-) terminal.

Attach a separate piece of wire between the Data Logger signal input (-) and analog ground.

In this configuration you will turn your data logger into a milliammeter. The size of your load resistor can be calculated in the following manner.

D/0.02=R

Where:

Data logger input range = D
Full scale output of transducer = 0.02 A (20 mA)
Load Resistor Value = R

Pick an appropriate standard value

250 Ohms results in 1 to 5 VDC at 4 and 20 mADC
125 Ohms results in 0.5 to 2.5 VDC (500 to 2500 mVDC) at 4 and 20 mADC

At this point the discussion needs to address IR loss (voltage drop) in series circuits. Note that Series 700 transducers need a minimum of 9 VDC to operate correctly. When the transducer is operating correctly it will output a current which, when driven through a resistor, will generate some amount of voltage drop. If the resistor value is 250 Ohms then the voltage measured across that resistor will be 0.004 A * 250 Ohms = 1.000 VDC and 0.020 A * 250 Ohms = 5 VDC. Notice that, if the available voltage from the data logger is12 VDC then 12 VDC - 5 VDC = 7 VDC which is less than the voltage required by the transducer to operate. If this scenario were to occur the transducer would actually stop functioning correctly when its output reached 12 mADC (50% of transducer full scale range). In this case the appropriate choice for a load resistor value is 125 Ohms.

14. Symptom: ***I have a Series 700 4-20mA transducer rated for 7.5 PSIG attached to a pressure source that is outputting 7.5 PSIG. With 20VDC being supplied I am getting 19.94 mA. I can't find the upper range allowance for the sensor, but this seems low to me. Does this mA reading fall into the acceptable range for the transducer with the settings I've specified?***

Procedure: When evaluating a transducer it is sometimes convenient to make some broad generalizations in order to rapidly determine the condition of the unit. In general, transducers that output a 4-20 mADC signal have a 16 mADC span (4 - 20 = 16). If the transducers accuracy is reported as being some percentage of its full-scale range then the following table could be used in conjunction with the instructional notations to determine whether a more detailed analysis of data quality is required.

Model	Accuracy	Accuracy in mADC
700	1.00%FS	±0.16 ma
710	0.50%FS	±0.08 ma
720	0.25%FS	±0.05 ma
730	0.10%FS	±0.016 ma
735	0.05%FS	±0.008 ma

In order to approximately determine how many milliamps a transducer should output at a given depth.

1. Determine the depth (in feet) at which the transducer is sited.
2. Divide the depth value (from step 1) by the transducer full-scale range (in feet). - Record the value.
3. Multiply the value calculated in step 2 by 16 (the transducer span in milliamps).
4. Add 4 to the product of step 3. This is the approximate value in milliamps that should be output by the transducer at its current depth.

In order to approximately determine the depth of a transducer (in feet) using a given value of milliamps.

1. Divide the full-scale range of the transducer (in feet) by 16. Record this value.
2. Subtract 4 from the milliamp output of the transducer. Record this value
3. Multiply the result of step one by the result of step 2. This is the approximate depth at which the transducer is sited.

If the resulting numbers are reasonably close to some verified value for current water depth, then the unit is functioning. In order to determine the quality of measurement, additional steps need to be performed.

Appendix D

Calibration Calculations

Pressure Systems ships a calibration sheet with every KPSI™ Transducer. This sheet lists the actual values that were output by the transducer, when it was being manufactured, at several different pressures. In addition, two coefficients are provided that can be used to calculate the actual depth from any given mA output value. These coefficients are derived from a Least Squares Best Fit Straight Line (BFSL) calibration using the data listed on the datasheet. Our accuracy specification is referenced to the line described by the BFSL coefficients and so the transducer may not output exactly 4 mADC at zero pressure and 20 mADC at full-scale. As an example here is an example of data for a typical transducer.

Calibration Report

Test Date: 02/28/08
Test Time: 13:02:57
Model No: 320T14B0A008.670000.000B10030B
Serial No: 0802048
Pressure Range: 0.00 to 8.67 PSIG
Excitation: 9-28 VDC
Output: 4-20 mA

Test Temps: ROOM = 25.3 DegC

PCU Serial No: TRF048

Target Test Pressure	BFSL Rm Temp Outputs	Run #1 Rm Temp Outputs	Run #1 Error %FSO	Run #2 Rm Temp Outputs	Run #2 Error %FSO
0.00	4.0017	3.9995	-0.0134	3.9981	-0.0222
1.73	7.2050	7.2003	-0.0295	7.2066	0.0098
3.47	10.4096	10.4111	0.0091	10.4144	0.0297
5.20	13.6133	13.6182	0.0305	13.6207	0.0461
6.94	16.8176	16.8158	-0.0114	16.8174	-0.0014
8.67	20.0219	20.0173	-0.0290	20.0190	-0.0184
6.94	16.8171	16.8162	-0.0057	16.8172	0.0006
5.20	13.6127	13.6176	0.0305	13.6175	0.0299
3.47	10.4083	10.4131	0.0298	10.4110	0.0167
1.73	7.2049	7.2067	0.0115	7.2059	0.0065
0.00	4.0020	4.0001	-0.0118	4.0000	-0.0124

Maximum Static Error: 0.0523 %FSO
Maximum Non-repeatability: -0.0393 %FSO

Electrical termination: RED: +SUPPLY
BLACK: -SUPPLY
BLUE: SHIELD

Slope1:	0.5411	PSIG/mA
Zero Offset1:	0.0000	PSIG
Slope2:	1.8479	mA/PSIG
Zero Offset2:	4.0017	mA
Conversion Factor:	1.0000	

Notes:

Calculations:

Method 1: Calculate pressure in desired units, using sensor's output as independent variable.
PSIG = 0.5411(mA - 4.0017) + 0.0000

Method 2: Calculate predicted sensor output in desired units using pressure as the independent variable.
mA = 1.8479(PSIG - 0.0000) + 4.0017

In this case, even though the offset or 0 PSIG output was 4.0017 mADC and the full-scale point was 20.0219 mADC the unit actually performed better than its specified accuracy of ±0.25% of full-scale range as indicated in the Error % FS column.

The calculation for pressure is illustrated below:

PSIG = (Span*Output (in mA)) + Offset

And, to convert to feet of water

Feet H_2O = PSIG * 2.3073

measurement
SPECIALTIES
34 Research Drive, Hampton, VA 23666 USA
757-865-1243, Toll Free 800-328-3665
Fax 757-865-8744
E-mail sales@PressureSystems.com
www.PressureSystems.com
online orders www.LevelandPressure.com

Technical
specification

ENM-10 Level regulator

FLYGT
a xylem brand

Table of Contents

PRODUCT DESCRIPTION....2
Product description....2

CHEMICAL RESISTANCE LIST....6
Chemical resistance list....6

PRODUCT RANGE....8
Product range....8

PRODUCT DESCRIPTION

Product description

The simplest possible method for level control! A mechanical switch in a plastic casing, freely suspended at the desired height from its own cable. When the liquid level reaches the regulator, the casing will tilt and the mechanical switch will close or break the circuit, thereby starting or stopping a pump or actuating an alarm device. No wear, no maintenance! In sewage pumping stations, for ground water and drainage pumping – in fact, for most level control applications – the ENM-10 is the ideal solution.

The regulator casing is made of polypropylene and the cable is sheathed with a special PVC or Nitrile/PVC rubber compound. The plastic components are welded and screwed together. Adhesive is never used. Impurities and deposits will not adhere to the smooth casing.

This level regulator is available in different versions, depending upon the medium in which it is to be used. As standard, the regulator can be obtained with 6, 13, 20, 30 or 50 metres (20, 42, 65, 100 or 167 feet) of cable for liquids with specific density between 0.95 and 1.10 g/cm3; for other specific densities and for the Ex-version, the regulator is only available with 20 metres (65 ft) of cable. The regulator can withstand up to 60°C (140°F).

Technical data

Liquid temperature:	min. 0°C (32°F) max. 60°C (140°F)
Liquid density:	min. 0.65 g/cm^3 max. 1.5 g/cm^3
Degree of protection:	IP68, 20 m (65 ft)
Interrupting capacity of micro switch:	AC, resistive load, 250V 10A AC, inductive load, 250V 3A cos ϕ = 0.5 DC, 30V 5A
With gold plated micro switch:	same as above, except: DC, 24V 10mA

Note that local regulations may limit the voltage.

Materials

Body:	Body:
Bending relief:	EPDM rubber
Cable:	special compound PVC or NBR/PVC nitrile/PVC rubber

Dimensions

Table 1

For density g/cm^3	Regulator length mm (in.)	Diameter mm (in.)
0.65–0.80	194 (7 10/16)	100 (4)
0.80–0.95	177 (7)	100 (4)
0.95–1.10	162 (6 3/8)	100 (4)
1.05–1.20	142 (5 9/16)	100 (4)
1.20–1.30	133 (5 1/4)	100 (4)

For density g/cm^3	Regulator length mm (in.)	Diameter mm (in.)
1.30–1.40	130 (5 2/16)	100 (4)
1.40–1.50	126 (5)	100 (4)

Weight: approx. 2 kg (4.5 lb) for a standard density regulator with 20 m cable.

Approvals: CE, CSA, SEMKO, NEMKO, DEMKO

LVD approval according to EN61058

CSA approval: Cert no. 1330172

Cl.I Zone 0, Gr. IIC;

CL.I Div.1 Gr A, B, C&D;

Cl.II Gr. E, F&G;

Cl.III when installed to the certified Intrinsically Safe relay, Ex ia, rated for the locations per submitter controll drawing and installation manual.

Intrincically safe circuits are required for the automatic control system. - Use a EX-safety barrier (e.g. Prod. no. 84 01 07).

0080

Figure 1

Wiring alternative

To conform to local regulations, the level regulators are normally connected through a transformer to a low-tension control circuit.

Two regulators are used; one for starting and one for stopping. A third regulator can be connected if an alarm is required at a given level.

Identical regulators can be used for all functions.

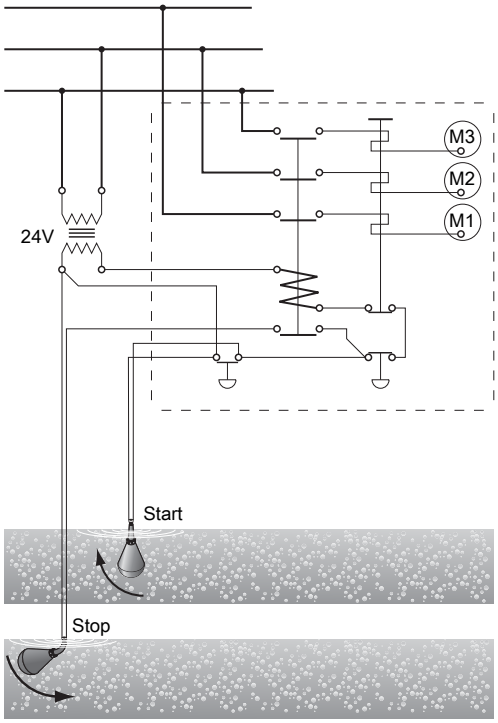

Connect the gray and black leads.

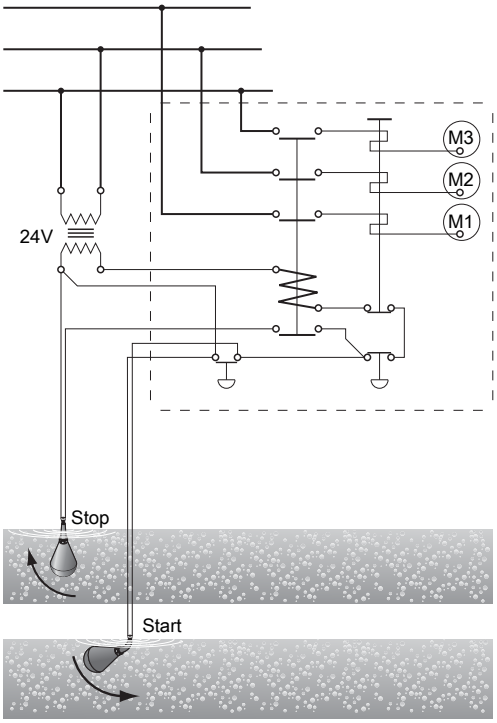

Connect the gray and brown leads.

Insulate the brown lead.
Figure 2: Connected for emptying

Insulate the black lead.
Figure 3: Connected for emptying

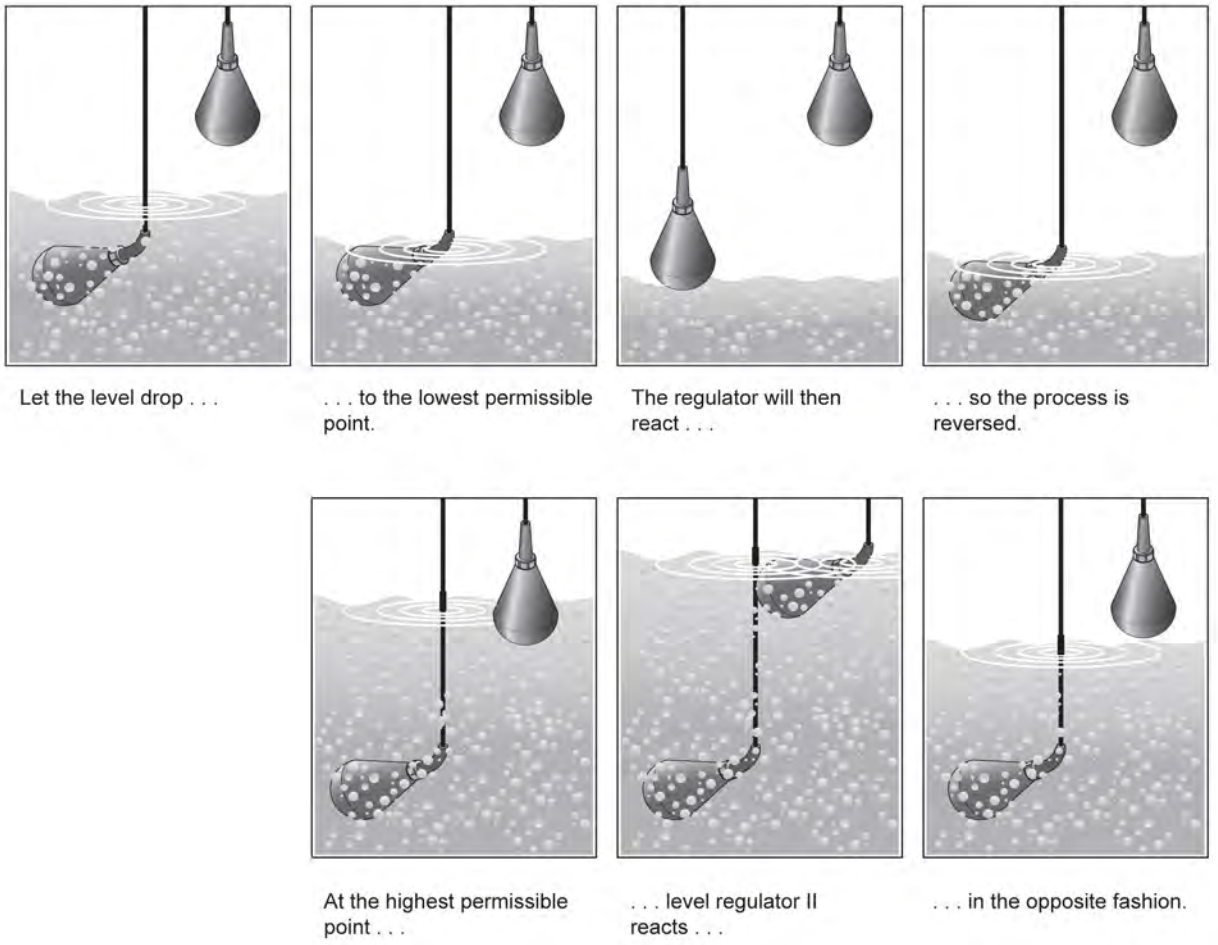

Figure 4

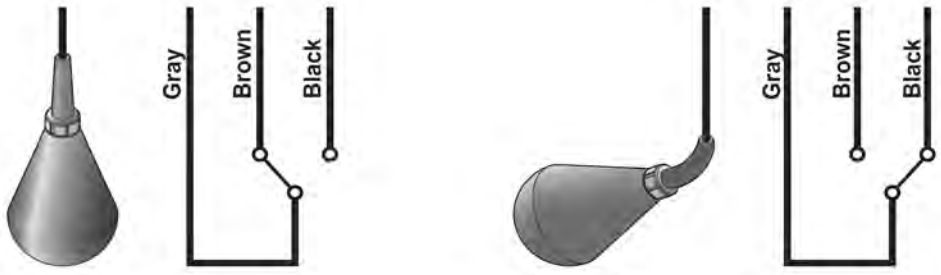

Figure 5: Colour code

Maintenance and repair

ENM-10 is very durable and practically maintenance free. You only have to check on it occasionally, to ensure its continual operation.

- It is recommended to occasionally clean ENM-10, and especially when fat/grease covers the plastic surface.
- At the same time, make an occular inspection of the regulator to make sure neither cable, protective sleeve or plastic casing show any signs of damage.

- A damaged ENM-10 cannot be repaired in any way, due to the hermetic encapsulation. If the unit is found to be damaged, replace it with a new one.
- For Ex-installations, also make absolutely sure that the Ex-barrier (e.g. Prod. no. 84 01 07) is operating correctly - The LED changes when the switch is toggled.

The manufacturers reserve the right to alter performance specification or design without notice.

CHEMICAL RESISTANCE LIST

Chemical resistance list

The liquid in which level regulation is practiced most frequently is, of course, water. Of the millions of regulators in use all over the world today, it is estimated that nine out of ten work in water.

However, with a float body of polypropylene, a cable of PVC or NBR/PVC nitrile/PVC rubber and a bending relief of EPDM rubber, the ENM-10 is virtually insensitive to many aggressive liquids.

The table shows how resistant the ENM-10 equipped with either PVC or NBR/PVC nitrile/PVC rubber cable, is to different chemicals at two different temperatures.

The classification is broken down into the following categories:

0 = No effect, 1 = Minor to moderate and 2 = Severe effect. The sign – means that information is not available.

Keep in mind also that the density of the liquid determines the bouyancy of the regulator. The ENM-10 is made for seven different densities. See *Product description* (page 2).

Always observe local regulations:

Take particular note of:

- risk of fire/explosion
- hygiene requirements

Acids	PVC cable		NBR/PVC nitrile/PVC rubber cable	
	20°C (68°F)	60°C (140°F)	20°C (68°F)	60°C (140°F)
Acetic Acid 50%	1	2	0	0
Acetic Acid 75%	2	2	0	0
Benzoic Acid	2	2	0	0
Boric Acid 5%	0	—	0	0
Butyric Acid	2	2	2	2
Chromic Acid 10%	0	2	2	2
Citric Acid	0	1	0	0
Hydrobromic Acid 5%	1	2	0	0
Hydrochloric Acid 10%	0	1	0	1
Hydrochloric Acid 37%	1	2	0	2
Hydrocyanic Acid 10%	0	0	1	2
Hydrofluoric Acid 5%	0	2	0	1
Hypochloric Acid	1	2	2	2
Maleic Acid	2	2	2	2
Nitric Acid 5%	1	1	1	1
Nitric Acid 65%	2	2	2	2
Oleic Acid	1	2	2	2
Oxalic Acid 50%	1	1	1	2
Phosphoric Acid 25%	0	0	1	2
Phosphoric Acid 85%	0	0	1	2
Sulphuric Acid 10%	1	2	1	2
Sulphuric Acid 78%	2	2	2	2
Tannic Acid	0	0	0	0
Tartaric Acid	1	1	1	1
Bases				
Ammonium Hydroxide	0	—	0	0
Calcium Hydroxide	0	0	0	0
Potassium Hydroxide	1	2	0	0
Sodium Hydroxide	1	2	0	0

Salts	PVC cable		NBR/PVC nitrile/PVC rubber cable	
	20°C (68°F)	60°C (140°F)	20°C (68°F)	60°C (140°F)
Aluminium Chloride	0	0	0	0
Calcium Sulphate	0	0	0	0
Calcium Chloride	0	0	0	0
Calcium Nitrate	0	0	0	0
Copper Chloride	0	0	0	0
Copper Sulphate	0	0	0	0
Ferric Chloride	0	0	0	0
Ferrous Sulphate	0	0	0	0
Magnesium Chloride	0	0	0	0
Potassium Sulphate	0	0	0	0
Potassium Nitrate	0	0	0	0
Potassium Carbonate	1	1	1	1
Potassium Bicarbonate	0	0	0	0
Sodium Sulphate	0	0	0	0
Sodium Chloride	0	0	0	0
Sodium Nitrate	0	0	0	0
Sodium Bicarbonate	0	0	0	0
Sodium Carbonate	0	0	0	0
Tin Chloride	1	1	1	1
Zinc Sulphate	0	0	0	0
Zinc Chloride	0	0	0	0
Oils				
Castor Oil	1	1	1	1
Cocoanut Oil	0	—	0	2
Corn Oil	2	2	2	2
Diesel Oil	2	2	2	2
Linseed Oil	2	2	2	2
Mineral Oils	2	2	2	2
Olive Oil	1	1	1	1
Silicone Oils	0	0	0	0

Solvents and miscellaneous	PVC cable		NBR/PVC nitrile/PVC rubber cable	
	20°C (68°F)	60°C (140°F)	20°C (68°F)	60°C (140°F)
Aceton	2	2	2	2
Aniline	2	2	1	2
Benzene	2	2	2	2
Butyl Alcohol	2	2	0	1
Carbon Tetrachloride	2	2	2	2
Chlorobenzene	2	2	2	2
Chloroform	2	2	2	2
Ethyl Alcohol	2	2	0	1
Ethyl Ether	2	2	2	2
Ethyl Acetate	2	2	2	2
Ethylene Dichloride	2	2	2	2
Ethylene Chloride	2	2	2	2
Formaldehyde 37%	1	2	0	0
Gasoline	2	2	2	2
Kerosene	2	2	2	2
Methyl Alcohol	2	2	0	0
Methyl Ethyl Ketone	2	2	2	2
Methylene Chloride	2	2	2	2
Nitrobenzene	2	2	2	2
Phenol	2	2	2	2
Toluene	2	2	2	2
Trichlorethylene	2	2	2	2
Turpentine	2	2	2	2
Xylene	2	2	2	2
Gases				
Carbon Dioxide	0	0	0	0
Carbon Monoxide	0	0	0	0
Chlorine (wet)	2	2	2	2
Hydrogen Sulphide	0	0	1	1
Sulphur Dioxide (wet)	1	1	2	2

0 = No effect, 1 = Minor to moderate, 2 = Severe effect. – = No information available.

Figure 6

PRODUCT RANGE

Product range

Part no.	For density [g/cm³]	Color of level switch	Type of cable	Cable length [m]	Approvals	For market	Notes
5828800	0,65-0,80	Blue	1	20	CE		
5828801	0,80-0,95	Blue	1	20	CE		
5828802	0,95-1,10	Blue	1	6	CE		
5828803	0,95-1,10	Blue	1	13	CE		
5828804	0,95-1,10	Blue	1	20	CE		
5828805	1,05-1,20	Blue	1	20	CE		
5828806	1,2-1,3	Blue	1	20	CE		
5828807	1,3-1,4	Blue	1	20	CE		
5828808	1,4-1,5	Blue	1	20	CE		
5828809	0,65-0,80	Grey	5	20	CSA/CE	Canada	
5828810	0,80-0,95	Grey	5	20	CSA/CE	Canada	
5828811	0,95-1,10	Grey	5	6	CSA/CE	Canada	
5828812	0,95-1,10	Grey	5	13	CSA/CE	Canada	
5828813	0,95-1,10	Grey	5	20	CSA/CE	Canada	
5828814	1,05-1,20	Grey	5	20	CSA/CE	Canada	
5828815	1,2-1,3	Grey	5	20	CSA/CE	Canada	
5828816	1,3-1,4	Grey	5	20	CSA/CE	Canada	
5828817	1,4-1,5	Grey	5	20	CSA/CE	Canada	
5828818	0,65-0,80	Grey	1	20	CSA/CE	Canada	
5828819	0,80-0,95	Grey	1	20	CSA/CE	Canada	
5828820	0,95-1,10	Grey	1	6	CSA/CE	Canada	
5828821	0,95-1,10	Grey	1	13	CSA/CE	Canada	
5828822	0,95-1,10	Grey	1	20	CSA/CE	Canada	
5828823	1,05-1,20	Grey	1	20	CSA/CE	Canada	
5828824	1,2-1,3	Grey	1	20	CSA/CE	Canada	
5828825	1,3-1,4	Grey	1	20	CSA/CE	Canada	
5828826	1,4-1,5	Grey	1	20	CSA/CE	Canada	
5828827	0,65-0,80	Blue	2	20	CE	USA	
5828828	0,80-0,95	Blue	2	20	CE	USA	
5828829	0,95-1,10	Blue	2	6	CE	USA	
5828830	0,95-1,10	Blue	2	13	CE	USA	
5828831	0,95-1,10	Blue	2	20	CE	USA	
5828832	1,05-1,20	Blue	2	20	CE	USA	
5828833	1,2-1,3	Blue	2	20	CE	USA	
5828834	1,3-1,4	Blue	2	20	CE	USA	
5828835	1,4-1,5	Blue	2	20	CE	USA	
5828836	0,95-1,10	Grey	5	30	CSA/CE	Canada	
5828837	0,95-1,10	Grey	5	50	CSA/CE	Canada	
5828838	0,95-1,10	Grey	5	100	CSA/CE	Canada	
5828839	0,95-1,10	Grey	5	150	CSA/CE	Canada	
5828851	0,95-1,10	Red	3	65	CE		
5828852	0,95-1,10	Red	3	6	CE		
5828853	0,95-1,10	Red	3	13	CE		
5828854	0,95-1,10	Red	3	20	CE		
5828855	0,95-1,10	Red	3	6	CSA/CE	Canada	
5828856	0,95-1,10	Red	3	13	CSA/CE	Canada	
5828857	0,95-1,10	Red	3	20	CSA/CE	Canada	

Cont. →

Figure 7

5828858	0,95-1,10	Red	4	6	CE	USA	
5828859	0,95-1,10	Red	4	13	CE	USA	
5828860	0,95-1,10	Red	4	20	CE	USA	
5828870	0,65-0,80	Blue	5	20	CE		
5828871	0,80-0,95	Blue	5	20	CE		
5828872	0,95-1,10	Blue	5	6	CE		
5828873	0,95-1,10	Blue	5	13	CE		
5828874	0,95-1,10	Blue	5	20	CE		
5828875	1,05-1,20	Blue	5	20	CE		
5828876	1,2-1,3	Blue	5	20	CE		
5828877	1,3-1,4	Blue	5	20	CE		
5828878	1,4-1,5	Blue	5	20	CE		
5828879	0,95-1,10	Blue	1	65	CE		
5828880	0,95-1,10	Blue	1	30	CE		
5828881	0,95-1,10	Blue	1	50	CE		
5828882	0,95-1,10	Grey	1	30	CSA/CE	Canada	
5828883	0,95-1,10	Grey	1	50	CSA/CE	Canada	
5828884	0,95-1,10	Blue	2	30	CE	USA	
5828885	0,95-1,10	Blue	2	50	CE	USA	
5828886	0,95-1,10	Red	3	30	CE		
5828887	0,95-1,10	Red	3	50	CE		
5828890	0,95-1,10	Blue	5	30	CE		
5828891	0,95-1,10	Blue	5	50	CE		
5828892	0,95-1,10	Red	3	6	CE	Japan	
5828893	0,95-1,10	Red	3	13	CE	Japan	
5828894	0,95-1,10	Red	3	20	CE	Japan	
5828895	0,95-1,10	Blue	1	6	CE	Japan	
5828896	0,95-1,10	Blue	1	13	CE	Japan	
5828897	0,95-1,10	Blue	1	20	CE	Japan	
5828898	0,95-1,10	Blue	1	50	CE	Japan	
5947919	0,95-1,10	Blue	5	20	CE		Designed for low current and slow movements
5947920	0,95-1,10	Grey	5	20	CSA/CE		Designed for low current and slow movements

Type of cable:

1. Blue PVC jacket with color coding of wires: Grey/Brown/Black
2. Blue PVC jacket with color coding of wires: Red/White/Black
3. Red PVC jacket with color coding of wires: Grey/Brown/Black
4. Red PVC jacket with color coding of wires: Red/White/Black
5. BLACK NBR/PVC jacket with color coding of wires: Grey/Brown/Black (NBR=Nitrile rubber)

Xylem |ˈzīləm|

1) The tissue in plants that brings water upward from the roots
2) A leading global water technology company

We're 12,000 people unified in a common purpose: creating innovative solutions to meet our world's water needs. Developing new technologies that will improve the way water is used, conserved, and re-used in the future is central to our work. We move, treat, analyze, and return water to the environment, and we help people use water efficiently, in their homes, buildings, factories and farms. In more than 150 countries, we have strong, long-standing relationships with customers who know us for our powerful combination of leading product brands and applications expertise, backed by a legacy of innovation.

For more information on how Xylem can help you, go to xyleminc.com

xylem
Let's Solve Water

Xylem Water Solutions AB
Gesällvägen 33
174 87 Sundbyberg
Sweden
Tel. +46-8-475 60 00
Fax +46-8-475 69 00
http://tpi.xyleminc.com

Visit our Web site for the latest version of this document and more information

The original instruction is in English. All non-English instructions are translations of the original instruction.

© 2011 Xylem Inc

891480_11.1_en.GB_2012-01_TS_ENM-10

GWTS Equipment

Installation Manual Pub. 0300277-02 Rev. B

InView Message Displays

Catalog Number: Catalog Number 2706-P22-SC, 2706-P42-SC, 2706-P44-SC, 2706-P72-SC, 2706-P74-SC, 2706-P92-SC, 2706-P92C2, 2706-P94-SC 2706-P94C2

SPECTRUM
CONTROLS

About This Publication

This publication describes the InView Display Modules.

Appendix A describes installing, wiring , and additional language messaging format codes for the 2706-P92C2 and 2706-P94C2 displays.

Important User Information

Solid state equipment has operational characteristics differing from those of electromechanical equipment. Because of this difference, and also because of the wide variety of uses for solid state equipment, all persons responsible for applying this equipment must satisfy themselves that each intended application of this equipment is acceptable.

In no event will Spectrum Controls, Inc. be responsible or liable for indirect or consequential damages resulting from the use or application of this equipment.

The examples and diagrams in this manual are included solely for illustrative purposes. Because of the many variables and requirements associated with any particular installation, Spectrum Controls, Inc. cannot assume responsibility or liability for actual use based on the examples and diagrams.

No patent liability is assumed by Spectrum Controls, Inc. with respect to use of information, circuits, equipment, or software described in this manual.

Reproduction of the contents of this manual, in whole or in part, without written permission of Spectrum Controls, Inc., is prohibited.

Throughout this manual, when necessary, we use notes to make you aware of safety considerations.

EXPLOSION HAZARD	Identifies information about practices or circumstances that can cause an explosion in a hazardous environment, which may lead to personal injury or death, property damage, or economic loss.
NOTE	Identifies information that is critical for successful application and understanding of the product.
WARNING	Identifies information about practices or circumstances that can lead to personal injury or death, property damage, or economic loss. Warnings help you to identify a hazard, avoid a hazard, and recognize the consequences.
SHOCK HAZARD	Labels may be on or inside the equipment, for example, a drive or motor, to alert people that dangerous voltage may be present.
BURN HAZARD	Labels may be on or inside the equipment, for example, a drive or motor, to alert people that surfaces may reach high temperatures.

AVERTISSEMENT	Actions ou situations risquant de provoquer une explosion dans un environnement dangereux et d'entraîner des blessures pouvant être mortelles, des dégâts matériels ou des pertes financières.
NOTE	Informations particulièrement importantes dans le cadre de l'utilisation du produit.
ATTENTION	Actions ou situations risquant d'entraîner des blessures pouvant être mortelles, des dégâts matériels ou des pertes financières. Les messages « Attention » vous aident à identifier un danger, à éviter ce danger et en discerner les conséquences.
DANGER D'ÉLECTROCUTION	Les étiquettes ci-contre, placées sur l'équipement ou à l'intérieur (un variateur ou un moteur, par ex.), signalent la présence éventuelle de tensions électriques dangereuses.
RISQUE DE BRÛLLURE	Les étiquettes ci-contre, placées sur l'équipement ou à l'intérieur (un variateur ou un moteur, par ex.), indiquent au personnel que certaines surfaces peuvent atteindre des températures particulièrement élevées.

Table of Contents

ABOUT THIS PUBLICATION II
IMPORTANT USER INFORMATION II
CHAPTER 1 INSTALLING INVIEW MARQUEE MESSAGE DISPLAY 1-1
INTRODUCTION 1-1
WIRE AND SAFETY GUIDELINES 1-1
CHANGE THE SERIAL ADDRESS 1-2
CHECKOUT PROCEDURE 1-2
MOUNT THE 2706-P42-SC AND 2706-P44-SC DISPLAYS 1-7
MOUNT THE 2706-P72-SC AND 2706-P74-SC SERIES NEMA 4 AND 4X MODELS 1-15
MOUNT THE 2706-P92-SC AND 2706-P94-SC DISPLAYS 1-19
ELECTRICAL CONNECTIONS FOR 2706-P92-SC AND 2706-P94-SC SIGNS 1-21
MOUNT THE 2706-P22-SC DISPLAY 1-24
PANEL CUTOUT DIMENSIONS FOR 2706-P22-SC DISPLAY 1-25
ELECTRICAL CONNECTIONS FOR 2706-P22-SC DISPLAY 1-25
COMMUNICATION CONNECTIONS FOR 2706-P22-SC DISPLAY 1-26
DIP SWITCH SETTINGS FOR 2706-P22-SC DISPLAY 1-27
DOWNLOAD A MESSAGE APPLICATION 1-28
RS-232 TO RS-485 NETWORKING 1-29
RS-485 ECHO 1-29
GLOBAL ADDRESSING 1-30
GROUND AND TERMINATE THE RS-485 NETWORK 1-30
CHAPTER 2 INVIEW SYSTEM CONNECTIVITY 2-1
SERIAL ASCII COMMUNICATIONS 2-1
FEATURES 2-1
DIP SWITCH INFORMATION FOR THE 2706-P9*X*-SC 2-5
POWER-UP MESSAGES 2-10
DISPLAY SETUP 2-10
SET THE IP ADDRESS 2-11
GATEWAY ADDRESS AND SUBNET MASK SETUP 2-13
CREATE THE MESSAGE FILE 2-14
CHAPTER 3 SERIAL ASCII COMMUNICATIONS 3-1
USE A PLC5 OUT CHANNEL ZERO 3-1
USE AN SLC 5/03, 5/04, OR 5/05 OUT CHANNEL ZERO 3-2
USE A MICROLOGIX OUT CHANNEL ZERO OR ONE 3-3

USE CONTROLLOGIX PROCESSOR OUT CHANNEL ZERO 3-4
USE THE COMPACTLOGIX PROCESSOR OUT CHANNEL ZERO OR ONE 3-5
USE FLEXLOGIX PROCESSOR OUT CHANNEL ZERO 3-6
CHAPTER 4 INVIEW PROTOCOL 3-1
INTRODUCTION 3-1
TRIGGER MESSAGE AND UPDATE VARIABLES 3-1
THE CTRL-T FUNCTION FRAME 3-1
EXAMPLES OF THE CONTROL-T FUNCTION 3-5
EXAMPLES OF THE CONTROL-V FUNCTION 3-8
UPDATE VARIABLE ON A SPECIFIC DISPLAY 3-9
MODBUS ASCII PROTOCOL TO DOWNLOAD AND PREVIEW MESSAGES 3-9
HOW INVIEW SIGN COMMUNICATION PROTOCOL IS USED WITH MODBUS ASCII PROTOCOL 3-9
EXAMPLES OF MODBUS ASCII FUNCTIONS 3-15
INVIEW DISPLAY COMMUNICATION PROTOCOL FUNCTIONS AND DESCRIPTIONS 3-33
INVIEW MESSAGE FORMAT USED WITHIN MODBUS ASCII PROTOCOL 3-33
ASCII CHARACTERS 3-44
REFERENCE MATERIAL 3-45
CHAPTER 5 INVIEW CONTROL AND INVIEW CONTROL API 5-1
INTRODUCTION 5-1
QUICK OVERVIEW 5-1
REFERENCE 5-1
PROPERTIES 5-2
METHODS 5-2
PROPERTIES 5-4
METHODS 5-8
CATALOG NUMBER EXPLANATION 5-18
TEMPERATURE PROTECTION IN NEMA-RATED ENCLOSURES 5-19
ADDITIONAL RESOURCES 5-20
GETTING TECHNICAL ASSISTANCE 5-20
APPENDIX A: INSTALLING INVIEW MARQUEE 2706-P92*X*C2-SC MESSAGE DISPLAYS A-1
OVERVIEW A-1
WIRE AND SAFETY GUIDELINES A-1
DESCRIPTION OF THE 2706-P92C2-SC AND 2706-P94C2-SC DISPLAYS A-1
MOUNTING THE 2706-P92C2-SC AND 2706-P94C2-SC DISPLAYS A-2
WIRING THE 2706-P92C2-SC AND 2706-P94-SC DISPLAYS A-4
SPECIFICATIONS A-7
2706-P9*X*C2 DISPLAY LANGUAGE MESSAGE FORMATTING CODES A-8

ADDITIONAL RESOURCES **A-9**

GETTING TECHNICAL ASSISTANCE **A-9**

Chapter 1 Installing InView Marquee Message Display

Introduction

These instructions show you how to change the serial address, and how to mount InView series signs with NEMA Types 4, 4X, and 12 enclosures. These signs are intended for indoor or outdoor use depending on the NEMA standard.

- Type 4 enclosures are intended to provide a degree of protection against windblown dust and rain, splashing water, and hose-directed water.
- Type 4X enclosures are intended to provide a degree of protection against corrosion, windblown dust and rain, splashing water, and hose-directed water.
- Type 12 enclosures are in a sealed case that is, dust free, gasketing, and spray-down resistant.

Wire and Safety Guidelines

Install the InView display conforming to NFPA 70E, Electrical Safety Requirements for Employee Workplaces. In addition to the NFPA general guidelines, refer to the following.

- Careful cable routing helps minimize electrical noise. Route incoming power to the module by a separate path from the communication cables.

NOTE You can configure your InView Messaging software without having an InView display connected.

- Where communication and wire paths must cross, make their intersection perpendicular.
- Grounding helps limit the effects of noise due to electromagnetic interference (EMI). To avoid problems caused by EMI, properly ground all equipment and use shielded cables.

EXPLOSION HAZARD	Identifies information about practices or circumstances that can cause an explosion in a hazardous environment, which may lead to personal injury or death, property damage, or economic loss.

AVERTISSEMENT	Actions ou situations risquant de provoquer une explosion dans un environnement dangereux et d'entraîner des blessures pouvant être mortelles, des dégâts matériels ou des pertes financières.

NOTE	Power wiring must be in accordance with Class I, Class II and Class III Division 2 wiring methods (Articles 501-4(b), 502-4(b) and 503-3(b) of the National Electrical Code, NFPA 70) and in accordance with the local authority having jurisdiction.

Change the Serial Address

A serial address for an InView sign is a number from 1 to 254 in hexadecimal (01 to FE). All signs leave the factory with a default address of 1 or 01.

This serial address is resident in the InView display and is used for RS-485 networking. If one of the factory network communications modules are used (2706-P*xxx*-SC*x*), this serial address is typically left at its factory default and the network node or IP address is set in the factory network communication module.

Checkout Procedure

After you install a sign according to the Electrical and Mounting Instructions, make sure the sign is installed properly by applying power to it. The following information should be displayed on the sign.

- Firmware part number and version letter (*xxxx*).
- Amount of RAM in the sign, (256 K).
- Serial address of the sign (a number from 01 to FE or from 1 to 254).

WARNING	**Hazardous voltage.** **Contact with high voltage may cause death or serious injury.** Always disconnect power to sign prior to servicing.

AVERTISSEMENT	**Tension dangereuse.** Tout contact avec une tension élevée peut entraîner la mort ou des blessures graves. Déconnectez toujours l'alimentation de l'afficheur avant toute opération de maintenance.

To connect the 2706-P42-SC and 2706-P44-SC displays:

1. Remove the power supply cover by unscrewing its six screws.
   Save the screws for a later step.

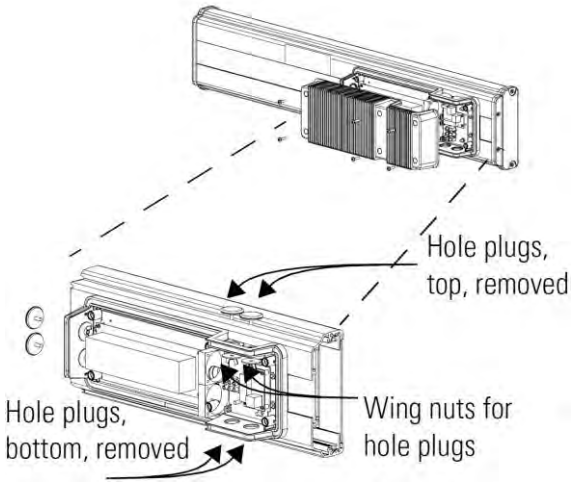

NOTE

It is recommended that you install power and serial wires at the bottom of the power supply enclosure to reduce noise from power wires crossing serial wires.

You can install the power or serial wires at the top of the enclosure if necessary.

2. Remove the left or right conduit hole plug from the top of the enclosure by removing its wing nut inside the enclosure.
   Save the hole plug for a later step.
3. Insert the power wires through the left conduit hole on either the top or the bottom of the sign.

NOTE

Use watertight conduit connectors only.

Also, only use flexible conduit.

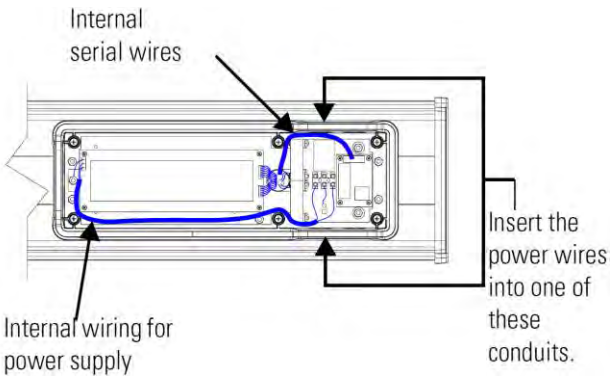

4. Strip the wires back 6.35 mm (1/4-in.). Connect the incoming electrical wires.

NOTE Be sure to place the wires so they are not caught by screws when replacing the power supply cover, and also so that they do not interfere with fan operation.

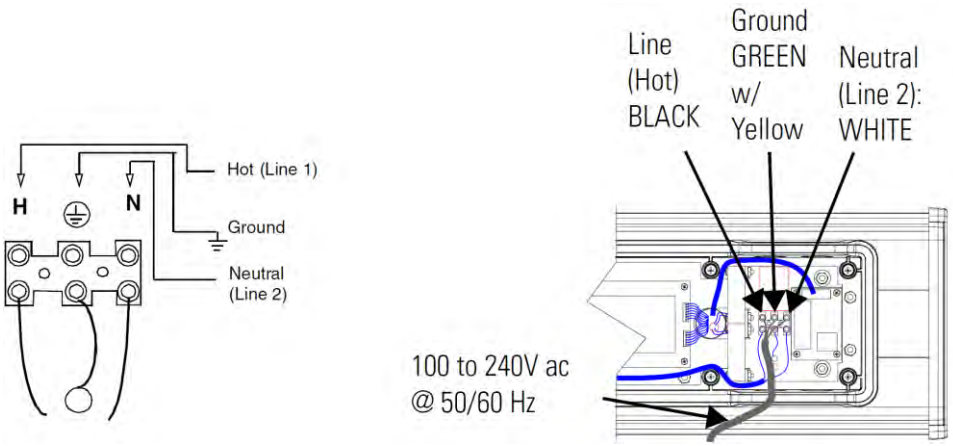

5. Insert the serial wires through the right conduit hole on either the top or the bottom of the sign.

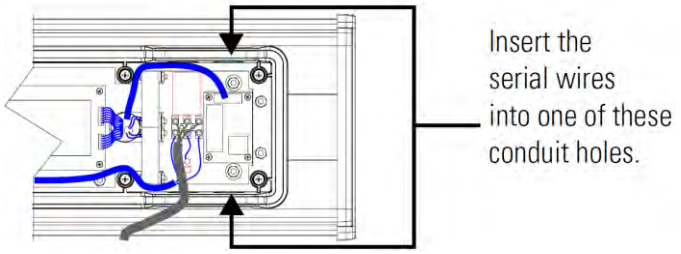

NOTE TB1 may be used for incoming serial connections for RS-232 or RS-485.

TB1-Full

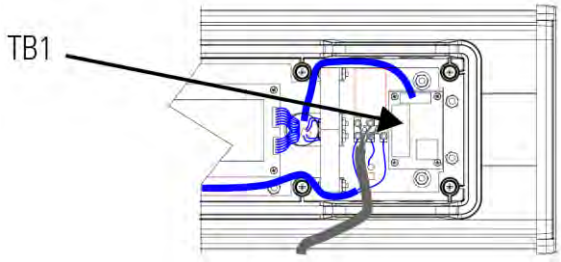

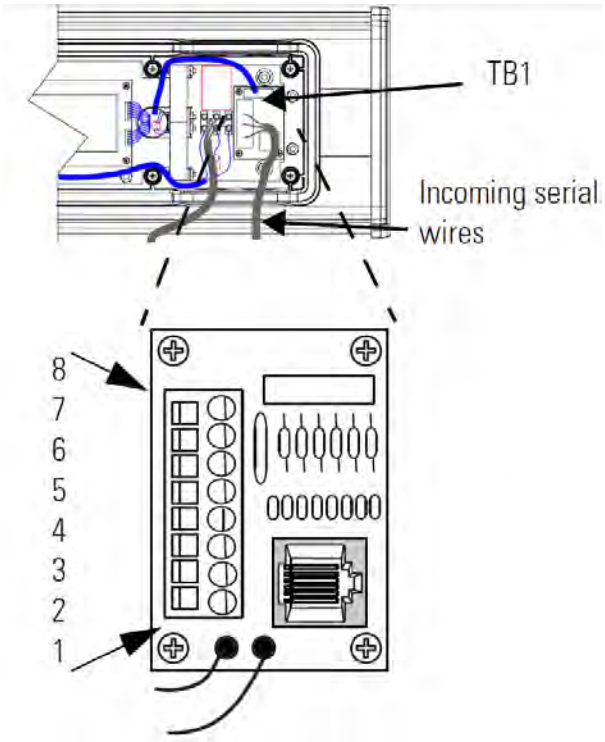

Pin	Pin Name	Pin	Pin Name
1	GND	5	RS-485+
2	+5V	6	RS-485-
3	RS-232 TX	7	NC
4	RS-232 RX	8	Shield

6. Connect the incoming serial wires.
   TB1 may be used for incoming RS-232 or RS-485 serial connections. They cannot be connected at the same time. RS-485 is recommended to reduce undesirable electrical interference.

NOTE Be sure to place the wires so they are not caught by screws when replacing the power supply cover, and also so that they do not interfere with fan operation.

TB1-RS-232

Pin	Pin Name	Pin	Pin Name
1	NC	5	RS-485+
2	NC	6	RS-485-
3	NC	7	NC
4	NC	8	Shield

TB1-RS-485

Pin	Pin Name	Pin	Pin Name
1	GND	5	NC
2	+5 V	6	NC
3	RS-232 TX	7	NC
4	RS-232 RX	8	NC

7. P1 can be used for incoming RS-232 only, although it is optional and not recommended.
   P1 is intended for RS-232 application downloads and RS-485 terminating resistor connection.
   See 0100215-02_A0(INSTALLATION_INSTRUCTIONS_2706-IN007B-EN-P) for more information about RS-485 end-of-line, terminating resistors.

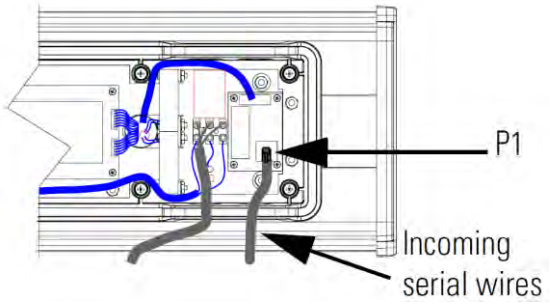

NOTE Be sure to place the wires so they are not caught by screws when replacing the power supply cover, and also so that they do not interfere with fan operation.

To maintain NEMA compliance, and to prevent EMI emissions, install hole plugs in any open conduit holes in the power supply enclosure. If needed, an extra hole plug is shipped with the sign, in addition to any hole plugs removed in step 2 of this procedure.

8. Replace the power supply cover using the 6 screws removed when the cover was removed.
9. Torque the screws to 2.7 Nm (24-lb in.).
10. Connect the power cable to a power source.

Mount the 2706-P42-SC and 2706-P44-SC Displays

NOTE

Only qualified personnel should install InView displays. InView displays are for indoor use only, and should not be exposed to direct sunlight.

Mounting hardware that is used to hang or suspend signs must be capable of supporting at least four times the total weight of any/all signs mounted together.

To preserve integrity of the case, do not drill holes in, or modify, the case.

WARNING	**Hazardous voltage.** **Contact with high voltage may cause death or serious injury.** Always disconnect power to sign prior to servicing.

WARNING	**Tension dangereuse.** **Tout contact avec une tension élevée peut entraîner la mort ou des blessures graves.** Déconnectez toujours l'alimentation de l'afficheur avant toute opération de maintenance

1. Before you mount a display, disconnect power.

NOTE

Remove only one end cap at a time.

Wall Mount

To mount a display on a wall:

1. Remove the 4 screws and end cap from one end of the sign.

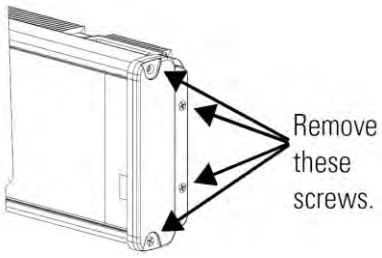

2. Slide one of the wall mounting brackets onto the back of the sign until it is approximately 13 mm (0.5 in.) away from the end of the sign.

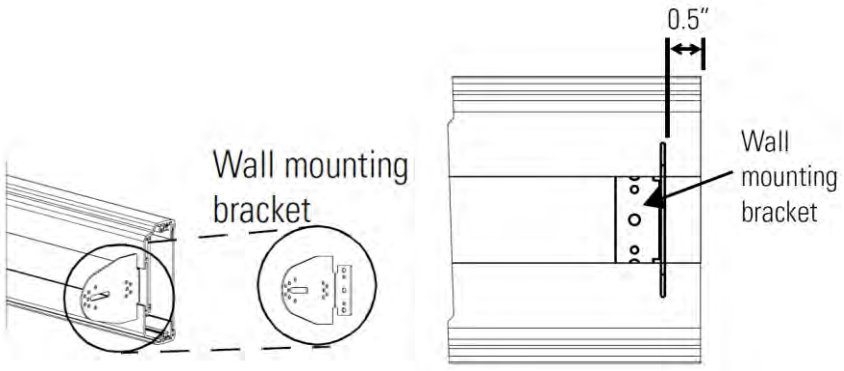

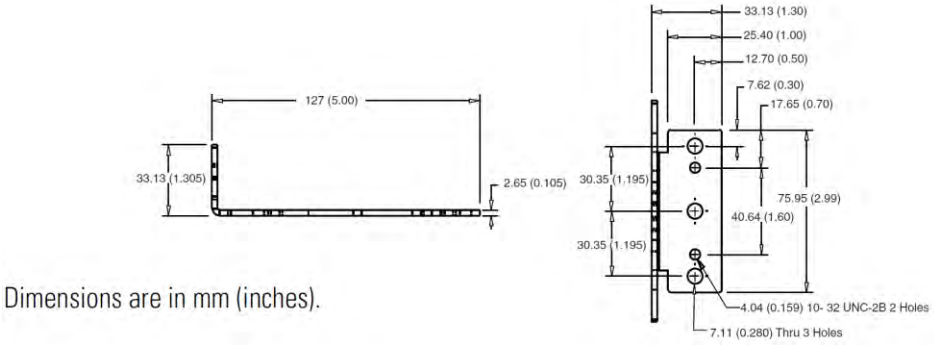

Dimensions are in mm (inches).

3. Use two 10-32 × 1/4 Phillips screws (supplied) to secure the wall mounting bracket to the back of the sign.

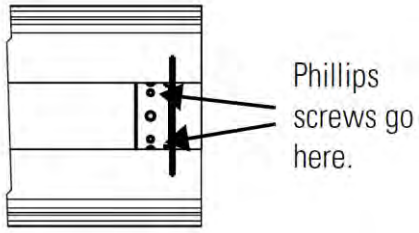

4. Torque the screws to 2.7 Nm (24 lb-in).
5. Replace the end cap using the 4 screws removed in Step 1 above.

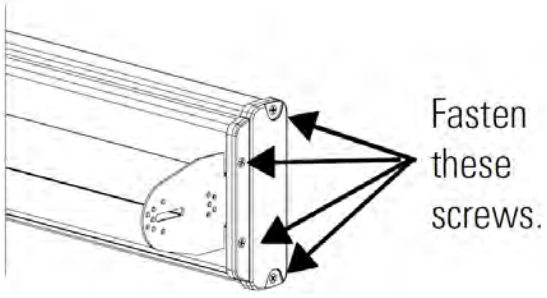

6. Torque the screws to 2.7 Nm (24 lb-in).
7. Repeat Steps 1 to 6 for the other end of the sign.

Approximate distances between the bracket holes, center-to-center, are shown below.

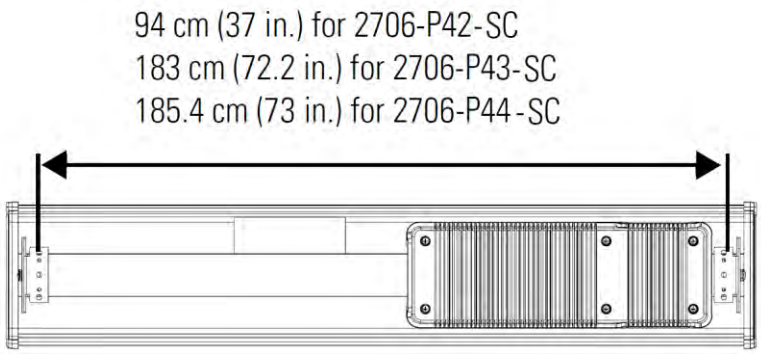

8. Attach the two remaining wall mounting brackets to a wall so that they align with the brackets on the sign.

NOTE Do not install the sign directly to drywall or plaster-board. The sign must be fastened to a wall capable of supporting at least four times the weight of the sign.

9. Connect the mounting brackets on each end of the sign together using a 5/16 Phillips screw and a 5/16 washer through the mounting holes, as shown below, securing with a 5/16 nut.
   Do not tighten the nut at this time.

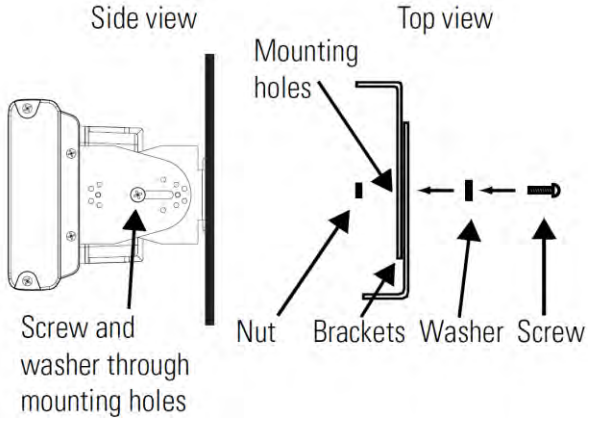

10. Match the alignment holes of the brackets on the sign with the alignment holes of the brackets on the wall so that the sign is at the desired viewing angle.

NOTE The second mounting bracket is shown here for illustration only. It is actually mounted to the wall.

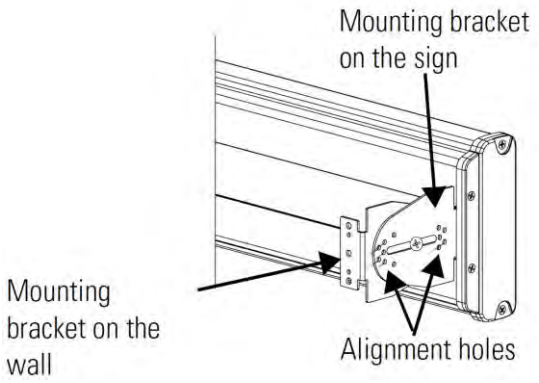

11. Fasten the mounting brackets together using two 10-32 × 3/4 Phillips screws, two 10-32 washers, and two 10-32 lock nuts through selected alignment holes on each end of the sign.
12. Torque the 5/16 nuts in the mounting holes (See Step 9) to 2.7 Nm (24 lb-in).

Ceiling Mount

To mount the display to the ceiling:

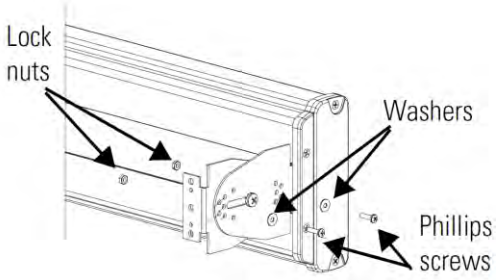

1. Remove one screw from the top of the end cap.

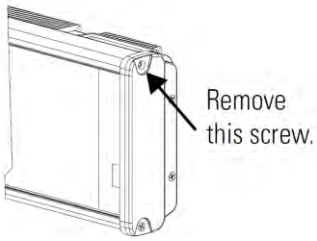

2. Line up a ceiling bracket with the top hole on the sign's end cap so the bracket fits in the indentation.
3. There are left and right ceiling brackets. Use the one that fits with the screw hole's countersunk side facing out.
4. Secure the ceiling bracket with the screw removed in Step 1 and torque the screw to 2.7 Nm (24 in-lb).

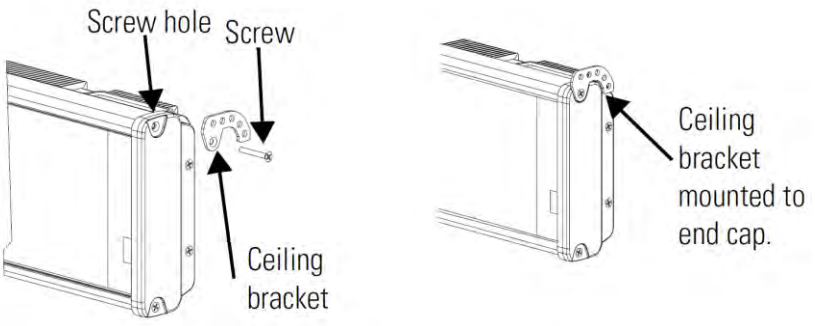

5. Repeat steps 1 through 3 for the other end of the sign.
6. Use chains (not supplied) to hang the sign from a ceiling.

NOTE Use chains capable of supporting 4 times the total weight of the sign(s).

NOTE The hole you select in the ceiling bracket for the chain determines the angle at which the sign hangs.

Stack Mount

NOTE Up to 4 signs can be hung together vertically ('stacked'). Mounting system for stack mounting must support a minimum of four times the total weight of all signs being stacked.

WARNING	**Possible crush Hazard.** **Stacking too many signs may cause signs to fall causing serious injury or death.** Do not stack more than 4 signs.

WARNING	**Danger de chute possible.** **Ils risquent de tomber et d'entraîner des blessures graves voire la mort.** **N'empilez pas plus de 4 afficheurs sinon.**

To stack the signs:

1. Remove the top screw from each end cap of the bottom sign.

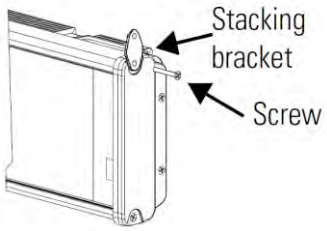

2. Use the screw removed in Step 1 to fasten a stacking bracket to each end cap, countersunk side out, and torque to 2.7 Nm (24 lb-in).
3. Remove the top and bottom screws from each end of the remaining signs.
4. Remove the top and bottom screws from each end of the remaining signs.

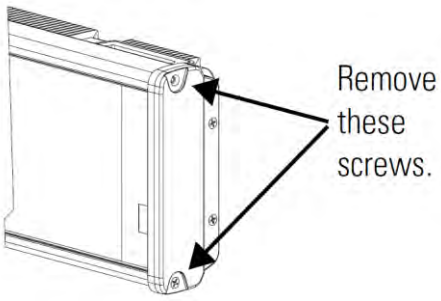

5. For each end of the signs, secure the stacking bracket from the bottom sign to the next sign using one of the screws removed in Step 3 and torque to 2.7 Nm (24 lb-in).

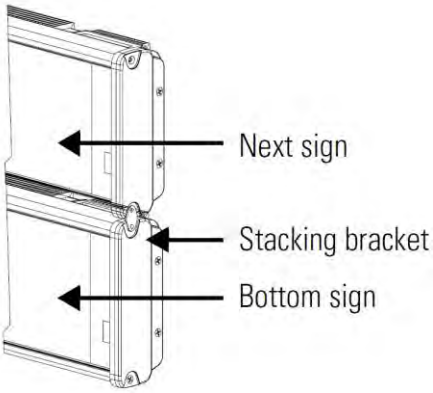

6. Secure a ceiling bracket to the top of each end cap on the top sign. See Step 2 of the Ceiling Mount instruction

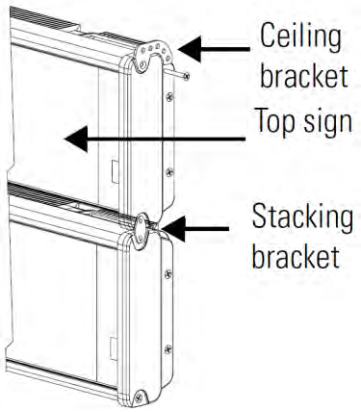

7. Use a chain (not supplied) to hang the signs from the ceiling.
   Follow the notes in Step 4 of the Ceiling Mount instructions.

Back-to-Back Mount

NOTE Remove only one end cap at a time for each sign.

To mount the signs back-to-back:

1. Attach a mounting bracket on each end of the signs and replace the end caps.
   Follow Steps 1 to 5 of the Wall Mount instructions.
2. However, replace only the bottom three screws for each end cap and torque the screws to 2.7 Nm (24 lb-in).
   Do this for each end of both signs.

NOTE Do NOT fasten the top screws to the end caps. The top screws are used to fasten the ceiling mounting brackets to the end caps in the next step

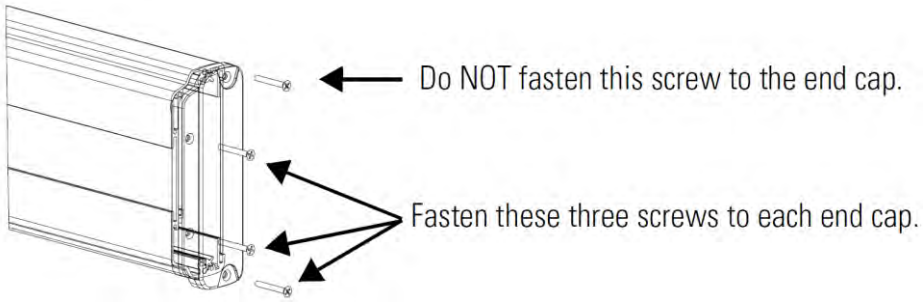

3. Attach ceiling mounting brackets to all the end caps and torque the screws to 2.7 Nm (24 lb-in).
   See Step 2 of the Ceiling Mount instructions.
4. Match the signs together back-to-back and connect them together.

See Step 2 of the Ceiling Mount instructions.

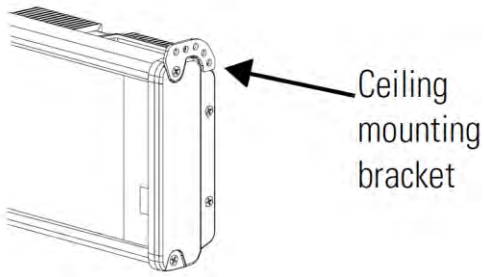

Follow Steps 7 through 10 of the Wall Mount instructions.

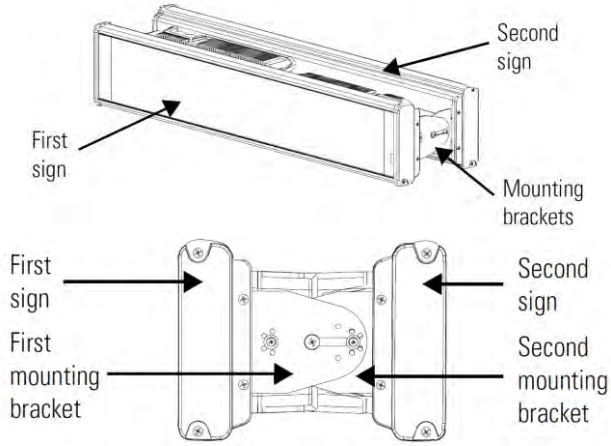

5. Use chains (not supplied) to hang the signs from the ceiling.

NOTE Use chains capable of supporting 4 times the total weight of the sign(s).

Mount the 2706-P72-SC and 2706-P74-SC Series NEMA 4 and 4X Models

To mount the sign:

1. Attach the two sign brackets to a wall, ceiling, or other surface.
   Be sure to place the brackets so the bracket flanges face appropriately as shown below. Mount the brackets the following distance apart (measured from the center of the mounting holes in each bracket):

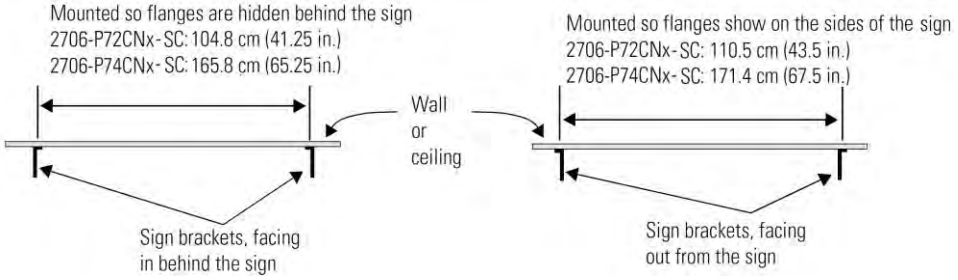

2. Mount the sign on the sign brackets using the two large hex bolts supplied.

NOTE Do not install the sign directly to drywall or plaster-board. The sign must be fastened to a wall capable of supporting at least four times the weight of the sign.

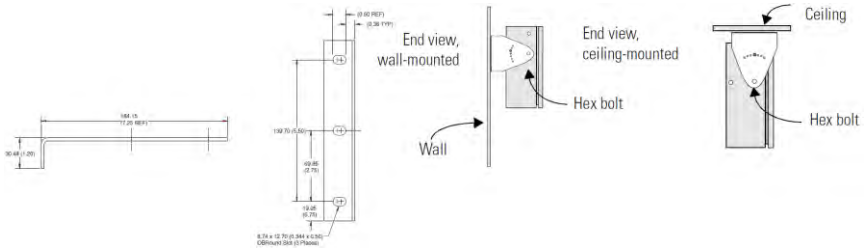

3. Tilt the sign to select a viewing angle.
4. To hold the sign in place, insert a Phillips screw (supplied) through one of the small holes on each bracket into the screw hole in the sign case.

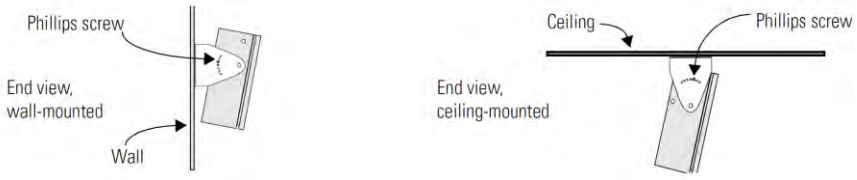

NOTE Keep a minimum 2.54 cm (1.0 in.) clearance on all sides of the sign for adequate ventilation.

WARNING	**Hazardous voltage.** **Contact with high voltage may cause death or serious injury.** Always disconnect power to sign prior to servicing.

WARNING	**Tension dangereuse.** **Tout contact avec une tension élevée peut entraîner la mort ou des blessures graves.** Déconnectez toujours l'alimentation de l'afficheur avant toute opération de maintenance

To connect the sign:

1. Open the front of the sign case by turning the quarter-turn latches to the left with a large screwdriver.
   (On the 2706-P72-CN*x*-SC, there are 3 quarter-turn latches; on the 2706-P74-CN*x*-SC there are 4.) Carefully let the front of the case drop forward.

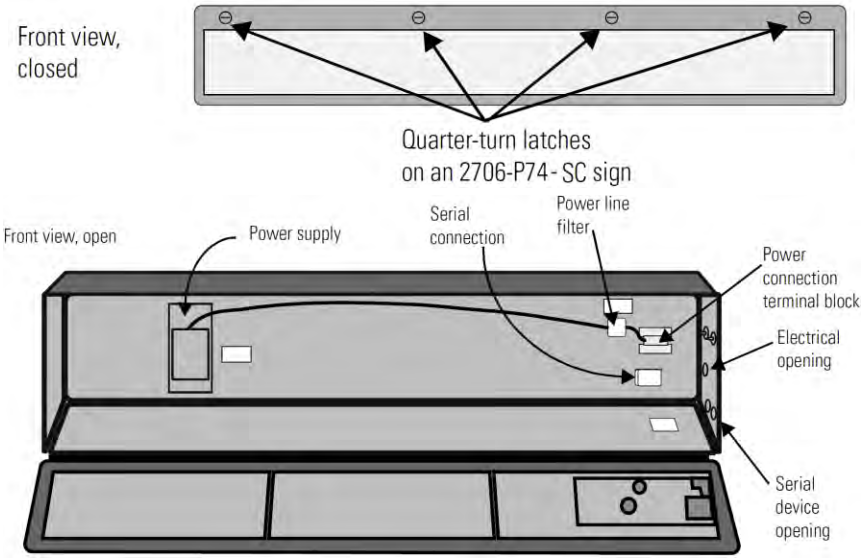

2. Feed electrical cable through 2.54 cm (1 in.) water-tight conduit, the outside end of the connector (supplied), the electrical opening in the sign case, and then through the inside end of the connector.
3. Screw the inside and outside ends of the connector together until water-tight.

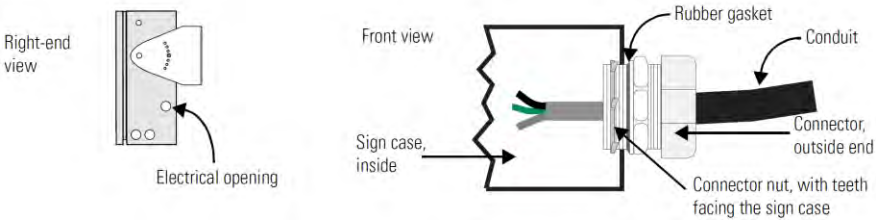

4. Strip the electrical wires back 6.35 cm (0.25 in.).

5. Connect the wires by screwing the end of each wire into the power connection.

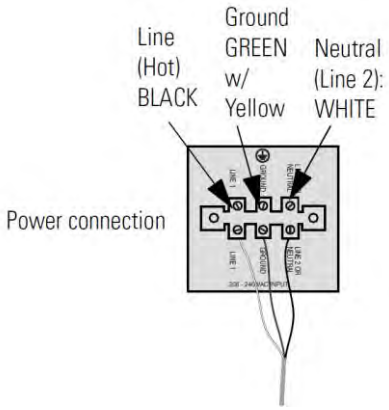

6. If the sign is to be used with serial communications, remove one or both of the hole plugs from the lowest holes on the right end of the sign case. Otherwise, proceed to Step 7.

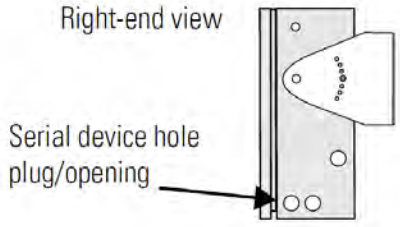

NOTE TB1 can be used for incoming RS-485 or RS-232 serial connection. The full pinout diagram is shown below.

TB1 Full

Pin	Pin Name	Pin	Pin Name
1	GND	5	RS-485+
2	+5V	6	RS-485-
3	RS-232 TX	7	NC
4	RS-232 RX	8	Shield

7. Connect the incoming serial wires per pinout.
   TB1 can be used for incoming RS-485 or RS-232 serial connection. They cannot be connected at the same time.
   RS-485 is recommended to reduce undesirable electrical interference.

TB1-RS-485

Pin	Pin Name	Pin	Pin Name
1	NC	5	RS-485+
2	NC	6	RS-485-
3	NC	7	NC
4	NC	8	Shield

TB1-RS-232

Pin	Pin Name	Pin	Pin Name
1	GND	5	NC
2	+5 V	6	NC
3	RS-232 TX	7	NC
4	RS-232 RX	8	NC

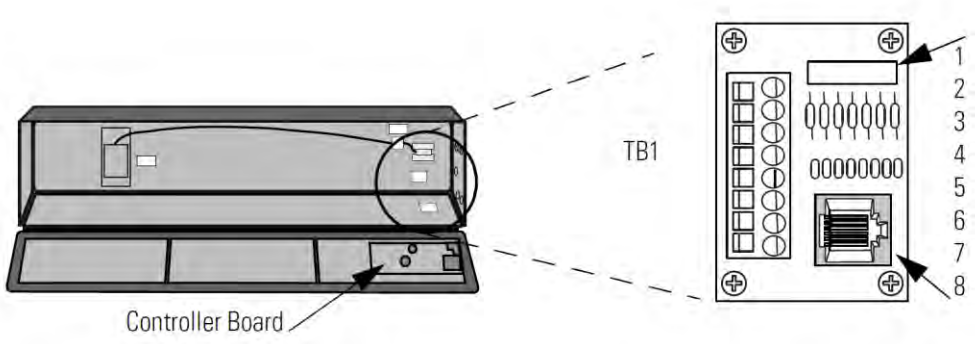

P1 can be used for incoming RS-232 only, although it is optional and not recommended. P1 is intended for RS-232 application downloads and RS-485 terminating resistor connection.

See Spectrum PN: 0100215-02 InView Display RS-485 End-of-Line Installation Instructions, for more information on RS-485 termination.

8. Carefully close the front of the sign case and turn the quarter-turn latches to the right with a large screwdriver.

Mount the 2706-P92-SC and 2706-P94-SC Displays

To mount the sign:

1. Attach the two sign brackets to a wall, ceiling, or other surface.
2. Be sure to place the brackets so the bracket flanges face appropriately as shown below. Mount the brackets the following distance apart (measured from the center of the mounting holes in each bracket):

NOTE Do not install the sign directly to drywall or plaster-board. The sign must be fastened to a wall capable of supporting at least four times the weight of the sign.

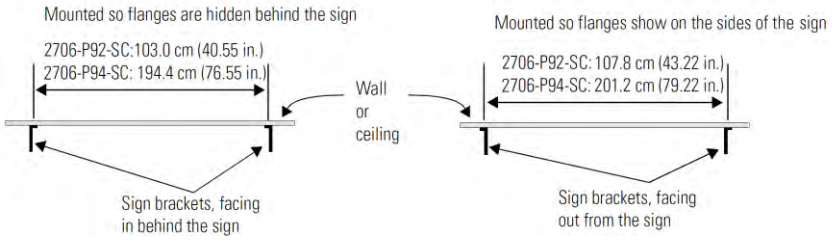

3. Mount the sign on the sign brackets using the two large hex bolts supplied.
4. Insert the bolts into the far single holes first, until the desired viewing angle is determined.

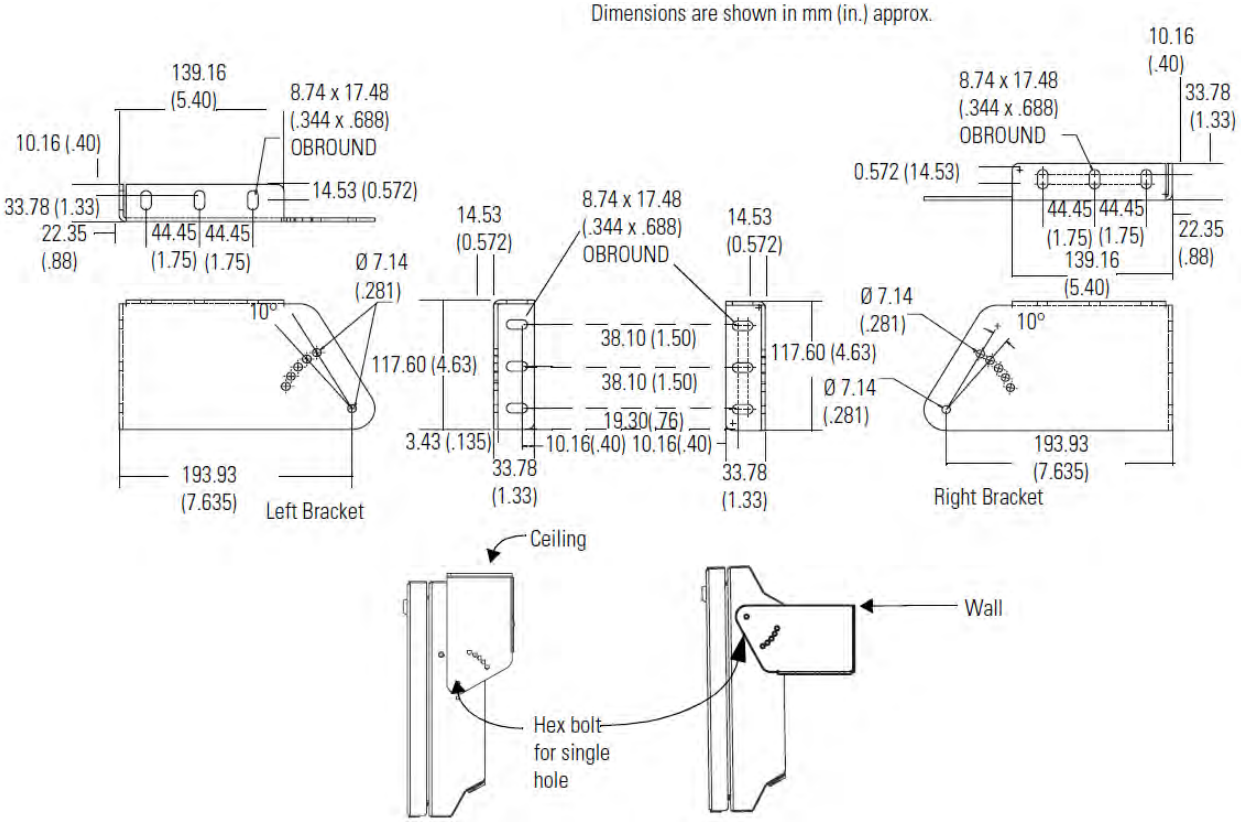

5. Tilt the sign to select a viewing angle.

6. To hold the sign in place, insert the remaining bolts into the desired viewing angle hole on each bracket.

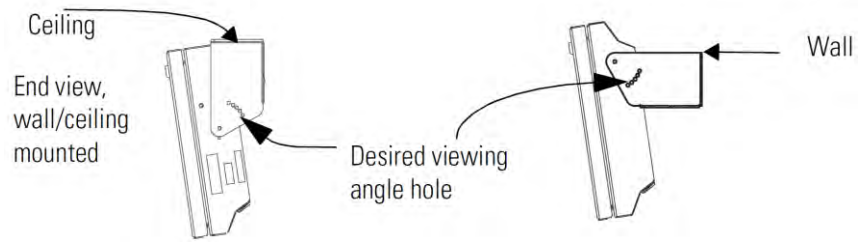

NOTE Keep a minimum 2.54 cm (1.0 in.) clearance on all sides of the sign for adequate ventilation.

Back-To-Back-Mount

To connect the sign:

1. Attach the brackets to the sign in the ceiling mount position with the hex bolts supplied.

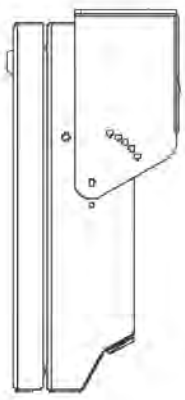

2. Match the signs together back-to-back and connect them together using a total of six 5/16” bolts and nuts (not supplied).
3. Attach chains (not supplied) to the top mounting holes of the bracket to hang the signs from the ceiling.

NOTE Use chains capable of supporting 4 times the total weight of the signs.

Electrical Connections for 2706-P92-SC and 2706-P94-SC Signs

WARNING	**Hazardous voltage.** **Contact with high voltage may cause death or serious injury**. Always disconnect power to sign prior to servicing. **Maintain Separation of circuits.** Route the incoming power directly to the power connection terminal block. **Do not run the power wiring over the logic board or optional Communication board.**

WARNING	**Tension dangereuse.** **Toucher un câble a haute tension peut provoquer la mort ou des blessures graves.** Sortir la prise d'alimentation de l'afficheur avant de le réparer. **Maintenir la séparation des câbles.** Brancher le câble d'alimentation directement au bornier d'alimentation électrique. **Ne pas faire cheminer le câble d'alimentation le long de la carte electronique numerique ou le long de la carte de communication.**

Open the front of the sign case by turning the half-turn latches to the left with a large screwdriver. On the 2706-P92-SC, there are 3 half-turn latches; on the 2706-P94-SC there are 5. Carefully let the front of the case drop forward.

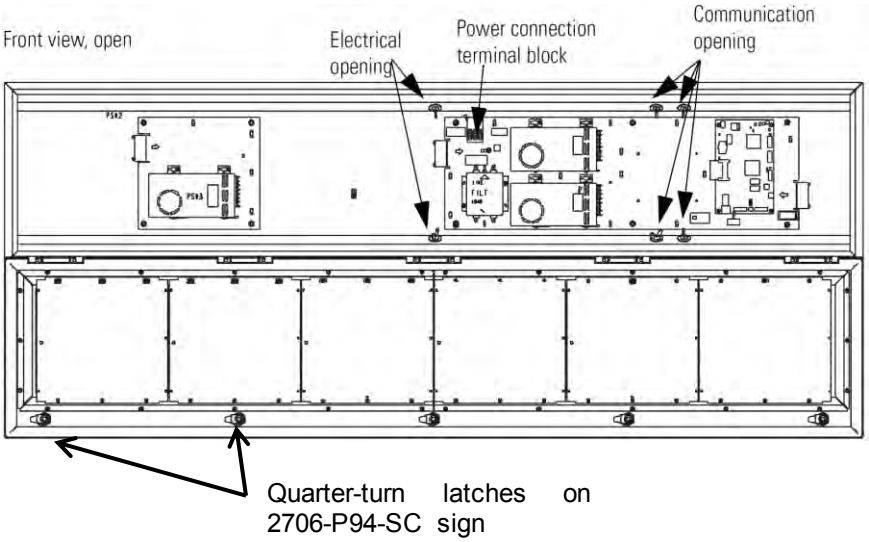

4. Feed electrical cable through 12.7 mm (0.5 in.) water-tight conduit, the outside end of the connector (supplied), the electrical opening in the sign case, and then through the inside end of the connector.
5. Screw the inside and outside ends of the connector together until water-tight.

NOTE Use either of the two holes nearest the power connection terminal block.

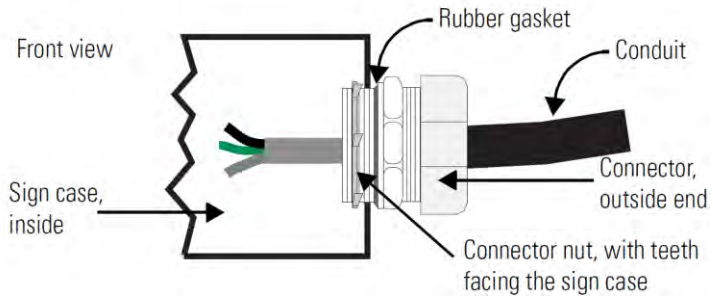

6. Strip the electrical wires back 6.35 mm (0.25 in.).
7. Insert the wires into the appropriate terminal connection and tighten the screw to 0.79 Nm (7 lb-in).
   The terminal block is UL rated for wire ranges of 14 to 8 AWG.

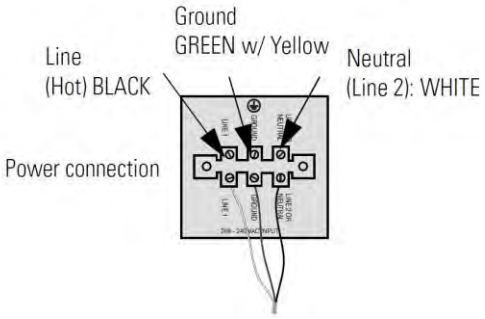

8. Remove the necessary hole plugs before connecting the communications cables.
9. Connect the incoming communication wires per the tables below.

WARNING	Use shielded Ethernet cable. Shielded Ethernet cable is required to maintain noise immunity. The 2706-PCable1-SC is used for downloading messages only, and must be removed after downloading is complete.

WARNING	Utiliser un câble Ethernet blindé. Câble Ethernet blindé est nécessaire pour maintenir l'immunité au bruit. Le 2706-PCable1-sc est utilisé pour le téléchargement des messages uniquement, et doit être retirée après le téléchargement est terminé.

TB1 is used for P9*x* pass-through. TB2 is used for supplying power to the options InView Legacy Communication board kit.

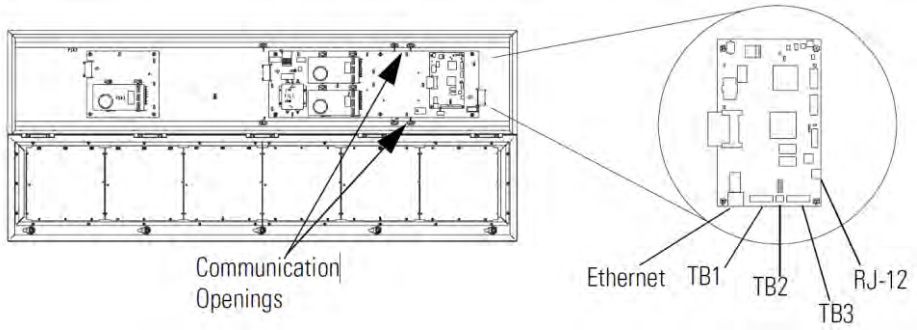

TB1-RS-485

Pin	Pin Name	Pin	Pin Name
1	GND	4	CH A
2	SHLD	5	CH B
3	COMM	6	TERM

TB2-AUX +5V

Pin	Pin Name	Pin	Pin Name
1	+5 V	2	GND

TB3-RS-232

Pin	Pin Name	Pin	Pin Name
1	TXD	4	CTS
2	RXD	5	GND
3	RTS	6	EGND

Ethernet (RJ45)

NOTE To maintain noise immunity, use shielded Ethernet cable.

Pin	Pin Name	Pin	Pin Name
1	TD+	5	NC
2	TD-	6	RD-
3	RD+	7	NC
4	NCRD-	8	NC

Download Port (RJ12)

NOTE The 2706-PCable1-SC is used for downloading messages only, and must be removed after downloading is complete.

Pin	Pin Name	Pin	Pin Name
1	AUX +5 V	4	RX
2	NC	5	NC
3	TX	6	GND

10. Carefully close the front of the sign case and turn the half-turn latches to the right with a large screwdriver.

Mount the 2706-P22-SC Display

The following provides panel cutout dimensions and overall dimensions for the InView P22R-SC panel mount display.

The InView P22R-SC mounts in a custom panel or enclosure. When it is properly installed, the faceplate provides a NEMA Type 12, 13, and 4X (indoor) rating.

To mount the display:

1. Cut and drill the appropriate mounting holes in the enclosure or panel. Refer to Panel Cutout Dimensions for 2706-P22R-SC Display earlier in this section.
2. Remove the six mounting nuts and washers from the hardware bag provided with the display.
3. Position the InView Display in the panel or enclosure mounting hole.
4. Install washers and nuts and alternately tighten the nuts to a torque of 0.904 Nm (8 lb-in).

NOTE InView P22R-SC mounting and panel cutout are identical to DL40 Plus, DL40, DL20 and DL10 two-line displays.

Panel Cutout Dimensions for 2706-P22-SC Display

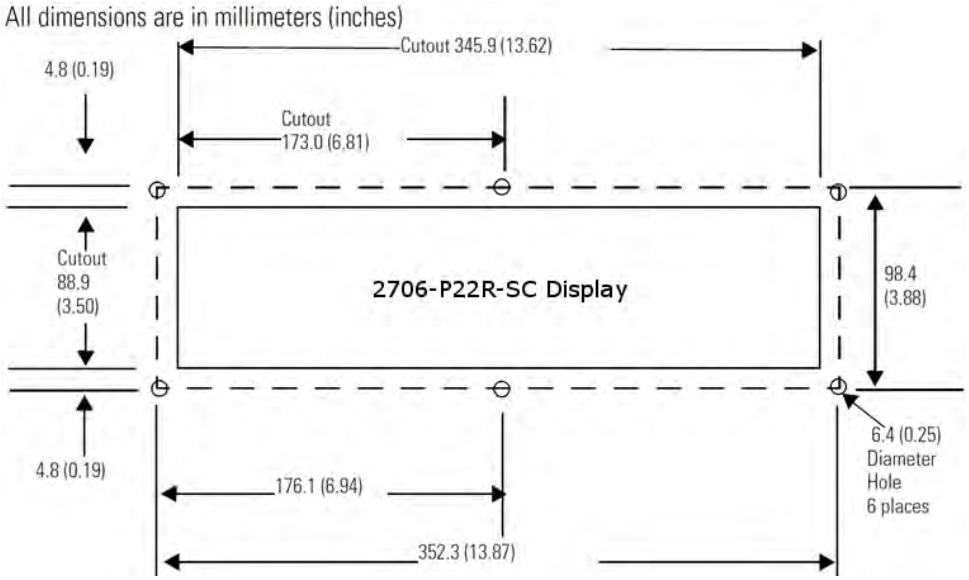

Electrical Connections for 2706-P22-SC Display

The InView display requires 18 to 30 VDC, 0.5 A at 18 VDC.

NOTE The 2706-PCable1-SC is used for downloading messages only, and must be removed after downloading is complete.

WARNING	Before making power connections, make sure that the power is turned off. Improper wiring of the power connections may result in personal injury or damage to the InView display. Make sure the area around the panel cutout is clear. Make sure metal cuttings or debris did not enter any components that may have been installed in the panel.

WARNING	Avant d'effectuer les connexions électriques, assurez-vous que l'alimentation est coupée. Un mauvais câblage de l'alimentation risque d'occasionner des blessures corporelles ou d'endommager l'afficheur InView. Vérifiez que la zone autour de la découpe du panneau est dégagée. Assurez-vous qu'aucun copeau de métal n'a pénétré dans les composants déjà installés sur le panneau.

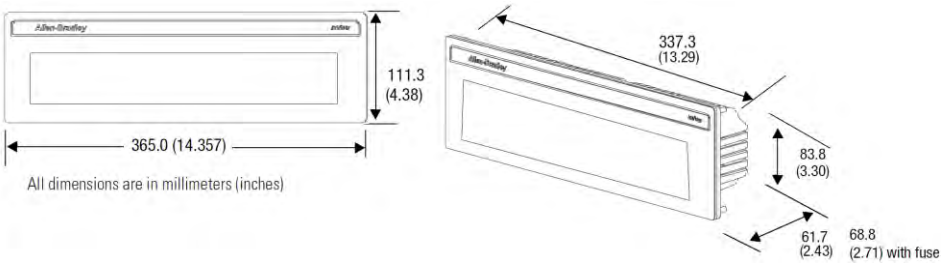

NOTE To satisfy all agency requirements and ensure proper operation, power this product using a 24 VDC, class 2 SELV power supply.

NOTE Use a small screwdriver to remove the terminal block's header to ease product wiring.

Communication Connections for 2706-P22-SC Display

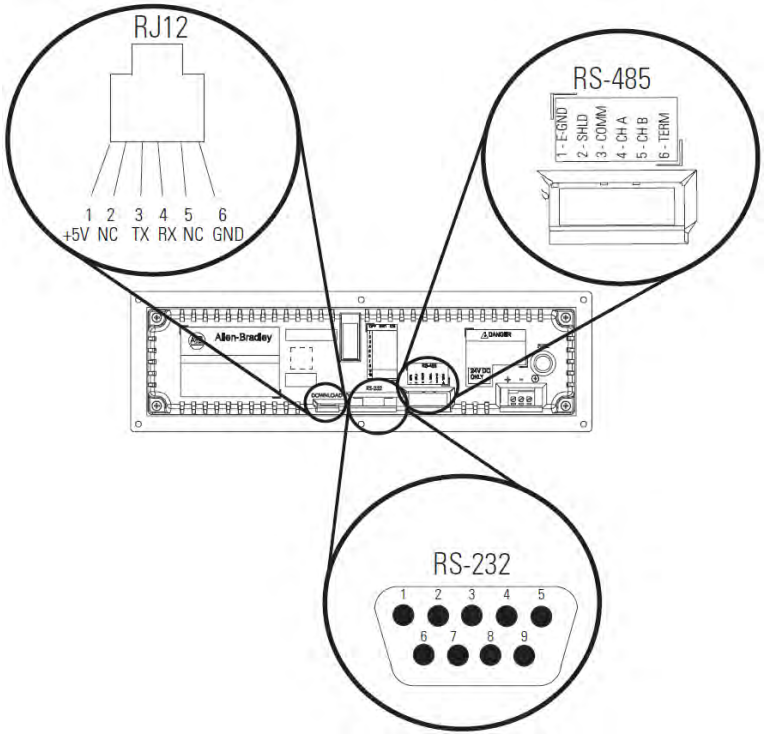

RJ12 Connections

Pin	Pin Name	Pin	Pin Name
1	+5 V	4	RX
2	NC	5	NC
3	TX	6	GND

RS-485 Connections

Pin	Pin Name	Pin	Pin Name
1	E-GND	4	CH A
2	SHLD	5	CH B
3	COMM	6	TERM

RS-232 Connection

Pin	Pin Name	Pin	Pin Name
1	NC	6	NC
2	TXD	7	CTS
3	RXD	8	RTS
4	NC	9	NC
5	GND		

DIP Switch Settings for 2706-P22-SC Display

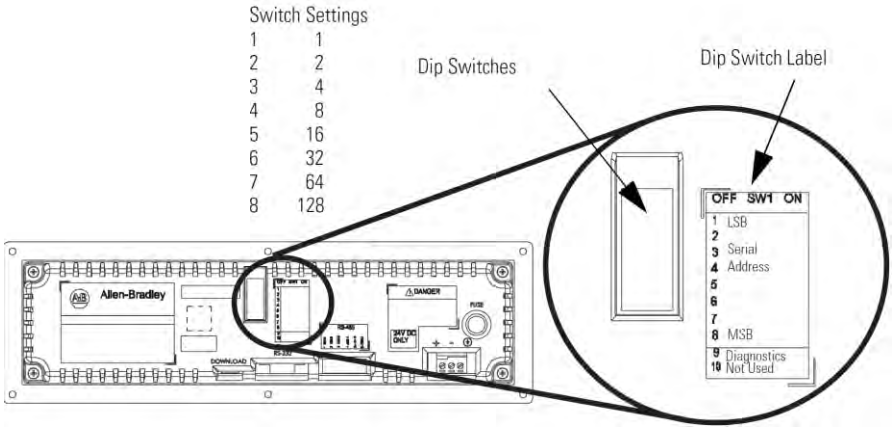

The 2706-PCable1-SC is used for downloading messages only, and must be removed after downloading is complete.

WARNING	Disconnect power from the InView display before setting any switch. Switch settings are scanned only on power-up.

WARNING	Coupez l'alimentation de l'afficheur InView avant de régler tout interrupteur. Les réglages des interrupteurs ne sont scrutés qu'à la mise sous tension.

DIP Switch Settings

Pin	Pin Name	Pin	Pin Name
1	1 (LSB)	6	32
2	2	7	64
3	4	8	128 (MSB)
4	8	9	Diagnostics
3	16	10	Not Used

Download a Message Application

InView message applications are created using the InView messaging software (2706-PSW1-SC). After creating the Message Application, you need to download it into your InView display memory.

InView applications can be downloaded using:

- Point-to-point serial communications (RS-232) from the communication port on a personal computer.
- Multi-drop RS-485 serial communications. Utilizing a 1761-NET-AIC to convert RS-232 to RS-485 from a personal computer allows you to download to multiple displays over RS-485.
- 2706-PCABLE1-SC which connects from your PC, running InView messaging software, to the phone jack type connector on your InView display. In larger InView models, this phone jack may be behind the power supply cover.
- EtherNet TCP/IP networking. With the InView 2706-PENET1-SC EtherNet TCP/IP communication module you can download message applications from a personal computer over Ethernet.
- For more information on this communications option, see 0100233-01_A0(INSTALLATION_INSTRUCTIONS,2706-PENET1-SC).
- InView communication modules. The communication modules allow the displays to communicate on the core Allen-Bradley networks.

RS-232 to RS-485 Networking

With the use of an Allen-Bradley 1761-NET-AIC, you can convert RS-232 to RS-485 and daisy chain InView Displays up to 1219 m (4000 ft).

1761-NET-AIC (AIC+)

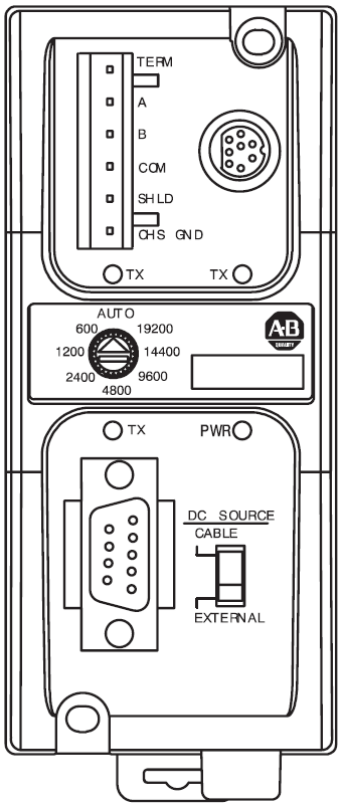

RS-485 Echo

The RS-485 echo feature addresses the issue of increased network traffic often caused by multiple node addresses and high consumption of communication bandwidth. The display's design enables users to daisy-chain numerous InView displays off an InView P9x-SC via the RS-485 communication network.

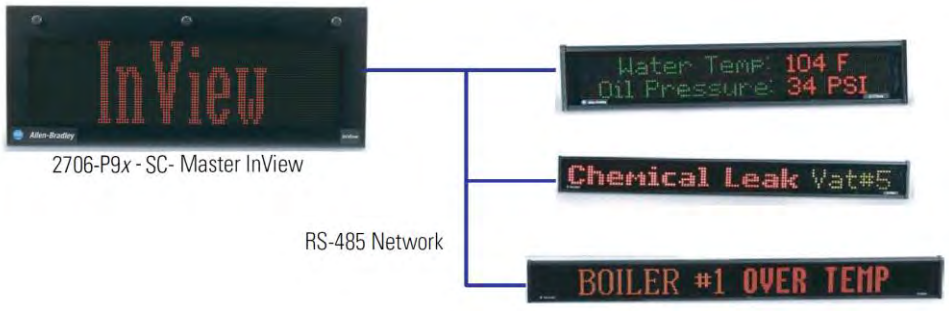

In order to set the 2706-P92-SC display or the 2706-P94-SC display as a Master, the echo dip switch must be enabled.

See Dip Switch Information for the 2706-P9*x*-SC in Chapter 2.

NOTE Only one 2706-P9*x*-SC InView display can be set as the master per RS-485 network.

When the echo feature is enabled, all incoming packets, whether it is over the RS-232 port, RJ12 download port, or the RJ45 10/100 base-T Ethernet port, are echoed out the RS-485 port.

An InView master display inspects the incoming packets and determines if the packet is addressed to itself and take the appropriate action. The master ignores all packets that are not addressed to itself. The only exception is for a packet with an address of 255. This is the broadcast address and must be accepted by all displays on the network.

NOTE When the 2706-P9*x*-SC display, echo feature is enabled, the RS-485 port of the 2706-P9*x*-SC display, does not accept incoming packets. The port is exclusively used to echo out data.

Global Addressing

The 2706-P92-SC and 2706-P94-SC displays can both set their serial address to 255, which is the global (broadcast) address. A display with the serial address of 255, accepts all message packets regardless of the address actually given in the packet. This allows the user to route all messages to the 2706-P9*x*-SC InView display.

See Dip Switch Information for the 2706-P9*x*-SC in Chapter 2, for serial address configuration.

NOTE A global address of 255 can only be set by hardware and cannot be set using software.

Ground and Terminate the RS-485 Network

Only one device at either end of the link must have earth ground and shield jumpered together. This provides an earth ground connection for the shield of this communication cable.

- If the connection is made at an AIC or AIC+, jumper terminals 1 and 2.
- If the connection is made at a 2706-P4*x*-SC or 2706-P7*x*-SC display, jumper terminals 1 and 8.
- If the connection is made at a 2706-P22R-SC display, jumper terminals 1 and 2.

Both ends of the network must be terminated. There is an impedance of 120 ohms built into each AIC and AIC+ as required by the RS-485 specification. Jumper terminals 5 and 6 of the AIC or AIC+ for end-of-line termination.

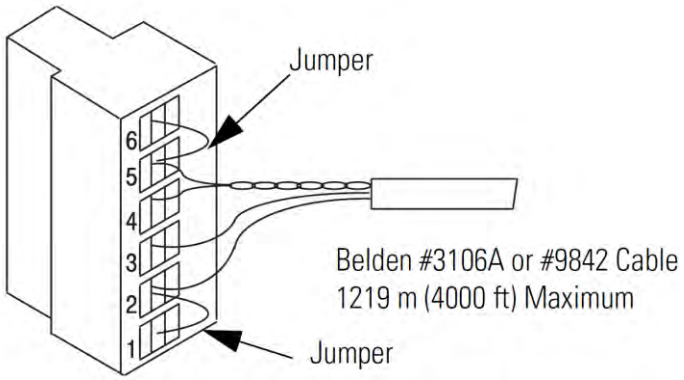

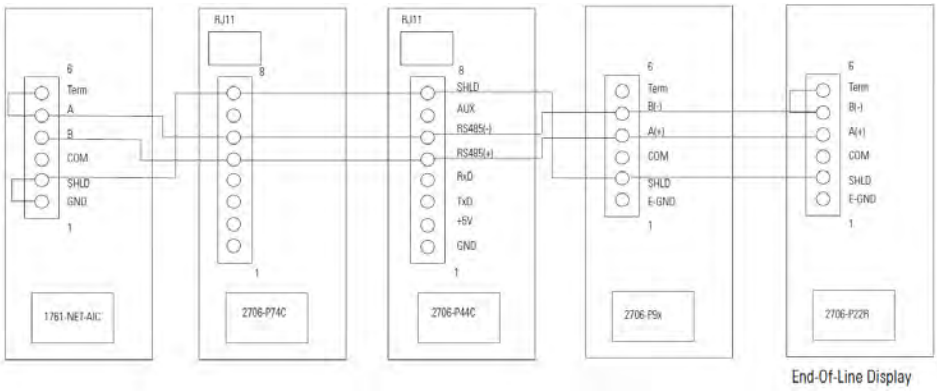

NOTE

End-of-line InView display should have a terminating resistor in RJ11 (P1). If a 2706-P22-SC display is the end-of-line display, jumper terminals 5 and 6. There is a built in impedance of 120 ohms similar to that of the AIC and AIC+.

Chapter 2 InView System Connectivity

This chapter demonstrates how the InView display connects to control networks. In the following chapters we show controller configuration and sample ladder for serial ASCII networks. This chapter also discusses how to set-up the display attributes, communications and create messages.

Serial ASCII Communications

Refer to Chapter 3 for more information on Serial ASCII communications from Channel Zero of an Allen-Bradley controller

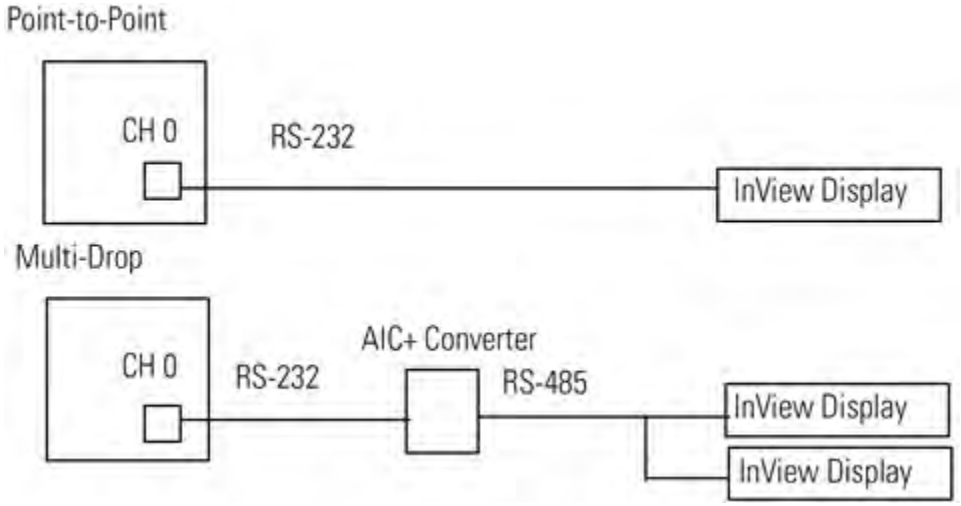

Features

The features are separated into sections for the 2706-P4*x*-SC and 2706-P7*x*-SC displays and the 2706-P22R-SC displays.

2706-P42-SC, 2706-P44-SC, 2706-P72-SC, and 2706-P74-SC Displays

These displays operate at 100 to 240 VAC. They have an eight-position terminal block that contains an auxiliary +5 VDC, RS-232 signals, and RS-485 signals. There is also an RJ12 port that is in parallel with the RS-232 signals from the terminal block. The RJ12 port is used primarily for downloading messages to the display via the 2706-PCABLE1-SC download cable.

These displays have a single channel UART and therefore can only have one of the three communication options connected at a time:

- RJ12
- RS-232 terminal block connections
- RS-485 terminal block connections

TB1 Connections

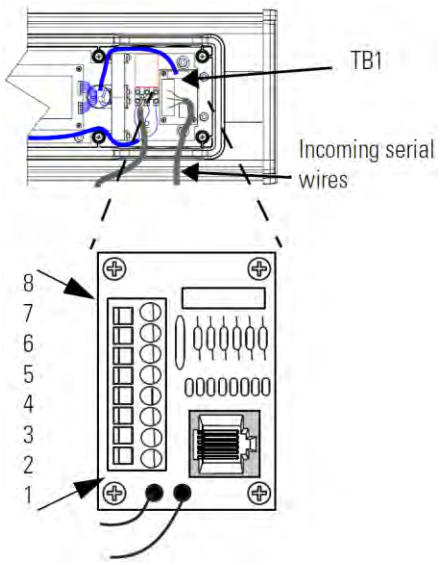

TB1-FULL

Pin	Pin Name	Pin	Pin Name
1	GND	5	RS-485+
2	+5 V	6	RS-485-
3	RS-232 TX	7	NC
4	RS-232 RX	8	Shield

2706-P22-SC Display

This display operates at 18 to 30 VDC. It has three communication ports. These are the RJ12, DB-9, and a six-position terminal block port. The RJ12 port is used primarily for downloading messages to the display via the 2706-PCABLE1-SC download cable. The DB-9 port is used for RS-232 communications and the signals are in parallel with the RJ12 port. Therefore, only one of the ports may be connected at a time. The six-position terminal block is used for RS-485 communications. The 2706-P22R-SC display has a two-channel UART. This means that one of the RS-232 ports and the RS-485 port can be connected at the same time.

2706-P22R-SC Display Communication Connections

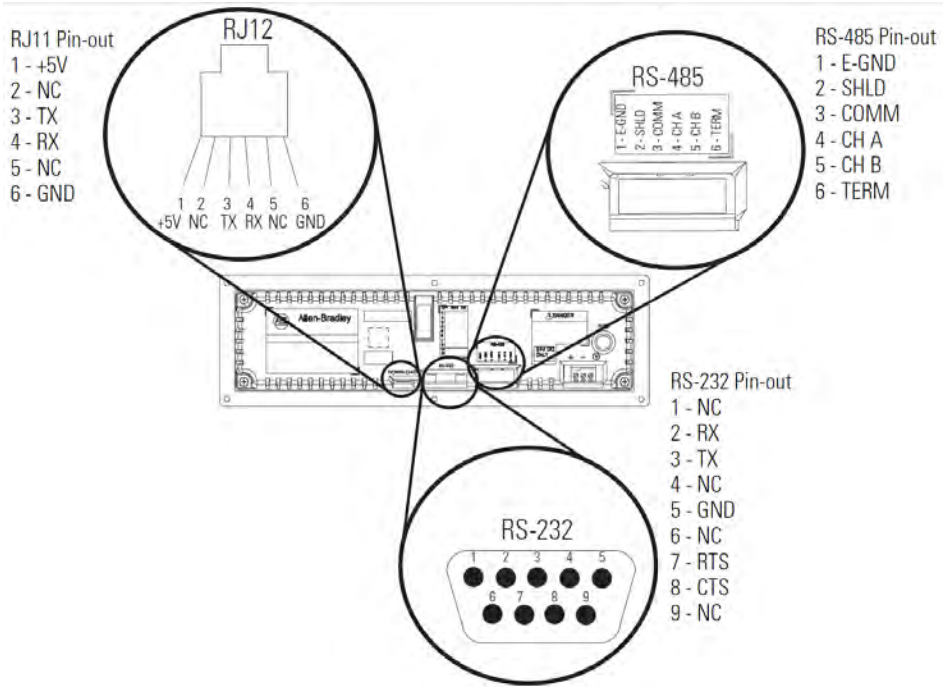

RJ11 Connections

Pin	Pin Name	Pin	Pin Name
1	+5 V	4	RX
2	NC	5	NC
3	TX	6	GND

RS-485 Connections

Pin	Pin Name	Pin	Pin Name
1	E-GND	4	CH A
2	SHLD	5	CH B
3	COMM	6	TERM

RS-232 Connection

Pin	Pin Name	Pin	Pin Name
1	NC	6	NC
2	TXD	5	RTS
3	RXD	8	CTS
4	NC	9	NC
5	GND		

The 2706-P22R-SC display has a ten-position dip switch. The first eight positions are used to set the address of the display. Position nine is used to put the display in diagnostic mode. Position ten is a spare. The dip switch is read only on power-up.

The diagnostic mode causes the display of LED patterns to visually indicate if any pixels are not turning on. It also performs a memory check.

NOTE

After one complete LED scan is done, a RAM check is performed and the display's memory is cleared. To ensure that the display's memory is not cleared, turn off power to the display after the LED block test is performed. Make sure that the download or message file has been saved before the diagnostic test is allowed to run completely through.

2706-P22-SC Display Dip Switch Settings

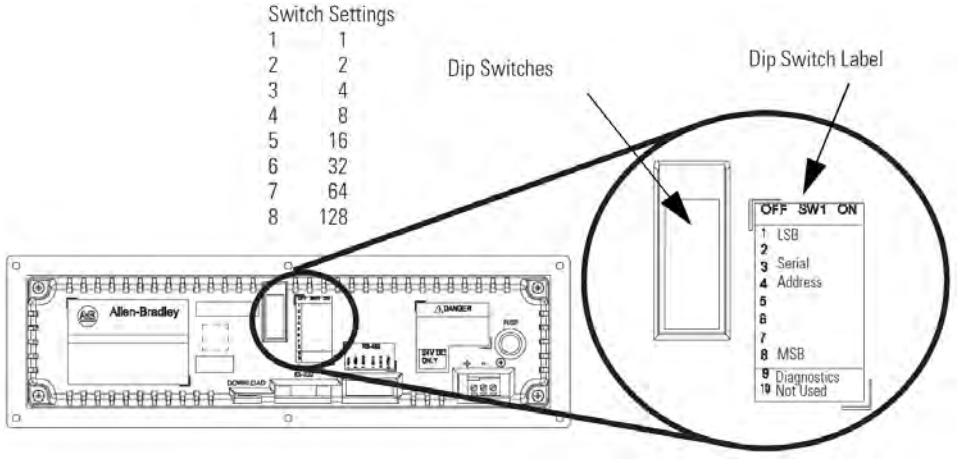

DIP Switch Settings

Pin	Pin Name	Pin	Pin Name
1	1 (LSB)	6	32
2	2	7	64
3	4	8	128 (MSB)
4	8	9	Diagnostics
3	16	10	Not Used

Dip Switch Information for the 2706-P9*x*-SC

There are two dip switches located on the controller board, Switch 1 and Switch 2.

2706-P9*x*-SC Dip Switch

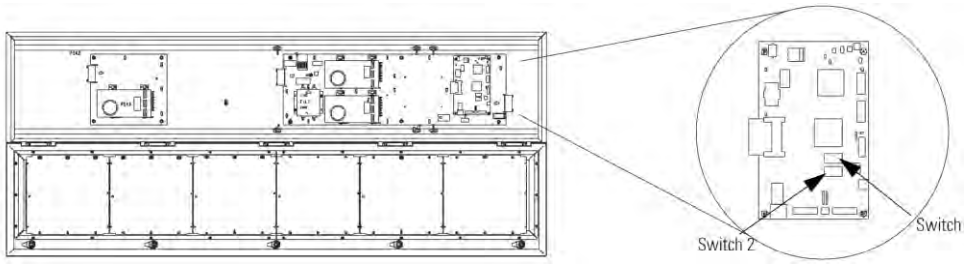

Switch 1

Switch 1 is used to configure the display's RS-485 echo enable, communication rate settings, and display size.

Position 1 enables or disables the echo function.

When you enable the RS-485 echo function, this allows any packets that come in on COM 0 (download, RJ12 port), COM 1 (RS-232, TB3 port), and the Ethernet TCP/IP port to be sent out the RS-485 port. This allows Ethernet TCP/IP and other communication protocols to be converted to RS-485 by a single 2706-P92-SC or 2706-P94-SC and then sent out to multiple RS-485 networked displays.

NOTE Only enable the echo function on one 2706-P9*x*-SC display.

Positions 3 and 4 set the communication rate.

Refer to page 2-6 for default positions.

If both switches are off, the communication rate can be set via the InView messaging software. The dip switches take priority over the software setting. If the communication rate is set to 19200 using the software (positions 3 and 4 set to off) and then set to 9600 using Switch 1 (position 3 on and 4 off), the communication rate is 9600. Also, once positions 3 and 4 are used to set the communication rate and then they are switched off, the communication rate setting remains until it is changed by software or a different dip switch setting.

Position 5 is used to set the display size. This is set by the factory.

Position 6 is used to turn on diagnostics.

Position 7 disables download message.

Switch 2

Switch 2 is used to set the serial address of the display.

Position 1 is the LSB of the address and position 8 is the MSB of the address.

If position 1 is on and all other positions are off, the display address is 1.

If position 8 is on and all other positions are off, the display address is 128.

If all positions are set to off, the display address is 128.

The dip switch setting takes priority over the software setting. If the serial address is set to 2 using the software (all the dip switches set to off) and then Switch 2 is used to set the serial address to 3 (position 1 and 2 set to on and the remaining positions set to off), the serial address is 3. Also, once Switch 2 is used to set the serial address and then all switch positions are set to off, the serial address setting remains until it is changed by software or the dip switch is set.

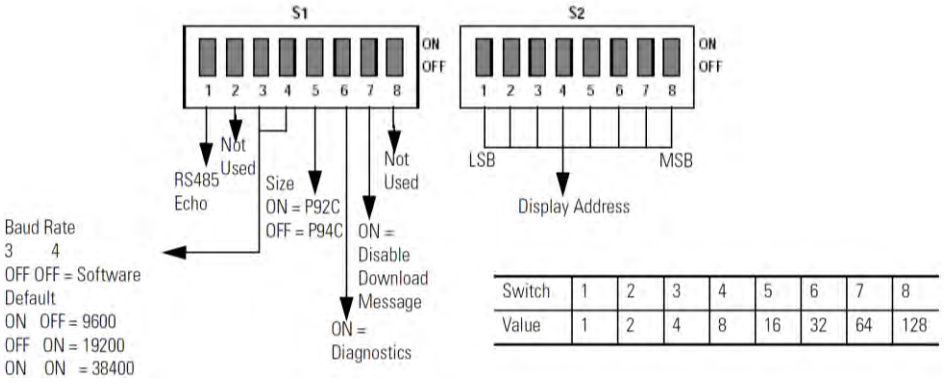

Switch	1	2	3	4	5	6	7	8
Value	1	2	4	8	16	32	64	128

Additional Information for 2706-P9*x*-SC Displays

For additional information on communication port wiring and display configuration, refer to the InView Marquee Message Display User Manual, publication 0300281-02_A0(MANUAL_2706-UM016D-EN-P).

This product contains a Lithium battery. See publication 0100214-02_A0(INSTALLATION_INSTRUCTIONS_2706-IN009C-EN-P) for information regarding battery replacement and disposal.

Communications Board Kits

There are optional Communications Board Kits available for the 2706-P9*x*-SC series displays. There are a total of six board kits:

- Remote I/O (2706-PRIOK-SC)
- DH+ (2706-PDHPK-SC)
- DH-485 (2706-PDH485K-SC)
- ControlNet (2706-PCNETK-SC)
- DeviceNet (2706-PDNETK-SC)
- EtherNet/IP (2706-PENETK-SC).

The Communications Board Kits convert the six protocols to RS-232.

The board kit mounts on the four PEM spacers that are attached to the internal mounting plate.

See publication 2706-IN015 for more information on how to install the board kits.

Spacer Location

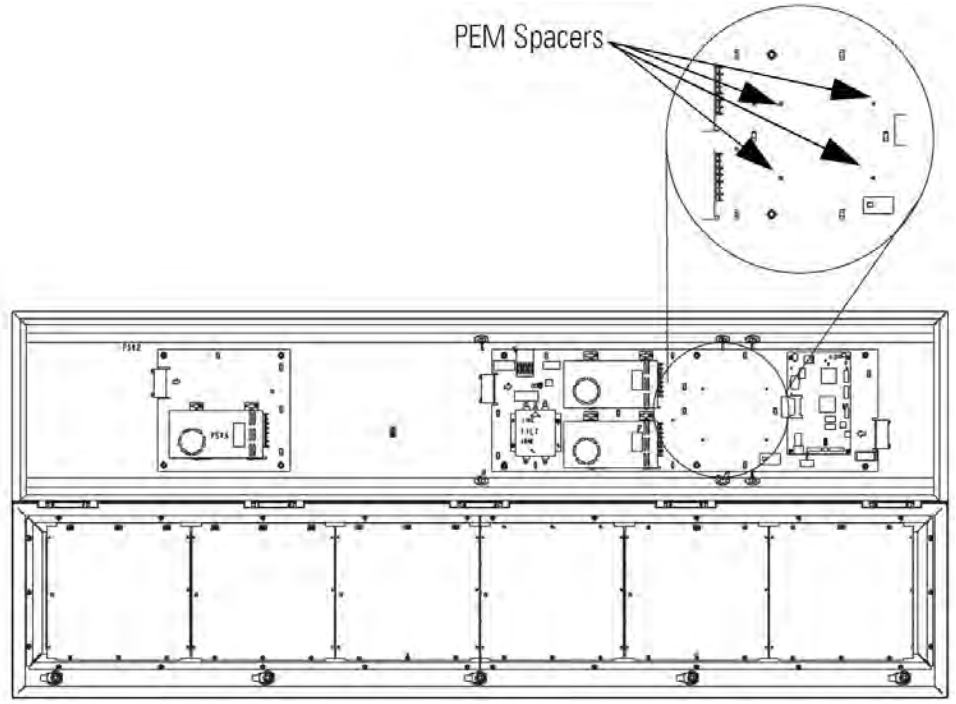

Compact Flash Card

This product uses a Type I Compact Flash Card for message file storage. Refer to publication 2706-IN017 for information on replacement and installation of the Compact Flash Card.

Multiple Communication Rate Support

The 2706-P92C-SC and 2706-P94C-SC displays allow you to select serial communication rates of 9600, 19200, or 38400 bps. The communication rates are both hardware (dip switches) and software selectable.

NOTE For selecting the communication rate using the dip switches, see the section entitled Dip Switch Settings.

The communication rate of the display is set using the InView messaging software, provided the communication rate dip switches are all off.

To set the communication rate using the messaging software:

1. Highlight the 2706-P9*x*-SC display you wish to set the communication rate:

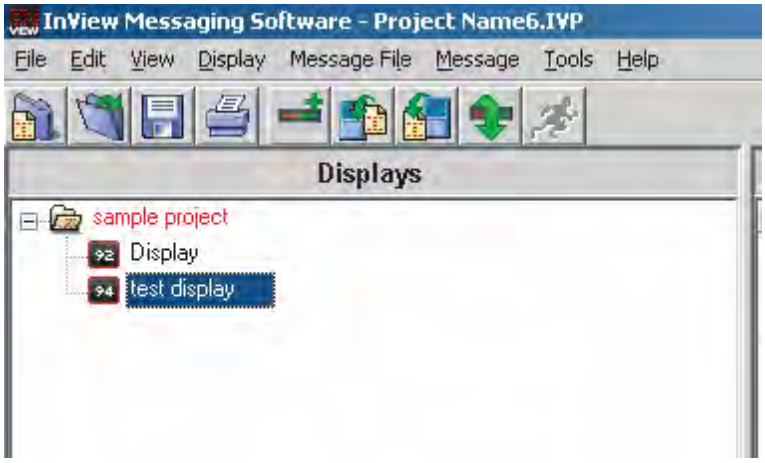

2. Select Set Display Baud Rate under the Tools menu:

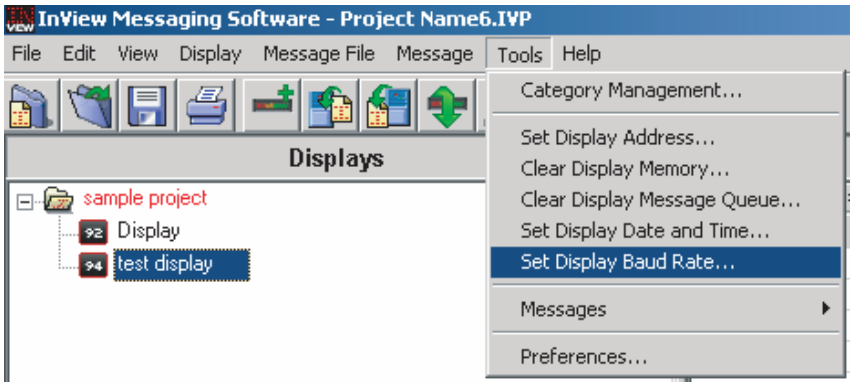

3. Choose the communication rate you wish to set the display at and click on the Set button:

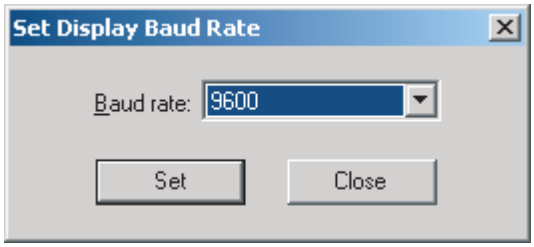

NOTE There is no confirmation that the command was sent. The display must be power cycled to view the new communication rate settings.

Isolated Communication Ports

The isolated communication ports consist of RS-232, RS485, 10/100 Ethernet port and a RS-232 download port. This allows the 2706-P92C-SC and 2706-P94C-SC displays to support multiple networks simultaneously. This allows programmers to change the messages or tie into an information database, while control operators can continue delivering alarms and messages to the plant floor.

Flash Programmable Firmware

The programmable Compact Flash card is located inside the 2706-P9*x*-SC display on the controller board as shown below.

NOTE The Compact Flash card must be at least 32 MB; anything less is not supported.

Power-Up Messages

After the power cable and the download cable (attaches to the RJ12 port) have been attached per the installation document, apply power to the display.

NOTE

If a display is connected to Ethernet via TCP/IP by using a 2706-PENET1-SC module or a 2706-P9*x*-SC display is connected to Ethernet via TCP/IP, the display configuration and message download can be done over Ethernet. For more information on this communication option, see publication 0100233-01_A0(INSTALLATION_INSTRUCTIONS,2706-PENET1-SC).

2706-P42-SC, 2706-P44-SC, 2706-P72-SC, 2706-P74-SC, 2706-P92-SC, and 2706-P94-SC Displays

After power is applied to the display the following messages are displayed.

- Firmware number and revision
- Memory size and partition
- Memory checksum message
- Date and time
- Address of the display; and background message, if one was created

P2706-P22-SC

After power is applied to the display the catalog number, firmware revision, and address is displayed on one screen. Then the background message is displayed.

See the help file for more details on the following topics.

Display Setup

To set up your display:

1. Start the InView messaging software.
2. Create a project.
   The software prompts for a project file name, a project name, and description. Once this is done, the project name and description appears in the Displays box.
3. The software then prompts for a display name, display description, display type, and the number of that particular display that is used in the system (1 to 100 of the same display type).
4. Select one for the number of displays (once displays have been assigned a unique address, more than one can be added at once).
5. Select Next.
   The software then prompts for the address of the display, heartbeat, TCP/IP settings (if applicable), and the serial com port settings.
   Use the default settings of 9600, None, 8, and 1.
6. Select Next.
7. When the software prompts for a message file association, check Create a New Message File.
8. Enter the message file name and select Finish.
   The message editor window is displayed.

Set the IP Address

For the 2706-P22-SC, 2706-P4*x*-SC, and 2706-P7*x*-SC terminals, separate communication modules are needed to place the display on the network. The 2706-P9*x*-SC displays have Ethernet TCP/IP built in. To add any other network protocol to the 2706-P9*x*-SC, a separate communication module is needed.

The Ethernet TCP/IP configuration utility is installed as part of the InView messaging software package. When first opening the InView messaging software, you are asked to create a display and a message file. After the display is created you can configure the IP address of the 2706-PENET1-SC module.

The 2706-PENET1-SC module is the communication interface for Ethernet TCP/IP. This module is used with the 2706-P22-SC, 2706-P4*x*-SC, and 2706-P7*x*-SC displays. The 2706-P9*x*-SC displays have this protocol built in.

Note that the 2706-PENET1-SC is Ethernet TCP/IP or Office type Ethernet and is not Ethernet I/P, which is Ethernet Industrial Protocol available on Rockwell Automation logic controllers.

To set the IP address:

1. Select the display you created, which use the Ethernet module.
2. Right click on the display and select Edit Display:

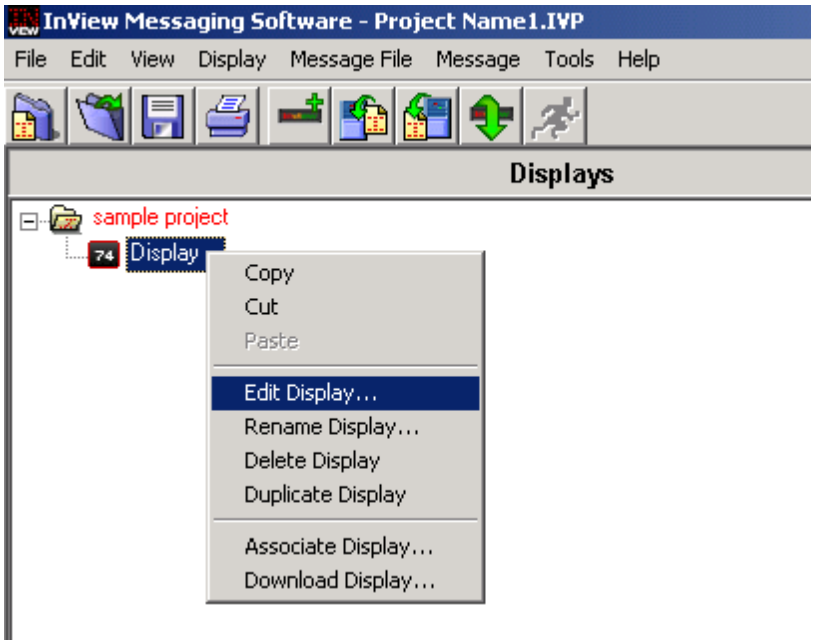

NOTE Double clicking on the display takes you to the same window.

3. When the Edit Display window appears, go to the Communications tab. This is where the configuration utility is located.

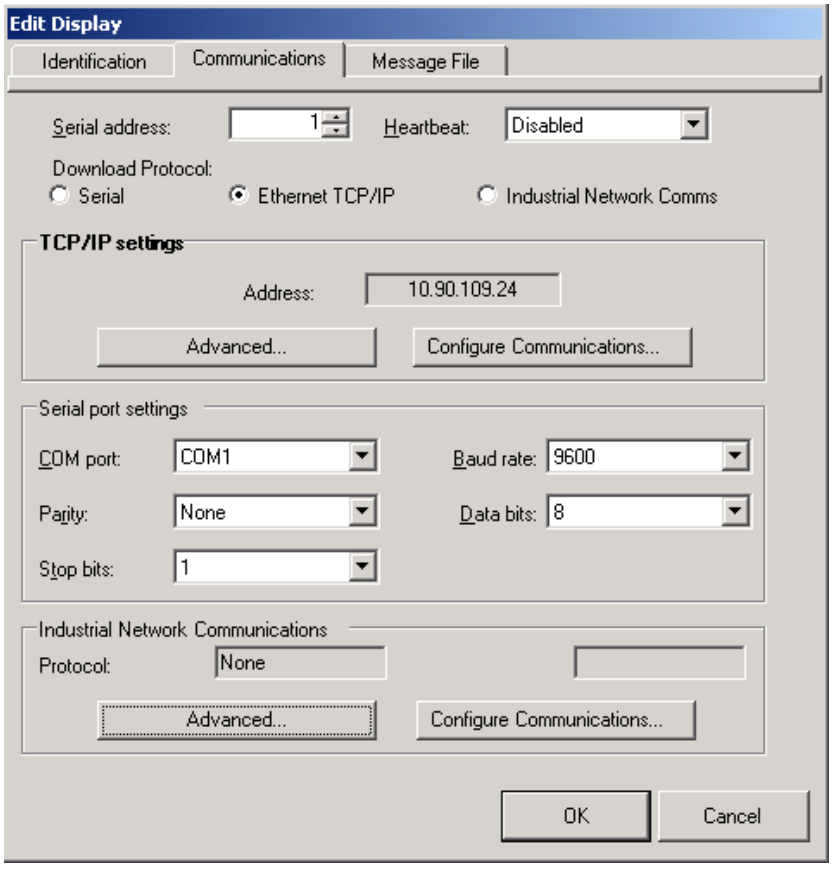

Under the section with the Heading TCP/IP settings is the Configure Communications button.

4. Click to access the Ethernet TCP/IP Communications window to set the IP address.

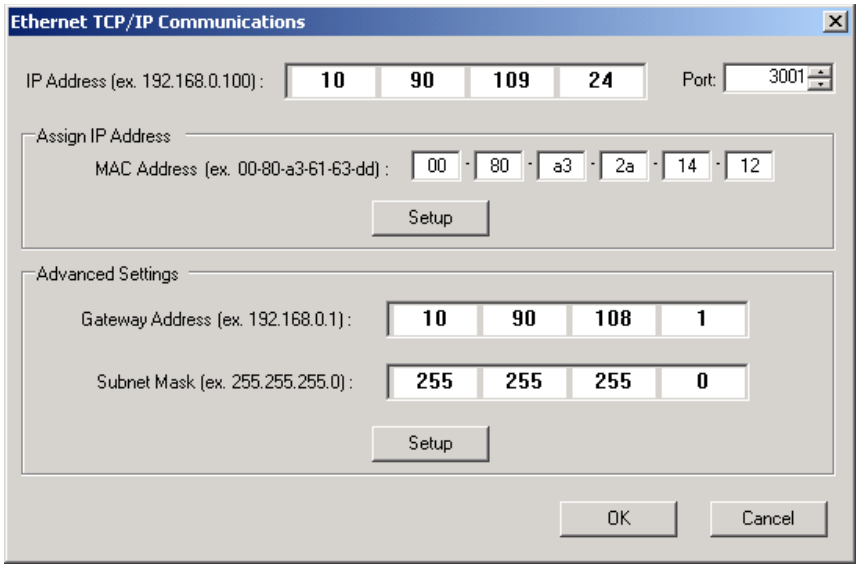

5. In the IP Address field, specify the IP address.
6. If you are using the 2706-PENET1-SC, specify 3001 for the Port address.

7. Enter the MAC Address of the module under the heading Assign IP Address. The MAC Address is found on the module itself.

NOTE The 2706-P9*x*-SC display does not use MAC Address. IP Address changes must be done serially.

8. Click the Setup button located in the section titled Assign IP Address once the desired IP Address, Port, and MAC Address have been entered.
9. If the IP Address is already in use, an error message window appears.

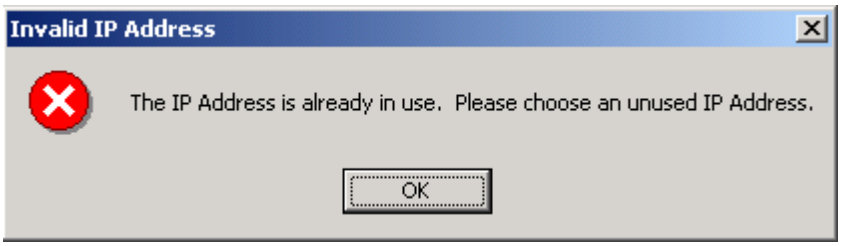

NOTE If the Invalid IP Address window appears, click OK, choose a different desired IP Address, and click the Setup button again. Once a valid IP Address is entered, the following window should appear saying it is ready to assign an IP address:

10. You need to either turn the display on or power cycle the display if it is already turned on. Upon successful assignment of an IP Address, the following window appears:

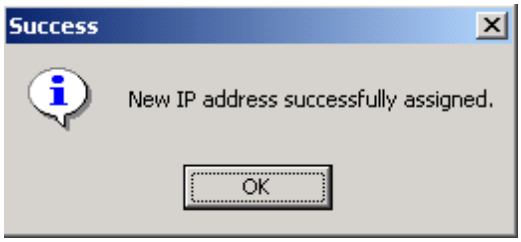

Gateway Address and Subnet Mask Setup

Set up the Gateway address and Subnet Mask if needed based on your Ethernet Network configuration. Default values typically are for Subnet Mask, 255.255.255.0 and as a default the Gateway address is left blank.

Subnet Mask is a parameter that interprets IP addresses when the network is divided into multiple networks. The IP address is formatted as four sets of decimal numbers with periods between them (255.255.255.1). The range of values for the first set of decimal numbers is 1 to 255. The range of values for the last three sets of decimal numbers is 0 to 255. The value 0.0.0.0 is not a valid

subnet mask.

Gateway Address is a unique address of the Gateway connecting two individual IP networks into a system of networks. When a node needs to communicate with a node on another network, the Gateway transfers the data between the two networks. The IP address is formatted as four sets of decimal numbers (from 1 to 255) with periods between them (130.0.0.1). The first field cannot be 0 if any other fields contain a 0.

Once the desired Gateway Address and Subnet Mask have been entered, click on the Setup button located just below where the Subnet Mask was entered. If for some reason, the settings are not received by the 2706-PENET1-SC module, the following error message will appear:

However, upon successfully setting up the Gateway Address and Subnet Mask, the following message appears telling you to cycle power to the module:

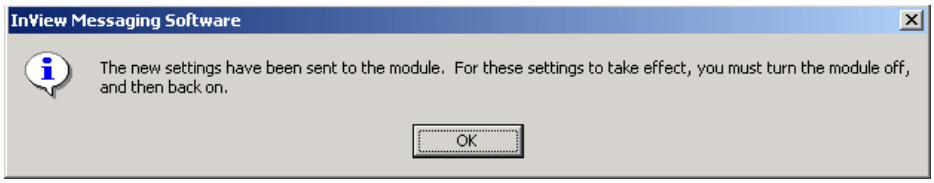

After the IP Address, Gateway Address and Subnet Mask have all been established, click the OK button on the bottom of the Ethernet TCP/IP Communications window. This allows the settings to be saved and configuration is now complete.

Once the settings have been saved, they can now be viewed by clicking on the Advanced button located in the section titled TCP/IP settings on the Edit Display window

Create the Message File

A background message of Rockwell Automation is automatically created. This is also indicated by the letter B in the message list below the message creation box. Message number 1 is highlighted and ready for creation. Create a message by typing in the message box. Attributes for the messages can be changed or added using the pull down menus located above the message creation box or from the toolbar. Once message number 1 has been created, select the down arrow or type 2 in the box and select the Goto button. This allows message number 2 to be created.

There is a size displayed in the lower right of the window. This is the size of the message that is being created. This number starts from 11 and increases to a maximum number that is determined by setting the partition size in software. This is based on a total of 200,000 bytes. The smaller the partition size the more messages are available. The limits are 450 bytes per message, 444 messages minimum to 50 bytes per message, 4000 messages maximum. To change the partition size, select File, followed by Partition.

See the following sections for more information regarding the message attributes.

Message File Additional Information

Additional tasks covered in the following section are:

- Attach a Note to a Message
- Text Color
- Date, Time and Variables
- Category
- Message Priorities
- Pause
- Message Header
- Preview Messages
- Set the Display Address
- Download Messages
- Clear Memory/Message Queue

Attach a Note to a Message

Select a message from the message list. Select Tools and Edit Note. Then a Message *X* Note window appears. The *X* is the message number for the message that a note is being created for. These message notes can only be viewed with the InView messaging software and are not downloaded to the display.

Text Color

There are three color options if a display is classified as color. They are red, green, or yellow. The color of the message is the color that is selected. The color of individual text within the message is changed by inserting a color before the text. The text after the color insert stays that color until a new color insert is performed.

Date, Time and Variables

The date, time and variables are also inserted into a message. These are found under the Edit menu then Insert or via the toolbar buttons. If inserting the date, a pop-up window appears and shows various formats and a pre-viewer that displays the data for the selected format. If inserting a variable, a pop-up window appears that allows the selection of the variable number and whether the variable is numeric or alpha numeric. The maximum number of variables per message file is 100 (00 to 99). The numeric variable ranges from 32,767 to -32,768 decimal. It also allows the selection of the type of padding and a check box for a sign (+/-). An alpha numeric variable is ASCII text except for the ". It also varies in length from 1 to 128 characters. There is a pre-viewer that displays the options selected. The format for the time is either standard or military. The selection for this is found in the InView configuration window (the project window) under Tools and Set Display Date and Time. Note that the time format is set for each display individually by address. The default format is standard. The data and time is also set here.

Category

The Category option is used to assign categories to messages. This helps in organizing messages for certain operations and when performing a Find.

Message Priorities

The Priority option is used to give messages a priority of low, medium, and high. As an example, a normal operating water temperature reading of a generator is a low priority message. A pre-alarm message of high water temperature is a

medium priority message. An alarm message of high water temperature shutdown is a high priority message.

In our example, the water temperature is part of the generator signals that are constantly being monitored and displayed as low priority signals in the message queue (the message queue can hold up to 64 messages). When the water temperature rises above a pre-alarm threshold, the medium priority high water temperature message is added to the message queue. When this happens, only medium priority messages are displayed. If other medium priority messages were added to the queue, they are also displayed until a high priority message is added to the queue. When the water temperature rises above an alarm threshold, the high priority high water temperature shutdown messages are displayed.

In order to view the low priority messages, the medium and high priority messages need to be removed from the message queue. See InView Protocol, Chapter 4, for information on how to add or remove messages from the message queue.

Pause

The Pause option determines how long a message is displayed when a message queue (two or more messages are being displayed due to a download and display or messages were added to a message queue) is running.

See InView Protocol, Chapter 4, for information on how to messages to the message queue.

Message Header

A header is added to a message by clicking the H button. Once this button is clicked, the button appears depressed and any text in the message creation box shifts from the top line to the bottom line.

Preview Messages

Messages are previewed before downloading. This option is found under the View menu, followed by accessing Preview Mode or by clicking the magnifying glass button.

After the message file is created, exit the message editor. The message file is automatically saved as it is created. If an edit is needed to a message file, double click a message in the Message File Details list in the project window. This brings up the message editor window.

Set the Display Address

All displays except for the 2706-P9*x*-SC and 2706-P22R-SC displays must have their addresses set through software. The factory default address setting for all InView displays is 01. This is the old address when setting up the display for the first time. To set the display address using the software, select Tools and Set Display Address. The display communication settings (com port and communication rate, or TCP/IP settings) should have been set when the display was added to the project.

The 2706-P22R-SC display address is set either in the software using InView messaging or by using the dip switch. The first eight positions of the dip switch are used for setting the display address. If all the dip switches are off, the address is set in the software. If any of the first eight dip switch positions are on, this is the display address and the software setting is overwritten. Once an address is selected by the dip switches, it is retained until it is overwritten by the software (only done when all switches are off) or the dip switches are changed. Once a unique address has been set, future display properties and message communications are downloaded to networked signs via RS-485. Message downloads, communications, and display properties are downloaded to

networked signs via Ethernet TCP/IP. See the 2706-PENET1-SC documentation for more information on using this communication option.

Download Messages

Once the message file has been created, there are several download Options:

- Download the entire file - Download Message File and
- Broadcast Download
- Download selected messages - Download Message
- Download and display selected messages - Trigger Message and
- Broadcast Trigger Message
- Message broadcast – Broadcast Download Message

A pop-up window appears when any of these options, except for broadcast, are selected. This window allows the selection of which displays to download to.

NOTE Assign the address and communication settings for each display before any messages are downloaded. These options are found under Message File and Message.

Download Message File and Broadcast Download

Broadcast Download downloads the entire file to all displays on the network. Download Message File downloads the entire file to the display specified. Download Message File and Broadcast Download overwrite the old messages starting at message number one to where the new messages end. If the old message file has more messages than the new message file, the old messages remain above the new message

Assign the address and communication settings for each display before any messages are downloaded. These options are found under Message File and Message.

The files at the end remain. For example, the old message file had messages 1 through 10 and a background message. The new message file has messages 1 through 2 and a background message. After the new message file is downloaded, the new message file contains new messages 1 through 2, a new background message, and old messages 3 through 10. If the new message file does not contain a background message, the background message is blank. If just the new message file is to be retained in memory, a clear memory operation should be performed before downloading a new message file. This erases the entire memory of the display. A message trigger or addition to the queue is required in order to view the downloaded messages. See InView Protocol, Chapter 4, for information on how to trigger a message or add it to the queue.

Download Message

Download Message downloads only those messages selected from the message list. To select messages, highlight them from the Message File Details box in the InView messaging software (project) window. Once they have been downloaded, the display behaves the same as if the entire message file were downloaded. A message trigger or addition to the queue is required in order to view the downloaded messages.

See InView Protocol, Chapter 4, for information on how to trigger a message or add it to the queue.

Trigger Message and Broadcast Trigger Message

Trigger Message and Broadcast Trigger Message allows up to 64 messages selected from the message list to be displayed after download. This is the message queue. Each message is displayed for the amount of the pause time that is set when the message is created.

NOTE Only messages of the highest priority are displayed. When using this option, ensure that all the messages have the same priority.

If new messages are downloaded using this option, a clear message queue command is done before the messages are downloaded. The old messages are erased and replaced with the new ones. Broadcast Trigger Message downloads the selected messages to all displays on the network

Clear Memory/Message Queue

These options are found under Tools then Clear Display Memory and Clear Display Message Queue. The clear memory option erases the entire memory of the display. Memory Cleared is displayed and then the display goes through a reset cycle. The clear message queue option just erases the queue, not the display memory. If there is a background message, it is displayed after a clear message queue command has been issued.

Chapter 3 Serial ASCII Communications

Use a PLC5 Out Channel Zero

To use a PLC5 out Channel Zero on a display:

1. Create a new application.
2. Set up the channel configuration.

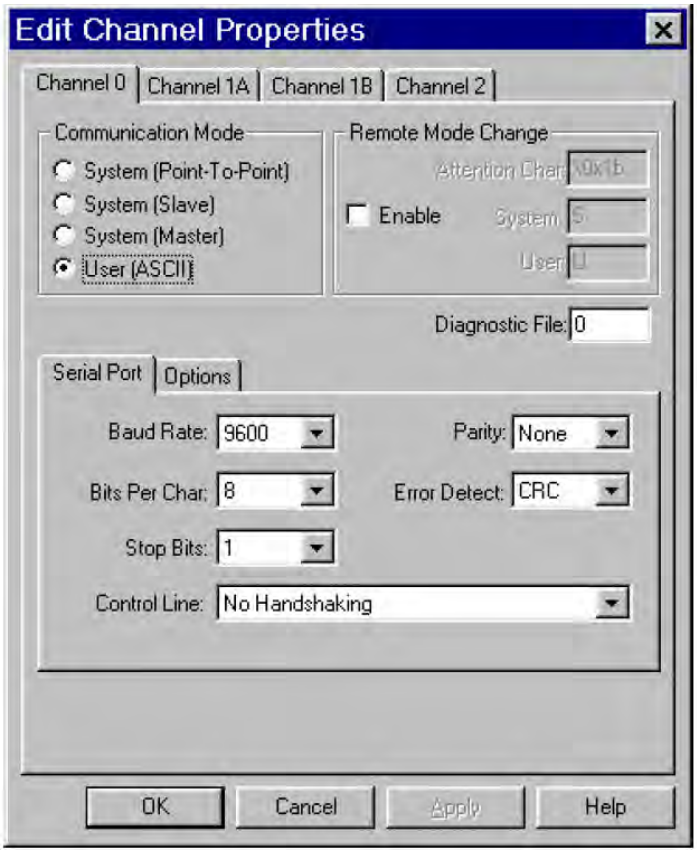

3. Create a file type String (ST). You insert ASCII/Hex commands in this file.
4. Set up the ladder logic.

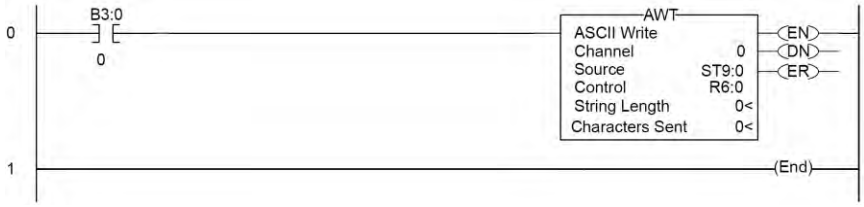

Use an SLC 5/03, 5/04, or 5/05 Out Channel Zero

The SLC processor is set up very similar to the PLC processor. The SLC processor uses the same ladder logic as the PLC processor shown below.

To use an SLC processor out Channel Zero on a display:

1. Create a new application and then set up the channel configuration as shown:

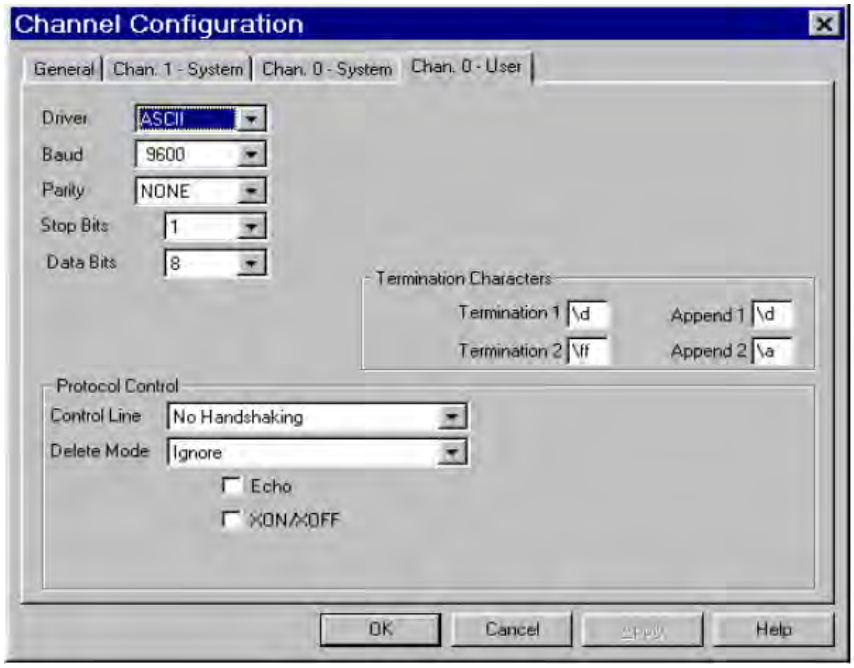

2. Under the General tab, make sure the mode for channel 0 is set to USER.

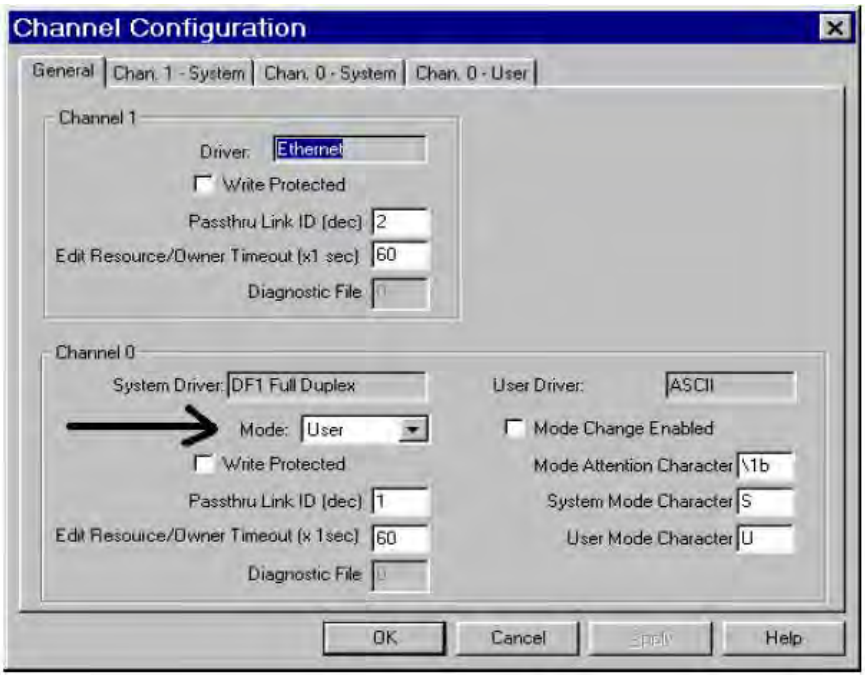

Use a MicroLogix Out Channel Zero or One

The MicroLogix processor is set-up similar to the SLC processor. They both use RSLogix 500 software to communicate; however the channel configuration and ladder is slightly different.

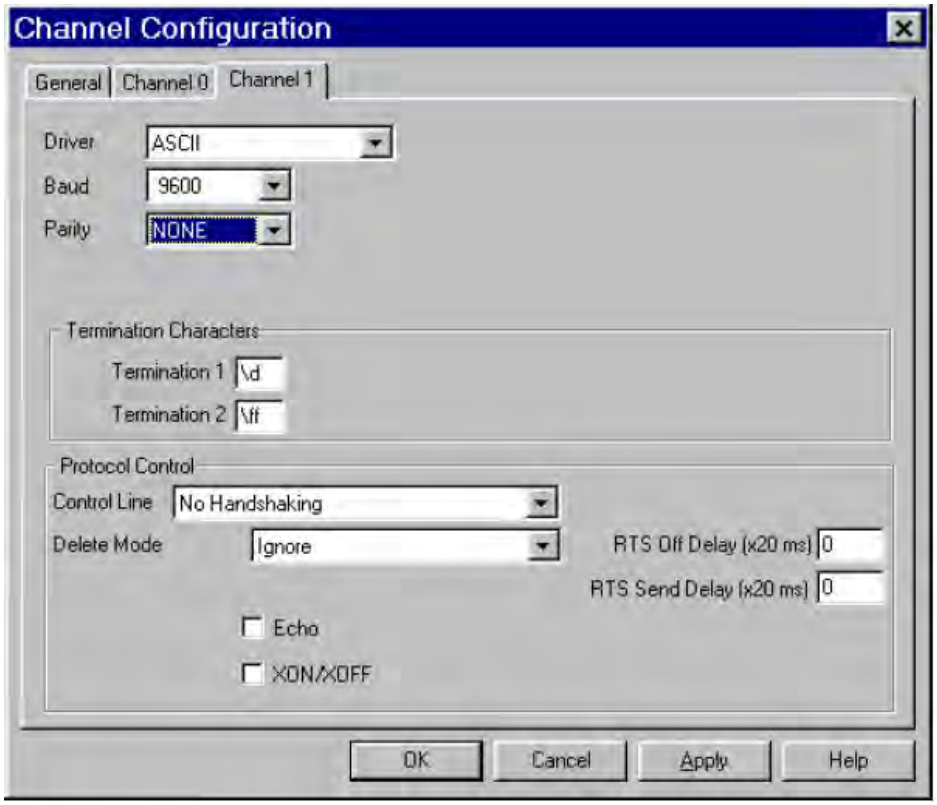

With the MicroLogix processor, you may download with either channel 0 or 1 and you may also write ASCII using channel 0 or 1.

In this example the ASCII is done using channel 1.

Use ControlLogix Processor Out Channel Zero

To use a ControlLogix processor out Channel Zero on a display:

1. Open a new application.
2. Set up the controller properties by right-clicking on the controller name and selecting properties and then the serial port tab as follows:

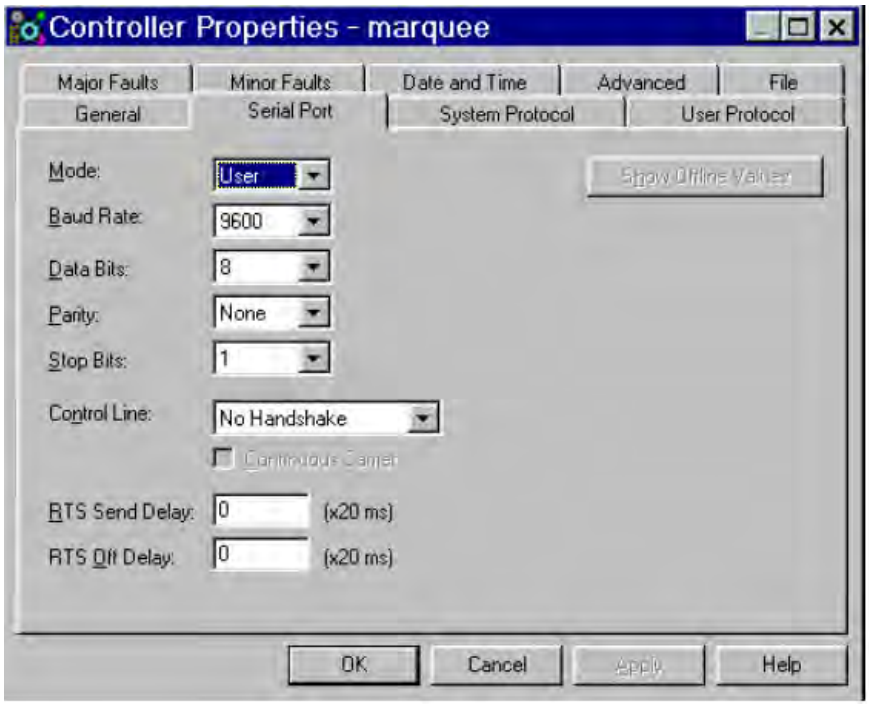

3. Set up ladder logic and controller tags:

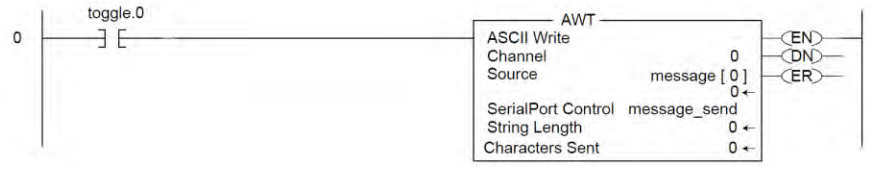

4. The tag setup for this example is:
   - Toggle is of type DINT.
   - Message_send is of type SERIAL_PORT_CONTROL
   - Message is of type SINT[50]

Use the CompactLogix Processor Out Channel Zero or One

To use a CompactLogix processor out Channel Zero on a display:

1. Open a new application.
2. Set up the controller properties by right-clicking on the controller name and selecting properties and then the serial port tab.
   The ladder is the same as a ControlLogix except that the user can select either channel zero or one:

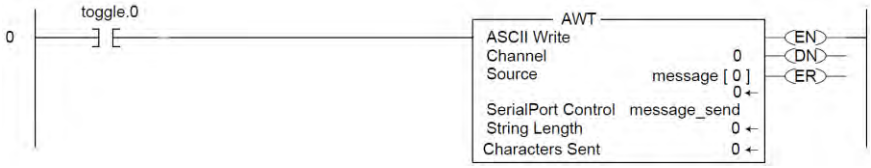

3. The tag setup for this example is:
   - Toggle is of type DINT.
   - Message_send is of type SERIAL_PORT_CONTROL
   - Message is of type SINT[50]

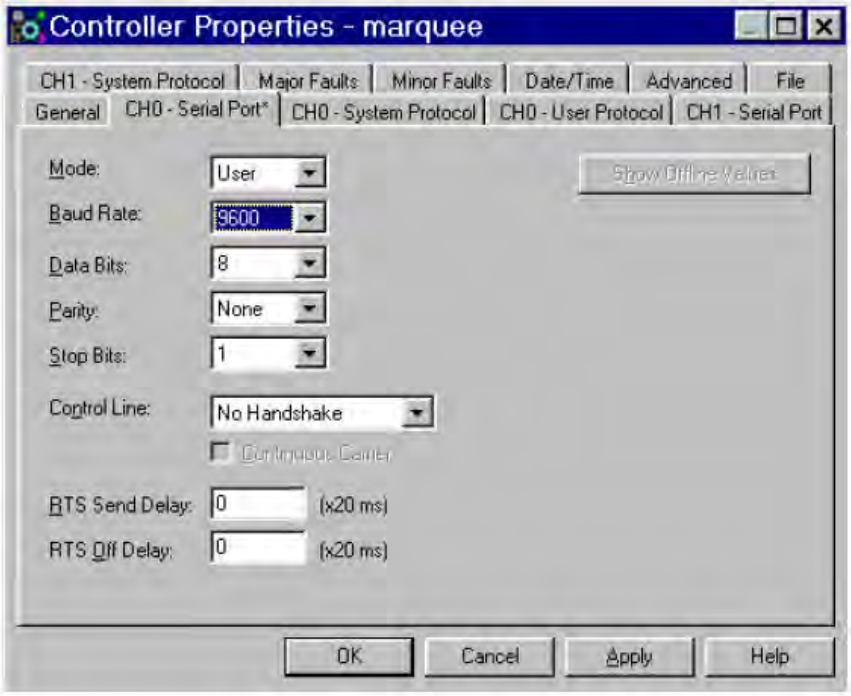

NOTE This same setup would need to be done for CH1-System Protocol if using you are using channel one instead of channel zero.

Use FlexLogix Processor Out Channel Zero

To use a FlexLogix Processor out Channel Zero on a display:

1. Open a new application.
2. Set up the controller properties by right-clicking on the controller name and selecting properties and then the serial port tab:

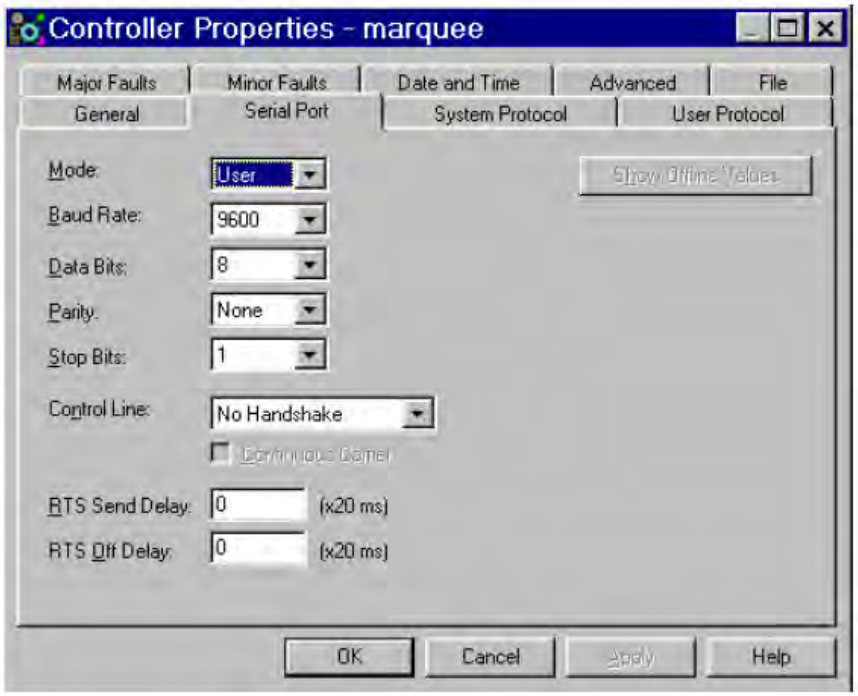

3. Set up ladder logic and controller tags:

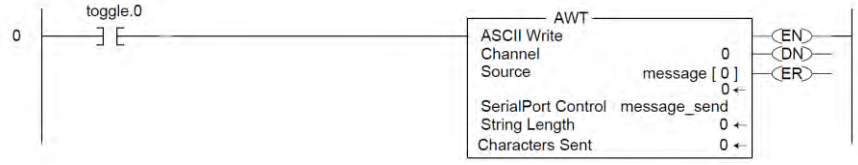

4. The tag setup for this example is:
   - Toggle is of type DINT.
   - Message_send is of type SERIAL_PORT_CONTROL
   - Message is of type SINT[50]

Chapter 4
InView Protocol

Introduction

The purpose of this chapter is to show the protocol that is required to trigger messages and update variables on InView displays with the InView protocol.

In general, messages are downloaded through the software and stored within the display memory. Up to 4000 messages and 100 (0 to 99) variables can be created with the InView software.

Messages are displayed using the Control-T function or Modbus ASCII.

One of three different methods can be used:

- Priority messaging.
- Add a message.
- Remove a displayed message.

Variables are updated using the Control-V function or Modbus ASCII.

Trigger Message and Update Variables

The two functions that are used to trigger messages and update variables are the Control-T (CRTL-T) and the Control-V (CTRL-V). The CTRL-T function allows for two different ways of displaying messages; priority messaging and add/remove messages. The CTRL-V function is used to update variables on all displays or a specific display.

Priority messaging displays the message number that was just transmitted to the display. Using this function has precedence over any priority levels that are used with add/remove messages. Add/remove messages allows for up to 64 concurrently running messages to be shown on the display. Messages are cleared one at a time or all at once. These messages have priority levels assigned to them that are used to determine how they are displayed.

The CTRL-T Function Frame

The CTRL-T function is used to trigger messages. This function requires an ASCII decimal value to be used to trigger the desired message number. The CTRL-T function has the ability for priority messaging, add a message, or remove a message. Control-T Frame Format shows the format for the Control-T function and Control-T Frame Description shows the acceptable values.

Control-T Frame Format

			Optional[1]				
Name	[CTRL][T]	MSG#	Backslash	Function	Backslash	Display Address	<CR>

[1] If not used, the message is shown as a Priority Message on all displays.

Control-T Frame Description

Data	Acceptable Values		Description
[CTRL][T[	ASCII	Hex	
MSG #	1 ... 4000 (Decimal)	\31 to \34\30\30\30	Message number
	4095 (Decimal)	\34\30\39\35	Background message number
	-1 (Decimal)	\2D\31	
Backslash	\	\5C	Backslash
Function	1 (Decimal) = Priority message 2 (Decimal) = dd message 3 (Decimal) = Remove message	\31 \32 \33	Message Function
Backslash	\	\5C	Backslash
Display Address	1 … 255	\31 to \32\35\35	Display address where 255 is a broadcast address.
<CR> or CTRL][M]	^M	\0D	Carriage Return

Use a priority message to clear all concurrently running messages and display the message number just sent. This supersedes any message added to the queue regardless of priority levels assigned to them. Add/remove messages allows for the ability of up to 64 concurrently running messages to be displayed. Messages are added to the queue, and are displayed for the length of time based on the message pause setting (1 to 5 seconds).

Messages have three different priority levels assigned to them; low, medium, and high. Messages with the highest priority level in the queue are displayed until they are cleared. When all messages are removed or cleared, the background message (message # 4095) is displayed.

NOTE If no background message is programmed, the default message NO BACKGROUND MESSAGE appears.

The CTRL-V Function Frame - Numeric Variables

The CTRL-V function is used to update variables that are embedded within messages. The value of the variable number determines which variable register is updated in the display. If no display address is used, it updates all displays with the variable data. The Control-V Frame Format shows the format for updating variables, and the Control-V Frame Description shows the acceptable values for the CTRL-V function.

Control-V Frame Format

			Optional[1]				
Name	[CTRL][V]	Variable Data	Backslash	Variable #	Backslash	Display Address	<CR>

The following table indicates the values to use in the Control-V format,

Control-V Frame Description

Data	Acceptable Values		Description
[CTRL][V[	ASCII	Hex	
Variable Data	-32768 to 32767 (ASCII decimal)[2]	\2D\33\32\37\36\38 to \33\32\37\36\37	Data
Backslash	\	\5C	Backslash
Function	1 (Decimal) = Priority message 2 (Decimal) = dd message 3 (Decimal) = Remove message	\31 \32 \33	Message Function
Backslash	\	\5C	Backslash
Display Address	1 … 255	\31 to \32\35\35	Display address where 255 is a broadcast address.
<CR> or CTRL][M]	^M	\0D	Carriage Return

NOTE To send floating point numbers, you need to use 2 variables; one for the integer portion, and one for the decimal portion. i.e {var1;}.{var2;}.

The CTRL-V Function Frame - Alphanumeric Variables

The Ctrl-V Function is used to update variables that are embedded within messages. The value of the variable number determines which register to update in the message display. If no variable number is used, only variable 0 is updated. In addition, you can flash or change the color of the variable data.

[1] If the Variable # and Display address are not used; only variable 0 on all displays will be updated. If the Variable # is used and not the Display address, that variable number will be updated on all displays.
[2] See previous footnote

Control-V Frame Format – Alphanumeric

			Optional[1]				
Name	[CTRL][V]	'Variable Data'	Backslash	Variable #	Backslash	Display Address	<CR>

The following table indicates the values to use in the Control-V format,

Control-V Frame Description - Alphanumeric

Data	Acceptable Values		Description
[CTRL][V[	ASCII	Hex	
Quote	"	\22	Quote Character
Variable Data	Any ASCII Character (except " character)	\20 to \126 (except \22)	Data
Quote	"	\22	Quote Character
Backslash	\	\5C	Backslash
Variable #	0 … 99 (ASCII decimal)	\30 to \39\39	Variable ID number
Backslash	\	\5C	Backslash
Display Address	1 … 255	\31 to \32\35\35	Display address where 255 is a broadcast address.
<CR> or CTRL][M]	^M	\0D	Carriage Return

Flash Variable Data

You can enable/disable flashing for the variable data by using [Ctrl] G1 to turn the variable on and [Ctrl] G0 to turn the variable off. For example, to flash the word text in the variable data how to flash text, you must enter the variable data as:

how to flash [Ctrl]G[1]text[Ctrl]G[0]

Change Color of Variable Data

To change the color of variable data, you must add the following characters to the variable data for the specific color:

\1C1 for red

\1C2 for green

\1C3 for yellow

For example, the variable data how to show the color is set to display as red. If you want to modify the variable data so the words to change the display as green

[1] If the Variable # and Display address are not used; only variable 0 on all displays will be updated. If the Variable # is used and not the Display address, that variable number will be updated on all displays.

with the remaining data red, you must set the variable data up as follows:
how \1C2 to change the \1C1 color

Examples of the Control-T Function

There are two basic ways in which messages are displayed: priority messaging or add/remove messages. When using either of these methods, the messages are shown on one or all displays.

Trigger a Message on all Displays using Priority Messaging

A message can be shown on all displays one of three different ways. These examples show the Control-T function being used to show message number 45 on all displays.

Trigger a Message on All Displays

Name	[CTRL][T]	MSG #	Return
ASCII	^T	45	^M
Hex	\14	\34\35	\0D

Name	[CTRL][T]	MSG #	Backslash	Display Address	RETURN
ASCII	^T	45	\	255	^M
Hex	\14	\34\35	\5C	\32\35\35	\0D

OR

Name	[CTRL][T]	MSG #	Backslash	Function	Backslash	Display Address	Return
ASCII	^T	45	\	1	\	255	^M
Hex	\14	\34\35	\5C	\31	\5C	\32\32\35	\0D

NOTE Allen-Bradley PLC processors require two backslashes (\\) to be used as a delimiter. Other PLC manufactures may only require one backslash (\).

Trigger a Message on a Specific Display using Priority Messaging

The following are examples of triggering message 39 on display address 031.

Trigger a Message on a Specific Display

Name	[CTRL][T]	MSG #	Backslash	Display Address	Return
ASCII	^T	39	\	31	^M
Hex	\14	\33\39	\5C	\33\31	\0D

OR

Name	[CTRL][T]	MSG #	Backslash	Function	Backslash	Display Address	Return
ASCII	^T	39	\	1	\	31	^M
Hex	\14	\33\39	\5C	\31	\5C	\33\31	\0D

Add a Message on all Displays

This is an example of how to add message 2011 to all displays.

Add a Message on all Displays

Name	[CTRL][T]	MSG #	Backslash	Function	Backslash	Display Address	Return
ASCII	^T	2011	\	2	\	255	^M
Hex	\14	\32\30\31\31 \	\5C	\32	\5C	\32\35\35	\0D

Adding a Message on a Specific Display

The following adds message 348 to display address 055.

Adding a Message on a Specific Display

Name	[CTRL][T]	MSG #	Backslash	Function	Backslash	Display Address	Return
ASCII	^T	348	\	2	\	55	^M
Hex	\14	\33\34\38	\5C	\32	\5C	\35\35	\0D

Remove all Messages on all Displays

The following removes all messages on all displays and automatically displays the background message (4095) without adding the background message number to the message queue. The following removes all messages on all displays and add the background message (4095) to the message queue using priority messaging.

Remove a Message on all Displays

Name	[CTRL][T]	MSG #	Backslash	Function	Backslash	Display Address	Return
ASCII	^T	-1	\	3	\	255	^M
Hex	\14	\2D\31	\5C	\33	\5C	\32\35\35	\0D

The following removes all messages on all displays and add the background message (4095) to the message queue using priority messaging.

Remove a Message on All Displays

Name	[CTRL][T]	MSG #	Return
ASCII	^T	4095	^M
Hex	\14	\34\30\39\35	\0D

OR

Name	[CTRL][T]	MSG #	Backslash	Display Address	Return
ASCII	^T	4095	\	255	^M
Hex	\14	\34\30\39\35	\5C	\32\35\35	\0D

OR

Name	[CTRL][T]	MSG #	Backslash	Function	Backslash	Display Address	Return
ASCII	^T	4095	\	1	\	255	^M
Hex	\14	\34\30\39\35	\5C	\31	\5C	\32\35\35	\0D

Remove all Messages on a Specific Display

The following removes all currently running messages on a display address 024 and automatically displays the background message (4095) without adding the background message number to the message queue.

Name	[CTRL][T]	MSG #	Backslash	Function	Backslash	Display Address	Return
ASCII	^T	-1	\	3	\	24	^M
Hex	\14	\2D\31	\5C	\33	\5C	\32\34	\0D

The following removes all messages on display address 024 and adds the background message (4095) to the message queue using priority messaging.

Remove all Messages on a Specific Display

Name	[CTRL][T]	MSG #	Backslash	Display Address	Return
ASCII	^T	4095	\	24	^M
Hex	\14	\34\30\39\35	\5C	\32\34	\0D

OR

Name	[CTRL][T]	MSG #	Backslash	Function	Backslash	Display Address	Return
ASCII	^T	4095	\	1	\	24	^M
Hex	\14	\34\30\39\35	\5C	\31	\5C	\32\34	\0D

Remove a Message on a Specific Display

The following removes message 367 on a display address 4.

Remove a Message on a Specific Display

Name	[CTRL][T]	MSG #	Backslash	Function	Backslash	Display Address	Return
ASCII	^T	367	\	3	\	4	^M
Hex	\14	\33\36\37	\5C	\33	\5C	\34	\0D

Examples of the Control-V Function

This function allows for the updating of variables that are embedded in messages. If no display address is used, it updates all displays with the variable data. The following example updates variable 0 in all displays.

Update a Variable on all Displays

Update variable 0 with the value of 2395 on all displays

Update a Variable on all Displays

Name	[CTRL][V]	Variable Data	Return
ASCII	^V	2395	^M
Hex	\16	\32\33\39\35	\0D

OR

Name	[CTRL][V]	Variable Data	Backslash	Variable #	Return
ASCII	^V	2395	\	0	^M
Hex	\16	\32\33\39\35	\5C	\30	\0D

OR

Name	[CTRL][V]	Variable Data	Backslash	Variable #	Backslash	Display Address	Return
ASCII	^V	2395	\	0	\	255	^M
Hex	\16	\32\33\39\35	\5C	\30	\5C	\32\35\35	\0D

Update Variable on a Specific Display

Update variable 5 with the value of 87 on display address 006.

Update a Variable on a Specific Display

Name	[CTRL][V]	Variable Data	Backslash	Variable #	Backslash	Display Address	Return
ASCII	^V	87	\	5	\	6	^M
Hex	\16	\38\37	\5C	\35	\5C	\36	\0D

Modbus ASCII Protocol to Download and Preview Messages

Modbus ASCII is an industrial data communications protocol that has been implemented in Allen-Bradley's InView Protocol. It is a master and slave protocol providing for one master and up to 247 slaves. Each slave is assigned a unique address, because only the master can initiate a transaction. The protocol controls the query and response that takes place between master and slave devices as in Figure.

The Modbus ASCII protocol is incorporated into the InView Industrial Protocol that allows displays to connect to a Modbus ASCII communications network. These displays receive applicable Modbus ASCII protocol and limited InView Sign Communication protocol (used during the download and preview of messages). Messages are pre-loaded into the displays, and then triggered by writing Modbus ASCII instructions to specific registers in the display.

Master and Slave Query/Response Cycle

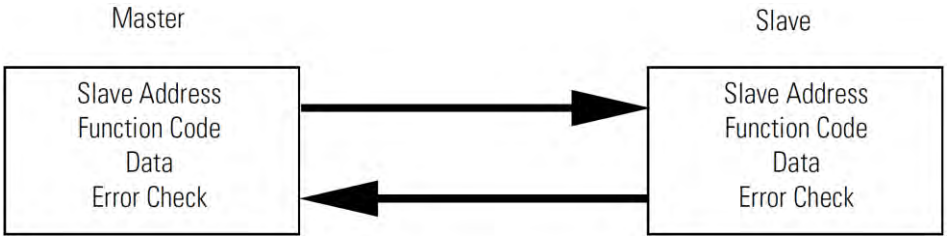

Below are several terms used throughout the Modbus ASCII section.

- ASCII–American Standard Code for Information Interchange.
- LRC–Longitudinal Redundancy Check used for error checking.
- RTU–Remote Terminal Unit.
- Query–Sending information to a node address where a response is expected.
- Response–A response is given to a Query.
- Transmission–Sending information to all node addresses where no response is expected.

How InView Sign Communication Protocol is used with Modbus ASCII Protocol

There are two different modes of transmission used with Modbus protocol, Modbus ASCII and Modbus RTU. In this case, Modbus ASCII is used. Modbus ASCII protocol is used to accomplish such functions as Priority Messaging, Add a Message, Remove a Message, Update Variables, and reading register in the Message Queue or Variable. The basic framing format that is used in the Modbus ASCII is shown in the section Add a Message on all Displays.

ASCII Message Frame Format

Beg of Frame	Address	Function	Data	Error Check	EOF	Ready to receive response
:	2-char 16 bits	2-char 16 bits	N × 4-char N × 16 Bits	2-char	CR	LF

Downloading messages to the displays using Modbus ASCII protocol requires a special function in order to pass Allen-Bradley's InView industrial protocol to the displays. To accomplish this, a Modbus 01 function or frame is specifically used to encapsulate the InView protocol. The downloading of messages that are created using automation software automatically encapsulates the protocol in the Modbus ASCII string.

To encapsulate the InView protocol a Modbus ASCII header and trailer are used. The automation software has message length range from 50 to 450 Bytes. This is only the maximum length of the InView protocol that is encapsulated within the Modbus ASCII protocol. When downloading messages on a Modbus network, the maximum length of the Modbus ASCII and the InView protocol is 500 bytes. The following table shows the format of the 01 Frame used for the downloading of messages to the displays.

Function 01 Used for Downloading of Messages

Beg of Frame	Address	Function	Starting Register Lo	Starting Register Hi	Data	Error Check	EOF	Ready to receive response
:	2-char 16 bits	2-char 16 bits	2-char 16 bits	2-char 16 bits	N × 4-char N × 16 Bits	2-char 16 bits	CR	LF

Messages are downloaded to all displays on the Modbus ASCII display network. A broadcast address is used that requires no response from the displays. Modbus ASCII protocol uses address 00h for broadcasting information from one device to the next. This is generally reserved for PLC to PLC communications. For this reason, address 255 (0×ff) is used.

Mode of Transmission

Mode of transmission is the format in which messages are transmitted over the network. Characteristics of the Modbus ASCII system are:

- Coding Systems - hexadecimal (uses ASCII printable characters: 0-9, A-F).

Modbus allows the format for data transmission.

- Communication rate: user selectable
- Format: Number of bits per character - 1 start bit, 7 data, 1 (optional) parity bit, 1 or 2 stop bits.

For the products, the data communication rate and format is 9600 baud (maximum), 1 start bit, 7 data bits, even parity, 2 stop bits.

InView Display Memory Map

Information transmitted to the displays writes or reads information into holding

registers. The holding registers used in the products are 40001 to 40167. Holding registers 40001 to 40103 can be written to. Registers 40001 to 40100, and 40103 to 40167 can be read from.

The product has three basic areas for registers, 100 registers for variables, 3 registers for message control, and 64 registers for the message queue. When referencing a holding register, Modbus ASCII requires that 40001 be subtracted from the holding register address.

For example, when using priority messaging, messages are sent to holding register 40103. The register number that is transmitted would be (40103-40001=102) or 102 (0×66) would be transmitted at 100 (64h). The following shows the memory map for the displays.

Memory Map

Modbus Holding Registers	Registers	Description
4001	001	Variables Registers Variables 001-100 (00-99 with automation software
….		
40100	100	
40101	101	Add a Message/Downloading of messages
400102	102	Remove a Message
400103	103	Message Queue/Priority Messaging
…		
400167	167	

Methods of Transmission

There are eight different methods of transmission of data to and from the display. Each one of these uses 1 of 4 different Modbus function codes.

The table, Modbus Function Codes used in InView Products, explains each of the four Modbus ASCII function codes used. The table, Methods of Transportation, shows the eight methods of using these codes with the product.

Modbus Function Codes Used in InView Products

Function Code	Function Code Hex	Modbus Meaning	Action
01	01	Read Coil Status	Used to signal the downloading of messages to the display.
03	03	Read Output Registers Query	Used to read registers in a display.

Function Code	Function Code Hex	Modbus Meaning	Action
06	06	Preset Single Register	Used to preset a single register in a display (Priority Messaging, Update Variables, and Add/Remove a Message).
16	10	Preset Multiple Registers	Used to preset multiple registers in a display (Add/Remove a Message or Update Variables).

Methods of Transportation

Method	Description	Modbus Function Code	Display Action
Add/Remove a Message using a Broadcast transmission	Triggers a message(s) on all displays using address 255	10	Writes information into registers 101 and 102. The display will give no response to transmission.
Add/Remove a Message using a Guaranteed transmission	Triggers a message(s) on a specific display address.	10	Writes information into register 101 and 102. The display will respond to the query
Priority Messaging using a Broadcast transmission	Triggers a message on all displays using address 255	06	Write information into register 103. The display will give no response to transmission.
Priority Messaging using a Guaranteed transmission	Triggers a message(s) on a specific display address	06	Write information into register 103. The display will respond to the query.
Read register data	Request information from a group of registers in the display	03	Transmit back the information in the registers queried.
Variables Broadcast	Update variables in all displays using address 255	06 or 10	Update variable registers. The display will give no response to the transmission.
Variable Guaranteed	Update variable in a specific display address	06 or 10	Update variable registers. The display will respond to the query.
Message Download	Download messages to all display(s) using a specific function code using address 255	01	Signals the displays that the following data will be InView protocol. The display will give no response to the transmission.

Message Format

Messages are transmitted at 9600 baud, and starts with a beginning of frame : and ends with a carriage return (CR) line feed (LF) to indicate the end of frame. The line feed character also serves as a synchronizing character to indicate that the transmitting station is ready to receive an immediate reply.

The Modbus ASCII message frame format consists of an address field, a function field, a data field, an LRC or error check field, an end of frame field (EOF), and a ready to receive response field (LF). The EOF is a carriage return (0×0d), and the

LF is a line feed (0×0a).

ASCII Message Frame Format

Beg of Frame	Address	Function	Data	Error Check (LRC)	EOF	LF
:	2-char 16-bits	2-char 16-bits	N × 4-char N × 16-bits	2-char 16-bits	0×0d	0×0a

Beginning of Frame Field

Each transmission will start with a colon (:) and is used to signal the receiving device that message packet follows.

Address Field

Each slave must be assigned a unique address. When a master sends to a specific slave address (query), the slave sends a response (response) message back to the master. When a master sends a message to a specific display address (001 to 247), the slave will give a response if the message data is correct. All other slaves will ignore the data transmission.

When a master sends a broadcast message addressed of 255 (0×ff), then all slaves interpret this as an instruction to read and take action on the message. No response message is required.

Modbus allows 001 through 247 for unique addresses that are used on a network. The products allow for address 001 through 255, with 255 being the broadcast address. Since some networks may not support address 248 through 255, then the broadcast address may not be used, and message queries are always guaranteed. If Modbus message transmissions are being generated from a serial port, then addressing from 001 through 255 are valid.

NOTE When a query/response is used for sending messages to the display, the display responds back to the host in less than 10 ms after receiving the LineFeed field (0×0a).

Function Field

The function field tells the address slave what function to perform. There are only four functions that are applicable to the display application.

Data Field

The data field contains information on the specific action that the slave must perform.

Error Check Field

The error checking is the LRC of the message and allows for the master and slave to detect message errors. A response message is only sent, if the original message was received correctly. The following shows a simulated query and response.

Simulated Query and Response

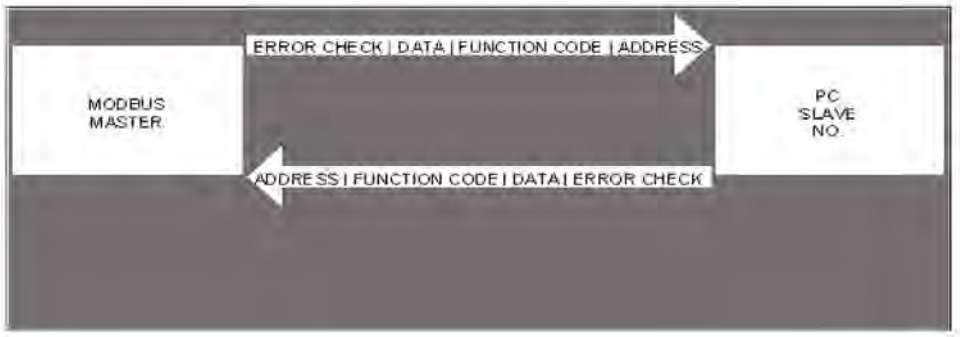

End Of File Field

This field is used to signify the end of file for the transmission. It uses a Carriage Return (0×0d).

Line Feed Field

This is the ready to respond field file (LF) and uses a line feed (0×0a).

Longitudinal Redundancy Check (LRC) Error Detection and Calculation

Some sort of error detection is needed, because communication errors can occur in an industrial environment due to machinery noise and electromagnetic interference. The method for error detection used with Modbus ASCII is Longitudinal Redundancy Check (LRC). The LRC is an 8-bit binary number represented and transmitted as two ASCII Hexadecimal characters. The LRC is produced by adding the message characters (ignoring the carry bit) and taking the two's compliment of the result. The error check byte is done from the address up to the data field.

The following is an example of how to calculate the LRC in a Modbus ASCII transmission.

Example of LRC Calculations

Beg of Frame	ADDR	FUNC	H.O ADDR	L.O ADDR	DATA	LRC Error	EOF	Ready to rec. response
	05	06	00	1F	0265	70	CR	LF

Modbus ASCII Transmission

Message	Transmitted Bytes	Binary
Address	05	0000 0101
Function	06	0000 0110
Start Add H.O.	00	0000 0000
Start Add L.O.	1F	0001 1111
Data H.O.	02	0000 0010
Data L.O.	64	0110 0100

Message	Transmitted Bytes	Binary
Sum	90	1001 0000
1's Complement		0110 1111
+1		+0000 0001
2's Complement		0111 0000
Transmitted as	70	

Examples of Modbus ASCII Functions

The following sections show examples of Modbus ASCII protocol Query/Response transmissions to/from a display for each command instruction listed above. Modbus ASCII will write/read to the holding registers in the display. These registers are in the 40000 range. When writing to register 40101, 40001 is dropped from the address leaving 100 (0×64). The following example shows the transmission of data to holding register 40102 in all displays. The display adds 40001 to the starting address upon receiving the transmission before updating the appropriate holding register.

Example of a Target Holding Register

Beg of Frame	ADDR	FUNC	H.O ADDR	L.O ADDR	DATA	LRC Error	EOF	Ready to rec. response
:	FF	06	00	65	FFFF	98	CR	LF

Target holding register 40102 – 40001 = 101 (0×65)

Format for the following sections is the use of a query/response or a transmission. Each section shows the complete transmission and response (if applicable). In some examples, there are multiple steps that are needed to complete the function requested. Within these steps, there are pause or delay times that must be used in-between each step.

The data that is sent is ASCII information and the CR and LF represents 0×0d and 0×0a respectively. The beginning of frame (:) represents (03a).

Heartbeat Function

The heartbeat function, when enabled, allows the display to determine if it is no longer on the network or if the host device is not functioning properly (not sending data or a heartbeat). Should the display not see any serial activity (valid or invalid) within 3 seconds, an error message No Network Activity is displayed. The heartbeat is either enabled or disabled via protocol or software.

Factory Default: DISABLED.

Enable the Heartbeat Function

The displays are shipped with the heartbeat disabled. Should the heartbeat function be required, the following string of information enables the display to look for a heartbeat or serial activity.

Transmission is as follows:

Transmission for Enabling the Heartbeat Function

Beg of Frame	ADDR	FUNC	H.O ADDR	L.O ADDR	DATA	EOF	Ready to rec. response
:	FF	01	00	64	^AZFF^BE01^D9C	CR	LF

NOTE See InView Display Communication Protocol Functions and Descriptions on for further explanation of the InView sign protocol being used.

Response: NONE

Disable the Heartbeat Function

Transmission is as follows:

Transmission for Disabling the Heartbeat Function

Beg of Frame	ADDR	FUNC	H.O ADDR	L.O ADDR	DATA	EOF	Ready to rec. response
:	FF	01	00	64	^AZFF^BE00^D9D	CR	LF

NOTE See InView Display Communication Protocol Functions and Descriptions on for further explanation of the InView sign protocol being used.

Response: NONE

Heartbeat Transmission

The following is the transmission for the heartbeat that is required for the display once the heartbeat function is enabled/

Transmission for the Heartbeat

Beg of Frame	Data	EOF	Ready to rec. response
:	00	CR	LF

NOTE Recommended interval to be transmitted: once every 500 ms.

Variable data or message data that is being updated in the displays acts as a heartbeat for the No Network Activity error message.

Response: NONE

Clear the Display Memory

This command is used to clear all of the memory (messages) in the displays, resize the memory partitions to 100 bytes (2,000 messages), and load each memory slot with a default message number (for example, Message #0002)

NOTE The Clearing Memory string may be required prior to the downloading of messages.

Transmission is as follows:

Transmission for Clearing Display Memory

Beg of Frame	ADDR	FUNC	H.O ADDR	L.O ADDR	DATA	EOF	Ready to rec. response
:	FF	01	00	64	^AZ00^BE$^D	CR	LF

NOTE See InView Display Communication Protocol Functions and Descriptions on for further explanation of the InView sign protocol being used.

Response: NONE

Clear the Message Queue using Modbus ASCII in Broadcast Mode (Recommended)

The display uses a message queue for all currently running messages on the display. This command is used to remove all currently running messages being displayed on all displays. This is also required when switching between priority messages and add/remove messages modes of operation.

Transmission is as follows:

Transmission for Clearing the Message Queue with 06 Frame Broadcast

Beg of Frame	ADDR	FUNC	H.O ADDR	L.O ADDR	DATA	LRC Error	EOF	Ready to rec. response
:	FF	06	00	65	FFFF	98	CR	LF

Response: NONE

Clear the Message Queue using Modbus ASCII in Guaranteed Mode

The following transmission is used to remove all currently running messages on a specific display address. For example, clearing all messages being displayed for display address 001:

Transmission is as follows:

Query for Clearing the Message Queue with 06 Frame Guaranteed

Beg of Frame	ADDR	FUNC	H.O ADDR	L.O ADDR	DATA	LRC Error	EOF	Ready to rec. response
:	01	06	00	65	FFFF	96	CR	LF

Response: The normal response to a function 06 is to echo (or re-transmit) the query after the holding register is updated.

Response from Clear Queue with a 06 Frame Guaranteed

ADDR	Beg of Frame	FUNC	H.O ADDR	L.O ADDR	DATA	LRC Error	EOF	Ready to rec. response
:	01	06	00	65	FFFF	96	CR	LF

Set Time in Broadcast Mode with AM/PM Format

The Set Time in Broadcast Mode with 24 Hour Format command is used to set the time and the format for the time in all displays. It is used primarily with the automation software to synchronize the time in the displays with the computer. This requires two separate transmissions. First, set the time and format for the time. Second, clear the queue.

The following is an example of setting the time to 1034 and the format for the time to be AM/PM.

1. Set the time and time format.

   Transmission is as follows:

Transmission for Setting Time with AM/PM Format

ADDR	Beg of Frame	FUNC	H.O ADDR	L.O ADDR	DATA	EOF	Ready to rec. response
:	FF	01	00	64	^AZ00^BE 1034^C^BE'S^C^D	CR	LF

NOTE See InView Display Communication Protocol Functions and Descriptions on for further explanation of the InView sign protocol being used.

Response: NONE

300 ms pause.

2. Clear the message queue.

The following transmission is used to remove the time that was just loaded into the message queue.

Transmission is as follows:

Transmission for Clearing the Message Queue

Beg of Frame	ADDR	FUNC	H.O ADDR	L.O ADDR	DATA	LRC Error	EOF	Ready to rec. response
:	FF	06	00	65	FFFF	98	CR	LF

Response: NONE

Set Time in Broadcast Mode with 24-Hour Format

This command is used to set the time and the format for the time in all displays. This is primarily done using the automation software to synchronize the time in the displays with the computer. This requires two separate transmissions. First, set the time and format for the time. Second, clear the queue. The following is an example of setting the time to 1035 and the format for the time to be 24 hour (military) format:

1. Set the time and time format.
   Transmission is as follows:

Transmission for Setting Time with AM/PM Format

ADDR	Beg of Frame	FUNC	H.O ADDR	L.O ADDR	DATA	EOF	Ready to rec. response
:	FF	01	00	64	^AZ00^BE 1034^C^BE'S^C^D	CR	LF

NOTE See InView Display Communication Protocol Functions and Descriptions on for further explanation of the InView sign protocol being used.

Response: NONE
300 ms pause.

2. Clear the message queue.

The following transmission is used to remove the time that was just loaded into the message queue.
Transmission is as follows:

Transmission for Clearing the Message Queue

Beg of Frame	ADDR	FUNC	H.O ADDR	L.O ADDR	DATA	LRC Error	EOF	Ready to rec. response
:	FF	06	00	65	FFFF	98	CR	LF

Response: NONE

Set Time in Broadcast Mode with 24 Hour Format

This command is used to set the time and the format for the time in all displays. This is primarily done using the automation software to synchronize the time in the displays with the computer. This requires two separate transmissions. First, set the time and format for the time. Second, clear the queue. The following is an example of setting the time to 1035 and the format for the time to be 24 hour (military) format.

1. Set the time and time format.
   Transmission is as follows:

Transmission for Setting Time with 24 Hour Format

ADDR	Beg of Frame	FUNC	H.O ADDR	L.O ADDR	DATA	EOF	Ready to rec. response
:	FF	01	00	64	^AZ00^BE 1035^C^BE'M^C^D	CR	LF

NOTE See InView Display Communication Protocol Functions and Descriptions on for further explanation of the InView sign protocol being used.

   Response: NONE
   300 ms pause.
2. Clear the message queue.

The following transmission is used to remove the time that was just loaded into the message queue.
Transmission is as follows:

Transmission for Clearing the Message Queue

Beg of Frame	ADDR	FUNC	H.O ADDR	L.O ADDR	DATA	LRC Error	EOF	Ready to rec. response
:	FF	06	00	65	FFFF	98	CR	LF

Response: NONE

Set Day and Date in Broadcast Mode

This command is used to set the date in all displays. This is primarily done using the automation software to synchronize the date in the displays with the computer. This requires three separate transmissions. First, set the date. Second, set the day of week. Third, clear the queue. The following is an example of setting the day and date to Thursday, January 4, 2001.

1. Set the date.
   Transmission is as follows:

Transmission for Setting Date

Beg of Frame	ADDR	FUNC	H.O ADDR	L.O ADDR	DATA	EOF	Ready to rec. response
:	FF	01	00	64	^AZ00^BE;01040^D	CR	LF

NOTE See InView Display Communication Protocol Functions and Descriptions on for further explanation of the InView sign protocol being used.

Response: NONE

300 ms pause.

2. Set the day of the week.
   The following transmission is used to remove the time that was just loaded into the message queue.
   Transmission is as follows:

Transmission for Setting Day of Week

Beg of Frame	ADDR	FUNC	H.O ADDR	L.O ADDR	DATA	EOF	Ready to rec. response
:	FF	01	00	64	^AZ00^BE&5^D	CR	LF

NOTE See InView Display Communication Protocol Functions and Descriptions on for further explanation of the InView sign protocol being used.

Response: NONE

300 ms pause.

3. Clear the message queue.

The following transmission is used to remove the date and day of week that was just loaded into the message queue.

Transmission is as follows:

Transmission for Clearing the Message Queue

Beg of Frame	ADDR	FUNC	H.O ADDR	L.O ADDR	DATA	LRC Error	EOF	Ready to rec. response
:	FF	06	00	65	FFFF	98	CR	LF

Response: NONE.

Preview a Message

NOTE A message preview is not recommended for run-time.

Four separate types of transmissions are required for message preview. This is primarily done using the automation software to preview a message. First, clear the Message Queue. Second, download the message to the appropriate memory partition. Third, trigger the message triggered for viewing. Fourth, generate a heartbeat (if enabled) so that there is some serial network activity allowing the message to be previewed. The software automatically performs these steps.

NOTE Message preview causes the loss of data in the memory partition where the message is stored.

This is an example of previewing Message #0001 as a target memory position.

1. Clear the message queue.
   This transmission is used to remove all currently running messages on the display for all displays.
   Transmission is as follows:

Transmission for Clearing the Message Queue

Beg of Frame	ADDR	FUNC	H.O ADDR	L.O ADDR	DATA	LRC Error	EOF	Ready to rec. response
:	FF	06	00	65	FFFF	98	CR	LF

Response: NONE.

300 ms pause.

Download Message #0001 to the appropriate memory position. This stores the message in the message number used within the data field. It overwrites any data already stored in the memory position.

NOTE Messages are downloaded to register 101 (40101), which then moves the InView message to the appropriate memory position.

Transmission is as follows:

Download Message 1 to be Previewed

Beg of Frame	ADDR	FUNC	H.O ADDR	L.O ADDR	DATA	EOF	Ready to rec. response
:	FF	01	00	64	^AZ00^BA2001^[”b^I^^1^\1Hello^D	CR	LF

NOTE See InView Display Communication Protocol Functions and Descriptions on for further explanation of the InView sign protocol being used.

Response: NONE

300 ms pause.

2. Trigger the message that was just downloaded.
   Trigger the message that was just downloaded by activating the message number that you want to preview in the message queue.

Trigger Message for Viewing

Beg of Frame	ADDR	FUNC	H.O ADDR	L.O ADDR	DATA	LRC Error	EOF	Ready to rec. response
:	FF	06	00	66	0001	94	CR	LF

Response: NONE.

300 ms pause.

3. Generate a heartbeat to view the message that was downloaded (if the Heartbeat function has been enabled).
   Use the heartbeat to provide serial activity so the message may be previewed. Disabling the heartbeat causes the previewed message to turn off after a 3-second internal time-out.
   Transmission is as follows:

Transmission for Heartbeat

Beg of Frame	DATA	EOF	Ready to rec. response
:	00	CR	LF

NOTE Send the Heartbeat every 500 ms until no longer needed for the previewing of the message.

Response: NONE.

500 ms pause between heartbeat transmissions.

Download Messages

Messages can be downloaded to the display so that they can be triggered (or activated) at a later time. The download of messages is generally done using the InView messaging software, but can be done from ladder logic using the instructions below. There are three basic steps that must be done to accomplish this.

- First, set the memory size.
- Second, messages are then downloaded.
- Third, clear the queue.

It may be necessary to clear the memory in the display prior to downloading of messages. This can be done either through a serial transmission from the InView messaging software (2706-PSW1-SC), or ladder logic commands.

Download Three Messages Example

This example shows the display downloading three messages (with three different priority levels). Setting the message size to 200 bytes (0×C8) for each message.

1. Set the message partition size in the display(s) to 200 bytes.

   Transmission:

Transmission for Setting Message size to 200 Bytes (Example 1)

Beg of Frame	ADDR	FUNC	H.O ADDR	L.O ADDR	DATA	EOF	Ready to rec. response
:	FF	06	00	64	^AZ00^BEa00C8^D	CR	LF

NOTE See InView Display Communication Protocol Functions and Descriptions on for further explanation of the InView sign protocol being used.

   Response: NONE

   2000 ms pause

2. Download three messages.

   This step is accomplished with three separate transmissions to the display, one for each message

NOTE The total number of bytes for each transmission (from the Beg of Frame to Ready to rec. resp.) must not exceed 500 bytes.

   Download message file #001

   Transmission is as follows:

Transmission for Downloading Message 1 (Example 1)

Beg of Frame	ADDR	FUNC	H.O ADDR	L.O ADDR	DATA	EOF	Ready to rec. response
:	FF	01	00	64	^AZ00^BA2001^[”b^I^^1^\1Priority High^D	CR	LF

NOTE See InView Display Communication Protocol Functions and Descriptions on for further explanation of the InView sign protocol being used.

Response: NONE
300 ms pause
Download message file #002
Transmission is as follows:

Transmission for Downloading Message 2 (Example 1)

Beg of Frame	ADDR	FUNC	H.O ADDR	L.O ADDR	DATA	EOF	Ready to rec. response
:	FF	01	00	64	^AZ00^BA1002^[”b^I^^1^\1Priority Medium^D	CR	LF

NOTE See InView Display Communication Protocol Functions and Descriptions on for further explanation of the InView sign protocol being used.

Response: NONE
300 ms pause
Download message file #003
Transmission is as follows:

Transmission for Downloading Message 3 (Example 1)

Beg of Frame	ADDR	FUNC	H.O ADDR	L.O ADDR	DATA	EOF	Ready to rec. response
:	FF	01	00	64	^AZ00^BA0003^[”b^I^^1^\1Priority Low^D	CR	LF

NOTE See InView Display Communication Protocol Functions and Descriptions on for further explanation of the InView sign protocol being used.

Response: NONE
300 ms pause

3. Clear the message queue.
   This transmission is used to remove all currently running messages downloaded to the queue.
   Transmission is as follows:

Transmission for Clearing the Message Queue

Beg of Frame	ADDR	FUNC	H.O ADDR	L.O ADDR	DATA	LRC Error	EOF	Ready to rec. response
:	FF	06	00	65	FFFF	98	CR	LF

Response: NONE.

Download Two Messages with a Variable Example

This example shows downloading two messages (one with a variable). Set the message size to 60 bytes (0×3C) for each message.

1. Set message partitions in the display(s) to 60 bytes.
   Transmission is as follows:

Transmission for Setting Message Size to 60 Bytes (Example 2)

Beg of Frame	ADDR	FUNC	H.O ADDR	L.O ADDR	DATA	EOF	Ready to rec. response
:	FF	01	00	64	^AZ00^BEa003C^D	CR	LF

NOTE See InView Display Communication Protocol Functions and Descriptions on for further explanation of the InView sign protocol being used.

Response: NONE

2000 ms pause

1. Download two messages.
   This step is accomplished with two separate transmissions to the display, one for each message.
   Transmission is as follows:

NOTE The total number of bytes for each transmission (from the beginning of frame to ready to rec. resp.) must not exceed 500 bytes.

Download message file #0001

Transmission for Downloading Message 1 (Example 2)

Beg of Frame	ADDR	FUNC	H.O ADDR	L.O ADDR	DATA	EOF	Ready to rec. response
:	FF	01	00	64	^AZ00^BA2001^[”b^I^^1^\1Hello^D	CR	LF

NOTE See InView Display Communication Protocol Functions and Descriptions on for further explanation of the InView sign protocol being used.

Response: NONE
300 ms pause
Download message file #0002

Transmission for Downloading Message 2 (Example 2)

Beg of Frame	ADDR	FUNC	H.O ADDR	L.O ADDR	DATA	EOF	Ready to rec. response
:	FF	01	00	64	^AZ00^BA1002^[b^I^^1^\2Part count = ^]A0^]B0^P00^D	CR	LF

NOTE See InView Display Communication Protocol Functions and Descriptions on for further explanation of the InView sign protocol being used.

Response: NONE
300 ms pause

2. Clear the message queue.
   This transmission is used to remove all currently running messages downloaded to the queue.
   Transmission is as follows:

Transmission for Clearing the Message Queue

Beg of Frame	ADDR	FUNC	H.O ADDR	L.O ADDR	DATA	LRC Error	EOF	Ready to rec. response
:	FF	06	00	65	FFFF	98	CR	LF

Response: NONE.

Add/Remove a Message using a Modbus ASCII 10 Frame Query (Recommended)

This method uses both registers 40101 and 40102 in the display to add and remove a message from the message queue respectively. By using the Guaranteed mode, only the display that is addressed on the network accepts and

processes the information it receives. The following is an example of adding message #0015 and removing message #0045 from the message queue on display number 019.

Transmission is as follows:

Query to Add/Remove the Message Queue

Beg of Frame	ADDR	FUNC	H.O ADDR	L.O ADDR	QUANTITY	BYTE CNT	DATA	
:	13	10	00	64	0002	04	000F	002D

LRC Error	EOF	Ready to rec. response
37	CR	LF

Response:

The normal response to a function 10 is to echo the address, function code, starting address, and the number of registers that were loaded.

Response to Add/Remove the Message Queue

Beg of Frame	ADDR	FUNC	H.O ADDR	L.O ADDR	QUANTITY	LRC Error	EOF	Ready to rec. response
:	13	10	00	64	0002	77	CR	LF

Add/Remove a Message using Modbus ASCII 10 Frame Transmission

This method uses both registers 40101 and 40102 in the display to activate and de-activate messages respectively. By using the Broadcast mode, all displays on the network will accept and process the information received. The following is an example of adding message #0003 and removing message #0002 from the message queue.

Transmission is as follows:

Transmission for Add/Remove a Message

Beg of Frame	ADDR	FUNC	H.O ADDR	L.O ADDR	QUANTITY	BYTE CNT	DATA	
:	FF	10	00	64	0002	04	0003	0002

LRC Error	EOF	Ready to rec. response
7E	CR	LF

Response: NONE

Priority Messaging using a Modbus ASCII Query (Recommended)

This method writes to the first register in the message queue (40103). When this happens, the previous message in the queue is replaced with the new message to be loaded.

This is an example of sending a Priority Message #0099 to display address 001.

Transmission is as follows:

Query for a Priority Message

Beg of Frame	ADDR	FUNC	H.O ADDR	L.O ADDR	DATA	LRC Error	EOF	Ready to rec. response
:	01	06	00	66	0063	30	CR	LF

Response:

The normal response to a function 06 is to echo (or re-transmit) the query after the holding register is updated.

Response for a Priority Message

Beg of Frame	ADDR	FUNC	H.O ADDR	L.O ADDR	DATA	LRC Error	EOF	Ready to rec. response
:	01	06	00	66	0063	30	CR	LF

Priority Messaging using a Modbus ASCII Transmission

This method writes to the first register in the message queue (40103). When this happens, the previous message in the queue is replaced with the new message to be activated. This is an example sending a Priority Message #0800 to all displays that are on the network.

Transmission is as follows:

Transmission for Priority Messaging

Beg of Frame	ADDR	FUNC	H.O ADDR	L.O ADDR	DATA	LRC Error	EOF	Ready to rec. response
:	FF	06	00	66	0320	72	CR	LF

Response: NONE

Update a Variable using a Modbus ASCII 06 Frame in Broadcast Mode (Recommended)

This method writes (or loads) variable data to the appropriate variable registers in all displays. The following is an example of loading variable 20 (register 40020) with the value of 3656 for all displays on the network.

Transmission is as follows:

Query for Updating a Variable Register

Beg of Frame	ADDR	FUNC	H.O ADDR	L.O ADDR	DATA	LRC Error	EOF	Ready to rec. response
:	05	06	00	1F	0264	70	CR	LF

Response:
The normal response to a function 06 is to echo (or re-transmit) the query after the holding register is updated.

Response for Updating a Variable Register

Beg of Frame	ADDR	FUNC	H.O ADDR	L.O ADDR	DATA	LRC Error	EOF	Ready to rec. response
:	05	06	00	1F	0264	70	CR	LF

NOTE Use of the Guaranteed mode for variable updates may slow down variable updates due to the response transmission.

Update Variables using a Modbus ASCII 10 frame in Broadcast mode (Recommended)

This method allows the ability to update more than one variable register in all displays. A maximum of 60 registers can be updated in one transmission.
The following example shows how to update variables 1, 2, and 3 (registers 40001, 40002, and 40003) with values 24, 53, and 56 respectively in all displays.
Transmission is as follows:

Transmission for Updating Variable Registers with 10 Frame Broadcast

Beg of Frame	ADDR	FUNC	H.O ADDR	L.O ADDR	QUANTITY	BYTE CNT	DATA		
:	FF	10	00	00	0003	06	00018	0035	0038

LRC Error	EOF	Ready to rec. response
63	CR	LF

Response: NONE

Update Variables using a Modbus ASCII 10 frame in Guaranteed Mode

This method allows the ability to update more than one variable in a specific display address. A maximum of 60 registers can be updated in one transmission. Unused high order bits must be set to zero. The following is an example of updating variables 1, 2, and 3 with values 23, 734, and 7 respectively in display address 003. Below is an example of a preset multiple register transmission.
Transmission is as follows:

Query for Updating Variable Registers using a 10 Frame

Beg of Frame	ADDR	FUNC	H.O ADDR	L.O ADDR	QUANTITY	BYTE CNT	DATA		
:	03	10	00	00	0003	06	00017	02DE	0007

LRC Error	EOF	Ready to rec. response
E6	CR	LF

NOTE Use of the Guaranteed mode for variable updates means messages may not be displayed as expected.

Response:
The normal response to a function 10 query is to echo the address, function code, starting address and the number of registers that were loaded.

Response for Updating Variable Registers using a 10 Frame

Beg of Frame	ADDR	FUNC	H.O ADDR	L.O ADDR	DATA	LRC Error	EOF	Ready to rec. response
:	03	10	00	00	0003	EA	CR	LF

Read the Message Queue using a Modbus ASCII 03 frame

This function allows the ability to read message numbers that are currently running in the message queue on a display. A maximum of 64 registers can be read since there is a maximum of 64 registers (or concurrently running messages) in the message queue. The following is an example of request for the first 3 registers in the message queue (Registers 40103 through 40105) which contain message data values 4, 6, and 11 respectively in display address 010.
Transmission is as follows:

Query for Requesting Message Data

Beg of Frame	ADDR	FUNC	H.O ADDR	L.O ADDR	DATA Number of register to read	LRC Error	EOF	Ready to rec. response
:	0A	03	00	66	0003	8A	CR	LF

Response:
The addressed slave responds with its address and the function code, followed by the information field. The information field contains 2 bytes describing the quantity of data bytes to be returned. The contents of the registers requested (DATA) are two bytes each, with the binary content right justified within each

pair of characters.
The normal response to a function 03 query is to echo the address, function code, starting address and the data for the registers that were requested.

Response for Requesting Message Data

Beg of Frame	ADDR	FUNC	BYTE COUNT	DATA OUTPUT REG H.O. 0066	DATA OUTPUT REG L.O. 0066	DATA OUTPUT REG H.O. 0067	DATA OUTPUT REG L.O. 0067
:	0A	03	00	00	04	00	06

DATA OUTPUT REG H.O. 0068	DATA OUTPUT REG L.O. 0068	LRC Error	EOF	Ready to rec. response
00	0B	D8	CR	LF

Read Variables in a Display using a Modbus ASCII 03 frame

This function allows the ability to read variable data stored in a display. A maximum of 100 registers can be read since there is a maximum of 100 registers of data. Below is an example of the request for registers 40002 through 40004 in display address 020.
Transmission as follows:

Query for Requesting Variable Data

Beg of Frame	ADDR	FUNC	H.O ADDR	L.O ADDR	DATA Number of register to read	LRC Error	EOF	Ready to rec. response
:	14	03	00	01	0003	E5	CR	LF

Response:
The addressed slave responds with its address and the function code, followed by the information field. The information field contains 2 bytes describing the quantity of data bytes to be returned. The contents of the registers requested (DATA) are two bytes each, with the binary content right justified within each pair of characters. Below shows the response to query for registers 40002 through 40004 having the decimal contents of 44, 63, and 1 respectively.
The normal response to a function 03 query is to echo the address, function code, starting address and the data for the registers that were requested.

Response for Requesting Variable Data

Beg of Frame	ADDR	FUNC	BYTE COUNT	DATA OUTPUT REG H.O. 0002	DATA OUTPUT REG L.O. 0002	DATA OUTPUT REG H.O. 0003	DATA OUTPUT REG L.O. 0003
:	14	03	006	00	2C	00	3F

DATA OUTPUT REG H.O. 0068	DATA OUTPUT REG L.O. 0068	LRC Error	EOF	Ready to rec. response
00	01	77	CR	LF

Change the InView Display Address

This function allows the ability to change the serial address in a display. For example, change display address 001 to address 020. When doing this, you need to know the address of the display you want to change. This is typically done using the automation software. The following is an example of changing a display (with the address of 005) to address 004.

Transmission is as follows:

Transmission for Changing the Serial Address

Beg of Frame	ADDR	FUNC	H.O ADDR	L.O ADDR	DATA	EOF	Ready to rec. response
:	05	01	00	64	^AZ05^BE704^D	CR	LF

NOTE See InView Display Communication Protocol Functions and Descriptions on for further explanation of the InView sign protocol being used.

Response: NONE

InView Display Communication Protocol Functions and Descriptions

The InView display communication protocol that is used in conjunction with the Modbus ASCII protocol is mostly limited due to the number of functions and features that required by the InView products. This Protocol can be used for downloading new messages of alpha numeric messages from an Allen-Bradley controller.

InView Message Format used within Modbus ASCII Protocol

Information that is used within the InView message is formatted differently than that of the standard protocol. The following table shows the basic message structure with a brief explanation of each part.

Basic InView Message Format

<SOH>	Type Code	Display Address	<STX>	Command Code	Message Control	Message Attributes	Insert Objects	Insert Variables	Message Data	EOT

Name	Description
<SOH>	Start of Header
Type Code	Display type with which to communicate
Display Address	Address of display where information is written
<STX>	Start of Text
Command Code	Describes what type function to perform, message priority, and message number
Message Control	Describes how the message is displayed, including Position, Mode, Pause, and Justification.
Message Attributes	Describes any Font, Color, Width/Height, and Flash
Insert Objects	Describes any special items that are inserted within a message such as Time, Date, and Extended Character set.
Message Data	Data for the Message itself.
<EOT>	End of Transmission

Items in Bold must be used in each transmission. The automation software will automatically put this information into the message that is transmitted. Some of these functions are modified from the InView protocol that is used in the standard product line, for example, message number versus file labels. Below is a list of the valid values for each of the fields shown above. Each of these are concatenated together to make up the InView message.

InView Message Format

<SOH>			**Type Code**			**Display Address**		
Description	**ASCII**	**Hex**	**Description**	**ASCII**	**Hex**	**Description**	**ASCII**	**Hex**
Start of Header	^A	01	All displays	Z	5A	Display Address	00	3030

<STX>			Command Code Command			Priority		
Description	**ASCII**	**Hex**	**Description**	**ASCII**	**Hex**	**Description**	**ASCII**	**Hex**
Start of Text	^B	02	Write Text file	A	41	Low	0	30
			Write Special Function	E[1]	45	Medium	1	31
						High	2	32

Command Code, continued			Message Control					
Message #			<ESC>			Display Position		
Description	**ASCII**	**Hex**	**Description**	**ASCII**	**Hex**	**Description**	**ASCII**	**Hex**
0001	001	303031	Start of Mode Field	^[	1B	Middle	(space)	20
Through						Top	“	22
4000	FA0	464130				Bottom	&	26
4095	FFF	464646				Fill	0	30

Mode			Speed			Justification		
Description	**ASCII**	**Hex**	**Description**	**ASCII**	**Hex**	**Description**	**ASCII**	**Hex**
Rotate left	a	61	(No Hold)	^I	09	Left	^^1	1E31
Hold	b	62	(1 sec)	^U	15	Center	^^0	IE30
			(2 sec)	^V	16			
			(3sec)	^W	17			
			(4 sec)	^X	18			
			(5 sec)	^Y	19			

[1] Refer to Trigger a Message on a Specific Display using Priority Messaging on page 6 for further explanation of the Special Function command

Message Attributes

Character Font			Character Color			Character Width/Height		
Description	**ASCII**	**Hex**	**Description**	**ASCII**	**Hex**	**Description**	**ASCII**	**Hex**
5 High Standard	^Z1	1A31	Red	^\1	1C31	Standard	^Q^]10	111D3130
7 High Standard	^Z3	1A33	Green	^\2	1C32	Wide	^R^]10	121D3130
7 High Fancy	^Z5	1A35	Yellow	^\3	1C33	Double Wide	^Q^]11	111D3131
10 High Standard	^Z6	1A36				Double High	^Q^]21	111D3231
16 High Fancy (Full Height)	^Z8	1A38						
16 High Standard (Full Height	^Z9	1A39						
24/32 Fancy	^Z8^E1	1A380531						
24/32 High	^Z9^E1	1A390531						

Message Attributes, continued			Insert Objects					
Character Flash			Time			Date		
Description	**ASCII**	**Hex**	**Description**	**ASCII**	**Hex**	**Description**	**ASCII**	**Hex**
Flash ON	^G1	0731	Time	^S	13	MM/DD/YY	^K0	0B30
Flash OFF	^G0	0730				DD/MM/YY	^K1	0B31
						MM-DD-YY	^K2	0B32
						DD-MM-YY	^K3	0B33
						MM.DD.YY	^K4	0B34
						DD.MM.YY	^K5	0B35
						MM DD YY	^K6	0B36
						DD MM YY	^K7	0B37
						MMM.DD YYYY	^K8	0B38

Insert Object, continued			**Insert Variable - Numeric**		
Miscellaneous			**Variable Format**		
Description	**ASCII**	**Hex**	**Description**	**ASCII**	**Hex**
See Appendix A			No Padding, XX	^]A0^]B0	1D41301D4230
			Leading 0, 000XX	^]A1^]B0	1D41311D4230
			Leading Space, ___XX	^]A2^]B0	1D41321D4230
			_+/- No Padding, +/- XX	^]A0^]B1	1D41301D4231
			+/- leading 0, +/- 000XX	^]A1^]B1	1D41311D4231
			+/- Leading Space, +/-, ___X	^]A2^]B1	1D41321D4231

Insert Variable – Numeric			**Message Field**			**<EOT>**		
Call Variable			**Message or Data**					
Description	**ASCII**	**Hex**	**Description**	**ASCII**	**Hex**	**Description**	**ASCII**	**Hex**
Variable 1	^P00	103030	ASCII Data	(space) – DEL	20-7F	End of Transmission	^D	04
Variable 2	^P01	103031						
…	…	…						
Variable 99	^P62	103632						
Variable 100	^P63	1030633						

Insert Variable - Alphanumeric					
Variable Format			**Call Variable**		
Description	**ASCII**	**Hex**	**Description**	**ASCII**	**Hex**
Alpha Length 1	^]A301	1D41333031	Variable 1	^PA00	10413030
…			…		
Alpha Length 128	^]A380	1D41333830	Variable 100	^PA63	10413633

Insert Bitmaps		
Bitmaps		
Description	**ASCII**	**Hex**
Bitmap 0	^N0000	0E30303030
…		
Bitmap 2047	^N07FF	0E30374646

<EOT>		
Description	**ASCII**	**Hex**
End of Transmission	^D	04

Special Function Command

The Special Function Command is used to; Clear the Display Memory, Set Message Size, Set Time and Date, Read Memory from a display on the network, and set the serial address.

The following tables show the valid information to perform each on the commands

Clear the Display Memory

Special Function Command to Clear Display Memory

<SOH>			Type Code			Display Address		
Description	**ASCII**	**Hex**	**Description**	**ASCII**	**Hex**	**Description**	**ASCII**	**Hex**
Start of Header	^A	01	All displays	Z	5A	Display Address	00	3030

<STX>			Command Code					
			Command			**Function**		
Description	**ASCII**	**Hex**	**Description**	**ASCII**	**Hex**	**Description**	**ASCII**	**Hex**
Start of Text	^B	02	Write Special Function	E	45	Clear Memory	$	24

Special Function Command to Clear Display Memory

<EOT>		
Description	**ASCII**	**Hex**
End of Transmission	^D	04

Set Message Size

The message size is the number of bytes that each message can be stored in. This message size will partition the displays memory based on the number of bytes used in the message size. When this command is used, it (generally, based on model of display) takes 200,000 bytes and divides it by the number of bytes used for the message size. For example, 2,000 message partitions would be available if the message size was set to 100 bytes (200,000 bytes/100 bytes/message = 2,000 messages).

The number of bytes used in each message is the number of bytes used from the <SOH> to the <EOT> inclusive. Therefore, care must be used to ensure that the number of bytes sent does not exceed the Message Size. The range for the message size is 50 bytes to 450 bytes. The following is the message data used to set the message size.

Special Function Command to Set Memory Size

<SOH>			**Type Code**			**Display Address**		
Description	**ASCII**	**Hex**	**Description**	**ASCII**	**Hex**	**Description**	**ASCII**	**Hex**
Start of Header	^A	01	All displays	Z	5A	Display Address	00	3030

<STX>			**Command Code**					
			Command			**Function**		
Description	**ASCII**	**Hex**	**Description**	**ASCII**	**Hex**	**Description**	**ASCII**	**Hex**
Start of Text	^B	02	Write Special Function	E	45	Clear Memory	a	61

Command Code			**<EOT>**		
Description	**ASCII**	**Hex**	**Description**	**ASCII**	**Hex**
Message Size (minimum) 50 Bytes	0032	30303332	End of Transmission	^D	04

Set Time

Time can be set in either AM/PM format or 24 hour (military) format. The following shows the valid values for this command:

Special Function Command to Set Time and Time Format

<SOH>			Type Code			Display Address		
Description	**ASCII**	**Hex**	**Description**	**ASCII**	**Hex**	**Description**	**ASCII**	**Hex**
Start of Header	^A	01	All displays	Z	5A	Display Address	00	3030

<STX>			Command Code					
			Command			Function		
Description	**ASCII**	**Hex**	**Description**	**ASCII**	**Hex**	**Description**	**ASCII**	**Hex**
Start of Text	^B	02	Write Special Function	E	45	Set Time	(Sp)	20

Command Code, continued			<ETX		
Set Time					
Set Hour and Minutes HhMm	**ASCII**	**Hex**	**Description**	**ASCII**	**Hex**
HhMm 1034 (Example)	1034	31303334	End of Text	^C	03
HhMm 0945 (Example)	0945	30393435			
H = ASCII digit for hours (10's digit)					
h = ASCII digit for hours (1's digit)					
M = ASCII digit for Minutes (10's digit)					
m = ASCII digit for Minutes (1's digit)					

<STX>			Command Code			<ETX		
Description	**ASCII**	**Hex**	**Description**	**ASCII**	**Hex**	**Description**	**ASCII**	**Hex**
Start of Text	^B	42	Set Time Format AM/PM	‘S	2753	End of Text	^C	03
			Set Time Format 24 Hr (Military)	‘M	274D			

<EOT>		
Description	**ASCII**	**Hex**
End of Transmission	^D	04

Set Date

This command is used to set the date.

Format for displaying the date is shown under Insert Object later in this section.

Special Function Command to Set Time and Date

<SOH>			Type Code			Display Address		
Description	**ASCII**	**Hex**	**Description**	**ASCII**	**Hex**	**Description**	**ASCII**	**Hex**
Start of Header	^A	01	All displays	Z	5A	Display Address	00	3030

<STX>			Command Code Command			Function		
Description	**ASCII**	**Hex**	**Description**	**ASCII**	**Hex**	**Description**	**ASCII**	**Hex**
Start of Text	^B	42	Write Special Function	E	45	Set Date	;	

Command Code, continued			<ETX		
Set Date					
Set Hour and Minutes HhMm	**ASCII**	**Hex**	**Description**	**ASCII**	**Hex**
January 4, 2001 (Example)	010401	303130343031	End of Text	^C	03
December 5, 2002 (Example)	120502	31323035303			

<STX>			Command Code			<ETX		
Description	**ASCII**	**Hex**	**Description**	**ASCII**	**Hex**	**Description**	**ASCII**	**Hex**
Start of Text	^B	42	Set Time Format AM/PM	‘S	2753	End of Text	^C	03
			Set Time Format 24Hr (Military)	‘M	274D			

<EOT>		
Description	**ASCII**	**Hex**
End of Transmission	^D	04

Set Day of Week

This command sets the day of the week once the date is set.

Special Function Command to Set Day of Week

<SOH>			Type Code			Display Address		
Description	**ASCII**	**Hex**	**Description**	**ASCII**	**Hex**	**Description**	**ASCII**	**Hex**
Start of Header	^A	01	All displays	Z	5A	Display Address	00	3030

<STX>			Command Code Command			Function		
Description	**ASCII**	**Hex**	**Description**	**ASCII**	**Hex**	**Description**	**ASCII**	**Hex**
Start of Text	^B	02	Write Special Function	E	45	Set Date	&	26

Command Code, continued			<EOT>		
Set Day of Week	**ASCII**	**Hex**	**Description**	**ASCII**	**Hex**
Sunday	1	31	End of Transmission	^D	04
Monday	2	32			
Tuesday	3	33			
Wednesday	4	34			
Thursday	5	35			
Friday	6	36			
Saturday	7	37			

Set Serial Address

This command changes a serial address for a display.

Special Function Command to Set Serial Address

<SOH>			Type Code			Display Address		
Description	**ASCII**	**Hex**	**Description**	**ASCII**	**Hex**	**Description**	**ASCII**	**Hex**
Start of Header	^A	01	All displays	Z	5A	Display Address	01-FF	3031-4646

<STX>			Command Code Command			Function		
Description	**ASCII**	**Hex**	**Description**	**ASCII**	**Hex**	**Description**	**ASCII**	**Hex**
Start of Text	^B	02	Write Special Function	E	45	Set address	7	37

Command Code, continued			<EOT>		
Serial Address	**ASCII**	**Hex**	**Description**	**ASCII**	**Hex**
New serial address	01-FE	3031-4645	End of Transmission	^D	04

Text Position Placement

Allen-Bradley uses the 2706-P42-SC, 2706-P44-SC, and 2706-P72-SC series displays with InView industrial protocol. The displays can be single line, two-

line or 3-line. Displaying of messages using protocol is slightly different based on which display is being used. Below are some rules for the 2706-P44-SC and 2706-P72-SC display. The 2706-P42-SC display ignores the display position and show (display) the text.

Valid Modes used in P44-SC Series Displays

P44 Series	
Display Position	**Description**
Top	Displays text on top line only.
Bottom	Displays text on bottom line only.
Middle	Used to display full height text (Fancy 16 Pixel or 16 Pixel).
Fill	Displays two lines of 7 pixel characters.

Valid Modes used in P72 Series Displays

P74 Series			
Display Position	**Description**	**Comment 1**	**Comment 2**
Top	Displays text on top line only.	If the top line has only one row of text, the remaining bottom rows are considered bottom.	If the top line has only two rows of text. The remaining bottom row is considered bottom.
Bottom	Displays text on bottom line only.	If the bottom line only has one row of text, the remaining top rows are considered top.	If the bottom line has two rows of text, the remaining top row is considered top.
Middle	Not used.	Not used.	Not used.
Fill	Displays full screen of text.	Can be used to display Fancy 16 Pixel or 16 Pixel characters.	

ASCII Characters

You can enter extended ASCII characters directly within the text of a message. Some of the characters may not show up depending on the fonts on your PC. Please refer to the software help, 2706-PSW1-SC, for a complete listing of the extended ASCII character set.

NOTE You must preview your message to view the extended characters when using the InView Messaging Software.

Reference Material

For additional information refer to, Modicon Modbus Protocol Reference Guide, PI-MBUS-300 Rev C.

Chapter 5 InView Control and InView Control API

Introduction

The purpose of this chapter is to describe the API for the InView control. The chapter is divided into two sections. The first section is a quick overview on how to use the control. It highlights the basic steps needed to get the control up and running. The second section is a detailed reference of the properties and methods available in the control. Each property and method is listed in a table with a brief description and a link to a more complete description.

Quick Overview

The InView control is designed primarily for use with the InView messaging software. The InView messaging software is used to create and download messages to the display, and the InView control is used to trigger the messages and update variables within those messages. Assuming that the InView messaging software has already been used to load the display with messages, there are five basic steps to using the control to trigger a message:

1. Add the control to your project. It appears as InView control under Project|Components… in Visual Basic.
2. Call the Initialize method to open a connection to the display.
3. Set the heartbeat property to 2 to disable the display's heartbeat requirement.
4. Call the AddMessage method to trigger a message on the display.
5. Call the UpdateVariable method to change the value of a variable.

Following is a snapshot of a Visual Basic form and its associated code that illustrates these five steps. This code assumes that the display contains a message in slot number 1, and that the message contains variable 0 within its body. It also uses the controls default communications settings of serial on COM1 to connect with the display:

```
Private Sub Command1_Click()
 InViewCtrl1.UpdateVariable 0, Text1.Text      'Update variable
                                                0 with
End Sub                                         'number in edit box
Private Sub Form_Load()
       InViewCtrl1.Initialize                   'Open COM1
       InViewCtrl1.Heartbeat = 2                'Disable heartbeat
       InViewCtrl1.AddMessage 1                 'Trigger message #1
End Sub
```

Reference

```
Name: InView Control
ProgID: Invwctrl.InView
Interface: InViewCtrl SupportErrorInfo
```

Properties

InViewCtrl Properties	Description
ConnectMode	Sets/Returns method by which the control communicates with the display.
NetworkAddress	Sets/Returns IP address used to communicate with the display.
NetworkPort	Sets/Returns socket port used to communicate with the display.
SerialComPort	Sets/Returns serial port used to communicate with the display.
SerialBaudRate	Sets/Returns serial baud rate used to communicate with the display.
SerialParity	Sets/Returns serial parity used to communicate with the display.
SerialDataBits	Sets/Returns serial data bits used to communicate with the display.
SerialStopBits	Sets/Returns serial stop bits used to communicate with the display.
DisplayAddress	Sets/Returns the address being used to communicate with the display.
PartitionSize	Sets/Returns the maximum size (in bytes) per message in the display.
Heartbeat	Sets/Returns the use of a heartbeat while communicating with the display.

Methods

InViewCtrl Methods	Description
Initialize	Establishes or re-establishes a connection with the display.
Close	Terminates a connection with the display.
Partition	Configures the maximum size per message (and number of messages) in the display.
ClearMessageQueue	Turns off any messages running on the display.
ClearMemory	Clears all memory in the display and reset the display.
DownloadMessage	Downloads a simple message to the display.

InViewCtrl Methods	Description
DownloadMessageEx	Downloads any type of message to the display (Advanced Use Only).
AddMessage	Starts a previously downloaded message running on the display.
RemoveMessage	Stops a message from running on the display.
SingleMessage	Stops any currently running messages on the display and run a single previously downloaded message.
UpdateVariable	Updates the value of a single variable.
UpdateVariableEx	Updates the values of a range of variables.
SetTime	Sets the time stored in the display.
SetDate	Sets the date stored in the display.
ChangeDisplayAddress	Changes the address of the display.
ChangeDisplayBaudRate	Changes the display's communication rate.
ChangeDisplayIPAddress	Changes the display's IPAddress (part of the TCP/IP protocol).
ChangeDisplaySubnetMask	Changes the display's subnet mask (part of the TCP/IP protocol).
ChangeDisplayGateway	Changes the display's gateway (part of the TCP/IP protocol).
ClearBitmapTable	Clears the contents of the display's bitmap table.
DownloadBitmaps	Downloads a range of bitmaps to the display's sbitmap table.

Properties

InViewCtrl Properties	Properties	Description
ConnectMode	Syntax	object.ConnectMode = value Read/Write (short)
	Values	0 - Serial Communication 1 - TCP/IP Communication
	Default	0
	Description	This property is used to set the method by which the control communicates with the display
NetworkAddress	Syntax	object.NetworkAddress = string Read/Write (BSTR)
	Values	A valid IP address on the network such as 207.67.12.57.
	Default	None
	Description	This property is used to set the IP address that the control uses to communicate with the display. It is only necessary to set this property if the ConnectMode is set to a value of 1 - TCP/IP.
Network Port	Syntax	object.NetworkPort = value Read/Write [short]
	Values	A listening socket port such as 3001 (the Ethernet Adapter's port is 3001).
	Default	3001
	Description	This property is used to set the socket port that the control will use to communicate with the display. It is only necessary to set this property if the ConnectMode is set to a value of 1 - TCP/IP.
SerialComPort	Syntax	object.SerialComPort = string Read/Write [BSTR]
	Values	COM1 COM2 COM3 COM4
	Default	COM1
	Description	This property is used to set the serial port that the control will use to communicate with the display. It is only necessary to set this property if the ConnectMode is set to a value of 0 - Serial.

InViewCtrl Properties	Properties	Description
SerialBaudRate	Syntax	object.SerialBaudRate = value Read/Write [long]
	Values	110, 300, 600, 1200, 2400, 4800, 9600, 14400, 19200, 28800, 38400, 56000, 57600, 115200, 128000, 256000
	Default	9600
	Description	This property is used to set the serial baud rate that the control will use to communicate with the display. It is only necessary to set this property if the ConnectMode is set to a value of 0 - Serial. Currently, 9600 baud is the rate supported by the display.
SerialParity	Syntax	object.SerialParity = string Read/Write [BSTR]
	Values	Even Odd None Mark Space
	Default	Even
	Description	This property is used to set the serial parity that the control will use to communicate with the display. It is only necessary to set this property if the ConnectMode is set to a value of 0 - Serial. Currently, Even parity is the parity supported by the display.
SerialDataBits	Syntax	object.SerialDataBits = value Read/Write [short]
	Values	4 5 6 7 8
	Default	7
	Description	This property is used to set the serial data bits that the control will use to communicate with the display. It is only necessary to set this property if the ConnectMode is set to a value of 0 - Serial. Currently, 7 bits is the data bit setting supported by the display.

InViewCtrl Properties	Properties	Description
SerialStopBits	Syntax	object.SerialStopBits = value Read/Write [float]
	Values	1 and 2
	Default	2
	Description	This property is used to set the serial stop bits that the control will use to communicate with the display. It is only necessary to set this property if the ConnectMode is set to a value of 0 - Serial. Currently, 2 bits is the stop bit setting supported by the display.
DisplayAddress	Syntax	object.DisplayAddress = value Read/Write [short]
	Values	255 - Broadcast to all displays 254 - Display address 254 only 253 - Display address 253 only … 1 - Display address 1 only
	Default	255
	Description	This property is used to set the address the control will use to communicate with the display. If the address is set to 255, all of the connected displays will receive transmissions from the control.
PartitionSize	Syntax	object.PartitionSize = value Read/Write [short]
	Values	50, 51, … 450
	Default	100
	Description	This property is used to set the maximum size in bytes reserved for each message in the display. The size of each message also determines the maximum number of messages that can be stored in the display. The number of messages is calculated as 200000 / PartitionSize. For example, with the default size of 100 the display can hold 2000 messages. It is only necessary to set this property if the Partition method will be used to partition the display's memory.

InViewCtrl Properties	Properties	Description
HeartBeat	Syntax	object.Heartbeat = value Read/Write [short]
	Values	0 - No heartbeat from control 1 - Heartbeat generated by control 2 - Heartbeat disabled
	Default	0
	Description	This property is used to set how the control will handle the heartbeat requirement of the display. The display requires serial activity approximately every 3 seconds. In the absence of such activity the display will show a No Network Activity message. If the heartbeat property is set to 0, the activity is assumed to come from sources such as variable updates. If the heartbeat property is set to 1, the control will generate a serial heartbeat command that prevents the display from displaying the no activity message. If the heartbeat property is set to 2, the need for constant serial activity will be disabled in the display.

Methods

InViewCtrl Methods	Properties	Description
Initialize	Syntax	HRESULT Initialize()
	Parameters	None
	Return Value	S_OK - Success E_FAIL - Failure
	Description	This method is used to open the COM port or socket that will be used to communicate with the display. If Initialize is called more than once, any open connection will be closed, and a new connection opened.
Close	Syntax	HRESULT Close()
	Parameters	None
	Return Value	S_OK - Success E_FAIL - Failure
	Description	This method is used to close any open connection to free its resources for other applications. Any open connection is automatically closed when the control is unloaded
Partition	Syntax	HRESULT Partition()
	Parameters	None
	Return Value	S_OK - Success E_FAIL - Failure
	Description	This method is used to partition the memory in the display. A partition command will be sent to the display address set by the DisplayAddress property. The size of the partitions is set to the PartitionSize property. Both DisplayAddress and PartitionSize should be set before calling this method.
ClearMessageQueue	Syntax	HRESULT ClearMessageQueue()
	Parameters	None
	Return Value	S_OK - Success E_FAIL - Failure
	Description	This method is used to clear the queue of messages that are running on the display. Once the queue is cleared the background message (if any) will be displayed. The clear message queue command will be sent to the display address set by the DisplayAddress property. DisplayAddress should be set before calling this method.

InViewCtrl Methods	Properties	Description
ClearMemory	Syntax	HRESULT ClearMemory()
	Parameters	None
	Return Value	S_OK - Success E_FAIL - Failure
	Description	This method is used to reset the display and clear its memory. After clearing memory the display will be set to 2000 messages of 100 bytes each, and each message slot will be set to a message of Message #*n* where *n* is the message number. The clear memory command will be sent to the display address set by the DisplayAddress property. DisplayAddress should be set before calling this method.

InViewCtrl Methods	Properties	Description
DownloadMessage	Syntax	HRESULT DownloadMessage(short nMessageNumber, short nPriority, short nPosition, short nMode, short nSpeed, short nFont, short nColor, BSTR bstrBody)
	Parameters	nMessageNumber The number of the message slot in the display to receive the message. nPriority The priority assigned to the message. 0 - Low 1 - Medium 2 - High nPosition The position on the display where the message will run. 0 - Fill 1 - Top 2 - Bottom 3 - Middle nMode The presentation mode of the running message. 0 - Rotate 1 - Hold nSpeed The pause time between transitions of screens of the message. 0 - 0 Second 1 - 1 Second 2 - 2 Second 3 - 3 Second 4 - 4 Second 5 - 5 Second nFont The font used to display the message text. 0 - Five high 1 - Seven high 2 - Seven high fancy 3 - Ten high 4 - Sixteen high fancy 5 - Sixteen high 6 - Twenty-four/Thirty-two high 7 - Twenty-four/Thirty-two high fancy nColor The color used to display the message text. 0 - Red 1 - Green 2 - Yellow bstrBody The actual text of the message displayed. The length of the text and attributes cannot exceed the PartitionSize.
	Return Value	S_OK - Success E_FAIL - Failure

InViewCtrl Methods	Properties	Description
DownloadMessage continued	Description	This method is used to download a simple message to the display. The download message command will be sent to the display address set by the DisplayAddress property. DisplayAddress should be set before calling this method.
DownloadMessageEx	Syntax	HRESULT DownloadMessageEx (BSTR bstrMessage)
	Parameters	bstrMessage A complete InView protocol formatted download message string.
	Return Value	S_OK - Success E_FAIL - Failure
	Description	This method is for advanced users only and requires knowledge of the InView Protocol. It allows you to download a message of any complexity to the display. The download message command will be sent to the display address set by the DisplayAddress property. DisplayAddress should be set before calling this method.
AddMessage	Syntax	HRESULT AddMessage (short nMessageNumber)
	Parameters	nMessageNumber The number of the message to be added to the queue of running messages.
	Return Value	S_OK - Success E_FAIL - Failure
	Description	This method is used to trigger a message to run on the display. A message of lower priority will not be visible if a higher priority message is running. The message to trigger must be downloaded to the display before it can be triggered. The maximum number of messages that can be queued to run is 60. The add message command will be sent to the display address set by the DisplayAddress property. DisplayAddress should be set before calling this method.

InViewCtrl Methods	Properties	Description
RemoveMessage	Syntax	HRESULT RemoveMessage (short nMessageNumber)
	Parameters	nMessageNumber The number of the message to be removed from the queue of running messages.
	Return Value	S_OK - Success E_FAIL - Failure
	Description	This method is used to trigger a message to stop running on the display. The remove message command will be sent to the display address set by the DisplayAddress property. DisplayAddress should be set before calling this method.
SingleMessage	Syntax	HRESULT SingleMessage (short nMessageNumber)
	Parameters	nMessageNumber The number of the sole message to be added to the queue of running messages.
	Return Value	S_OK - Success E_FAIL - Failure
	Description	This method is used to trigger a single message to run on the display. Any messages currently running on the display will be removed. The message to trigger must be downloaded to the display before it can be triggered. The single message command will be sent to the display address set by the DisplayAddress property. DisplayAddress should be set before calling this method.

InViewCtrl Methods	Properties	Description
UpdateVariable	Syntax	HRESULT UpdateVariable (short nVariable, long nValue)
	Parameters	nVariable The variable number to update. Valid values are 0 … 99. nValue The new value for the variable. The display is limited to 16-bit numbers, which can be signed or unsigned.
	Return Value	S_OK - Success E_FAIL - Failure
	Description	This method is used to update a variable in the display. If the variable is embedded in a running message, the new value will be shown. The update variable command will be sent to the display address set by the DisplayAddress property. DisplayAddress should be set before calling this method.
UpdateVariableEx	Syntax	HRESULT UpdateVariableEx (short nVariable, long nValue)
	Parameters	nVariable The variable number to update. Valid values are 0 … 99. nValues The new value for the variable. The display is limited to 16-bit numbers, which can be signed or unsigned.
	Return Value	S_OK - Success E_FAIL - Failure
	Description	This method is used to update a variable in the display. If the variable is embedded in a running message, the new value will be shown. The update variable command will be sent to the display address set by the DisplayAddress property. DisplayAddress should be set before calling this method.

InViewCtrl Methods	Properties	Description
SetTime	Syntax	HRESULT SetTime (DATE dtTime, BOOL fMilitary)
	Parameters	dtTime The time used to update the display's clock. fMilitary A flag used to indicate if the time should be displayed using 24-hour format. TRUE - use 24-hour format FALSE - use AM/PM format
	Return Value	S_OK - Success E_FAIL - Failure
	Description	This method is used to set the display's clock and to set how the time will be shown on the display (AM/PM vs. 24-Hour). The set time command will be sent to the display address set by the DisplayAddress property. DisplayAddress should be set before calling this method.
SetDate	Syntax	HRESULT SetDate (DATE dtDate)
	Parameters	dtDate The date used to update the display's calendar.
	Return Value	S_OK - Success E_FAIL - Failure
	Description	This method is used to set the display's calendar. The set date command will be sent to the display address set by the DisplayAddress property. DisplayAddress should be set before calling this method.
ChangeDisplayAddress	Syntax	HRESULT ChangeDisplayAddress (short nNewDisplayAddress)
	Parameters	nNewDisplayAddress The new address to which the display will be set.
	Return Value	S_OK - Success E_FAIL - Failure
	Description	This method is used to change the address of a display. The change display address command will be sent to the display address set by the DisplayAddress property. DisplayAddress should be set before calling this method. Be careful when using the broadcast address (255) with this method on a network of displays.

InViewCtrl Methods	Properties	Description
`ChangeDisplayBaudRate` This method is only recognized by the P9*x* series of displays.	Syntax	HRESULT ChangeDisplayBaudRate short nNewDisplayBaudRate)
	Parameters	nNewDisplayBaudRate An enumerated value of the currently available baud rates. 0 = 9600 baud, 1 = 19200 baud, and 2 = 38400 baud.
	Return Value	S_OK - Success E_FAIL - Failure
	Description	This method is used to change the display's baud rate for communication transmissions. The change display baud rate command will be sent to the display address set by the DisplayAddress property. DisplayAddress should be set before calling this method.
	Example	ChangeDisplayBaudRate(1) Changes the display's baud rate to 19200 baud.
`ChangeDisplayIPAddress` This method is only recognized by the P9*x* series of displays.	Syntax	HRESULT ChangeDisplayIPAddress (BSTR ipaddress)
	Parameters	ipaddress An IPAddress string with the syntax of NNN.NNN.NNN.NNN, where each octet is between 0 and 255.
	Return Value	S_OK - Success E_FAIL - Failure
	Description	This method is used to change the display's IPAddress for TCP/IP communication. The change display IPAddress command will be sent to the display address set by the DisplayAddress property. DisplayAddress should be set before calling this method.
	Example	ChangeDisplayIPAddress (192.168.0.1) Changes the display's IPAddress to 192.168.0.1

InViewCtrl Methods	Properties	Description
`ChangeDisplaySubnetMask` This method is only recognized by the P9*x* series of displays.	Syntax	HRESULT ChangeDisplaySubnetMask (BSTR ipaddress)
	Parameters	ipaddress An IPAddress string with the syntax of NNN.NNN.NNN.NNN, where each octet is between 0 and 255.
	Return Value	S_OK - Success E_FAIL - Failure
	Description	This method is used to change the display's subnet mask for TCP/IP communication. The change display subnet mask command will be sent to the display address set by the DisplayAddress property. DisplayAddress should be set before calling this method.
	Example	ChangeDisplaySubnetMask (255.255.255.0) Changes the display's subnet mask to 255.255.255.0.
`ChangeDisplayGateway` This method is only recognized by the P9*x* series of displays.	Syntax	HRESULT ChangeDisplayGateway (BSTR ipaddress)
	Parameters	ipaddress An IPAddress string with the syntax of NNN>NNN>NNN>NNN, where each octet is between 0 and 255.
	Return Value	S_OK - Success E_FAIL - Failure
	Description	This method is used to change the display's gateway for TCP/IP communication. The change display gateway command will be sent to the display address set by the DisplayAddress property. DisplayAddress should be set before calling this method.
	Example	ChangeDisplayGateway (192.168.0.1) Changes the display's gateway to 192.168.0.1.

InViewCtrl Methods	Properties	Description
`ClearBitmapTable` This method is only recognized by the P9*x* series of displays.	Syntax	HRESULT ClearBitmapTable()
	Parameters	None
	Return Value	S_OK - Success E_FAIL - Failure
	Description	This method is used to clear the contents of the display's bitmap table. The clear bitmap table command will be sent to the display address set by the DisplayAddress property. DisplayAddress should be set before calling this method.
	Example	ClearBitmapTable() Clears the bitmap table for the display with the display address set through the DisplayAddress property.
`DownloadBitmaps` This method is only recognized by the P9*x* series of displays.	Syntax	HRESULT DownloadBitmaps (short nBitmapCount, BSTR bstrBitmaps)
	Parameters	The number of bitmaps that will be included in the bstrBitmaps string. The maximum that can be downloaded is 2048. bstrBitmaps A string that contains the contents of each bitmap that will be downloaded concatenated together. The format of a single bitmap string is as follows: OOOOWWWHH[bitmap definition] OOOO = the ASCII hex offset (0 to 0×07FF) WWW = the bitmap width (0 to 0×020) HH = the bitmap height (0 to 0×20) [bitmap definition] = the bitmap information, where each row of the bitmap is compressed into a series of bytes. For example, a 24 × 24 bitmap will have 72 bytes of information (3 bytes for each row and the last 4 bits of the third byte being zeroed out because they are not used).
	Return Value	S_OK - Success E_FAIL - Failure
	Description	This method is used to download a range of bitmaps to a display. The range of bitmaps to be downloaded is based on the bitmap count passed into the method and the data for each bitmap is based on the string holding the concatenation of bitmap information. The download bitmaps command will be sent to the display address set by the DisplayAddress property. DisplayAddress should be set before calling this method.

Catalog Number Explanation

NOTE

The 4-inch displays are available only in NEMA 12.
The 7-inch displays are available only with the standard LED.
The 7-inch displays are only available in color.
The 9-inch displays are only available in color.

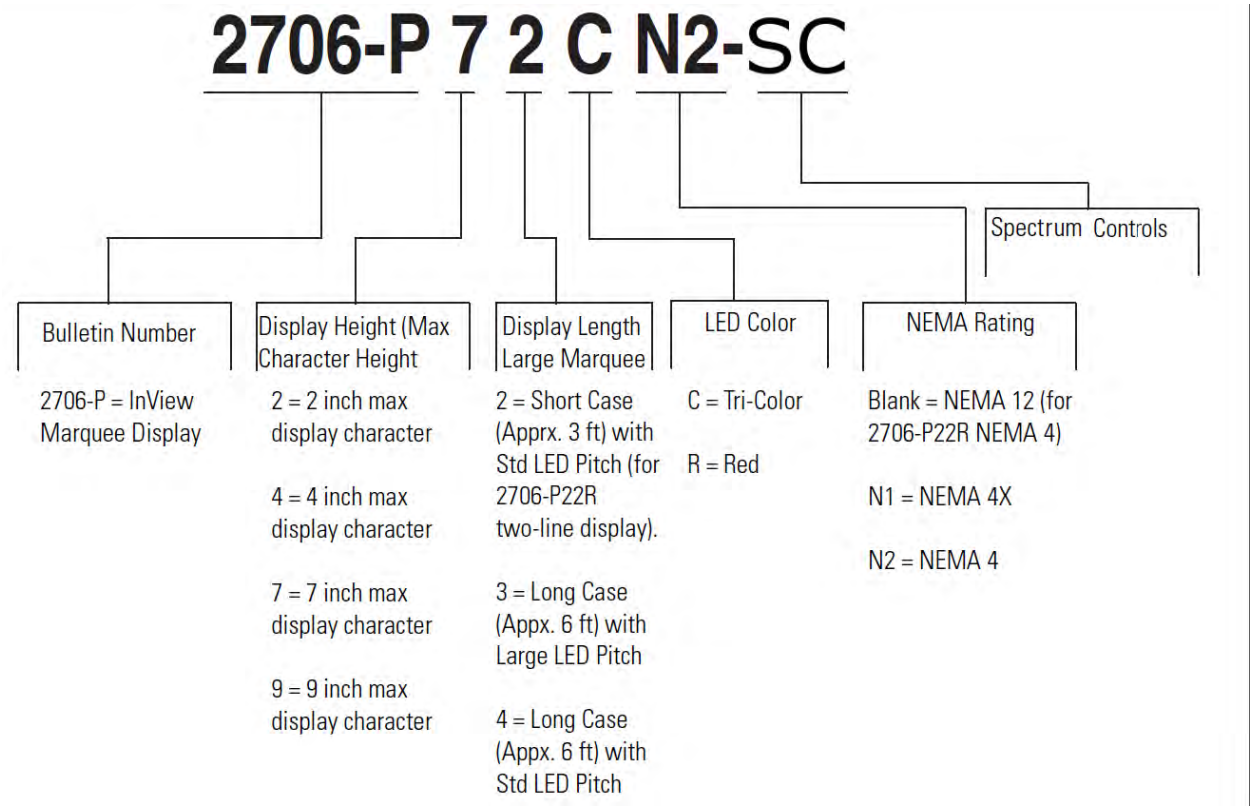

Temperature Protection in NEMA-Rated Enclosures

Some InView signs in NEMA-rated enclosures have automatic temperature controls that help to protect the sign from damage when the internal temperature of the sign is too hot to continue normal operation.

If the internal temperature of the sign reaches a pre-determined dimming point, the LED output from the sign is forced into a 50 percent reduced power mode, effectively dimming the brightness of LED output by about 50 percent.

If the internal temperature of the sign continues to increase, another sensing circuit will execute an automatic shutdown to protect the sign from damage. The LED output from the sign is turned off.

The dimming and shutdown points are listed in the table below. Once the temperature drops below the auto-shutdown threshold, the LED output is turned on at the dimming level. Once the temperature drops below the dimming threshold, auto-dimming is disabled and the LED brightness is back to 100 percent.

Model	Enclosure	Dimming Point	Auto-Shutdown On
2706-P42-SC, 2706-P44-SC	NEMA 2	55°C (131°F)	70°C (158°F)
	NEMA 12	55°C (131°F)	70°C (158°F)
2706-P72-SC, 2706-P74-SC	NEMA 2	55°C (131°F)	70°C (158°F)
	NEMA 12	55°C (131°F)	70°C (158°F)
2706-P92-SC, 2706-P94-SC	NEMA 4, NEMA 4X	55°C (131°F)	70°C (158°F)
	NEMA	55°C (131°F)	75°C (167°F)

NOTE

When evaluating mounting locations for the sign, take into account the effects of ambient temperature

You should always maintain recommended clearance distances around the sign and avoid poorly ventilated mounting locations that could be subject to radiation, convection, conduction or other thermal transfer effects.

Additional Resources

Resource	Description
InView Online Help 2706-PSW1-SC	Details configuration setup software.

You can view or download publications at http://www.spectrumcontrols.com

Getting Technical Assistance

Note that your display contains electrostatic components that are susceptible to damage from electrostatic discharge (ESD). An electrostatic charge can accumulate on the surface of ordinary wrapping or cushioning material. **In the unlikely event that the module should need to be returned to Spectrum Controls, Inc., please ensure that the unit is enclosed in approved ESD packaging (such as static-shielding/metallized bag or black conductive container).** Spectrum Controls, Inc. reserves the right to void the warranty on any unit that is improperly packaged for shipment.

RMA (Return Material Authorization) form required for all product returns.

Please note that Spectrum Controls, Inc. contracts with Rockwell Automation TechConnect telephone support. There is no cost to Spectrum Controls, Inc. customers to use this technical support as the service is funded by Spectrum Controls, Inc. for all InView customers.

For further information or assistance, please contact your local distributor, or call the Spectrum Controls, Inc. technical support at:

- United States: 1-440-646-6900
- United Kingdom: 01908-635230
- Australia: 1800-809-929
- Brazil: 011 (55) 11 3619 8800
- Mexico: 001-888-365-8677
- Europe: (49) 2104 960 630

or send an email to support@spectrumcontrols.com

To order paper copies, contact your local Spectrum Controls, Inc. distributor or sales representative

Appendix A: Installing InView Marquee 2706-P92*x*C2-SC Message Displays

NOTE The information in the following section applies only to the C2 displays and is identical to the information provided in the installation instruction booklet, PN 0100267-01_A0(INSTALLATION_INSTRUCTIONS,2706-P9xC2-SC) shipped with your display.

Overview

These instructions show you how to mount InView 2706-92C2-SC and 2706-94C2-SC signs with NEMA Types 4, and 4X enclosures. These signs are intended for indoor use.

- Type 4 enclosures are intended to provide a degree of protection against windblown dust and rain, splashing water, and hose-directed water.
- Type 4X enclosures are intended to provide a degree of protection against corrosion, windblown dust and rain, splashing water, and hose-directed water.

Wire and Safety Guidelines

Install the InView display conforming to all locally in effect, Electrical Safety Requirements for Employee Workplaces. In addition to the NFPA general guidelines, refer to the following:

- Careful cable routing helps minimize electrical noise. Route incoming power to the module by a separate path from the communication cables.
- Wire used for installation must be rated higher than 75° C (167° F) or 15° C (59° F) above ambient temperature.

NOTE You can configure your InView Communications module or Messaging software without having an InView display connected.

Description of the 2706-P92C2-SC and 2706-P94C2-SC Displays

There are two InView C2 models, 2706-92C2-SC and 2706-94C2-SC. These displays provide 10, user-selectable colors for fonts and bitmaps. The displays provide a 1800 NITs brightness level. Power consumption is also much lower than the previous models of P9 InView displays. The resolution is 6.25 mm versus 7.5 mm. You may scroll images and characters from right-to-left, or left-to-right, depending on the language. The displays comply with NEMA 4 and IP66 housing standards.

NOTE

If you use the equipment in a manner not specified by Spectrum Controls, Inc. may impair the protection provided by the equipment.

Mount the sign so that it is easy to disconnect power when servicing.

Mounting the 2706-P92C2-SC and 2706-P94C2-SC Displays

To mount the sign:

1. Attach the two sign brackets to a metal post, wall, ceiling, or other surface with sufficient weight bearing rating. It is preferable that you install the display on metal posts attached directly to studs. Never install the brackets only on sheetrock with toggle bolts:
   - If installing directly onto a wall or ceiling, use two 5/16-inch lug bolts and washers per bracket, screwed at least one-inch into the center of wood studs. The washer must be snug against the bracket. The bracket must be snug against the sheetrock or other wall surface.
   - If a wooden stud is not available in the correct spot, use 3/4 – inch thick plywood or a 3/4-inch metal backing plate attached to studs to secure the bracket.
2. Be sure to place the brackets so the bracket flanges face appropriately as shown below. Mount the brackets the following distance apart (measured from the center of the mounting holes in each bracket):

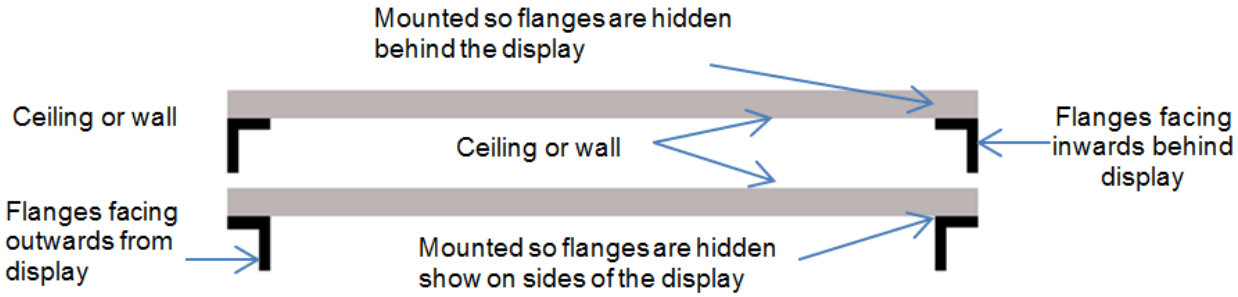

3. Mount the sign onto the sign brackets using the two hex bolts supplied.
4. Insert the bolts into the far single holes first, until the desired viewing angle is determined. Dimensions are shown in mm (in) approximately.

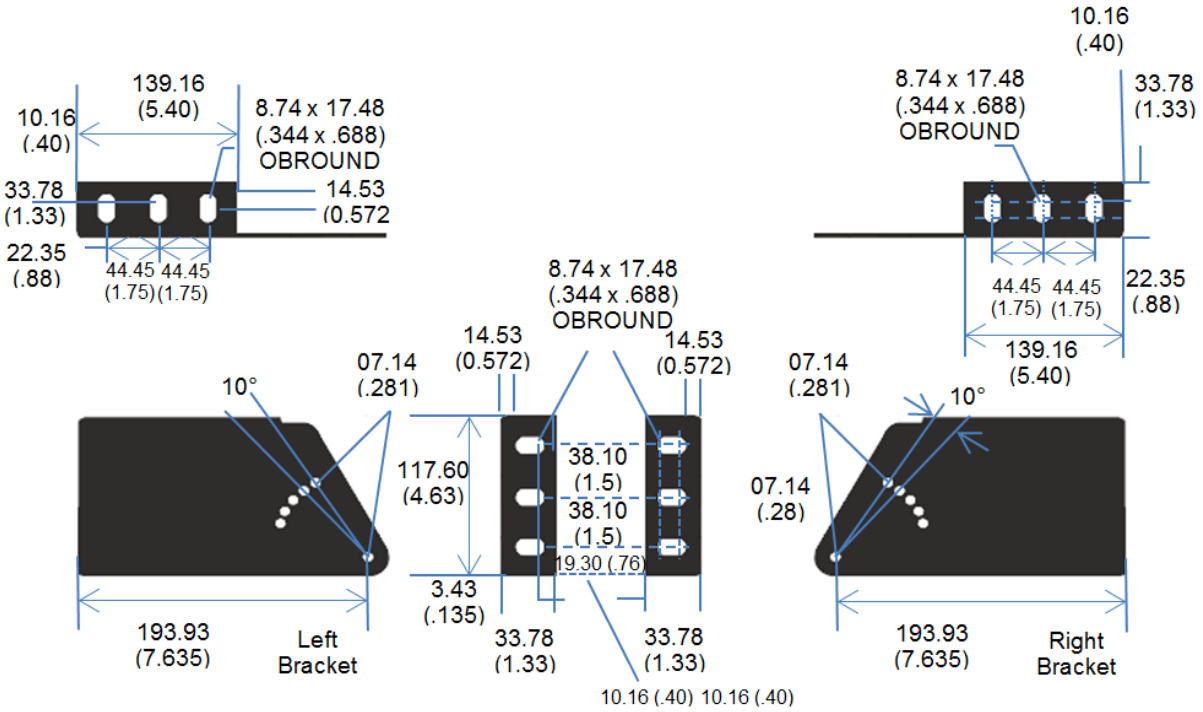

5. Tilt the sign to select a viewing angle.
6. To hold the sign in place, insert the remaining bolts into the desired viewing angle hole on each bracket.

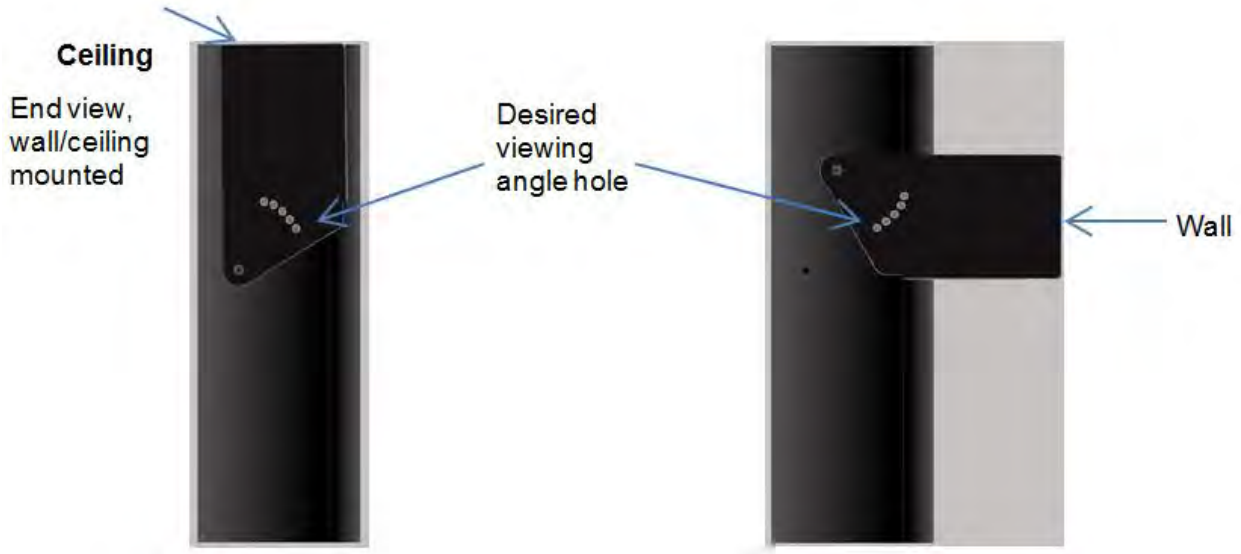

NOTE Keep a minimum 2.54 cm (1.0 in.) clearance on all sides of the sign for adequate ventilation.

Back-to-Back Mount

To connect the sign:

1. Attach the brackets to the sign in the ceiling mount position with the hex bolts supplied.

2. Match the signs together back-to-back and connect them together using a total of six 5/16” bolts and nuts (not supplied).
3. Attach chains (not supplied) to the top mounting holes of the bracket to hang the signs from the ceiling.

NOTE	Use chains capable of supporting 4 times the total weight of the signs.

Wiring the 2706-P92C2-SC and 2706-P94-SC Displays

WARNING	**Hazardous voltage.** **Contact with high voltage may cause death or serious injury.** Always disconnect power to the InView display prior to servicing. Maintain separation of circuits. Route the incoming power directly to the power connections terminal block. Do not run the power wiring over the logic board.

WARNING	**Tension dangereuse.** **Toucher un câble a haute tension peut provoquer la mort ou des blessures graves.** Sortir la prise d'alimentation de l'afficheur avant de le réparer. Maintenir la séparation des câbles. Brancher le câble d’alimentation directement au bornier d’alimentation électrique. Ne pas faire cheminer le câble d'alimentation le long de la carte

1. Disconnect power to the InView display.
2. Loosen the right-hand drawer by unscrewing its 4 screws until you can pull the drawer out. Set the screws aside for later step.

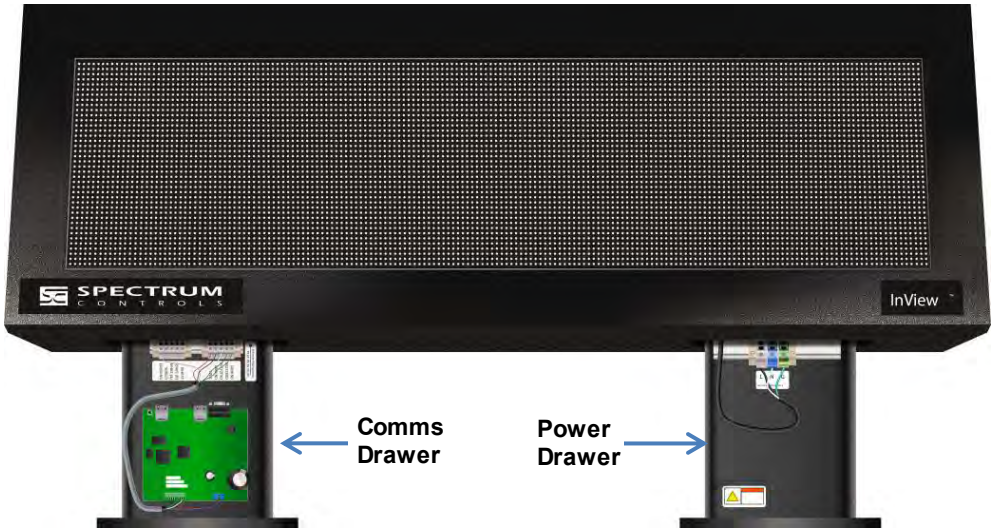

3. Connect power conduit through the power drawer conduit opening on the left side of the drawer. Pull wires through the conduit and wire as shown below. Ensure you follow all applicable, local, electrical codes for completion of the wiring.
4. The InView Display power terminal block in the right-hand drawer is rated for wire ranges of 20 to 6 AWG for the power wiring. Strip the electrical wires back 6.35 mm (0.25 in).
5. Insert the wires into the appropriate terminal connection as shown below and tighten the screw to 1.47 to 1.7 N-m (13 to 15 in-lbs). Enlarged label is shown following image below:

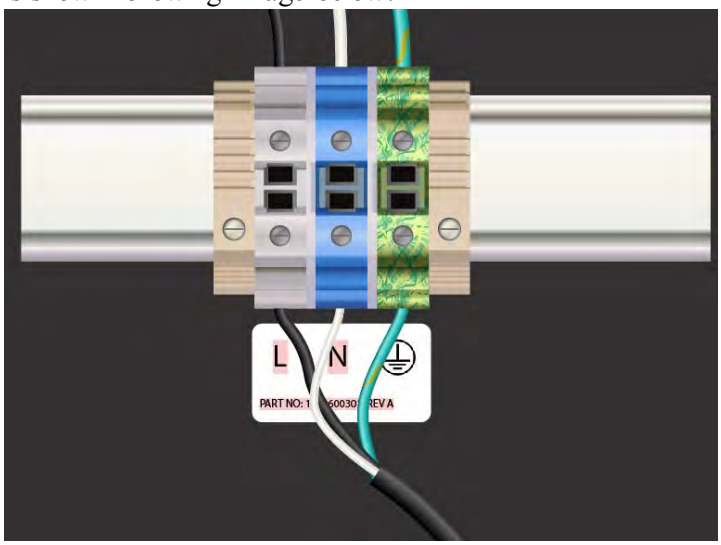

Wire Color	Wire Name
Black	Line (Hot) connect to L (White terminal)
White	Neutral connect to N (Blue terminal)
Green	Ground connect to G (Green and Yellow terminal)

6. If you are installing a Communications Module in the left-hand drawer, install it now (refer to the 0300289-05_A0(Users_Guide_InView_COMMS_MODULE) manual) for additional details.

NOTE Cable tie locations are supplied within the drawer to help ensure loose wires are not obstructed by adjacent mechanical obstructions.

7. Route the Comms cable and tie down the cable as shown below. The cable must be kept above the board until it is past the slots in the drawer. Individual wires must also be kept clear of the slots. The InView Comms Module screws must be torqued to 0.68 N-m (6.0 in-lbs ± 0.100).
8. Route sixteen inches of the Ethernet cable inside the closure and between the two terminal blocks as shown. This avoids a tight curve in the cable.

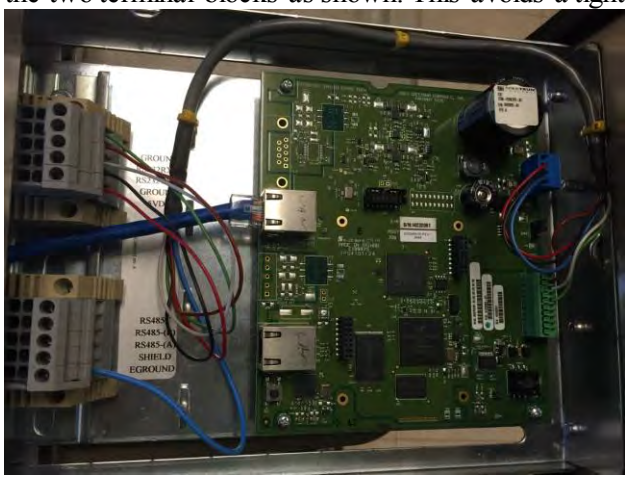

9. Use the 0300289-0*n*_A0(Users_Guide_InView_COMMS_MODULE) manual to complete setup.
10. Replace the drawers using the 4 screws. Torque the screws to 1.8 N-m (16 in-lbs) for NEMA 4 models, and 3 N-m (26.5 in-lbs) for NEMA 4X models.

11. Connect the power wiring to a power source.

Specifications

Display Specifications	2706-P92C2-SC	2706-P94C2-SC
Active Display Area	39.37 in × 9.84 in (100 cm × 25 cm)	68.90 in × 9.84 in (175 cm × 25 cm)
Array/ Pixel pitch	160 × 40 pixels/ 6.25 mm pitch	280 × 40 pixels/ 6.25 mm pitch
Lines of Text/ Character height/ Max characters per line	1 line/9.9 in/13 2 lines/4.75 in/13 3 lines/3.0 in/13 4 lines/2.25 in/20 5 lines/1.75 in/24	1 line/9.9 in/13 2 lines/4.75 in/13 3 lines/3.0 in/13 4 lines/2.25 in/20 5 lines/1.75 in/24
Default Brightness Setting	1,800 Nits	
Colors	10 colors	
Viewing Distance	450 ft (137 m)	
Character Set	Standard and extended ASCII	
Physical Dimensions	44.8 in W 15.7 in H 5.2 in D 113.8 mm W 39.9 cm H 132 cm D	74.3 in W 15.7 in H 5.2 in D 188.8 cm W 39.9 cm H 13.2 cm D
Unit Weight	62 lbs/28.13 kg	93.5 lbs/42.41 kg
Packaged (Shipping) Weight	74 lbs/33.64 kg	111 lbs/50.45 kg
Electrical and Environmental Specifications		
Input Voltage	100-264 VAC 50/60 Hz	100-264 VAC 50/60 Hz
Power Consumption (blank display)	20 W	35 W
Typical Power Consumption (35% lit) Full brightness	50 W	90 W
Typical Power Consumption (35% lit) Default brightness	35 W	62.5 W
Maximum Power Consumption Full brightness	160 W	280 W
Enclosure Rating	NEMA 4 / IP66	NEMA 4 / IP66
Safety and Compliance Rating	UL, CE,	UL, CE,
Operating Temperature	0˚ C to 60˚ C (32˚ F to 140˚ F)	

Display Specifications	2706-P92C2-SC	2706-P94C2-SC
Storage Temperature	-40˚ C to 85˚ C (-40˚ F to 185˚ F)	
Relative humidity (operating and none-condensing	5% to 95% non-condensing	

2706-P9xC2 Display Language Message Formatting Codes

The following message formatting codes have been added for the C2 displays:

Mode		
Description	**ASCII**	**Hex**
Rotate right	A	41
Justification		
Description	**ASCII**	**Hex**
Right	^^2	IE32
Message Attributes		
Description	**ASCII**	**Hex**
20High	^Z2	IA32
20Fancy	^Z4	IA34
40High	^Z<	IA3C
40Fancy	^Z=	IA3D
Character Color		
Description	**ASCII**	**Hex**
RGB Color	^\Zrrggbb	IC5Arrggbb Where: rr=ASCII hex value (00 - FF) for red channel gg=ASCII hex value (00 - FF) for green channel bb=ASCII hex value (00 - FF) for blue channel
Character Width/Height		
Description	**ASCII**	**Hex**
Bold	^Q^]01	111D3031

Additional Resources

Resource	Description
InView Communication Module User Manual, Publication 0300289-05	Provides all setup information for the InView Communications module.
All other InView Manuals	http://spectrumcontrols.com/InView.htm
Declaration of Conformity	http://spectrumcontrols.com/InView.htm

You can view or download publications at http://www.spectrumcontrols.com

Getting Technical Assistance

Note that your display contains electrostatic components that are susceptible to damage from electrostatic discharge (ESD). An electrostatic charge can accumulate on the surface of ordinary wrapping or cushioning material. **In the unlikely event that the display should need to be returned to Spectrum Controls, Inc., please ensure that the unit is enclosed in approved ESD packaging (such as static-shielding/metallized bag or black conductive container).** Spectrum Controls, Inc. reserves the right to void the warranty on any unit that is improperly packaged for shipment.

RMA (Return Material Authorization) form required for all product returns.

Please note that Spectrum Controls, Inc. contracts with Rockwell Automation TechConnect telephone support. There is no cost to Spectrum Controls, Inc. customers to use this technical support as the service is funded by Spectrum Controls, Inc. for all InView customers.

For further information or assistance, please contact your local distributor, or call the Spectrum Controls, Inc. technical support at:

- United States: 1-440-646-6900
- United Kingdom: 01908-635230
- Australia: 1800-809-929
- Brazil: 011 (55) 11 3619 8800
- Mexico: 001-888-365-8677
- Europe: (49) 2104 960 630

or send an email to support@spectrumcontrols.com

To order paper copies of this document, contact your local Spectrum Controls, Inc. distributor or Spectrum Controls sales representative

©2009-2016 Spectrum Controls, Inc. All rights reserved. Specifications subject to change without notice. The Encompass logo and ControlLogix are trademarks of Rockwell Automation.

Corporate Headquarters
Spectrum Controls Inc.
1705 132nd Ave NE
Bellevue, WA 98005 USA
Fax: 425-641-9473
Tel: 425-746-9481

Web Site: www.spectrumcontrols.com
E-mail: spectrum@spectrumcontrols

A User's Manual Pub. 0300289-07 Rev. A

User's Guide, InView® Communications Module

SPECTRUM
CONTROLS

Important Notes

Please read all the information in this manual before installing the product.

The information in the manual applies through InView Messaging Software Version 1.04.

This manual assumes that you have a full working knowledge of the relevant equipment.

Notice

The product described in this manual is useful in a wide variety of applications. Therefore, you and others responsible for applying the product described herein are responsible for determining its acceptability for each application. While efforts have been made to provide accurate information within this manual, Spectrum Controls, Inc. assumes no responsibility for the accuracy, completeness, or usefulness of the information herein.

Under no circumstances will Spectrum Controls, Inc. be responsible or liable for any damages or losses, including indirect or consequential damages or losses, arising out of either the use of any information within this manual or the use of any product referenced herein.

No patent liability is assumed by Spectrum Controls, Inc. with respect to the use of any of the information, or product referenced herein.

The information in this manual is subject to change without notice.

Limited Warranty

We warrant to you that, for a period of 60 days after delivery of this copy of the Software to you:

1. The physical media on which this copy of the Software is distributed will be free from defects in materials and workmanship under normal use,
2. The Software will perform in accordance with the printed documentation distributed with it by us, and
3. To the best of our knowledge your use of the Software in accordance with its printed documentation will not, in and of itself, infringe any third party's copyright, patent, or other intellectual property right.

To the extent permitted by applicable law, THE FOREGOING LIMITED WARRANTY IS IN LIEU OF ALL OTHER WARRANTIES OR CONDITIONS, EXPRESS OR IMPLIED, AND WE DISCLAIM ANY AND ALL IMPLIED WARRANTIES OR CONDITIONS, INCLUDING ANY IMPLIED WARRANTY OF TITLE, OF NON-INFRINGEMENT, OF MERCHANT ABILITY, OR OF FITNESS FOR A PARTICULAR PURPOSE, regardless whether we know or have reason to know of your particular needs.

No employee, agent, dealer, or distributor of ours is authorized to modify this limited warranty, nor to make any additional warranties.

No action for any breach of the above limited warranty may be commenced more than one (1) year following the expiration date of the warranty.

If implied warranties may not be disclaimed under applicable law, then ANY IMPLIED WARRANTIES ARE LIMITED IN DURATION TO 60 DAYS AFTER DELIVERY OF THIS COPY OF THE SOFTWARE TO YOU.

Some states do not allow limitations on how long an implied warranty lasts, so the above limitation may not apply to you.

This warranty gives you specific legal rights, and you may also have other rights which vary from state to state.

Limited Remedy

Your exclusive remedy in the event of a breach of the foregoing limited warranty, TO THE EXCLUSION OF ALL OTHER REMEDIES, is set forth in this paragraph.

In such event, you shall return all copies of the Software to us and pay for shipping; you must include a dated proof of the date on which this copy of the Software was delivered to you, such as a copy of your dated receipt or invoice for this copy.

We will, at our option, either (i) ship you a replacement copy of the Software on non-defective physical media at our expense or (ii) refund your license fee in full.

Trademarks

InView is a trademark of Spectrum Controls, Inc.

Microsoft and Microsoft Windows are registered trademarks of Microsoft Corporation.

The Encompass logo, ControlLogix, and RSLinx are trademarks of Rockwell Automation.

Other brands and their products are trademarks or registered trademarks of their respective holders and should be noted as such.

Table of Contents

IMPORTANT NOTES II

CHAPTER 1 INVIEW MESSAGING OVERVIEW 1-1

SECTION 1.1 START HERE 1-1
SECTION 1.2 INVIEW OVERVIEW 1-1

CHAPTER 2 INSTALLING INVIEW COMMS MODULE 2-1

SECTION 2.1 ABOUT THE INVIEW COMMS MODULE® 2-3
SECTION 2.2 HARDWARE SPECIFICATIONS 2-5
SECTION 2.3 ENVIRONMENTAL AND EMC SPECIFICATIONS 2-6
SECTION 2.4 CERTIFICATIONS FOR INVIEW COMMS MODULES 2-7
SECTION 2.5 INSTALLING THE INVIEW COMMS MODULE 2-8
2.5.1 Mount the Comms Module to the 2706-P42-SC and 2706-P44-SC Displays *2-10*
2.5.2 Wire the Comms Module to the 2706-P42-SC and 2706-P44-SC *2-11*
2.5.3 Mount the Comms Module to the 2706-P72-SC and 2706-P74-SC Displays *2-15*
2.5.4 Wire the Comms Module to the 2706-P72-SC and 2706-P74-SC Displays *2-16*
2.5.5 Mount the Comms Module to the 2706-P92-SC and 2706-P94-SC Displays *2-19*
2.5.6 Wire the Comms Module to the 2706-P92-SC and 2706-P94-SC Displays *2-20*
2.5.7 Mount the Comms Module to the 2706-P92C2-SC and 2706-P94C2-SC Displays *2-23*
2.5.8 Wire the Comms Module to the 2706-P92C2-SC and 2706-P94C2-SC Displays *2-24*
SECTION 2.6 USING THE COMMS MODULE WITH A 2706-P22R-SC DISPLAY 2-27
SECTION 2.7 GETTING HARDWARE AND SOFTWARE INFORMATION 2-30
SECTION 2.8 GETTING IP ADDRESS INFORMATION 2-32
SECTION 2.9 PINGING IP ADDRESSES 2-33
SECTION 2.10 GENERAL PUBLIC LICENSE INFORMATION 2-34
SECTION 2.11 LIMITED WARRANTY 2-34

CHAPTER 3 USING THE INVIEW MESSAGING SOFTWARE INTERFACE 3-1

SECTION 3.1 USING THE INVIEW MESSAGING SOFTWARE USER INTERFACE 3-1
SECTION 3.2 LOGGING ONTO THE INVIEW COMMS MODULE 3-1
SECTION 3.3 ABOUT THE INVIEW USER INTERFACE WINDOW 3-4
3.3.1 InView Comms Module User Interface Title Bar *3-5*
3.3.2 InView User Interface Menu Bar *3-5*
3.3.3 InView User Interface Configuration Work Area *3-6*
SECTION 3.4 CONFIGURING PLC SERVER SETUP FOR THE INVIEW COMMS MODULE 3-6
SECTION 3.5 CONFIGURING CONTROLLOGIX MESSAGE SERVER SETUP FOR THE INVIEW COMMS MODULE 3-9
SECTION 3.6 CONFIGURING COMPACTLOGIX MESSAGE SERVER SETUP FOR THE INVIEW COMMS MODULE 3-14
SECTION 3.7 CONFIGURING MICROLOGIX/PLC5/SLC MESSAGE SERVER SETUP FOR THE INVIEW COMMS MODULE 3-20
SECTION 3.8 CONFIGURING TCP/IP PASSTHROUGH 3-26
SECTION 3.9 CONFIGURING MODBUS TCP MESSAGE SERVER SETUP 3-28
SECTION 3.10 TESTING DEVICE CONNECTIONS 3-31
SECTION 3.11 CONFIGURING NETWORK SETTINGS FOR THE INVIEW COMMS MODULE 3-33
3.11.1 Configuring Eth1 Settings for the InView Comms Module *3-34*
3.11.2 Configuring Eth2 Settings for the InView Comms Module *3-36*
3.11.3 Configuring Web Server Setup for the InView Comms Module *3-38*
3.11.4 Configuring InView Comms Card *3-39*
SECTION 3.12 MANAGING DISPLAYS 3-40
SECTION 3.13 ADDING DISPLAYS 3-41
SECTION 3.14 MODIFYING DISPLAYS 3-43

SECTION 3.15 DELETING DISPLAYS....3-44
SECTION 3.16 SETTING A DISPLAY ADDRESS....3-45
SECTION 3.17 CLEARING DISPLAY MEMORY....3-46
SECTION 3.18 SETTING DATE AND TIME....3-48
SECTION 3.19 CONFIGURING MESSAGE GROUPS....3-49
SECTION 3.20 ADDING MESSAGE GROUPS....3-50
SECTION 3.21 MODIFYING MESSAGE GROUPS....3-52
SECTION 3.22 REORDERING MESSAGES....3-53
SECTION 3.23 DELETING MESSAGE GROUPS....3-54
SECTION 3.24 DOWNLOADING A MESSAGE GROUP....3-55
SECTION 3.25 CONFIGURING MESSAGES....3-56
SECTION 3.26 ADDING MESSAGES....3-58
SECTION 3.27 INSERTING CUSTOM CHARACTERS....3-66
SECTION 3.28 MODIFYING MESSAGES....3-69
SECTION 3.29 DELETING MESSAGES....3-71
SECTION 3.30 MANAGING INVIEW COMMS MODULE MAINTENANCE OPTIONS....3-72
SECTION 3.31 IMPORTING INVIEW COMMS MESSAGES....3-73
SECTION 3.32 IMPORTING CUSTOM CHARACTERS....3-75
SECTION 3.33 RESTORING THE INVIEW COMMS MODULE....3-77
SECTION 3.34 EXPORTING INVIEW COMMS MODULE MESSAGES....3-78
SECTION 3.35 EXPORTING CUSTOM CHARACTERS....3-80
SECTION 3.36 BACKING UP THE INVIEW COMMS MODULE....3-81
SECTION 3.37 UPDATING FIRMWARE....3-82
SECTION 3.38 RESETTING THE INVIEW COMMS MODULE TO DEFAULT CONFIGURATION....3-84
SECTION 3.39 REBOOTING THE INVIEW COMMS MODULE....3-85
SECTION 3.40 CONFIGURING SECURITY SETUP FOR THE INVIEW COMMS MODULE....3-86
SECTION 3.41 CONFIGURING TOOLS....3-87
SECTION 3.42 ADDING MESSAGE TO A QUEUE....3-88
SECTION 3.43 DELETING MESSAGE FROM QUEUE....3-89
SECTION 3.44 CLEARING MESSAGE QUEUE....3-90
SECTION 3.45 TRIGGERING A PRIORITY MESSAGE....3-91
SECTION 3.46 TRIGGERING A VARIABLE UPDATE....3-92
SECTION 3.47 VIEWING DIAGNOSTICS, STORAGE, AND LOG INFORMATION....3-94
3.47.1 Viewing System Report Information....3-96
3.47.2 Viewing System Engineering Error Log Data....3-98
SECTION 3.48 CONFIGURING SERIAL COMMUNICATIONS SETUP....3-101
SECTION 3.49 VIEWING ETH1 COMMUNICATIONS STATUS INFORMATION....3-102
SECTION 3.50 VIEWING ETH2 COMMUNICATIONS STATUS INFORMATION....3-103
SECTION 3.51 VIEWING HELP INFORMATION....3-104

CHAPTER 4 TECHNICAL REFERENCE....4-1

SECTION 4.1 INVIEW COMMS MODULES MESSAGES....4-1
SECTION 4.2 CONCEPTS....4-5
SECTION 4.3 CALCULATING MESSAGE SIZE....4-7
SECTION 4.4 ABOUT COMMUNICATION TAGS....4-8
SECTION 4.5 HOW MESSAGE PRIORITIES WORK....4-8
SECTION 4.6 EXTENDED ASCII CHARACTER SET....4-11
SECTION 4.7 HOW INVIEW LEDS WORK....4-12
SECTION 4.8 EASY TAGS SUMMARY....4-13

INDEX....I-1

Read this introduction to become familiar with the rest of the manual. This preface covers the following topics:

- Who should use this manual
- How to use this manual
- Technical support
- Conventions used in this manual

Who Should Use This Manual

Use this manual if you are responsible for installing and running an InView Comms Module using v1.04 software.

How to Use This Manual

This manual provides step-by-step instructions for installing and running an InView Message Display using InView software.

Technical Support

For technical support, please contact your local distributor or contact Spectrum Controls, Inc. at: (425) 746-9481 from 8:00 am to 4:00 pm Pacific Time or send an email to support@spectrumcontrols.com

Conventions Used in This Manual

The following conventions are used throughout this manual:

- Bulleted lists (like this one) provide information not procedural steps.
- Numbered lists provide sequential steps or hierarchical information.
- *Italic* type is used for emphasis.
- **Bold** type identifies headings and sub-headings.

  WARNING

- Are used to identify critical information to the reader.

Chapter 1
InView Messaging Overview

This manual provides comprehensive information about installing, configuring, and using your InView Message Display and embedded GUI Software.
You use the InView Comms Module Graphic User Interface to configure and interact with one or more InView Message Displays.

Section 1.1
Start Here

Your InView Comms Module ships with an easy-to-use Quick Start Guide. Instructions are also provided in the InView Software's online help.
When running the InView Software, to access context-sensitive online help from each of the main InView dialogs, click the following button on the upper right-hand side of the InView menu bar:

Section 1.2
InView Overview

Refer to the listed chapter for the following information:

- Chapter 2, Installing the InView Comms Module
- Chapter 3, Using the InView Messaging Software Interface
- Chapter 4, Technical Reference
- Index

Chapter 2
Installing InView Comms Module

The help topics listed here provide technical information that is useful when you install your InView Comms Module and InView Message Displays. The Quick Start Guide shipped with your InView Comms Module shows you how to physically install the InView Comms Module and InView Message Display. You may also access this manual online from www.spectrumcontrols.com.

The Spectrum Controls, Inc. InView Comms Modules, catalog numbers 2706-PENETK2-SC, 2706-PENETM2-SC, and 2706-PENETP2-SC, are designed to work with InView displays.

InView Comms Modules replace previous versions as follows:

Replacement Comms Module Model	Existing Comms Module Model
2706-PENETK2-SC	2706-PENETK-SC/2706-PENET1-SC
2706-PENETM2-SC	2706-PENETM-SC/2706-PENET1-SC
2706-PENETP2-SC	2706-PENETP-SC/2706-PENET1-SC

You use the Passthrough (TCP/IP) option to connect your own PC-based message server application to an InView message display. The Passthrough (TCP/IP) software option implements full 2706-PENET1 functionality, and replaces the PENET1 hardware. You use your third-party PC-based application to communicate with the InView display via TCP Port 3001 on the InView Comms Module installed with your InView display.

InView Cables are provided as follows:

Cable PN	Use with
6010105-*nn*, InView Display, 0.254 Meter (10-inch)	Used when installing Comms Modules in drawer of 2706-P9*x*C2-SC displays.
6010104-*nn*, InView Display, 3 Meter	Used on 2705-PENETK2-SC and 2706-PENETM2-SC
6010100-*nn*, InView Display, 5 Meter, shielded	2706-PENETP2-SC only

To help transition to the new interface, the new user interface software allows you to import existing InView Project .ivp, .ivl, and .csv files generated by the legacy InView Messaging software. The legacy software extracts current settings

and message tables for display in the user interface. This allows you to remain compatible with existing Allen-Bradley 2706-P*xxxx* Comms Modules.

You configure the new InView Comms Module using the embedded web page interface. The InView Comms Module makes it possible for either PLC ladder logic or a host PC message server application to display information on the different types of InView display. Example: The InView Comms Module retrieves updates from a PLC message server via your chosen protocol.

Communications to the display itself from the ICM occurs over either an RS-232 or RS-485 serial interface following the InView communications protocol.

The InView displays are powered from an external AC source (except for 2706-P22R, which uses 24 VDC). Each InView display receives its power from an external 120/240 VAC source. Larger displays generate their own regulated supply and output a regulated +5 VDC at 1 Ampere to the InView Comms Module. Smaller displays do not have a power supply with the capacity to power an ICM. In this case the ICM is powered by an external DC supply. The module ships with a jumper that sets whether the board uses 24 VDC or 5 VDC. You must check to ensure the jumper is correctly set for your usage.

The InView Comms Module input power summary is as follows:

- 5 VDC ±2% at 1.0 Ampere maximum from the InView display.
- External voltage. The external supply voltage can range from +9.6 VDC to +28.8 VDC at 10 W (maximum).
- Inrush current is less than 1.75 A.
- Jumper J2 settings are shown as labeled on the board and in 24 VDC or 5 VDC positions:

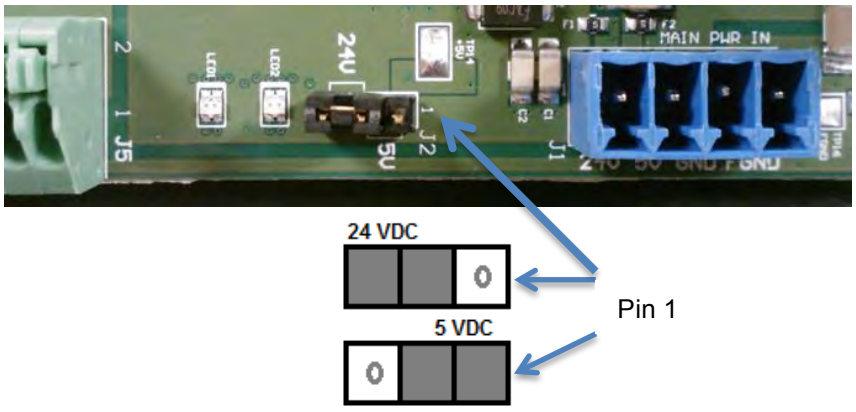

Section 2.1 About the InView Comms Module®

NOTE You can use the Passthrough (TCP/IP) option to connect a host personal computer running the InView Comms Module software application to an InView message display. The Passthrough (TCP/IP) software option implements full 2706-PENET1 functionality, and replaces the PENET1 hardware. You use your third-party PC-based application to communicate with the InView display via TCP Port 3001 on the InView Comms Module installed with your InView display.

NOTE The Spectrum Controls, Inc. InView Comms Module may also be used to manually trigger messages, manually manage the message queue, and manually update variables on the display for systems that do not contain PLCs.

The supported protocols are EtherNet/IP, TCP/IP Passthrough, and Modbus TCP. The InView Comms Module provides Ethernet access to a message server PLC or Passthrough access to a message display. The PLCs use ladder logic that includes InView tags and/or InView Add-On instructions that are queried by the Comms Module. You interact with the Spectrum Controls, Inc. InView Comms Module via an embedded webpage that provides configuration and management access, or via third-party access that uses Passthrough on the Comms Module to access the display directly from a PC-based message server application. The web page opens and runs in an Internet browser. (The legacy InView Messaging Software functions only on Windows XP, and requires a separate host PC application. You cannot use this software to configure the Spectrum Controls InView Comms Module.

NOTE To physically install the InView Comms Module Series 2 hardware, which is drop-in compatible with the existing 2706-PENET (P/M/K) Ethernet/IP Comms Modules and the 2706-PENET1 TCP/IP Passthrough option, refer to the document provided with your InView Comms Module when it shipped. Additional documentation is available from the Spectrum Controls website.

To help transition to the new interface, the new user interface software allows you to import existing InView Project .ivp, .ivl, and .csv files generated by the legacy InView Messaging software. The legacy software extracts current settings and message tables for display in the user interface. This allows you to remain compatible with existing Allen-Bradley 2706-P*xxxx* Comms Modules.

You configure the new InView Comms Module using an embedded webpage. The InView Comms Module makes it possible for either PLC ladder logic or a host PC message server application to display information on the different types of InView display. Example: The InView Comms Module retrieves updates from a PLC message server via EtherNet/IP.

NOTE In order to view the InView Comms Module interface, your personal computer or hand-held device must be able to run an Adobe Flash Player compatible browser. (Adobe and Flash are either registered trademarks or trademarks of Adobe Systems Incorporated in the United States and/or other countries.) All other copyrights and registered trademarks are the property of their respective owners.

NOTE The images that appear are dependent on your choice of browser and browser version. If you are using a different operating system, your windows may appear different.

Section 2.2 Hardware Specifications

Spectrum Controls, Inc. InView specifications replace previous versions as follows:

Specification	Description
Fault Detection	Expansion Memory
Input Protection	30 VDC
Connectors	• Power: 4-pin plug and socket power connector. • Ethernet: 2 RJ-45 connectors. **Eth1** is the recommended default. • Terminal Block: 10-pin RS-232/485 connector to the InView display. • Plug-In Modules: Main board-to-daughter board connectors are to be installed for future, expanded functionality such as cell modem and wireless.
RTC	Inaccuracy: 1 minute per month maximum. Keep-alive time on power OFF is 3 days minimum.
Isolation	Power supply, Ethernet: • 250 VAC, Continuous, Class 1 • 1500 VAC, one minute • 2100 VDC, one minute RS-232/RS-485 • 120 VAC, Continuous, Class 1 • 1000 VAC, one minute • 1410 VDC, one minute
Number of Inputs/Outputs	• 1 Power • 2 Ethernet • 1 RS-232/RS-485
Power Requirements	• 24 V nominal input • Ranges from 9.6 VDC at 0.625 mA maximum to 28.8 VDC at 210 mA maximum • 5 V nominal input • 5 VDC +/-2% at 1.0 ADC maximum
Power Dissipation within Module	Less than, or equal to 6 W
Dimensions	Circuit board no larger than 13.70 by 13.34 cm (5 by 5.625 inches) with a minimum of 4 mounting hole locations with grounded standoffs.
Weight (unpackaged)	0.20 Kg (0.45 lbs) PCB and cable

Specification	Description
Weight (packaged)	• 0.36 Kg (0.80 lbs) PCB, cable, and cardboard box • 0.82 Kg (1.80 lbs) PCB, cable, enclosure (plastic DIN clips), and cardboard box • 1.38 Kg (3.05 lbs) PCB, cable, enclosure (metal DIN clips), and cardboard box

Section 2.3 Environmental and EMC Specifications

The following table lists the environmental specifications for the InView Comms Modules:

Environmental Test Description

Attribute	Standard	Class/Limit
Mechanical		
Vibration of Unpackaged Products	IEC 60068-2-6 FC	Channel Mount: 10 Hz < f < 57 Hz 0.012 in. p-p displacement 57 Hz < f 500 Hz 1.0 g DIN Rail Mount: 10 Hz < f < 57 Hz 0.012 in
Shock of Unpackaged Products, Operating	IEC 60068-2-27; Ea	15 g peak acceleration 11(±1) mS pulse width, half-sine
Shock of Unpackaged Products, Non-Operating	IEC 60068-2-27; Ea	30 g peak acceleration 11(±1) mS pulse width, half-sine
Vibration of Packaged Products		NIST 1A; ASTM D999-75(81)
Shock of Packaged Products	IEC 60068-2-32, Ed Procedure 1	Packaged drop at 122 cm (48 in.), all sides, 3 edges, 1 corner (Not applicable for phase 1 development)
Temperature / Humidity		
Operating Temperature Cycling	IEC 60068-2-3	0°C to +55°C (32°F to 131°F)
Non-Operational Storage Temperature	IEC 60068-2-3	-25°C to +70°C (-13°F to 158°F)
Humidity	IEC 60068-2-3	5 to 95% non-condensing at 60°C

Section 2.4 Certifications for InView Comms Modules

Certification	2706-PENETK2-SC, 2706-PENETM2-SC, 2706-PENETP2-SC
c-UL-us	UL Listed Industrial Control Equipment, certified for US and Canada. • UL listed for UL508C-Industrial Control Products • UL listed for ANSI/ISA 12.12.01-Hazardous Environments Class 1, Division 2, Groups A, B, C, and D; Class II, Division 2, Groups F and G; and Class III, Division 2 • UL Listed for Canadian Safety Standards CSA 22.2 No. 14-M91
CE	European Union 89/336/EEC EMC Directive, compliant with: • 2006/95/EC • 2004/108/EC • EN 61000-4; Conducted Emissions, AC P/S Input • EN 61000-4; Radiated Emissions, entire product • EN 61000-4-2; ESD Immunity, Conductive Non-operator Interface • EN 61000-4-3; Radiated Immunity, Non-conductive, Non-operator Interface • EN 61000-4-4; Fast Transient Immunity; Analog I/O and associated power input • EN 61000-4-5; Surge Immunity, Information communications and analog shielded lines • EN 61000-4-6; Conducted Immunity, Analog I/O and associated power input • EN 61000-4-11; Line, AC P/S input • EN 61000-6-6; Electromagnetic Compatibility • IEC 61131-2:2007; Programmable Controllers-Equipment Class 1, Dielectric, port to backplane/port to port
C-Tick	Australian Radiocommunications Act, compliant with: AS/NZS CISPR 11-Group 1, Class A
	The PCA must be installed in a UL 1212 approved display module. HAZLOC is not required.

Performance Criteria A

The equipment shall operate without malfunction or loss of performance during the whole time test stimulus is applied, and after removal of test stimulus (at the conclusion of the entire test). A loss of performance is acceptable provided the level of performance is no worse than the stated tolerance allowed.

Performance Criteria B

"Self-recoverable." The equipment may suffer a temporary malfunction or loss of performance during test stimulus, but shall recover following the removal of test stimulus without operator intervention. Examples:

- Temporary loss of communications
- Loss and subsequent addition of module

Performance Criteria C

"Operator-recoverable." The equipment may suffer a malfunction during the test, but shall fully recover following a reset or other immediate operator intervention. Examples:

- Watchdog Timer faults
- Having to recycle power

Performance Criteria D

"Non-recoverable"; Degradation or loss of function which is not recoverable due to damage of equipment (components), software, or loss of data. Examples**:**

- Blown fuses (soldered), memories, and FETs.
- Replacement of hardware devices needed to restore equipment to working condition.

Section 2.5 Installing the InView Comms Module

The label supplied with your InView Comms Module contains important information you need, including the part number and certifications for the device:

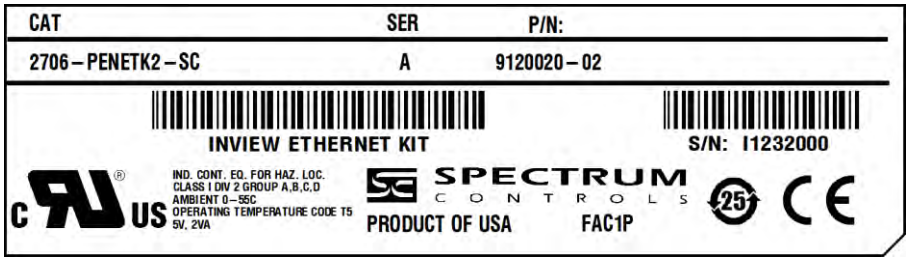

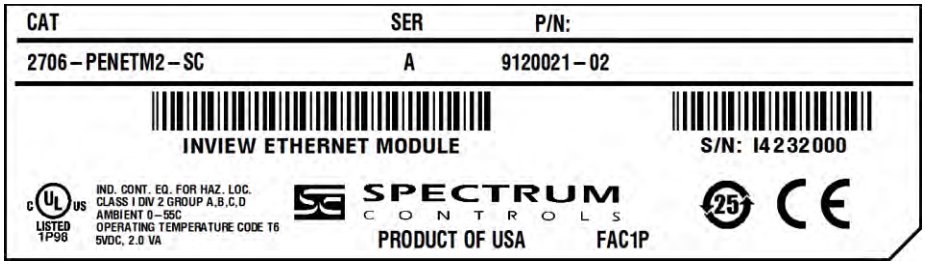

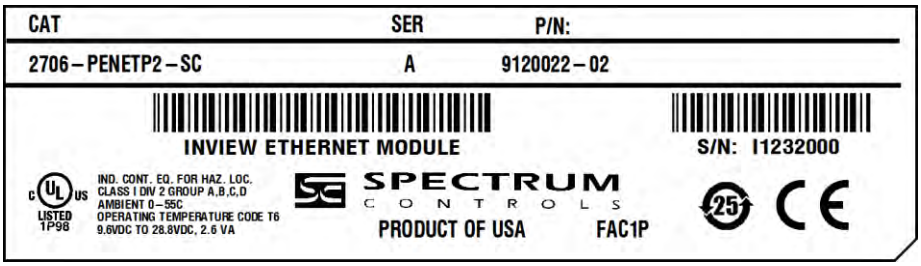

WARNING	**Hazardous voltage.** Contact with high voltage may cause death or serious injury. Always disconnect power to the InView display prior to servicing.

WARNING	**Tension dangereuse.** Tout contact avec une tension élevée peut entraîner la mort ou des blessures graves. Déconnectez toujours l'alimentation de l'afficheur avant toute opération de maintenance.

WARNING	**EXPLOSION HAZARD** • Substitution of components may impair suitability for Class I, Division 2; Class II, Division 2; and Class III, Division 2. Do not replace components or disconnect equipment unless power has been switched off or the area is known to be non-hazardous. • Do not connect or disconnect components unless power has been switched off or the area is known to be non-hazardous. • This product must be installed in an enclosure. • All wiring must comply with N.E.C. article 501-4(b), 502-4(b), or 503-3(b), as appropriate for Class I, Class II, and Class III equipment.

WARNING	**DANGER D'EXPLOSION** • La substitution de composants peut rendre cet équipement impropre à une utilisation en environnement de Classe I, Division 2, de Classe II, Division 2 et de Classe III, Division 2. • Mettre l'appareil hors tension et vérifier que l'environnement est classé non dangereux avant de remplacer des composants ou de débrancher l'appareil. • Mettre l'appareil hors tension et vérifier que l'environnement est classé non dangereux avant de connecter ou de déconnecter des composants. • Ce produit doit être installé dans une armoire. • Le câblage doit être conforme à l'article 501-4(b), 502-4(b) ou 503-3(b) du Code national de l'électricité des Etats-Unis, selon que l'équipement est de Classe I, Classe II, ou Classe III.

Power Supply Requirements

- The 2706-PENETM2-SC and 2706-PENETK2-SC modules are powered at 5 VDC ±2% at 1.0 ADC maximum from the InView 2706-P4*x*-SC, 2706-P7*x*-SC, and 2706-P9*x*-SC displays.
- The 2706-PENETP2-SC module requires an external 24V ±25%, 1 A DC power supply for use with the InView 2706-P22R-SC panel mount display. External supply voltage can range from +9.6 VDC to +28.8 VDC at 10 W (maximum). Inrush current must be less than 1.75 A.

2.5.1 Mount the Comms Module to the 2706-P42-SC and 2706-P44-SC Displays

The InView Comms module, catalog number 2706-PENETM2-SC, is designed to mount to the track of the InView 2706-P42-SC and 2706-P44-SC displays. The back plate of the module has tabs for attaching to the track. Tighten mounting screws until they bottom out against the back plate.

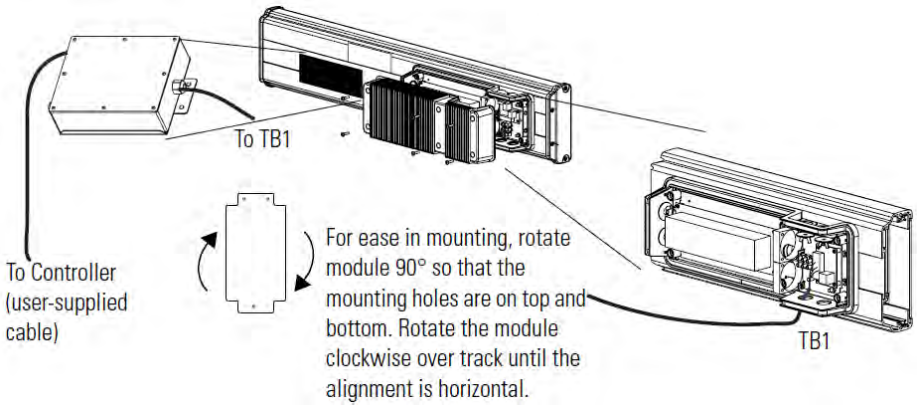

2.5.2 Wire the Comms Module to the 2706-P42-SC and 2706-P44-SC

Below is an illustration and description of the InView Comms module and its connectors with relation to an InView 2706-P4*x*-SC display.

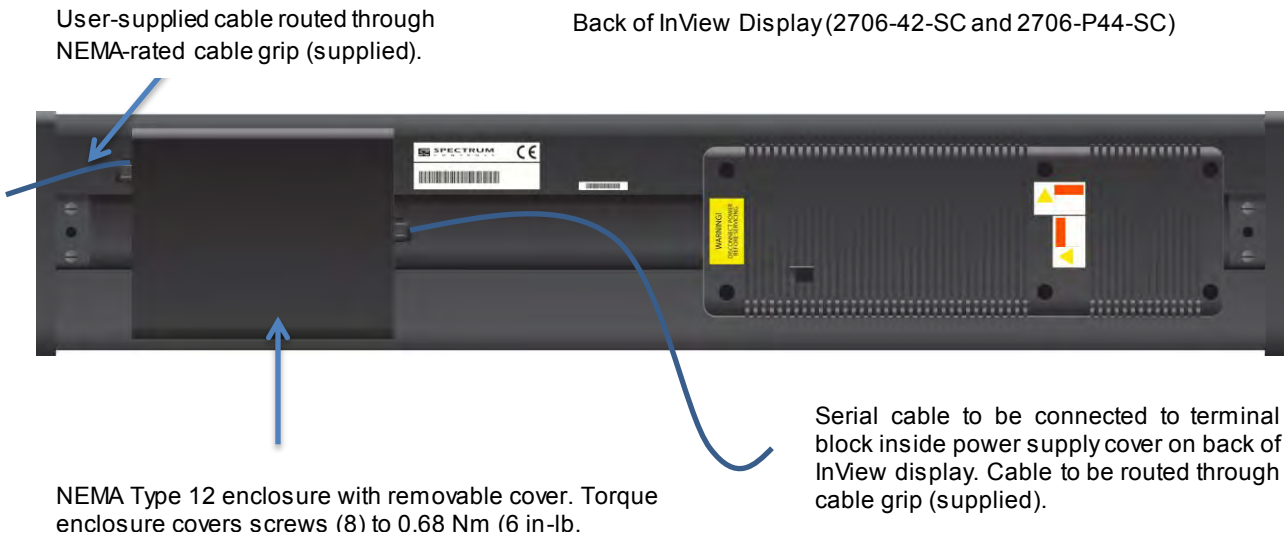

WARNING	**Hazardous voltage.** Contact with high voltage may cause death or serious injury. Always disconnect power to the InView display prior to servicing.

WARNING	**Tension dangereuse.** Tout contact avec une tension élevée peut entraîner la mort ou des blessures graves. Déconnectez toujours l'alimentation de l'afficheur avant toute opération de maintenance.

1. Disconnect power to the InView display.
2. Remove the six screws from the power supply cover and remove cover (2706-P42-SC and 2706-P44-SC).

Set the screws aside for a later step:

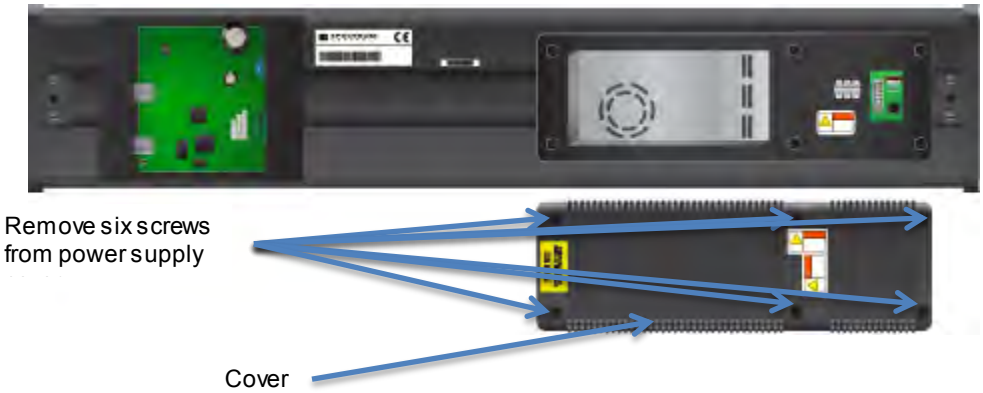

3. Mount the Comms module onto the mounting plate located on the outside of the display back to the left of the label as shown above.
4. Feed the serial cable through the cable grip (shipped with module).
5. Insert the serial wires through the conduit opening on either the top or the bottom of the InView display.

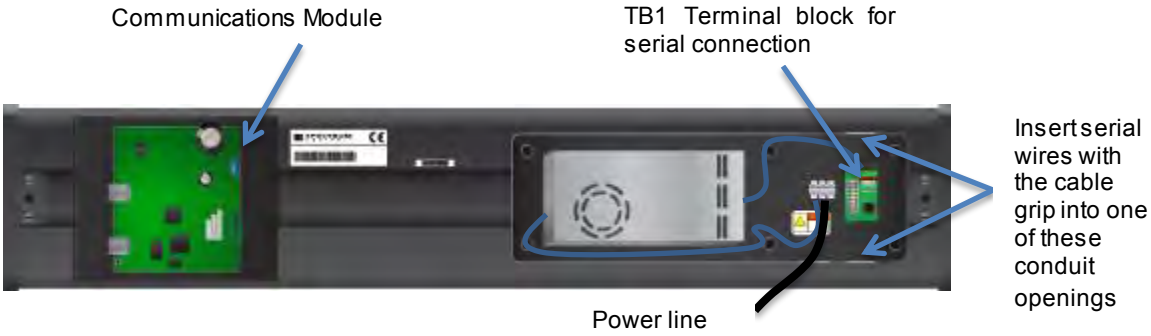

6. Mount the cable grip to the InView display housing, tighten the locknut finger-tight, and rotate an additional 1/2 turn.

WARNING	**Hazard of damage to electronic equipment.** **Failure to ensure that jumper J2 is in the correct position for the voltage supplied to the InView Comms module can result in damage to the module circuitry.** Before applying power to the InView Comms Module, check that the jumper is in the correct position for your application.

WARNING	**Danger de dommage pour l'équipement électronique.** **S'assurez que le cavalier J2 est dans la position correcte pour la tension fournie au module de communication InView sinon cela pourrait entrainer des dommages a l'ensemble des circuits du module.** InView en tension, vérifiez que le cavalier est dans la position de voltage adequat pour votre application.

7. Jumper J2 settings are shown as labeled on the board and in 24 VDC or 5 VDC positions. Check jumper J2 is correctly positioned for your application:

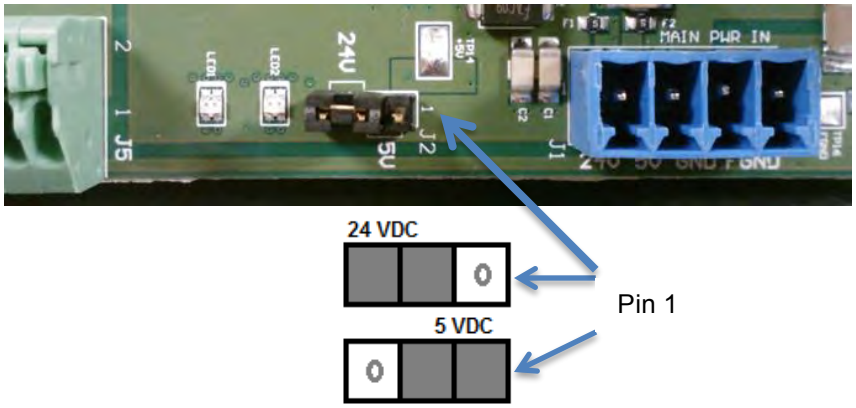

8. Connect the display to the Comms module.
9. Connect the display to the Comms module using the supplied cable.
10. Wire the Comms module as shown in the wiring diagram below. Connect incoming power (Black and Red), serial (White and Brown), and GND (Green and Blue) wires from the Comms module to the **TB1** terminal block and to the power terminal block as shown.
11. With a CAT5 cable, connect the Comms module to an unmanaged switch.
12. Connect the unmanaged switch to both your PLC and PC with a CAT5 cable.

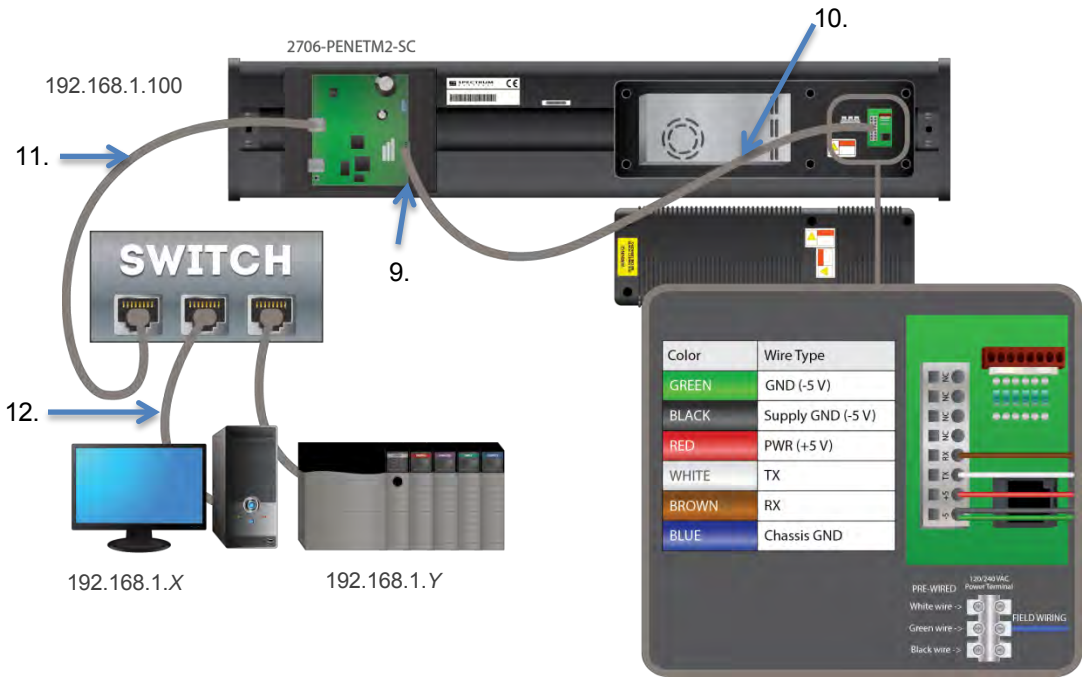

TB1 Connector (on Display) Pin	Stranded wire from Comms Module Cable 6010*nn-nn*	Connectors on InView Comms Module J5/J1
1: GND (Insert Two Ground wires in Pin 1)	GREEN: Isolated Signal GND BLACK: Supply GND (-5 V)	**J5** Pin 5 **J1** Pin 3
2: PWR (+ 5 V)	RED + 5 V Power	**J1** Pin 2
4: RX	BROWN	**J5** Pin 2
3: TX	WHITE	**J5** Pin 3
Power Connection Terminal block (on Display Pin)	Stranded wire from Comms Module Cable 6010*nn-nn*	Connectors on InView Comms Module
GND	Blue Chassis Ground	**J1** Pin 4

IMPORTANT	The 2706-P*x*M-SC Comms modules are provided with cable PN 6010104-*nn*, (3 meters long). The cable combines power and serial communications (connected as shown in diagram **TB1**). Power for the Comms module comes from display terminals #1 and #2. Serial communications are via RS-232 from the module to the display using terminals #3 and #4.

13. Torque the cable grip cap until the cable is securely fastened.
14. Replace the power supply back-cover with the six screws, and torque the screws to 2.7 Nm (24 in-lb).
15. Connect the power supply to a power source.
16. If you press the reset button in the module, the module restarts, initializes, and displays the Comms Module's MAC address, its Ethernet IP address, and its Gateway IP addresses as part of the associated InView display.
17. Write down the values. Example: **192.168.1.100**
18. Connect your PC to the other end of the Ethernet network cable installed on the Comms module and start an Internet browser.
19. In the Address field, type the IP address you obtained from the display to which the Comms Module is connected.
20. Example entry only. Your value will be different: **192.168.1.100**
21. The InView User Interface starts up. If you do not have Adobe Flash Player installed on your computer, the software provides a link for you to access, download, and install the Flash Player. Follow Adobe's instructions to install the Flash Player.
22. If needed, re-enter the IP address in the Browser.
23. The InView User Interface software starts up and provides you with a login screen. Enter the default password:

    spectrum

    The main InView User Interface View window appears.

24. Use the online help or Chapter 3 to finish setting up your InView and display.
25. Follow directions. If needed, click **Help** button for specific instructions:

2.5.3 Mount the Comms Module to the 2706-P72-SC and 2706-P74-SC Displays

The 2706-P72-SC and 2706-P74-SC displays are equipped with a mounting plate inside the case for mounting the 2706-PENETK2-SC Communications kit.

To mount the communications kit:

WARNING	**Hazardous voltage.** Contact with high voltage may cause death or serious injury. Always disconnect power to the InView display prior to servicing.

WARNING	**Tension dangereuse.** Tout contact avec une tension élevée peut entraîner la mort ou des blessures graves. Déconnectez toujours l'alimentation de l'afficheur avant toute opération de maintenance.

1. Disconnect power to the InView display.
2. Open the front of the InView display case by turning the latches counter clockwise, and carefully lowering (opening) the front of the case.
1. If necessary, remove the previous Comms module and set aside.
3. Install the Comms module to the mounting plate located near the **TB1** terminal block by using the supplied standoffs and screws (also see image later in this section).

4. Torque the screws to 0.68 Nm (6 in-lb).

IMPORTANT	A label is included in the hardware kit that indicates the default IP address for the 2706-PENETK2-SC EtherNet/IP Comms module. The module is shipped with a default IP address of 192.168.1.100. Please consult with personnel who will be configuring communications for the most appropriate placement of the label.

2.5.4 Wire the Comms Module to the 2706-P72-SC and 2706-P74-SC Displays

The power to the Comms module is provided by the InView display (series C).

WARNING	**Hazard of damage to electronic equipment.** **Failure to ensure that jumper J2 is in the correct position for the voltage supplied to the InView Comms module can result in damage to the module circuitry.** Before applying power to the InView Comms Module, check that the jumper is in the correct position for your application.

WARNING	**Danger de dommage pour l'équipement électronique**. **S'assurez que le cavalier J2 est dans la position correcte pour la tension fournie au module de communication InView sinon cela pourrait entrainer des dommages a l'ensemble des circuits du module.** InView en tension, vérifiez que le cavalier est dans la position de voltage adequat pour votre application.

To wire the Comms module:

1. Jumper J2 settings are shown as labeled on the board and in 24 VDC or 5 VDC positions. Check jumper J2 is correctly positioned for your application:

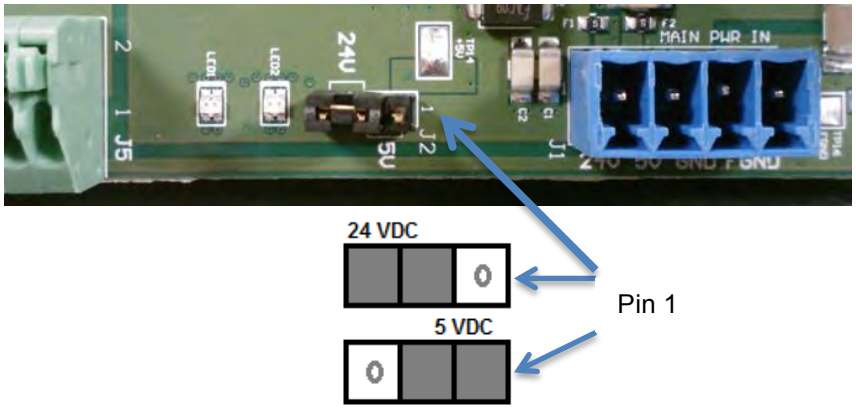

NOTE Personal computer and PLC must be in the 192.168.1.*X* subnet.

2. Connect the display to the Comms Module using the supplied cable.
3. Connect the incoming power (Black and Red) wires, serial (White and Brown), and GND (Green and Blue) wires from the Comms module to the **TB1** terminal block and to the power terminal block as shown.

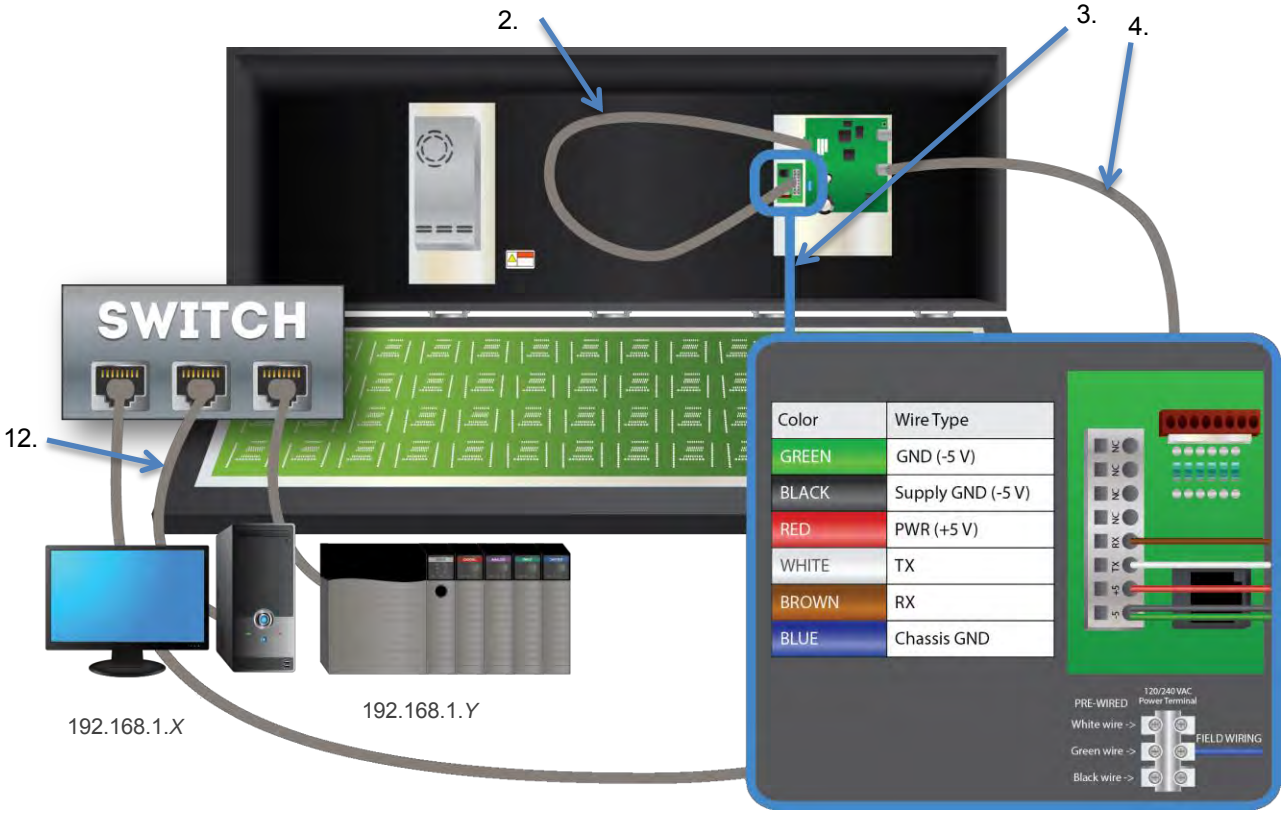

IMPORTANT	The 2706-PENETK2-SC and 2706-PENETM2-SC Comms modules are provided with cable PN 6010104-*nn*, (3 meters long). The cables combine power and serial communications (connected as shown in diagram **TB1**). Power for the Comms module comes from display terminals #1 and #2. Serial communications are via RS-232 from the module to the display using terminals #3 and #4.

4. Connect the user-supplied network cable to the Comms module, and route the user-supplied network cable through the cable grip and locknut that is provided, to an unmanaged switch.
5. Verify that there is adequate slack in the cable by making a loop of the cable inside the InView case.
6. Mount the cable grip to the InView display housing, tighten the locknut finger-tight, and rotate an additional ½ turn.
7. Torque the cable grip cap until the cable is securely fastened.
8. Carefully close the InView case, and tighten the latches by turning them clockwise.
9. Connect the InView display to a power source.
10. If you press the reset button in the module, the module restarts, initializes, and displays the Comms Module's MAC address, its Ethernet IP address, and its Gateway IP addresses as part of the associated InView display.
11. Write down the values. Example: **192.168.1.100**
12. Connect your PC and PLC to the unmanaged switch, and start an Internet browser.
13. In the Address field, type the IP address you obtained from the display to which the Comms Module is connected.
14. Example entry only. Your value will be different: **192.168.1.100**
15. The InView User Interface starts up. If you do not have Adobe Flash Player installed on your computer, the software provides a link for you to access, download, and install the Flash Player. Follow Adobe's instructions to install the Flash Player.
16. If needed, re-enter the IP address in the Browser.
17. The InView User Interface software starts up and provides you with a login screen. Enter the default password:

    spectrum

    The main InView User Interface View window appears.
18. Use the online help or Chapter 3 to finish setting up your InView and display.
19. Follow directions. If needed, click **Help** button for specific instructions:

2.5.5 Mount the Comms Module to the 2706-P92-SC and 2706-P94-SC Displays

The 2706-P92-SC and 2706-P94-SC displays are equipped with a mounting plate inside the case for mounting the 2706-PENETK2-SC Comms module.

To mount the communications kit:

WARNING	**Hazardous voltage.** Contact with high voltage may cause death or serious injury. Always disconnect power to the InView display prior to servicing.

WARNING	**Tension dangereuse.** Tout contact avec une tension élevée peut entraîner la mort ou des blessures graves. Déconnectez toujours l'alimentation de l'afficheur avant toute opération de maintenance.

NOTE Personal computer and PLC must be in the 192.168.1.*X* subnet.

1. Disconnect power to the InView display.
2. Open the front of the InView display case by turning the latches counterclockwise and carefully lowering (opening) the front of the case.

3. If necessary, remove the previous Comms Module and set aside.

4. Install the Comms module to the mounting plate located near the **TB1** terminal block by using the supplied standoffs and screws.
5. Torque the screws to 0.68 Nm (6 in-lb).

IMPORTANT	A label is included in the hardware kit that indicates the default IP address for the 2706-PENETK2-SC EtherNet/IP Comms module. The module is shipped with a default IP address of 192.168.100. Please consult with personnel who will be configuring communications for the most appropriate placement of the label.

2.5.6 Wire the Comms Module to the 2706-P92-SC and 2706-P94-SC Displays

The power to the Comms module is provided by the InView display.

WARNING	**Hazard of damage to electronic equipment.** **Failure to ensure that jumper J2 is in the correct position for the voltage supplied to the InView Comms module can result in damage to the module circuitry.** Before applying power to the InView Comms Module, check that the jumper is in the correct position for your application.

WARNING	**Danger de dommage pour l'équipement électronique**. **S'assurez que le cavalier J2 est dans la position correcte pour la tension fournie au module de communication InView sinon cela pourrait entrainer des dommages a l'ensemble des circuits du module.** InView en tension, vérifiez que le cavalier est dans la position de voltage adequat pour votre application.

To wire the Comms module:

1. Jumper J2 settings are shown as labeled on the board and in 24 VDC or 5 VDC positions. Check jumper J2 is correctly positioned for your application:

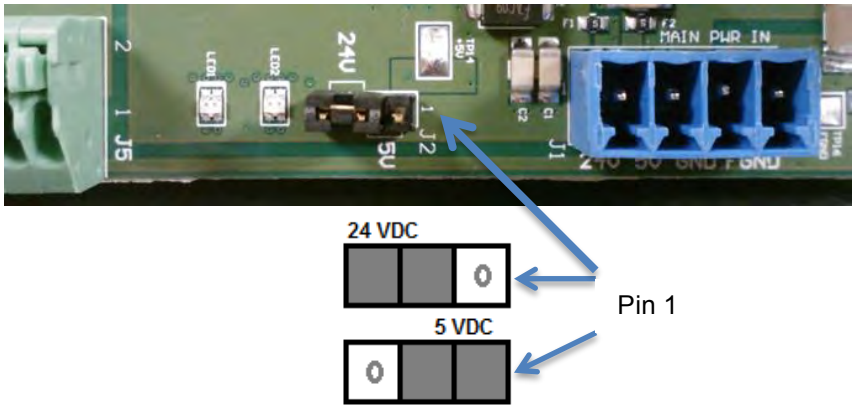

2. Route the user-supplied CAT5 network cable through the cable grip and locknut that is provided. Connect the CAT5 cable to the Comms module by plugging in the Ethernet cable to the **Ethernet1** RJ-45 connector as shown. Connect the other end of the cable to an unmanaged switch.
3. Connect the display to the comms module using the supplied cable. Connect the power and serial wires to the **TB2**, **TB3** terminal block in the InView display.

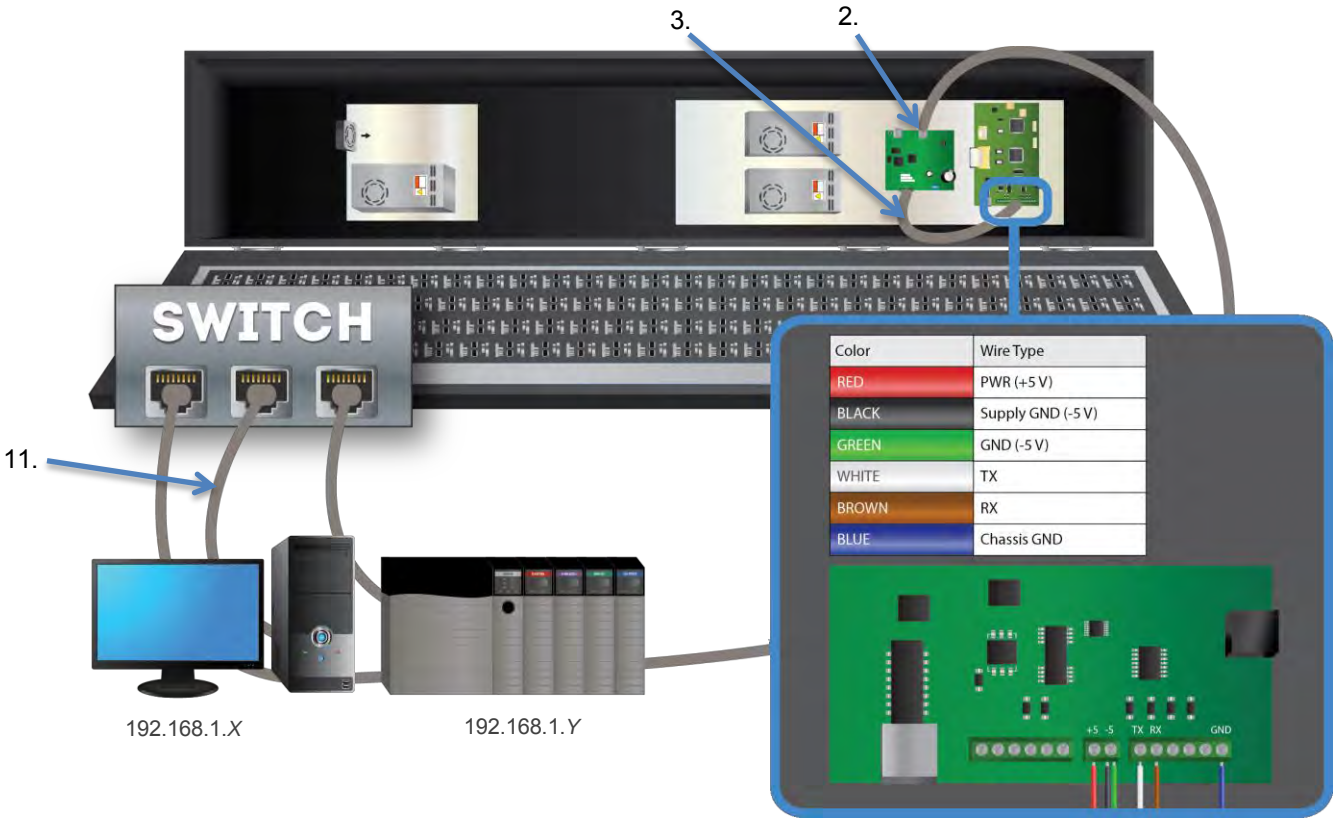

TB2 Connector (on Display) Pin	Stranded wire from Comms Module Cable 6010*nn-nn*	Connectors on InView Comms Module J5/J1
1: GND (Insert Two Ground wires in Pin 1)	GREEN: Isolated Signal GND BLACK: Supply GND (-5 V)	**J5** Pin 5 **J1** Pin 3
2: PWR (+ 5 V)	RED + 5 V Power	**J1** Pin 2
TB3 Connector (On Display) Pin	**Stranded wire from Comms Module Cable 6010*nn-nn***	**Connectors on InView Comms Module J5/J1**
4: RX	BROWN	**J5** Pin 2
3: TX	WHITE	**J5** Pin 3
Power Connection Terminal block (on Display Pin	Stranded wire from Comms Module Cable 6010*nn-nn*	Connectors on InView Comms Module
GND	Blue Chassis Ground	**J1** Pin 4

IMPORTANT	The 2706-P*x*K-SC Comms modules are powered through the serial cable by the display (series A).

4. Verify that there is adequate slack in the cable by making a loop of cable inside the InView case.
5. Mount the cable grip to the InView display housing, tighten the locknut finger-tight, and rotate an additional 1/2 turn.
6. Torque the cable grip cap until the cable is securely fastened.
7. Carefully close the InView case and tighten the latches by turning them clockwise.
8. Connect the InView display to a power source.
9. If you press the reset button in the module, the module restarts, initializes, and displays the Comms Module's MAC address, its Ethernet IP address, and its Gateway IP addresses as part of the associated InView display.
10. Write down the values. Example: **192.168.1.100**
11. Connect your PC and PLC to the unmanaged switch with a CAT5 cable and start an Internet browser.
12. In the Address field, type the IP address you obtained from the display to which the Comms Module is connected.
13. Example entry only. Your value will be different: **192.168.1.100**
14. The InView User Interface starts up. If you do not have Adobe Flash Player installed on your computer, the software provides a link for you to access, download, and install the Flash Player. Follow Adobe's instructions to install the Flash Player.
15. If needed, re-enter the IP address in the Browser.
16. The InView User Interface software starts up and provides you with a login screen. Enter the default password:

    spectrum

    The main InView User Interface View window appears.
17. Use the online help to finish setting up your InView and display.
18. Follow directions. If needed, click **Help** button for specific instructions:

2.5.7 Mount the Comms Module to the 2706-P92C2-SC and 2706-P94C2-SC Displays

The 2706-P92-SC and 2706-P94-SC displays are equipped with a mounting plate inside the case for mounting the 2706-PENETK2-SC Comms module.

To mount the communications kit:

WARNING	**Hazardous voltage.** Contact with high voltage may cause death or serious injury. Always disconnect power to the InView display prior to servicing.

WARNING	**Tension dangereuse.** Tout contact avec une tension élevée peut entraîner la mort ou des blessures graves. Déconnectez toujours l'alimentation de l'afficheur avant toute opération de maintenance.

NOTE Personal computer and PLC must be in the 192.168.1.*X* subnet.

1. If needed, disconnect power to the InView display.
2. Unscrew the four screws on the front of the two drawers located on the bottom panel of the InView display. The padding on the inside of the drawer fronts may allow you to leave the screws in the drawer front.
3. Pull out both drawers to their fullest extent.
4. If necessary, remove the previous Comms module and set aside.
5. In the left-hand drawer (as you face the display), install the Comms module on the mounting stands located at the front of the drawer, using the supplied standoffs and screws.
6. Torque the screws to 0.68 Nm (6 in-lb).

IMPORTANT	A label is included in the hardware kit that indicates the default IP address for the 2706-PENETK2-SC EtherNet/IP Comms module. The module is shipped with a default IP address of 192.168.100. Please consult with personnel who will be configuring communications for the most appropriate placement of the label.

2.5.8 Wire the Comms Module to the 2706-P92C2-SC and 2706-P94C2-SC Displays

The power to the Comms module is provided by the InView display.

WARNING	**Hazard of damage to electronic equipment.** **Failure to ensure that jumper J2 is in the correct position for the voltage supplied to the InView Comms module can result in damage to the module circuitry.** Before applying power to the InView Comms Module, check that the jumper is in the correct position for your application.

WARNING	**Danger de dommage pour l'équipement électronique.** **S'assurez que le cavalier J2 est dans la position correcte pour la tension fournie au module de communication InView sinon cela pourrait entrainer des dommages a l'ensemble des circuits du module.** InView en tension, vérifiez que le cavalier est dans la position de voltage adequat pour votre application.

To wire the Comms module:

1. Jumper J2 settings are shown as labeled on the Comms module board and in 24 VDC or 5 VDC positions. Check jumper J2 is correctly positioned for your application. Default jumper setting is 5 VDC:

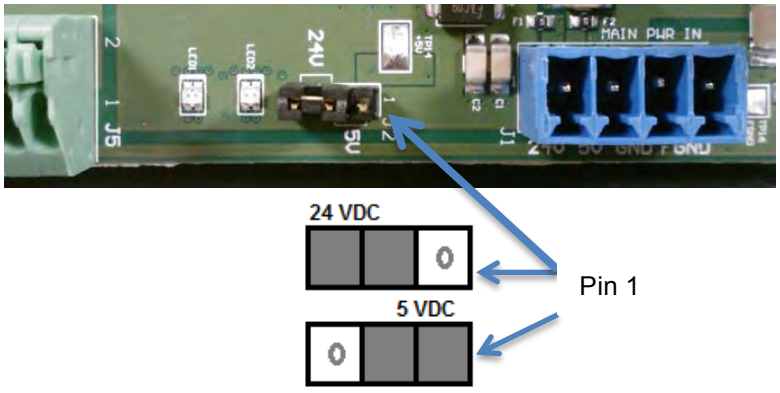

2. In the same drawer in which you install the Comms module board, route the user-supplied CAT5 network cable through the cable grip and locknut that is provided. Connect the CAT5 cable to the Comms module by plugging in the Ethernet cable to the **Ethernet1** RJ-45 connector as shown. Connect the other end of the cable to an unmanaged switch.
3. Connect the display terminal serial and power connectors in the left-hand drawer to the installed Comms module, using the supplied Comms Module cable as shown in the image and table provided.
4. The InView Display terminal blocks in the left-hand drawer are rated for wire ranges of 26 AWG to 12 AWG for the Comms Module serial and power wiring connections to the InView display. Ensure you follow all applicable,

local, electrical codes for placing wiring cable in conduit outside the display.

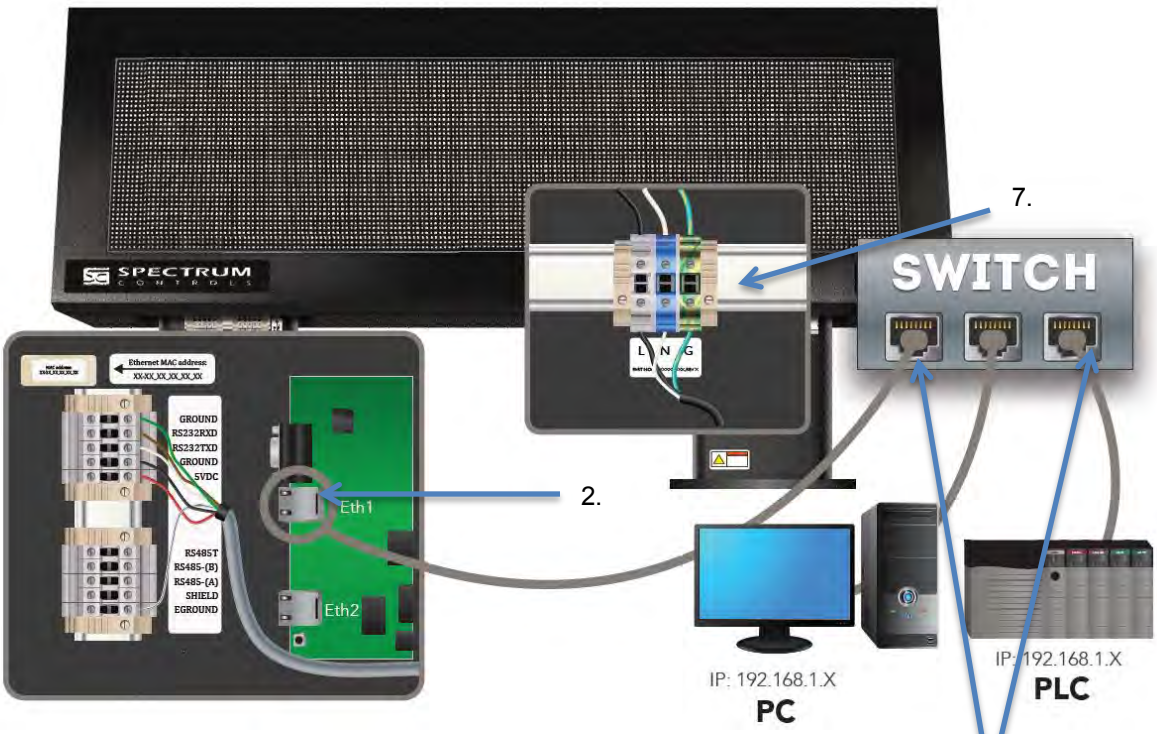

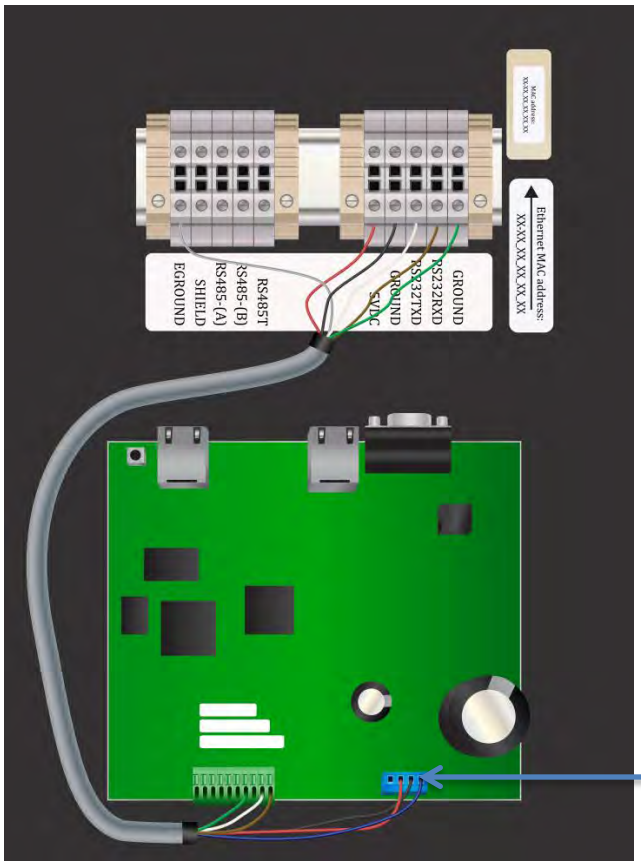

Stranded wire from Comms Module Cable 6010*nn-nn*	**Connectors on InView Comms Module J5/J1**
GREEN: Isolated Signal GND	**J5** Pin 5
BLACK: Supply GND (-5 V)	**J1** Pin 3
RED + 5 V Power	**J1** Pin 2
Stranded wire from Comms Module Cable 6010*nn-nn*	**Connectors on InView Comms Module J5/J1**
BROWN: RX	**J5** Pin 2
WHITE: TX	**J5** Pin 3
Blue: Chassis Ground	**J1** Pin 4

IMPORTANT	The 2706-P*x*K-SC Comms modules are powered through the serial cable by the display (series A).

5. Verify that there is adequate slack in the cable by making a loop of cable inside the InView case. Shorten cable as needed.
6. Torque the cable grip cap until the cable is securely fastened.
7. Connect the InView display to a power source.
8. The display initializes, and displays the Comms Module's MAC address, its Ethernet IP address, and its Gateway IP addresses as part of the associated InView display.
9. Write down the values. Example: **192.168.1.100**
10. Connect your PC and PLC to the unmanaged switch with a CAT5 cable and start an Internet browser.
11. In the Browser Address field, type the IP address you obtained from the display to which the Comms Module is connected.
12. Example entry only. Your value will be different: **192.168.1.100**
13. The InView User Interface starts up. If you do not have Adobe Flash Player installed on your computer, the software provides a link for you to access, download, and install the Flash Player. Follow Adobe's instructions to install the Flash Player.
14. If needed, re-enter the IP address in the Browser.
15. The InView User Interface software starts up and provides you with a login screen. Enter the default password:

    spectrum

    The main InView User Interface View window appears.
16. Use the online help to finish setting up your InView and display.
17. Follow directions. If needed, click **Help** button for specific instructions:

Section 2.6 Using the Comms Module with a 2706-P22R-SC Display

The 2706-P22R-SC InView panel-mount display can be used with a 2706-P*x*P-SC Comms module. The module is mounted on a DIN rail inside the enclosure in which the 2706-P22R-SC display is mounted. This maintains the NEMA 4*x*, 12, or 13 rating. The 2706-P*x*P-SC Comms module also requires a separate 24 VDC power supply. This module does not receive power from the InView display.

To mount and connect the Comms module:

WARNING	**Hazardous voltage.** Contact with high voltage may cause death or serious injury. Always disconnect power to the InView display prior to servicing.

WARNING	**Tension dangereuse.** Tout contact avec une tension élevée peut entraîner la mort ou des blessures graves. Déconnectez toujours l'alimentation de l'afficheur avant toute opération de maintenance.

1. Disconnect power to the enclosure.
2. Mount the DIN rail somewhere in the enclosure, near the 2706-P22R-SC display.
3. Snap the Comms module to the DIN rail and lock the latches.
4. Unscrew the top of Comms Module container.
5. Connect the Comms module to the 2706-P22R-SC display using the supplied serial cable.
6. Connect the user-supplied CAT5 network cable to the Comms module as shown below. Connect the other end of the network cable to an unmanaged switch.

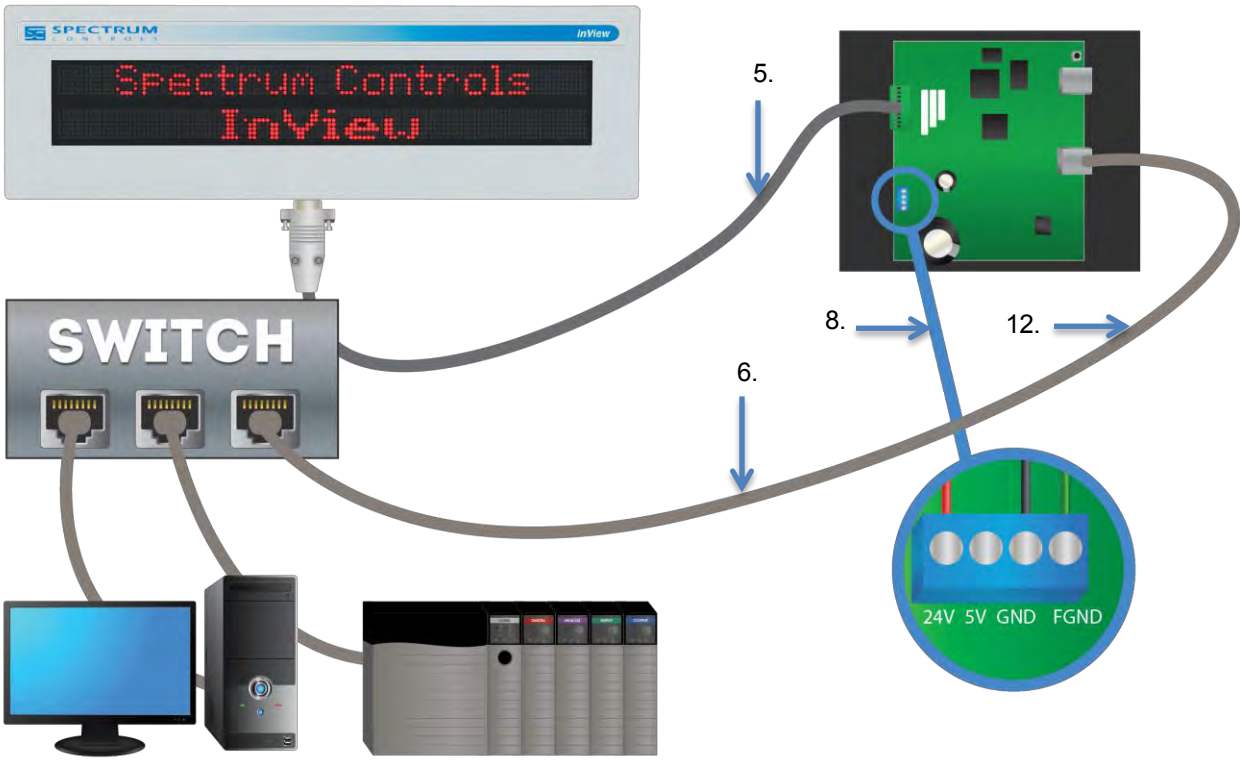

IMPORTANT	The 2706-PENETP2-SC Comms module is provided with cable PN 6010100-*nn*, (5 meters long). Pinouts are shown below.

Terminal Block J5 on Comms Module		
Pin	**Signal**	**Color**
10	Frame GND	Shield
9	RI (NC)	
8	RTS (O)	Green
7	CTS (I)	Brown or Orange
6	NC	-
5	Isolated GND	Black
4	NC	
2	TX (O)	White
3	RX (I)	Red
1	CD (NC)	-

DB-9F Connector plugged into P22 Display		
Pin	**Signal**	**Color**
1	NC	-
2	RX	White
3	TX	Red
4	NC	-
5	GND	Black
6	NC	-
7	CTS	Green
8	RTS	Brown or Orange
9	NC	-

WARNING	**Hazard of damage to electronic equipment.** **Failure to ensure that jumper J2 is in the correct position for the voltage supplied to the InView Comms module can result in damage to the module circuitry.** Before applying power to the InView Comms Module, check that the jumper is in the correct position for your application.

WARNING	**Danger de dommage pour l'équipement électronique**. **S'assurez que le cavalier J2 est dans la position correcte pour la tension fournie au module de communication InView sinon cela pourrait entrainer des dommages a l'ensemble des circuits du module.** InView en tension, vérifiez que le cavalier est dans la position de voltage adequat pour votre application.

7. Jumper J2 settings are shown as labeled on the board and in 24 VDC or 5 VDC positions.

   Check jumper J2 is correctly positioned for your application:

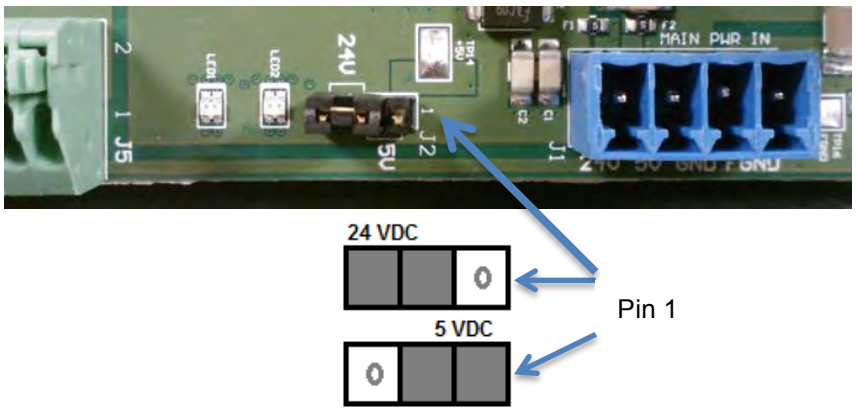

8. Connect 24 VDC to the comms module. Wire **+24 V** to Pin **J1-1**. Wire **-24 V** to Pin **J1-3**.
9. Turn +24 VDC power on.

   The Comms Module starts up.
10. If you press the reset button in the module, the module restarts, initializes, and displays the Comms Module's MAC address, its Ethernet IP address, and its Gateway IP addresses as part of the associated InView display.
11. Write down the values. Example: **192.168.1.100**
12. Connect your PC and PLC to the unmanaged switch and start an Internet browser.
13. In the Address field, type the IP address you obtained from the display to which the Comms Module is connected.
14. Example entry only. Your value will be different: **192.168.1.100**

15. The InView User Interface starts up. If you do not have Adobe Flash Player installed on your computer, the software provides a link for you to access, download, and install the Flash Player. Follow Adobe's instructions to install the Flash Player.
16. If needed, re-enter the IP address in the Browser.
17. The InView User Interface software starts up and provides you with a login screen. Enter the default password:

    spectrum

    The main InView User Interface View window appears.
18. Use the online help or Chapter 3 to finish setting up your InView and display.
19. Follow directions. If needed, click **Help** button for specific instructions:

Section 2.7 Getting Hardware and Software Information

You can get hardware equipment and software version information using a web browser. To access this information:

To save database record files:

1. If needed, log onto the InView:

   See Logging onto the InView User Interface
2. Right click on the window:

   The following popup menu appears:

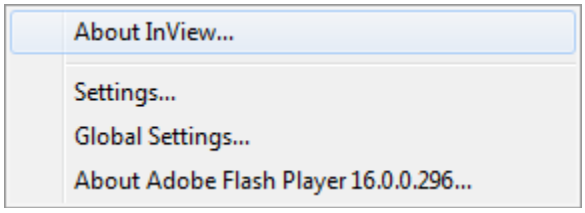

3. View the information using the following options:
   - **About InView**. Displays the current InView Messaging Software User Interface software version, InView Comms Module serial number, and its model number:

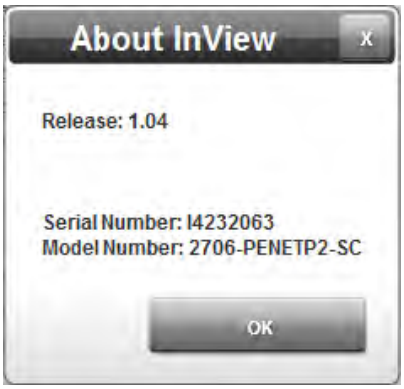

- **Settings...**. Displays software that allows you to view and modify all Adobe Flash Player settings documentation for further help):

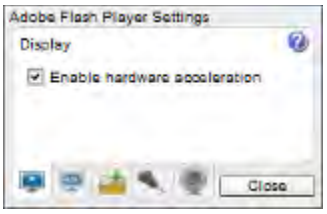

- **Global Settings...**. Displays the Flash Player Settings Manager dialog. You may need to give permission for this to run (allow):

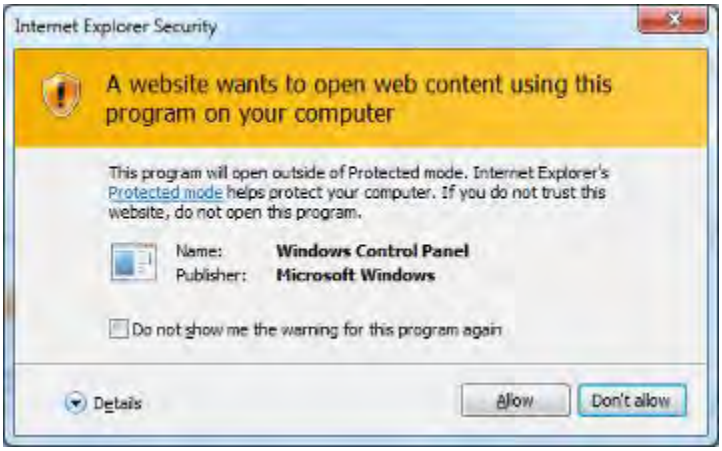

- Use the software to change settings as needed:

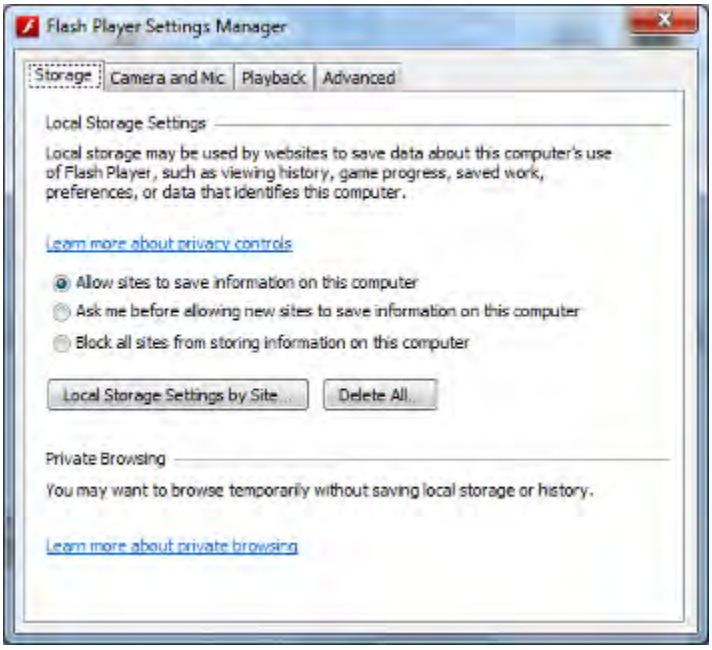

- **About Adobe Flash Player *version*...**. Displays current version of the Adobe Flash Player in use and opens the Adobe Flash Player website (refer to Adobe documentation for further help).

Section 2.8 Getting IP Address Information

You can determine the IP address and other addresses, including the MAC address for your personal computer as follows:

1. From the main window on your personal computer, click **Start**: The following field appears:

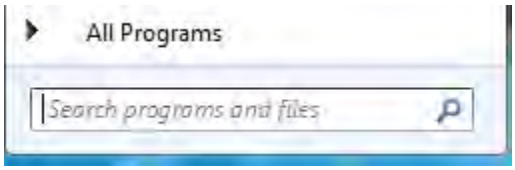

2. In the field, type **cmd** and press **Enter**: The command window appears:

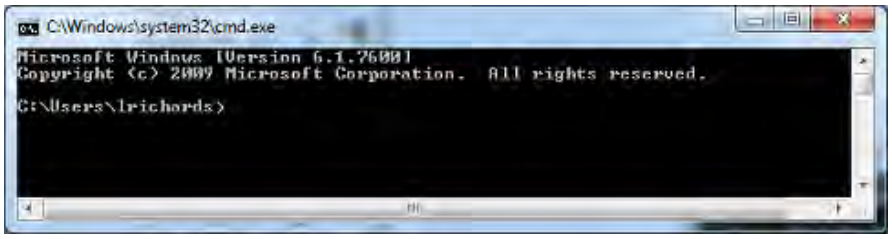

3. At the command prompt, type **ipconfig /all**, and press **Enter**: The following list of all addresses associated with your device appears:

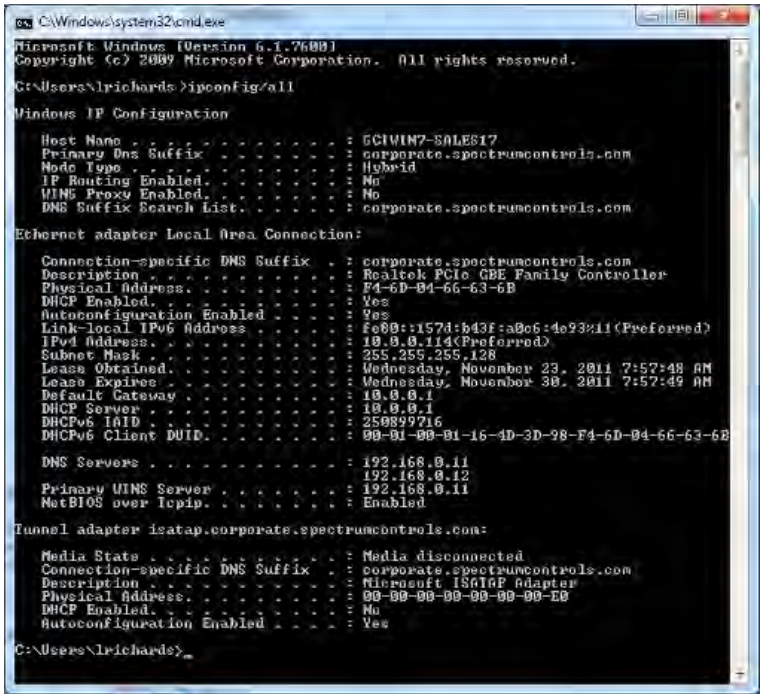

4. Use this list to set up your communications network (if you wish to have your Comms module on the same network as your personal computer).
5. To exit this window, at the command prompt, type **exit**, and press **Enter**.

Section 2.9 Pinging IP Addresses

Whether or not you are able to ping an individual InView Comms Module is dependent on your PC's security settings, and whether or not you have chosen to allow pings over your network.

You can determine whether or not a device such as a computer, InView Comms Module, router, or other device that has an IP address is reachable from your device by using the **ping** command. Example: You have connected a personal computer to an InView Comms Module, and you wish to determine whether or not the computer is able to communicate with the module.

To ping the InView Comms Module from the personal computer:

1. From the main window on your personal computer, click **Start**:

   The following field appears:

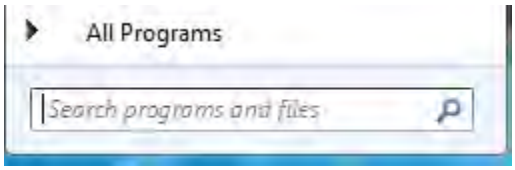

2. In the field, type **cmd** and press **Enter**:

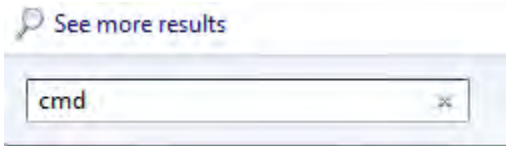

   The **C:\Windows\system32\cmd.exe** command window appears.

3. At the command prompt, type **ping *IP address*** where ***IP address*** is the address of the InView Comms Module you wish to access, and press **Enter**. Example: **10.0.0.13**:

   The following data appears in the command window:

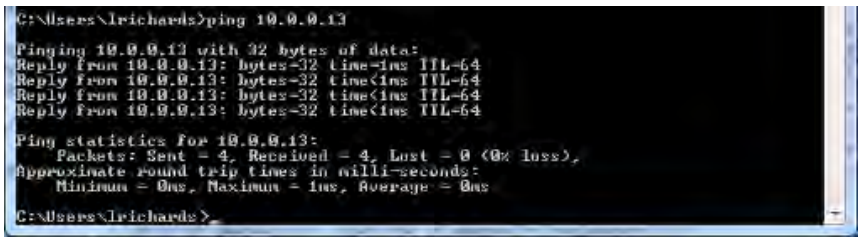

   This data lets you know that you were successful in reaching the device belonging to the IP address you entered.

4. If you were not successful in reaching the device, you will instead be informed that the device is unreachable:

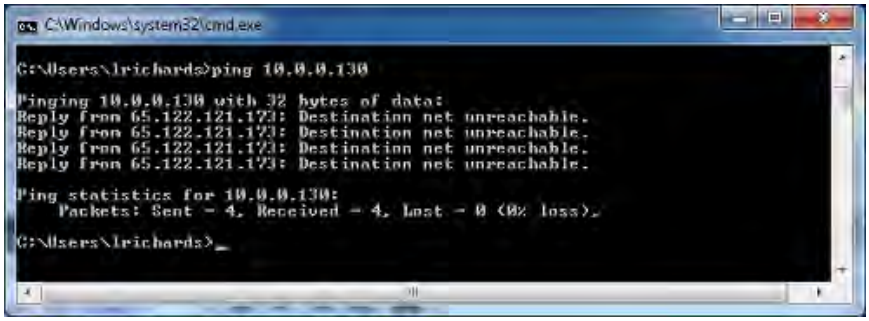

If you cannot reach the device using this command, you can contact your system administrator or technical support for additional assistance in connecting to the device you are trying to access.

Section 2.10 General Public License Information

As part of the InView product, Spectrum Controls, Inc. uses software licensed under GNU General Public License, version 2:

GPL version 2.0

Spectrum Controls, Inc. also uses software licensed under GNU General Public License, version 3:

GPL version 3.0

Please refer to the websites listed above for further information about these licenses, and how they are to be used.

Section 2.11 Limited Warranty

Spectrum Controls, Inc. warrants that its products are free from defects in material and workmanship under normal use and service, as described in Spectrum Controls, Inc. literature covering this product, for a period of 1 year. The obligations of Spectrum Controls, Inc. under this warranty are limited to replacing or repairing, at its option, at its factory or facility, any product which shall, in the applicable period after shipment, be returned to the Spectrum Controls, Inc. facility, transportation charges prepaid, and which after examination is determined, to the satisfaction of Spectrum Controls, Inc., to be thus defective.

This warranty shall not apply to any such equipment which shall have been repaired or altered except by Spectrum Controls, Inc. or which shall have been subject to misuse, neglect, or accident. In no case shall the liability of Spectrum Controls, Inc. exceed the purchase price. The aforementioned provisions do not extend the original warranty period of any product which has either been repaired or replaced by Spectrum Controls, Inc.

Chapter 3
Using the InView Messaging Software Interface

Section 3.1 Using the InView Messaging Software User Interface

NOTE Running the InView Messaging Software User Interface requires an Adobe Flash compatible web browser. The first time you run the InView Messaging Software User Interface, if you do not have the Adobe Flash Player, the User Interface prompts you to download and install the Adobe Flash Player.

NOTE Before you can use the InView Comms Module to configure the InView Display both systems must be powered on and connected to the network.

Section 3.2 Logging onto the InView Comms Module

You log onto the InView Comms Module to set up and manage all InView Comms Module functions:

NOTE All fields that show a red asterisk (*) are required.

To log onto the InView Comms Module:

1. Start web browser software. Examples: **Microsoft ® Internet Explorer**, **Mozilla Firefox**.

   The browser window appears:

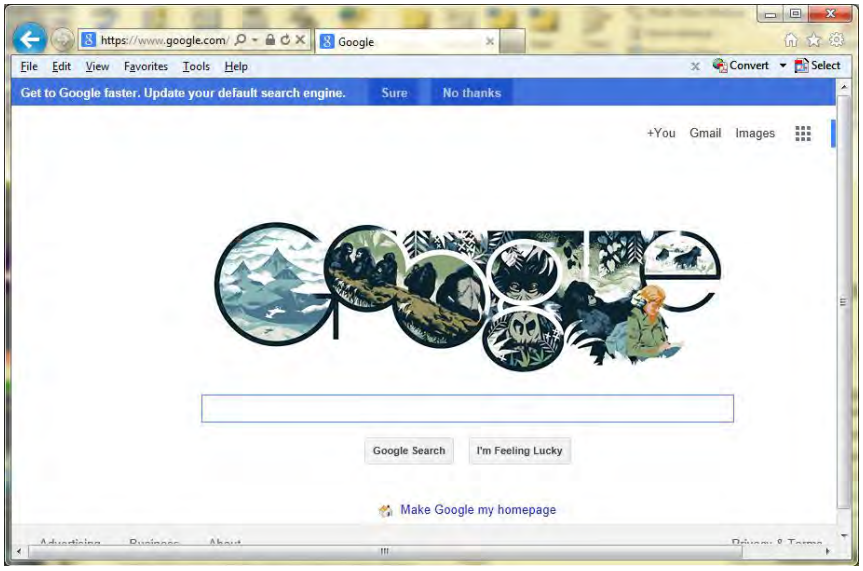

2. In the address bar, type the IP address preprogrammed on the InView Comms Module you are going to work with:

NOTE You may find that you need to install an Adobe Flash Player. If that is the case, the InView Comms Module UI appears with an Adobe Flash link on the window. Click the link and follow the Adobe instructions for installing the Player:

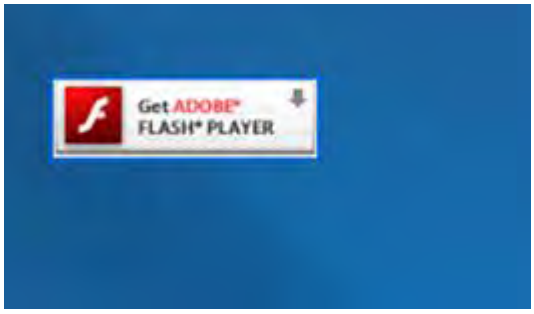

- Enter the IP address you specified during system installation. Example: **10.0.0.19**

The InView User Interface login dialog appears:

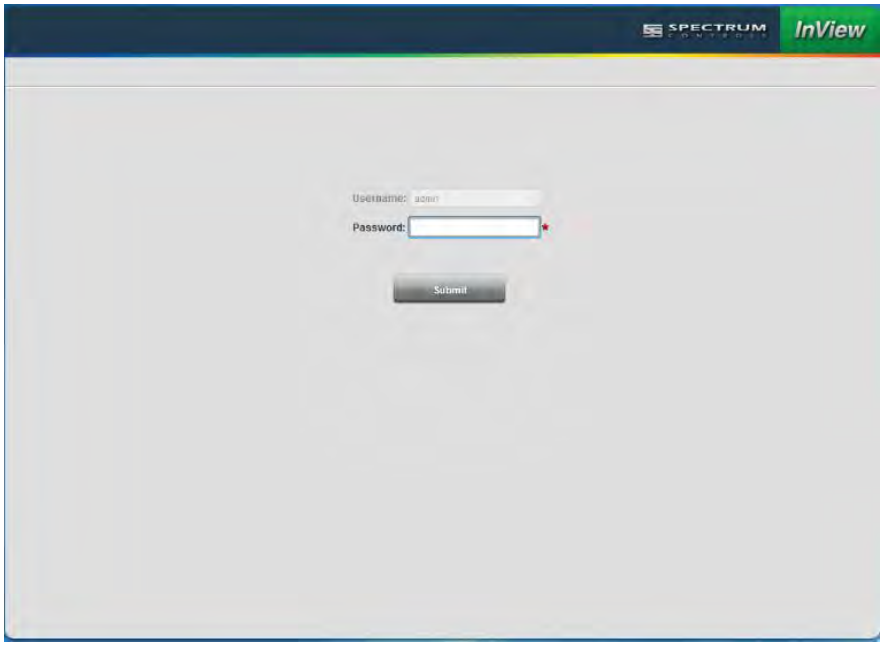

3. Type in (enter) your password. The asterisk [*] beside the field tells you that you must enter information in this field.
4. The default username is not editable. The default password provided with your InView Comms Module is:
   - **Username**. Default user name (**admin)** is not editable.
   - **Password**. Default password is **spectrum**.

   - Change the password for additional security. See Configuring Security Setup for the InView Comms Module
5. Click **Submit**.

   The software informs you that it is retrieving data and displays the InView User Interface window.

   See About the InView User Interface Window

Section 3.3 About the InView User Interface Window

NOTE Before you can configure your InView Comms Module, you must have the InView Comms Module powered on.

NOTE The Comms module software has replaced the 2706-PENET1 hardware and software. An external, PC-based message server is still required.

See Installing the InView Comms Module

The Spectrum Controls, Inc. InView Messaging Software uses message groups to define and store information for an InView display. The information includes display type and message content. Typically, a message group contains information for a specific display type. All message group tasks are performed from the InView software using typical dialog controls, menus, and toolbar buttons.

You use the InView Comms Module User Interface Window to interact with the InView Comms Module to configure communications between message server PLCs, InView displays, and a personal computer, and to create, view and send messages to InView displays:

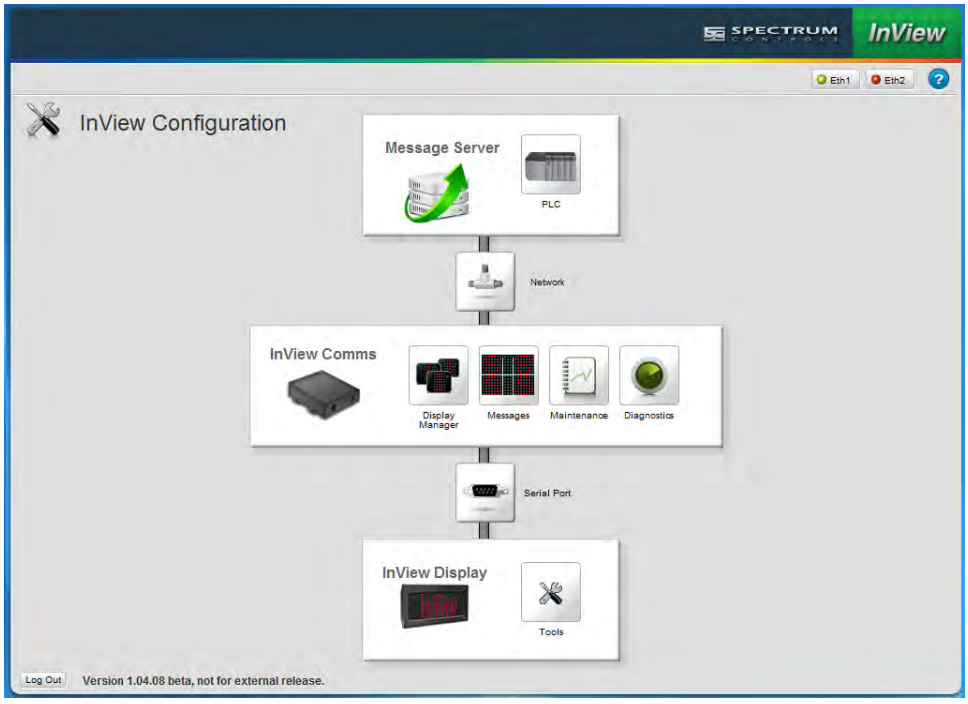

The InView Comms Module User Interface Window contains:

- **InView Comms Module User Interface Title Bar**. Accesses **InView Configuration** work area, and displays company name and logo.
- **InView Comms Module User Interface Menu Bar**. Accesses **Eth1** and **Eth2** communications connection information, and online help.
- **InView Comms Module User Interface Work Area**. Provides access to InView Messaging Software for configuration and messaging, and to view maintenance and diagnostic information.

3.3.1 InView Comms Module User Interface Title Bar

The InView User title bar shows the company name and InView Comms Module logo.

3.3.2 InView User Interface Menu Bar

The InView Comms Module User Interface menu bar provides access to InView Comms Module Eth1 and Eth2 communications status data and online help:

The status panel updates every ten seconds.

NOTE

- When green, a connection is active.
- When red, a connection is not active.

To access Eth1 communications status information, mouse over the Eth1 icon:

See Viewing Eth1 Communications Status Information

To access Eth2 communications status information, mouse over the Eth2 icon:

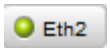

See Viewing Eth2 Communications Status Information

To access online help, select the Help icon:

See Viewing Help Information

3.3.3 InView User Interface Configuration Work Area

To access the Configuration work area, bring up the InView embedded web page. See Logging into the InView Comms Module User Interface.

The InView Configuration work area appears:

Use the InView Configuration work area for setting up your entire InView Comms Module configuration. You may access help about all configuration software options from this dialog.

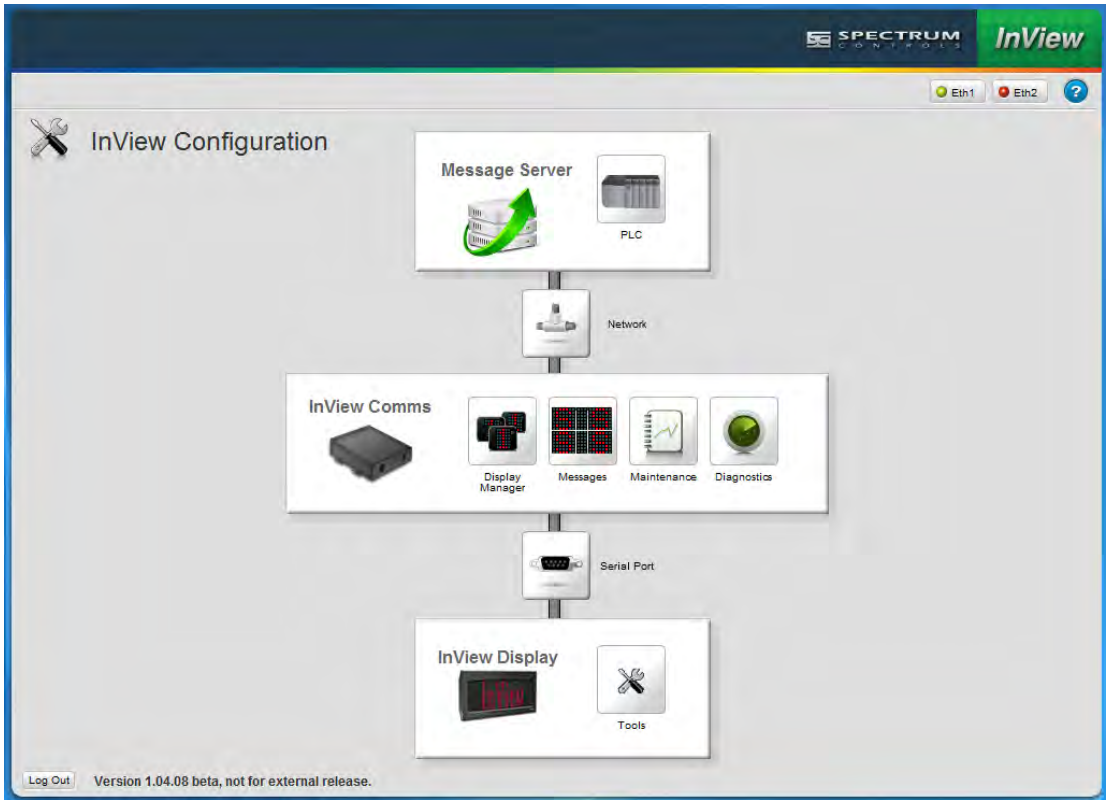

Section 3.4 Configuring PLC Server Setup for the InView Comms Module

You may configure message server access using one of three modes:

- **Classic mode**. Provides compatibility with older RA ladder logic Add-On-Instructions commonly used in conjunction with legacy Rockwell Automation InView Comms Modules.
- **Easy mode**. Forms the **Ctrl-T** and **Ctrl-V** InView Display language commands for you.
- **TCP/IP Passthrough**. Provides message server access to a PC message server application (TCP/IP Passthrough option replaces the PENET1 hardware and software).

Classic and Easy modes function as follows:

- **Classic Mode**. This mode provides backwards compatibility with the legacy ladder logic on PLC message servers used with older, legacy, Rockwell Automation Comms modules. A message server is typically used to update system variables and to trigger system messages. The InView Comms Module setup

defines the settings for communication between a PLC Message Server, a personal computer, or a communications protocol, and the Comms Module. The Spectrum InView Comms Module then monitors the **Message Trigger Address** and the **Variable Update Address** on the host message server. When the tag changes state, the Comms Module reads the **CTRL-T** (Trigger) ASCII commands from the PLC message server. The Comms Module forwards these as a Function Frame to the InView display using the serial link (RS-232 or RS-485).

This mode also requires a Rockwell Add On Instruction in the PLC's ladder logic in order to form the complete InView language CTRL-T or CTRL-V ASCII string Function Frame from the PLC Message Data Address or Variable Data Address. The Comms Module then relays that Function Frame to the InView display's control module using the serial link. If you are sufficiently familiar with InView Modbus ASCII language, you may also form your own CTRL-T or CTRL-V Function Frame strings.

- **Easy Mode** . Easy mode allows you to provide plain INT or SINT/STRING tag values for the prescribed Message Trigger update tags instead of having to form the completed InView language Function Frame string in the PLC ladder logic. The InView Communications Module converts the tags to InView Function Frame strings and sends them to the InView display. Monitoring for Message Trigger tags and Variable Update Trigger tags functions the same way as in Classic mode. In Easy Mode, the Comms Module is able to scan tags on PLCs that use the specified communications protocol, regardless of the make of the PLC you are using as a message server. Example. If you select the Modbus TCP protocol, the Comms Module can scan tags on most PLCs that use Modbus TCP.

For PLCs, you may specify an interscan delay if tag polling traffic generates too many requests for the message server.

To determine which protocol matches which message server, see About Available Protocols Using Existing Hardware.

NOTE

If you select a PLC type that uses a different protocol than that used by the previous message server type selection, (changing from PCCC to CIP or CIP to PCCC, for example), several changes occur:

- Polling is disabled.
- The tag configuration is cleared and set to a default. This is necessary because tag settings that are valid between an existing protocol and the InView controller may need to be cleared of data that is not valid for the new protocol.
- The setup dialog changes according to the selected PLC type. Differences are documented in the options for individual PLC types.

To configure the message server setup:

1. From the InView Configuration Work Area, select the following icon:

The PLC/Tag Setup dialog appears:

2. View or specify the following options:
   - **PLC**. Lists message server options:
     - *Msg Server Type*. From this list choose the PLC type or protocol you wish to configure:
     - PLC type. Lists PLCs or protocols you can select as a message server:

       If you change between PLCs, the software warns you that the change will clear your tag configuration. Confirm that this is the case as shown in the example below:

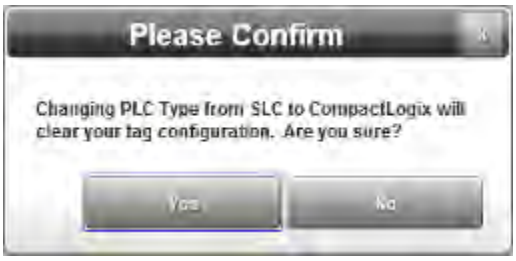

       - CompactLogix. See Configuring CompactLogix Message Server Setup for the InView Comms Module.
       - ControlLogix. See Configuring ControlLogix Message Server Setup for the InView Comms Module.
       - MicroLogix/PLC5/SLC. See Configuring MicroLogix/PLC5/SLC Message Server Setup for the InView Comms Module.

- Passthrough. See Configuring Passthrough.
- Modbus TCP. See Configuring Modbus TCP Message Server Setup.

3. **Submit**. Click to save entered changes (applies to both **PLC** and **Tag Setup** fields.
4. **Cancel**. Click to cancel any changes and restore the current settings (applies to both **PLC** and **Tag Setup** fields.

Section 3.5 Configuring ControlLogix Message Server Setup for the InView Comms Module

You may configure a ControlLogix Message Server using one of two modes:

- Classic mode. Provides compatibility with older RA ladder logic Add-On-Instructions commonly used in conjunction with legacy Rockwell Automation InView Comms Modules.
- Easy mode. Forms the Ctrl-T and Ctrl-V InView Display language commands for you.

The two modes function as follows:

- **Classic Mode**. This mode provides backwards compatibility with the legacy ladder logic on PLC message servers used with older, legacy, Rockwell Automation Comms modules. A message server is typically used to update system variables and to trigger system messages. The InView Comms Module setup defines the settings for communication between a PLC Message Server, a personal computer, or a communications protocol, and the Comms Module. The Spectrum InView Comms Module then monitors the **Message Trigger Address** and the **Variable Update Address** on the host message server. When the tag changes state, the Comms Module reads the **CTRL-T** (Trigger) ASCII commands from the PLC message server. The Comms Module forwards these as a Function Frame to the InView display using the serial link (RS-232 or RS-485).
- This mode also requires a Rockwell Add On Instruction in the PLC's ladder logic in order to form the complete InView language CTRL-T or CTRL-V ASCII string Function Frame from the PLC Message Data Address or Variable Data Address. The Comms Module then relays that Function Frame to the InView display's control module using the serial link. If you are sufficiently familiar with InView Modbus ASCII language, you may also form your own CTRL-T or CTRL-V Function Frame strings.
- **Easy Mode**. Easy mode allows you to provide plain INT or SINT/STRING tag values for the prescribed Message Trigger update tags instead of having to form the completed InView language Function Frame string in the PLC ladder logic. The InView Communications Module converts the tags to InView Function Frame strings and sends them to the InView display. Monitoring for Message Trigger tags and Variable Update Trigger tags functions the same way as in Classic mode. In Easy

Mode, the Comms Module is able to scan tags on PLCs that use the specified communications protocol, regardless of the make of the PLC you are using as a message server. Example. If you select the Modbus TCP protocol, the Comms Module can scan tags on most PLCs that use Modbus TCP.

You may also specify an interscan delay if tag polling traffic generates too many requests for the message server.

To access the setup dialog, see Configuring PLC Message Server Setup for the InView Comms Module.

NOTE

If you select a PLC type that uses a different protocol than that used by the previous message server type selection, (changing from PCCC to CIP or CIP to PCCC, for example), several changes occur:

- Polling is disabled.
- The tag configuration is cleared and set to a default. This is necessary because tag settings that are valid between an existing protocol and the InView controller may need to be cleared of data that is not valid for the new protocol.
- The setup dialog changes according to the selected PLC type. Differences are documented in the options for individual PLC types.

To configure the setup:

1. From **PLC:Msg Server Type** drop down list, select **ControlLogix**:

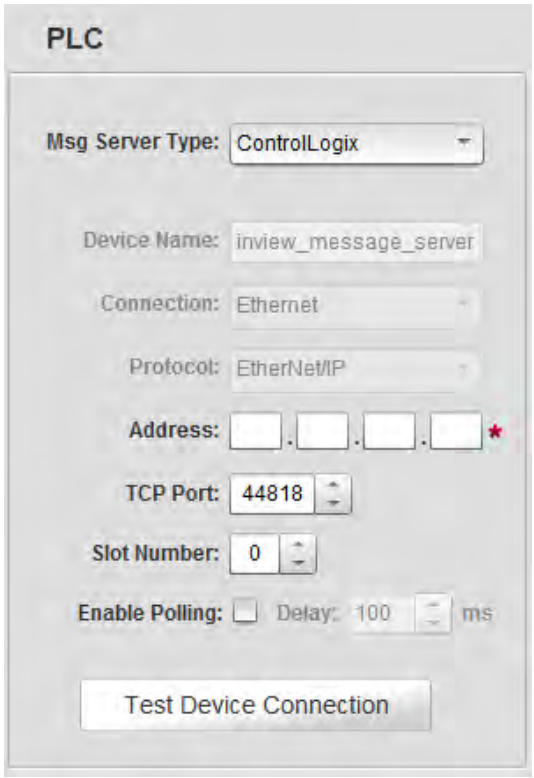

2. View or specify the following options in the PLC dialog:
   - **Device Name**. The name of the PLC message controller with which the InView display communicates. Not editable.
   - **Connection**. Shows communications connection type (Ethernet). Not editable.
   - **Protocol**. Shows communications protocol type (EtherNet/IP). Not editable.
   - **Address**. The IP address of the PLC message server with which the InView display communicates on the EtherNet/IP network. The IP address is formatted as four sets of decimal numbers with periods between them (10.0.0.1). The range of values for the first set of numbers is 1 to 255, unless all fields are 0.0.0.0. The range of values for the last three sets of decimal numbers is 0 to 255.
   - **TCP Port**. Specifies port used to communicate with controller. Default port for any PLC selected under **Message Server Type** option is **44818**. Port selection range is 1 to 50000.
   - **Slot Number**. Specify slot position of PLC controller. Range is 0 to 16.
   - **Enable Polling**. Specifies whether to enable a polling delay. Disabled by default until the user is ready to commence polling. The tag polling engine of the InView Comms is capable of putting a substantial load on the message server by flooding it with requests. Too much load will create slow response times from the server as well as generating substantial network traffic. In order to reduce the possibility of this occurring, use the **Delay** field to introduce a delay between packet reads.

NOTE After updating firmware, ensure that this option is correctly on or off for your own application. If you have turned this option on in the previous software version, check to ensure that your setting is still on.

   - **Delay *n* ms**. Specify how much polling delay to use. The default setting for this field is **100 ms**. The range is 10 ms to 500 ms.
   - **Test Device Connection**. Tests connection between InView Comms Module and PLC message server and informs you whether or not connection is active. See Testing Device Connections

3. Specify each classic or easy setup in the Tag Setup dialog:

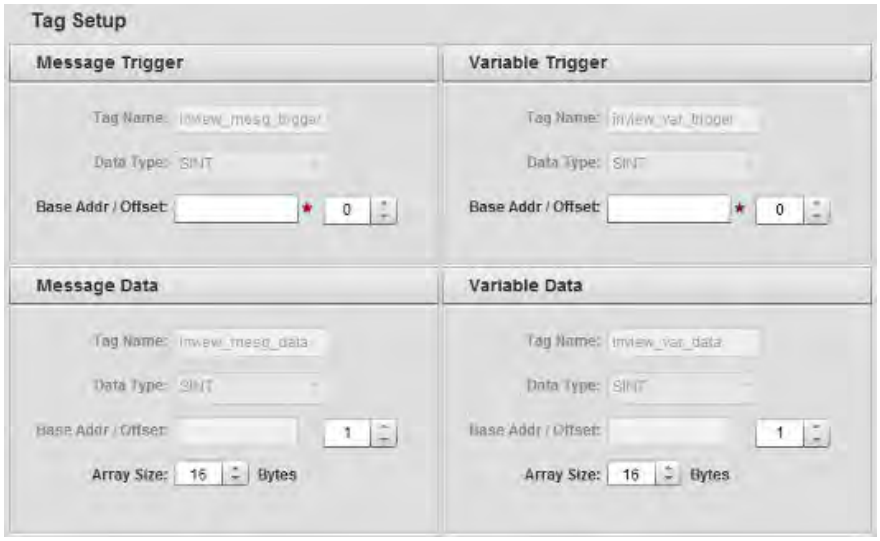

- **Message Trigger**. Specify the following:
  - *Tag Name*. View name of trigger tag. Example: **inview_mesg_trigger**. Not editable.
  - *Data Type*. View data type for tag. Not editable.
  - *Base Addr/Offset*. The controller address that will trigger a message to the display. Characters allowed for naming address are alphanumeric, underscore, and hyphen. Example: **Msg_Data**. Offset is number from 0 to 254 that references an element in an array starting at the specified offset. Range is 0 to 254.
- **Message Data**. Specify the following:
  - *Tag Name*. View name of data tag. Example: **inview_mesg_data**. Not editable.
  - *Data Type*. View data type for tag. Not editable.
  - *Base Addr/Offset*. Same as Message Trigger value. Not editable. Offset starts at [Message Trigger base address+1]. However, you can enter a different offset as long it is at least 1 increment above the Message Trigger address.
  - *Array Size*. Specifies the size of the array (from 15 to 255 characters). The array contains the variable data. The maximum array size is dependent on the controller, and must be an even integer.
- **Variable Trigger**. Specify the following:
  - *Tag Name*. View name of variable trigger tag. Not editable Example: **inview_var_trigger**.
  - *Data Type*. View data type for tag. Not editable.
  - *Base Addr/Offset*. Base address here is set from Variable

Trigger Address field. Not editable. The Offset value is the offset from the Base Address as to where the Variable Data starts.

- **Variable Data**. Specify the following:
  - *Tag Name*. Lists name of tag. Example: **inview_var_data**. Not editable.
  - *Data Type*. Lists data type for tag. Not editable.
  - *Base Addr/Offset*. Same as Variable Trigger value. Not editable. The Offset value is the offset from the Base Address as to where the Variable Data starts.
  - *Array*. Specifies the size of the variable data array. The size of the array, which contains the variable data, is 15 to 255 characters. The maximum array size is dependent on the controller and must be an even integer.
- **Easy**. Specify the following **Preset InView Tags**. You may individually edit each tag:

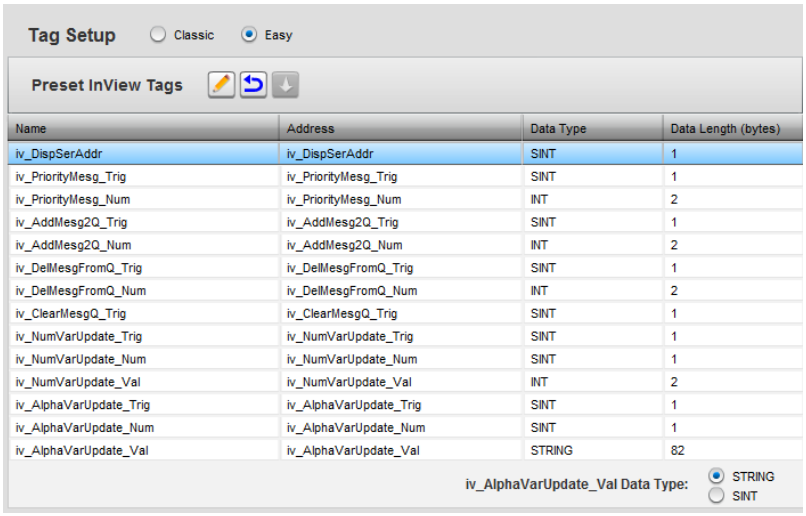

For an explanation of the easy tags, and a summary of their function, see Easy Tags Summary (Chapter 4).

  - Choose tag for **iv_AlphaVarUpdate_Val** Data Type. Options are:
    - STRING. Specifies a string with a fixed length of 82 characters. Not editable.
    - SINT. Specifies a string with a fixed length of 16 characters, range is from 16 to 128 characters. Editable.
  - *Modify*. To modify a tag entry, select the row of interest and click the following icon: Specify the following option for addresses for tags:

    - Address. If needed, specify a user-defined address for each of the tags.

- *Reset*. Select to reset any of altered tag names, addresses or integer types to the preset versions.

  Confirm that you wish to reset the tag names:

- *Download*. Select to download the tags to the PLC specified in the PLC dialog.

- **Submit**. Click to save entered changes.
- **Cancel**. Click to cancel any changes and exit.

Section 3.6 Configuring CompactLogix Message Server Setup for the InView Comms Module

You may configure a CompactLogix Message Server using one of two modes:

- Classic mode. Provides compatibility with older RA ladder logic Add-On-Instructions commonly used in conjunction with legacy Rockwell Automation InView Comms Modules.
- Easy mode. Forms the Ctrl-T and Ctrl-V InView Display language commands for you.

The two modes function as follows:

- **Classic Mode**. This mode provides backwards compatibility with the legacy ladder logic on PLC message servers used with older, legacy, Rockwell Automation Comms modules. A message server is typically used to update system variables and to trigger system messages. The InView Comms Module setup defines the settings for communication between a PLC Message Server, a personal computer, or a communications protocol, and the Comms Module. The Spectrum InView Comms Module then monitors the **Message Trigger Address** and the **Variable Update Address** on the host message server. When the tag changes state, the Comms Module reads the **CTRL-T** (Trigger) ASCII commands from the PLC message server. The Comms Module forwards these as a Function Frame to the InView display using the serial link (RS-232 or RS-485).
- This mode also requires a Rockwell Add On Instruction in the PLC's ladder logic in order to form the complete InView language CTRL-T or CTRL-V ASCII string Function Frame from the PLC Message Data Address or Variable Data Address. The Comms Module then relays that Function Frame to the

InView display's control module using the serial link. If you are sufficiently familiar with InView Modbus ASCII language, you may also form your own CTRL-T or CTRL-V Function Frame strings.

- **Easy Mode**. Easy mode allows you to provide plain INT or SINT/STRING tag values for the prescribed Message Trigger update tags instead of having to form the completed InView language Function Frame string in the PLC ladder logic. The InView Communications Module converts the tags to InView Function Frame strings and sends them to the InView display. Monitoring for Message Trigger tags and Variable Update Trigger tags functions the same way as in Classic mode. In Easy Mode, the Comms Module is able to scan tags on PLCs that use the specified communications protocol, regardless of the make of the PLC you are using as a message server. Example. If you select the Modbus TCP protocol, the Comms Module can scan tags on most PLCs that use Modbus TCP

You may also specify an interscan delay if tag polling traffic generates too many requests for the message server.

To access the setup dialog, see Configuring PLC Message Server Setup for the InView Comms Module.

NOTE

If you select a PLC type that uses a different protocol than that used by the previous message server type selection, (changing from PCCC to CIP or CIP to PCCC, for example), several changes occur:

- Polling is disabled.
- The tag configuration is cleared and set to a default. This is necessary because tag settings that are valid between an existing protocol and the InView controller may need to be cleared of data that is not valid for the new protocol.
- The setup dialog changes according to the selected PLC type. Differences are documented in the options for individual PLC types.

To configure the setup:

1. From the **PLC:Msg Server Type** drop down list, select CompactLogix:

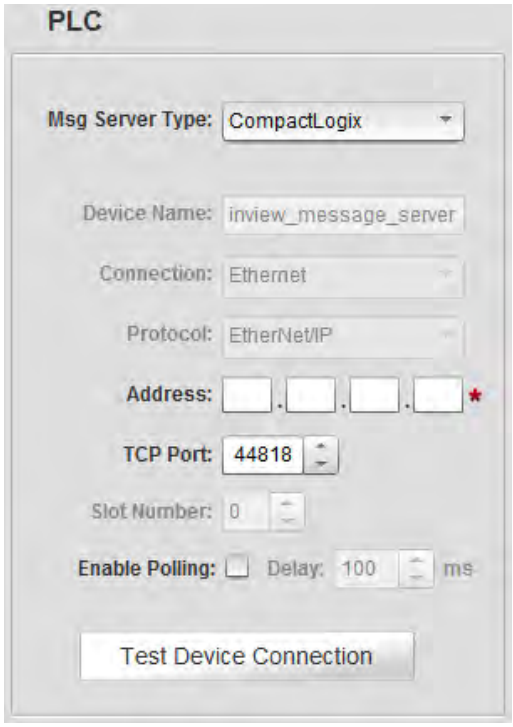

2. View or specify the following options in the PLC dialog:
   - **Device Name**. The name of the PLC message controller with which the InView display communicates. Not editable.
   - **Connection**. Shows communications connection type (Ethernet). Not editable.
   - **Protocol**. Shows communications protocol type (Ethernet/IP). Not editable.
   - **Address**. The IP address of the PLC message server with which the InView display communicates on the EtherNet/IP network. The IP address is formatted as four sets of decimal numbers with periods between them (10.0.0.1). The range of values for the first set of numbers is 1 to 255, unless all fields are 0.0.0.0. The range of values for the last three sets of decimal numbers is 0 to 255.
   - **TCP Port**. Specifies port used to communicate with controller. Default port for any PLC selected under **Message Server Type** option is **44818**. Port selection range is 1 to 50000.
   - **Slot Number**. Slot position of PLC controller. Not editable.
   - **Enable Polling**. Specifies whether to enable a polling delay. Disabled by default until the user is ready to commence polling. The tag polling engine of the InView Comms is capable of putting a substantial load on the message server by flooding it with requests. Too much load will create slow response times from the server as well as generating substantial network traffic. In order to reduce the possibility of this occurring, use the **Delay** field to introduce a delay between packet reads.

NOTE After updating firmware, ensure that this option is correctly on or off for your own application. If you have turned this option on in the previous software version, check to ensure that your setting is still on.

- **Delay *n* ms**. Specify how much polling delay to use. The default setting for this field is **100 ms**. The range is 10 ms to 500 ms.
- **Test Device Connection**. Tests connection between InView Comms Module and PLC message server and informs you whether or not connection is active. See Testing Device Connections

3. View or specify the following options in the Tag Setup dialog:

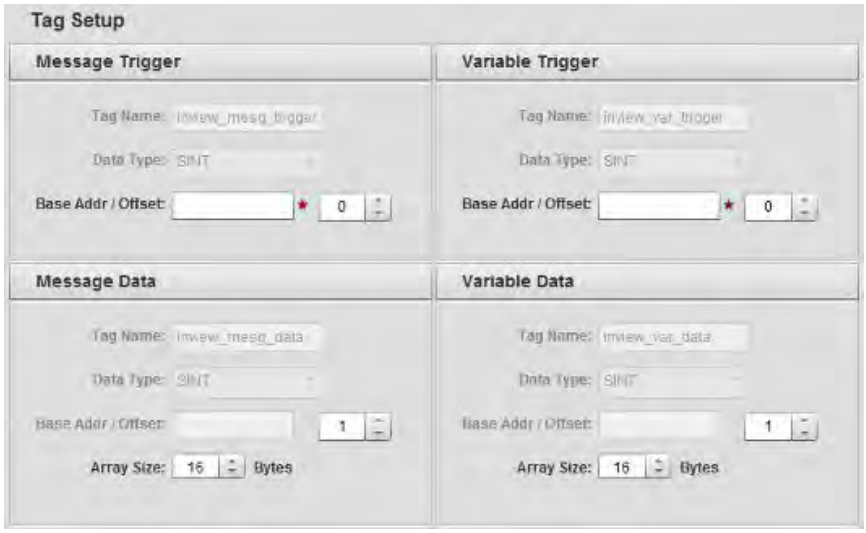

- **Message Trigger**. Specify the following:
  - *Tag Name*. View name of trigger tag. Example: **inview_mesg_trigger**. Not editable.
  - *Data Type*. View data type for tag. Not editable.
  - *Base Addr/Offset*. The controller address that will trigger a message to the display. Characters allowed for naming address are alphanumeric, underscore, and hyphen. Example: **Msg_Data**. Offset is number from 0 to 254 that references an element in an array starting at the specified offset. Range is 0 to 254.
- **Message Data**. Specify the following:
  - *Tag Name*. View name of data tag. Example: **inview_mesg_data**. Not editable.
  - *Data Type*. View data type for tag. Not editable.
  - *Base Addr/Offset*. Same as Message Trigger value. Not editable. Offset starts at [Message Trigger base address+1]. However, you can enter a different offset as

long it is at least 1 increment above the Message Trigger address.

- *Array Size*. Specifies the size of the array (from 15 to 255 characters). The array contains the variable data. The maximum array size is dependent on the controller and must be an even integer.

- **Variable Trigger**. Specify the following:
  - *Tag Name*. View name of variable trigger tag. Not editable Example: **inview_var_trigger**.
  - *Data Type*. View data type for tag. Not editable.
  - *Base Addr/Offset*. The controller address that will trigger a message variable to the display. Base address here is set from Variable Trigger Address field. Not editable. The Offset value is the offset from the Base Address as to where the Variable Data starts.
- **Variable Data**. Specify the following:
  - *Tag Name*. Lists name of tag. Example: **inview_var_data**. Not editable.
  - *Data Type*. Lists data type for tag. Not editable.
  - *Base Addr/Offset*. The starting address of the variable data to be displayed. Base address here is set from Variable Trigger Address field. Not editable. The Offset value is the offset from the Base Address as to where the Variable Data starts.
  - *Array Size*. Specifies the size of the array. The array contains the variable data. The maximum array size is dependent on the controller and must be an even integer.
- **Easy**. Specify the following **Preset InView Tags**. You may individually edit each tag:

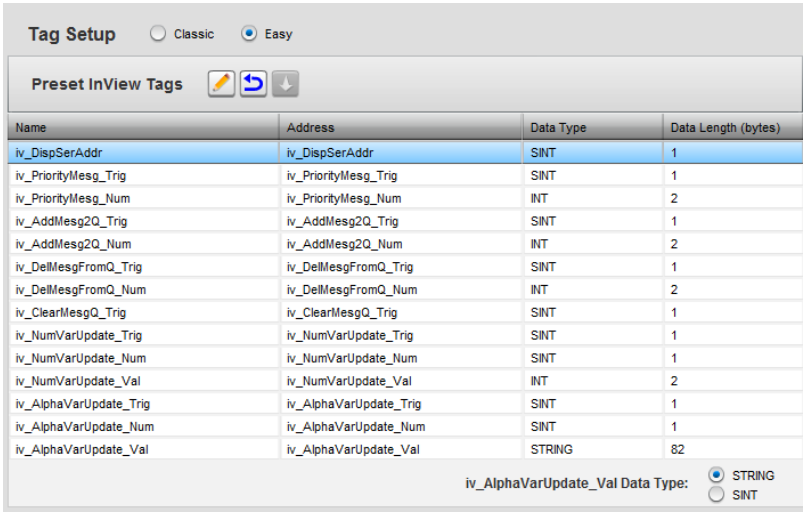

For an explanation of the easy tags, and a summary of their function, see Easy Tags Summary (Chapter 4).

- Choose tag for **iv_AlphaVarUpdate_Val** Data Type. Options are:
  - STRING. Specifies a string with a fixed length of 82 characters. Not editable.
  - SINT. Specifies a string with a fixed length of 16 characters, range is from 16 to 128 characters. Editable.
- *Modify*. To modify a tag entry, select the row of interest and click the following icon: Specify the following option for addresses for tags:

  - Address. If needed, specify a user-defined address for each of the tags.
- *Reset*. Select to reset any of altered tag names, addresses or integer types to the preset versions.

Confirm that you wish to reset the tag names:

- *Download*. Select to download the tags to the PLC specified in the PLC dialog.

- **Submit**. Click to save entered changes.
- **Cancel**. Click to cancel any changes and exit.

Section 3.7 Configuring MicroLogix/PLC5/SLC Message Server Setup for the InView Comms Module

You may configure a MicroLogix/PLC5 or SLC Message Server using one of two modes:

- Classic mode. Provides compatibility with older RA ladder logic Add-On-Instructions commonly used in conjunction with legacy Rockwell Automation InView Comms Modules.
- Easy mode. Forms the Ctrl-T and Ctrl-V InView Display language commands for you.

The two modes function as follows:

- **Classic Mode**. This mode provides backwards compatibility with the legacy ladder logic on PLC message servers used with older, legacy, Rockwell Automation Comms modules. A message server is typically used to update system variables and to trigger system messages. The InView Comms Module setup defines the settings for communication between a PLC Message Server, a personal computer, or a communications protocol, and the Comms Module. The Spectrum InView Comms Module then monitors the **Message Trigger Address** and the **Variable Update Address** on the host message server. When the tag changes state, the Comms Module reads the **CTRL-T** (Trigger) ASCII commands from the PLC message server. The Comms Module forwards these as a Function Frame to the InView display using the serial link (RS-232 or RS-485).

  The user is required to implement in ladder logic the fully formed InView display language **CTRL-T** and **CTRL-V** function frames stored at the specified Message Data Address & Variable Data address for MicroLogix/PLC5/SLC.
- **Easy Mode**. Easy mode allows you to provide plain INT or SINT tag values for the prescribed Message Trigger update tags instead of having to form the completed InView language Function Frame string in the PLC ladder logic. The InView Communications Module converts the tags to InView Function Frame strings and sends them to the InView display. Monitoring for Message Trigger tags and Variable Update Trigger tags functions the same way as in Classic mode. In Easy Mode, the Comms Module is able to scan tags on PLCs that use the specified communications protocol, regardless of the make of the PLC you are using as a message server. Example. If you select the Modbus TCP protocol, the Comms Module can scan tags on most PLCs that use Modbus TCP

You may also specify a delay if tag polling traffic generates too many requests for the message server.

To access the setup dialog, see Configuring PLC Message Server Setup for the InView Comms Module.

NOTE

If you select a PLC type that uses a different protocol than that used by the previous message server type selection, (changing from PCCC to CIP or CIP to PCCC, for example), several changes occur:

- Polling is disabled.
- The tag configuration is cleared and set to a default. This is necessary because tag settings that are valid between an existing protocol and the InView controller may need to be cleared of data that is not valid for the new protocol.
- The setup dialog changes according to the selected PLC type. Differences are documented in the options for individual PLC types.

1. From the **PLC:Msg Server Type** drop down list, select **MicroLogix**, **PLC5**, or **SLC**:

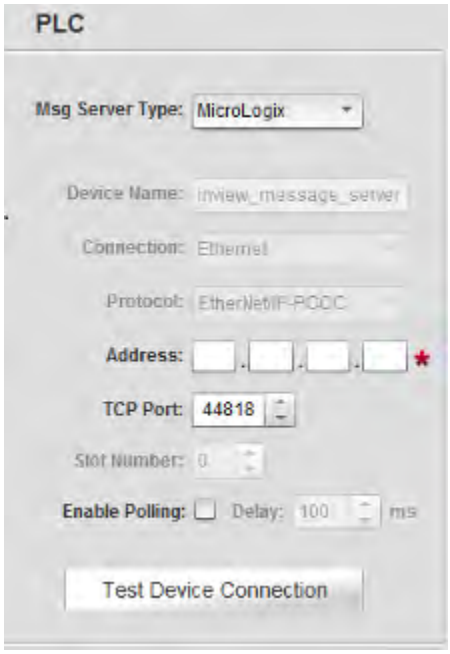

2. View or specify the following options in the PLC dialog:
   - **Device Name**. The name of the PLC message controller with which the InView display communicates. Not editable.
   - **Connection**. Shows communications connection type (Ethernet). Not editable.
   - **Protocol**. Shows communications protocol type (EtherNet/IP-PCCC). Not editable.
   - **Address**. The IP address of the PLC message server with which the InView display communicates on the EtherNet/IP network. The IP address is formatted as four sets of decimal numbers with periods between them (10.0.0.1). The range of values for the first set of numbers is 1 to 255, unless all fields are 0.0.0.0. The range of values for the last three sets of decimal numbers is 0 to 255.

- **TCP Port**. Specifies port used to communicate with controller. Default port for any PLC selected under **Message Server Type** option is **44818**. Port selection range is 1 to 50000.
- **Slot Number**. Specify slot position of PLC controller. Range is 0 to 16.
- **Enable Polling**. Specifies whether to enable a polling delay. Disabled by default until the user is ready to commence polling. The tag polling engine of the InView Comms is capable of putting a substantial load on the message server by flooding it with requests. Too much load will create slow response times from the server as well as generating substantial network traffic. In order to reduce the possibility of this occurring, use the **Delay** field to introduce a delay between packet reads.

NOTE After updating firmware, ensure that this option is correctly on or off for your own application. If you have turned this option on in the previous software version, check to ensure that your setting is still on.

- **Delay *n* ms**. Specify how much polling delay to use. The default setting for this field is **100 ms**. The range is 10 ms to 500 ms.
- **Test Device Connection**. Tests connection between InView Comms Module and PLC message server and informs you whether or not connection is active. See Testing Device Connections.

3. Specify each classic or easy setup in the Tag Setup dialog:

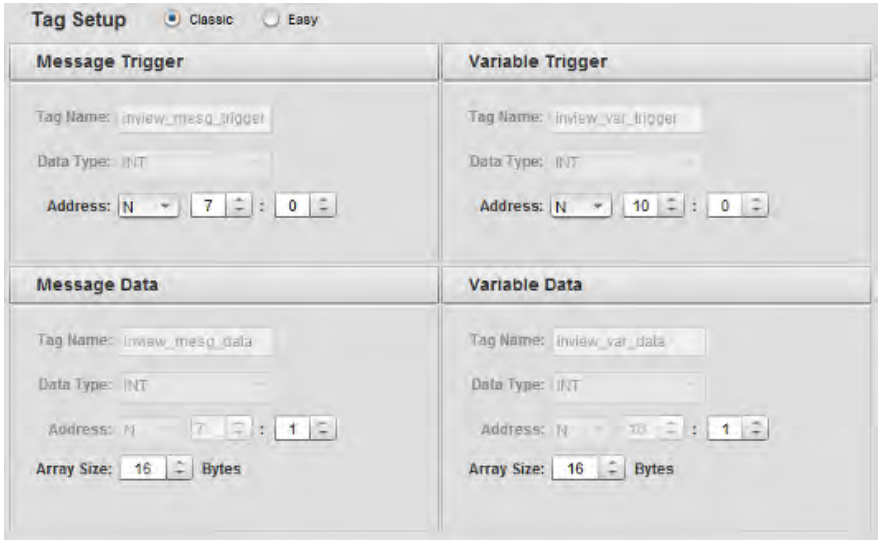

- **Message Trigger**. Specify the following:
  - *Tag Name*. View name of trigger tag. Example: **inview_mesg_trigger**. Not editable.
  - *Data Type*. View data type for tag. Not editable.
  - *Address*. The controller address that will trigger a

message to the display. Lists address in N:7:0 (PCCC tag address) format.

- **Message Data**. Specify the following:
  - *Tag Name*. View name of data tag. Example: **inview_mesg_data**. Not editable.
  - *Data Type*. View data type for tag. Not editable.
  - *Address*. The starting address of the data to be displayed. Lists address in N:7:0 (PCCC tag address) format.
  - *Array Size*. Specifies the size of the array (from 15 to 255 bytes). MicroLogix is 16 to 78 bytes, PLC5 is 16 to 228 bytes, and SLC is 16to 78 bytes. The array contains the variable data. The maximum array size is dependent on the controller and must be an even integer.
- **Variable Trigger**. Specify the following:
  - *Tag Name*. View name of variable trigger tag. Not editable Example: **inview_var_trigger**.
  - *Data Type*. View data type for tag. Not editable.
  - *Address*. The controller address that will trigger a message variable to the display. Not editable. Lists address in N:7:0 (PCCC tag address) format.
- **Variable Data**. Specify the following:
  - *Tag Name*. Lists name of tag. Example: **inview_var_data**. Not editable.
  - *Data Type*. Lists data type for tag. Not editable.
  - *Address*. The starting address of the variable data to be displayed. Not editable. Lists address in N:7:0 (PCCC tag address) format.
  - *Array Size*. Specifies the size of the array. The array contains the variable data. The maximum array size is dependent on the controller and must be an even integer.

- **Easy**. Specify the following **Preset InView Tags**. You may individually edit each tag:

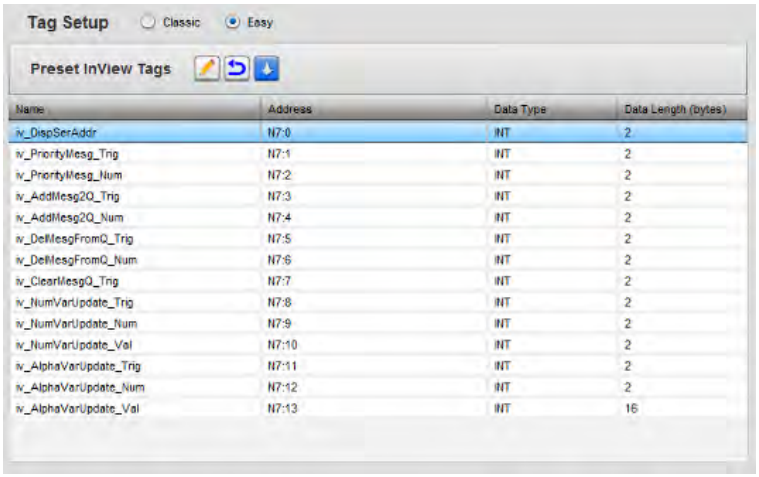

Name	Address	Data Type	Data Length (bytes)
iv_DispSerAddr	N7:0	INT	2
iv_PriorityMesg_Trig	N7:1	INT	2
iv_PriorityMesg_Num	N7:2	INT	2
iv_AddMesg2Q_Trig	N7:3	INT	2
iv_AddMesg2Q_Num	N7:4	INT	2
iv_DelMesgFromQ_Trig	N7:5	INT	2
iv_DelMesgFromQ_Num	N7:6	INT	2
iv_ClearMesgQ_Trig	N7:7	INT	2
iv_NumVarUpdate_Trig	N7:8	INT	2
iv_NumVarUpdate_Num	N7:9	INT	2
iv_NumVarUpdate_Val	N7:10	INT	2
iv_AlphaVarUpdate_Trig	N7:11	INT	2
iv_AlphaVarUpdate_Num	N7:12	INT	2
iv_AlphaVarUpdate_Val	N7:13	INT	16

For an explanation of the easy tags, and a summary of their function, see Easy Tags Summary (Chapter 4).

  - *Modify*. To modify a tag entry, select the row of interest and click the following icon:

Specify the following starting address for the generated addresses for tags:

    - Starting Address. Specify the starting address for InView Message Server tags. Addresses will be generated and incremented by one for all tags in the list.
    - Variable Update Array Size. Specifies size of array (must be even integer).
    - Submit. Submits information so software can generate addresses for preset tags.
    - Cancel. Cancels information submission. No addresses are generated for preset tags.

  - *Reset*. Select to reset any of altered tag names, addresses or integer types to the preset versions.

Confirm that you wish to reset the tag names:

- *Download*. Select to download the tags to the PLC specified in the PLC dialog.

- **Submit**. Click to save entered changes.
- **Cancel**. Click to cancel any changes.

Section 3.8 Configuring TCP/IP Passthrough

TCP/Passthrough provides message server access to a PC message server application. The TCP/IP Passthrough option replaces the PENET1 hardware and software. You then use third-party software to communicate with the display via the Comms Module.

To configure TCP/IP assthrough setup:

1. From the InView Configuration Work Area, select the following icon:

The following dialog appears:

2. View or specify the following options:
   - **PLC**. Lists message server options:
     - *Msg Server Type*. From this list, choose Passthrough. Options are:
       - TCP/IP Passthrough. **Does not use a PLC**. Specifies that the Comms module is to function as a passthrough module. The TCP/IP Passthrough option replaces 2706-PENET1 TCP/IP hardware functionality, and allows you to use a PC message server application instead of a PLC message server to drive the InView display.

- View or specify the following options:

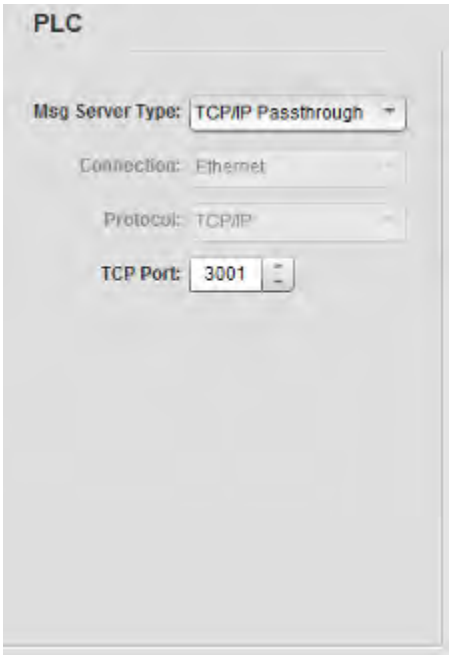

  - Connection. Lists Ethernet connection used for TCP/IP Passthrough. Not editable.
  - Protocol. Lists TCP/IP protocol used with Passthrough. Not editable.
  - TCP Port. When the **TCP/IP Passthrough** option is selected, specify which port the host PC message server application uses to communicate with the InView Comms module. (Port 3001, by default.)

3. **Submit**. Click to save entered changes.
4. **Cancel**. Click to cancel any changes and restore the current settings.

Section 3.9 Configuring Modbus TCP Message Server Setup

Easy mode allows you to provide plain INT or SINT tag values for the prescribed Message Trigger update tags instead of having to form the completed InView language Function Frame string in the PLC ladder logic. The InView Communications Module converts the tags to InView Function Frame strings and sends them to the InView display. Monitoring for Message Trigger tags and Variable Update Trigger tags functions the same way as in Classic mode. In Easy Mode, the Comms Module is able to scan tags on PLCs that use the specified communications protocol, regardless of the make of the PLC you are using as a message server. Example. If you select the Modbus TCP protocol, the Comms Module can scan tags on most PLCs that use Modbus TCP.

To configure the Modbus TCP setup:

1. From the InView Configuration Work Area, select the following icon:

The PLC/Tag Setup dialog appears:

2. View or specify the following options:
   - **PLC**. Lists message server options:
     - *Msg Server Type*. From this list, choose Modbus TCP. Options are:

- Modbus TCP. Allows you to communicate with controllers such as Schneider controllers. This protocol is not master/slave protocol. Communication is possible in both directions. View or specify the following options:

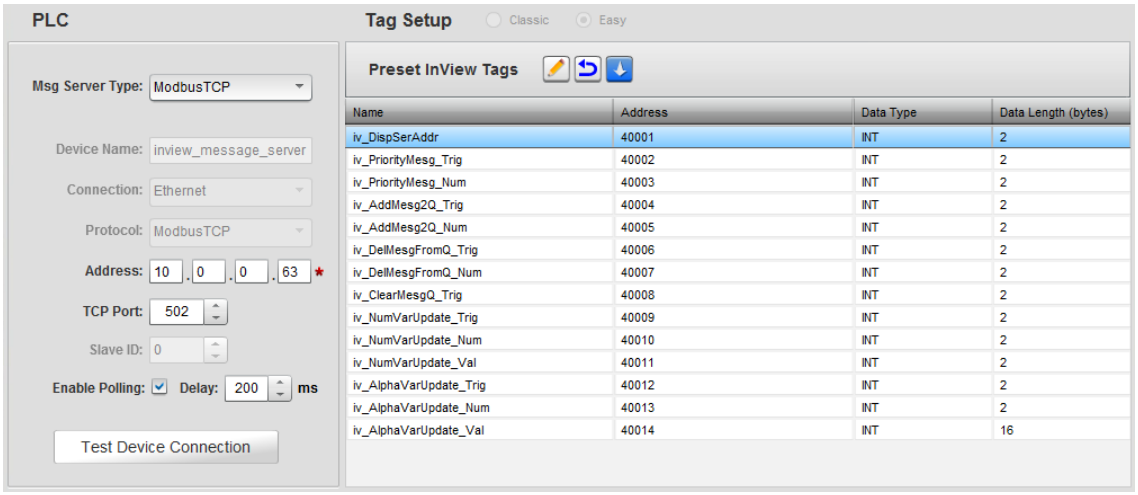

  - Device Name. The default name of the PLC with which the InView display communicates. Not editable.
  - Connection. Shows communications connection type (Ethernet). Not editable.
  - Protocol. Shows communications protocol type (Modbus TCP). Not editable.
  - Address. The IP address or host name of the controller on the Ethernet network with which the InView display communicates. The IP address is formatted as four sets of decimal numbers with periods between them (10.0.0.1). The range of values for the first set of numbers is 1 to 255, unless all fields are 0.0.0.0. The range of values for the last three sets of decimal numbers is 0 to 255.
  - TCP Port. Specifies port used to communicate with controller. Default port is **502**.
  - Slave ID. Specify value for the controller's **Slave ID**. This value is usually **1**.
  - Enable Polling. Specifies whether to enable a polling delay. Default is enabled (checked). The tag polling engine of the InView Comms is capable of putting a substantial load on the

message server by flooding it with requests. Too much load will create slow response times from the server as well as generating substantial network traffic. In order to reduce the possibility of this occurring, use the **Delay** field to introduce a delay between packet reads.

- Delay *n* ms. Specify how much polling delay to use. The default setting for this field is **100 ms**. The range is 10 ms to 500 ms.
- Test Device Connection. Tests connection between InView Comms Module and PLC message server and informs you whether or not connection is active. See Testing Device Connections

- **Preset InView Tags**. Easy setup is the only option available for setting up tags using Modbus TCP. For an explanation of the easy tags, and a summary of their function, see Easy Tags Summary (Chapter 4):
  - *Generate*. To generate addresses for tags, click the following icon:

    The following dialog appears:

    View or specify the following options:
    - Starting Address. Specify the starting address for InView Message Server tags. Addresses will be generated and incremented by one for all tags in the list.
    - Variable Update Array Size. Specifies the size of the **iv_AlphaVarUpdate_Val** array containing the variable data. The maximum array size is dependent on the controller and must be an even integer. The array range is from 15 to 255 characters.
    - Submit. Submits information so software can generate addresses for preset tags.
    - Cancel. Cancels information submission. No

addresses are generated for preset tags.

- *Reset*. To reset any of altered tag names, addresses or integer types to the preset versions, select the following icon:

- *Download*. To download the tags to the PLC specified in the PLC dialog, select the following icon:

3. **Submit**. Click to save entered changes (applies to both **PLC** and **Tag Setup** fields).
4. **Cancel**. Click to cancel any changes and restore the current settings (applies to both **PLC** and **Tag Setup** fields).

Section 3.10 Testing Device Connections

You may test connections between a PLC and an InView Comms Module. To test the connection, after setting up your PLC Message Server, click the **Test Device Connection** button.

To test connections:

1. From the InView Configuration Work Area, select the following icon:

The PLC/Tag Setup dialog appears:

2. Click the Test Device Connection icon:

The software tests the connection. The dialog that appears shows the connected device tested, the time it took for three pings of the connected device to return, and whether or not the communications protocol is actually working properly between the two devices:

- If successful, the following dialog appears:

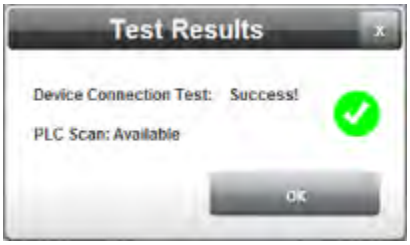

- If unsuccessful, the following dialog appears.
  The dialog contains an error message that lets you know the type of problem encountered:

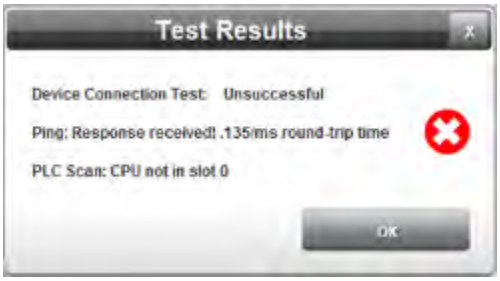

Section 3.11 Configuring Network Settings for the InView Comms Module

You use the InView Comms Module Network Settings options to configure InView Comms Module web server, network and Ethernet settings. You may also enter a name for the module.

To configure network settings:

1. From the InView Configuration Work Area, select the following icon:

The Network Setup dialog appears:

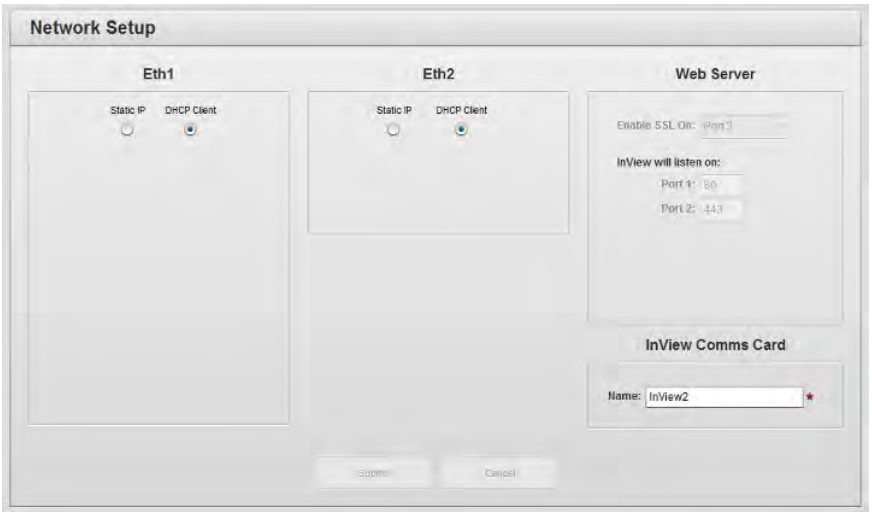

2. View or specify the options listed in the following sections.
   - Configuring Eth1 Settings for the InView Comms Module
   - Configuring Eth2 Settings for the InView Comms Module
   - Configuring InView Comms Card
   - Configuring Web Server Setup for the InView Comms Module

3.11.1 Configuring Eth1 Settings for the InView Comms Module

NOTE Keep the following in mind:

- If you configure the InView Comms Module's Eth1 port as a DHCP client, the Eth1 IP address is allocated by the DHCP server on the network to which you connect the InView Comms Module. You do not need to change the address.
- If you leave the Eth1 port with its default Static IP address, you have the option of specifying a new IP address, subnet mask, gateway, and one or two DNS addresses for your network.

The InView Comms Module Eth1 port is a single Ethernet port that provides an interface between a network and the InView Comms Module. Each InView Comms Module Ethernet port is assigned a unique Spectrum Controls MAC address. This address is listed on the label on your InView Comms Module. During setup, you can configure the Eth1 as a DHCP client or with a static IP address. The Eth1 port communicates at 10/100 Mbytes per second over an Ethernet connection.

To configure Eth1 settings for the InView Comms Module:

1. Upon startup, type the address into a web browser address field:

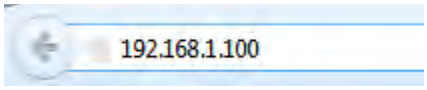

The InView Configuration Work Area dialog appears.

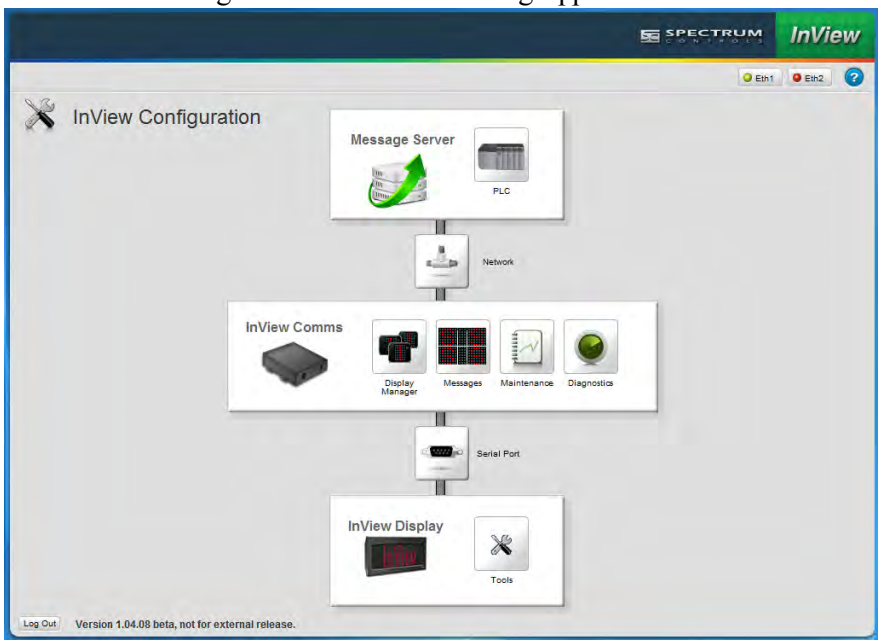

2. From the InView Configuration Work Area, select the following icon:

The Network Setup dialog appears:

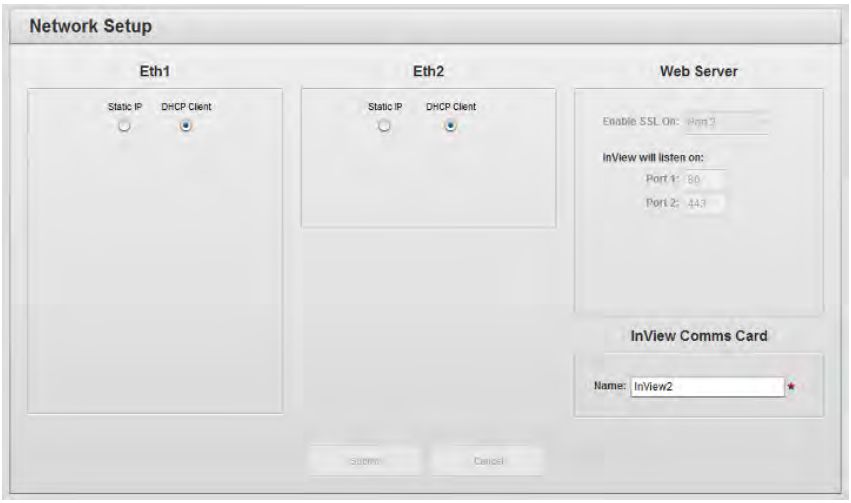

3. View or specify the following Eth1 Settings options:
   - ***Connection type***. Identifies whether to use static or dynamic address configuration for the Eth1 network:
     - *Static IP*. Select this option if you want the IP address for the InView Comms Module to be static. This means that the IP address is entered manually and does not change.
     - *DHCP Client*. If you have a DHCP Server installed and configured on the network, select this option to allow the InView Comms Module to get an Eth1 IP address from the designated DHCP server for a designated lease period when the InView Comms Module starts up. The DHCP client IP address can change each time the lease period expires although it usually does not.
   - **Eth1 IP**. Select a valid Static IP address in the Network. Enter InView Comms Module Eth1 IP Address. This option is enabled only if you select **Static IP** addressing. Example: **10.0.0.2**.
   - **Subnet Mask**. Enter subnet mask address. This value is typically **255.255.255.0**. This option is enabled only if you select **Static IP** addressing
   - **Gateway**. Enter Gateway address (optional). Example: **10.0.0.1**. This option is enabled only if you select **Static IP** addressing.
   - **DNS1**. Enter the primary DNS value (optional). This option is enabled only if you select Static IP addressing. Example: **8.8.8.8**
   - **DNS2**. Lists a secondary DNS value. For the InView Comms

Module, this value may be set to a different value. If the primary connection fails, the secondary is available. This option is enabled only if you select Static IP addressing. If you do not wish to use the Google DNS address, try Google's Namebench to determine which public DNS server will best suit your purposes.

- **Submit**. Saves data on InView Comms Module and exits.
- **Cancel**. Does not save data from InView Comms Module.

3.11.2 Configuring Eth2 Settings for the InView Comms Module

The InView Comms Module Eth2 port provides a local network interface between a personal computer and the InView configuration software on the InView Comms Module.

To configure Eth2 settings for the InView Comms Module:

1. Upon startup, type the InView Comms Module IP address into a web browser address field:

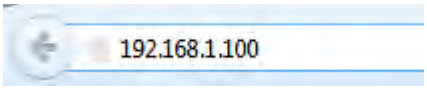

2. Login to the Interface: Logging Onto the InView Comms Module User Interface:
3. The InView Configuration Work Area dialog appears.

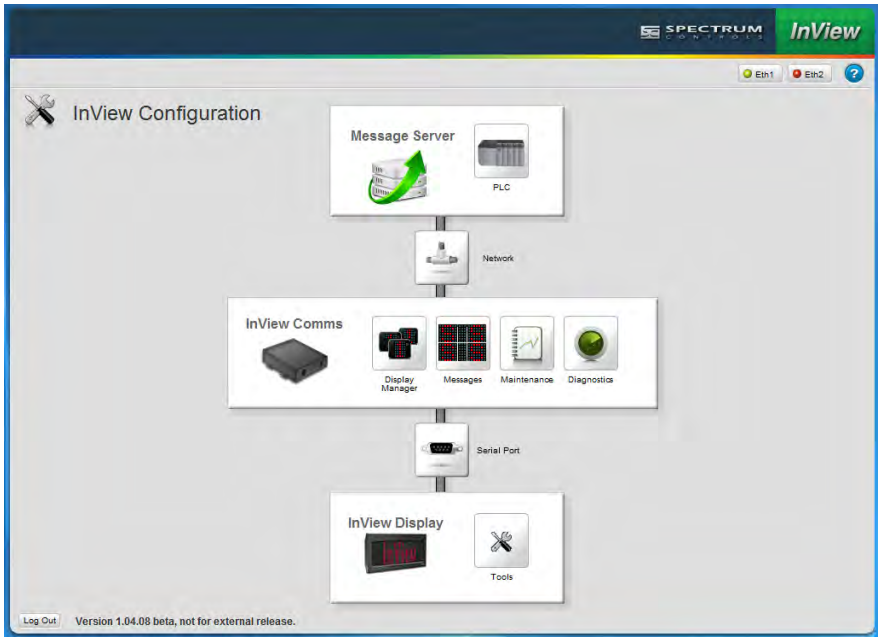

4. From the InView Configuration Work Area, select the following icon:

The Network Setup dialog appears:

5. View or specify the following Eth2 Settings options:
   - ***Connection type***. Identifies whether to use static or dynamic address configuration for the Eth2 network:
     - *Static IP*. Select this option if you want the local IP address for the InView Comms Module to be static. This means that the IP address is entered manually and does not change.

     - *DHCP Client*. If you have a DHCP Server installed and configured on the network, select this option to allow the InView Comms Module to get an Eth2 IP address from the designated DHCP server for a designated lease period when the InView Comms Module starts up. The DHCP client IP address can change each time the lease period expires although it usually does not.
   - **Eth2 IP**. Select a valid Static IP address in the Network. Enter InView Comms Module Eth2 IP Address. This option is enabled only if you select **Static IP** addressing. Example: **192.168.1.102.**
   - **Subnet Mask**. Enter subnet mask address. This value is typically 255.255.255.0. This option is enabled only if you select Static IP addressing.
   - **Submit.** Saves data on InView Comms Module and exits.
   - **Cancel.** Does not save data from InView Comms Module.

3.11.3 Configuring Web Server Setup for the InView Comms Module

The InView Comms Module setup information is shown for information only as you cannot change the settings.

To view the server setup information:

1. From the InView Configuration work area, select the following icon:

   The Network Setup dialog appears, including the Web Server information:

2. View the following Web Server Setup options:
   - **Enable SSL On** *port number*. Not editable. Shows the port on which InView Comms Module communicates using the Secure Socket Layer (SSL) protocol. **Port 1** and **Port 2** have different numbers:

     InView will listen on. Not editable. Shows port on which module listens for data:

     - *Port 1 number*. Shows default port value (80). Port 80 is the commonly used port for HTTP connections (unsecure websites).
     - *Port 2 number*. Shows default port value (443). Port 443 is the commonly used port for HTTPS connections (secure websites).

3.11.4 Configuring InView Comms Card

Gives a name to your InView Comms Module.

To enter a name:

1. From the InView Configuration Work Area, select the following icon:

The Network Setup dialog appears:

2. View or specify the following InView Comms Cards information:
   - **Name**. Specify the name of your InView Comms card.
   - **Submit**. Defines the module name. The name appears on InView module's tab.
   - **Cancel**. Cancels entry of the module name. No change is made.

Section 3.12 Managing Displays

You may add, modify, or delete display profiles. A profile is a record of display information for use by the Comms Module user interface, and is distinct from the actual physical display.

To add, modify, or delete display profiles:

1. From the InView Configuration Work Area, select the following icon:

The Configured Displays dialog appears:

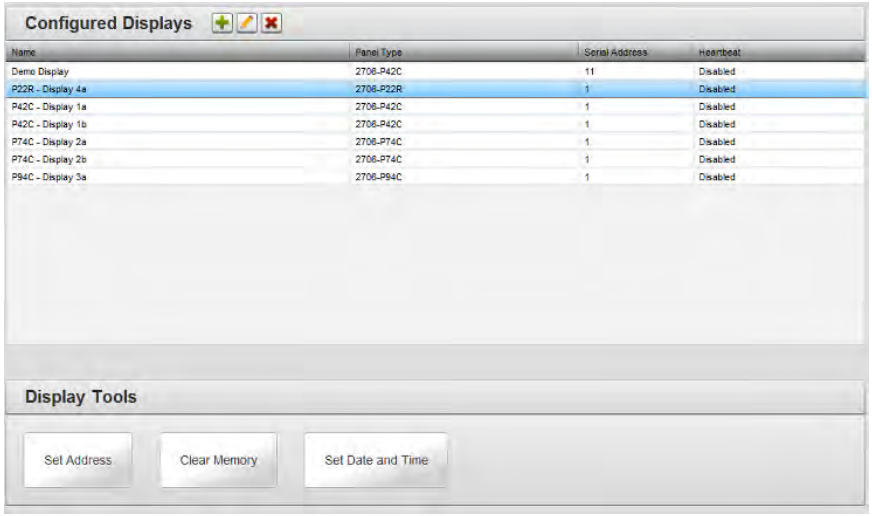

2. View or specify the following options:

Icon	Function	Access
	Add a display:	Adding Displays
	Modify a display:	Modifying Displays
	Delete a display from the InView Comms Module:	Deleting Displays
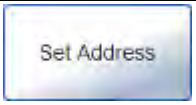	Set a display serial address:	Setting a Display Address
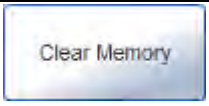	Clear display memory:	Clearing Display Memory
	Set date and time	Setting Date and Time

Section 3.13 Adding Displays

You may add any current InView display model to the InView Comms Module software.

To add a display:

1. From the InView Configuration Work Area, select the following icon:

The Configured Displays dialog appears:

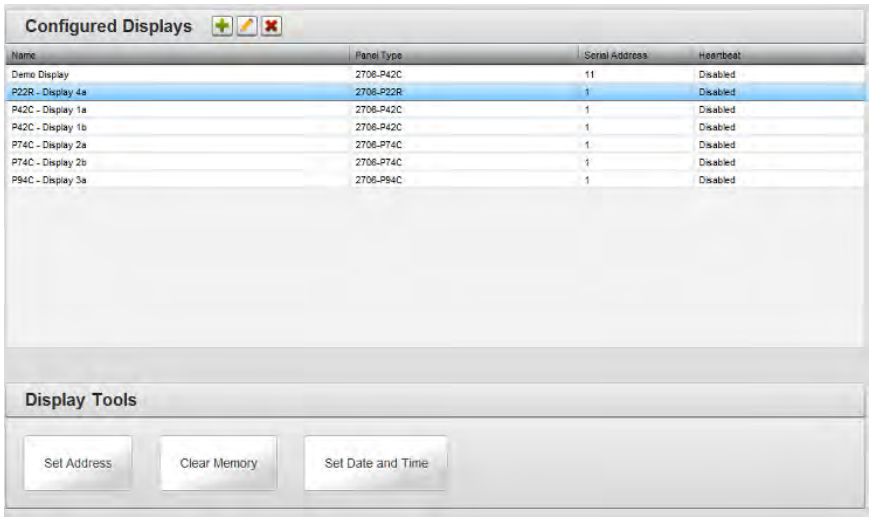

2. In the Configured Displays section, click the following icon:

The Display Properties dialog appears:

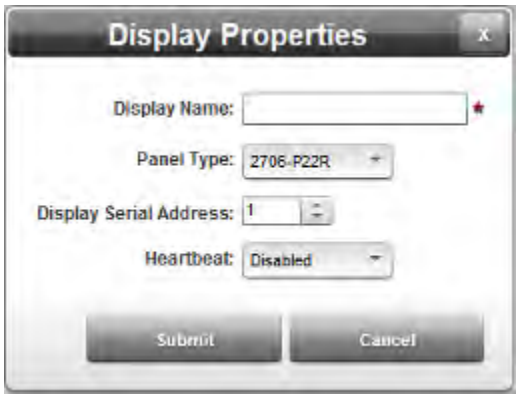

3. View or specify the following Display options:
   - **Display Name**. Enter the display name. Example: **West Wing Messages**

- **Panel Type**. Defines the type of display panel you are adding. This affects the type of message you can create. Select the panel type from the drop down list:
  - *2706-P22R*. InView Message Display with 2 lines, 20 characters, Red LEDs. When panel-mounted, NEMA Type 4.
  - *2706-42C*. InView Message Display with 1 or 2 lines, 12 or 20 characters, 4.8, or 2.1 in. high, tri-color LEDs, NEMA Type 12.
  - *2706-42R*. InView Message Display with 1 or 2 lines, 12 or 20 characters, 4.8, or 2.1 in. high, red LEDs, NEMA Type 12.
  - *2706-44C*. InView Message Display with 1 or 2 lines, 24 or 40 characters, 4.8, or 2.1 in. high, tri-color LEDs, NEMA Type 12.
  - *2706-44R*. InView Message Display with 1 or 2 lines, 24 or 40 characters, 4.8, or 2.1 in. high, red LEDs, NEMA Type 12.
  - *2706-72C*. InView Message Display with 1 or 2 lines, 12 or 20 characters, 7.2, 3.0, 2.1, or 1.5 in. high, tri-color LEDs, NEMA Type 4.
  - *2706-74C*. InView Message Display with 1 or 2 lines, 12 or 20 characters, 7.2, 3.0, 2.1, or 1.5 in. high, tri-color LEDs, NEMA Type 4X.
  - *2706-92C*. InView Message Display with 1 or 2 lines, 13 or 24 characters, 9.6, 4.5, 3.0, 2.1, or 1.5 in. high, tri-color LEDs, NEMA Type 12, 13.
  - *2706-92C2*. InView Message Display, with up to five lines, 9.9, 4.75, 3.0, 2.25, or 1.75 in. high, ten-color LEDs, NEMA Type 4, 4X
  - *2706-94C*. InView Message Display with 1 or 2 lines, 26 or 48 characters, 9.6, 4.5, 3.0, 2.1, or 1.5 in. high, tri-color LEDs, NEMA Type 12, 13
  - *2706-94C2*. InView Message Display, with up to five lines, 9.9, 4.75, 3.0, 2.25, or 1.75 in. high, ten-color LEDs, NEMA Type 4, 4X.
- **Display Serial Address**. Specifies the address of the display to which a message is downloaded. Before downloading messages to the InView Message Display you must set the address of the target display. The serial address of the InView display is a number from 1 to 254. The default address is 1.
- **Heartbeat**. The display requires serial activity approximately every three seconds. In the absence of such activity, the display will show a **No Network Activity** message. Options are:
  - *Disabled*. When the heartbeat property is set to

Disabled, disables the need for constant serial activity in the display.

- *None*. When the heartbeat property is set to **None**, the activity is assumed to come from sources such as variable updates.
- *Control*. When the heartbeat property is set to **Control**, the control generates a serial heartbeat command that prevents the display from showing the **No Network Activity** message.

- **Submit**. Saves changes on InView Comms Module and exits.
- **Cancel**. Exits without saving changes on InView Comms Module.

Section 3.14 Modifying Displays

To modify display information:

1. Access the Configured Displays dialog:

   See Managing Displays

   The Configured Displays dialog appears:

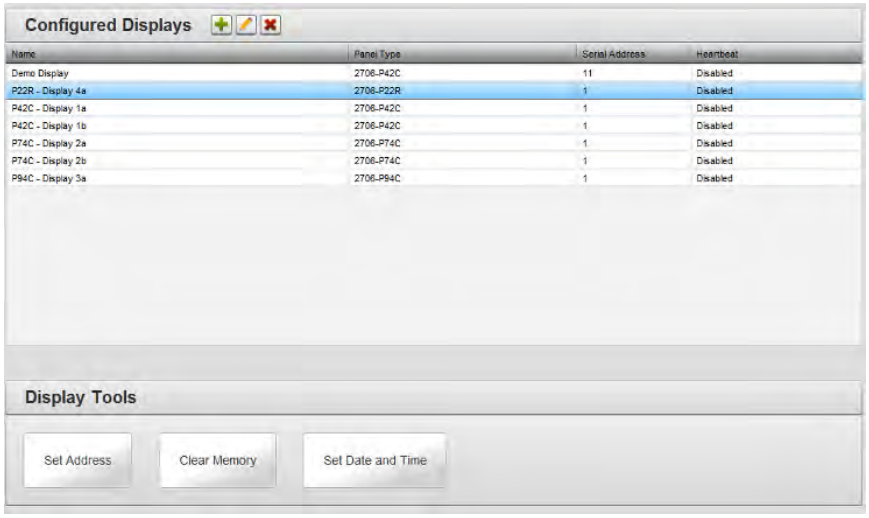

2. Select a listing and click the following icon:

   The Display Properties dialog appears. Change information in the listed fields:

   See Adding Displays

3. When finished making changes, click either of the following to exit:
   - **Submit**. Saves changes on the InView Comms Module and exits.
   - **Cancel**. Exits without saving changes on InView Comms Module.

Section 3.15 Deleting Displays

To delete a display:

1. Access the Configured Displays dialog:

   See Managing Displays

   The Configured Displays dialog appears:

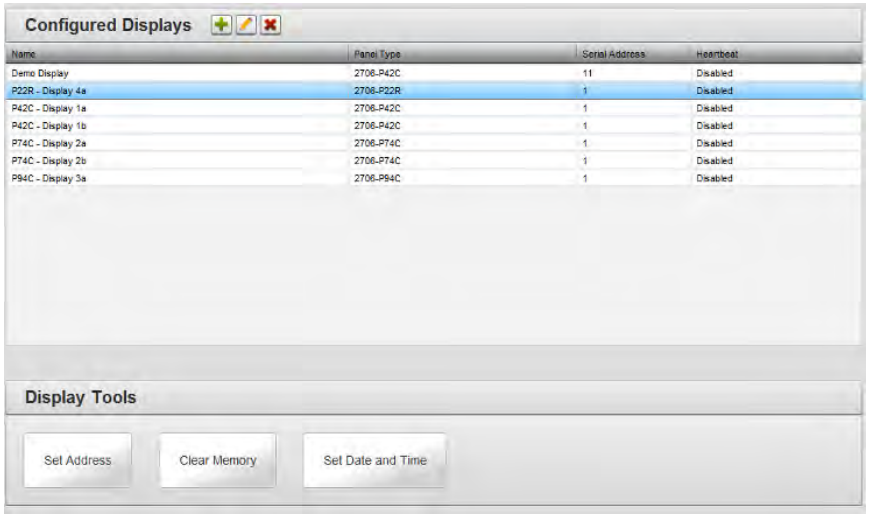

2. Select a display from the list.
3. Click the Delete icon:

   A confirmation dialog appears:

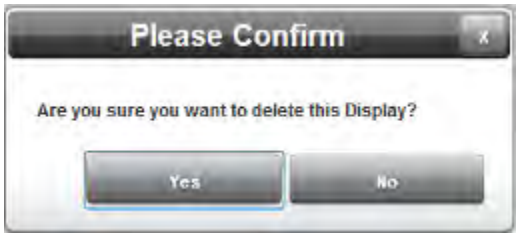

4. Confirm the deletion:
   - **Yes**. Deletes the selected display from the InView Comms Module and exits.
   - **No**. Exits without deleting the selected display from the InView Comms Module.

Section 3.16 Setting a Display Address

Before downloading messages to the InView Message Display you must set the address of the target display. All InView displays leave the factory with a default address of 1. You must know what the current display address is before setting a new address. If you are not sure of the current address, cycle power to the InView display to check the address.

To set a display address:

1. Access the Configured Displays dialog:

   See Managing Displays

   The Configured Displays dialog appears:

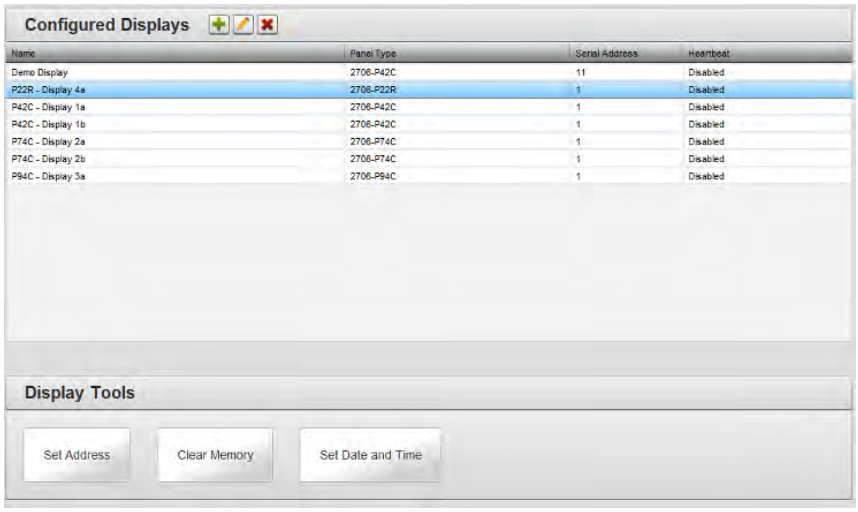

2. Select the Set Address icon:

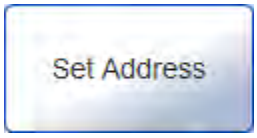

3. The Set Address dialog appears. Change information in the listed fields.

   - **Old Display Address**. Lists the current display address (1 to 254). If you do not know what this address is, power cycle the InView display and observe the Display Serial Address as shown on the display power-up message.
   - **New Display Address**. Specify the new display address. (1 to 254).

4. When finished making changes, click either of the following to exit:
   - **Submit**. Saves changes on the InView Comms Module and exits.
   - **Cancel**. Exits without saving changes on InView Comms Module.

Section 3.17 Clearing Display Memory

Clears all messages from the display's memory, and resets the display. When memory is cleared, the background message becomes **NO BACKGROUND MESSAGE**.

To clear display memory:

1. Access the Configured Displays dialog:

   See Managing Displays

   The Configured Displays dialog appears:

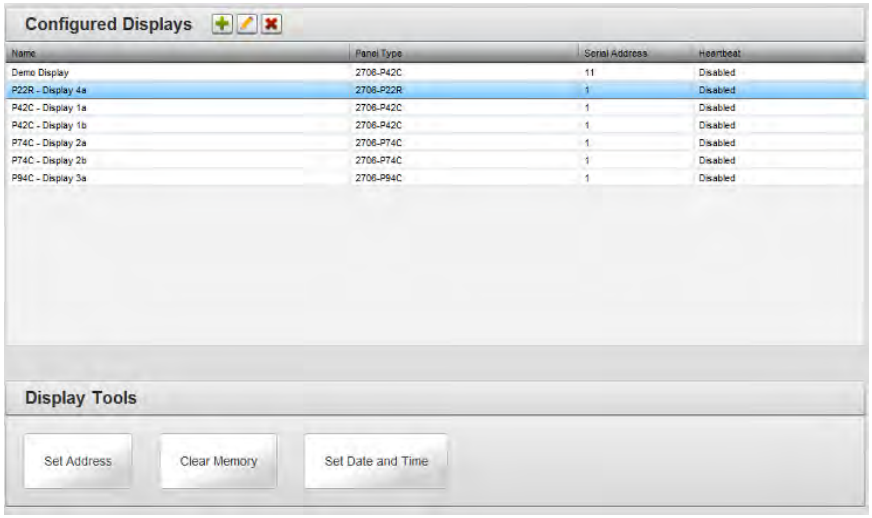

2. Select the Clear Memory icon:

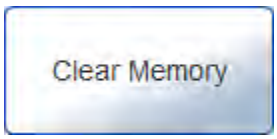

3. The Clear Memory dialog appears. Enter information in the listed fields.

   - **Display**. Specifies the display for which you wish to clear memory. Select from the dropdown list.
   - **Serial Address**. Lists the current serial display address (1 to 254). If you do not know what this address is, power cycle the InView display and write down the address you see displayed on startup.
   - **Apply to All Displays**. Specify whether to apply the clear memory to all displays accessible from the InView Comms module.

4. When finished making changes, click either of the following to exit:
   - **Submit**. Saves changes on the InView Comms Module and exits.
   - **Cancel**. Exits without saving changes on InView Comms Module.

Section 3.18 Setting Date and Time

To configure InView display time and date settings:

1. Access the Configured Displays dialog:

   See Managing Displays

   The Configured Displays dialog appears:

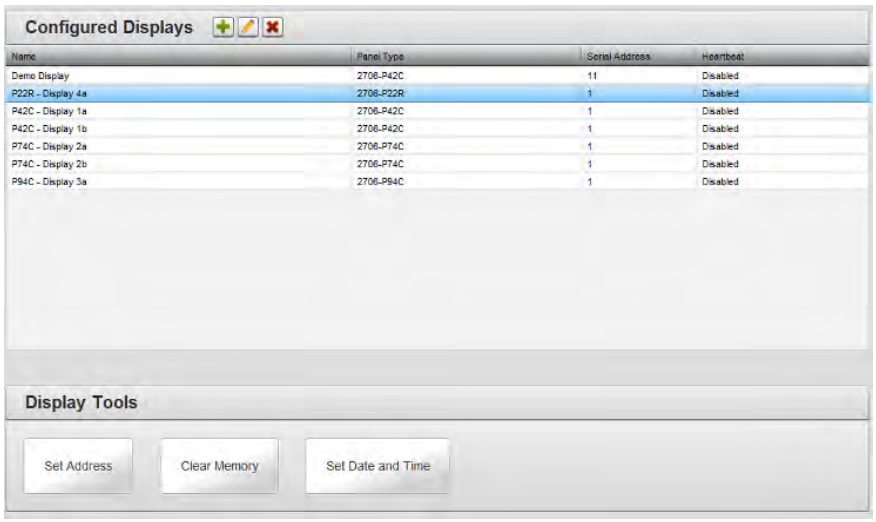

2. Select the Set Date and Time icon:

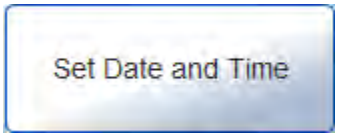

3. The Set Date and Time dialog appears. Enter information in the listed fields.

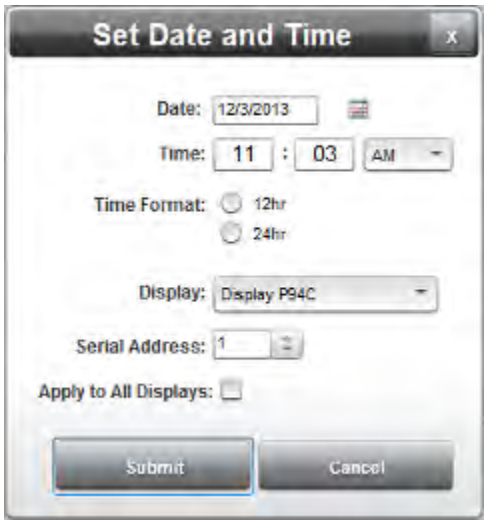

   - **Date**. Enter the date or select the date you wish to use from the popup calendar.
   - **Time: *HH:MM* AM/PM**. Enter the time you wish to use in hours and minutes.
   - **Time Format**. Specifies whether to use standard (12-hour) or

military (24-hour) time.

- **Display**. Specifies the display for which you wish to set date and time. If needed, select from the dropdown list.
- **Serial Address**. Lists the current serial display address (1 to 254). If you do not know what this address is, power cycle the InView display and write down the address you see displayed on startup.
- **Apply to All Displays**. Specify whether to apply the set date and time to all displays accessible from the InView Comms module.

4. When finished making changes, click either of the following to exit:
   - **Submit**. Saves changes on the InView Comms Module and exits.
   - **Cancel**. Exits without saving changes on InView Comms Module.

Section 3.19 Configuring Message Groups

To configure message groups:

1. From the InView Configuration Work Area, select the following icon:

The Message Groups dialog appears:

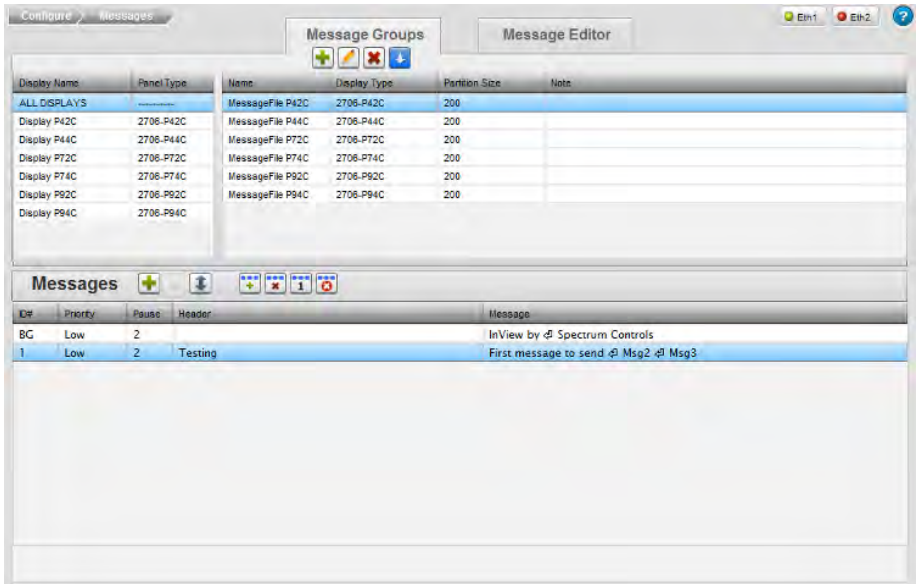

2. View or specify the following options:

Icon	Function	Access
	Add a message group:	Adding Message Groups
	Delete a message group:	Deleting Message Groups
	Reorder a message group:	Reordering Message Groups
	Download message to display	Downloading a Message Group

Section 3.20 Adding Message Groups

You must assign a display type group to each message you create. Groups are useful if you wish to organize messages by display types. For example, you might want to create a group of messages for a 2706-P22R-SC display and another group for a 2706-P94C-SC display. You may then sort the messages by the **Display Type** column to organize them into groups. This makes it very easy to edit or download a specific group of messages to a display.

You may also convert a P92C or P94C message group to a P92C2 or P94C2 message group. This allows you to import existing message files groups for use in the C2 displays. You use the editing function for message groups to convert the files. See Modifying Message Groups.

To add a message group:

1. From the InView Configuration Work Area, select the following icon:

The Message Server dialog appears:

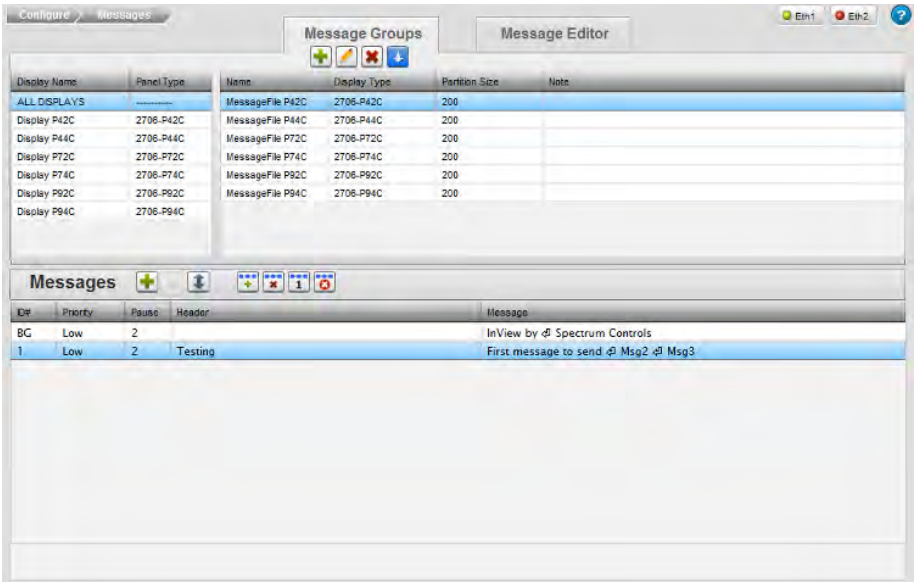

2. In the Message Groups section, click the following icon:

The Message Group Properties dialog appears:

3. View or specify the following options:
   - **Group Name**. Specify the name of the group.
   - **Display Type**. From the pull down menu, select the display type. Options are 2706-P22R, 2706-P42C, 2706-P42R, 2706-P44C, 2706-P44R, 2706-P72C, 2706-P74C, 2706-P92C, 2706-P94C.
   - **Partition Size**. Partitions the memory in the display. The InView Message Displays supports 256 K of memory. You can specify how much memory to allocate for each message. The message size ranges from 50 to 450 bytes. To determine the required length for messages, see Calculating Message Size. The maximum number of messages ranges from 444 to 4,000. The default message size is 200 bytes, which results in 1,000 messages. If you select another message size, the maximum number of messages is automatically recalculated.
     Range is 50 to 450 bytes, even numbers only. Default size is 200 bytes.
   - **Note**. Adds a note to the message group. The note appears in the Message Groups list but is not downloaded to the display.
   - **Submit**. Click to save entered changes.
   - **Cancel**. Click to cancel any changes and exit.

Section 3.21 Modifying Message Groups

You may convert a P92C or P94C message group to a P92C2 or P94C2 message group. This allows you to import existing message files groups for use in the C2 displays. You use the editing function for message groups to convert the files. See Modifying Message Groups.

1. Access the Message Groups dialog:

   See Adding Message Groups

   The Message Groups dialog appears:

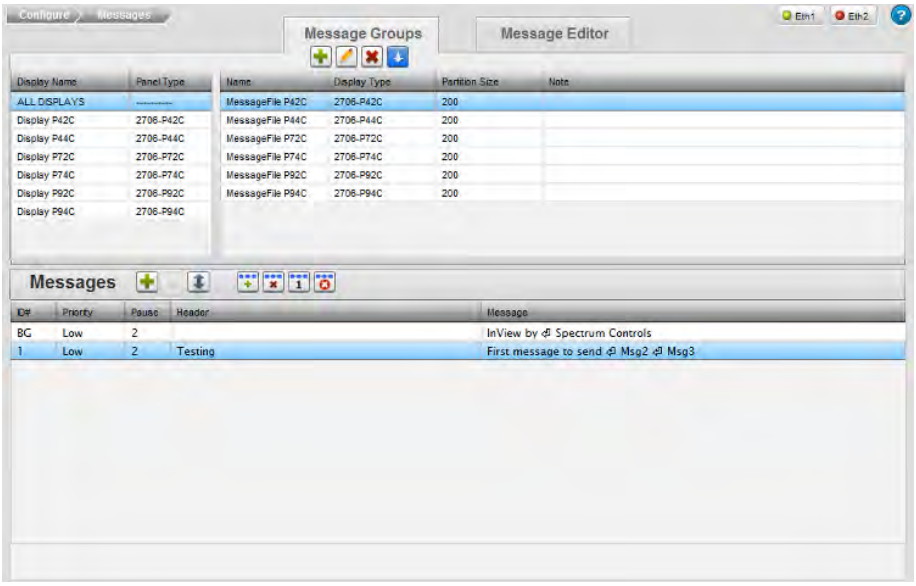

2. Select a listing and click the following icon:

   The Message Group Properties dialog appears:

3. Change information in the listed fields.

See Adding Message Groups

4. If you also wish to convert the message you are modifying to run on a P92C2 or a P94C2, click the **Copy & Convert to 2706-P9*x*C2** button. The file is converted to the selected message format. The converted file appears using the same file name as the selected file, with **Copy** added to the file name. You will need to select the display type to view the converted file.
5. When finishing making changes, click either of the following to exit:
   - **Submit**. Saves changes on the InView Comms Module and exits.
   - **Cancel**. Exits without saving changes on the InView Comms Module.

Section 3.22 Reordering Messages

To reorder messages:

1. Access the Message Groups dialog:

   See Adding Message Groups

   The Message Groups dialog appears:

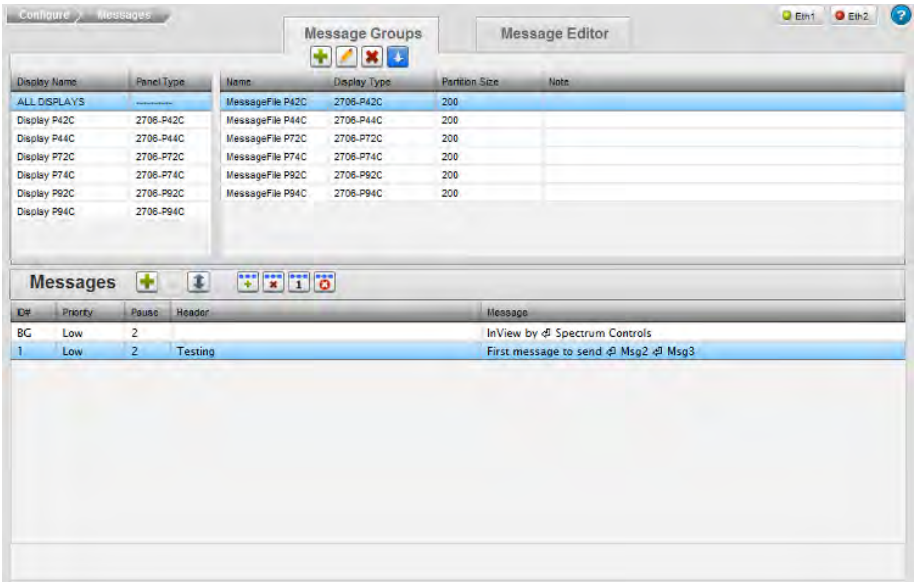

   Click the following icon:

2. The Re-order Messages dialog appears. Enter new number(s) for the message(s).

Message IDs must be whole numbers. Zero (0) is invalid.

3. When finished making changes, click either of the following to exit:
   - **Submit**. Saves changes on the InView Comms Module and exits.
   - **Cancel**. Exits without saving changes on InView Comms Module.

Section 3.23 Deleting Message Groups

To delete a message group:

1. Access the Message Groups dialog:

   See Adding Message Groups

   The Message Groups dialog appears:

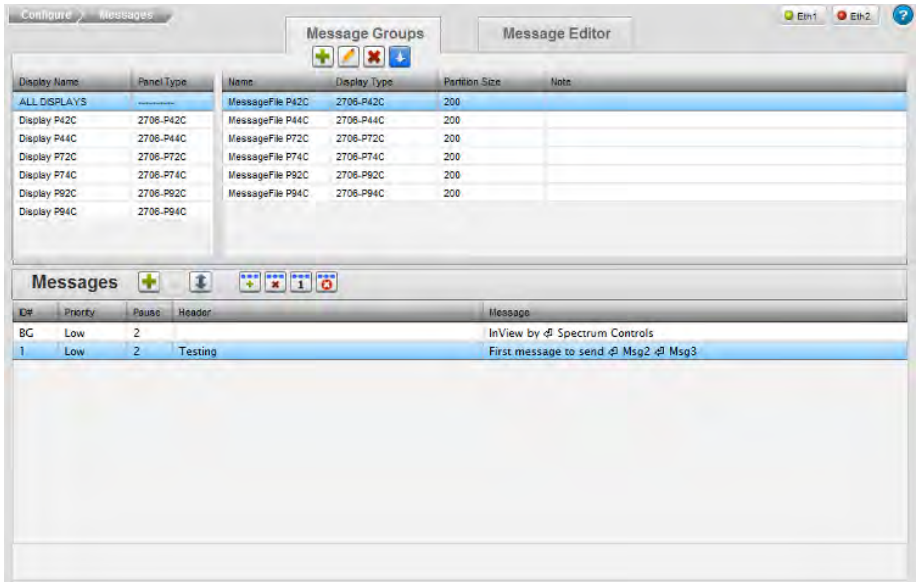

2. Select a message group from the list.
3. Click the Delete icon:

A confirmation dialog appears:

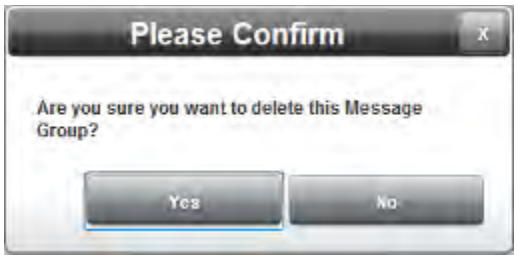

4. Confirm the deletion:

NOTE

Deleting a message group also removes any associated messages that are associated with the group.

- **Yes**. Deletes the selected message group from the InView Comms Module and exits.
- **No**. Exits without deleting the selected message group from the InView Comms Module.

Section 3.24 Downloading a Message Group

To download a message group to an InView display:

1. Access the Message Groups dialog:

   See Adding Message Groups

   The Message Groups dialog appears:

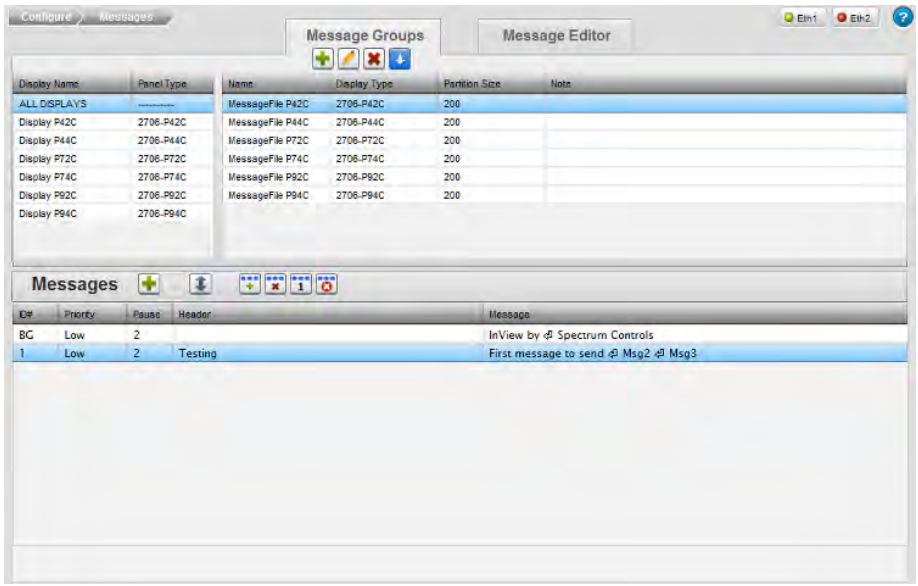

2. Select a message group from the Message Groups list.

3. Click the Download icon:

A Download Group to Display dialog appears:

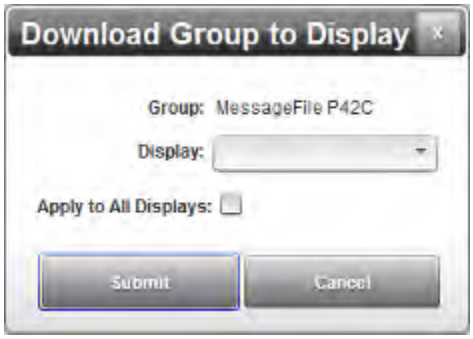

4. View or specify the following options:
   - **Group**. Shows group selected for download. Not editable.
   - **Display**. Select the target display from the dropdown list.
   - **Apply to All Displays**. Specify whether to apply the instruction to all displays accessible from the InView Comms module.
5. Download the message group:
   - **Submit**. Downloads the selected group to the specified display.
   - **Cancel**. Cancel downloading the selected group the specified display.

Section 3.25 Configuring Messages

You may add messages to groups.

To add, modify, or delete messages:

1. From the InView Configuration Work Area, select the following icon:

The Messages dialog appears:

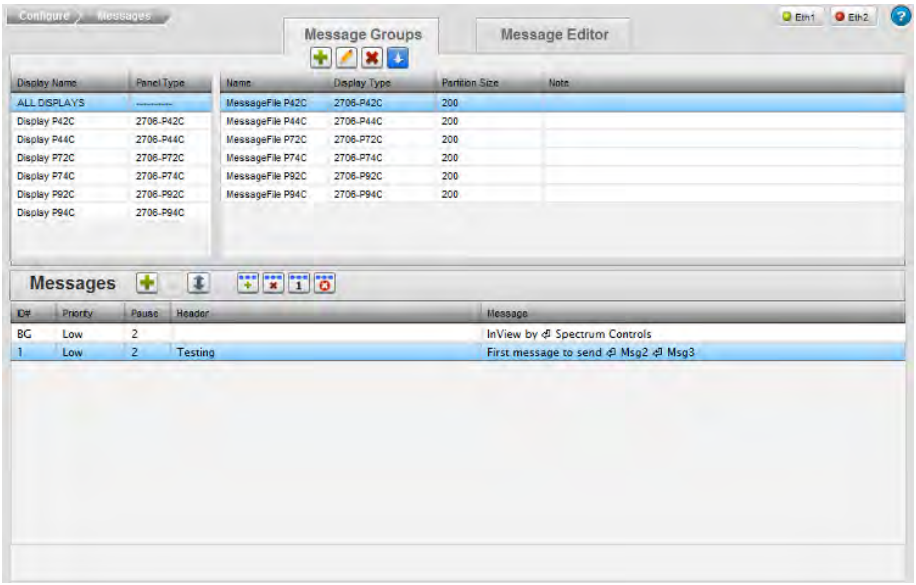

2. View or specify the following options:

Icon	Function	Access
	Add a message to a group:	Adding Messages
	Reordering messages in a group:	Reordering Messages
	Delete a message from a group:	Deleting Messages
	Add a message to the message queue:	Adding Message to the Queue
	Delete a message from the message queue:	Deleting a Message from the Queue
	Trigger a priority message (operates on the message queue):	Triggering a Priority Message
	Clear message queue:	Clearing Message Queue

Section 3.26 Adding Messages

NOTE The P22R display allows you to have two messages displaying on the P22R at the same time. One message is set to Line 1. The second message is set to Line 2. You may also have an All Lines setting where one message displays on one or both lines.

NOTE If you select a message that has missing bitmaps, the software informs you that is the case. However, the software still opens the file but adds place holder bitmaps when previewing the message:

NOTE You see this message when the software allows you to enter a font height that is impossible to display correctly. For example, if you set up both a header and a message with font heights that do not allow both lines to be displayed at the same time:

NOTE In Rotate mode, all Justification buttons are disabled.

Adds a message to a display.

To add a message:

1. From the InView Configuration Work Area, select the following icon:

The Message Group/Message Editor dialog appears:

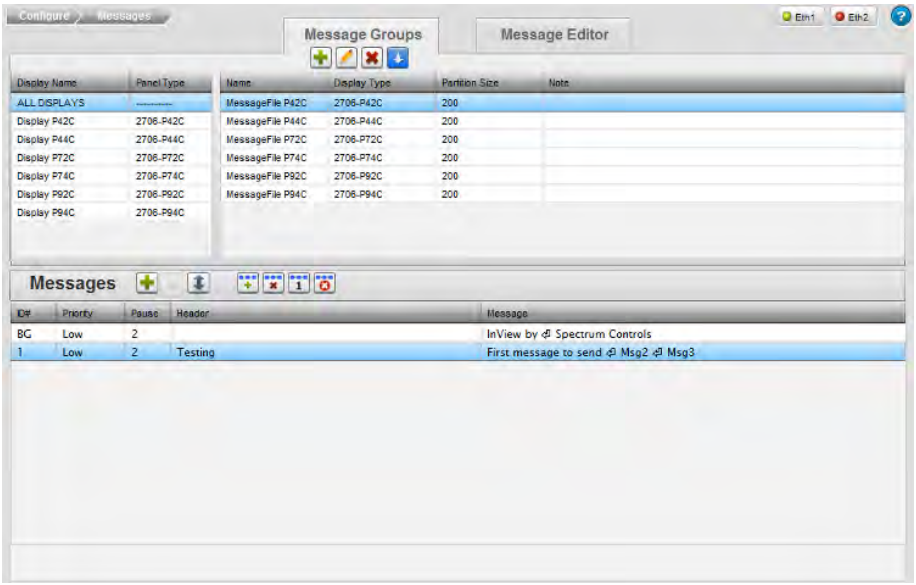

2. In the Messages section, click the following icon:

When you click on the Add Message icon, the software creates a blank message and switches to the Messages Editor dialog tab:

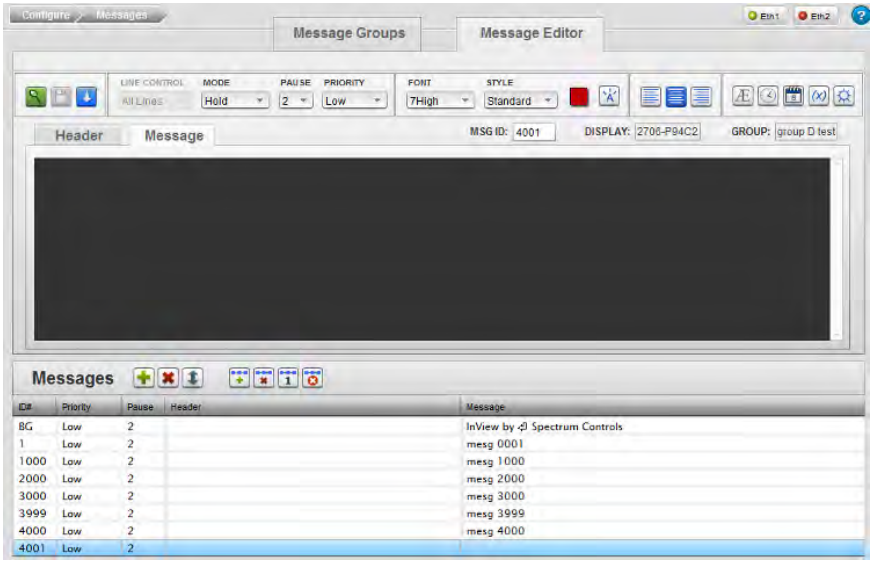

3. Use the following Message Editor options to add a message to the blank message window and to format the message's appearance. Formatting options are defined by the type of display on which the message is to appear:

   - In the message display window, type in your message:

   - ***GROUP/DISPLAY***. Shows category to which message will

belong after it is created and display type on which message will be shown:

- **HEADER**. Uses the Header tab create a heading for each message. The heading is centered on the first line of the display above the message. You can assign attributes to the heading, which can differ from the message text. To add a header, click the tab. To remove a header you have added, delete the text. Header example:

- **LINE CONTROL**. Allows you to display two messages on the 22R, 2-line display at one time. To activate this feature, you must assign each message to a specific line, Line 1, or Line 2, in the Message Editor. Options are:
  - *All Lines*. Displays a message on Line 2 only.
  - *Line 1*. Displays a message on Line 1 only.
  - *Line 2*. Displays a message on Line 2 only.
- When displaying messages, the line controls options function as follows:
  - If a Line 1 message is active on the display, and a Line 2 message is downloaded, the Line 1 message remains active on Line 1, and the downloaded Line 2 message appears on Line 2.
  - If a Line 1 message is active on the display, and a new Line 1 message is downloaded to the display, the active Line 1 message is replaced with the downloaded Line 1 message.
  - If a Line 1 or Line 2 message is downloaded while All Lines message is active, the All Lines message is cleared, and the Line 1 or Line 2 message is displayed.
  - If an All Lines message is downloaded while a Line 1 and/or Line 2 message is active, the Line 1 and/or Line 2 messages are cleared, and the All Lines Message is displayed.

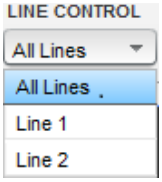

- **MODE**. Specifies whether message display is fixed or rotating. To select a mode, from the dropdown menu, select:

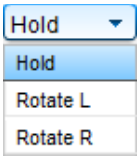

  - *Hold*. Specifies stationary message display. You may rotate messages to the left, or to the right, depending on your character set. Arabic characters may be rotated right to left. However, you must also insert the characters in the correct order (reversed from English language characters) so that the text meaning displays correctly.
  - *Rotate L*. Message rotates on displays from right to left (English and other languages that are read from left to right).
  - *Rotate R*. P9*x*C2 only. Message rotates on displays from left to right (Arabic and other languages that are read from right to left).
- **PAUSE**. Refreshes and displays the message after the specified number of seconds (1 to 5). Default is 2 seconds. To select a pause, from the dropdown menu, select:

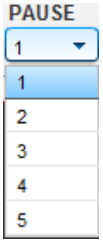

- **PRIORITY**. Specifies the importance of a message. Messages of a lower priority do not run if any message of a higher priority is running. To select a priority, from the dropdown menu, select:

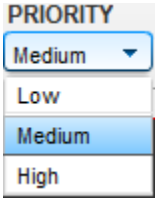

- **FONT**. Specifies the maximum number of pixels to use for the height of the characters. The font is sans-serif. Fancy indicates the maximum height of the characters using a serif font. To select a font style, from the dropdown menu select:

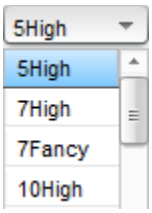

Font sizes are:

  - 5High
  - 7High (default value)
  - 7Fancy
  - 10High
  - 16High
  - 16Fancy
  - 20High (2706-92C2-SC, 2706-94C2-SC only)
  - 20Fancy (2706-92C2-SC, 2706-94C2-SC only)
  - 24High (2706-92C2-SC, 2706-94C2-SC only)
  - 24Fancy (2706-92C2-SC, 2706-94C2-SC only)
  - 32High
  - 32Fancy
  - 40High (2706-92C2-SC, 2706-94C2-SC only)
  - 40Fancy (2706-92C2-SC, 2706-94C2-SC only)
  - **STYLE**. Specifies font style. To select a style, from the dropdown menu, select:

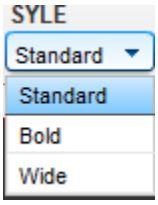

- **COLOR**. Specifies a color. R displays only show red. For C/C2 displays, specifies a color (3 colors or 10 colors, depending on the display model. C2 models provide 10 color selections). Select the color you wish to use:

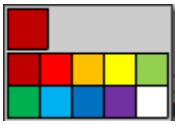

- **Left-align text**. To align the text justified to the left, click the following icon:

- **Center text**. To align the text in the center of the display, click the following icon:

- **Right-align text**. P9*x*C2 only. To align the text justified to the right, click the following icon:

- **Blinking text**. To make text blink, highlight the text you wish to blink, and click the following icon:

- **Insert Extended Character Set**. To insert a special character in the set, click the following icon:

- The Extended ASCII dialog appears:

From this dialog, select the character of interest. The dialog closes and the character appears in the text window.

- **Insert time in message**. To insert the time in a message, click where you wish to insert the time and click the following icon:

- **Insert date in message**. To insert the date in a message, click where you wish to insert the date and click the following icon:

- **Insert variable in message**. To insert a variable in a message, click where you wish to insert the variable, and click the

following icon:

The Insert Variable dialog appears:

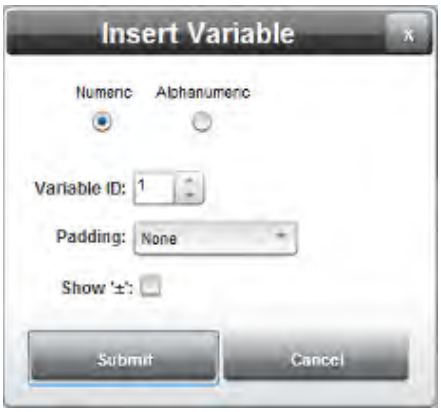

Specify the variable to insert in the list:

- Choose either numbers, or numbers and letters:
  - *Numeric*. Specifies that variable can only be a number.
  - *Alphanumeric*. Specifies that variable can be either a number or a letter.
  - *Variable ID*. Lists ID associated with variable.
  - *Padding*. Defines whether or not to place no space, spaces, or zeroes before or after the variable.
  - ±. Show plus or minus sign on variable entry.
  - *Min Text Length*. Defines minimum text length.

- Insert a custom character in message.

  To insert a custom character in an image, click where you wish to insert the character and click the following icon. See Inserting Custom Characters for further information.

  Example: If you have selected a rotating or blinking message, the message rotates or starts blinking.

4. Once you have downloaded a message group, you may add the message to the queue, delete a message from a queue, or trigger a priority message using the following icons:

   - **Preview**. When you have finished creating your message, click the following icon to preview how your message appears on the display. If you selected a rotating or blinking message, the message rotates or starts blinking. If you try to preview a message containing too long an embedded object, the software warns you it cannot display the object and does not show the preview:

- **Save**. Before exiting the editor, you need to save your changes. To save the changes, click the following icon:

- **Download Message Group to InView Display**. To download the message, click the following icon:

- Once you have added a message you may add the message to the queue, delete a message from a queue, or trigger a priority message using the following icons:
  - To add a message to a queue, click the following icon:

    See also Adding Message to a Queue
  - To delete a message from a queue, click the following icon:

    See also Deleting Message from Queue
  - To trigger a priority message, click the following icon:

    See also Triggering a Priority Message
  - To clear a message queue, click the following icon:

    See also Clearing Message Queue
- **Save**. Click to save the messages in the current message file.
- **Submit**. Click to save entered changes.
- **Cancel**. Click to cancel any changes and exit.

Section 3.27 Inserting Custom Characters

NOTE Custom characters should be monochrome (1-bit color depth), and must be 16 × 16, 24 × 24, 32 × 32, or 40 × 40 pixels in dimension.

Inserts a custom character into a message.

To insert a custom character:

1. Access the InView Configuration Message Editor dialog. See Adding Messages earlier in this section.
2. From the InView Configuration Message Editor dialog, click where you wish to insert the character and click the following icon:

3. From the popup dialog that appears, select your character type or character and your type size as follows. If needed, scroll down to find the character:

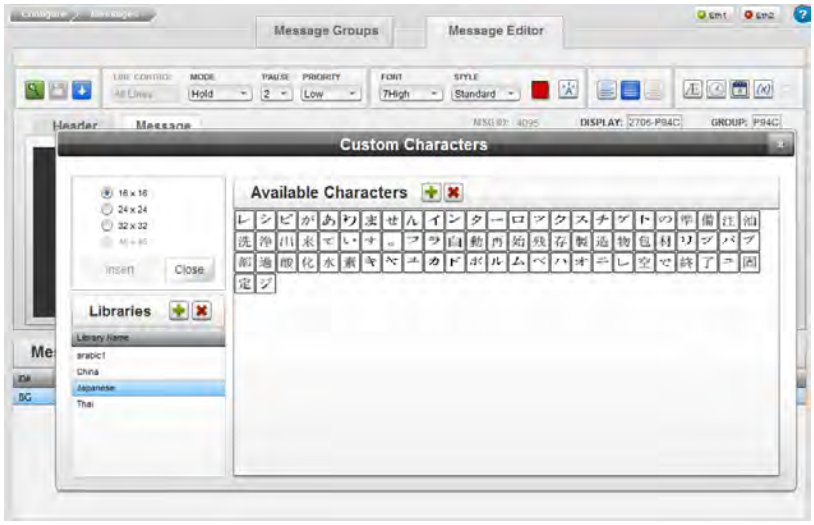

- ***bitmap size***. Defines how large the bitmap image will be for the selected character. Image sizes may be 16 × 16, 24 × 24, 32 × 32, or 40 × 40 (92*x*C2 only) pixels. Different displays may not accept all image sizes. To review all characters available for the selected library, click each of the image size selections in turn.
- **Libraries**. To review a set of available characters, choose a library. You can add and delete libraries:
  - *add*. To add a library, click the following icon:

    - The Add Library dialog appears. View or specify the following options:

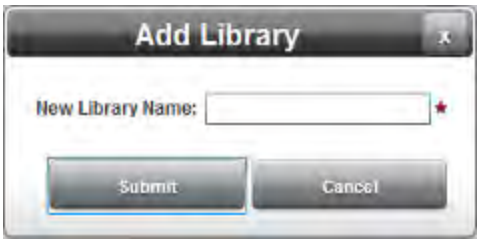

- New Library Name. Enter the name of the new library.
- Submit. Adds new library name to **Libraries** list.
- Cancel. Cancels addition of new library name to **Libraries** list.

- *delete*. To delete a library, click the following icon:

The following dialog appears. Confirm the deletion:

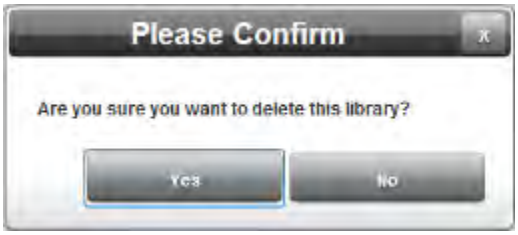

- Submit. Deletes the selected library from the **Libraries** list.
- Cancel. Cancels deletion of the selected library name from the **Libraries** list.

- **Available Characters**. Lists available characters for the selected image size for the selected library. You may add and delete characters for each library. To add a custom character, click the following icon in the Available Characters dialog:

- Navigate to your bitmap location and choose the character you wish to insert, and then click **Open**:

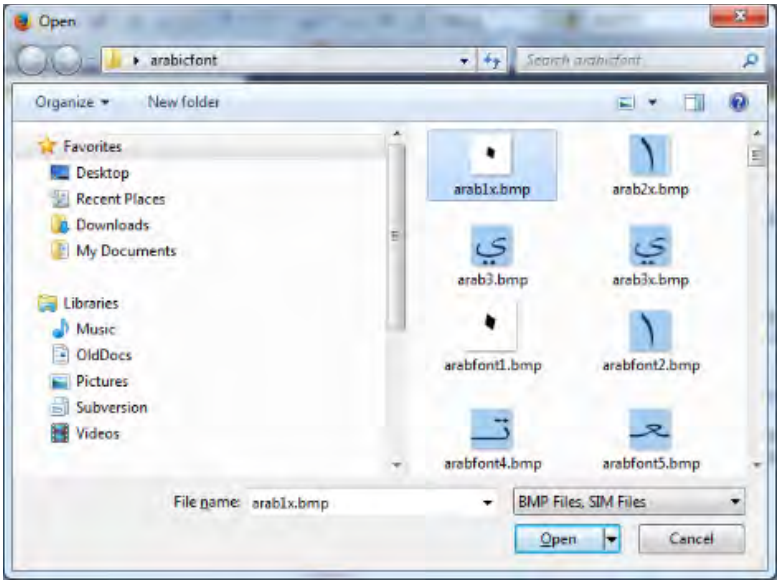

4. Once you select a character, the Message Editor field shows a placeholder for the character. To see which character is selected, mouse over the placeholder:

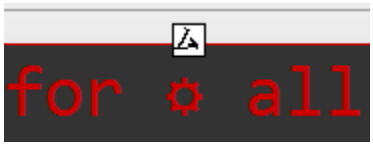

5. If the character you select no longer exists because it has been deleted from the library, you will see the following message:

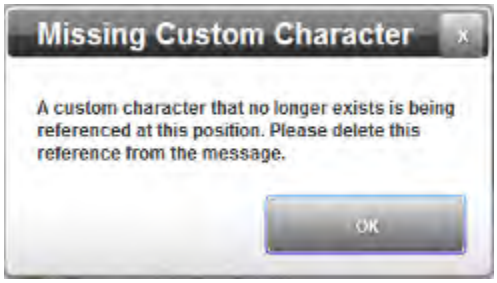

   Remove the deleted or unavailable character from the message.

6. **Close**. Saves the changes and exits the dialog.

Section 3.28 Modifying Messages

You can modify messages that you import. For example, you can change the font size on text characters and custom characters after you import a message group onto a Comms Module associated with a new 92C2 or 94C2 display.

To modify messages:

1. Access the Message Groups dialog:

   See Adding Message Groups

   The Messages dialog appears:

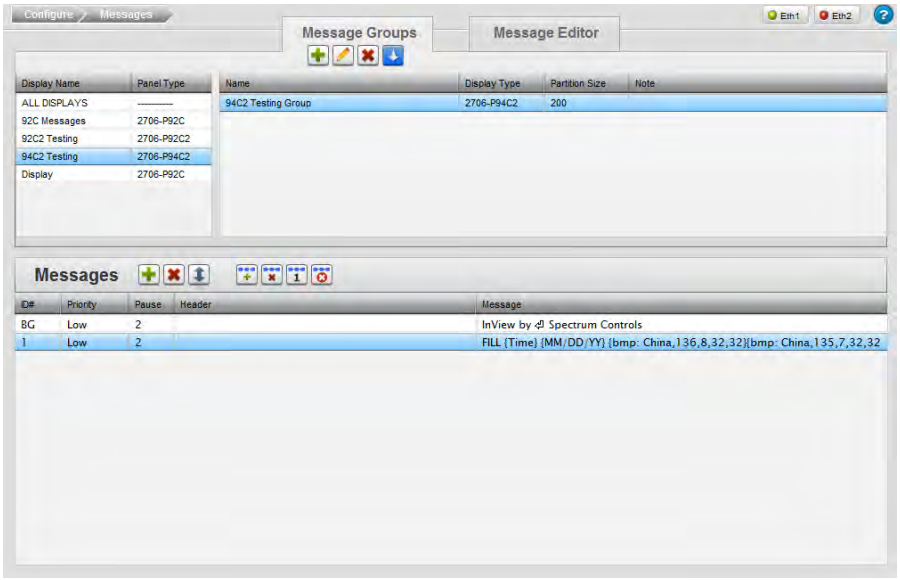

2. Select a message group and a message from that group and click the Message Editor tab.

   The Message Editor dialog appears:

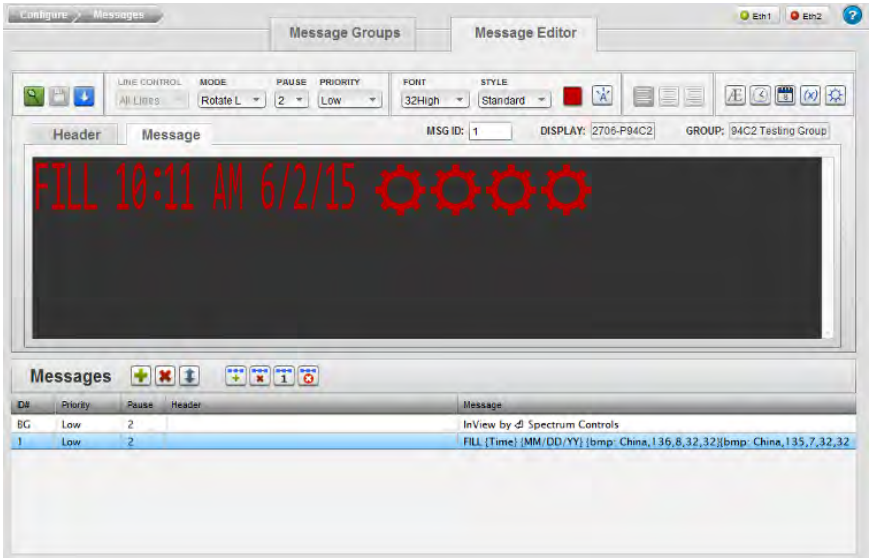

3. Highlight the message characters you wish to change to 40 pixels in size.

The option only functions if you select bitmap characters:

The FONTS dropdown option changes to **SIZE** and the listed options change to bitmap sizes:

4. From the drop-down list, select the **40 × 40** font size.

   The select characters change to the 40High font size:

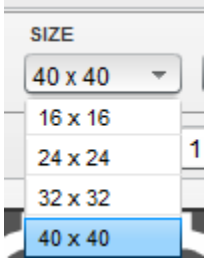

5. When finished making changes, to save your changes, click the following icon:

Section 3.29 Deleting Messages

To delete a message:

1. Access the Messages dialog:

   See Adding Message Groups

   The Messages dialog appears:

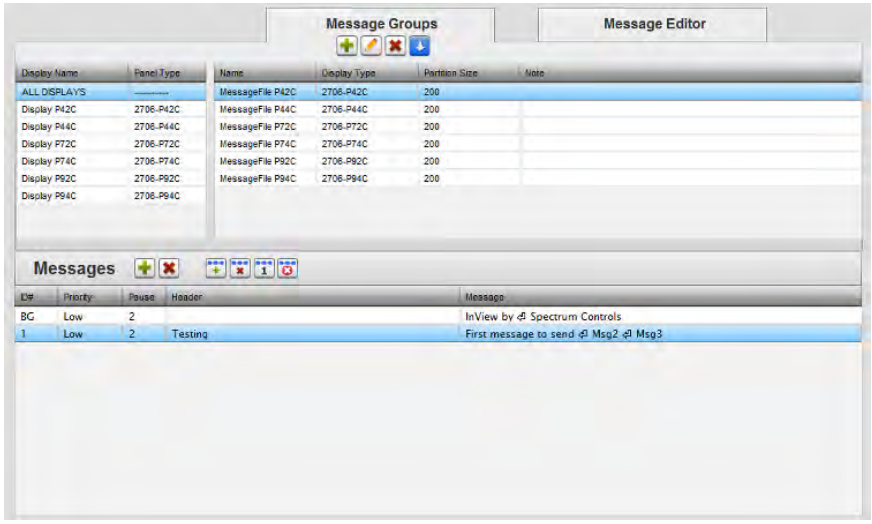

2. Select a message from the list.
3. Click the Delete icon:

   A confirmation dialog appears:

4. Confirm the deletion:
   - **Yes**. Deletes the selected message from the message group and exits.
   - **No**. Exits without deleting the selected message from the message group.

Section 3.30 Managing InView Comms Module Maintenance Options

You use the maintenance options to export and import characters and messages, update firmware, reset the InView Comms Module to the factory default configuration, back up your data, change your password, and to reboot the InView Comms Module.

To manage maintenance operations:

1. From the Configuration Work Area, select the following icon:

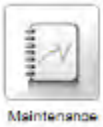

The Maintenance dialog with Import/Export/Configure areas appears:

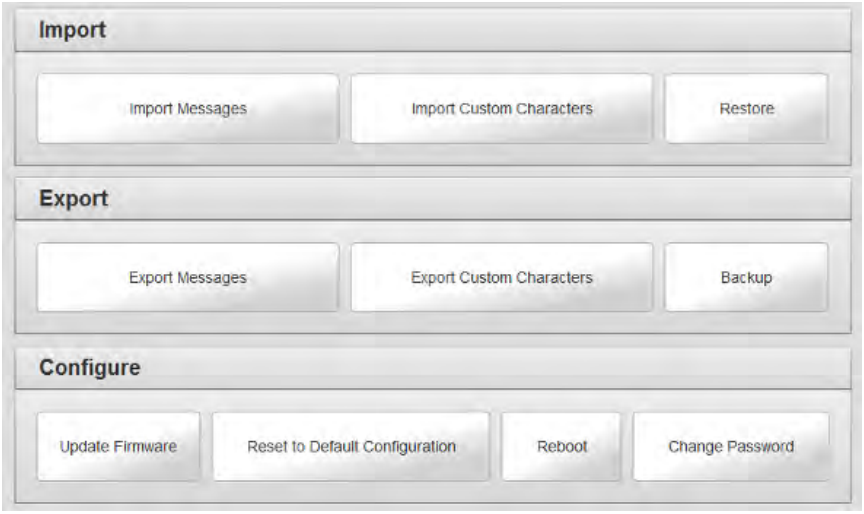

2. View or specify the following options:
   - Importing InView Messages
   - Importing InView Comms Module Custom Characters
   - Restoring InView Comms Module
   - Exporting InView Messages
   - Exporting InView Comms Module Custom Characters
   - Backing Up InView Comms Module
   - Updating Firmware
   - Resetting the InView Comms Module to Default Configuration
   - Rebooting the InView Comms Module

Section 3.31 Importing InView Comms Messages

NOTE If you are importing a .csv file, you need to ensure that the partition size you choose is large enough to accommodate the message group you are importing. Review the partition size set of the message group in the IMS .ivp project from which the *messages*.csv file was originally exported to ensure you specify a sufficiently large partition.

Imports messages from an existing, legacy .IVP file, a .csv, or a new Spectrum .sim file.

This option imports an existing set of messages created by the Rockwell Automation InView Messaging Software into the Spectrum Controls, Inc. InView Comms Module software. This allows you to view the configuration information and messages in the current InView software. You may also import legacy .IVL flies that contain custom character libraries.

To import an existing .IVP file:

1. Save the contents of an existing message table and configuration to a .IVP file using the legacy InView Message Software.
2. Start up the Spectrum Controls, Inc. InView Messaging Software.
3. From the Configuration Work Area, select the following icon:

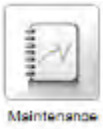

The Maintenance dialog with Import/Export/Configure areas appears:

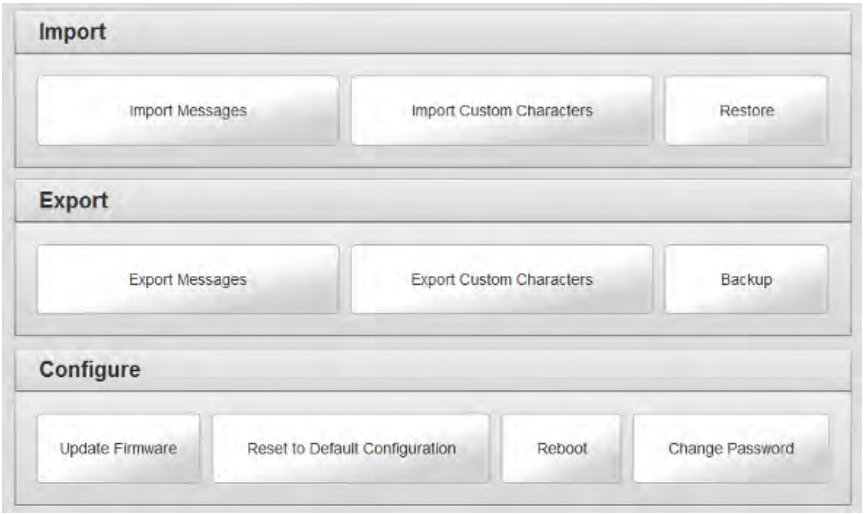

4. From the Import area, select the Import Messages button:

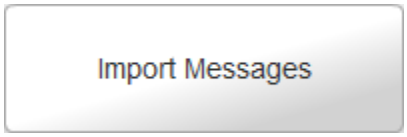

The confirmation dialog appears.

Confirm that you wish to continue to import messages:

- To confirm the import, click **Yes**.
- To cancel the import, click **No**.

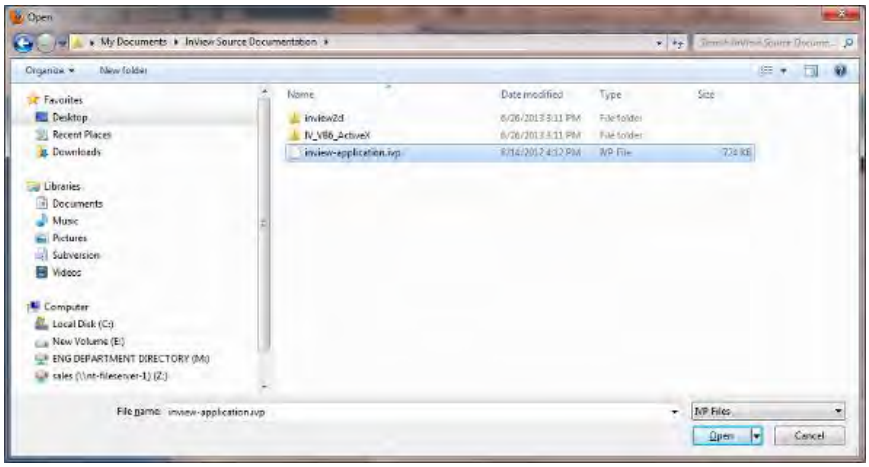

5. Navigate to the directory in which the .ivp, .csv, or .sim file you created is located.
6. Click **Open**. The software informs you that it is importing the data.

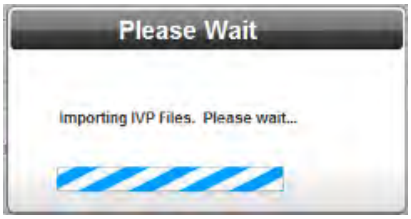

After the import is completed, you are able to access the messages in the software interface.

Section 3.32 Importing Custom Characters

Imports custom character libraries into the InView Comms Module.

To import custom characters:

1. Using the Rockwell Automation InView Messaging Software, export the custom character libraries to a .IVL file, or choose a new Spectrum .sic file.
2. Start up the Spectrum Controls, Inc. InView Messaging Software.
3. From the Configuration Work Area, select the following icon:

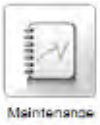

The Maintenance dialog with Import/Export/Configure areas appears:

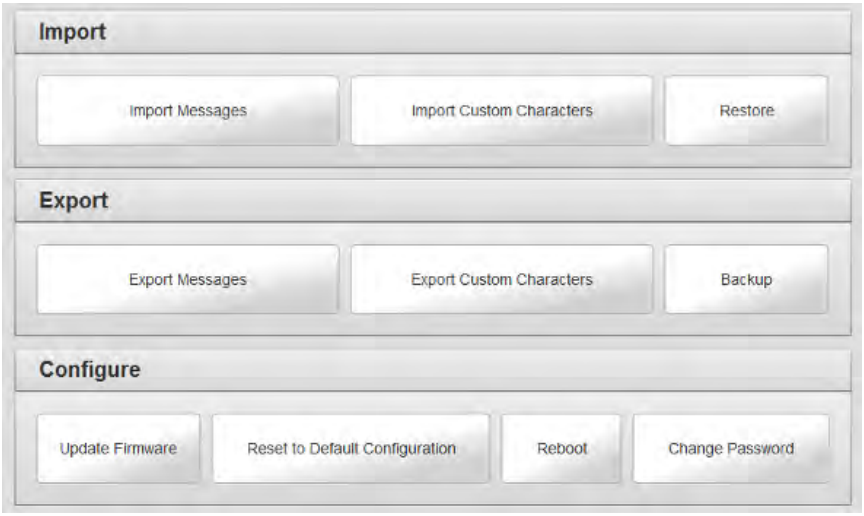

4. From the Import area, select the Import Custom Characters button:

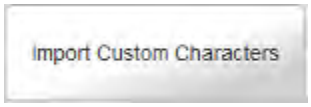

The following dialog appears:

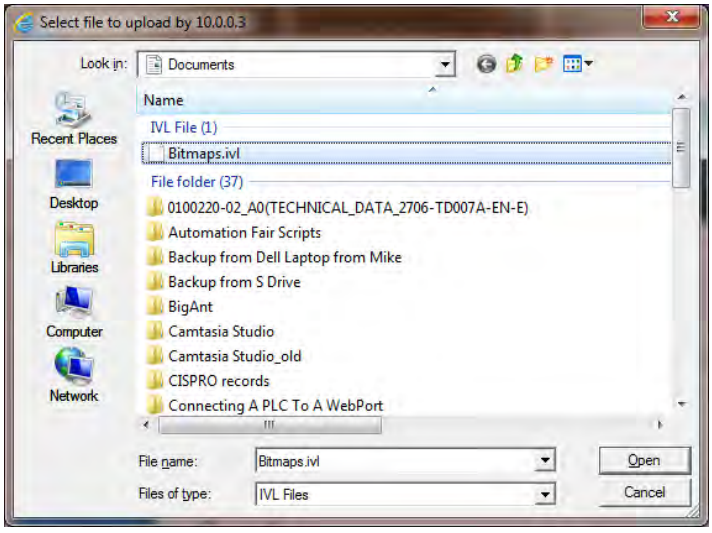

5. Navigate to the directory containing the .IVL or .sic file.
6. Click **Open**. The software informs you that it is importing the data:

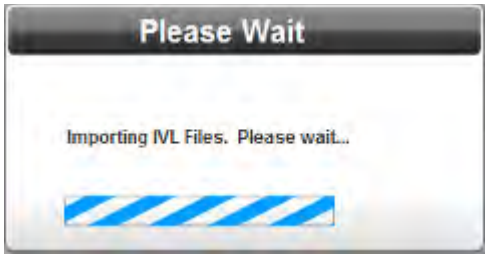

7. After the import is completed, you will be able to access the imported characters in the software interface.

Section 3.33 Restoring the InView Comms Module

Restores the InView Comms Module data. To restore the InView Comms Module:

1. Access the Configure:Maintenance dialog. See Managing InView Comms Module Maintenance.
2. Click **Restore**:

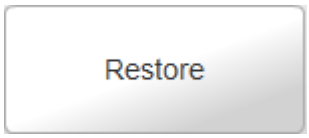

3. From the file dialog that appears, select the backup file you wish to use to restore your InView Comms Module and click **Open**:

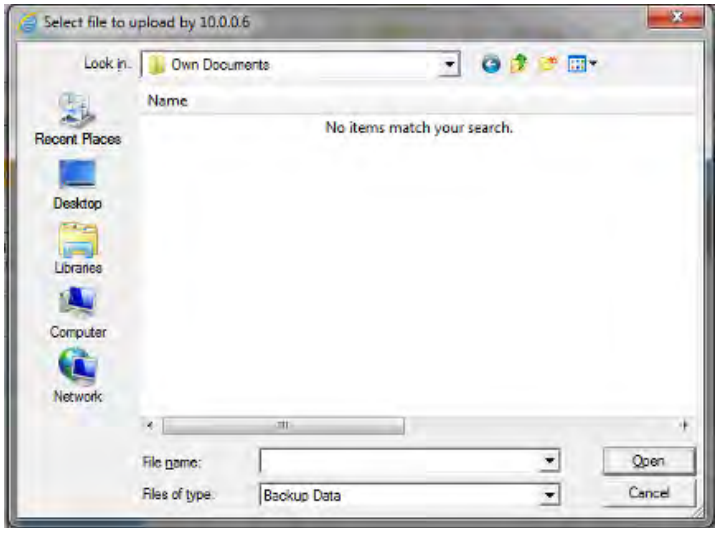

The software restores the data.

Section 3.34 Exporting InView Comms Module Messages

You can export InView Comms Module messages to other InView Comms Modules on the network, or to a file on a local personal computer.

To export an InView Comms Module message file:

1. Access the **Configuration:Maintenance** menu by clicking the Maintenance icon:

The Maintenance dialog appears:

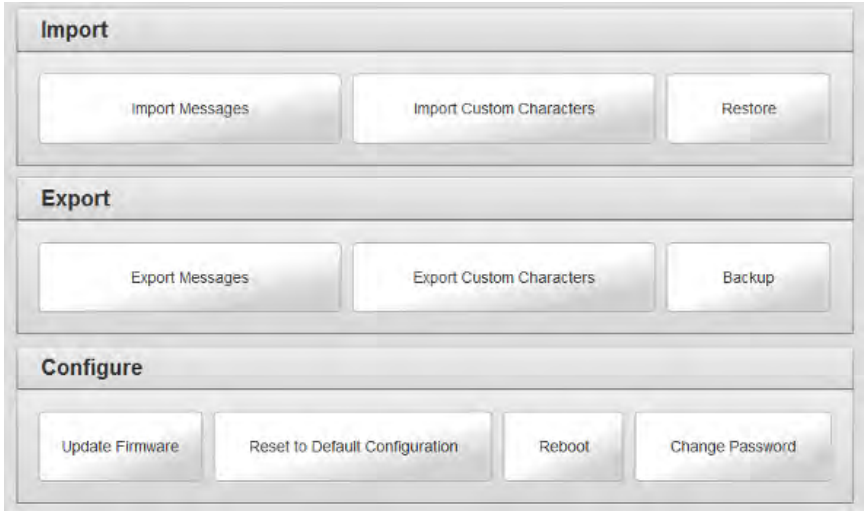

2. Click the **Export Messages** button:

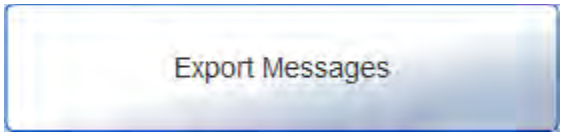

The following dialog appears:

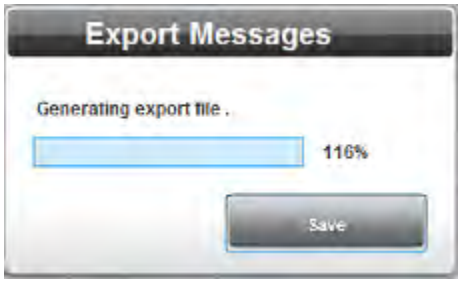

3. Click **Save** to bring up the download location:

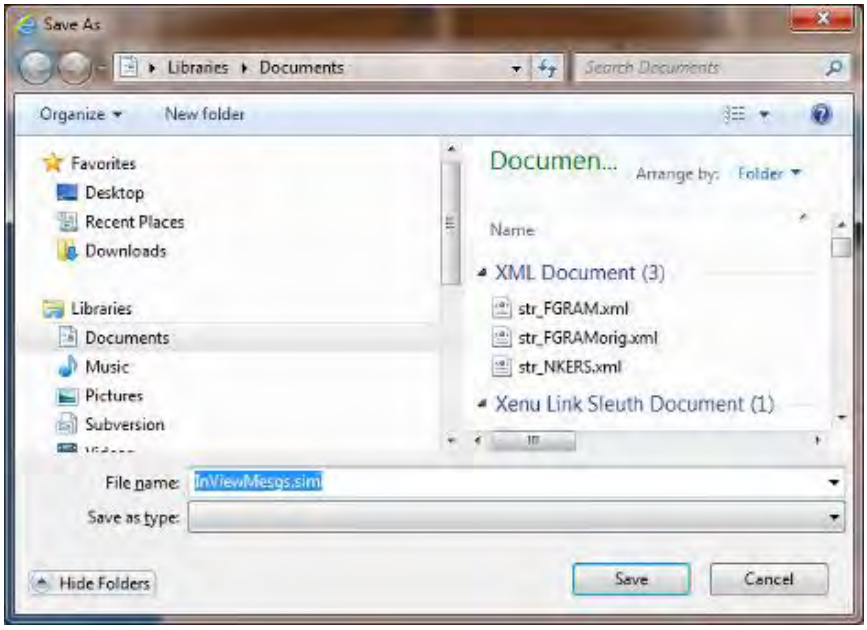

- Navigate to the folder where you wish to save the exported messages and enter a name. The exported file has a **.sim** (Spectrum InView Message file) extension. To ensure continued file access, the file must have the extension added.
- Click **Save** to save exported message in the designated file and to exit.

- **Cancel**. Exits without saving the exported messages.

Section 3.35 Exporting Custom Characters

You can export custom characters to a file.

To export an InView Comms Module file:

1. To access the **Configuration:Maintenance** menu, click the Maintenance icon:

The Maintenance dialog appears:

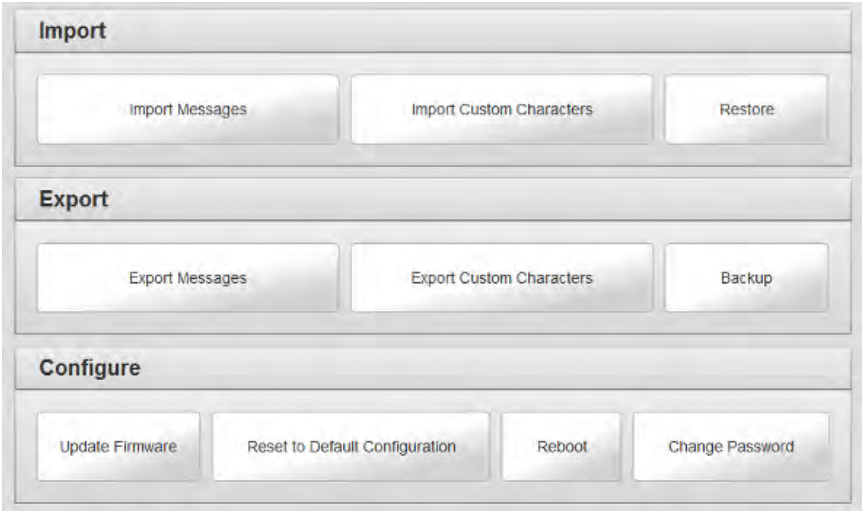

2. Click the **Export Custom Characters** button:

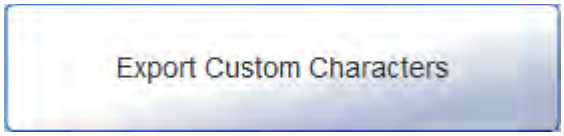

The following dialog appears:

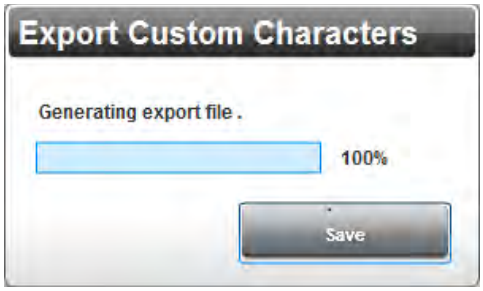

3. Click **Save** to bring up the download location:

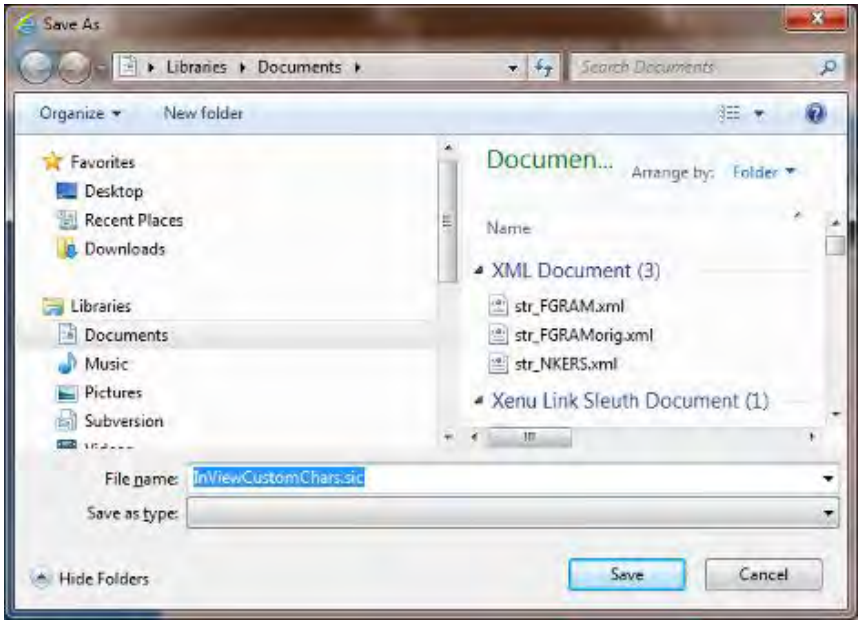

   - Navigate to the folder where you wish to save the exported characters file.
   - Click **Save** to save the exported file. The exported file has a **.sic** (Spectrum InView Custom Character file) extension. To ensure continued file access, the file must have the extension added.

- **Cancel**. Exits without saving the exported characters file.

Section 3.36 Backing Up the InView Comms Module

Backs up the InView Comms Module data. To back up the InView Comms Module:

1. Access the Configure:Maintenance dialog. See Managing InView Comms Module Maintenance.
2. Click **Backup**:

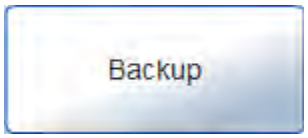

The software creates a backup file and informs you of progress:

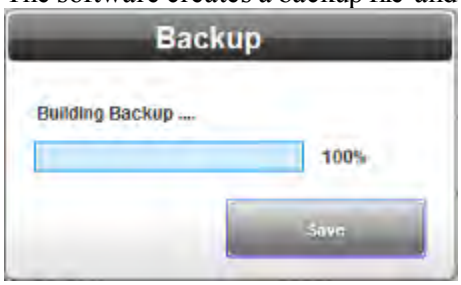

3. When progress reaches 100%, click **Save**. The following dialog appears:

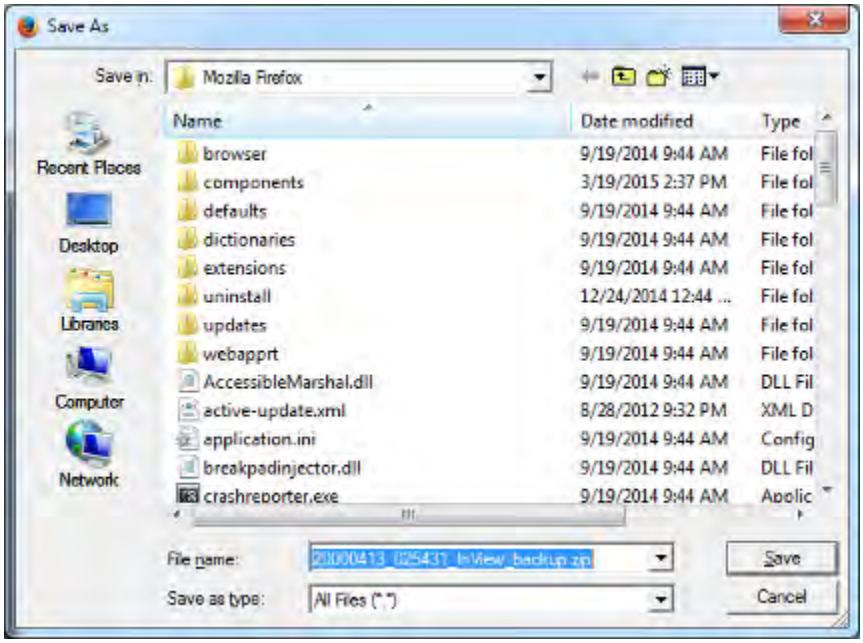

4. If necessary, navigate to the folder where you wish to save your backup and click **Save**.

   The software saves the InView Comms Module backup file with date, time, and code.

Section 3.37 Updating Firmware

Replaces firmware on the InView Comms Module. The firmware is the software that runs your InView Comms Module. Replacing firmware does not change or replace your data or settings on the InView Comms Module. While you install the firmware, the software informs you what is happening during the installation, and lets you know whether the process is successful. This takes several minutes.

To replace firmware:

1. Access the Configure:Maintenance dialog. See Managing InView Comms Module Maintenance
2. Click **Update Firmware**:

The following dialog appears:

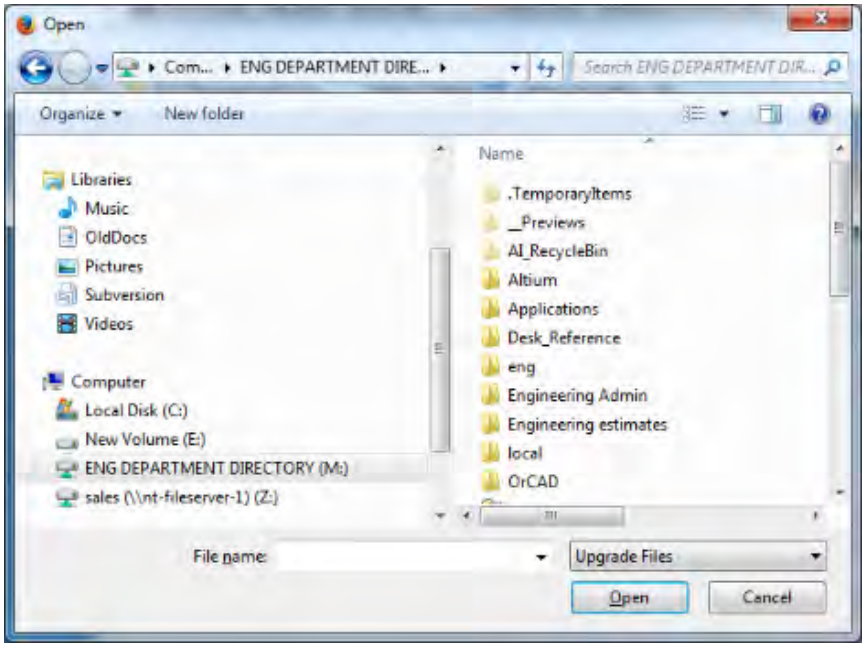

3. Navigate to the directory in which your firmware file is located. This directory can be on a personal computer drive or a network server. Select the correct file. Example: **InView Comms-*n.n.n*.fup** where *n.n.n* is the version. Your version may be different.

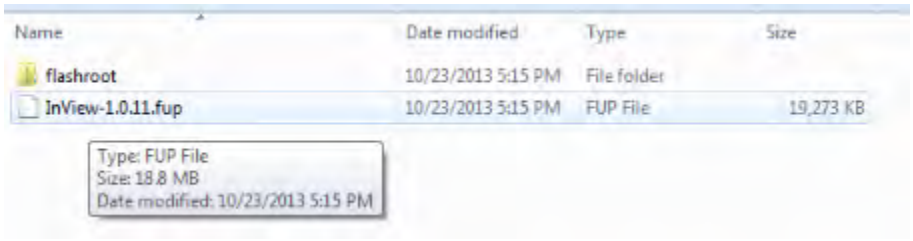

The software downloads the selected firmware to the InView Comms Module. It installs the software, displaying a progress bar during the installation:

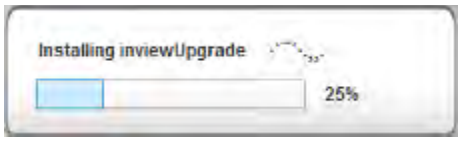

The software informs you **Firmware upgrade is completed** when done:

Section 3.38 Resetting the InView Comms Module to Default Configuration

If the InView Comms Module has stopped functioning for some reason, you may not need to reset an InView Comms Module to its default configuration. First try restarting the InView Comms Module using the software. This restarts the Comms Module using the current configuration. To reset the InView Comms Module and retain its current configuration, you may also press the **Reset** switch gently and briefly on the InView Comms Module board. You can now either remove power, or wait a short period. If you do not remove power, the InView Comms Module reboots itself after a short period.

If either a software reboot or a hardware reset fails to restart the InView Comms Module normally, you can reset the InView Comms Module to its default configuration using either the software or the **Reset** switch on the InView Comms Module board. If you wish to reset the InView Comms Module to its factory default settings using the hardware, press the **Reset** switch for an interval of thirty seconds. The InView Comms Module resets itself to its factory configuration settings. If the reset fails, call Technical Services for further help.

Pressing the Reset button for less than five seconds shows the IP address of the Comms Module on the attached display.

To reset the InView Comms Module to these settings using software:

1. Access the Configure:Maintenance dialog. See Managing InView Comms Module Maintenance Options.
2. Click **Reset to Default Config**:

   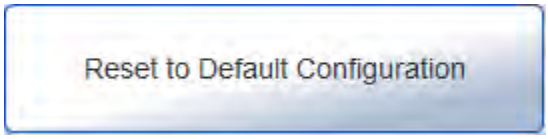

   The following dialog appears:

3. Confirm the reset:
   - **Yes**. Restores the factory default settings and exits.
   - **Cancel**. Exits without restoring the factory default settings.
4. The software informs you when the reset is done. To continue, click **OK**:

   The software restores the initial settings. For example, your InView Comms Module name is restored to **InView Comms Module**.

Section 3.39 Rebooting the InView Comms Module

Restarts the InView Comms Module. To reboot the InView Comms Module:

1. Access the Configure:Maintenance dialog. See Managing InView Comms Module Maintenance Options.
2. Click **Reboot**:

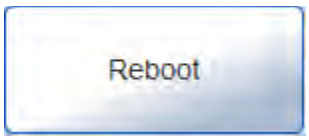

The following dialog appears:

3. Confirm the reboot:
   - **Yes**. Reboots the InView Comms Module and exits the InView Comms Module user login.
   - **No**. Exits without rebooting the InView Comms Module.

   The software reboots the InView Comms Module:
4. After about five minutes, reload your web browser and log back in to your InView Comms Module.

Section 3.40 Configuring Security Setup for the InView Comms Module

The InView Comms Module allows you to change password access for the InView Comms Module web page. To guard against unauthorized access to settings and log information, access is restricted by password. The InView Comms Module does not use user accounts or multiple passwords.

To change the password for accessing the InView Comms Module:

1. From the InView Configuration Work Area, select the following icon:

The Serial Communications Setup dialog appears:

2. View or specify the following options:
   - **Old Password**. Enter the password you used to log onto the InView Comms Module software.
   - **New Password**. Enter the new password.
   - **Confirm**. Re-enter the new password for confirmation.
   - **Submit**. Saves the new password on the InView Comms Module and exits.
   - **Cancel**. Exits without saving the new password on the InView Comms Module.

Section 3.41 Configuring Tools

You can change display and message queue information.

To add, modify, clear, or delete display and message queue information:

1. From the InView Configuration Work Area, select the following icon:

The Configure Tools dialog appears:

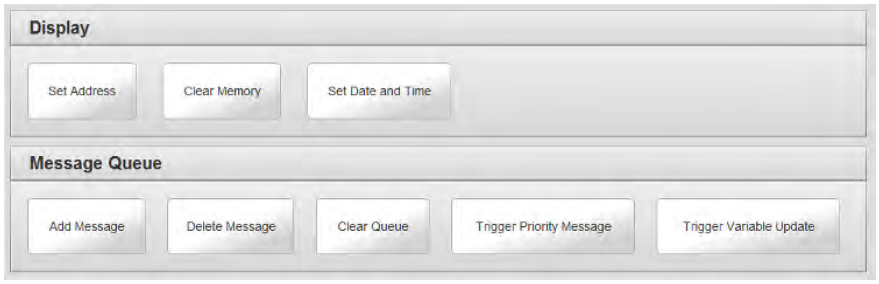

2. View or specify the following options for displays and the message queue:

Icon	Function	Access
Set Address	Set a display address:	Setting a Display Address
Clear Memory	Clear display memory:	Clearing Display Memory
Set Date and Time	Set date and time:	Setting Date and Time
Add Message	Add message to queue:	Adding Message to Queue
Delete Message	Delete message from queue:	Deleting Message From Queue
Clear Queue	Clear message queue:	Clearing Message Queue
Trigger Priority Message	Trigger priority message:	Triggering Priority Message
Trigger Variable Update	Trigger variable update	Triggering Variable Update

Section 3.42 Adding Message to a Queue

Once you have downloaded a message group, you can add it to a message queue. This queues a message to run on a single display, or all displays. Once queued, whether the message is visible or not depends on whether a higher priority message is already running on the display. The maximum number of messages that can run is 64. You may also add messages to a queue, delete messages from a queue, or trigger a priority message from the Messages dialog.

You may add a message to a queue from the Tools option, or from the Messages option (see Adding Messages)

To add a message to the queue of a display:

1. From the InView Configuration Work Area, select the following icon:

The Configure Tools dialog appears:

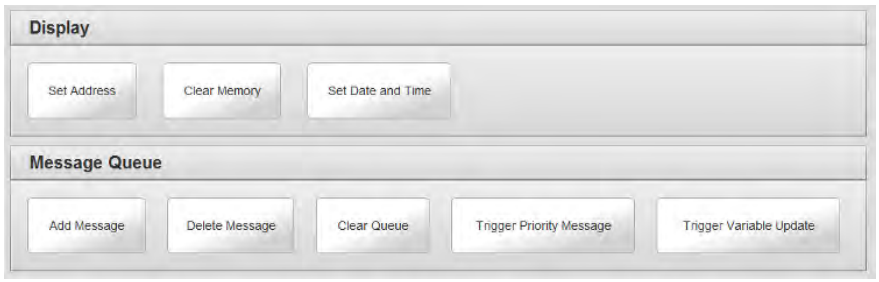

2. Select the Add Message icon:

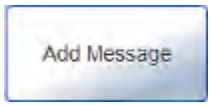

3. The Add Message To Queue dialog appears. Enter information in the listed fields.

- **Display**. From the dropdown list, select the display for which you wish to add the message to the queue.
- **Serial Address**. Lists the current serial display address (1 to 254). If you do not know what this address is, power cycle the InView display and write down the address you see displayed on startup.

- **Apply to All Displays**. Specify whether to apply the add message to queue instruction to all displays accessible from the InView Comms module.
- **Message ID**. Specifies the message ID (number 1 to *n* that is associated with the message when you create the message.

4. When finished making changes, click either of the following to exit:
   - **Submit**. Saves changes on the InView Comms Module and exits.
   - **Apply**. Applies the change to the display(s).

Section 3.43 Deleting Message From Queue

To delete a message from a queue:

1. Access the Tools dialog:

   See Adding Message to Queue

   The Configure Tools dialog appears:

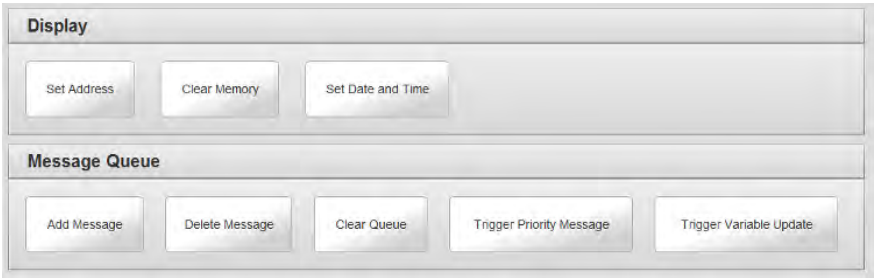

2. Select the Delete Message icon:

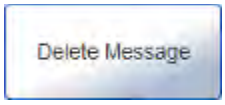

3. The Delete Message From Queue dialog appears.

   Enter information in the listed fields.

   - **Displays**. From the dropdown list, select the display for which you wish to delete the queued message.
   - **Serial Address**. Lists the current serial display address (1 to 254). If you do not know what this address is, power cycle the InView display and write down the address you see displayed on

startup.

- **Apply to All Displays**. Specify whether to apply the delete message from queue instruction to all displays accessible from the InView Comms module.
- **Message ID**. Specifies the message ID (number 1 to *n* that is associated with the message when you create the message.

4. When finished making changes, click either of the following to exit:
   - **Submit**. Saves changes on the InView Comms Module and exits.
   - **Apply**. Applies the change to the display(s).

Section 3.44 Clearing Message Queue

You can clear the queue of active messages that are running on a specific InView display. Once the queue is cleared, the background message (if any) is displayed. Even though the messages are cleared from the queue, they remain in the display's memory. Before clearing the message queue, the InView message display must be running, and you must know the address of the display.

To clear the message queue of a display:

1. From the InView Configuration Work Area, select the following icon:

The Configure Tools dialog appears:

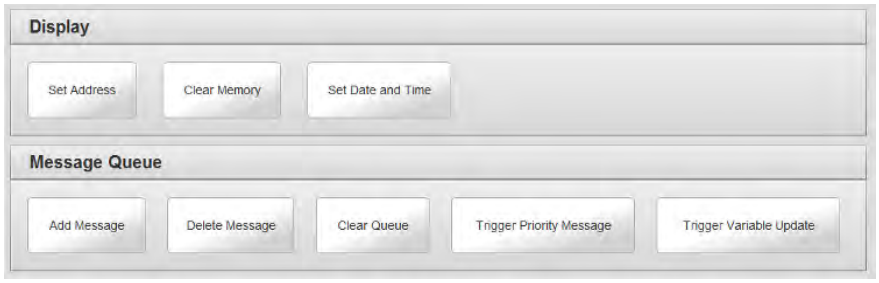

2. Select the Clear Queue icon:

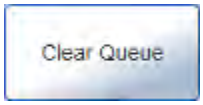

3. The Clear Message Queue dialog appears. Enter information in the listed fields.

- **Display**. From the dropdown list, select the display for which you wish to clear the message queue.
- **Serial Address**. Lists the current serial display address (1 to 254). If you do not know what this address is, power cycle the InView display and write down the serial address you see displayed on startup.
- **Apply to All Displays**. Specify whether to apply the clear message queue to all displays accessible from the InView Comms module.

4. When finished making changes, click either of the following to exit:
   - **Submit**. Saves changes on the InView Comms Module and exits.
   - **Cancel**. Exits without saving changes on InView Comms Module.

Section 3.45 Triggering a Priority Message

Once you have a message created, you can trigger the message as a priority message to one display, or all displays.

To trigger a priority message one or more displays:

1. From the InView Configuration Work Area, select the following icon:

The Configure Tools dialog appears:

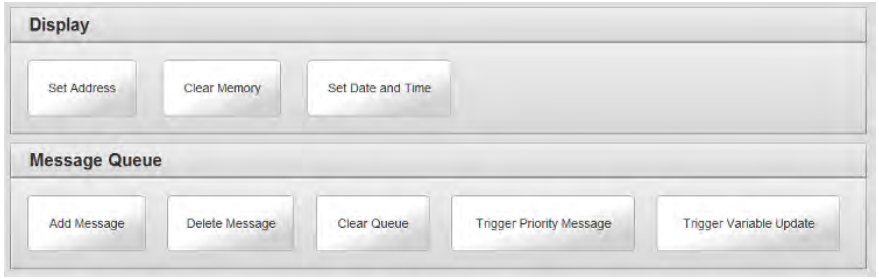

2. Select the Trigger Priority Message icon:

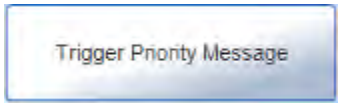

3. The Trigger Priority Message dialog appears. Enter information in the listed fields.

- **Display**. From the dropdown list, select the display for which you wish to trigger the priority message.
- **Serial Address**. Lists the current serial display address (1 to 254). If you do not know what this address is, power cycle on the InView display and write down the display serial address you see displayed on startup.
- **Apply to All Displays**. Specify whether to apply the trigger priority message to all displays accessible from the InView Comms module.
- **Message ID**. Specifies the message ID (number 1 to *n* that is associated with the message when you create the message.

4. When finished making changes, click either of the following to exit:
   - **Submit**. Saves changes on the InView Comms Module and exits.
   - **Apply**. Applies the change to the display(s).

Section 3.46 Triggering a Variable Update

Once you have a variable created, you can trigger an update to the variable on the display directly from the Comms Module.

To trigger a variable update on one or more displays:

1. From the InView Configuration Work Area, select the following icon:

The Configure Tools dialog appears:

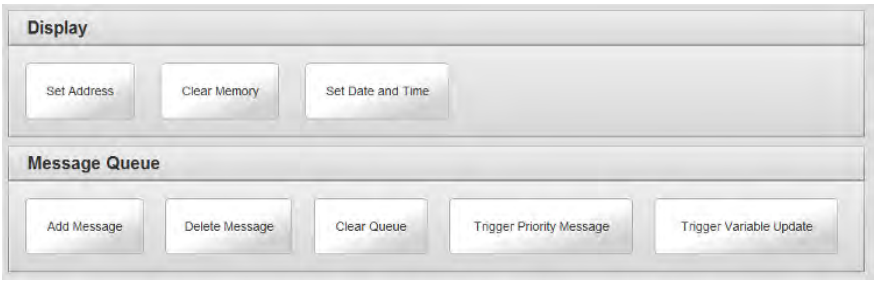

2. Select the Trigger Variable Update icon:

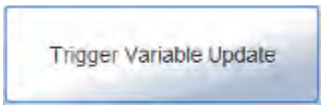

3. The Trigger Variable Update dialog appears. Enter information in the listed fields.

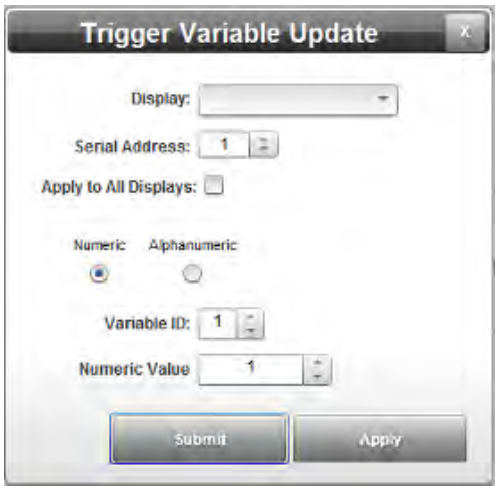

- **Display**. From the dropdown list, select the display for which you wish to trigger the variable update.
- **Serial Address**. Lists the current serial display address (1 to 254). If you do not know what this address is, power cycle on the InView display and write down the display serial address you see displayed on startup.
- **Apply to All Displays**. Specify whether to apply the trigger variable update to all displays accessible from the InView Comms module.
- **Variable ID**. Specifies the variable ID (number 1 to *n* that is associated with the variable when you create the variable. Variable may be **Numeric** or **Alphanumeric**:
  - *Numeric Value*. Specifies number to use when triggering the update. Example: **0**, **1**.
  - *Alphanumeric Value*. Specifies number or a letter.

4. When finished making changes, click either of the following to exit:
   - **Submit**. Saves changes on the InView Comms Module and exits.
   - **Apply**. Applies the change to the display(s).

Section 3.47 Viewing Diagnostics, Storage, and Log Information

Lists the following sets of information:

- The Processes groups list whether processes are running that are needed for your software to function properly.
- The Resources group shows how much of the system resources are being used for available memory, Flash memory, and the central processing unit (CPU).
- The Connectivity group allows you to test whether the Comms module is able to access a specific message server.

1. From the InView Configuration Work Area, select the following icon:

The following dialog appears:

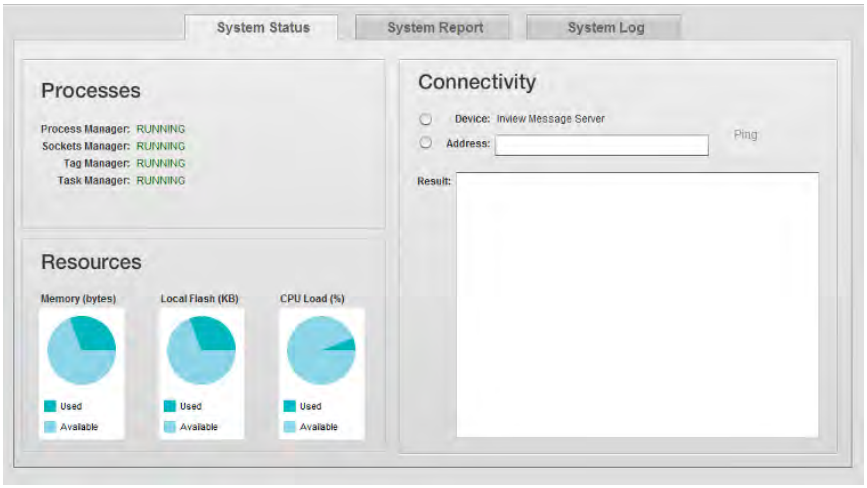

2. View the following options:
   - **Processes**. Lists all InView Comms Module processes and whether or not they are running. If any of these processes has stopped, please restart your InView Comms Module:
     - *Process Manager*. Shows whether this process is running or stopped.
     - *Sockets Manager*. Shows whether this process is running or stopped.
     - *Tag Manager*. Shows whether this process is running or stopped.
     - *Task Manager*. Shows whether this process is running or

stopped.

- **Resources**. Graphically shows available memory, Flash memory, and central processing unit (CPU) load:
  - *Memory (bytes)*. To view amount of memory usage in bytes and percentages, mouse over the graphic.
  - *Local Flash (KB)*. To view amount of memory usage in kilobytes and percentages, mouse over the graphic.
  - *CPU Load %*. To view CPU load in percentages, mouse over the graphic.
- **Connectivity**. Allows you to attempt to ping any IP address or server name from the InView Comms Module:
  - *Device*. To ping a message server by name, select the option; then choose the device from the dropdown list (if present).
  - *Address*. To ping a device by address, select the option; then enter the IP address for the device.
  - *Ping*. When clicked, pings the specified device.
  - *Result*. Tells you whether ping was successful and provides information about the ping.

    Whether or not the ping is successful is shown in a Test Results dialog and in the **Result** text box:
    - *Successful ping message* (for a device) appears in the **Result** text box:

      PING 10.0.0.232 (10.0.0.232): 56 data bytes

      64 bytes from 10.0.0.232: icmp_seq=0 ttl=63 time=8.312 ms

      64 bytes from 10.0.0.232: icmp_seq=1 ttl=63 time=1.414 ms

      64 bytes from 10.0.0.232: icmp_seq=2 ttl=63 time=1.424 ms

      --- 10.0.0.232 ping statistics ---

      3 packets transmitted, 3 packets received, 0% packet loss

      round-trip min/avg/max/stddev = 1.414/3.717/8.312/3.249 ms
    - *Unsuccessful ping message* appears in the **Result** text box:

      inview_message_server - Unsuccessful (10.0.0.8): 56 data bytes

      Ping: Success! 0.92/ms round-trip time

      EthernetIP: CPU not in slot 0

3.47.1 Viewing System Report Information

Lists the following report information:

- Product ID/Model name/Serial number.
- Firmware revision.
- GUI revision.
- Eth1 address and network information (including MAC address).
- Eth2 address and network information (including MAC address).
- User-defined name.
- PLC Message server details.
- Display profile information.

1. From the InView Configuration Work Area, select the following icon:

The following dialog appears:

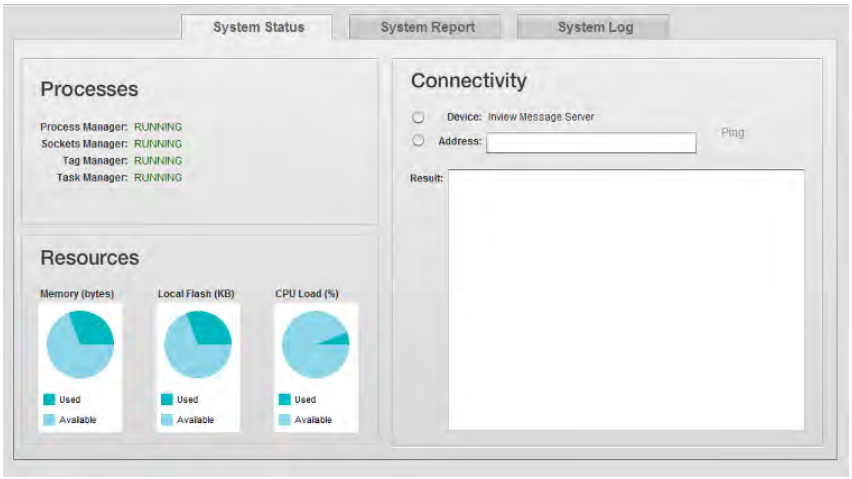

2. Select the System Report tab.

The following dialog appears:

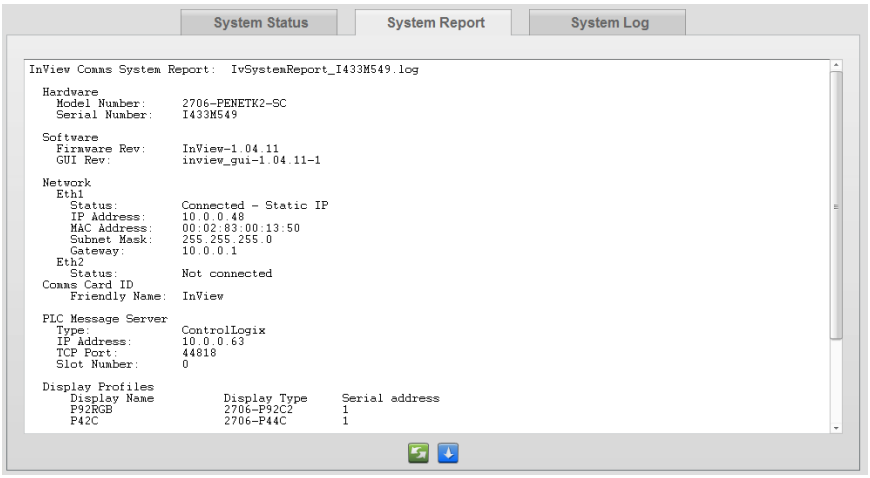

3. View the following options:
   - ***report_information***. Shows information for selected display, including hardware, software, network, PLC server and display profile settings.
   - **Refresh**. Refreshes report information. Click the following icon to update:

   - **Download**. Allows you to download the report contents to a file. Click the following icon to download:

     The following dialog appears

     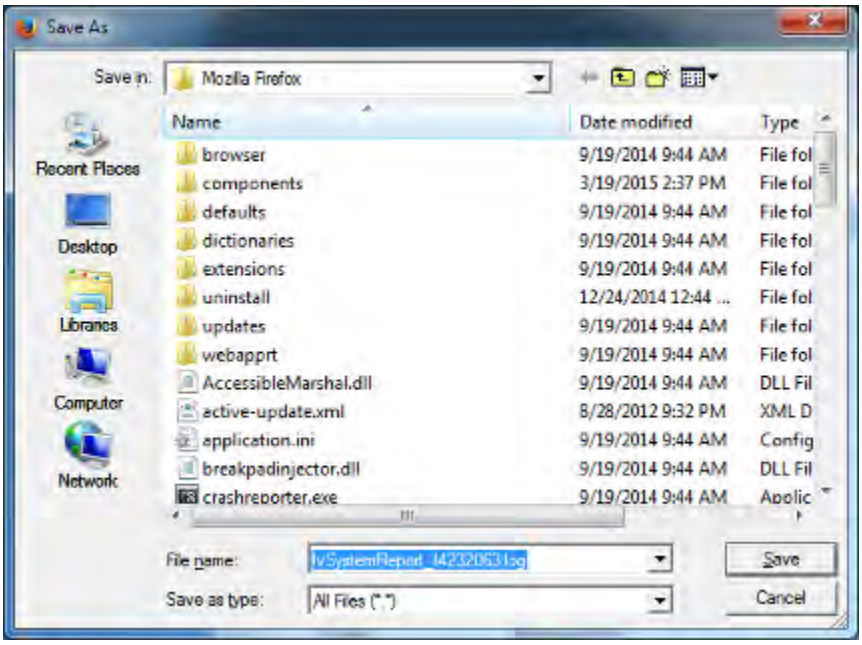

     Navigate to the directory where wish to store the saved report, edit the file name as needed, and click **Save**. The report saves.

3.47.2 Viewing System Engineering Error Log Data

Shows current InView Comms Module system engineering error details.

You can navigate through the pages using the buttons provided, or use the slider or next or previous page buttons.

The errors are viewed most recent date first, and as either LIVE or HISTORICAL:

- LIVE mode. Shows continual updates every ten seconds when you are on first page of logs, and you do not have any form of filtering activated. Default setting.
- HISTORICAL mode. When you move past the first page in the logs, or when you have a filter active, this mode activates. You do not receive updates when in this mode.

To view the logs:

1. Click the System Log tab on the Diagnostics dialog:

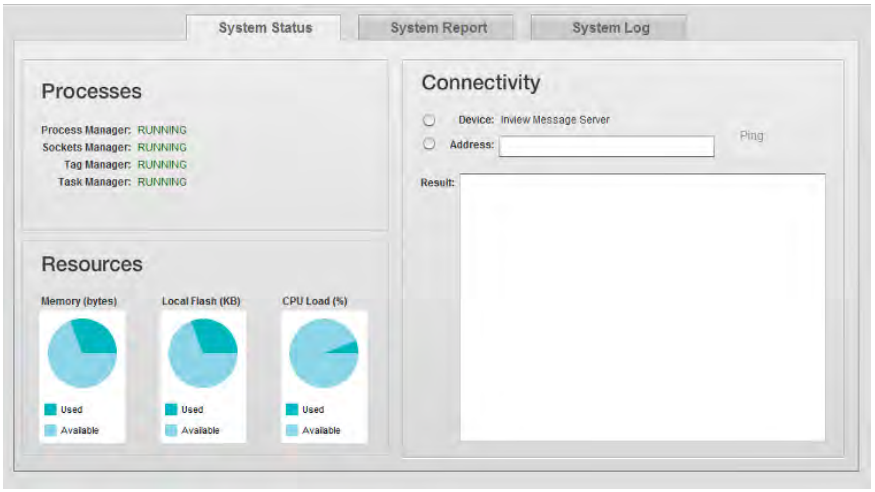

2. The following Engineering Log dialog appears:

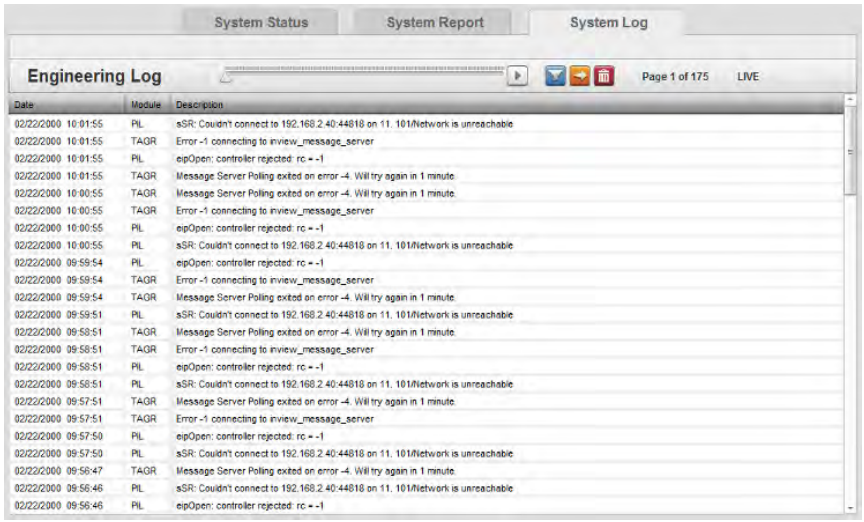

3. View the following options.
   - **Date**. Lists time and date stamp associated with the error as *MM/DD/YYYY HH/MM/SS* where *MM* is month, *DD* is day, *YYYY* is year, *HH* is hours, *MM* is minutes, and *SS* is seconds.
   - **Module**. Lists error module.
   - **Description**. Lists error description.
4. To filter error log entries by date range, click the following icon:

   - The Filter dialog appears. View or specify the following options:

     - **From**. Defines a starting date in the date range (must be earlier than ending date). Enter a new date in the field provided, or select a date from the calendar. To make changes, click the field or the calendar.

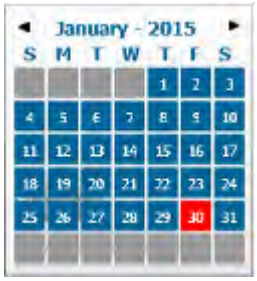

     - **To**. Defines an ending date in the date range (must be

later than starting date). You can also select the date from a calendar, as shown above.

- **Clear**. Clears filtering selections.
- **Apply**. Applies filtering selections.
- **Submit**. Saves changes on InView Comms Module and exits.
- **Cancel**. Exits without saving changes on InView Comms Module.

5. To export and download the engineering error data to a storage device, click the following icon:

- Confirm you wish to download the data:

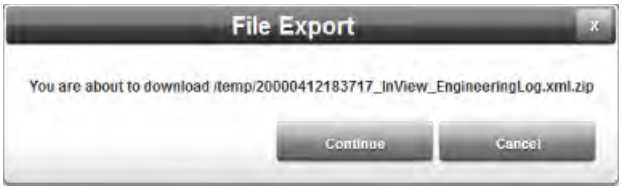

  - **Continue**. Brings up download location:

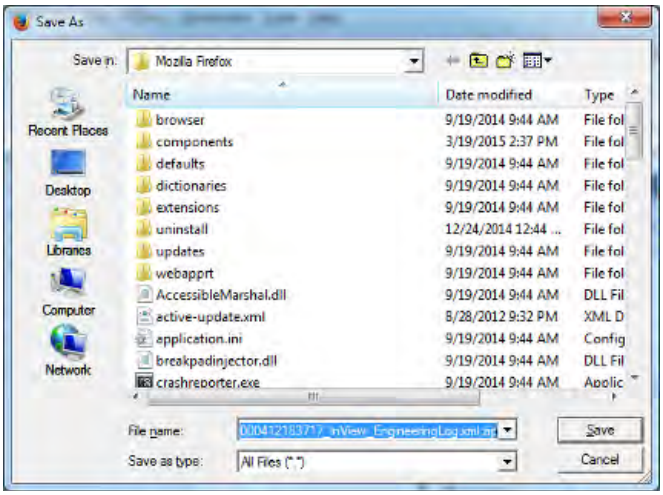

    - Navigate to the folder where you wish to save the log.
    - Click **Save** to download data from InView Comms Module and exit.
  - **Cancel**. Exits without downloading data from InView Comms Module.

6. To permanently delete all engineering error log entries, use the following icon:

7. Confirm the data purge:

- **Yes**. Purges all engineering error log data on InView Comms Module and exits.
- **Cancel**. Exits without purging engineering error log data on InView Comms Module.

Section 3.48 Configuring Serial Communications Setup

The InView Comms Module provides RS-232/RS-485 serial communications via terminal block J5.

InView Comms Modules replace previous versions as follows:

Pinout	RS-232	RS-485/422 Half Duplex	RS-485/422 Full Duplex
1	CD		
2	TXD	T-/R-	T-
3	RXD		R+
4	N/C	N/C	N/C
5	Isolated Common/Signal Ground	Isolated Common/Signal Ground	Signal Ground
6	N/C	N/C	N/C
7	CTS		R-
8	RTS	T+/R+	T+
9	RI		
10	Frame/Shield Ground		

To configure the serial port for the InView Comms Module:

1. From the InView Configuration Work Area, select the following icon:

The following dialog appears:

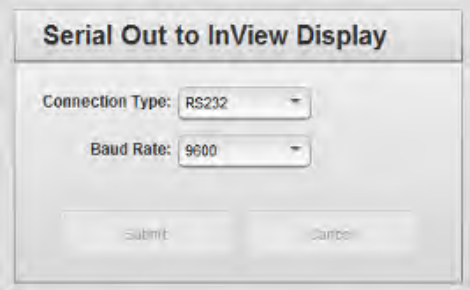

2. View or specify the following options:
   - Serial Out to InView Display. Specify:
     - *Connection Type*. Defines whether to use the InView Comms Module's RS-232 or RS-485 serial communication. RS-232 is a single-drop protocol (can only connect one device per port) that usually runs on cables shorter than fifty feet, and may be susceptible to noise. Select this option for point-to-point communication on the serial port. RS-485 is a multi-drop protocol (up to thirty-two devices per port), that runs up to five hundred feet (or more with repeaters), and is noise resistant. Select this option for multi-point network communication.
     - *Baud Rate*. Specifies the speed at which the serial port sends data. Rates are **9600**, **19200**, and **38400**. All displays except for the 2706-9*x*-SC use only the 9600 baud rate. Select the desired rate from the dropdown menu.
   - **Submit**. Saves the entered connection data on InView Comms Module. The software informs you that the data settings were successfully modified. Click **OK**.
   - **Cancel**. Exits without saving data from InView Comms Module.

Section 3.49 Viewing Eth1 Communications Status Information

You may view the Eth1 local network static or DHCP connection status (from the Network Setup dialog) on the title bar.

To view the information:

1. Mouse over the following icon on the menu bar:

   - When green, the Eth1 connection is configured with an IP address.
   - When red, the Eth1 connection is not active.

The following dialog appears:

2. View the following options:
   - **Connection Status**. Identifies whether, and how, the InView Comms Module communicates via the Internet:
     - *connected*. InView Comms Module is connected to the Internet.
     - *not connected*. InView Comms Module is not connected via the Internet.
   - **IP Address**. Lists InView Comms Module IP Address.
   - **Subnet Mask**. Lists the subnet mask for the Eth1 setting. The default value **is 255.255.255.0**.
   - **Gateway**. Lists Gateway address.
3. To modify connection information, double click the popup menu. This opens the Network Setup dialog:

   See Configuring WAN Settings for the InView Comms Module.

Section 3.50 Viewing Eth2 Communications Status Information

You may view the InView Comms Module DHCP or Static IP Eth2 settings (from the Network Setup dialog) on the title bar:

To view the information:

1. Mouse over the following icon on the menu bar:

   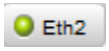

   - When green, the WAN connection is active.
   - When red, the WAN connection is not active.

   The following dialog appears:

2. View the following options:
   - **Connection Status**. Identifies whether, and how, the InView Comms Module communicates via the Eth2:

- *connected*. InView Comms Module is connected via Eth2.
- *not connected*. InView Comms Module is not connected via Eth2.

- **IP Address**. Lists InView Comms Module IP Address.
- **Subnet Mask**. Lists the subnet mask for the WAN setting. The default value is **255.255.255.0**.

3. To modify connection information, double click the popup menu. This opens the Network Setup dialog:

   See Configuring WAN Settings for the InView Comms Module.

Section 3.51 Viewing Help Information

To view help information:

1. Click the following icon on the menu bar:

   The following dialog appears:

   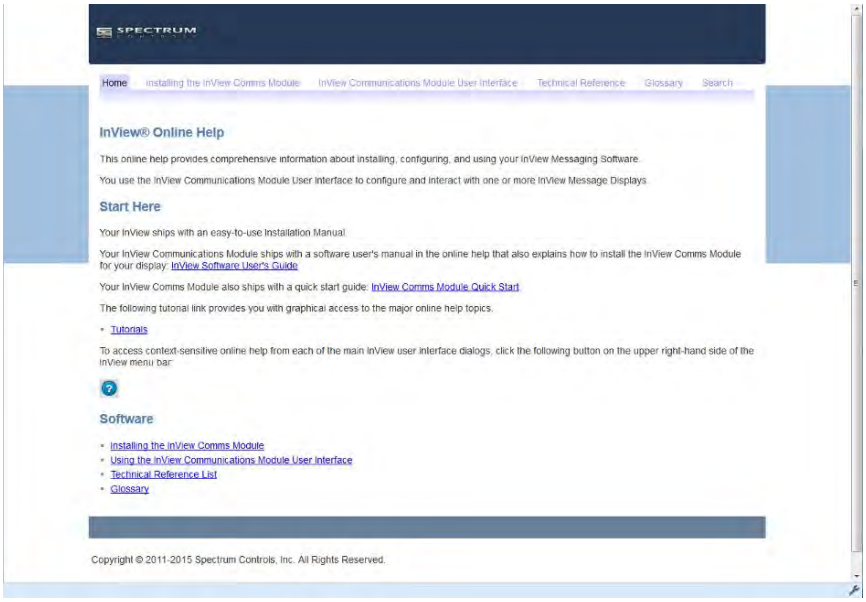

2. Either navigate to the topic of interest using the provided links, or search for a term using the search capability:
   - For context-sensitive help, select the help icon from the dialog that is currently displayed.
   - For a software table of contents, see Using the InView Comms Module User Interface.

Chapter 4
Technical Reference

The technical reference contains reference material that provides greater detail about some of the InView functions than you find in the general body of the documentation.

Section 4.1 InView Comms Modules Messages

InView Comms Modules Messages appear when a user enters incorrect information, or makes an incorrect selection. Most messages are self-explanatory:

Message	Explanation	Possible Cause
ALL the current messages and configured displays will be replaced. Do you wish to continue?	User Message. If you continue with the import of a new set of messages, all the existing messages and configured display data on the InView Comms Module will be replaced by the incoming message and display data. Confirm that you wish to do this, or cancel the import.	Choose whether to continue and delete your existing data, or cancel to retain the data.
Addresses must be unique.	User Input Error. You specified an address for a message server that was not unique.	Specify a unique address.
Address Word Offset cannot be '8'	User Input Error. You entered a word offset of 8 and this is not a valid offset for an SLC or MicroLogix PLC	Change the offset.
A Memory range conflict exists in the *named_offset*	User Input Error. You see this message when there is a range overlap in the Message Trigger, or Message Data offset value, or the Message Data Array size.	Change the relevant value to one where no range overlap exists.
Are you sure you want to reboot the InView Comms Module?	User Message. You see this message when you choose the option to reboot the InView Comms Module.	This will shut down and then reboot the InView Comms Module. Confirm that this is what you wish to do, or cancel the reboot.
Are you sure you want to reset to the default configuration?	User Message. You see this message when you choose the option to reset the InView Comms Module to factory default settings.	The reset will erase all user-defined data on the module. Confirm that this is what you wish to do, or cancel the reset.

Message	Explanation	Possible Cause
Array Size must be an even number.	User Input Error. You see this error because you entered an odd number in the array size field.	Enter an even number for the array size.
Block size is: *block size* bytes.	User Message. Identifies number of bytes in the block of interest. If the block size is greater than the block limit, you will see an additional error message showing the actual range.	Reduce the block size to a valid value.
Cannot parse XML data, Unable to Retrieve Data	Error Message. Error Log: Sockets Manager Message. The software was unable to receive the requested data.	You may see this message as a result of a low-level error. Contact Technical Service.
Custom character library not found: *library name*. Any references to the missing custom characters will be stripped from the message.	User Input Error. You wish to delete a library that is currently being referenced in a message.	If you do this, the characters from the library that are currently being used in messages will be removed from the messages.
Data successfully modified	User Message. You see this message when you change information in a dialog and the software successfully adds your changes.	No further action is needed.
Display Name '*name display data* already exists.	User Input Error. You see this message because you entered a display name that already exists.	Enter a different name.
Display Specs not found for *display_type*	User Input Error. You should never see this message. If you do, essential device information is missing from the configuration.	Try deleting the device from the software and adding it back in. If the problem continues, call Technical Services.
Invalid Eth1 Subnet Mask	User Input Error. The Eth1 subnet mask entry must be from the following list: • 255.128.0.0, 255.192.0.0, 255.224.0.0, 255.240.0.0, 255.248.0.0, 255.252.0.0, 255.254.0.0, 255.255.0.0, 255.255.128.0, 255.255.192.0, 255.255.224.0, 255.255.248.0, 255.255.252.0, 255.255.254.0, 255.255.255.0, 255.255.255.128, 255.255.255.192, 255.255.255.224, 255.255.255.240, 255.255.255.248, 255.255.255.252	You see this message if your Eth1 subnet mask does not match one of these entries.

Message	Explanation	Possible Cause
Invalid Eth2 Subnet Mask	User Input Error. The Eth2 subnet mask entry must be from the following list: • 255.128.0.0, 255.192.0.0, 255.224.0.0, 255.240.0.0, 255.248.0.0, 255.252.0.0, 255.254.0.0, 255.255.0.0, 255.255.128.0, 255.255.192.0, 255.255.224.0, 255.255.248.0, 255.255.252.0, 255.255.254.0, 255.255.255.0, 255.255.255.128, 255.255.255.192, 255.255.255.224, 255.255.255.240, 255.255.255.248, 255.255.255.252	You see this message if your Eth2 subnet mask does not match one of these entries.
library name already exists	User Input Error. You see this message when you entered a library name that matches one that already exists.	Enter a different library name.
Message ID is not an integer: *id*	User Input Error. You see this message if you entered any other value than a whole number for a message ID.	Use a whole number for your message ID.
Message ID must be between 1 and 4000	User Input Error. You see this message if you enter a message ID that is beyond this range during an add, delete, clear, or trigger a message.	Check for the correct ID in your list of messages.
Messages import completed. Restarting InView services.	User Message. You see this message when you have successfully imported an .ivp, .ivl, or .csv message group file into the software.	No further action is needed. You will shortly see a message group appear in the GUI.
Message Group '*name* already exists	User Input Error. You see this message when you enter a new group name that exactly matches an existing group name.	Modify the group name to be unique.
Message Base Address and Variable Base Address cannot have the same value.	User Input Error. You see this message if you enter the same value in both fields.	You must enter a different value in each field.
Message Trigger Offset and Message Data Offset cannot have the same value	User Input Error. You see this message if you enter the same value in both fields.	You must enter a different value in each field.
Modified data has not saved. Are you sure you wish to navigate away from this screen?	User Message. You usually see this message when you have made changes in a dialog but have not chosen to save them.	Confirm that you wish to exit without saving your changes, or save the changes.
New Password and Confirmation do not match	User Input Error. The characters entered in the new password and confirmation fields were not an exact match.	Enter a new password and confirmation that match exactly.

Message	Explanation	Possible Cause
New Password must be at least eight letters	User Input Error. You entered a new password that is not eight letters long.	Add enough letters to the new password to make it at least eight letters long. Longer is stronger.
Old Password is incorrect	User Input Error. Under Security Setup, while trying to change an existing password to a new password, you entered an incorrect password for the existing (old) password.	You will have to enter the correct existing password before you can change the password.
The following new message IDs are duplicates: *id1*, *id2*	User Input Error. You see this error when you entered the same values as existing messages.	Enter different message IDs.
This message cannot be downloaded for one of the following reasons: There are messages that reference custom character libraries that cannot be found. This includes the following libraries: *library_names*; You must either upload the missing libraries or remove any references to them in the messages.	User Input Error. You see s message when you have imported existing messages that require characters such as bitmaps from libraries that are not already in libraries in the software.	Use the InView Comms Module software to import the missing library, or edit the messages to remove any obsolete characters.
This message cannot be previewed. It contains an element that does not fit within the display.	User Input Error. If you try to preview a message containing too long an embedded object in a 40H font, the software warns you it cannot display the object and does not show the preview:	Remove the embedded object, or separate the letters.
Trigger and Data must fit within a block of *number* bytes.	User Input Error. You have entered a value that exceeds the valid number of bytes allowed in the block.	Reduce the value entered so that it is equal to, or less than, the value shown in the error message, keeping in mind that the upper limit shown applies to a combined total of the Trigger and Data bytes.
Unable to receive data	Error Message. You see this message if the software was unable to successfully read and/or decompress data from a socket.	This is a low-level error.
Variable Trigger Offset and Variable Data Offset cannot have the same value.	User Input Error. You see this message if you enter the same value in both fields.	You must enter a different value in each field.

Message	Explanation	Possible Cause
You can only import bitmaps that are 16 × 16, 24 × 24, or 32 × 32	User Input Error. You tried to import a bitmap that did not fit the stated pixel counts.	Use a graphics software package to re-size your bitmap to fit the valid pixel counts.
You entered an incorrect password	User Input Error. You see this message if you entered one or more characters incorrectly in the **Password** field.	Re-enter the password correctly.
ALL the current messages and configured displays will be replaced. Do you wish to continue?	User Message. If you continue with the import of a new set of messages, all the existing messages and configured display data on the InView Comms Module will be replaced by the incoming message and display data. Confirm that you wish to do this, or cancel the import.	Choose whether to continue and delete your existing data, or cancel to retain the data.

Section 4.2 Concepts

The following list contains further information about concepts that you may encounter when setting up and using your InView Comms Modules:

Concept	Information
Application service provider (ASP)	Application service provider. Software that is provided over a network as a service to businesses that do not wish to, or cannot afford to, provide the software services for themselves.
API	Application Programmer Interface. Software that provides source code specifications intended for use by developers to create interfaces that communicate with each other using the code routines, data structures, and object classes that may be provided by the API.
CPU	Central Processing Unit. Carries out the instructions provided by a computer program. Normally these are basic logical, input/output, and arithmetical operations that form the basis of most software operations on a computer.
Domain Name Server (DNS)	This is the value that is associated with the Domain Name Server that your system interacts with on the Internet. Domain name servers convert text names that are easy to remember (google.com, spectrumcontrols.com) to IP address values.
DHCP Client	Dynamic Host Configuration Protocol Client. When you connect a new device such as a computer, or an InView Comms Module to a network that has a DHCP Server set up, the client device gets its IP address and other configuration information such as default gateway and domain name from a group of IP addresses maintained by the DHCP server for a defined time period.
Flash	A type of non-volatile memory that can be electronically erased and re-written.
FTP/FTPS	File Transfer Protocol/Secure File Transfer Protocol. A standard network protocol standard used to transfer files from one computer or host to another over a network that uses the TCP/IP communications protocol. FTP is therefore frequently used to transfer files over the Internet.

Concept	Information
FSF	Free Software Foundation. A non-profit foundation that supports free software. It wrote an operating system, GNU, that is similar to Unix but is free to all users. The General Public License (GPL) was written for distribution with the operating system but is frequently used for other free software packages.
Gateway Address	A gateway address is the default address of your network or web site. This is usually the next address in line when connecting to the Internet from a local area network and is usually the address assigned to a router or a firewall. Communications traffic goes out and comes in through the gateway.
GPL	GNU Public License. A license offered by the Free Software Foundation that covers licensing and distribution of free software.
HTTP/HTTPS	Hypertext Transfer Protocol. Communication protocols that access the world-wide web. HTTP protocol is not secure. HTTPS is secure. The S designation means that the transfer protocol is combined with the Secure Socket Layer/Transport Security Layer (SSL/TLS) protocol to provide secure communication for transactions such as payments across the Internet.
Internet Protocol (IP) Address	An IP address is a unique number that every device that connects to the Internet must have. Devices include personal computers, printers, removable hard drives, routers such as the InView Comms Module, and hardware firewalls. The addresses are assigned by your system administrator or by the protocol that is running on your device. The connection method you choose defines how that address is assigned.
Local Area Network (LAN)	A local area network (LAN) is a network that is normally made of devices such as personal computers that are located near to each other, such as in the same office building or plant.
LED	Light-emitting diode. Photons emitted from a semi-conductor provide indicator signals for electronic devices and various forms of lighting. An LED can emit light photons in different colors, including red, green, and purple, and different frequencies (visible, infrared, and ultraviolet). InView has no LEDs visible outside the Inview Comms Module case enclosure.
MAC	Media Access Control address. A unique set of numbers assigned to a network interface card and stored in the read-only memory. A MAC address may also be called the Ethernet hardware address or the physical address of a device.
NAT	Network Address Translation. Used for port forwarding and 'masquerading'.
PLC	Programmable logic controller. A digital computer used to automate industrial processes such as controlling electrical turbine operation, assembly lines, and manufacturing machinery. The controllers are frequently ruggedized to withstand difficult operating environments.
Static IP Address	A permanent IP address assigned to a computer by the network administrator or a domain name server.
Transmission Control Protocol, Internet Protocol (TCP/IP)	Transmission Control Protocol, Internet Protocol. A group of communications protocols used to communicate between computers on the Internet or other networks. Also called The Internet protocol suite. The suite sends data across the Internet in packets.

Section 4.3 Calculating Message Size

By calculating the message size, you can determine the maximum number of messages allowed for messages of a set length.

To calculate message size, use the following table:

Message Attribute	Size	Note
Heading *	9	A heading adds 9 bytes to a message.
Message*	11	A message always uses a minimum of 11 bytes
Char(0×0D)	1	Carriage return adds 1 byte to a message
Char(0×20-0×7F)	2	Standard ASCII characters add 1 byte to a message
Char(0×E0-0×FF)	2	Most international characters add 2 bytes to a message
Symbol	3	Select international characters add 3 bytes
Time	5	Inserting the time adds 1 byte to a message
Date	1	Inserting the date adds 2 bytes to a message.
Color	2	Each color added to a message (over and above the message attribute color) adds 2 bytes to the message.
Flash	2	Add 2 bytes each time flash is enabled for text and 2 bytes for each line that has flash enabled.
Font Style	4	Each font style added to a message adds 4 bytes to message.
Variable	9	Inserting a variable adds 9 bytes to a messages

* The Heading and Message include settings for mode, font, color, and justification. If using a font size of 24 or 32, add 2 bytes to the minimum message size.

The formula for maximum number of messages is:

200,000/Message Size = Maximum Number of Messages

- If the default message size is 100 bytes, then the maximum number of messages is 2,000.
- 200,000/100=2000
- If the default message size is 50 bytes, then the maximum number of messages is 4,000.
- 200,000/50=4,000
- If the default message size is 200 bytes, then the maximum number of messages is 1,000.
- 200,000/200=1,000

Section 4.4 About Communication Tags

You must define tag parameters for the InView message data and variable that is transferred to/from the controller for each communication protocol. The tags must be ASCII or Integer.

Tags are as follows:

Tag	Description
Message Trigger Address	The controller address that triggers a message to display.
Message Data Address	The starting address of the message data to be displayed.
Message Array Size	The size of the array, 16 to 230 characters (depending on the PLC message server), containing the message data. The maximum array size is dependent on the controller and must be an even integer.
Message Data Swap Bytes	(DeviceNet not available at present.) For DeviceNet, each message data tag can be set to swap (or not swap) the order of bytes within a 16-bit word. To enable swapping, select the check box. To disable swapping, uncheck the box.
Variable Trigger Address	The controller address that will trigger a message variable to display.
Variable Data Address	The starting address of the variable data to be displayed.
Variable Array Size	The size of the array, 15 to 255 characters, containing the variable data. The maximum array size is dependent on the controller and must be an even integer.
Variable Data Swap Bytes	(DeviceNet not available at present.) For DeviceNet, each variable data tag can be set to swap, or not swap, the order of bytes within a 16-bit word. To enable swapping, select the check box. To disable swapping, uncheck the box.

The maximum array size for the Ethernet protocol is as follows:

Controller Type	Array Size
SLC	80
MicroLogix	80
PLC	230
Compact with ENI	230
ControlLogix with ENI	230
FlexLogix with ENI	254

Section 4.5 How Message Priorities Work

Message priority specifies the importance of a message. You can assign low, medium, or high priority to a message. Messages of a lower priority will not run if any message of a higher priority is running.

The third column of each row in the message list shows the priority assigned to a message: **Low**, **Medium**, or **High**.

The following table shows a sample of priorities set for messages:

Message Number	Priority
5	Low
4	Low
3	Medium
2	High
1	High

The result of sending these sample priority messages is as follows:

Message queue	Message number shown on display	Highest priority message displayed
5	5	Low
4,5	4,5 both messages toggle	Low
5,4,3	3	Medium
5,4,3,2	2	High
5,4,3,2,1	1,2	High
5,4,2,1	1,2	High
4,3,2,1	1,2	High
4,3,1	1	High
3,4	3	Medium
4	4	Low
-	-	Background Message

The following example shows a more complicated set of priorities:

Message Number	Priority
1	Low
2	Low
3	Low
4	Medium
5	Medium
6	Medium
7	High
8	High
9	High

The following example shows a more complicated set of priorities (XX means 'does not matter'):

Message Number in Activation Register	Message Number in Deactivation Register	Message queue	Number of message displayed	Highest priority message displayed
1	XX	1	1	Low
2	XX	1,2	1	Low
3	XX	1,2,3	1	Low
5	XX	1,2,3,5	5	Medium
4	XX	1,2,3,5,4	5,4	Medium
6	XX	1,2,3,5,4,6	5,4,6	Medium
9	XX	1,2,3,5,4,6,9	9	High
8	XX	1,2,3,5,4,6,9,8	9,8	High
8	XX	2,3,5,4,6,9,8	9,8	High
7	1	2,3,5,4,6,9,8,7	9,8,7	High
7	5	2,3,4,6,9,8,7	9,8,7	High
XX	7	2,3,4,6,9,8	9,8	High
XX	9	2,3,4,6,8	8	High
XX	8	2,3,4,6	4,6	Medium
XX	4	2,3,6	6	Medium
XX	6	2,3	2,3	Low
XX	2	3	3	Low
XX	3	-	-	Background Message

Section 4.6 Extended ASCII Character Set

The following table lists the extended ASCII character set and hexadecimal and decimal values associated with the ASCII character:

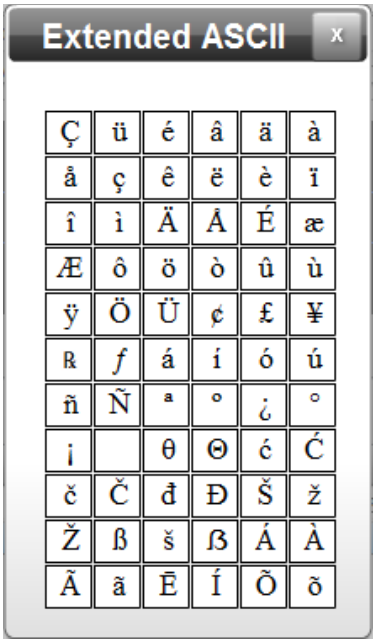

Character	Hex	Dec	Character	Hex	Dec
Ç	80H	128	í	A1H	161
ü	81H	129	ó	A2H	162
é	82H	130	ú	A3H	163
â	83H	131	ñ	A4H	164
ä	84H	132	Ñ	A5H	165
à	85H	133	ª	A6H	166
å	86H	134	º	A7H	167
ç	87H	135	¿	A8H	168
ê	88H	136	°	A9H	169
ë	89H	137	¡	AAH	170
è	8AH	138	(thin space)	ABH	171
ï	8BH	139	θ	ACH	172
î	8CH	140	Θ	ADH	173
ì	8DH	141	ć	AEH	174
Ä	8EH	142	Ć	AFH	175
Å	8FH	143	č	B0H	176
É	90H	144	Č	B1H	177
æ	91H	145	đ	B2H	178

Character	Hex	Dec	Character	Hex	Dec
Æ	92H	146	Đ	B3H	179
ô	93H	147	Š	B4H	180
ö	94H	148	ž	B5H	181
ò	95H	149	Ž	B6H	182
û	96H	150	β	B7H	183
ù	97H	151	š	BH8	184
ÿ	98H	152	ß	B9H	185
Ö	99H	153	Á	BAH	186
Ü	9AH	154	À	BBH	187
¢	9BH	155	Ã	BCH	188
£	9CH	156	ã	BDH	189
¥	9DH	157	É	BEH	190
Pt	9EH	158	Í	BFH	191
f	9fH	159	Õ	C0H	192
à	AOH	160	õ	C1H	193

Section 4.7 How InView LEDs Work

InView Comms Module LEDs function as follows.

LED Operation	Function Indication
Solid ON	Normal Operation (no fault)
Solid OFF	Hardware failure
Blinking	POR Initialization OR no communications

LED Operation	Function Indication
Solid ON	Hardware failure
Solid OFF	Normal Operation (no fault}
Blinking	Application failure

Section 4.8 Easy Tags Summary

Tag Name	Description	Function
iv_DispSerAddr	Display Serial Address	Used in conjunction with all other Easy Tags to specify the target display.
iv_PriorityMesg_Trig	Priority Message Trigger	When the value for iv_PriorityMesg_Trig changes then the Message Number contained in tag iv_PriorityMesg_Num will be activated on the display specified by iv_DispSerAddr.
iv_PriorityMesg_Num	Priority Message Number	Message Number to be activated whenever the value for iv_PriorityMesg_Trig is changed.
iv_AddMesg2Q_Trig	Add Message to Message Queue Trigger	When the value for iv_AddMesg2Q_Trig changes then the Message Number contained in tag iv_AddMesg2Q_Num will be added to the Message Queue for the display specified by iv_DispSerAddr.
iv_AddMesg2Q_Num	Add Message to Message Queue Number	Message Number to be added to the Message Queue whenever the value for iv_AddMesg2Q_Trig is changed.
iv_DelMesgFromQ_Trig	Delete Message from Message Queue Trigger	When the value for iv_DelMesgFromQ_Trig changes then the Message Number contained in tag iv_DelMesgFromQ_Num will be deleted from the Message Queue for the display specified by iv_DispSerAddr.
iv_DelMesgFromQ_Num	Delete Message from Message Queue Number	Message Number to be deleted from the Message Queue whenever the value for iv_DelMesgFromQ_Trig is changed.
iv_ClearMesgQ_Trig	Clear Message Queue Trigger	When the value for iv_ClearMesgQ_Trig changes then the Message Queue will be cleared for the display specified by iv_DispSerAddr.
iv_NumVarUpdate_Trig	Update Numeric Variable Trigger	When the value for iv_NumVarUpdate_Trig changes then the Numeric Variable Number contained in tag iv_NumVarUpdate_Num will be updated with the Numeric Variable value contained in tag iv_NumVarUpdate_Val for the display specified by iv_DispSerAddr.
iv_NumVarUpdate_Num	Numeric Variable Update Number	Numeric Variable ID number to be updated whenever the value for iv_NumVarUpdate_Trig is changed.
iv_NumVarUpdate_Val	Numeric Variable Update Value	Numeric Variable value to be updated whenever the value for iv_NumVarUpdate_Trig is changed.

Tag Name	Description	Function
iv_AlphaVarUpdate_Trig	Update Alphanumeric Variable Trigger	When the value for iv_AlphaVarUpdate_Trig changes then the Alphanumeric Variable Number contained in tag iv_AlphaVarUpdate_Num will be updated with the Alphanumeric Variable text string contained in array iv_AlphaVarUpdate_Val for the display specified by iv_DispSerAddr.
iv_AlphaVarUpdate_Num	Alphanumeric Variable Update Number	Alphanumeric Variable ID number to be updated whenever the value for iv_AlphaVarUpdate_Trig is changed.
iv_AlphaVarUpdate_Val	Alphanumeric Variable Update Value	Alphanumeric Variable text string to be updated whenever the value for iv_AlphaVarUpdate_Trig is changed.

Index

.IVL file
  importing 3-75
.IVP data
  importing 3-73
.csv file
  importing 3-73
.SIC file 3-81
.SIM file 3-79
2706-42C
  field 3-42
2706-42R
  field 3-42
2706-44C
  field 3-42
2706-44R
  field 3-42
2706-72C
  field 3-42
2706-74C
  field 3-42
2706-922C
  field 3-42
2706-92C
  field 3-42
2706-942C
  field 3-42
2706-94C
  field 3-42
2706-P22R
  field 3-42
2706-PENETK2-SC
  2-1
2706-PENETM2-SC 2-1
2706-PENETP2-SC 2-1
6010100-01, InView Display, 5 Meter, shielded
  Cable 2-1
6010104-01, InView Display, 3 Meter
  Cable 2-1
add
  field 3-66
Add message to a queue
  icon 3-65
Adding
  displays 3-41
  message groups 3-50
  message to queue 3-88
  messages 3-58
Address
  field 3-11, 3-13, 3-16, 3-19, 3-21, 3-22, 3-23, 3-29, 3-95
Adobe Flash Player
  download and install 3-1, 3-2
  installing 2-31
  requirement for 3-1
  settings 2-31
  version 2-31
All Lines
  field 3-60
Alphanumeric
  field 3-64
Alphanumeric Value
  field 3-93
Apply to All Displays
  field 3-47, 3-49, 3-56, 3-89, 3-90, 3-91, 3-92, 3-93
Array
  field 3-13, 3-17
Array Size
  field 3-12, 3-18, 3-23
ASCII
  extended character set 4-11
Available Characters
  field 3-67
Backing up
  InView Comms module 3-81
Base Addr/Offset
  field 3-12, 3-13, 3-17, 3-18
Baud Rate
  field 3-102
bitmap size
  field 3-66
Blinking text
  icon 3-63
Cables
  InView Comms Module 2-.
Center text
  icon 3-63
Certifications
  InView 2-7
Characters
  Exporting custom 3-80
  extended ASCII set 4-11
  inserting custom 3-66
Classic
  description of mode 3-6, 3-9, 3-14, 3-20
Clearing
  display memory 3-46
  message queue 3-90
COLOR
  field 3-62
Communication tags
  about 4-8
Communications
  module, installing P22 2-27

module, mounting P42, P44 2-10
module, mounting P72, P74 2-15
module, mounting P92, P94 2-19
module, mounting P92C2, P94C2 2-23
module, wiring P42, P44 2-11
module, wiring P72, P74 2-16
module, wiring P92, P94 2-20
module, wiring P92C2, P94C2 2-24
CompactLogix
setup 3-8
Concepts, 4-5
Configuration
resetting to default 3-84
Configuring
CompactLogix Message Server Setup 3-14
ControlLogix Message Server Setup 3-9
InView Comms card 3-39
message groups 3-49
messages 3-56
MicroLogix/PLC5/SLC Message Server Setup 3-20
Modbus TCP 3-28
PLC Server Setup 3-6
security setup 3-86
serial communications setup 3-101
TCP/IP passthrough 3-26
tools 3-87
Configuring CompactLogix Message Server Setup
configuring 3-14
Configuring ControlLogix Message Server Setup
configuring 3-9
connected
field 3-103, 3-104
Connection
field 3-11, 3-16, 3-21, 3-27, 3-29
Connection Status
field 3-103
Connection type
field 3-35, 3-37
Connection Type
field 3-102
Connectivity
field 3-95
context-sensitive online 1-1
Control
field 3-43
ControlLogix
setup 3-8
Conventions, iii
CPU Load %
field 3-95
Custom characters
importing 3-75
Data Type
field 3-12, 3-13, 3-17, 3-18, 3-22, 3-23
Date
field 3-48, 3-99
Definitions
of terms 4-5
Delay *n* ms
field 3-11, 3-17, 3-22, 3-30
delete
field 3-67
Delete a message from a queue
icon 3-65
Deleting
displays 3-44
message from queue 3-89
message groups 3-54
messages 3-71
Description
field 3-99
Device
field 3-95
Device connections 3-
testing 3-31
Device Name
field 3-11, 3-16, 3-21, 3-29
DHCP Client
field 3-35, 3-37
Diagnostics
retrieving from InView 2-30
viewing information 3-94
Disabled
field 3-42
Display
clearing memory 3-46
field 3-47, 3-49, 3-56, 3-88, 3-91
setting address 3-45
Display Name
field 3-41
Display profiles
managing 3-40
Display Serial Address
field 3-42
Display Type
field 3-51
Displays
adding 3-41
deleting 3-44
field 3-89, 3-3-92, 3-93
modifying 3-43
DNS1
field 3-35
DNS2
field 3-35
Download
field 3-14, 3-19, 3-25, 3-31, 3-97
Download Message Group to InView Display
field 3-65
Easy
description of mode 3-7, 3-9, 3-15, 3-20
field 3-18
Easy tags
summary 4-13
Enable Polling
field 3-11, 3-16, 3-22, 3-29

Enable SSL On port number
select port 3-38
Engineering
viewing erro log information 3-98
Eth1
communications status, viewing 3-102
entering IP address in address bar 3-2
Eth1 IP
field 3-35
Eth2
communications status, viewing 3-103
Eth2IP
field 3-37
EtherNet/IP
protocol 2-3
Exporting
custom characters 3-80
messages 3-78
Fields
required, red asterisk 3-1
Firmware
updating 3-82
FONT
field 3-62
Gateway
field 3-35, 3-103
General Public License
information 2-34
Generate
field 3-30
Global Settings
Adobe Flash Player 2-31
Group
field 3-56
Group Name
field 3-51
GROUP/DISPLAY
field 3-59
Hardware Specifications
information 2-5
HEADER
field 3-60
Heartbeat
field 3-42
Help
viewing online help 3-104
HISTORICAL
field 3-98
Hold
field 3-61
Important Notes, ii
Importing
custom characters in .IVL file 3-75
InView Comms Messages (.IVP data) 3-73
.csv files 3-73
Insert a custom (foreign language or bitmap) character in message
icon 3-64
Insert date in message
icon 3-63
Insert Extended Character Set
field 3-63
Insert time in message
icon 3-63
Insert variable in message
icon 3-63
Inserting
custom characters 3-66
Installation
InView 2-8
Introduction, iii
InView
accessing hardware and software information 2-30
backing up Comms module 3-81
get diagnostics 2-30
installation steps 2-8
logging onto the InView Messaging Software User Interface 3-1
restoring module 3-77
setting up 3-38
User Interface Window components 3-5
using the graphical user interface 3-1
InView Comms Card
configuring 3-39
InView Comms Module
rebooting 3-85
InView Communications Module
setting up Eth1 3-34
setting up Eth2 3-36
setting up networking 3-33
InView User Interface
about 3-4
InView will listen on
field 3-38
IP Address
field 3-103, 3-104
getting 2-32
pinging 2-33
Label
InView label information 2-8
LEDs
how they work 4-12
Left-align text
icon 3-63
Libraries
field 3-66
Limited Remedy
software return, iii
Line 1
field 3-60
Line 2
field 3-60
LINE CONTROL
field 3-60
LIVE
field 3-98

Local Flash (KB)
field 3-95
Log
viewing engineering error information 3-98
Logging
onto the InView Messaging Software User Interface 3-1
Login
InView dialog 3-3
Logs
viewing engineering error information 3-94
Maintenance
on InView Comms Module 3-72
Managing
display profiles 3-40
maintenance on InView Comms Module 3-72
Memory (bytes)
field 3-95
Menu Bar
InView User Interface Window 3-5
Message
adidng to queue 3-88
calculating size 4-7
clearing queue 3-90
deleting from queue 3-89
how priorities work 4-8
triggering priority 3-91
Message Data
field 3-12, 3-23
Message Groups
adding 3-50
configuring 3-49
deleting 3-54
Message ID
field 3-89, 3-90, 3-92
Message Server Type
field 3-8
Message Trigger
field 3-12, 3-17, 3-22
Messages
adding 3-58
configuring 3-56
deleting 3-71
exporting 3-78
InView Comms module software 4-1
modifying 3-69
reordering 3-53
MicroLogix
setup 3-8
MicroLogix Message Server Setup
configuring 3-20
Min Text Length
field 3-64
Modbus TCP
configuring 3-28
field 3-29
setup 3-9
MODE
field 3-61
Modify
field 3-14, 3-19, 3-24
Modifying
displays 3-43
messages 3-69
Module
field 3-99
Msg Server Type
field 3-10, 3-16, 3-21, 3-26, 3-28
Name
field 3-39
New Display Address
field 3-45
New Library Name
field 3-67
None
field 3-43
not connected
field 3-103
Note
field 3-51
Numeric
field 3-64
Numeric Value
field 3-93
Old Display Address
field 3-45
Padding
field 3-64
Panel Type
field 3-42
Partition Size
field 3-51
Passthrough
field 3-26
setup 3-9
Passthrough, TPC/IP
configuring 3-26
Password
change 3-3
logging into InView 3-3
logging into InView Comms Module 3-3
PAUSE
field 3-61
Performance Criteria
A, B, C, D 2-7
Ping
field 3-95
PLC
field 3-8, 3-26, 3-28
PLC Server Setup
configuring 3-6
PLC type
field 3-8
PLC5
setup 3-8
PLC5 Message Server Setup
configuring 3-20

Port 1 number
field 3-38
Port 2 number
field 3-38
Power
InView requirements 2-2
supply requirements 2-10
Preset InView Tags
field 3-30
Preview
field 3-64
PRIORITY
field 3-61
Process Manager
field 3-94
Processes
field 3-94
Product information
legal, ii
Protocol
field 3-11, 3-16, 3-21, 3-27, 3-29
Rebooting
InView Comms Module 3-85
Refresh
field 3-97
Reordering
Message Groups 3-53
report_information
field 3-97
Reset
field 3-14, 3-19, 3-24, 3-31
Resetting
default configuration 3-84
Resources
field 3-95
Restoring
InView module 3-77
Result
field 3-95
Rotate L
field 3-61
Rotate R
field 3-61
Save
field 3-65
Security
configuring setup 3-86
Serial Address
field 3-47, 3-49, 3-88, 3-89, 3-91, 3-92, 3-93
Serial communications setup
configuring 3-101
Setting
display address 3-45
up InView 3-38
up InView Communications Module Eth1 3-34
up InView Communications Module Eth2 3-36
up InView Communications Module networking 3-33
Settings
Adobe Flash Player 2-31
Slave ID
field 3-29
SLC
setup 3-8
SLC5 Message Server Setup
configuring 3-20
Slot Number
field 3-11, 3-16, 3-22
Sockets Manager
field 3-94
Specifications
InView certifications 2-7
InView Environmental and EMC 2-6
InView hardware 2-5
Spectrum InView Custom Character file 3-81
Starting Address
field 3-24, 3-30
Static IP
field 3-35, 3-37
Storage
viewing information 3-94
STYLE
field 3-62
Subnet Mask
field 3-35, 3-37, 3-103, 3-104
Tag Manager
field 3-94
Tag Name
field 3-12, 3-13, 3-17, 3-18, 3-22, 3-23
Tags
about communication 4-8
easy summary 4-13
Task Manager
field 3-94
TCP Port
field 3-11, 3-16, 3-22, 3-27, 3-29
Technical Reference
concepts 4-5
Technical support, iii
Test Device Connection
field 3-11, 3-17, 3-22, 3-30
Testing device connections 3-31
Time
field 3-48
Title Bar
InView Comms Module User Interface Window 3-5
InView User Interface Window 3-5
Tools
configuring 3-87
Trademarks
list of, iii
Trigger priority message
icon 3-65
Triggering
priority message 3-91
variable update 3-92
Updating

firmware 3-82
User interface
using 3-1
Username
logging into InView 3-3
logging into InView Comms Module 3-3
Variable
triggering update 3-92
Variable Data
field 3-13, 3-18, 3-23
Variable ID
field 3-64, 3-93
Variable Trigger
field 3-12, 3-18, 3-23
Variable Update Array Size
field 3-24, 3-30
Viewing
Eth1 communication status 3-102
Eth2 communication status 3-103
online help 3-104
Warranty
limited, ii, 2-34
Work Area
access functions 3-6
InView User Interface Window 3-5, 3-6

©2009-2016 Spectrum Controls, Inc. All rights reserved. Specifications are subject to change without notice. The Encompass logo and ControlLogix are trademarks of Rockwell Automation.

Corporate Headquarters
Spectrum Controls Inc.
1705 132nd Avenue NE
Bellevue, WA 98005 USA
Fax: 425-641-9473
Tel: 425-746-9481

Web Site: www.spectrumcontrols.com
E-mail: spectrum@spectrumcontrols.com

Initial Construction Warranty Information

January 31, 2017

Ed Butler
Techsas, Inc
4819 West Bayshore Drive
Bacliff, Texas 77518

Subject: KAFB – Bulk Fuels Facility Mid-Plume Pump & Treat System Expansion

Reference: Project Warranty

Mick Rich Contractors, Inc. warrants and guarantees all workmanship performed by us, and material supplied by us for a period of one year from the date of substantial completion of the contract.

Date of substantial completion: January 9, 2017.

Very truly yours,

Jim Rich
Vice-President

MICK RICH
CONTRACTORS
Solving complexity with creativity
MICK RICH CONTRACTORS, INC.
P.O. BOX 90727
ALBUQUERQUE, NM 87199
Tele. (505) 823-9782
E-Mail: contact@mickrichcontractors.com
Web Site: www.mickrichcontractors.com

Rupert Plumbing & Heating Co., Inc.

1401 Candelaria Rd. NE Albuquerque, New Mexico 87107
Phone (505) 247-8138 Fax (505) 764-9704

January 9, 2016

PROJECT WARRANTY

Project: KAFB Bulk Fuels Facility phase II

Rupert Plumbing and Heating Co Inc guarantees that this installation is free from mechanical defects. Rupert Plumbing agrees to repair any part of the installation which may fail within a period of one year after date of final acceptance or occupancy, whichever occurs first, provided that such failure is due to defects in materials or workmanship.

Rupert Plumbing and Heating Co Inc

Michael Rupert

TECHSAS Incorporated

Providing Technical Sales and Service
4819 West Bayshore Drive Bacliff, TX 77518

Tuesday, March 07, 2017

Devon E. Jercinovic, PG, PMP
EA Engineering, Science, and Technology, Inc., PBC
Program Manager I
320 Gold Ave. SW, Suite 1300
Albuquerque, NM 87102

Re: Kirtland BFF GWTS Expansion – Project Warranty

WARRANTY STATEMENT

Techsas, Inc. warrants and guarantees products of its manufacture against defective workmanship or material for a period of one year from the date of shipment from the factory.

This warranty is expressly and strictly limited to replacing, without charge, any part or parts which prove to Techsas's satisfaction upon examination, to have been defective and which have not been neglected, abused or misapplied, provided the buyer gives Techsas immediate written notice upon discovery of any claimed defect.

Techsas will also guarantee component parts manufactured by others to the extent of the guarantee made by the manufacturer of such equipment. In any case, guarantees on specific components will be extended a minimum of one year from date of shipment.

Warranty Exclusions:

Warranty coverage does not include:

(A) Freight, labor, travel, and living expenses associated with parts replacement;
(B) Normal maintenance items such as lubrication, fan belts, and cleaning of the equipment.

In the event the customer, or any installation contractor employed by the customer, contracts outside Techsas for installation work or erection of quoted equipment, the customer shall assume full responsibility for said contract.

Sincerely,

Edwin J. Butler

Edwin J. Butler - VP

Ultra Painting Inc.

State Labor and Industrial Reg. # 0046720050604

ultrapainting@aol.com

Bonding rate 3%

Phone: (505) 792-5153 Fax: (505) 792-7226

Date: 31 January 2017

To: Mick Rich Contractors

From: Andrew Sanchez

RE: Warranty

Please accept this as a warranty that Ultra Painting Inc. will guarantee out workmanship and material for a one year period after the final acceptance date.

Project: KAFB Bulk Fuel Facility Mid-Plume Pump & Treatment Facility

Final Acceptance Date: 9 January 2017

Expiration Date: 9 January 2018

Scope of work: Painting- Subcontractor

Address: P.O. Box 3835

Corrales, New Mexico 87048

Signed :

Andrew Sanchez

Date: 31 January 2017

Influent and Effluent Pump Skid Equipment

Electromagnetic flowmeters

SITRANS F M MAG 5100 W

Operating Instructions • 11/2010

SITRANS F

SIEMENS

SIEMENS

SITRANS F

Electromagnetic Flowmeters SITRANS F M MAG 5100 W

Operating Instructions

Introduction 1

Safety notes 2

Description 3

Installing/Mounting 4

Connecting 5

Service and maintenance 6

Troubleshooting/FAQs 7

Technical data 8

Appendix A

Electromagnetic sensor type SITRANS F M MAG 5100 W for use with transmitter types SITRANS F M MAG 5000/6000/6000I

11/2010
A5E03063678-02

Legal information

Warning notice system

This manual contains notices you have to observe in order to ensure your personal safety, as well as to prevent damage to property. The notices referring to your personal safety are highlighted in the manual by a safety alert symbol, notices referring only to property damage have no safety alert symbol. These notices shown below are graded according to the degree of danger.

⚠ DANGER

indicates that death or severe personal injury **will** result if proper precautions are not taken.

⚠ WARNING

indicates that death or severe personal injury **may** result if proper precautions are not taken.

⚠ CAUTION

with a safety alert symbol, indicates that minor personal injury can result if proper precautions are not taken.

CAUTION

without a safety alert symbol, indicates that property damage can result if proper precautions are not taken.

NOTICE

indicates that an unintended result or situation can occur if the corresponding information is not taken into account.

If more than one degree of danger is present, the warning notice representing the highest degree of danger will be used. A notice warning of injury to persons with a safety alert symbol may also include a warning relating to property damage.

Qualified Personnel

The product/system described in this documentation may be operated only by **personnel qualified** for the specific task in accordance with the relevant documentation for the specific task, in particular its warning notices and safety instructions. Qualified personnel are those who, based on their training and experience, are capable of identifying risks and avoiding potential hazards when working with these products/systems.

Proper use of Siemens products

Note the following:

⚠ WARNING

Siemens products may only be used for the applications described in the catalog and in the relevant technical documentation. If products and components from other manufacturers are used, these must be recommended or approved by Siemens. Proper transport, storage, installation, assembly, commissioning, operation and maintenance are required to ensure that the products operate safely and without any problems. The permissible ambient conditions must be adhered to. The information in the relevant documentation must be observed.

Trademarks

All names identified by ® are registered trademarks of the Siemens AG. The remaining trademarks in this publication may be trademarks whose use by third parties for their own purposes could violate the rights of the owner.

Disclaimer of Liability

We have reviewed the contents of this publication to ensure consistency with the hardware and software described. Since variance cannot be precluded entirely, we cannot guarantee full consistency. However, the information in this publication is reviewed regularly and any necessary corrections are included in subsequent editions.

Siemens AG
Industry Sector
Postfach 48 48
90026 NÜRNBERG
GERMANY

order number: A5E03063678
℗ 11/2010

Copyright © Siemens AG 2010.
Technical data subject to change

Table of contents

1 Introduction 5

1.1 Items supplied 5

1.2 History 5

1.3 Further Information 6

2 Safety notes 7

2.1 Laws and directives 7

2.2 Installation in hazardous area 9

2.3 Certificates 10

3 Description 11

3.1 System components 11

3.2 Theory of operation 12

4 Installing/Mounting 15

4.1 Installation safety precautions 15

4.2 Determining a location 16

4.3 Orienting the sensor 18

4.4 Mounting 19

4.5 Potential equalization 21

5 Connecting 23

5.1 Remote installation 24

5.2 Installation check 26

5.3 Potting 26

5.4 Direct burial 28

6 Service and maintenance 29

6.1 Maintenance 29

6.2 Recalibration 29

6.3 Transportation/storage 29

6.4 Unit repair 30

6.5 Technical support 30

6.6 Return procedures 31

7 Troubleshooting/FAQs 33

7.1 Sensor check 33

7.2 Fluctuating process values 35

8 Technical data 37
8.1 MAG 5100 W 37
8.2 Cable data 40
8.3 Effect of temperature on working pressure 41
8.4 Process fluid conductivity 42
8.5 Liner selection 43
8.6 Electrode selection 43
8.7 Sizing tables 44
8.8 Dimensions and weight 46
A Appendix 51
A.1 Flange mating dimensions (metric) 51
A.2 Factory settings 53
A.3 Coil resistance 55
A.4 Ordering 57
Glossary 59
Index 61

Introduction

1

These instructions contain all the information you need for using the device.

The instructions are aimed at persons mechanically installing the device, connecting it electronically, configuring the parameters and commissioning it as well as service and maintenance engineers.

Note

It is the responsibility of the customer that the instructions and directions provided in the manual are read, understood and followed by the relevant personnel before installing the device.

1.1 Items supplied

- SITRANS F M MAG 5100 W
- Calibration report
- SITRANS F M literature CD
- Quick Start guide

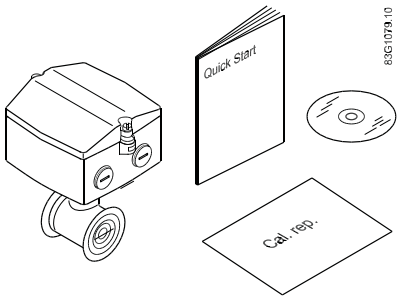

1.2 History

The contents of these instructions are regularly reviewed and corrections are included in subsequent editions. We welcome all suggestions for improvement.

The following table shows the most important changes in the documentation compared to each previous edition.

Edition	Remarks
11/2010	Minor updates
07/2010	First edition Replaces MAG 5100 W part of SITRANS F M Handbook (A5E02435647) and MAG 5100 W instruction (A5E00718677)

1.3 Further Information

The contents of these Operating Instructions shall not become part of or modify any prior or existing agreement, commitment or legal relationship. All obligations on the part of Siemens AG are contained in the respective sales contract which also contains the complete and solely applicable warranty conditions. Any statements contained herein do not create new warranties or modify the existing warranty.

Product information on the Internet

The Operating Instructions are available on the CD-ROM shipped with the device, and on the Internet on the Siemens homepage, where further information on the range of SITRANS F flowmeters may also be found:

Product information on the internet (http://www.siemens.com/flowdocumentation)

Worldwide contact person

If you need more information or have particular problems not covered sufficiently by the operating instructions, please get in touch with your contact person. You can find contact information for your local contact person on the Internet:

Local contact person (http://www.automation.siemens.com/partner)

See also

Technical support (Page 30)

Safety notes

2

⚠ CAUTION
Correct, reliable operation of the product requires proper transport, storage, positioning and assembly as well as careful operation and maintenance. Only qualified personnel should install or operate this instrument.

Note

Alterations to the product, including opening or improper repairs of the product, are not permitted.

If this requirement is not observed, the CE mark and the manufacturer's warranty will expire.

2.1 Laws and directives

General requirements

Installation of the equipment must comply with national regulations.

Instrument safety standards

The device has been tested at the factory, based on the safety requirements. In order to maintain this condition over the expected life of the device the requirements described in these Operating Instructions must be observed.

CAUTION
Material compatibility Siemens Flow Instruments can provide assistance with the selection of wetted sensor parts. However, the full responsibility for the selection rests with the customer and Siemens Flow Instruments can take no responsibility for any failure due to material incompatibility.

CE marked equipment

All meters carry either a CE mark or a CE mark followed by eg.200

- CE200: This indicates that the product conforms to:
  - PED 97/23/EC
  - LVD 2006/95/EC
  - EMC 2004/108/EC
- CE: This indicates that the product conforms to:
  - LVD 2006/95/EC
  - EMC 2004/108/EC

Compliance with PED directive

"Pressure Equipment Directive" (PED) is mandatory for all pressure equipment sold within the EU and EFTA.

Siemens Flow Instruments products confirms to PED by following the tables below.

Table 2- 1 MAG 5100 W (7ME6580 only DN15 ... 600 (½" ... 24"))

Flange mm	PN 10	PN 16	PN 40	150 lb	300 lb
15	N/A	N/A	SEP	SEP	N/A
25	N/A	N/A	SEP	SEP	N/A
40	N/A	N/A	SEP	SEP	N/A
50	N/A	SEP	N/A	SEP	N/A
65	N/A	SEP	N/A	SEP	N/A
80	N/A	SEP	N/A	SEP	N/A
100	SEP	SEP	N/A	SEP	N/A
125	N/A	SEP	N/A	PED	N/A
150	N/A	PED	N/A	PED	N/A
200	SEP	PED	N/A	PED	N/A
250	LVD	PED	N/A	PED	N/A
300	LVD	PED	N/A	PED	N/A
350	LVD	PED	N/A	PED	N/A
400	LVD	PED	N/A	PED	N/A
450	LVD	PED	N/A	PED	N/A
500	LVD	PED	N/A	PED	N/A
600	LVD	PED	N/A	PED	N/A
700	LVD	PED*	N/A	N/A	PED
750	N/A	N/A	N/A	N/A	PED

800	LVD	PED*	N/A	N/A	PED
900	LVD	PED*	N/A	N/A	PED
1000	LVD	PED*	N/A	N/A	PED
1050	N/A	N/A	N/A	N/A	PED
1100	N/A	N/A	N/A	N/A	PED
1200	LVD	PED*	N/A	N/A	PED

The key to the tables is as follows:

PED	Product covered by PED and only available as fully PED-conforming
PED*	Product covered by PED but available as either conforming or non-conforming to PED
SEP	Excluded from PED under Sound Engineering Practice
LVD	Excluded from PED under the Low Voltage Directive

2.2 Installation in hazardous area

⚠ WARNING

Equipment used in hazardous areas must be approved for use in hazardous area and marked accordingly. It is required that the special conditions for safe use provided in the manual and in the FM / CSA certificates are followed!

Hazardous area approvals

The device is approved for use in hazardous area and has the following approvals:

- MAG 5100 W DN 15 ... 1200: FM / CSA Class I, Div. 2

WARNING

Make sure the hazardous area approval is suitable for the environment in which the device will be installed.

WARNING

All approvals are based on non-flammable processes only!

WARNING

Potential equalization

In operation, the output is earthed through the conductive medium being measured and therefore potential equalisation is necessary throughout the hazardous area.

The apparatus housing shall be connected to the potential equalising conductor in the hazardous area.

WARNING

Laying of cables

Cables for use in hazardous area must satisfy the requirements for having a proof voltage < AC 500 V applied between the conductor/ground, conductor/shield and shield/ground.

Connect the devices that are operated in hazardous areas as per the stipulations applicable in the country of operation.

2.3 Certificates

Certificates are posted on the Internet and on the documentation CD-ROM shipped with the device.

See also

Technical data (Page 37)

Certificates on the Internet (http://www.siemens.com/processinstrumentation/certificates)

Description

3

The main applications of the SITRANS F M electromagnetic flow sensors can be found in the following fields:

- Process industry
- Chemical industry
- Steel industry
- Mining
- Utility
- Power generation & distribution
- Oil & gas / HPI
- Water & waste water
- Pulp & paper

3.1 System components

The SITRANS F M USM II flowmeter system includes:

- Transmitter (types: SITRANS F M MAG 5000/6000 or MAG 6000 I)
- Sensor (types: SITRANS F M MAG 1100/1100F, MAG 3100/3100 P or MAG 5100 W)
- Communication module (optional) (types: HART, PROFIBUS PA/DP, MODBUS RTU RS 485, Foundation Fieldbus H1, Devicenet)
- SENSORPROM memory unit

Communication solutions

The SITRANS F USM II range of add on modules, presently including HART, Foundation Fieldbus. MODBUS RTU RS 485, PROFIBUS PA / DP and Devicenet, are all applicable with the SITRANS F M MAG 6000 transmitter.

The SITRANS F M MAG 5100 W sensor housing and flanges are designed in carbon steel and terminal box in fibre glass reinforced polyamide. Measuring pipe is made of stainless steel (AISI 304) and liners are available in NBR Hard Rubber, Ebonite Hard Rubber, or EPDM, which makes the sensor highly resistant to a wide range of chemicals. Electrodes are made of Hastelloy.

MAG 5100W DN15 ... 40

MAG 5100W DN50 ... 300

MAG 5100W DN350 ... 1200 (7ME6520)

MAG 5100W DN25 ... 2000 (7ME6580)

MAG 5100W compact installation with MAG 5000/6000 IP67

MAG 5100W compact installation with MAG 6000 I

The sensors carry a wide range of approvals, see Technical data (Page 37).

3.2 Theory of operation

The flow measuring principle is based on Faraday's law of electromagnetic induction.

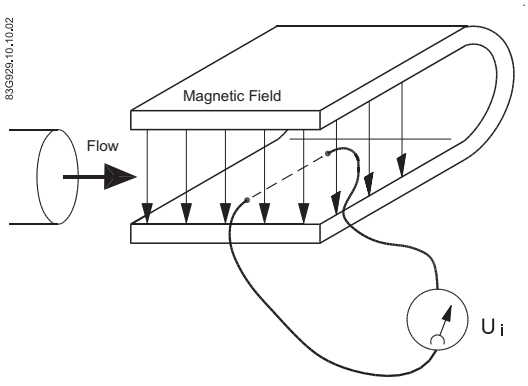

U_i = When an electrical conductor of length L is moved at velocity v, perpendicular to the lines of flux through a magnetic field of strength B, the voltage Ui is induced at the ends of the conductor

$U_i = L \times B \times v$

- Ui = Induced voltage
- L = Conductor length = Inner pipe diameter = k_1
- B = Magnetic field strength = k_2
- v = Velocity of conductor (media)
- $k = k_1 \times k_2$

Ui = k x v, the electrode signal is directly proportional to the fluid velocity

Operating principle

The coil current module generates a pulsating magnetizing current that drives the coils in the sensor. The current is permanently monitored and corrected. Errors or cable faults are registered by the self-monitoring circuit.

Input circuit amplifies the flow-proportional induced voltage signal from the electrodes. The input impedance is extremely high: $>10^{14}$ Ω which allows flow measurements on fluids with conductivities as low as 5 µS/cm. Measuring errors due to cable capacitance are eliminated due to active cable screening.

Digital signal processor converts the analog flow signal to a digital signal and suppresses electrode noise through a digital filter. Inaccuracies in the transmitter as a result of long-term drift and temperature drift are monitored and continuously compensated for via the self-monitoring circuit. The analog to digital conversion takes place in an ultra low noise ASIC with 23 bit signal resolution. This has eliminated the need for range switching. The dynamic range of the transmitter is therefore unsurpassed with a turn down ratio of minimum 3000:1.

Installing/Mounting

4

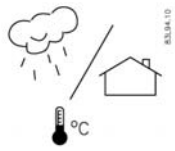

SITRANS F flowmeters with minimum IP67/NEMA 4X enclosure rating are suitable for in- and outdoor installations.

- Make sure that pressure and temperature specifications indicated on the device nameplate / label will not be exceeded.

WARNING

Installation in hazardous location

Special requirements apply to the location and interconnection of sensor and transmitter. See "Installation in hazardous area" (Page 9)

4.1 Installation safety precautions

WARNING

In applications with working pressures/media that can be dangerous to people, surroundings, equipment or others in case of pipe fracture, we recommend that special precautions such as special placement, shielding or installation of a security guard or a security valve are taken when the sensor is mounted.

- Ensure that stresses and loading caused by e.g. earthquakes, traffic, high winds and fire damage if appropriate are taken into account during installation.
- Ensure that the flowmeter is installed such that it does not act as a focus for pipeline stresses. External loadings are not taken into account in the flowmeter design.
- Provide adequate protection to minimise any risk of contact with hot surfaces.

WARNING

Prevent personal injuries by assuring that operation below pressure guards cannot take place, if working with vacuum or fluids boiling readily.

4.2 Determining a location

NOTICE
The sensor must always be completely filled with liquid.

- Locate the the flowmeter in u-shaped pipes if pipes are only partially filled or have free outlet

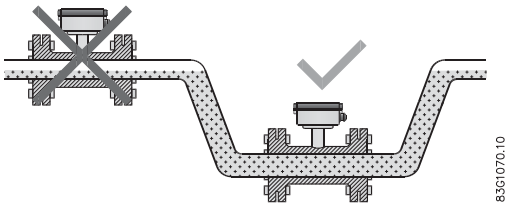

Figure 4-1 Correct installation in U-tube

- Avoid the following installations
  - Installation at the highest point in the pipe system
  - Installation in vertical pipes with free outlet

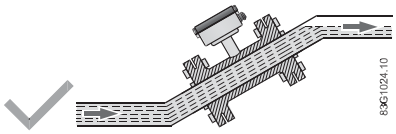

Figure 4-2 Correct installation with filled pipes

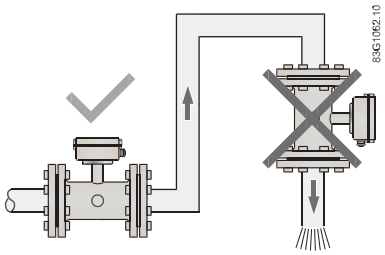

Figure 4-3 Correct installation at low point in system before outlet

Inlet and outlet conditions

To achieve accurate flow measurement it is essential to have straight lengths of inlet and outlet pipes and a certain distance to pumps and valves.

It is also important to centre the flowmeter in relation to pipe flanges and gaskets.

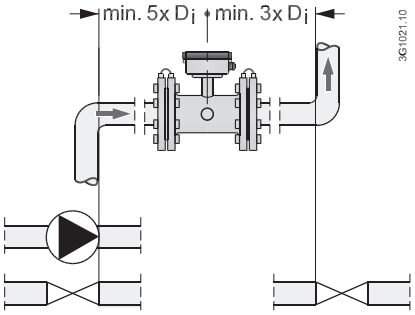

Figure 4-4 Inlet and outlet conditions

Installation in large pipes

The flowmeter can be installed between two reducers (e.g. DIN 28545). At 8° the following pressure drop curves apply. The curves are applicable to water.

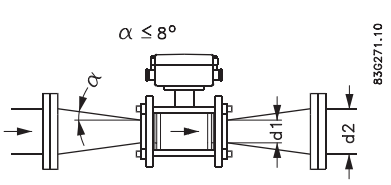

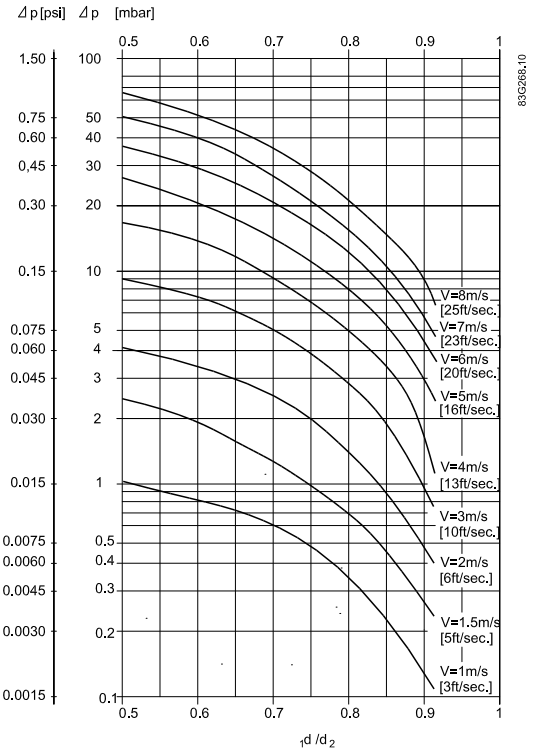

Example:

A flow of 3 m/s (V) in a sensor with a diameter reduction from DN 100 to DN 80 (d_1/d_2 = 0.8) gives a pressure drop of 2.9 mbar.

4.3 Orienting the sensor

The sensor operates in all orientations, but Siemens has the following recommendations:

- Vertical installation with an upwards flow

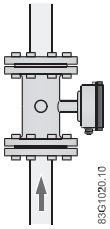

Figure 4-5 Vertical orientation, upwards flow

CAUTION
Abrasive liquids / liquids containing solid particles A vertical installation minimizes wear and deposits in the sensor

NOTICE
Gas/air bubbles in the liquid A vertical installation minimizes any negative effect of gas/air bubbles in the liquid

- Horizontal installation, terminal box upwards or downwards

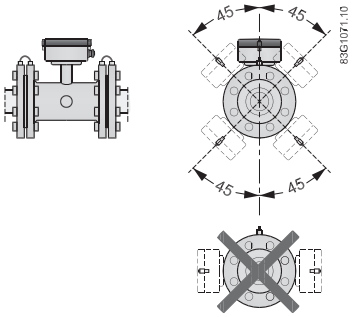

Figure 4-6 Horizontal installation, various terminal box positions

CAUTION
Do NOT mount the sensor with the terminal box sideways This will position the electrodes at the top where there is possibility for air bubbles and at the bottom where there is possibility for mud, sludge, sand etc.

NOTICE
Empty pipe detection For applications with empty pipe detection, the sensor can be tilted 45°, as shown above.

4.4 Mounting

- Install the sensor in rigid pipelines in order to support the weight of the meter.
- Center the connecting pipelines axially in order to avoid turbulent flow profiles.
- Use proper gaskets according to liner type

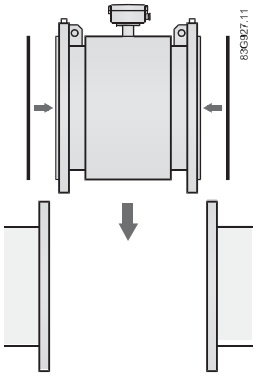

Figure 4-7 Correct installation with gaskets

Vibrations

Avoid strong vibrations.

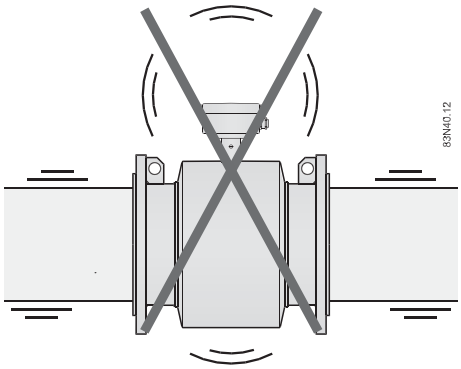

Figure 4-8 Avoid vibrations

⚠ CAUTION
In applications with strong vibrations, Siemens recommend remote mounting of the transmitter!

Torques

Fasten screws according to the torques values below

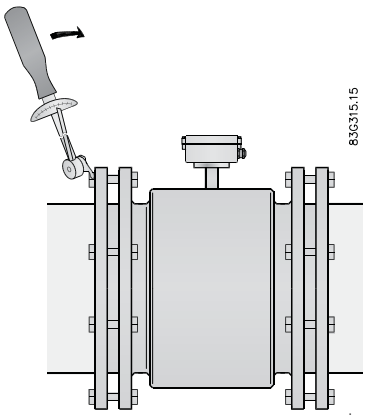

Figure 4-9 Torques values

NOTICE
Torque values are calculated on the basis of use of gaskets.

Table 4- 1 Maximum allowable torques

DN		PN 10		PN 16		PN 40		Class 150		AWWA	
Mm	Inch	Nm	F/lbs	Nm	F/lbs	Nm	F/lbs	Nm	F/lbs	Nm	F/lbs
15	½	N/A	N/A	N/A	N/A	10	7	6	5	N/A	N/A
25	1"	N/A	N/A	N/A	N/A	10	7	7	5	N/A	N/A
40	1½"	N/A	N/A	N/A	N/A	16	12	9	7	N/A	N/A
50	2"	N/A	N/A	N/A	N/A	N/A	N/A	25	18	N/A	N/A
65	2½"	N/A	N/A	25/25	18/18	N/A	N/A	25	18	N/A	N/A
80	3"	N/A	N/A	25/25	18/18	N/A	N/A	34	25	N/A	N/A
100	4"	N/A	N/A	25/25	18/18	N/A	N/A	26	19	N/A	N/A
125	5"	N/A	N/A	29/32	21/24	N/A	N/A	42	31	N/A	N/A
150	6"	N/A	N/A	50/50	37/37	N/A	N/A	57	42	N/A	N/A
200	8"	50/50	37/37	50/52	37/38	N/A	N/A	88	65	N/A	N/A
250	10"	50/50	37/37	82/88	61/65	N/A	N/A	99	73	N/A	N/A
300	12"	57/62	42/46	111/117	82/86	N/A	N/A	132	97	N/A	N/A
350	14"	60/60	44/44	120/120	89/89	N/A	N/A	225	166	N/A	N/A
400	16"	88/88	65/65	170/170	125/125	N/A	N/A	210	155	N/A	N/A
450	18"	92/92	68/68	170/170	125/125	N/A	N/A	220	162	N/A	N/A
500	20"	103/103	76/76	230/230	170/170	N/A	N/A	200	148	N/A	N/A
600	24"	161/161	119/119	350/350	258/258	N/A	N/A	280	207	N/A	N/A
700	28"	200/200	148/148	304/304	224/224	N/A	N/A	N/A	N/A	200	148
750	30"	N/A	N/A	N/A	N/A	N/A	N/A	N/A	N/A	240	177

DN		PN 10		PN 16		PN 40		Class 150		AWWA	
800	32"	274/274	202/202	386/380	285/285	N/A	N/A	N/A	N/A	260	192
900	36"	288/288	213/213	408/408	301/301	N/A	N/A	N/A	N/A	240	177
1000	40"	382/382	282/282	546/546	403/403	N/A	N/A	N/A	N/A	280	207
1050	42"	N/A	N/A	N/A	N/A	N/A	N/A	N/A	N/A	280	207
1100	44"	N/A	N/A	N/A	N/A	N/A	N/A	N/A	N/A	290	214
1200	48"	395/395	292/292	731/731	539/538	N/A	N/A	N/A	N/A	310	229
1400	54"	-/503	-/317	-/736	-/543	N/A	N/A	N/A	N/A	528	389
1600	66"	-/684	-/505	-/913	-/674	N/A	N/A	N/A	N/A	698	515
1800	72"	-/771	-/569	-/937	-/692	N/A	N/A	N/A	N/A	700	516
2000	78"	-/867	-/640	-/1128	-/832	N/A	N/A	N/A	N/A	890	656

4.5 Potential equalization

To obtain optimum results from the measuring system, the sensor must have the same electrical potential as the liquid being measured.

This is achieved by means of built-in grounding electrodes.

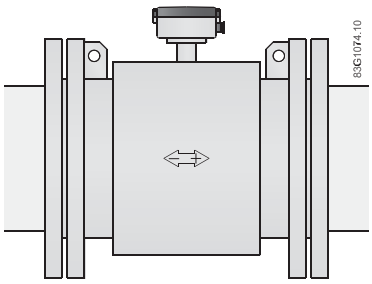

Figure 4-10 Potential equalization with earthing electrodes

Cathodic protected piping

Special attention must be paid to systems with cathodic protection

⚠ WARNING

Use in hazardous area!

Cathodic pipe protection is not allowed in hazardous areas

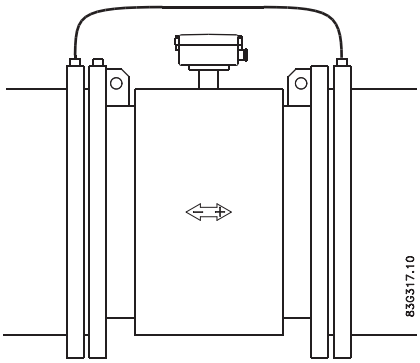

Figure 4-11 Cathodic protection

- Isolate the sensor from cathodic protected pipes using insulated bolts.
- Use bypass cable between the mating flanges

NOTICE
Remote mounted sensor versions If the above is not acceptable, remote mounted sensors can alternatively be connected as follows: • Connect coil current cable shield at sensor end via a 1.5 µF condensator • Make sure that electrode cable shield is not connected at both ends

Connecting

5

The following contains a short description of how to connect a remote mounted sensor to a transmitter type SITRANS F M MAG 5000 / 6000 or MAG 6000 I. For more information, e.g. about wiring of power supply and outputs, refer to the Operating Instructions for the respective transmitters.

Before connecting

- Check that serial numbers on sensor and SENSORPROM® unit are identical.

⚠ WARNING

The pertinent regulations must be observed for electrical installation.

- Never install the device with the mains voltage switched on!
- Danger of electric shock!
- The electrodes and magnetic current line may only be connected when the device is not connected to the power supply.
- If the housing is under voltage (power supply), the cover may be unscrewed by qualified personnel only.

⚠ WARNING

Mains supply from building installation Class II

A switch or circuit breaker (max. 15 A) must be installed in close proximity to the equipment and within easy reach of the operator. It must be marked as the disconnecting device for the equipment.

Cable specifications

- Only use cables with at least the same degree of protection as the sensor to install the sensor.
- The line length from the cable gland to the terminals must be kept as short as possible. Line loops in the terminal box must be avoided.

- To guarantee the IP 67 degree of protection, use cables with the required specifications.

⚠ WARNING
Protective conductor terminal The required cable is min. AGW16 or 1.5 Cu.

⚠ WARNING
Wire insulation The insulation between the connected mains supply and 24 V AC/DC supply for the flowmeter must at least be rated with double or reinforced insulation at mains voltage. For field wiring installation: Ensure that the **National Installation Code** of the country in which the flowmeters are installed is met.

See also

Cable data (Page 40)

5.1 Remote installation

NOTICE
Remote installation only The following applies to remote installation of MAG 5000 / 6000 or MAG 6000 I.

1. Unscrew and remove terminal box lid.

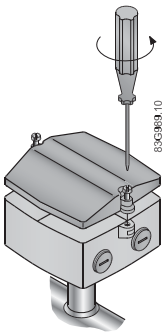

2. Remove SENSORPROM® unit from sensor and mount it on connection plate in transmitter, see relevant transmitter operating instructions.

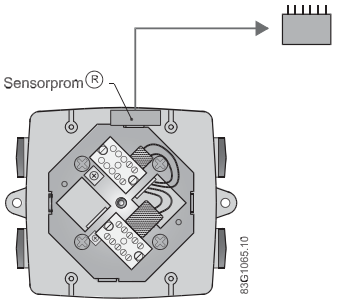

3. Fit the ½" NPT or M20 cable glands for supply and output cables.
4. Fit and connect electrode and coil cables as shown below.

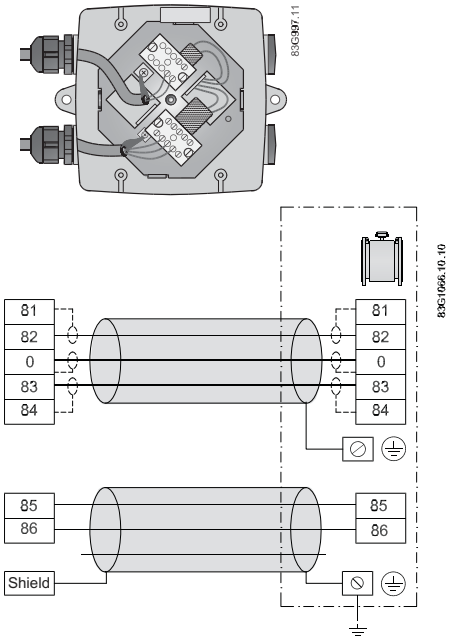

CAUTION

Unshielded cable ends

Keep unscreened cable ends as short as possible.

CAUTION

Prevent interference

Separate electrode and coil cables to prevent interference.

5. Tighten cable glands well to obtain optimum sealing.

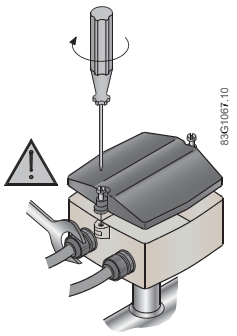

WARNING
Mount terminal box lid before power up.

5.2 Installation check

The meter is now ready to go into normal operation - for commissioning and setting of parameters refer to the relevant transmitter manual.

Before commissioning it must be checked that:

- The device has been installed and connected in accordance with the guidelines provided in chapter 4 Installing/mounting (Page 15) and 5 Connecting (Page 23)

5.3 Potting

If sensor is buried or permanently submerged, terminal box must be encapsulated with silicon dielectric gel (non-toxic, transparent and self-healing gel)

CAUTION
Do **not** pot meter before electrical connections have been made.

- Mix the two components of the potting kit well and pour into terminal box.
- Let cure for approximately 24 hours at approximately 25°C (77°F). Curing time increases by 100% per -10°C (-18°F).

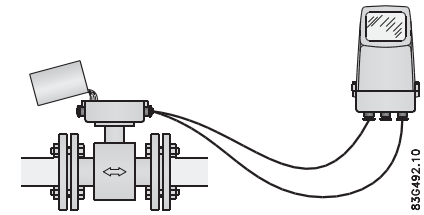

Horizontal orientation

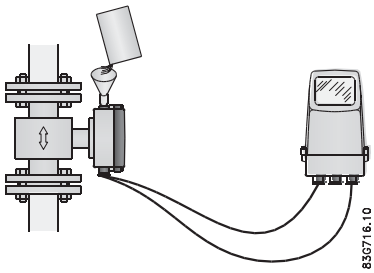

Vertical orientation

NOTICE
Gel can be penetrated with test instruments or be removed in case of cable replacement.

5.4 Direct burial

Recommendations for direct burial of remote sensor:

- Check for visible damages in paint finish !
- Use protection conduit !
- Protect sensor with pea gravel at least 3000 mm around sensor. This provides some drainage and also avoids caking sensor with earth. It also helps to locate sensor in case excavation takes place.

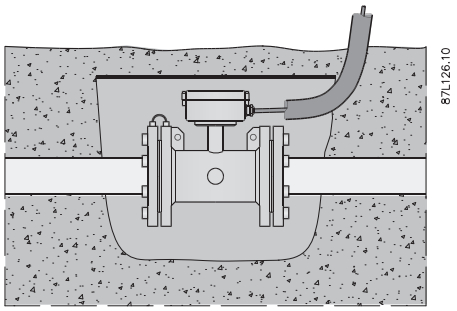

Figure 5-1 Direct burial of sensor

⚠ CAUTION

Sensor should not be subject to heavy vehicles applying excessive weight above sensor or pipeline

CAUTION

SENSORPROM® memory unit

Remove the SENSORPROM® from terminal box on sensor and relocate in remote transmitter prior to burying sensor.

All sensor data plate information and serial number should be recorded for each sensor prior to burying. This will ensure correct matching with SENSORPROM® unit.

⚠ WARNING

Electrical cable identification

Use suitable coil and electrode cables

Lay electrical cable identification tape above pea gravel before it is covered with earth.

Service and maintenance 6

6.1 Maintenance

The device is maintenance-free, however, a periodic inspection according pertinent directives and regulations must be carried out.

An inspection can include check of:

- Ambient conditions
- Seal integrity of the process connections, cable entries, and cover screws
- Reliability of power supply, lightning protection, and grounds

6.2 Recalibration

Siemens A/S Flow Instruments offers to recalibrate the sensor. The following calibrations are offered as standard:

- Standard matched pair calibration

Note

For recalibration the memory unit must always be returned with the sensor

6.3 Transportation/storage

The sensor is a fragile piece of equipment. Impact and shock can cause measuring inaccuracy. Therefore during transportation it must be placed in the transportation box delivered by Siemens Flow Instruments. If this is not possible, the alternative sensor packaging must be able to withstand the hazards from transportation.

Handling

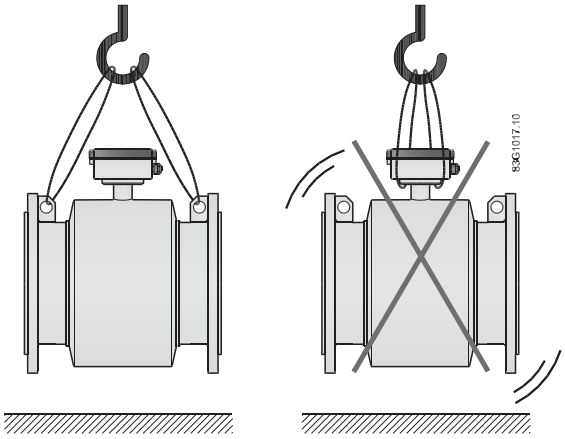

Figure 6-1 Handling of sensor

6.4 Unit repair

CAUTION
Repair and service must be carried out by Siemens authorized personnel only.

Note

Siemens Flow Instruments defines sensors as non-repairable products.

6.5 Technical support

If you have any technical questions about the device described in these Operating Instructions and do not find the right answers, you can contact Technical Support:

- Via the Internet using the **Support Request:**
  Support request (http://www.siemens.com/automation/support-request)
- Via Phone:
  - Europe: +49 (0)911 895 7222
  - America: +1 423 262 5710
  - Asia-Pacific: +86 10 6475 7575

Further information about our technical support is available in the Internet at Technical support (http://support.automation.siemens.com/WW/view/en/16604318)

Service & Support on the Internet

In addition to our documentation, we offer a comprehensive knowledge base online on the Internet at:

Service and support (http://www.siemens.com/automation/service&support)

There you will find:

- The latest product information, FAQs, downloads, tips and tricks.
- Our newsletter, providing you with the latest information about your products.
- A Knowledge Manager to find the right documents for you.
- Our bulletin board, where users and specialists share their knowledge worldwide.
- You can find your local contact partner for Industry Automation and Drives Technologies in our partner database.
- Information about field service, repairs, spare parts and lots more under "Services."

Additional Support

Please contact your local Siemens representative and offices if you have additional questions about the device

Find your contact partner at:

Local contact person (http://www.automation.siemens.com/partner)

6.6 Return procedures

Enclose the delivery note, the cover note for return delivery together with the declaration of decontamination form on the outside of the package in a well-fastened clear document pouch.

Required forms

- **Delivery Note**
- **Cover Note for Return Delivery** with the following information

  Cover note (http://support.automation.siemens.com/WW/view/en/16604370)
  - product (ordering number)
  - number of devices or spare parts returned
  - reason for the return

- **Declaration of Decontamination**

  Declaration of Decontamination (http://pia.khe.siemens.com/efiles/feldg/files/Service/declaration_of_decontamination_en.pdf)

  With this declaration you certify *that the returned products/spare parts have been carefully cleaned and are free from any residues.*

  If the device has been operated together with toxic, caustic, flammable or water-damaging products, clean the device before return by rinsing or neutralizing. Ensure that all cavities are free from dangerous substances. Then, double-check the device to ensure the cleaning is completed.

  We shall not service a device or spare part unless the declaration of decontamination confirms proper decontamination of the device or spare part. Shipments without a declaration of decontamination shall be cleaned professionally at your expense before further proceeding.

You can find the forms on the Internet and on the CD delivered with the device.

Troubleshooting/FAQs 7

7.1 Sensor check

Requirement

To check the SITRANS F M sensors the following test instruments will be required:

- Digital Meter/Multimeter
- Megger
- (Moving Coil Meter)

Sensor check

Remove the transmitter from the sensor or remote position before making the following checks.

Coil resistance check

- Measure the coil resistance between connection numbers 85 and 86 using a digital meter.
  Resistance should be around 100 ohms ±10 ohms. (See Coil resistence table)

A low reading may indicate moisture within the coil housing or shorted coil tums.

A high reading would indicate an open circuit coil.

NOTICE
In case of deviation from nominal coil values, the sensor is damaged and must be replaced

Coil insulation check

⚠ WARNING
Potential hazard!
Only carry our a coil insulation check in non-hazardous area!

- Megger between connection number 85 and the sensor body.
  The resistance should be above 20 Megohms.

A low megger reading would indicate the coil insulation is braking down. This is normally due to fluid ingress into the coil housing.

Sensors with an insulation resistance down to 1 Megohms may still work satisfactorily but this is not guaranteed.

Electrode resistance check

- Measure the electrode resistance between connections 82 and Zero with a moving coil meter.
  With a sensor full of fluid the resistance should be between 5Kohms and 50Kohms.
  If the sensor is empty the resistance will be infinite.
- Repeat the resistance measurements between connections 83 and Zero.
  The results should be the same.

If the resistance is low there may be a short on the electrodes or wiring (in the case of a remote mounted transmitter). Alternatively there may be water ingress or moisture in the terminal box.

If the resistance is high and the pipe is completely full of fluid check the following:

1. The fluid is electrically conductive.
2. Electrodes are not coated with grease or any deposit.
3. Electrode circuit is not open
4. The remote mounted transmitter has a 3 core cable with an overall shield continuously from the sensor to the transmitter, including junction boxes and terminal rails inside panels.
5. The shield is connected to the Zero or to the earth terminal (PE) on the sensor.

NOTICE
Sensors removed from line For sensors removed from line with dry bore, use megger between terminal 82 and compression plate, and 83 and compression plate to show any water ingress behind electrodes or within enclosure.

7.2 Fluctuating process values

Question

Why do the displayed process values fluctuate when the electrode cable is moved?

Answer

There are several causes to the fluctuating process values:

- Deposits on electrodes
  - Clean the electrodes.
- Defect electrode cable
  - Replace the cable
- Incorrect cable connection
  - Connect the electrode cable (82, 83, 0 and shield) according to the instructions in chapter Connecting (Page 23)

NOTICE
Vibrating environments It is recommended to use special low noise cables for sensor sizes DN 2 and 3 installed in vibrating environments.

Technical data

8

8.1 MAG 5100 W

Table 8- 1 Technical data

Version	MAG 5100W (7ME6520)	MAG 5100W (7ME6580)
Product characteristic	Mainly for the European market EPDM or NBR lining	Mainly for the non-European market Ebonite lining
Design and nominal size	*Coned sensor:* • DN 15 ... 300 (½" ... 12") *Full bore sensor:* • DN 350 ... 1200 (14" ... 48")	*Full bore sensor:* • DN 25 ... 2000 (1" ... 78")
Measuring principle	Electromagnetic induction	
Excitation frequency (Mains supply: 50 Hz/60 Hz)	*DN 15 ... 65 (½" ... 2½"):* • 12.5 Hz / 15 Hz *DN 80 ... 150 (3" ... 6"):* • 6.25 Hz / 7.5 Hz *DN 200 ... 300 (8" ... 12"):* • 3.125 Hz / 3.75 Hz *DN 350 ... 1200 (14" ... 48"):* • 1.5625 Hz / 1.875 Hz	*DN 25 ... 65 (1" ... 2½"):* • 12.5 Hz / 15 Hz *DN 80 ... 150 (3" ... 6"):* • 6.25 Hz / 7.5 Hz *DN 200 ... 1200 (8" ... 48"):* • 3.125 Hz / 3.75 Hz *DN 1400 ... 2000 (54" ... 78"):* • 1.5625 Hz / 1.875 Hz

Table 8- 2 Process connections

Version	MAG 5100W (7ME6520)	MAG 5100W (7ME6580)
EN 1092-1	*PN 10 (145 psi):* • DN 200 ... 300 (8" ... 12") Flat face flanges *PN 10 (145 psi):* • DN 350 ... 1200 (14" ... 48") Raised face flanges *PN 16 (232 psi):* • DN 50 ... 300 (2" ... 12") Flat face flanges *PN 16 (232 psi):* • DN 350 ... 1200 (14" ... 48") Raised face flanges *PN 40 (580 psi):* • DN 15 ... 40 (½" ... 1½") Flat face flanges	Raised face (EN 1092-1, DIN 3501 and BS4504 have the same mating dimensions) PN 16 (87 psi): • DN 1400 ... 2000 (54" ... 78") PN 10 (145 psi): • DN 200 ... 2000 (8" ... 78") PN16 (232 psi): • DN 65 ... 600 (2½" ... 24") PN 40 (580 psi): • DN 25 ... 50 (1" ... 2")
ANSI B16.5	Class 150 lb: ½" ... 24"	Class 150 lb: 1" ... 24"

Version	MAG 5100W (7ME6520)	MAG 5100W (7ME6580)
AWWA C-207	Class D: • 28" ... 48", Flat face flanges	Class D: • 28" ... 78", Flat face flanges
AS4087	*PN 16 (230 psi):* • DN 50 ... 1200 (2" ... 48")	*PN 16 (230 psi):* • DN 50 ... 1200 (2" ... 48")
JIS B 2220:2004	-	K10 (1" ... 24")

Table 8- 3 Rated operating conditions

Version	MAG 5100W (7ME6520)	MAG 5100W (7ME6580)
Ambient temperature • Sensor	-40 ... +70 °C (-40 ... +158 °F)	-40 ... +70 °C (-40 ... +158 °F)
• With compact transmitter		
MAG 5000/6000	-20 ... +60 °C (-4 ... +140 °F)	-20 ... +60 °C (-4 ... +140 °F)
MAG 6000 I	-20 ... +60 °C (-4 ... +140 °F)	-20 ... +60 °C (-4 ... +140 °F)
Operating pressure [abs. bar][1]	DN 15 ... 40 (½" ... 1½") 0.01 ... 40 bar (0.15 ... 580 psi) DN 50 ... 300 (2" ... 12") 0.03 ... 20 bar (0.44 ... 290 psi) DN 350 ... 1200 (14" ... 48") 0.01 ... 16 bar (0.15 ... 232 psi)	DN 25 ... 50 (1" ... 2") 0.01 ... 40 bar (0.15 ... 580 psi) DN 65 ... 1200 (2½" ... 48") 0.01 ... 16 bar (0.15 ... 232 psi) DN 1400 ... 2000 (54" ... 78") 0.01 ... 10 bar (0.15 ... 145 psi)
Enclosure rating		
Standard	IP67 to EN 60529 / NEMA 4X/6 (1 mH_2O for 30 minutes)	IP67 to EN 60529 / NEMA 4X/6 (1 mH_2O for 30 minutes)
Option	IP68 to EN 60529 / NEMA 6P (10 mH_2O continuously)	IP68 to EN 60529 / NEMA 6P (10 mH_2O continuously)
Corrosive category	C4 according to ISO 12944-2	C4 according to ISO 12944-2
Pressure drop	DN 15 and 25 (½" and 1"): • Max. 20 mbar (0.29 psi) at 1 m/s (3 ft/s) DN 40 ... 300 (1½" ... 12"): • Max. 25 mbar (0.36 psi) at 3 m/s (10ft/s) DN 350 ... 1200 (14" ... 48"): • Insginificant	Insignificant
Test pressure	1.5 x PN (where applicable)	1.5 x PN (where applicable)
Mechanical load (vibration)	18 ... 1000 Hz random in x,y, z directions for 2 hours according to EN 60068-2-36 Sensor: 3.17 grms Sensor with compact MAG 5000/6000 transmittter mounted: 3.17 grms Sensor with compact MAG 6000 I transmitter mounted: 1.14 grms	18 ... 1000 Hz random in x,y, z directions for 2 hours according to EN 60068-2-36 Sensor: 3.17 grms Sensor with compact MAG 5000/6000 transmittter mounted: 3.17 grms Sensor with compact MAG 6000 I transmitter mounted: 1.14 grms

Version	MAG 5100W (7ME6520)	MAG 5100W (7ME6580)
Process fluid temperature		
NBR	-10 ... +70 °C (14 ... 158 °F)	-
EPDM	-10 ... +70 °C (14 ... 158 °F)	-
EPDM (MI-001)	+0.1 ... +30 °C (32 ... 76 °C)	-
Ebonite	-	-10 ... +70 °C (14 ... 158 °F)
EMC	EMC 2004/108/EC	EMC 2004/108/EC

Maximum operating pressure decreases with increasing operating temperature

Table 8- 4 Design

Version	MAG 5100W (7ME6520)	MAG 5100W (7ME6580)
Housing and flange material	Carbon steel, with corrosion-resistant two-component epoxy coating (min. 150 µm) Corrosive category C4, according to ISO 12944-2	Carbon steel ASTM A 105, with corrosion-resistant two-component epoxy coating (min. 150 µm)
Measuring pipe	AISI 304 (1.4301)	AISI 304 (1.4301)
Electrodes	Hastelloy	Hastelloy
Grounding electrodes (standard	Hastelloy	Hastelloy
Terminal box	Fibre glass reinforced polyamide	Fibre glass reinforced polyamide

Table 8- 5 Certificates and approvals

Version	MAG 5100W (7ME6520)	MAG 5100W (7ME6580)
Calibration Standard production calibration, calibration report shipped with sensor	DN 15 ... 300: • Zero-point, 2 x 25 % and 2 x 90 % DN 350 ... 1200: • Zero-point, 1 x 25 % and 1 x 90 %	Zero-point, 2 x 25 % and 2 x 90 %
Custody transfer (only with MAG 5000/6000 CT)	*OIML R 49 pattern approval cold water (Denmark and Germany):* • DN 50 ... 300 (2" ... 12") *MI 001 cold water (EU):* • DN 50 ... 300 (2" ... 12")	-

Version	MAG 5100W (7ME6520)	MAG 5100W (7ME6580)
Drinking water approvals	*EPDM liner:* • ANSI/NSF 61 Standard (Cold water, US) • WRAS (WRc, BS6920 cold water, GB) • ACS (F) • DVGW W270 (D) • Belgaqua (NBR) *NBR liner:* • ANSI/NSF 61 Standard (Cold water, US), only ANSI and AWWA flanges)	• NSF/ANSI Standard 61 (Cold water, US) • WRAS (WRc, BS6920 cold water, GB)
Other approvals	• MCERTS • PED - 97/23 EC[1)], CRN • FM Class 1, Div 2 • CSA Class 1, Div 2	• PED - 97/23 EC[1)] (only < DN 600 (< 24")) • FM Class 1, Div 2 • CSA Class 1, Div 2

1) : For sizes larger than 600 mm (24") in PN 16, PED conformity is available as cost-added option. The basic unit will carry the LVD (Low Voltage Directive) and EMC approval.

8.2 Cable data

Description

Cable for standard electrode or coil	
Electrode cable, double shielded	
Cable kit with standard coil cable and electrode cable double shielded (also available as low noise cable for MAG 1100 sensor)	

Standard applications

Table 8- 6 Technical data, standard application cables

		Coil cable	Standard electrode cable
Basic data	No. of conductors	2	3
	Min. sqr. area	0.5 mm^2	0.2 mm^2
	Shield	Yes	Yes
	Max. capacitance	N/A	350 pF/m

		Coil cable	Standard electrode cable
Max. cable loop resistance	Media temperature:		
	< 100 °C	40 Ω	N/A
	> 200 °C	6 Ω	N/A
Cable glands on sensor and transmitter	M20x1.5 gland - Cable ø 5 ... 13 mm (0.20 ... 0.51 inches)		
	½ NPT gland - cable ø 5 ... 9 mm (0.20 ... 0.35 inches)		

Special applications, e.g. low conductivity or electrical noise

Table 8- 7 Technical data, special application cables

		Coil cable	Special electrode cable
Basic data	No. of conductors	3	3
	Sqr. area	1.5 mm^2	0.25 mm^2
	Shield	Yes	Double
	Color code	Brown, blue, black	Brown, blue, black
	Outside color	Grey	Grey
	Ext. diameter	7.8 mm	8.1 mm
	Conductor	Flexible CU	Flexible CU
	Isolation material	PVC	PVC
Ambient temperature	Flexible installation	-5 ... +70°C (23 ... 158°F)	-5 ... +70°C (23 ... 158°F)
	Non-flexible installtaion	-30 ... +70°C (-22 ... 158°F)	-30 ... +70°C (-22 ... 158°F)
Cable parameter	Capacity	161.50 pF/m	N/A
	Inductance	0.583 µH/m	N/A
	L/R	43.83 þH/Ω	N/A

8.3 Effect of temperature on working pressure

Effect of temperature on working pressure.

Table 8- 8 Metric measures (pressure in bar)

Flange specifications	Flange rating	Temperature (°C)			
		-5	10	50	90
Sizes DN25 ... 2000					
EN 1092-1	PN 10	10.0	10.0	9.7	9.4
	PN 16	16.0	16.0	15.5	15.1
	PN 40	40.0	40.0	38.7	37.7
ANSI B16.5	150 lb	19.7	19.7	19.3	18.0
AWWA C-207	Class D	10.3	10.3	10.3	10.3

Flange specifications	Flange rating	Temperature (°C)			
		-5	10	50	90
Sizes DN 15 ... 300 (order no. 7ME6520 only)					
EN 1092-1	PN 10	10.0	10.0	10.0	8.2
	PN 16	10.0	16.0	16.0	13.2
	PN 40	40.0	40.0	38.7	37.7
ANSI B16.5	150 lb	10.0	19.7	19.7	16.2

Table 8- 9 Imperial measures (pressure in psi)

Flange specifications	Flange rating	Temperature (°F)			
		23	50	120	200
Sizes 1" ... 78"					
EN 1092-1	PN 10	145	145	141	136
	PN 16	232	232	225	219
	PN 40	580	580	561	547
ANSI B16.5	150 lb	286	286	280	261
AWWA C-207	Class D	150	150	150	150l
Sizes ½"... 12" (order no. 7ME6520 only)					
EN 1092-1	PN 10	145	145	145	119
	PN 16	145	232	232	191
ANSI B16.5	150 lb	145	286	286	235

8.4 Process fluid conductivity

Compact installation

Liquids with an electrical conductivity ≥ 5 µS/cm.

Remote installation

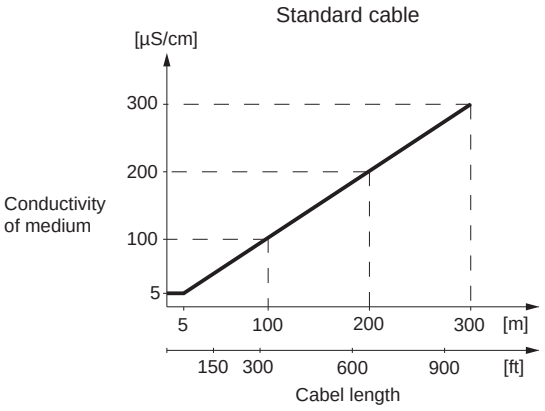

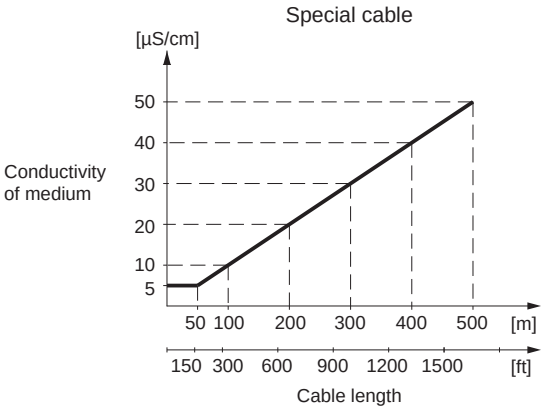

WARNING

For detection of empty sensor the min. conductivity must always be >50 µS/cm and the max. length of the electrode cable when remote mounted is 50 meters (164 ft). Special cable must be used!

For remote MID installations the max. cable length is 3 meters (9.8 ft). For other CT application standard requirements are applicable.

8.5 Liner selection

Liner	Applications
EPDM	Drinking water applications (not hydrocarbons)
Ebonite	Drinking water applications wastewater applications and certain chemicals applications
NBR	General purpose. Drinking water, sea waters

8.6 Electrode selection

Electrodes	
Hastelloy C	The preferred choice for water and wastewater, chemicals, food and beverage, and pharmaceutical industries

8.7 Sizing tables

Sizing table (DN 2 ... DN 2000)

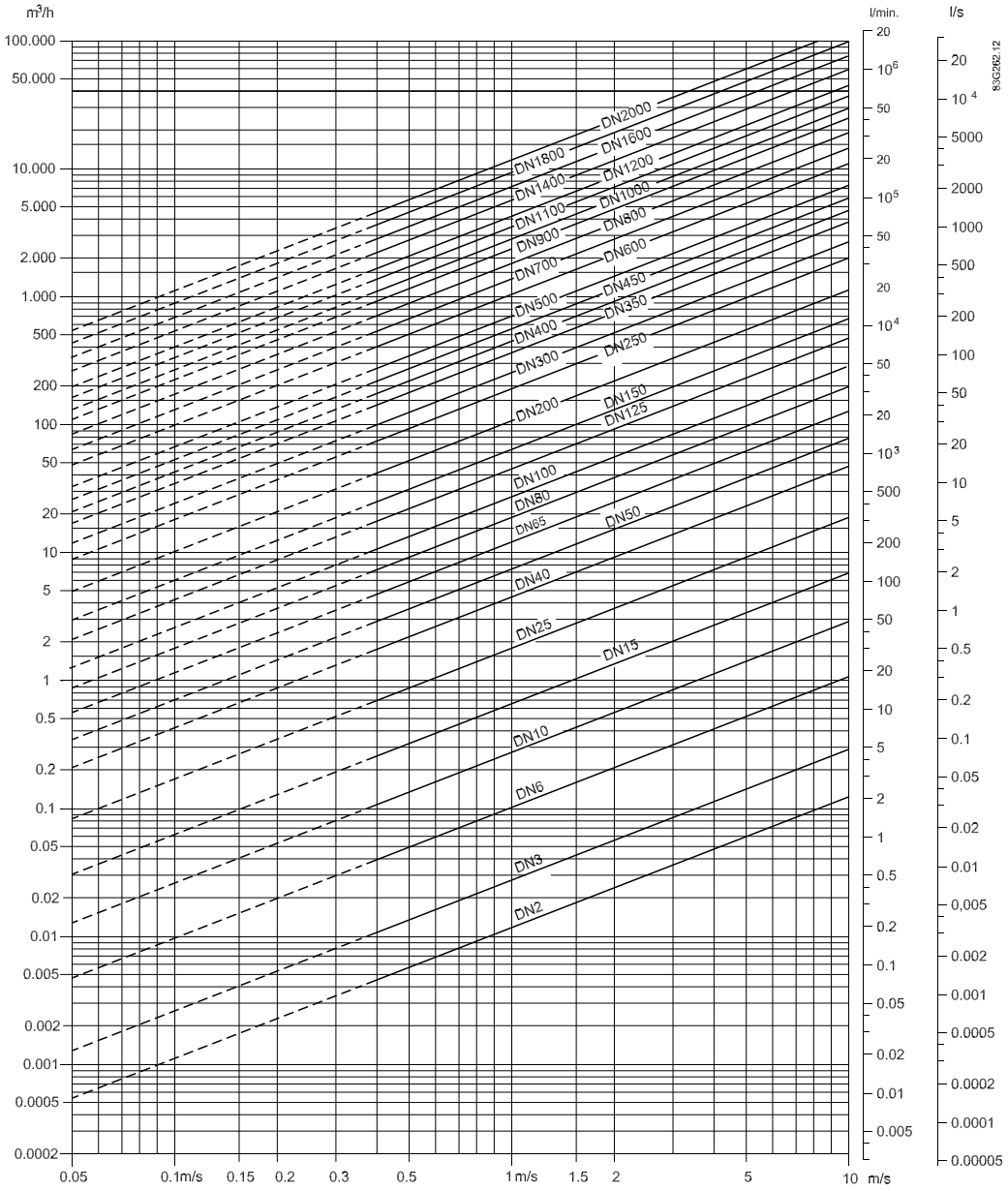

Sizing table (DN 1/12" ... DN 78")

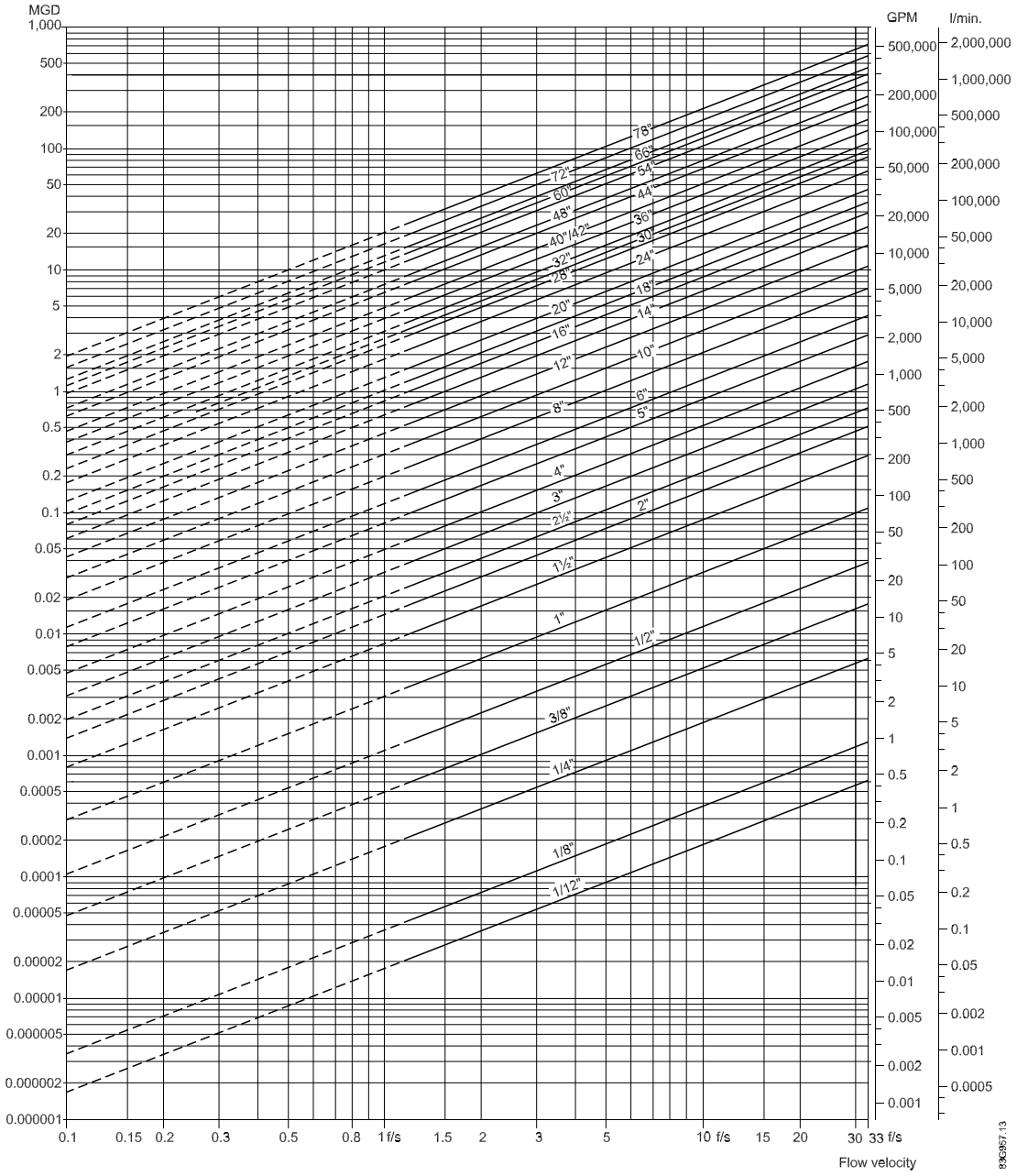

The tables show the relationship between flow velocity v, flow quantity Q and sensor dimension DN.

Guidelines for selection of sensor

Min. measuring range: 0 ... 0.25 m/s (0 ... 0.8 ft/s)

Max. measuring range: 0 ... 10 m/s (0 ... ft/s)

Normally the sensor size is selected so that the nominal flow velocity v lies within the measuring range 1 ... 3 m/s (1 ... 15 ft/s).

Flow velocity calculation formula:

(metric measures)

$$V = \frac{1273.24 \times Q\ [l/s]}{DN^2\ [mm]}\ [m/s] \text{ or } V = \frac{353.68 \times Q\ [m^3/h]}{DN^2\ [mm]}\ [m/s]$$

(imperial measures)

$$V = \frac{0.408 \times Q\ [GPM]}{(\text{Pipe ID})^2\ [inch]}\ [ft/s] \text{ or } V = \frac{283.67 \times Q\ [MGD]}{(\text{Pipe ID})^2\ [inch]}\ [ft/s]$$

8.8 Dimensions and weight

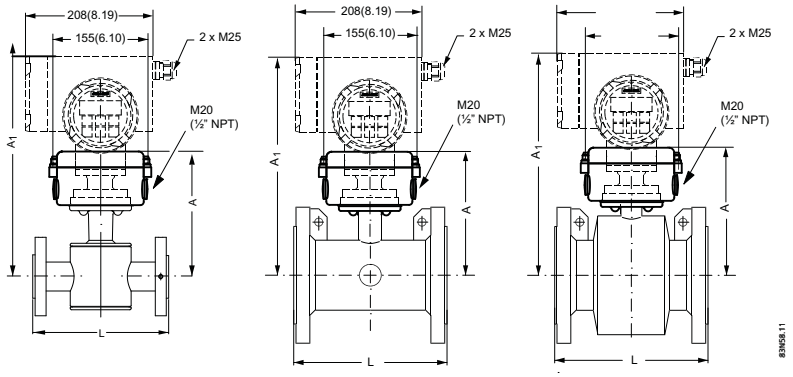

Figure 8-1 MAG 5100 W with MAG 6000 I / MAG 6000 I Ex d

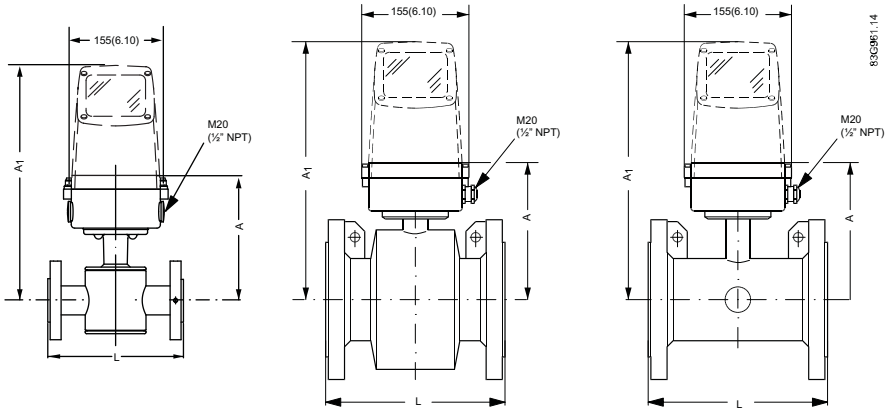

Figure 8-2 MAG 5100 W with MAG 5000 / 6000

Dimensions

Table 8- 10 Nominal size A

Nominal size		**A**			
		Order no. 7ME6520 NBR or EPDM liner		**Order no. 7ME6580 Ebonite liner**	
mm	inch	mm	inch	mm	inch
15	½	177	7	-	-
25	1	187	7.4	187	7.4
40	1½	202	8	197	7.8
50	2	188	7.4	205	8.1
65	2½	194	7.6	212	8.3
80	3	200	7.9	222	8.7
100	4	207	8.1	242	9.5
125	5	217	8.5	255	10.0
150	6	232	9.1	276	10.9
200	8	257	10.1	304	12.0
250	10	284	11.2	332	13.1
300	12	310	12.2	357	14.1
350	14	382	15.0	362	14.3
400	16	407	16.0	387	15.2
450	18	438	17.2	418	16.5
500	20	463	18.2	443	17.4
600	24	514	20.2	494	19.4
700	28	564	22.2	544	21.4
750	30	591	23.3	571	22.5
800	32	616	24.3	606	23.9
900	36	663	26.1	653	25.7
1000	40	714	28.1	704	27.7
1050	42	714	28.1	704	27.7
1100	44	765	30.1	755	29.7
1200	48	820	32.3	810	31.9
1400	54	N/A	N/A	925	36.4
1500	60	N/A	N/A	972	38.2
1600	66	N/A	N/A	1025	40.4
1800	72	N/A	N/A	1123	44.2
2000	78	N/A	N/A	1223	48.1

Table 8- 11 Nominal size L

Nominal size		L											
		PN 10		PN 16		PN 16 non-PED		PN 40		Class 150 AWWA		AS / JIS10K	
mm	inch	mm	inch	mm	inch	mm	inch	mm	inch	mm	inch	mm	inch
15	½	N/A	N/A	N/A	N/A	N/A	N/A	200	7.9	200	7.9	N/A	N/A
25	1	N/A	N/A	N/A	N/A	N/A	N/A	200	7.9	200	7.9	200	7.9
40	1½	N/A	N/A	N/A	N/A	N/A	N/A	200	7.9	200	7.9	200	7.9
50	2	N/A	N/A	200	7.9	N/A	N/A	N/A	N/A	200	7.9	200	7.9
65	2½	N/A	N/A	200	7.9	N/A	N/A	N/A	N/A	200	7.9	200	7.9
80	3	N/A	N/A	200	7.9	N/A	N/A	N/A	N/A	200	7.9	200	7.9
100	4	N/A	N/A	250	9.8	N/A	N/A	N/A	N/A	250	9.8	250	9.8
125	5	N/A	N/A	250	9.8	N/A	N/A	N/A	N/A	250	9.8	250[1)]	9.8[1)]
150	6	N/A	N/A	300	11.8	N/A	N/A	N/A	N/A	300	11.8	300	11.8
200	8	350	13.8	350	13.8	N/A	N/A	N/A	N/A	350	13.8	350	13.8
250	10	450	17.7	450	17.7	N/A	N/A	N/A	N/A	450	17.7	450	17.7
300	12	500	19.7	500	19.7	N/A	N/A	N/A	N/A	500	19.7	500	19.7
350	14	550	21.7	550	21.7	N/A	N/A	N/A	N/A	550	21.7	550	21.7
400	16	600	23.6	600	23.6	N/A	N/A	N/A	N/A	600	23.6	N/A	23.6
450	18	600	23.6	600	23.6	N/A	N/A	N/A	N/A	600	23.6	600	23.6
500	20	600	23.6	600	23.6	N/A	N/A	N/A	N/A	600	23.6	600	23.6
600	24	600	23.6	600	23.6	N/A	N/A	N/A	N/A	600	23.6	600	23.6
700	28	700	27.6	700	27.6	N/A	N/A	N/A	N/A	700	27.6	700[2)]	27.6[2)]
750	30	N/A	N/A	N/A	N/A	N/A	N/A	N/A	N/A	750	29.5	750[2)]	N/A
800	32	800	31.5	800	31.5	N/A	N/A	N/A	N/A	800	31.5	800[2)]	31.5[2)]
900	36	900	35.4	900	35.4	N/A	N/A	N/A	N/A	900	35.4	900[2)]	35.4[2)]
1000	40	1000	39.4	1000	39.4	N/A	N/A	N/A	N/A	1000	39.4	1000[2)]	39.4[2)]
1050	42	N/A	N/A	N/A	N/A	N/A	N/A	N/A	N/A	1000	39.4	N/A	N/A
1100	44	N/A	N/A	N/A	N/A	N/A	N/A	N/A	N/A	1100	43.3	N/A	N/A
1200	48	1200	47.2	1200	47.2	N/A	N/A	N/A	N/A	1200	47.2	1200[2)]	47.2[2)]
1400	54	1400	55.1	N/A	N/A	1400	55.1	N/A	N/A	1200	47.2	N/A	N/A
1500	60	1500	59.1	N/A	N/A	1500	59.1	N/A	N/A	1200	47.2	N/A	N/A
1600	66	1600	63.0	N/A	N/A	1600	63.0	N/A	N/A	1200	47.2	N/A	N/A
1800	72	1800	70.9	N/A	N/A	1800	70.9	N/A	N/A	1200	47.2	N/A	N/A
2000	78	2000	78.7	N/A	N/A	2000	78.7	N/A	N/A	1200	47.2	N/A	N/A

1) Not available with AS flange

2) Not available with JIS 10K flange

Weight

Table 8- 12 Weight

Nominal size		Order no. 7ME6520										Order no. 7ME6580	
		PN 10		PN 16		PN 40		Class 150 / AWWA		AS		PN / ANSI / AWWA / AS	
mm	inch	kg	lbs	kg	lbs	kg	lbs	kg	lbs	kg	lbs	kg	lbs
15	½	N/A	N/A	N/A	N/A	4	9	4	9	N/A	N/A	-	-
25	1	N/A	N/A	N/A	N/A	6	12	5	11	N/A	N/A	5	11
40	1½	N/A	N/A	N/A	N/A	8	18	7	15	N/A	N/A	8	17
50	2	N/A	N/A	9	20	N/A	N/A	8	20	N/A	N/A	9	20
65	2½	N/A	N/A	10.7	24	N/A	N/A	11	24	N/A	N/A	11	24
80	3	N/A	N/A	11.6	26	N/A	N/A	13	28	N/A	N/A	12	24
100	4	N/A	N/A	15.2	33	N/A	N/A	19	41	N/A	N/A	16	35
125	5	N/A	N/A	20.4	45	N/A	N/A	24	52	N/A	N/A	19	42
150	6	N/A	N/A	26	57	N/A	N/A	29	64	N/A	N/A	27	60
200	8	48	106	48	106	N/A	N/A	56	124	N/A	N/A	40	68
250	10	64	141	69	152	N/A	N/A	79	174	N/A	N/A	60	132
300	12	76	167	86	189	N/A	N/A	110	243	N/A	N/A	80	176
350	14	104	229	125	274	N/A	N/A	139	307	N/A	N/A	110	242
400	16	119	263	143	314	N/A	N/A	159	351	N/A	N/A	125	275
450	18	136	299	173	381	N/A	N/A	182	400	N/A	N/A	175	385
500	20	163	359	223	491	N/A	N/A	225	495	N/A	N/A	200	440
600	24	236	519	338	744	N/A	N/A	320	704	N/A	N/A	187	633
700	28	270	595	314	692	N/A	N/A	273	602	320	70	330	728
750	30	N/A	N/A	N/A	N/A	N/A	N/A	329	725	N/A	N/A	360	794
800	32	346	763	396	873	N/A	N/A	365	804	428	944	450	992
900	36	432	951	474	1043	N/A	N/A	495	1089	618	1362	53	1168
1000	40	513	1130	600	1321	N/A	N/A	583	1282	636	1399	66	1455
1050	42	N/A	N/A	N/A	N/A	N/A	N/A	687	1512	N/A	N/A	N/A	N/A
1100	44	N/A	N/A	N/A	N/A	N/A	N/A	763	1680	N/A	N/A	1140	2513
1200	48	643	1415	885	1948	N/A	N/A	861	1896	813	1789	1180	2601
1400	54	1592	3510	N/A	N/A	N/A	N/A	N/A	N/A	N/A	N/A	1600	3528
1500	60	N/A	N/A	N/A	N/A	N/A	N/A	N/A	N/A	N/A	N/A	2460	5423
1600	66	2110	4652	N/A	N/A	N/A	N/A	N/A	N/A	N/A	N/A	2525	5566
1800	72	2560	5644	N/A	N/A	N/A	N/A	N/A	N/A	N/A	N/A	2930	6460
2000	78	3640	8025	N/A	N/A	N/A	N/A	N/A	N/A	N/A	N/A	3665	8080

Appendix

A

A.1 Flange mating dimensions (metric)

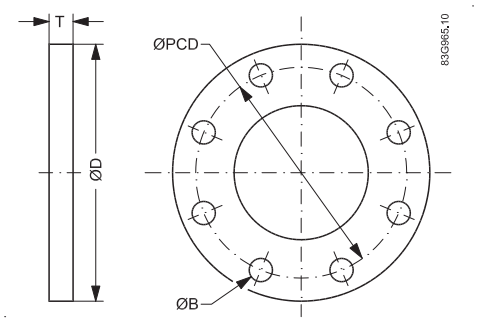

Figure A-1 Flange mating dimensions

Table A- 1 Flange mating dimensions (metric)

	Dimensions (mm)				Bolting	
mm	D	PCD	T	B	Holes	Bolts
PN10						
200	340	295	24	22	8	M20
250	395	350	26	22	12	M20
300	445	400	26	22	12	M20
350	505	460	28	22	16	M20
400	565	515	32	26	16	M24
450	615	565	36	26	20	M24
500	670	620	38	26	20	M24
600	780	725	42	3	20	M27
700	895	840	30	30	24	M27
800	1015	950	32	33	24	M30
900	1115	1050	34	33	28	M30
1000	1230	1160	34	36	28	M33
1200	1455	1380	38	39	32	M36
PN16						
50	165	125	19	18	4	M16
65	185	145	20	18	8	M16
80	200	160	20	18	8	M16
100	220	180	22	18	8	M16
125	250	210	22	18	8	M16
150	285	240	24	22	8	M20
200	340	295	26	22	12	M20
250	405	355	29	26	12	M24

	Dimensions (mm)				Bolting	
mm	**D**	**PCD**	**T**	**B**	**Holes**	**Bolts**
300	460	410	32	26	12	M24
350	520	470	35	26	16	M24
400	580	525	38	30	16	M27
450	640	585	42	30	20	M27
500	715	650	46	33	20	M30
600	840	770	52	36	20	M33
700	910	840	36	36	24	M33
800	1025	950	38	39	24	M36
900	1125	1050	40	39	28	M36
1000	1255	1170	42	42	28	M39
1200	1485	1390	48	48	32	M45
PN40						
15	95	65	14	14	4	M12
25	115	85	16	14	4	M16
40	150	110	18	18	4	M16
150 lb						
15	89	60	12	16	4	M12
25	108	79	16	16	4	M16
40	127	98	18	16	4	M16
50	152	121	19	19	4	M16
65	178	140	22	19	4	M16
80	190	152	24	19	4	M16
100	229	191	24	19	8	M16
125	254	216	24	22	8	M20
150	279	241	25	22	8	M20
200	343	298	29	22	8	M20
250	406	362	30	25	12	M24
300	483	432	32	25	12	M24
350	533	476	35	28	12	M27
400	597	540	36.5	28	16	M27
450	635	578	40	32	16	M30
500	699	635	43	32	20	M30
600	813	749	48	35	20	M33

	Dimensions (mm)				Bolting	
mm	D	PCD	T	B	Holes	Bolts
AWWA						
700	927	864	33	35	28	M33
750	984	914	35	35	28	M33
800	1060	978	38	41	28	M39
900	1168	1068	41	41	32	M39
1000	1289	1200	41	41	36	M39
1050	1346	1257	44	41	36	M39
1200	1511	1422	48	41	44	M39

A.2 Factory settings

Dimension-dependent factory settings

Table A- 2 50 Hz version

DN			Qmax				Unit	Volume/ pulse	Pulse unit	Totalizer unit
			Order no. 7ME6520		Order no. 7ME6580					
mm	Inch	Fac settings	Min.	Max.	Min.	Max.				
15	½	**2000**	159	6361	-	-	l/h	1	l	l
25	1	**5000**	441	17671	441	17671	l/h	10	l	l
40	1½	**12**	1.1	45	1.1	45	m^3/h	10	l	l
50	2	**20**	1.7	63	1.7	70	m^3/h	10	l	l
65	2½	**30**	2.9	100	2.9	119	m^3/h	100	l	l
80	3	**50**	4.0	160	4.5	180	m^3/h	100	l	l
100	4	**120**	6.2	250	7	282	m^3/h	100	l	l
125	5	**180**	10.0	400	11	441	m^3/h	100	l	m^3
150	6	**250**	15.7	629	15.9	636	m^3/h	100	l	m^3
200	8	**400**	24.9	997	28.2	1130	m^3/h	1	m^3	m^3
250	10	**700**	40.0	1600	44.1	1767	m^3/h	1	m^3	m^3
300	12	**1000**	62.5	2500	63.6	2544	m^3/h	1	m^3	m^3
350	14	**1200**	86.5	3463	86.5	3463	m^3/h	1	m^3	m^3
400	16	**1800**	113	4523	113	4523	m^3/h	1	m^3	m^3
450	18	**2000**	143.1	5725	143.1	5725	m^3/h	1	m^3	m^3
500	20	**3000**	176.7	7068	176.7	7068	m^3/h	1	m^3	m^3
600	24	**4000**	254.4	10178	254.4	10178	m^3/h	10	m^3	m^3
700	28	**5000**	346.3	13854	346.3	13854	m^3/h	10	m^3	m^3
750	30	**6000**	397.6	15904	397.6	15904	m^3/h	10	m^3	m^3
800	32	**7000**	452.3	18095	452.3	18095	m^3/h	10	m^3	m^3

DN			Qmax				Unit	Volume/ pulse	Pulse unit	Totalizer unit
			Order no. 7ME6520		Order no. 7ME6580					
900	36	**9000**	572.5	22902	572.5	22902	m^3/h	10	m^3	m^3
1000	40	**12000**	706.8	28274	706.8	28274	m^3/h	10	m^3	m^3
1050	42	**12000**	706.8	28274	706.8	28274	m^3/h	10	m^3	m^3
1100	44	**14000**	855.2	34211	855.2	34211	m^3/h	10	m^3	m^3
1200	48	**15000**	1017.8	40715	1017.8	40715	m^3/h	10	m^3	m^3
1400	54	**25000**	-	-	1385.4	55417	m^3/h	10	m^3	m^3
1500	60	**30000**	-	-	1590.4	63617	m^3/h	10	m^3	m^3
1600	66	**35000**	-	-	1809.5	72382	m^3/h	10	m^3	m^3
1800	72	**40000**	-	-	2290.2	91608	m^3/h	10	m^3	m^3
2000	78	**45000**	-	-	2827.4	113097	m^3/h	10	m^3	m^3

Table A- 3 60 Hz version

DN			Qmax				Unit	Volume/ pulse	Pulse unit	Totalizer unit
			Order no. 7ME6520		Order no. 7ME6580					
mm	Inch	**Fac. settings**	Min.	Max.	Min.	Max.				
15	½	9	0.7	28	-	-	US GPM	1	US G	US G
25	1	**22**	1.9	77.8	1.9	77.8	US GPM	1	US G	US G
40	1½	**52**	4.9	199.1	4.9	199.1	US GPM	1	US G	US G
50	2	**88**	6.9	277.2	7.7	311.2	US GPM	1	US G	US G
65	2½	**132**	11.0	440.2	13.1	525.9	US GPM	1	US G	US G
80	3	**220**	17.6	705.1	19.9	796.7	US GPM	1	US G	US MG
100	4	**528**	27.5	1101	31.1	1244.8	US GPM	1	US G	US MG
125	5	**793**	44.0	1762.2	48.6	1945.1	US GPM	1	US G	US MG
150	6	**1101**	69.3	2772.9	70	2800.9	US GPM	1	US G	US MG
200	8	**1761**	109.7	4391.9	124.4	4979.5	US GPM	1	US G	US MG
250	10	**3082**	176.1	7045.2	194.5	7780.5	US GPM	1	US G	US MG
300	12	**4402**	275.1	11007.8	280	11203.9	US GPM	1	US G	US MG
350	14	**5283**	381.2	15249.7	381.2	15249.7	US GPM	1	US G	US MG
400	16	**7925**	497.9	19918.1	497.9	19918.1	US GPM	1	US G	US MG
450	18	**8806**	630.2	25208.8	630.2	25208.8	US GPM	1	US G	US MG
500	20	**13209**	778	31122	778	31122	US GPM	1	US G	US MG
600	24	**17611**	1120.3	44815.7	1120.3	44815.7	US GPM	10	US G	US MG
700	28	**19812**	1524.9	60999.1	1524.9	60999.1	US GPM	10	US G	US MG
750	30	**22014**	1750.6	70024.5	1750.6	70024.5	US GPM	10	US G	US MG
800	32	**30820**	1991.8	79672.4	1991.8	79672.4	US GPM	10	US G	US MG
900	36	**39626**	2522.8	100835.3	2522.8	100835.3	US GPM	10	US G	US MG
1000	40	**52834**	3112.2	124488.1	3112.2	124488.1	US GPM	10	US G	US MG
1050	42	**52834**	3431.2	137248.1	3431.2	137248.1	US GPM	10	US G	US MG
1100	44	**61640**	3765.7	150630.6	3765.7	150630.6	US GPM	10	US G	US MG

DN			Qmax				Unit	Volume/ pulse	Pulse unit	Totalizer unit
			Order no. 7ME6520		Order no. 7ME6580					
1200	48	**66043**	4481	179262.9	4481	179262.9	US GPM	10	US G	US MG
1400	54	**110072**	-	-	6099.9	243993.7	US GPM	1000	US G	US MG
1500	60	**132086**	-	-	7002.4	280098.3	US GPM	1000	US G	US MG
1600	66	**154100**	-	-	7967.2	318689.6	US GPM	1000	US G	US MG
1800	72	**176115**	-	-	10083.5	403341.5	US GPM	1000	US G	US MG
2000	78	**198129**	-	-	12448.8	497952.5	US GPM	1000	US G	US MG

A.3 Coil resistance

Table A- 4 Coil resistance

		MAG 1100, MAG 1100F		MAG 3100, MAG 3100P, MAG 5100 W (Order no. 7ME6580)		MAG 5100 W (Order no. 7ME6520)	
DN	Inch	Resistance	Tolerance	Resistance	Tolerance	Resistance	Tolerance
2	1/12	104 Ω	+/− 5	104			
3	1/8	104 Ω	+/− 5	104			
6	1/4	99 Ω	+/− 17	104			
10	3/8	99 Ω	+/− 17	104			
15[1)]	1/2	91 Ω	+/− 9	104			
25	1	91 Ω	+/− 17	104	+/− 2	104	+/− 10
40	11/2	91 Ω	+/− 9	92	+/− 2	92	+/− 10
50	2	91 Ω	+/− 9	92	+/− 2	119.4	+/− 10
65	21/2	99 Ω	+/− 17	100	+/− 2	127	+/− 10
80	3	91 Ω	+/− 17	94	+/− 2	126	+/− 10
100	4	91 Ω	+/− 9	92	+/− 2	125	+/− 10
125	5	92	+/− 2	126	+/− 10		
150	6	94	+/− 2	116	+/− 10		
200	8	90	+/− 2	109	+/− 10		
250	10	92	+/− 2	104	+/− 10		
300	12	100	+/− 2	108	+/− 10		
350	14	112	+/− 2	100	+/− 6		
400	16	100	+/− 4	100	+/− 6		
450	18	108	+/− 4	100	+/− 6		
500	20	122	+/− 4	100	+/− 6		
600	24	115	+/− 4	98	+/− 6		
700	28	128	+/− 4	98	+/− 6		
750	30	133					
800	32	128	+/− 4	98	+/− 6		
900	36	131	+/− 4	98	+/− 6		

		MAG 1100, MAG 1100F		MAG 3100, MAG 3100P, MAG 5100 W (Order no. 7ME6580)		MAG 5100 W (Order no. 7ME6520)	
1000	40	131	+/− 4	88	+/− 6		
1100	44	126					
1200	48	130	+/− 4	88	+/− 6		
1400	54	130					
1500	60	124					
1600	66	133					
1800	72	133					
2000	78	147					

1) On MAG 1100 DN 15 produced as from May 1999 the coil resistance must be 86 ohm, +8/−4 ohm.

NOTICE

Reference values

- All resistance values are at 20 °C
- The resistance changes proportionally 0.4% / °C

Spare parts

Description	
Cable glands, 2 pcs. M20 ½" NPT	
Sealing screws for sensor/transmitter, 2 pcs.	
Terminal box, in polyamide, inclusive of lid M20 ½" NPT	

Description	
Terminal box lid, in polyamide	
Terminal box, in stainless steel, inclusive of lid M20 ½" NPT	
Potting kit for terminal box of MAG sensors for I P68/NEMA 6P (not for EX)	

A.4 Ordering

In order to ensure that the ordering data you are using is not outdated, the latest ordering data is always available on the Internet: Catalog process instrumentation (http://www.siemens.com/processinstrumentation/catalogs)

Glossary

ASIC

Application-Specific Integrated Circuit is an integrated circuit (IC) customized for a particular use, rather than intended for general-purpose use.

EMC

Electromagnetic compatibility (EMC) is the branch of electrical sciences which studies the unintentional generation, propagation and reception of electromagnetic energy with reference to the unwanted effects (Electromagnetic Interference, or EMI) that such energy may induce. The goal of EMC is the correct operation, in the same electromagnetic environment, of different equipment which use electromagnetic phenomena, and the avoidance of any interference effects.

IP

An IP (Ingress Protection) number is used to specify the environmental protection of enclosures around electronic equipment. These ratings are determined by specific tests. The IP number is composed of two numbers, the first referring to the protection against solid objects and the second against liquids. The higher the number, the better the protection. For example, in IP67 the first Number (6) means that the device is totally protected against dust, and the second (7) that it is protected against the effect of immersion between 15cm and 1m

PED

The Pressure Equipment Directive (97/23/EC) is the legislative framework on European level for equipment subject to a pressure hazard. It was adopted by the European Parliament and the European Council in May 1997 and has been obligatory throughout the European Union since May 2002.

SENSORPROM

All sensor related settings/data saved on an EPROM. SENSORPROM technology automatically configures the transmitter at start up providing calibration data, pipe size, sensor type, and output settings. The SENSORPROM automatically stores values or settings changed by users, and automatically re-programs any new transmitter without loss of accuracy.

USM

USM II is a Communication Platform. The Siemens USM II concept enables fitting of add-on bus modules without loss of functionality:

1. All modules can be fitted as true "plug & play"
2. Module and transmitter are automatically configured through the SENSORPROM

Index

A

Abrasive liquids, 18
Add-on modules, (See Communication module)
Applications, 11

C

Cable specifications, 24, 40
Cathodic protection, 21
Coil insulation check, 33
Coil resistance check, 33
Communication modules, 11
Compliance, 7
Contact person, 6
Customer Support Hotline, 30

D

Decontamination, 31
Dimensions, 47
Direct burial, 28
Document history, 5

E

Electrical connection
  Cable specifications, 24
  Remote installations, 24
  Safety instructions, 23
Electrode resistance check, 34
Empty pipe detection, 18

F

FAQ
  Fluctuating process values, 34
Flange mating dimensions, 51

G

Gas / Air bubbles, 18

H

Hazardous area
  Approvals, 10
Horizontal pipes
  Installation in, 18
Hotline, 30

I

Inlet / outlet conditions, 16
Installation
  in U-tube, 16
  Indoor/outdoor, 15
  Large pipes, 17
  Location in system, 16
  Mounting of sensor, 19
  Pipes with free outlet, 16
  Remote, 24
  Safety instructions, 15
Internet
  Contact person, 6, 31
  Flowdocumentation, 6
  Support, 31
Introduction, 5
Items supplied, 5

L

Laws and directives, 7

M

Mains supply, 23
Maintenance, 29
Material compatibility, 7
Measurement principle, 12
Mounting, (See Installation)

P

Potential equalization, 21
Potting, 27
Pressure
  Safety instructions, 15

Pressure Equipment Directive, 8
Process fluid
    Conductivity, 42
Protective conductor terminal, 24
Protective earth, 24

R

Recalibration, 29
Repair, 30
Return procedures, 31

S

Safety
    Instrument safety standards, 7
Safety instructions
    Electrical connection, 23
    Installation, 15
Safety notes, 7
Sensor check, 33
Sensor orientation, 18
Service, 30, 31
Support, 31
System components, 11

T

Theory of operation, 12
Torques values, 20
Transportation, 29

V

Vertical pipes
    Installation in, 18
Vibrations, 19

W

Weight, 49
Wire insulation, 24
Wiring, (See Electrical connection)

For more information

www.siemens.com/flow

Siemens A/S
Flow Instruments
DK-6430 Nordborg
Denmark

Subject to change without prior notice
Order No.: A5E03063678
Literature No.: A5E03063678-02
Copyright Siemens AG 11.2010
All rights reserved

www.siemens.com/processautomation

SIEMENS

SITRANS F

Electromagnetic flowmeters

SITRANS F M MAG 5000/6000

Operating Instructions

Edition 12/2013

Answers for industry.

SIEMENS

SITRANS F

Flowmeters
SITRANS F M MAG 5000/6000

Operating Instructions

Introduction 1

Safety notes 2

Description 3

Installing/Mounting 4

Connecting 5

Commissioning 6

Functions 7

Alarm, error, and system messages 8

Service and maintenance 9

Troubleshooting/FAQs 10

Technical data 11

Spare parts/Accessories 12

Menu diagrams A

Factory settings B

Approvals/Certificates C

Electromagnetic flow transmitter designed for use with flow sensor types
MAG 1100/1100 F/3100/3100 P/5100 W
Compact and remote installation

12/2013
A5E02338368-002

Legal information

Warning notice system

This manual contains notices you have to observe in order to ensure your personal safety, as well as to prevent damage to property. The notices referring to your personal safety are highlighted in the manual by a safety alert symbol, notices referring only to property damage have no safety alert symbol. These notices shown below are graded according to the degree of danger.

⚠DANGER

indicates that death or severe personal injury **will** result if proper precautions are not taken.

⚠WARNING

indicates that death or severe personal injury **may** result if proper precautions are not taken.

⚠CAUTION

indicates that minor personal injury can result if proper precautions are not taken.

NOTICE

indicates that property damage can result if proper precautions are not taken.

If more than one degree of danger is present, the warning notice representing the highest degree of danger will be used. A notice warning of injury to persons with a safety alert symbol may also include a warning relating to property damage.

Qualified Personnel

The product/system described in this documentation may be operated only by **personnel qualified** for the specific task in accordance with the relevant documentation, in particular its warning notices and safety instructions. Qualified personnel are those who, based on their training and experience, are capable of identifying risks and avoiding potential hazards when working with these products/systems.

Proper use of Siemens products

Note the following:

⚠WARNING

Siemens products may only be used for the applications described in the catalog and in the relevant technical documentation. If products and components from other manufacturers are used, these must be recommended or approved by Siemens. Proper transport, storage, installation, assembly, commissioning, operation and maintenance are required to ensure that the products operate safely and without any problems. The permissible ambient conditions must be complied with. The information in the relevant documentation must be observed.

Trademarks

All names identified by ® are registered trademarks of Siemens AG. The remaining trademarks in this publication may be trademarks whose use by third parties for their own purposes could violate the rights of the owner.

Disclaimer of Liability

We have reviewed the contents of this publication to ensure consistency with the hardware and software described. Since variance cannot be precluded entirely, we cannot guarantee full consistency. However, the information in this publication is reviewed regularly and any necessary corrections are included in subsequent editions.

Siemens AG
Industry Sector
Postfach 48 48
90026 NÜRNBERG
GERMANY

Order number: A5E02338368
℗ 12/2013 Technical data subject to change

Copyright © Siemens AG 2013.
All rights reserved

Table of contents

1 Introduction 7

1.1 Preface 7

1.2 Items supplied 7

1.3 History 8

1.4 Further Information 9

2 Safety notes 11

2.1 Laws and directives 11

2.2 Installation in hazardous location 12

3 Description 15

3.1 System components 15

3.2 Operating principle 15

3.3 Applications 15

3.4 Features 16

3.5 MAG 5000/MAG 6000 versions 17

4 Installing/Mounting 19

4.1 Introduction 19

4.2 Installation conditions 20

4.3 MAG 5000/6000 compact 22

4.4 Remote installation 24

4.5 MAG 5000/6000 CT 28

4.5.1 Installing hardware key 29

4.5.2 Seal device 29

4.5.3 Installation conditions 31

4.5.3.1 MI-001 31

4.5.3.2 PTB K7.2 31

4.6 Turning transmitter/keypad 31

5 Connecting 35

5.1 Electrical connection 36

5.2 Electrical connection PTB K7.2 38

5.3 Connection of add-on modules 38

6 Commissioning 39

6.1 MAG 5000/6000 Blind 39

6.2 Local user interface 40

6.3 Menu structure ... 41
6.4 Changing password ... 42
6.5 Changing basic settings ... 43
6.6 Changing operator menu setup ... 45
6.7 Changing language ... 46
7 Functions ... 47
7.1 Output settings ... 47
7.2 External input ... 49
7.3 Sensor characteristics ... 49
7.4 Reset mode ... 49
7.5 Service mode ... 51
7.6 MAG 5000 CT and MAG 6000 CT settings ... 51
7.7 MAG 6000 SV ... 52
8 Alarm, error, and system messages ... 53
8.1 Diagnostics ... 53
8.2 List of error numbers ... 55
9 Service and maintenance ... 57
9.1 Transmitter check list ... 57
9.2 Technical support ... 58
9.3 Return procedures ... 59
9.4 Recalibration ... 60
10 Troubleshooting/FAQs ... 61
11 Technical data ... 63
11.1 Technical specifications ... 63
11.2 Accuracy ... 66
11.3 Output characteristics ... 68
11.4 Cable data ... 71
11.5 Cable requirements ... 72
12 Spare parts/Accessories ... 73
12.1 Ordering ... 73
12.2 Accessories ... 73
12.3 Spare parts ... 74
12.4 Sun shield ... 74
A Menu diagrams ... 75
A.1 Transmitter menu overview ... 75

A.2 Basic settings 76
A.3 Current output 77
A.4 Digital output - pulse 78
A.5 Digital output - frequency 78
A.6 Error level 78
A.7 Error number 79
A.8 Direction/limit 79
A.9 Batch 79
A.10 External input 80
A.11 Sensor characteristics 81
A.12 Reset mode 82
A.13 Reset mode - MAG 6000 SV 83
A.14 Service mode 84
A.15 Operator menu setup 85
A.16 Product identity 86
A.17 Add-on communication module 87
A.18 Cleaning 87
A.19 MAG 5000/6000 CT menu overview 88
A.20 Change password 89
B Factory settings 91
B.1 Transmitter factory settings 91
B.2 50 Hz Dimension dependent 93
B.3 60 Hz Dimension dependent 94
B.4 50 Hz Dimension dependent batch and pulse output settings 96
B.5 60 Hz Dimension dependent batch and pulse output settings 97
C Approvals/Certificates 99
Index 101

Introduction

1

1.1 Preface

These instructions contain all the information you need for using the device.

The instructions are aimed at persons mechanically installing the device, connecting it electronically, configuring the parameters and commissioning it as well as service and maintenance engineers.

Note

It is the responsibility of the customer that the instructions and directions provided in the manual are read, understood and followed by the relevant personnel before installing the device.

1.2 Items supplied

- SITRANS F M MAG 5000/6000 transmitter
- Calibration report
- SITRANS F literature CD
- Quick start guide

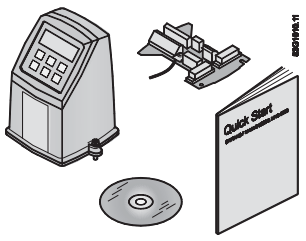

Inspection

1. Check for mechanical damage due to possible improper handling during shipment. All claims for damage are to be made promptly to the shipper.
2. Make sure the scope of delivery, and the information on the type plate corresponds to the ordering information

Device identification

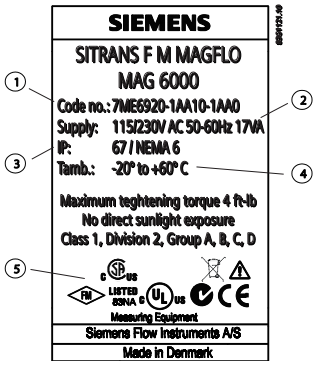

① Code number
② Power supply
③ Enclosure rating
④ Ambient temperature
⑤ Approvals

Figure 1-1 MAG 5000/6000 nameplate

1.3 History

This document describes:

- SITRANS F MAG 5000 and MAG 6000 transmitters (standard version).
- Optional versions:
  - MAG 5000 Blind and MAG 6000 Blind
  - MAG 5000 CT and MAG 6000 CT
  - MAG 6000 SV

Documentation history

The contents of these instructions are regularly reviewed and corrections are included in subsequent editions. We welcome all suggestions for improvement.

The following table shows the most important changes in the documentation compared to each previous edition.

Edition	Remarks	FW version
01 01/2010	First edition	
02 01/2012		4.04
03 12/2013	• Customer defined unit • Velocity value with unit • Operational without SensorProm • EPD for 60 Hz mains	4.07

1.4 Further Information

Product information on the Internet

The Operating Instructions are available on the CD-ROM shipped with the device, and on the Internet on the Siemens homepage, where further information on the range of SITRANS F flowmeters may also be found:

Product information on the internet (http://www.siemens.com/flow)

Worldwide contact person

If you need more information or have particular problems not covered sufficiently by these Operating Instructions, get in touch with your contact person. You can find contact information for your local contact person on the Internet:

Local contact person (http://www.automation.siemens.com/partner)

Safety notes

2

⚠ CAUTION

Correct, reliable operation of the product requires proper transport, storage, positioning and assembly as well as careful operation and maintenance. Only qualified personnel should install or operate this instrument.

Note

Alterations to the product, including opening or improper repairs of the product, are not permitted.

If this requirement is not observed, the CE mark and the manufacturer's warranty will expire.

2.1 Laws and directives

General requirements

Installation of the equipment must comply with national regulations. For example EN 60079-14 for the European Community.

Instrument safety standards

The device has been tested at the factory, based on the safety requirements. In order to maintain this condition over the expected life of the device the requirements described in these Operating Instructions must be observed.

Environmental conditions according to IEC 61010-1 (2001)

- Indoor use
- Altitude up to 2000m
- Maximum relative humidity 80% for temperatures up to 31°C (88°F) decreasing linearly up to 50% relative humidity from 40°C (104°F)
- Main supply voltage fluctuations up to ±10% of the nominal voltage (see technical specifications)
- Overvoltage category II
- Pollution degree 2

CE-marked equipment

The CE mark symbolizes the compliance of the device with the following guidelines:

- EMC-guideline 89/336/EEC
- Low voltage guideline 73/23/EWG
- ATEX Directive 94/9/EG
- CT: (MI-001) Directive 2004/22/EC

2.2 Installation in hazardous location

⚠ WARNING

Equipment used in hazardous locations must be Ex-approved and marked accordingly.

It is required that the special conditions for safe use provided in the manual and in the Ex certificate are followed!

Ex approvals

CSA Class I, Division 2, Groups A, B, C and D. Code T5 for an ambient temperature of +60 °C.

FM Class I, Division 2, Groups A, B, C and D and Class I, Zone 2, Group IIC indoor/outdoor Type IP67 hazardous (classified) locations

Temperature specifications for Ex use

Temperature class	Ambient temperature [°C]		
	-40 to +40	-40 to +50	-40 to +60
T2	180 (process temperature)	-	-
T3	165 (process temperature)	140 (process temperature)	-
T4	100 (process temperature)	100 (process temperature)	80 (process temperature)
T5	65 (process temperature)	65 (process temperature)	65 (process temperature)
T6	50 (process temperature)	50 (process temperature)	50 (process temperature)

EX requirements

It is required that:

- Electrical connections are in accordance with Elex V (VO in explosion hazardous areas) and EN60079-14 (Installing Electrical Systems in Explosion Hazardous Areas).
- The protective cover over the power supply is properly installed. For intrinsically safe circuits the connection area can be opened.

- Appropriate cable connectors are used for the output cicuits: intrinsically safe: blue, non-intrinsically safe: black
- Sensor and transmitter are connected to the potential equalization. For intrinsically safe output circuits potential equalization must be maintained along the entire connection path.
- Sensor insulation thickness is max. 100mm (only insulated sensors).
- EN50281-1-2 is considered for installation in areas with combustible dust.
- When protective earth (PE) is connected, no potential difference between the protective earth (PE) and the potential equalization (PA) can exist, even during a fault condition.

Description

3

3.1 System components

A SITRANS F M MAG 5000/6000 flowmeter system includes:

- Transmitter (type SITRANS F M MAG 5000/6000)
- Sensor (types: SITRANS F MAG 1100/1100F/3100/3100 P/5100 W)
- Communication module (optional) (types: HART, PROFIBUS PA/DP, MODBUS RTU RS 485, Foundation Fieldbus H1, Devicenet)
- SENSORPROM memory unit

Communication solutions

The SITRANS F USM II range of add on modules, presently including HART, Foundation Fieldbus. MODBUS RTU RS 485, PROFIBUS PA / DP and Devicenet, are all applicable with the SITRANS F M MAG 6000 transmitter.

3.2 Operating principle

The transmitters are microprocessor-based with a built-in alphanumeric display in several languages. The flow measuring principle is based on Faraday's law of electromagnetic induction. Magnet coils mounted diametrically on the measuring pipe generate a pulsed electromagnetic field. The liquid flowing through this electromagnetic field induces a voltage.

The transmitters evaluate the signals from the associated electromagnetic sensors, convert the signals into appropriate standard signals such as 4 ... 20 mA, and also fulfil the task of a power supply unit providing the magnet coils with a constant current.

The transmitter consists of a number of function blocks which convert the sensor voltage into flow readings.

3.3 Applications

The pulsed DC-powered magnetic flowmeters are suitable for measuring the flow of almost all electrically conductive liquids, pastes, and slurries with max. 40% solids.

The main applications can be found in the following sectors:

- Water and waste water
- Chemical and pharmaceutical industries
- Food & beverage industry
- Mining and cements industries

- Pulp and paper industry
- Steel industry
- Power generation; utility and chilled water industry

3.4 Features

Power supply

2 different types of power supply are available. A 12 ... 24 V AC/DC and a 115 ... 230 V AC switch mode type.

Coil current module generates a pulsating magnetizing current that drives the coils in the sensor. The current is permanently monitored and corrected. Errors or cable faults are registered by the self-monitoring circuit.

Input circuit amplifies the flow-proportional signal from the electrodes. The input impedance is extremely high: $>10^{14}$ Ω which allows flow measurements on fluids with conductivities as low as 5 µS/cm. Measuring errors due to cable capacitance are eliminated due to active cable screening.

Digital signal processor converts the analog flow signal to a digital signal and suppresses electrode noise through a digital filter. Inaccuracies in the transmitter as a result of long-term drift and temperature drift are monitored and continuously compensated for via the self-monitoring circuit. The analog to digital conversion takes place in an ultra low noise ASIC with 23 bit signal resolution. This has eliminated the need for range switching. The dynamic range of the transmitter is therefore unsurpassed with a turn down ratio of minimum 3000:1.

CAN communication

The transmitter operates internally via an internal CAN communication bus. Signals are transferred through a signal conditioner to the display module and to/from internal/external option modules and the dialog module.

Dialog module

The display unit consists of a 3-line display and a 6-key keypad. The display shows a flow rate or a totalizer value as a primary reading.

Output module

The output module converts flow data to analog, digital and relay outputs. The outputs are galvanically isolated and can be individually set to suit a particular application.

3.5 MAG 5000/MAG 6000 versions

The transmitters are designed in various versions and offer high performance and easy installation, commissioning and maintenance.

Standard version

The standard version is an IP67 version for compact or remote installation. Its robust design ensures a long lifetime if installed outdoors.

Blind version

This version carries all the normal MAG 5000/6000 features, except those associated with the display and keypad.

Both current and digital outputs are available.

Factory setting of current output in unit is switched off when delivered.

CT version

The MAG 5000/6000 CT version is a custody transfer-approved transmitter.

It is approved according to:

- Cold water pattern approval (MAG 5000/6000 CT):
  - OIML R 49
- Cold water pattern approval (MAG 6000 CT only):
  - MI-001
- Hot water pattern approval (MAG 6000 CT only):
- Heat meter pattern approval (MAG 6000 CT only):
  - OIML R 75
- Other media than water (MAG 6000 CT only):
  - OIML R 117

* Energy metering

- PTB K7.2

SV version (MAG 6000 only)

This version is identical to the standard MAG 6000 transmitters except for the following additional functions:

- Zero point adjustment
- Adjustable excitation frequency up to 44 Hz

Installing/Mounting

4

4.1 Introduction

- SITRANS F flowmeters are suitable for indoor and outdoor installations.

WARNING
Installation in hazardous location
Special requirements apply to the location and interconnection of sensor and transmitter. See "Installation in hazardous area"

This chapter describes how to install the flowmeter in the compact version as well as in the remote version.

The transmitter is delivered ready for mounting on the sensor. The transmitter is delivered with a compression plate ready for mounting on the sensor. No further assembling is necessary.

The transmitter can be installed either compact on the sensor or remote.

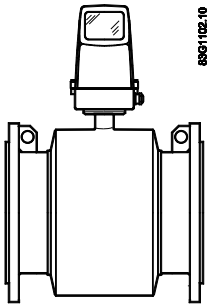

Figure 4-1 Compact installation

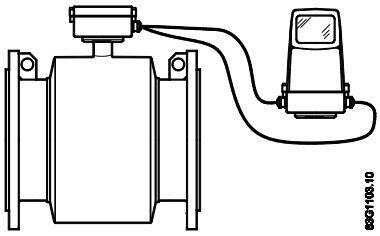

Figure 4-2 Remote installation

⚠ CAUTION
See Cable requirements (Page 72) before installing transmitter

4.2 Installation conditions

Reading and operating the flowmeter is possible under almost any installation conditions because the display can be oriented in relation to the sensor. To ensure optimum flow measurement, attention should be paid to the following:

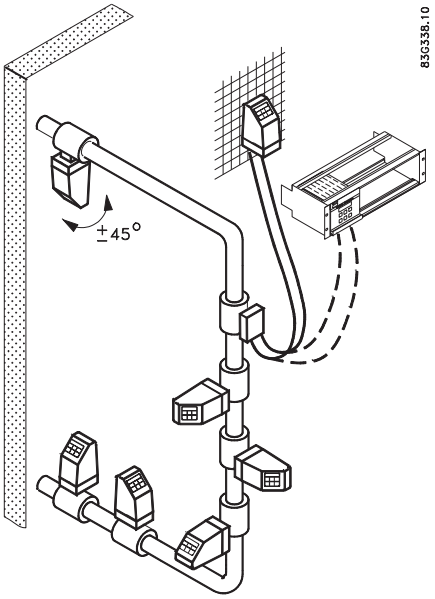

Vibrations

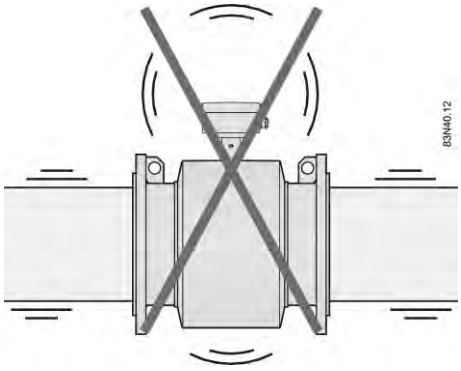

Figure 4-3 Avoid strong vibrations

Compact installation

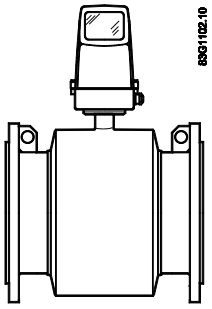

Medium temperature must be in accordance with the graphs showing max. ambient temperature as a function of medium temperature.

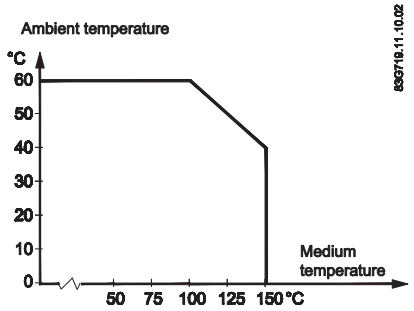

Figure 4-4 Standard, blind and SV versions

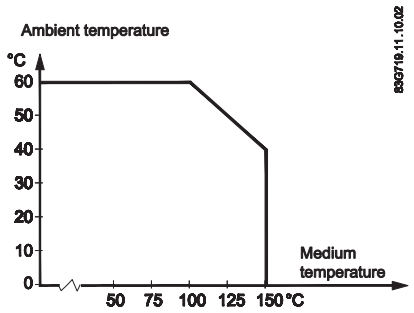

Figure 4-5 CT version

Remote installation

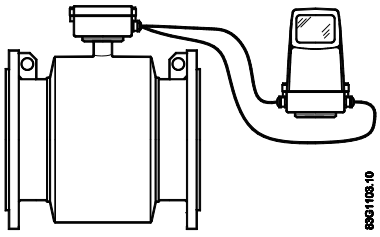

Cable length and type (as described in Cable requirements (Page 72)) must be used.

For installation conditions for sensors, see respective sensor operating instructions.

4.3 MAG 5000/6000 compact

Install MAG 5000 / MAG 6000 compact version

1. Remove and discard terminal box lid of sensor.

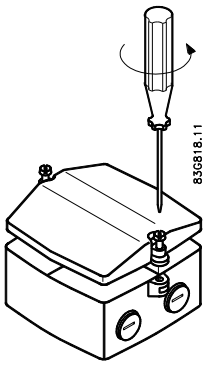

2. Ensure SENSORPROM® memory unit is installed.
3. Fit M20 or ½" NPT cable glands for supply and output cables.
4. Unplug the two black plug assemblies for coil and electrode cables in terminal box.
5. Connect earth wire from connection board to bottom of terminal box.
6. Connect 2-pin connector and 3-pin connector as shown to their corresponding terminal numbers on connection board as shown in Electrical connection (Page 36).

Note

System will not register flow if black plugs are not connected to connection board.

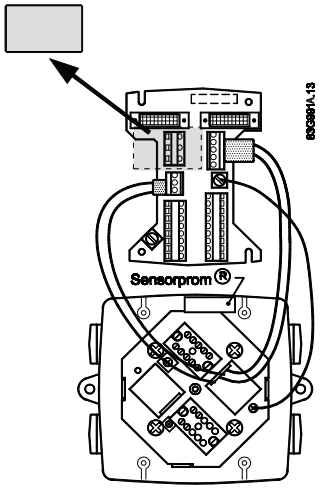

7. Fit supply and output cables through cable glands and connect to connection plate as shown in Electrical connection (Page 36).

8. Mount connection plate in terminal box.

Note

Check that your connection board lines up with SENSORPROM® unit, if not, move SENSORPROM® unit to the other side of terminal box.

SENSORPROM® memory unit connections will be established automatically when connection plate is mounted in terminal box.

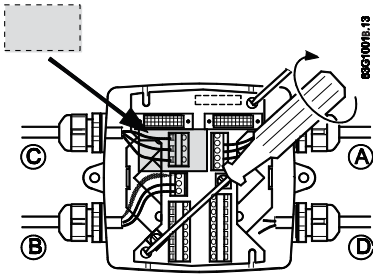

9. Tighten cable glands to obtain optimum sealing.
10. Mount transmitter on terminal box.

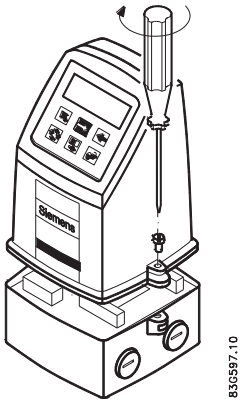

11. Transmitter is ready to be powered up.

NOTICE
Exposing transmitter to direct sunlight may increase operating temperature above its specified limit, and decrease display visibility.
A sunshield is available as accessory.

4.4 Remote installation

At sensor

1. Remove terminal box lid.

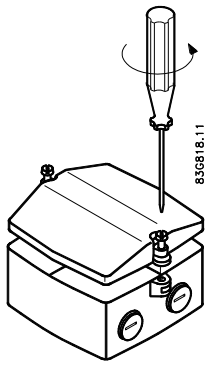

2. Remove SENSORPROM® unit from sensor terminal box and mount it in terminal box of wall mounting unit.

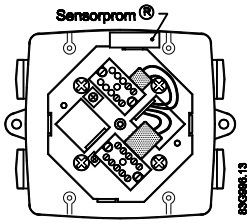

3. Fit M20 or ½" NPT cable glands for cables.

4. Fit and connect electrode (1) and coil (2) cables as shown in Electrical connection (Page 36).

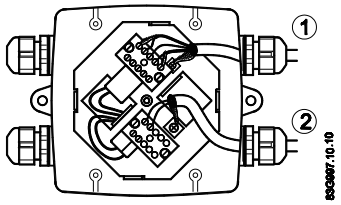

Note

Unscreened cable ends must be kept as short as possible.

Electrode cable and coil cable must be kept separate to prevent interference.

5. Tighten cable glands well to obtain optimum sealing.

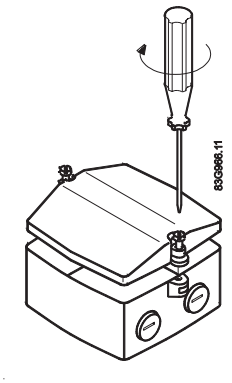

⚠ WARNING

Mount terminal box lid before power up.

Wall mounting

1. Mount bracket on a wall or on a horizontal or a vertical pipe using ordinary hose clips or duct straps.

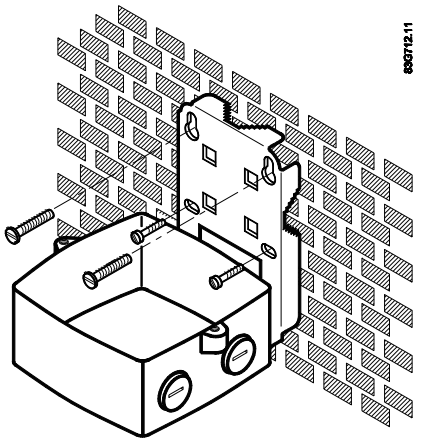

Figure 4-6 Wall mounting

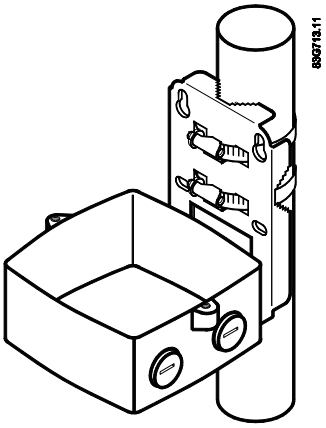

Figure 4-7 Pipe mounting - vertical

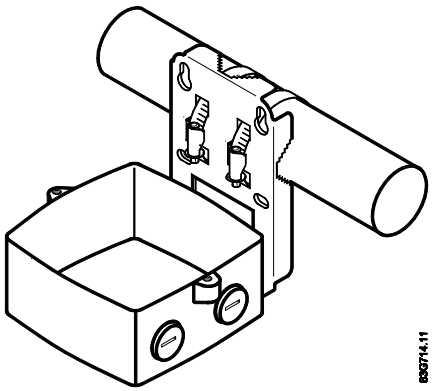

Figure 4-8 Pipe mounting - horizontal

2. Ensure that correct SENSORPROM® memory unit is mounted in wall/pipe mounting unit.

3. Fit M20 or ½" NPT cable glands for cables from bottom or sides of terminal box.
4. Mount earth wire in bottom of terminal box.

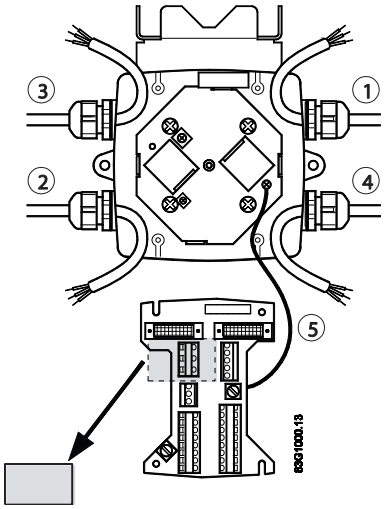

① Connect electrode cable
② Connect coil cable - keep separate from electrode cable
③ Connect power supply
④ Connect output cable
⑤ Connect PE (ground) wire

5. Mount connection plate in terminal box.

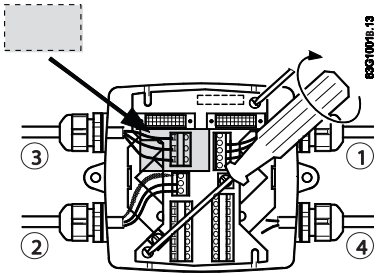

① Electrode cable
② Coil cable
③ Power supply
④ Output cable

6. Fit coil, electrode, supply and output cables through cable glands and connect to connection plate as shown in Electrical connection (Page 36).
7. Fix connection plate with the two diagonally opposite screws.

8. Tighten cable glands to obtain optimum sealing.

⚠ CAUTION
When remote mounted, power supply PE wire must be connected to PE terminal (⏚). Coil cable shield must be connected to SHIELD terminal.

9. Mount transmitter on terminal box.

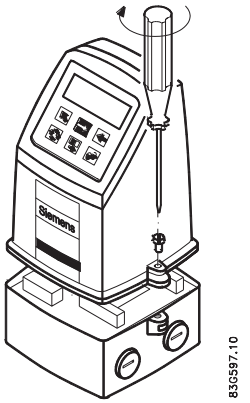

10. Transmitter is ready to be powered up.

NOTICE
Exposing the transmitter to direct sunlight may increase the operating temperature above its specified limit, and decrease display visibility. A sun shield is available as accessory.

4.5 MAG 5000/6000 CT

To ensure that the settings of this custody transfer-approved MAG 5000/6000 CT transmitter are not changed, it is necessary to install a hardware key to lock the software functions and to seal the device.

MAG 6000 CT is installed like a Standard MAG 6000 except for the final sealing.

Calibration sealing has been carried out at calibration.

4.5.1 Installing hardware key

Use hardware key on non-verified transmitter

1. Mount hardware key on transmitter connection plate during setting of primary operating parameters such as $Q_{max.}$, low-flow cut-off, units, approvals, etc. in connection with commissioning or calibration. See setup menus in appendix menu diagrams.

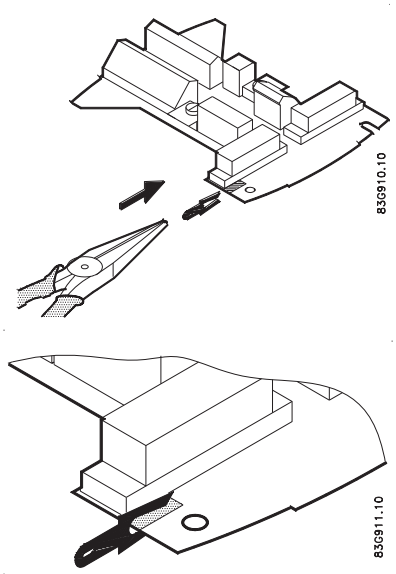

2. Remove hardware key after setting up and calibrating unit.

   This locks the menu structure and the selected settings.

Note

Hardware key function

Setting of primary operating parameters is blocked during normal operation.

When key is mounted, access to all menu items is gained. When key is removed, primary settings are blocked in accordance with requirements in authorisation.

4.5.2 Seal device

Seal transmitter

⚠ CAUTION
Seal transmitter to prevent unauthorized access.

1. Seal connection plate to prevent access to SENSORPROM® memory unit as shown below. 1 indicates sealing locations.

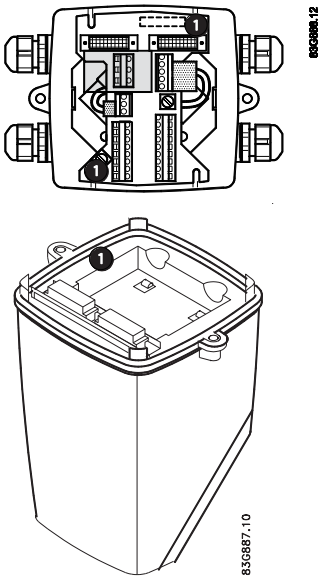

2. Drill through marked drilling holes in terminal box and transmitter/lid. Seal transmitter externally as shown below.

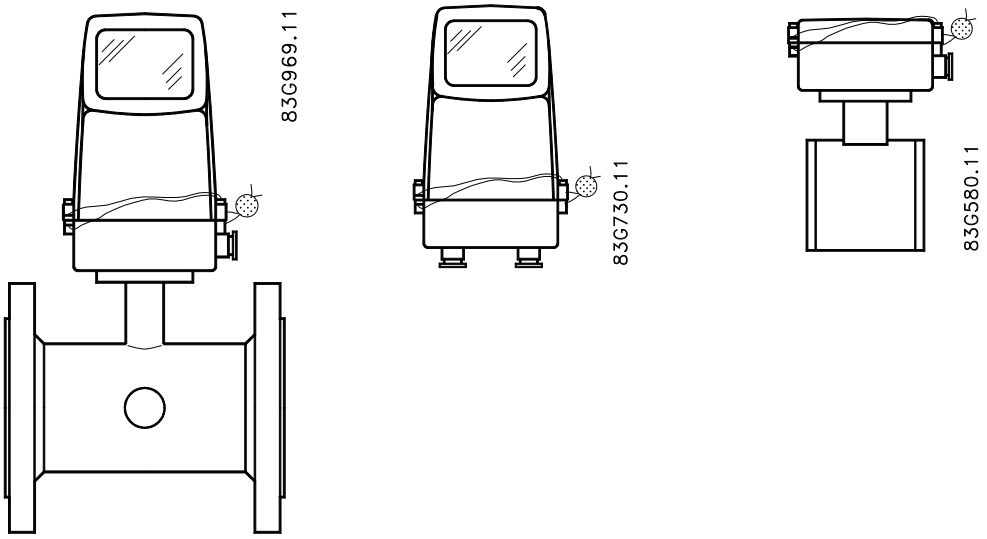

4.5.3 Installation conditions

4.5.3.1 MI-001

MAG 5000/6000 CT together with MAG 5100W (7ME652) are approved for Mi-001 under the following installation conditions.

- DN 50 to 300 mm (2" to 12")
- Horizontal installation
- Compact or remote with max. 3 m cable
- Power supply 115/230 V AC

Other restrictions may apply (see certificate).

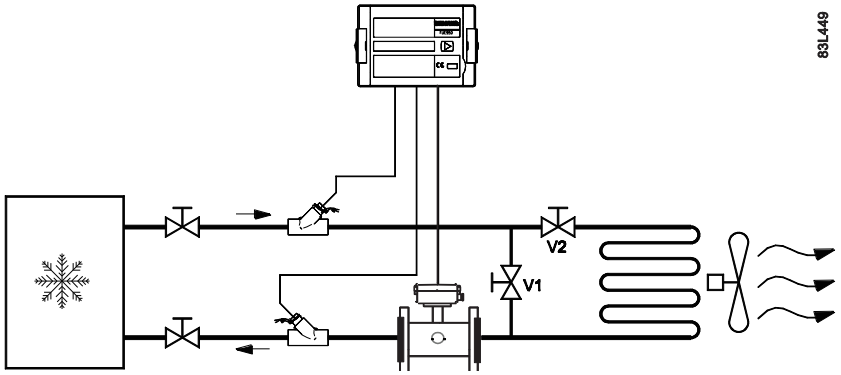

4.5.3.2 PTB K7.2

MAG 5000/6000 CT together with MAG 5100W (7ME652) are approved for PTB K7.2 under the following installation conditions.

SITRANS F M MAG 5100 W with MAG 5000/6000CT

- DN 50 to 300 mm (2" to 12")
- Horizontal installation
- Compact or remote with max. 10 m (33 ft.) cable

Other restrictions may apply (see certificate 22.76/10.02)

**insert installation conditions as pasted

4.6 Turning transmitter/keypad

It is possible to alter the standard assembly, e.g. to turn transmitter or keypad.

Transmitter

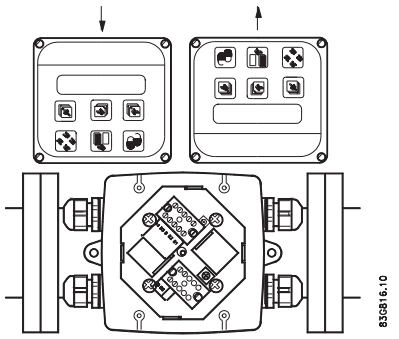

Figure 4-9 Transmitter can be mounted with its front in either direction indicated by the arrows without turning terminal box

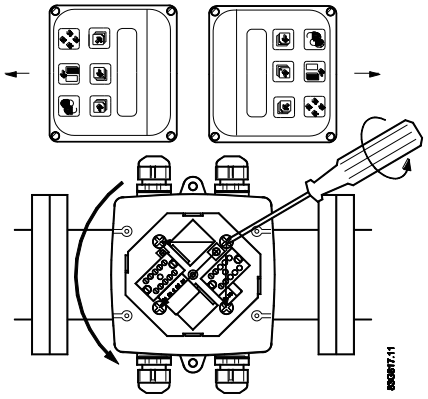

Figure 4-10 Terminal box can be rotated ±90° in order to optimize viewing angle of transmitter display/keypad

1. Unscrew the four screws in bottom of terminal box.
2. Turn terminal box to required position.
3. Retighten screws firmly.

Keypad

1. Remove outer frame using a screwdriver.

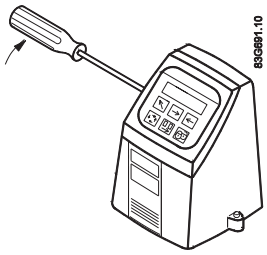

2. Loosen the four screws retaining keypad.

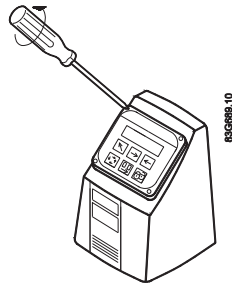

3. Withdraw keypad and turn it to required orientation.

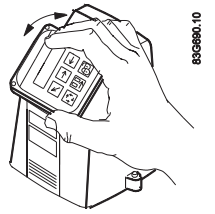

4. Tighten the four screws until a mechanical stop is felt in order to obtain IP67 enclosure.

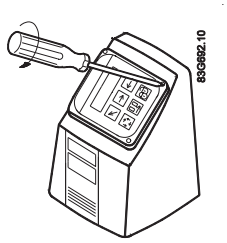

5. Snaplock outer frame onto keypad (click).

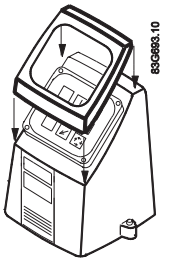

Connecting

5

⚠ WARNING

Mains supply from building installation Class II

A switch or circuit breaker (Max. 15 A) must be installed in close proximity to the equipment and within easy reach of the operator. It must be marked as the disconnecting device for the equipment.

⚠ WARNING

Protective conductor terminal

The required cable is min. AGW16 or 1.5 Cu.

⚠ WARNING

Wire insulation

The insulation between the connected mains supply and 24 V AC/DC supply for the flowmeter must at least be rated with double or reinforced insulation at mains voltage.

For field wiring installation: Ensure that the **National Installation Code** of the country in which the flowmeters are installed is met.

Note

National installation code

Observe country specific installation directives for field wiring.

5.1 Electrical connection

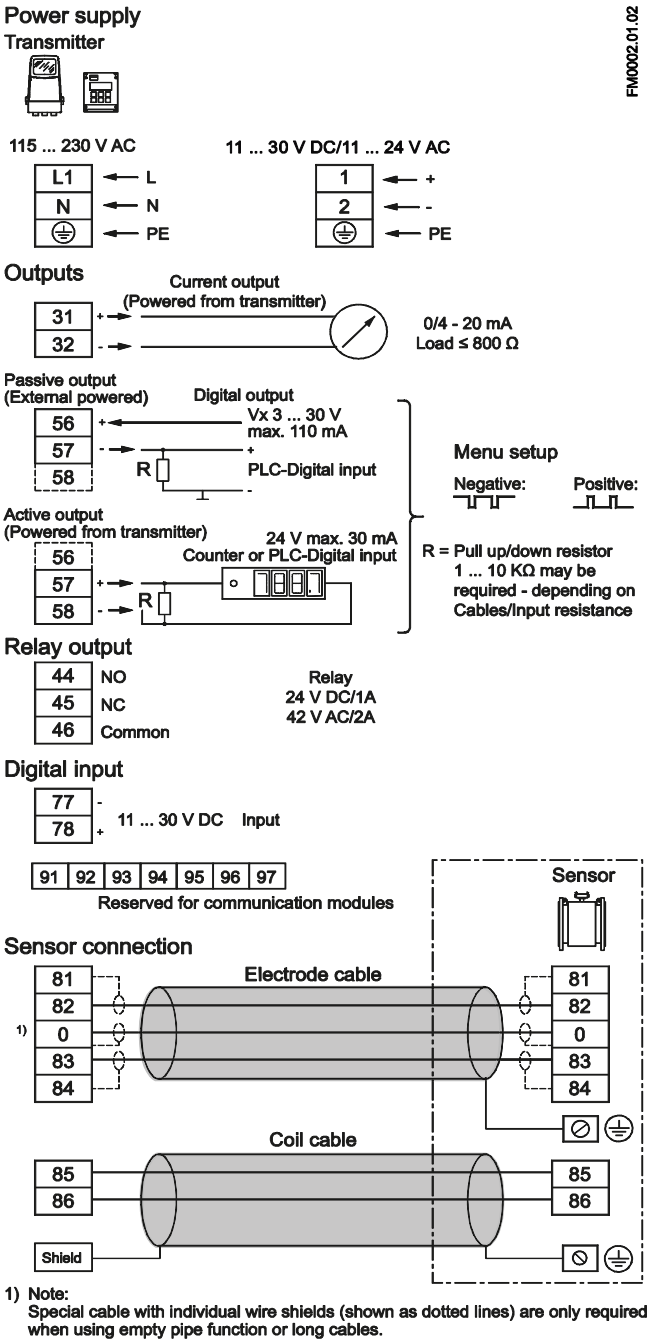

Figure 5-1 Wiring diagram

Note

Terminals 81 and 84 are only to be connected if special electrode cable with double screening is used, e.g. when empty pipe function or long cables are used.

Mains supply

Mains supply 115 ... 230 V AC from building installation Class II.

Note

For DC installations it is recommend to install an under voltage relay or protection circuit in the application where there is a risk of low power supply below the specifications for more than 10 minutes.

⚠ WARNING

Grounding

Connect mains protective earth wire to PE terminal in accordance with diagram (due to class 1 power supply).

Mechanical counter

Connect a 1000 µF capacitor (capacitor+ to terminal 56 and capacitor- to terminal 58) if a mechanical counter is connected to terminals 57 and 58 (active output).

Output cables

Use screened cables if long cables are used in noisy environments.

Digital output

If internal resistance of a load exceeds 10 kΩ, connect an external 10 kΩ load resistor in parallel to this load.

⚠ WARNING

Intrinsically safe terminals

Always ensure that distance between cables/wires is **minimum 50 mm** in order to avoid that wires/terminals of intrinsically safe circuits get into contact with wires of other cables.

Fasten cables/wires in a way that they **cannot** get into contact with each other, not even in case of an error. Keep wire ends as short as possible.

5.2 Electrical connection PTB K7.2

Additional Electrical connection for PTB K7.2 approved MAG5000/6000 with MAG5100W (7ME652)

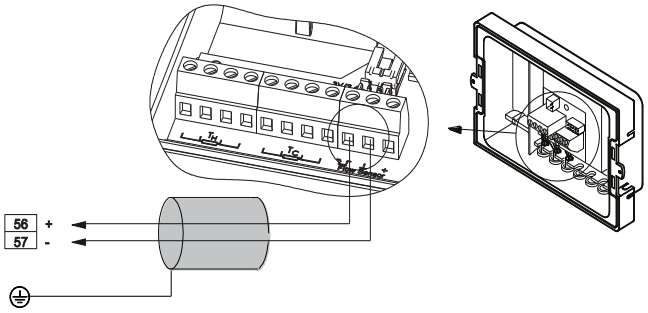

5.3 Connection of add-on modules

When the add-on module has been installed, the electrical connections are available on terminal rows 91-97.

For more information

Refer to the relevant BUS communication Quick Start or Operating Instructions available at the SITRANS F literature CD or on the internet, at : www.siemens.com/flowdocumentation (www.siemens.com/flowdocumentation).

Commissioning

6

In this chapter it is described how to commission the device via the local user interface (LUI).

The display is described in details in section Local user interface (Page 40).

Furthermore, the following functions are described in details:

- Changing password (Page 42)
- Changing basic settings (Page 43)
- Changing operator menu setup (Page 45)
- Changing language (Page 46)

Detailed diagrams concerning the specific menu are shown in appendix menu diagrams.

For factory settings, see Factory settings.

6.1 MAG 5000/6000 Blind

Note

Does not have a display. All factory settings will be uploaded from the SENSORPROM® unit after power-up.

For sensor dependent factory settings, see Appendix B.

Changing settings

If other settings are required, a standard transmitter with display and similar power supply can be used.

1. Unscrew and remove MAG 5000/6000 Blind.
2. Mount standard MAG 5000/6000 transmitter.
3. Change required settings via display and keypad.

   All changed data will be stored in SENSORPROM® memory unit.
4. Remove standard transmitter and remount Blind transmitter.
5. Fasten screws holding transmitter.

New settings stored in SENSORPROM® memory unit will be uploaded in blind transmitter.

6.2 Local user interface

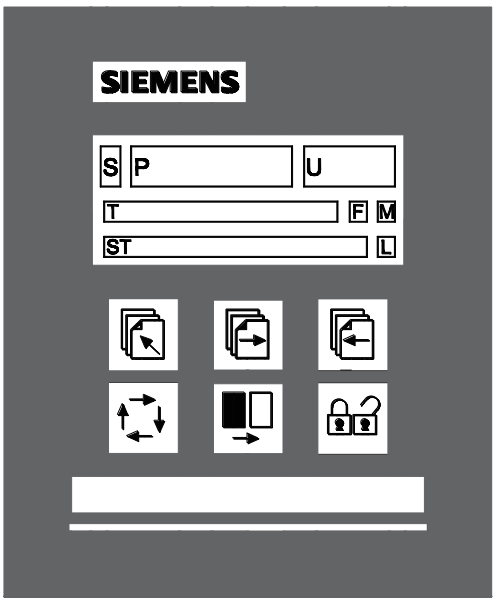

S Sign field

P Primary field for numeric value flow rate, Totalizer 1 or Totalizer 2)

U Unit field

T Title line with individual information according to operator or setup menu selected.

ST Subtitle line which will either add information to the title line or keep individual information independent of the title line.

F Alarm field. Two flashing triangles will appear in case of a fault condition.

M Mode field

L Lock field

Figure 6-1 Local User Interface

Mode field symbols

Communication mode	Language mode	Sensor characteristics
Service mode	Basic settings	Reset mode
Operator menu	Output	Operator-active
Product identity	External input	Operator-inactive

Lock field symbols

	Ready for change		Access to submenu
	Value locked		RESET MODE: Zero setting of totalizers and initialization of setting

Keypad

The keypad is used to set the flowmeter. The keys function as follows:

TOP UP KEY		This key (when held for 2 sec.) is used to switch between operator menu and setup menu. In transmitter setup menu, a short press will cause a return to previous level.
FORWARD KEY		This key is used to step forward through the menus. It is the only key normally used by the operator.
BACKWARD KEY		This key is used to step backwards through the menus.
CHANGE KEY		With this key settings or numerical values are changed.
SELECT KEY		With this key figures to be changed are selected.
LOCK/UNLOCK KEY		This key enables the operator to change settings and it gives access to submenus.

6.3 Menu structure

The menu is built up of two parts. An **operator menu** and a **setup menu**, see also overview diagrams MAG 5000/6000 and MAG 5000/6000 CT.

Operator menu

The operator menu is for daily operation. It is customized in the operator menu setup. The transmitter always starts up in operator menu No. 1. The forward and the backward keys are used to step through the operator menus.

Setup menu

The setup menu is for commissioning and service only. Access to the setup menu is gained by pressing the top up key for 2 seconds. The setup menu operates in two modes:

- View mode
- Setup mode

View mode is a read-only mode. The pre-selected settings can only be scanned.

Setup mode is a read and write mode. The pre-selected settings can be scanned and changed. Access to the setup mode is password-protected. The factory set password is 1000.

Access to a submenu in the setup menu is gained by pressing the lock key. Press the top up key briefly to return to the previous menu. Press longer (2 sec.) to exit the setup menu and return to operator menu No. 1.

6.4 Changing password

The setup menu is password-protected in order to ensure that only authorized personnel can make any changes in transmitter settings.

Change password as follows:

1. Press top up key for 2 sec.
2. Enter password.
3. Use forward key or backward key to reach password menu.
4. Press lock/unlock key to unlock password.
5. Use select key and change key to change password.
6. Press lock/unlock key to confirm new password.
7. Press top up key two times to exit setup mode.

See change password diagram.

The factory-set password is 1000, but it can be changed to any value between 1000 and 9999.

Factory setting of password can be re-established as follows:

1. Switch off power supply.
2. While pressing top up key - switch on power supply.
3. Release top up key after 10 sec.

6.5 Changing basic settings

In the basic settings menu it is possible to set the following parameters:

Parameter	Description
Main frequency	Selection of main power supply frequency corresponding to the country in which the flowmeter is installed (e.g. 60 Hz in America).
Flow direction	Selection of correct flow direction in pipe.
Customer units	Setting of user defined volume and time units.
Q_{max}	Setting of measuring range, analog outputs and frequency output. Also individual dimension-dependent setting of value, decimal point, unit and time.
Q_{max} 2	Setting of measuring range, analog outputs and frequency output. Also individual dimension-dependent setting of value, decimal point, unit and time. This menu is only visible if chosen as external digital input.
Totalizer	Setting of unit and decimal point.
Low flow cut-off	Setting of a percentage of selected Q_{max}. This filters noise in installation reducing fluctuations in display and all outputs.
Empty pipe cut-off	When set to "On" the alarm will indicate when sensor is running empty. All readings, display and outputs, will indicate zero.
Velocity unit	Setting of velocity unit per time unit
Error level	Selecting error level at which flowmeter will detect an error.

Note

Totalizer 2 is not visible when batch is selected as digital output.

Note

Q_{max} 2 is visible only when chosen as digital input.

Change basic settings as follows:

1. Press top up key for 2 sec.
2. Enter password.
3. Use forward key to reach basic settings menu.
4. Press lock/unlock key to unlock settings.
5. Use forward key or backward key to reach relevant menu.
6. Press lock/unlock key to unlock settings.
7. Use select key and change key to change settings.
8. Press lock/unlock key to confirm new settings.

9. Repeat steps 5-8 to change other settings.
10. Press top up key ⇱ two times to exit setup mode.

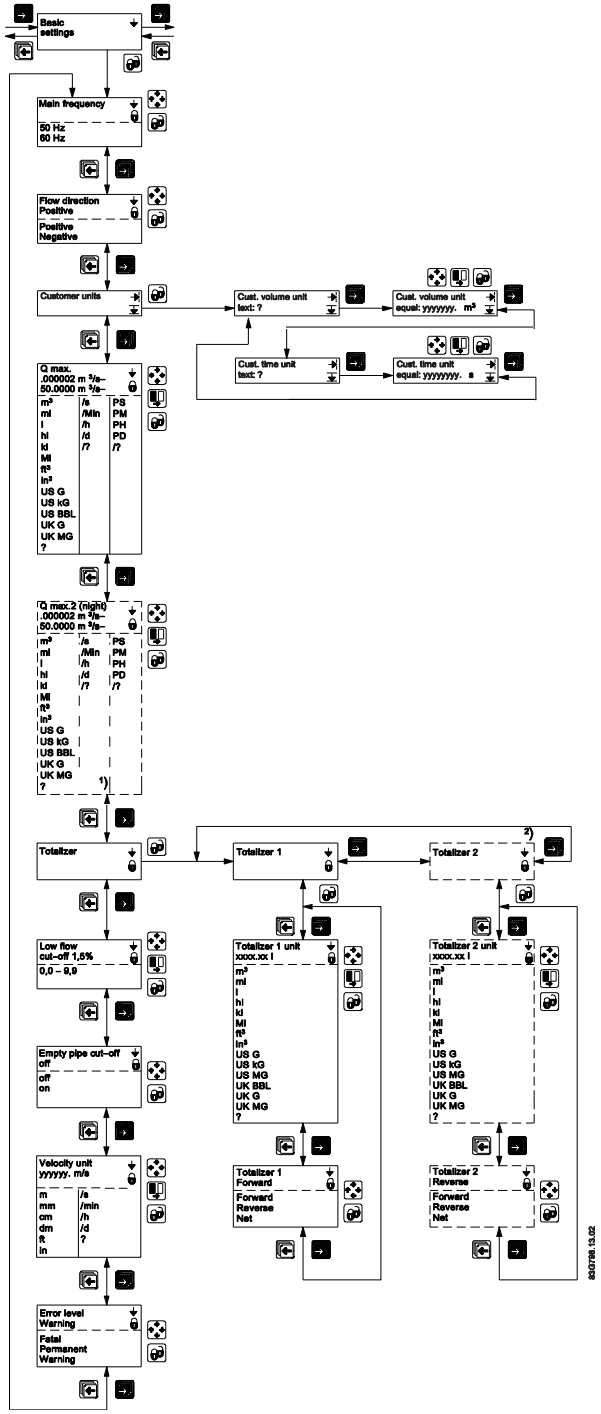

Decimal point can be positioned and units set individually for flow rate in totalizer 1 and totalizer 2.

Changing decimal point position

1. Enter the respective totalizer menu.
2. Use select key to position cursor below decimal point.
3. Use change key to move decimal point to requested position.

Changing units

1. Use select key to position cursor below unit.
2. Press change key until requested unit is displayed.

6.6 Changing operator menu setup

In the operator menu the menus required for daily operation of the flowmeter are shown. It is possible to hide and change some of the menus in the operator menu. This is done in the operator menu setup menu, see operator menu setup diagram.

Customizing menus in operator menu

To customize the menus in the operator menu perform the following steps:

1. Press top up key for 2 sec.
2. Enter password.
3. Use forward key or backward key to reach operator menu.

Changing text in line 1

1. Press lock/unlock key to unlock setting.
2. Use change key to select desired text.
3. Press lock/unlock key to confirm selected text.

Note

If "Text" is selected in line 2, this line functions as a heading for the value shown in line 3. Otherwise it shows the actual value of the reading selected.

Enabling two readings

1. Use forward key to reach requested menu.
2. Press lock/unlock key to unlock setting.
3. Use select key to move cursor to upper line.
4. Use change key to select requested reading.
5. Press lock/unlock key to confirm selection.

6. Use select key to move cursor to line 3.
7. Use change key to select desired setting.
8. Press lock/unlock key to confirm new setting.
9. Repeat steps 1-8 for each requested menu.

Showing/hiding menus in operator menu

1. Use forward key to reach requested menu.
2. Press lock/unlock key to unlock setting.
3. Use select key to move cursor to √/÷ symbol.
4. Press change key to select visible (√) or hidden (÷).
5. Press lock/unlock key to confirm new setting.

6.7 Changing language

It is possible to change language in transmitter. Default language is English, but it can be changed to various other languages.

Change language as follows:

1. Press top up key for 2 sec.
2. Enter password.
3. Use forward key or backward key to reach language menu.
4. Press lock/unlock key to unlock language.
5. Use change key to select desired language.
6. Press lock/unlock key to confirm new language.
7. Press top up key two times to exit setup mode.

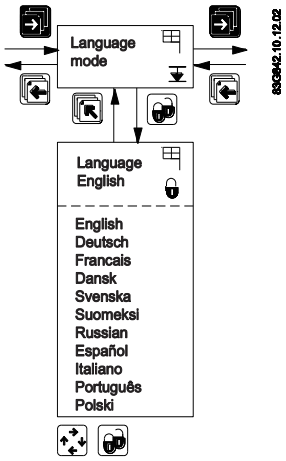

Functions

7

This chapter describes the various menus of the transmitter in details. The menu diagrams are shown in appendix menu diagrams.

7.1 Output settings

Three outputs are available:

- Current output (range and time constant); terminals 31 and 32.
- Digital output (pulse, frequency, error, limit, or batch settings); terminals 56, 57, and 58.
- Relay output (error, limit, and batch settings); terminals 44, 45, and 46.

Current output

In the current output menu it is possible to select current output direction, range and time constant, see also Current output menu diagram.

If current output "4-20 mA + Alarm" is selected, then alarm level and alarm differentiation may also be defined.

"Alarm level" defines if an alarm should be above 21 mA "High" or below 3.6 mA "Low".

"Alarm diff." defines whether or not the alarm should vary according to selected error level. Error level "Fatal". "Permanent" or "Warning" is selected in "Basic settings".

If Alarm differentiation is set to "Yes", depending on the Alarm level setting, the current output will show:

Alarm level	Output / Error level		
	Fatal	Permanent	Warning
Low	1.3 mA	2 mA	3 mA
High	23 mA	22 mA	21.5 mA

If Alarm differentiation is set to "No", depending on the Alarm level setting, the current output will show:

Alarm level	Output
Low	3.5 mA
High	22.6 mA

For setting of error level, see Error level menu diagram.

If current output is not used, it must be set to "Off".

Digital output

Digital output can be used to configure various settings:

- Pulse (volume/pulse, pulse output, pulse width, pulse polarity, and time constant), see pulse menu diagram.
- Frequency (frequency output, max frequency, and time constant), see frequency menu diagram.
- Error settings (level and number), see error level menu diagram and error number menu diagram.
- Limit settings (number of setpoints, setpoint settings, and hysteresis), see direction/limit menu diagram.
- Batch settings (quantity, time and counter settings, and time constant), see batch menu diagram.

Note

Batch settings

Only MAG 6000.

Not available in MAG 5000, MAG 5000 CT and MAG 6000 CT.

Note

When relay is set to batch function, pulse/frequency is not available on digital output.

Relay outputs

Relay output can be used to configure various settings:

- Error settings (level and number), see error level menu diagram and error number menu diagram.
- Limit settings (number of setpoints, setpoint settings, and hysteresis), see direction/limit menu diagram.
- Batch settings (quantity, time and counter settings, and time constant), see batch menu diagram.
- Cleaning (cycle time), see cleaning menu diagram.

Note

Batch settings

Only MAG 6000.

Not available in MAG 5000, MAG 5000 CT and MAG 6000 CT.

Note

Cleaning

If a cleaning unit is installed together with transmitter, relay output must **always** be used to operate this unit. It cannot be used for other purposes.

7.2 External input

By applying 11 … 30 V DC to terminals 77 and 78, it is possible to perform:

- Batch control (start, stop, hold/continue)
- Reset totalizer
- Force/freeze output
- Q_{max} 2 (night)

See external input menu diagram.

Note

Batch settings

Only MAG 6000.

Not available in MAG 5000, MAG 5000 CT and MAG 6000 CT.

Note

Manual cleaning

If the digital input is used for manual cleaning, the relay output also automatically changes to "cleaning".

7.3 Sensor characteristics

The sensor characteristics menu shows:

- If a SENSORPROM® is installed or not.
- Suppress error P 40 (SENSORPROM® not installed)
- Sensor size.
- Calibration factor.
- Correction factor.
- Excitation.

See also sensor characteristics menu diagram.

7.4 Reset mode

The reset mode is used for resetting totalizers/counters or for restoring MAG 5000/6000 to its factory settings.

Resetting

1. Press top up key for 2 sec.
2. Enter password.
3. Use forward key or backward key to reach reset mode menu.
4. Press lock/unlock key to enter reset menu.
5. Press forward key to reach totalizer/counter to be reset or default setting menu.
6. Press lock/unlock key to start resetting.

If restoring of factory settings is required:

1. Press lock/unlock key again to confirm destruction of customized settings.

See also reset menu diagram.

Zero point adjustment (MAG 6000 SV only)

Auto adjustment

Before auto zero point adjustment is carried out ensure that valves to and from flowmeter are completely closed and that flow velocity in sensor is zero.

1. Press top up key for 2 sec.
2. Enter password.
3. Use forward key or backward key to reach reset mode menu.
4. Press lock/unlock key to enter reset menu.
5. Press forward key to reach zero adjust menu.
6. Press lock/unlock key to enter the menu.
7. Use change key to select "auto".
8. Press forward key to view actual offset (lower line in display). Value will be zero after adjustment has been performed.
9. Press lock/unlock key to start adjustment.

Manual adjustment.

1. Press top up key for 2 sec.
2. Enter password.
3. Use forward key or backward key to reach reset mode menu.
4. Press lock/unlock key to enter reset menu.
5. Press forward key to reach zero adjust menu.
6. Press lock/unlock key to enter the menu.
7. Use change key to select "manual".

8. Press forward key and then select key and change key to key in offset value.
9. Press lock/unlock key to start adjustment.

Zero point can be adjusted manually in range -1.000 ... +1.000 m^3/s. If value outside this range is keyed in, zero point adjustment will not be implemented.

See also reset mode menu diagram (MAG 6000 SV).

7.5 Service mode

All outputs of the transmitter can be forced-controlled in the service mode menu, see also service mode menu diagram.

Here it is possible to check whether e.g. the current output is functioning.

Error pending and status log lists are also accessible from this menu and the operating time (in days) can be read.

The forced control is cut off and all previous settings are reinitialized the moment the service mode is left by pressing top up key .

7.6 MAG 5000 CT and MAG 6000 CT settings

Internal totallizers

Depending on the type of approval it is possible to reset the internal totalizers. The type of approval is selected in the reset menu with the hardware key mounted. It is possible to choose between:

- Hot/cold water
- Other liquids

Resetting of totalizers by electrical input is not possible.

Hot/cold water

- Totalizer 1 is allocated to forward flow (cannot be reset)
- Totalizer 2 is allocated to reverse flow (cannot be reset)

Other liquids

Both totalizer 1 and totalizer 2 are allocated to measure the net flow, i.e. any reverse flow will make the totalizers count backwards.

- Totalizer 1 cannot be reset.
- Totalizer 2 can be reset if the flow velocity in the meter pipe is <0.25 m/s. When the totalizer is reset, the pulse output register will also be reset.

Output

- When choosing hot water, changing the output settings is not allowed and the output setting menus are not shown in display.
- When choosing cold water or other liquids, all output settings can be changed.

7.7 MAG 6000 SV

Excitation frequency

The MAG 6000 SV excitation frequency can be changed in sensor characteristics menu to one of the following frequencies:

- 1 $^{9}/_{16}$ Hz
- 3 $^{1}/_{8}$ Hz
- 6 ¼ Hz
- 12½ Hz
- 25 Hz
- 44 Hz

Note

Calibration has been made with the frequency stored in SENSORPROM® memory unit. A change in excitation frequency is not recommended and will always mean decreased measuring accuracy. In some instances, however, it may be necessary to change frequency due to pulsating flow from piston pumps or other resonance frequencies from surroundings.

It is highly recommended to carry out a External input (Page 49) after changing the excitation frequency as the offset is affected by the frequency selected. When this is done, the decrease in measuring accuracy can be kept below 1% o.r.

A too high frequency for the sensor used will cause a coil current alarm indication.

Alarm, error, and system messages

8

8.1 Diagnostics

Error system

Transmitter system is equipped with an error and status log system with 4 groups of information.

(**I**) Information - system will continue to measure as normal, relay and current outputs will not be affected.

(**W**) Warning - system will continue to measure, but an event that may cause a system malfunction and require operator attention has occurred. The cause of the error may disappear on its own.

(**P**) Permanent error - may cause malfunction in the application and operator attention is required.

(**F**) Fatal error - is essential for the operation of the flowmeter. Immediate operator attention is required.

Two menus are available in service and operator menus for registration of information and errors.

- Error pending
- Status log

Note

Registration of errors in different modes

- In setup mode (local dialog) errors are entered only to Error pending list and not to Error log list, and not registered on physical outputs (current or relay).
- In service mode errors are entered to both Error pending and Error log lists, but not registered on physical outputs (current or relay).

Note

Power-off

Both error pending and status logs are reset at power-off.

Error pending

The first 9 pending errors are stored in the error pending list. When the error is corrected, it is removed from the error pending list.

The acceptance level for "error pending" can be individually configured to a particular application.

The acceptance level is set in the basic settings menu (Page 43).

Acceptance levels

The following three acceptance levels are selectable.

- Fatal error: Only fatal errors are registered as errors
- Permanent error: Permanent and fatal errors are registered as errors
- Warning (Default value): Warnings, permanent and fatal errors are registered as errors

Error information is displayed in title and subtitle lines, see display layout (Page 40). Title line will show time since occurrence of error in days, hours and minutes. Subtitle line will flash between an error text and a remedy text. Error text will indicate type of error (I, W, P or F), error number, and error text. Remedy text will inform operator of action to take to remove error.

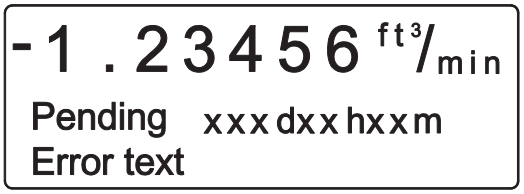

Status log

The latest 9 errors are stored in the status log. Errors are stored in the status log for 180 days, even if they are corrected.

Alarm field

The alarm field on the display will always flash when an error is pending.

Error output

The digital and relay output can be activated individually error by error (error level). The relay output is default selected to error level. An output can also be selected to activate on a single error number.

The alarm field, error output and error pending always operate together.

Operator menu

Error pending and status log are as default enabled (√) in the operator menu.

8.2 List of error numbers

Error No.	*Error text* Remedy text	Comment	Output status	Input status
1	*I1 - Power on* OK	Device powered on	Active	Active
2	*I2 - Add-on module* Applied	A new module has been applied to the system	Active	Active
3	*I3 - Add-on module* Install	An add-on module is defect or has been removed. This can be an internal add-on module	Active	Active
4	*I4 - Param. corrected* OK	A less vital parameter in the transmitter has been replaced by its default value	Active	Active
20	*W20 - Totalizer 1* Reset manually	During initialisation the check of the saved totalizer value has failed. It is not possible to rely on the saved totalizer value anymore. The totalizer value must be reset manually in order to rely on future readings	Active	Active
20	*W20 - Totalizer 2* Reset manually	During initialisation the check of the saved totalizer value has failed. It is not possible to rely on the saved totalizer value anymore. The totalizer value must be reset manually in order to rely on future readings	Active	Active
21	*W21 - Pulse overflow* Adj. pulse settings	Actual flow is too big compared with pulse width and volume/pulse	Reduced pulse width	Active
22	*W22 - Batch timeout* Check installation	Duration of batching has exceeded a predefined maximum time	Batch output on zero	Active
23	*W23 - Batch overrun* Check installation	Batch volume has exceeded a predefined maximum overrun volume	Batch output on zero	Active
24	*W24 - Batch neg. flow* Check flow direction	Negative flow direction during batch	Active	Active
30	*W30 - Overflow* Adj. Q_{max}	Flow is above Q_{max} settings	Max. 120 %	Active
31	*W31 - Empty pipe*	Pipe is empty	Zero	Active
40	*P40 - SENSORPROM®* Insert/change	SENSORPROM® unit not installed	Active	Active
41	*P41 - Parameter range* Switch off and on	A parameter is out of range. The parameter could not be replaced by its default value. The error will disappear at the next power-on	Active	Active

Error No.	*Error text* Remedy text	Comment	Output status	Input status
42	*P42 - Current output* Check cables	Current loop is disconnected or the loop resistance is too big	Active	Active
43	*P43 - Internal error* Switch off and on	Too many errors occurred at the same time. Some errors are not detected correctly	Active	Active
44	*P44 - CT SENSORPROM®*	SENSORPROM® unit has been used as CT version	Active	Active
60	*F60 - CAN comm. error* Transmitter/AOM	CAN bus communication error. An add-on module, the display module or the transmitter is defective	Zero	Inactive
61	*F60 - SENSORPROM® error* Replace	It is not possible to rely on the data in SENSORPROM® unit anymore	Active	Active
62	*F62 - SENSORPROM® ID* Replace	The SENSORPROM® unit ID does not comply with the product ID. The SENSORPROM® unit is from another type of product SITRANS F C, SITRANS F US etc.	Zero	Inactive
63	*F63 - SENSORPROM®* Replace	It is not possible to read from the SENSORPROM® unit anymore	Active	Active
70	*F70 - Coil current* Check cables	Coil excitation has failed	Active	Active
71	*F71 - Internal error* Replace transmitter	Internal convertion error in ASIC	Active	Active

Service and maintenance

9

The device is maintenance-free, however, a periodic inspection according pertinent directives and regulations must be carried out.

An inspection can include check of:

- Ambient conditions
- Seal integrity of the process connections, cable entries, and cover screws
- Reliability of power supply, lightning protection, and grounds

Under ideal conditions the flowmeter will operate continuously with no manual adjustment or intervention required.

The SITRANS F M Verificator is an external tool developed for verifying the MAG 5000/6000 system, installation, and application. It is a highly advanced instrument, which carries out the complex verification of the entire flowmeter system according to unique SIEMENS patented principles. The verification test is automated and the instrument easy to use, so no human error or influence will affect the verification.

9.1 Transmitter check list

If unstable/wrong measurements occur, it is often due to insufficient/wrong earthing or potential equalization. If earthing connection is OK, check transmitter as described below, and sensor as described in sensor check lists (see the respective operating instructions).

The easiest way to check the transmitter in a SITRANS F M installation is to replace the transmitter with another MAG 5000/6000 with a similar power supply.

As all settings are stored in and downloaded from the SENSORPROM®, replacement is easily done and no extra settings need to be made.

Check transmitter

If no replacement transmitter is available, check transmitter according to the following check table.

Power on transmitter		
0	Display light on?	Yes ⇒ 1
		No ⇒ 2
1	Flashing error triangles?	Yes ⇒ Check error table
		No ⇒ 1.2
1.2	Output and display readings OK?	Yes ⇒ 1.2.1
		No ⇒ 1.2.2

Power on transmitter		
1.2.1	Transmitter OK	Check application Check installation/sensor/earthing connection etc.
1.2.2	Check cables/conndections Check connection board Check pins in transmitter multiplug	OK ⇒ 1.2.1
		Not OK ⇒ correct fault
2	Check cables/conndections Check connection board Check pins in transmitter multiplug	OK ⇒ 2.1
		Not OK ⇒ Correct fault
2.1	Output readings OK?	Yes ⇒ 2.1.1
		No ⇒ 2.1.2.
2.1.1	Dispaly defective	Replace display
2.1.2	Transmitter defective	Replace transmitter

Note

Sensor check list

Check list for sensors are included in the respective sensor operating instructions.

9.2 Technical support

NOTICE
Repair and service must be carried out by approved Siemens Flow Instruments personnel only.

Note

Siemens Flow Instrument defines sensors as non-repairable products.

Technical Support

If you have any technical questions about the device described in these Operating Instructions and do not find the right answers, you can contact Technical Support:

- Via the Internet using the **Support Request:**
  Support request (http://www.siemens.com/automation/support-request)
- Phone: +49 (0) 180 5050 222

Further information about our technical support is available in the Internet at
Technical support (http://support.automation.siemens.com/WW/view/en/16604318)

Service & Support on the Internet

In addition to our documentation, we offer a comprehensive knowledge base online on the Internet at:

Service and support (http://www.siemens.com/automation/service&support)

There you will find:

- The latest product information, FAQs, downloads, tips and tricks.
- Our newsletter, providing you with the latest information about your products.
- A Knowledge Manager to find the right documents for you.
- Our bulletin board, where users and specialists share their knowledge worldwide.
- You can find your local contact partner for Industry Automation and Drives Technologies in our partner database.
- Information about field service, repairs, spare parts and lots more under "Services."

Additional Support

Please contact your local Siemens representative and offices if you have additional questions about the device

Find your contact partner at:

Local contact person (http://www.automation.siemens.com/partner)

9.3 Return procedures

Enclose the delivery note, the cover note for return delivery together with the declaration of decontamination form on the outside of the package in a well-fastened clear document pouch.

Required forms

- **Delivery Note**
- **Cover Note for Return Delivery** with the following information

  Cover note
  (http://cache.automation.siemens.com/dnl/zY/zY0OTg1AAAA_16604370_TxtObj/Begleitschein_RW_AD.pdf)

  – product (ordering number)

  – number of devices or spare parts returned

  – reason for the return

- **Declaration of Decontamination**

  Decontamination declaration
  (http://pia.khe.siemens.com/efiles/feldg/files/Service/declaration_of_decontamination_en.pdf)

  With this declaration you certify *that the returned products/spare parts have been carefully cleaned and are free from any residues.*

  If the device has been operated together with toxic, caustic, flammable or water-damaging products, clean the device before return by rinsing or neutralizing. Ensure that all cavities are free from dangerous substances. Then, double-check the device to ensure the cleaning is completed.

  We will not service a device or spare part unless the declaration of decontamination confirms proper decontamination of the device or spare part. Shipments without a declaration of decontamination will be cleaned professionally at your expense before further proceeding.

You can find the forms on the Internet and on the CD delivered with the device.

9.4 Recalibration

Siemens A/S Flow Instruments offers to recalibrate the sensor. The following calibrations are offered as standard:

- Standard matched pair calibration

Note

For recalibration the SENSORPROM® memory unit must always be returned with the sensor.

Troubleshooting/FAQs

10

Symptom	Output signals	Error code	Cause	Remedy
Empty display	Minimum		1. No power supply	Power supply Check MAG 5000/6000 for bended pins on the connector
			2. MAG 5000/6000 defective	Replace MAG 5000/6000
No flow signal	Minimum		1. Current output disabled	Turn on current output
			2. Digital output disabled	Turn on digital output
			3. Reverse flow direction	Change direction
		F70	Incorrect or no coil current	Check cables/connections
		W31	Measuring pipe empty	Ensure that the measuring pipe is full
		F60	Internal error	Replace MAG 5000/6000
	Undefined	P42	1. No load on current output	Check cables/connections
			2. MAG 5000/6000 defective	Replace MAG 5000/6000
		P41	Initializing error	Switch off MAG 5000/6000, wait 5 sec. and switch on again
Indicates flow with no flow in pipe	Undefined		Measuring pipe empty	Select empty pipe cut-off
			Empty pipe cut-off is OFF	Ensure that the measuring pipe is full
			Electrode connection missing/electrode cable is insufficiently screened	Ensure that electrode cable is connected and sufficiently screened
Unstable flow signal	Unstable		1. Pulsating flow	Increase time constant
			2. Conductivity of medium too low	Use special electrode cable
			3. Electrical noise potential between medium and sensor	Ensure sufficient potential equalization
			4. Air bubbles in medium	Ensure medium does not contain air bubbles
			5. High concentration of particles or fibres	Increase time constant
Measuring error	Undefined		Incorrect installation	Check installation
		P40	No SENSORPROM® unit	Install SENSORPROM® unit
		P44	CT SENSORPROM® unit	Replace SENSORPROM® unit or reset SENSORPROM® unit with MAG CT transmitter
		F61	Defective SENSORPROM® unit	Replace SENSORPROM® unit
		F62	Wrong type of SENSORPROM® unit	Replace SENSORPROM® unit

Symptom	Output signals	Error code	Cause	Remedy
		F63	Defective SENSORPROM® unit	Replace SENSORPROM® unit
		F71	Loss of internal data	Replace MAG 5000/6000
	Maximum	W30	Flow exceeds 100% of Qmax.	Check Q_{max} (Basic Settings)
		W21	Pulse overflow Volume/pulse too small	Change volume/pulse
			Pulse width too large	Change pulse width
Measuring approx. 50%			Missing one electrode connection	Check cables
Loss of totalizer data	OK	W20	Initializing error	Reset totalizer manually
##### Signs in display	OK		Totalizer roll over	Reset totalizer or increase totalizer unit

Technical data

11

11.1 Technical specifications

Mode of operation and design	Measuring principle	Electromagnetic with pulsed constant field
	Empty pipe	Detection of empty pipe (special cable required in remote mounted installation)
	Excitation frequency	Depends on sensor size
	Electrode input impedance	> 1 x 10^{14} Ω
Input	**Digital input**	11 ... 30 V DC, R_i = 4.4 KΩ
	Activation time	50 ms
	Current	$I_{DC\ 11\ V}$ = 2.5 mA, $I_{DC\ 30\ V}$ = 7 mA
Output	**Current output**	
	Signal range	0 ... 20 mA or 4 ... 20 mA, Alarm
	Load	< 800 Ω
	Time constant	0.1 … 30 s, adjustable (for batch: fixed at 0.1 s)
	Digital output	
	Frequency	0 ... 10 kHz, 50% duty cycle (uni/bidirectional)
	Pulse (active)	DC 24 V, 30 mA, 1 kΩ ≤ R_i ≤10 kΩ, short-circuit protected (power supplied from flowmeter)
	Pulse (passive)	DC 3 … 30 V, max. 110 mA, 200 Ω ≤ R_i ≤10 kΩ (powered from connected equipment)
	Time constant	0.1 … 30 s, adjustable (for batch: fixed at 0.1 s)
	Relay output	
	Time constant	Changeover relay, same as current output
	Load	42 V AC/2 A, 24 V DC/1 A
Low flow cut off	0 ... 9.9% of maximum flow	
Galvanic isolation	All inputs and outputs are galvanically isolated	
Max. measuring error (incl. sensor and zero point)	MAG 5000	0.4% ± 1 mm/s (for v > 0.1 m/s)

	MAG 6000	0.2% ± 1 mm/s (for v > 0.1 m/s)
Functions	Flow rate, 2 totalizers, low-flow cut-off, empty pipe cut-off, flow direction, error system, operating time, uni/bidirectional flow, limit switches, pulse output, control for cleaning and batch	
Rated operation conditions	**Ambient temperature**	
	Operation	Standard IP67, 19", blind and SV versions: -20 ... +60 °C (-4 ... +140 °F) CT version: -20 ... +50 °C (-4 ... +122 °F)
	Storage	-40 ... +70 °C (-40 ... +158 °F)
Mechanical load	18 ... 1000 Hz, 3.17 G rms, sinusoidal in all directions to IEC 68-2-36	
Degree of protection	IP67/NEMA 4X/6 to IEC 529 and DIN 40050 (1 mH_2O 30 min.)	
EMC performance	EN 61326-1 (industrial environments)	
	EN 61326-2-5	
Display and keypad	Totalizer	Two eight-digit counters for forward, net or reverse flow
	Display	Background illumination with alphanumeric text, 3 x 20 characters to indicate flow rate, totalized values, settings and faults; Reverse flow indicated by negative sign
	Time constant	Time constant as current output time constant
Design	Enclosure material	Fiber glass reinforced polyamide; optional (IP67 only): AISI 316 stainless steel
	Dimensions	See dimensional drawings
	Weight	0.75 kg (2 lb)
Power supply	115 ... 230 V AC +10% -15%, 50 ... 60 Hz, Fuse: 500 mA T 11 ... 30 V DC or 11 ... 24 V AC; Fuse 2 A T	
Power consumption	115 ... 230 V AC: 17 VA 24 V AC: 9 VA, I_N = 380 mA, I_{ST} = 8 A (30 ms) 12 V DC: 11 W, I_N = 920 mA, I_{ST} = 4 A (250 ms)	
Certificates and approvals	CE, C-UL US general purpose, C-tick, CSA/FM Class 1, div 2	
	Custody transfer approval (MAG 5000/6000 CT)	Cold water pattern approval: PTB OIML R 49, MI-001 Hot water pattern approval: DANAK OIML R 75 (MAG 6000 CT) Other media than water (milk, beer etc.) pattern approval: DANAK OIML R 117 (MAG 6000 CT) Energy metering : PTB K7.2
Communication	MAG 5000	Without communication or HART as option
	MAG 6000	Prepared for client mounted add-on modules: HART, MODBUS RTU/RS485, FOUNDATION Fieldbus H1, DeviceNet, PROFIBUS PA, PROFIBUS DP as add-on modules
	MAG 5000 CT / MAG 6000 CT	No communication modules approved

Transmitter IP67/NEMA 4X/6 compact polyamide

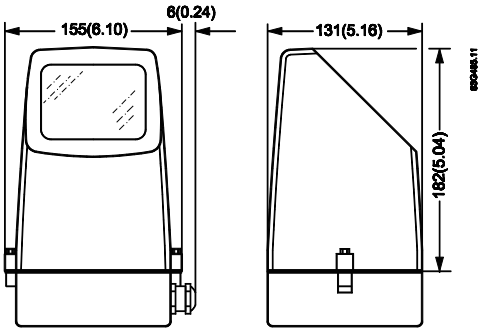

Weight: MAG 5000/6000: 0.75 kg (1.65 lbs)

Transmitter IP67/NEMA 4X/6 wall-mounted polyamide

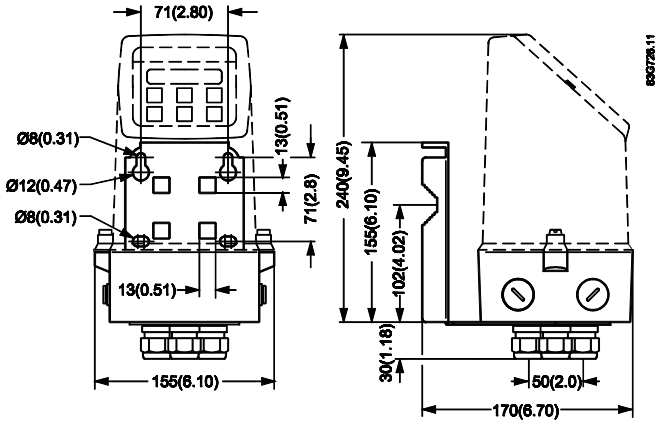

Weight(transmitter and wall mounting bracket): 1.65 kg (3.64 lbs)

11.2 Accuracy

For accuracy reference conditions, please see below.

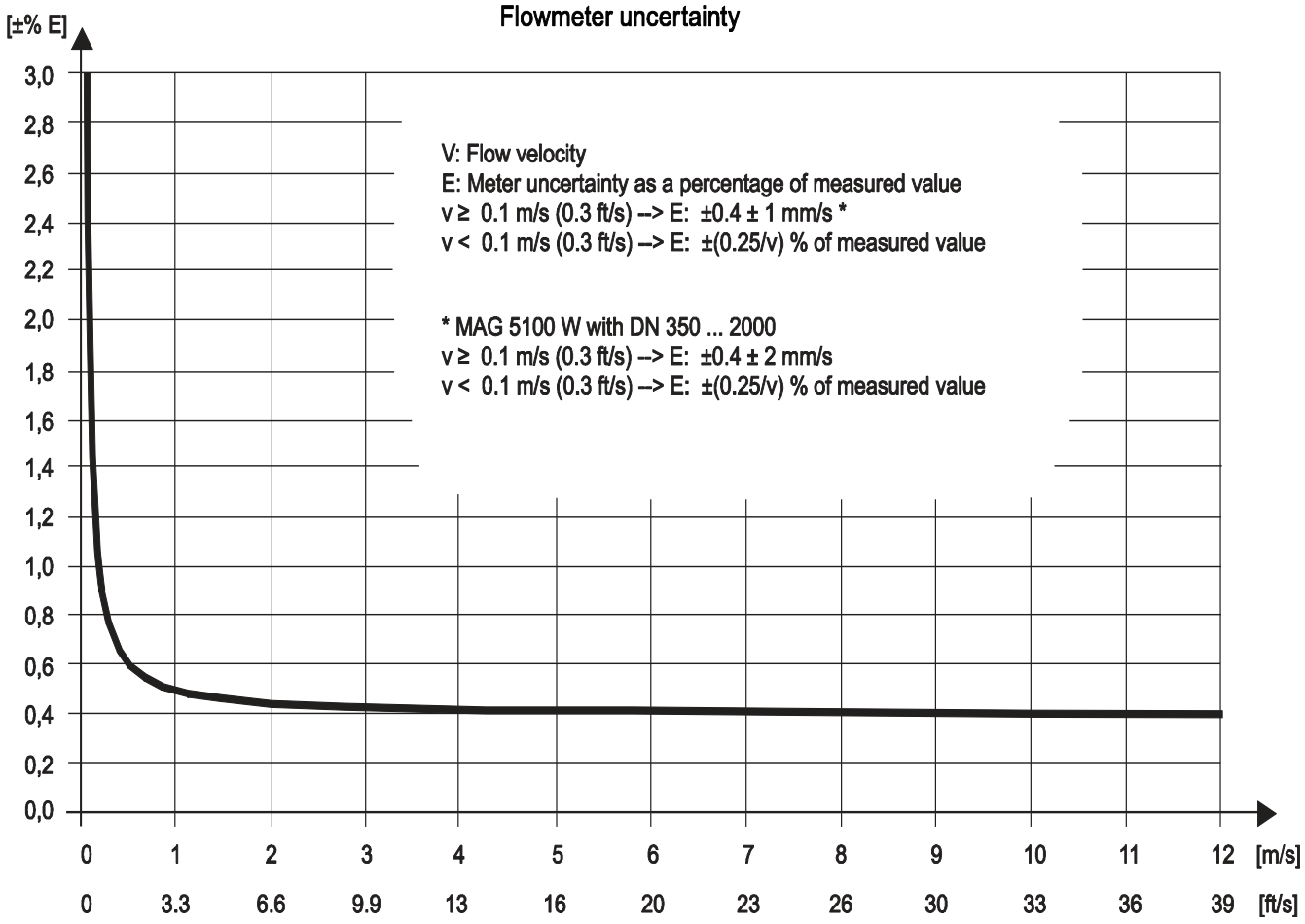

Figure 11-1 MAG 5000 with MAG 1100, MAG 1100 F, MAG 5100 W, MAG 3100 and MAG 3100 P and MAG 6000 with MAG 1100 (PFA), MAG 1100 F (PFA)

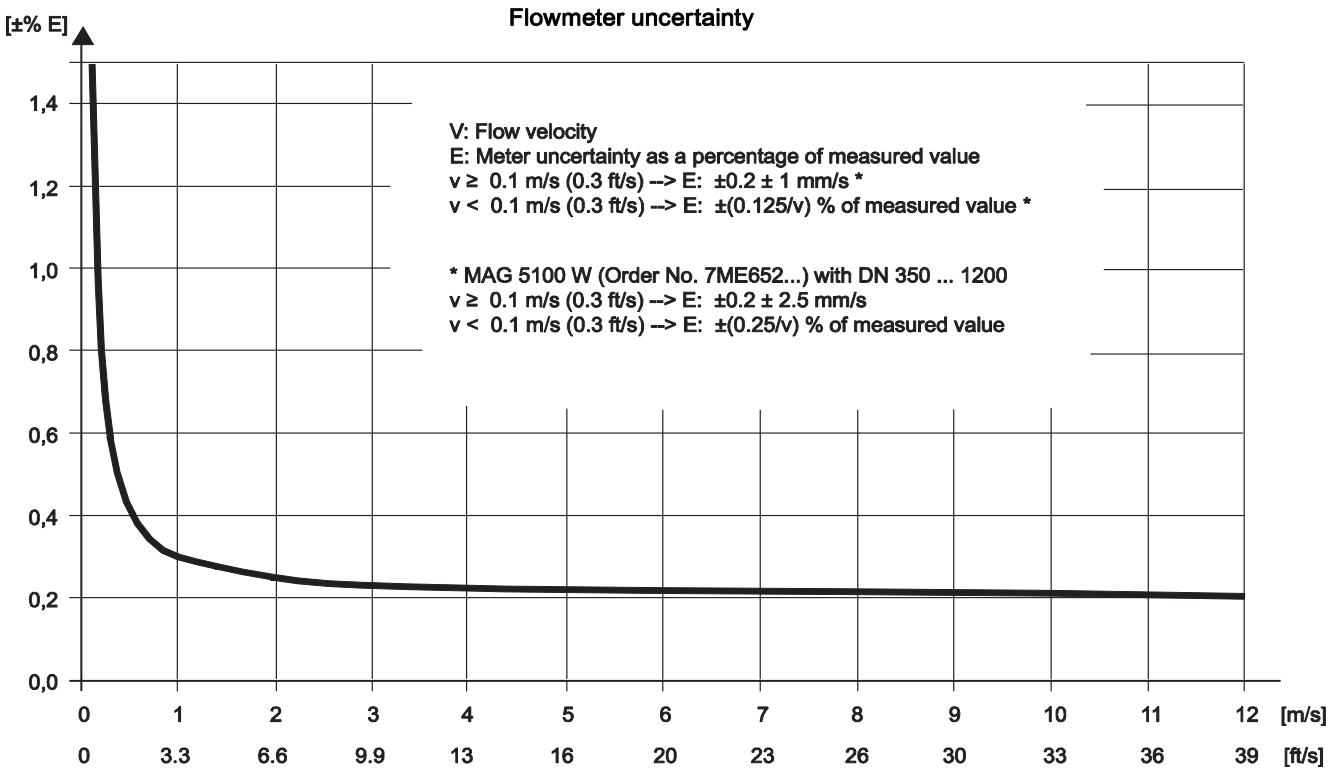

Figure 11-2 MAG 6000 with MAG 1100 (not PFA), MAG 1100 F (not PFA), MAG 5100 W, MAG 3100 and MAG 3100 P

Reference conditions

(ISO 9104 and DIN/EN 29104)

A calibration certificate is shipped with every sensor and calibration data are stored in SENSORPROM memory unit.

Medium temperature	20°C ± 5°C (68°F ± 9°C)
Ambient temperature	20°C ± 5°C (68°F ± 9°C)
Supply voltage	U_n ± 1%
Warming-up time	30 minutes
Incorporation in conductive pipe section Inlet section Outlet section	 10 x DN (DN ≤ 1200/48") 5 x DN (DN > 1200/48") 5 x DN (DN ≤ 1200/48") 3 x DN (DN > 1200/48")
Flow conditions	Developed flow profile

Reference conditions for sensor calibration

Current output	As pulse output ± (0.1% of actual flow + 0.05% FSO)
Effect of ambient temperature Display/frequency/pulse output Current output	 < ± 0.003% / °C act. < ± 0.005% / °C act.
Effect of supply voltage	< 0.005% of measuring value on 1% change
Repeatability	± 0.1% of actual flow for V ≥ 0.5 m/s (1.5 ft/s) and conductivity ≥ 10 µS/cm

Additions in the event of deviations from reference conditions

11.3 Output characteristics

Current output

Output characteristics	Bidirectional mode	Unidirectional mode
0...20 mA	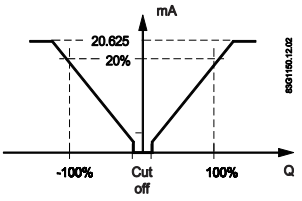	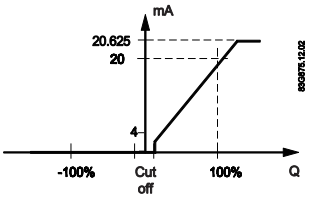
4...20 mA	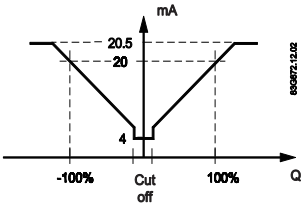	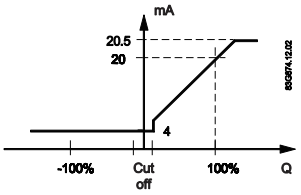

Frequency output

Bidirectional mode	Unidirectional mode
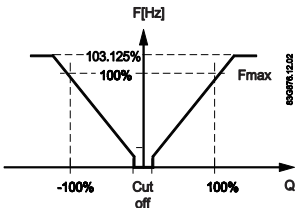	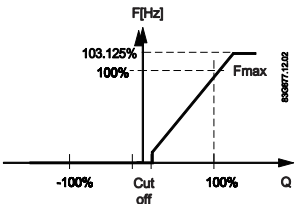

Pulse output

Bidirectional mode	Unidirectional mode
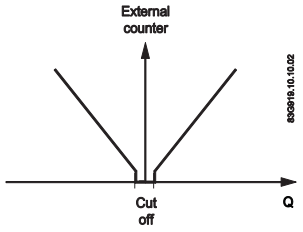	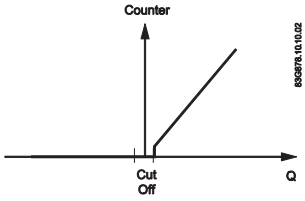

Relay output

Bidirectional mode		Unidirectional mode	
Power down	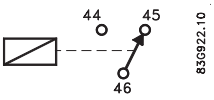	Active	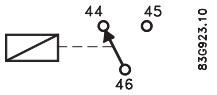

Error relay output

Bidirectional mode		Unidirectional mode	
No error	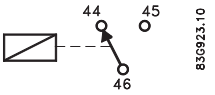	Error	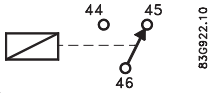

Limit switch (can be used as direction switch)

1 set point	2 set points
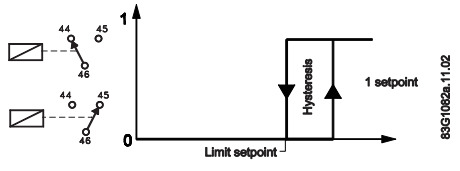	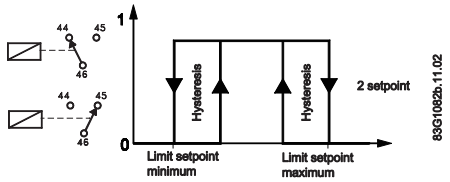
Passive Digital output	Passive Digital output

1 set point	2 set points
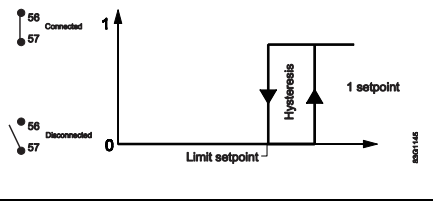	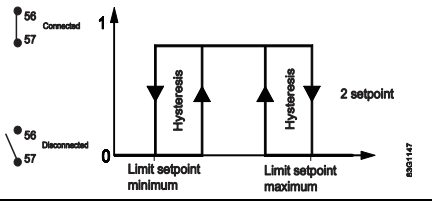
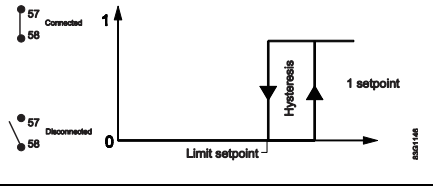	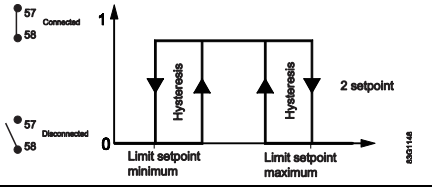

Note

Active digital output is not avaiable with MAG 6000 I.

Batch on digital output

Unidirectional mode (forward flow only)
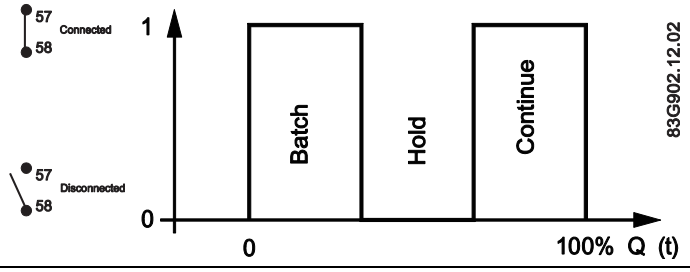

Totalizer lap

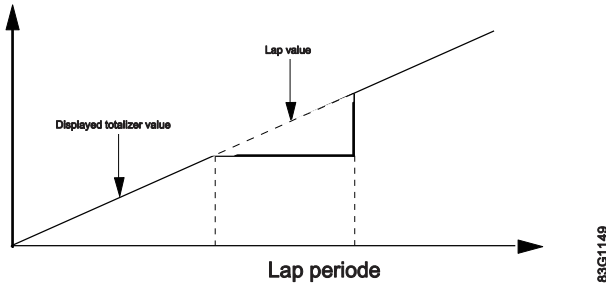

Batch on relay output

Unidirectional mode (forward flow only)			
Hold	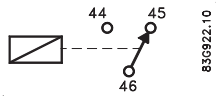	Batch	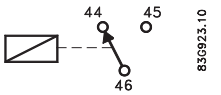

11.4 Cable data

Description

Cable for standard electrode or coil	
Electrode cable, double shielded	
Cable kit with standard coil cable and electrode cable double shielded (also available as low noise cable for MAG 1100 sensor)	

Technical data

		Standard electrode cable (electrode/coil)	Special cable (electrode)
Basic data	No. of conductors	3	3
	Sqr. area	1.5 mm^2	0.25 mm^2
	Screen	Yes	Double
	Color code	Brown, blue, black	Brown, blue, black
	Outside color	Grey	Grey
	Ext. diameter	7.8 mm	8.1 mm
	Conductor	Flexible CU	Flexible CU
	Isolation material	PVC	PVC
Ambient temperature	Flexible installation	-5 ... +70°C (23 ... 158°F)	-5 ... +70°C (23 ... 158°F)
	Non-flexible installtaion	-30 ... +70°C (-22 ... 158°F)	-30 ... +70°C (-22 ... 158°F)
Cable parameter	Capacity	161.50 pF/m	N/A
	Inductance	0.583 µH/m	N/A
	L/R	43.83 þH/Ω	N/A

11.5 Cable requirements

		Coil cable	Electrode cable
Basic data	No. of conductors	2	3
	Min. sqr. area	0.5 mm^2	0.2 mm^2
	Screen	Yes	Yes
	Max. capacitance	N/A	350 pF/m
Max. cable loop resistance	Media temperature:		
	< 100 °C	40 Ω	N/A
	> 200 °C	6 Ω	N/A
Cable glands on sensor	M20x1.5 gland - Cable ø 5 ... 13 mm (0.20 ... 0.51 inches)		
	½ NPT gland - cable ø 5 ... 9 mm (0.20 ... 0.35 inches)		

WARNING

Cable glands

For Ex zone 1 installations only certified cable glands with protection type "e" can be used for the power supply and the coil cable. The cable glands must be approved for the actual temperature and cable dimension.

Spare parts/Accessories

12

12.1 Ordering

In order to ensure that the ordering data you are using is not outdated, the latest ordering data is always available on the Internet:

Catalog process instrumentation (http://www.siemens.com/processinstrumentation/catalogs)

12.2 Accessories

Description	
Wall mounting unit	
Display protection lid	
Communication modules for MAG 6000	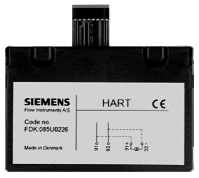

12.3 Spare parts

Description	
Connection plate	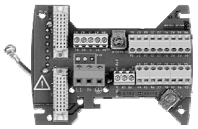
SENSORPROM® memory unit	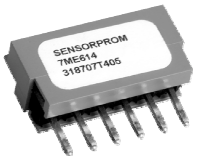
Display unit	
Communication modules for MAG 6000	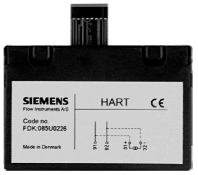

12.4 Sun shield

Description	
Sun shield	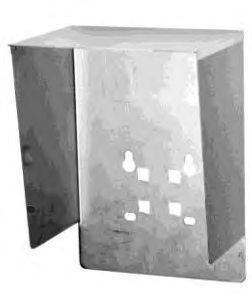

Menu diagrams

A

A.1 Transmitter menu overview

The menu diagrams shown on the following pages apply to MAG 5000/6000 as well as MAG 6000 I.

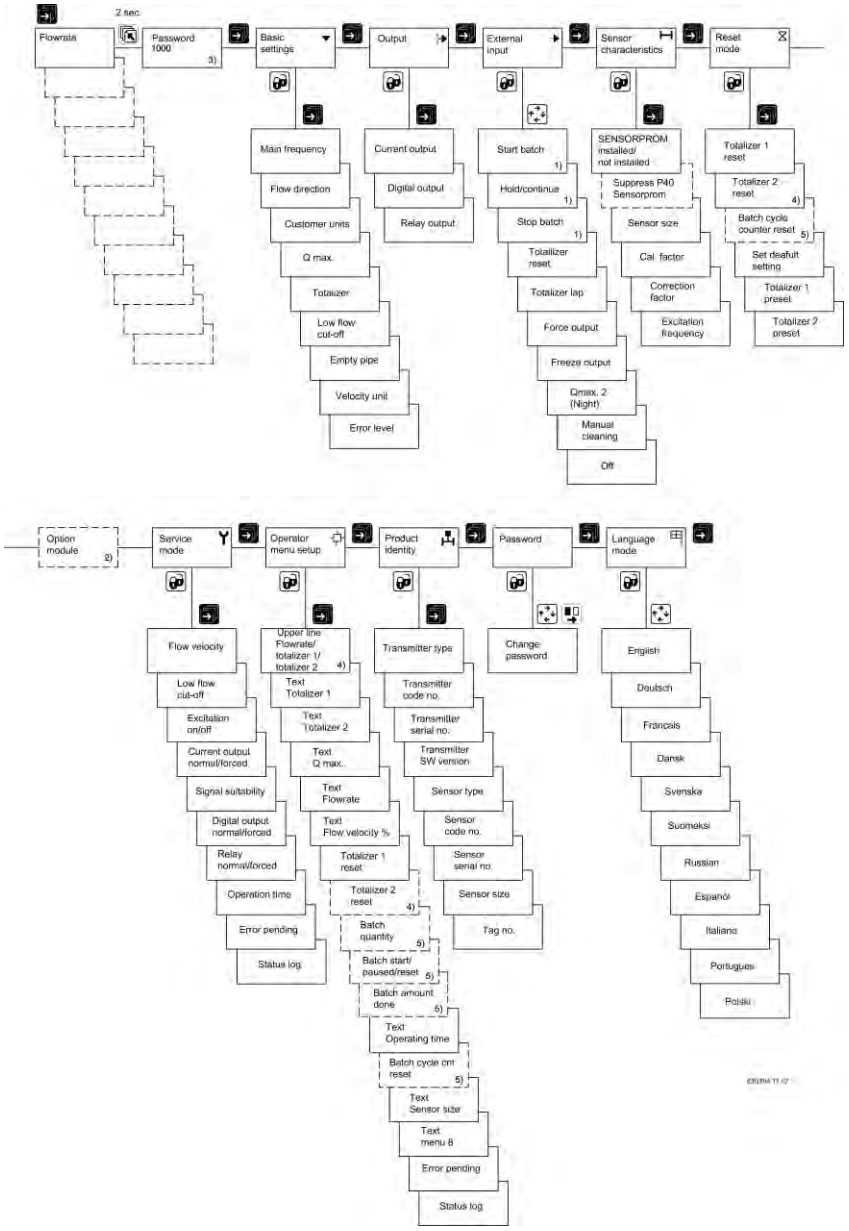

1) Not available in MAG 5000
2) Add-on module
3) Factory-set password: 1000
4) Not available when batch
5) Only available when batch

A.2 Basic settings

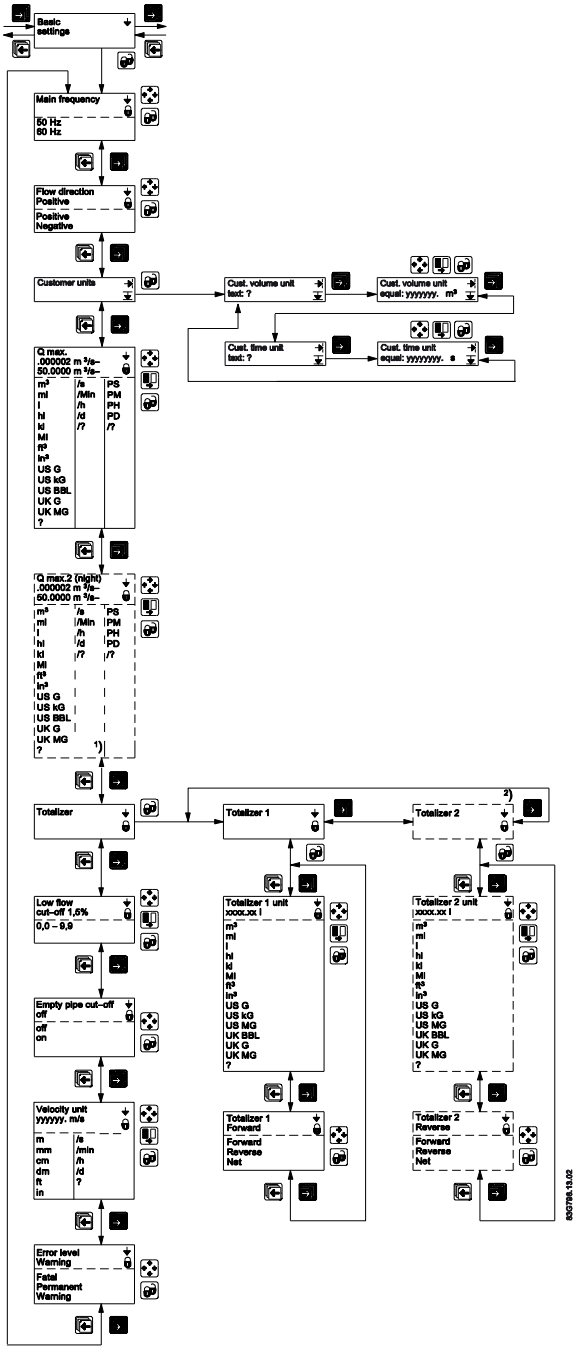

1) The question mark at unit selections stand for customer units. The unit is shown as a question mark on display if not overwritten with customer's own unit text setup using PDM or ordered specially using Y20 in ordering system.

   The flow rate unit can be "?/?" or show customer unit texts as for example "AcrFt/y" (Acre feet/year).

2) When batch is selected on digital output or relay, Totalizer 2 is not shown because it is controlled by the batch function.

A.3 Current output

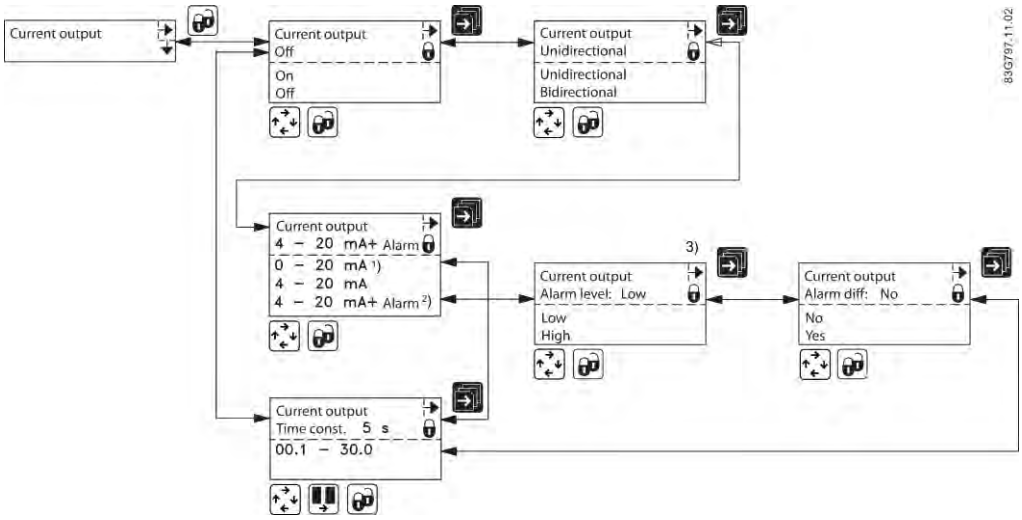

1) If HART communication is installed, it is not possible to set the output for 0-20 mA (even though the option is visible in the display). This is due to the fact that HART does not work if the output falls below 2-3 mA.

2) 4-20 mA + Alarm is the default setting for MAG 6000 I. For all other variants, the default setting is 4-20 mA.

3) The controlling of alarm levels does not recognize if the jumper is mounted for passive output. Do not combine differentiation and low alarm level together with passive output. The output will try to pull down the level to 1.3 mA at fatal errors which is not possible for passive output.

A.4 Digital output - pulse

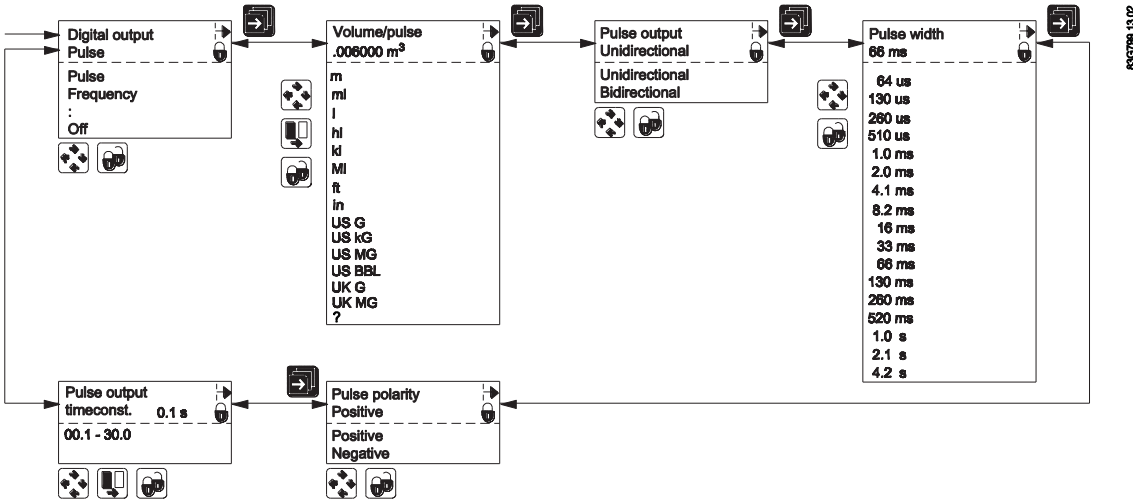

A.5 Digital output - frequency

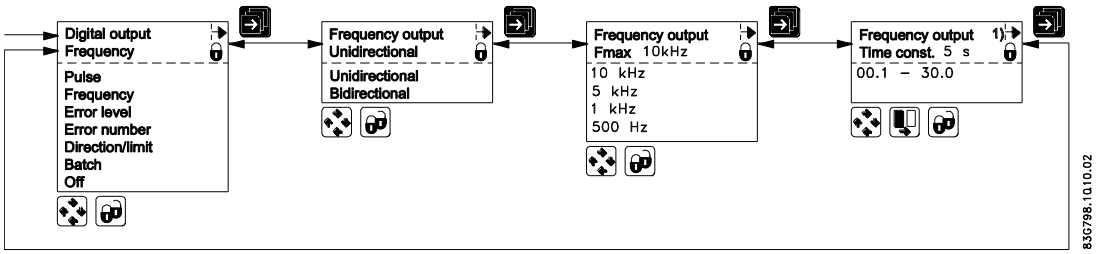

A.6 Error level

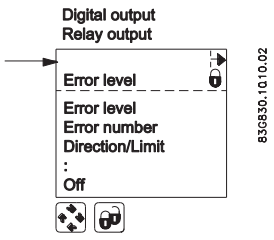

A.7 Error number

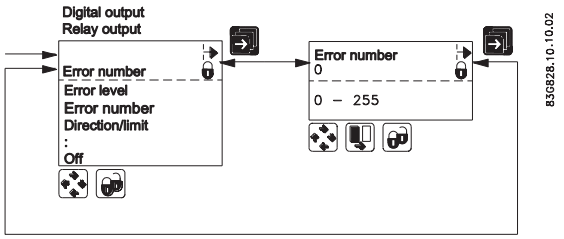

A.8 Direction/limit

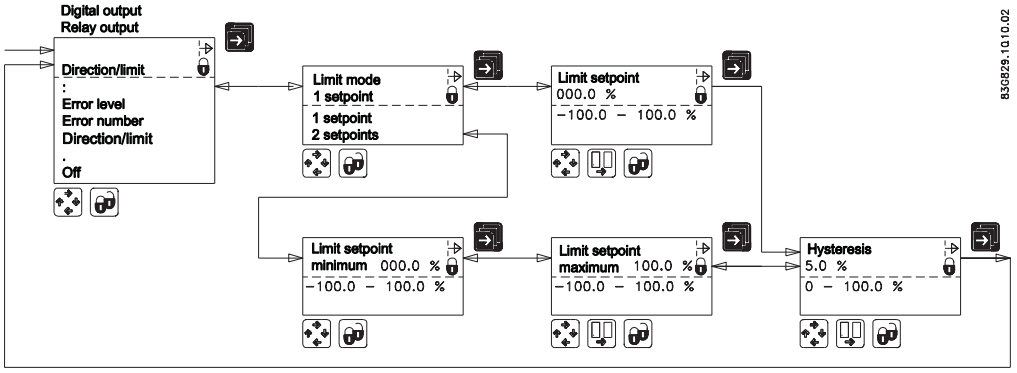

A.9 Batch

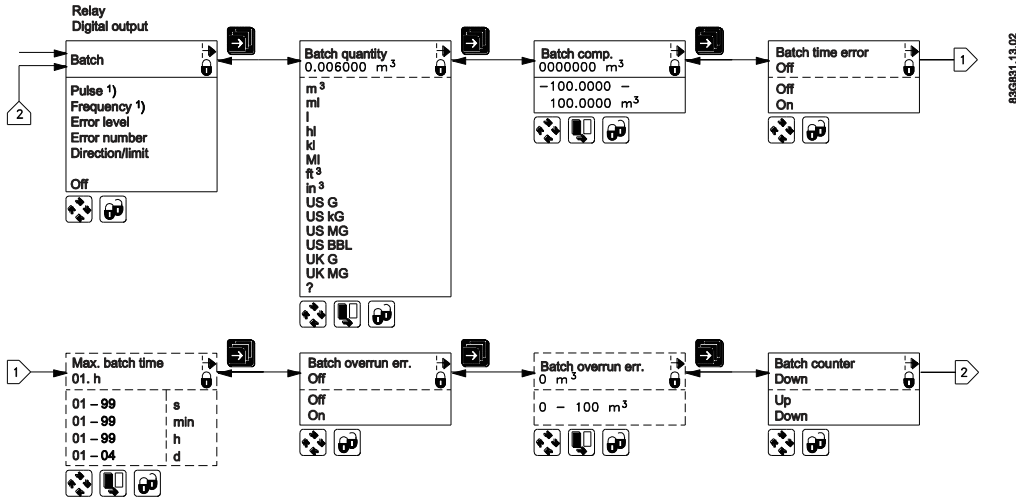

1) Visible only on Digital output.

Note

If batch function is chosen on the relay output, the digital output will be turned off if it has been set up for pulse, frequency or batch.

If digital output is set up for pulse, frequency or batch, then the relay output will be turned off if it has been set up for batch.

A.10 External input

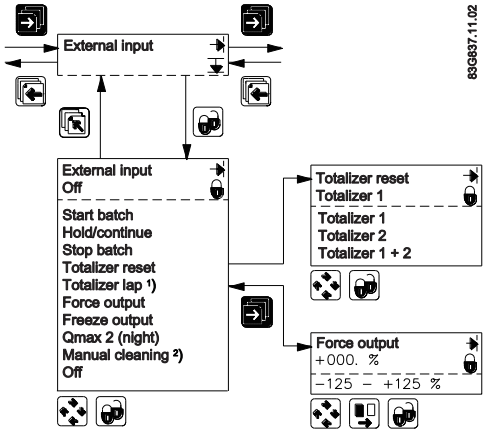

1) The value showing totalizer 1 on the display is frozen for as long as the digital output is activated. However, totalizer 1 continues counting, and when the digital input is released, the value on the display again follows totalizer 1.

2) MAG 6000 I cannot be equipped with cleaning unit. The cleaning option for relay output is however possible. When selecting function for MAG 6000 I relay output, the relay output has the same behavior as if cleaning unit was installed.

   The relay output of the transmitter determines when the relay is on by applying voltage for approximately 60 seconds. The metering is resumed after another 60 seconds when the cycle is complete. (The display is locked during this time). The time cycle can be set at 1 to 240 hours. If the cycle is set at for example three hours, the transmitter will be active every three hours.

A.11 Sensor characteristics

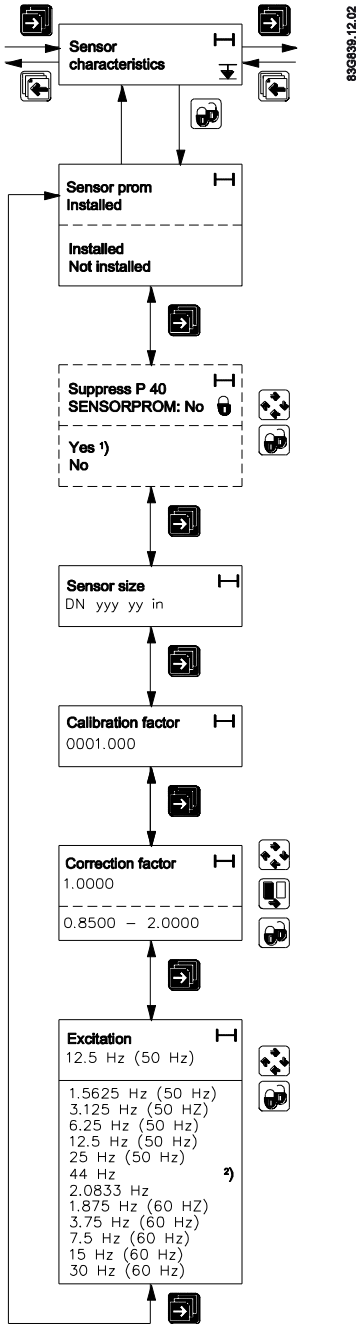

1) Error status (level or number) on an output is updated only at the time the error status changes (occurs or disappears). If P40 is suppressed after it has been detected (at power up), the output does not change state. In this case the power must be switched off/on to suppress the P40 error on the output.

2) The frequency can be set to 44 Hz in the MAG 6000 SV transmitter only.

A.12 Reset mode

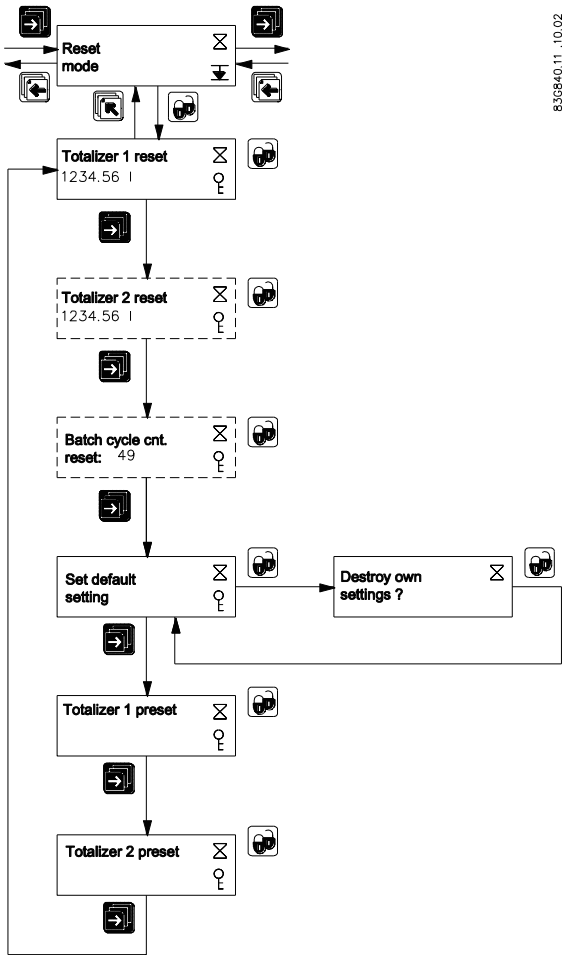

A.13 Reset mode - MAG 6000 SV

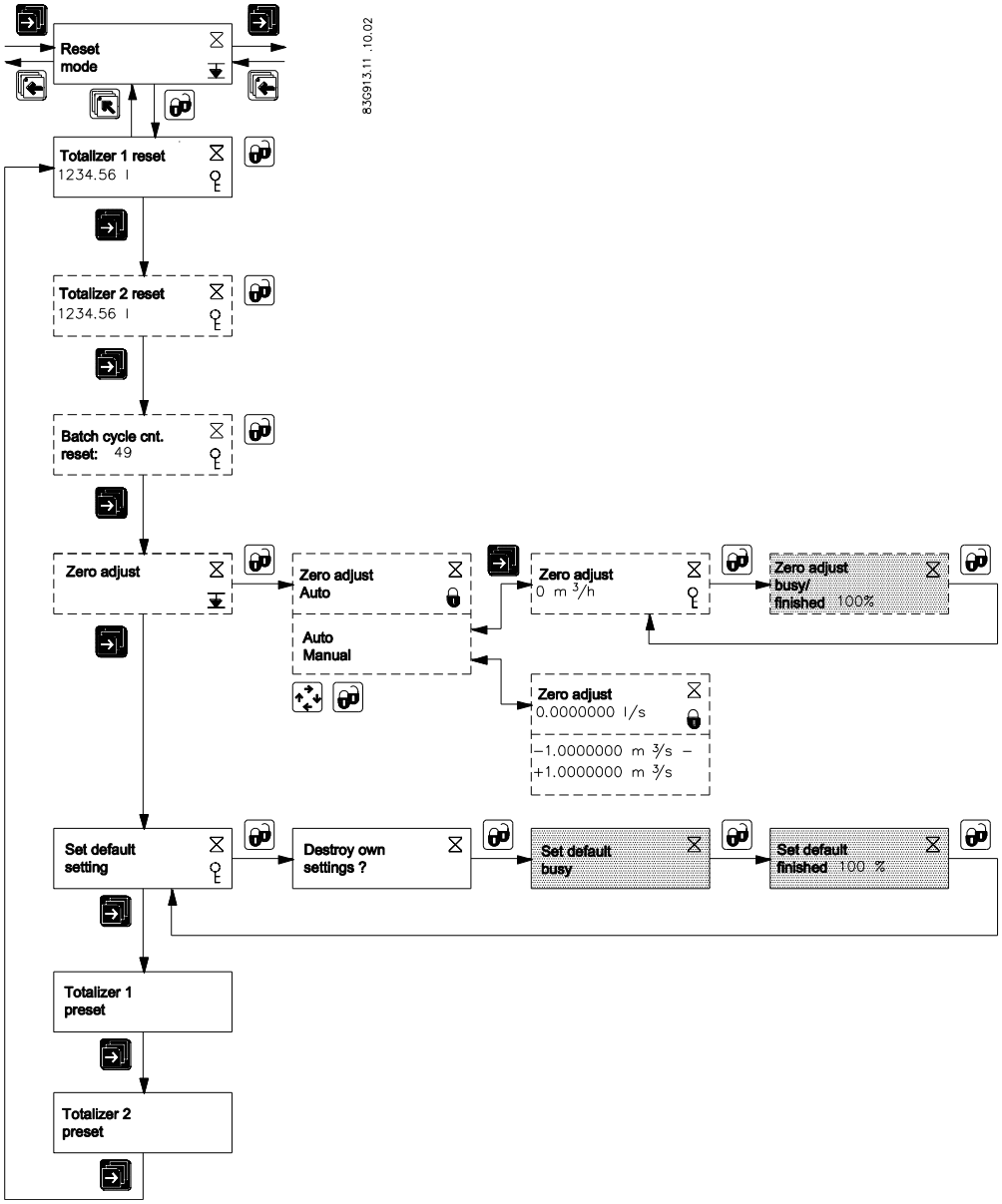

A.14 Service mode

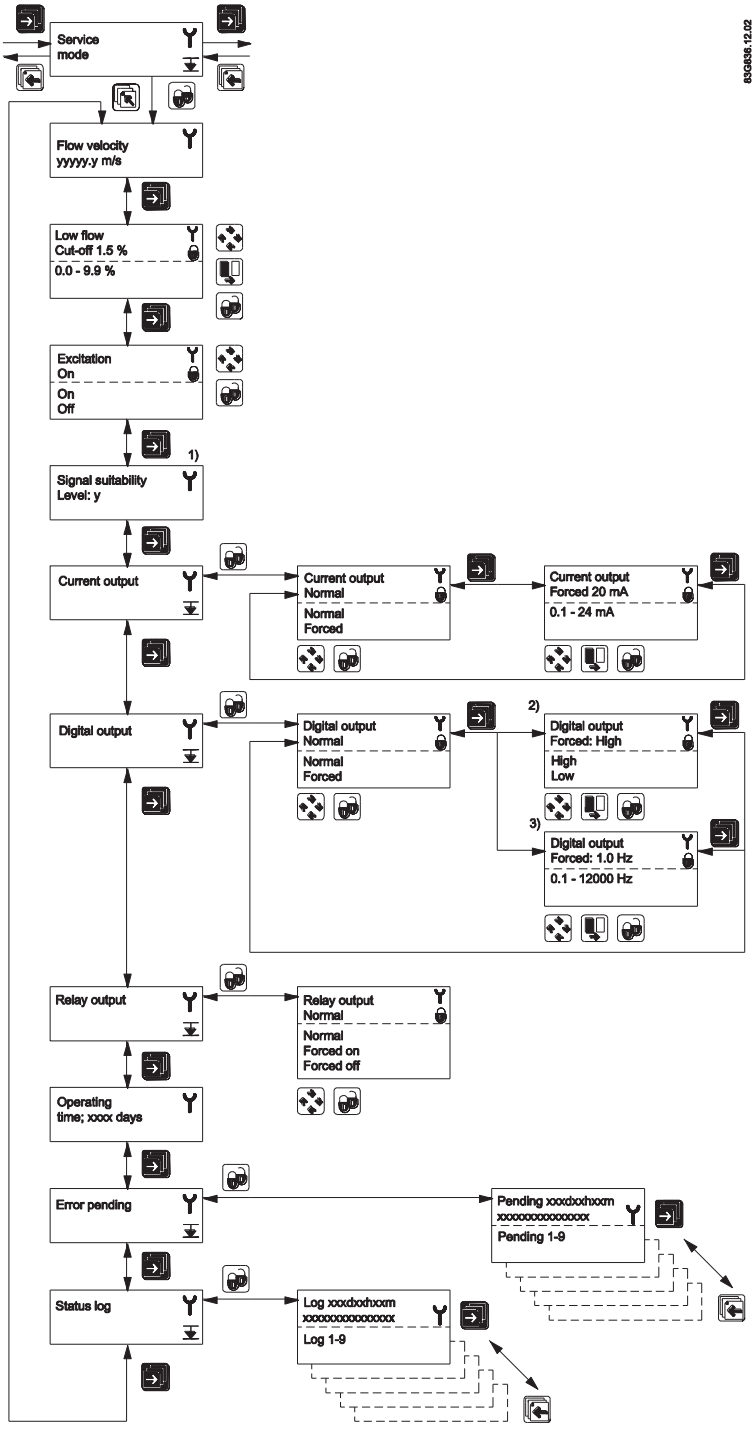

1) Signal suitability is a level from 0 to 9 of the electrode measured voltage. Level 0 is equal to the limit value that is set for empty pipe error detection, and level 9 is the best signal measured.

2) If digital output is set to pulse (standard).

3) If digital output is set to frequency.

A.15 Operator menu setup

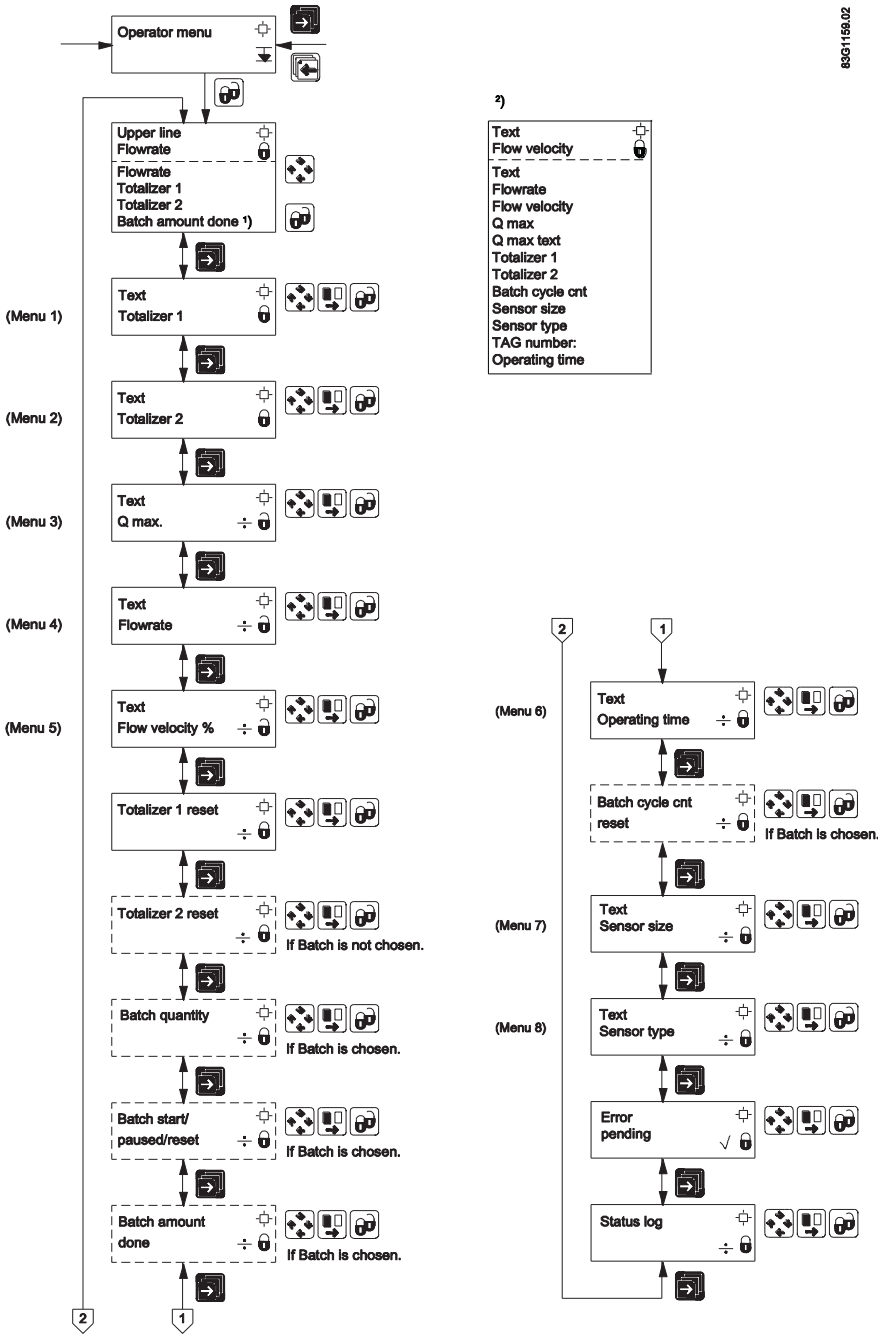

1) When selecting Batch amount for upper line, the upper line is initially blank. The amount done may not appear until the batch is started.

2) 'Text' means that the text for the chosen measured value is shown. For example, if textis chosen in line 2 and flow velocity is chosen in line 3, the text "Flow velocity " is shown in line2 and the measured flow velocity is shown in line 3.

A.16 Product identity

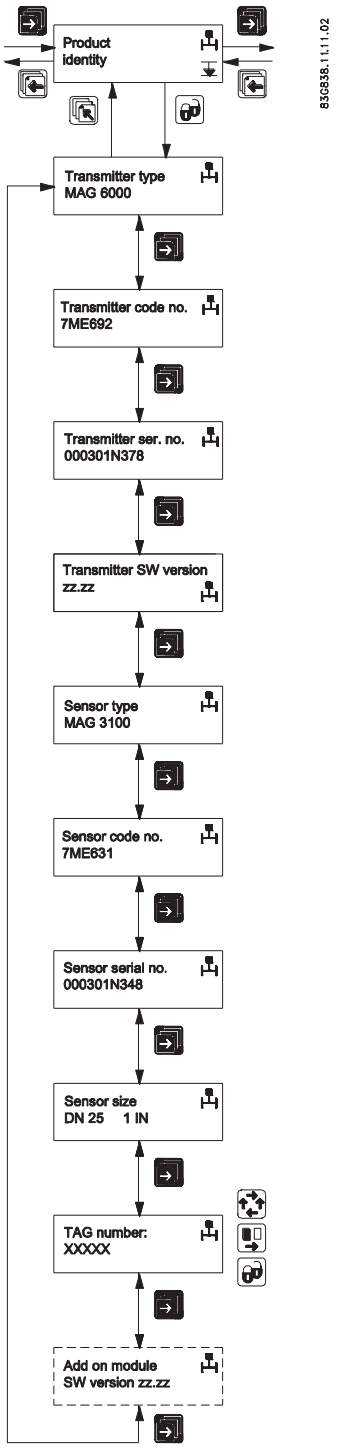

A.17 Add-on communication module

Example: HART

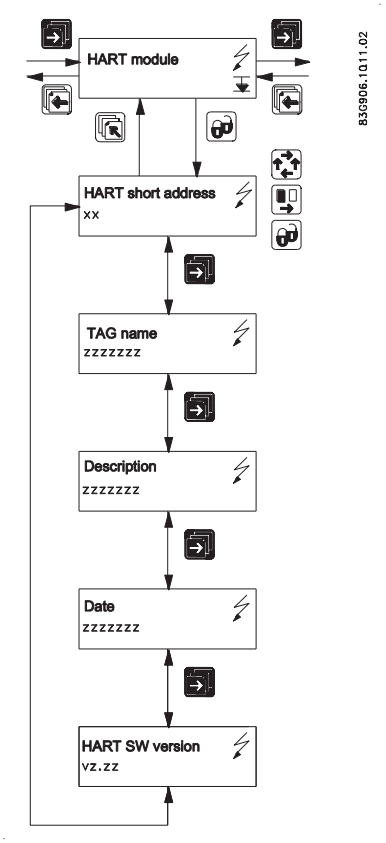

Note

Burst mode is not available with HART communication

A.18 Cleaning

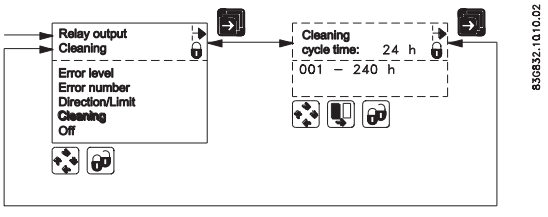

Note

Relay outputs

If cleaning unit is installed, relay outputs must always be used to operate cleaning.

Relay outputs cannot be used for other purposes

A.19 MAG 5000/6000 CT menu overview

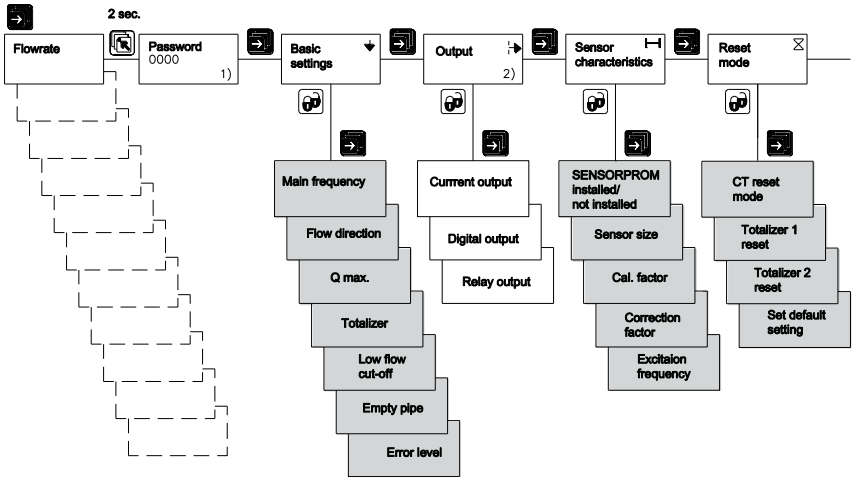

Figure A-1 Overview MAG 5000 CT and MAG 6000 CT (part 1)

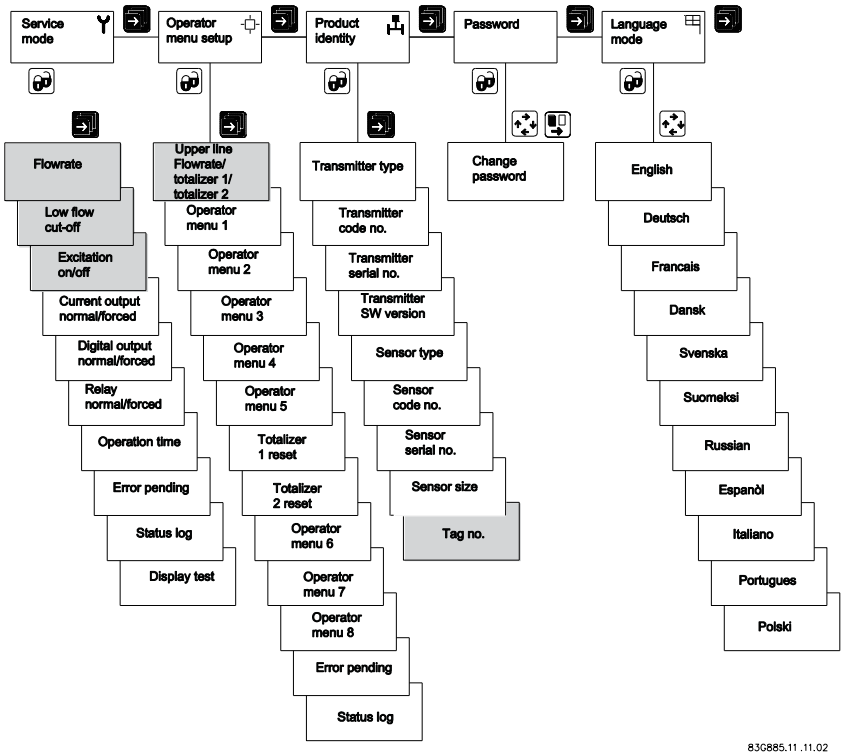

1) Factory-set password: 1000

2) Not visible when CT mode is "Hot water"

Figure A-2 Overview MAG 5000 CT and MAG 6000 CT (part 2)

Note
Sealing

Menus marked with gray are locked when transmitter is sealed.

A.20 Change password

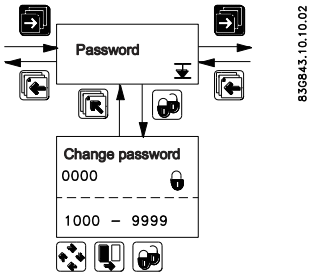

Factory settings

B

B.1 Transmitter factory settings

The factory settings shown on the following pages apply to MAG 5000/6000 as well as MAG 6000 I.

Menu item	Parameter	Factory settings	Options	More info
Password	Password	1000	1000 ... 9999	Changing password (Page 42) and Change password (Page 89)
Basic settings	Flow direction	Positive	Positive, negative	Changing basic settings (Page 43)
	Q_{max}	Sensor size dependent	Sensor size dependent	
	• *volume unit*	*Sensor size dependent*	*m^3, ml, l , hl, kl, Ml, ft^3, in^3, US G, US kG, US MG, US BBL, UK G, UK kG, UK MG, ? (customer unit)*	
	• *time unit*	*Sensor size dependent*	*Sec., min., hour, day, ? (customer unit)*	
	Totalizer 1	Forward	Forward, reverse, net	
	• *Totalizer 1 unit*	*Sensor size dependent*	*m^3, ml, l , hl, kl, Ml, ft^3, in^3, US G, US kG, US MG, US BBL, UK G, UK kG, UK MG, ? (customer unit)*	
	Totalizer 2	Reverse	Forward, reverse, net	
	• *Totalizer 2 unit*	*Sensor size dependent*	*m^3, ml, l , hl, kl, Ml, ft^3, in^3, US G, US kG, US MG, US BBL, UK G, UK kG, UK MG, ? (customer unit)*	
	Low flow cut-off	1.5%	0 ... 9.9%	
	Empty pipe	Off	On, Off	
	Velocity unit	m/s	m, mm, cm, dm, ft , in per s, min, h, d, ? (customer unit)	
	Error level	Warning	Fatal, permanent, warning	
Output	Current output	Off for MAG5000/ 6000 On for MAG6000I Namur	On/off, Unidirectional/bidirectional, 0...20 mA/4...20 mA/4...20 mA + Alarm	Output settings (Page 47)
	• *Alarm level*	*Low*	*High/Low*	
	• *Alarm diff.*	*No*	*Yes/No*	
	• *Time constant*	*5 s*	*0.1...30 s*	

Menu item	Parameter	Factory settings	Options	More info
	Digital output	Pulse	Error, direction/limit, batch, frequency, pulse, error number, off	Digital output - pulse (Page 78)
	Relay output	Error level	Error, direction/limit, cleaning, error number, off	Error level (Page 78)
	Direction/limit switch	Off	1 setpoint, 2 setpoints	Direction/limit (Page 79)
	• *Setpoints*	*0%*	*-100 ... +100%*	
	• *Hysteresis*	*5%*	*0.0 ... 100%*	
	Batch	Off		Batch (Page 79)
	• *Batch quantity*	*0*	*Sensor size dependent*	
	• *Batch compensation*	*0*	*-100 ... +100 m³*	
	• *Batch counter*	*Down*	*Up, down*	
	Frequency	Off	500 Hz, 1 kHz, 5 kHz, 10 kHz	Digital output - frequency (Page 78)
	• *Time constant*	*5 s*	*0.1 ... 30 s*	
	Pulse	On		Digital output - pulse (Page 78)
	• *Pulse polarity*	*Positive*	*Positive, negative*	
	• *Pulse width*	*66 ms*	*64 µs 130 µs, 260 µs, 510 µs, 1.0 ms, 2.0 ms, 4.1 ms, 8.2 ms, 16 ms, 33, ms, 66 ms, 130 ms, 260 ms, 520 ms, 1.0 s, 2.1 s, 4.2 s*	
	• *Volume/pulse*	*Sensor size dependent*	*Dimension-dependent*	
	• *Time constant*	*0.1 s*	*0.1 ... 30 s*	
External input	External input	Off	Batch, reset totalizer, freeze output, forced output, off	External input (Page 80)
	• *Batch*	*Start*	*Start, hold/continue, stop, Qmax 2*	

Menu item	Parameter	Factory settings	Options	More info
Sensor characteristics	Correction factor	1	0.85 ... 2.00	Sensor characteristics (Page 81)
Language	Language	English	English, German, French, Danish, Swedish, Finnish, Spanish, Russian, Italian, Portuguese, Polish	Changing language (Page 46)
Operator menu	Primary field	Flow rate	Flow rate, Totalizer 1, Totalizer 2	Changing operator menu setup (Page 45)
	Title/subtitle lines	Flow rate	Flow rate, Flow velocity, Qmax, Totalizer 1, Totalizer 2, Totalizer 1 reset, Totalizer 2 reset, Batch start/paused/stop, Batch cycle counter, Batch cycle counter reset, Sensor size, Sensor type, Error pending, Status log, Tag No.	

B.2 50 Hz Dimension dependent

50 Hz Dimension dependent factory settings MAG 1100, MAG1100F, MAG 3100, MAG 3100 P and MAG 5100W with M20 cable glands

DN	Q_{max}*					
	Factory settting	MAG 5100 W (Order no. 7ME6520)		MAG 1100, MAG 1100 F, 5100 W (Order no. 7ME6580) MAG 3100, 3100 P		unit
mm (inch)		min.	max.	min.	max.	
2 ($^1/_{12}$)	30	-	-	3.903623	156.1448	l/h
3 ($^1/_8$)	70	-	-	6.361726	254.469	l/h
6 ($^1/_4$)	300	-	-	25.44691	1017.876	l/h
10 ($^3/_8$)	900	-	-	70.68584	2827.433	l/h
15 (½)	2000	-	-	159.0432	6361.725	l/h
25 (1)	5000	441.7865	17671.45	441.7865	17671.45	l/h
40 (1½)	12	1.130974	45.23893	1.130974	45.23893	m^3/h
50 (2)	20	1.574527	62.98107	1.767146	70.68583	m^3/h
65 (2½)	30	2.499681	99.98723	2.986477	119.459	m^3/h
80 (3)	50	4.003646	160.1458	4.523894	180.9557	m^3/h
100(4)	120	6.252163	250.0864	7.068584	282.7433	m^3/h
125 (5)	180	10.00647	400.2585	11.04467	441.7864	m^3/h
150 (6)	250	15.74527	629.8107	15.90432	636.1725	m^3/h
200(8)	400	24.93797	997.5184	28.27434	1130.973	m^3/h
250(10)	700	40.00377	1600.15	44.17865	1767.145	m^3/h
300 (12)	1000	62.50395	2500.157	63.61726	254469	m^3/h
350 (14)	1200	86.59015	3463.605	86.59015	3463.605	m^3/h

DN	Q_{max}*					
	Factory settting	MAG 5100 W (Order no. 7ME6520)		MAG 1100, MAG 1100 F, 5100 W (Order no. 7ME6580) MAG 3100, 3100 P		unit
mm (inch)		min.	max.	min.	max.	
400 (16)	1800	113.0974	4523.893	113.0974	4523.893	m^3/h
450 (18)	2000	143.1389	5725.552	143.1389	5725.552	m^3/h
500 (20)	3000	176.7146	7068.583	176.7146	7068.583	m^3/h
600 (24)	4000	254.4691	10178.76	254.4691	10178.76	m^3/h
700 (28)	4500	346.3606	13854,42	346.3606	13854.42	m^3/h
750 (30)	5000	397.6079	15904.31	397.6079	15904.31	m^3/h
800 (32)	7000	452.3894	18095,57	452.3894	18095.57	m^3/h
900 (36)	9000	572.5553	22902,21	572.5553	22902.21	m^3/h
1000 (40)	12000	706.8584	28274.33	706.8584	28274.33	m^3/h
1050 (42)	12000	706.8584	28274.33	706.8584	28274.33	m^3/h
1100 (44)	14000	855.986	34211.94	855.2986	3421194	m^3/h
1200 (48)	15000	1017.877	40715.04	1017.877	40715.04	m^3/h
1400 (54)	25000	-	-	1385.443	55417.69	m^3/h
1500 (60)	30000	-	-	1590.432	63617.25	m^3/h
1600 (66)	35000	-	-	1809.558	72382.29	m^3/h
1800 (72)	40000	-	-	2290.222	91608.84	m^3/h
2000 (78)	45000	-	-	2827.434	113097.3	m^3/h
2200 (90)	50000	-	-	3421,195	136847.7	m^3/h
2400 (96)	55000	-	-	4071.505	162860.1	m3/h
2600 (102)	60000	-	-	4778.363	191134.4	m3/h
280 (114)	65000	-	-	5541.77	221670.7	m3/h
3000 (120)	70000	-	-	6361.726	254469	m3/h

* The min. and max. amount values show mathematical values and do not indicate measurement accuracy

B.3 60 Hz Dimension dependent

60 Hz Dimension dependent factory settings MAG 1100, MAG1100F, MAG 3100, MAG 3100 P and MAG 5100W with ½" NPT cable glands

DN	$Q_{max.}$					
	Factory setting*	MAG 5100 W (Order no. 7ME6520)		MAG 1100, MAG 1100 F, 5100 W (Order no. 7ME6580) MAG 3100, 3100 P		unit
mm (inch)		min.	max.	min.	max.	
2 ($^1/_{12}$)	0.14	-	-	0.01718714	0.6874852	US GPM
3 ($^1/_8$)	0.31	-	-	0.02800984	1.120393	US GPM
6 ($^1/_4$)	1.4	-	-	0.1120394	4.481573	US GPM
10 ($^3/_8$)	4	-	-	0.3112204	12.44881	US GPM
15 (½)	9	-	-	0.7002459	28.0	US GPM
25 (1)	23	1.945128	77.80509	1.945128	77.80509	US GPM
40 (1½)	53	4.979526	199.181	4.979526	199.181	US GPM
50 (2)	89	6.932434	277.2973	7.78051	311.2203	US GPM
65 (2½)	133	11.00577	440.2305	13.14907	525.9624	US GPM
80 (3)	221	17.62753	705.1008	19.91811	796.7241	US GPM
100(4)	529	27.52745	1101.097	31.12204	1244.881	US GPM
125 (5)	793	44.05714	1762.285	48.62819	1945.127	US GPM
150 (6)	1101	69.32434	2772.973	70.02459		
200 (8)	1762	109.7986	4391.941		4979.525	
250 (10)	3083	176.1313	7045.251	194.5128		
300 (12)	4403	275.1967	11007.86	280.0984	11203.93	US GPM
350 (14)	5284	381.245	15249.79	381.245	15249.79	US GPM
400 (16)	7926	497.9526	19918.1	497.9526	19918.1	US GPM
450 (18)	8806	630.2213	25208.84	630.2213	25208.84	US GPM
500 (20)	13209	778.051	31122.03	778.051	31122.03	US GPM
600 (24)	17612	1120.394	44815.73	1120.394	44815.73	US GPM
700 (28)	19813	1524.98	60999.19	1524.98	60999.19	US GPM
750 (30)	22015	1750.615	70024.58	1750.615	70024.58	US GPM
800 (32)	3082	1991.811	79672.4	1991.811	79672.41	US GPM
900 (36)	39626	2520.885	100835.3	2520.885	100835.3	US GPM
1000 (40)	52835	3112.204	124488.1	3112.204	124488.1	US GPM
1050 (42)	52835	3112.204	137248.1	3112.204	124488.1	US GPM
1100 (44)	61641	3765.767	150630.6	3765.767	150630.6	US GPM
1200 (48)	66044	4481.574	179262.9	4481.574	179262.9	US GPM
1400 (54)	110072	-	-	6099.92	243996.7	US GPM
1500 (60)	1320867	-	-	7002.459	280098.3	US GPM
1600 (66)	154101	-	-	7967.242	318689.6	US GPM

DN	$Q_{max.}$					
	Factory setting*	MAG 5100 W (Order no. 7ME6520)		MAG 1100, MAG 1100 F, 5100 W (Order no. 7ME6580) MAG 3100, 3100 P		unit
mm (inch)		min.	max.	min.	max.	
1800 (72)	176115	-	-	10083.54	403341.5	US GPM
2000 (78)	198130	-	-	12448.82	497952.5	US GPM
2200 (90)	220144	-	-	15063.07	602522.6	
	242158	-		17926.3	717051.7	
2600 (102)	264173	-	-	21038.5	841539.8	
2800 (114)	286187	-	-	24399.68	975987	
3000 (120)	308201	-	-	28009.84	1120393	

* Factory setting sets Qmax to a metric unit (see previous table). The values here are converted to rounded off US GPM.

B.4 50 Hz Dimension dependent batch and pulse output settings

50 Hz Dimension dependent factory settings MAG 1100, MAG1100F, MAG 3100, MAG 3100 P and MAG 5100W with ½" NPT cable glands

6DN	Volume/pulse or batch quantity*				Factory setting		
	MAG 5100 W (Order no. 7ME6520)		MAG 1100, MAG 1100 F, 5100 W (Order no. 7ME6580) MAG 3100, 3100 P		Volume/ pulse & batch amount	Pulse & batch unit	Totalizer unit
mm (inch)	min.	max.	min.	max.			
2 ($^1/_{12}$)	-	-	3.61466 µl	94.75103 l	0.1	ml	ml
3 ($^1/_8$)	-	-	5.890487 µl	154.4155 l	0.1	ml	ml
6 ($^1/_4$)	-	-	23.56195 µl	617.6622 l	1	l	l
10 ($^3/_8$)	-	-	65.44985 µl	1.715728 m^3	1	l	l
15 (½)	-	-	147.2622 µl	3.860389 m^3	1	l	l
25 (1)	409.0616 µl	10.7233 m^3	409.0616 µl	10.7233 m^3	10	l	l**
40 (1½)	1.047198 ml	27.45165 m^3	1.047198 ml	27.45165 m^3	10	l	l**
50 (2)	1.457896 ml	38.21785 m^3	1.636247 ml	42.89321 m^3	10	l	l**
65 (2½)	2.31452 ml	60.67373 m^3	2.765257 ml	72.48952 m^3	100	l	l**
80 (3)	3.70708 ml	97.17886 m^3	4.188791 ml	109.8066 m^3	100	l	l**
100(4)	5.789039 ml	151.7561 m^3	6.544985 ml	171.5728 m^3	100	l	l**
125 (5)	9.265244 ml	242.8828 m^3	10.22654 ml	268.0825 m^3	100	l	m^3
150 (6)	14.57896 ml	382.1785 m^3	14.72622 ml	386.0389 m^3	100	l	m^3
200 (8)	23.09071 ml	605.309 m^3	26.17994 ml	686.2913 m^3	1	m^3	m^3

6DN	Volume/pulse or batch quantity*				Factory setting		
	MAG 5100 W (Order no. 7ME6520)		MAG 1100, MAG 1100 F, 5100 W (Order no. 7ME6580) MAG 3100, 3100 P		Volume/ pulse & batch amount	Pulse & batch unit	Totalizer unit
mm (inch)	min.	max.	min.	max.			
250 (10)	37.04053 ml	970.995 m^3	40.90616 ml	1072.33 m^3	1	m^3	m^3
300 (12)	57.87403 ml	1517.132 m^3	58.90487 ml	1544.155 m^3	1	m^3	m^3
350 (14)	80.17607 ml	2101.767 m^3	80.17607 ml	210.7671 m^3	1	m^3	m^3
400 (16)	104.7198 ml	2745.165 m^3	104.7198 ml	2745.165 m^3	1	m^3	m^3
450 (18)	132.536 ml	3474.35 m^3	132.536 ml	3474.35 m^3	1	m^3	m^3
500 (20)	163.6247 ml	4289.321 m^3	163.6247 ml	4289.321 m^3	10	m^3	m^3
600 (24)	235.6195 ml	6176.622 m^3	235.6195 ml	6176.622 m^3	10	m^3	m^3
700 (28)	320.7043 ml	8407.069 m^3	320.7143 ml	8407.069 m^3	10	m^3	m^3
750 (30)	368.1554 ml	9650.972 m^3	368.1554 ml	9650.972 m^3	10	m^3	m^3
800 (32)	418.8791 ml	10980.66 m^3	418.8791 ml	10980.66 m^3	10	m^3	m^3
900 (36)	530.1438 ml	13897.4 m^3	530.1438 ml	13897.4 m^3	10	m^3	m^3
1000 (40)	654.4985 ml	17157.28 m^3	654.4985 ml	17157.28 m^3	10	m^3	m^3
1050 (42)	654.4985 ml	17157.28 m^3	654.4985 ml	17157.28 m^3	10	m^3	m^3
1100 (44)	79.94321 ml	20760.31 m^3	791.9432 ml	20760.31 m^3	10	m^3	m^3
1200 (48)	942.4778 ml	24706.48 m^3	942.4778 ml	24706.48 m^3	10	m^3	m^3
1400 (54)	-	-	1.282817 l	33628.27 m^3	10	m^3	m^3
1500 (60)	-	-	1.472622 l	38603.89 m^3	10	m^3	m^3
1600 (66)	-	-	1.675517 l	43922.64 m^3	10	m^3	m^3
1800 (72)	-	-	2.120576 l	55589.6 m^3	10	m^3	m^3
2000 (78)	-	-	2.617994 l	68629.13 m^3	10	m^3	m^3
2200 (90)	-	-	3.167773 l	83041.25 m^3	10	m^3	m^3
2400 (96)	-	-	3.769912 l	98825.9 m^3	10	m^3	m^3
2600 (102)	-	-	4.4241 l	115983. m^3	10	m^3	m^3
2800 (114)	-	-	5.131268 l	134513.1 m^3	10	m^3	m^3
3000 (120)	-	-	5.890487 l	154415.5 m^3	10	m^3	m^3

* The min. and max. amount values show mathematical values and do not indicate measurement accuracy.

** For CT devices the totalizer 1 unit is in m^3

B.5 60 Hz Dimension dependent batch and pulse output settings

60 Hz Dimension dependent factory settings MAG 1100, MAG1100F, MAG 3100, MAG 3100 P and MAG 5100W with ½" NPT cable glands

DN	Volume/pulse or batch quantity			
	MAG 5100 W (Order no. 7ME6520)		MAG 1100, MAG 1100 F, 5100 W (Order no. 7ME6580) MAG 3100, 3100 P	
mm (inch)	US G min.	US G max.	US G min.	US G max.
2 ($^1/_{12}$)	-	-	0.00000095484069	25.03057
3 ($^1/_8$)	-	-	0.000001556102	40.79227
6 ($^1/_4$)	-	-	0.000006224408	163.1691
10 ($^3/_8$)	-	-	0.00001729003	453.2475
15 (½)	-	-	0.00003890255	1019.806
25 (1)	0.0001080627	2832.796	0.0001080627	2832.796
40 (1½)	0.0002766404	7251.96	0.0002766404	7251.96
50 (2)	0.0003851353	10096.08	0.0004322506	11331.18
65 (2½)	0.0006114314	16028.3	0.0007305034	19149.7
80 (3)	0.0009793068	25671.93	0.001106562	29007.84
100(4)	0.001529303	40089.74	0.001729003	45324.75
125 (5)	0.002447619	64162.85	0.002701566	70819.92
150 (6)	0.003851353	100960.8	0.003890255	101980.6
200 (8)	0.00609992	159905.7	0.006916009	181299
250 (10)	0.009785071	256509.7	0.01080627	283279.6
300 (12)	0.01528871	400784.1	0.01556102	407922.7
350 (14)	0.02118028	555228.2	0.02118028	555228.2
400 (16)	0.02766404	725196	0.02766404	725196
450 (18)	0.0350123	917826.2	0.0350123	917826.2
500 (20)	0.04322506	1133118	0.04322506	1133118
600 (24)	0.06224408	1631691	0.06224408	1631691
700 (28)	0.0847211	2220912	0.0847211	2220912
750 (30)	0.09725637	2549517	0.09725637	2549517
800 (32)	0.1106562	2900784	0.1106562	2900784
900 (36)	0.1400492	3671304	0.1400492	3671304
1000 (40)	0.1729003	4532475	0.1729003	4532475
1050 (42)	0.1729003	4532475	0.1729003	4532475
1100 (44)	0.2092093	5484294	0.2092093	5484294
1200 (48)	0.2489763	6526764	0.2489763	6526764
1400 (54)	-	-	0.3388844	8883651
1500 (60)	-	-	0.3890255	10198060
1600 (66)	-	-	0.4426246	11603130
1800 (72)	-	-	0.5601967	14685210

DN	Volume/pulse or batch quantity			
	MAG 5100 W (Order no. 7ME6520)		MAG 1100, MAG 1100 F, 5100 W (Order no. 7ME6580) MAG 3100, 3100 P	
mm (inch)	US G min.	US G max.	US G min.	US G max.
2000 (78)	-	-	0.6916009	18129900
2200 (90)			0.836837	21937170
2400 (96)			0.995906	26107050
2600 (102)			1.168806	30639530
2800 (114)			1.355538	35534600
3000 (120)			1.556102	40792270

Approvals/Certificates

C

All certificates are posted on the Internet. Additionally, the CE Declaration of Conformity as well as ATEX approvals are available on the SITRANS F literature CD-ROM.

Certificates (http://support.automation.siemens.com/WW/view/en/10806951/134200)

Index

A

Add-on module, 15
Add-on modules
    Electrical connection:Add-on modules, 38
Alarm differentiation, 47
Alarm level, 47

C

Communication module, (See Add-on module)
Compliance, 11
Contact person, 9
Customer Support Hotline, 58

D

Decontamination, 59
Device
    Identification, 8
    Inspection, 7
Diagnostic functions, 53

E

Electrical connection, 38
Error handling, 53

H

Hotline, 58

I

Installation
    Indoor/outdoor, 19
Internet
    Contact person, 9, 59
    Flow documentation, 9
    Support, 59
Introduction, 7

L

Laws and directives, 11

M

Mains supply, 35
Maintenance, 57

P

Protective conductor terminal, 35
Protective earth, 35

R

Recalibration, 60
Repair, 58
Return procedures, 59

S

Safety
    Instrument safety standards, 11
Safety notes, 11
Service, 58, 59
Support, 59
System components, 15

W

Wire insulation, 35

For more information

www.siemens.com/flow

Siemens A/S
Flow Instruments
Nordborgvej 81
DK-6430 Nordborg

Subject to change without prior notice
Order No.: A5E02338368
Lit. No.: A5E02338368-002
© Siemens AG 12.2013

A5E02338368

www.siemens.com/processautomation

Pressure transmitter

SITRANS P, DS III Series with HART

Operating Instructions· 09/2012

SITRANS

Answers for industry.

SIEMENS

AC & DC Motor Installation & Maintenance

Safety Notice: Be sure to read and understand all of the Safety Notice statements in MN408 or Product Specific manual for your motor. A copy is available at: http://www.baldor.com/support/product_manuals.asp

ACCEPTANCE
Thoroughly inspect this equipment before accepting shipment from the transportation company. If any damage or shortage is discovered do not accept until noted on the freight bill. Report all damage to the freight carrier.

SAFETY
Eye bolts, lifting lugs or lifting openings, if provided, are intended only for lifting the motor and motor mounted standard accessories not exceeding, in total 30% of the motor weight. These lifting provisions should never be used when lifting or handling the motor and driven equipment. Eye bolt lifting capacity rating is based on a lifting alignment coincident with eye bolt center line. Eye bolt capacity reduces as deviation from this alignment is increased. Be sure eye bolts are tight and prevented from turning before lifting.

INSTALLATION OUTSIDE THE USA:
Refer to MN408 and MN1383 for Compliance with European Directives. Copies are available at:
http://www.baldor.com/support/product_manuals.asp

MOTOR ENCLOSURE
ODP, Open drip proof motors are intended for use in clean, dry locations with adequate supply of cooling air. These motors should not be used in the presence of flammable or combustible materials. Open motors can emit flame and/or molten metal in the event of insulation failure. TEFC, totally enclosed motors are intended for use where moisture, dirt and/or corrosive materials are present in indoor and outdoor locations.
Explosion protected motors, as indicated by a Nationally Recognized Testing Laboratory Certification mark and marking with Class, Division and Temperature Code are intended for installation in hazardous locations as described in Article 500 of the NEC. Refer to MN408 for more details.

MOUNTING
Foot mounted machines should be mounted to a rigid foundation to prevent excessive vibration. Shims may be used if location is uneven.

Flange mounted machines should be properly seated and aligned. Note: If improper rotation direction is detrimental to the load, check rotation direction prior to coupling the load to the motor shaft.
For V-belt drive, mount the sheave pulley close to the motor housing. Allow clearance for end to end movement of the motor shaft. Do not overtighten belts as this may cause premature bearing failure or shaft breakage.
Direct coupled machines should be carefully aligned and the shaft should rotate freely without binding.

GENERAL
The user must select a motor starter and overcurrent protection suitable for this motor and its application. Consult motor starter application data as well as the National Electric Code and/or applicable local codes. Special motors for use by United States Government including special specifications, master plans, etc. refer to the applicable master plans and specifications involved. On motors received from the factory with the shaft blocked, remove blocking before operating the motor. If motor is to be reshipped alone or installed to another piece of equipment, the shaft block must be installed to prevent axial movement and prevent brinelling of the bearings during shipment.

TESTING
If the motor has been in storage for an extensive period or has been subjected to adverse moisture conditions, check the motor insulation resistance with a meg ohm meter. Depending on storage conditions it may be necessary to regrease or change rusted bearings. Contact Baldor District Office if resistance is less than 5 meg ohms.

WARNING: Do not touch electrical connections before you first ensure that power has been disconnected. Electrical shock can cause serious or fatal injury.

WARNING: Be sure the system is properly grounded before applying power. Electrical shock can cause serious or fatal injury.

INSTALLATION
This motor must be installed in accordance with National Electric Code, NEMA MG-2, IEC standards or local codes.

WIRING
Connect the motor as shown in the connection diagrams. If this motor is installed as part of a motor control drive system, connect and protect the motor according to the control manufacturers diagrams. Refer to MN408 for additional details on lead marking. The wiring, fusing and grounding must comply with the National Electrical Code or IEC and local codes. When the motor is connected to the load for proper direction of rotation and started, it should start quickly and run smoothly. If not, stop the motor immediately and determine the cause. Possible causes are: low voltage at the motor, motor connections are not correct or the load is too heavy. Check the motor current after a few minutes of operation and compare the measured current with the nameplate rating.

GROUNDING
Ground the motor according to NEC and local codes. In the USA consult the National Electrical Code, Article 430 for information on grounding of motors and generators, and Article 250 for general information on grounding. In making the ground connection, the installer should make certain that there is a solid and permanent metallic connection between the ground point, the motor or generator terminal housing, and the motor or generator frame. In non-USA locations consult the appropriate national or local code applicable.

ADJUSTMENT
The neutral is adjustable on some DC motors. AC motors have no adjustable parts.

Noise
For specific sound power or pressure level information, contact your local Baldor representative.

VIBRATION
This motor is balanced to NEMA MG1, Part 7 standard.

BRUSHES (DC Motors)
Periodically, the brushes should be inspected and all brush dust blown out of the motor. If a brush is worn 1/2, (length specified in renewal parts data), replace the brushes.

WARNING: Guards must be installed for rotating parts such as couplings, pulleys, external fans, and unused shaft extensions, should be permanently guarded to prevent accidental contact by personnel. Accidental contact with body parts or clothing can cause serious or fatal injury.

Reassemble and seat the new brushes using a brush seating stone. Be sure the rocker arm is set on the neutral mark.

INSPECTION

Before connecting the motor to an electrical supply, inspect for any damage resulting from shipment. Turn the shaft by hand to ensure free rotation. Motor leads must be isolated before the shaft will turn freely on permanent magnet motors.

DRAIN PLUGS

One or more condensation drain plugs are provided on each endplate for various motor mounting configurations. For Washdown and totally enclosed, fan cooled or non-ventilated motors, the plugs in the lowest portion of the ends shields should be removed for operation (unless the motor has special stainless steel drains). All drains are located in the lowest portion of the ends shields.

MOUNTING

Mount the motor on a foundation sufficiently rigid to prevent excessive vibration. Grease lubricated ball bearing motors may be mounted with the feet at any angle. After careful alignment, bolt motor securely in place. Use shim to fill any unevenness in the foundation. Motor feet should sit solidly on the foundation before mounting bolts are tightened.

IP (Ingress Protection)

IP designations include two numerals, the first characteristic numeral is for ingress solid bodies and from dust. The second for ingress protection from liquid - water. Motors marked less than IP23 require additional protection from water.

GUARDING

After motor installation is complete, a guard of suitable dimensions must be constructed and installed around the motor/gearmotor. This guard must prevent personnel from coming in contact with any moving parts of the motor or drive assembly but must allow sufficient cooling air to pass over the motor. If a motor mounted brake is installed, provide proper safeguards for personnel in case of brake failure. Brush inspection plates and electrical connection cover plates or lids, must be installed before operating the motor.

STARTING

Before starting motor remove all unused shaft keys and loose rotating parts to prevent them from flying off. Check direction of rotation before coupling motor to load. The motor should start quickly and run smoothly and with little noise. If the motor should fail to start the load may be too great for the motor, the voltage is low or the motor has been miswired. In any case immediately shut motor off and investigate the cause.

ROTATION

To reverse the direction of rotation, disconnect and lockout power and interchange any two of the three AC power leads for three phase motors. For two-phase four wire, disconnect and lockout power and interchange the AC line leads on any one phase. For two phase three wire, disconnect and lockout power and interchange phase one and phase two AC line leads.

Maintenance Procedures

WARNING: Do not touch electrical connections before you first ensure that power has been disconnected. Electrical shock can cause serious or fatal injury.

WARNING: Surface temperatures of motor enclosures may reach temperatures which can cause discomfort or injury to personnel accidentally coming into contact with hot surfaces. Protection should be provided by the user to protect against accidental contact with hot surfaces. Failure to observe this precaution could result in bodily injury.

Lubrication Information

Refer to motor nameplate for recommended lubricant. If none is shown, the recommended lubricant for anti-friction bearings (-15°F to 120°) is POLYREX EM. For Min Start Temp -100°F use AEROSHELL #7. For roller bearings is ExxonMobil SHC-220.

Relubrication Intervals
(For motors with regrease capability)

New motors that have been stored for a year or more should be relubricated. Lubrication is also recommended at Table 1 intervals.

LUBRICATION INSTRUCTIONS

Cleanliness is important in lubrication. Any grease used to lubricate anti friction bearings should be fresh and free from contamination. Properly clean the grease inlet area of the motor to prevent grease contamination.

1. Select service conditions from Table 2.
2. Select lubrication interval (Table 1).
3. Adjust lubrication interval with multiplier from Table 3.
4. Select volume of grease from Table 4.

LUBRICATION PROCEDURE

Bearings should be lubricated while stationary and the motor is warm.

1. Locate the grease inlet, clean the area, and replace the pipe plug with a grease fitting.
2. Locate and remove the grease drain plug, if provided.
3. Add the recommended volume of the recommended grease.
4. Replace the grease inlet plug and run the motor for 15 minutes.
5. Replace the grease drain plug.

SPECIAL APPLICATIONS

For special temperature applications, consult your Baldor District Office.

Relubrication Intervals

Recommended relubrication intervals are shown in Table 1. It is important to realize that the recommended intervals of Table 2 are based on average use. Refer to additional information contained in Tables 2, 3 and 4.

Table1 Relubrication Interval

NEMA (IEC) Frame Size	Rated Speed (RPM)			
	3600	1800	1200	900
Up to 210 incl. (132)	5500Hrs.	12000Hrs.	18000Hrs.	22000Hrs.
Over 210 to 280 incl. (180)	3600Hrs.	9500Hrs.	15000Hrs.	18000Hrs.
Over 280 to 360 incl. (225)	2200Hrs.	7400Hrs.	12000Hrs.	15000Hrs.
Over 360 to 5800 incl. (400)	2200Hrs.	3500Hrs.	7400Hrs.	10500Hrs.

* Relubrication intervals are for ball bearings.
For vertically mounted motors and roller bearings, divide the relubrication interval by 2.

** For motors operating at speeds greater than 3600 RPM, contact Baldor for relubrication recommendations.

Table2 Service Conditions

Severity of Service	Hours per day of Operation	Ambient Temperature Maximum	Atmospheric Contamination
Standard	8	40° C	Clean, Little Corrosion
Severe	16 Plus	50° C	Moderate dirt, Corrosion
Extreme	16 Plus	>50° C* or Class H Insulation	Severe dirt, Abrasive dust, Corrosion, Heavy Shock or Vibration
Low Temperature		<-29 ° C **	

* Special high temperature grease is recommended (Dow Corning DC44).

** Special low temperature grease is recommended (Aeroshell 7).

Note: Different grease types are generally incompatible and should not be mixed. Mixing different types can cause lubricant and bearing failure. Thoroughly clean bearing and cavity before changing grease type.

Table3 Lubrication Interval Multiplier

Severity of Service	Multiplier
Standard	1.0
Severe	0.5
Extreme	0.1
Low Temperature	1.0

Some motor designs use different bearings on each motor end. This is normally indicated on the motor nameplate. In this case, the larger bearing is installed on the motor Drive endplate. For best relubrication results, only use the appropriate amount of grease for each bearing size (not the same for both).

Table4 Amount of Grease to Add

Frame Size NEMA (IEC)	Bearing Description (These are the "Large" bearings (Shaft End) in each frame size)			
	Bearing	Weight of Grease to add * oz (Grams)	Volume of grease to be added	
			in^3	teaspoon
56 to 140 (90)	6203	0.08 (2.4)	0.15	0.5
140 (90)	6205	0.15 (3.9)	0.2	0.8
180 (100–112)	6206	0.19 (5.0)	0.3	1.0
210 (132)	6307	0.30 (8.4)	0.6	2.0
250 (160)	6309	0.47 (12.5)	0.7	2.5
280 (180)	6311	0.61 (17)	1.2	3.9
320 (200)	6312	0.76 (20.1)	1.2	4.0
360 (225)	6313	0.81 (23)	1.5	5.2
400 (250)	6316	1.25 (33)	2.0	6.6
440 (280)	6318	1.52(40)	2.5	8.2
440 (280)	6319	2.12 (60)	4.1	13.4
5000 to 5800 (315–400)	6328	4.70 (130)	9.2	30.0
5000 to 5800 (315–400)	NU328	4.70 (130)	9.2	30.0
360 to 449 (225–280)	NU319	2.12 (60)	4.1	13.4
AC Induction Servo				
76 Frame 180 (112)	6207	0.22 (6.1)	0.44	1.4
77 Frame 210 (132)	6210	0.32 (9.0)	0.64	2.1
80 Frame 250(160)	6213	0.49 (14.0)	0.99	3.3

Typical IEC vs NEMA Lead Marking

Single Phase Non-Reversible
Refer to the connection diagram provided on the Baldor motor.

Single Phase Reversible

Dual Voltage Reversible

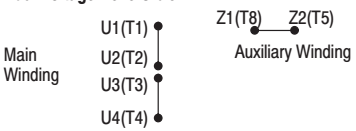

DC Motors
Lead markings can be translated between IEC and NEMA designations as follows:

	NEMA	IEC
Armature	A1, A2	A1, A2
Series Field	S1, S2	D1, D2
Shunt Field	F1, F2	E1, E2

Refer to the connection diagram provided on the Baldor motor.

Three Phase
For single winding 3 phase motors, lead markings can be directly translated between IEC and NEMA designations. For these motors, the lead markings are:

U1=T1	U2=T4	U3=T7	U4=T10
V1=T2	V2=T5	V3=T8	V4=T11
W1=T3	W2=T6	W3=T9	W4=T12

Refer to the connection diagram provided on the Baldor motor. Some examples are as follows:

Three Leads

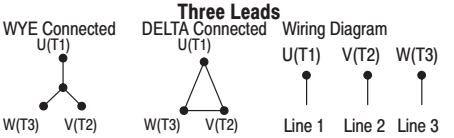

Six Leads

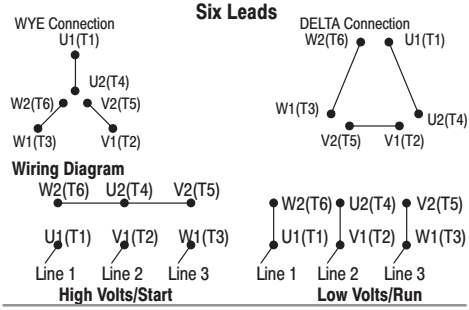

MN416A01-1114

BALDOR®
A MEMBER OF THE ABB GROUP
P.O. Box 2400 Fort Smith, AR 72902-2400 USA Ph: (1) 479.646.4711, Fax: (1) 479.648.5792
www.baldor.com

© Baldor Electric Company
All rights reserved. Printed in USA
MN416A01
11/14

User Manual

Allen-Bradley

PowerFlex 520-Series Adjustable Frequency AC Drive

PowerFlex 523 Catalog Number 25A, Series B
PowerFlex 525 Catalog Number 25B

Original Instructions

Allen-Bradley • Rockwell Software

Rockwell Automation

Important User Information

Solid-state equipment has operational characteristics differing from those of electromechanical equipment. Safety Guidelines for the Application, Installation and Maintenance of Solid State Controls (publication SGI-1.1 available from your local Rockwell Automation® sales office or online at http://www.rockwellautomation.com/literature/) describes some important differences between solid-state equipment and hard-wired electromechanical devices. Because of this difference, and also because of the wide variety of uses for solid-state equipment, all persons responsible for applying this equipment must satisfy themselves that each intended application of this equipment is acceptable.

In no event will Rockwell Automation, Inc. be responsible or liable for indirect or consequential damages resulting from the use or application of this equipment.

The examples and diagrams in this manual are included solely for illustrative purposes. Because of the many variables and requirements associated with any particular installation, Rockwell Automation, Inc. cannot assume responsibility or liability for actual use based on the examples and diagrams.

No patent liability is assumed by Rockwell Automation, Inc. with respect to use of information, circuits, equipment, or software described in this manual.

Reproduction of the contents of this manual, in whole or in part, without written permission of Rockwell Automation, Inc., is prohibited.

Throughout this manual, when necessary, we use notes to make you aware of safety considerations.

	WARNING: Identifies information about practices or circumstances that can cause an explosion in a hazardous environment, which may lead to personal injury or death, property damage, or economic loss.
	ATTENTION: Identifies information about practices or circumstances that can lead to personal injury or death, property damage, or economic loss. Attentions help you identify a hazard, avoid a hazard, and recognize the consequence.
	SHOCK HAZARD: Labels may be on or inside the equipment, for example, a drive or motor, to alert people that dangerous voltage may be present.
	BURN HAZARD: Labels may be on or inside the equipment, for example, a drive or motor, to alert people that surfaces may reach dangerous temperatures.
	ARC FLASH HAZARD: Labels may be on or inside the equipment, for example, a motor control center, to alert people to potential Arc Flash. Arc Flash will cause severe injury or death. Wear proper Personal Protective Equipment (PPE). Follow ALL Regulatory requirements for safe work practices and for Personal Protective Equipment (PPE).
IMPORTANT	Identifies information that is critical for successful application and understanding of the product.

Allen-Bradley, Rockwell Automation, Rockwell Software, PowerFlex, Connected Components Workbench, Studio 5000, Studio 5000 Logix Designer, DriveTools SP, AppView, CustomView, QuickView, MainsFree Programming, PointStop, and TechConnect are trademarks of Rockwell Automation, Inc.

Trademarks not belonging to Rockwell Automation are property of their respective companies.

Important User Information 2

Summary of Changes

New and Updated Information. 7

Preface

Overview

Who Should Use this Manual 9
Recommended Documentation 9
Manual Conventions 10
Drive Frame Sizes 11
General Precautions 12
Catalog Number Explanation 13

Chapter 1

Installation/Wiring

Mounting Considerations. 15
AC Supply Source Considerations 19
General Grounding Requirements 20
Fuses and Circuit Breakers 23
Power and Control Module 28
Control Module Cover 31
Power Module Terminal Guard 31
Power Wiring. 32
Power Terminal Block 35
Common Bus/Precharge Notes 36
I/O Wiring 36
Control I/O Terminal Block 37
Start and Speed Reference Control 49
CE Conformity 52

Chapter 2

Start Up

Prepare for Drive Start-Up 59
Display and Control Keys 62
Viewing and Editing Parameters 63
Drive Programming Tools 64
Language Support 64
Smart Start-Up with Basic Program Group Parameters 65
LCD Display with QuickView Technology. 67
Using the USB Port 67

Chapter 3

Programming and Parameters

About Parameters ... 71
Parameter Groups ... 73
Basic Display Group ... 78
Basic Program Group ... 83
Terminal Block Group ... 89
Communications Group ... 101
Logic Group ... 107
Advanced Display Group ... 110
Advanced Program Group ... 115
Network Parameter Group ... 141
Modified Parameter Group ... 142
Fault and Diagnostic Group ... 142
AppView Parameter Groups ... 150
CustomView Parameter Group ... 151
Parameter Cross Reference by Name ... 152

Chapter 4

Troubleshooting

Drive Status ... 157
Faults ... 157
Fault Descriptions ... 159
Common Symptoms and Corrective Actions ... 162

Appendix A

Supplemental Drive Information

Certifications ... 167
Environmental Specifications ... 168
Technical Specifications ... 169
Power Specifications ... 172

Appendix B

Accessories and Dimensions

Product Selection ... 175
Product Dimensions ... 185
Optional Accessories and Kits ... 198

Appendix C

RS485 (DSI) Protocol

Network Wiring ... 201
Parameter Configuration ... 202
Supported Modbus Function Codes ... 203
Writing (06) Logic Command Data ... 203
Writing (06) Comm Frequency Command ... 205
Reading (03) Logic Status Data ... 205
Reading (03) Drive Error Codes ... 207
Reading (03) Drive Operational Values ... 208
Reading (03) and Writing (06) Drive Parameters ... 208
Additional Information ... 208

Appendix D

Velocity StepLogic, Basic Logic and Timer/Counter Functions

Velocity StepLogic Using Timed Steps 210
Velocity StepLogic Using Basic Logic Functions 210
Timer Function 211
Counter Function 212
Velocity StepLogic Parameters 213

Appendix E

Encoder/Pulse Train Usage and Position StepLogic Application

Encoder and Pulse Train Usage 215
Wiring Notes 216
Determine Encoder Pulse Per Revolution (PPR) Specification Based on Speed Resolution 217
Positioning Overview 218
Common Guidelines for All Applications 218
Positioning Operation 220
Homing Routine 223
Encoder and Position Feedback 224
Use Over Communications 225
Setup Notes 226

Appendix F

PID Set Up

PID Loop 227
PID Reference and Feedback 229
Analog PID Reference Signals 230

Appendix G

Safe-Torque-Off Function

PowerFlex 525 Safe-Torque-Off Overview 235
EC Type Examination Certification 236
EMC Instructions 236
Using PowerFlex 525 Safe-Torque-Off 236
Safety Concept 237
Enabling PowerFlex 525 Safe-Torque-Off 239
Wiring 239
PowerFlex 525 Safe-Torque-Off Operation 239
Verify Operation 240
Connection Examples 241
PowerFlex 525 Certification for Safe-Torque-Off 245

Appendix H

EtherNet/IP

Establishing A Connection With EtherNet/IP 247
Ground Connections for EtherNet/IP Networks 248

Appendix I

Control Diagrams

Induction Motor Tuning Diagrams 249
Adjusting Speed Control Parameters 250

Appendix J

PowerFlex 525 PM Motor Configuration

Download Files 252
Automatic Configuration Using Drive Startup Wizard 254
Manual Configuration Using Drive Keypad 261
Additional PM Motor Configuration 262
Optional Parameter Adjustments for Optimum Performance 266

Index

This manual contains new and updated information.

New and Updated Information

This table contains the changes made to this revision.

Topic	Page
Added footnote to indicate that circuit breaker selection is not available for certain drive ratings.	24...27
Added PowerFlex 523 series B to Control I/O Wiring Block Diagram.	38
Added PowerFlex 523 series B to Control I/O Terminal Designations.	40
Added PowerFlex 523 series B I/O wiring examples for analog input and analog output.	45
Added note to PowerFlex 525 I/O wiring example for pulse train input.	46
Added footnote to enum "4" for P053 [Reset to Defalts] under Smart Start-Up with Basic Program Group Parameters.	67
Added new sub topic for 32-bit parameters.	72
Added footnotes to parameters that are available in PowerFlex 523 FRN 3.xxx and later.	Chapter 3
Updated descriptions for parameters that are available in PowerFlex 523 FRN 3.xxx and later.	
Added formula for calculating scaled process value to parameter b010 [Process Display].	79
Added recommendation to perform rotate tune when using VVC mode to parameter P040 [Autotune].	85
Added footnote to indicate which settings are PowerFlex 525 only for parameter d394 [Dig Out Status].	114
Updated descriptions for parameters A465 [PID 1 Deadband] and A477 [PID 2 Deadband].	123
Added corrective action to fault F114 (uC Failure).	162
Added analog output to PowerFlex 523 drives.	171
Added new topic "Determine Encoder Pulse Per Revolution (PPR) Specification Based on Speed Resolution" to Appendix E.	217
Updated information to verify operation of the safety inputs in Appendix G.	240
General maintenance updates.	Throughout manual

Notes:

Overview

The purpose of this manual is to provide you with the basic information needed to install, start-up and troubleshoot the PowerFlex® 520-Series Adjustable Frequency AC Drive.

For information on…	See page…
Who Should Use this Manual	9
Recommended Documentation	9
Manual Conventions	10
Drive Frame Sizes	11
General Precautions	12
Catalog Number Explanation	13

Who Should Use this Manual

This manual is intended for qualified personnel. You must be able to program and operate Adjustable Frequency AC Drive devices. In addition, you must have an understanding of the parameter settings and functions.

Recommended Documentation

All the recommended documentation listed in this section is available online at http://www.rockwellautomation.com/literature/.

The following publications provide general drive information:

Title	Publication
Wiring and Grounding Guidelines for Pulse Width Modulated (PWM) AC Drives	DRIVES-IN001
Preventive Maintenance of Industrial Control and Drive System Equipment	DRIVES-TD001
Safety Guidelines for the Application, Installation and Maintenance of Solid State Control	SGI-1.1
A Global Reference Guide for Reading Schematic Diagrams	100-2.10
Guarding Against Electrostatic Damage	8000-4.5.2

The following publications provide specific PowerFlex 520-Series information on drive installation, features, specifications, and service:

Title	Publication
PowerFlex 520-Series AC Drive Specifications	520-TD001
PowerFlex Dynamic Braking Resistor Calculator	PFLEX-AT001
PowerFlex AC Drives in Common Bus Configurations	DRIVES-AT002

The following publications provide specific Network Communications information:

Title	Publication
PowerFlex 525 Embedded EtherNet/IP Adapter	520COM-UM001
PowerFlex 25-COMM-D DeviceNet Adapter	520COM-UM002
PowerFlex 25-COMM-E2P Dual-Port EtherNet/IP Adapter	520COM-UM003
PowerFlex 25-COMM-P PROFIBUS DPV1 Adapter	520COM-UM004

Manual Conventions

- In this manual we refer to PowerFlex 520-Series Adjustable Frequency AC Drive as; drive, PowerFlex 520-series, PowerFlex 520-series drive or PowerFlex 520-series AC drive.
- Specific drives within the PowerFlex 520-series may be referred to as:
  – PowerFlex 523, PowerFlex 523 drive or PowerFlex 523 AC drive.
  – PowerFlex 525, PowerFlex 525 drive or PowerFlex 525 AC drive.
- Parameter numbers and names are shown in this format:

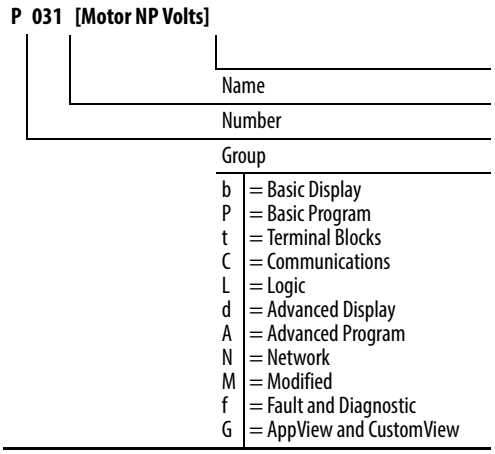

- The following words are used throughout the manual to describe an action:

Words	Meaning
Can	Possible, able to do something
Cannot	Not possible, not able to do something
May	Permitted, allowed
Must	Unavoidable, you must do this
Shall	Required and necessary
Should	Recommended
Should Not	Not Recommended

- The Studio 5000® Engineering and Design Environment combines engineering and design elements into a common environment. The first element in the Studio 5000 environment is the Logix Designer application. The Studio 5000 Logix Designer™ application is the rebranding of RSLogix™ 5000 software and will continue to be the product to program Logix 5000 controllers for discrete, process, batch, motion, safety, and drive-based solutions. The Studio 5000 environment is the foundation for the future of Rockwell Automation engineering design tools and capabilities. It is the one place for design engineers to develop all the elements of their control system.

Drive Frame Sizes

Similar PowerFlex 520-series drive sizes are grouped into frame sizes to simplify spare parts ordering, dimensioning, etc. A cross reference of drive catalog numbers and their respective frame sizes is provided in Appendix B.

General Precautions

ATTENTION: The drive contains high voltage capacitors which take time to discharge after removal of mains supply. After power has been removed from the drive, wait three minutes to make sure DC bus capacitors are discharged. After three minutes, verify AC voltage L1, L2, L3 (Line to Line and Line to Ground) to ensure mains power has been disconnected. Measure DC voltage across DC- and DC+ bus terminals to verify DC Bus has discharged to zero volts. Measure DC voltage from L1, L2, L3, T1, T2, T3 DC – and DC+ terminals to ground and keep the meter on the terminals until the voltage discharges to zero volts. The discharge process may take several minutes to reach zero volts. Darkened display LEDs is not an indication that capacitors have discharged to safe voltage levels.

ATTENTION: Only qualified personnel familiar with adjustable frequency AC drives and associated machinery should plan or implement the installation, start-up and subsequent maintenance of the system. Failure to comply may result in personal injury and/or equipment damage.

ATTENTION: This drive contains ESD (Electrostatic Discharge) sensitive parts and assemblies. Static control precautions are required when installing, testing, servicing or repairing this assembly. Component damage may result if ESD control procedures are not followed. If you are not familiar with static control procedures, reference A-B publication 8000-4.5.2, "Guarding Against Electrostatic Damage" or any other applicable ESD protection handbook.

ATTENTION: An incorrectly applied or installed drive can result in component damage or a reduction in product life. Wiring or application errors, such as undersizing the motor, incorrect or inadequate AC supply, or excessive ambient temperatures may result in malfunction of the system.

ATTENTION: The bus regulator function is extremely useful for preventing nuisance overvoltage faults resulting from aggressive decelerations, overhauling loads, and eccentric loads. However, it can also cause either of the following two conditions to occur.
1. Fast positive changes in input voltage or imbalanced input voltages can cause uncommanded positive speed changes;
2. Actual deceleration times can be longer than commanded deceleration times However, a "Stall Fault" is generated if the drive remains in this state for 1 minute. If this condition is unacceptable, the bus regulator must be disabled (see parameter A550 [Bus Reg Enable]). In addition, installing a properly sized dynamic brake resistor will provide proper stopping requirements based on braking resistor sizing.

ATTENTION: Risk of injury or equipment damage exists. Drive does not contain user-serviceable components. Do not disassemble drive chassis.

Catalog Number Explanation

1-3	4	5	6-8	9	10	11	12	13	14
25B	**–**	**B**	**2P3**	**N**	**1**	**1**	**4**	**–**	**–**
Drive	Dash	Voltage Rating	Rating	Enclosure	Reserved	Emission Class	Reserved	Dash	Dash

Code	Type
25A	PowerFlex 523
25B	PowerFlex 525

Code	Voltage	Phase
V	120V AC	1
A	240V AC	1
B	240V AC	3
D	480V AC	3
E	600V AC	3

Code	Enclosure
N	IP20 NEMA / Open

Code	Interface Module
1	Standard

Code	EMC Filter
0	No Filter
1	Filter

Code	Braking
4	Standard

Output Current @ 1 Phase, 100...120V Input						
Code	Amps	Frame	ND		HD	
			HP	kW	HP	kW
1P6[1]	1.6	A	0.25	0.2	0.25	0.2
2P5	2.5	A	0.5	0.4	0.5	0.4
4P8	4.8	B	1.0	0.75	1.0	0.75
6P0	6.0	B	1.5	1.1	1.5	1.1

Output Current @ 1 Phase, 200...240V Input						
Code	Amps	Frame	ND		HD	
			HP	kW	HP	kW
1P6[1]	1.6	A	0.25	0.2	0.25	0.2
2P5	2.5	A	0.5	0.4	0.5	0.4
4P8	4.8	A	1.0	0.75	1.0	0.75
8P0	8.0	B	2.0	1.5	2.0	1.5
011	11.0	B	3.0	2.2	3.0	2.2

Output Current @ 3Phase, 200...240V Input						
Code	Amps	Frame	ND		HD	
			HP	kW	HP	kW
1P6[1]	1.6	A	0.25	0.2	0.25	0.2
2P5	2.5	A	0.5	0.4	0.5	0.4
5P0	5.0	A	1.0	0.75	1.0	0.75
8P0	8.0	A	2.0	1.5	2.0	1.5
011	11.0	A	3.0	2.2	3.0	2.2
017	17.5	B	5.0	4.0	5.0	4.0
024	24.0	C	7.5	5.5	7.5	5.5
032	32.2	D	10.0	7.5	10.0	7.5
048[2]	48.3	E	15.0	11.0	10.0	7.5
062[2]	62.1	E	20.0	15.0	15.0	11.0

Output Current @ 3 Phase, 380...480V Input						
Code	Amps	Frame	ND		HD	
			HP	kW	HP	kW
1P4	1.4	A	0.5	0.4	0.5	0.4
2P3	2.3	A	1.0	0.75	1.0	0.75
4P0	4.0	A	2.0	1.5	2.0	1.5
6P0	6.0	A	3.0	2.2	3.0	2.2
010	10.5	B	5.0	4.0	5.0	4.0
013	13.0	C	7.5	5.5	7.5	5.5
017	17.0	C	10.0	7.5	10.0	7.5
024	24.0	D	15.0	11.0	15.0	11.0
030[2]	30.0	D	20.0	15.0	15.0	11.0
037[2]	37.0	E	25.0	18.5	20.0	15.0
043[2]	43.0	E	30.0	22.0	25.0	18.5

Output Current @ 3 Phase, 525...600V Input						
Code	Amps	Frame	ND		HD	
			HP	kW	HP	kW
0P9	0.9	A	0.5	0.4	0.5	0.4
1P7	1.7	A	1.0	0.75	1.0	0.75
3P0	3.0	A	2.0	1.5	2.0	1.5
4P2	4.2	A	3.0	2.2	3.0	2.2
6P6	6.6	B	5.0	4.0	5.0	4.0
9P9	9.9	C	7.5	5.5	7.5	5.5
012	12.0	C	10.0	7.5	10.0	7.5
019	19.0	D	15.0	11.0	15.0	11.0
022[2]	22.0	D	20.0	15.0	15.0	11.0
027[2]	27.0	E	25.0	18.5	20.0	15.0
032[2]	32.0	E	30.0	22.0	25.0	18.5

(1) This rating is only available for PowerFlex 523 drives.

(2) Normal and Heavy Duty ratings are available for this drive.

Notes:

Installation/Wiring

This chapter provides information on mounting and wiring the PowerFlex 520-series drives.

For information on...	See page...
Mounting Considerations	15
AC Supply Source Considerations	19
General Grounding Requirements	20
Fuses and Circuit Breakers	23
Power and Control Module	28
Control Module Cover	31
Power Module Terminal Guard	31
Power Wiring	32
Power Terminal Block	35
Common Bus/Precharge Notes	36
I/O Wiring	36
Control I/O Terminal Block	37
Start and Speed Reference Control	49
CE Conformity	52

Most start-up difficulties are the result of incorrect wiring. Every precaution must be taken to assure that the wiring is done as instructed. All items must be read and understood before the actual installation begins.

ATTENTION: The following information is merely a guide for proper installation. Rockwell Automation cannot assume responsibility for the compliance or the noncompliance to any code, national, local or otherwise for the proper installation of this drive or associated equipment. A hazard of personal injury and/or equipment damage exists if codes are ignored during installation.

Mounting Considerations

- Mount the drive upright on a flat, vertical and level surface.

Frame	Screw Size	Screw Torque
A	M5 (#10...24)	1.56...1.96 Nm (14...17 lb-in.)
B	M5 (#10...24)	1.56...1.96 Nm (14...17 lb-in.)
C	M5 (#10...24)	1.56...1.96 Nm (14...17 lb-in.)
D	M5 (#10...24)	2.45...2.94 Nm (22...26 lb-in.)
E	M8 (5/16 in.)	6.0...7.4 Nm (53...65 lb-in.)

- Protect the cooling fan by avoiding dust or metallic particles.

- Do not expose to a corrosive atmosphere.
- Protect from moisture and direct sunlight.

Minimum Mounting Clearances

See Appendix B for mounting dimensions.

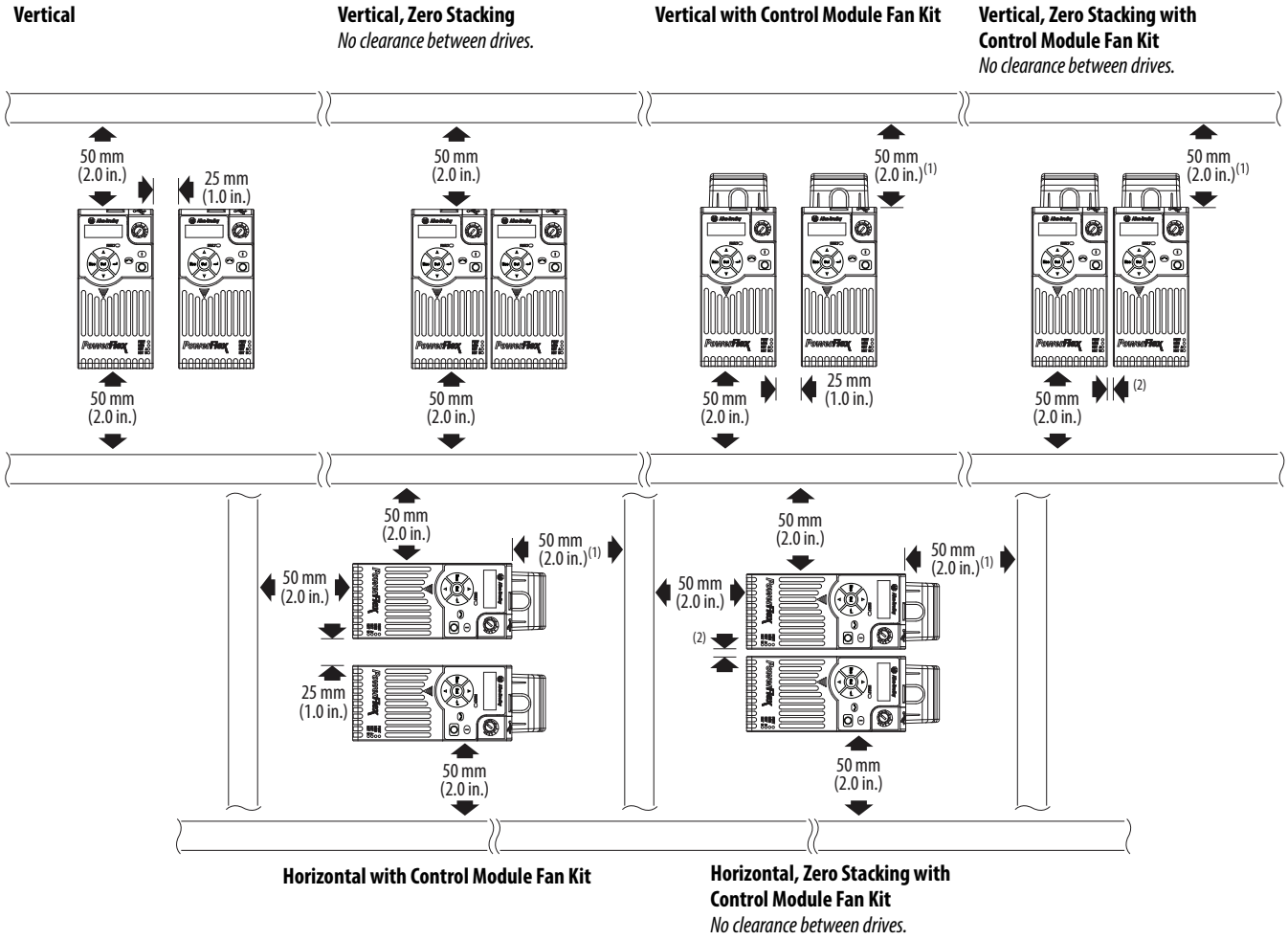

(1) For Frame E with Control Module Fan Kit only, clearance of 95 mm (3.7 in.) is required.
(2) For Frame E with Control Module Fan Kit only, clearance of 12 mm (0.5 in.) is required.

Ambient Operating Temperatures

See Appendix B for option kits.

Mounting	Enclosure Rating[1]	Ambient Temperature			
		Minimum	Maximum (No Derate)	Maximum (Derate)[2]	Maximum with Control Module Fan Kit (Derate)[3][5]
Vertical	IP 20/Open Type	-20 °C (-4 °F)	50 °C (122 °F)	60 °C (140 °F)	70 °C (158 °F)
	IP 30/NEMA 1/UL Type 1		45 °C (113 °F)	55 °C (131 °F)	–
Vertical, Zero Stacking	IP 20/Open Type		45 °C (113 °F)	55 °C (131 °F)	65 °C (149 °F)
	IP 30/NEMA 1/UL Type 1		40 °C (104 °F)	50 °C (122 °F)	–
Horizontal with Control Module Fan Kit[4][5]	IP 20/Open Type		50 °C (122 °F)	–	70 °C (158 °F)
Horizontal, Zero Stacking with Control Module Fan Kit[4][5]	IP 20/Open Type		45 °C (113 °F)	–	65 °C (149 °F)

(1) IP 30/NEMA 1/UL Type 1 rating requires installation of the PowerFlex 520-Series IP 30/NEMA 1/UL Type 1 option kit, catalog number 25-JBAx.
(2) For catalogs 25x-D1P4N104 and 25x-E0P9N104, the temperature listed under the Maximum (Derate) column is reduced by 5 °C (9 °F) for all mounting methods.
(3) For catalogs 25x-D1P4N104 and 25x-E0P9N104, the temperature listed under the Maximum with Control Module Fan Kit (Derate) column is reduced by 10 °C (18 °F) for vertical and vertical with zero stacking mounting methods only.
(4) Catalogs 25x-D1P4N104 and 25x-E0P9N104 cannot be mounted using either of the horizontal mounting methods.
(5) Requires installation of the PowerFlex 520-Series Control Module Fan Kit, catalog number 25-FANx-70C.

Current Derating Curves

Vertical Mounting

Single Drive

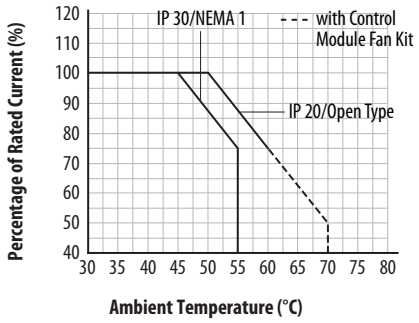

Zero Stacking

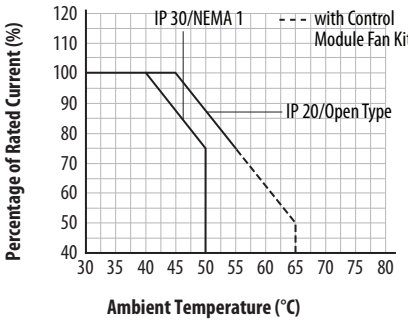

Horizontal/Floor Mounting

Single Drive

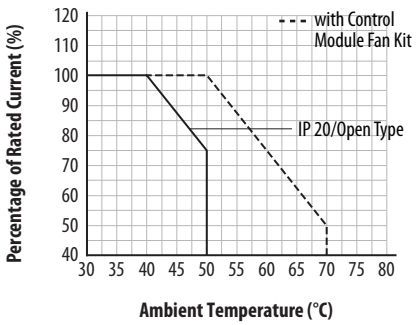

Zero Stacking

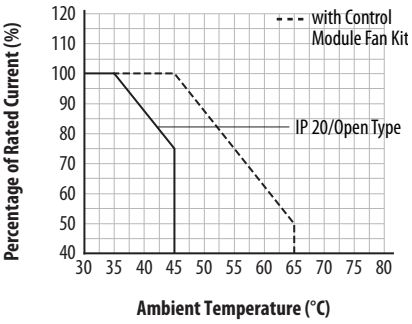

Derating Guidelines for High Altitude

The drive can be used without derating at a maximum altitude of 1000 m (3300 ft). If the drive is used above 1000 m (3300 ft):

- Derate the maximum ambient temperature by 5 °C (9 °F) for every additional 1000 m (3300 ft), subject to limits listed in the Altitude Limit (Based on Voltage) table below.
  Or
- Derate the output current by 10% for every additional 1000 m (3300 ft), up to 3000 m (9900 ft), subject to limits listed in the Altitude Limit (Based on Voltage) table below.

Altitude Limit (Based on Voltage)

Drive Rating	Center Ground (Wye Neutral)	Corner Ground, Impedance Ground, or Ungrounded
100...120V 1-Phase	6000 m	6000 m
200...240V 1-Phase	2000 m	2000 m
200...240V 3-Phase	6000 m	2000 m
380...480V 3-Phase	4000 m	2000 m
525...600V 3-Phase	2000 m	2000 m

High Altitude

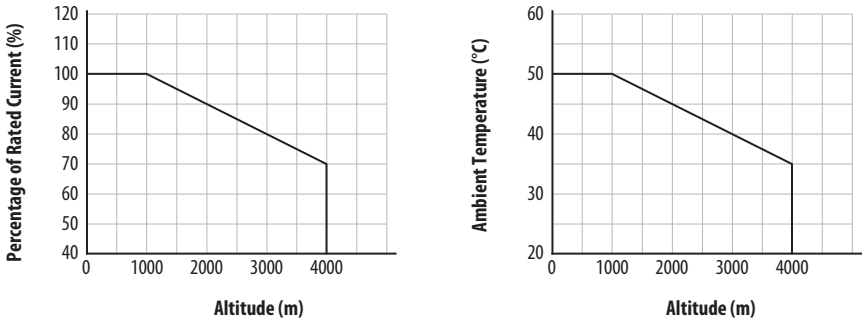

Debris Protection

Take precautions to prevent debris from falling through the vents of the drive housing during installation.

Storage

- Store within an ambient temperature range of -40...85°C(1).
- Store within a relative humidity range of 0...95%, noncondensing.
- Do not expose to a corrosive atmosphere.

(1) The maximum ambient temperature for storing a Frame E drive is 70 °C.

AC Supply Source Considerations

Ungrounded Distribution Systems

ATTENTION: PowerFlex 520-series drives contain protective MOVs that are referenced to ground. These devices must be disconnected if the drive is installed on an ungrounded or resistive grounded distribution system.

ATTENTION: Removing MOVs in drives with an embedded filter will also disconnect the filter capacitor from earth ground.

Disconnecting MOVs

To prevent drive damage, the MOVs connected to ground shall be disconnected if the drive is installed on an ungrounded distribution system (IT mains) where the line-to-ground voltages on any phase could exceed 125% of the nominal line-to-line voltage. To disconnect these devices, remove the jumper shown in the diagrams below.

1. Turn the screw counterclockwise to loosen.
2. Pull the jumper completely out of the drive chassis.
3. Tighten the screw to keep it in place.

Jumper Location (Typical)

Power Module

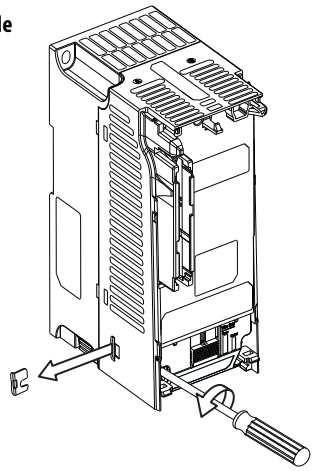

IMPORTANT Tighten screw after jumper removal.

Phase to Ground MOV Removal

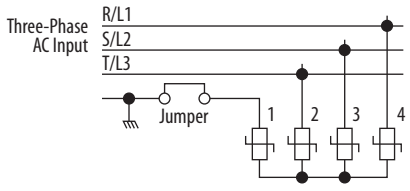

Input Power Conditioning

The drive is suitable for direct connection to input power within the rated voltage of the drive (see page 169). Listed in the Input Power Conditions table below are certain input power conditions which may cause component damage or reduction in product life. If any of these conditions exist, install one of the devices listed under the heading Corrective Action on the line side of the drive.

IMPORTANT Only one device per branch circuit is required. It should be mounted closest to the branch and sized to handle the total current of the branch circuit.

Input Power Conditions

Input Power Condition	Corrective Action
Low Line Impedance (less than 1% line reactance)	• Install Line Reactor(2) • or Isolation Transformer
Greater than 120 kVA supply transformer	
Line has power factor correction capacitors	• Install Line Reactor(2) • or Isolation Transformer
Line has frequent power interruptions	
Line has intermittent noise spikes in excess of 6000V (lightning)	
Phase to ground voltage exceeds 125% of normal line to line voltage	• Remove MOV jumper to ground. • or Install Isolation Transformer with grounded secondary if necessary.
Ungrounded distribution system	
B-phase grounded distribution system	
240V open delta configuration (stinger leg)(1)	• Install Line Reactor(2)

(1) For drives applied on an open delta with a middle phase grounded neutral system, the phase opposite the phase that is tapped in the middle to the neutral or earth is referred to as the "stinger leg," "high leg," "red leg," etc. This leg should be identified throughout the system with red or orange tape on the wire at each connection point. The stinger leg should be connected to the center Phase B on the reactor. See Bulletin 1321-3R Series Line Reactors on page 183 for specific line reactor part numbers.

(2) See Appendix B for accessory ordering information.

General Grounding Requirements

The drive Safety Ground - ⏚ (PE) must be connected to system ground. Ground impedance must conform to the requirements of national and local industrial safety regulations and/or electrical codes. The integrity of all ground connections should be periodically checked.

Typical Grounding

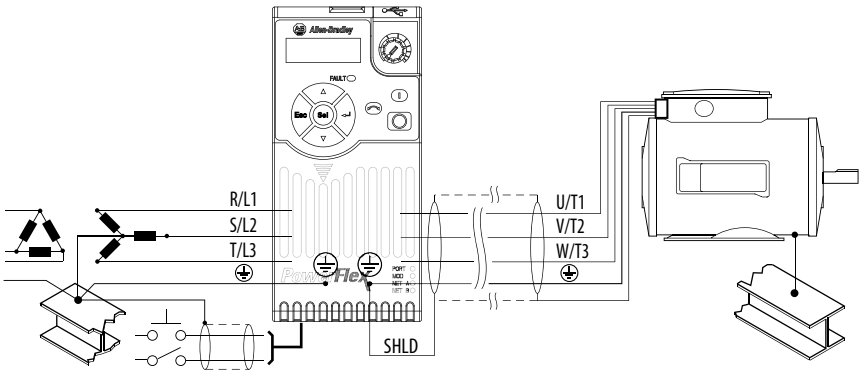

Ground Fault Monitoring

If a system ground fault monitor (RCD) is to be used, only Type B (adjustable) devices should be used to avoid nuisance tripping.

Safety Ground - ⏚ (PE)

This is the safety ground for the drive that is required by code. One of these points must be connected to adjacent building steel (girder, joist), a floor ground rod or bus bar. Grounding points must comply with national and local industrial safety regulations and/or electrical codes.

Network Ground

Connect terminal C1 to a clean earth ground when using a network with a star topology (EtherNet/IP) or daisy-chain (RS485). It is acceptable to ground both C1 and C2 terminals.

Connect terminal CS1 or CS2 to a clean ground when using a network with a ring topology (EtherNet/IP).

For more information on EtherNet/IP networks, see Ground Connections for EtherNet/IP Networks on page 248.

For more information on RS485 networks, see Network Wiring on page 201.

Motor Ground

The motor ground must be connected to one of the ground terminals on the drive.

Shield Termination - SHLD

Either of the safety ground terminals located on the power terminal block provides a grounding point for the motor cable shield. The **motor cable** shield connected to one of these terminals (drive end) should also be connected to the motor frame (motor end). Use a shield terminating or EMI clamp to connect the shield to the safety ground terminal. The earthing plate or conduit box option may be used with a cable clamp for a grounding point for the cable shield.

When shielded cable is used for **control and signal wiring**, the shield should be grounded at the source end only, not at the drive end.

RFI Filter Grounding

Using a drive with filter may result in relatively high ground leakage currents. Therefore, the **filter must only be used in installations with grounded AC supply systems and be permanently installed and solidly grounded** (bonded) to the building power distribution ground. Ensure that the incoming supply neutral is solidly connected (bonded) to the same building power distribution ground. Grounding must not rely on flexible cables and should not include any form of plug or socket that would permit inadvertent disconnection. Some local codes may require redundant ground connections. The integrity of all connections should be periodically checked.

Fuses and Circuit Breakers

The PowerFlex 520-series drive does not provide branch short circuit protection. This product should be installed with either input fuses or an input circuit breaker. National and local industrial safety regulations and/or electrical codes may determine additional requirements for these installations.

The tables found on pages 24...27 provide recommended AC line input fuse and circuit breaker information. See Fusing and Circuit Breakers below for UL and IEC requirements. Sizes listed are the recommended sizes based on 40 °C (104 °F) and the U.S. N.E.C. Other country, state or local codes may require different ratings.

Fusing

The recommended fuse types are listed in the tables found on pages 24...27. If available current ratings do not match those listed in the tables provided, choose the next higher fuse rating.

- IEC – BS88 (British Standard) Parts 1 & 2(1), EN60269-1, Parts 1 & 2, type GG or equivalent should be used.
- UL – UL Class CC, T, RK1, or J should be used.

Circuit Breakers

The "non-fuse" listings in the tables found on pages 24...27 include inverse time circuit breakers, instantaneous trip circuit breakers (motor circuit protectors) and 140M self-protected combination motor controllers. If one of these is chosen as the desired protection method, the following requirements apply:

- IEC – Both types of circuit breakers and 140M self-protected combination motor controllers are acceptable for IEC installations.
- UL – Only inverse time circuit breakers and the specified 140M self-protected combination motor controllers are acceptable for UL installations.

Bulletin 140M (Self-Protected Combination Controller)/UL489 Circuit Breakers

When using Bulletin 140M or UL489 rated circuit breakers, the guidelines listed below must be followed in order to meet the NEC requirements for branch circuit protection.

- Bulletin 140M can be used in single motor applications.
- Bulletin 140M can be used up stream from the drive **without** the need for fuses.

(1) Typical designations include, but may not be limited to the following; Parts 1 & 2: AC, AD, BC, BD, CD, DD, ED, EFS, EF, FF, FG, GF, GG, GH.

Fuses and Circuit Breakers for PowerFlex 520-Series Drives

100...120V 1-Phase Input Protection Devices – Frames A...B

Catalog No.		Output Ratings					Input Ratings		Frame Size	Contactor Catalog No.	IEC Applications (Non-UL)				UL Applications			
PF 523	PF 525	ND		HD		Amps	kVA	Max Amps[1]			Fuses (Rating)		Circuit Breakers		Fuses (Max. Rating)	Circuit Breakers		Min. Enclosure Vol. (in.^{3})
		HP	kW	HP	kW						Min.	Max.	140U/140G	140M	Class / Catalog No.	140U/140G	140M[2][3][4]	
25A-V1P6N104	–	0.25	0.2	0.25	0.2	1.6	0.8	6.4	A	100-C09	10	16	140U-D6D2-B80	140M-C2E-B63	CLASS RK5, CC, J, or T / DLS-R-15	140U-D6D2-B80	140M-C2E-B63	–
25A-V2P5N104	25B-V2P5N104	0.5	0.4	0.5	0.4	2.5	1.3	9.6	A	100-C12	16	20	140U-D6D2-C12	140M-C2E-C10	CLASS RK5, CC, J, or T / DLS-R-20	140U-D6C2-C12	140M-C2E-C10	–
25A-V4P8N104	25B-V4P8N104	1.0	0.75	1.0	0.75	4.8	2.5	19.2	B	100-C23	25	40	140U-D6D2-C25	140M-D8E-C20	CLASS RK5, CC, J, or T / DLS-R-40	140U-D6D2-C25	140M-D8E-C20	–
25A-V6P0N104	25B-V6P0N104	1.5	1.1	1.5	1.1	6.0	3.2	24.0	B	100-C23	32	50	140U-D6D2-C30	140M-F8E-C25	CLASS RK5, CC, J, or T / DLS-R-50	140U-D6D2-C30	140M-F8E-C25	–

200...240V 1-Phase Input Protection Devices – Frames A...B

Catalog No.		Output Ratings					Input Ratings		Frame Size	Contactor Catalog No.	IEC Applications (Non-UL)				UL Applications			
PF 523	PF 525	ND		HD		Amps	kVA	Max Amps[1]			Fuses (Rating)		Circuit Breakers		Fuses (Max. Rating)	Circuit Breakers		Min. Enclosure Vol. (in.^{3})
		HP	kW	HP	kW						Min.	Max.	140U/140G	140M	Class / Catalog No.	140U/140G	140M[2][3][4]	
25A-A1P6N104	–	0.25	0.2	0.25	0.2	1.6	1.4	5.3	A	100-C09	6	10	140U-D6D2-C10	140M-C2E-B63	CLASS RK5, CC, J, or T / DLS-R-15	140U-D6D2-C10	140M-C2E-B63	–
25A-A1P6N114	–	0.25	0.2	0.25	0.2	1.6	1.4	5.3	A	100-C09	6	10	140U-D6D2-C10	140M-C2E-B63	CLASS RK5, CC, J, or T / DLS-R-15	140U-D6D2-C10	140M-C2E-B63	–
25A-A2P5N104	25B-A2P5N104	0.5	0.4	0.5	0.4	2.5	1.7	6.5	A	100-C09	10	16	140U-D6D2-C10	140M-C2E-C10	CLASS RK5, CC, J, or T / DLS-R-15	140U-D6D2-C10	140M-C2E-C10	–
25A-A2P5N114	25B-A2P5N114	0.5	0.4	0.5	0.4	2.5	1.7	6.5	A	100-C09	10	16	140U-D6D2-C10	140M-C2E-C10	CLASS RK5, CC, J, or T / DLS-R-15	140U-D6D2-C10	140M-C2E-C10	–
25A-A4P8N104	25B-A4P8N104	1.0	0.75	1.0	0.75	4.8	2.8	10.7	A	100-C12	16	25	140U-D6D2-C15	140M-C2E-C16	CLASS RK5, CC, J, or T / DLS-R-25	140U-D6D2-C15	140M-C2E-C16	–
25A-A4P8N114	25B-A4P8N114	1.0	0.75	1.0	0.75	4.8	2.8	10.7	A	100-C12	16	25	140U-D6D2-C15	140M-C2E-C16	CLASS RK5, CC, J, or T / DLS-R-25	140U-D6D2-C15	140M-C2E-C16	–
25A-A8P0N104	25B-A8P0N104	2.0	1.5	2.0	1.5	8.0	4.8	18.0	B	100-C23	25	40	140U-D6D2-C25	140M-F8E-C25	CLASS CC, J, or T / 40	140U-D6D2-C25	140M-F8E-C25	–
25A-A8P0N114	25B-A8P0N114	2.0	1.5	2.0	1.5	8.0	4.8	18.0	B	100-C23	25	40	140U-D6D2-C25	140M-F8E-C25	CLASS CC, J, or T / 40	140U-D6D2-C25	140M-F8E-C25	–
25A-A011N104	25B-A011N104	3.0	2.2	3.0	2.2	11.0	6.0	22.9	B	100-C37	32	50	140G-G6C3-C35	140M-F8E-C25	CLASS CC, J, or T / 50	–[5]	140M-F8E-C25	–
25A-A011N114	25B-A011N114	3.0	2.2	3.0	2.2	11.0	6.0	22.9	B	100-C37	32	50	140G-G6C3-C35	140M-F8E-C25	CLASS CC, J, or T / 50	–[5]	140M-F8E-C25	–

(1) When the drive is controlling motors with lower amp ratings, refer to the drive nameplate for drive input current rating.

(2) The AIC ratings of the Bulletin 140M Motor Protector Circuit Breakers may vary. See Bulletin 140M Motor Protection Circuit Breakers Application Ratings.

(3) Bulletin 140M with adjustable current range should have the current trip set to the minimum range that the device will not trip.

(4) Manual Self-Protected (Type E) Combination Motor Controller, UL listed for 480Y/277 and 600Y/347 AC input. Not UL listed for use on 480V or 600V Delta/Delta, corner ground, or high-resistance ground systems.

(5) Circuit breaker selection is not available for this drive rating.

Fuses and Circuit Breakers for PowerFlex 520-Series Drives *(continued)*

200...240V 3-Phase Input Protection Devices – Frames A...E

Catalog No.[1]		Output Ratings					Input Ratings		Frame Size	Contactor Catalog No.	IEC Applications (Non-UL)				UL Applications			
PF 523	PF 525	ND		HD		Amps	kVA	Max Amps[2]			Fuses (Rating)		Circuit Breakers		Fuses (Max. Rating)	Circuit Breakers		Min. Enclosure Vol. (in.^{3})
		HP	kW	HP	kW						Min.	Max.	140U/140G	140M	Class / Catalog No.	140U/140G	140M[3][4][5]	
25A-B1P6N104	–	0.25	0.2	0.25	0.2	1.6	0.9	1.9	A	100-C09	3	6	140U-D6D3-B30	140M-C2E-B25	CLASS RK5, CC, J, or T / DLS-R-15	140U-D6D3-B30	140M-C2E-B25	–
25A-B2P5N104	25B-B2P5N104	0.5	0.4	0.5	0.4	2.5	1.2	2.7	A	100-C09	6	6	140U-D6D3-B40	140M-C2E-B40	CLASS RK5, CC, J, or T / DLS-R-6	140U-D6D3-B40	140M-C2E-B40	–
25A-B5P0N104	25B-B5P0N104	1.0	0.75	1.0	0.75	5.0	2.7	5.8	A	100-C09	10	16	140U-D6D3-B80	140M-C2E-B63	CLASS RK5, CC, J, or T / DLS-R-15	140U-D6D3-B80	140M-C2E-B63	–
25A-B8P0N104	25B-B8P0N104	2.0	1.5	2.0	1.5	8.0	4.3	9.5	A	100-C12	16	20	140U-D6D3-C10	140M-C2E-C10	CLASS RK5, CC, J, or T / DLS-R-20	140U-D6D3-C10	140M-C2E-C10	–
25A-B011N104	25B-B011N104	3.0	2.2	3.0	2.2	11.0	6.3	13.8	A	100-C23	20	32	140U-D6D3-C15	140M-C2E-C16	CLASS RK5, CC, J, or T / DLS-R-30	140U-D6D3-C15	140M-C2E-C16	–
25A-B017N104	25B-B017N104	5.0	4.0	5.0	4.0	17.5	9.6	21.1	B	100-C23	32	45	140U-D6D3-C25	140M-F8E-C25	CLASS CC, J, or T / 45	140U-D6D3-C25	140M-F8E-C25	–
25A-B024N104	25B-B024N104	7.5	5.5	7.5	5.5	24.0	12.2	26.6	C	100-C37	35	63	140G-G6C3-C35	140M-F8E-C32	CLASS CC, J, or T / 60	–[7]	140M-F8E-C32	–
25A-B032N104	25B-B032N104	10.0	7.5	10.0	7.5	32.2	15.9	34.8	D	100-C43	45	70	140G-G6C3-C60	140M-F8E-C45	CLASS RK5, CC, J, or T / DLS-R-70	–[7]	140M-F8E-C45	–
25A-B048N104	25B-B048N104	15.0	11.0	10.0	7.5	48.3	20.1	44.0	E	100-C60	63	90	140G-G6C3-C70	140M-F8E-C45	CLASS CC, J, or T / 90	–[7]	140M-F8E-C45	1416.0[6]
25A-B062N104	25B-B062N104	20.0	15.0	15.0	11.0	62.1	25.6	56.0	E	100-C72	70	125	140G-G6C3-C90	–[7]	CLASS CC, J, or T / 125	–[7]	–[7]	–

(1) Normal Duty (ND) and Heavy Duty (HD) ratings are available for this drive.

(2) When the drive is controlling motors with lower amp ratings, refer to the drive nameplate for drive input current rating.

(3) The AIC ratings of the Bulletin 140M Motor Protector Circuit Breakers may vary. See Bulletin 140M Motor Protection Circuit Breakers Application Ratings.

(4) Bulletin 140M with adjustable current range should have the current trip set to the minimum range that the device will not trip.

(5) Manual Self-Protected (Type E) Combination Motor Controller, UL listed for 480Y/277 and 600Y/347 AC input. Not UL listed for use on 480V or 600V Delta/Delta, corner ground, or high-resistance ground systems.

(6) When using a Manual Self-Protected (Type E) Combination Motor Controller with this drive power rating, the drive must be installed in a ventilated or non-ventilated enclosure with the minimum volume specified in this column. Application specific thermal considerations may require a larger enclosure.

(7) Circuit breaker selection is not available for this drive rating.

Fuses and Circuit Breakers for PowerFlex 520-Series Drives *(continued)*

380...480V 3-Phase Input Protection Devices – Frames A...E

Catalog No.[1]		Output Ratings					Input Ratings		Frame Size	Contactor Catalog No.	IEC Applications (Non-UL)				UL Applications			
PF 523	PF 525	ND		HD		Amps	kVA	Max Amps[2]			Fuses (Rating)		Circuit Breakers		Fuses (Max. Rating)	Circuit Breakers		Min. Enclosure Vol. (in.^{3})
		HP	kW	HP	kW						Min.	Max.	140U/140G	140M	Class / Catalog No.	140U/140G	140M[3][4][5]	
25A-D1P4N104	25B-D1P4N104	0.5	0.4	0.5	0.4	1.4	1.7	1.9	A	100-C09	3	6	140U-D6D3-B30	140M-C2E-B25	CLASS RK5, CC, J, or T / DLS-R-6	–[7]	140M-C2E-B25	–
25A-D1P4N114	25B-D1P4N114	0.5	0.4	0.5	0.4	1.4	1.7	1.9	A	100-C09	3	6	140U-D6D3-B30	140M-C2E-B25	CLASS RK5, CC, J, or T / DLS-R-6	–[7]	140M-C2E-B25	–
25A-D2P3N104	25B-D2P3N104	1.0	0.75	1.0	0.75	2.3	2.9	3.2	A	100-C09	6	10	140U-D6D3-B60	140M-C2E-B40	CLASS RK5, CC, J, or T / DLS-R-10	–[7]	140M-C2E-B40	–
25A-D2P3N114	25B-D2P3N114	1.0	0.75	1.0	0.75	2.3	2.9	3.2	A	100-C09	6	10	140U-D6D3-B60	140M-C2E-B40	CLASS RK5, CC, J, or T / DLS-R-10	–[7]	140M-C2E-B40	–
25A-D4P0N104	25B-D4P0N104	2.0	1.5	2.0	1.5	4.0	5.2	5.7	A	100-C09	10	16	140U-D6D3-B60	140M-C2E-B63	CLASS RK5, CC, J, or T / DLS-R-15	–[7]	140M-C2E-B63	–
25A-D4P0N114	25B-D4P0N114	2.0	1.5	2.0	1.5	4.0	5.2	5.7	A	100-C09	10	16	140U-D6D3-B60	140M-C2E-B63	CLASS RK5, CC, J, or T / DLS-R-15	–[7]	140M-C2E-B63	–
25A-D6P0N104	25B-D6P0N104	3.0	2.2	3.0	2.2	6.0	6.9	7.5	A	100-C09	10	16	140U-D6D3-C10	140M-C2E-C10	CLASS RK5, CC, J, or T / DLS-R-15	–[7]	140M-C2E-C10	–
25A-D6P0N114	25B-D6P0N114	3.0	2.2	3.0	2.2	6.0	6.9	7.5	A	100-C09	10	16	140U-D6D3-C10	140M-C2E-C10	CLASS RK5, CC, J, or T / DLS-R-15	–[7]	140M-C2E-C10	–
25A-D010N104	25B-D010N104	5.0	4.0	5.0	4.0	10.5	12.6	13.8	B	100-C23	20	32	140U-D6D3-C15	140M-C2E-C16	CLASS RK5, CC, J, or T / DLS-R-30	–[7]	140M-C2E-C16	–
25A-D010N114	25B-D010N114	5.0	4.0	5.0	4.0	10.5	12.6	13.8	B	100-C23	20	32	140U-D6D3-C15	140M-C2E-C16	CLASS RK5, CC, J, or T / DLS-R-30	–[7]	140M-C2E-C16	–
25A-D013N104	25B-D013N104	7.5	5.5	7.5	5.5	13.0	14.1	15.4	C	100-C23	20	35	140U-D6D3-C25	140M-D8E-C20	CLASS CC, J, or T / 35	–[7]	140M-D8E-C20	–
25A-D013N114	25B-D013N114	7.5	5.5	7.5	5.5	13.0	14.1	15.4	C	100-C23	20	35	140U-D6D3-C25	140M-D8E-C20	CLASS CC, J, or T / 35	–[7]	140M-D8E-C20	–
25A-D017N104	25B-D017N104	10.0	7.5	10.0	7.5	17.0	16.8	18.4	C	100-C23	25	40	140U-D6D3-C25	140M-D8E-C20	CLASS CC, J, or T / 40	–[7]	140M-D8E-C20	–
25A-D017N114	25B-D017N114	10.0	7.5	10.0	7.5	17.0	16.8	18.4	C	100-C23	25	40	140U-D6D3-C25	140M-D8E-C20	CLASS CC, J, or T / 40	–[7]	140M-D8E-C20	–
25A-D024N104	25B-D024N104	15.0	11.0	15.0	11.0	24.0	24.1	26.4	D	100-C37	35	63	140G-G6C3-C40	140M-F8E-C32	CLASS CC, J, or T / 60	–[7]	140M-F8E-C32	656.7[6]
25A-D024N114	25B-D024N114	15.0	11.0	15.0	11.0	24.0	24.1	26.4	D	100-C37	35	63	140G-G6C3-C40	140M-F8E-C32	CLASS CC, J, or T / 60	–[7]	140M-F8E-C32	656.7[6]
25A-D030N104	25B-D030N104	20.0	15.0	15.0	11.0	30.0	30.2	33.0	D	100-C43	45	70	140G-G6C3-C50	140M-F8E-C45	CLASS CC, J, or T / 70	–[7]	140M-F8E-C45	656.7[6]
25A-D030N114	25B-D030N114	20.0	15.0	15.0	11.0	30.0	30.2	33.0	D	100-C43	45	70	140G-G6C3-C50	140M-F8E-C45	CLASS CC, J, or T / 70	–[7]	140M-F8E-C45	656.7[6]
25A-D037N114	25B-D037N114	25.0	18.5	20.0	15.0	37.0	30.8	33.7	E	100-C43	45	70	140G-G6C3-C50	140M-F8E-C45	CLASS CC, J, or T / 70	–[7]	140M-F8E-C45	–
25A-D043N114	25B-D043N114	30.0	22.0	25.0	18.5	43.0	35.6	38.9	E	100-C60	50	80	140G-G6C3-C60	140M-F8E-C45	CLASS CC, J, or T / 80	–[7]	140M-F8E-C45	–

(1) Normal Duty (ND) and Heavy Duty (HD) ratings are available for this drive.

(2) When the drive is controlling motors with lower amp ratings, refer to the drive nameplate for drive input current rating.

(3) The AIC ratings of the Bulletin 140M Motor Protector Circuit Breakers may vary. See Bulletin 140M Motor Protection Circuit Breakers Application Ratings.

(4) Bulletin 140M with adjustable current range should have the current trip set to the minimum range that the device will not trip.

(5) Manual Self-Protected (Type E) Combination Motor Controller, UL listed for 480Y/277 and 600Y/347 AC input. Not UL listed for use on 480V or 600V Delta/Delta, corner ground, or high-resistance ground systems.

(6) When using a Manual Self-Protected (Type E) Combination Motor Controller with this drive power rating, the drive must be installed in a ventilated or non-ventilated enclosure with the minimum volume specified in this column. Application specific thermal considerations may require a larger enclosure.

(7) Circuit breaker selection is not available for this drive rating.

Fuses and Circuit Breakers for PowerFlex 520-Series Drives *(continued)*

525...600V 3-Phase Input Protection Devices – Frames A...E

Catalog No.[1]		Output Ratings					Input Ratings		Frame Size	Contactor Catalog No.	IEC Applications (Non-UL)				UL Applications			
PF 523	PF 525	ND		HD		Amps	kVA	Max Amps[2]			Fuses (Rating)		Circuit Breakers		Fuses (Max. Rating)	Circuit Breakers		Min. Enclosure Vol. (in.^{3})
		HP	kW	HP	kW						Min.	Max.	140U/140G	140M	Class / Catalog No.	140U/140G	140M[3][4][5]	
25A-E0P9N104	25B-E0P9N104	0.5	0.4	0.5	0.4	0.9	1.4	1.2	A	100-C09	3	6	140U-D6D3-B20	140M-C2E-B25	CLASS RK5, CC, J, or T / DLS-R-6	–[8]	140M-C2E-B25	–
25A-E1P7N104	25B-E1P7N104	1.0	0.75	1.0	0.75	1.7	2.6	2.3	A	100-C09	3	6	140U-D6D3-B30	140M-C2E-B25	CLASS RK5, CC, J, or T / DLS-R-6	–[8]	140M-C2E-B25	–
25A-E3P0N104	25B-E3P0N104	2.0	1.5	2.0	1.5	3.0	4.3	3.8	A	100-C09	6	10	140U-D6D3-B50	140M-C2E-B40	CLASS RK5, CC, J, or T / DLS-R-10	–[8]	140M-C2E-B40	–
25A-E4P2N104	25B-E4P2N104	3.0	2.2	3.0	2.2	4.2	6.1	5.3	A	100-C09	10	16	140U-D6D3-B80	140M-C2E-B63	CLASS RK5, CC, J, or T / DLS-R-15	–[8]	140M-D8E-B63	–
25A-E6P6N104	25B-E6P6N104	5.0	4.0	5.0	4.0	6.6	9.1	8.0	B	100-C09	10	20	140U-D6D3-C10	140M-C2E-C10	CLASS RK5, CC, J, or T / DLS-R-20	–[8]	140M-D8E-C10	–
25A-E9P9N104	25B-E9P9N104	7.5	5.5	7.5	5.5	9.9	12.8	11.2	C	100-C16	16	25	140U-D6D3-C15	140M-C2E-C16	CLASS RK5, CC, J, or T / DLS-R-25	–[8]	140M-D8E-C16[6]	–
25A-E012N104	25B-E012N104	10.0	7.5	10.0	7.5	12.0	15.4	13.5	C	100-C23	20	32	140U-D6D3-C20	140M-C2E-C16	CLASS RK5, CC, J, or T / DLS-R-30	–[8]	140M-D8E-C16	–
25A-E019N104	25B-E019N104	15.0	11.0	15.0	11.0	19.0	27.4	24.0	D	100-C30	32	50	140G-G6C3-C30	140M-F8E-C25	CLASS CC, J, or T / 50	–[8]	140M-F8E-C25	656.7[7]
25A-E022N104	25B-E022N104	20.0	15.0	15.0	11.0	22.0	31.2	27.3	D	100-C30	35	63	140G-G6C3-C35	140M-F8E-C32	CLASS CC, J, or T / 60	–[8]	140M-F8E-C32	656.7[7]
25A-E027N104	25B-E027N104	25.0	18.5	20.0	15.0	27.0	28.2	24.7	E	100-C30	35	50	140G-G6C3-C35	140M-F8E-C32	CLASS CC, J, or T / 50	–[8]	140M-F8E-C32	1416.0[7]
25A-E032N104	25B-E032N104	30.0	22.0	25.0	18.5	32.0	33.4	29.2	E	100-C37	40	63	140G-G6C3-C50	140M-F8E-C32	CLASS CC, J, or T / 60	–[8]	140M-F8E-C32	1416.0[7]

(1) Normal Duty (ND) and Heavy Duty (HD) ratings are available for this drive.
(2) When the drive is controlling motors with lower amp ratings, refer to the drive nameplate for drive input current rating.
(3) The AIC ratings of the Bulletin 140M Motor Protector Circuit Breakers may vary. See Bulletin 140M Motor Protection Circuit Breakers Application Ratings.
(4) Bulletin 140M with adjustable current range should have the current trip set to the minimum range that the device will not trip.
(5) Manual Self-Protected (Type E) Combination Motor Controller, UL listed for 480Y/277 and 600Y/347 AC input. Not UL listed for use on 480V or 600V Delta/Delta, corner ground, or high-resistance ground systems.
(6) When used with the 140M circuit breaker, the 25A-E9P9104 must be installed in a ventilated or non-ventilated enclosure with the minimum size of 457.2 x 457.2 x 269.8 mm (18 x 18 x 10.62 in.).
(7) When using a Manual Self-Protected (Type E) Combination Motor Controller with this drive power rating, the drive must be installed in a ventilated or non-ventilated enclosure with the minimum volume specified in this column. Application specific thermal considerations may require a larger enclosure.
(8) Circuit breaker selection is not available for this drive rating.

Power and Control Module

PowerFlex 520-series drives consist of a Power Module and Control Module.

Separating the Power and Control Module

ATTENTION: Perform this action only when drive is NOT powered.

1. Press and hold down the catch on both sides of the frame cover, then pull out and swing upwards to remove (Frames B...E only).

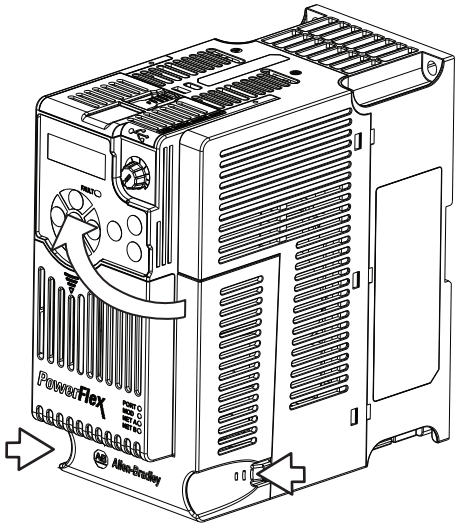

2. Press down and slide out the top cover of the Control Module to unlock it from the Power Module.

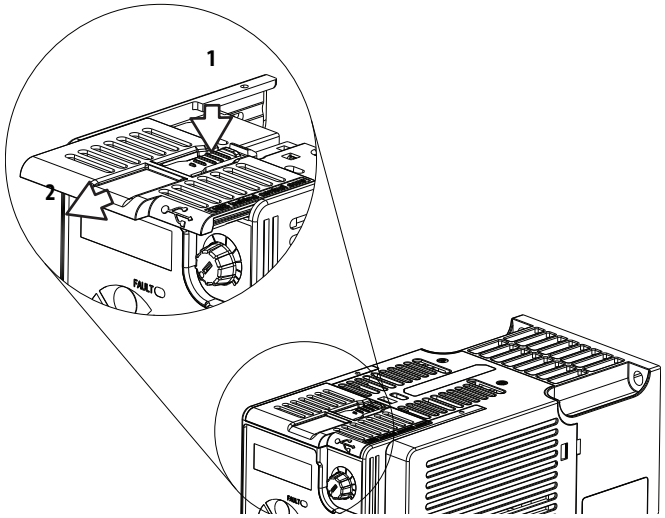

3. Hold the sides and top of the Control Module firmly, then pull out to separate it from the Power Module.

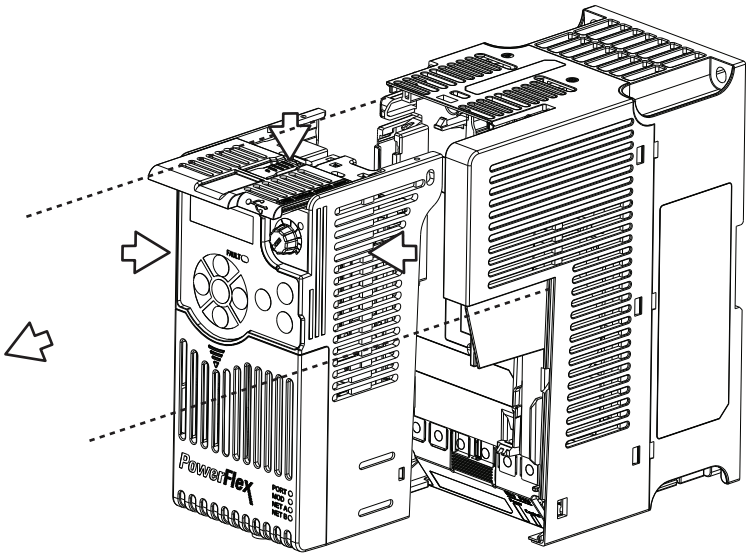

Connecting the Power and Control Module

1. Align the connectors on the Power Module and Control Module, then push the Control Module firmly onto the Power Module.

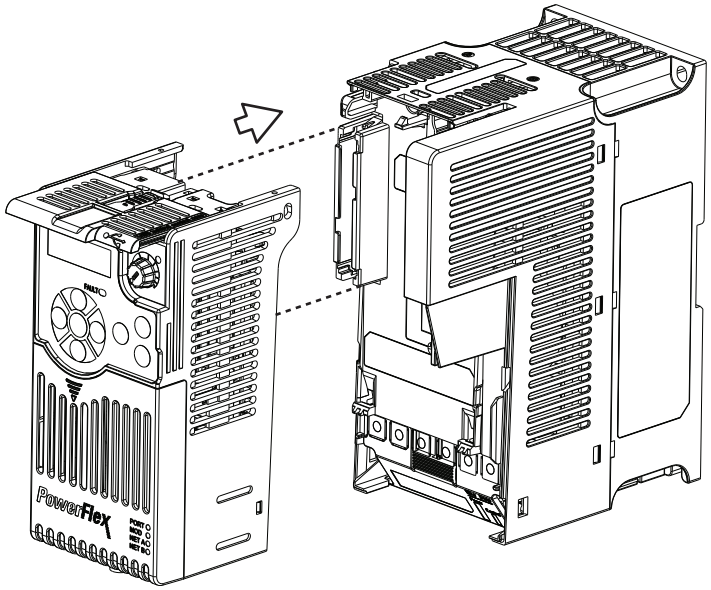

2. Push the top cover of the Control Module towards the Power Module to lock it.

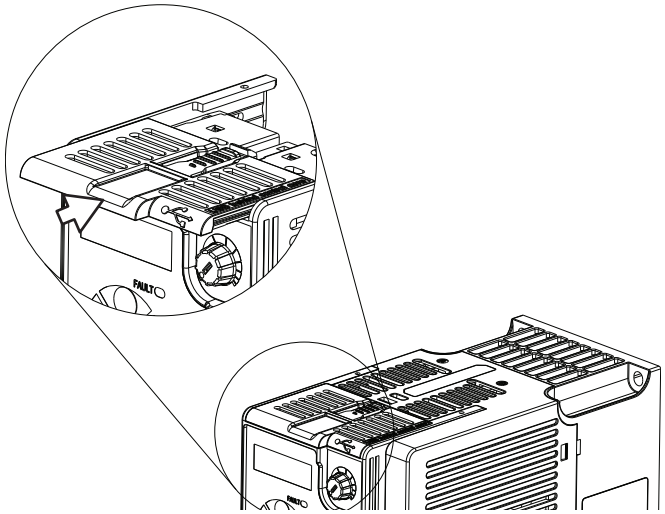

3. Insert the catch at the top of the frame cover into the Power Module, then swing the frame cover to snap the side catches onto the Power Module (Frames B...E only).

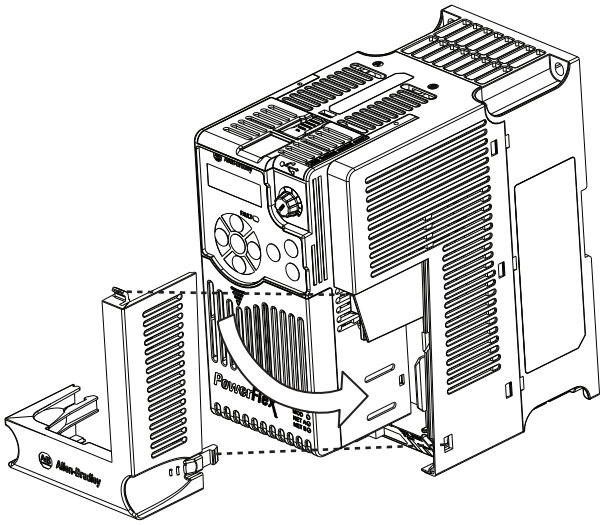

Control Module Cover

To access the control terminals, DSI port, and Ethernet port, the front cover must be removed. To remove:

1. Press and hold down the arrow on the front of the cover.
2. Slide the front cover down to remove from the Control Module.

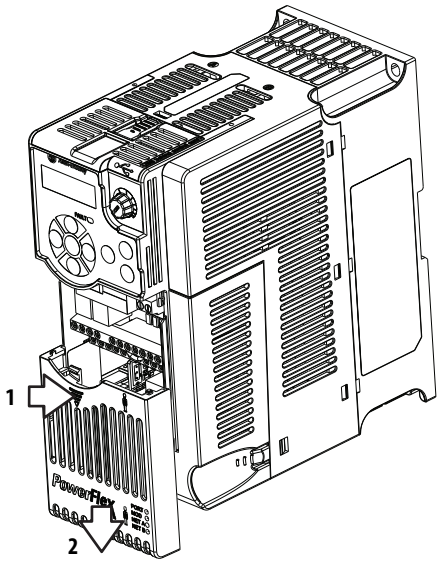

Re-attach the front cover when wiring is complete.

Power Module Terminal Guard

To access the power terminals, the terminal guard must be removed. To remove:

1. Press and hold down the catch on both sides of the frame cover, then pull out and swing upwards to remove (Frames B...E only).

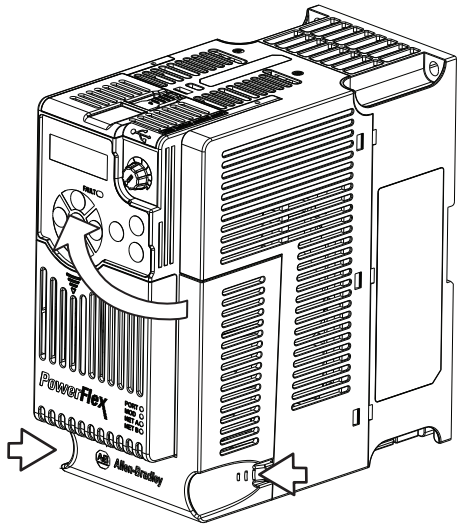

2. Press and hold down the locking tab on the terminal guard.
3. Slide the terminal guard down to remove from the Power Module.

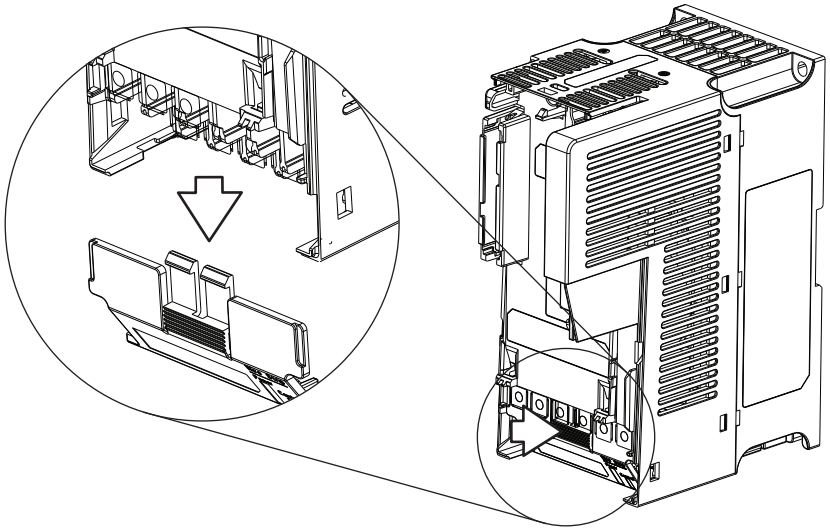

Re-attach the terminal guard when wiring is complete.

To access the power terminals for Frame A, you need to separate the Power and Control Modules. See Separating the Power and Control Module on page 28 for instructions.

Power Wiring

ATTENTION: National Codes and standards (NEC, VDE, BSI, etc.) and local codes outline provisions for safely installing electrical equipment. Installation must comply with specifications regarding wire types, conductor sizes, branch circuit protection and disconnect devices. Failure to do so may result in personal injury and/or equipment damage.

ATTENTION: To avoid a possible shock hazard caused by induced voltages, unused wires in the conduit must be grounded at both ends. For the same reason, if a drive sharing a conduit is being serviced or installed, all drives using this conduit should be disabled. This will help minimize the possible shock hazard from "cross coupled" power leads.

Motor Cable Types Acceptable for 100...600 Volt Installations

A variety of cable types are acceptable for drive installations. For many installations, unshielded cable is adequate, provided it can be separated from sensitive circuits. As an approximate guide, allow a spacing of 0.3 m (1 ft) for every 10 m (32.8 ft) of length. In all cases, long parallel runs must be avoided. Do not use cable with an insulation thickness less than 15 mils (0.4 mm/0.015 in.). Do not route more than three sets of motor leads in a single conduit to minimize "cross talk". If more than three drive/motor connections per conduit are required, shielded cable must be used.

UL installations above 50 °C ambient must use 600V, 90 °C wire.
UL installations in 50 °C ambient must use 600V, 75 °C or 90 °C wire.
UL installations in 40 °C ambient should use 600V, 75 °C or 90 °C wire.
Use copper wire only. Wire gauge requirements and recommendations are based on 75 °C. Do not reduce wire gauge when using higher temperature wire.

WARNING: The distance between the drive and motor must not exceed the maximum cable length stated in the Motor Cable Length Restrictions Tables in "Wiring and Grounding Guide, (PWM) AC Drives," publication DRIVES-IN001.

Unshielded

THHN, THWN or similar wire is acceptable for drive installation in dry environments provided adequate free air space and/or conduit fill rates limits are provided. Any wire chosen must have a minimum insulation thickness of 15 mils and should not have large variations in insulation concentricity.

ATTENTION: Do not use THHN or similarly coated wire in wet areas.

Shielded/Armored Cable

Shielded cable contains all of the general benefits of multi-conductor cable with the added benefit of a copper braided shield that can contain much of the noise generated by a typical AC Drive. Strong consideration for shielded cable should be given in installations with sensitive equipment such as weigh scales, capacitive proximity switches and other devices that may be affected by electrical noise in the distribution system. Applications with large numbers of drives in a similar location, imposed EMC regulations or a high degree of communications / networking are also good candidates for shielded cable.

Shielded cable may also help reduce shaft voltage and induced bearing currents for some applications. In addition, the increased impedance of shielded cable may help extend the distance that the motor can be located from the drive without the addition of motor protective devices such as terminator networks. Refer to Reflected Wave in "Wiring and Grounding Guide, (PWM) AC Drives," publication DRIVES-IN001.

Consideration should be given to all of the general specifications dictated by the environment of the installation, including temperature, flexibility, moisture characteristics and chemical resistance. In addition, a braided shield should be included and be specified by the cable manufacturer as having coverage of at least 75%. An additional foil shield can greatly improve noise containment.

A good example of recommended cable is Belden® 295xx (xx determines gauge). This cable has four (4) XLPE insulated conductors with a 100% coverage foil and an 85% coverage copper braided shield (with drain wire) surrounded by a PVC jacket.

Other types of shielded cable are available, but the selection of these types may limit the allowable cable length. Particularly, some of the newer cables twist 4 conductors of THHN wire and wrap them tightly with a foil shield. This construction can greatly increase the cable charging current required and reduce the overall drive performance. Unless specified in the individual distance tables as tested with the drive, these cables are not recommended and their performance against the lead length limits supplied is not known.

Recommended Shielded Wire

Location	Rating/Type	Description
Standard (Option 1)	600V, 90 °C (194 °F) XHHW2/RHW-2 Anixter B209500-B209507, Belden 29501-29507, or equivalent	• Four tinned copper conductors with XLPE insulation. • Copper braid/aluminum foil combination shield and tinned copper drain wire. • PVC jacket.
Standard (Option 2)	Tray rated 600V, 90 °C (194 °F) RHH/RHW-2 Anixter OLF-7xxxxx or equivalent	• Three tinned copper conductors with XLPE insulation. • 5 mil single helical copper tape (25% overlap min.) with three bare copper grounds in contact with shield. • PVC jacket.
Class I & II; Division I & II	Tray rated 600V, 90 °C (194 °F) RHH/RHW-2 Anixter 7V-7xxxx-3G or equivalent	• Three bare copper conductors with XLPE insulation and impervious corrugated continuously welded aluminum armor. • Black sunlight resistant PVC jacket overall. • Three copper grounds on #10 AWG and smaller.

Reflected Wave Protection

The drive should be installed as close to the motor as possible. Installations with long motor cables may require the addition of external devices to limit voltage reflections at the motor (reflected wave phenomena). Refer to Reflected Wave in "Wiring and Grounding Guide, (PWM) AC Drives," publication DRIVES-IN001.

The reflected wave data applies to all carrier frequencies 2...16 kHz.

For 240V ratings and lower, reflected wave effects do not need to be considered.

Output Disconnect

The drive is intended to be commanded by control input signals that will start and stop the motor. A device that routinely disconnects then reapplies output power to the motor for the purpose of starting and stopping the motor should not be used. If it is necessary to disconnect power to the motor with the drive outputting power, an auxiliary contact should be used to simultaneously disable drive (Aux Fault or Coast to Stop).

Power Terminal Block

Power Terminal Block

Frame A, B, C & D

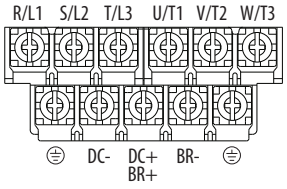

Frame E

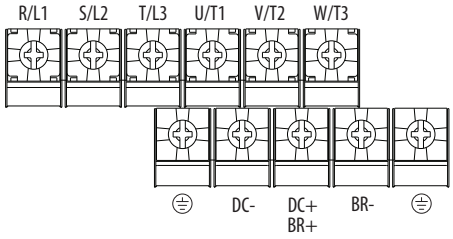

Terminal	Description
R/L1, S/L2	1-Phase Input Line Voltage Connection
R/L1, S/L2, T/L3	3-Phase Input Line Voltage Connection
U/T1, V/T2, W/T3	Motor Phase Connection = 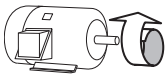 Switch any two motor leads to change forward direction.
DC+, DC-	DC Bus Connection (except for 110V 1-Phase)
BR+, BR-	Dynamic Brake Resistor Connection
⏚	Safety Ground - PE

IMPORTANT Terminal screws may become loose during shipment. Ensure that all terminal screws are tightened to the recommended torque before applying power to the drive.

Power Terminal Block Wire Specifications

Frame	Maximum Wire Size(1)	Minimum Wire Size(1)	Torque
A	5.3 mm^2 (10 AWG)	0.8 mm^2 (18 AWG)	1.76...2.16 Nm (15.6...19.1 lb-in.)
B	8.4 mm^2 (8 AWG)	2.1 mm^2 (14 AWG)	1.76...2.16 Nm (15.6...19.1 lb-in.)
C	8.4 mm^2 (8 AWG)	2.1 mm^2 (14 AWG)	1.76...2.16 Nm (15.6...19.1 lb-in.)
D	13.3 mm^2 (6 AWG)	5.3 mm^2 (10 AWG)	1.76...2.16 Nm (15.6...19.1 lb-in.)
E	26.7 mm^2 (3 AWG)	8.4 mm^2 (8 AWG)	3.09...3.77 Nm (27.3...33.4 lb-in.)

(1) Maximum/minimum sizes that the terminal block will accept – these are not recommendations.

Common Bus/Precharge Notes

If drives are used with a disconnect switch to the common DC bus, then an auxiliary contact on the disconnect must be connected to a digital input of the drive. The corresponding input (parameter t062, t063, t065...t068 [DigIn TermBlk xx]) must be set to 30, "Precharge En" This provides the proper precharge interlock, guarding against possible damage to the drive when connected to a common DC bus. For more information, see Drives in Common Bus Configurations, publication DRIVES-AT002.

I/O Wiring

Motor Start/Stop Precautions

ATTENTION: A contactor or other device that routinely disconnects and reapplies the AC line to the drive to start and stop the motor can cause drive hardware damage. The drive is designed to use control input signals that will start and stop the motor. If used, the input device must not exceed one operation per minute or drive damage can occur.

ATTENTION: The drive start/stop control circuitry includes solid-state components. If hazards due to accidental contact with moving machinery or unintentional flow of liquid, gas or solids exist, an additional hardwired stop circuit may be required to remove the AC line to the drive. When the AC line is removed, there will be a loss of any inherent regenerative braking effect that might be present - the motor will coast to a stop. An auxiliary braking method may be required. Alternatively, use the drive's safety input function.

Important points to remember about I/O wiring:

- Always use copper wire.
- Wire with an insulation rating of 600V or greater is recommended.
- Control and signal wires should be separated from power wires by at least 0.3 m (1 ft).

IMPORTANT I/O terminals labeled "Common" are not referenced to the safety ground (PE) terminal and are designed to greatly reduce common mode interference.

ATTENTION: Driving the 4-20 mA analog input from a voltage source could cause component damage. Verify proper configuration prior to applying input signals.

Signal and Control Wire Types

Recommendations are for 50 °C ambient temperature.
75 °C wire must be used for 60 °C ambient temperature.
90 °C wire must be used for 70 °C ambient temperature.

Recommended Signal Wire

Signal Type/ Where Used	Belden Wire Type(s)[1] *(or equivalent)*	Description	Min. Insulation Rating
Analog I/O & PTC	8760/9460	0.750 mm^2 (18 AWG), twisted pair, 100% shield with drain[2]	300V, 60 °C (140 °F)
Remote Pot	8770	0.750 mm^2 (18 AWG), 3 conductor, shielded	
Encoder/Pulse I/O	9728/9730	0.196 mm^2 (24 AWG), individually shielded pairs	

(1) Stranded or solid wire.

(2) If the wires are short and contained within a cabinet which has no sensitive circuits, the use of shielded wire may not be necessary, but is always recommended.

Recommended Control Wire for Digital I/O

Type	Wire Type(s)	Description	Min. Insulation Rating
Unshielded	Per US NEC or applicable national or local code	–	300V, 60 °C (140 °F)
Shielded	Multi-conductor shielded cable such as Belden 8770 (or equivalent)	0.750 mm^2 (18 AWG), 3 conductor, shielded.	

Maximum Control Wire Recommendations

Do not exceed control wiring length of 30 m (100 ft). Control signal cable length is highly dependent on electrical environment and installation practices. To improve noise immunity, the I/O terminal block Common may be connected to ground terminal/protective earth.

Control I/O Terminal Block

Control I/O Terminal Block Wire Specifications

Frame	Maximum Wire Size[1]	Minimum Wire Size[1]	Torque
A...E	1.3 mm^2 (16 AWG)	0.13 mm^2 (26 AWG)	0.71...0.86 Nm (6.2...7.6 lb-in.)

(1) Maximum/minimum sizes that the terminal block will accept – these are not recommendations.

PowerFlex 523 Control I/O Terminal Block

PowerFlex 523 Control I/O Wiring Block Diagram

Series A

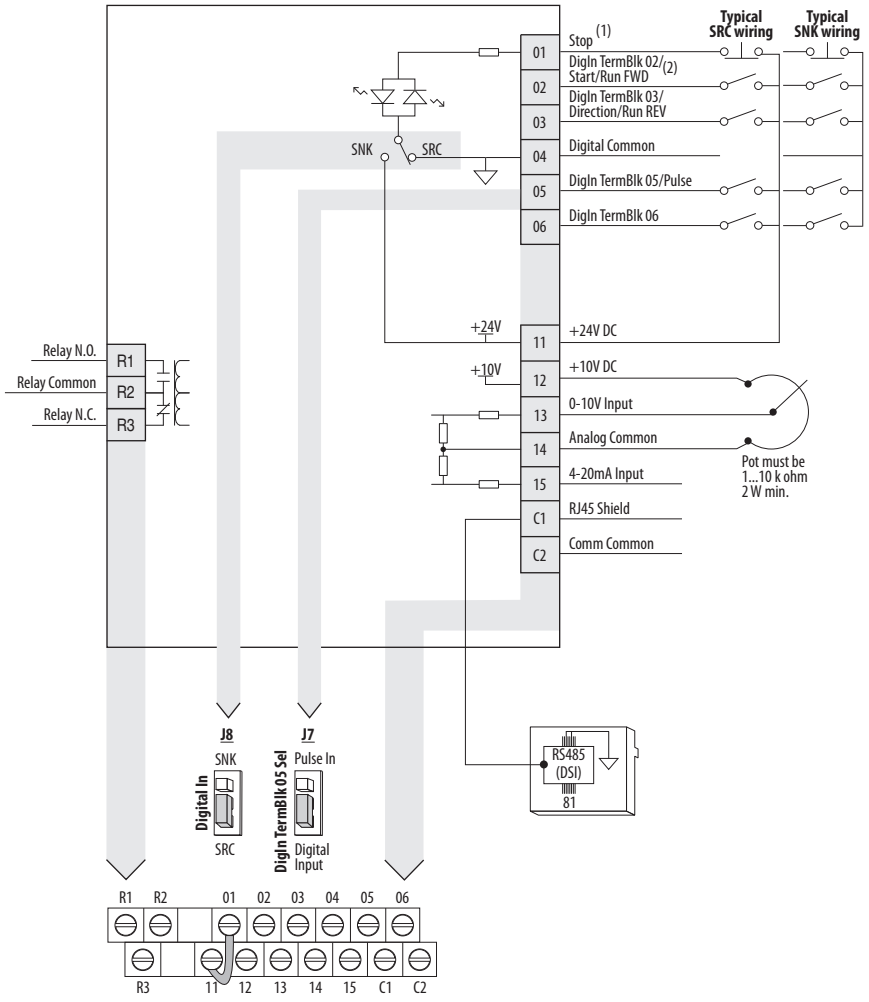

Series B

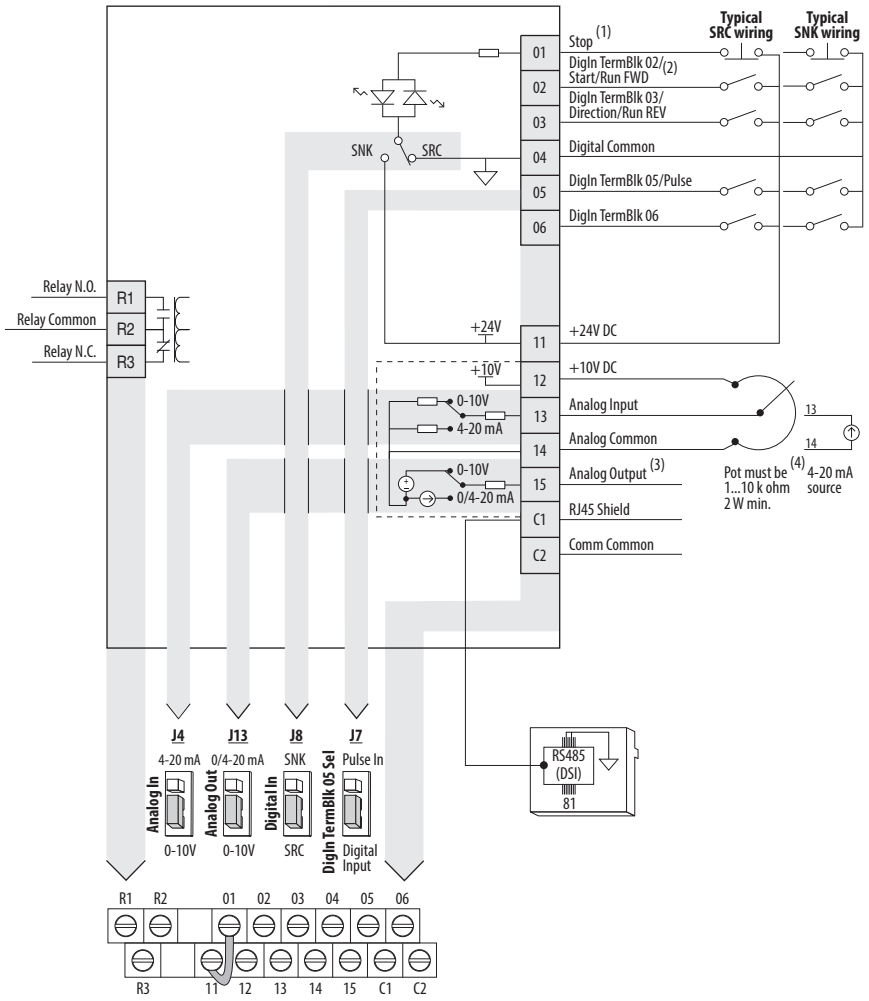

Control I/O Wiring Block Diagram Notes

(1) See Digital Input Selection for Start Source on page 50 for more information on configuring the digital inputs.

IMPORTANT I/O Terminal 01 is always a stop input. The stopping mode is determined by the drive setting. See the tables below for more information.

Start Method	Stop Method	
P046, P048, P050 [Start Source x]	**I/O Terminal 01 Stop**	**Normal Stop**
1 "Keypad"	Coast	Per P045 [Stop Mode]
2 "DigIn TrmBlk"	See t062, t063 [DigIn TermBlk xx] below	
3 "Serial/DSI"	Coast	
4 "Network Opt"	Coast	
5 "Ethernet/IP" (1)	Coast	

(1) Setting is specific to PowerFlex 525 drives only.

Start Method	Stop Method	
t062, t063 [DigIn TermBlk xx]	**I/O Terminal 01 Stop**	**Normal Stop**
48 "2-Wire FWD"	t064 [2-Wire Mode] is set to: • 0, 1, or 2 = Coast • 3 = per P045 [Stop Mode]	Per P045 [Stop Mode]
49 "3-Wire Start"	Per P045 [Stop Mode]	
50 "2-Wire REV"	t064 [2-Wire Mode] is set to: • 0, 1, or 2 = Coast • 3 = per P045 [Stop Mode]	
51 "3-Wire Dir"	Per P045 [Stop Mode]	

IMPORTANT The drive is shipped with a jumper installed between I/O Terminals 01 and 11. Remove this jumper when using I/O Terminal 01 as a stop or enable input.

(2) Two wire control shown. For three wire control use a momentary input on I/O Terminal 02 to command a start. Use a maintained input for I/O Terminal 03 to change direction.

(3) Analog output (terminal 15) is only available on PowerFlex 523 series B drive, and requires firmware 3.001 and later to configure the analog output parameters (t088, t089, and t090).

(4) Potentiometer connection is only applicable when the 0-10V setting (default) is selected for jumper J4.

(5) Only one analog frequency source may be connected at a time. If more than one reference is connected at the same time, an undetermined frequency reference will result.

Control I/O Terminal Designations

No.	Signal	Default	Description	Parameter
R1	Relay N.O.	Fault	Normally open contact for output relay.	t076
R2	Relay Common	Fault	Common for output relay.	
R3	Relay N.C.	Motor Running	Normally closed contact for output relay.	t081
01	Stop	Coast	Three wire stop. However, it functions as a stop under all input modes and cannot be disabled.	P045(2)
02	DigIn TermBlk 02/ Start/Run FWD	Run FWD	Used to initiate motion and also can be used as a programmable digital input. It can be programmed with t062 [DigIn TermBlk 02] as three wire (Start/Dir with Stop) or two wire (Run FWD/ Run REV) control. Current consumption is 6 mA.	P045, P046, P048, P050, A544, t062
03	DigIn TermBlk 03/ Dir/Run REV	Run REV	Used to initiate motion and also can be used as a programmable digital input. It can be programmed with t063 [DigIn TermBlk 03] as three wire (Start/Dir with Stop) or two wire (Run FWD/ Run REV) control. Current consumption is 6 mA.	t063
04	Digital Common	–	Return for digital I/O. Electrically isolated (along with the digital I/O) from the rest of the drive.	–
05	DigIn TermBlk 05/ Pulse In	Preset Freq	Program with t065 [DigIn TermBlk 05]. Also functions as a Pulse Train input for reference or speed feedback. Requires an NPN pulse input. The maximum frequency is 100 kHz. Current consumption is 6 mA.	t065
06	DigIn TermBlk 06	Preset Freq	Program with t066 [DigIn TermBlk 06]. Current consumption is 6 mA.	t066
11	+24V DC	–	Referenced to Digital Common. Drive supplied power for digital inputs. Maximum output current is 100 mA.	–
12	+10V DC	–	Referenced to Analog Common. Drive supplied power for 0...10V external potentiometer. Maximum output current is 15 mA.	P047, P049

Control I/O Terminal Designations

No.	Signal	Default	Description	Parameter
13	**For Series A** 0-10V In(1)	Not Active	For external 0-10V (unipolar) input supply or potentiometer wiper. Input impedance: Voltage source = 100 kΩ Allowable potentiometer resistance range = 1...10 kΩ	P047, P049, t062, t063, t065, t066, t093, A459, A471
	For Series B Analog Input	Not Active	External analog input supply, selectable by Analog Input jumper. Default is 0-10V (unipolar) input supply or potentiometer wiper. Input impedance: Voltage source = 100 kΩ Allowable potentiometer resistance range = 1...10 kΩ Change Analog Input jumper to 4-20 mA for external 4-20 mA input supply. Input impedance = 250 Ω	P047, P049, t062, t063, t065, t066, t093, A459, A471
14	Analog Common	–	Return for the analog I/O. Electrically isolated (along with the analog I/O) from the rest of the drive.	–
15	**For Series A** 4-20mA In(1)	Not Active	For external 4-20 mA input supply. Input impedance = 250 Ω	P047, P049, t062, t063, t065, t066, A459, A471
	For Series B Analog Output	OutFreq 0-10	The default analog output is 0-10V. To convert a current value, change the Analog Output jumper to 0-20 mA. Program with t088 [Analog Out Sel]. Maximum analog value can be scaled with t089 [Analog Out High]. Maximum Load: 4-20 mA = 525 Ω (10.5V) 0-10V = 1 kΩ (10 mA)	t088, t089
C1	C1	–	This terminal is tied to the RJ-45 port shield. Tie this terminal to a clean ground in order to improve noise immunity when using external communication peripherals.	–
C2	C2	–	This is the signal common for the communication signals.	–

(1) Only one analog frequency source may be connected at a time. If more than one reference is connected at the same time, an undetermined frequency reference will result.

(2) See Footnote (1) on page 39.

PowerFlex 525 Control I/O Terminal Block

PowerFlex 525 Control I/O Wiring Block Diagram

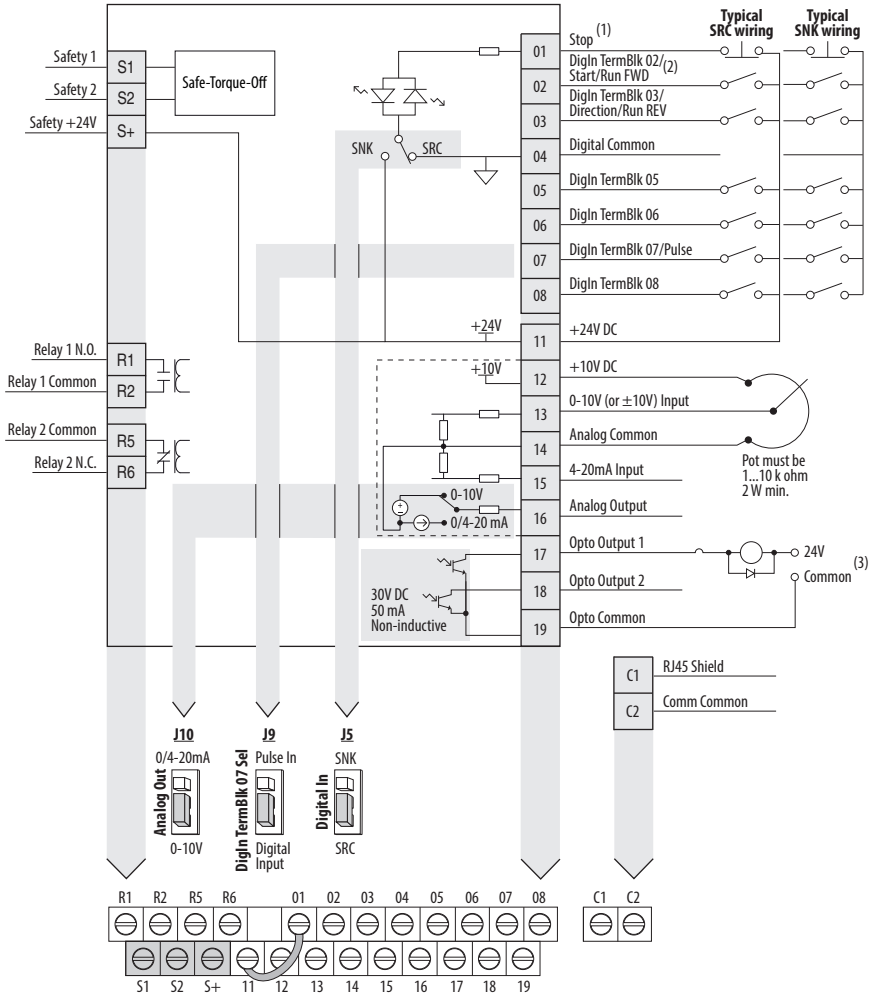

Control I/O Wiring Block Diagram Notes

(1) See Digital Input Selection for Start Source on page 50 for more information on configuring the digital inputs.

IMPORTANT I/O Terminal 01 is always a stop input. The stopping mode is determined by the drive setting. See the tables below for more information.

Start Method	Stop Method	
P046, P048, P050 [Start Source x]	**I/O Terminal 01 Stop**	**Normal Stop**
1 "Keypad"	Coast	Per P045 [Stop Mode]
2 "DigIn TrmBlk"	See t062, t063 [DigIn TermBlk xx] below	
3 "Serial/DSI"	Coast	
4 "Network Opt"	Coast	
5 "EtherNet/IP"	Coast	

Start Method	Stop Method	
t062, t063 [DigIn TermBlk xx]	**I/O Terminal 01 Stop**	**Normal Stop**
48 "2-Wire FWD"	t064 [2-Wire Mode] is set to: • 0, 1, or 2 = Coast • 3 = per P045 [Stop Mode]	Per P045 [Stop Mode]
49 "3-Wire Start"	Per P045 [Stop Mode]	
50 "2-Wire REV"	t064 [2-Wire Mode] is set to: • 0, 1, or 2 = Coast • 3 = per P045 [Stop Mode]	
51 "3-Wire Dir"	Per P045 [Stop Mode]	

IMPORTANT The drive is shipped with a jumper installed between I/O Terminals 01 and 11. Remove this jumper when using I/O Terminal 01 as a stop or enable input.

(2) Two wire control shown. For three wire control use a momentary input on I/O Terminal 02 to command a start. Use a maintained input for I/O Terminal 03 to change direction.

(3) When using an opto output with an inductive load such as a relay, install a recovery diode parallel to the relay as shown, to prevent damage to the output.

Control I/O Terminal Designations

No.	Signal	Default	Description	Parameter
R1	Relay 1 N.O.	Fault	Normally open contact for output relay.	t076
R2	Relay 1 Common	Fault	Common for output relay.	
R5	Relay 2 Common	Motor Running	Common for output relay.	t081
R6	Relay 2 N.C.	Motor Running	Normally closed contact for output relay.	
01	Stop	Coast	Three wire stop. However, it functions as a stop under all input modes and cannot be disabled.	P045(1)
02	DigIn TermBlk 02/ Start/Run FWD	Run FWD	Used to initiate motion and also can be used as a programmable digital input. It can be programmed with t062 [DigIn TermBlk 02] as three wire (Start/Dir with Stop) or two wire (Run FWD/ Run REV) control. Current consumption is 6 mA.	P045, P046, P048, P050, A544, t062
03	DigIn TermBlk 03/ Dir/Run REV	Run REV	Used to initiate motion and also can be used as a programmable digital input. It can be programmed with t063 [DigIn TermBlk 03] as three wire (Start/Dir with Stop) or two wire (Run FWD/ Run REV) control. Current consumption is 6 mA.	t063
04	Digital Common	–	Return for digital I/O. Electrically isolated (along with the digital I/O) from the rest of the drive.	–
05	DigIn TermBlk 05	Preset Freq	Program with t065 [DigIn TermBlk 05]. Current consumption is 6 mA.	t065
06	DigIn TermBlk 06	Preset Freq	Program with t066 [DigIn TermBlk 06]. Current consumption is 6 mA.	t066
07	DigIn TermBlk 07/ Pulse In	Start Source 2 + Speed Reference2	Program with t067 [DigIn TermBlk 07]. Also functions as a Pulse Train input for reference or speed feedback. Requires an NPN pulse input. Maximum frequency is 100 kHz. Current consumption is 6 mA.	t067
08	DigIn TermBlk 08	Jog Forward	Program with t068 [DigIn TermBlk 08]. Current consumption is 6 mA.	t068
C1	C1	–	This terminal is tied to the RJ-45 port shield. Tie this terminal to a clean ground in order to improve noise immunity when using external communication peripherals.	–
C2	C2	–	This is the signal common for the communication signals.	–
S1	Safety 1	–	Safety input 1. Current consumption is 6 mA.	–
S2	Safety 2	–	Safety input 2. Current consumption is 6 mA.	–
S+	Safety +24V	–	+24V supply for safety circuit. Internally tied to the +24V DC source (Pin 11).	–
11	+24V DC	–	Referenced to Digital Common. Drive supplied power for digital inputs. Maximum output current is 100 mA.	–

Control I/O Terminal Designations

No.	Signal	Default	Description	Parameter
12	+10V DC	–	Referenced to Analog Common. Drive supplied power for 0...10V external potentiometer. Maximum output current is 15 mA.	P047, P049
13	±10V In	Not Active	For external 0-10V (unipolar) or ±10V (bipolar) input supply or potentiometer wiper. Input impedance: Voltage source = 100 kΩ Allowable potentiometer resistance range = 1...10 kΩ	P047, P049, t062, t063, t065, t066, t093, A459, A471
14	Analog Common	–	Return for the analog I/O. Electrically isolated (along with the analog I/O) from the rest of the drive.	–
15	4-20mA In	Not Active	For external 4-20 mA input supply. Input impedance = 250 Ω	P047, P049, t062, t063, t065, t066, A459, A471
16	Analog Output	OutFreq 0-10	The default analog output is 0-10V. To convert a current value, change the Analog Output jumper to 0-20 mA. Program with t088 [Analog Out Sel]. Maximum analog value can be scaled with t089 [Analog Out High]. Maximum Load: 4-20 mA = 525 Ω (10.5V) 0-10V = 1 kΩ (10 mA)	t088, t089
17	Opto Output 1	Motor Running	Program with t069 [Opto Out1 Sel]. Each Opto-Output is rated 30V DC 50 mA (Non-inductive).	t069, t070, t075
18	Opto Output 2	At Frequency	Program with t072 [Opto Out1 Sel]. Each Opto-Output is rated 30V DC 50 mA (Non-inductive).	t072, t073, t075
19	Opto Common	–	The emitters of the Optocoupler Outputs (1 and 2) are tied together at Optocoupler Common. Electrically isolated from the rest of the drive.	–

(1) See Footnote (1) on page 39.

I/O Wiring Examples

<table>
<tr><th>I/O</th><th>Connection Example</th></tr>
<tr><td rowspan="2">Potentiometer
1...10k Ω Pot.
Recommended
(2 W minimum)</td><td>P047 [Speed Reference1] = 5 “0-10V Input”</td></tr>
<tr><td> 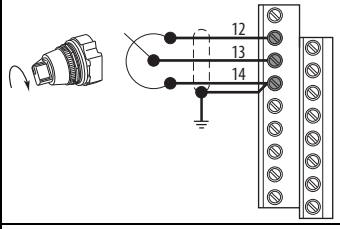
</td></tr>
<tr><td rowspan="4">Analog Input
0-10V, 100k Ω impedance
4-20 mA, 250 Ω impedance</td><td>Bipolar
P047 [Speed Reference1] = 5 “0-10V Input” and t093 [10V Bipolar Enbl] = 1 “Bi-Polar In”</td><td>Unipolar (Voltage)
P047 [Speed Reference1] = 5 “0-10V Input”</td></tr>
<tr><td> 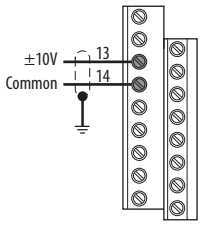
</td><td> 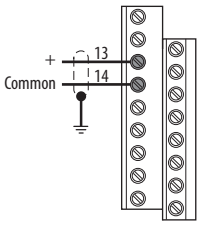
</td></tr>
<tr><td colspan="2">Unipolar (Current)
P047 [Speed Reference1] = 6 “4-20mA Input”</td></tr>
<tr><td colspan="2">PowerFlex 523 Series A, PowerFlex 525
 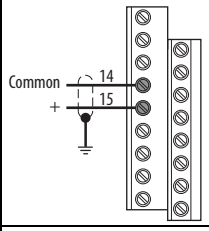

PowerFlex 523 Series B
 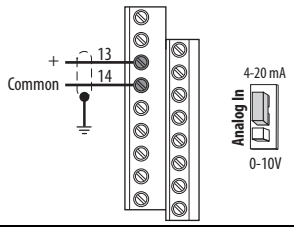
</td></tr>
<tr><td rowspan="2">Analog Input, PTC
For Drive Fault</td><td colspan="2">Wire the PTC and External Resistor (typically matched to the PTC Hot Resistance) to I/O Terminals 12, 13, 14.
Wire R2/R3 Relay Output (SRC) to I/O Terminals 5 & 11.
t065 [DigIn TermBlk 05] = 12 “Aux Fault”
t081 [Relay Out 2 Sel] = 10 “Above AnIg V”
t082 [Relay Out 2 Level] = % Voltage Trip</td></tr>
<tr><td colspan="2"> 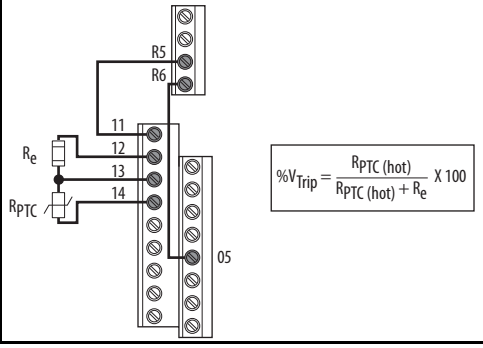
</td></tr>
</table>

I/O	Connection Example	
Pulse Train Input PowerFlex 523 t065 [DigIn TermBlk 05] = 52 PowerFlex 525 t067 [DigIn TermBlk 07] = 52 Use P047, P049 and P051 [Speed Referencex] to select pulse input. Jumper for DigIn TermBlk 05 or 07 Sel must be moved to Pulse In.	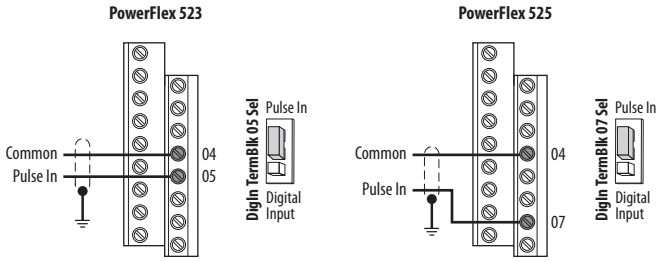 The device connected to terminal 5 (for PowerFlex 523) or terminal 7 (for PowerFlex 525) needs to be NPN or push-pull output driver.	
2 Wire SRC Control - Non-Reversing P046 [Start Source 1] = 2 and t062 [DigIn TermBlk 02] = 48 Input must be active for the drive to run. When input is opened, the drive will stop as specified by P045 [Stop Mode]. If desired, a User Supplied 24V DC power source can be used. Refer to the "External Supply (SRC)" example.	Internal Supply (SRC) 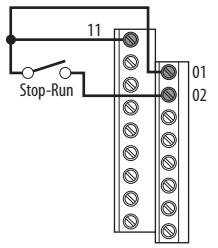	External Supply (SRC) 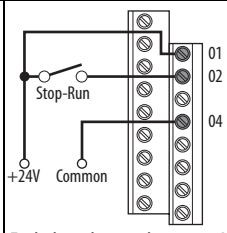 Each digital input draws 6 mA.
2 Wire SNK Control - Non-Reversing	Internal Supply (SNK) 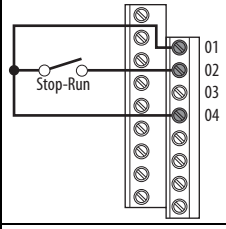	
2 Wire SRC Control - Run FWD/Run REV P046 [Start Source 1] = 2, t062 [DigIn TermBlk 02] = 48 and t063 [DigIn TermBlk 03] = 50 Input must be active for the drive to run. When input is opened, the drive will stop as specified by P045 [Stop Mode]. If both Run Forward and Run Reverse inputs are closed at the same time, an undetermined state could occur.	Internal Supply (SRC) 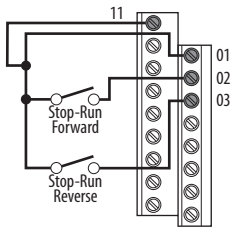	External Supply (SRC) 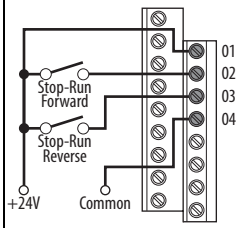 Each digital input draws 6 mA.
2 Wire SNK Control - Run FWD/Run REV	Internal Supply (SNK) 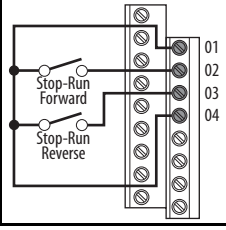	

<table>
<tr><th>I/O</th><th colspan="2">Connection Example</th></tr>
<tr><td rowspan="2">3 Wire SRC Control - Non-Reversing
P046 [Start Source 1] = 2, t062 [DigIn TermBlk 02] = 49 and t063 [DigIn TermBlk 03] = 51
A momentary input will start the drive. A stop input to I/O Terminal 01 will stop the drive as specified by P045 [Stop Mode].</td><td>Internal Supply (SRC)
 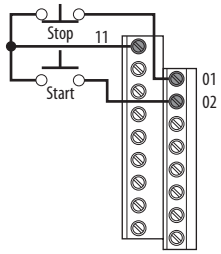
</td><td>External Supply (SRC)
 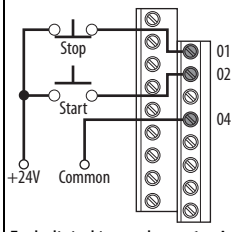

Each digital input draws 6 mA.</td></tr>
<tr><td>3 Wire SNK Control - Non-Reversing</td><td colspan="2">Internal Supply (SNK)
 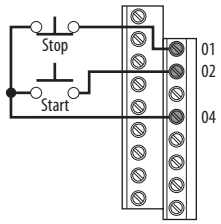
</td></tr>
<tr><td>3 Wire SRC Control - Reversing
P046 [Start Source 1] = 2, t062 [DigIn TermBlk 02] = 49 and t063 [DigIn TermBlk 03] = 51
A momentary input will start the drive. A stop input to I/O Terminal 01 will stop the drive as specified by P045 [Stop Mode]. I/O Terminal 03 determines direction.</td><td>Internal Supply (SRC)
 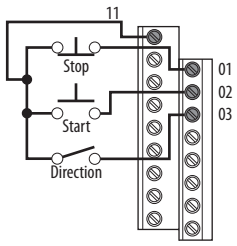
</td><td>External Supply (SRC)
 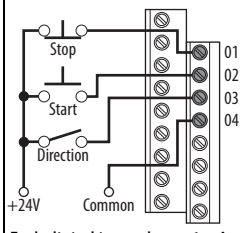

Each digital input draws 6 mA.</td></tr>
<tr><td>3 Wire SNK Control - Reversing</td><td colspan="2">Internal Supply (SNK)
 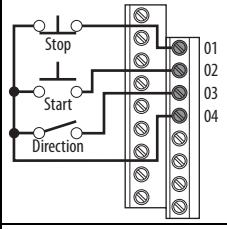
</td></tr>
<tr><td>Opto Output (1 & 2)[1]
t069 [Opto Out1 Sel] determines Opto-Output 1 (I/O Terminal 17) operation.
t072 [Opto Out2 Sel] determines Opto-Output 2 (I/O Terminal 18) operation.
When using Opto-Output with an inductive load such as a relay, install a recovery diode parallel to the relay as shown, to prevent damage to the output.</td><td colspan="2">Opto-Output 1
 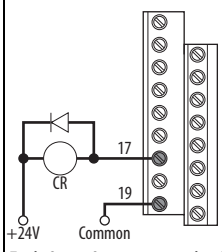

Each Opto-Output is rated 30V DC 50 mA (Non-inductive).</td></tr>
</table>

I/O	Connection Example
Analog Output[2] t088 [Analog Out Sel] determines analog output type and drive conditions. 0-10V, 1k Ω minimum 0-20 mA/4-20 mA, 525 Ω maximum	t088 [Analog Out Sel] = 0 through 23 The Analog Output Select jumper must be set to match the analog output signal mode set in t088 [Analog Out Sel]. **PowerFlex 523 Series B** **PowerFlex 525** 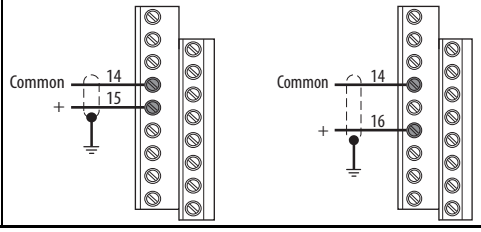

(1) Feature is specific to PowerFlex 525 drives only

(2) Feature is not applicable to PowerFlex 523 series A drives.

Typical Multiple Drive Connection Examples

Input/Output	Connection Example
Multiple Digital Input Connections Customer Inputs can be wired per External Supply (SRC).	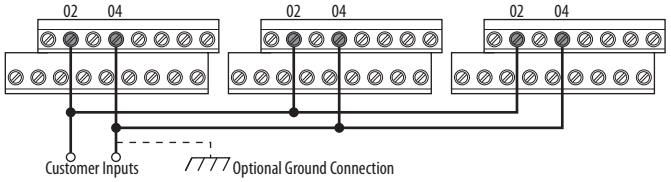 When connecting a single input such as Run, Stop, Reverse or Preset Speeds to multiple drives, it is important to connect I/O Terminal 04 common together for all drives. If they are to be tied into another common (such as earth ground or separate apparatus ground) only one point of the daisy chain of I/O Terminal 04 should be connected. **ATTENTION:** I/O Common terminals should **not** be tied together when using SNK (Internal Supply) mode. In SNK mode, if power is removed from one drive, inadvertent operation of other drives that share the same I/O Common connection may occur.
Multiple Analog Connections	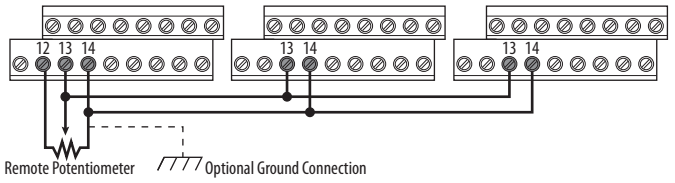 When connecting a single potentiometer to multiple drives it is important to connect I/O Terminal 14 common together for all drives. I/O Terminal 14 common and I/O Terminal 13 (potentiometer wiper) should be daisy-chained to each drive. All drives must be powered up for the analog signal to be read correctly.

Start and Speed Reference Control

Start Source and Speed Reference Selection

The start and drive speed command can be obtained from a number of different sources. By default, start source is determined by P046 [Start Source 1] and drive speed source is determined by P047 [Speed Reference1]. However, various inputs can override this selection, See below for the override priority.

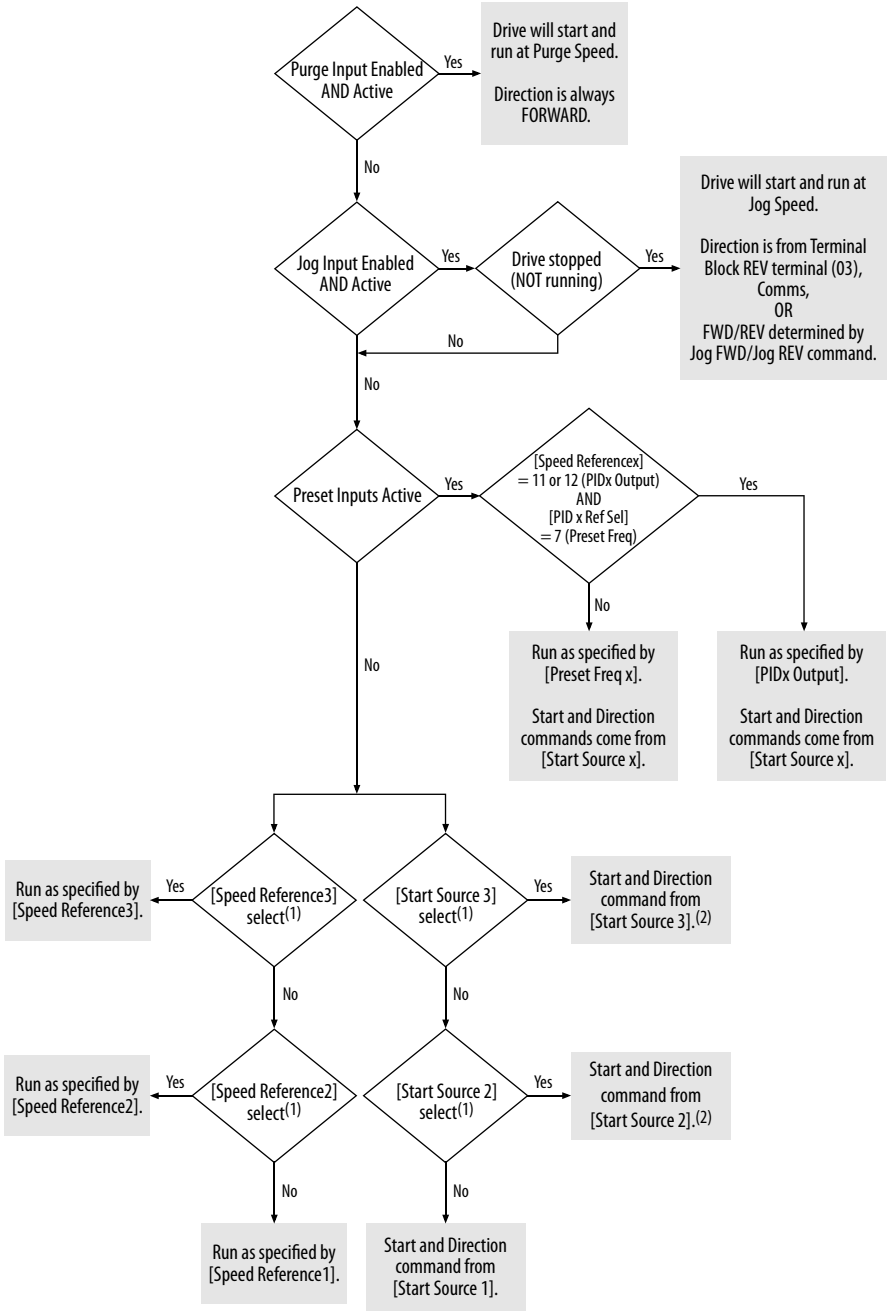

(1) [Start Source 2/3] and [Speed Reference2/3] can be selected by the control terminal block or communication commands.

(2) See Digital Input Selection for Start Source on page 50 for information on selecting the correct digital input.

Digital Input Selection for Start Source

If P046, P048 or P050 [Start Source x] has been set to 2, "DigIn TermBlk", then t062 and t063 [DigIn TermBlk xx] must be configured for 2-Wire or 3-Wire control for the drive to function properly.

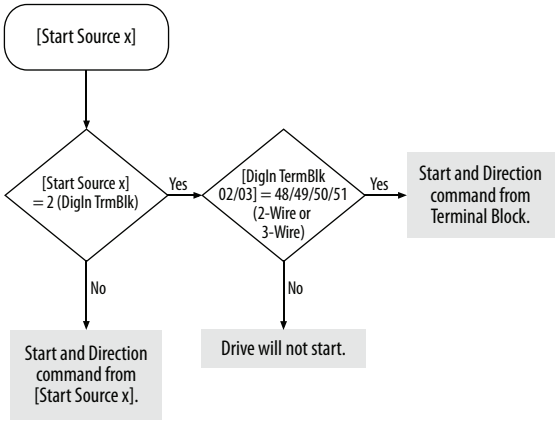

Accel/Decel Selection

The Accel/Decel rate can be obtained by a variety of methods. The default rate is determined by P041 [Accel Time 1] and P042 [Decel Time 1]. Alternative Accel/Decel rates can be made through digital inputs, communications and/or parameters. See below for the override priority.

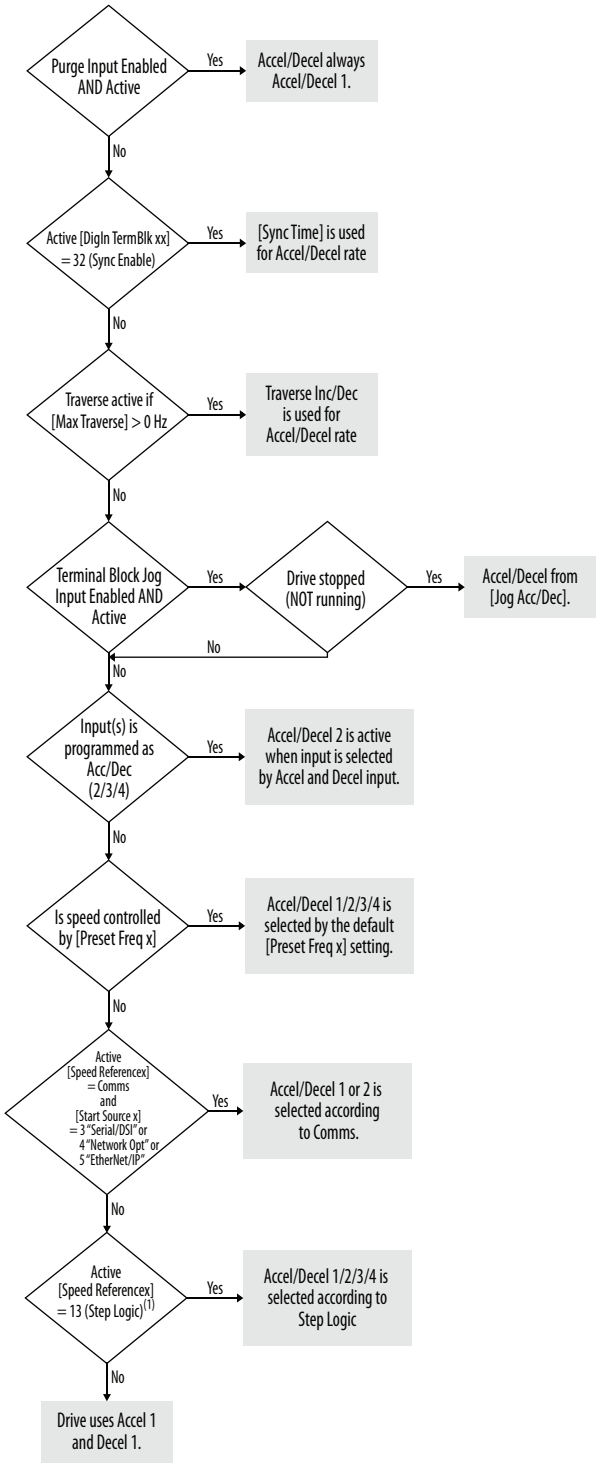

(1) Setting is specific to PowerFlex 525 drives only.

CE Conformity

Compliance with the Low Voltage Directive and Electromagnetic Compatibility Directive has been demonstrated using harmonized European Norm (EN) standards published in the Official Journal of the European Communities. PowerFlex 520-series drives comply with the EN standards listed below when installed according to the installation instructions in this manual.

CE Declarations of Conformity are available online at: http://www.rockwellautomation.com/products/certification/.

Low Voltage Directive (2006/95/EC and 2014/35/EU)

- EN 61800-5-1 Adjustable speed electrical power drive systems – Part 5-1: Safety requirements – Electrical, thermal and energy.

Pollution Degree Ratings According to EN 61800-5-1

Pollution Degree	Description
1	No pollution or only dry, non-conductive pollution occurs. The pollution has no influence.
2	Normally, only non-conductive pollution occurs. Occasionally, however, a temporary conductivity caused by condensation is to be expected, when the drive is out of operation.

EMC Directive (2004/108/EC and 2014/30/EU)

- EN 61800-3 – Adjustable speed electrical power drive systems - Part 3: EMC requirements and specific test methods

Machinery Directive (2006/42/EC)

- EN ISO 13849-1 – Safety of machinery – Safety related parts of control systems -Part 1: General principles for design
- EN 62061 – Safety of machinery – Functional safety of safety-related electrical, electronic and programmable electronic control systems
- EN 60204-1 – Safety of machinery – Electrical equipment of machines - Part 1: General requirements
- EN 61800-5-2 – Adjustable speed electrical power drive systems - Part 5-2: Safety requirement – Functional

Refer to Appendix G for installation consideration related to Machinery Directive.

ATEX Directive (94/9/EC and 2014/34/EU)

- EN 50495 – Safety devices required for the safe functioning of equipment with respect to explosion risks.

General Considerations

- For CE compliance, drives must satisfy installation requirements related to both EN 61800-5-1 and EN 61800-3 provided in this document.
- PowerFlex 520-series drives must be installed in a pollution degree 1 or 2 environment to be compliant with the CE LV Directive. See Pollution Degree Ratings According to EN 61800-5-1 on page 52 for descriptions of each pollution degree rating.
- PowerFlex 520-series drives comply with the EMC requirements of EN 61800-3 when installed according to good EMC practices and the instructions provided in this document. However, many factors can influence the EMC compliance of an entire machine or installation, and compliance of the drive itself does not ensure compliance of all applications.
- PowerFlex 520-series drives are not intended to be used on public low-voltage networks which supply domestic premises. Without additional mitigation, radio frequency interference is expected if used on such a network. The installer is responsible for taking measures such as a supplementary line filter and enclosure (see Connections and Grounding on page 55) to prevent interference, in addition to the installation requirements of this document.

ATTENTION: NEMA/UL Open Type drives must either be installed in a supplementary enclosure or equipped with a "NEMA Type 1 Kit" to be CE compliant with respect to protection against electrical shock.

- PowerFlex 520-series drives generate harmonic current emissions on the AC supply system. When operated on a public low-voltage network it is the responsibility of the installer or user to ensure that applicable requirements of the distribution network operator have been met. Consultation with the network operator and Rockwell Automation may be necessary.
- If the optional NEMA 1 kit is not installed, the drive must be installed in an enclosure with side openings less than 12.5 mm (0.5 in.) and top openings less than 1.0 mm (0.04 in.) to maintain compliance with the LV Directive.
- The motor cable should be kept as short as possible in order to avoid electromagnetic emission as well as capacitive currents.
- Use of line filters in ungrounded systems is not recommended.
- In CE installations, input power must be a Balanced Wye with Center Ground configuration for EMC compliance.

Installation Requirements Related to EN 61800-5-1 and the Low Voltage Directive

- 600V PowerFlex 520-series drives can only be used on a "center grounded" supply system for altitudes up to and including 2000 m (6562 ft).

- When used at altitudes above 2000 m (6562 ft) up to a maximum of 4800 m (15,748 ft), PowerFlex 520-series drives of voltage classes up to 480V may not be powered from a "corner-earthed" supply system in order to maintain compliance with the CE LV Directive. See Derating Guidelines for High Altitude on page 18.
- PowerFlex 520-series drives produce leakage current in the protective earthing conductor which exceeds 3.5 mA AC and/or 10 mA DC. The minimum size of the protective earthing (grounding) conductor used in the application must comply with local safety regulations for high protective earthing conductor current equipment.

ATTENTION: PowerFlex 520-series drives produce DC current in the protective earthing conductor which may reduce the ability of RCD's (residual current-operated protective devices) or RCM's (residual current-operated monitoring devices) of type A or AC to provide protection for other equipment in the installation. Where an RCD or RCM is used for protection in case of direct or indirect contact, only an RCD or RCM of Type B is allowed on the supply side of this product.

Installation Requirements Related to EN 61800-3 and the EMC Directive

- The drive must be earthed (grounded) as described in Connections and Grounding on page 55. See General Grounding Requirements on page 20 for additional grounding recommendations.
- Output power wiring to the motor must employ cables with a braided shield providing 75% or greater coverage, or the cables must be housed in metal conduit, or equivalent shield must be provided. Continuous shielding must be provided from the drive enclosure to the motor enclosure. Both ends of the motor cable shield (or conduit) must terminate with a low-impedance connection to earth.
  Drive Frames A...E: At the drive end of the motor, either
  a. The cable shield must be clamped to a properly installed "EMC Plate" for the drive. Kit number 25-EMC1-Fx.
     or
  b. The cable shield or conduit must terminate in a shielded connector installed in an EMC plate, conduit box, or similar.
- At the motor end, the motor cable shield or conduit must terminate in a shielded connector which must be properly installed in an earthed motor wiring box attached to the motor. The motor wiring box cover must be installed and earthed.
- All control (I/O) and signal wiring to the drive must use cable with a braided shield providing 75% or greater coverage, or the cables must be housed in metal conduit, or equivalent shielding must be provided. When shielded cable is used, the cable shield should be terminated with a low impedance connection to earth at only one end of the cable, preferably the end where the receiver is located. When the cable shield is terminated at the drive end, it may be terminated either by using a shielded connector in conjunction with a conduit plate or conduit box, or the shield may be clamped to an "EMC plate."

- Motor cabling must be separated from control and signal wiring wherever possible.
- Maximum motor cable length must not exceed the maximum length indicated in PowerFlex 520-Series RF Emission Compliance and Installation Requirements on page 55 for compliance with radio frequency emission limits for the specific standard and installation environment.

Connections and Grounding

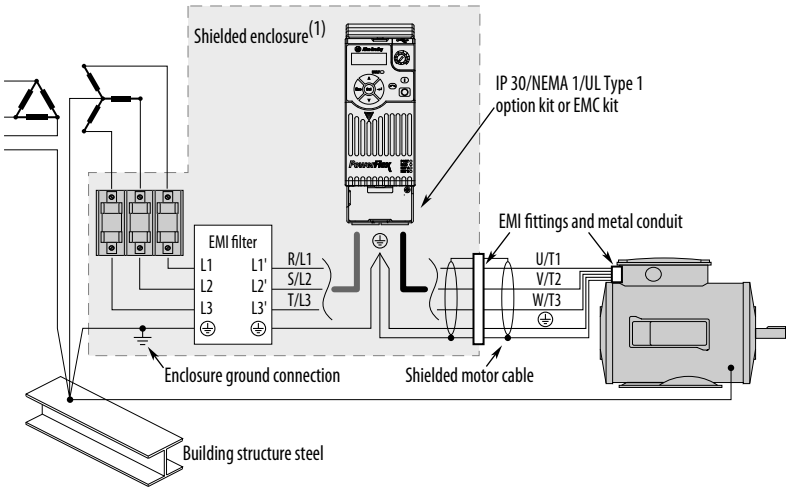

(1) Some installations require a shielded enclosure. Keep wire length as short as possible between the enclosure entry point and the EMI filter.

PowerFlex 520-Series RF Emission Compliance and Installation Requirements

Filter Type	Standard/Limits		
	EN61800-3 Category C1 EN61000-6-3 CISPR11 Group 1 Class B	**EN61800-3 Category C2 EN61000-6-4 CISPR11 Group 1 Class A (Input power ≤ 20 kVA)**	**EN61800-3 Category C3 (I ≤ 100 A) CISPR11 Group 1 Class A (Input power > 20 kVA)**
Internal	–	10 m (33 ft)	20 m (66 ft)
External(1)	30 m (16 ft)	100 m (328 ft)	100 m (328 ft)

(1) See Appendix B for more information on optional external filters.

Additional Installation Requirements

This section provides information on additional requirements for category C1 and C2 installation, such as enclosures and EMC cores.

IMPORTANT EMC cores are included with:

- drives that have an internal EMC filter (25x-xxxxN114)
- external EMC filter accessory kit (25-RFxxx)

IMPORTANT An enclosure, shielded input cable, and EMC cores are not required to meet category C3 requirements.

Additional Installation Requirements

Frame Size	Category C1			Category C2		
	Enclosure	Conduit or Shielded Cable @ Input	EMC Cores Required (Included with product)	Enclosure	Conduit or Shielded Cable @ Input	EMC Cores Required (Included with product)
100...120V AC (-15%, +10%) – 1-Phase Input with External EMC Filter, 0...120V 1-Phase Output						
A	No	No	No	No	No	No
B	No	No	No	No	No	No
200...240V AC (-15%, +10%) – 1-Phase Input with External EMC Filter, 0...230V 3-Phase Output						
A	Yes	Yes	No	No	No	Input/Output
B	Yes	Yes	Output only	No	No	Input/Output
200...240V AC (-15%, +10%) – 1-Phase Input with Internal EMC Filter, 0...230V 3-Phase Output(1)						
A	*	*	*	Yes	No	No
B	*	*	*	Yes	No	No
200...240V AC (-15%, +10%) – 3-Phase Input with External EMC Filter, 0...230V 3-Phase Output						
A	Yes	Yes	Output only	No	No	Input/Output
B	Yes	Yes	Output only	No	No	Input/Output
C	Yes	Yes	Output only	No	No	Input/Output
D	Yes	Yes	No	No	No	Input only
E	Yes	Yes	Output only	No	No	Input only
380...480V AC (-15%, +10%) – 3-Phase Input with External EMC Filter, 0...460V 3-Phase Output						
A	Yes	Yes	No	No	No	Input/Output
B	Yes	Yes	No	No	No	Input/Output
C	Yes	Yes	No	No	No	Input only
D	Yes	Yes	Output only	No	No	Input/Output
E	Yes	Yes	No	Yes	No	Input/Output
380...480V AC (-15%, +10%) – 3-Phase Input with Internal EMC Filter, 0...460V 3-Phase Output(1)						
A	*	*	*	No	No	Input/Output
B	*	*	*	No	No	Input/Output
C	*	*	*	No	No	Input/Output
D	*	*	*	No	No	Input/Output
E	*	*	*	No	No	Input/Output
525...600V AC (-15%, +10%) – 3-Phase Input with External EMC Filter, 0...575V 3-Phase Output						
A	Yes	Yes	No	No	No	Input/Output
B	Yes	Yes	No	No	No	Input/Output
C	Yes	Yes	No	No	No	Input/Output
D	Yes	Yes	No	No	No	Input/Output
E	Yes	Yes	No	Yes	No	No

(1) An (*) indicates that EMC requirements are not met.

Recommended Placement of EMC Cores

Frame A	Frame B	Frame C	Frame D	Frame E
With optional EMC plate (25-EMC-Fx)				
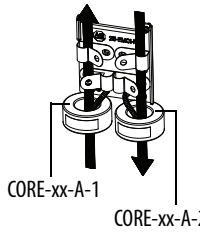	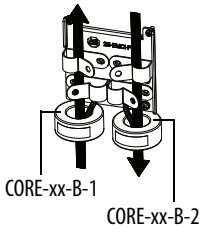	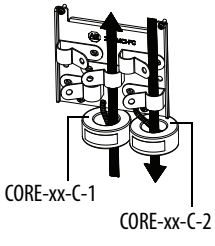	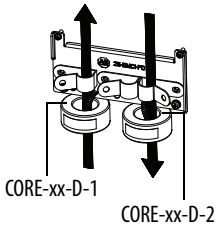	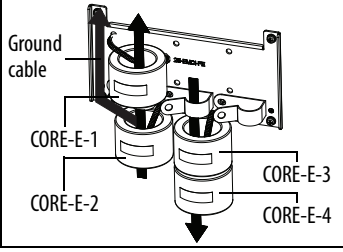
Without EMC plate				
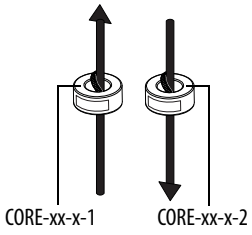				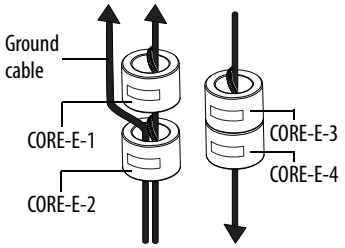

Input cable to drive (Shielded or Unshielded) Output cable from drive (Shielded)

Shows contact to shielded layer

Secure EMC core by using cable/zip ties

IMPORTANT The ground cable/shield for both input and output must pass through the EMC core(s), except for the following:

- Frame E drives with internal filters where the grounded input cable must not pass through EMC CORE-E-1.
- 600V drives with external filters where the grounded output cable must not pass through the EMC core(s).

Recommended Placement of EMC Cores Relative to External Filter

All Frame sizes

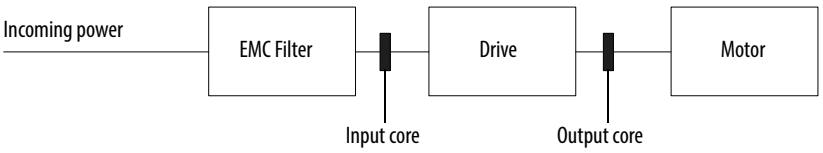

Notes:

Start Up

This chapter describes how to start up the PowerFlex 520-series drive. To simplify drive setup, the most commonly programmed parameters are organized in a single Basic Program Group.

For information on...	See page...
Prepare for Drive Start-Up	59
Display and Control Keys	62
Viewing and Editing Parameters	63
Drive Programming Tools	64
Smart Start-Up with Basic Program Group Parameters	65
LCD Display with QuickView Technology	67
Using the USB Port	67

IMPORTANT Read the *General Precautions* section before proceeding.

ATTENTION: Power must be applied to the drive to perform the following start-up procedures. Some of the voltages present are at incoming line potential. To avoid electric shock hazard or damage to equipment, only qualified service personnel should perform the following procedure. Thoroughly read and understand the procedure before beginning. If an event does not occur while performing this procedure, **Do Not Proceed. Remove All Power** including user supplied control voltages. User supplied voltages may exist even when main AC power is not applied to the drive. Correct the malfunction before continuing.

Prepare for Drive Start-Up

Drive Startup Task List

1. Disconnect and lock out power to the machine.
2. Verify that AC line power at the disconnect device is within the rated value of the drive.
3. If replacing a drive, verify the current drive's catalog number. Verify all options installed on the drive.
4. Verify that any digital control power is 24 volts.
5. Inspect grounding, wiring, connections, and environmental compatibility.

6. Verify that the Sink (SNK)/Source (SRC) jumper is set to match your control wiring scheme. See the PowerFlex 523 Control I/O Wiring Block Diagram on page 38 and PowerFlex 525 Control I/O Wiring Block Diagram on page 42 for location.

IMPORTANT The default control scheme is Source (SRC). The Stop terminal is jumpered to allow starting from the keypad or comms. If the control scheme is changed to Sink (SNK), the jumper must be removed from I/O Terminals 01 and 11 and installed between I/O Terminals 01 and 04.

7. Wire I/O as required for the application.
8. Wire the power input and output terminals.
9. Confirm that all inputs are connected to the correct terminals and are secure.
10. Collect and record motor nameplate and encoder or feedback device information. Verify motor connections.
    - Is the motor uncoupled?
    - What direction will the motor need to turn for the application?
11. Verify the input voltage to the drive. Verify if the drive is on a grounded system. Ensure the MOV jumpers are in the correct position. See AC Supply Source Considerations on page 19 for more information.
12. Apply power and reset the drive and communication adapters to factory default settings. To reset the drive, see parameter P053 [Reset to Defalts]. To reset the communication adapters, see the user manual of the adapter for more information.
13. Configure the basic program parameters related to the motor. See Smart Start-Up with Basic Program Group Parameters on page 65.
14. Complete the autotune procedure for the drive. See parameter P040 [Autotune] for more information.
15. If you are replacing a drive and have a backup of the parameter settings obtained using the USB utility application, use the USB utility application to apply the backup to the new drive. See Using the USB Port on page 67 for more information.

    Otherwise, set the necessary parameters for your application using the LCD keypad interface, Connected Components Workbench, or RSLogix or Logix Designer if using an Add-on Profile through EtherNet/IP.
    - Configure the communication parameters needed for the application (node number, IP address, Datalinks in and out, communication rate, speed reference, start source, and so on). Record these settings for your reference.
    - Configure the other drive parameters needed for the drive analog and digital I/O to work correctly. Verify the operation. Record these settings for your reference.

16. Verify the drive and motor perform as specified.
    - Verify that the Stop input is present or the drive will not start.

    IMPORTANT If I/O Terminal 01 is used as a stop input, the jumper between I/O Terminals 01 and 11 must be removed.

    - Verify the drive is receiving the speed reference from the correct place and that the reference is scaled correctly.
    - Verify the drive is receiving start and stop commands correctly.
    - Verify input currents are balanced.
    - Verify motor currents are balanced.
17. Save a backup of the drive settings using the USB utility application. See Using the USB Port on page 67 for more information.

Start, Stop, Direction and Speed Control

Factory default parameter values allow the drive to be controlled from the keypad. No programming is required to start, stop, change direction and control speed directly from the keypad.

IMPORTANT To disable reverse operation, see A544 [Reverse Disable].

If a fault appears on power up, see Fault Descriptions on page 159 for an explanation of the fault code.

Variable Torque Fan/Pump Applications

For improved motor and drive performance, tune the motor in SVC mode using parameter P040 [Autotune]. If V/Hz mode is selected, use parameter A530 [Boost Select] to adjust the boost.

Display and Control Keys

PowerFlex 523

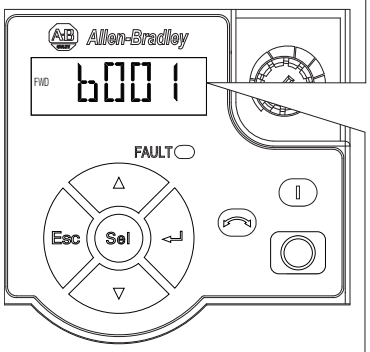

PowerFlex 525

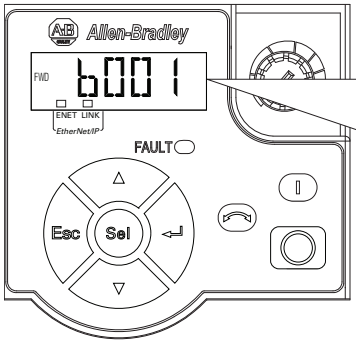

Menu	Parameter Group and Description
b	**Basic Display** Commonly viewed drive operating conditions.
P	**Basic Program** Commonly used programmable functions.
t	**Terminal Blocks** Programmable terminal functions.
C	**Communications** Programmable communication functions.
L	**Logic (PowerFlex 525 only)** Programmable logic functions.
d	**Advanced Display** Advanced drive operating conditions.
A	**Advanced Program** Remaining programmable functions.
N	**Network** Network functions that are shown only when a comm card is used.
M	**Modified** Functions from the other groups with values changed from default.
F	**Fault and Diagnostic** Consists of list of codes for specific fault conditions.
G	**AppView and CustomView** Functions from the other groups organized for specific applications.

Control and Navigation Keys

Display	Display State	Description
ENET (PowerFlex 525 only)	Off	Adapter is not connected to the network.
	Steady	Adapter is connected to the network and drive is controlled through Ethernet.
	Flashing	Adapter is connected to the network but drive is not controlled through Ethernet.
LINK (PowerFlex 525 only)	Off	Adapter is not connected to the network.
	Steady	Adapter is connected to the network but not transmitting data.
	Flashing	Adapter is connected to the network and transmitting data.

LED	LED State	Description
FAULT	Flashing Red	Indicates drive is faulted.

Key	Name	Description
	Up Arrow Down Arrow	Scroll through user-selectable display parameters or groups. Increment values.
	Escape	Back one step in programming menu. Cancel a change to a parameter value and exit Program Mode.
	Select	Advance one step in programming menu. Select a digit when viewing parameter value.
	Enter	Advance one step in programming menu. Save a change to a parameter value.

Key	Name	Description
	Reverse	Used to reverse direction of the drive. Default is active. Controlled by parameters P046, P048 and P050 [Start Source x] and A544 [Reverse Disable].
	Start	Used to start the drive. Default is active. Controlled by parameters P046, P048 and P050 [Start Source x].
	Stop	Used to stop the drive or clear a fault. This key is always active. Controlled by parameter P045 [Stop Mode].
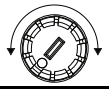	Potentiometer	Used to control speed of drive. Default is active. Controlled by parameters P047, P049 and P051 [Speed Referencex].

Viewing and Editing Parameters

The following is an example of basic integral keypad and display functions. This example provides basic navigation instructions and illustrates how to program a parameter.

Step	Key(s)	Example Display
1. When power is applied, the last user-selected Basic Display Group parameter number is briefly displayed with flashing characters. The display then defaults to that parameter's current value. (Example shows the value of b001 [Output Freq] with the drive stopped.)		
2. Press Esc to display the Basic Display Group parameter number shown on power-up. The parameter number will flash.		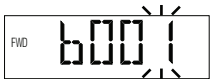
3. Press Esc to enter the parameter group list. The parameter group letter will flash.		
4. Press the Up Arrow or Down Arrow to scroll through the group list (b, P, t, C, L, d, A, f and Gx).	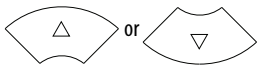	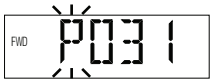
5. Press Enter or Sel to enter a group. The right digit of the last viewed parameter in that group will flash.	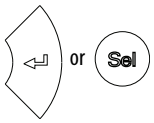	
6. Press the Up Arrow or Down Arrow to scroll through the parameter list.	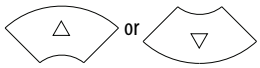	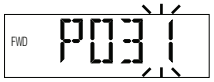
7. Press Enter to view the value of the parameter. Or Press Esc to return to the parameter list.	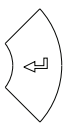	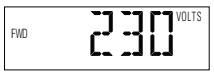
8. Press Enter or Sel to enter Program Mode and edit the value. The right digit will flash and the word Program on the LCD display will light up.	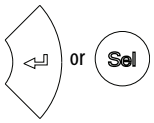	
9. Press the Up Arrow or Down Arrow to change the parameter value.	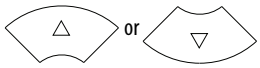	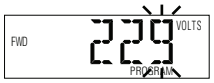

Step	Key(s)	Example Display
10. If desired, press Sel to move from digit to digit or bit to bit. The digit or bit that you can change will flash. 11. Press Esc to cancel a change and exit Program Mode. Or Press Enter to save a change and exit Program Mode. The digit will stop flashing and the word Program on the LCD display will turn off. 12. Press Esc to return to the parameter list. Continue to press Esc to back out of the programming menu. If pressing Esc does not change the display, then b001 [Output Freq] is displayed. Press Enter or Sel to enter the group list again.	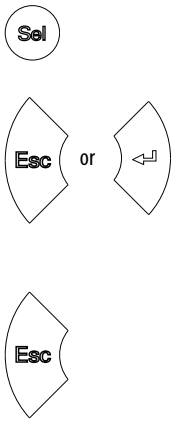	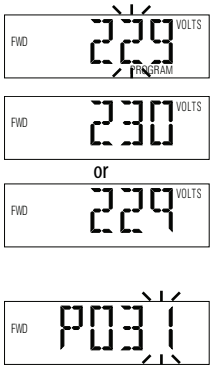

Drive Programming Tools

Some features in the PowerFlex 520-series drive are not supported by older configuration software tools. It is strongly recommended that customers using such tools migrate to RSLogix 5000 (version 17.0 or greater) or Logix Designer (version 21.0 or greater) with Add-On-Profile (AOP), or Connected Components Workbench (version 5.0 or greater) to enjoy a richer, full-featured configuration experience. For Automatic Device Configuration (ADC) support, RSLogix 5000 version 20.0 or greater is required.

Description	Catalog Number/Release Version
Connected Components Workbench(1)	Version 5.0 or greater
Logix Designer	Version 21.0 or greater
RSLogix 5000	Version 17.0 or greater
Built-in USB software tool	–
Serial Converter Module(2)	22-SCM-232
USB Converter Module(2)	1203-USB
Remote Panel Mount, LCD Display(2)	22-HIM-C2S
Remote Handheld, LCD Display(2)	22-HIM-A3

(1) Available as a free download at http://ab.rockwellautomation.com/programmable-controllers/connected-components-workbench-software.

(2) Does not support the new dynamic parameter groups (AppView, CustomView), and CopyCat functionality is limited to the linear parameter list.

Language Support

Language	Keypad/LCD Display	RSLogix 5000/ Logix Designer	Connected Components Workbench
English	Y	Y	Y
French	Y	Y	Y
Spanish	Y	Y	Y
Italian	Y	Y	Y
German	Y	Y	Y
Japanese	–	Y	–
Portuguese	Y	Y	–
Chinese Simplified	–	Y	Y
Korean	–	Y	–

Language	Keypad/LCD Display	RSLogix 5000/ Logix Designer	Connected Components Workbench
Polish(1)	Y	–	–
Turkish(1)	Y	–	–
Czech(1)	Y	–	–

(1) Due to a limitation of the LCD Display, some of the characters for Polish, Turkish, and Czech will be modified.

Smart Start-Up with Basic Program Group Parameters

The PowerFlex 520-series drive is designed so that start up is simple and efficient. The Basic Program Group contains the most commonly used parameters. See Programming and Parameters on page 71 for detailed descriptions of the parameters listed here, as well as the full list of available parameters.

= Stop drive before changing this parameter.
PF 525 = Parameter is specific to PowerFlex 525 drives only.

No.	Parameter	Min/Max	Display/Options	Default
P030	[Language]	1/15	1 = English 2 = Français 3 = Español 4 = Italiano 5 = Deutsch 6 = Reserved 7 = Português 8 = Reserved 9 = Reserved 10 = Reserved 11 = Reserved 12 = Polish 13 = Reserved 14 = Turkish 15 = Czech	1
	Selects the language displayed. **Important:** The setting takes effect after the drive is power cycled.			
P031	[Motor NP Volts]	10V (for 200V Drives), 20V (for 400V Drives), 25V (for 600V Drives)/Drive Rated Volts	1V	Based on Drive Rating
	Sets the motor nameplate rated volts.			
P032	[Motor NP Hertz]	15/500 Hz	1 Hz	60 Hz
	Sets the motor nameplate rated frequency.			
P033	[Motor OL Current]	0.0/(Drive Rated Amps x 2)	0.1 A	Based on Drive Rating
	Sets the motor nameplate overload current.			
P034	[Motor NP FLA]	0.0/(Drive Rated Amps x 2)	0.1 A	Drive Rated Amps
	Sets the motor nameplate FLA.			
P035	[Motor NP Poles]	2/40	1	4
	Sets the number of poles in the motor.			
P036	[Motor NP RPM]	0/24000 rpm	1 rpm	1750 rpm
	Sets the rated nameplate rpm of motor.			
P037 PF 525	[Motor NP Power]	0.00/Drive Rated Power	0.01 kW	Drive Rated Power
	Sets the motor nameplate power. Used in PM regulator.			
P038	[Voltage Class]	2/3	2 = “480V” 3 = “600V”	3
	Sets the voltage class of 600V drives. Only applicable to 600V drives.			

= Stop drive before changing this parameter.
PF 525 = Parameter is specific to PowerFlex 525 drives only.

No.	Parameter	Min/Max	Display/Options	Default
P039	[Torque Perf Mode]	0/4	0 = "V/Hz" 1 = "SVC" 2 = "Economize" 3 = "Vector"(1) 4 = "PM Control"(1)(2)(3)	1
	Selects the motor control mode. (1) Setting is specific to PowerFlex 525 drives only. (2) Setting is available in PowerFlex 525 FRN 5.xxx and later. (3) When P039 [Torque Perf Mode] is set to 4 and A535 [Motor Fdbk Type] is set to 0, 1, 2 or 3, the drive is in open loop PM motor control mode. When P039 [Torque Perf Mode] is set to 4 and A535 [Motor Fdbk Type] is set to 4 or 5, the drive is in closed loop PM motor control mode.			
P040	[Autotune]	0/2	0 = "Ready/Idle" 1 = "Static Tune" 2 = "Rotate Tune"	0
	Enables a static (not spinning) or dynamic (motor spinning) autotune.			
P041	[Accel Time 1]	0.00/600.00 s	0.01 s	10.00 s
	Sets the time for the drive to accel from 0 Hz to [Maximum Freq].			
P042	[Decel Time 1]	0.00/600.00 s	0.01 s	10.00 s
	Sets the time for the drive to decel from [Maximum Freq] to 0 Hz.			
P043	[Minimum Freq]	0.00/500.00 Hz	0.01 Hz	0.00 Hz
	Sets the lowest frequency the drive outputs.			
P044	[Maximum Freq]	0.00/500.00 Hz	0.01 Hz	60.00 Hz
	Sets the highest frequency the drive outputs.			
P045	[Stop Mode]	0/11	0 = "Ramp, CF"(1) 1 = "Coast, CF"(1) 2 = "DC Brake, CF"(1) 3 = "DCBrkAuto,CF"(1) 4 = "Ramp" 5 = "Coast" 6 = "DC Brake" 7 = "DC BrakeAuto" 8 = "Ramp+EM B,CF"(1) 9 = "Ramp+EM Brk" 10 = "PointStp,CF"(1) 11 = "PointStop"	0
	Stop command for normal stop. **Important:** I/O Terminal 01 is always a stop input. The stopping mode is determined by the drive setting. **Important:** The drive is shipped with a jumper installed between I/O Terminals 01 and 11. Remove this jumper when using I/O Terminal 01 as a stop or enable input. (1) Stop input also clears active fault.			
P046, P048, P050	[Start Source 1]	1/5	1 = "Keypad"(1) 2 = "DigIn TrmBlk"(2) 3 = "Serial/DSI" 4 = "Network Opt" 5 = "Ethernet/IP"(3)	P046 = 1 P048 = 2 P050 = 3 (PowerFlex 523) 5 (PowerFlex 525)
	Sets the default control scheme used to start the drive unless overriden by P048 [Start Source 2] or P050 [Start Source 3]. (1) When active, the Reverse key is also active unless disabled by A544 [Reverse Disable]. (2) If "DigIn TrmBlk" is selected, ensure that the digital inputs are properly configured. (3) Setting is specific to PowerFlex 525 drives only.			

= Stop drive before changing this parameter.
PF 525 = Parameter is specific to PowerFlex 525 drives only.

No.	Parameter	Min/Max	Display/Options	Default
P047, P049, P051	[Speed Reference1] Sets the default speed command of the drive unless overridden by P049 [Speed Reference2] or P051 [Speed Reference3]. (1) Setting is specific to PowerFlex 525 drives only.	1/16	1 = "Drive Pot" 2 = "Keypad Freq" 3 = "Serial/DSI" 4 = "Network Opt" 5 = "0-10V Input" 6 = "4-20mA Input" 7 = "Preset Freq" 8 = "Anlg In Mult"(1) 9 = "MOP" 10 = "Pulse Input" 11 = "PID1 Output" 12 = "PID2 Output"(1) 13 = "Step Logic"(1) 14 = "Encoder"(1) 15 = "Ethernet/IP"(1) 16 = "Positioning"(1)	P047 = 1 P049 = 5 P051 = 3 (PowerFlex 523) 15 (PowerFlex 525)
P052	[Average kWh Cost] Sets the average cost per kWh.	0.00/655.35	0.01	0.00
P053	[Reset To Defalts] Resets parameters to their factory defaults values. After a Reset command, the value of this parameter returns to zero. (1) Power cycle of the drive, **NO** parameters are reset. (2) Setting is available in PowerFlex 525 FRN 5.xxx and later. (3) Setting is available in PowerFlex 523 FRN 3.xxx and later.	0/4	0 = "Ready/Idle" 1 = "Param Reset" 2 = "Factory Rset" 3 = "Power Reset" 4 = "Module Reset"(1)(2)(3)	0

LCD Display with QuickView Technology

QuickView™ technology enables text to scroll across the LCD display of the PowerFlex 520-series drive. This allows you to easily configure parameters, troubleshoot faults and view diagnostic items without using a separate device.

Use parameter A556 [Text Scroll] to set the speed at which the text scrolls across the display. Select 0 "Off" to turn off text scrolling. See Language Support on page 64 for the languages supported by the PowerFlex 520-series drive.

Using the USB Port

The PowerFlex 520-series drive has a USB port that connects to a PC for the purpose of upgrading drive firmware or uploading/downloading a parameter configuration.

IMPORTANT To use the USB feature of the PowerFlex 520-series drive, Microsoft .Net Framework 2.0 and Windows XP or later is required.

MainsFree Programming

The MainsFree™ programming feature allows you to quickly configure your PowerFlex 520-series drive without having to power up the control module or install additional software. Simply connect the control module to your PC with a USB Type B cable and you can download a parameter configuration to your drive. You can also easily upgrade your drive with the latest firmware.

Connecting a PowerFlex 520-series drive to a PC

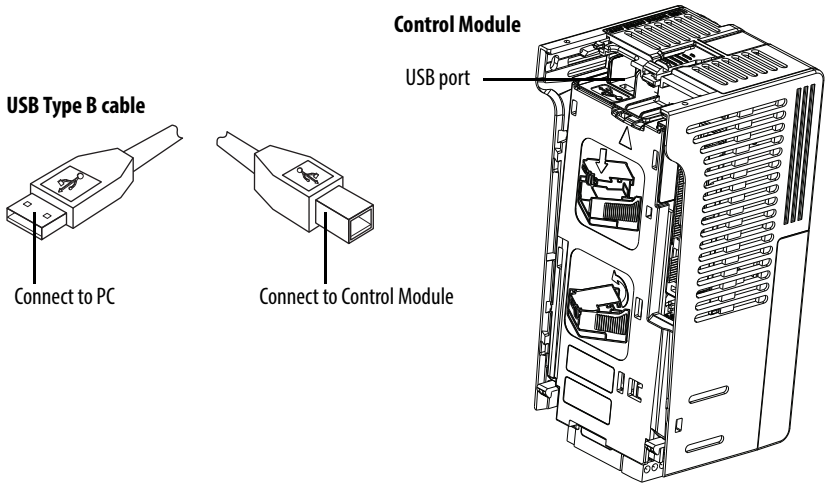

When connected, the drive appears on the PC and contains two files:

- GUIDE.PDF
  This file contains links to relevant product documentation and software downloads.
- PF52XUSB.EXE
  This file is an application to flash upgrade firmware or upload/download a parameter configuration.

  It is not possible to delete these files or add more to the drive.

Double-click on the PF52XUSB.EXE file to launch the USB utility application. The main menu is displayed. Follow the program instructions to upgrade the firmware or upload/download configuration data.

IMPORTANT Make sure your PC is powered by an AC power outlet or has a fully charged battery before starting any operation. This prevents the operation from terminating before completion due to insufficient power.

Limitation in Downloading .pf5 Configuration Files with the USB Utility Application

Before downloading a .pf5 configuration file using the USB utility application, parameter C169 [MultiDrv Sel] in the destination drive must match the incoming configuration file. If it does not, set the parameter manually to match and then cycle drive power. Also, the drive type of the .pf5 file must match the drive.

This means you cannot apply a multi-drive configuration using the USB utility application to a drive in single mode (parameter C169 [MultiDrv Sel] set to 0 “Disabled”), or apply a single mode configuration to a drive in multi-drive mode.

Notes:

Programming and Parameters

This chapter provides a complete listing and description of the PowerFlex 520-series drive parameters. Parameters are programmed (viewed/edited) using either the drive's built-in keypad, RSLogix 5000 version 17.0 or greater, Logix Designer version 21.0 or greater, o r Connected Components Workbench version 5.0 or greater software. The Connected Components Workbench software can be used offline (through USB) to upload parameter configurations to the drive or online (through Ethernet connection).

Limited functionality is also available when using the Connected Components Workbench software online (through DSI and serial converter module), a legacy external HIM, or legacy software online (DriveTools SP™). When using these methods, the parameter list can only be displayed linearly, and there is no access to communications option card programming.

For information on...	See page...
About Parameters	71
Parameter Groups	73
Basic Display Group	78
Basic Program Group	83
Terminal Block Group	89
Communications Group	101
Logic Group	107
Advanced Display Group	110
Advanced Program Group	115
Network Parameter Group	141
Modified Parameter Group	142
Fault and Diagnostic Group	142
AppView Parameter Groups	150
CustomView Parameter Group	151
Parameter Cross Reference by Name	152

About Parameters

To configure a drive to operate in a specific way, drive parameters may have to be set. Three types of parameters exist:

- **ENUM**
  ENUM parameters allow a selection from 2 or more items. Each item is represented by a number.
- **Numeric Parameters**
  These parameters have a single numerical value (0.1V).

- **Bit Parameters**
  Bit parameters have five individual digits associated with features or conditions. If the digit is 0, the feature is off or the condition is false. If the digit is 1, the feature is on or the condition is true.

Some parameters are marked as follows.

= Stop drive before changing this parameter.

= 32 bit parameter.

= Parameter is specific to PowerFlex 525 drives only.

32-bit Parameters

Parameters marked 32-bit will have two parameter numbers when using RS485 communications and programming software. For example, parameters b010 [Process Display] and b011 [Process Fract] are scaled and displayed as follows.

- P043 [Minimum Freq] = 0 Hz
- P044 [Maximum Freq] = 60 Hz
- A481 [Process Display Lo] = 0
- A482 [Process Display Hi] = 10

Using the forumla,

$$\text{Scaled Process Value (PV)} = \frac{([\text{Process Disp Hi}] - [\text{Process Disp Lo}]) \times ([\text{Output Freq}] - [\text{Minimum Freqp}])}{[\text{Maximum Freq}] - [\text{Minimum Freq}]}$$

when the drive is running at 10 Hz, the Process Value will be 1.66.

On the drive LCD display, only parameter b010 [Process Display] is shown.

In Connected Components Workbench software, parameter b010 [Process Display] and b011 [Process Fract] are shown separately.

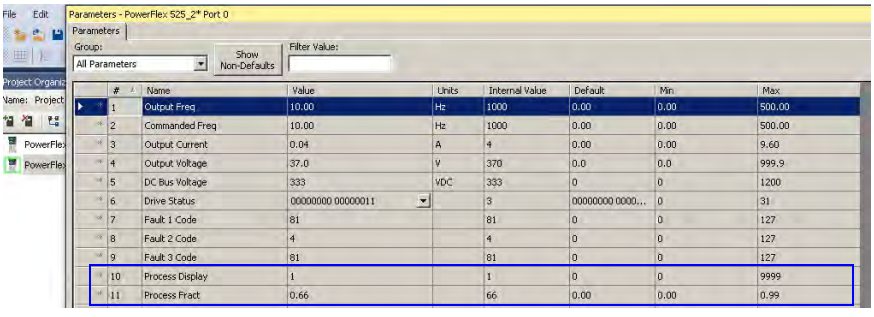

Parameter Groups

For an alphabetical listing of parameters, see Parameter Cross Reference by Name on page 152.

Basic Display		Output Voltage	b004	Control Source	b012	Elapsed Run Time	b019	Accum CO2 Sav	b026
		DC Bus Voltage	b005	Contrl In Status	b013	Average Power	b020	Drive Temp	b027
		Drive Status	b006	Dig In Status	b014	Elapsed kWh	b021	Control Temp	b028
		Fault 1 Code	b007	Output RPM	b015	Elapsed MWh	b022	Control SW Ver	b029
Output Freq	b001	Fault 2 Code	b008	Output Speed	b016	Energy Saved	b023		
Commanded Freq	b002	Fault 3 Code	b009	Output Power	b017	Accum kWh Sav	b024		
Output Current	b003	Process Display	b010	Power Saved	b018	Accum Cost Sav	b025		
Basic Program		Motor NP Hertz	P032	Voltage Class	P038	Maximum Freq	P044	Start Source 3	P050
		Motor OL Current	P033	Torque Perf Mode	P039	Stop Mode	P045	Speed Reference3	P051
		Motor NP FLA	P034	Autotune	P040	Start Source 1	P046	Average kWh Cost	P052
		Motor NP Poles	P035	Accel Time 1	P041	Speed Reference1	P047	Reset To Defalts	P053
Language	P030	Motor NP RPM	P036	Decel Time 1	P042	Start Source 2	P048		
Motor NP Volts	P031	Motor NP Power[1]	P037	Minimum Freq	P043	Speed Reference2	P049		
Terminal Blocks		DigIn TermBlk 07[1]	t067	Relay 1 On Time	t079	Analog Out High[2]	t089	Anlg Loss Delay	t098
		DigIn TermBlk 08[1]	t068	Relay 1 Off Time	t080	Anlg Out Setpt[2]	t090	Analog In Filter	t099
		Opto Out1 Sel[1]	t069	Relay Out2 Sel[1]	t081	Anlg In 0-10V Lo	t091	Sleep-Wake Sel	t100
		Opto Out1 Level[1]	t070	Relay Out2 Level[1]	t082	Anlg In 0-10V Hi	t092	Sleep Level	t101
DigIn TermBlk 02	t062	Opto Out2 Sel[1]	t072	Relay 2 On Time[1]	t084	10V Bipolar Enbl[1]	t093	Sleep Time	t102
DigIn TermBlk 03	t063	Opto Out2 Level[1]	t073	Relay 2 Off Time[1]	t085	Anlg In V Loss	t094	Wake Level	t103
2-Wire Mode	t064	Opto Out Logic[1]	t075	EM Brk Off Delay	t086	Anlg In4-20mA Lo	t095	Wake Time	t104
DigIn TermBlk 05	t065	Relay Out1 Sel	t076	EM Brk On Delay	t087	Anlg In4-20mA Hi	t096	Safety Open En[1]	t105
DigIn TermBlk 06	t066	Relay Out1 Level	t077	Analog Out Sel[2]	t088	Anlg In mA Loss	t097	SafetyFlt RstCfg[1][3]	t106
Communications		EN Addr Sel[1]	C128	EN Gateway Cfg 3[1]	C139	EN Data In 1[1]	C153	Opt Data In 4	C164
		EN IP Addr Cfg 1[1]	C129	EN Gateway Cfg 4[1]	C140	EN Data In 2[1]	C154	Opt Data Out 1	C165
		EN IP Addr Cfg 2[1]	C130	EN Rate Cfg[1]	C141	EN Data In 3[1]	C155	Opt Data Out 2	C166
		EN IP Addr Cfg 3[1]	C131	EN Comm Flt Actn[1]	C143	EN Data In 4[1]	C156	Opt Data Out 3	C167
Comm Write Mode	C121	EN IP Addr Cfg 4[1]	C132	EN Idle Flt Actn[1]	C144	EN Data Out 1[1]	C157	Opt Data Out 4	C168
Cmd Stat Select[1]	C122	EN Subnet Cfg 1[1]	C133	EN Flt Cfg Logic[1]	C145	EN Data Out 2[1]	C158	MultiDrv Sel	C169
RS485 Data Rate	C123	EN Subnet Cfg 2[1]	C134	EN Flt Cfg Ref[1]	C146	EN Data Out 3[1]	C159	Drv 1 Addr	C171
RS485 Node Addr	C124	EN Subnet Cfg 3[1]	C135	EN Flt Cfg DL 1[1]	C147	EN Data Out 4[1]	C160	Drv 2 Addr	C172
Comm Loss Action	C125	EN Subnet Cfg 4[1]	C136	EN Flt Cfg DL 2[1]	C148	Opt Data In 1	C161	Drv 3 Addr	C173
Comm Loss Time	C126	EN Gateway Cfg 1[1]	C137	EN Flt Cfg DL 3[1]	C149	Opt Data In 2	C162	Drv 4 Addr	C174
RS485 Format	C127	EN Gateway Cfg 2[1]	C138	EN Flt Cfg DL 4[1]	C150	Opt Data In 3	C163	DSI I/O Cfg	C175
Logic[1]		Stp Logic 2	L182	Stp Logic Time 0	L190	Stp Logic Time 6	L196	Step Units 4	L208
		Stp Logic 3	L183	Stp Logic Time 1	L191	Stp Logic Time 7	L197	Step Units 5	L210
		Stp Logic 4	L184	Stp Logic Time 2	L192	Step Units 0	L200	Step Units 6	L212
		Stp Logic 5	L185	Stp Logic Time 3	L193	Step Units 1	L202	Step Units 7	L214
Stp Logic 0	L180	Stp Logic 6	L186	Stp Logic Time 4	L194	Step Units 2	L204		
Stp Logic 1	L181	Stp Logic 7	L187	Stp Logic Time 5	L195	Step Units 3	L206		
Advanced Display		Elapsed Time-min	d363	Speed Feedback	d376	PID2 Fdbk Displ[1]	d385	RdyBit Mode Act[2][4]	d392
		Counter Status	d364	Encoder Speed[2]	d378	PID2 Setpnt Disp[1]	d386	Drive Status 2[2][3]	d393
		Timer Status	d365	DC Bus Ripple	d380	Position Status[1]	d387	Dig Out Status[2][3]	d394
		Drive Type	d367	Output Powr Fctr	d381	Units Traveled H[1]	d388		
Analog In 0-10V	d360	Testpoint Data	d368	Torque Current	d382	Units Traveled L[1]	d389		
Analog In 4-20mA	d361	Motor OL Level	d369	PID1 Fdbk Displ	d383	Fiber Status	d390		
Elapsed Time-hr	d362	Slip Hz Meter	d375	PID1 Setpnt Disp	d384	Stp Logic Status[1]	d391		

Advanced Program		Accel Time 2	A442	PID 2 Preload[1]	A478	PM HIFI NS Cur[1][3]	A519	Reset Meters	A555
		Decel Time 2	A443	PID 2 Invert Err[1]	A479	PM Bus Reg Kd[1][3]	A520	Text Scroll	A556
		Accel Time 3	A444	Process Disp Lo	A481	Freq 1 Kp[1]	A521	Out Phas Loss En	A557
		Decel Time 3	A445	Process Disp Hi	A482	Freq 1 Ki[1]	A522	Positioning Mode[1]	A558
Preset Freq 0	A410	Accel Time 4	A446	Testpoint Sel	A483	Freq 2 Kp[1]	A523	Counts Per Unit[1]	A559
Preset Freq 1	A411	Decel Time 4	A447	Current Limit 1	A484	Freq 2 Ki[1]	A524	Enh Control Word[1]	A560
Preset Freq 2	A412	Skip Frequency 1	A448	Current Limit 2[1]	A485	Freq 3 Kp[1]	A525	Home Save[1]	A561
Preset Freq 3	A413	Skip Freq Band 1	A449	Shear Pin1 Level	A486	Freq 3 Ki[1]	A526	Find Home Freq[1]	A562
Preset Freq 4	A414	Skip Frequency 2	A450	Shear Pin 1 Time	A487	PM FWKn 1 Kp[1][3]	A527	Find Home Dir[1]	A563
Preset Freq 5	A415	Skip Freq Band 2	A451	Shear Pin2 Level[1]	A488	PM FWKn 2 Kp[1][3]	A528	Encoder Pos Tol[1]	A564
Preset Freq 6	A416	Skip Frequency 3[1]	A452	Shear Pin 2 Time[1]	A489	PM Control Cfg[1][3]	A529	Pos Reg Filter[1]	A565
Preset Freq 7	A417	Skip Freq Band 3[1]	A453	Load Loss Level[1]	A490	Boost Select	A530	Pos Reg Gain[1]	A566
Preset Freq 8[1]	A418	Skip Frequency 4[1]	A454	Load Loss Time[1]	A491	Start Boost	A531	Max Traverse	A567
Preset Freq 9[1]	A419	Skip Freq Band 4[1]	A455	Stall Fault Time	A492	Break Voltage	A532	Traverse Inc	A568
Preset Freq 10[1]	A420	PID 1 Trim Hi	A456	Motor OL Select	A493	Break Frequency	A533	Traverse Dec	A569
Preset Freq 11[1]	A421	PID 1 Trim Lo	A457	Motor OL Ret	A494	Maximum Voltage	A534	P Jump	A570
Preset Freq 12[1]	A422	PID 1 Trim Sel	A458	Drive OL Mode	A495	Motor Fdbk Type[2]	A535	Sync Time	A571
Preset Freq 13[1]	A423	PID 1 Ref Sel	A459	IR Voltage Drop	A496	Encoder PPR[1]	A536	Speed Ratio	A572
Preset Freq 14[1]	A424	PID 1 Fdback Sel	A460	Flux Current Ref	A497	Pulse In Scale	A537	Mtr Options Cfg[2][5]	A573
Preset Freq 15[1]	A425	PID 1 Prop Gain	A461	Motor Rr[1]	A498	Ki Speed Loop[2]	A538	RdyBit Mode Cfg[2][4]	A574
Keypad Freq	A426	PID 1 Integ Time	A462	Motor Lm[1]	A499	Kp Speed Loop[2]	A539	Flux Braking En[2][3]	A575
MOP Freq	A427	PID 1 Diff Rate	A463	Motor Lx[1]	A500	Var PWM Disable	A540	Phase Loss Level[2][3]	A576
MOP Reset Sel	A428	PID 1 Setpoint	A464	PM IR Voltage[1][3]	A501	Auto Rstrt Tries	A541	Current Loop BW[1][3]	A580
MOP Preload	A429	PID 1 Deadband	A465	PM IXd Voltage[1][3]	A502	Auto Rstrt Delay	A542	PM Stable 1 Freq[1][3]	A581
MOP Time	A430	PID 1 Preload	A466	PM IXq Voltage[1][3]	A503	Start At PowerUp	A543	PM Stable 2 Freq[1][3]	A582
Jog Frequency	A431	PID 1 Invert Err	A467	PM BEMF Voltage[1][3]	A504	Reverse Disable	A544	PM Stable 1 Kp[1][3]	A583
Jog Accel/Decel	A432	PID 2 Trim Hi[1]	A468	Speed Reg Sel[1]	A509	Flying Start En	A545	PM Stable 2 Kp[1][3]	A584
Purge Frequency	A433	PID 2 Trim Lo[1]	A469	Freq 1[1]	A510	FlyStrt CurLimit	A546	PM Stable Brk Pt[1][3]	A585
DC Brake Time	A434	PID 2 Trim Sel[1]	A470	Freq 1 BW[1]	A511	Compensation	A547	PM Stepload Kp[1][3]	A586
DC Brake Level	A435	PID 2 Ref Sel[1]	A471	Freq 2[1]	A512	Power Loss Mode	A548	PM 1 Efficiency[1][3]	A587
DC Brk Time@Strt	A436	PID 2 Fdback Sel[1]	A472	Freq 2 BW[1]	A513	Half Bus Enable	A549	PM 2 Efficiency[1][3]	A588
DB Resistor Sel	A437	PID 2 Prop Gain[1]	A473	Freq 3[1]	A514	Bus Reg Enable	A550	PM Algor Sel[1][3]	A589
DB Threshold	A438	PID 2 Integ Time[1]	A474	Freq 3 BW[1]	A515	Fault Clear	A551		
S Curve %	A439	PID 2 Diff Rate[1]	A475	PM Initial Sel[1][3]	A516	Program Lock	A552		
PWM Frequency	A440	PID 2 Setpoint[1]	A476	PM DC Inject Cur[1][3]	A517	Program Lock Mod	A553		
Droop Hertz@ FLA[1]	A441	PID 2 Deadband[1]	A477	PM Align Time[1][3]	A518	Drv Ambient Sel	A554		

Network	This group contains parameters for the network option card that is installed. See the network option card's user manual for more information on the available parameters.
Modified	This group contains parameters that have their values changed from the factory default. When a parameter has its default value changed, it is automatically added to this group. When a parameter has its value changed back to the factory default, it is automatically removed from this group.

Fault and Diagnostic	
Fault 4 Code	F604
Fault 5 Code	F605
Fault 6 Code	F606
Fault 7 Code	F607
Fault 8 Code	F608
Fault 9 Code	F609
Fault10 Code	F610
Fault 1 Time-hr	F611
Fault 2 Time-hr	F612
Fault 3 Time-hr	F613
Fault 4 Time-hr	F614
Fault 5 Time-hr	F615
Fault 6 Time-hr(1)	F616
Fault 7 Time-hr(1)	F617
Fault 8 Time-hr(1)	F618
Fault 9 Time-hr(1)	F619
Fault10 Time-hr(1)	F620
Fault 1 Time-min	F621
Fault 2 Time-min	F622
Fault 3 Time-min	F623
Fault 4 Time-min	F624
Fault 5 Time-min	F625
Fault 6 Time-min(1)	F626
Fault 7 Time-min(1)	F627
Fault 8 Time-min(1)	F628
Fault 9 Time-min(1)	F629
Fault10 Time-min(1)	F630
Fault 1 Freq	F631
Fault 2 Freq	F632
Fault 3 Freq	F633
Fault 4 Freq	F634
Fault 5 Freq	F635
Fault 6 Freq(1)	F636
Fault 7 Freq(1)	F637
Fault 8 Freq(1)	F638
Fault 9 Freq(1)	F639
Fault10 Freq(1)	F640
Fault 1 Current	F641
Fault 2 Current	F642
Fault 3 Current	F643
Fault 4 Current	F644
Fault 5 Current	F645
Fault 6 Current(1)	F646
Fault 7 Current(1)	F647
Fault 8 Current(1)	F648
Fault 9 Current(1)	F649
Fault10 Current(1)	F650
Fault 1 BusVolts	F651
Fault 2 BusVolts	F652
Fault 3 BusVolts	F653
Fault 4 BusVolts	F654
Fault 5 BusVolts	F655
Fault 6 BusVolts(1)	F656
Fault 7 BusVolts(1)	F657
Fault 8 BusVolts(1)	F658
Fault 9 BusVolts(1)	F659
Fault10 BusVolts(1)	F660
Status @ Fault 1	F661
Status @ Fault 2	F662
Status @ Fault 3	F663
Status @ Fault 4	F664
Status @ Fault 5	F665
Status @ Fault 6(1)	F666
Status @ Fault 7(1)	F667
Status @ Fault 8(1)	F668
Status @ Fault 9(1)	F669
Status @ Fault10(1)	F670
Comm Sts - DSI	F681
Comm Sts - Opt	F682
Com Sts-Emb Enet(1)	F683
EN Addr Src(1)	F684
EN Rate Act(1)	F685
DSI I/O Act	F686
HW Addr 1(1)	F687
HW Addr 2(1)	F688
HW Addr 3(1)	F689
HW Addr 4(1)	F690
HW Addr 5(1)	F691
HW Addr 6(1)	F692
EN IP Addr Act 1(1)	F693
EN IP Addr Act 2(1)	F694
EN IP Addr Act 3(1)	F695
EN IP Addr Act 4(1)	F696
EN Subnet Act 1(1)	F697
EN Subnet Act 2(1)	F698
EN Subnet Act 3(1)	F699
EN Subnet Act 4(1)	F700
EN Gateway Act 1(1)	F701
EN Gateway Act 2(1)	F702
EN Gateway Act 3(1)	F703
EN Gateway Act 4(1)	F704
Drv 0 Logic Cmd	F705
Drv 0 Reference	F706
Drv 0 Logic Sts	F707
Drv 0 Feedback	F708
Drv 1 Logic Cmd	F709
Drv 1 Reference	F710
Drv 1 Logic Sts	F711
Drv 1 Feedback	F712
Drv 2 Logic Cmd	F713
Drv 2 Reference	F714
Drv 2 Logic Sts	F715
Drv 2 Feedback	F716
Drv 3 Logic Cmd	F717
Drv 3 Reference	F718
Drv 3 Logic Sts	F719
Drv 3 Feedback	F720
Drv 4 Logic Cmd	F721
Drv 4 Reference	F722
Drv 4 Logic Sts	F723
Drv 4 Feedback	F724
EN Rx Overruns(1)	F725
EN Rx Packets(1)	F726
EN Rx Errors(1)	F727
EN Tx Packets(1)	F728
EN Tx Errors(1)	F729
EN Missed IO Pkt(1)	F730
DSI Errors	F731

(1) Parameter is specific to PowerFlex 525 drives only.
(2) Parameter is also available in PowerFlex 523 FRN 3.xxx and later.
(3) Parameter is available in PowerFlex 525 FRN 5.xxx and later.
(4) Parameter is available in PowerFlex 525 FRN 3.xxx and later.
(5) Parameter is available in PowerFlex 525 FRN 2.xxx and later.

AppView Parameter Groups

PowerFlex 520-series drives include various AppView™ parameter groups that groups certain parameters together for quick and easy access based on different types of applications. See AppView Parameter Groups on page 150 for more information.

Conveyor		Motor NP Volts	P031	Decel Time 1	P042	DigIn TermBlk 03	t063	Anlg In mA Loss	t097
		Motor NP Hertz	P032	Minimum Freq	P043	Opto Out1 Sel	t069	Slip Hz Meter	d375
		Motor OL Current	P033	Maximum Freq	P044	Relay Out1 Sel	t076	Preset Freq 0	A410
		Motor NP FLA	P034	Stop Mode	P045	Anlg In 0-10V Lo	t091	Jog Frequency	A431
Language	P030	Motor NP Poles	P035	Start Source 1	P046	Anlg In 0-10V Hi	t092	Jog Accel/Decel	A432
Output Freq	b001	Autotune	P040	Speed Reference1	P047	Anlg In4-20mA Lo	t095	S Curve %	A439
Commanded Freq	b002	Accel Time 1	P041	DigIn TermBlk 02	t062	Anlg In4-20mA Hi	t096	Reverse Disable	A544
Mixer		Commanded Freq	b002	Motor NP Poles	P035	Stop Mode	P045	Anlg In4-20mA Lo	t095
		Output Current	b003	Autotune	P040	Start Source 1	P046	Anlg In4-20mA Hi	t096
		Motor NP Volts	P031	Accel Time 1	P041	Speed Reference1	P047	Anlg In mA Loss	t097
		Motor NP Hertz	P032	Decel Time 1	P042	Relay Out1 Sel	t076	Preset Freq 0	A410
Language	P030	Motor OL Current	P033	Minimum Freq	P043	Anlg In 0-10V Lo	t091	Stall Fault Time	A492
Output Freq	b001	Motor NP FLA	P034	Maximum Freq	P044	Anlg In 0-10V Hi	t092		
Compressor		Motor NP Hertz	P032	Maximum Freq	P044	Anlg In 0-10V Lo	t091	Start At PowerUp	A543
		Motor OL Current	P033	Stop Mode	P045	Anlg In 0-10V Hi	t092	Reverse Disable	A544
		Motor NP FLA	P034	Start Source 1	P046	Anlg In4-20mA Lo	t095	Power Loss Mode	A548
		Motor NP Poles	P035	Speed Reference1	P047	Anlg In4-20mA Hi	t096	Half Bus Enable	A549
Language	P030	Autotune	P040	Relay Out1 Sel	t076	Anlg In mA Loss	t097		
Output Freq	b001	Accel Time 1	P041	Analog Out Sel	t088	Preset Freq 0	A410		
Commanded Freq	b002	Decel Time 1	P042	Analog Out High	t089	Auto Rstrt Tries	A541		
Motor NP Volts	P031	Minimum Freq	P043	Anlg Out Setpt	t090	Auto Rstrt Delay	A542		
Centrifugal Pump		Motor OL Current	P033	Start Source 1	P046	Anlg In4-20mA Hi	t096	PID 1 Diff Rate	A463
		Motor NP FLA	P034	Speed Reference1	P047	Anlg In mA Loss	t097	PID 1 Setpoint	A464
		Motor NP Poles	P035	Relay Out1 Sel	t076	Preset Freq 0	A410	PID 1 Deadband	A465
		Autotune	P040	Analog Out Sel	t088	PID 1 Trim Hi	A456	PID 1 Preload	A466
Language	P030	Accel Time 1	P041	Analog Out High	t089	PID 1 Trim Lo	A457	Auto Rstrt Tries	A541
Output Freq	b001	Decel Time 1	P042	Anlg Out Setpt	t090	PID 1 Ref Sel	A459	Auto Rstrt Delay	A542
Commanded Freq	b002	Minimum Freq	P043	Anlg In 0-10V Lo	t091	PID 1 Fdback Sel	A460	Start At PowerUp	A543
Motor NP Volts	P031	Maximum Freq	P044	Anlg In 0-10V Hi	t092	PID 1 Prop Gain	A461	Reverse Disable	A544
Motor NP Hertz	P032	Stop Mode	P045	Anlg In4-20mA Lo	t095	PID 1 Integ Time	A462		
Blower/Fan		Motor OL Current	P033	Start Source 1	P046	Anlg In4-20mA Hi	t096	PID 1 Diff Rate	A463
		Motor NP FLA	P034	Speed Reference1	P047	Anlg In mA Loss	t097	PID 1 Setpoint	A464
		Motor NP Poles	P035	Relay Out1 Sel	t076	Preset Freq 0	A410	PID 1 Deadband	A465
		Autotune	P040	Analog Out Sel	t088	PID 1 Trim Hi	A456	PID 1 Preload	A466
Language	P030	Accel Time 1	P041	Analog Out High	t089	PID 1 Trim Lo	A457	Auto Rstrt Tries	A541
Output Freq	b001	Decel Time 1	P042	Anlg Out Setpt	t090	PID 1 Ref Sel	A459	Auto Rstrt Delay	A542
Commanded Freq	b002	Minimum Freq	P043	Anlg In 0-10V Lo	t091	PID 1 Fdback Sel	A460	Start At PowerUp	A543
Motor NP Volts	P031	Maximum Freq	P044	Anlg In 0-10V Hi	t092	PID 1 Prop Gain	A461	Reverse Disable	A544
Motor NP Hertz	P032	Stop Mode	P045	Anlg In4-20mA Lo	t095	PID 1 Integ Time	A462	Flying Start En	A545

Extruder		Motor NP Hertz	P032	Stop Mode	P045	Anlg In4-20mA Lo	t095	Encoder PPR	A536
		Motor OL Current	P033	Start Source 1	P046	Anlg In4-20mA Hi	t096	Pulse In Scale	A537
		Motor NP FLA	P034	Speed Reference1	P047	Anlg In mA Loss	t097	Ki Speed Loop	A538
		Motor NP Poles	P035	Relay Out1 Sel	t076	Slip Hz Meter	d375	Kp Speed Loop	A539
Language	P030	Autotune	P040	Analog Out Sel	t088	Speed Feedback	d376	Power Loss Mode	A548
Output Freq	b001	Accel Time 1	P041	Analog Out High	t089	Encoder Speed	d378	Half Bus Enable	A549
Commanded Freq	b002	Decel Time 1	P042	Anlg Out Setpt	t090	Preset Freq 0	A410		
Output Current	b003	Minimum Freq	P043	Anlg In 0-10V Lo	t091	Stall Fault Time	A492		
Motor NP Volts	P031	Maximum Freq	P044	Anlg In 0-10V Hi	t092	Motor Fdbk Type	A535		
Positioning(1)		Stop Mode	P045	Stp Logic 5	L185	Step Units 6	L212	Jog Accel/Decel	A432
		Start Source 1	P046	Stp Logic 6	L186	Step Units 7	L214	DB Threshold	A438
		Speed Reference1	P047	Stp Logic 7	L187	Slip Hz Meter	d375	S Curve %	A439
		DigIn TermBlk 02	t062	Stp Logic Time 0	L190	Speed Feedback	d376	Motor Fdbk Type	A535
Language	P030	DigIn TermBlk 03	t063	Stp Logic Time 1	L191	Encoder Speed	d378	Encoder PPR	A536
Output Freq	b001	DigIn TermBlk 05	t065	Stp Logic Time 2	L192	Units Traveled H	d388	Pulse In Scale	A537
Commanded Freq	b002	DigIn TermBlk 06	t066	Stp Logic Time 3	L193	Units Traveled L	d389	Ki Speed Loop	A538
Motor NP Volts	P031	Opto Out1 Sel	t069	Stp Logic Time 4	L194	Preset Freq 0	A410	Kp Speed Loop	A539
Motor NP Hertz	P032	Opto Out2 Sel	t072	Stp Logic Time 5	L195	Preset Freq 1	A411	Bus Reg Enable	A550
Motor OL Current	P033	Relay Out1 Sel	t076	Stp Logic Time 6	L196	Preset Freq 2	A412	Positioning Mode	A558
Motor NP FLA	P034	EM Brk Off Delay	t086	Stp Logic Time 7	L197	Preset Freq 3	A413	Counts Per Unit	A559
Motor NP Poles	P035	EM Brk On Delay	t087	Step Units 0	L200	Preset Freq 4	A414	Enh Control Word	A560
Autotune	P040	Stp Logic 0	L180	Step Units 1	L202	Preset Freq 5	A415	Find Home Freq	A562
Accel Time 1	P041	Stp Logic 1	L181	Step Units 2	L204	Preset Freq 6	A416	Find Home Dir	A563
Decel Time 1	P042	Stp Logic 2	L182	Step Units 3	L206	Preset Freq 7	A417	Encoder Pos Tol	A564
Minimum Freq	P043	Stp Logic 3	L183	Step Units 4	L208	Preset Freq 8	A418	Pos Reg Filter	A565
Maximum Freq	P044	Stp Logic 4	L184	Step Units 5	L210	Jog Frequency	A431	Pos Reg Gain	A566
Textile/Fiber		Motor NP FLA	P034	DigIn TermBlk 02	t062	Slip Hz Meter	d375	Max Traverse	A567
		Motor NP Poles	P035	DigIn TermBlk 03	t063	Fiber Status	d390	Traverse Inc	A568
		Autotune	P040	Opto Out1 Sel	t069	Preset Freq 0	A410	Traverse Dec	A569
		Accel Time 1	P041	Opto Out2 Sel	t072	Jog Frequency	A431	P Jump	A570
Language	P030	Decel Time 1	P042	Relay Out1 Sel	t076	Jog Accel/Decel	A432	Sync Time	A571
Output Freq	b001	Minimum Freq	P043	Anlg In 0-10V Lo	t091	S Curve %	A439	Speed Ratio	A572
Commanded Freq	b002	Maximum Freq	P044	Anlg In 0-10V Hi	t092	Reverse Disable	A544		
Motor NP Volts	P031	Stop Mode	P045	Anlg In4-20mA Lo	t095	Power Loss Mode	A548		
Motor NP Hertz	P032	Start Source 1	P046	Anlg In4-20mA Hi	t096	Half Bus Enable	A549		
Motor OL Current	P033	Speed Reference1	P047	Anlg In mA Loss	t097	Bus Reg Enable	A550		

(1) This AppView parameter group is specific to PowerFlex 525 drives only.

CustomView Parameter Group

PowerFlex 520-series drives include a CustomView™ parameter group for you to store frequently used parameters for your application. See CustomView Parameter Group on page 151 for more information.

Custom Group	
	This group can store up to 100 parameters.

Basic Display Group

b001 [Output Freq] Related Parameter(s): b002, b010, P043, P044, P048, P050, P052

Output frequency present at T1, T2 & T3 (U, V & W). Does not include slip frequency.

Values	Default:	Read Only
	Min/Max:	0.00/[Maximum Freq]
	Display:	0.01 Hz

b002 [Commanded Freq] Related Parameter(s): b001, b013, P043, P044, P048, P050, P052

Value of the active frequency command even if the drive is not running.

IMPORTANT The frequency command can come from a number of sources. See Start and Speed Reference Control on page 49 for more information.

Values	Default:	Read Only
	Min/Max:	0.00/[Maximum Freq]
	Display:	0.01 Hz

b003 [Output Current]

Output current present at T1, T2 & T3 (U, V & W).

Values	Default:	Read Only
	Min/Max:	0.00/(Drive Rated Amps x 2)
	Display:	0.01 A

b004 [Output Voltage] Related Parameter(s): P031, A530, A534

Output voltage present at T1, T2 & T3 (U, V & W).

Values	Default:	Read Only
	Min/Max:	0.0/Drive Rated Volts
	Display:	0.1V

b005 [DC Bus Voltage]

Filtered DC bus voltage level of the drive.

Values	Default:	Read Only
	Min/Max:	0/1200VDC
	Display:	1VDC

b006 [Drive Status] Related Parameter(s): A544

Present operating condition of the drive.

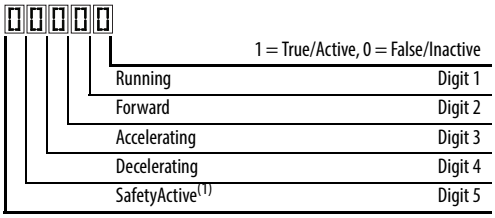

(1) Setting is specific to PowerFlex 525 drives only.

Values	Default:	Read Only
	Min/Max:	00000/11111
	Display:	00000

Basic Display Group *(continued)*

b007 [Fault 1 Code]
b008 [Fault 2 Code]
b009 [Fault 3 Code]

Related Parameter(s): F604-F610

A code that represents a drive fault. Codes appear in these parameters in the order they occur (b007 [Fault 1 Code] = the most recent fault). Repetitive faults are only recorded once. See Fault and Diagnostic Group for more information.

Values	Default:	Read Only
	Min/Max:	F0/F127
	Display:	F0

b010 [Process Display]

Related Parameter(s): b001, A481, A482

32 bit parameter.

Output frequency scaled by A481[Process Disp Lo] and A482 [Process Disp Hi].
Scaled Process Value (PV) = ((([Process Disp Hi] - [Process Disp Lo]) x ([Output Freq] - [Minimum Freq])) / ([Maximum Freq] - [Minimum Freq])

Values	Default:	Read Only
	Min/Max:	0.00/9999.00
	Display:	0.01

b012 [Control Source]

Related Parameter(s): P046, P047, P048, P049, P050, P051, t062, t063, t065-t068, L180-L187, A410-A425

Active source of the Start Command and Frequency Command. Normally defined by the settings of P046, P048, P050 [Start Source x] and P047, P049, P051 [Speed Referencex]. See Start and Speed Reference Control on page 49 for more information.

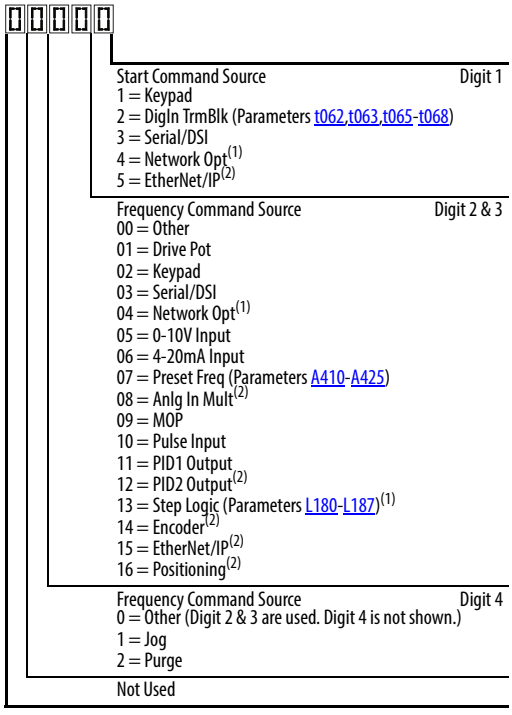

Example

Display reads...	Description
2004	Start source comes from Network Opt and Frequency source is Purge.
113	Start source comes from Serial/DSI and Frequency source comes from PID1 Output.
155	Start source and Frequency source comes from EtherNet/IP.
052	Start source comes from DigIn TrmBlk and Frequency source from 0-10V Input.
011	Start source comes from Keypad and Frequency source comes from Drive Pot.

(1) Select this setting if using the optional PowerFlex 25-COMM-E2P, 25-COMM-D, or 25-COMM-P adapters as the Start source and/or Frequency source.
(2) Setting is specific to PowerFlex 525 drives only.

Values	Default:	Read Only
	Min/Max:	0000/2165
	Display:	0000

Basic Display Group *(continued)*

b013 [Contrl In Status] Related Parameter(s): b002, P044, P045

State of the digital terminal blocks 1...3 and DB transistor.

IMPORTANT Actual control commands may come from a source other than the control terminal block.

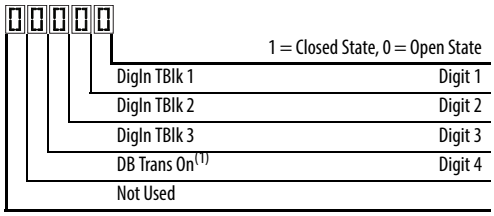

(1) The DB Transistor "on" indication must have a 0.5 s hysteresis. It will turn on and stay on for at least 0.5 s every time the DB transistor is turned on.

Values	Default:	Read Only
	Min/Max:	0000/1111
	Display:	0000

b014 [Dig In Status] Related Parameter(s): t065-t068

State of the programmable digital inputs.

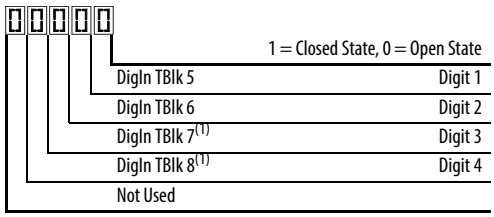

(1) Setting is specific to PowerFlex 525 drives only.

Values	Default:	Read Only
	Min/Max:	0000/1111
	Display:	0000

b015 [Output RPM] Related Parameter(s): P035

Current output frequency in rpm. Scale is based on P035 [Motor NP Poles].

Values	Default:	Read Only
	Min/Max:	0/24000 rpm
	Display:	1 rpm

b016 [Output Speed] Related Parameter(s): P044

Current output frequency in %. Scale is 0% at 0.00 Hz to 100% at P044 [Maximum Freq].

Values	Default:	Read Only
	Min/Max:	0.0/100.0%
	Display:	0.1%

b017 [Output Power] Related Parameter(s): b018

Output power present at T1, T2 & T3 (U, V & W).

Values	Default:	Read Only
	Min/Max:	0.00/(Drive Rated Power x 2)
	Display:	0.01 kW

Basic Display Group *(continued)*

b018 [Power Saved] Related Parameter(s): b017

Instantaneous power savings of using this drive compared to an across the line starter.

Values	Default:	Read Only
	Min/Max:	0.00/655.35 kW
	Display:	0.01 kW

b019 [Elapsed Run time] Related Parameter(s): A555

Accumulated time drive is outputting power. Time is displayed in 10 hour increments.

Values	Default:	Read Only
	Min/Max:	0/65535 x 10 hr
	Display:	1 = 10 hr

b020 [Average Power] Related Parameter(s): A555

Average power used by the motor since the last reset of the meters.

Values	Default:	Read Only
	Min/Max:	0.00/(Drive Rated Power x 2)
	Display:	0.01 kW

b021 [Elapsed kWh] Related Parameter(s): b022

Accumulated output energy of the drive. When the maximum value of this parameter is reached, it resets to zero and b022 [Elapsed MWh] is incremented.

Values	Default:	Read Only
	Min/Max:	0.0/100.0 kWh
	Display:	0.1 kWh

b022 [Elapsed MWh] Related Parameter(s): b021

Accumulated output energy of the drive.

Values	Default:	Read Only
	Min/Max:	0.0/6553.5 MWh
	Display:	0.1 MWh

b023 [Energy Saved] Related Parameter(s): A555

Total energy savings of using this drive compared to an across the line starter since the last reset of the meters.

Values	Default:	Read Only
	Min/Max:	0.0/6553.5 kWh
	Display:	0.1 kWh

b024 [Accum kWh Sav] Related Parameter(s): b025

Total approximate accumulated energy savings of the drive compared to using an across the line starter.

Values	Default:	Read Only
	Min/Max:	0.0/6553.5 kWh
	Display:	0.1 = 10 kWh

Basic Display Group *(continued)*

b025 [Accum Cost Sav] Related Parameter(s): b024, P052, A555

Total approximate accumulated cost savings of the drive compared to using an across the line starter.
[Accum Cost Sav] = [Average kWh cost] x [Accum kWh Sav]

Values	Default:	Read Only
	Min/Max:	0.0/6553.5
	Display:	0.1

b026 [Accum CO2 Sav] Related Parameter(s): A555

Total approximate accumulated CO2 savings of the drive compared to using an across the line starter.

Values	Default:	Read Only
	Min/Max:	0.0/6553.5 kg
	Display:	0.1 kg

b027 [Drive Temp]

Present operating temperature of the drive heatsink (inside module).

Values	Default:	Read Only
	Min/Max:	0/120 °C
	Display:	1 °C

b028 [Control Temp]

Present operating temperature of the drive control.

Values	Default:	Read Only
	Min/Max:	0/120 °C
	Display:	1 °C

b029 [Control SW Ver]

Current drive firmware version.

Values	Default:	Read Only
	Min/Max:	0.000/65.535
	Display:	0.001

Basic Program Group

P030 [Language]

Selects the language displayed. A reset or power cycle is required after selection is made.

			Language Support		
			Keypad/ LCD Display	RSLogix 5000/ Logix Designer	Connected Components Workbench
Options	1 English (Default)		Y	Y	Y
	2 Français		Y	Y	Y
	3 Español		Y	Y	Y
	4 Italiano		Y	Y	Y
	5 Deutsch		Y	Y	Y
	6 Japanese		–	Y	–
	7 Português		Y	Y	–
	8 Chinese	Chinese Simplified	–	Y	Y
	9 Reserved				
	10 Reserved				
	11 Korean		–	Y	–
	12 Polish(1)		Y	–	–
	13 Reserved				
	14 Turkish(1)		Y	–	–
	15 Czech(1)		Y	–	–

(1) Due to a limitation of the LCD Display, some of the characters for Polish, Turkish, and Czech will be modified.

P031 [Motor NP Volts] Related Parameter(s): b004, A530, A531, A532, A533

Stop drive before changing this parameter.

Sets the motor nameplate rated volts.

Values	Default:	Drive Rated Volts
	Min/Max:	10V (for 230V Drives), 20V (for 460V Drives), 25V (for 600V Drives)/Drive Rated Volts
	Display:	1V

P032 [Motor NP Hertz] Related Parameter(s): A493, A530, A531, A532, A533

Stop drive before changing this parameter.

Sets the motor nameplate rated frequency.

Values	Default:	60 Hz
	Min/Max:	15/500 Hz
	Display:	1 Hz

P033 [Motor OL Current] Related Parameter(s): t069, t072, t076, t081, A484, A485, A493

Sets the motor nameplate overload current. Used to determine motor overload conditions and can be set from 0.1 A to 200% of drive rated current.

IMPORTANT The drive will fault on an F007 "Motor Overload" if the value of this parameter is exceeded based on class 10 motor overload protection according to NEC article 430 and motor over-temperature protection according to NEC article 430.126 (A) (2). UL 508C File 29572

Values	Default:	Drive Rated Amps
	Min/Max:	0.0/(Drive Rated Amps x 2)
	Display:	0.1 A

Basic Program Group *(continued)*

P034 [Motor NP FLA] Related Parameter(s): P040

Sets the motor nameplate FLA. Used to assist the Autotune routine and motor control.

Values	Default:	Based on Drive Rating
	Min/Max:	0.1/(Drive Rated Amps x 2)
	Display:	0.1 A

P035 [Motor NP Poles] Related Parameter(s): b015

Sets the number of poles in the motor.

Values	Default:	4
	Min/Max:	2/40
	Display:	1

P036 [Motor NP RPM]

Stop drive before changing this parameter.

Sets the rated nameplate rpm of the motor. Used to calculate the rated slip of the motor. To reduce the slip frequency, set this parameter closer to the motor synchronous speed.

Values	Default:	1750 rpm
	Min/Max:	0/24000 rpm
	Display:	1 rpm

P037 [Motor NP Power]

PF 525 PowerFlex 525 only.

Sets the motor nameplate power. Used in PM regulator.

Values	Default:	Drive Rated Power
	Min/Max:	0.00/Drive Rated Power
	Display:	0.01 kW

P038 [Voltage Class]

Stop drive before changing this parameter.

Sets the voltage class of 600V drives. Only applicable to 600V drives.

Options	2	"480V"
	3	"600V" (Default)

P039 [Torque Perf Mode] Related Parameter(s): P040, A530, A531, A532, A533, A535

Stop drive before changing this parameter.

Selects the motor control mode.

The PowerFlex 523 and PowerFlex 525 drives are capable of performing with the following motor control modes.

Options	0	"V/Hz"	
	1	"SVC" (Default)	
	2	"Economize"	
	3	"Vector"(1)	
	4	"PM Control"(1) (2)	When P039 [Torque Perf Mode] is set to 4 and A535 [Motor Fdbk Type] is set to 0, 1, 2 or 3, the drive is in open loop PM motor control mode. When P039 [Torque Perf Mode] is set to 4 and A535 [Motor Fdbk Type] is set to 4 or 5, the drive is in closed loop PM motor control mode.

(1) Setting is specific to PowerFlex 525 drives only.

(2) Setting is available in PowerFlex 525 FRN 5.xxx and later.

Basic Program Group *(continued)*

P040 [Autotune] Related Parameter(s): P034, P039, A496, A497

Stop drive before changing this parameter.

Enables a static (not spinning) or dynamic (motor spinning) autotune to automatically set the motor parameters. Set the parameter value to a one or two, then issue a valid "Start" command to begin the routine. After the routine is complete the parameter resets to a zero. A failure (such as if a motor is not connected) results in an Autotune Fault.
It is recommended to perform a full rotate tune when using VVC mode.

IMPORTANT All motor parameters in the Basic Program group must be set before running the routine. If a start command is not given (or a stop command is given) within 30 s, the parameter automatically returns to a zero and an Autotune Fault occurs.

ATTENTION: Rotation of the motor in an undesired direction can occur during this procedure. To guard against possible injury and/or equipment damage, it is recommended that the motor be disconnected from the load before proceeding.

Options	0	"Ready/Idle" (Default)	
	1	"Static Tune"	A temporary command that initiates a non-rotational motor stator resistance test for the best possible automatic setting of A496 [IR Voltage Drop]. A start command is required following initiation of this setting. The parameter returns to 0 "Ready/Idle" following the test, at which time another start transition is required operate the drive in normal mode. Used when motor cannot be uncoupled from the load.
	2	"Rotate Tune"	A temporary command that initiates a "Static Tune" followed by a rotational test for the best possible automatic setting of A497 [Flux Current Ref]. A start command is required following initiation of this setting. The parameter returns to 0 "Ready/Idle" following the test, at which time another start transition is required to operate the drive in normal mode. Important: Used when motor is uncoupled from the load. Results may not be valid if a load is coupled to the motor during this procedure.

P041 [Accel Time 1] Related Parameter(s): P044, A439

Sets the time for the drive to accelerate from 0 Hz to P044 [Maximum Freq].
Accel Rate = [Maximum Freq] / [Accel Time x]

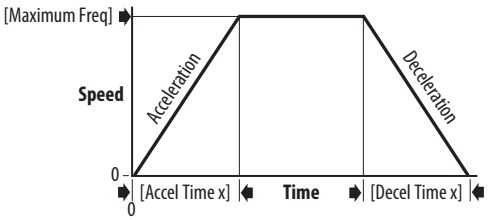

Values	Default:	10.00 s
	Min/Max:	0.00/600.00 s
	Display:	0.01 s

P042 [Decel Time 1] Related Parameter(s): P044, A439

Sets the time for the drive to decelerate from P044 [Maximum Freq] to 0 Hz.
Decel Rate = [Maximum Freq] / Decel Time x]

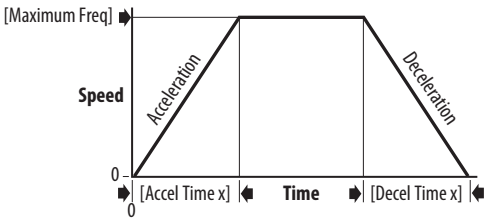

Values	Default:	10.00 s
	Min/Max:	0.00/600.00 s
	Display:	0.01 s

Basic Program Group *(continued)*

P043 [Minimum Freq] Related Parameter(s): b001, b002, b013, P044, A530, A531

Stop drive before changing this parameter.

Sets the lowest frequency the drive outputs.

Values	Default:	0.00 Hz
	Min/Max:	0.00/500.00 Hz
	Display:	0.01 Hz

P044 [Maximum Freq] Related Parameter(s): b001, b002, b013, b016, P043, A530, A531

Stop drive before changing this parameter.

Sets the highest frequency the drive outputs.

IMPORTANT This value must be greater than the value set in P043 [Minimum Freq].

Values	Default:	60.00 Hz
	Min/Max:	0.00/500.00 Hz
	Display:	0.01 Hz

P045 [Stop Mode] Related Parameter(s): t086, t087, A434, A435, A550

Determines the stopping mode used by the drive when a stop is initiated.

Options	0	"Ramp, CF" (Default)	Ramp to Stop. Stop command clears active fault.
	1	"Coast, CF"	Coast to Stop. Stop command clears active fault.
	2	"DC Brake, CF"	DC Injection Braking Stop. Stop command clears active fault.
	3	"DC BrkAuto,CF"	DC Injection Braking Stop with Auto Shutoff. • Standard DC Injection Braking for value set in A434 [DC Brake Time]. OR • Drive shuts off if the drive detects that the motor is stopped. Stop command clears active fault.
	4	"Ramp"	Ramp to Stop.
	5	"Coast"	Coast to Stop.
	6	"DC Brake"	DC Injection Braking Stop.
	7	"DC BrakeAuto"	DC Injection Braking Stop with Auto Shutoff. • Standard DC Injection Braking for value set in A434 [DC Brake Time]. OR • Drive shuts off if the drive detects that the motor is stopped.
	8	"Ramp+EM B,CF"	Ramp to Stop with EM Brake Control. Stop command clears active fault.
	9	"Ramp+EM Brk"	Ramp to Stop with EM Brake Control.
	10	"PointStp,CF"	PointStop. Stop command clears active fault.
	11	"PointStop"	PointStop.

Provides a method to stop at a constant distance instead of a fixed rate.

When a Stop command is given, the distance required for the machine to travel to standstill based on the programmed maximum speed and deceleration time is calculated. If the drive is running slower than the maximum speed, the function will apply a calculated deceleration time that allows the machine to travel to standstill in the same distance based on the current speed.

It is recommended to use braking resistors or set A550 [Bus Reg Enable] to 0 "Disabled" for better performance.

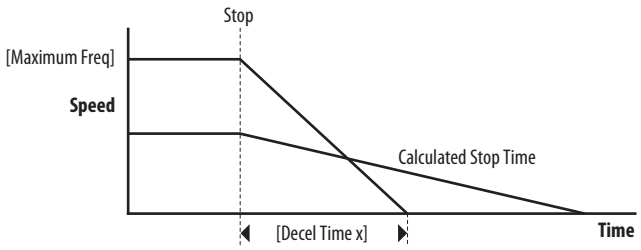

Basic Program Group *(continued)*

P046 [Start Source 1]
P048 [Start Source 2]
P050 [Start Source 3]

Related Parameter(s): b012, t064, C125

Stop drive before changing this parameter.

Configures the start source of the drive. Changes to these inputs take effect as soon as they are entered. P046 [Start Source 1] is the factory default start source unless overridden.
See Start and Speed Reference Control on page 49 for more information.

IMPORTANT For all settings except when t064 [2-Wire Mode] is set to 1 "Level Sense", the drive must receive a leading edge from the start input for the drive to start after a stop input, loss of power, or fault condition.

Options	1	"Keypad"	[Start Source 1] default
	2	"DigIn TrmBlk"	[Start Source 2] default
	3	"Serial/DSI"	[Start Source 3] default for PowerFlex 523
	4	"Network Opt"(1)	
	5	"EtherNet/IP"(2)	[Start Source 3] default for PowerFlex 525

(1) Select this setting if using the optional PowerFlex 25-COMM-E2P, 25-COMM-D, or 25-COMM-P adapters as the start source.
(2) Setting is specific to PowerFlex 525 drives only.

P047 [Speed Reference1]
P049 [Speed Reference2]
P051 [Speed Reference3]

Related Parameter(s): C125

Selects the source of speed command for the drive. Changes to these inputs take effect as soon as they are entered. P047 [Speed Reference1] is the factory default speed reference unless overridden.
See Start and Speed Reference Control on page 49 for more information.

Options	1	"Drive Pot"	[Speed Reference1] default
	2	"Keypad Freq"	
	3	"Serial/DSI"	[Speed Reference3] default for PowerFlex 523
	4	"Network Opt"(1)	
	5	"0-10V Input"	[Speed Reference2] default
	6	"4-20mA Input"	
	7	"Preset Freq"	
	8	"Anlg In Mult"(2)	
	9	"MOP"	
	10	"Pulse Input"	
	11	"PID1 Output"	
	12	"PID2 Output"(2)	
	13	"Step Logic"(2)	
	14	"Encoder"(2)	
	15	"EtherNet/IP"(2)	[Speed Reference3] default for PowerFlex 525
	16	"Positioning"(2)	Referencing from A558 [Positioning Mode]

(1) Select this setting if using the optional PowerFlex 25-COMM-E2P, 25-COMM-D, or 25-COMM-P adapters as the speed reference.
(2) Setting is specific to PowerFlex 525 drives only.

P052 [Average kWh Cost]

Related Parameter(s): b025

Sets the average cost per kWh.

Values	Default:	0.00
	Min/Max:	0.00/655.35
	Display:	0.01

Basic Program Group *(continued)*

P053 [Reset To Defalts]

Stop drive before changing this parameter.

Resets all parameters to their factory default values. After a Reset command, the value of this parameter returns to zero.

Parameters that are NOT Reset when P053 = 1

Parameter	Parameter	Parameter
P030 [Language]	C138 [EN Gateway Cfg 2]	C159 [EN Data Out 3]
C121 [Comm Write Mode]	C139 [EN Gateway Cfg 3]	C160 [EN Data Out 4]
C122 [Cmd Stat Select]	C140 [EN Gateway Cfg 4]	C161 [Opt Data In 1]
C123 [RS485 Data Rate]	C141 [EN Rate Cfg]	C162 [Opt Data In 2]
C124 [RS485 Node Addr]	C143 [EN Comm Flt Actn]	C163 [Opt Data In 3]
C124 [Comm Loss Action]	C144 [EN Idle Flt Actn]	C164 [Opt Data In 4]
C126 [Comm Loss Time]	C145 [EN Flt Cfg Logic]	C165 [Opt Data Out 1]
C127 [RS485 Format]	C146 [EN Flt Cfg Ref]	C166 [Opt Data Out 2]
C128 [EN Addr Sel]	C147 [EN Flt Cfg DL 1]	C167 [Opt Data Out 3]
C129 [EN IP Addr Cfg 1]	C148 [EN Flt Cfg DL 2]	C168 [Opt Data Out 4]
C130 [EN IP Addr Cfg 2]	C149 [EN Flt Cfg DL 3]	C169 [MultiDrv Sel]
C131 [EN IP Addr Cfg 3]	C150 [EN Flt Cfg DL 4]	C171 [Drv 1 Addr]
C132 [EN IP Addr Cfg 4]	C153 [EN Data In 1]	C172 [Drv 2 Addr]
C133 [EN Subnet Cfg 1]	C154 [EN Data In 2]	C173 [Drv 3 Addr]
C134 [EN Subnet Cfg 2]	C155 [EN Data In 3]	C174 [Drv 4 Addr]
C135 [EN Subnet Cfg 3]	C156 [EN Data In 4]	C175 [DSI I/O Cfg]
C136 [EN Subnet Cfg 4]	C157 [EN Data Out 1]	GC [Parameters in Custom Group]
C137 [EN Gateway Cfg 1]	C158 [EN Data Out 2]	

Parameters that are Reset when P053 = 3

Parameter Name
P031 [Motor NP Volts]
P033 [Motor OL] Current
P034 [Motor NP FLA]
P035 [Motor NP Poles]
P038 [Voltage Class]
A435 [DC Brake Level]
A484 [Current Limit 1]
A485 [Current Limit 2]
A486 [Shear Pin1 Level]
A488 [Shear Pin2 Level]
A490 [Load Loss Level]
A496 [IR Voltage Drop]
A497 [Flux Current Ref]
A530 [Boost Select]
A531 [Start Boost]
A532 [Break Voltage]
A533 [Break Frequency]
A534 [Maximum] Voltage

Options			
	0	"Ready/Idle" (Default)	
	1	"Param Reset"	Does not reset custom groups, parameter P030 [Language], and communication parameters.
	2	"Factory Rset"	Restore drive to factory condition.
	3	"Power Reset"	Resets only power parameters. Can be used when swapping power modules.
	4	"Module Reset"(1) (2)	Power cycle of the drive, **NO** parameters are reset.

(1) Setting is available in PowerFlex 525 FRN 5.xxx and later.

(2) Setting is available in PowerFlex 523 FRN 3.xxx and later.

Terminal Block Group

t062	**[DigIn TermBlk 02]**	**t063**	**[DigIn TermBlk 03]**
t065	**[DigIn TermBlk 05]**	**t066**	**[DigIn TermBlk 06]**
t067	**[DigIn TermBlk 07]**	**t068**	**[DigIn TermBlk 08]**

PF 525 PowerFlex 525 only.

Related Parameter(s): b012, b013, b014, P045, P046, P048, P049, P050, P051, t064, t086, A410-A425, A427, A431, A432, A433, A434, A435, A442, A443, A488, A535, A560, A562, A563, A567, A571

Stop drive before changing this parameter.

Programmable digital input. Changes to these inputs takes effect as soon as they are entered. If a digital input is set for a selection that is only usable on one input, no other input can be set for the same selection.

Options	0 "Not Used"	Terminal has no function but can be read over network communications with b013 [Contrl In Status] and b014 [Dig In Status].
	1 "Speed Ref 2"	Selects P049 [Speed Reference2] as drive's speed command.
	2 "Speed Ref 3"	Selects P051 [Speed Reference3] as drive's speed command.
	3 "Start Src 2"	Selects P048 [Start Source 2] as control source to start the drive.
	4 "Start Src 3"	Selects P050 [Start Source 3] as control source to start the drive.
	5 "Spd + Strt 2"	[DigIn TermBlk 07] default. Selects combination of P049 [Speed Reference2] and P048 [Start Source 2] as speed command with control source to start the drive.
	6 "Spd + Strt 3"	Selects combination of P051 [Speed Reference3] and P050 [Start Source 3] as speed command with control source to start the drive.
	7 "Preset Freq" (PF523: only for DigIn TermBlk 03, 05, and 06) (PF525: only for DigIn TermBlk 05...08)	[DigIn TermBlk 05] and [DigIn TermBlk 06] default. • Selects a preset frequency in Velocity mode (P047, P049, P051 [Speed Referencex] = 1...15). See A410...A425 [Preset Freq x]. • Selects a preset frequency and position in Positioning mode (P047, P049, P051 [Speed Referencex] = 16). See L200...L214 [Step Units x] (only for PowerFlex 525 drives). **IMPORTANT** Digital Inputs have priority for frequency control when programmed as Preset Speed and are active. See Start Source and Speed Reference Selection on page 49 for more information.
	8 "Jog"	• When input is present, drive accelerates according to the value set in A432 [Jog Accel/Decel] and ramps to the value set in A431 [Jog Frequency]. • When input is removed, drive ramps to a stop according to the value set in A432 [Jog Accel/Decel]. • A valid Start command will override this input.
	9 "Jog Forward"	[DigIn TermBlk 08] default. Drive accelerates to A431 [Jog Frequency] according to A432 [Jog Accel/Decel] and ramps to a stop when input becomes inactive. A valid Start command will override this input.
	10 "Jog Reverse"	Drive accelerates to A431 [Jog Frequency] according to A432 [Jog Accel/Decel] and ramps to a stop when input becomes inactive. A valid Start command will override this input.
	11 "Acc/Dec Sel2"(1)	If active, determines which Accel/Decel time will be used for all ramp rates except jog. Can be used with option 29 "Acc/Dec Sel3" for additional Accel/Decel times. See A442 [Accel Time 2] for more information.
	12 "Aux Fault"	When enabled, an F002 "Auxiliary Input" fault will occur when the input is removed.
	13 "Clear Fault"	When active, clears an active fault.
	14 "RampStop,CF"	Causes drive to immediately ramp to a stop regardless of how P045 [Stop Mode] is set.
	15 "CoastStop,CF"	Causes drive to immediately coast to a stop regardless of how P045 [Stop Mode] is set.
	16 "DCInjStop,CF"	Causes drive to immediately begin a DC Injection stop regardless of how P045 [Stop Mode] is set.
	17 "MOP Up"	Increases the value of A427 [MOP Freq] at the rate set in A430 [MOP Time].
	18 "MOP Down"	Decreases the value of A427 [MOP Freq] at the rate set in A430 [MOP Time].
	19 "Timer Start"(1)	Clears and starts the timer function. May be used to control the relay or opto outputs.
	20 "Counter In"(1)	Starts the counter function. May be used to control the relay or opto outputs.
	21 "Reset Timer"	Resets the internal active timer, d365 [Timer Status]. For more information, see Timer Function on page 211.
	22 "Reset Countr"	Resets the count in the accumulated internal active counter, d364 [Counter Status]. For more information, see Counter Function on page 212.
	23 "Rset Tim&Cnt"	Resets both the internal active timer and accumulated internal active counter.
	24 "Logic In 1"(1)(2)	Logic function input number 1. May be used to control the relay or opto outputs (t076, t081 [Relay Outx Sel] and t069, t072 [Opto Outx Sel], options 11...14). May be used in conjunction with StepLogic parameters L180...L187 [Stp Logic x].
	25 "Logic In 2"(1)(2)	Logic function input number 2. May be used to control the relay or opto outputs (t076, t081 [Relay Outx Sel] and t069, t072 [Opto Outx Sel], options 11...14). May be used in conjunction with StepLogic parameters L180...L187 [Stp Logic x].

Options

26	"Current Lmt2"[2]	When active, A485 [Current Limit 2] determines the drive current limit level.
27	"Anlg Invert"	Inverts the scaling of the analog input levels set in t091 [Anlg In 0-10V Lo] and t092 [Anlg In 0-10V Hi] or t095 [Anlg In4-20mA Lo] and t096 [Anlg In4-20mA Hi].
28	"EM Brk Rlse"	If EM brake function is enabled, this input releases the brake. See t086 [EM Brk Off Delay] for more information. **ATTENTION:** If a hazard of injury due to movement of equipment or material exists, an auxiliary mechanical braking device must be used.
29	"Acc/Dec Sel3"[1]	If active, determines which Accel/Decel time is used for all ramp rates except jog. Used with option 11 "Acc/Dec Sel2" for the Accel/Decel times listed in this table.
30	"Precharge En"	Forces drive into precharge state. Typically controlled by auxiliary contact on the disconnect at the DC input to the drive. If this input is assigned, it must be energized for the pre-charge relay to close and for the drive to run. If it is de-energized, the pre-charge relay opens and the drive coasts to a stop.
31	"Inertia Dcel"	Forces drive into Inertia Ride-Through state. The drive attempts to regulate the DC bus at the current level.
32	"Sync Enable"	Must be used in order to hold the existing frequency when Sync Time is set to enable speed synchronization. When this input is released the drive accelerates to the commanded frequency in A571 [Sync Time].
33	"Traverse Dis"	When an input is programmed the traverse function is disabled while this input is active. See A567 [Max Traverse].
34	"Home Limit"[2]	In Positioning mode, indicates the drive is at the home position. See Appendix E for more information on Positioning.
35	"Find Home"[2]	In Positioning mode, causes the drive to return to the Home position when a Start command is issued. Uses A562 [Find Home Freq] and A563 [Find Home Dir] until the "Home Limit" input is activated. If it passes this point, it then runs in the reverse direction at 1/10th the frequency of [Find Home Freq] until the "Home Limit" is activated again. As long as this input is active, any start command causes the drive to enter the homing routine. Only functions if in Positioning mode. Once the Find Home routine has finished, the drive stops. See Appendix E for more information on Positioning.
36	"Hold Step"[2]	In Positioning mode, overrides other inputs and causes the drive to remain at its current step (running at zero speed once it reaches its position) until released. While in "Hold", the drive ignores any input command which would normally result in a move to a new step. Timers continue to run. Therefore, when the Hold is removed, the drive must see any required digital inputs transition (even if they already transitioned during the hold), but it does not reset any timer. See Appendix E for more information on Positioning.
37	"Pos Redefine"[2]	In Positioning mode, resets the home position to the current position of the machine. See Appendix E for more information on Positioning.
38	"Force DC"	If the drive is not running, causes the drive to apply a DC Holding current (A435 [DC Brake Level], ignoring A434 [DC Brake Time]) while the input is applied.
39	"Damper Input"	When active, drive is allowed to run normally. When inactive, drive is forced into sleep mode and is prevented from accelerating to command speed.
40	"Purge"[1]	Starts the drive at A433 [Purge Frequency] regardless of the selected control source. Supersedes the keypad Control function as well as any other control command to take control of the drive. Purge can occur, and is operational, at any time whether the drive is running or stopped regardless of the selected logic source selection. If a valid stop (other than from comms or SW enable) is present, the drive will not start on the purge input transition. **ATTENTION:** If a hazard of injury due to movement of equipment or material exists, an auxiliary mechanical braking device must be used.
41	"Freeze-Fire"	When inactive, will cause an immediate F094 "Function Loss" fault. Use to safely bypass the drive with an external switching device.
42	"SW Enable"	Works like an interlock that has to be active for the drive to run.
43	"SherPin1 Dis"	Disables shear pin 1 but leaves shear pin 2 active. If A488 [Shear Pin 2 Level] is greater than 0.0 A, shear pin 2 is enabled.
44	Reserved	
45	Reserved	
46	Reserved	
47	Reserved	

Option		Description
29	11	
0	0	Acc/Dec 1
0	1	Acc/Dec 2
1	0	Acc/Dec 3
1	1	Acc/Dec 4

Options	48 "2-Wire FWD" (only for DigIn TermBlk 02)	[DigIn TermBlk 02] default. Select 2-Wire FWD for this input. Select this option and set P046, P048 or P050 [Start Source x] to 2 "DigIn TrmBlk" to configure [Start Source x] to a 2-wire run forward mode. Also see t064 [2-Wire Mode] for level trigger settings.	
	49 "3-Wire Start" (only for DigIn TermBlk 02)	Select 3-Wire Start for this input. Select this option and set P046, P048 or P050 [Start Source x] to 2 "DigIn TrmBlk" to configure [Start Source x] to a 3-wire start mode.	
	50 "2-Wire REV" (only for DigIn TermBlk 03)	[DigIn TermBlk 03] default. Select 2-Wire REV for this input. Select this option and set P046, P048 or P050 [Start Source x] to 2 "DigIn TrmBlk" to configure [Start Source x] to a 2-wire run reverse mode. Also see t064 [2-Wire Mode] for level trigger settings. For PowerFlex 523 drives, this setting will be disabled If [DigIn TermBlk 03] is set to 7 "Preset Freq".	
	51 "3-Wire Dir" (only for DigIn TermBlk 03)	Select 3-Wire Dir for this input. Select this option and set P046, P048 or P050 [Start Source x] to 2 "DigIn TrmBlk" to change the direction of [Start Source x]. For PowerFlex 523 drives, this setting will be disabled If [DigIn TermBlk 03] is set to 7 "Preset Freq".	
	52 "Pulse Train" (PF523: only for DigIn TermBlk 05) (PF525: only for DigIn TermBlk 07)	Select pulse train for this input. Use P047, P049 and P051 [Speed Referencex] to select pulse input. Jumper for DigIn TermBlk 05 or 07 Sel must be moved to Pulse In.	

Drive Start Condition Matrix for t062 and t063

	t062 Setting	
t063 Setting	**3-Wire Start**	**2-Wire FWD**
2-Wire REV	Drive will not start	OK
3-Wire Dir	OK	Drive will not start

(1) This function may be tied to one input only.
(2) Setting is specific to PowerFlex 525 drives only.

t064 [2-Wire Mode]

Related Parameter(s): P045, P046, P048, P050, t062, t063

Stop drive before changing this parameter.

Programs the mode of trigger only for t062 [DigIn TermBlk 02] and t063 [DigIn TermBlk 03] when 2-wire option is being selected as P046, P048 or P050 [Start Source x].

Options

0 "Edge Trigger" (Default)

Standard 2-Wire operation.

1 "Level Sense"

- I/O Terminal 01 "Stop" = Coast to stop. Drive will restart after a Stop command when:
  - Stop is removed
    and
  - Start is held active
- I/O Terminal 03 "Run REV"

ATTENTION: Hazard of injury exists due to unintended operation. When t064 [2-Wire Mode] is set to option 1, and the Run input is maintained, the Run inputs do not need to be toggled after a Stop input for the drive to run again. A Stop function is provided only when the Stop input is active (open).

ATTENTION: When operating in 2-Wire Level Sense (Run Level), the PowerFlex 523 and PowerFlex 525 drive should only be controlled from the Digital Input Terminal Blocks. This should NOT be used with any other DSI or Network device.

2 "Hi-Spd Edge"

IMPORTANT There is greater potential voltage on the output terminals when using this option.

- Outputs are kept in a ready-to-run state. The drive will respond to a Start command within 10 ms.
- I/O Terminal 01 "Stop" = Coast to stop.
- I/O Terminal 03 "Run REV"

3 "Momentary"

- Drive will start after a momentary input from either the Run FWD input (I/O Terminal 02) or the Run REV input (I/O Terminal 03).
- I/O Terminal 01 "Stop" = Stop according to the value set in P045 [Stop Mode].

t069 [Opto Out1 Sel]
t072 [Opto Out2 Sel]

Related Parameter(s): P046, P048, P050, t070, t073, t077, t082, t086, t087, t093, t094, t097, A541, A564

PF 525 PowerFlex 525 only.

Determines the operation of the programmable digital outputs.

Options	Setting Output Changes State When...	Hysteresis
0 "Ready/Fault"	Opto outputs are active when power is applied. Indicates that the drive is ready for operation. Opto outputs are inactive when power is removed or a fault occurs.	None
1 "At Frequency"	Drive reaches commanded frequency.	0.5 Hz above; 1.0 Hz below
2 "MotorRunning"	Motor is receiving power from the drive.	None
3 "Reverse"	Drive is commanded to run in reverse direction.	None
4 "Motor Overld"	Motor overload condition exists.	100 ms time delay on or off
5 "Ramp Reg"	Ramp regulator is modifying the programmed accel/decel times to avoid an overcurrent or overvoltage fault from occurring.	100 ms time delay on or off
6 "Above Freq"	Drive exceeds the frequency (Hz) value set in t070 or t073 [Opto Outx Level].	100 ms time delay on or off
7 "Above Cur"	Drive exceeds the current (% Amps) value set in t070 or t073 [Opto Outx Level]. **IMPORTANT** Value for t070 or t073 [Opto Outx Level] must be entered in percent of drive rated output current.	100 ms time delay on or off
8 "Above DCVolt"	Drive exceeds the DC bus voltage value set in t070 or t073 [Opto Outx Level].	100 ms time delay on or off
9 "Retries Exst"	Value set in A541 [Auto Rstrt Tries] is exceeded.	None
10 "Above Anlg V"	Analog input voltage (0-10V input) exceeds the value set in t070 or t073 [Opto Outx Level]. **IMPORTANT** Do not use if t093 [10V Bipolar Enbl] is set to 1 "Bi-Polar In".	100 ms time delay on or off
11 "Above PF Ang"	Power Factor angle exceeds the value set in t070 or t073 [Opto Outx Level].	100 ms time delay on or off
12 "Anlg In Loss"	Analog input loss has occurred. Program t094 [Anlg In V Loss] or t097 [Anlg In mA Loss] for desired action when input loss occurs.	On, 2 mA / ±1V Off, 3 mA / ±1.5V
13 "ParamControl"	Output is directly controlled by the state of the t070 or t073 [Opto Outx Level]. A value of 0 causes the output to turn off. A value of 1 or greater in this parameter causes the output to turn on.	None
14 "NonRec Fault"	• Value set in A541 [Auto Rstrt Tries] is exceeded or • A541 [Auto Rstrt Tries] is not enabled or • A non-resettable fault has occurred.	None
15 "EM Brk Cntrl"	EM Brake is energized. Program t087 [EM Brk On Delay] and t086 [EM Brk Off Delay] for desired action.	None
16 "Thermal OL"	Relay energizes when thermal Motor overload counter is above the value set in t077 or t082 [Relay Outx Level]. It also energizes if the drive is within 5 °C of the drive overheat trip point.	None
17 "Amb OverTemp"	Relay energizes when control module over temperature occurs.	None
18 "Local Active"	Active when drive P046, P048 or P050 [Start Source x] is in local keypad control.	None
19 "Comm Loss"	Active when communication is lost from any comm source with reference or control.	None
20 "Logic In 1"	An input is programmed as "Logic Input 1" and is active.	None
21 "Logic In 2"	An input is programmed as "Logic Input 2" and is active.	None
22 "Logic 1 & 2"	Both Logic inputs are programmed and active.	None
23 "Logic 1 or 2"	One or both Logic inputs are programmed and one or both is active.	None
24 "StpLogic Out"	Drive enters StepLogic step with Command Word set to enable Logic output.	None
25 "Timer Out"	Timer has reached the value set in t070 or t073 [Opto Outx Level] or not timing.	None
26 "Counter Out"	Counter has reached the value set in t070 or t073 [Opto Outx Level] or not counting.	None
27 "At Position"	Drive is in Positioning mode and has reached the commanded position. Tolerance is adjusted with A564 [Encoder Pos Tol].	–
28 "At Home"	Drive is in Positioning mode and has reached the home position. Tolerance is adjusted with A564 [Encoder Pos Tol].	–
29 "Safe-Off"	Both safe-off inputs are active.	–
30 "SafeTqPermit"(1)	Both safe-off inputs are inactive (closed).	–
31 "AutoRst Ctdn"(1)	Drive is counting down to an automatic restart.	–

Values		
	Default: Opto Out1 Sel: Opto Out2 Sel:	 2 1
	Min/Max:	0/31
	Display:	1

(1) Setting is available in FRN 5.xxx and later.

Terminal Block Group *(continued)*

t070 [Opto Out1 Level]
t073 [Opto Out2 Level]

Related Parameter(s): t069, t072

32 32 bit parameter.

PF 525 PowerFlex 525 only.

Determines the on/off point for the digital outputs when t069 or t072 [Opto Outx Sel] is set to the values shown below.

Min/Max Value Range Based On [Opto Outx Sel] Setting							
6:	0...500 Hz	10:	0...100%	16:	0.1...9999 s	20:	0/1
7:	0...180%	11	0/1	17:	1...9999 counts	26:	0...150%
8:	0...815V	13	0...800	18:	0...180°	–	

Values	Default:	0.0
	Min/Max:	0.0/9999.0
	Display:	0.1

t075 [Opto Out Logic]

PF 525 PowerFlex 525 only.

Determines the logic (Normally Open/NO or Normally Closed/NC) of the digital outputs only.

Setting	Digital Out 1 Logic	Digital Out 2 Logic
0	NO	NO
1	NC	NO
2	NO	NC
3	NC	NC

Values	Default:	0
	Min/Max:	0/3
	Display:	1

t076 [Relay Out1 Sel] Related Parameter(s): P046, P048, P050, t070, t073, t077, t082, t086, t087, t093, t094, t097, A541, A564

t081 [Relay Out2 Sel]

PF 525 PowerFlex 525 only.

Determines the operation of the programmable output relay.

Options	Output Relay Changes State When...	Hysteresis
0 "Ready/Fault"	Relay changes state when power is applied. Indicates that the drive is ready for operation. Relay returns drive to shelf state when power is removed or a fault occurs.	None
1 "At Frequency"	Drive reaches commanded frequency.	0.5 Hz above; 1.0 Hz below
2 "MotorRunning"	Motor is receiving power from the drive.	None
3 "Reverse"	Drive is commanded to run in reverse direction.	None
4 "Motor OverId"	Motor overload condition exists.	100 ms time delay on or off
5 "Ramp Reg"	Ramp regulator is modifying the programmed accel/ decel times to avoid an overcurrent or overvoltage fault from occurring.	100 ms time delay on or off
6 "Above Freq"	Drive exceeds the frequency (Hz) value set in t077 or t082 [Relay Outx Level].	100 ms time delay on or off
7 "Above Cur"	Drive exceeds the current (% Amps) value set in t077 or t082 [Relay Outx Level]. **IMPORTANT** Value for t077 or t082 [Relay Outx Level] must be entered in percent of drive rated output current.	100 ms time delay on or off
8 "Above DCVolt"	Drive exceeds the DC bus voltage value set in t077 or t082 [Relay Outx Level].	100 ms time delay on or off
9 "Retries Exst"	Value set in A541 [Auto Rstrt Tries] is exceeded.	None
10 "Above Anlg V"	Analog input voltage (0-10V input) exceeds the value set in t077 or t082 [Relay Outx Level]. **IMPORTANT** Do not use if t093 [10V Bipolar Enbl] is set to 1 "Bi-Polar In".	100 ms time delay on or off
11 "Above PF Ang"	Power Factor angle exceeds the value set in t077 or t082 [Relay Outx Level].	100 ms time delay on or off
12 "Anlg In Loss"	Analog input loss has occurred. Program t094 [Anlg In V Loss] or t097 [Anlg In mA Loss] for desired action when input loss occurs.	On, 2 mA / ±1V Off, 3 mA / ±1.5V
13 "ParamControl"	Output will be directly controlled by the state of the t077 or t082 [Relay Outx Level]. A value of 0 causes the output to turn off. A value of 1 or greater in this parameter causes the output to turn on.	None
14 "NonRec Fault"	• Value set in A541 [Auto Rstrt Tries] is exceeded or • A541 [Auto Rstrt Tries] is not enabled or • A non-resettable fault has occurred.	None
15 "EM Brk Cntrl"	EM Brake is energized. Program t087 [EM Brk On Delay] and t086 [EM Brk Off Delay] for desired action.	None
16 "Thermal OL"	Relay energizes when thermal Motor overload counter is above the value set in t077 or t082 [Relay Outx Level]. It also energizes if the drive is within 5°C of the drive overheat trip point.	None
17 "Amb OverTemp"	Relay energizes when control module over temperature occurs.	None
18 "Local Active	Active when drive P046, P048 or P050 [Start Source x] is in local keypad control.	None
19 "Comm Loss"	Active when communication is lost from any comm source with reference or control.	None
20 "Logic In 1"(1)	An input is programmed as "Logic Input 1" and is active.	None
21 "Logic In 2"(1)	An input is programmed as "Logic Input 2" and is active.	None
22 "Logic 1 & 2"(1)	Both Logic inputs are programmed and active.	None
23 "Logic 1 or 2"(1)	One or both Logic inputs are programmed and one or both is active.	None
24 "StpLogic Out"(1)	Drive enters StepLogic step with Command Word set to enable Logic output.	None
25 "Timer Out"	Timer has reached the value set in t077 or t082 [Relay Outx Level] or not timing.	None
26 "Counter Out"	Counter has reached the value set in t077 or t082 [Relay Outx Level] or not counting.	None
27 "At Position"(1)	Drive is in Positioning mode and has reached the commanded position. Tolerance is adjusted with A564 [Encoder Pos Tol].	–
28 "At Home"(1)	Drive is in Positioning mode and has reached the home position. Tolerance is adjusted with A564 [Encoder Pos Tol].	–
29 "Safe-Off"(1)	Both safe-off inputs are active.	–
30 "SafeTqPermit"(1)(2)	Both safe-off inputs are inactive (closed).	–
31 "AutoRst Ctdn"(1)(2)	Drive is counting down to an automatic restart.	–

Values		
	Default: Relay Out1 Sel: Relay Out2 Sel:	 0 2
	Min/Max:	0/31
	Display:	1

(1) Setting is specific to PowerFlex 525 drives only.

(2) Setting is available in FRN 5.xxx and later.

t077 [Relay Out1 Level]

Related Parameter(s): t076, t081

t082 [Relay Out2 Level]

PF 525 PowerFlex 525 only.

32 32 bit parameter.

Determines the on/off point for the output relay when t076 or t081 [Relay Outx Sel] is set to the values shown below.

Min/Max Value Range Based On [Relay Outx Sel] Setting							
6:	0...500 Hz	10:	0...100%	16:	0.1...9999 s	20:	0/1
7:	0...180%	11:	0/1	17:	1...9999 counts	26:	0...150%
8:	0...815V	13:	0...800	18:	0...180°	–	

Values	Default:	0.0
	Min/Max:	0.0/9999.0
	Display:	0.1

t079 [Relay 1 On Time]

t084 [Relay 2 On Time]

PF 525 PowerFlex 525 only.

Sets the delay time before Relay energizes after required condition is met.

Values	Default:	0.0 s
	Min/Max:	0.0/600.0 s
	Display:	0.1 s

t080 [Relay 1 Off Time]

t085 [Relay 2 Off Time]

PF 525 PowerFlex 525 only.

Sets the delay time before Relay de-energizes after required condition ceases.

Values	Default:	0.0 s
	Min/Max:	0.0/600.0 s
	Display:	0.1 s

t086 [EM Brk Off Delay]

Related Parameter(s): P045

Sets the time the drive remains at minimum frequency before ramping up to the commanded frequency (and engaging the brake coil relay) if Electromechanical (EM) Brake Control Mode is enabled with P045 [Stop Mode].

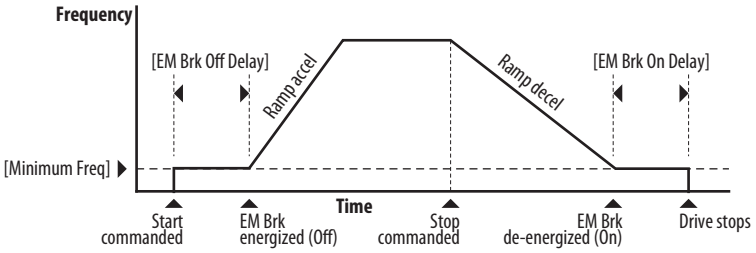

Values	Default:	2.00 s
	Min/Max:	0.00/10.00 s
	Display:	0.01 s

Terminal Block Group *(continued)*

t087 [EM Brk On Delay] Related Parameter(s): P045

Sets the time the drive remains at minimum frequency (after releasing the brake coil relay) before stopping if EM Brake Control Mode is enabled with P045 [Stop Mode].

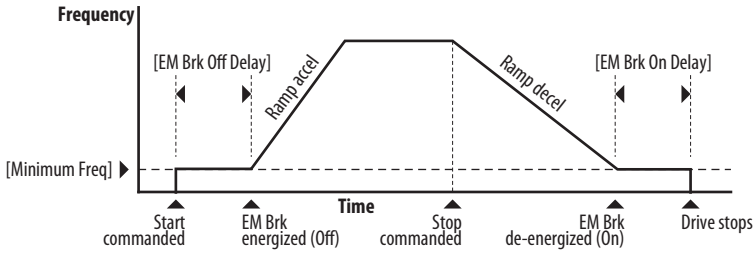

Values	Default:	2.00 s
	Min/Max:	0.00/10.00 s
	Display:	0.01 s

t088 [Analog Out Sel] Related Parameter(s): t090

The 0-10V, 0-20 mA or 4-2 0 mA analog output can be used to provide a signal proportional to several drive conditions. This parameter also selects which analog calibration parameters to use.(1)

Options	Output Range	Minimum Output Value	Maximum Output Value = t089 [Analog Out High]	Filter(1)	Related Parameter
0 "OutFreq 0-10"	0-10V	0V = 0 Hz	[Maximum Freq]	None	b001
1 "OutCurr 0-10"	0-10V	0V = 0 A	200% Drive Rated Current	Filter A	b003
2 "OutVolt 0-10"	0-10V	0V = 0V	120% Drive Rated Output Volts	None	b004
3 "OutPowr 0-10"	0-10V	0V = 0 kW	200% Drive Rated Power	Filter A	b017
4 "OutTorq 0-10"	0-10V	0V = 0 A	200% Drive Rated Current	Filter A	d382
5 "TstData 0-10"	0-10V	0V = 0000	65535 (Hex FFFF)	None	–
6 "Setpnt 0-10"	0-10V	0V = 0%	100.0% Setpoint setting	None	t090
7 "DCVolt 0-10"	0-10V	0V = 0V	100.0% of trip value	None	b005
8 "OutFreq 0-20"	0-20 mA	0 mA = 0 Hz	[Maximum Freq]	None	b001
9 "OutCurr 0-20"	0-20 mA	0 mA = 0 A	200% Drive Rated Current	Filter A	b003
10 "OutVolt 0-20"	0-20 mA	0 mA = 0V	120% Drive Rated Output Volts	None	b004
11 "OutPowr 0-20"	0-20 mA	0 mA = 0 kW	200% Drive Rated Power	Filter A	b017
12 "OutTorq 0-20"	0-20 mA	0 mA = 0 A	200% Drive Rated Current	Filter A	d382
13 "TstData 0-20"	0-20 mA	0 mA = 0000	65535 (Hex FFFF)	None	–
14 "Setpnt 0-20"	0-20 mA	0 mA = 0%	100.0% Setpoint setting	None	t090
15 "DCVolt 0-20"	0-20 mA	0 mA = 0V	100.0% of trip value	None	b005
16 "OutFreq 4-20"	4-20 mA	4 mA = 0 Hz	[Maximum Freq]	None	b001
17 "OutCurr 4-20"	4-20 mA	4 mA = 0 A	200% Drive Rated Current	Filter A	b003
18 "OutVolt 4-20"	4-20 mA	4 mA = 0V	120% Drive Rated Output Volts	None	b004
19 "OutPowr 4-20"	4-20 mA	4 mA = 0 kW	200% Drive Rated Power	Filter A	b017
20 "OutTorq 4-20"	4-20 mA	4 mA = 0 A	200% Drive Rated Current	Filter A	d382
21 "TstData 4-20"	4-20 mA	4 mA = 0000	65535 (Hex FFFF)	None	–
22 "Setpnt 4-20"	4-20 mA	4 mA = 0%	100.0% Setpoint setting	None	t090
23 "DCVolt 4-20"	4-20 mA	4 mA = 0V	100.0% of trip value	None	b005

(1) Filter A is a single pole digital filter with a 162 ms time constant. Given a 0...100% step input from a steady state, the output of Filter A takes 500 ms to get to 95% of maximum, 810 ms to get to 99%, and 910 ms to get to 100%.

Values	Default:	0
	Min/Max:	0/23
	Display:	1

(1) Parameter is also available in PowerFlex 523 FRN 3.xxx and later. PowerFlex 523 series B drive is required.

Terminal Block Group *(continued)*

t089 [Analog Out High]

Scales the maximum output value (V or mA) when the source setting is at maximum.(1)

Values	Default:	100%
	Min/Max:	0/800%
	Display:	1%

(1) Parameter is also available in PowerFlex 523 FRN 3.xxx and later. PowerFlex 523 series B drive is required.

t090 [Anlg Out Setpt] Related Parameter(s): t088

Sets the percentage of output desired when t088 [Analog Out Sel] is set to 6, 14 or 22 "Analog Setpoint".(1)

Values	Default:	0.0%
	Min/Max:	0.0/100.0%
	Display:	0.1%

(1) Parameter is also available in PowerFlex 523 FRN 3.xxx and later. PowerFlex 523 series B drive is required.

t091 [Anlg In 0-10V Lo] Related Parameter(s): P043, t092, t093

Stop drive before changing this parameter.

Sets the percentage (based on 10V) of input voltage applied to the 0-10V analog input used to represent P043 [Minimum Freq].
Analog inversion can be accomplished by setting this value larger than t092 [Anlg In 0-10V Hi].
If t093 [10V Bipolar Enbl] is set to 1 "Bi-Polar In", this parameter is ignored.

Values	Default:	0.0%
	Min/Max:	0.0/200.0%
	Display:	0.1%

t092 [Anlg In 0-10V Hi] Related Parameter(s): P044, t091, t093

Stop drive before changing this parameter.

Sets the percentage (based on 10V) of input voltage applied to the 0-10V analog input used to represent P044 [Maximum Freq].
Analog inversion can be accomplished by setting this value smaller than t091 [Anlg In 0-10V Lo].
If t093 [10V Bipolar Enbl] is set to 1 "Bi-Polar In", the same value applies to positive and negative voltage.

Values	Default:	100.0%
	Min/Max:	0.0/200.0%
	Display:	0.1%

t093 [10V Bipolar Enbl] Related Parameter(s): t091, t092

PF 525 PowerFlex 525 only.

Enables/disables bi-polar control. In bi-polar mode direction is commanded by the polarity of the voltage.
If bi-polar control is enabled, P043 [Minimum Freq] and t091 [Anlg In 0-10V Lo] are ignored.

Options	0	"Uni-Polar In" (Default)	0-10V only
	1	"Bi-Polar In"	±10V

Terminal Block Group *(continued)*

t094 [Anlg In V Loss] Related Parameter(s): P043, P044, A426, A427

Sets the response to a loss of input. When the 0-10V input (or –10 to +10V) is used for any reference, any input less than 1V is reported as a signal loss. Input must exceed 1.5V for the signal loss condition to end.
If enabled, this function affects any input that is being used as a speed reference, PID reference or PID setpoint in the drive.

Options	0	"Disabled" (Default)
	1	"Fault (F29)"
	2	"Stop"
	3	"Zero Ref"
	4	"Min Freq Ref"
	5	"Max Freq Ref"
	6	"Key Freq Ref"
	7	"MOP Freq Ref"
	8	"Continu Last"

t095 [Anlg In4-20mA Lo] Related Parameter(s): P043, t096

Stop drive before changing this parameter.

Sets the percentage (based on 4-20 mA) of input current applied to the 4-20 mA analog input used to represent P043 [Minimum Freq].
Analog inversion can be accomplished by setting this value larger than t096 [Anlg In4-20mA Hi].

Values	Default:	0.0%
	Min/Max:	0.0/100.0%
	Display:	0.1%

t096 [Anlg In4-20mA Hi] Related Parameter(s): P044, t095

Stop drive before changing this parameter.

Sets the percentage (based on 4-20 mA) of input current applied to the 4-20 mA analog input used to represent P044 [Maximum Freq].
Analog inversion can be accomplished by setting this value smaller than t095 [Anlg In4-20mA Lo].

Values	Default:	100.0%
	Min/Max:	0.0/200.0%
	Display:	0.1%

t097 [Anlg In mA Loss] Related Parameter(s): P043, P044, A426, A427

Sets the response to a loss of input. When the 4-20mA input is used for any reference, any input less than 2 mA is reported as a signal loss. Input must exceed 3 mA for the signal loss condition to end.
If enabled, this function affects any input that is being used as a speed reference or PID reference or PID setpoint in the drive.

Options	0	"Disabled" (Default)
	1	"Fault (F29)"
	2	"Stop"
	3	"Zero Ref"
	4	"Min Freq Ref"
	5	"Max Freq Ref"
	6	"Key Freq Ref"
	7	"MOP Freq Ref"
	8	"Continu Last"

Terminal Block Group *(continued)*

t098 [Anlg Loss Delay] Related Parameter(s): t094, t097

Sets the length of time after power-up during which the drive detects no analog signal loss.
Response to an analog signal loss is set in t094 or t097 [Analog In x Loss].

Values	Default:	0.0 s
	Min/Max:	0.0 /20.0 s
	Display:	0.1 s

t099 [Analog In Filter]

Sets the level of additional filtering of the analog input signals. A higher number increases filtering and decreases bandwidth. Each setting doubles the applied filtering (1 = 2x filter, 2 = 4x filter, and so on).

Values	Default:	0
	Min/Max:	0/14
	Display:	1

t100 [Sleep-Wake Sel] Related Parameter(s): t101, t102, t103

Drive "sleeps" if the appropriate analog input drops below the set t101 [Sleep Level] for the time set in t102 [Sleep Time] and the drive is running. When entering sleep mode the drive ramps to zero and the run indicator on the keypad display flashes to indicate the drive is in "sleep" mode.
When the appropriate analog input rises above the set [Wake Level], the drive "wakes" and ramps to the commanded frequency.
Inversion can be accomplished by setting [Sleep Level] to a higher setting than t103 [Wake Level].

ATTENTION: Enabling the Sleep-Wake function can cause unexpected machine operation during the Wake mode. Equipment damage and/or personal injury can result if this parameter is used in an inappropriate application. In addition, all applicable local, national and international codes, standards, regulations or industry guidelines must be considered.

Options	0	"Disabled" (Default)	
	1	"0-10V Input"	Sleep enabled from 0-10V Analog Input 1
	2	"4-20mA Input"	Sleep enabled from 4-20 mA Analog Input 2
	3	"Command Freq"	Sleep enabled based on drive commanded frequency

t101 [Sleep Level]

Sets the analog input level the drive must reach to enter sleep mode.

Values	Default:	10.0%
	Min/Max:	0.0/100.0%
	Display:	0.1%

t102 [Sleep Time]

Sets the analog input time the drive must stay below to enter sleep mode.

Values	Default:	0.0 s
	Min/Max:	0.0/600.0 s
	Display:	0.1 s

t103 [Wake Level]

Sets the analog input level the drive must reach to wake from sleep mode.

Values	Default:	15.0%
	Min/Max:	0.0/100.0%
	Display:	0.1%

Terminal Block Group *(continued)*

t104 [Wake Time]

Sets the analog input time the drive must stay above to wake from sleep mode.

Values	Default:	0.0 s
	Min/Max:	0.0/600.0 s
	Display:	0.1 s

t105 [Safety Open En]

PF 525 PowerFlex 525 only.

Sets the action when both safety inputs (Safety 1 and Safety 2) are disabled (de-energized – no power is applied).

Options	0	"FaultEnable" (Default)
	1	"FaultDisable"

t106 [SafetyFlt RstCfg]

PF 525 PowerFlex 525 only.

(With FRN 5.xxx and later.)

Sets the method of resetting fault F111 "Safety Hardware" either by means of a power cycle or fault clear operation.

Options	0	"PwrCycleRset" (Default)	Reset fault F111 using power cycle.
	1	"FltClr Reset"	Reset fault F111 using fault clear mechanism without power cycle.

Communications Group

C121 [Comm Write Mode]

Saves parameter values in active drive memory (RAM) or in drive non-volatile memory (EEPROM).

ATTENTION: If Automatic Drive Configuration (ADC) is used, this parameter must remain at its default value of 0 “Save”.

IMPORTANT Parameter values set prior to setting 1 “RAM only” are saved in RAM.

Options	0	“Save” (Default)
	1	“RAM only”

C122 [Cmd Stat Select]

PF 525 PowerFlex 525 only.

Selects velocity-specific or position/fibers-specific Command and Status Word bit definitions for use over a communication network. See Writing (06) Logic Command Data on page 203 for more information. This parameter cannot be changed when an I/O connection is established through the communication adapter or the drive’s embedded EtherNet/IP port.

Options	0	“Velocity” (Default)
	1	“Position”

C123 [RS485 Data Rate]

Sets the communications baud rate (bits/second) for the RS485 port. A reset or power cycle is required after selection is made.

Options	0	“1200”
	1	“2400”
	2	“4800”
	3	“9600” (Default)
	4	“19,200”
	5	“38,400”

C124 [RS485 Node Addr]

Sets the Modbus drive node number (address) for the RS485 port if using a network connection. A reset or power cycle is required after selection is made.

Values	Default:	100
	Min/Max:	1/247
	Display:	1

C125 [Comm Loss Action] Related Parameter(s): P045

Sets the drive's response to a loss of connection or excessive communication errors on the RS485 port.

Options	0	“Fault” (Default)	
	1	“Coast Stop”	Stops drive using “Coast to stop”.
	2	“Stop”	Stops drive using P045 [Stop Mode] setting.
	3	“Continu Last”	Drive continues operating at communication commanded speed saved in RAM.

C126 [Comm Loss Time] Related Parameter(s): C125

Sets the time that the drive remains in communication loss with the RS485 port before taking the action specified in C125 [Comm Loss Action]. See Appendix C for more information.

IMPORTANT This setting is effective only if I/O that controls the drive is transmitted through the RS485 port.

Values	Default:	5.0 s
	Min/Max:	0.1/60.0 s
	Display:	0.1 s

Communications Group *(continued)*

C127 [RS485 Format]

Determines the details related to the specific Modbus protocol used by the drive. A reset or power cycle is required after selection is made.

Options	0	"RTU 8-N-1" (Default)
	1	"RTU 8-E-1"
	2	"RTU 8-O-1"
	3	"RTU 8-N-2"
	4	"RTU 8-E-2"
	5	"RTU 8-O-2"

C128 [EN Addr Sel]

Related Parameter(s): C129-C132, C133-C136, C137-C140

PF 525 PowerFlex 525 only.

Enables the IP address, subnet mask and gateway address to be set with a BOOTP server. Identifies the connections that would be attempted on a reset or power cycle. A reset or power cycle is required after selection is made.

Options	1	"Parameters"
	2	"BOOTP" (Default)

C129 [EN IP Addr Cfg 1]
C130 [EN IP Addr Cfg 2]
C131 [EN IP Addr Cfg 3]
C132 [EN IP Addr Cfg 4]

Related Parameter(s): C128

PF 525 PowerFlex 525 only.

Sets the bytes in the IP address. A reset or power cycle is required after selection is made.

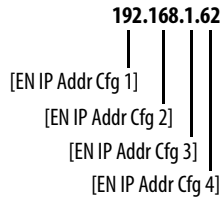

IMPORTANT C128 [EN Addr Sel] must be set to 1 "Parameters".

Values	Default:	0
	Min/Max:	0/255
	Display:	1

Communications Group *(continued)*

C133 [EN Subnet Cfg 1]
C134 [EN Subnet Cfg 2]
C135 [EN Subnet Cfg 3]
C136 [EN Subnet Cfg 4]

Related Parameter(s): C128

PF 525 PowerFlex 525 only.

Sets the bytes of the subnet mask. A reset or power cycle is required after selection is made.

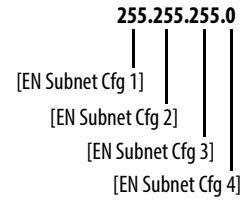

IMPORTANT C128 [EN Addr Sel] must be set to 1 "Parameters".

Values	Default:	0
	Min/Max:	0/255
	Display:	1

C137 [EN Gateway Cfg 1]
C138 [EN Gateway Cfg 2]
C139 [EN Gateway Cfg 3]
C140 [EN Gateway Cfg 4]

Related Parameter(s): C128

PF 525 PowerFlex 525 only.

Sets the bytes of the gateway address. A reset or power cycle is required after selection is made.

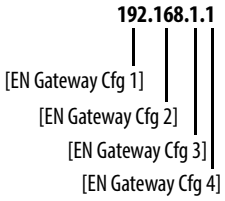

IMPORTANT C128 [EN Addr Sel] must be set to 1 "Parameters".

Values	Default:	0
	Min/Max:	0/255
	Display:	1

C141 [EN Rate Cfg]

PF 525 PowerFlex 525 only.

Sets the network data rate at which EtherNet/IP communicates. A reset or power cycle is required after selection is made.

Options	0	"Auto detect" (Default)
	1	"10Mbps Full"
	2	"10Mbps Half"
	3	"100Mbps Full"
	4	"100Mbps Half"

Communications Group *(continued)*

C143 [EN Comm Flt Actn]

Related Parameter(s): P045, C145, C146, C147-C150

PF 525 PowerFlex 525 only.

Sets the action that the EtherNet/IP interface and drive takes if the EtherNet/IP interface detects that Ethernet communications have been disrupted.

IMPORTANT This setting is effective only if I/O that controls the drive is transmitted through the EtherNet/IP interface.

ATTENTION: Risk of injury or equipment damage exists. Parameter C143 [EN Comm Flt Actn] lets you determine the action of the EtherNet/IP interface and connected drive if communications are disrupted. By default, this parameter faults the drive. You can set this parameter so that the drive continues to run. Precautions should be taken to ensure that the setting of this parameter does not create a risk of injury or equipment damage. When commissioning the drive, verify that your system responds correctly to various situations (for example, a disconnected drive).

Options	0	"Fault" (Default)	
	1	"Stop"	Drive stops per P045 [Stop Mode] setting.
	2	"Zero Data"	Note: The Reference and Datalink values transmitted to the drive will be set to "0".
	3	"Hold Last"	Note: The Logic Command, Reference, and Datalink values transmitted to the drive will be held at their last value.
	4	"Send Flt Cfg"	Note: The Logic Command, Reference, and Datalink values will be transmitted to the drive as configured in C145, C146, and C147...C150.

C144 [EN Idle Flt Actn]

Related Parameter(s): P045, C145, C146, C147-C150

PF 525 PowerFlex 525 only.

Sets the action that the EtherNet/IP interface and drive takes if the EtherNet/IP interface detects that the scanner is idle because the controller was switched to program mode.

ATTENTION: Risk of injury or equipment damage exists. Parameter C144 [EN Idle Flt Actn] lets you determine the action of the EtherNet/IP interface and connected drive if the scanner is idle. By default, this parameter faults the drive. you can set this parameter so that the drive continues to run. Precautions should be taken to ensure that the setting of this parameter does not create a risk of injury or equipment damage. When commissioning the drive, verify that your system responds correctly to various situations (for example, a disconnected drive).

Options	0	"Fault" (Default)	
	1	"Stop"	Drive stops per P045 [Stop Mode] setting.
	2	"Zero Data"	Note: The Reference and Datalink values transmitted to the drive will be set to "0".
	3	"Hold Last"	Note: The Logic Command, Reference, and Datalink values transmitted to the drive will be held at their last value.
	4	"Send Flt Cfg"	Note: The Logic Command, Reference, and Datalink values will be transmitted to the drive as configured in C145, C146, and C147...C150.

C145 [EN Flt Cfg Logic]

Related Parameter(s): C143, C144

32 32 bit parameter.

PF 525 PowerFlex 525 only.

Sets the Logic Command data that is sent to the drive if any of the following is true:

– C143 [EN Comm Flt Actn] is set to 4 "Send Flt Cfg" and communications are disrupted.

– C144 [EN Idle Flt Actn] is set to 4 "Send Flt Cfg" and the scanner is put into Program or Test mode.

See Writing (06) Logic Command Data on page 203 for more information.

Values	Default:	0000
	Min/Max:	0000/FFFF
	Display:	0000

Communications Group *(continued)*

C146 [EN Flt Cfg Ref]

Related Parameter(s): C143, C144

32 32 bit parameter.

PF 525 PowerFlex 525 only.

Sets the Reference data that is sent to the drive if any of the following is true:
– C143 [EN Comm Flt Actn] is set to 4 "Send Flt Cfg" and communications are disrupted.
– C144 [EN Idle Flt Actn] is set to 4 "Send Flt Cfg" and the scanner is put into Program or Test mode.

Values	Default:	0
	Min/Max:	0/50000
	Display:	1

C147 [EN Flt Cfg DL 1]
C148 [EN Flt Cfg DL 2]
C149 [EN Flt Cfg DL 3]
C150 [EN Flt Cfg DL 4]

PF 525 PowerFlex 525 only.

Sets the Ethernet Datalink Input data that is sent to the drive if any of the following is true:
– C143 [EN Comm Flt Actn] is set to 4 "Send Flt Cfg" and communications are disrupted.
– C144 [EN Idle Flt Actn] is set to 4 "Send Flt Cfg" and the scanner is put into Program or Test mode.

Values	Default:	0
	Min/Max:	0/65535
	Display:	1

C153 [EN Data In 1]
C154 [EN Data In 2]
C155 [EN Data In 3]
C156 [EN Data In 4]

PF 525 PowerFlex 525 only.

Datalink parameter number whose value is written from the embedded EtherNet/IP data table. This parameter cannot be changed when an I/O connection is established through the drive's embedded EtherNet/IP port.

Values	Default:	0
	Min/Max:	0/800
	Display:	1

C157 [EN Data Out 1]
C158 [EN Data Out 2]
C159 [EN Data Out 3]
C160 [EN Data Out 4]

PF 525 PowerFlex 525 only.

Datalink parameter number whose value is read from the embedded EtherNet/IP data table. This parameter cannot be changed when an I/O connection is established through the drive's embedded EtherNet/IP port.

Values	Default:	0
	Min/Max:	0/800
	Display:	1

Communications Group *(continued)*

C161 [Opt Data In 1]
C162 [Opt Data In 2]
C163 [Opt Data In 3]
C164 [Opt Data In 4]

Datalink parameter number whose value is written from the High Speed Drive Serial Interface (HSDSI) data table. This parameter cannot be changed when an I/O connection is established through the communication adapter.

Values	Default:	0
	Min/Max:	0/800
	Display:	1

C165 [Opt Data Out 1]
C166 [Opt Data Out 2]
C167 [Opt Data Out 3]
C168 [Opt Data Out 4]

Datalink parameter number whose value is read from the HSDSI data table. This parameter cannot be changed when an I/O connection is established through the communication adapter.

Values	Default:	0
	Min/Max:	0/800
	Display:	1

C169 [MultiDrv Sel]

Sets the configuration of the drive that is in multi-drive mode. A reset or power cycle is required after selection is made.

Options	0 "Disabled" (Default)	No multi-drive master from the internal network option module or embedded Ethernet port. The drive can still function as a multi-drive slave or as a single drive (no multi-drive used).
	1 "Network Opt"	Multi-drive is enabled with the internal network option as a multi-drive master. The host drive is "Drive 0" and up to four slave drives can be daisy-chained from its RS485 port.
	2 "EtherNet/IP"(1)	Multi-drive is enabled with the embedded Ethernet port as the multi-drive master. The host drive is "Drive 0" and up to four slave drives can be daisy-chained from its RS485 port.

(1) Setting is specific to PowerFlex 525 drives only.

C171 [Drv 1 Addr]
C172 [Drv 2 Addr]
C173 [Drv 3 Addr]
C174 [Drv 4 Addr]

Related Parameter(s): C169

Sets the corresponding node addresses of the daisy-chained drives when C169 [MultiDrv Sel] is set to 1 "Network Opt" or 2 "EtherNet/IP". A reset or power cycle is required after selection is made.

Values	Default: Drv 1 Addr: Drv 2 Addr: Drv 3 Addr: Drv 4 Addr:	 2 3 4 5
	Min/Max:	1/247
	Display:	1

C175 [DSI I/O Cfg]

Sets the configuration of the Drives that are active in the multi-drive mode. Identifies the connections that would be attempted on a reset or power cycle. A reset or power cycle is required after selection is made.

Options	0 "Drive 0" (Default)	
	1 "Drive 0-1"	
	2 "Drive 0-2"	
	3 "Drive 0-3"	
	4 "Drive 0-4"	

Logic Group

L180 [Stp Logic 0] **L181 [Stp Logic 1]**
L182 [Stp Logic 2] **L183 [Stp Logic 3]**
L184 [Stp Logic 4] **L185 [Stp Logic 5]**
L186 [Stp Logic 6] **L187 [Stp Logic 7]**

Related Parameter(s):

Stop drive before changing this parameter.

PF 525 PowerFlex 525 only.

Values	Default:	00F1
	Min/Max:	0000/FAFF
	Display	0001

See Appendix D and Appendix E for more information on applying Step Logic and Position StepLogic.

Parameters L180...L187 are only active if P047, P049, or P051 [Speed Referencex] is set to 13 "Step Logic" or 16 "Positioning". These parameters can be used to create a custom profile of frequency commands. Each "step" can be based on time, status of a Logic input or a combination of time and the status of a Logic input.

Digits 1...4 for each [Stp Logic x] parameter must be programmed according to the desired profile. A Logic input is established by setting a digital input, parameters t062, t063, t065...t068 [DigIn TermBlk xx] to 24 "Logic In 1" and/or 25 "Logic In 2" or by using Bits 6 and 7 of A560 [Enh Control Word].

A time interval between steps can be programmed using parameters L190...L197 [Stp Logic Time x]. See the table below for related parameters.

The speed for any step is programmed using parameters A410...A417 [Preset Freq x].

Step	StepLogic Parameter	Related Preset Frequency Parameter (Can be activated independent of StepLogic Parameters)	Related StepLogic Time Parameter (Active when L180...L187 Digit 1 or 2 are set to 1, b, C, d or E)
0	L180 [Stp Logic 0]	A410 [Preset Freq 0]	L190 [Stp Logic Time 0]
1	L181 [Stp Logic 1]	A411 [Preset Freq 1]	L191 [Stp Logic Time 1]
2	L182 [Stp Logic 2]	A412 [Preset Freq 2]	L192 [Stp Logic Time 2]
3	L183 [Stp Logic 3]	A413 [Preset Freq 3]	L193 [Stp Logic Time 3]
4	L184 [Stp Logic 4]	A414 [Preset Freq 4]	L194 [Stp Logic Time 4]
5	L185 [Stp Logic 5]	A415 [Preset Freq 5]	L195 [Stp Logic Time 5]
6	L186 [Stp Logic 6]	A416 [Preset Freq 6]	L196 [Stp Logic Time 6]
7	L187 [Stp Logic 7]	A417 [Preset Freq 7]	L197 [Stp Logic Time 7]

The position for any step is programmed using parameters L200...L214 [Step Units x].

Step	StepLogic Position Parameter
0	L200 [Step Units 0] & L201 [Step Units F 0]
1	L202 [Step Units 1] & L203 [Step Units F 1]
2	L204 [Step Units 2] & L205 [Step Units F 2]
3	L206 [Step Units 3] & L207 [Step Units F 3]
4	L208 [Step Units 4] & L209 [Step Units F 4]
5	L210 [Step Units 5] & L211 [Step Units F 5]
6	L212 [Step Units 6] & L213 [Step Units F 6]
7	L214 [Step Units 7] & L215 [Step Units F 7]

How StepLogic Works

The StepLogic sequence begins with a valid start command. A normal sequence always begins with L180 [Stp Logic 0].

Digit 1: Logic for next step

This digit defines the logic for the next step. When the condition is met the program advances to the next step. Step 0 follows Step 7. Example: Digit 1 is set to 3. When "Logic In 2" becomes active, the program advances to the next step.

Digit 2: Logic to jump to a different step

For all settings other than F, when the condition is met, the program overrides Digit 0 and jumps to the step defined by Digit 3.

Digit 3: Different step to jump

When the condition for Digit 2 is met, this digit setting determines the next step or to end the program.

Digit 4: Step settings

This digit defines additional characteristics of each step.

Any StepLogic parameter can be programmed to control a relay or opto output, but you can not control different outputs based on the condition of different StepLogic commands.

StepLogic Settings

The logic for each function is determined by the four digits for each StepLogic parameter. The following is a listing of the available settings for each digit. See Appendix D for more information.

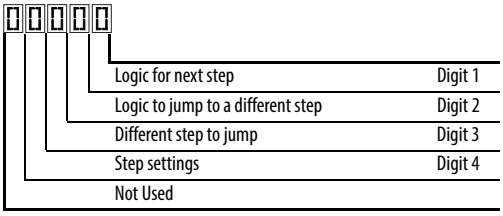

Velocity Control Settings (Digit 4)

Required Setting	Accel/Decel Param. Used	StepLogic Output State	Commanded Direction
0	Accel/Decel 1	Off	FWD
1	Accel/Decel 1	Off	REV
2	Accel/Decel 1	Off	No Output
3	Accel/Decel 1	On	FWD
4	Accel/Decel 1	On	REV
5	Accel/Decel 1	On	No Output
6	Accel/Decel 2	Off	FWD
7	Accel/Decel 2	Off	REV
8	Accel/Decel 2	Off	No Output
9	Accel/Decel 2	On	FWD
A	Accel/Decel 2	On	REV
b	Accel/Decel 2	On	No Output

Positioning Settings (Digit 4)

Required Setting	Accel/Decel Param. Used	StepLogic Output State	Direction From Home	Type of Command
0	Accel/Decel 1	Off	FWD	Absolute
1	Accel/Decel 1	Off	FWD	Incremental
2	Accel/Decel 1	Off	REV	Absolute
3	Accel/Decel 1	Off	REV	Incremental
4	Accel/Decel 1	On	FWD	Absolute
5	Accel/Decel 1	On	FWD	Incremental
6	Accel/Decel 1	On	REV	Absolute
7	Accel/Decel 1	On	REV	Incremental
8	Accel/Decel 2	Off	FWD	Absolute
9	Accel/Decel 2	Off	FWD	Incremental
A	Accel/Decel 2	Off	REV	Absolute
b	Accel/Decel 2	Off	REV	Incremental
C	Accel/Decel 2	On	FWD	Absolute
d	Accel/Decel 2	On	FWD	Incremental
E	Accel/Decel 2	On	REV	Absolute
F	Accel/Decel 2	On	REV	Incremental

Settings (Digit 3)

Setting	Description
0	Jump to Step 0
1	Jump to Step 1
2	Jump to Step 2
3	Jump to Step 3
4	Jump to Step 4
5	Jump to Step 5
6	Jump to Step 6
7	Jump to Step 7
8	End Program (Normal Stop)
9	End Program (Coast to Stop)
A	End Program and Fault (F2)

Settings (Digit 2 and 1)

Setting	Description
0	Skip Step (Jump Immediately)
1	Step Based on [Stp Logic Time x]
2	Step if “Logic In 1” is Active
3	Step if “Logic In 2” is Active
4	Step if “Logic In 1” is Not Active
5	Step if “Logic In 2” is Not Active
6	Step if either “Logic In 1” or “Logic In 2” is Active
7	Step if both “Logic In 1” and “Logic In 2” are Active
8	Step if neither “Logic In 1” nor “Logic In 2” is Active
9	Step if “Logic In 1” is Active and “Logic In 2” is Not Active
A	Step if “Logic In 2” is Active and “Logic In 1” is Not Active
b	Step after [Stp Logic Time x] and “Logic In 1” is Active
C	Step after [Stp Logic Time x] and “Logic In 2” is Active
d	Step after [Stp Logic Time x] and “Logic In 1” is Not Active
E	Step after [Stp Logic Time x] and “Logic In 2” is Not Active
F	Do Not Step/Ignore Digit 2 Settings

Logic Group *(continued)*

L190 [Stp Logic Time 0] **L191 [Stp Logic Time 1]**
L192 [Stp Logic Time 2] **L193 [Stp Logic Time 3]**
L194 [Stp Logic Time 4] **L195 [Stp Logic Time 5]**
L196 [Stp Logic Time 6] **L197 [Stp Logic Time 7]**

PF 525 PowerFlex 525 only.

Sets the time to remain in each step if the corresponding command word is set to "Step based on time".

Values	Default:	30.0 s
	Min/Max:	0.0/999.9 s
	Display:	0.1 s

L200 [Step Units 0] **L202 [Step Units 1]**
L204 [Step Units 2] **L206 [Step Units 3]**
L208 [Step Units 4] **L210 [Step Units 5]**
L212 [Step Units 6] **L214 [Step Units 7]**

32 32 bit parameter.

PF 525 PowerFlex 525 only.

Sets the position in user-defined units the drive must reach at each step.

Values	Default:	0.00
	Min/Max:	0.00/6400.00
	Display:	0.01

Advanced Display Group

d360 [Analog In 0-10V] Related Parameter(s): t091, t092

Displays the 0-10V analog input as a percent of full scale.

Values	Default:	Read Only
	Min/Max:	0.0/100.0%
	Display:	0.1%

d361 [Analog In 4-20mA] Related Parameter(s): t095, t096

Displays the 4-20 mA analog input as a percent of full scale.

Values	Default:	Read Only
	Min/Max:	0.0/100.0%
	Display:	0.1%

d362 [Elapsed Time-hr] Related Parameter(s): A555

Displays the total elapsed powered-up time (in hours) since timer reset. The timer stops when it reaches the maximum value.

Values	Default:	Read Only
	Min/Max:	0/32767 hr
	Display:	1 hr

d363 [Elapsed Time-min] Related Parameter(s): d362, A555

Displays the total elapsed powered-up time (in minutes) since timer reset. Resets to zero when maximum value is reached and increments d362 [Elapsed Time-hr] by one.

Values	Default:	Read Only
	Min/Max:	0.0/60.0 min
	Display:	0.1 min

d364 [Counter Status]

Displays the current value of the counter if enabled.

Values	Default:	Read Only
	Min/Max:	0/65535
	Display:	1

d365 [Timer Status]

32 32 bit parameter.

Displays the current value of the timer if enabled.

Values	Default:	Read Only
	Min/Max:	0.0/9999.0 s
	Display:	0.1 s

d367 [Drive Type]

Displays the Drive type setting. Used by Rockwell Automation field service personnel (not write accessible by non Rockwell Automation technical personnel).

Values	Default:	Read Only
	Min/Max:	0/65535
	Display:	1

Advanced Display Group *(continued)*

d368 [Testpoint Data] Related Parameter(s): A483

Displays the present value of the function selected in A483 [Testpoint Sel].

Values	Default:	Read Only
	Min/Max:	0/FFFF
	Display:	1

d369 [Motor OL Level]

Displays the motor overload counter.

Values	Default:	Read Only
	Min/Max:	0.0/150.0%
	Display:	0.1%

d375 [Slip Hz Meter] Related Parameter(s): P032

Displays the current amount of slip or droop (absolute value) being applied to the motor frequency. Drives applies slip based on the setting for P032 [Motor NP Hertz].

Values	Default:	Read Only
	Min/Max:	0.0/25.0 Hz
	Display:	0.1 Hz

d376 [Speed Feedback]

32 bit parameter.

Displays the value of the actual motor speed whether measured by encoder/pulse train feedback or estimated.

Values	Default:	Read Only
	Min/Max:	0.0/64000.0 rpm
	Display:	0.1 rpm

d378 [Encoder Speed]

32 bit parameter.

Provides a monitoring point that reflects the speed measured from the feedback device. This shows the encoder or pulse train speed even if not used directly to control motor speed.(1)

Values	Default:	Read Only
	Min/Max:	0.0/64000.0 rpm
	Display:	0.1 rpm

(1) Parameter is also available in PowerFlex 523 FRN 3.xxx and later.

d380 [DC Bus Ripple]

Displays the real-time value of the DC bus ripple voltage.

Values	Default:	Read Only
	Min/Max:	0/410VDC for 230V AC drives; 820VDC for 460VAC drives; 1025VDC for 600VAC drives
	Display:	1V DC

d381 [Output Powr Fctr]

Displays the angle in electrical degrees between motor voltage and motor current.

Values	Default:	Read Only
	Min/Max:	0.0/180.0 deg
	Display:	0.1 deg

Advanced Display Group *(continued)*

d382 [Torque Current]

Displays the current value of the motor torque current measured by the drive.

Values	Default:	Read Only
	Min/Max:	0.00/(Drive Rated Amps x 2)
	Display:	0.01 A

d383 [PID1 Fdbk Displ]

d385 [PID2 Fdbk Displ]

PF 525 PowerFlex 525 only.

Displays the active PID Feedback value.

Values	Default:	Read Only
	Min/Max:	0.0/100.0%
	Display:	0.1%

d384 [PID1 Setpnt Disp]

d386 [PID2 Setpnt Disp]

PF 525 PowerFlex 525 only.

Displays the active PID Setpoint value.

Values	Default:	Read Only
	Min/Max:	0.0/100.0%
	Display:	0.1%

d387 [Position Status]

PF 525 PowerFlex 525 only.

Displays the present operating condition of the drive. When in Positioning mode, Bit 1 indicates positive or negative position in relation to Home.

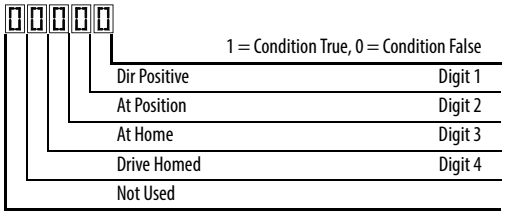

Values	Default:	Read Only
	Min/Max:	0000/1111
	Display:	0000

d388 [Units Traveled H]

Related Parameter(s): d387

Stop drive before changing this parameter.

32 bit parameter.

PF 525 PowerFlex 525 only.

Displays the number of user-defined units traveled from the home position. See d387 [Position Status] for direction of travel.

Values	Default:	Read Only
	Min/Max:	0/64000
	Display:	1

Advanced Display Group *(continued)*

d389 [Units Traveled L] Related Parameter(s): d387

Stop drive before changing this parameter.

PF 525 PowerFlex 525 only.

Displays the number of user-defined units traveled from the home position. See d387 [Position Status] for direction of travel.

Values	Default:	Read Only
	Min/Max:	0.00/0.99
	Display:	0.01

d390 [Fiber Status]

Present status of the Fibers features.

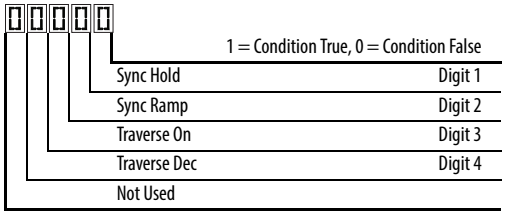

Values	Default:	Read Only
	Min/Max:	0000/1111
	Display:	0000

d391 [Stp Logic Status] Related Parameter(s): P047, L180-L187

PF 525 PowerFlex 525 only.

Displays the current step of the Step Logic profile as defined by parameters L180...L187 [Step Logic x] when P047 [Speed Reference1] is set to 13 “Step Logic” or 16 “Positioning”.

Values	Default:	Read Only
	Min/Max:	0/8
	Display:	1

d392 [RdyBit Mode Act] Related Parameter(s): A574

(With PowerFlex 525 FRN 3.xxx and later.)
(With PowerFlex 523 FRN 3.xxx and later.)

Displays the value of A574 [RdyBit Mode Cfg].

Values	Default:	Read Only
	Min/Max:	0/1
	Display:	1

Advanced Display Group *(continued)*

d393 [Drive Status 2]

(With PowerFlex 525 FRN 5.xxx and later.)
(With PowerFlex 523 FRN 3.xxx and later.)

Displays the present operating condition of the drive.

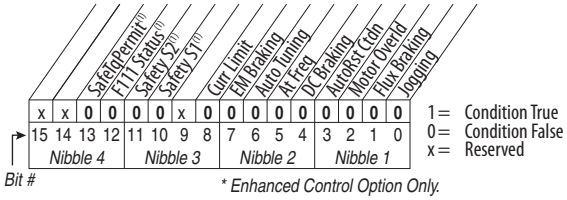

(1) Bit status is specific to PowerFlex 525 drives only.

Values		
	Default:	Read Only
	Min/Max:	0/65535
	Display:	1

d394 [Dig Out Status]

(With PowerFlex 525 FRN 5.xxx and later.)
(With PowerFlex 523 FRN 3.xxx and later.)

Displays relay output and opto output status.

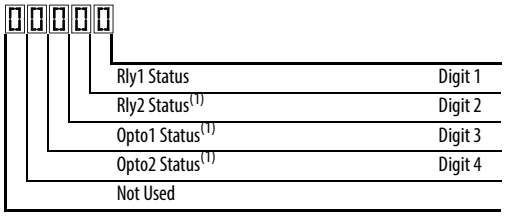

Status	Bit Value = 0	Bit Value = 1
Relay 1 status (Normally Open)	Not activated (Relay 1 open)	Activated (Relay 1 closed)
Relay 2 status (Normally Closed)	Not activated (Relay 2 closed)	Activated (Relay 2 open)
Opto 1 status	Not activated	Activated
Opto 2 status	Not activated	Activated

(1) Setting is specific to PowerFlex 525 drives only.

Values		
	Default:	Read Only
	Min/Max:	0/15
	Display:	1

Advanced Program Group

A410 [Preset Freq 0] **A411 [Preset Freq 1]**
A412 [Preset Freq 2] **A413 [Preset Freq 3]**
A414 [Preset Freq 4] **A415 [Preset Freq 5]**
A416 [Preset Freq 6] **A417 [Preset Freq 7]**

A418 [Preset Freq 8] **A419 [Preset Freq 9]**
A420 [Preset Freq 10] **A421 [Preset Freq 11]**
A422 [Preset Freq 12] **A423 [Preset Freq 13]**
A424 [Preset Freq 14] **A425 [Preset Freq 15]**

PF 525 PowerFlex 525 only.

Sets the frequency of the drive outputs to the programmed value when selected.

For PowerFlex 525

	Default Accel/Decel Used	Preset Input 1 (DigIn TermBlk 05)	Preset Input 2 (DigIn TermBlk 06)	Preset Input 3 (DigIn TermBlk 07)	Preset Input 4 (DigIn TermBlk 08)
Preset Setting 0[1]	1	0	0	0	0
Preset Setting 1	1	1	0	0	0
Preset Setting 2	2	0	1	0	0
Preset Setting 3	2	1	1	0	0
Preset Setting 4	1	0	0	1	0
Preset Setting 5	1	1	0	1	0
Preset Setting 6	2	0	1	1	0
Preset Setting 7	2	1	1	1	0
Preset Setting 8	1	0	0	0	1
Preset Setting 9	1	1	0	0	1
Preset Setting 10	2	0	1	0	1
Preset Setting 11	2	1	1	0	1
Preset Setting 12	1	0	0	1	1
Preset Setting 13	1	1	0	1	1
Preset Setting 14	2	0	1	1	1
Preset Setting 15	2	1	1	1	1

For PowerFlex 523

	Default Accel/Decel Used	Preset Input 1 (DigIn TermBlk 05)	Preset Input 2 (DigIn TermBlk 06)	Preset Input 3 (DigIn TermBlk 03)	–
Preset Setting 0[1]	1	0	0	0	–
Preset Setting 1	1	1	0	0	
Preset Setting 2	2	0	1	0	
Preset Setting 3	2	1	1	0	
Preset Setting 4	1	0	0	1	
Preset Setting 5	1	1	0	1	
Preset Setting 6	2	0	1	1	
Preset Setting 7	2	1	1	1	

(1) Preset Setting 0 is only available if P047, P049 or P051 [Speed Referencex] is set to 7 “Preset Freq”.

Values	Defaults:	
	Preset Freq 0:	0.00 Hz
	Preset Freq 1:	5.00 Hz
	Preset Freq 2:	10.00 HZ
	Preset Freq 3:	20.00 Hz
	Preset Freq 4:	30.00 Hz
	Preset Freq 5:	40.00 Hz
	Preset Freq 6:	50.00 Hz
	Preset Freq 7...15:	60.00 Hz
	Min/Max:	0.00/500.00 Hz
	Display:	0.01 Hz

Advanced Program Group *(continued)*

A426 [Keypad Freq] Related Parameter(s): P047, P049, P051

Provides the drive frequency command using the built-in keypad navigation. When P047, P049 or P051 [Speed Referencex] selects 2 "Keypad Freq", the value set in this parameter controls the frequency of the drive. The value of this parameter can also be changed when navigating with the keypad by pressing the Up or Down arrow keys.

Values	Default:	60.00 Hz
	Min/Max:	0.00/500.00 Hz
	Display:	0.01 Hz

A427 [MOP Freq]

Provides the drive frequency command using the built-in Motor Operated Potentiometer (MOP).

IMPORTANT Frequency is not written to non-volatile storage until drive is powered-down. If both MOP Up and MOP Down are applied at the same time, the inputs are ignored and the frequency is unchanged.

Values	Default:	60.00 Hz
	Min/Max:	0.00/500.00 Hz
	Display:	0.01 Hz

A428 [MOP Reset Sel]

Determines if the current MOP reference command is saved on power down.

Options	0 "Zero MOP Ref"	Resets the MOP frequency to zero on power down and stop.
	1 "Save MOP Ref" (Default)	

A429 [MOP Preload]

Determines the operation of the MOP function.

Options	0 "No preload" (Default)	
	1 "Preload"	Bumpless Transfer: whenever MOP mode is selected, the current output value of the speed is loaded.

A430 [MOP Time]

Sets the rate of change of the MOP reference.

Values	Default:	10.0 s
	Min/Max:	0.1/600.0 s
	Display:	0.1 s

A431 [Jog Frequency] Related Parameter(s): P044

Sets the output frequency when a jog command is issued.

Values	Default:	10.00 Hz
	Min/Max:	0.00/[Maximum Freq]
	Display:	0.01 Hz

A432 [Jog Accel/Decel]

Sets the acceleration and deceleration time used when in jog mode.

Values	Default:	10.00 s
	Min/Max:	0.01/600.00 s
	Display:	0.01 s

Advanced Program Group *(continued)*

A433 [Purge Frequency] Related Parameter(s): t062, t063, t065-t068

Provides a fixed frequency command value when t062, t063, t065-t068 [DigIn TermBlk xx] is set to 40 "Purge".

Values	Default:	5.00 Hz
	Min/Max:	0.00/500.00 Hz
	Display:	0.01 Hz

A434 [DC Brake Time] Related Parameter(s): P045, A435

Sets the length of time that DC brake current is "injected" into the motor.

Values	Default:	0.0 s
	Min/Max:	0.0/99.9 s
	Display:	0.1 s

A435 [DC Brake Level] Related Parameter(s): P045

Defines the maximum DC brake current, in amps, applied to the motor when P045 [Stop Mode] is set to either 4 "Ramp" or 6 "DC Brake".

Ramp-to-Stop Mode

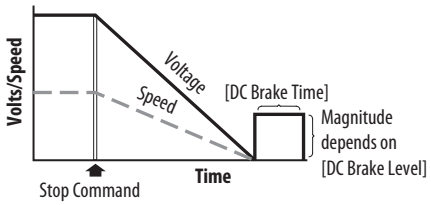

DC Injection Stop Mode

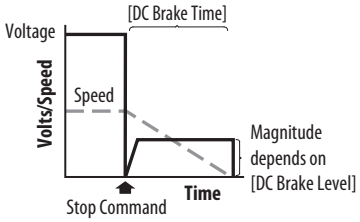

ATTENTION: If a hazard of injury due to movement of equipment or material exists, an auxiliary mechanical braking device must be used. This feature should not be used with synchronous motors. Motors may be demagnetized during braking.

Values	Default:	Drive Rated Amps x 0.05
	Min/Max:	0.00/(Drive Rated Amps x 1.80)
	Display:	0.01 A

A436 [DC Brk Time@Strt] Related Parameter(s): P045, A435

Sets the length of time that DC brake current is "injected" into the motor after a valid start command is received.

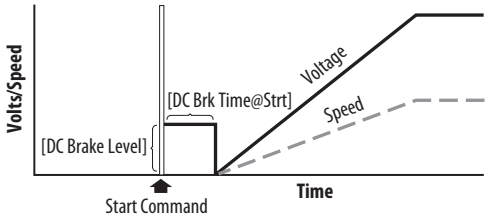

Values	Default:	0.0 s
	Min/Max:	0.0/99.9 s
	Display:	0.1 s

Advanced Program Group *(continued)*

A437 [DB Resistor Sel] Related Parameter(s): A438, A550

Stop drive before changing this parameter.

Enables/disables external dynamic braking and selects the level of resistor protection.

IMPORTANT When A437 [DB Resistor Sel] is set to a value greater than "0", the value set in parameter A550 [Bus Reg Enable] will not take effect.

Options	0	"Disabled" (Default)	
	1	"Norml RA Res"	5%
	2	"NoProtection"	100%
	3...99	"3...99% DutyCycle"	

A438 [DB Threshold] Related Parameter(s): A437

Sets the DC bus voltage threshold for Dynamic Brake operation. If DC bus voltage rises above this level, Dynamic Brake turns on. Lower values makes the dynamic braking function more responsive but may result in nuisance Dynamic Brake activation (IGBT can modulate continuously).

ATTENTION: Equipment damage may result if this parameter is set to a value that causes the dynamic braking resistor to dissipate excessive power. Parameter settings less than 100% should be carefully evaluated to ensure that the Dynamic Brake resistor's wattage rating is not exceeded. In general, values less than 90% are not needed. This parameter's setting is especially important if parameter A437 [DB Resistor Sel] is set to 2 "NoProtection".

Values	Default:	100.0%
	Min/Max:	10.0/110.0%
	Display:	0.1%

A439 [S Curve %]

Enables a fixed shape S-Curve that is applied to the acceleration and deceleration ramps (including jog).
S-Curve Time = (Accel or Decel Time) x (S-Curve Setting in percentage)

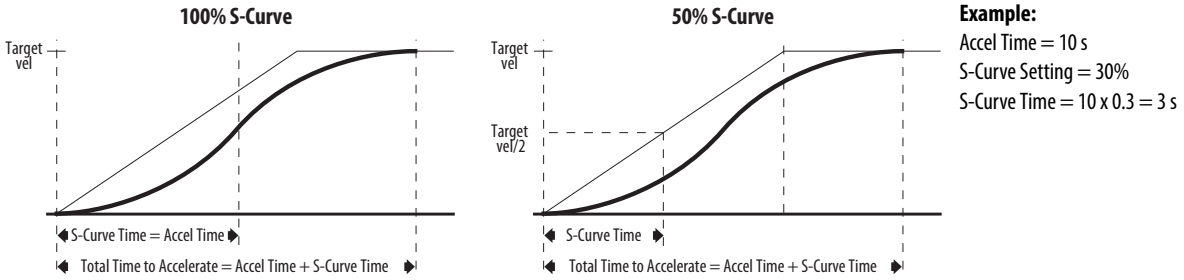

Example:
Accel Time = 10 s
S-Curve Setting = 30%
S-Curve Time = 10 x 0.3 = 3 s

Values	Default:	0%
	Min/Max:	0/100%
	Display:	1%

Advanced Program Group *(continued)*

A440 [PWM Frequency] Related Parameter(s): A540

Sets the carrier frequency for the PWM output waveform. The chart below provides derating guidelines based on the PWM frequency setting.

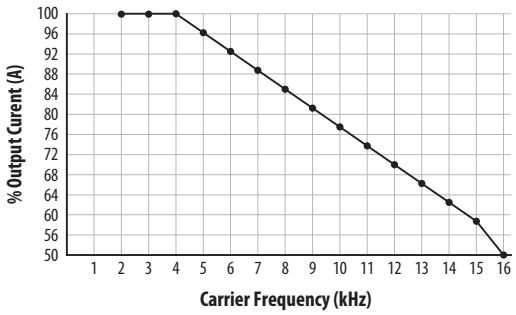

Note: If Vector mode (open loop) is selected and 16 kHz is selected, the drive will forcibly reduce the carrier frequency to 8 kHz.

IMPORTANT Ignoring derating guidelines can cause reduced drive performance. The drive may automatically reduce the PWM carrier frequency at low output speeds, unless prevented from doing so by A540 [Var PWM Disable].

Values	Default:	4.0 kHz
	Min/Max:	2.0/16.0 kHz
	Display:	0.1 kHz

A441 [Droop Hertz@ FLA]

PF 525 PowerFlex 525 only.

Reduces the frequency based on current. This frequency is subtracted from the commanded output frequency. Generally Slip and Droop would not both be used, but if both are enabled they simply subtract from each other. Typically used in load sharing schemes.

Values	Default:	0.0 Hz
	Min/Max:	0.0/10.0 Hz
	Display:	0.1 Hz

A442 [Accel Time 2] Related Parameter(s): P044

Time for the drive to ramp from 0.0 Hz to P044 [Maximum Freq] if Accel Time 2 is selected.
Accel Rate = [Maximum Freq] / [Accel Time]

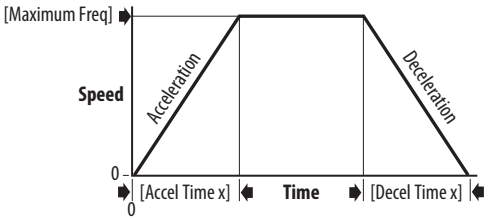

Values	Default:	10.00 s
	Min/Max:	0.00/600.00 s
	Display:	0.01 s

A443 [Decel Time 2] Related Parameter(s): P044

Time for the drive to ramp from P044 [Maximum Freq] to 0.0 Hz if Decel Time 2 is selected.
Decel Rate = [Maximum Freq] / [Decel Time]

Values	Default:	10.00 s
	Min/Max:	0.00/600.00 s
	Display:	0.01 s

Advanced Program Group *(continued)*

A444 [Accel Time 3]
A446 [Accel Time 4]

Sets the rate of acceleration for all speed increases when selected by digital inputs.

Values	Default:	10.00 s
	Min/Max:	0.00/600.00 s
	Display:	0.01 s

A445 [Decel Time 3]
A447 [Decel Time 4]

Sets the rate of deceleration for all speed decreases when selected by digital inputs.

Values	Default:	10.00 s
	Min/Max:	0.00/600.00 s
	Display:	0.01 s

A448 [Skip Frequency 1]
A450 [Skip Frequency 2]
A452 [Skip Frequency 3]
A454 [Skip Frequency 4]

PF 525 PowerFlex 525 only.

Related Parameter(s): A449, A451, A453, A455

Works in conjunction with A449, A451, A453 and A455 [Skip Freq Band x] creating a range of frequencies at which the drive does not operate continuously.

Values	Default:	0.0 Hz (Disabled)
	Min/Max:	0.0/500.0 Hz
	Display:	0.1 Hz

A449 [Skip Freq Band 1]
A451 [Skip Freq Band 2]
A453 [Skip Freq Band 3]
A455 [Skip Freq Band 4]

PF 525 PowerFlex 525 only.

Related Parameter(s): A448, A450, A452, A454

Determines the band around A448, A450, A452 and A454 [Skip Frequency x].

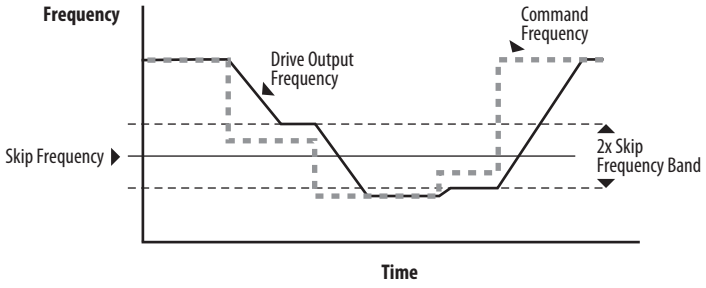

Values	Default:	0.0 Hz
	Min/Max:	0.0/30.0 Hz
	Display:	0.1 Hz

Advanced Program Group *(continued)*

A456 [PID 1 Trim Hi]

A468 [PID 2 Trim Hi]

PF 525 PowerFlex 525 only.

Scales the upper value of the trim frequency when trim is active.

Values	Default:	60.0 Hz
	Min/Max:	0.0/500.0 Hz
	Display:	0.1 Hz

A457 [PID 1 Trim Lo]

A469 [PID 2 Trim Lo]

PF 525 PowerFlex 525 only.

Scales the lower value of the trim frequency when trim is active.

Values	Default:	0.0 Hz
	Min/Max:	0.0/500.0 Hz
	Display:	0.1 Hz

A458 [PID 1 Trim Sel]

A470 [PID 2 Trim Sel]

PF 525 PowerFlex 525 only.

Stop drive before changing this parameter.

Sets the PID output as trim to the source reference.

Options	0	"Disabled" (Default)	PID Trim is disabled.
	1	"TrimOn Pot"	
	2	"TrimOn Keypd"	
	3	"TrimOn DSI"	
	4	"TrimOn NetOp"	
	5	"TrimOn 0-10V"	
	6	"TrimOn 4-20"	
	7	"TrimOn Prset"	
	8	"TrimOn AnMlt"(1)	
	9	"TrimOn MOP"	
	10	"TrimOn Pulse"	
	11	"TrimOn SIgic"(1)	
	12	"TrimOn Encdr"(1)	
	13	"TrimOn ENet"(1)	

(1) Setting is specific to PowerFlex 525 drives only.

Advanced Program Group *(continued)*

A459 [PID 1 Ref Sel]

A471 [PID 2 Ref Sel]

PF 525 PowerFlex 525 only.

Stop drive before changing this parameter.

Selects the source of the PID reference.

Options	0	"PID Setpoint" (Default)
	1	"Drive Pot"
	2	"Keypad Freq"
	3	"Serial/DSI"
	4	"Network Opt"
	5	"0-10V Input"
	6	"4-20mA Input"
	7	"Preset Freq"
	8	"AnIgIn Multi"(1)
	9	"MOP Freq"
	10	"Pulse Input"
	11	"Step Logic"(1)
	12	"Encoder"(1)
	13	"EtherNet/IP"(1)

(1) Setting is specific to PowerFlex 525 drives only.

A460 [PID 1 Fdback Sel]

A472 [PID 2 Fdback Sel]

PF 525 PowerFlex 525 only.

Selects the source of the PID feedback.

Options	0	"0-10V Input" (Default)	Note: PID does not function with bipolar input. Negative voltages are ignored and treated as zero.
	1	"4-20mA Input"	
	2	"Serial/DSI"	
	3	"Network Opt"	
	4	"Pulse Input"	
	5	"Encoder"(1)	
	6	"EtherNet/IP"(1)	

(1) Setting is specific to PowerFlex 525 drives only.

A461 [PID 1 Prop Gain]

Related Parameter(s): A459, A471

A473 [PID 2 Prop Gain]

PF 525 PowerFlex 525 only.

Sets the value for the PID proportional component when the PID mode is enabled.

Values	Default:	0.01
	Min/Max:	0.00/99.99
	Display:	0.01

Advanced Program Group *(continued)*

A462 [PID 1 Integ Time] Related Parameter(s): A459, A471

A474 [PID 2 Integ Time]
PF 525 PowerFlex 525 only.

Sets the value for the PID integral component when PID mode is enabled.

Values	Default:	2.0 s
	Min/Max:	0.0/999.9 s
	Display:	0.1 s

A463 [PID 1 Diff Rate] Related Parameter(s): A459, A471

A475 [PID 2 Diff Rate]
PF 525 PowerFlex 525 only.

Sets the value (in 1/second) for the PID differential component when PID mode is enabled.

Values	Default:	0.00
	Min/Max:	0.00/99.99
	Display:	0.01

A464 [PID 1 Setpoint] Related Parameter(s): A459, A471

A476 [PID 2 Setpoint]
PF 525 PowerFlex 525 only.

Provides an internal fixed value for process setpoint when PID mode is enabled.

Values	Default:	0.0%
	Min/Max:	0.0/100.0%
	Display:	0.1%

A465 [PID 1 Deadband]

A477 [PID 2 Deadband]
PF 525 PowerFlex 525 only.

Sets a range, in percent above and below the PID Reference, that the PID output will ignore.

Values	Default:	0.0%
	Min/Max:	0.0/10.0%
	Display:	0.1%

A466 [PID 1 Preload]

A478 [PID 2 Preload]
PF 525 PowerFlex 525 only.

Sets the value used to preload the integral component on start or enable.

Values	Default:	0.0 Hz
	Min/Max:	0.0/500.0 Hz
	Display:	0.1 Hz

A467 [PID 1 Invert Err]

A479 [PID 2 Invert Err]
PF 525 PowerFlex 525 only.

Changes the sign of the PID error.

Options	0	"Normal" (Default)
	1	"Inverted"

Advanced Program Group *(continued)*

A481 [Process Disp Lo] Related Parameter(s): b010, P043

Sets the value displayed in b010 [Process Display] when the drive is running at P043 [Minimum Freq].

Values	Default:	0.00
	Min/Max:	0.00/99.99
	Display:	0.01

A482 [Process Disp Hi] Related Parameter(s): b010, P044

Sets the value displayed in b010 [Process Display] when the drive is running at P044 [Maximum Freq].

Values	Default:	0.00
	Min/Max:	0.00/99.99
	Display:	0.01

A483 [Testpoint Sel]

Used by Rockwell Automation field service personnel.

Values	Default:	400
	Min/Max:	0/FFFF
	Display:	1

A484 [Current Limit 1] Related Parameter(s): P033

Maximum output current allowed before current limiting occurs.

Values	Default:	Drive Rated Amps x 1.1 (Normal Duty); Drive Rated Amps x 1.5 (Heavy Duty)
	Min/Max:	0.0/Drive Rated Amps x 1.5 (Normal Duty); Drive Rated Amps x 1.8 (Heavy Duty)
	Display:	0.1 A

A485 [Current Limit 2] Related Parameter(s): P033

PF 525 PowerFlex 525 only.

Maximum output current allowed before current limiting occurs.

Values	Default:	Drive Rated Amps x 1.1
	Min/Max:	0.0/Drive Rated Amps x 1.5 (Normal Duty); Drive Rated Amps x 1.8 (Heavy Duty)
	Display:	0.1 A

A486 [Shear Pin1 Level] Related Parameter(s): A487, A489

A488 [Shear Pin2 Level]

PF 525 PowerFlex 525 only.

Sets the value of current at which the shear pin fault occurs after the time set in A487, A489 [Shear Pin x Time]. Setting the value at 0.0 A disables this function.

Values	Default:	0.0 A (Disabled)
	Min/Max:	0.0/(Drive Rated Amps x 2)
	Display:	0.1 A

A487 [Shear Pin 1 Time] Related Parameter(s): A486, A488

A489 [Shear Pin 2 Time]

PF 525 PowerFlex 525 only.

Sets the continuous time the drive must be at or above the value set in A486, A488 [Shear Pinx Level] before a shear pin fault occurs.

Values	Default:	0.00 s
	Min/Max:	0.00/30.00 s
	Display:	0.01 s

Advanced Program Group *(continued)*

A490 [Load Loss Level] Related Parameter(s): A491

PF 525 PowerFlex 525 only.

Provides a software trip (Load Loss fault) when the current drops below this level for the time specified in A491 [Load Loss Time].

Values	Default:	0.0 A
	Min/Max:	0.0/Drive Rated Amps
	Display:	0.1 A

A491 [Load Loss Time] Related Parameter(s): A490

PF 525 PowerFlex 525 only.

Sets the required time for the current to be below A490 [Load Loss Level] before a Load Loss fault occurs.

Values	Default:	0 s
	Min/Max:	0/9999 s
	Display:	1 s

A492 [Stall Fault Time]

Sets the time that the drive remains in stall mode before a fault is issued.

Options	0	"60 Seconds" (Default)
	1	"120 Seconds"
	2	"240 Seconds"
	3	"360 Seconds"
	4	"480 Seconds"
	5	"Flt Disabled"

A493 [Motor OL Select] Related Parameter(s): P032, P033

Drive provides Class 10 overload protection. Settings 0...2 select the derating factor for the I^2t overload function.

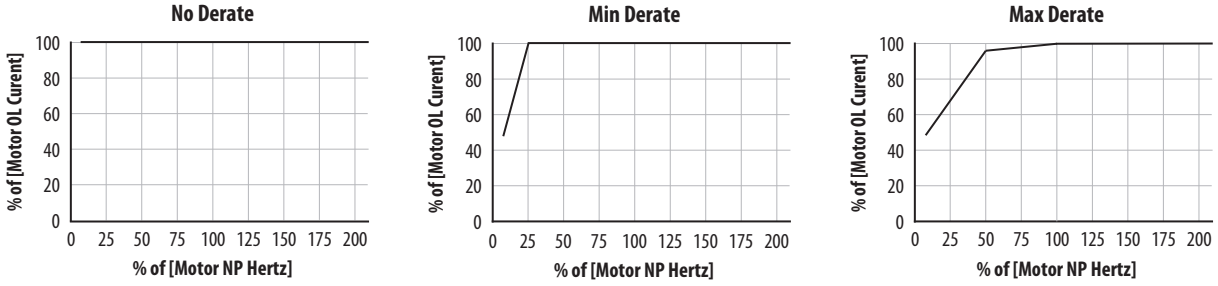

Options	0	"No Derate" (Default)
	1	"Min. Derate"
	2	"Max. Derate"

A494 [Motor OL Ret]

Selects whether the motor overload counter is saved on power-down or reset on power-up.

Options	0	"Reset" (Default)
	1	"Save"

Advanced Program Group *(continued)*

A495 [Drive OL Mode]

Determines how the drive handles overload conditions that would otherwise cause the drive to fault.

Options	0	"Disabled"
	1	"Reduce CLim"
	2	"Reduce PWM"
	3	"Both-PWM 1st" (Default)

A496 [IR Voltage Drop] Related Parameter(s): P040

Value of volts dropped across the resistance of the motor stator (autotune) for induction motor.

Values	Default:	Based on Drive Rating
	Min/Max:	0.0/600.0VAC
	Display:	0.1VAC

A497 [Flux Current Ref] Related Parameter(s): P040

This is the current necessary for full motor flux. The value should be set to the full speed no-load current of the motor.

Values	Default:	Based on Drive Rating
	Min/Max:	0.00/(Drive Rated Amps x 1.4)
	Display:	0.01 A

A498 [Motor Rr]

PF 525 PowerFlex 525 only.

Rotor resistance of induction motor. The value of this parameter will populate when a full rotate tune is performed.

Values	Default:	Based on Drive Rating
	Min/Max:	0.00/655.35 ohm
	Display:	0.01 ohm

A499 [Motor Lm]

PF 525 PowerFlex 525 only.

Mutual Inductance of induction motor. The value of this parameter will populate when a full rotate tune is performed.

Values	Default:	Based on Drive Rating
	Min/Max:	0.0/6553.5 mH
	Display:	0.1 mH

A500 [Motor Lx]

PF 525 PowerFlex 525 only.

Leakage Inductance of induction motor. The value of this parameter will populate when a full rotate tune is performed.

Values	Default:	Based on Drive Rating
	Min/Max:	0.0/6553.5 mH
	Display:	0.1 mH

A501 [PM IR Voltage]

PF 525 PowerFlex 525 only.

(With FRN 5.xxx and later.)

Voltage across the stator resistance of the PM motor at the rated motor current displayed in line-to-line rms value.

Values	Default:	11.50V
	Min/Max:	0.00/655.35V
	Display:	0.01V

Advanced Program Group *(continued)*

A502 [PM IXd Voltage]

PF 525 PowerFlex 525 only.

(With FRN 5.xxx and later.)
Voltage across the d-axis stator inductance of the PM motor at the rated motor current and the rated motor frequency displayed in line-to-line rms value.

Values	Default:	17.91V
	Min/Max:	0.00/655.35V
	Display:	0.01V

A503 [PM IXq Voltage]

PF 525 PowerFlex 525 only.

(With FRN 5.xxx and later.)
Voltage across the q-axis stator inductance of the PM motor at the rated motor current and the rated motor frequency displayed in line-to-line rms value.

Values	Default:	53.21V
	Min/Max:	0.00/655.35V
	Display:	0.01V

A504 [PM BEMF Voltage]

PF 525 PowerFlex 525 only.

(With FRN 5.xxx and later.)
Back electromotive force (EMF) voltage.

Values	Default:	1640.0 Drive Rated Volts
	Min/Max:	0.0/6000.0 Drive Rated Volts
	Display:	0.1V

A509 [Speed Reg Sel] Related Parameter(s): A521, A522, A523, A524, A525, A526

PF 525 PowerFlex 525 only.

Determines if PI gain of the "Vector" control mode speed regulator is set automatically or manually. Parameters A521...A526 are set automatically by this parameter.

Options	0	"Automatic" (Default)
	1	"Manual"

A510 [Freq 1]
A512 [Freq 2]
A514 [Freq 3]

PF 525 PowerFlex 525 only.

Sets the "Vector" control mode frequency.

Values	Default:	
	Freq 1:	8.33%
	Freq 2:	15.00%
	Freq 3:	20.00%
	Min/Max:	0.00/200.00%
	Display:	0.01%

Advanced Program Group *(continued)*

A511 [Freq 1 BW]
A513 [Freq 2 BW]
A515 [Freq 3 BW]

PF 525 PowerFlex 525 only.

Speed control loop bandwidth for "Vector" control mode.

Values	Default:	10 Hz
	Min/Max:	0/40 Hz
	Display:	1 Hz

A516 [PM Initial Sel]

PF 525 PowerFlex 525 only.

(With FRN 5.xxx and later.)
PM initial angle detect.

Options	0 "Align" (Default)	
	1 "HFI"	High Frequency Injection to detect initial angle.
	2 "Six Pulse"	

A517 [PM DC Inject Cur]

PF 525 PowerFlex 525 only.

(With FRN 5.xxx and later.)
Maximum DC current in amps applied to the motor in order to reset the rotor position of a PM motor.

Values	Default:	30%
	Min/Max:	0/300%
	Display:	1%

A518 [PM Align Time]

PF 525 PowerFlex 525 only.

(With FRN 5.xxx and later.)
Magnetic pole reorientation time.

Values	Default:	0.7 s
	Min/Max:	0.0/60.0 s
	Display:	0.1 s

A519 [PM HFI NS Cur]

PF 525 PowerFlex 525 only.

(With FRN 5.xxx and later.)
High Frequency Injection (HFI) North South Current to detect N/S Magnet.

Values	Default:	100%
	Min/Max:	0/300%
	Display:	1%

A520 [PM Bus Reg Kd]

PF 525 PowerFlex 525 only.

(With FRN 5.xxx and later.)
Derivative gain for bus regulator.

Values	Default:	2
	Min/Max:	0/500
	Display:	1

Advanced Program Group *(continued)*

A521 [Freq 1 Kp]
A523 [Freq 2 Kp]
A525 [Freq 3 Kp]

Related Parameter(s): A509, A510

PF 525 PowerFlex 525 only.

Sets P-gain of "Vector" control mode when in frequency region 1, 2 or 3 for faster speed response during dynamic-state where motor is still accelerating. If A509 [Speed Reg Sel] is set to 1 "Manual", these parameters can be changed.

Values	Default:	100.0%
	Min/Max:	0.0/500.0%
	Display:	0.1%

A522 [Freq 1 Ki]
A524 [Freq 2 Ki]
A526 [Freq 3 Ki]

Related Parameter(s): A509, A510

PF 525 PowerFlex 525 only.

Sets I-gain of "Vector" control mode when in frequency region 1, 2 or 3 for faster speed response during steady-state where motor is at its rated speed. If A509 [Speed Reg Sel] is set to 1 "Manual", these parameters can be changed.

Values	Default:	0.100 s
	Min/Max:	0.000/10.000 s
	Display:	0.001 s

A527 [PM FWKn 1 Kp]

PF 525 PowerFlex 525 only.

(With FRN 5.xxx and later.)
The gain to ensure good performance in field weakening region.

Values	Default:	250%
	Min/Max:	0/2000%
	Display:	1%

A528 [PM FWKn 2 Kp]

PF 525 PowerFlex 525 only.

(With FRN 5.xxx and later.)
The gain to ensure robustness under step load in weakening region.

Values	Default:	100%
	Min/Max:	100/8000%
	Display:	1%

Advanced Program Group *(continued)*

A529 [PM Control Cfg]

PF 525 PowerFlex 525 only.

(With FRN 5.xxx and later.)
Control configuration for Feed Forward Decouple (FFD), Maximum Torque Per Amp (MTPA), and Load Disturbance Observer (LDOB).

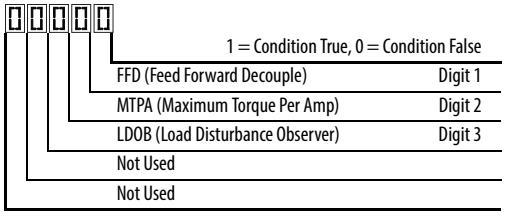

Values	Default:	00111
	Min/Max:	00000/00111
	Display:	00000

A530 [Boost Select]

Related Parameter(s): b004, P031, P032, P039

Sets the boost voltage (% of P031 [Motor NP Volts]) and redefines the V/Hz curve. Only used for V/Hz control modes.

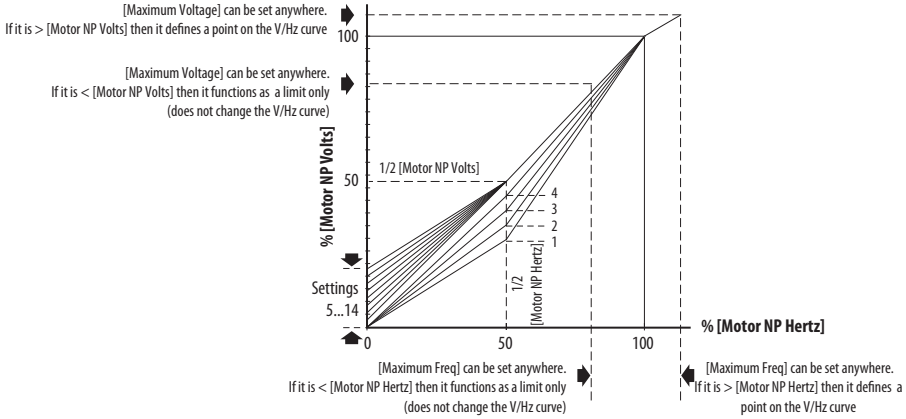

Options	0	"Custom V/Hz"	
	1	"30.0, VT"	Fan/Pump Curves (Variable Torque)
	2	"35.0, VT"	
	3	"40.0, VT"	
	4	"45.0, VT"	
	5	"0.0, no IR"	Boost Voltage (% of Base) (Constant Torque)
	6	"0.0" (Default for 400V and 600V drives, 5 HP and above)	
	7	"2.5, CT" (Default for 200V drives, 5 HP and above)	
	8	"5.0, CT" (Default for drives below 5 HP)	
	9	"7.5, CT"	
	10	"10.0, CT"	
	11	"12.5, CT"	
	12	"15.0, CT"	
	13	"17.5, CT"	
	14	"20.0, CT"	

Advanced Program Group *(continued)*

A531 [Start Boost] Related Parameter(s): P031, P032, P039, A530

Sets the boost voltage (% of P031 [Motor NP Volts]) and redefines the V/Hz curve when A530 [Boost Select] = 0 "Custom V/Hz" and P039 [Torque Perf Mode] = 0 "V/Hz".

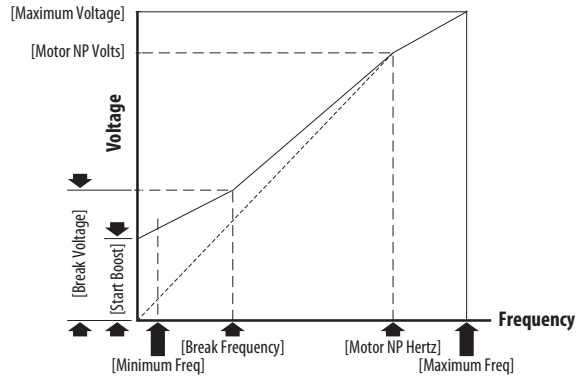

Values	Default:	2.5%
	Min/Max:	0.0/25.0%
	Display:	0.1%

A532 [Break Voltage] Related Parameter(s): P031, P032, P039, A530, A533

Sets the voltage (in percent of [Base Frequency]) at the A533 [Break Frequency] if A530 [Boost Select] is set to 0 "Custom V/Hz".

Values	Default:	25.0%
	Min/Max:	0.0/100.0%
	Display:	0.1%

A533 [Break Frequency] Related Parameter(s): P031, P032, P039, A530, A532

Sets the frequency where A532 [Break Voltage] is applied if A530 [Boost Select] is set to 0 "Custom V/Hz".

Values	Default:	15.0 Hz
	Min/Max:	0.0/500.0 Hz
	Display:	0.1 Hz

A534 [Maximum Voltage] Related Parameter(s): b004

Sets the highest voltage the drive outputs.

Values	Default:	Drive Rated Volts
	Min:	10V AC (on 230V AC Drives); 20V AC (on 460V AC Drives); 25V AC (on 600V AC Drives)
	Max:	255V AC (on 230V AC Drives); 510V AC (on 460V AC Drives); 637.5V AC (on 600V AC Drives)
	Display:	1V AC

Advanced Program Group *(continued)*

A535 [Motor Fdbk Type]

Related Parameter(s):P039, A537

Stop drive before changing this parameter.

Selects the encoder type.(1)

ATTENTION: The loss of analog input, encoder or other feedback may cause unintended speed or motion. Take appropriate precautions to guard against possible unintended speed or motion.

			Allowable Control Modes (See P039 [Torque Perf Mode])	Hardware Inputs
Options	0	"None" (Default)	V/Hz, SVC, Economize, Vector, PM Control	–
	1	"Pulse Train"	V/Hz, SVC, Economize, PM Control	[DigIn TermBlk 05] for PowerFlex 523 [DigIn TermBlk 07] for PowerFlex 525
	2	"Single Chan"(2)	V/Hz, SVC, Economize, PM Control	Optional incremental encoder card (catalog number 25-ENC-1)
	3	"Single Check"(2)	V/Hz, SVC, Economize, PM Control	
	4	"Quadrature"(2)	V/Hz, SVC, Economize, Vector, PM Control	
	5	"Quad Check"(2)	V/Hz, SVC, Economize, Vector, PM Control	

(1) Parameter is also available in PowerFlex 523 FRN 3.xxx and later.

(2) Setting is specific to PowerFlex 525 drives only.

A536 [Encoder PPR]

PF 525 PowerFlex 525 only.

Specifies the encoder Pulses Per Revolution (PPR) when an encoder is used.

To achieve speed range/accuracy for SVC and VVC closed loop control, a minimum of 1024 PPR encoder is recommended. The maximum encoder pulse is 250 kHz.

For more information, see Determine Encoder Pulse Per Revolution (PPR) Specification Based on Speed Resolution on page 217.

Values	Default:	1024 PPR
	Min/Max:	1/20000 PPR
	Display:	1 PPR

A537 [Pulse In Scale]

Related Parameter(s): t065, t067, A535

Sets the scale factor/gain for the Pulse Input when t065 [DigIn TermBlk 05] or t067 [DigIn TermBlk 07] is set to 52 "Pulse Train", or A535 [Motor Fdbk Type] is set to 1 "Pulse Train".

Input frequency (Hz) / Pulse in Scale = Output frequency (Hz)

Values	Default:	64
	Min/Max:	0/20000
	Display:	1

A538 [Ki Speed Loop]

Sets the I-gain used in the PI calculation of the speed loop when feedback is used. Applicable to V/Hz and SVC modes in closed loop control only.(1)

Values	Default:	2.0
	Min/Max:	0.0/400.0
	Display:	0.1

(1) Parameter is also available in PowerFlex 523 FRN 3.xxx and later.

A539 [Kp Speed Loop]

Sets the P-gain used in the PI calculation of the speed loop when feedback is used. Applicable to V/Hz and SVC modes in closed loop control only.(1)

Values	Default:	5.0
	Min/Max:	0.0/200.0
	Display:	0.1

(1) Parameter is also available in PowerFlex 523 FRN 3.xxx and later.

Advanced Program Group *(continued)*

A540 [Var PWM Disable] Related Parameter(s): A440

Stop drive before changing this parameter.

Enables/disables a feature that varies the carrier frequency for the PWM output waveform defined by A440 [PWM Frequency].

Options	0	"Enabled" (Default)
	1	"Disabled"

A541 [Auto Rstrt Tries] Related Parameter(s): A542

Sets the maximum number of times the drive attempts to reset a fault and restart. See Chapter 4 for more information on faults and fault codes.

Clear a Type 1 fault and restart the drive.
1. Set A541 [Auto Rstrt Tries] to a value other than "0".
2. Set A542 [Auto Rstrt Delay] to a value other than "0".

Clear an OverVoltage, UnderVoltage or Heatsink OvrTmp fault without restarting the drive.
1. Set A541 [Auto Rstrt Tries] to a value other than "0".
2. Set A542 [Auto Rstrt Delay] to "0".

ATTENTION: Equipment damage and/or personal injury may result if this parameter is used in an inappropriate application. Do not use this function without considering applicable local, national and international codes, standards, regulations or industry guidelines.

Values	Default:	0
	Min/Max:	0/9
	Display:	1

A542 [Auto Rstrt Delay] Related Parameter(s): A541

Sets the time between restart attempts if A541 [Auto Rstrt Tries] is not zero.

Values	Default:	1.0 s
	Min/Max:	0.0/120.0 s
	Display:	0.1 s

A543 [Start At PowerUp]

Stop drive before changing this parameter.

Enables/disables drive start on power up without a Run command being cycled. Requires a digital input configured for Run and a valid run signal.

ATTENTION: Equipment damage and/or personal injury may result if this parameter is used in an inappropriate application. Do not use this function without considering applicable local, national and international codes, standards, regulations or industry guidelines.

Options	0	"Disabled" (Default)
	1	"Enabled"

A544 [Reverse Disable] Related Parameter(s): b006

Stop drive before changing this parameter.

Enables/disables the function that allows the direction of motor rotation to be changed.

Options	0	"Rev Enabled" (Default)
	1	"Rev Disabled"

A545 [Flying Start En]

Sets the condition that allows the drive to reconnect to a spinning motor at actual RPM.

Options	0	"Disabled" (Default)
	1	"Enabled" Catch and ramp to commanded speed at every drive start.

Advanced Program Group *(continued)*

A546 [FlyStrt CurLimit]

Used to determine when the drive has matched the motor frequency if flying start is enabled.

Values	Default:	150%
	Min/Max:	30/200%
	Display:	1%

A547 [Compensation]

Enables/disables correction options that may improve problems with motor instability.

Options	0	"Disabled"	No compensation.
	1	"Electrical" (Default)	Some drive/motor combinations have inherent instabilities which are exhibited as non-sinusodial motor currents. This setting attempts to correct this condition
	2	"Mechanical"	Some motor/load combinations have mechanical resonances which can be excited by the drive current regulator. This setting slows down the current regulator response and attempts to correct this condition.
	3	"Both"	

A548 [Power Loss Mode]

Sets the reaction to a loss of input power.

Options	0	"Coast" (Default)	Drive faults and motor coasts to a stop.
	1	"Decel"	Drive decelerates and attempts to keep the DC bus voltage above the undervoltage level.

A549 [Half Bus Enable]

Enables/disables the power ride through function which allows the drive to maintain power to the motor at 50% drive input voltage during short-term power sag conditions.

ATTENTION: To guard against drive damage, a minimum line impedance must be provided to limit inrush current when the power line recovers. The input impedance should be equal or greater than the equivalent of a 5% transformer with a VA rating 6 times the drive's input VA rating if Half Bus is enabled.

Options	0	"Disabled" (Default)
	1	"Enabled"

A550 [Bus Reg Enable] Related Parameter(s): A437

Enables/disables the bus regulator.

Options	0	"Disabled"
	1	"Enabled" (Default)

A551 [Fault Clear]

Stop drive before changing this parameter.

Resets a fault and clears the fault queue.

Options	0	"Ready/Idle" (Default)	
	1	"Reset Fault"	Resets the active fault but does not clear any fault buffer.
	2	"Clear Buffer"	Resets the active fault and clears all fault buffers to "0".

A552 [Program Lock] Related Parameter(s): A553

Protects parameters against change by unauthorized personnel with a 4-digit password.

Values	Default:	0000
	Min/Max:	0000/9999
	Display:	1111

Advanced Program Group *(continued)*

A553 [Program Lock Mod] Related Parameter(s): A552

Determines the lock mode used in parameter A552 [Program Lock]. When set to 2 or 3, A552 [Program Lock] is added to the custom group to allow unlocking of parameters.

Options	0	"Full Lock" (Default)	All parameters are locked except [Program Lock].
	1	"Keypad Lock"	All parameters are locked except [Program Lock] from keypad access but can still be accessed over communications.
	2	"Custom Only"	All parameters are locked and hidden except custom group and [Program Lock].
	3	"KeyPd Custom"	All parameters are locked and hidden except custom group and [Program Lock] from keypad access but can still be accessed over communications.

A554 [Drv Ambient Sel]

Sets the maximum expected ambient of the drive when used above 50 °C. When ambient temperature is above 50 °C, the drive will apply necessary current derating.

Options	0	"Normal" (Default)	
	1	"55C"	
	2	"60C"	
	3	"65C +Fan Kit"	Fan kit required.
	4	"70C +Fan Kit"	

A555 [Reset Meters] Related Parameter(s): b019, b021, b022, b023, b024, b025, b026, d362, d363

Resets the values stored in the parameters that track fault times and energy usage.

Options	0	"Ready/Idle" (Default)	
	1	"Reset Meters"	Resets kWh, MWh, Accum kWh, Cost, and CO2 Sav parameter values.
	2	"Reset Time"	Resets min, hr, and x10 hr.

A556 [Text Scroll]

Sets the scrolling speed of the text in the LCD display.

Options	0	"Off"	No scroll.
	1	"Low Speed"	
	2	"Mid Speed" (Default)	
	3	"High Speed"	

A557 [Out Phas Loss En]

Enable/disable output phase loss detection.

ATTENTION: Equipment damage and/or personal injury may result if this parameter is used in an inappropriate application. Do not use this function without considering applicable local, national and international codes, standards, regulations or industry guidelines.

Options	0	"Disable" (Default)
	1	"Enable"

A558 [Positioning Mode]

Stop drive before changing this parameter.

PF 525 PowerFlex 525 only.

Defines the positioning transition mode used for the position steps.

Options	0	"Time Steps" (Default)	Steps based on time.
	1	"Preset Input"	Preset inputs directly commands a given step.
	2	"Step Logic"	Use Step Logic Commands. Always start from Step 0.
	3	"Preset StpL"	Use Preset Inputs to determine starting step then Step Logic commands.
	4	"StpLogic-Lst"	Use Step Logic commands from last Step Logic step at last drive stop.

Advanced Program Group *(continued)*

A559 [Counts Per Unit]

PF 525 PowerFlex 525 only.

Sets the number of encoder counts equal to one user-defined unit.

Values	Default:	4096
	Min/Max:	1/32000
	Display:	1

A560 [Enh Control Word]

Related Parameter(s): t062, t063, t065 - t068, A571

PF 525 PowerFlex 525 only.

Allows control of positioning and other functions through parameter control for use over comms. The functions replicate the digital input options and function in the same way.

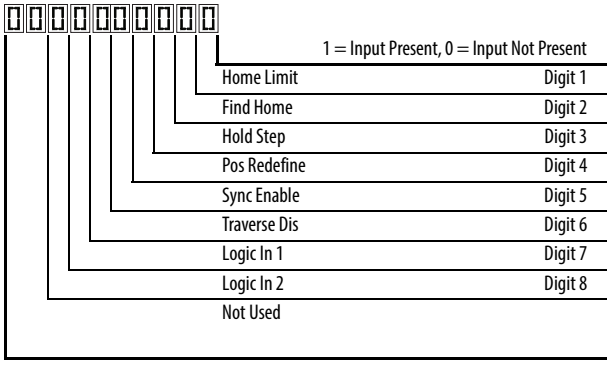

Values	Default:		0000 0000
	Min/Max:		0000 0000/1111 1111
	Display:		0000 0000
Digits	0	"Home Limit"	In Positioning mode, this indicates the drive is at the home position
	1	"Find Home"	When set, the next start command causes the drive to find home. Set this bit to 0 after completing the homing routine.
	2	"Hold Step"	In Positioning mode, this input over-rides other inputs and causes the drive to remain at its current step (running at zero speed once it reaches its position) until released.
	3	"Pos Redefine"	In Positioning mode, this input resets the home position to the current position of the machine. Set this bit to 0 after completing the homing routine.
	4	"Sync Enable"	Must be used in order to hold the existing frequency when Sync Time is set to enable speed synchronization. When this bit is reset to zero the drive accelerates to the new commanded frequency based on A571 [Sync Time] setting.
	5	"Traverse Dis"	When set the traverse function is disabled.
	6	"Logic In 1"	This provides an identical function as the "Logic In1" Digital Input option. This bit is logically ORed with a digital input t062, t063, t065-t068 [DigIn TermBlk xx] set to 24 "Logic In1". It can be used to move through the Step-Logic functions (speed or position) using comms control without requiring actual digital input transitions.
	7	"Logic In 2"	This provides and identical function as the "Logic In2" Digital Input option. This bit is logically ORed with a digital input t062, t063, t065-t068 [DigIn TermBlk xx] set to 25 "Logic In2". It can be used to move through the Step-Logic functions (speed or position) using comms control without requiring actual digital input transitions.

A561 [Home Save]

PF 525 PowerFlex 525 only.

Determines whether the current position is saved on power down.

Options	0	"Home Reset" (Default)	Position resets to zero on power up.
	1	"Home Saved"	

Advanced Program Group *(continued)*

A562 [Find Home Freq]

PF 525 PowerFlex 525 only.

Sets the maximum frequency the drive uses when "Find Home" is issued.

Values	Default:	10.0 Hz
	Min/Max:	0.1/500.0 Hz
	Display:	0.1 Hz

A563 [Find Home Dir]

Stop drive before changing this parameter.

PF 525 PowerFlex 525 only.

Sets the direction the drive commands when "Find Home" is issued.

Options	0	"Forward" (Default)
	1	"Reverse"

A564 [Encoder Pos Tol]

PF 525 PowerFlex 525 only.

Sets the "At Position" and the "At Home' tolerance around the encoder count. The value is added to and subtracted from the target encoder unit value to create the tolerance range.

Values	Default:	100
	Min/Max:	1/50000
	Display:	1

A565 [Pos Reg Filter]

PF 525 PowerFlex 525 only.

Sets the error signal filter in the position regulator.

Values	Default:	8
	Min/Max:	0/15
	Display:	1

A566 [Pos Reg Gain]

PF 525 PowerFlex 525 only.

Sets the gain adjustment for the position regulator.

Values	Default:	3.0
	Min/Max:	0.0/200.0
	Display:	0.1

Advanced Program Group *(continued)*

A567 [Max Traverse]

Sets the amplitude of triangle wave speed modulation.

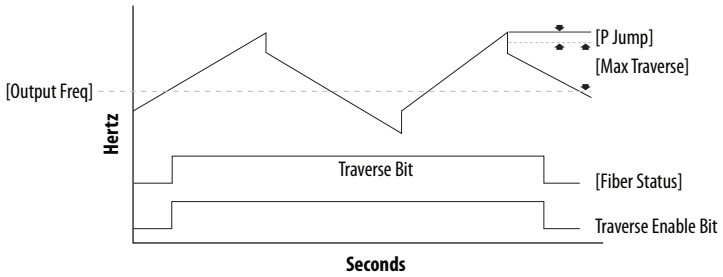

Values	Default:	0.00 Hz
	Min/Max:	0.00/300.00 Hz
	Display:	0.01 Hz

A568 [Traverse Inc] Related Parameter(s): A567

Sets the time required for the Traverse function to accelerate from the minimum to the maximum traverse frequency. See the diagram at A567 [Max Traverse].

Values	Default:	0.00 s
	Min/Max:	0.00/300.00 s
	Display:	0.01 s

A569 [Traverse Dec] Related Parameter(s): A567

Sets the time required for the Traverse function to decelerate from the maximum to the minimum traverse frequency. See the diagram at A567 [Max Traverse].

Values	Default:	0.00 s
	Min/Max:	0.00/300.00 s
	Display:	0.01 s

A570 [P Jump] Related Parameter(s): A567

Sets the frequency amplitude that is added to or subtracted from the commanded frequency. See the diagram at A567 [Max Traverse].

Values	Default:	0.00 Hz
	Min/Max:	0.00/300.00 Hz
	Display:	0.01 Hz

A571 [Sync Time] Related Parameter(s): t062, t063, t065 - t068, A560

Enables the function that holds the drive at the current frequency even if the commanded frequency changes. Used with t062, t063, t065-t068 [DigIn TermBlk xx] 32 “Sync Enable”.

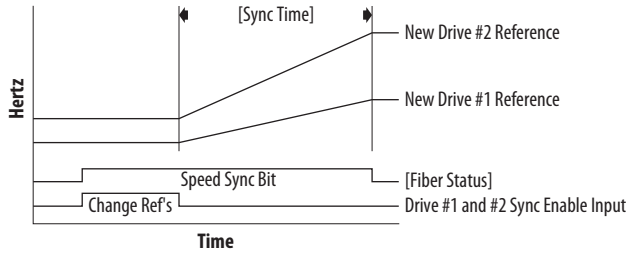

Values	Default:	0.0 s
	Min/Max:	0.0/3200.0 s
	Display:	0.1 s

Advanced Program Group *(continued)*

A572 [Speed Ratio]

Stop drive before changing this parameter.

Scales the drive speed command.

Values	Default:	1.00
	Min/Max:	0.01/99.99
	Display:	0.01

A573 [Mtr Options Cfg]

(With PowerFlex 525 FRN 2.xxx and later.)
(With PowerFlex 523 FRN 3.xxx and later.)

Sets the configuration of the motor option.

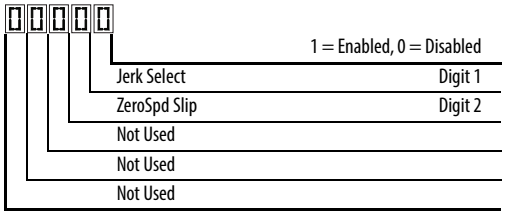

Options	Description
Jerk Select	Limits the rate of change to the velocity reference for improved current limiting. Set to 0 "Disabled" for positioning type applications with fast Accel or Decel times.
ZeroSpd Slip	Sets slip compensation to 0.0 Hz when the following conditions are met: • Commanded speed = 0.00 Hz • Status of drive = "At speed" • ZeroSpd Slip = 1 "Enabled"

Values	Default:	11
	Min/Max:	00/11
	Display:	00

A574 [RdyBit Mode Cfg]

Related Parameter(s): d392

Stop drive before changing this parameter.

(With PowerFlex 525 FRN 3.xxx and later.)
(With PowerFlex 523 FRN 3.xxx and later.)

Determines which Stop conditions causes the drive's Ready bit (Network Logic Status bit 1) to go low (0). A reset or power cycle is required after selection is made.

	Ready Bit Status(2)	
Stop Conditions	**Standard**	**Enhanced**
Drive fault	0	0
Stop digital input terminal 01/11 open	1	0
Holding down the drive's keypad or the Remote DSI HIM Stop button	1	0
Stop commanded through Comms (Stop bit = 1)	1	0
Software (SW) Enable digital input terminal open	1	0
Safe-Torque-Off (STO) condition with value of t105 [Safety Open En] set to 1 "FaultDisabled"(1)	0	0

(1) Condition is specific to PowerFlex 525 drives only.
(2) 1 = Active, 0 = Inactive

Options	0	"Standard" (Default)
	1	"Enhanced"

A575 [Flux Braking En]

Related Parameter(s): A550

(With PowerFlex 525 FRN 5.xxx and later.)
(With PowerFlex 523 FRN 3.xxx and later.)

Enables/disables flux braking.

Options	0	"Disable" (Default)
	1	"Enable"

Advanced Program Group *(continued)*

A576 [Phase Loss Level]

(With PowerFlex 525 FRN 5.xxx and later.)
(With PowerFlex 523 FRN 3.xxx and later.)
Output Phase Loss Level. Sets the threshold level which is used to determine an output phase loss condition.
Each motor phase must exceed this value. Decreasing this parameter's value lowers sensitivity.

Values	Default:	25.0% for Induction motor; 4.0% for PM motor
	Min/Max:	0.0/100.0%
	Display:	0.1%

A580 [Current Loop BW]

PF 525 PowerFlex 525 only.

(With FRN 5.xxx and later.)
Current loop bandwidth (0 = Automatically calculate the control gain of current loop).

Values	Default:	0 Hz
	Min/Max:	0/65535 Hz
	Display:	1 Hz

A581 [PM Stable 1 Freq]

PF 525 PowerFlex 525 only.

(With FRN 5.xxx and later.)
The start frequency for stabilization loop (P032 [Motor NP Hertz] x A581 [PM Stable 1 Freq]).

Values	Default:	0%
	Min/Max:	0/100%
	Display:	1%

A582 [PM Stable 2 Freq]

PF 525 PowerFlex 525 only.

(With FRN 5.xxx and later.)
Stabilization function will return to normal output after this frequency (P032 [Motor NP Hertz] x A582 [PM Stable 2 Freq]).

Values	Default:	45%
	Min/Max:	0/100%
	Display:	1%

A583 [PM Stable 1 Kp]

PF 525 PowerFlex 525 only.

(With FRN 5.xxx and later.)
Percentage of the gain for stabilization loop. The gain is set in A584 [PM Stable 2 Kp].

Values	Default:	40%
	Min/Max:	0/100%
	Display:	1%

A584 [PM Stable 2 Kp]

PF 525 PowerFlex 525 only.

(With FRN 5.xxx and later.)
The gain for stabilization loop.

Values	Default:	250%
	Min/Max:	0/2000%
	Display:	1%

Advanced Program Group *(continued)*

A585 [PM Stable Brk Pt]

PF 525 PowerFlex 525 only.

(With FRN 5.xxx and later.)
Percentage of rated power P037 [Motor NP Power] for the gain of (A584 [PM Stable 2 Kp] x A583 [PM Stable 1 Kp]).

Values	Default:	40%
	Min/Max:	0/100%
	Display:	1%

A586 [PM Stepload Kp]

PF 525 PowerFlex 525 only.

(With FRN 5.xxx and later.)
The gain to ensure robustness under step load in low speed region.

Values	Default:	0%
	Min/Max:	0/1000%
	Display:	1%

A587 [PM 1 Efficiency]

PF 525 PowerFlex 525 only.

(With FRN 5.xxx and later.)
Reduce full load current.

Values	Default:	120%
	Min/Max:	0/2000%
	Display:	1%

A588 [PM 2 Efficiency]

PF 525 PowerFlex 525 only.

(With FRN 5.xxx and later.)
Reduce no load current.

Values	Default:	500%
	Min/Max:	0/2000%
	Display:	1%

A589 [PM Algor Sel] Related Parameter(s): A550

Stop drive before changing this parameter.

PF 525 PowerFlex 525 only.

(With FRN 5.xxx and later.)
Selects the algorithm to use with your motor. Check with the manufacturer of your motor to determine whether it is an iPM or sPM motor.

Options	0	"Algorithm 1" (Default)	Suggested for most motors.
	1	"Algorithm 2"	Enable an embedded algorithm to reduce oscillation in output waveform (use with sPM motor only, do not enable for iPM motor).

Network Parameter Group

This group contains parameters for the network option card that is installed.

Refer to the network option card's user manual for more information on the available parameters.

Modified Parameter Group

This group contains parameters that have their values changed from the factory default.

When a parameter has its default value changed, it is automatically added to this group. When a parameter has its value changed back to the factory default, it is automatically removed from this group.

Fault and Diagnostic Group

F604 [Fault 4 Code]
F605 [Fault 5 Code]
F606 [Fault 6 Code]
F607 [Fault 7 Code]
F608 [Fault 8 Code]
F609 [Fault 9 Code]
F610 [Fault10 Code]

Related Parameter(s): b007-b009

A code that represents a drive fault. The codes appear in these parameters in the order they occur (b007 [Fault 1 Code] = the most recent fault). Repetitive faults are only recorded once.

Values	Default:	Read Only
	Min/Max:	F0/F127
	Display:	F0

F611 [Fault 1 Time-hr] **F612 [Fault 2 Time-hr]**
F613 [Fault 3 Time-hr] **F614 [Fault 4 Time-hr]**
F615 [Fault 5 Time-hr]
F616 [Fault 6 Time-hr] **F617 [Fault 7 Time-hr]**
F618 [Fault 8 Time-hr] **F619 [Fault 9 Time-hr]**
F620 [Fault10 Time-hr]

PF 525 PowerFlex 525 only.

Related Parameter(s): d362

Displays the value of d362 [Elapsed Time-hr] when the fault occurs.

Values	Default:	Read Only
	Min/Max:	0/32767 hr
	Display:	1 hr

F621 [Fault 1 Time-min] **F622 [Fault 2 Time-min]**
F623 [Fault 3 Time-min] **F624 [Fault 4 Time-min]**
F625 [Fault 5 Time-min]
F626 [Fault 6 Time-min] **F627 [Fault 7 Time-min]**
F628 [Fault 8 Time-min] **F629 [Fault 9 Time-min]**
F630 [Fault10 Time-min]

PF 525 PowerFlex 525 only.

Related Parameter(s): d363

Displays the value of d363 [Elapsed Time-min] when the fault occurs.

Values	Default:	Read Only
	Min/Max:	0.0/320.0 min
	Display:	0.1 min

Fault and Diagnostic Group *(continued)*

F631 [Fault 1 Freq] **F632 [Fault 2 Freq]**
F633 [Fault 3 Freq] **F634 [Fault 4 Freq]**
F635 [Fault 5 Freq]

F636 [Fault 6 Freq] **F637 [Fault 7 Freq]**
F638 [Fault 8 Freq] **F639 [Fault 9 Freq]**
F640 [Fault10 Freq]

PF 525 PowerFlex 525 only.

Related Parameter(s): b001

Displays and stores the value of b001 [Output Freq] with the most recent 10 faults occurred.
[Fault 1 Freq] stores the most recent fault, [Fault 2 Freq] stores the second most recent fault and [Fault 3 Freq] stores the third most recent fault.

Values	Default:	Read Only
	Min/Max:	0.00/500.00 Hz
	Display:	0.01 Hz

F641 [Fault 1 Current] **F642 [Fault 2 Current]**
F643 [Fault 3 Current] **F644 [Fault 4 Current]**
F645 [Fault 5 Current]

F646 [Fault 6 Current] **F647 [Fault 7 Current]**
F648 [Fault 8 Current] **F649 [Fault 9 Current]**
F650 [Fault10 Current]

PF 525 PowerFlex 525 only.

Related Parameter(s): b003

Displays and stores the value of b003 [Output Current] with the most recent 10 faults occurred.
[Fault 1 Current] stores the most recent fault, [Fault 2 Current] stores the second most recent fault and [Fault 3 Current] stores the third most recent fault.

Values	Default:	Read Only
	Min/Max:	0.00/(Drive Rated Amps x 2)
	Display:	0.01 A

F651 [Fault 1 BusVolts] **F652 [Fault 2 BusVolts]**
F653 [Fault 3 BusVolts] **F654 [Fault 4 BusVolts]**
F655 [Fault 5 BusVolts]

F656 [Fault 6 BusVolts] **F657 [Fault 7 BusVolts]**
F658 [Fault 8 BusVolts] **F659 [Fault 9 BusVolts]**
F660 [Fault10 BusVolts]

PF 525 PowerFlex 525 only.

Related Parameter(s): b005

Displays and stores the value of b005 [DC Bus Voltage] with the most recent 10 faults occurred.
[Fault 1 BusVolts] stores the most recent fault, [Fault2 BusVolts] stores the second most recent fault and [Fault 3 BusVolts] stores the third most recent fault.

Values	Default:	Read Only
	Min/Max:	0/1200VDC
	Display:	1VDC

Fault and Diagnostic Group *(continued)*

F661 [Status @ Fault 1] **F662 [Status @ Fault 2]**
F663 [Status @ Fault 3] **F664 [Status @ Fault 4]**
F665 [Status @ Fault 5]

Related Parameter(s): b006

F666 [Status @ Fault 6] **F667 [Status @ Fault 7]**
F668 [Status @ Fault 8] **F669 [Status @ Fault 9]**
F670 [Status @ Fault10]

PF 525 PowerFlex 525 only.

Displays the value of b006 [Drive Status] with the most recent 10 faults occurred.
[Status@ Fault 1] stores the most recent fault, [Status@ Fault 2] stores the second most recent fault and [Status@ Fault 3] stores the third most recent fault.

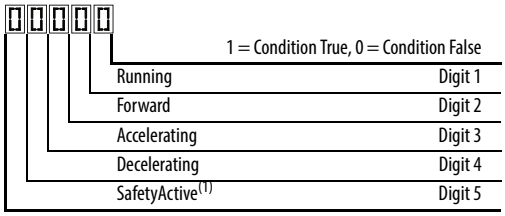

(1) Setting is specific to PowerFlex 525 drives only.

Values	Default:	Read Only
	Min/Max:	0/0x1F
	Display:	1

F681 [Comm Sts - DSI]

Displays the status of the RS485 serial (DSI) port to the drive.

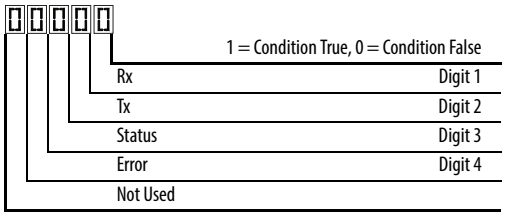

Digit 3 (Connection Status)	
0	"Not Active"
1	"Modbus slave network (external Modbus master)"
2	"Modbus multi-drive w/ internal com option master"
3	"Modbus multi-drive w/ embedded com master"(1)
4	"DSI peripheral connected"
5...8	"Reserved"
9	"RS-485 network faulted"

(1) Setting is specific to PowerFlex 525 drives only.

Values	Default:	Read Only
	Min/Max:	0000/1911
	Display:	0000

F682 [Comm Sts - Opt]

Displays the status of the internal communication to the drive.

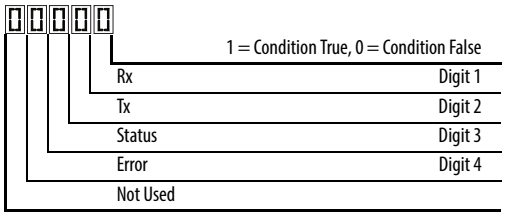

Digit 3 = "Internal Com option"	
0	"Not Active (no connection)"
1	"Internal option connected/active"
2...8	"Reserved"
9	"Internal com option faulted"

Values	Default:	Read Only
	Min/Max:	0000/1911
	Display:	0000

Fault and Diagnostic Group *(continued)*

F683 [Com Sts-Emb Enet]

PF 525 PowerFlex 525 only.

Displays the status of the embedded EtherNet/IP interface to the drive.

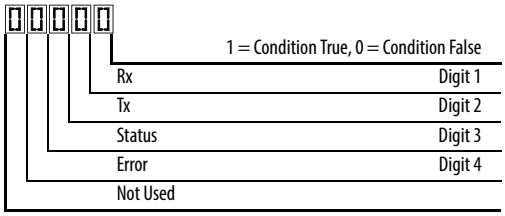

Digit 3 = "Embedded EtherNet/IP"	
0	"Not Active (no connection)"
1	"Embedded EtherNet/IP active"
2-8	"Reserved"
9	"Embedded EtherNet/IP faulted"

Values	Default:	Read Only
	Min/Max:	0000/1911
	Display:	0000

F684 [EN Addr Src]

PF 525 PowerFlex 525 only.

Displays the actual source of the Ethernet configuration (IP address, subnet mask, and gateway address).

Options	1	"Parameters"	Read Only
	2	"BOOTP"	

F685 [EN Rate Act]

PF 525 PowerFlex 525 only.

Displays the network data rate currently used by the embedded EtherNet/IP interface.

Options	0	"No Link"	Read Only
	1	"10Mbps Full"	
	2	"10Mbps Half"	
	3	"100Mbps Full"	
	4	"100Mbps Half"	
	5	"Dup IP Addr"	
	6	"Disabled"	

F686 [DSI I/O Act]

Displays the Drives that are active in Multi-Drive mode.

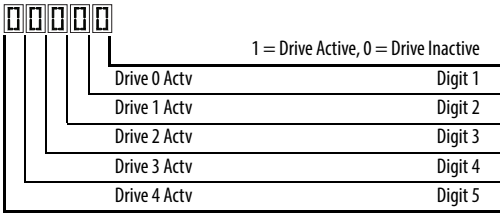

Value	Default:	Read Only
	Min/Max:	00000/11111
	Display:	00000

Fault and Diagnostic Group *(continued)*

F687 [HW Addr 1]
F688 [HW Addr 2]
F689 [HW Addr 3]
F690 [HW Addr 4]
F691 [HW Addr 5]
F692 [HW Addr 6]

PF 525 PowerFlex 525 only.

Shows the MAC address for the embedded EtherNet/IP interface.

Values	Default:	Read Only
	Min/Max:	0/255
	Display:	1

F693 [EN IP Addr Act 1]
F694 [EN IP Addr Act 2]
F695 [EN IP Addr Act 3]
F696 [EN IP Addr Act 4]

PF 525 PowerFlex 525 only.

Shows the actual IP address used by the embedded EtherNet/IP interface at the time. This indicates 0 if no address is set.

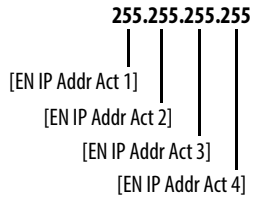

Values	Default:	Read Only
	Min/Max:	0/255
	Display:	1

F697 [EN Subnet Act 1]
F698 [EN Subnet Act 2]
F699 [EN Subnet Act 3]
F700 [EN Subnet Act 4]

PF 525 PowerFlex 525 only.

Shows the actual subnet mask used by the embedded EtherNet/IP interface at the time. This will indicate 0 if no address is set.

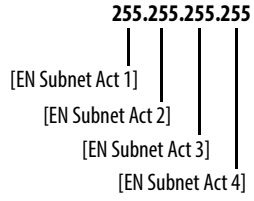

Values	Default:	Read Only
	Min/Max:	0/255
	Display:	1

Fault and Diagnostic Group *(continued)*

F701 [EN Gateway Act 1]
F702 [EN Gateway Act 2]
F703 [EN Gateway Act 3]
F704 [EN Gateway Act 4]

PF 525 PowerFlex 525 only.

Shows the actual gateway address used by the embedded EtherNet/IP interface at the time. This will indicate 0 if no address is set.

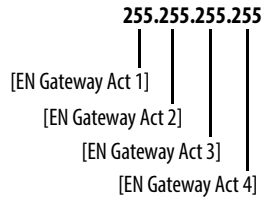

Values	Default:	Read Only
	Min/Max:	0/255
	Display:	1

F705 [Drv 0 Logic Cmd]
F709 [Drv 1 Logic Cmd]
F713 [Drv 2 Logic Cmd]
F717 [Drv 3 Logic Cmd]
F721 [Drv 4 Logic Cmd]

In multi-drive mode, this is the logic command being transmitted to drive 0/1/2/3/4/.
In single-drive mode, this is the logic command being used by the drive (whether HS-DSI, EtherNet/IP, or DSI) at the time. If comms control is NOT being used, and the drive is in single-drive mode, then this parameter will show 0.

Values	Default:	Read Only
	Min/Max:	0/FFFF
	Display:	1

F706 [Drv 0 Reference]
F710 [Drv 1 Reference]
F714 [Drv 2 Reference]
F718 [Drv 3 Reference]
F722 [Drv 4 Reference]

In multi-drive mode, this is the reference being transmitted to drive 0/1/2/3/4.
In single-drive mode, this is the reference being used by the drive (whether HS-DSI, EtherNet/IP, or DSI) at the time. If comms control is NOT being used, and the drive is in single-drive mode, then this parameter will show 0.

Values	Default:	Read Only
	Min/Max:	0.00/500.00 Hz
	Display:	0.01 Hz

F707 [Drv 0 Logic Sts]
F711 [Drv 1 Logic Sts]
F715 [Drv 2 Logic Sts]
F719 [Drv 3 Logic Sts]
F723 [Drv 4 Logic Sts]

In multi-drive mode, this is the logic status being received from drive 0/1/2/3/4.
In single-drive mode, this is the logic status of the drive at the time.

Values	Default:	Read Only
	Min/Max:	0/FFFF
	Display:	1

Fault and Diagnostic Group *(continued)*

F708 [Drv 0 Feedback]
F712 [Drv 1 Feedback]
F716 [Drv 2 Feedback]
F720 [Drv 3 Feedback]
F724 [Drv 4 Feedback]

In multi-drive mode, this is the feedback being received from drive 0/1/2/3/4.
In single-drive mode, this is the feedback of the drive at the time.

Values	Default:	Read Only
	Min/Max:	0.00/500.00 Hz
	Display:	0.01 Hz

F725 [EN Rx Overruns]

PF 525 PowerFlex 525 only.

A count of the number of receive overrun errors reported by the embedded EtherNet/IP interface.

Values	Default:	Read Only
	Min/Max:	0/65535
	Display:	1

F726 [EN Rx Packets]

PF 525 PowerFlex 525 only.

A count of the number of receive packets reported by the embedded EtherNet/IP interface.

Values	Default:	Read Only
	Min/Max:	0/65535
	Display:	1

F727 [EN Rx Errors]

PF 525 PowerFlex 525 only.

A count of the number of receive errors reported by the embedded EtherNet/IP interface.

Values	Default:	Read Only
	Min/Max:	0/65535
	Display:	1

F728 [EN Tx Packets]

PF 525 PowerFlex 525 only.

A count of the number of transmitted packets reported by the embedded EtherNet/IP interface.

Values	Default:	Read Only
	Min/Max:	0/65535
	Display:	1

F729 [EN Tx Errors]

PF 525 PowerFlex 525 only.

A count of the number of transmit errors reported by the embedded EtherNet/IP interface.

Values	Default:	Read Only
	Min/Max:	0/65535
	Display:	1

Fault and Diagnostic Group *(continued)*

F730 [EN Missed IO Pkt]

PF 525 PowerFlex 525 only.

The number of I/O packets missed.

Values	Default:	Read Only
	Min/Max:	0/65535
	Display:	1

F731 [DSI Errors]

The number of total DSI errors.

Values	Default:	Read Only
	Min/Max:	0/65535
	Display:	1

AppView Parameter Groups

AppView parameter groups provide a simple starting point for using the PowerFlex 520-series drives by grouping certain commonly used parameters based on different types of applications. Use these parameter groups to quickly and easily setup the PowerFlex 520-series drive for your application.

AppView parameter groups are available for the following applications:

- Conveyor
- Mixer
- Compressor
- Centrifugal Pump
- Blower/Fan
- Extruder
- Positioning (PowerFlex 525 only)
- Textile/Fiber

You cannot add or remove parameters to or from the AppView parameter groups. If you require quick access to additional parameters to what is already included in the different AppView parameter groups, use the CustomView parameter group instead.

The parameters in the AppView parameter groups can be quickly added to the CustomView parameter group by doing the following:

Step		Key(s)	Example Displays
1.	Press the Up Arrow or Down Arrow to scroll to an AppView group (G1...G8).	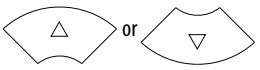	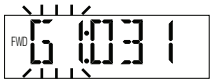
2.	Press Enter or Sel to enter a group. The right most digit of the last viewed parameter in that group will flash.	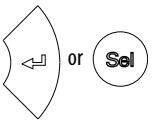	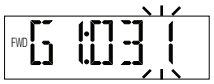
3.	Press the Up Arrow or Down Arrow to scroll to the command G1->GC.	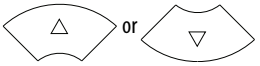	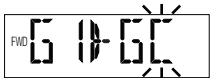
4.	Press Enter or Sel to add all the parameters in this AppView group to the CustomView group. The LCD display will show a confirmation.	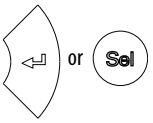	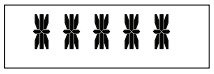

CustomView Parameter Group

CustomView allows you to quickly access only the parameters needed for your application by storing them in a custom parameter group. Add your frequently used parameters to this group, then hide all other parameters with A552 [Program Lock] to simplify your drive configuration process.

Up to 100 parameters can be stored in the CustomView parameter group. You can copy one entire AppView parameter group to the CustomView parameter group as shown on page 150 or add individual parameters as show below.

Step		Key(s)	Example Displays
1.	Press the Up Arrow or Down Arrow to scroll to the CustomView group (GC).	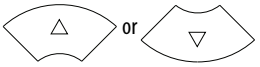	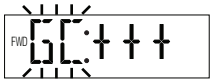
2.	Press Enter to view the parameters that can be added to the CustomView group.		
3.	Press the Up Arrow or Down Arrow to scroll through the list of parameters.	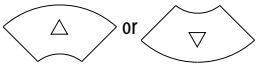	
4.	Press Enter to add the parameter to the CustomView group. The LCD display will show a confirmation.	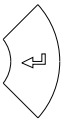	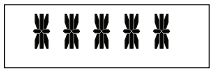

To delete parameters from the CustomView parameter group:

Step		Key(s)	Example Displays
1.	Press the Up Arrow or Down Arrow to scroll to the CustomView group (GC).	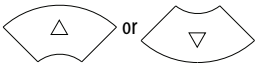	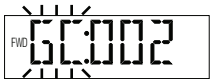
2.	Press Enter to view the parameters that are in the CustomView group.	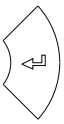	
3.	Press the Up Arrow or Down Arrow to scroll to the command GC---.	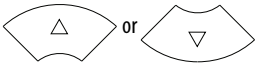	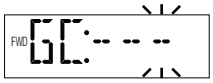
4.	Press Enter or Sel to view the parameters that are stored in the CustomView group.	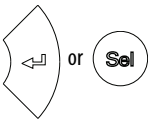	
5.	Press the Up Arrow or Down Arrow to scroll through the list of parameters.	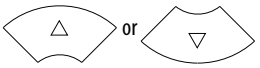	
6.	Press Enter to delete the parameter from the CustomView group. The LCD display will show a confirmation.		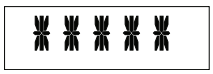

TIP The Connected Components Workbench software can be used to speed up this process with drag and drop functionality.

Parameter Cross Reference by Name

Parameter Name	No.
10V Bipolar Enbl[1]	093
2-Wire Mode	064
Accel Time 1	041
Accel Time 2	442
Accel Time 3	444
Accel Time 4	446
Accum CO2 Sav	026
Accum Cost Sav	025
Accum kWh Sav	024
Analog In 0-10V	360
Analog In 4-20mA	361
Analog In Filter	099
Analog Out High[2]	089
Analog Out Sel[2]	088
Anlg In 0-10V Hi	092
Anlg In 0-10V Lo	091
Anlg In mA Loss	097
Anlg In V Loss	094
Anlg In4-20mA Hi	096
Anlg In4-20mA Lo	095
Anlg Loss Delay	098
Anlg Out Setpt[2]	090
Auto Rstrt Delay	542
Auto Rstrt Tries	541
Autotune	040
Average kWh Cost	052
Average Power	020
Boost Select	530
Break Frequency	533
Break Voltage	532
Bus Reg Enable	550
Cmd Stat Select[1]	122
Com Sts-Emb Enet[1]	683
Comm Loss Action	125
Comm Loss Time	126
Comm Sts - DSI	681
Comm Sts - Opt	682
Comm Write Mode	121
Commanded Freq	002
Compensation	547
Contrl In Status	013
Control Source	012
Control SW Ver	029
Control Temp	028
Counter Status	364
Counts Per Unit[1]	559
Current Limit 1	484
Current Limit 2[1]	485
Current Loop BW[1][3]	580
DB Resistor Sel	437
DB Threshold	438
DC Brake Level	435
DC Brake Time	434
DC Brk Time@Strt	436
DC Bus Ripple	380
DC Bus Voltage	005
Decel Time 1	042
Decel Time 2	443
Decel Time 3	445
Decel Time 4	447
Dig In Status	014
Dig Out Status[2][3]	394
DigIn TermBlk 02	062
DigIn TermBlk 03	063
DigIn TermBlk 05	065
DigIn TermBlk 06	066
DigIn TermBlk 07[1]	067
DigIn TermBlk 08[1]	068
Drive OL Mode	495
Drive Status	006
Drive Status 2[2][3]	393
Drive Temp	027
Drive Type	367
Droop Hertz@ FLA[1]	441
Drv 0 Feedback	708
Drv 0 Logic Cmd	705
Drv 0 Logic Sts	707
Drv 0 Reference	706
Drv 1 Addr	171
Drv 1 Feedback	712
Drv 1 Logic Cmd	709
Drv 1 Logic Sts	711
Drv 1 Reference	710
Drv 2 Addr	172
Drv 2 Feedback	716
Drv 2 Logic Cmd	713
Drv 2 Logic Sts	715
Drv 2 Reference	714
Drv 3 Addr	173
Drv 3 Feedback	720
Drv 3 Logic Cmd	717
Drv 3 Logic Sts	719
Drv 3 Reference	718
Drv 4 Addr	174
Drv 4 Feedback	724
Drv 4 Logic Cmd	721
Drv 4 Logic Sts	723
Drv 4 Reference	722
Drv Ambient Sel	554
DSI Errors	731
DSI I/O Act	686
DSI I/O Cfg	175
Elapsed kWh	021
Elapsed MWh	022
Elapsed Run Time	019
Elapsed Time-hr	362
Elapsed Time-min	363
EM Brk Off Delay	086
EM Brk On Delay	087
EN Addr Sel[1]	128
EN Addr Src[1]	684
EN Comm Flt Actn[1]	143
EN Data In 1[1]	153
EN Data In 2[1]	154
EN Data In 3[1]	155
EN Data In 4[1]	156
EN Data Out 1[1]	157
EN Data Out 2[1]	158
EN Data Out 3[1]	159
EN Data Out 4[1]	160
EN Flt Cfg DL 1[1]	147
EN Flt Cfg DL 2[1]	148
EN Flt Cfg DL 3[1]	149
EN Flt Cfg DL 4[1]	150
EN Flt Cfg Logic[1]	145
EN Flt Cfg Ref[1]	146
EN Gateway Act 1[1]	701
EN Gateway Act 2[1]	702
EN Gateway Act 3[1]	703
EN Gateway Act 4[1]	704
EN Gateway Cfg 1[1]	137
EN Gateway Cfg 2[1]	138
EN Gateway Cfg 3[1]	139
EN Gateway Cfg 4[1]	140
EN Idle Flt Actn[1]	144
EN IP Addr Act 1[1]	693
EN IP Addr Act 2[1]	694
EN IP Addr Act 3[1]	695
EN IP Addr Act 4[1]	696
EN IP Addr Cfg 1[1]	129
EN IP Addr Cfg 2[1]	130
EN IP Addr Cfg 3[1]	131
EN IP Addr Cfg 4[1]	132
EN Missed IO Pkt[1]	730

Parameter Name	No.
EN Rate Act[1]	685
EN Rate Cfg[1]	141
EN Rx Errors[1]	727
EN Rx Overruns[1]	725
EN Rx Packets[1]	726
EN Subnet Act 1[1]	697
EN Subnet Act 2[1]	698
EN Subnet Act 3[1]	699
EN Subnet Act 4[1]	700
EN Subnet Cfg 1[1]	133
EN Subnet Cfg 2[1]	134
EN Subnet Cfg 3[1]	135
EN Subnet Cfg 4[1]	136
EN Tx Errors[1]	729
EN Tx Packets[1]	728
Encoder Pos Tol[1]	564
Encoder PPR[1]	536
Encoder Speed[2]	378
Energy Saved	023
Enh Control Word[1]	560
Fault 1 BusVolts	651
Fault 1 Code	007
Fault 1 Current	641
Fault 1 Freq	631
Fault 1 Time-hr	611
Fault 1 Time-min	621
Fault 2 BusVolts	652
Fault 2 Code	008
Fault 2 Current	642
Fault 2 Freq	632
Fault 2 Time-hr	612
Fault 2 Time-min	622
Fault 3 BusVolts	653
Fault 3 Code	009
Fault 3 Current	643
Fault 3 Freq	633
Fault 3 Time-hr	613
Fault 3 Time-min	623
Fault 4 BusVolts	654
Fault 4 Code	604
Fault 4 Current	644
Fault 4 Freq	634
Fault 4 Time-hr	614
Fault 4 Time-min	624
Fault 5 BusVolts	655
Fault 5 Code	605
Fault 5 Current	645
Fault 5 Freq	635
Fault 5 Time-hr	615
Fault 5 Time-min	625

Parameter Name	No.
Fault 6 BusVolts[1]	656
Fault 6 Code[1]	606
Fault 6 Current[1]	646
Fault 6 Freq[1]	636
Fault 6 Time-hr[1]	616
Fault 6 Time-min[1]	626
Fault 7 BusVolts[1]	657
Fault 7 Code[1]	607
Fault 7 Current[1]	647
Fault 7 Freq[1]	637
Fault 7 Time-hr[1]	617
Fault 7 Time-min[1]	627
Fault 8 BusVolts[1]	658
Fault 8 Code[1]	608
Fault 8 Current[1]	648
Fault 8 Freq[1]	638
Fault 8 Time-hr[1]	618
Fault 8 Time-min[1]	628
Fault 9 BusVolts[1]	659
Fault 9 Code[1]	609
Fault 9 Current[1]	649
Fault 9 Freq[1]	639
Fault 9 Time-hr[1]	619
Fault 9 Time-min[1]	629
Fault Clear	551
Fault10 BusVolts[1]	660
Fault10 Code[1]	610
Fault10 Current[1]	650
Fault10 Freq[1]	640
Fault10 Time-hr[1]	620
Fault10 Time-min[1]	630
Fiber Status	390
Find Home Dir[1]	563
Find Home Freq[1]	562
Flux Braking En[2][3]	575
Flux Current Ref	497
Flying Start En	545
FlyStrt CurLimit	546
Freq 1[1]	510
Freq 1 BW[1]	511
Freq 1 Ki[1]	522
Freq 1 Kp[1]	521
Freq 2[1]	512
Freq 2 BW[1]	513
Freq 2 Ki[1]	524
Freq 2 Kp[1]	523
Freq 3[1]	514
Freq 3 BW[1]	515
Freq 3 Ki[1]	526
Freq 3 Kp[1]	525

Parameter Name	No.
Half Bus Enable	549
Home Save[1]	561
HW Addr 1[1]	687
HW Addr 2[1]	688
HW Addr 3[1]	689
HW Addr 4[1]	690
HW Addr 5[1]	691
HW Addr 6[1]	692
IR Voltage Drop	496
Jog Accel/Decel	432
Jog Frequency	431
Keypad Freq	426
Ki Speed Loop[2]	538
Kp Speed Loop[2]	539
Language	30
Load Loss Level[1]	490
Load Loss Time[1]	491
Max Traverse	567
Maximum Freq	044
Maximum Voltage	534
Minimum Freq	043
MOP Freq	427
MOP Preload	429
MOP Reset Sel	428
MOP Time	430
Motor Fdbk Type[2]	535
Motor Lm[1]	499
Motor Lx[1]	500
Motor NP FLA	034
Motor NP Hertz	032
Motor NP Poles	035
Motor NP Power[1]	037
Motor NP RPM	036
Motor NP Volts	031
Motor OL Current	033
Motor OL Level	369
Motor OL Ret	494
Motor OL Select	493
Motor Rr[1]	498
Mtr Options Cfg[2][5]	573
MultiDrv Sel	169
Opt Data In 1	161
Opt Data In 2	162
Opt Data In 3	163
Opt Data In 4	164
Opt Data Out 1	165
Opt Data Out 2	166
Opt Data Out 3	167
Opt Data Out 4	168
Opto Out Logic[1]	075

Parameter Name	No.
Opto Out1 Level[1]	070
Opto Out1 Sel[1]	069
Opto Out2 Level[1]	073
Opto Out2 Sel[1]	072
Out Phas Loss En	557
Output Current	003
Output Freq	001
Output Power	017
Output Powr Fctr	381
Output RPM	015
Output Speed	016
Output Voltage	004
P Jump	570
Phase Loss Level[2][3]	576
PID 1 Deadband	465
PID 1 Diff Rate	463
PID 1 Fdback Sel	460
PID 1 Integ Time	462
PID 1 Invert Err	467
PID 1 Preload	466
PID 1 Prop Gain	461
PID 1 Ref Sel	459
PID 1 Setpoint	464
PID 1 Trim Hi	456
PID 1 Trim Lo	457
PID 1 Trim Sel	458
PID1 Fdbk Displ	383
PID1 Setpnt Disp	384
PID 2 Deadband[1]	477
PID 2 Diff Rate[1]	475
PID 2 Fdback Sel[1]	472
PID 2 Integ Time[1]	474
PID 2 Invert Err[1]	479
PID 2 Preload[1]	478
PID 2 Prop Gain[1]	473
PID 2 Ref Sel[1]	471
PID 2 Setpoint[1]	476
PID 2 Trim Hi[1]	468
PID 2 Trim Lo[1]	469
PID 2 Trim Sel[1]	470
PID2 Fdbk Displ[1]	385
PID2 Setpnt Disp[1]	386
PM 1 Efficiency[1][3]	587
PM 2 Efficiency[1][3]	588
PM Algor Sel[1][3]	589
PM Align Time[1][3]	518
PM BEMF Voltage[1][3]	504
PM Bus Reg Kd[1][3]	520
PM Control Cfg[1][3]	529
PM DC Inject Cur[1][3]	517
PM FWKn 1 Kp[1][3]	527
PM FWKn 2 Kp[1][3]	528
PM HIFI NS Cur[1][3]	519
PM Initial Sel[1][3]	516
PM IR Voltage[1][3]	501
PM IXd Voltage[1][3]	502
PM IXq Voltage[1][3]	503
PM Stable 1 Freq[1][3]	581
PM Stable 1 Kp[1][3]	583
PM Stable 2 Freq[1][3]	582
PM Stable 2 Kp[1][3]	584
PM Stable Brk Pt[1][3]	585
PM Steploat Kp[1][3]	586
Pos Reg Filter[1]	565
Pos Reg Gain[1]	566
Position Status[1]	387
Positioning Mode[1]	558
Power Loss Mode	548
Power Saved	018
Preset Freq 0	410
Preset Freq 1	411
Preset Freq 2	412
Preset Freq 3	413
Preset Freq 4	414
Preset Freq 5	415
Preset Freq 6	416
Preset Freq 7	417
Preset Freq 8[1]	418
Preset Freq 9[1]	419
Preset Freq 10[1]	420
Preset Freq 11[1]	421
Preset Freq 12[1]	422
Preset Freq 13[1]	423
Preset Freq 14[1]	424
Preset Freq 15[1]	425
Process Disp Hi	482
Process Disp Lo	481
Process Display	010
Program Lock	552
Program Lock Mod	553
Pulse In Scale	537
Purge Frequency	433
PWM Frequency	440
RdyBit Mode Act[2][4]	392
RdyBit Mode Cfg[2][4]	574
Relay 1 Off Time	080
Relay 1 On Time	079
Relay Out1 Level	077
Relay Out1 Sel	076
Relay 2 Off Time[1]	085
Relay 2 On Time[1]	084
Relay Out2 Level[1]	082
Relay Out2 Sel[1]	081
Reset Meters	555
Reset to Defalts	053
Reverse Disable	544
RS485 Data Rate	123
RS485 Format	127
RS485 Node Addr	124
S Curve %	439
Safety Open En[1]	105
SafetyFlt RstCfg[1][3]	106
Shear Pin 1 Time	487
Shear Pin1 Level	486
Shear Pin 2 Time[1]	489
Shear Pin2 Level[1]	488
Skip Freq Band 1	449
Skip Freq Band 2	451
Skip Freq Band 3[1]	453
Skip Freq Band 4[1]	455
Skip Frequency 1	448
Skip Frequency 2	450
Skip Frequency 3[1]	452
Skip Frequency 4[1]	454
Sleep Level	101
Sleep Time	102
Sleep-Wake Sel	100
Slip Hz Meter	375
Speed Feedback	376
Speed Ratio	572
Speed Reference1	047
Speed Reference2	049
Speed Reference3	051
Speed Reg Sel[1]	509
Stall Fault Time	492
Start At PowerUp	543
Start Boost	531
Start Source 1	046
Start Source 2	048
Start Source 3	050
Status @ Fault 1	661
Status @ Fault 2	662
Status @ Fault 3	663
Status @ Fault 4	664
Status @ Fault 5	665
Status @ Fault 6[1]	666
Status @ Fault 7[1]	667
Status @ Fault 8[1]	668
Status @ Fault 9[1]	669
Status @ Fault10[1]	670

Parameter Name	No.
Step Units 0[1]	200
Step Units 1[1]	202
Step Units 2[1]	204
Step Units 3[1]	206
Step Units 4[1]	208
Step Units 5[1]	210
Step Units 6[1]	212
Step Units 7[1]	214
Stop Mode	045
Stp Logic 0[1]	180
Stp Logic 1[1]	181
Stp Logic 2[1]	182
Stp Logic 3[1]	183
Stp Logic 4[1]	184

Parameter Name	No.
Stp Logic 5[1]	185
Stp Logic 6[1]	186
Stp Logic 7[1]	187
Stp Logic Status[1]	391
Stp Logic Time 0[1]	190
Stp Logic Time 1[1]	191
Stp Logic Time 2[1]	192
Stp Logic Time 3[1]	193
Stp Logic Time 4[1]	194
Stp Logic Time 5[1]	195
Stp Logic Time 6[1]	196
Stp Logic Time 7[1]	197
Sync Time	571
Testpoint Data	368

Parameter Name	No.
Testpoint Sel	483
Text Scroll	556
Timer Status	365
Torque Current	382
Torque Perf Mode	039
Traverse Dec	569
Traverse Inc	568
Units Traveled H[1]	388
Units Traveled L[1]	389
Var PWM Disable	540
Voltage Class	038
Wake Level	103
Wake Time	104

(1) Parameter is specific to PowerFlex 525 drives only.
(2) Parameter is also available in PowerFlex 523 FRN 3.xxx and later.
(3) Parameter is available in PowerFlex 525 FRN 5.xxx and later.
(4) Parameter is available in PowerFlex 525 FRN 3.xxx and later.
(5) Parameter is available in PowerFlex 525 FRN 2.xxx and later.

Notes:

Troubleshooting

This chapter provides information to guide you in troubleshooting the PowerFlex 520-series drive. Included is a listing and description of drive faults with possible solutions, when applicable.

For information on...	See page...
Drive Status	157
Faults	157
Fault Descriptions	159
Common Symptoms and Corrective Actions	162

ATTENTION: Risk of injury or equipment damage exists. Drive does not contain user-serviceable components. Do not disassemble drive chassis.

Drive Status

The condition or state of your drive is constantly monitored. Any changes will be indicated through the integral LCD display.

See Display and Control Keys on page 62 for information on drive status indicators and controls.

Faults

A fault is a condition that stops the drive. There are two fault types.

Fault Types

Type	Fault Description	
1	Auto-Reset/Run	When this type of fault occurs, and A541 [Auto Rstrt Tries] is set to a value greater than "0," a user-configurable timer, A542 [Auto Rstrt Delay], begins. When the timer reaches zero, the drive attempts to automatically reset the fault. If the condition that caused the fault is no longer present, the fault will be reset and the drive will be restarted.
2	Non-Resettable	This type of fault may require drive or motor repair, or is caused by wiring or programming errors. The cause of the fault must be corrected before the fault can be cleared.

Fault Indication

Condition	Display
Drive is indicating a fault. The integral LCD display provides visual notification of a fault condition by displaying the following. • Flashing fault number • Flashing fault indicator (LED) Press the Esc key to regain control of the display.	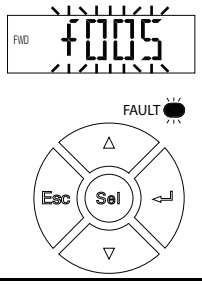

Manually Clearing Faults

Step	Key(s)
1. Press Esc to acknowledge the fault. The fault information will be removed so that you can use the integral keypad. Access b007 [Fault 1 Code] to view the most recent fault information. 2. Address the condition that caused the fault. The cause must be corrected before the fault can be cleared. See Fault Types, Descriptions and Actions on page 159. 3. After corrective action has been taken, clear the fault by one of these methods. • Press Stop if P045 [Stop Mode] is set to a value between "0" and "3". • Cycle drive power. • Set A551 [Fault Clear] to 1 "Reset Fault" or 2 "Clear Buffer". • Cycle digital input if t062, t063, t065...t068 [DigIn TermBlk xx] is set to 13 "Clear Fault".	

Automatically Clearing Faults

Option/Step	
Clear a Type 1 fault and restart the drive. 1. Set A541 [Auto Rstrt Tries] to a value other than "0". 2. Set A542 [Auto Rstrt Delay] to a value other than "0". **Clear an OverVoltage, UnderVoltage or Heatsink OvrTmp fault without restarting the drive.** 1. Set A541 [Auto Rstrt Tries] to a value other than "0". 2. Set A542 [Auto Rstrt Delay] to "0".	

ATTENTION: Equipment damage and/or personal injury may result if these parameters are used in an inappropriate application. Do not use this function without considering applicable local, national and international codes, standards, regulations or industry guidelines.

Auto Restart (Reset/Run)

The Auto Restart feature provides the ability for the drive to automatically perform a fault reset followed by a start attempt without user or application intervention. This allows remote or "unattended" operation. Only certain faults are allowed to be reset. Certain faults (Type 2) that indicate possible drive component malfunction are not resettable. Fault types are listed in the table Fault Types on page 157. See Fault Descriptions on page 159 for more information.

Use caution when enabling this feature, since the drive will attempt to issue its own start command based on user selected programming.

Fault Descriptions

Fault Types, Descriptions and Actions

No.	Fault	Type[2]	Description	Action
F000	No Fault	–	No fault present.	–
F002	Auxiliary Input	1	External trip (Auxiliary) input.	• Check remote wiring. • Verify communications programming for intentional fault.
F003	Power Loss	2	Single phase operation detected with excessive load.	• Monitor the incoming AC line for low voltage or line power interruption. • Check input fuses. • Reduce load.
F004	UnderVoltage	1	DC bus voltage fell below the minimum value.	Monitor the incoming AC line for low voltage or line power interruption.
F005	OverVoltage	1	DC bus voltage exceeded maximum value.	Monitor the AC line for high line voltage or transient conditions. Bus overvoltage can also be caused by motor regeneration. Extend the decel time or install dynamic brake option.
F006	Motor Stalled	1	Drive is unable to accelerate or decelerate motor.	• Increase P041, A442, A444, A446 [Accel Time x] or reduce load so drive output current does not exceed the current set by parameter A484, A485 [Current Limit x] for too long. • Check for overhauling load.
F007	Motor Overload	1	Internal electronic overload trip.	• An excessive motor load exists. Reduce load so drive output current does not exceed the current set by parameter P033 [Motor OL Current]. • Verify A530 [Boost Select] setting.
F008	Heatsink OvrTmp	1	Heatsink/Power Module temperature exceeds a predefined value.	• Check for blocked or dirty heat sink fins. Verify that ambient temperature has not exceeded the rated ambient temperature. • Check fan.
F009	CC OvrTmp	1	Control module temperature exceeds a predefined value.	• Check product ambient temperature. • Check for airflow obstruction. • Check for dirt or debris. • Check fan.
F012	HW OverCurrent	2	The drive output current has exceeded the hardware current limit.	Check programming. Check for excess load, improper A530 [Boost Select] setting, DC brake volts set too high or other causes of excess current.
F013	Ground Fault	1[3]	A current path to earth ground has been detected at one or more of the drive output terminals.	Check the motor and external wiring to the drive output terminals for a grounded condition.

Fault Types, Descriptions and Actions

No.	Fault	Type[2]	Description	Action
F015[1]	Load Loss	2	The output torque current is below the value programmed in A490 [Load Loss Level] for a time period greater than the time programmed in A491 [Load Loss Time].	• Verify connections between motor and load. • Verify level and time requirements
F021	Output Ph Loss	1	Output Phase Loss (if enabled). Configure with A557 [Out Phas Loss En].	• Verify motor wiring. • Verify motor.
F029	Analog In Loss	1	An analog input is configured to fault on signal loss. A signal loss has occurred. Configure with t094 [Anlg In V Loss] or t097 [Anlg In mA Loss].	• Check for broken/loose connections at inputs. • Check parameters.
F033	Auto Rstrt Tries	2	Drive unsuccessfully attempted to reset a fault and resume running for the programmed number of A541 [Auto Rstrt Tries].	Correct the cause of the fault and manually clear.
F038	Phase U to Gnd	2	A phase to ground fault has been detected between the drive and motor in this phase.	• Check the wiring between the drive and motor. • Check motor for grounded phase. • Replace drive if fault cannot be cleared.
F039	Phase V to Gnd			
F040	Phase W to Gnd			
F041	Phase UV Short	2	Excessive current has been detected between these two output terminals.	• Check the motor and drive output terminal wiring for a shorted condition. • Replace drive if fault cannot be cleared.
F042	Phase UW Short			
F043	Phase VW Short			
F048	Params Defaulted	1	The drive was commanded to write default values to EEPROM.	• Clear the fault or cycle power to the drive. • Program the drive parameters as needed.
F059[1]	Safety Open	1	Both of the safety inputs (Safety 1, Safety 2) are not enabled. Configure with t105 [Safety Open En].	• Check safety input signals. If not using safety, verify and tighten jumper for I/O terminals S1, S2 and S+.
F063	SW OverCurrent	1	Programmed A486, A488 [Shear Pinx Level] has been exceeded for a time period greater than the time programmed in A487, A489 [Shear Pin x Time].	• Verify connections between motor and load. • Verify level and time requirements.
F064	Drive Overload	2	Drive overload rating has been exceeded.	Reduce load or extend Accel Time.
F070	Power Unit	2	Failure has been detected in the drive power section.	• Check maximum ambient temperature has not been exceeded. • Cycle power. • Replace drive if fault cannot be cleared.
F071	DSI Net Loss	2	Control over the Modbus or DSI communication link has been interrupted.	• Cycle power. • Check communications cabling. • Check Modbus or DSI setting. • Check Modbus or DSI status.
F072	Opt Net Loss	2	Control over the network option card's remote network has been interrupted.	• Cycle power. • Check communications cabling. • Check network adapter setting. • Check external network status.
F073[1]	EN Net Loss	2	Control through the embedded EtherNet/IP adapter has been interrupted.	• Cycle power. • Check communications cabling. • Check EtherNet/IP setting. • Check external network status.
F080	Autotune Failure	2	The autotune function was either cancelled by the user or failed.	Restart procedure.

Fault Types, Descriptions and Actions

No.	Fault	Type[2]	Description	Action
F081	DSI Comm Loss	2	Communications between the drive and the Modbus or DSI master device have been interrupted.	• Cycle power. • Check communications cabling. • Check Modbus or DSI setting. • Check Modbus or DSI status. • Modify using C125 [Comm Loss Action]. • Connecting I/O terminals C1 and C2 to ground may improve noise immunity. • Replace wiring, Modbus master device, or control module.
F082	Opt Comm Loss	2	Communications between the drive and the network option card have been interrupted.	• Cycle power. • Reinstall option card in drive. • Modify using C125 [Comm Loss Action]. • Replace wiring, port expander, option card, or control module.
F083[1]	EN Comm Loss	2	Internal communications between the drive and the embedded EtherNet/IP adapter have been interrupted.	• Cycle power. • Check EtherNet/IP setting. • Check drive's Ethernet settings and diagnostic parameters. • Modify using C125 [Comm Loss Action]. • Replace wiring, Ethernet switch, or control module.
F091[1]	Encoder Loss	2	Requires differential encoder. One of the 2 encoder channel signals is missing.	• Check Wiring. • If P047, P049, P051 [Speed Referencex] = 16 "Positioning" and A535 [Motor Fdbk Type] = 5 "Quad Check", swap the Encoder channel inputs or swap any two motor leads. • Replace encoder.
F094	Function Loss	2	"Freeze-Fire" (Function Loss) input is inactive, input to the programmed terminal is open.	Close input to the terminal and cycle power.
F100	Parameter Chksum	2	Drive parameter non-volatile storage is corrupted.	Set P053 [Reset To Defalts] to 2 "Factory Rset".
F101	External Storage	2	External non-volatile storage has failed.	Set P053 [Reset To Defalts] to 2 "Factory Rset".
F105	C Connect Err	2	Control module was disconnected while drive was powered.	Clear fault and verify all parameter settings. Do not remove or install the control module while power is applied.
F106	Incompat C-P	2	The PowerFlex 525 control module does not support power modules with 0.25 HP power rating.	• Change to a different power module. • Change to a PowerFlex 523 control module.
F107	Replaced C-P	2	The control module could not recognize the power module. Hardware failure.	• Change to a different power module. • Replace control module if changing power module does not work.
F109	Mismatch C-P	2	The control module was mounted to a different drive type power module.	Set P053 [Reset To Defalts] to 3 "Power Reset".
F110	Keypad Membrane	2	Keypad membrane failure / disconnected.	• Cycle power. • Replace control module if fault cannot be cleared.
F111[1]	Safety Hardware	2	Safety input enable hardware malfunction. One of the safety inputs is not enabled.	• Check safety input signals. If not using safety, verify and tighten jumper for I/O terminals S1, S2 and S+. • Replace control module if fault cannot be cleared.

Fault Types, Descriptions and Actions

No.	Fault	Type[2]	Description	Action
F114	uC Failure	2	Microprocessor failure.	• Cycle power. • Verify grounding requirements. See General Grounding Requirements on page 20 for more information. • Replace control module if fault cannot be cleared.
F122	I/O Board Fail	2	Failure has been detected in the drive control and I/O section.	• Cycle power. • Replace drive or control module if fault cannot be cleared.
F125	Flash Update Req	2	The firmware in the drive is corrupt, mismatched, or incompatible with the hardware.	Perform a firmware flash update operation to attempt to load a valid set of firmware.
F126	NonRecoverablErr	2	A non-recoverable firmware or hardware error was detected. The drive was automatically stopped and reset.	• Clear fault or cycle power to the drive. • Replace drive or control module if fault cannot be cleared.
F127	DSIFlashUpdatReq	2	A critical problem with the firmware was detected and the drive is running using backup firmware that only supports DSI communications.	Perform a firmware flash update operation using DSI communications to attempt to load a valid set of firmware.

(1) This fault is not applicable to PowerFlex 523 drives.
(2) See Fault Types for more information.
(3) This fault may be cleared by the auto-restart routine and will be attempted only once. It ignores the value set in parameter A541 [Auto Rstrt Tries].

Common Symptoms and Corrective Actions

The drive is designed to start from the keypad when shipped. For a basic test of drive operation:

1. Remove all user I/O wire.
2. Verify safety terminals (S1, S2 and S+) jumper is in place and tightened.
3. Verify wire jumper is in place between I/O terminals 01 and 11.
4. Verify that the three jumpers are in their proper default positions on the control board. See PowerFlex 525 Control I/O Wiring Block Diagram on page 42 for more information.
5. Reset default parameter values by setting P053 [Reset Defalts] to 2 “Factory Rset”.
6. If safe to do so for your application, press Start on drive keypad. Drive will run according to the speed potentiometer.

Motor does not Start.

Cause(s)	Indication	Corrective Action
No output voltage to the motor.	None	Check the power circuit. • Check the supply voltage. • Check all fuses and disconnects. Check the motor. • Verify that the motor is connected properly. Check the control input signals. • Verify that a Start signal is present. If 2-Wire control is used, verify that either the Run Forward or Run Reverse signal is active, but not both. • Verify that I/O Terminal 01 is active. • Verify that P046, P048, P050 [Start Source x] matches your configuration. • Verify that A544 [Reverse Disable] is not prohibiting movement. • Verify that safety inputs (Safety 1 and Safety 2) are active.
Improper boost setting at initial start-up.	None	Set A530 [Boost Select] to 2 "35.0, VT".
Drive is Faulted	Flashing red status light	Clear fault. • Press Stop if P045 [Stop Mode] is set to a value between "0" and "3". • Cycle drive power. • Set A551 [Fault Clear] to 1 "Reset Fault" or 2 "Clear Buffer". • Cycle digital input if t062, t063, t065...t068 [DigIn TermBlk xx] is set to 13 "Clear Fault".
Incorrect programming. • P046, P048, P050 [Start Source x] is set incorrectly.	None	Check setting for b012 [Control Source].
Incorrect input wiring. See page 45 for wiring examples. • 2 wire control requires Run Forward, Run Reverse or Jog input. • 3 wire control requires Start and Stop inputs • Stop input is always required.	None	• Wire inputs correctly and/or install jumper. • If the PowerFlex 525 Safe-Torque-Off function is used, verify that inputs are active. • If 2-wire or 3-wire mode is used, verify that t062 [DigIn TermBlk 02] and t063 [DigIn TermBlk 03] are set properly.
Incorrect Sink/Source jumper setting.	None	Set switch to match wiring scheme.

Drive does not Start from Start or Run Inputs wired to the terminal block.

Cause(s)	Indication	Corrective Action
Drive is Faulted	Flashing red status light	Clear fault. • Press Stop if P045 [Stop Mode] is set to a value between "0" and "3". • Cycle drive power. • Set A551 [Fault Clear] to 1 "Reset Fault" or 2 "Clear Buffer". • Cycle digital input if t062, t063, t065...t068 [DigIn TermBlk xx] is set to 13 "Clear Fault".
Incorrect programming. • P046, P048, P050 [Start Source x] is set incorrectly. • t062, t063 [DigIn TermBlk 02/03] is set incorrectly.	None	Check parameter settings.
Incorrect input wiring. See page 45 for wiring examples. • 2 wire control requires Run Forward, Run Reverse or Jog input. • 3 wire control requires Start and Stop inputs • Stop input is always required.	None	• Wire inputs correctly and/or install jumper. • If the PowerFlex 525 Safe-Torque-Off function is used, verify that inputs are active.
Incorrect Sink/Source jumper setting.	None	Set switch to match wiring scheme.

Drive does not respond to changes in speed command.

Cause(s)	Indication	Corrective Action
No value is coming from the source of the command.	The drive "Run" indicator is lit and output is 0 Hz.	• Check b012 [Control Source] for correct source. • If the source is an analog input, check wiring and use a meter to check for presence of signal. • Check b002 [Commanded Freq] to verify correct command.
Incorrect reference source is being selected by remote device or digital inputs.	None	• Check b012 [Control Source] for correct source. • Check b014 [Dig In Status] to see if inputs are selecting an alternate source. Verify settings for t062, t063, t065-t068 [DigIn TermBlk xx]. • Check P047, P049, P051 [Speed Referencex] for the source of the speed reference. Reprogram as necessary. • Review the Speed Reference Control chart on page 49. • Verify communications if used.

Motor and/or drive will not accelerate to commanded speed.

Cause(s)	Indication	Corrective Action
Acceleration time is excessive.	None	Reprogram P041, A442, A444, A446 [Accel Time x].
Excess load or short acceleration times force the drive into current limit, slowing or stopping acceleration.	None	• Compare b003 [Output Current] with A484, A485 [Current Limit x]. • Remove excess load or reprogram P041, A442, A444, A446 [Accel Time x]. • Check for improper A530 [Boost Select] setting.
Speed command source or value is not as expected.	None	• Verify b002 [Commanded Freq]. • Check b012 [Control Source] for the proper Speed Command.
Programming is preventing the drive output from exceeding limiting values.	None	• Check P044 [Maximum Freq] to ensure that speed is not limited by programming. • Verify programming of A572 [Speed Ratio].
Torque performance does not match motor characteristics.	None	• Set motor nameplate full load amps in parameter P034 [Motor NP FLA]. • Perform P040 [Autotune] "Static Tune" or "Rotate Tune" procedure. • Set P039 [Torque Perf Mode] to 0 "V/Hz".

Motor operation is unstable.

Cause(s)	Indication	Corrective Action
Motor data was incorrectly entered.	None	1. Correctly enter motor nameplate data into P031, P032 and P033. 2. Enable A547 [Compensation]. 3. Use A530 [Boost Select] to reduce boost level.

Drive will not reverse motor direction.

Cause(s)	Indication	Corrective Action
Reverse is disabled.	None	Check A544 [Reverse Disable].
Digital input is not selected for reversing control.	None	Check [DigIn TermBlk xx] (See page 89). Choose correct input and program for reversing mode.
Digital input is incorrectly wired.	None	Check input wiring (See page 45).
Motor wiring is improperly phased for reverse.	None	Switch two motor leads.

Drive does not power up.

Cause(s)	Indication	Corrective Action
No input power to drive.	None	• Check the power circuit. • Check the supply voltage. • Check all fuses and disconnects.
Control module is not connected properly to power module.	None	1. Remove power. 2. Verify that the control module is properly and fully installed on the power module. 3. Reapply power.

Motor is rotating at zero Hz or slip frequency is not correct.

Cause(s)	Indication	Corrective Action
Incorrect speed calculation.	Improper speed.	• Verify P032 [Motor NP Hertz]. • Reduce boost with A530 [Boost Select]. • Set P036 [Motor NP RPM] to motor synchronous speed.

Notes:

Supplemental Drive Information

For information on...	See page...
Certifications	167
Environmental Specifications	168
Technical Specifications	169
Power Specifications	172

Certifications

Certifications	PowerFlex 523	PowerFlex 525
c-UL-us	Listed to UL508C and CAN/CSA-C22.2 No. 14-05.	
RCM	Australian Communications and Media Authority In conformity with the following: Radiocommunications Act: 1992 Radiocommunications Standard: 2008 Radiocommunications Labelling Notice: 2008 Standards applied: EN 61800-3	
CE	In conformity with the following European Directives: 2014/35/EU Low Voltage Directive (LVD) 2014/30/EU EMC Directive (EMC) 2014/34/EU ATEX Directive (ATEX) 2006/42/EC Machinery Directive (MD) Standards applied: EN 61800-3 EN 61800-5-1	
TUV	(Applicable to PowerFlex 525 drives only) TÜV Rheinland Standards applied: EN ISO 13849-1 EN 61800-5-2 EN 61508 PARTS 1-7 EN 62061 EN 60204-1 Certified to ISO 13849-1 SIL2/PLd with embedded Safe-Torque-Off function Meets Functional Safety (FS) when used with embedded Safe-Torque-Off function	
ATEX **II (2) G D** **TUV 12 ATEX 7199 X**	(Applicable to PowerFlex 525 drives only) Certified to ATEX Directive 2014/34/EU Group II Category (2) GD Applications with ATEX Approved Motors	
KCC	Korean Registration of Broadcasting and Communications Equipment Compliant with the following standards: Article 58-2 of Radio Waves Act, Clause 3	
EAC	Standards applied: Low Voltage TP TC 004/2011 EMC TP TC 020/2011	

Certifications	PowerFlex 523	PowerFlex 525
AC 156	Tested by Trentec to be compliant with AC156 Acceptance Criteria for Seismic Qualification Testing of Nonstructural Components and 2003 International Building Code for worst-case seismic level for USA excluding site class F	
SEMI F47	Electric Power Research Institute Certified compliant with the following standards: SEMI F47 IEC 61000-4-11 IEC 61000-4-34	
Lloyds Register	(Applicable to PowerFlex 525 drives only) Lloyd's Register Type Approval Certificate 12/10068(E1)	
RoHS	Compliant with the European "Restriction of Hazardous Substances" Directive	
The drive is also designed to meet the appropriate portions of the following specifications: NFPA 70 - US National Electrical Code NEMA ICS 7.1 - Safety standards for Construction and Guide for Selection, Installation and Operation of Adjustable Speed Drive Systems.		

Environmental Specifications

Specifications	PowerFlex 523	PowerFlex 525
Altitude: Without derating: With derating:	See Current Derating Curves on page 17 for derating guidelines. 1000 m (3300 ft) max. Up to 4000 m (13,200 ft) max., with the exception of 600V drives at 2000 m (6600 ft) max.	
Max. Surrounding Air Temperature Without derating: With derating:	See Current Derating Curves on page 17 for derating guidelines. -20...50 °C (-4...122 °F) -20...60 °C (-4...140 °F) or -20...70 °C (-4...158 °F) with optional Control Module Fan kit.	
Storage Temperature: Frame A...D: Frame E:	 -40...85 °C (-40...185 °F) -40...70 °C (-40...158 °F)	
Atmosphere:		

IMPORTANT Drive **must not** be installed in an area where the ambient atmosphere contains volatile or corrosive gas, vapors or dust. If the drive is not going to be installed for a period of time, it must be stored in an area where it will not be exposed to a corrosive atmosphere.

Relative Humidity:	0...95% noncondensing
Shock: Vibration:	Complies with IEC 60068-2-27 Complies with IEC 60068-2-6:1995

	Operating and Nonoperating		Nonoperating (Transportation)	
Frame Size	Force (Shock/Vibration)	Mounting Type	Force (Shock/Vibration)	Mounting Type
A	15 g / 2 g	DIN rail or screw	30 g/ 2.5 g	Screw only
B	15 g / 2 g	DIN rail or screw	30 g/ 2.5 g	Screw only
C	15 g / 2 g	DIN rail or screw	30 g/ 2.5 g	Screw only
D	15 g / 2 g	Screw only	30 g/ 2.5 g	Screw only
E	15 g / 1.5 g	Screw only	30 g/ 2.5 g	Screw only

Specifications	PowerFlex 523	PowerFlex 525
Conformal Coating:	Complies with: IEC 60721-3-3 to level 3C2 (chemical and gases only)	
Surrounding Environment Pollution Degree Pollution Degree 1 & 2:	See Pollution Degree Ratings According to EN 61800-5-1 on page 52 for descriptions. All enclosures acceptable.	
Sound Pressure Level (A-weighted) Frame A & B: Frame C: Frame D: Frame E:	Measurements are taken 1 m from the drive. Maximum 53 dBA Maximum 57 dBA Maximum 64 dBA Maximum 68 dBA	

Technical Specifications

Protection

Specifications	PowerFlex 523	PowerFlex 525
Bus Overvoltage Trip 100...120V AC Input: 200...240V AC Input: 380...480V AC Input: 525...600V AC Input:	 405V DC bus (equivalent to 150V AC incoming line) 405V DC bus (equivalent to 290V AC incoming line) 810V DC bus (equivalent to 575V AC incoming line) 1005V DC bus (equivalent to 711V AC incoming line)	
Bus Undervoltage Trip 100...120V AC Input: 200...240V AC Input: 380...480V AC Input: 525...600V AC Input P038 = 3 "600V": P038 = 2 "480V":	 190V DC bus (equivalent to 75V AC incoming line) 190V DC bus (equivalent to 150V AC incoming line) 390V DC bus (equivalent to 275V AC incoming line) 487V DC bus (equivalent to 344V AC incoming line) 390V DC bus (equivalent to 275V AC incoming line)	
Power Ride-Thru:	100 ms	
Logic Control Ride-Thru:	0.5 s minimum, 2 s typical	
Electronic Motor Overload Protection:	Provides class 10 motor overload protection according to NEC article 430 and motor over-temperature protection according to NEC article 430.126 (A) (2). UL 508C File 29572.	
Overcurrent:	200% hardware limit, 300% instantaneous fault	
Ground Fault Trip:	Phase-to-ground on drive output	
Short Circuit Trip:	Phase-to-phase on drive output	

Electrical

Specifications	PowerFlex 523	PowerFlex 525
Voltage Tolerance:	-15% / +10%	
Frequency Tolerance:	47...63 Hz	
Input Phases:	Three-phase input provides full rating. Single-phase input provides 35% rating on three-phase drives.	
Displacement Power Factor:	0.98 across entire speed range	
Maximum Short Circuit Rating:	100,000 Amps Symmetrical	
Actual Short Circuit Rating:	Determined by AIC Rating of installed fuse/circuit breaker	
Transistor Type:	Isolated Gate Bipolar Transistor (IGBT)	
Internal DC Bus Choke 200...240V AC Input: 380...480V AC Input: 525...600V AC Input:	Only for Frame E drive ratings 11 kW (15 HP) 15...18.5 kW (20...25 HP) – Heavy Duty 15...18.5 kW (20...25 HP) – Heavy Duty	

Control

Specifications	PowerFlex 523	PowerFlex 525
Method	Sinusoidal PWM, Volts/Hertz, Sensorless Vector Control, Economizer SVC motor control, Closed Loop Velocity Vector Control, Surface Mount and Interior Permanent Magnet Motor (without encoder), Interior Permanent Magnet Motor (with encoder) (Closed Loop Velocity Vector Control and PM motor control are not applicable to PowerFlex 523 drives)	
Carrier Frequency	2...16 kHz, Drive rating based on 4 kHz	
Frequency Accuracy		
Digital Input:	Within ±0.05% of set output frequency	
Analog Input:	Within 0.5% of maximum output frequency, 10-Bit resolution	
Analog Output:	±2% of full scale, 10-Bit resolution	
Performance		
V/Hz (Volts per Hertz):	±1% of base speed across a 60:1 speed range	
SVC (Sensorless Vector):	±0.5% of base speed across a 100:1 speed range	
SVC Economizer:	±0.5% of base speed across a 100:1 speed range	
	(Applicable to PowerFlex 525 drives only)	
VVC (Velocity Vector Control):	±0.5% of base speed across a 60:1 speed range	
PM Motor (1):	±0.5% of base speed, up to a 20:1 speed range	
Performance with Encoder	(Applicable to PowerFlex 525 drives only)	
SVC (Sensorless Vector):	±0.1% of base speed across a 100:1 speed range(2)	
SVC Economizer:	±0.1% of base speed across a 100:1 speed range(2)	
VVC (Velocity Vector Control):	±0.1% of base speed across a 1000:1 speed range(2)	
PM Motor (iPM motor, 10 HP rating and below) (1):	±0.1% of base speed, up to a 60:1 speed range	
Output Voltage Range:	0V to rated motor voltage	
Output Frequency Range:	0...500 Hz (programmable)	
Efficiency:	97.5% (typical)	
Stop Modes:	Multiple programmable stop modes including – Ramp, Coast, DC-Brake, and Ramp-to-Stop	
Accel/Decel:	Four independently programmable accel and decel times. Each time may be programmed from 0...600 s in 0.01 s increments.	
Intermittent Overload		
Normal Duty:	110% Overload capability for up to 60 s, 150% for up to 3 s Applies for power rating above 15 kW (20 HP) only. Based on 480V drive rating.	
Heavy Duty:	150% Overload capability for up to 60 s, 180% for up to 3 s (200% programmable)	

(1) For details on specific motor performance, see Knowledge Base article "PowerFlex 525 PM Motor Performance Testing Summary".
(2) For more information, see Determine Encoder Pulse Per Revolution (PPR) Specification Based on Speed Resolution on page 217.

Control Inputs

Specifications		PowerFlex 523	PowerFlex 525
Digital	Bandwidth:	10 Rad/s for open and closed loop	
	Quantity:	(1) Dedicated for stop (4) Programmable	(1) Dedicated for stop (6) Programmable
	Current:	6 mA	
	Type Source Mode (SRC): Sink Mode (SNK):	 18...24V = ON, 0...6V = OFF 0...6V = ON, 18...24V = OFF	
	Pulse Train Quantity: Input Signal: Input Frequency: Current Consumption:	 (1) Shared with one of the programmable digital input terminals. Transistor contact (open collector) 0...100 kHz 7 mA @ 24V DC maximum	
Analog:	Quantity:	(1) Isolated, 0-10V and 4-20mA	(2) Isolated, -10-10V and 4-20mA
	Specification Resolution: 0-10V DC Analog: 4-20mA Analog: External Pot:	 10-bit 100k ohm input impedance 250 ohm input impedance 1...10k ohm, 2 W minimum	

Control Outputs

Specifications		PowerFlex 523	PowerFlex 525
Relay:	Quantity:	(1) Programmable Form C	(2) 1 Programmable Form A and 1 Programmable Form B
	Specification Resistive Rating: Inductive Rating:	 3.0 A @ 30V DC, 3.0 A @ 125V, 3.0 A @ 240V AC 0.5 A @ 30V DC, 0.5 A @ 125V, 0.5 A @ 240V AC	
Opto:	Quantity:	–	(2) Programmable
	Specification:		30V DC, 50 mA Non-inductive
Analog	Quantity:	(1) Non-Isolated 0-10V or 4-20 mA(1)	
	Specification Resolution: 0-10V DC Analog: 4-20 mA Analog:	 10-bit 1 k ohm minimum 525 ohm maximum	

(1) Feature is not applicable to PowerFlex 523 series A drives.

Encoder

Specifications	PowerFlex 523	PowerFlex 525
Type:	–	Incremental, dual channel
Supply:		12V, 250 mA
Quadrature:		90 °, ±27 ° @ 25 °C
Duty Cycle:		50%, +10%
Requirements:		Encoders must be line driver type, quadrature (dual channel) or pulse (single channel), 3.5...26V DC output, single-ended or differential and capable of supplying a minimum of 10 mA per channel. Allowable input is DC up to a maximum frequency of 250 kHz. The encoder I/O automatically scales to allow 5V, 12V and 24V DC nominal voltages.

Power Specifications

Watts Loss

PowerFlex 520-Series Estimated Watts Loss (Rated Load, Speed & PWM)

Voltage	Output Current (A)	Total Watts Loss
100...120V, 50/60 Hz 1-Phase	1.6	20.0
	2.5	27.0
	4.8	53.0
	6.0	67.0
200...240V, 50/60 Hz 1-Phase	1.6	20.0
	2.5	29.0
	4.8	50.0
	8.0	81.0
	11.0	111.0
200...240V, 50/60 Hz 1-Phase w/ EMC Filter	1.6	20.0
	2.5	29.0
	4.8	53.0
	8.0	84.0
	11.0	116.0
200...240V, 50/60 Hz 3-Phase	1.6	20.0
	2.5	29.0
	5.0	50.0
	8.0	79.0
	11.0	107.0
	17.5	148.0
	24.0	259.0
	32.2	323.0
	48.3	584.0
	62.1	708.0
380...480V, 50/60 Hz 3-Phase	1.4	27.0
	2.3	37.0
	4.0	62.0
	6.0	86.0
	10.5	129.0
	13.0	170.0
	17.0	221.0
	24.0	303.0
	30.0	387.0
380...480V, 50/60 Hz 3-Phase w/ EMC Filter	1.4	27.0
	2.3	37.0
	4.0	63.0
	6.0	88.0
	10.5	133.0
	13.0	175.0
	17.0	230.0
	24.0	313.0
	30.0	402.0
	37.0	602.0
	43.0	697.0

PowerFlex 520-Series Estimated Watts Loss (Rated Load, Speed & PWM)

Voltage	Output Current (A)	Total Watts Loss
525...600V, 50/60 Hz 3-Phase	0.9	22.0
	1.7	32.0
	3.0	50.0
	4.2	65.0
	6.6	95.0
	9.9	138.0
	12.0	164.0
	19.0	290.0
	22.0	336.0
	27.0	466.0
	32.0	562.0

Input Current Scaling (Optional)

You can use a higher drive rating by scaling the input current based on the output current required for your application. You can use a lower input current rating based upon the motor FLA rating. For example, if the motor has an FLA rating of 1.6, the input rating will be 3.2 amps. See the PowerFlex 520-Series Input Current Rating Scaled by the Motor FLA on page 173 table for more information.

PowerFlex 520-Series Input Current Rating Scaled by the Motor FLA

PowerFlex 523	PowerFlex 525	Output Current: Motor FLA				Input Drive Current Rating			
Catalog Number	Catalog Number	1	2	3	4	5	6	7	8
100...120V AC (-15%, +10%) – 1-Phase Input, 0...230V 3-Phase Output									
25A-V1P6N104	–	1.6	1.3	1.0	0.8	6.4	5.2	4.0	3.2
25A-V2P5N104	25B-V2P5N104	2.5	2.0	1.6	1.3	9.6	7.7	6.2	4.8
25A-V4P8N104	25B-V4P8N104	4.8	3.8	3.1	2.4	19.2	15.4	12.5	9.6
25A-V6P0N104	25B-V6P0N104	6.0	4.8	3.9	3.0	24.0	19.2	15.6	12.0
200...240V AC (-15%, +10%) – 1-Phase Input, 0...230V 3-Phase Output									
25A-A1P6N104	–	1.6	1.3	1.0	0.8	5.3	4.3	3.4	2.7
25A-A2P5N104	25B-A2P5N104	2.5	2.0	1.6	1.3	6.5	5.2	4.2	3.3
25A-A4P8N104	25B-A4P8N104	4.8	3.8	3.1	2.4	10.7	8.6	7.0	5.4
25A-A8P0N104	25B-A8P0N104	8.0	6.4	5.2	4.0	18.0	14.4	11.7	9.0
25A-A011N104	25B-A011N104	11.0	8.8	7.2	5.5	22.9	18.3	14.9	11.5
200...240V AC (-15%, +10%) – 1-Phase Input with EMC Filter, 0...230V 3-Phase Output									
25A-A1P6N114	–	1.6	1.3	1.0	0.8	5.3	4.3	3.4	2.7
25A-A2P5N114	25B-A2P5N114	2.5	2.0	1.6	1.3	6.5	5.2	4.2	3.3
25A-A4P8N114	25B-A4P8N114	4.8	3.8	3.1	2.4	10.7	8.6	7.0	5.4
25A-A8P0N114	25B-A8P0N114	8.0	6.4	5.2	4.0	18.0	14.4	11.7	9.0
25A-A011N114	25B-A011N114	11.0	8.8	7.2	5.5	22.9	18.3	14.9	11.5
200...240V AC (-15%, +10%) – 3-Phase Input, 0...230V 3-Phase Output									
25A-B1P6N104	–	1.6	1.3	1.0	0.8	1.9	1.5	1.2	1.0
25A-B2P5N104	25B-B2P5N104	2.5	2.0	1.6	1.3	2.7	2.2	1.8	1.4
25A-B5P0N104	25B-B5P0N104	5.0	4.0	3.2	2.5	5.8	4.6	3.8	2.9
25A-B8P0N104	25B-B8P0N104	8.0	6.4	5.2	4.0	9.5	7.6	6.2	4.8
25A-B011N104	25B-B011N104	11.0	8.8	7.2	5.5	13.8	11.0	9.0	6.9
25A-B017N104	25B-B017N104	17.5	14.0	11.4	8.8	21.1	16.9	13.7	10.6

PowerFlex 520-Series Input Current Rating Scaled by the Motor FLA

PowerFlex 523	PowerFlex 525	Output Current: Motor FLA				Input Drive Current Rating			
Catalog Number	**Catalog Number**	**1**	**2**	**3**	**4**	**5**	**6**	**7**	**8**
25A-B024N104	25B-B024N104	24.0	19.2	15.6	12.0	26.6	21.3	17.3	13.3
25A-B032N104	25B-B032N104	32.2	25.8	20.9	16.1	34.8	27.8	22.6	17.4
25A-B048N104	25B-B048N104	48.3	38.6	31.4	24.2	44.0	35.2	28.6	22.0
25A-B062N104	25B-B062N104	62.1	49.7	40.4	31.1	56.0	44.8	36.4	28.0
380...480V AC (-15%, +10%) – 3-Phase Input, 0...460V 3-Phase Output									
25A-D1P4N104	25B-D1P4N104	1.4	1.1	0.9	0.7	1.9	1.5	1.2	1.0
25A-D2P3N104	25B-D2P3N104	2.3	1.8	1.5	1.2	3.2	2.6	2.1	1.6
25A-D4P0N104	25B-D4P0N104	4.0	3.2	2.6	2.0	5.7	4.6	3.7	2.9
25A-D6P0N104	25B-D6P0N104	6.0	4.8	3.9	3.0	7.5	6.0	4.9	3.8
25A-D010N104	25B-D010N104	10.5	8.4	6.8	5.3	13.8	11.0	9.0	6.9
25A-D013N104	25B-D013N104	13.0	10.4	8.5	6.5	15.4	12.3	10.0	7.7
25A-D017N104	25B-D017N104	17.0	13.6	11.1	8.5	18.4	14.7	12.0	9.2
25A-D024N104	25B-D024N104	24.0	19.2	15.6	12.0	26.4	21.1	17.2	13.2
25A-D030N104	25B-D030N104	30.0	24.0	19.5	15.0	33.0	26.4	21.5	16.5
380...480V AC (-15%, +10%) – 3-Phase Input with EMC Filter, 0...460V 3-Phase Output									
25A-D1P4N114	25B-D1P4N114	1.4	1.1	0.9	0.7	1.9	1.5	1.2	1.0
25A-D2P3N114	25B-D2P3N114	2.3	1.8	1.5	1.2	3.2	2.6	2.1	1.6
25A-D4P0N114	25B-D4P0N114	4.0	3.2	2.6	2.0	5.7	4.6	3.7	2.9
25A-D6P0N114	25B-D6P0N114	6.0	4.8	3.9	3.0	7.5	6.0	4.9	3.8
25A-D010N114	25B-D010N114	10.5	8.4	6.8	5.3	13.8	11.0	9.0	6.9
25A-D013N114	25B-D013N114	13.0	10.4	8.5	6.5	15.4	12.3	10.0	7.7
25A-D017N114	25B-D017N114	17.0	13.6	11.1	8.5	18.4	14.7	12.0	9.2
25A-D024N114	25B-D024N114	24.0	19.2	15.6	12.0	26.4	21.1	17.2	3.2
25A-D030N114	25B-D030N114	30.0	24.0	19.5	15.0	33.0	26.4	21.5	16.5
25A-D037N114	25B-D037N114	37.0	29.6	24.1	18.5	33.7	27.0	21.9	16.9
25A-D043N114	25B-D043N114	43.0	34.4	28.0	21.5	38.9	31.1	25.3	19.5
525...600V AC (-15%, +10%) – 3-Phase Input, 0...575V 3-Phase Output									
25A-E0P9N104	25B-E0P9N104	0.9	0.7	0.6	0.5	1.2	1.0	0.8	0.6
25A-E1P7N104	25B-E1P7N104	1.7	1.4	1.1	0.9	2.3	1.8	1.5	1.2
25A-E3P0N104	25B-E3P0N104	3.0	2.4	2.0	1.5	3.8	3.0	2.5	1.9
25A-E4P2N104	25B-E4P2N104	4.2	3.4	2.7	2.1	5.3	4.2	3.4	2.7
25A-E6P6N104	25B-E6P6N104	6.6	5.3	4.3	3.3	8.0	6.4	5.2	4.0
25A-E9P9N104	25B-E9P9N104	9.9	7.9	6.4	5.0	11.2	9.0	7.3	5.6
25A-E012N104	25B-E012N104	12.0	9.6	7.8	6.0	13.5	10.8	8.8	6.8
25A-E019N104	25B-E019N104	19.0	15.2	12.4	9.5	24.0	19.2	15.6	12.0
25A-E022N104	25B-E022N104	22.0	17.6	14.3	11.0	27.3	21.8	17.7	13.7
25A-E027N104	25B-E027N104	27.0	21.6	17.6	13.5	24.7	19.8	16.1	12.4
25A-E032N104	25B-E032N104	32.0	25.6	20.8	16.0	29.2	23.4	19.0	14.6

Accessories and Dimensions

Product Selection

Catalog Number Description

25B	-	V	2P5	N	1	0	4
Drive		Voltage Rating	Rating	Enclosure	HIM	Emission Class	Version

PowerFlex 520-Series Drive Ratings

Output Ratings					Input Voltage Range	Frame Size	PowerFlex 523	PowerFlex 525
Normal Duty		Heavy Duty		Output Current (A)				
HP	kW	HP	kW				Catalog No.	Catalog No.
100...120V AC (-15%, +10%) – 1-Phase Input, 0...230V 3-Phase Output								
0.25	0.2	0.25	0.2	1.6	85...132	A	25A-V1P6N104[2]	–
0.5	0.4	0.5	0.4	2.5	85...132	A	25A-V2P5N104	25B-V2P5N104
1.0	0.75	1.0	0.75	4.8	85...132	B	25A-V4P8N104	25B-V4P8N104
1.5	1.1	1.5	1.1	6.0	85...132	B	25A-V6P0N104	25B-V6P0N104
200...240V AC (-15%, +10%) – 1-Phase Input, 0...230V 3-Phase Output								
0.25	0.2	0.25	0.2	1.6	170...264	A	25A-A1P6N104[2]	–
0.5	0.4	0.5	0.4	2.5	170...264	A	25A-A2P5N104	25B-A2P5N104
1.0	0.75	1.0	0.75	4.8	170...264	A	25A-A4P8N104	25B-A4P8N104
2.0	1.5	2.0	1.5	8.0	170...264	B	25A-A8P0N104	25B-A8P0N104
3.0	2.2	3.0	2.2	11.0	170...264	B	25A-A011N104	25B-A011N104
200...240V AC (-15%, +10%) – 1-Phase Input with EMC Filter, 0...230V 3-Phase Output								
0.25	0.2	0.25	0.2	1.6	170...264	A	25A-A1P6N114	–
0.5	0.4	0.5	0.4	2.5	170...264	A	25A-A2P5N114	25B-A2P5N114
1.0	0.75	1.0	0.75	4.8	170...264	A	25A-A4P8N114	25B-A4P8N114
2.0	1.5	2.0	1.5	8.0	170...264	B	25A-A8P0N114	25B-A8P0N114
3.0	2.2	3.0	2.2	11.0	170...264	B	25A-A011N114	25B-A011N114
200...240V AC (-15%, +10%) – 3-Phase Input, 0...230V 3-Phase Output								
0.25	0.2	0.25	0.2	1.6	170...264	A	25A-B1P6N104[2]	–
0.5	0.4	0.5	0.4	2.5	170...264	A	25A-B2P5N104	25B-B2P5N104
1.0	0.75	1.0	0.75	5.0	170...264	A	25A-B5P0N104	25B-B5P0N104
2.0	1.5	2.0	1.5	8.0	170...264	A	25A-B8P0N104	25B-B8P0N104
3.0	2.2	3.0	2.2	11.0	170...264	A	25A-B011N104	25B-B011N104
5.0	4.0	5.0	4.0	17.5	170...264	B	25A-B017N104	25B-B017N104
7.5	5.5	7.5	5.5	24.0	170...264	C	25A-B024N104	25B-B024N104
10.0	7.5	10.0	7.5	32.2	170...264	D	25A-B032N104	25B-B032N104
15.0	11.0	10.0	7.5	48.3	170...264	E	25A-B048N104	25B-B048N104
20.0	15.0	15.0	11.0	62.1	170...264	E	25A-B062N104	25B-B062N104
380...480V AC (-15%, +10%) – 3-Phase Input, 0...460V 3-Phase Output[1]								
0.5	0.4	0.5	0.4	1.4	323...528	A	25A-D1P4N104[2]	25B-D1P4N104[2]
1.0	0.75	1.0	0.75	2.3	323...528	A	25A-D2P3N104	25B-D2P3N104
2.0	1.5	2.0	1.5	4.0	323...528	A	25A-D4P0N104	25B-D4P0N104
3.0	2.2	3.0	2.2	6.0	323...528	A	25A-D6P0N104	25B-D6P0N104
5.0	4.0	5.0	4.0	10.5	323...528	B	25A-D010N104	25B-D010N104

PowerFlex 520-Series Drive Ratings

Output Ratings					Input Voltage Range	Frame Size	PowerFlex 523	PowerFlex 525
Normal Duty		Heavy Duty		Output Current (A)				
HP	kW	HP	kW				Catalog No.	Catalog No.
7.5	5.5	7.5	5.5	13.0	323...528	C	25A-D013N104	25B-D013N104
10.0	7.5	10.0	7.5	17.0	323...528	C	25A-D017N104	25B-D017N104
15.0	11.0	15.0	11.0	24.0	323...528	D	25A-D024N104	25B-D024N104
20.0	15.0	15.0	11.0	30.0	323...528	D	25A-D030N104	25B-D030N104
380...480V AC (-15%, +10%) – 3-Phase Input with EMC Filter, 0...460V 3-Phase Output								
0.5	0.4	0.5	0.4	1.4	323...528	A	25A-D1P4N114	25B-D1P4N114
1.0	0.75	1.0	0.75	2.3	323...528	A	25A-D2P3N114	25B-D2P3N114
2.0	1.5	2.0	1.5	4.0	323...528	A	25A-D4P0N114	25B-D4P0N114
3.0	2.2	3.0	2.2	6.0	323...528	A	25A-D6P0N114	25B-D6P0N114
5.0	4.0	5.0	4.0	10.5	323...528	B	25A-D010N114	25B-D010N114
7.5	5.5	7.5	5.5	13.0	323...528	C	25A-D013N114	25B-D013N114
10.0	7.5	10.0	7.5	17.0	323...528	C	25A-D017N114	25B-D017N114
15.0	11.0	15.0	11.0	24.0	323...528	D	25A-D024N114	25B-D024N114
20.0	15.0	15.0	11.0	30.0	323...528	D	25A-D030N114	25B-D030N114
25.0	18.5	20.0	15.0	37.0	323...528	E	25A-D037N114	25B-D037N114
30.0	22.0	25.0	18.5	43.0	323...528	E	25A-D043N114	25B-D043N114
525...600V AC (-15%, +10%) – 3-Phase Input, 0...575V 3-Phase Output								
0.5	0.4	0.5	0.4	0.9	446...660	A	25A-E0P9N104(2)	25B-E0P9N104(2)
1.0	0.75	1.0	0.75	1.7	446...660	A	25A-E1P7N104	25B-E1P7N104
2.0	1.5	2.0	1.5	3.0	446...660	A	25A-E3P0N104	25B-E3P0N104
3.0	2.2	3.0	2.2	4.2	446...660	A	25A-E4P2N104	25B-E4P2N104
5.0	4.0	5.0	4.0	6.6	446...660	B	25A-E6P6N104	25B-E6P6N104
7.5	5.5	7.5	5.5	9.9	446...660	C	25A-E9P9N104	25B-E9P9N104
10.0	7.5	10.0	7.5	12.0	446...660	C	25A-E012N104	25B-E012N104
15.0	11.0	15.0	11.0	19.0	446...660	D	25A-E019N104	25B-E019N104
20.0	15.0	15.0	11.0	22.0	446...660	D	25A-E022N104	25B-E022N104
25.0	18.5	20.0	15.0	27.0	446...660	E	25A-E027N104	25B-E027N104
30.0	22.0	25.0	18.5	32.0	446...660	E	25A-E032N104	25B-E032N104

(1) A non-filtered drive is not available for 380...480V AC 25 HP (18.5 kW) and 30 HP (22.0 kW) ratings. Filtered drives are available, however you must verify that the application will support a filtered drive.

(2) These drive ratings do not come with a heatsink cooling fan and are in accordance with design specifications.

Dynamic Brake Resistors

Drive Ratings			Minimum Resistance Ω ±10%	Resistance Ω ±5%	Catalog No.(1)(2)
Input Voltage	HP	kW			
100...120V 50/60 Hz 1-Phase	0.25	0.2	56	91	AK-R2-091P500
	0.5	0.4	56	91	AK-R2-091P500
	1.0	0.75	56	91	AK-R2-091P500
	1.5	1.1	41	91	AK-R2-091P500
200...240V 50/60 Hz 1-Phase	0.25	0.2	56	91	AK-R2-091P500
	0.5	0.4	56	91	AK-R2-091P500
	1.0	0.75	56	91	AK-R2-091P500
	2.0	1.5	41	91	AK-R2-091P500
	3.0	2.2	32	47	AK-R2-047P500

Dynamic Brake Resistors

Drive Ratings			Minimum Resistance Ω ±10%	Resistance Ω ±5%	Catalog No.(1)(2)
Input Voltage	**HP**	**kW**			
200...240V 50/60 Hz 3-Phase	0.25	0.2	56	91	AK-R2-091P500
	0.5	0.4	56	91	AK-R2-091P500
	1.0	0.75	56	91	AK-R2-091P500
	2.0	1.5	41	91	AK-R2-091P500
	3.0	2.2	32	47	AK-R2-047P500
	5.0	4.0	18	47	AK-R2-047P500
	7.5	5.5	16	30	AK-R2-030P1K2
	10.0	7.5	14	30	AK-R2-030P1K2
	15.0	11.0	14	15	AK-R2-030P1K2(3)
	20.0	15.0	10	15	AK-R2-030P1K2(3)
380...480V 50/60 Hz 3-Phase	0.5	0.4	89	360	AK-R2-360P500
	1.0	0.75	89	360	AK-R2-360P500
	2.0	1.5	89	360	AK-R2-360P500
	3.0	2.2	89	120	AK-R2-120P1K2
	5.0	4.0	47	120	AK-R2-120P1K2
	7.5	5.5	47	120	AK-R2-120P1K2
	10.0	7.5	47	120	AK-R2-120P1K2
	15.0	11.0	43	60	AK-R2-120P1K2(3)
	20.0	15.0	43	60	AK-R2-120P1K2(3)
	25.0	18.5	27	40	AK-R2-120P1K2(4)
	30.0	22.0	27	40	AK-R2-120P1K2(4)
525...600V 50/60 Hz 3-Phase	0.5	0.4	112	360	AK-R2-360P500
	1.0	0.75	112	360	AK-R2-360P500
	2.0	1.5	112	360	AK-R2-360P500
	3.0	2.2	112	120	AK-R2-120P1K2
	5.0	4.0	86	120	AK-R2-120P1K2
	7.5	5.5	59	120	AK-R2-120P1K2
	10.0	7.5	59	120	AK-R2-120P1K2
	15.0	11.0	59	60	AK-R2-120P1K2(3)
	20.0	15.0	59	60	AK-R2-120P1K2(3)
	25.0	18.5	53	60	AK-R2-120P1K2(3)
	30.0	22.0	34	40	AK-R2-120P1K2(4)

(1) The resistors listed in this tables are rated for 5% duty cycle.

(2) Use of Rockwell Automation resistors is always recommended. The resistors listed have been carefully selected for optimizing performance in a variety of applications. Alternative resistors may be used, however, care must be taken when making a selection. See the PowerFlex Dynamic Braking Resistor Calculator, publication PFLEX-AT001.

(3) Requires two resistors wired in parallel.

(4) Requires three resistors wired in parallel.

EMC Line Filters

Short Circuit Current Rating = 100 kA					
Drive Ratings					
Input Voltage	**HP**	**kW**	**Current (A)**	**Frame Size**	**Catalog No.**
100...120V 50/60 Hz 1-Phase	0.25	0.2	1.6	A	25-RF011-AL
	0.5	0.4	2.5	A	25-RF011-AL
	1.0	0.75	4.8	B	25-RF023-BL
	1.5	1.1	6.0	B	25-RF023-BL

EMC Line Filters

Short Circuit Current Rating = 100 kA					
Drive Ratings					
Input Voltage	**HP**	**kW**	**Current (A)**	**Frame Size**	**Catalog No.**
200...240V 50/60 Hz 1-Phase	0.25	0.2	1.6	A	25-RF011-AL
	0.5	0.4	2.5	A	25-RF011-AL
	1.0	0.75	4.8	A	25-RF011-AL
	2.0	1.5	8.0	B	25-RF023-BL
	3.0	2.2	11.0	B	25-RF023-BL
200...240V 50/60 Hz 3-Phase	0.25	0.2	1.6	A	25-RF014-AL
	0.5	0.4	2.5	A	25-RF014-AL
	1.0	0.75	5.0	A	25-RF014-AL
	2.0	1.5	8.0	A	25-RF014-AL
	3.0	2.2	11.0	A	25-RF014-AL
	5.0	4.0	17.5	B	25-RF021-BL
	7.5	5.5	24.0	C	25-RF027-CL
	10.0	7.5	32.2	D	25-RF035-DL
	15.0	11.0	48.3	E	25-RF056-EL
	20.0	15.0	62.1	E	25-RF056-EL
380...480V 50/60 Hz 3-Phase	0.5	0.4	1.4	A	25-RF7P5-AL
	1.0	0.75	2.3	A	25-RF7P5-AL
	2.0	1.5	4.0	A	25-RF7P5-AL
	3.0	2.2	6.0	A	25-RF7P5-AL
	5.0	4.0	10.5	B	25-RF014-BL
	7.5	5.5	13.0	C	25-RF018-CL
	10.0	7.5	17.0	C	25-RF018-CL
	15.0	11.0	24.0	D	25-RF033-DL
	20.0	15.0	30.0	D	25-RF033-DL
	25.0	18.5	37.0	E	25-RF039-EL
	30.0	22.0	43.0	E	25-RF039-EL(1)
525...600V 50/60 Hz 3-Phase	0.5	0.4	0.9	A	25-RF8P0-BL(2)
	1.0	0.75	1.7	A	25-RF8P0-BL(2)
	2.0	1.5	3.0	A	25-RF8P0-BL(2)
	3.0	2.2	4.2	A	25-RF8P0-BL(2)
	5.0	4.0	6.6	B	25-RF8P0-BL
	7.5	5.5	9.9	C	25-RF014-CL
	10.0	7.5	12.0	C	25-RF014-CL
	15.0	11.0	19.0	D	25-RF027-DL
	20.0	15.0	22.0	D	25-RF027-DL
	25.0	18.5	27.0	E	25-RF029-EL
	30.0	22.0	32.0	E	25-RF029-EL(1)

(1) EMC Line Filter size is based on the input current of the drive. See the tables on page 26 and page 27 for more information.

(2) This 600V drive rating needs to be matched with a frame B EMC Line Filter.

EMC Plates

Item	Description	Frame Size	Catalog No.
EMC Plate	Optional grounding plate for shielded cables.	A	25-EMC1-FA
		B	25-EMC1-FB
		C	25-EMC1-FC
		D	25-EMC1-FD
		E	25-EMC1-FE

Human Interface Module (HIM) Option Kits and Accessories

Item	Description	Catalog No.
LCD Display, Remote Panel Mount	Digital speed control CopyCat capable IP66 (NEMA Type 4X/12) indoor use only Includes 2.0 meter cable	22-HIM-C2S
LCD Display, Remote Handheld	Digital speed control Full numeric keyboard CopyCat capable IP 30 (NEMA Type 1) Includes 1.0 meter cable Panel mount with optional Bezel Kit	22-HIM-A3
Bezel Kit	Panel mount for LCD Display, Remote Handheld unit, IP 30 (NEMA Type 1) Includes 2.0 m DSI cable	22-HIM-B1
DSI HIM Cable (DSI HIM to RJ45 cable)	1.0 m (3.3 ft)	22-HIM-H10
	2.9 m (9.51 ft)	22-HIM-H30

IP 30/NEMA 1/UL Type 1 Kit

Item	Description	Frame Size	Catalog No.
IP 30/NEMA 1/UL Type 1 Kit	Field installed kit. Converts drive to IP 30/NEMA 1/UL Type 1 enclosure. Includes conduit box with mounting screws and plastic top panel.	A	25-JBAA
		B	25-JBAB
		C	25-JBAC
		D	25-JBAD
		E	25-JBAE

Control Module Fan Kit

Item	Description	Frame Size	Catalog No.
Control Module Fan Kit	For use with drive in environments with ambient temperatures up to 70 °C or horizontal mounting.	A...D	25-FAN1-70C
		E	25-FAN2-70C

Incremental Encoder Input Option

Item	Description	Catalog No.
Incremental Encoder	Incremental encoder input option board.	25-ENC-1

WARNING: Only the 25-ENC-1 Encoder will work properly in the PowerFlex 525 drive. Installing an incorrect encoder card, such as the PowerFlex 527 25-ENC-2 will cause damage to the PowerFlex 525 drive.

Bulletin 160 to PowerFlex 520-Series Mounting Adapter Plate

Item	Description	B160 Frame Size	Catalog No.
Mounting Adapter Plate	For use with drive when replacing Bulletin 160 drives in existing installations to a PowerFlex 520-Series drive. Select the catalog number based on the frame size of your Bulletin 160 drive.	A	25-MAP-FA
		B	25-MAP-FB

Replacement Parts

PowerFlex 520-Series Power Module

Item	Description
PowerFlex 520-Series Power Module	Replacement power module for use with PowerFlex 520-Series drives. Includes: • Power Module • Power Module Front Cover • Power Terminal Guard • Heatsink Fan

Output Ratings					Input Voltage Range	Frame Size	Catalog No.
Normal Duty		Heavy Duty		Output Current (A)			
HP	kW	HP	kW				
100...120V AC (-15%, +10%) – 1-Phase Input, 0...230V 3-Phase Output							
0.25	0.2	0.25	0.2	1.6	85...132	A	25-PM1-V1P6
0.5	0.4	0.5	0.4	2.5	85...132	A	25-PM1-V2P5
1.0	0.75	1.0	0.75	4.8	85...132	B	25-PM1-V4P8
1.5	1.1	1.5	1.1	6.0	85...132	B	25-PM1-V6P0
200...240V AC (-15%, +10%) – 1-Phase Input, 0...230V 3-Phase Output							
0.25	0.2	0.25	0.2	1.6	170...264	A	25-PM1-A1P6
0.5	0.4	0.5	0.4	2.5	170...264	A	25-PM1-A2P5
1.0	0.75	1.0	0.75	4.8	170...264	A	25-PM1-A4P8
2.0	1.5	2.0	1.5	8.0	170...264	B	25-PM1-A8P0
3.0	2.2	3.0	2.2	11.0	170...264	B	25-PM1-A011
200...240V AC (-15%, +10%) – 1-Phase Input with EMC Filter, 0...230V 3-Phase Output							
0.25	0.2	0.25	0.2	1.6	170...264	A	25-PM2-A1P6
0.5	0.4	0.5	0.4	2.5	170...264	A	25-PM2-A2P5
1.0	0.75	1.0	0.75	4.8	170...264	A	25-PM2-A4P8
2.0	1.5	2.0	1.5	8.0	170...264	B	25-PM2-A8P0
3.0	2.2	3.0	2.2	11.0	170...264	B	25-PM2-A011
200...240V AC (-15%, +10%) – 3-Phase Input, 0...230V 3-Phase Output							
0.25	0.2	0.25	0.2	1.6	170...264	A	25-PM1-B1P6
0.5	0.4	0.5	0.4	2.5	170...264	A	25-PM1-B2P5
1.0	0.75	1.0	0.75	5.0	170...264	A	25-PM1-B5P0
2.0	1.5	2.0	1.5	8.0	170...264	A	25-PM1-B8P0
3.0	2.2	3.0	2.2	11.0	170...264	A	25-PM1-B011
5.0	4.0	5.0	4.0	17.5	170...264	B	25-PM1-B017
7.5	5.5	7.5	5.5	24.0	170...264	C	25-PM1-B024
10.0	7.5	10.0	7.5	32.2	170...264	D	25-PM1-B032
15.0	11.0	10.0	7.5	48.3	170...264	E	25-PM1-B048
20.0	15.0	15.0	11.0	62.1	170...264	E	25-PM1-B062
380...480V AC (-15%, +10%) – 3-Phase Input, 0...460V 3-Phase Output							
0.5	0.4	0.5	0.4	1.4	323...528	A	25-PM1-D1P4

Output Ratings							
Normal Duty		Heavy Duty		Output Current (A)	Input Voltage Range	Frame Size	Catalog No.
HP	kW	HP	kW				
1.0	0.75	1.0	0.75	2.3	323...528	A	25-PM1-D2P3
2.0	1.5	2.0	1.5	4.0	323...528	A	25-PM1-D4P0
3.0	2.2	3.0	2.2	6.0	323...528	A	25-PM1-D6P0
5.0	4.0	5.0	4.0	10.5	323...528	B	25-PM1-D010
7.5	5.5	7.5	5.5	13.0	323...528	C	25-PM1-D013
10.0	7.5	10.0	7.5	17.0	323...528	C	25-PM1-D017
15.0	11.0	15.0	11.0	24.0	323...528	D	25-PM1-D024
20.0	15.0	15.0	11.0	30.0	323...528	D	25-PM1-D030
380...480V AC (-15%, +10%) – 3-Phase Input with EMC Filter, 0...460V 3-Phase Output							
0.5	0.4	0.5	0.4	1.4	323...528	A	25-PM2-D1P4
1.0	0.75	1.0	0.75	2.3	323...528	A	25-PM2-D2P3
2.0	1.5	2.0	1.5	4.0	323...528	A	25-PM2-D4P0
3.0	2.2	3.0	2.2	6.0	323...528	A	25-PM2-D6P0
5.0	4.0	5.0	4.0	10.5	323...528	B	25-PM2-D010
7.5	5.5	7.5	5.5	13.0	323...528	C	25-PM2-D013
10.0	7.5	10.0	7.5	17.0	323...528	C	25-PM2-D017
15.0	11.0	15.0	11.0	24.0	323...528	D	25-PM2-D024
20.0	15.0	15.0	11.0	30.0	323...528	D	25-PM2-D030
25.0	18.5	20.0	15.0	37.0	323...528	E	25-PM2-D037
30.0	22.0	25.0	18.5	43.0	323...528	E	25-PM2-D043
525...600V AC (-15%, +10%) – 3-Phase Input, 0...575V 3-Phase Output							
0.5	0.4	0.5	0.4	0.9	446...660	A	25-PM1-E0P9
1.0	0.75	1.0	0.75	1.7	446...660	A	25-PM1-E1P7
2.0	1.5	2.0	1.5	3.0	446...660	A	25-PM1-E3P0
3.0	2.2	3.0	2.2	4.2	446...660	A	25-PM1-E4P2
5.0	4.0	5.0	4.0	6.6	446...660	B	25-PM1-E6P6
7.5	5.5	7.5	5.5	9.9	446...660	C	25-PM1-E9P9
10.0	7.5	10.0	7.5	12.0	446...660	C	25-PM1-E012
15.0	11.0	15.0	11.0	19.0	446...660	D	25-PM1-E019
20.0	15.0	15.0	11.0	22.0	446...660	D	25-PM1-E022
25.0	18.5	20.0	15.0	27.0	446...660	E	25-PM1-E027
30.0	22.0	25.0	18.5	32.0	446...660	E	25-PM1-E032

PowerFlex 520-Series Control Module

Item	Description	Frame Size	Catalog No.
PowerFlex 523 Control Module	Replacement control module for use with PowerFlex 520-Series drives. Includes: • Control Module • Control Module Front Cover	A...E	25A-CTM1
PowerFlex 525 Control Module			25B-CTM1

Other Parts

Item	Description	Frame Size	Catalog No.
PowerFlex 523 Control Module Front Cover	Replacement cover for the control module I/O terminals, EtherNet/IP and DSI ports.	A...E	25A-CTMFC1
PowerFlex 525 Control Module Front Cover			25B-CTMFC1

Other Parts

Item	Description	Frame Size	Catalog No.
PowerFlex 520-Series Power Module Front Cover	Replacement cover for the PowerFlex 520-Series power module.	B	25-PMFC-FB
		C	25-PMFC-FC
		D	25-PMFC-FD
		E	25-PMFC-FE
PowerFlex 520-Series Power Terminal Guard	Replacement finger guard for power terminals.	A	25-PTG1-FA
		B	25-PTG1-FB
		C	25-PTG1-FC
		D	25-PTG1-FD
		E	25-PTG1-FE
PowerFlex 520-Series Heatsink Fan Kit	Replacement fan for drive power module.	A	25-FAN1-FA
		B	25-FAN1-FB
		C	25-FAN1-FC
		D	25-FAN1-FD
		E	25-FAN1-FE
PowerFlex 520-Series EMC Cores	Replacement EMC cores	A	25-CORE-A
			25-CORE-RF-A
		B	25-CORE-B
			25-CORE-RF-B
		C	25-CORE-C
			25-CORE-RF-C
		D	25-CORE-D
			25-CORE-RF-D
		E	25-CORE-E
			25-CORE-RF-E

Communication Option Kits and Accessories

Item	Description	Catalog No.
Communication Adapters	Embedded communication options for use with the PowerFlex 520-Series drives: • DeviceNet™ • Dual Port EtherNet/IP™ • PROFIBUS™ DP-V1	 25-COMM-D 25-COMM-E2P 25-COMM-P
Compact I/O Module	Three channel	1769-SM2
Universal Serial Bus™ (USB) Converter Module	Provides serial communication with DF1 protocol for use with Connected Components Workbench software. Includes: • 2 m USB cable (1) • 20-HIM-H10 cable (1) • 22-HIM-H10 cable (1)	1203-USB
Serial Converter Module (RS485 to RS232)	Provides serial communication with DF1 protocol for use with Connected Components Workbench software. Includes: • DSI to RS232 serial converter (1) • 1203-SFC serial cable (1) • 22-RJ45CBL-C20 cable (1)	22-SCM-232
DSI Cable	2.0 m RJ45 to RJ45 cable, male to male connectors.	22-RJ45CBL-C20
Serial Cable	2.0 m serial cable with a locking low profile connector to connect to the serial converter and a 9-pin sub-miniature D female connector to connect to a computer.	1203-SFC
Splitter Cable	RJ45 one to two port splitter cable (Modbus only)	AK-U0-RJ45-SC1

Communication Option Kits and Accessories

Item	Description	Catalog No.
Terminating Resistors	RJ45 120 Ohm resistors (2 pieces)	AK-U0-RJ45-TR1
Terminal Block	RJ45 Two position terminal block (5 pieces)	AK-U0-RJ45-TB2P
Connected Components Workbench Software (Download or DVD-ROM)	Windows-based software packages for programming and configuring Allen-Bradley drives and other Rockwell Automation products. Compatibility: Windows XP, Windows Vista and Windows 7	http://ab.rockwellautomation.com/programmable-controllers/connected-components-workbench-software

Bulletin 1321-3R Series Line Reactors

Output Ratings[1]				Input Line Reactor[3][4]		Output Line Reactor[3][4]	
Normal Duty		Heavy Duty		IP00 (Open Style)	IP11 (NEMA/UL Type 1)	IP00 (Open Style)	IP11 (NEMA/UL Type 1)
HP	kW	HP	kW	Catalog No.	Catalog No.	Catalog No.	Catalog No.
200...240V 50/60 Hz 1-Phase[2]							
0.25	0.2	0.25	0.2	1321-3R4-A	1321-3RA4-A	1321-3R2-D	1321-3RA2-D
0.5	0.4	0.5	0.4	1321-3R8-A	1321-3RA8-A	1321-3R2-D	1321-3RA2-D
1.0	0.75	1.0	0.75	1321-3R8-A	1321-3RA8-A	1321-3R4-A	1321-3RA4-A
2.0	1.5	2.0	1.5	1321-3R18-A	1321-3RA18-A	1321-3R8-A	1321-3RA8-A
3.0	2.2	3.0	2.2	1321-3R18-A	1321-3RA18-A	1321-3R12-A	1321-3RA12-A
200...240V 50/60 Hz 3-Phase							
0.25	0.2	0.25	0.2	1321-3R2-D	1321-3RA2-D	1321-3R2-D	1321-3RA2-D
0.5	0.4	0.5	0.4	1321-3R2-D	1321-3RA2-D	1321-3R2-D	1321-3RA2-D
1.0	0.75	1.0	0.75	1321-3R4-A	1321-3RA4-A	1321-3R4-A	1321-3RA4-A
2.0	1.5	2.0	1.5	1321-3R8-A	1321-3RA8-A	1321-3R8-A	1321-3RA8-A
3.0	2.2	3.0	2.2	1321-3R12-A	1321-3RA12-A	1321-3R12-A	1321-3RA12-A
5.0	4.0	5.0	4.0	1321-3R18-A	1321-3RA18-A	1321-3R18-A	1321-3RA18-A
7.5	5.5	7.5	5.5	1321-3R25-A	1321-3RA25-A	1321-3R25-A	1321-3RA25-A
10.0	7.5	10.0	7.5	1321-3R35-A	1321-3RA35-A	1321-3R35-A	1321-3RA35-A
15.0	11.0	10.0	7.5	1321-3R45-A	1321-3RA45-A	1321-3R45-A	1321-3RA45-A
20.0	15.0	15.0	11.0	1321-3R55-A (ND) 1321-3R45-A (HD)	1321-3RA55-A (ND) 1321-3RA45-A (HD)	1321-3R55-A (ND) 1321-3R45-A (HD)	1321-3RA55-A (ND) 1321-3RA45-A (HD)
380...480V 50/60 Hz 3-Phase							
0.5	0.4	0.5	0.4	1321-3R2-B	1321-3RA2-B	1321-3R2-B	1321-3RA2-B
1.0	0.75	1.0	0.75	1321-3R4-C	1321-3RA4-C	1321-3R4-C	1321-3RA4-C
2.0	1.5	2.0	1.5	1321-3R4-B	1321-3RA4-B	1321-3R4-B	1321-3RA4-B
3.0	2.2	3.0	2.2	1321-3R8-C	1321-3RA8-C	1321-3R8-C	1321-3RA8-C
5.0	4.0	5.0	4.0	1321-3R12-B	1321-3RA12-B	1321-3R12-B	1321-3RA12-B
7.5	5.5	7.5	5.5	1321-3R12-B	1321-3RA12-B	1321-3R12-B	1321-3RA12-B
10.0	7.5	10.0	7.5	1321-3R18-B	1321-3RA18-B	1321-3R18-B	1321-3RA18-B
15.0	11.0	15.0	11.0	1321-3R25-B	1321-3RA25-B	1321-3R25-B	1321-3RA25-B
20.0	15.0	15.0	11.0	1321-3R35-B (ND) 1321-3R25-B (HD)	1321-3RA35-B (ND) 1321-3RA25-B (HD)	1321-3R35-B (ND) 1321-3R25-B (HD)	1321-3RA35-B (ND) 1321-3RA25-B (HD)
25.0	18.5	20.0	15.0	1321-3R35-B	1321-3RA35-B	1321-3R35-B	1321-3RA35-B
30.0	22.0	25.0	18.5	1321-3R45-B (ND) 1321-3R35-B (HD)	1321-3RA45-B (ND) 1321-3RA35-B (HD)	1321-3R45-B (ND) 1321-3R35-B (HD)	1321-3RA45-B (ND) 1321-3RA35-B (HD)
525...600V 50/60 Hz 3-Phase							
0.5	0.4	0.5	0.4	1321-3R1-C	1321-3RA1-C	1321-3R1-C	1321-3RA1-C
1.0	0.75	1.0	0.75	1321-3R2-B	1321-3RA2-B	1321-3R2-B	1321-3RA2-B
2.0	1.5	2.0	1.5	1321-3R4-C	1321-3RA4-C	1321-3R4-C	1321-3RA4-C

Bulletin 1321-3R Series Line Reactors

Output Ratings[1]				Input Line Reactor[3][4]		Output Line Reactor[3][4]	
Normal Duty		Heavy Duty		IP00 (Open Style)	IP11 (NEMA/UL Type 1)	IP00 (Open Style)	IP11 (NEMA/UL Type 1)
HP	kW	HP	kW	Catalog No.	Catalog No.	Catalog No.	Catalog No.
3.0	2.2	3.0	2.2	1321-3R4-B	1321-3RA4-B	1321-3R4-B	1321-3RA4-B
5.0	4.0	5.0	4.0	1321-3R8-C	1321-3RA8-C	1321-3R8-C	1321-3RA8-C
7.5	5.5	7.5	5.5	1321-3R12-B	1321-3RA12-B	1321-3R12-B	1321-3RA12-B
10.0	7.5	10.0	7.5	1321-3R12-B	1321-3RA12-B	1321-3R12-B	1321-3RA12-B
15.0	11.0	15.0	11.0	1321-3R18-B	1321-3RA18-B	1321-3R18-B	1321-3RA18-B
20.0	15.0	15.0	11.0	1321-3R25-B (ND) 1321-3R18-B (HD)	1321-3RA25-B (ND) 1321-3RA18-B (HD)	1321-3R25-B (ND) 1321-3R18-B (HD)	1321-3RA25-B (ND) 1321-3RA18-B (HD)
25.0	18.5	20.0	15.0	1321-3R35-C (ND) 1321-3R25-C (HD)	1321-3RA35-C (ND) 1321-3RA25-C (HD)	1321-3R35-C (ND) 1321-3R25-C (HD)	1321-3RA35-C (ND) 1321-3RA25-C (HD)
30.0	22.0	25.0	18.5	1321-3R35-C (ND) 1321-3R25-B (HD)	1321-3RA35-C (ND) 1321-3RA25-B (HD)	1321-3R35-C (ND) 1321-3R25-B (HD)	1321-3RA35-C (ND) 1321-3RA25-B (HD)

(1) Normal Duty and Heavy Duty ratings for 15 HP (11 kW) and below are identical except for 200...240V 3-Phase 15 HP (11 kW) drive.

(2) Standard 3-phase reactors can be used for 1-phase applications by routing each of the two supply conductors through an outside coil and leaving the center open.

(3) Catalog numbers listed are for 3% impedance at 60 Hz. 5% impedance reactor types are also available. See publication 1321-TD001.

(4) Input line reactors were sized based on the NEC fundamental motor amps. Output line reactors were sized based on the VFD rated output currents.

Product Dimensions

The PowerFlex 520-series drive is available in five frame sizes. See the PowerFlex 520-Series Drive Ratings on page 175 for information on power ratings.

PowerFlex 520-Series Drive Weight

Frame Size	Weight (kg/lb)
A	1.1 / 2.4
B	1.6 / 3.5
C	2.3 / 5.0
D	3.9 / 8.6
E	12.9 / 28.4

IP 20/Open Type – Frame A

Dimensions are in millimeters and (inches)

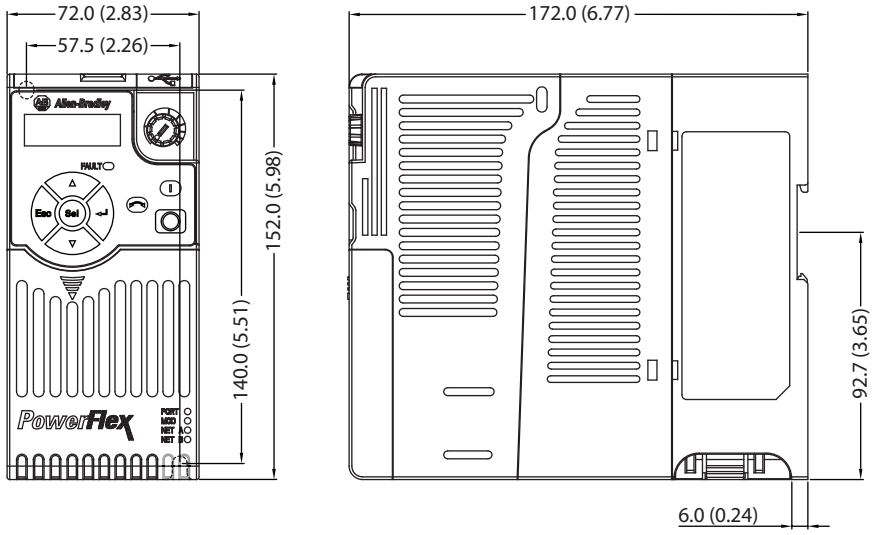

IP 20/Open Type – Frame B

Dimensions are in millimeters and (inches)

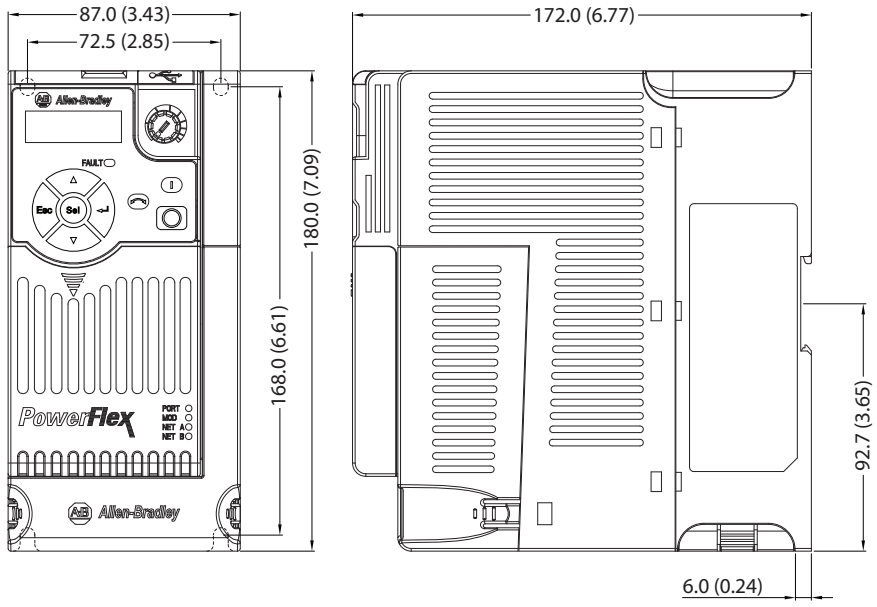

IP 20/Open Type – Frame C

Dimensions are in millimeters and (inches)

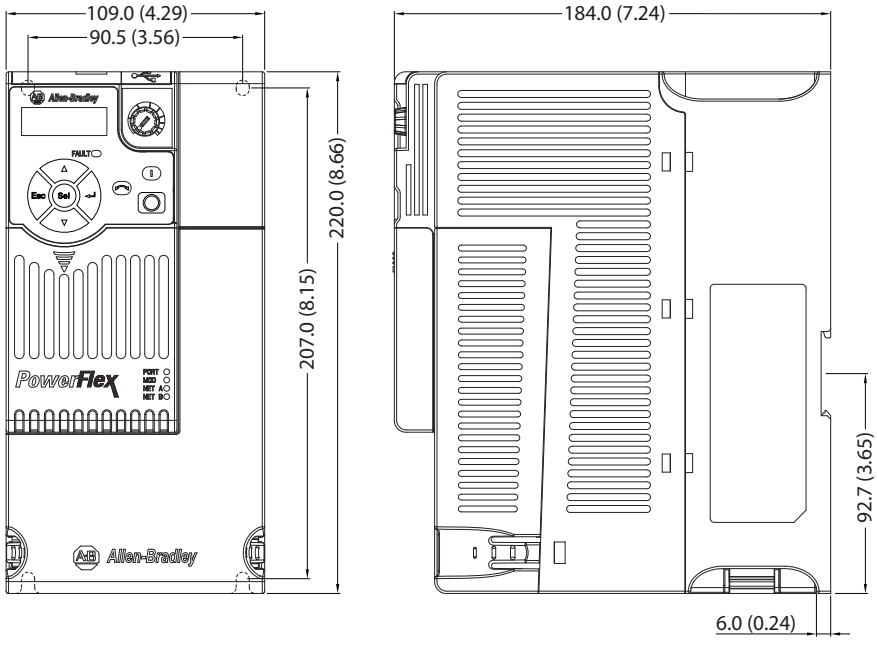

IP 20/Open Type – Frame D

Dimensions are in millimeters and (inches)

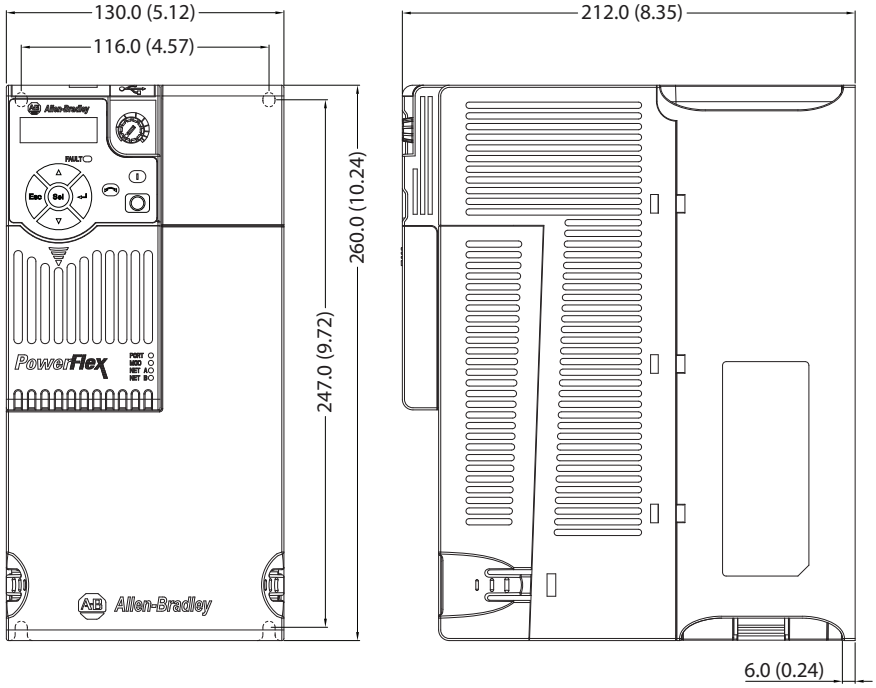

IP 20/Open Type – Frame E

Dimensions are in millimeters and (inches)

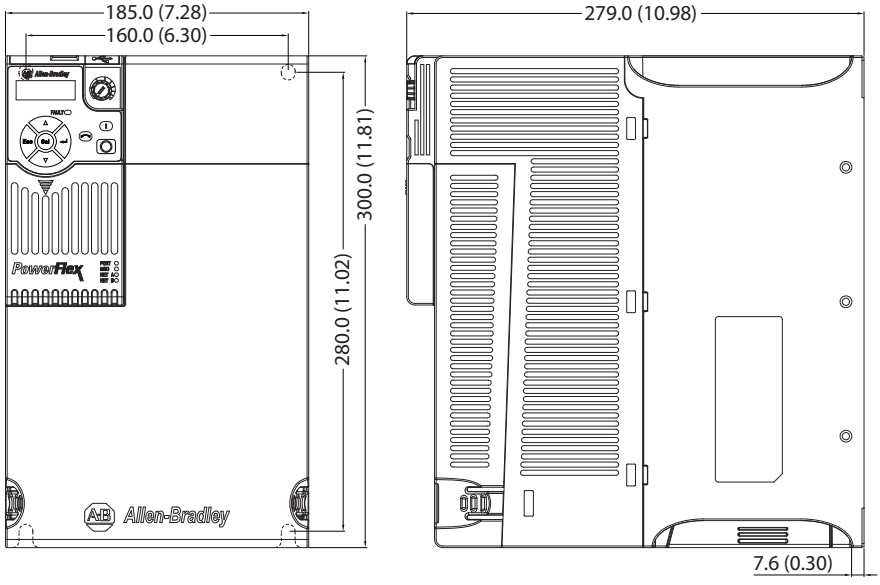

Control Module Fan Kit

25-FAN1-70C

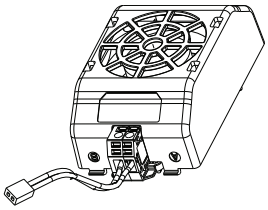

25-FAN2-70C

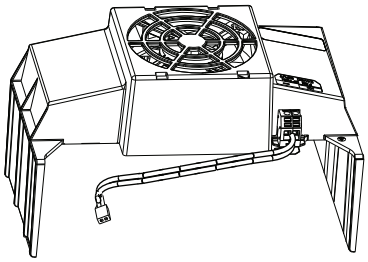

Specifications	25-FAN1-70C	25-FAN2-70C
Rated Voltage	24V DC	
Operation Voltage	14...27.6V DC	
Input Current	0.1 A	0.15 A
Speed (Reference)	7000 rpm	4500 ± 10% rpm
Maximum Air Flow (At zero static pressure)	0.575 m^3/min	1.574 m^3/min
Maximum Air Pressure (At zero air flow)	7.70 mmH_2O	9.598 mmH_2O
Acoustical Noise	40.5 dB-A	46.0 dB-A
Insulation Type	UL Class A	
Frame Size	Frame A...D	Frame E
Wire Size	0.32 mm^2 (22 AWG)	
Torque	0.29...0.39 Nm (2.6...3.47 lb-in.)	

IP 20/Open Type with Control Module Fan Kit – Frame A...C

Dimensions are in millimeters and (inches)

Frame A

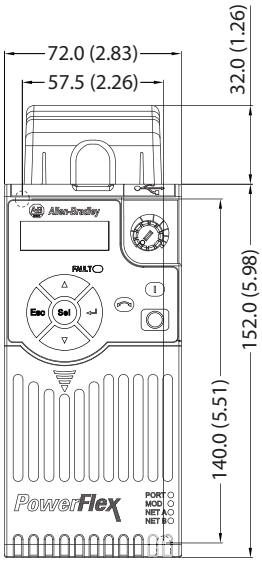

Frame B

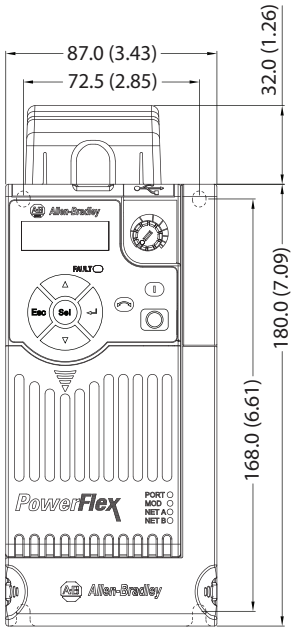

Frame C

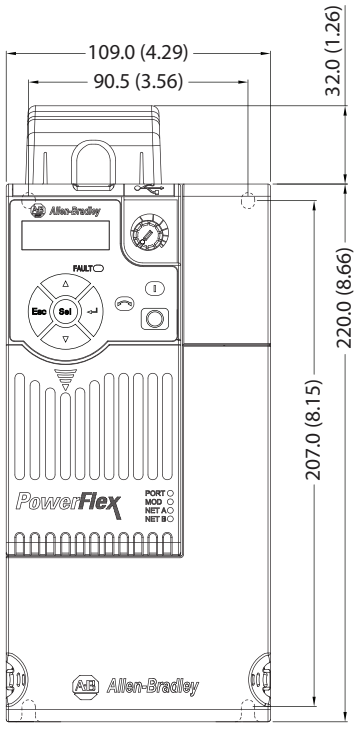

IMPORTANT An external 24V DC power source is required when using the Control Module Fan Kit with drive frames A, B, and C.

IP 20/Open Type with Control Module Fan Kit – Frame D...E

Dimensions are in millimeters and (inches)

Frame D

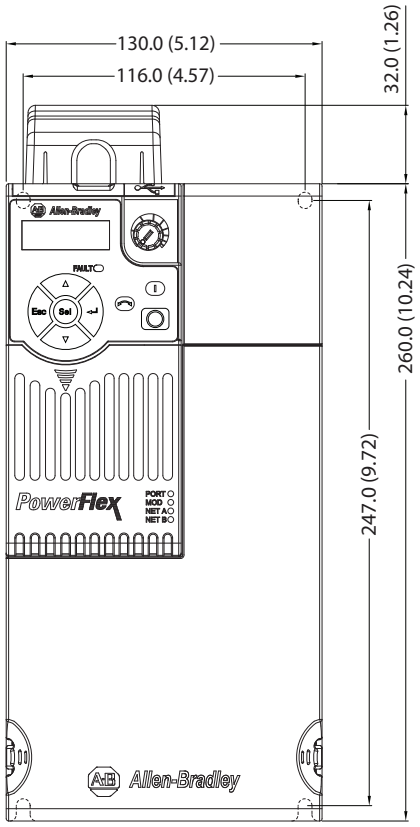

Frame E

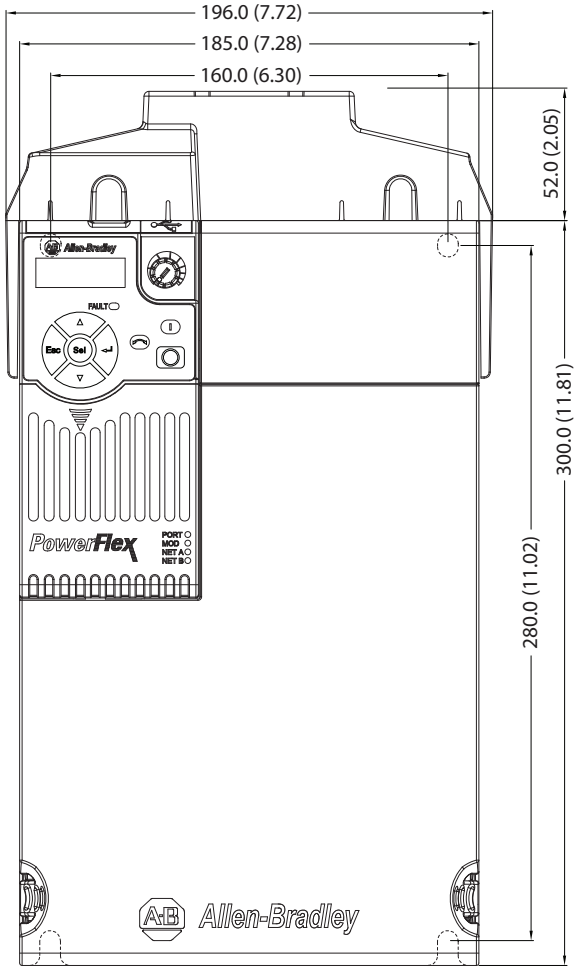

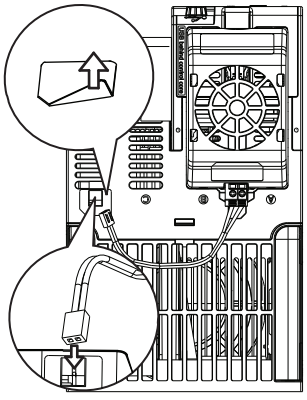

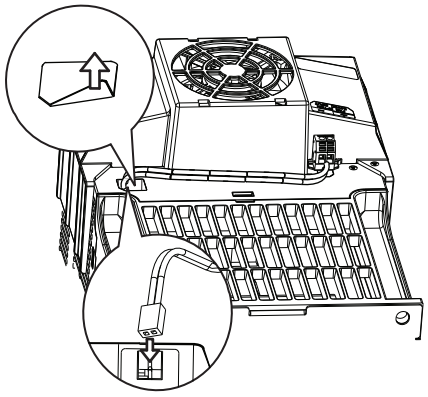

IMPORTANT Remove the label to access the built-in 24V supply on drive frames D and E for use with the Control Module Fan Kit.

IP 30/NEMA 1/UL Type 1 – Frame A

Dimensions are in millimeters and (inches)

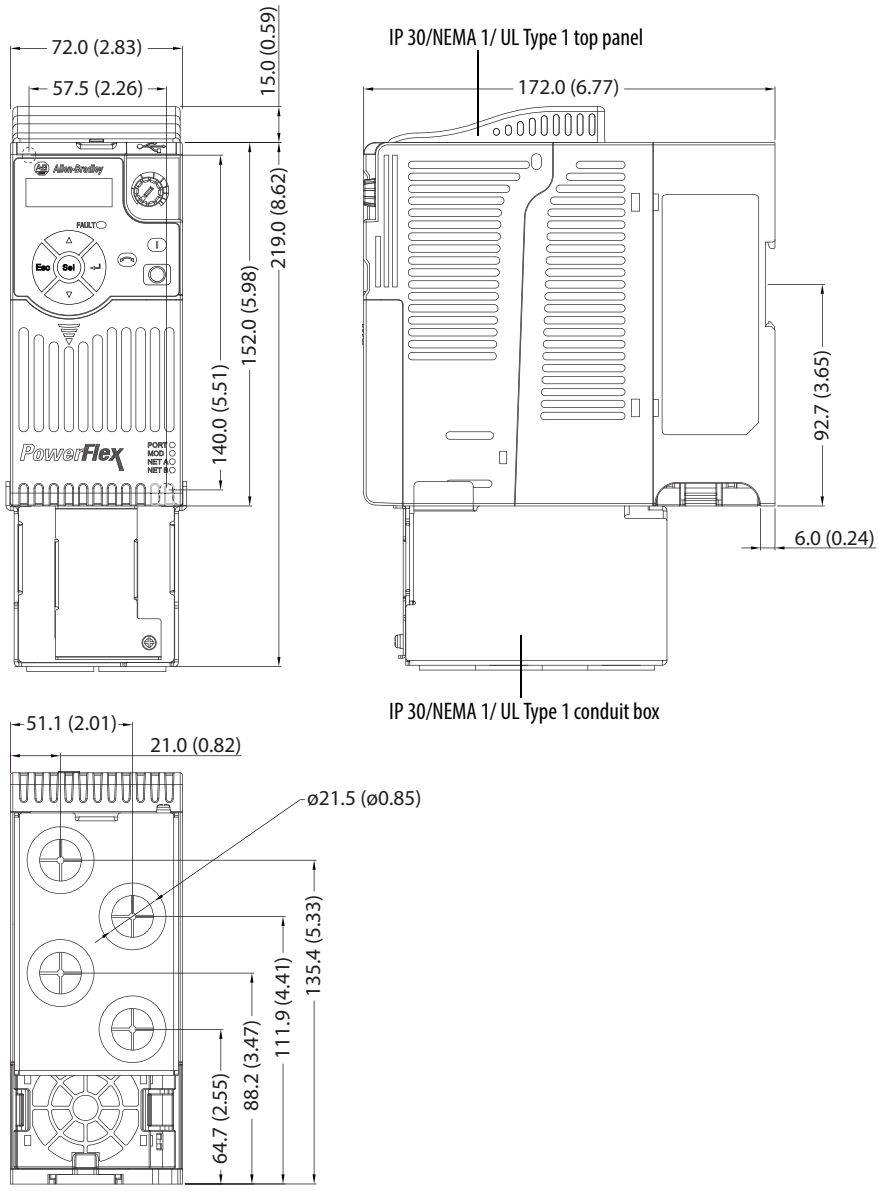

IP 30/NEMA 1/UL Type 1 – Frame B

Dimensions are in millimeters and (inches)

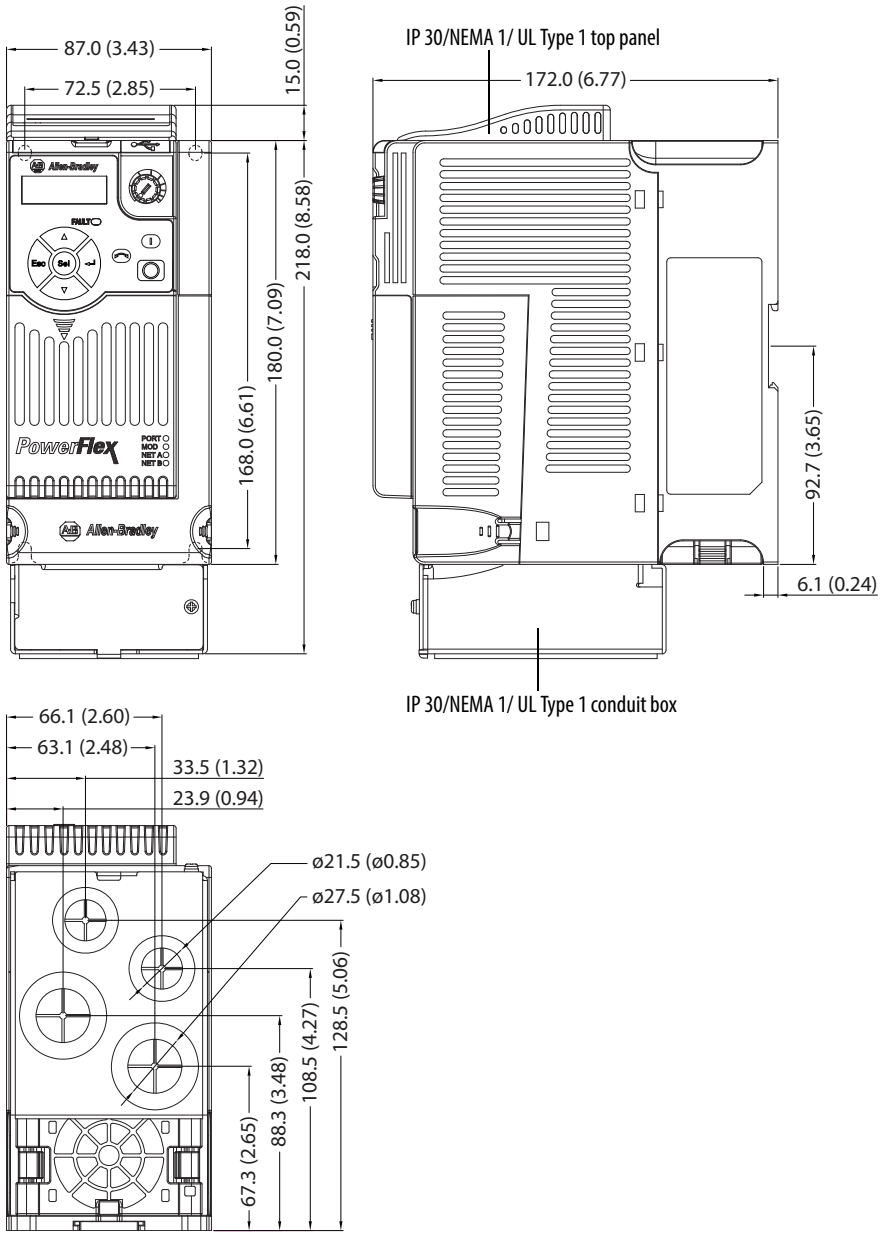

IP 30/NEMA 1/UL Type 1 – Frame C

Dimensions are in millimeters and (inches)

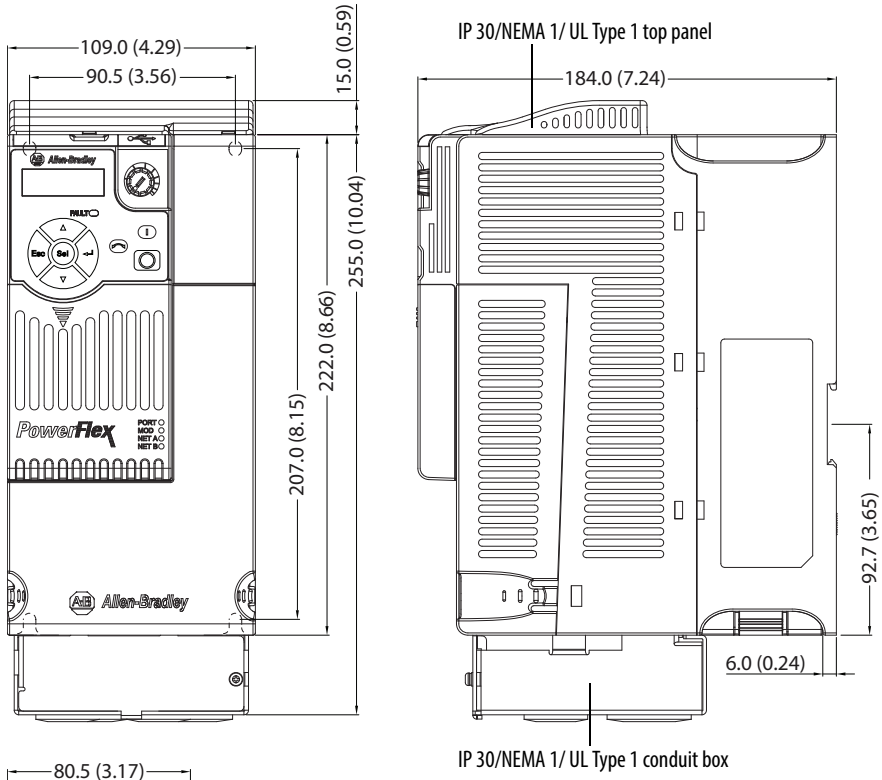

IP 30/NEMA 1/UL Type 1 – Frame D

Dimensions are in millimeters and (inches)

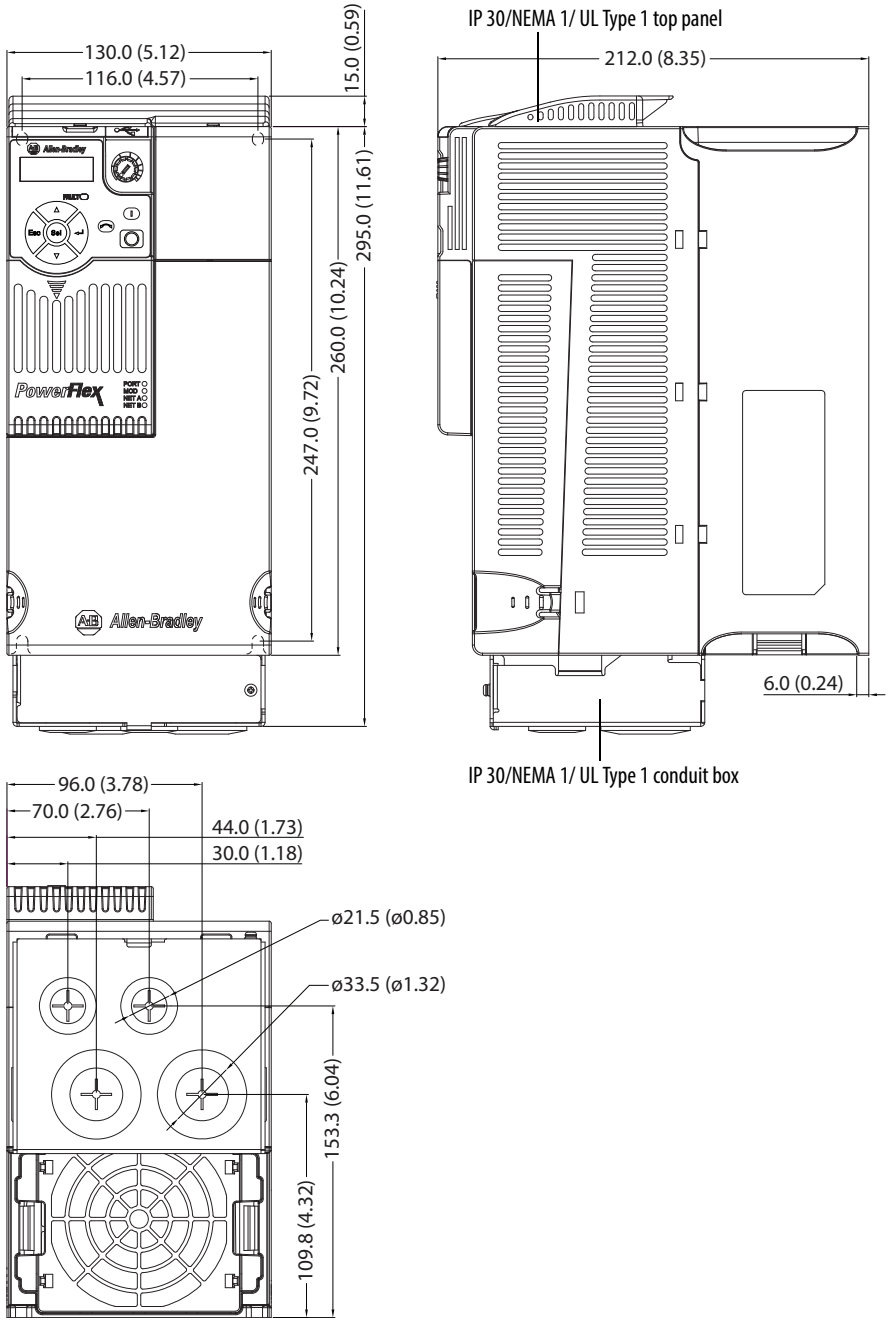

IP 30/NEMA 1/UL Type 1 – Frame E

Dimensions are in millimeters and (inches)

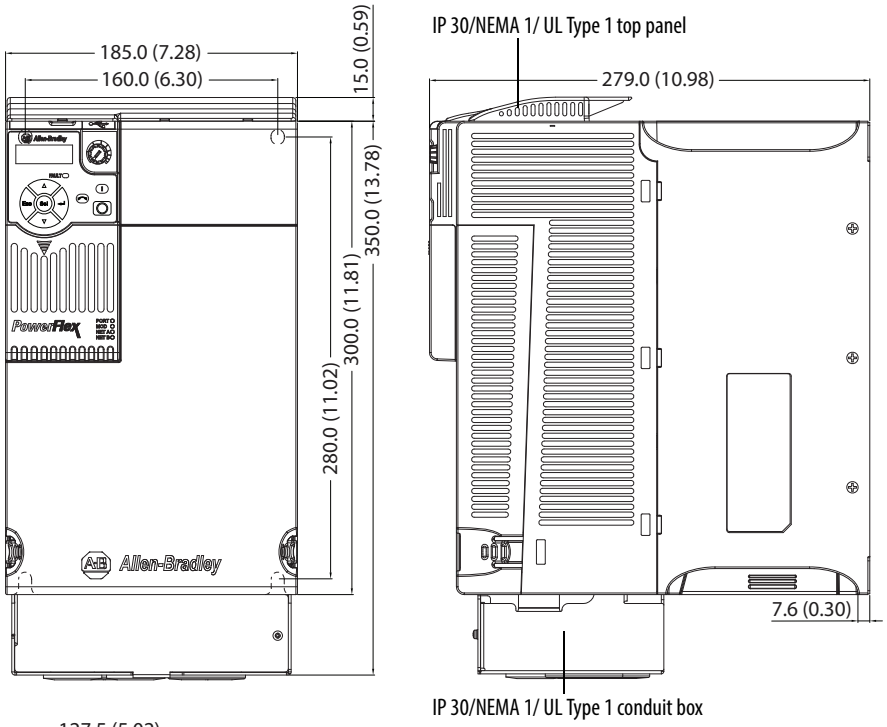

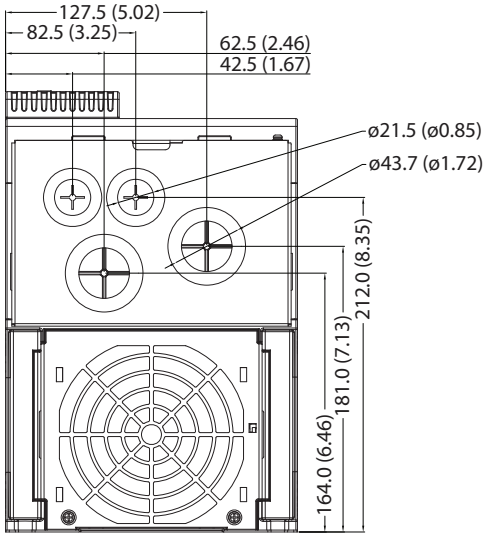

EMC Line Filter – Frame A

Dimensions are in millimeters and (inches)

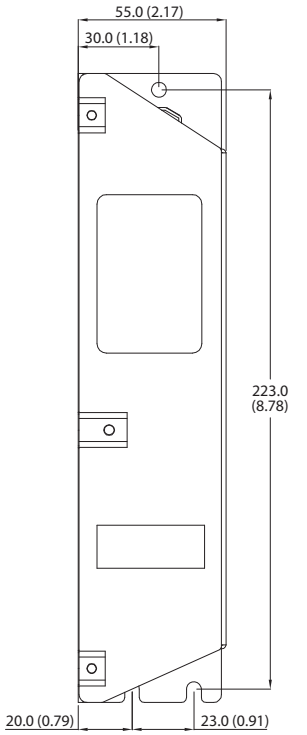

Filter can be mounted onto the back of the drive.

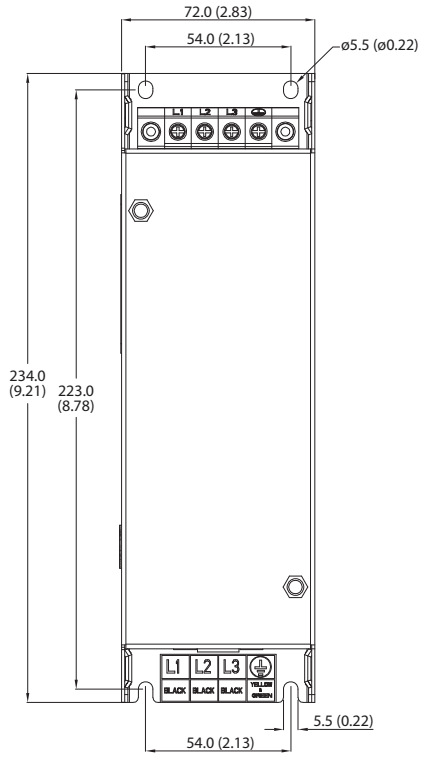

EMC Line Filter – Frame B

Dimensions are in millimeters and (inches)

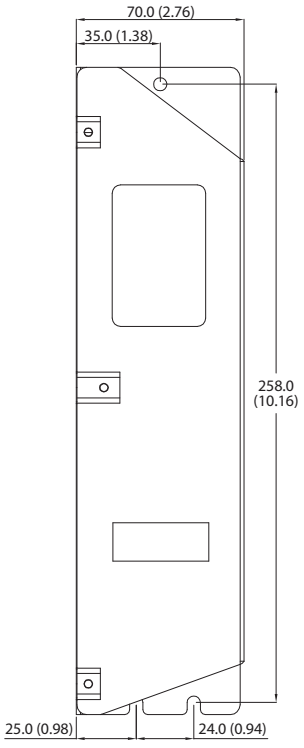

Filter can be mounted onto the back of the drive.

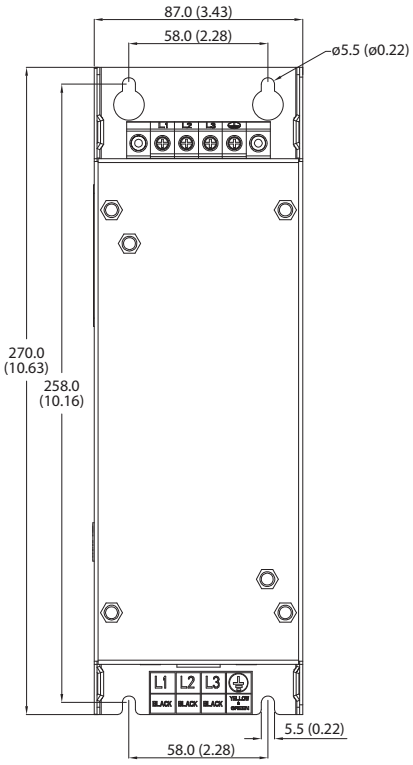

EMC Line Filter – Frame C

Dimensions are in millimeters and (inches)

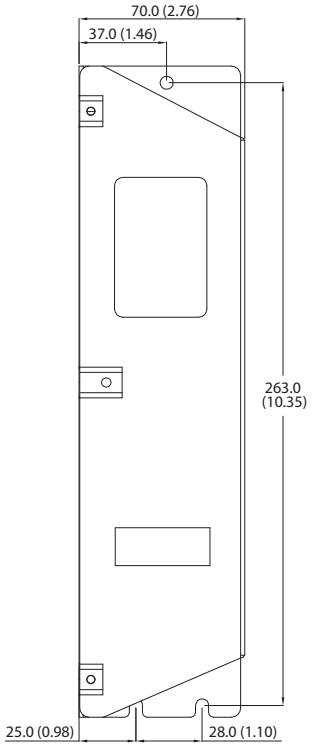

Filter can be mounted onto the back of the drive.

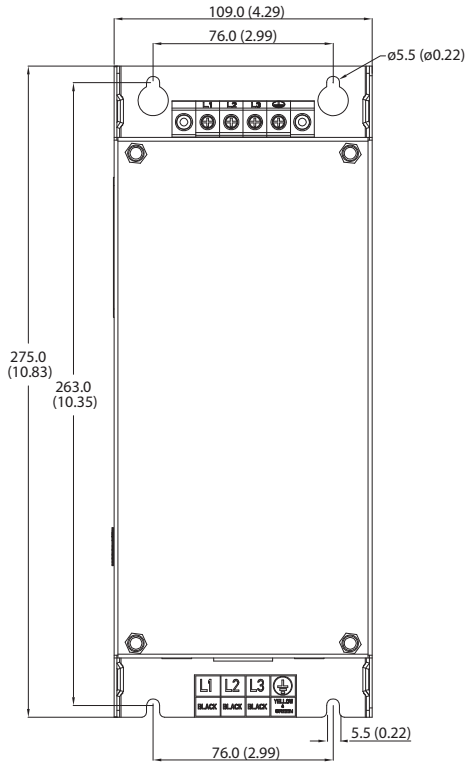

EMC Line Filter – Frame D

Dimensions are in millimeters and (inches)

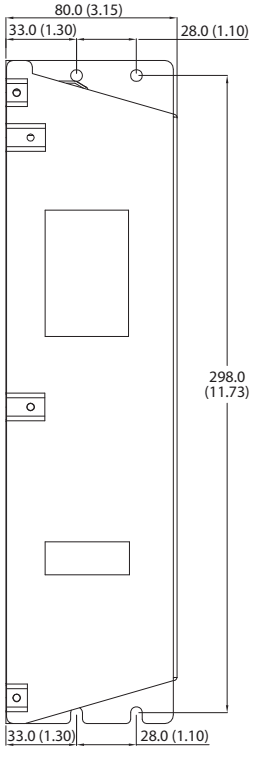

Filter can be mounted onto the back of the drive.

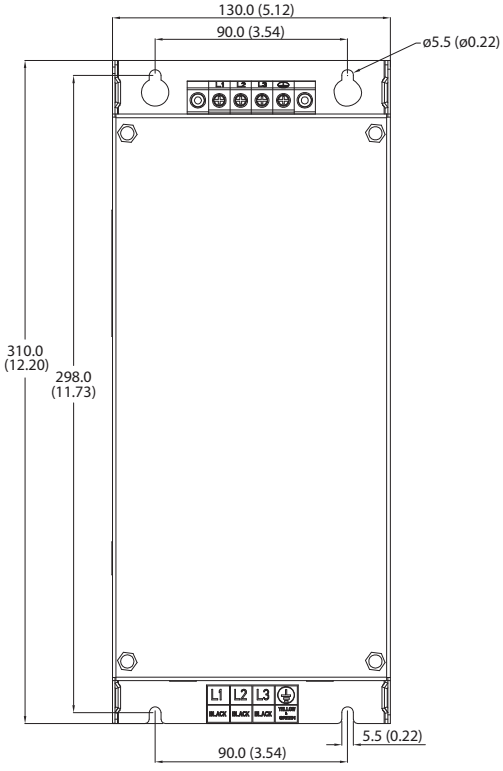

EMC Line Filter – Frame E

Dimensions are in millimeters and (inches)

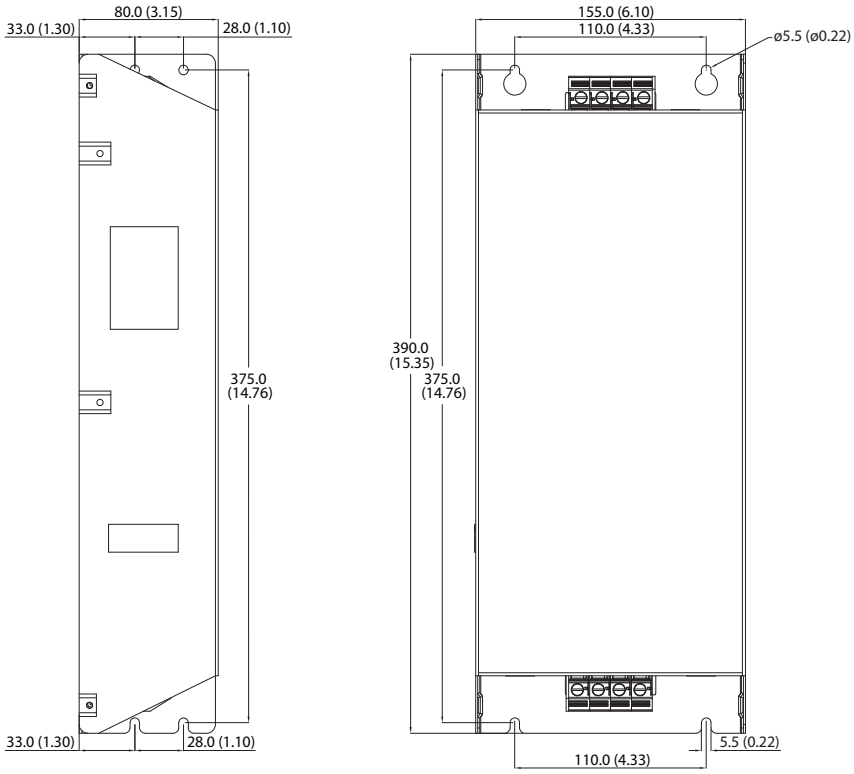

Optional Accessories and Kits Installing a Communication Adapter

1. Insert the communication adapter interface connector into the Control Module. Make sure the indicator line on the connector is aligned with the surface of the Control Module.

For PowerFlex 523

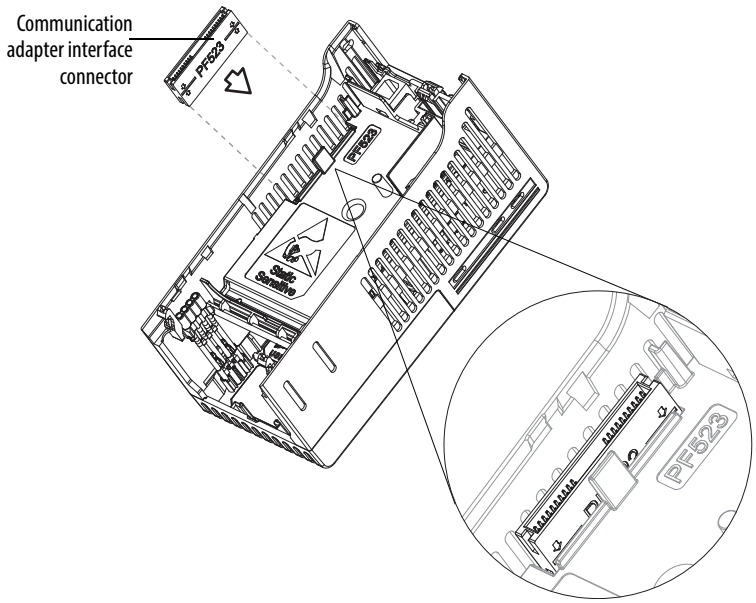

For PowerFlex 525

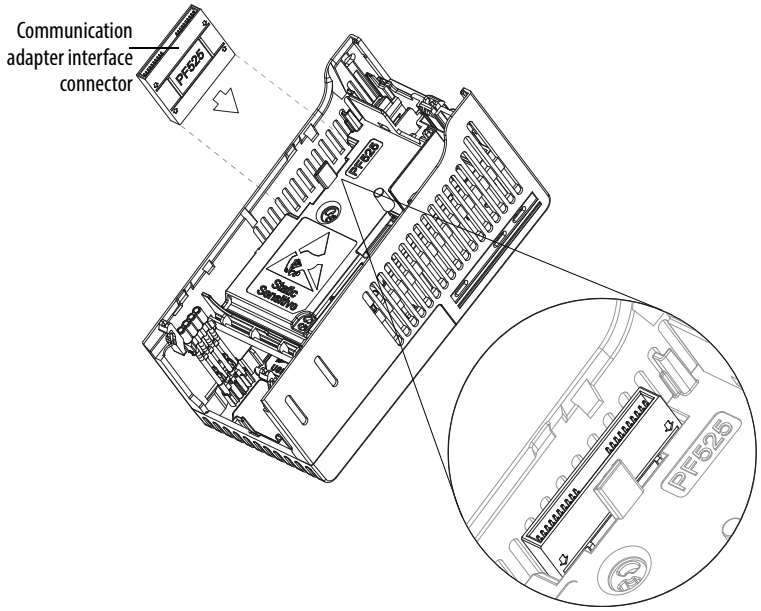

2. Align the connectors on the communication adapter to the communication adapter interface connector, then push the back cover down.

3. Press along the edges of the back cover until it snaps firmly into place.

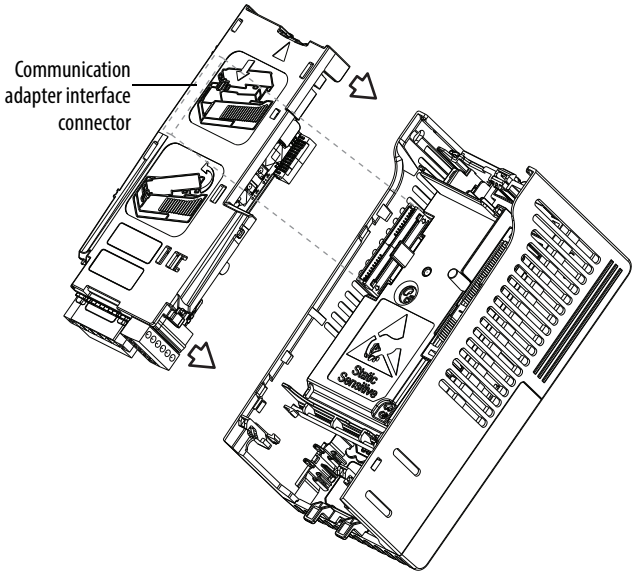

Removing a Communication Adapter

1. Insert a finger into the slot at the top of the back cover. Lift to separate the back cover from the Control Module.

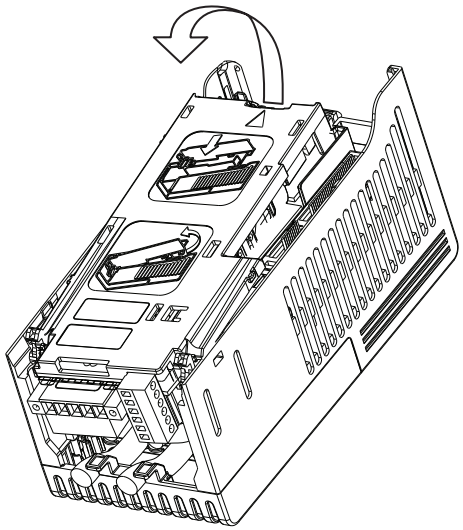

Notes:

RS485 (DSI) Protocol

PowerFlex 520-series drives support the RS485 (DSI) protocol to allow efficient operation with Rockwell Automation peripherals. In addition, some Modbus functions are supported to allow simple networking. PowerFlex 520-series drives can be multi-dropped on an RS485 network using Modbus protocol in RTU mode.

PowerFlex 520-Series Drive Network

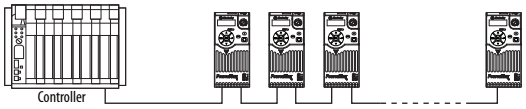

For information regarding EtherNet/IP or other communication protocols, refer to the appropriate user manual.

Network Wiring

Network wiring consists of a shielded 2-conductor cable that is daisy-chained from node to node.

ATTENTION: Never attempt to connect a Power over Ethernet (PoE) cable to the RS485 port. Doing so may damage the circuitry.

Network Wiring Diagram Example

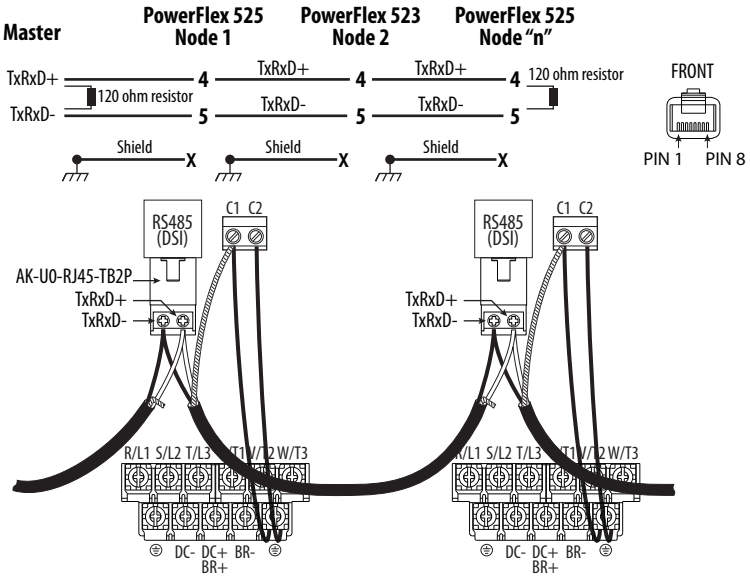

IMPORTANT The shield is connected at ONLY ONE end of each cable segment.

Only pins 4 and 5 on the RJ45 plug should be wired. The other pins on the PowerFlex 520-series drive's RJ45 socket must not be connected because they contain power, etc. for other Rockwell Automation peripheral devices.

Wiring terminations on the master controller will vary depending on the master controller used and "TxRxD+" and "TxRxD-" are shown for illustration purposes only. Refer to the master controller's user manual for network terminations. Note that there is no standard for the "+" and "-" wires, and consequently Modbus device manufacturers interpret them differently. If you have problems with initially establishing communications, try swapping the two network wires at the master controller.

Standard RS485 wiring practices apply.

- Termination resistors need to be applied at each end of the network cable.
- RS485 repeaters may need to be used for long cable runs, or if greater than 32 nodes are needed on the network.
- Network wiring should be separated from power wires by at least 0.3 meters (1 foot).
- Network wiring should only cross power wires at a right angle.

I/O Terminal C1 (RJ45 Shield) for the Ethernet and DSI network cables on the PowerFlex 520-series drive must also be connected to PE ground (there are two PE terminals on the drive). The shield for the network cables should be connected to PE ground at one end only.

I/O Terminal C2 (Comm Common) is internally tied to Network Common for the network signals, and NOT to RJ45 Shield. Tying I/O Terminal C2 to PE ground may improve noise immunity in some applications.

See I/O Control Terminal Designations on page 40 and page 43 for more information.

Parameter Configuration

The following PowerFlex 520-series drive parameters are used to configure the drive to operate on a DSI network.

Configuring Parameters for DSI Network

Parameter	Details	Reference
P046 [Start Source 1]	Set to 3 "Serial/DSI" if Start is controlled from the network.	page 87
P047 [Speed Reference1]	Set to 3 "Serial/DSI" if the Speed Reference is controlled from the network.	page 87
C123 [RS485 Data Rate]	Sets the data rate for the RS485 (DSI) Port. All nodes on the network must be set to the same data rate.	page 101
C124 [RS485 Node Addr]	Sets the node address for the drive on the network. Each device on the network requires a unique node address.	page 101
C125 [Comm Loss Action]	Selects the drive's response to communication problems.	page 101
C126 [Comm Loss Time]	Sets the time that the drive will remain in communication loss before the drive implements C125 [Comm Loss Action].	page 101
C127 [Comm Format]	Sets the transmission mode, data bits, parity and stop bits for the RS485 (DSI) Port. All nodes on the network must be set to the same setting.	page 102
C121 [Comm Write Mode]	Set to 0 "Save" when programming drive. Set to 1 "RAM only" to only write to volatile memory.	page 101

Supported Modbus Function Codes

The peripheral interface (DSI) used on PowerFlex 520-series drives supports some of the Modbus function codes.

Supported Modbus Function Codes

Modbus Function Code (Decimal)	Command
03	Read Holding Registers
06	Preset (Write) Single Register
16 (10 Hexadecimal)	Preset (Write) Multiple Registers

IMPORTANT Modbus devices can be 0-based (registers are numbered starting at 0) or 1-based (registers are numbered starting at 1). Depending on the Modbus Master used, the register addresses listed on the following pages may need to be offset by +1. For example, Logic Command may be register address 8192 for some master devices (e.g. ProSoft 3150-MCM SLC Modbus scanner) and 8193 for others (e.g. PanelViews).

Writing (06) Logic Command Data

The PowerFlex 520-series drive can be controlled through the network by sending Function Code 06 writes to register address 2000H (Logic Command). P046 [Start Source 1] must be set to 3 "Serial/DSI" in order to accept the commands. PowerFlex 523 drives support only Velocity bit definitions. PowerFlex 525 drives can use Parameter C122 [Cmd Stat Select] to select either Velocity or Position bit definitions.

TIP Powerup/Reset the drive after selecting an option for C122 [Cmd Stat Select] for the change to take effect.

Velocity Bit Definitions

Comm Logic Command – C122 = 0 "Velocity"		
Address (Decimal)	**Bit(s)**	**Description**
2000H (8192)	0	1 = Stop, 0 = Not Stop
	1	1 = Start, 0 = Not Start
	2	1 = Jog, 0 = No Jog
	3	1 = Clear Faults, 0 = Not Clear Faults
	5, 4	00 = No Command
		01 = Forward Command
		10 = Reverse Command
		11 = No Command
	6	1 = Force Keypad Control, 0 = Not Force Keypad Control
	7	1 = MOP Increment, 0 = Not Increment
	9, 8	00 = No Command
		01 = Accel Rate 1 Enable
		10 = Accel Rate 2 Enable
		11 = Hold Accel Rate Selected
	11, 10	00 = No Command
		01 = Decel Rate 1 Enable
		10 = Decel Rate 2 Enable
		11 = Hold Decel Rate Selected
	14, 13, 12	000 = No Command
		001 = Freq. Source = P047 [Speed Reference1]
		010 = Freq. Source = P049 [Speed Reference2]
		011 = Freq. Source = P051 [Speed Reference3]
		100 = A410 [Preset Freq 0]
		101 = A411 [Preset Freq 1]
		110 = A412 [Preset Freq 2]
		111 = A413 [Preset Freq 3]
	15	1 = MOP Decrement, 0 = Not Decrement

Position Bit Definitions

Comm Logic Command – C122 = 1 "Position"		
Address (Decimal)	**Bit(s)**	**Description**
2000H (8192)	0	1 = Stop, 0 = Not Stop
	1	1 = Start, 0 = Not Start
	2	1 = Jog, 0 = No Jog
	3	1 = Clear Faults, 0 = Not Clear Faults
	5, 4	00 = No Command
		01 = Forward Command
		10 = Reverse Command
		11 = No Command
	6	1 = Logic In 1
	7	1 = Logic In 2
	10, 9, 8	000 = Freq. and Position Step 0
		001 = Freq. and Position Step 1
		010 = Freq. and Position Step 2
		011 = Freq. and Position Step 3
		100 = Freq. and Position Step 4
		101 = Freq. and Position Step 5
		110 = Freq. and Position Step 6
		111 = Freq. and Position Step 7
	11	1 = Find Home
	12	1 = Hold Step
	13	1 = Pos Redefine
	14	1 = Sync Enable
	15	1 = Traverse Disable

Writing (06) Comm Frequency Command

The PowerFlex 520-series drive Comm Frequency Command can be controlled through the network by sending Function Code 06 writes to register address 2001H (Comm Frequency Command).

Comm Frequency Command

Reference	
Address (Decimal)	**Description**
2001H (8193)	Used by internal comm modules to control the reference of the drive. In units of 0.01 Hz.

Reading (03) Logic Status Data

The PowerFlex 520-series drive Logic Status data can be read through the network by sending Function Code 03 reads to register address 2100H (Logic Status). PowerFlex 523 drives support only Velocity bit definitions. PowerFlex 525 drives can use Parameter C122 [Cmd Stat Select] to select either Velocity or Position bit definitions.

Velocity Bit Definitions

Comm Logic Status – C122 = 0 "Velocity"		
Address (Decimal)	**Bit(s)**	**Description**
2100H (8448)	0	1 = Ready, 0 = Not Ready
	1	1 = Active (Running), 0 = Not Active
	2	1 = Cmd Forward, 0 = Cmd Reverse
	3	1 = Rotating Forward, 0 = Rotating Reverse
	4	1 = Accelerating, 0 = Not Accelerating
	5	1 = Decelerating, 0 = Not Decelerating
	6	Not Used
	7	1 = Faulted, 0 = Not Faulted
	8	1 = At Reference, 0 = Not At Reference
	9	1 = Main Freq Controlled by Active Comm
	10	1 = Operation Cmd Controlled by Active Comm
	11	1 = Parameters have been locked
	12	Digital Input 1 Status (DigIn TermBlk 05)
	13	Digital Input 2 Status (DigIn TermBlk 06)
	14	Digital Input 3 Status (DigIn TermBlk 07)
	15	Digital Input 4 Status (DigIn TermBlk 08)

Position Bit Definitions

Comm Logic Status – C122 = 1 "Position"		
Address (Decimal)	**Bit(s)**	**Description**
2100H (8448)	0	1 = Ready, 0 = Not Ready
	1	1 = Active (Running), 0 = Not Active
	2	1 = Cmd Forward, 0 = Cmd Reverse
	3	1 = Rotating Forward, 0 = Rotating Reverse
	4	1 = Accelerating, 0 = Not Accelerating
	5	1 = Decelerating, 0 = Not Decelerating
	6	1 = Forward Travel Position, 0 = Reverse Travel Position
	7	1 = Faulted, 0 = Not Faulted
	8	1 = At Reference, 0 = Not At Reference
	9	1 = At Position, 0 = Not At Position
	10	1 = At Home, 0 = Not At Home
	11	1 = Drive Homed, 0 = Not Drive Homed
	12	1 = Sync Hold, 0 = Not Sync Hold
	13	1 = Sync Ramp, 0 = Not Sync Ramp
	14	1 =Traverse On, 0 = Traverse Off
	15	1 = Traverse Decel, 0 = Not Traverse Decel

Reading (03) Drive Error Codes

The PowerFlex 520-series Error Code data can be read through the network by sending Function Code 03 reads to register address 2101H (Drive Error Codes).

Drive Error Codes

Logic Status		
Address (Decimal)	**Value (Decimal)**	**Description**
2101H (8449)	0	No Fault
	2	Auxiliary Input
	3	Power Loss
	4	Undervoltage
	5	Overvoltage
	6	Motor Stalled
	7	Motor Overload
	8	Heatsink Overtemperature
	9	Control Module Overtemperature
	12	HW Overcurrent (300%)
	13	Ground Fault
	15	Load Loss
	21	Output Phase Loss
	29	Analog Input Loss
	33	Auto Restart Tries
	38	Phase U to Ground Short
	39	Phase V to Ground Short
	40	Phase W to Ground Short
	41	Phase UV Short
	42	Phase UW Short
	43	Phase VW Short
	48	Parameters Defaulted
	59	Safety Open
	63	Software Overcurrent
	64	Drive Overload
	70	Power Unit Fail
	71	DSI Network Loss
	72	Option Card Network Loss
	73	Embedded EtherNet/IP Adapter Network Loss
	80	AutoTune Fail
	81	DSI Communication Loss
	82	Option Card Communication Loss
	83	Embedded EtherNet/IP Adapter Communication Loss
	91	Encoder Loss
	94	Function Loss
	100	Parameter Checksum Error
	101	External Storage
	105	Control Module Connect Error
	106	Incompatible Control-Power Module
	107	Unrecognized Control-Power Module
	109	Mismatched Control-Power Module
	110	Keypad Membrane
	111	Safety Hardware
	114	Microprocessor Failure
	122	I/O Board Fail

Drive Error Codes

Logic Status		
Address (Decimal)	**Value (Decimal)**	**Description**
2101H (8449)	125	Flash Update Required
	126	Non Recoverable Error
	127	DSI Flash Update Required

Reading (03) Drive Operational Values

The PowerFlex 520-series Drive Operational Values can be read through the network by sending Function Code 03 reads to register addresses 2102H...210AH.

Drive Operational Values

Reference	
Address (Decimal)	**Description**
2102H (8450)	Frequency Command (xxx.xx Hz)
2103H (8451)	Output Frequency (xxx.xx Hz)
2104H (8452)	Output Current (xxx.xx A)
2105H (8453)	DC-BUS Voltage (xxxV)
2106H (8454)	Output Voltage (xxx.xV)

Reading (03) and Writing (06) Drive Parameters

To access drive parameters, the Modbus register address equals the parameter number. For example, a decimal “1” is used to address Parameter b001 [Output Freq] and decimal “41” is used to address Parameter P041 [Accel Time 1].

Additional Information

See http://www.ab.com/drives/ for additional information.

Velocity StepLogic, Basic Logic and Timer/ Counter Functions

Four PowerFlex 520-series logic functions provide the capability to program simple logic functions without a separate controller.

- Velocity StepLogic™ Function (specific to PowerFlex 525 drives only)

  Steps through up to eight preset speeds based on programmed logic. Programmed logic can include conditions that need to be met from digital inputs programmed as "Logic In 1" and "Logic In 2" before stepping from one preset speed to the next. A timer is available for each of the eight steps and is used to program a time delay before stepping from one preset speed to the next. The status of a digital output can also be controlled based on the step being executed.
- Basic Logic Function (specific to PowerFlex 525 drives only)

  Up to two digital inputs can be programmed as "Logic In 1" and/or "Logic In 2". A digital output can be programmed to change state based on the condition of one or both inputs based on basic logic functions such as AND, OR, NOR. The basic logic functions can be used with or without StepLogic.
- Timer Function

  A digital input can be programmed for "Timer Start". A digital output can be programmed as a "Timer Out" with an output level programmed to the desired time. When the timer reaches the time programmed into the output level the output will change state. The timer can be reset with a digital input programmed as "Reset Timer".
- Counter Function

  A digital input can be programmed for "Counter In". A digital output can be programmed as "Counter Out" with an output level programmed to the desired number of counts. When the counter reaches the count programmed into the output level the output will change state. The counter can be reset with a digital input programmed as "Reset Counter".

TIP Use the Wizard in Connected Components Workbench to simplify setup instead of manually configuring the parameters.

Velocity StepLogic Using Timed Steps

IMPORTANT This function is specific to PowerFlex 525 drives only.

To activate this function, set one of the three speed reference sources, parameter P047, P049 or P051[Speed Referencex] to 13 "Step Logic" and activate that speed reference source. Three parameters are used to configure the logic, speed reference and time for each step.

- Logic is defined using parameters L180...L187 [Stp Logic x].
- Preset Speeds are set with parameters A410...A417 [Preset Freq 0...7].
- Time of operation for each step is set with parameters L190...L197 [Stp Logic Time x].

The direction of motor rotation can be forward or reverse.

Using Timed Steps

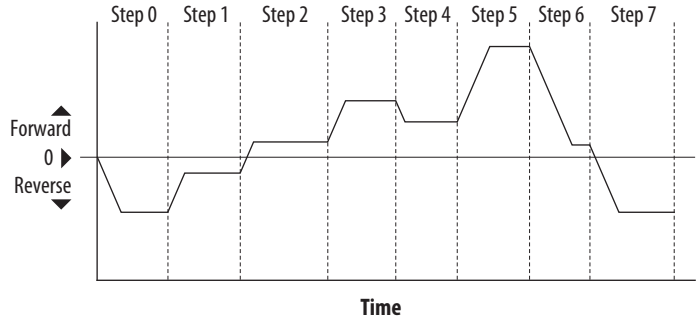

Velocity StepLogic Sequence

- Sequence begins with a valid start command.
- A normal sequence begins with Step 0 and transition to the next step when the corresponding StepLogic time has expired.
- Step 7 is followed by Step 0
- Sequence repeats until a stop is issued or a fault condition occurs.

Velocity StepLogic Using Basic Logic Functions

IMPORTANT This function is specific to PowerFlex 525 drives only.

Digital input and digital output parameters can be configured to use logic to transition to the next step. Logic In 1 and Logic In 2 are defined by programming parameters t062...t063, t065...t068 [DigIn TermBlk xx] to 24 "Logic In 1" or 25 "Logic In 2".

Example

- Run at Step 0.
- Transition to Step 1 when Logic In 1 is true.
  Logic senses the edge of Logic In 1 when it transitions from off to on. Logic In 1 is not required to remain "on".

- Transition to Step 2 when both Logic In 1 and Logic In 2 are true. The drive senses the level of both Logic In 1 and Logic In 2 and transitions to Step 2 when both are on.
- Transition to Step 3 when Logic In 2 returns to a false or off state. Inputs are not required to remain in the "on" condition except under the logic conditions used for the transition from Step 2 to Step 3.

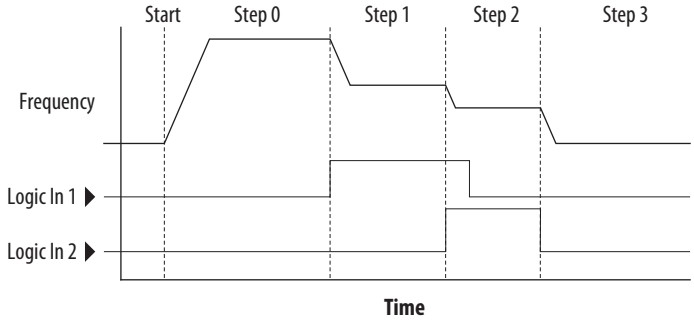

The step time value and the basic logic may be used together to satisfy machine conditions. For instance, the step may need to run for a minimum time period and then use the basic logic to trigger a transition to the next step.

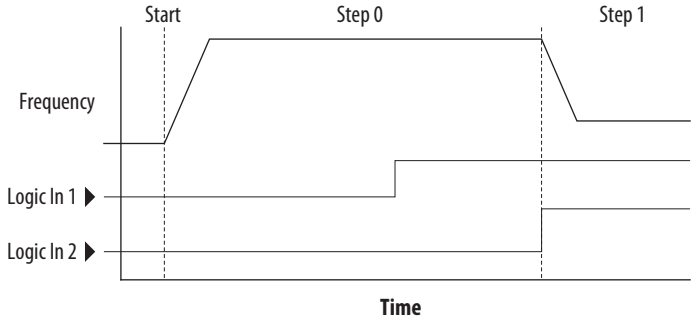

Timer Function

Digital inputs and outputs control the timer function and are configured with parameters t062...t063, t065...t068 [DigIn TermBlk xx] set to 19 "Timer Start" and 21 "Reset Timer".

Digital outputs (relay and opto type) define a preset level and indicate when the level is reached. Level parameters t077 [Relay Out1 Level], t082[Relay Out2 Level], t070 [Opto Out1 Level] and t073 [Opto Out2 Level] are used to set the desired time in seconds.

Parameters t076 [Relay Out1 Sel], t081 [Relay Out2 Sel], t069 [Opto Out1 Sel] and t072 [Opto Out2 Sel] are set to 25 "Timer Out" and causes the output to change state when the preset level is reached.

Example

- Drive starts up and accelerates to 30 Hz.
- After 30 Hz has been maintained for 20 seconds, a 4-20 mA analog input becomes the reference signal for speed control.

- The timer function is used to select a preset speed with a 20 second run time that overrides the speed reference while the digital input is active.
- Parameters are set to the following options:
  - P047 [Speed Reference1] = 6 “4-20mA Input”
  - P049 [Speed Reference2] = 7 “Preset Freq”
  - t062 [DigIn TermBlk 02] = 1 “Speed Ref 2”
  - t063 [DigIn TermBlk 03] = 19 “Timer Start”
  - t076 [Relay Out1 Sel] = 25 “Timer Out”
  - t077 [Relay Out1 Level] = 20.0 Secs
  - A411 [Preset Freq 1] = 30.0 Hz
- The control terminal block is wired such that a start command will also trigger the timer start.
- The relay output is wired to I/O Terminal 02 (DigIn TermBlk 02) so that it forces the input on when the timer starts.
- After the timer is complete, the output is turned off releasing the preset speed command. The drive defaults to following the analog input reference as programmed.

Note that a “Reset Timer” input is not required for this example since the “Timer Start” input both clears and starts the timer.

Counter Function

Digital inputs and outputs control the counter function and are configured with parameters t062...t063, t065...t068 [DigIn TermBlk xx] set to 20 “Counter In” and 22 “Reset Countr”.

Digital outputs (relay and opto type) define a preset level and indicate when the level is reached. Level parameters t077 [Relay Out1 Level], t082[Relay Out2 Level], t070 [Opto Out1 Level] and t073 [Opto Out2 Level] are used to set the desired count value.

Parameters t076 [Relay Out1 Sel], t081 [Relay Out2 Sel], t069 [Opto Out1 Sel] and t072 [Opto Out2 Sel] are set to 26 “Counter Out” which causes the output to change state when the level is reached.

Example

- A photo eye is used to count packages on a conveyor line.
- An accumulator holds the packages until 5 are collected.
- A diverter arm redirects the group of 5 packages to a bundling area.
- The diverter arm returns to its original position and triggers a limit switch that resets the counter.
- Parameters are set to the following options:
  - t065 [DigIn TermBlk 05] = 20 “Counter In”
  - t066 [DigIn TermBlk 06] = 22 “Reset Countr”
  - t076 [Relay Out1 Sel] = 26 “Counter Out”
  - t077 [Relay Out1 Level] = 5.0 Counts

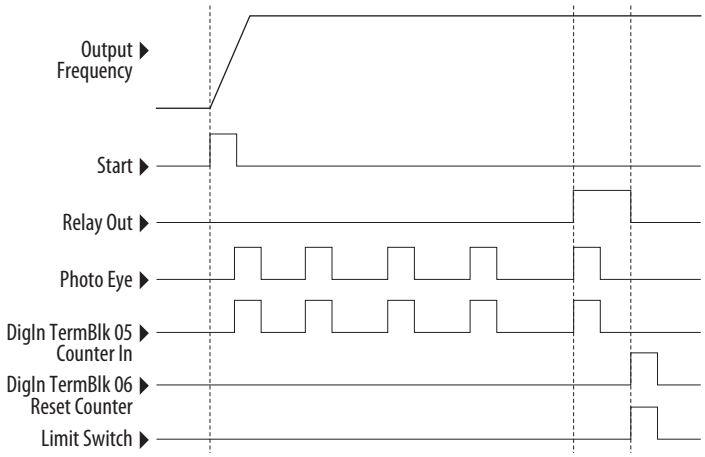

Velocity StepLogic Parameters

Code Descriptions for Parameters L180...L187

Digit 4	Digit 3	Digit 2	Digit 1
0	0	F	1

Digit 4 – Defines the action during the step currently executing

Setting	Accel/Decel Parameter Used	StepLogic Output State	Commanded Direction
0	1	Off	FWD
1	1	Off	REV
2	1	Off	No Output
3	1	On	FWD
4	1	On	REV
5	1	On	No Output
6	2	Off	FWD
7	2	Off	REV
8	2	Off	No Output
9	2	On	FWD
A	2	On	REV
b	2	On	No Output

Digit 3 – Defines what step to jump to or how to end program when the logic conditions specified in Digit 2 are met.

Setting	Logic
0	Jump to Step 0
1	Jump to Step 1
2	Jump to Step 2
3	Jump to Step 3
4	Jump to Step 4
5	Jump to Step 5
6	Jump to Step 6
7	Jump to Step 7
8	End Program (Normal Stop)
9	End Program (Coast to Stop)
A	End Program and Fault (F002)

Digit 2 – Defines what logic must be met to jump to a step other than the very next step.

Setting	Description	Logic
0	Skip Step (jump immediately)	SKIP
1	Step based on the time programmed in the respective [Stp Logic Time x] parameter.	TIMED
2	Step if "Logic In 1" is active (logically true)	TRUE
3	Step if "Logic In 2" is active (logically true)	TRUE
4	Step if "Logic In 1" is not active (logically false)	FALSE
5	Step if "Logic In 2" is not active (logically false)	FALSE
6	Step if either "Logic In 1" or "Logic In 2" is active (logically true)	OR
7	Step if both "Logic In 1" and "Logic In 2" is active (logically true)	AND
8	Step if neither "Logic In 1" or "Logic In 2" is active (logically true)	NOR
9	Step if "Logic In 1" is active (logically true) and "Logic In 2" is not active (logically false)	XOR
A	Step if "Logic In2" is active (logically true) and "Logic In 1" is not active (logically false)	XOR
b	Step after [Stp Logic Time x] and "Logic In 1" is active (logically true)	TIMED AND
C	Step after [Stp Logic Time x] and "Logic In 2" is active (logically true)	TIMED AND
d	Step after [Stp Logic Time x] and "Logic In 1" is not active (logically false)	TIMED OR
E	Step after [Stp Logic Time x] and "Logic In 2" is not active (logically false)	TIMED OR
F	Do not step OR no "jump to", so use Digit 0 logic	IGNORE

Digit 1 – Defines what logic must be met to jump to the very next step.

Setting	Description	Logic
0	Skip Step (jump immediately)	SKIP
1	Step based on the time programmed in the respective [Stp Logic Time x] parameter.	TIMED
2	Step if "Logic In 1" is active (logically true)	TRUE
3	Step if "Logic In 2" is active (logically true)	TRUE
4	Step if "Logic In 1" is not active (logically false)	FALSE
5	Step if "Logic In 2" is not active (logically false)	FALSE
6	Step if either "Logic In 1" or "Logic In 2" is active (logically true)	OR
7	Step if both "Logic In 1" and "Logic In 2" is active (logically true)	AND
8	Step if neither "Logic In 1" or "Logic In 2" is active (logically true)	NOR
9	Step if "Logic In 1" is active (logically true) and "Logic In 2" is not active (logically false)	XOR
A	Step if "Logic In 2" is active (logically true) and "Logic In 1" is not active (logically false)	XOR
b	Step after [Stp Logic Time x] and "Logic In 1" is active (logically true)	TIMED AND
C	Step after [Stp Logic Time x] and "Logic In 2" is active (logically true)	TIMED AND
d	Step after [Stp Logic Time x] and "Logic In 1" is not active (logically false)	TIMED OR
E	Step after [Stp Logic Time x] and "Logic In 2" is not active (logically false)	TIMED OR
F	Use logic programmed in Digit 1	IGNORE

Encoder/Pulse Train Usage and Position StepLogic Application

Encoder and Pulse Train Usage

The PowerFlex 520-series drives include a pulse train input built into the terminal block. PowerFlex 525 drives also support an optional encoder card. The pulse train and encoder can be used for many of the same functions, but the pulse train supports up to 100 kHz at 24V, and uses the drive built-in terminal block. The encoder supports up to 250 kHz dual channel at 5, 12 or 24V and requires the optional encoder board to be installed. When A535 [Motor Fdbk Type] is set to a value other than zero, the drive is set to use an encoder or pulse train. The drive will use the encoder or pulse train in several ways depending on the settings of other parameters. The drive will use the encoder or pulse train as shown below (listed in order of priority):

1. If enabled by P047, P049, or P051 [Speed Referencex], the encoder or pulse train will be used directly as a commanded speed (normally used with a pulse train) or as a position reference (normally used with a quadrature encoder).
2. If not enabled by the Speed Reference parameters, the encoder or pulse train can be used with the PID function if enabled by A459 or A471 [PID x Ref Sel], or A460 or A472 [PID x Fdback Sel].
3. If not enabled by the Speed Reference or PID function parameters, the encoder or pulse train can be used with A535 [Motor Fdbk Type] for direct feedback and trim of the speed command. The normal slip compensation is not used in this case. Instead the drive will use the encoder or pulse train to determine actual output frequency and adjust the output frequency to match the command. Parameters A538 [Ki Speed Loop] and A539 [Kp Speed Loop] are used in this control loop. The primary benefit of this mode is increased speed accuracy when compared to open-loop slip compensation. It does not provide speed bandwidth improvement.

IMPORTANT The encoder usage, and position StepLogic application covered in this chapter is specific to PowerFlex 525 drives only.

Encoder Interface

The incremental encoder option card can source 5 or 12 volt power and accept 5, 12 or 24 volt single ended or differential inputs. See Appendix B for ordering information.

IMPORTANT Only the 25-ENC-1 Encoder will work properly in the PowerFlex 525 drive. Installing an incorrect encoder card, such as the PowerFlex 527 25-ENC-2 will cause damage to the PowerFlex 525 drive.

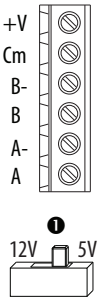

No.	Signal	Description
+V	5...12V Power(1)(2)	Internal power source 250 mA (isolated).
Cm	Power Return	
B-	Encoder B (NOT)	Quadrature B input.
B	Encoder B	
A-	Encoder A (NOT)	Single channel, pulse train or quadrature A input.
A	Encoder A	
❶	Output	DIP switch selects 12 or 5 volt power supplied at terminals "+V" and "Cm" for the encoder.

(1) When using 12V Encoder power, 24V I/O power, maximum output current at I/O Terminal 11 is 50 mA.
(2) If Encoder requires 24V power, it must be supplied by an external power source.

Encoder Wiring Examples

I/O	Connection Example
Encoder Power – Internal Drive Power Internal (drive) 12V DC, 250mA	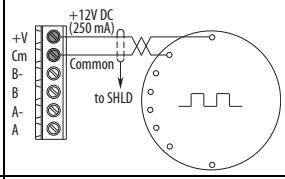
Encoder Signal – Single-Ended, Dual Channel	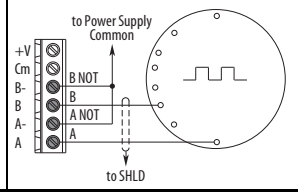

I/O	Connection Example
Encoder Power – External Power Source	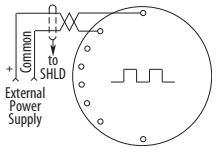
Encoder Signal – Differential, Dual Channel	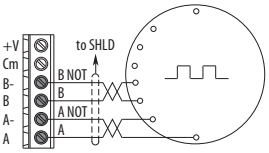

Wiring Notes

The encoder option card can supply 5V or 12V power (250 mA maximum) for an encoder. Be sure the DIP switch is set properly for the encoder. In general, 12V will provide higher noise immunity.

The encoder can handle 5V, 12V, or 24V inputs, but the pulse train can handle only 24V inputs. The inputs will automatically adjust to the voltage applied and no additional drive adjustment is necessary. If a single-channel input is used, it must be wired between the A (signal) and A- (signal common) channels.

IMPORTANT A quadrature encoder provides rotor speed and direction. Therefore, the encoder must be wired such that the forward direction matches the motor forward direction. If the drive is reading encoder speed but the position regulator or other encoder function is not working properly, remove power to the drive, then do one of the following:

- Swap the A and A (NOT) encoder channels.
- Swap the B and B (NOT) encoder channels.
- Swap any two motor leads.

Drives will fault when an encoder is incorrectly wired and A535 [Motor Fdbk Type] is set to 5 "Quad Check".

Determine Encoder Pulse Per Revolution (PPR) Specification Based on Speed Resolution

Use the following formula to determine the encoder pulse per revolution (PPR) specification based on the speed resolution.

$$\text{Speed resolution (Hz)} = \frac{\left(\frac{1}{\text{encoder pulse number x 4}}\right) \text{x pole pairs}}{10^{-3}\ \text{sec}}$$

TIP The operating speed range will depend on the motor control mode selected (SVC or VVC). For more information, see Performance with Encoder on page 170.

Example 1

To determine the PPR for quadrature encoder, to achieve 0.06 Hz of speed resolution on a 4-pole motor (2-pole pair) with a base speed of 60 Hz:

$$0.06\ \text{Hz} = \frac{\left(\frac{1}{\text{encoder pulse number x 4}}\right) \text{x2}}{10^{-3}\ \text{sec}}$$

$$= \sim 8333\ \text{pulse}$$

Therefore, select 8333 PPR or higher for the quadrature encoder to achieve the desired speed resolution of 0.06 Hz.

Example 2

To determine the speed resolution, using a 1024 PPR quadrature incremental encoder on a 4-pole (2-pole pair) motor:

$$\text{Speed resolution (Hz)} = \frac{\left(\frac{1}{1024 \text{ x } 4}\right) \text{x2}}{10^{-3}\ \text{sec}}$$

$$= 0.49\ \text{Hz}$$

Therefore, using a 1024 PPR quadrature encoder will give a speed resolution of 0.49 Hz.

Positioning Overview

The PowerFlex 525 drive includes a simple position regulator which can be used in a variety of position applications without the need for multiple limit switches or photo-eyes. This can be used as a stand-alone controller for simple applications (up to 8 positions) or in conjunction with a controller for more flexibility.

Please note that this is not intended to replace high end servo controllers or any application that needs high bandwidth or very high torque at low speeds.

Common Guidelines for All Applications

The position regulator can be configured for operation appropriate for a variety of applications. Certain parameters will need to be adjusted in all cases.

P047 [Speed Reference1] must be set to 16 "Positioning".

A535 [Motor Fdbk Type] must be set to the match the feedback device. Positioning mode must use A535 [Motor Fdbk Type] option 4.

A535 [Motor Fdbk Type] Options

0 "None" indicates no encoder is used. This can not be used for positioning.

1 "Pulse Train" is a single channel input, no direction, speed feedback only. This should not be used for positioning. The Single Channel selection is similar to a Pulse Train, but uses the standard encoder scaling parameters.

2 "Single Chan" is a single channel input, no direction, speed feedback only. This should not be used for positioning. Single channel uses the standard encoder scaling parameters.

3 "Single Check" is a single channel input with encoder signal loss detection. The drive will fault if it detects that the input pulses do not match the expected motor speed. This should not be used for positioning.

4 "Quadrature" is a dual channel encoder input with direction and speed from the encoder. This may be used for positioning control.

5 "Quad Check" is a dual channel encoder with encoder signal loss detection. The drive will fault if it detects that the encoder speed does not match the expected motor speed.

A544 [Reverse Disable] should be set to 0 "Rev Enabled" to allow bidirectional movement necessary for position control.

P039 [Torque Perf Mode] default setting is 1 "SVC". However, any mode can be used to improve the low speed torque for positioning applications. For best results, tune the application first. The autotune routine can be completed to further improve the drive-motor performance.

A550 [Bus Reg Enable] default setting is 1 “Enabled”. If the deceleration time is too short, the drive may overshoot the desired position. For best results, a longer deceleration time may be necessary. A550 [Bus Reg Enable] can be disabled to provide precise stopping movements, but the deceleration time will need to be manually tuned so that it is long enough to avoid F005 “OverVoltage” faults.

A437 [DB Resistor Sel] default setting is 0 “Disabled”. If improved deceleration performance is required a Dynamic Brake resistor can be used. If used, this parameter should be set to the appropriate setting for the resistor selected.

P035 [Motor NP Poles] must be set to match the number of motor poles on the motor driven by the PowerFlex 520-series drive.

A536 [Encoder PPR] must be set to match the number of pulses per revolution of the encoder used (i.e., 1024 PPR Encoder).

A559 [Counts Per Unit] sets the number of encoder counts that will be used to define one position unit. This allows the encoder positions to be defined in terms of units important to the application. For example, if 1cm of travel on a conveyor belt requires 0.75 turns of the motor, the motor encoder is 1024 PPR, and the Motor Feedback type is set to Quadrature, then this parameter would need to be set to (4 x 1024 x 0.75) = 3072 counts for one cm of travel. Then all other positions could be setup in units of “cm”.

A564 [Encoder Pos Tol] indicates the desired position tolerance for the system. This will determine how close the drive must be to the commanded position before the drive will indicate “At Home” or “At Position” in units of raw encoder pulses. This has no effect on the actual positioning control of the motor.

Positioning Operation

Parameter A558 [Positioning Mode] must be set to properly match the desired operation of the positioning function.

A558 [Positioning Mode] Options

0 "Time Steps" uses Step Logic times. This mode ignores the Step Logic settings and moves through the steps (Step 0 to Step 7 and back to Step 0) based on the times programmed into L190...L197 [Stp Logic Time x]. This can be used when the desired position is based only on time. In addition, this mode only accepts absolute positions in a positive direction from "home". This option provides an easy way to implement a simple positioning program or to test the basic positioning setup. For additional flexibility one of the other settings should be used.

1 "Preset Input" directly commands movement to any step based on the status of the digital inputs programmed for "Preset Freq". This setting ignores the Step Logic Commands settings and instead the drive will move directly to whatever step is currently commanded by A410...A425 [Preset Freq x] and L200...L214 [Step Units x]. This is useful when an application needs direct access to any position step based on discrete inputs. This mode moves in the forward direction from Home and is an absolute move.

IMPORTANT Advanced Step Logic options such as incremental move are not available in this mode.

2 "Step Logic" provides a highly flexible mode of operation. This can be used to move through the steps (Step 0 to Step 7 and back to Step 0) or can jump to a different step at any time based on time or the status of digital inputs or communication commands. In this mode the drive always starts at Step 0 of the Step Logic profile.

3 "Preset StpL" is identical to 2 "Step Logic" except the drive will use the current status of the Preset Inputs to determine which Step Logic step to begin. This only affects the initial step. After start, the drive will move through the steps in the same manner as if setting 2 was selected.

4 "StpLogic-Lst" is identical to 2 "Step Logic" except the drive will use the step prior to its last stop command to determine which Step Logic step to begin. This only affects the initial step. After start, the drive will move through the steps in the same manner as if setting 2 was selected. This allows a process to be stopped and then restarted at the position where it stopped.

In all position modes, the following parameters will control the characteristics at each step:

L200, L202, L204, L206, L208, L210, L212 and L214 [Step Units x] are the number value to the left of the decimal (whole number) of the 8 positions desired for an application, beginning with Step 0 (L200) and continuing with each step until Step 7 (L214). For example, enter 2 into this parameter if you would like a commanded position of 2.77.

L201, L203, L205, L207, L209, L211, L213 and L215 [Step Units F x] are the number value to the right of the decimal (the portion less than 1) of the 8 positions desired for an application, beginning with Step 0 (L201) and continuing with each step until Step 7 (L215). For example, enter 0.77 into this parameter if you would like a commanded position of 2.77.

A410...A417 [Preset Freq x] are the parameters that define the maximum frequency the drive will run at during the corresponding step. For example, if [Preset Freq 2] is set to 40 Hz, the drive will accelerate to 40 Hz maximum when moving to Position 2.

Frequency Source	Step Source	Position Source
A410 [Preset Freq 0]	L180 [Stp Logic 0]	L200 [Step Units 0]
A411 [Preset Freq 1]	L181 [Stp Logic 1]	L202 [Step Units 1]
A412 [Preset Freq 2]	L182 [Stp Logic 2]	L204 [Step Units 2]
A413 [Preset Freq 3]	L183 [Stp Logic 3]	L206 [Step Units 3]
A414 [Preset Freq 4]	L184 [Stp Logic 4]	L208 [Step Units 4]
A415 [Preset Freq 5]	L185 [Stp Logic 5]	L210 [Step Units 5]
A416 [Preset Freq 6]	L186 [Stp Logic 6]	L212 [Step Units 6]
A417 [Preset Freq 7]	L187 [Stp Logic 7]	L214 [Step Units 7]

IMPORTANT The default value for A410 [Preset Freq 0] is 0.00 Hz. This value needs to be changed or the drive will not be able to move during Step 0.

L190...L197 [Stp Logic Time x] are the parameters that define the time the drive will remain in each corresponding step if that step is time-based. For example, if L192 [Stp Logic Time 2] is set to 5.0 seconds and that step is time-based, the drive will remain in Step 2 for 5.0 seconds. Note that this is the total time in that step, not the time at that position. Therefore, it will include the time needed to accelerate, run, and decelerate to that position.

L180...L187 [Stp Logic x] are the parameters that allow additional flexibility and control various aspects of each step when a positioning mode is selected that utilizes the Step Logic functions. Note that in Positioning mode these parameters have a different function than when used for normal velocity Step Logic. Each of the 4 digits controls one aspect of the each position step. The following is a listing of the available settings for each digit:

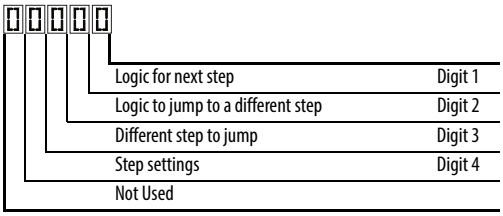

Velocity Control Settings (Digit 4)

Required Setting	Accel/Decel Param. Used	StepLogic Output State	Commanded Direction
0	Accel/Decel 1	Off	FWD
1	Accel/Decel 1	Off	REV
2	Accel/Decel 1	Off	No Output
3	Accel/Decel 1	On	FWD
4	Accel/Decel 1	On	REV
5	Accel/Decel 1	On	No Output
6	Accel/Decel 2	Off	FWD
7	Accel/Decel 2	Off	REV
8	Accel/Decel 2	Off	No Output
9	Accel/Decel 2	On	FWD
A	Accel/Decel 2	On	REV
b	Accel/Decel 2	On	No Output

Positioning Settings (Digit 4)

Required Setting	Accel/Decel Param. Used	StepLogic Output State	Direction From Home	Type of Command
0	Accel/Decel 1	Off	FWD	Absolute
1	Accel/Decel 1	Off	FWD	Incremental
2	Accel/Decel 1	Off	REV	Absolute
3	Accel/Decel 1	Off	REV	Incremental
4	Accel/Decel 1	On	FWD	Absolute
5	Accel/Decel 1	On	FWD	Incremental
6	Accel/Decel 1	On	REV	Absolute
7	Accel/Decel 1	On	REV	Incremental
8	Accel/Decel 2	Off	FWD	Absolute
9	Accel/Decel 2	Off	FWD	Incremental
A	Accel/Decel 2	Off	REV	Absolute
b	Accel/Decel 2	Off	REV	Incremental
C	Accel/Decel 2	On	FWD	Absolute
d	Accel/Decel 2	On	FWD	Incremental
E	Accel/Decel 2	On	REV	Absolute
F	Accel/Decel 2	On	REV	Incremental

Settings (Digit 3)

Setting	Description
0	Jump to Step 0
1	Jump to Step 1
2	Jump to Step 2
3	Jump to Step 3
4	Jump to Step 4
5	Jump to Step 5
6	Jump to Step 6
7	Jump to Step 7
8	End Program (Normal Stop)
9	End Program (Coast to Stop)
A	End Program and Fault (F2)

Settings (Digit 2 and 1)

Setting	Description
0	Skip Step (Jump Immediately)
1	Step Based on [Stp Logic Time x]
2	Step if “Logic In 1” is Active
3	Step if “Logic In 2” is Active
4	Step if “Logic In 1” is Not Active
5	Step if “Logic In 2” is Not Active
6	Step if either “Logic In 1” or “Logic In 2” is Active
7	Step if both “Logic In 1” and “Logic In 2” are Active
8	Step if neither “Logic In 1” nor “Logic In 2” is Active
9	Step if “Logic In 1” is Active and “Logic In 2” is Not Active
A	Step if “Logic In 2” is Active and “Logic In 1” is Not Active
b	Step after [Stp Logic Time x] and “Logic In 1” is Active
C	Step after [Stp Logic Time x] and “Logic In 2” is Active
d	Step after [Stp Logic Time x] and “Logic In 1” is Not Active
E	Step after [Stp Logic Time x] and “Logic In 2” is Not Active
F	Do Not Step/Ignore Digit 2 Settings

TIP Use the Wizard in Connected Components Workbench to simplify setup instead of manually configuring the parameters.

Note: Incremental move commands will cause the drive to move the amount specified based on the current position. Absolute commands are always with reference to “Home”.

A565 [Pos Reg Filter] provides a low pass filter at the input of the position regulator.

A566 [Pos Reg Gain] is a single adjustment for increasing or decreasing the responsiveness of the position regulator. For faster response, the filter should be reduced and/or the gain should be increased. For smoother response with less overshoot, the filter should be increased and/or the gain should be reduced. In general, the gain will have a larger effect on most systems than the filter.

Homing Routine

This drive supports incremental encoders only. Therefore, when the drive powers up it will reset the current position to zero. If this is known to be correct the position routine can be started without further adjustment. However, in most applications the drive will need to be "homed" after each power-up and prior to starting the position routine.

This can be accomplished in one of the following two ways:

1. Manual Homing–Program the following drive parameters:

   t062, t063, t065...t068 [DigIn TermBlk xx] = 37 "Pos Redefine"

   Program one of the digital inputs to 37 "Pos Redefine". Then, move the system into the home position with a run command, a jog command, or by manually moving the system into the home position. Then, toggle the "Pos Redefine" input. This will set the drive to "Home" at its current position and d388 [Units Traveled H] and d389 [Units Traveled L] are set to zero. Alternately, the "Pos Redefine" bit in A560 [Enh Control Word] can be toggled instead of utilizing a digital input.

   IMPORTANT The "Pos Redefine" input or bit must be returned to inactive before starting the position routine. Otherwise the drive will continuously read a position of "0" (home) and the position routine will not function correctly.

2. Automatic Homing to Limit Switch–Program the following drive parameters:

   t062, t063, t065...t068 [DigIn TermBlk xx] = 35 "Find Home"
   Program one of the digital inputs to 35 "Find Home".

   t062, t063, t065...t068 [DigIn TermBlk xx] = 34 "Home Limit"
   Program one of the digital inputs to 34 "Home Limit". Normally, the "Home Limit" input would be wired to a proximity switch or photo-eye and will indicate the system is in the home position.

   A562 [Find Home Freq] sets the frequency the drive will use while it is moving to the home position during the automatic homing routine.

   A563 [Find Home Dir] sets the direction the drive will use while it is moving to the home position during the automatic homing routine.

To begin the automatic homing routine, activate the "Find Home" input and then initiate a valid start command. The drive will then ramp to the speed set in A562 [Find Home Freq] and in the direction set in A563 [Find Home Dir] until the digital input defined as "Home Limit" is activated. If the drive passes this point too quickly it will then reverse direction at 1/10th A562 [Find Home Freq] to the point where the Home Limit switch reactivates. Approximately one second after the routine finds home the drive will stop. Alternately, the "Find Home Freq" and/or "Home Limit" bits in A560 [Enh Control Word] can be activated instead of utilizing a digital input. The inputs or bits should be returned to inactive after the routine is complete.

IMPORTANT After the position is reached the drive will stop. If the Find Home is removed before the homing is complete, the drive will begin running the position routine without the proper home. In this case Home will not be reset and the position will be in relation to the power up position.

Encoder and Position Feedback

d376 [Speed Feedback] indicates the measured speed feedback or the calculated speed feedback when no feedback device is selected. Parameter d376 [Speed Feedback] is the number value to the left of the decimal (whole number) and d377 [Speed Feedback F] is the value to the right of the decimal (the portion less than 1).

d378 [Encoder Speed] indicates the measured speed of the feedback device. This is useful if the encoder is not used for motor speed control. However, the encoder must be used for some purpose in order for d378 [Encoder Speed] to indicate a value. Parameter d378 [Encoder Speed] is the number value to the left of the decimal (whole number) and d379 [Encoder Speed F] is the number to the right of the decimal (the portion less than 1).

d388, d389 [Units Traveled x] indicate the current position of the system in terms of units away from Home. Parameter d388 [Units Traveled H] is the number value to the left of the decimal (whole number) and d389 [Units Traveled L] is the number to the right of the decimal (the portion less than 1).

d387 [Position Status] indicates the status of the positioning functions. The indication bits are:

Bit 0 "Dir Positive" indicates the current direction the drive has moved from Home.

Bit 1 "At Position" indicates whether the drive is at its commanded position. If the drive is within A564 [Encoder Pos Tol] of the commanded position, this bit will be active.

Bit 2 "At Home" indicates whether the drive is at Home. If the drive is within A564 [Encoder Pos Tol] of "Home", this bit will be active.

Bit 3 "Drive Homed" indicates whether the drive has been homed since power-up. This bit will be active once the drive has been homed either manually or automatically. It will remain active until the next power down.

Use Over Communications

If 8 steps are not adequate for the application or if dynamic program changes are required, many of the positioning functions can be controlled through an active communication network. The following parameters will allow this control.

C121 [Comm Write Mode]
Repeated writes to parameters over a communication network can cause damage to the drive EEPROM. This parameter allows the drive to accept parameter changes without writing to the EEPROM.

IMPORTANT Parameter values set prior to setting 1 "RAM only" are saved in RAM.

C122 [Cmd Stat Select]
Selects velocity-specific or position/fibers-specific Command and Status Word bit definitions for use over a communication network.

A560 [Enh Control Word]
This parameter allows many of the positioning functions to be completed through parameter control using an explicit message. This allows the operation over communications instead of with hardware inputs. The bits have the same functions as the digital input options of the same name. Options relating to positioning are:

Bit 0 "Home Limit" indicates the drive is at the home position.

Bit 1 "Find Home" causes the drive to find home at the next start command. Deactivate this bit after completing the homing routine.

Bit 2 "Hold Step" overrides other inputs and causes the drive to remain at its current step (running at zero speed once it reaches its position) until released.

Bit 3 "Pos Redefine" resets the home position to the current position of the machine. Deactivate this bit after completing the homing routine.

Bit 4 "Sync Enable" holds the existing frequency when A571 [Sync Time] is set to enable speed synchronization. When this bit is deactivated the drive will accelerate to the new commanded frequency based on A571 [Sync Time].

Bit 5 "Traverse Dis" disables the traverse function when this bit is active.

Bit 6 "Logic In 1" provides an identical function and is logically ORed with setting 24 "Logic In 1" for t062, t063, t065...t068 [DigIn TermBlk xx]. It can be used to move through the Step Logic functions (speed or position) using comms control without requiring actual digital input transitions.

Bit 7 "Logic In 2" provides an identical function and is logically ORed with setting 25 "Logic In 2" for t062, t063, t065...t068 [DigIn TermBlk xx]. It can be used to move through the Step Logic functions (speed or position) using comms control without requiring actual digital input transitions.

L200...L214 [Step Units x]
All of the position steps can be written to while the drive is running. The changes will take place at the next move. For example, if step 0 is over-written while the drive is moving to step 0, the drive will move to the previous commanded position at step 0. The next time the drive is commanded to return to step 0 it will proceed to the new position. One possible use of this capability is when an application requires full control of the movement by a controller external to the drive. The Step Logic program might be written to jump from step 0 back to step 0 when Input 1 is active. The controller could write any desired position to step 0 and then toggle the input 1 bit of A560 [Enh Control Word] to cause the drive to move to the new position. This allows almost unlimited flexibility and can be used with absolute or incremental moves.

Setup Notes

The RA computer tool (Connected Components Workbench) can make setup of the positioning functions much easier. Refer to the latest versions for additional tools or wizards which can aid in the setup.

PID Set Up

PID Loop

The PowerFlex 520-series drive features built-in PID (proportional, integral, derivative) control loops. The PID loop is used to maintain a process feedback (such as pressure, flow or tension) at a desired set point. The PID loop works by subtracting the PID feedback from a reference and generating an error value. The PID loop reacts to the error, based on the PID Gains, and outputs a frequency to try to reduce the error value to 0.

To enable the PID loop, P047, P049 or P051 [Speed Referencex] must be set to 11 "PID1 Output" or 12 "PID2 Output", and the corresponding speed reference activated.

IMPORTANT PowerFlex 523 has one PID control loop.

PowerFlex 525 has two PID control loops, of which only one can be in use at any time.

Exclusive Control and Trim Control are two basic configurations where the PID loop may be used.

Exclusive Control

In Exclusive Control, the Speed Reference becomes 0, and the PID Output becomes the entire Freq Command. Exclusive Control is used when A458 or A470 [PID x Trim Sel] is set to option 0. This configuration does not require a master reference, only a desired set point, such as a flow rate for a pump.

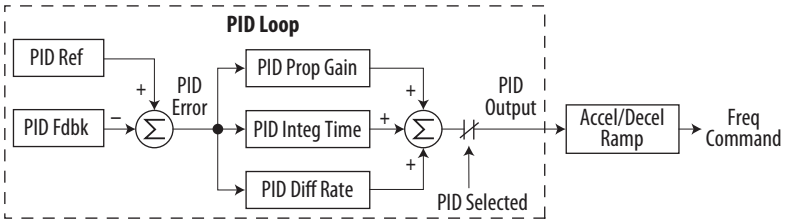

Example

- In a pumping application, the PID Reference equals the Desired System Pressure set point.
- The Pressure Transducer signal provides PID Feedback to the drive. Fluctuations in actual system pressure, due to changes in flow, result in a PID Error value.
- The drive output frequency increases or decreases to vary motor shaft speed to correct for the PID Error value.

- The Desired System Pressure set point is maintained as valves in the system are opened and closed causing changes in flow.
- When the PID Control Loop is disabled, the Commanded Speed is the Ramped Speed Reference.

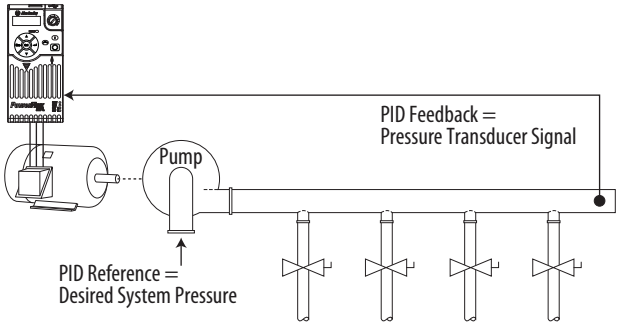

Trim Control

In Trim Control, the PID Output is added to the Speed Reference. In Trim mode, the output of the PID loop bypasses the accel/decel ramp as shown. Trim Control is used when A458 or A470 [PID x Trim Sel] is set to any option other than 0.

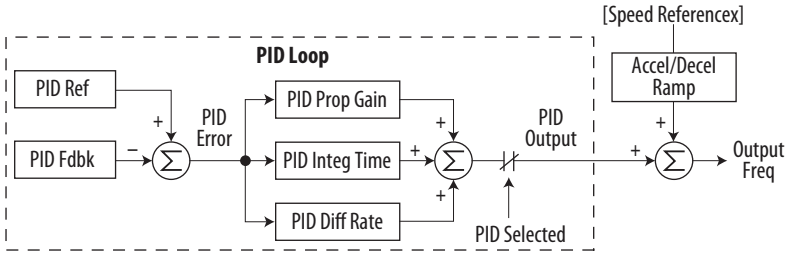

Example

- In a winder application, the PID Reference equals the Equilibrium set point.
- The Dancer Pot signal provides PID Feedback to the drive. Fluctuations in tension result in a PID Error value.
- The Master Speed Reference sets the wind/unwind speed.

- As tension increases or decreases during winding, the Speed Reference is trimmed to compensate. Tension is maintained near the Equilibrium set point.

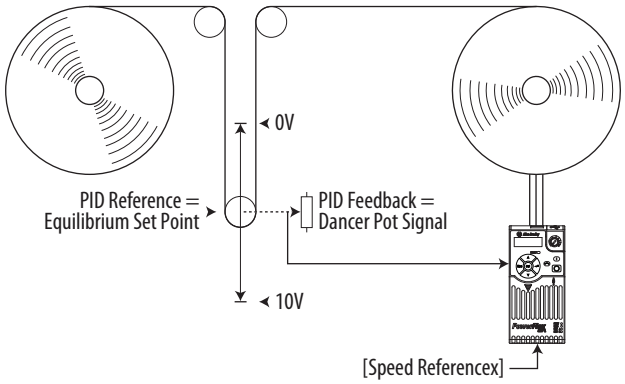

PID Reference and Feedback

PID mode is enabled by setting P047, P049 or P051 [Speed Referencex] to 11 "PID1 Output" or 12 "PID2 Output", and activating the corresponding speed reference.

IMPORTANT PowerFlex 523 has one PID control loop.

PowerFlex 525 has two PID control loops, of which only one can be in use at any time.

If A459 or A471 [PID x Ref Sel] is not set to 0 "PID Setpoint", PID can still be disabled by select programmable digital input options (parameters t062, t063, t065...t068 [DigIn TermBlk xx]) such as "Purge".

A459, A471 [PID x Ref Sel] Options

Options	Description
0 "PID Setpoint"	A464 or A476 [PID x Setpoint] will be used to set the value of the PID Reference.
1 "Drive Pot"	The drive potentiometer will be used to set the value of the PID Reference.
2 "Keypad Freq"	The drive keypad will be used to set the value of the PID Reference.
2 "Serial/DSI"	The reference word from the Serial/DSI communication network becomes the PID Reference.
4 "Network Opt"	The reference word from a communication network option becomes the PID Reference.
5 "0-10V Input"	Selects the 0-10V Input. Note that the PID will not function with a bipolar analog input. It will ignore any negative voltages and treat them like a zero.
6 "4-20mA Input"	Selects the 4-20 mA Input.
7 "Preset Freq"	A410...A425 [Preset Freq x] will be used as an input for the PID Reference.
8 "AnIgIn Multi"(1)	The product of the 0-10V and 4-20mA Inputs will be used as an input for the PID Reference.
9 "MOP Freq"	A427 [MOP Freq] will be used as an input for the PID Reference.
10 "Pulse Input"	Pulse train will be used as an input for the PID Reference.
11 "Step Logic"(1)	Step Logic will be used as an input for the PID Reference.
12 "Encoder"(1)	Encoder will be used as an input for the PID Reference.
13 "Ethernet/IP"(1)	The reference word from the Ethernet/IP communication network becomes the PID Reference.

(1) Setting is specific to PowerFlex 525 drives only.

A460 and A472 [PID x Fdback Sel] are used to select the source of the PID feedback.

A460, A472 [PID x Fdback Sel] Options

Options	Description
0 "0-10V Input"	Selects the 0-10V Input (default setting). Note that the PID will not function with a bipolar analog input. It will ignore any negative voltages and treat them like a zero.
1 "4-20mA Input"	Selects the 4-20 mA Input.
2 "Serial/DSI"	Serial/DSI will be used as an input for the PID Feedback.
3 "Network Opt"	The reference word from a communication network option becomes the PID Reference.
4 "Pulse Input"	Pulse train will be used as an input for the PID Feedback.
5 "Encoder"(1)	Encoder will be used as an input for the PID Feedback.
6 "Ethernet/IP"(1)	Ethernet/IP will be used as an input for the PID Feedback.

(1) Setting is specific to PowerFlex 525 drives only.

Analog PID Reference Signals

Parameters t091 [Anlg In 0-10V Lo] and t092 [Anlg In 0-10V Hi] are used to scale or invert an analog PID Reference or PID Feedback.

Scale Function

For a 0...5V signal, the following parameter settings are used so that a 0V signal = 0% PID Reference and a 5V signal = 100% PID Reference.

- t091 [Anlg In 0-10V Lo] = 0.0%
- t092 [Anlg In 0-10V Hi] = 50.0%
- A459 [PID 1 Ref Sel] = 5 "0-10V Input"

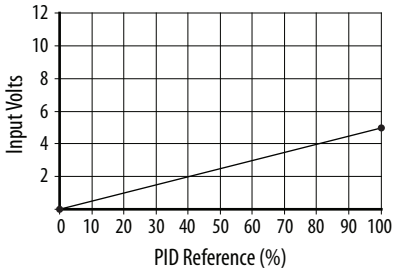

Invert Function

For a 4-20 mA signal, the following parameter settings are used so that a 20 mA signal = 0% PID Reference and a 4 mA signal = 100% PID Reference.

- t095 [Anlg In4-20mA Lo] = 100.0%
- t096 [Anlg In4-20mA Hi] = 0.0%

- A459 [PID 1 Ref Sel] = 6 “4-20mA Input”

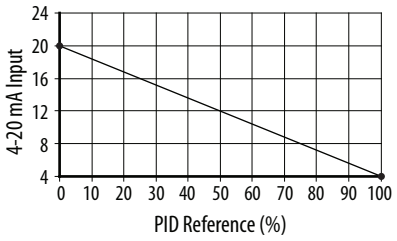

PID Deadband

Parameters A465 and A477 [PID x Deadband] are used to set a range, in percent, of the PID Reference that the drive will ignore.

Example

- A465 [PID 1 Deadband] = 5.0%
- The PID Reference is 25.0%
- The PID Regulator will not act on a PID Error that falls between 20.0 and 30.0%

PID Preload

The value set in A466 or A478 [PID x Preload], in Hz, will be pre-loaded into the integral component of the PID at any start or enable. This will cause the drive’s frequency command to initially jump to that preload frequency, and the PID loop starts regulating from there.

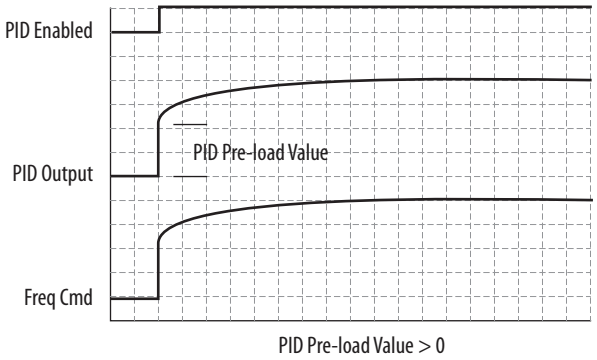

PID Limits

A456 and A468 [PID x Trim Hi] and A457 and A469 [PID x Trim Lo] are used to limit the PID output and are only used in trim mode. [PID x Trim Hi] sets the maximum frequency for the PID output in trim mode. [PID x Trim Lo] sets the reverse frequency limit for the PID output in trim mode. Note that when the

PID reaches the Hi or Lo limit, the PID regulator stops integrating so that windup does not occur.

PID Gains

The proportional, integral, and differential gains make up the PID regulator.

- A461 and A473 [PID x Prop Gain]
  The proportional gain (unitless) affects how the regulator reacts to the magnitude of the error. The proportional component of the PID regulator outputs a speed command proportional to the PID error. For example, a proportional gain of 1 would output 100% of max frequency when the PID error is 100% of the analog input range. A larger value for [PID x Prop Gain] makes the proportional component more responsive, and a smaller value makes it less responsive. Setting [PID x Prop Gain] to 0.00 disables the proportional component of the PID loop.
- A462 and A474 [PID x Integ Time]
  The integral gain (units of seconds) affects how the regulator reacts to error over time and is used to get rid of steady state error. For example, with an integral gain of 2 seconds, the output of the integral gain component would integrate up to 100% of max frequency when the PID error is 100% for 2 seconds. A larger value for [PID x Integ Time] makes the integral component less responsive, and a smaller value makes it more responsive. Setting [PID x Integ Time] to 0.0 disables the integral component of the PID loop.
- A463 and A475 [PID x Diff Rate]
  The Differential gain (units of 1/seconds) affects the rate of change of the PID output. The differential gain is multiplied by the difference between the previous error and current error. Thus, with a large error the D has a large effect and with a small error the D has less of an effect. This parameter is scaled so that when it is set to 1.00, the process response is 0.1% of P044 [Maximum Freq] when the process error is changing at 1% / second. A larger value for [PID x Diff Rate] makes the differential term have more of an effect and a small value makes it have less of an effect. In many applications, the D gain is not needed. Setting [PID x Diff Rate] to 0.00 (factory default) disables the differential component of the PID loop.

Guidelines for Adjusting the PID Gains

1. Adjust the proportional gain. During this step it may be desirable to disable the integral gain and differential gain by setting them to 0. After a step change in the PID Feedback:
   - If the response is too slow increase A461 or A473 [PID x Prop Gain].
   - If the response is too quick and/or unstable (see Unstable Response on page 233), decrease A461 or A473 [PID x Prop Gain].
   - Typically, A461 or A473 [PID x Prop Gain] is set to some value below the point where the PID begins to go unstable.

2. Adjust the integral gain (leave the proportional gain set as in Step 1). After a step change in the PID Feedback:
   - If the response is too slow (see Slow Response – Over Damped on page 233), or the PID Feedback does not become equal to the PID Reference, decrease A462 or A474 [PID x Integ Time].
   - If there is a lot of oscillation in the PID Feedback before settling out (see Oscillation – Under Damped on page 233), increase A462 or A474 [PID x Integ Time].
3. At this point, the differential gain may not be needed. However, if after determining the values for A461 or A473 [PID x Prop Gain] and A462 or A474 [PID x Integ Time]:
   - Response is still slow after a step change, increase A463 or A475 [PID x Diff Rate].
   - Response is still unstable, decrease A463 or A475 [PID x Diff Rate].

The following figures show some typical responses of the PID loop at different points during adjustment of the PID Gains.

Unstable Response

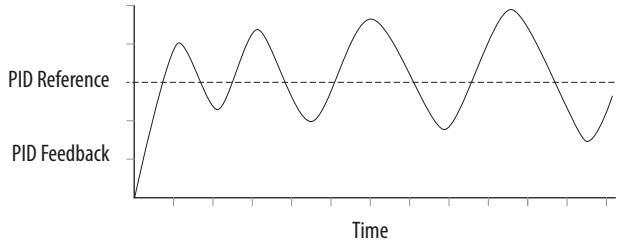

Slow Response – Over Damped

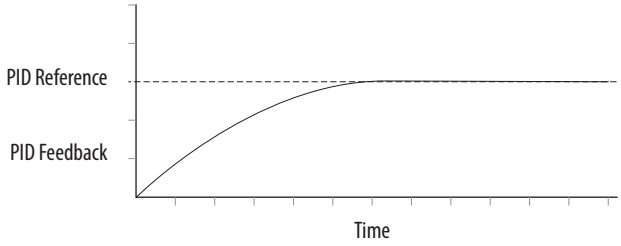

Oscillation – Under Damped

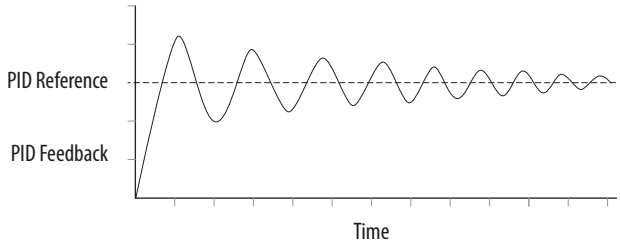

Good Response – Critically Damped

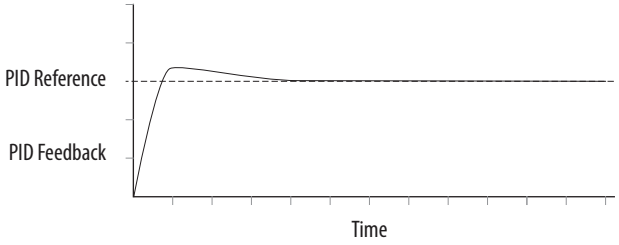

Safe-Torque-Off Function

The PowerFlex 525 Safe-Torque-Off function, when used with other safety components, helps provide protection according to EN ISO 13849 and EN62061 for safe-off and protection against restart. The PowerFlex 525 Safe-Torque-Off function is just one component in a safety control system. Components in the system must be chosen and applied appropriately to achieve the desired level of operator safeguarding.

For information on...	See page...
PowerFlex 525 Safe-Torque-Off Overview	235
EC Type Examination Certification	236
EMC Instructions	236
Using PowerFlex 525 Safe-Torque-Off	236
Enabling PowerFlex 525 Safe-Torque-Off	239
Wiring	239
Verify Operation	240
PowerFlex 525 Safe-Torque-Off Operation	239
Connection Examples	241
PowerFlex 525 Certification for Safe-Torque-Off	245

IMPORTANT The Safe-Torque-Off function covered in this chapter is specific to PowerFlex 525 drives only.

PowerFlex 525 Safe-Torque-Off Overview

The PowerFlex 525 Safe-Torque-Off function:

- Provides the Safe-Torque-Off (STO) function defined in EN 61800-5-2.
- Blocks gate-firing signals from reaching the Insulated Gate Bipolar Transistor (IGBT) output devices of the drive. This prevents the IGBTs from switching in the sequence necessary to generate torque in the motor.
- Can be used in combination with other safety devices to fulfill the requirements of a system “safe torque off” function which satisfies Category 3 / PL (d) according to EN ISO 13849-1 and SIL CL2 according to EN 62061, IEC 61508, and EN 61800-5-2.

IMPORTANT The function is suitable for performing mechanical work on the drive system or affected area of a machine only. It does not provide electrical safety.

ATTENTION: Electric Shock Hazard. Verify that all sources of AC and DC power are de-energized and locked out or tagged out in accordance with the requirements of ANSI/NFPA 70E, Part II.

To avoid an electric shock hazard, verify that the voltage on the bus capacitors has discharged before performing any work on the drive. Measure the DC bus voltage at the +DC and -DC terminals or test points (refer to your drive's User Manual for locations). The voltage must be zero.

In safe-off mode, hazardous voltages may still be present at the motor. To avoid an electric shock hazard, disconnect power to the motor and verify that the voltage is zero before performing any work on the motor.

EC Type Examination Certification

TÜV Rheinland has certified the PowerFlex 525 Safe-Torque-Off function compliant with the requirements for machines defined in Annex I of the EC Directive 2006/42/EC, and that it complies with the requirements of the relevant standards listed below:

- EN ISO 13849-1 Safety of machinery – Safety related parts of control systems – Part 1: General principles for design.
  (PowerFlex 525 STO achieves Category 3 / PL(d))
- EN 61800-5-2 Adjustable speed electrical power drive systems – Part 5-2 Safety requirements – Functional.
  (PowerFlex 525 STO achieves SIL CL 2)
- EN 62061 Safety of machinery – Functional safety of safety-related electrical, electronic and programmable electronic control systems.
- IEC 61508 Part 1-7 Functional safety of electrical/electronic/programmable electronic safety-related systems – Parts 1-7.

TÜV also certifies that the PowerFlex 525 STO may be used in applications up to Category 3/ PL(d) according to EN ISO 13849-1 and SIL 2 according to EN 62061 / EN 61800-5-2 / IEC 61508.

The TÜV Rheinland certificate may be found at:
www.rockwellautomation.com/products/certification/.

EMC Instructions

PowerFlex 525 Safe-Torque-Off function requires CE Conformity as described on page 52.

Using PowerFlex 525 Safe-Torque-Off

The PowerFlex 525 Safe-Torque-Off function is intended to be part of the safety related control system of a machine. Before use, a risk assessment should be performed that compares the PowerFlex 525 Safe-Torque-Off function specifications and all foreseeable operational and environmental characteristics of the machine to which it is to be fitted.

A safety analysis of the machine section controlled by the drive is required to determine how often the safety function should be tested for proper operation during the life of the machine.

ATTENTION: The following information is merely a guide for proper installation. Rockwell Automation cannot assume responsibility for the compliance or the noncompliance to any code, national, local or otherwise for the proper installation of this equipment. A hazard of personal injury and/or equipment damage exists if codes are ignored during installation.

ATTENTION: In safe-off mode, hazardous voltages may still be present at the motor. To avoid an electric shock hazard, disconnect power to the motor and verify that the voltage is zero before performing any work on the motor.

ATTENTION: In the event of the failure of two output IGBTs in the drive, when the PowerFlex 525 Safe-Torque-Off has controlled the drive outputs to the off state, the drive may provide energy for up to 180° of rotation in a 2-pole motor before torque production in the motor ceases.

Safety Concept

The PowerFlex 525 Safe-Torque-Off function is suitable for use in safety applications up to and including Category 3 / PL(d) according to EN ISO 13849-1 and SIL 2 according to EN 62061 / EN 61800-5-2 / IEC 61508.

In addition, the PowerFlex 525 STO may be used together with other components in a safety application to achieve an overall Category 3 / PL(e) according to EN ISO 13849-1 and SIL 3 according to EN 62061 and IEC 61508. This is illustrated in Example 3 in this appendix.

Safety requirements are based on the standards current at the time of certification.

The PowerFlex 525 Safe-Torque-Off function is intended for use in safety-related applications where the de-energized state is considered to be the safe state. All of the examples in this manual are based on achieving de-energization as the safe state for typical Machine Safety and Emergency Shutdown (ESD) systems.

Important Safety Considerations

The system user is responsible for:

- the set-up, safety rating, and validation of any sensors or actuators connected to the system.
- completing a system-level risk assessment and reassessing the system any time a change is made.
- certification of the system to the desired safety performance level.
- project management and proof testing.
- programming the application software and the safety option configurations in accordance with the information in this manual.

- access control to the system, including password handling.
- analyzing all configuration settings and choosing the proper setting to achieve the required safety rating.

IMPORTANT When applying Functional Safety, restrict access to qualified, authorized personnel who are trained and experienced.

ATTENTION: When designing your system, consider how personnel will exit the machine if the door locks while they are in the machine. Additional safeguarding devices may be required for your specific application.

Functional Proof Test

The PFD and PFH values provided in the table below are contingent upon the Proof Test Interval (PTI). Before the end of the PTI specified in the table below, a proof test of the STO safety function must be performed in order for the specified PFD and PFH values to remain valid.

PFD and PFH Data

PFD and PFH calculations are based on the equations from Part 6 of EN 61508.

This table provides data for a 20-year proof test interval and demonstrates the worst-case effect of various configuration changes on the data.

PFD and PFH for 20-year Proof Test Interval

Attribute	Value
PFD	6.62E-05 (MTTF = 3593 years)
PFH_D	8.13E-10
SFF	83%
DC	62.5%
CAT	3
HFT	1 (1oo2)
PTI	20 YEARS
Hardware Type	Type A

Safety Reaction Time

The safety reaction time is the amount of time from a safety-related event as input to the system until the system is in the Safe State.

The safety reaction time from an input signal condition that triggers a safe stop, to the initiation of safe-torque-off, is 100 ms (maximum).

Enabling PowerFlex 525 Safe-Torque-Off

1. Remove all power to the drive.

> **ATTENTION:** To avoid an electric shock hazard, verify that the voltage on the bus capacitors has discharged before performing any work on the drive. Measure the DC bus voltage at the +DC and -DC terminals or test points (refer to your drive's user manual for the location of the terminals). The voltage must be zero.

2. Loosen the screw of terminals Safety 1, Safety 2 and Safety +24V (S1, S2, S+) on the control I/O terminal block.
3. Remove the protective jumper.

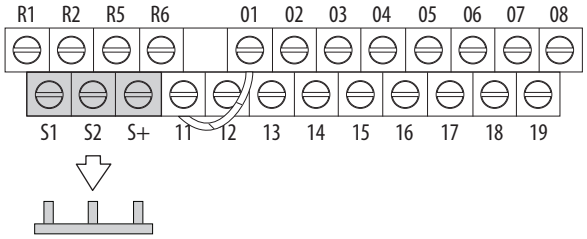

4. Safe-Torque-Off function is now enabled and the terminals are ready to function as safety inputs.

Wiring

Important points to remember about wiring:

- Always use copper wire.
- Wire with an insulation rating of 600V or greater is recommended.
- Control wires should be separated from power wires by at least 0.3 m (1 ft).

Recommended Wire

Type	Wire Type(1)	Description	Min. Insulation Rating
Shielded	Multi-conductor shielded cable such as Belden 8770 (or equiv.)	0.750 mm^2 (18 AWG), 3 conductor, shielded.	300V, 60 °C (140 °F)

(1) Recommendations are for 50 °C ambient temperature.
75 °C wire must be used for 60 °C ambient temperature.
90 °C wire must be used for 70 °C ambient temperature.

See I/O Wiring on page 36 for wiring recommendations and Control I/O Terminal Designations on page 43 for terminal descriptions.

If Safety Inputs S1 and S2 are powered by an external +24V source, apply it only in SELV system, PELV system or low voltage Class 2 circuit.

PowerFlex 525 Safe-Torque-Off Operation

The PowerFlex 525 Safe-Torque-Off function disables the drive's output IGBT's by breaking the link with the drive microcontroller. When used in combination with a safety input device, the system satisfies the requirements of EN ISO 13849 and EN62061 for safe-torque-off and helps protect against restart.

Under normal drive operation, both safety inputs (Safety 1 and Safety 2) are energized, and the drive is able to run. If either input is de-energized, the gate control circuit becomes disabled. To meet EN ISO 13849 operation, both safety channels must be de-energized. Refer to the following examples for more information.

IMPORTANT By itself, the Safe-Torque-Off function initiates a coast to stop action. Additional protective measures will need to be applied when an application requires a change to the stop action.

Verify Operation

Test the safety function for proper operation after the initial setup of the PowerFlex 525 Safe-Torque-Off function. Retest the safety function at the intervals determined by the safety analysis described on page 236.

Verify that both safety channels are functioning according to the table below.

Channel Operation and Verification

Safety Function Status	**Drive In Safe State**	**Drive In Safe State**	**Drive In Safe State**	**Drive Able To Run**
Drive Status	**Configured by t105 [Safety Open En]**	**Fault F111 (Safety Hardware)**	**Fault F111 (Safety Hardware)**	**Ready/Run**
		Safety Channel Operation		
Safety Input S1	No Power Applied	Power Applied	No Power Applied	Power Applied
Safety Input S2	No Power Applied	No Power Applied	Power Applied	Power Applied

IMPORTANT If an external fault is present on the wiring or circuitry controlling the Safety 1 or Safety 2 inputs for a period of time, the Safe-Torque-Off function may not detect this condition. When the external fault condition is removed the Safe-Torque-Off function will allow an enable condition. Fault in the external wiring shall either be detected by external logic, or excluded (wiring must be protected by cable ducting or armoring), according to EN ISO 13849-2.

Discrepancy Time of the Safety Inputs

For example, if S1 is disabled and S2 did not follow after the discrepancy time, fault F111 “Safety Hardware” will occur. However, if S1 is disable and S2 follows before the discrepancy time, fault F059 “Safety Open” will occur.

The discrepancy time is one second for PowerFlex 525 FRN 5.xxx and later. The discrepancy time is 10 milliseconds for PowerFlex 525 FRN 4.xxx and earlier.

Connection Examples

Example 1 – Safe-Torque-Off Connection with Coast-to-Stop Action, SIL 2/PL d

Stop Category 0 – Coast

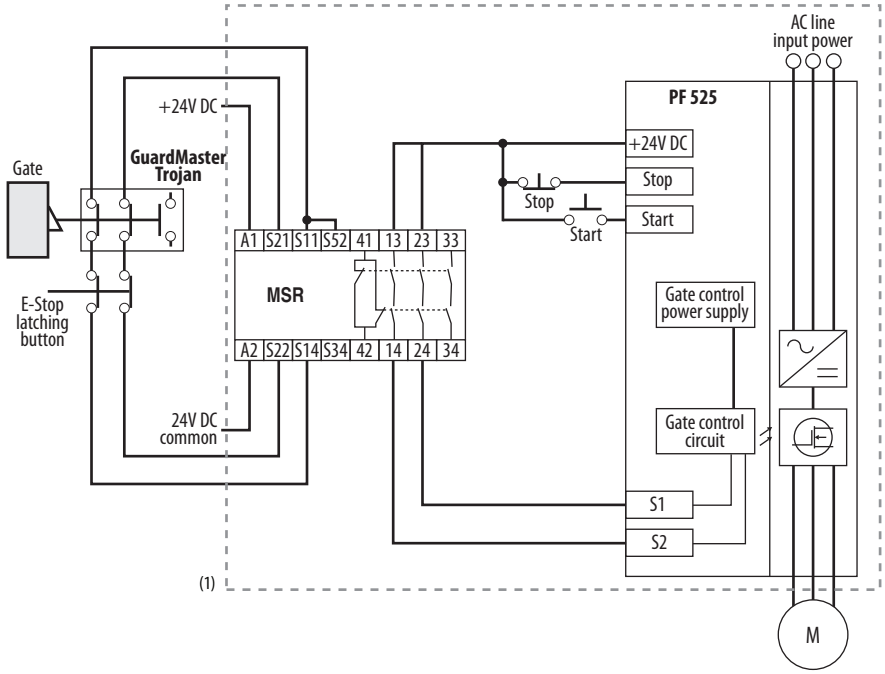

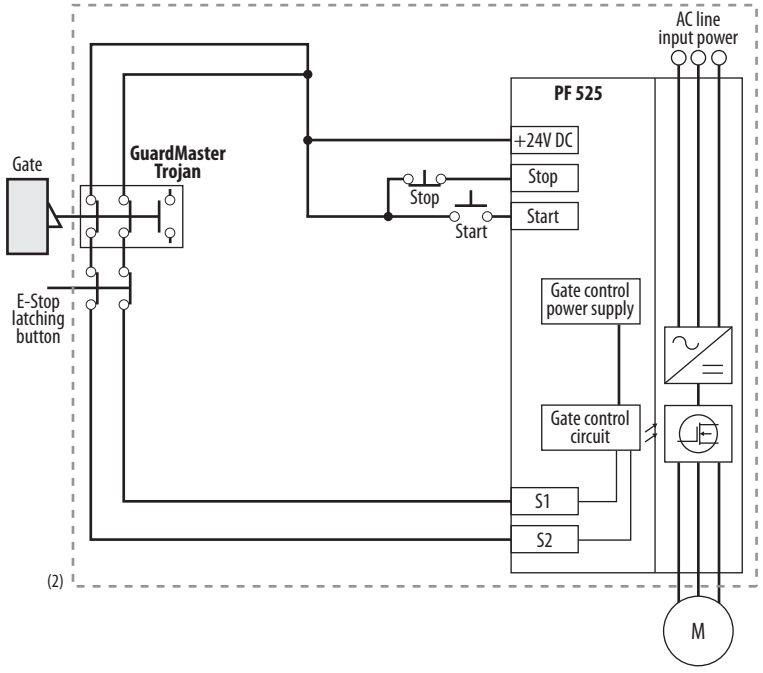

(1) Enclosure Recommended. Note: External wiring failure modes must be considered as described in EN ISO 13849-2. Enclosure or other measure to exclude these failure modes should be used.

(2) In some situations, a safety relay is not required if both the switch and PowerFlex 525 are installed in the same enclosure.

Stop Category 0 – Coast with Two PowerFlex 525 Drives

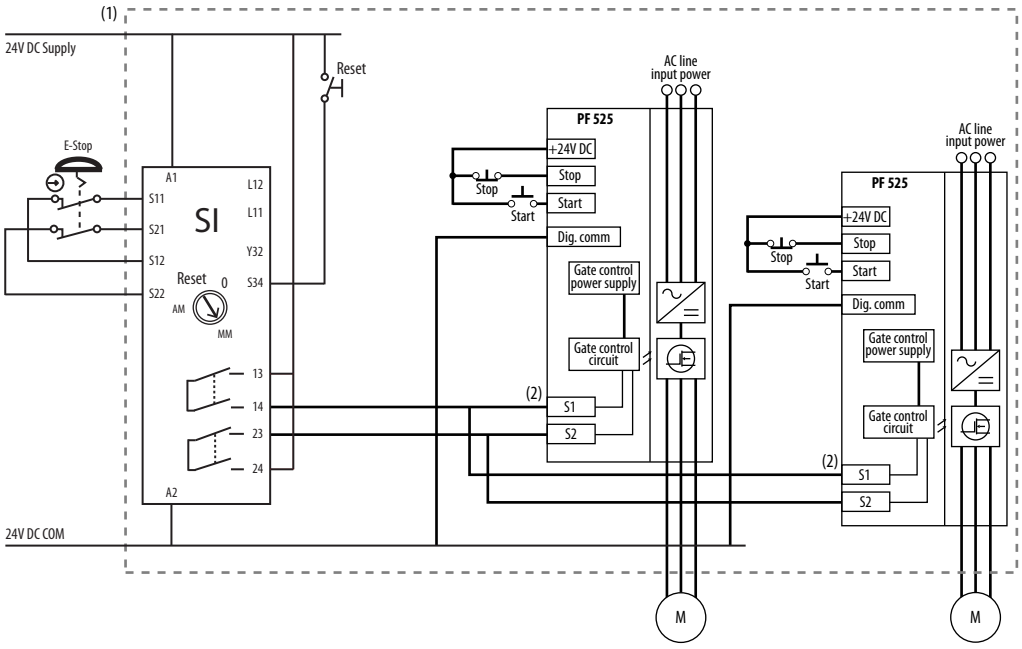

(1) Enclosure Recommended. Note: External wiring failure modes must be considered as described in EN ISO 13849-2. Enclosure or other measure to exclude these failure modes should be used.
(2) Each safety input draws 6 mA from the supply.

Circuit Status

Circuit shown with guard door closed and system ready for normal drive operation.

Operating Principle

This is a dual channel system with monitoring of the Safe-Torque-Off circuit and drive. Opening the guard door will switch the input circuits (S13-S14 & S21-S22) to the Minotaur monitoring safety relay unit. The output circuits (13-14 & 23-24) will cause the Safe-Torque-Off Enable circuit to trip and the motor will coast to stop. To restart the drive, the Minotaur safety relay must first be reset followed by a valid start command to the drive.

Fault Detection

A single fault detected on the Minotaur safety input circuits will result in the lock-out of the system at the next operation and will not cause loss of the safety function.

A single fault detected on the PowerFlex 525 safety enable redundant inputs will result in the lock-out of the drive and will not cause loss of the safety function.

Example 2 – Safe-Torque-Off Connection with Controlled Stop Action, SIL 2/PL d

Stop Category 1 – Controlled

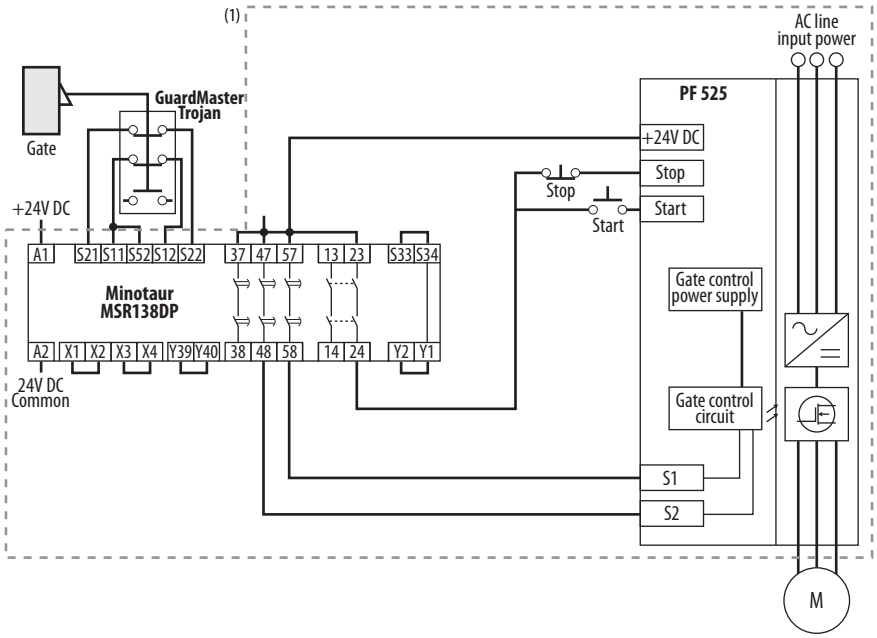

(1) Enclosure Recommended. External wiring failure modes must be considered as described in EN ISO 13849-2. Enclosure or other measure to exclude these failure modes should be used.

Circuit Status

Circuit shown with guard door closed and system ready for normal drive operation.

Operating Principle

This is a dual channel system with monitoring of the Safe-Torque-Off circuit and drive. Opening the guard door will switch the input circuits (S11-S12 & S21-S22) to the Minotaur monitoring safety relay unit. The output circuits (13-14) will issue a Stop command to the drive and cause a controlled deceleration. After the programmed delay, the timed output circuits (47-48 & 57-58) will cause the Safe-Torque-Off Enable circuit to trip. If the motor is rotating when the trip occurs, it will coast to stop. To restart the drive, the Minotaur safety relay must first be reset followed by a valid start command to the drive.

Fault Detection

A single fault detected on the Minotaur safety input circuits will result in the lock-out of the system at the next operation and will not cause loss of the safety function.

A single fault detected on the PowerFlex 525 safety enable redundant inputs will result in the lock-out of the drive and will not cause the loss of the safety function.

Example 3 – Safe-Torque-Off Connection with Coast-to-Stop Action Using External +24V supply, SIL 3/PL e

Stop Category 0 – Coast

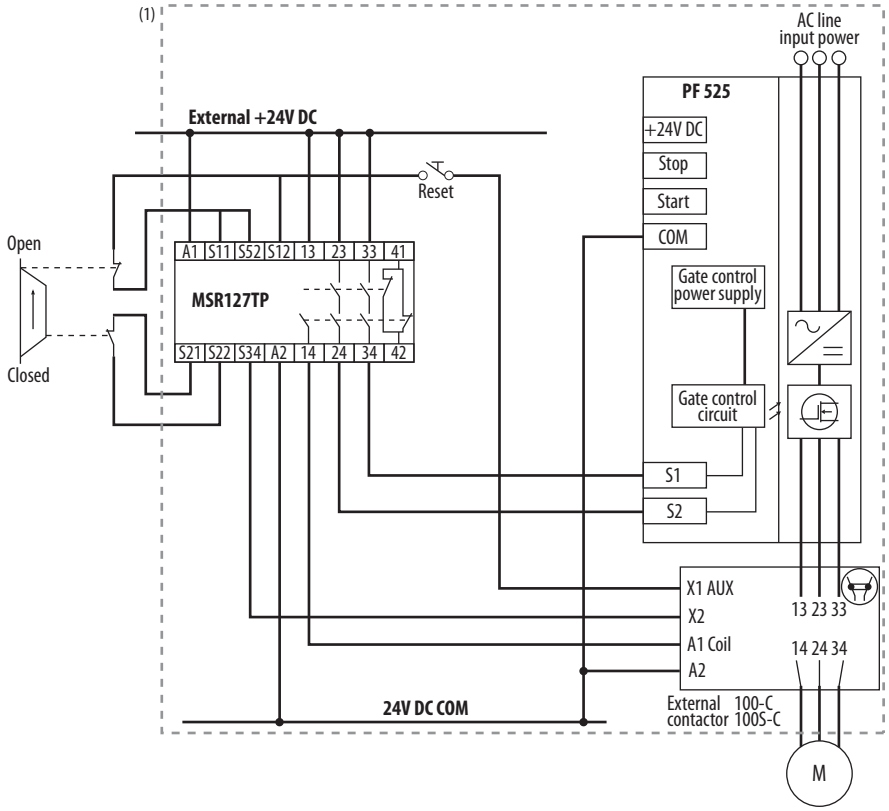

(1) Enclosure Recommended. External wiring failure modes must be considered as described in EN ISO 13849-2. Enclosure or other measure to exclude these failure modes should be used.

Circuit Status

Circuit shown with guard door closed and system ready for normal drive operation.

Operating Principle

This is a dual channel system with monitoring of the Safe-Torque-Off circuit and drive. Opening the guard door will switch the input circuits (S11-S12 & S21-S22) to the Minotaur monitoring safety relay unit. The output circuits (13-14 & 23-24 & 33-34) will cause the output contact and Safe-Torque-Off Enable circuit to trip and the motor will coast to stop. To restart the drive, the Minotaur safety relay must first be reset followed by a valid start command to the drive.

Fault Detection

A single fault detected on the Minotaur safety input circuits will result in the lock-out of the system at the next operation and will not cause loss of the safety function.

PowerFlex 525 Certification for Safe-Torque-Off

Certification information can be viewed at http://www.rockwellautomation.com/global/certification/

Notes:

EtherNet/IP

This section contains only basic information to setup an EtherNet/IP connection with your PowerFlex 520-series drive. For comprehensive information about EtherNet/IP (single and dual-port) and how to use it, see the following publications:

- PowerFlex 525 Embedded EtherNet/IP Adapter User Manual, publication 520COM-UM001.
- PowerFlex 25-COMM-E2P Dual-Port EtherNet/IP Adapter User Manual, publication 520COM-UM003.

ATTENTION: PowerFlex 523 drives support only the 25-COMM-E2P dual-port EtherNet/IP adapter. PowerFlex 525 drives support both the embedded EtherNet/IP adapter and the 25-COMM-E2P dual-port EtherNet/IP adapter.

It is recommended to use Allen-Bradley Ethernet RJ45 cables, shielded or unshielded (catalog number 1585J-M8xBJM-x), for connecting your PowerFlex 520-series drive to an EtherNet/IP network.

Establishing A Connection With EtherNet/IP

There are three methods for configuring the Ethernet IP address:

- **BootP Server** – Use BootP if you prefer to control the IP addresses of devices using a server. The IP address, subnet mask, and gateway addresses will then be provided by the BootP server.
- **Adapter Parameters** – Use adapter parameters when you want more flexibility in setting up the IP address, or need to communicate outside the control network using a gateway. The IP address, subnet mask, and gateway addresses will then come from the adapter parameters you set.
- **DHCP** (**Dynamic Host Configuration Protocol**) (only with PowerFlex 25-COMM-E2P adapter) – Use DHCP when you want additional flexibility and ease-of-use compared to BOOTP in configuring the IP address, subnet mask, and gateway address for the adapter using a DHCP server.

IMPORTANT If you are setting your network addresses manually using parameters, you must set the appropriate drive or 25-COMM-E2P adapter parameter value to 1 "Parameters". See the respective EtherNet/IP adapter user manual for more information.

IMPORTANT Regardless of the method used to set the adapter IP address, each node on the EtherNet/IP network must have a unique IP address. To change an IP address, you must set the new value and then remove and reapply power to (or reset) the adapter.

Ground Connections for EtherNet/IP Networks

Connect terminal C1 to a clean ground when using a network with a star topology. It is acceptable to ground both C1 and C2 terminals.

PowerFlex 525 Embedded Ethernet/IP Adapter

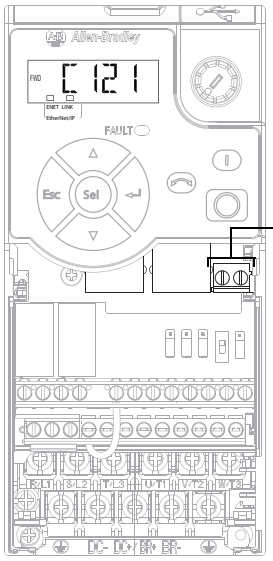

Terminal	Description
C1	This terminal is tied to the RJ-45 port shield. Tie this terminal to a clean ground in order to improve noise immunity when using external communication peripherals.
C2	This is the signal common for the communication signals.

Connect terminal CS1 or CS2 to a clean ground when using a network with a ring topology.

PowerFlex 25-COMM-E2P Dual-Port EtherNet/IP Adapter

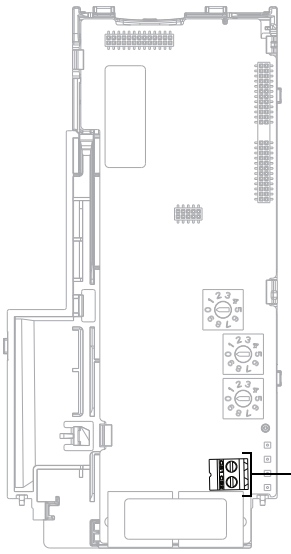

Terminal	Description
CS1/CS2	Provides a clean ground for the communication bus cable shields. CS1 or CS2 should be connected to a clean ground or PE ground on the drive.

Control Diagrams

This chapter contains various diagrams on the PowerFlex 520-series drive functions and behaviors.

Induction Motor Tuning Diagrams

[Speed Reg Sel] Diagrams For Motor Tuning

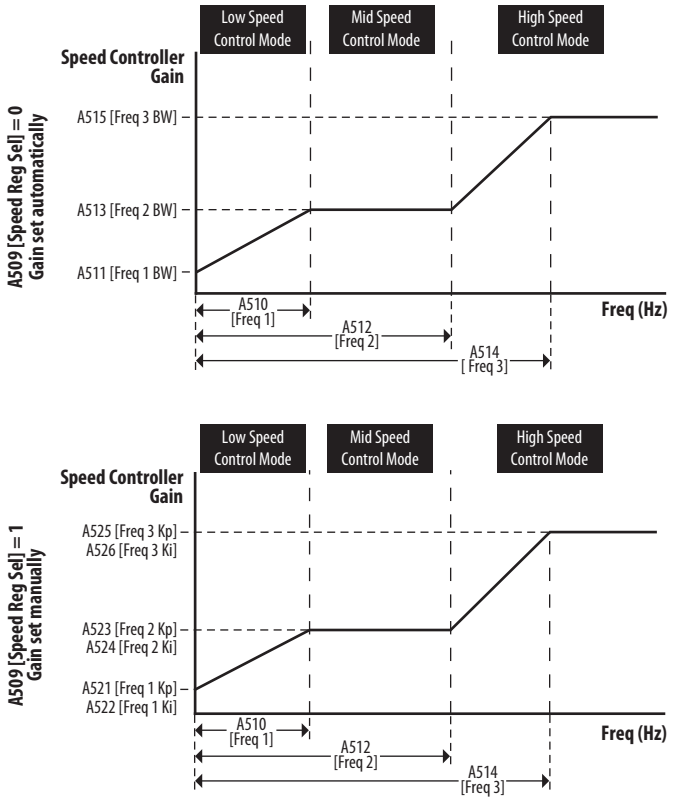

Adjusting Speed Control Parameters

These settings show how to adjust the speed control for motor tuning.

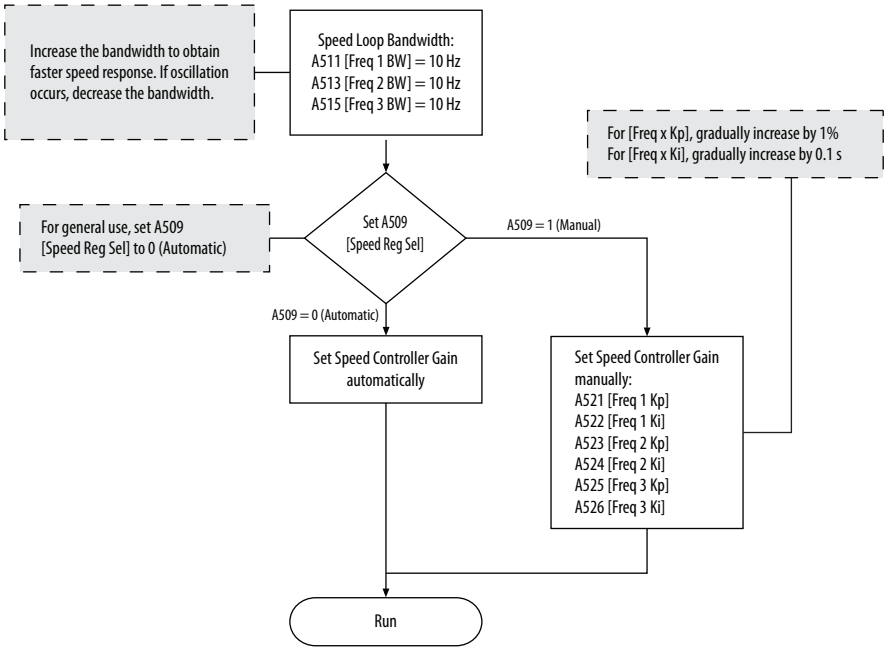

PowerFlex 525 PM Motor Configuration

This chapter contains instructions and diagrams on configuring the PowerFlex 525 drive for use with a PM motor.

For information on...	See page...
Download Files	252
Automatic Configuration Using Drive Startup Wizard	254
Manual Configuration Using Drive Keypad	261
Additional PM Motor Configuration	262
Optional Parameter Adjustments for Optimum Performance	266

ATTENTION: It is the responsibility of the startup engineer / end user to use proper safety precautions with any equipment used during this startup.

In no event will Rockwell Automation, Inc. be responsible or liable for indirect or consequential damages resulting from the use or application of this equipment. The examples and diagrams in this document are included solely for illustrative purposes. Because of the many variables and requirements associated with any particular installation, Rockwell Automation cannot assume responsibility or liability of actual use based on the examples and diagrams.

No patent liability is assumed by Rockwell Automation, Inc. with respect to the information, circuits, equipment. Or software described in this document. Rockwell Automation reserves the right to make changes to this document without prior notice. When using examples in this document the user recognizes that Rockwell Automation cannot be made liable for any damage or claims. Because there are many application-specific variables, users MUST ensure that products are correctly used and the appropriate architecture is deployed. Reproduction of the contents of this document, in whole or in part, without written permission of Rockwell Automation, Inc. is prohibited.

To use PM motor control, you need to install the PowerFlex 525 drive firmware revision 5.001 or later. If you wish to perform PM motor tuning by using the PowerFlex 525 Startup Wizard in Connected Components Workbench, you also need to install version 1.05 or later Add-on profile (AOP) and update to the latest drive database for Connected Components Workbench.

These files are available for download at the Rockwell Automation Product Compatibility and Download Center. For instructions, see Download Files on page 252.

Download Files

Follow these steps to download the files for your PowerFlex 525 drive.

1. Go to the Rockwell Automation Product Compatibility and Download Center at http://www.rockwellautomation.com/rockwellautomation/support/pcdc.page

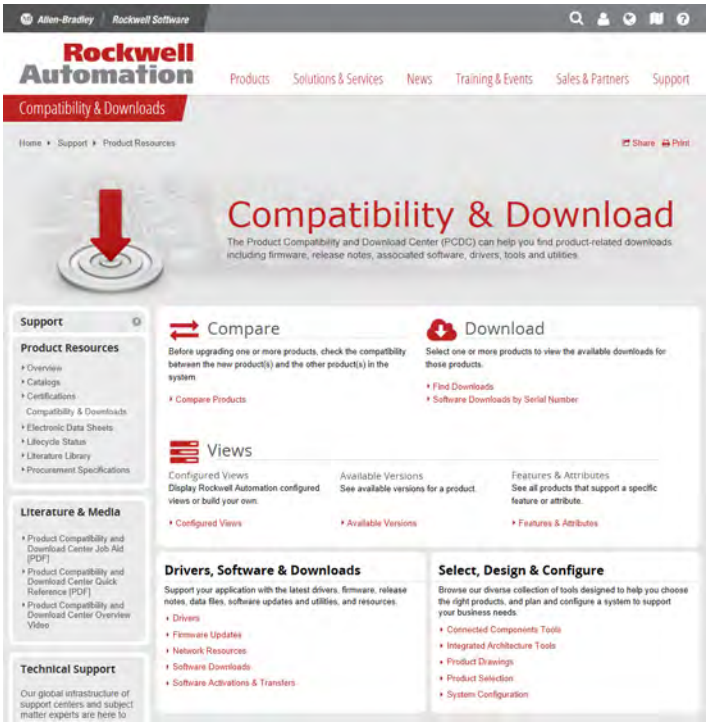

IMPORTANT You must sign in to the Rockwell Automation website before downloading a firmware revision.

2. Click the Find Downloads link.

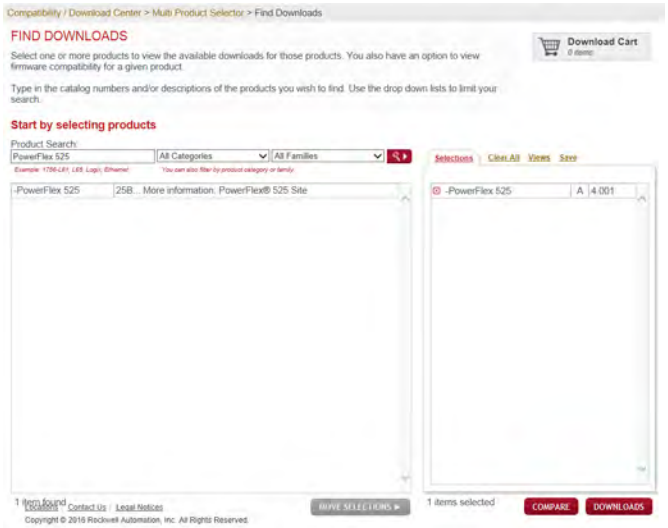

3. Enter “PowerFlex 525” into the Product Search field.
   The results appears in the box below.
4. Select the entry and the firmware revision, then click **Downloads**.

5. Click the Show Downloads icon, then click the links to download the firmware revision and AOP files to your computer.
6. Go back to step 2 and enter “AB Drives” into the Product Search field.
   The results appear in the box below.

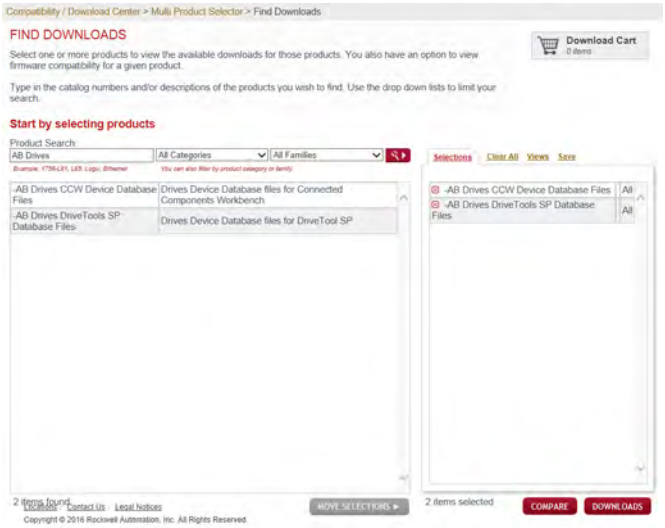

7. Select both entries, then click **Downloads**.

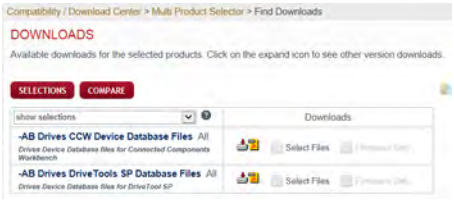

8. Click the Show Downloads icon, then click the links to download the database files to your computer.

Automatic Configuration Using Drive Startup Wizard

To use the PowerFlex 525 Startup Wizard in Connected Components Workbench to automatically configure the parameters, make sure you have installed the following:

- PowerFlex 525 drive firmware revision 5.001 or later.
- PowerFlex 525 drive Add-on Profile 1.05 or later.
- Latest drive database for Connected Components Workbench.

For instructions, see Download Files on page 252.

Alternatively, you can manually configure the parameters by using the drive keypad. For instructions, see Manual Configuration Using Drive Keypad on page 261.

1. From Connected Components Workbench software, click the Wizard Browser icon.

2. In the Available Wizards dialog box, click on PowerFlex 525 Startup Wizard, then click Select.

3. Before tuning the drive, it is recommended to reset all parameters to their default values. Select the option shown below.

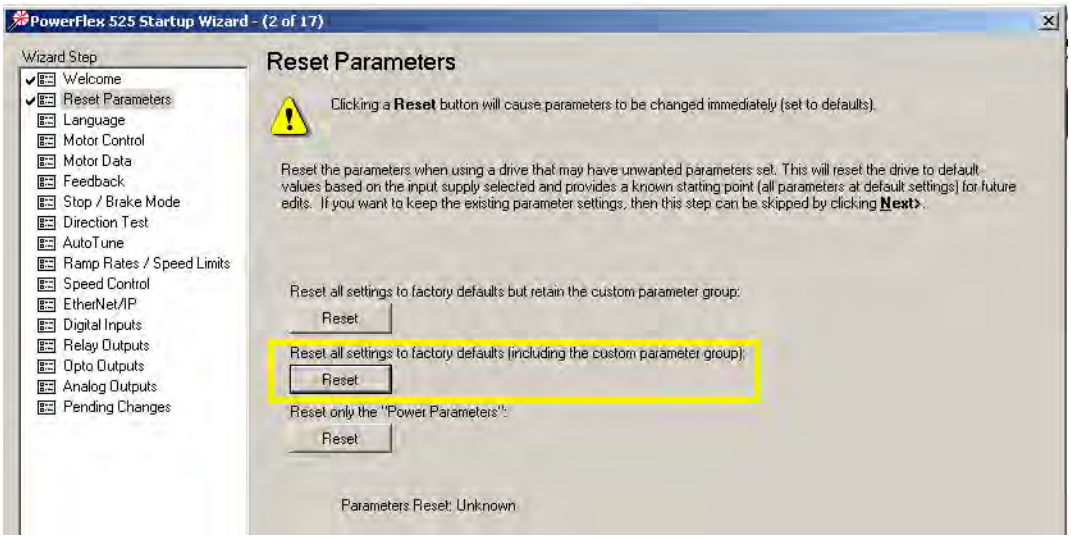

4. Complete each step in the Startup Wizard to configure the drive.

IMPORTANT Follow the Startup Wizard steps exactly. If not, unexpected results can occur.

Motor Control

From the Torq Perf Mode drop-down list, select “PM Motor”.

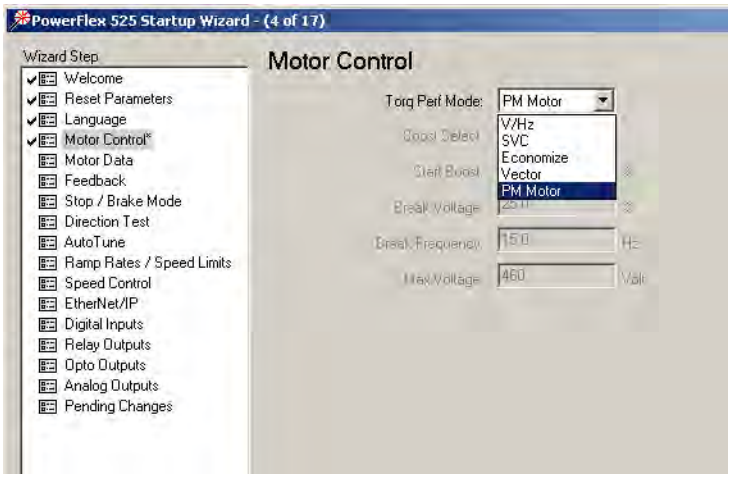

This configuration can also be done by setting parameter P039 [Torq Perf Mode] to 4 “PM Motor”.

Motor Data

Key in the details of your Motor Nameplate.

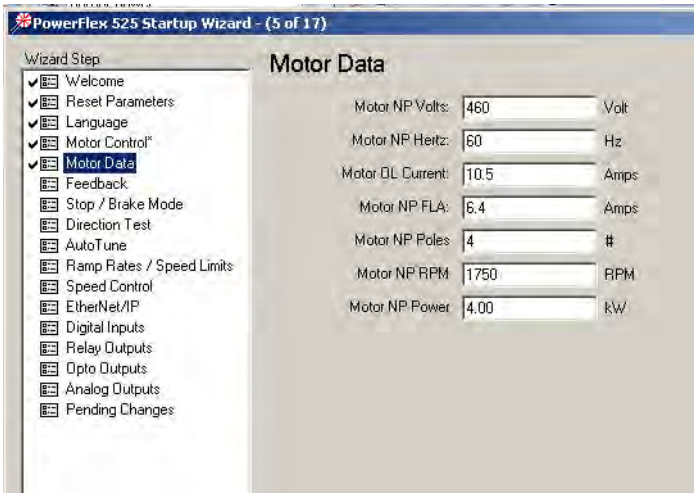

Feedback

If you are configuring a closed loop PM motor control, key in the details of your incremental encoder.

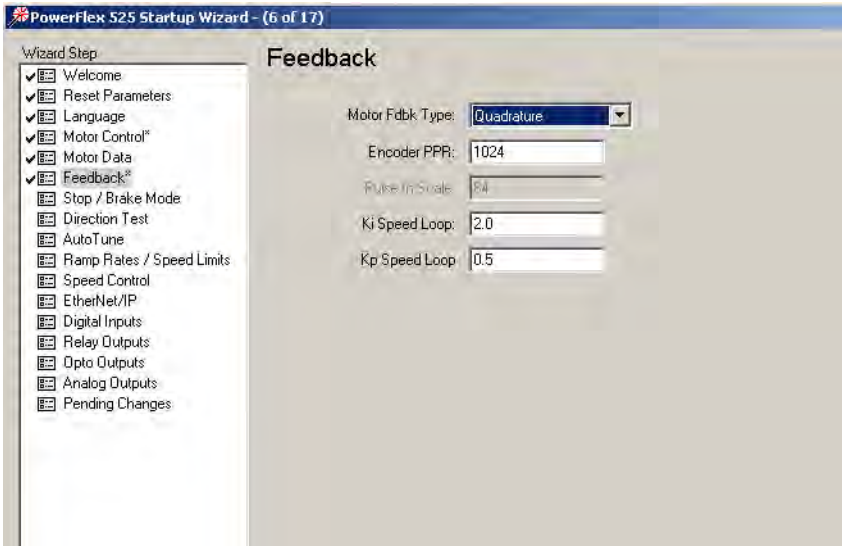

IMPORTANT Note the following:

- PowerFlex 525 drive only supports incremental AB encoder (25-ENC-1).
- Motor Feedback Type can be “Quadrature” or “Quad Check”.
- Only Interior Permanent magnet motor (iPM) is supported for closed loop control.

Stop Mode/Brake Type

Key in the details of your configuration.

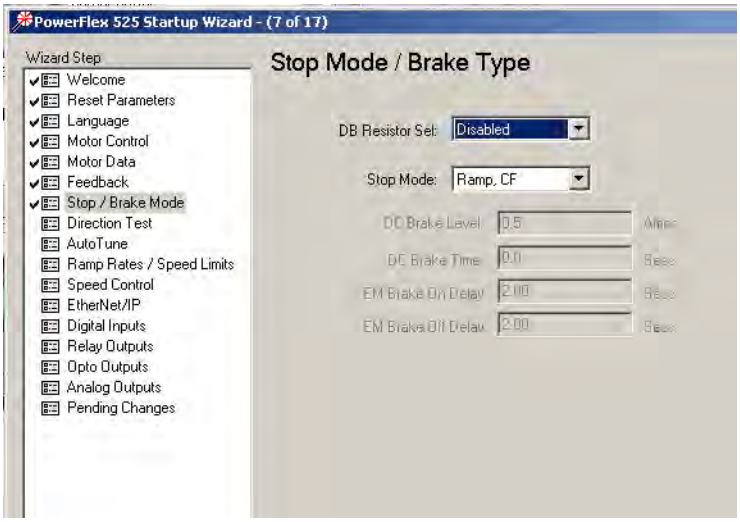

Direction Test

IMPORTANT When configuring a PM motor, it is required to perform a Direction Test before proceeding to the next step (Auto Tune).

Perform a Direction Test. The direction test can be performed with or without the load attached. Consider your application requirements when deciding to have the load attached or removed from the motor. This test runs in V/Hz mode to verify the motor polarity relative to the feedback polarity. The test confirms motor rotation and feedback polarity. After the test is completed, a change can be made, if required.

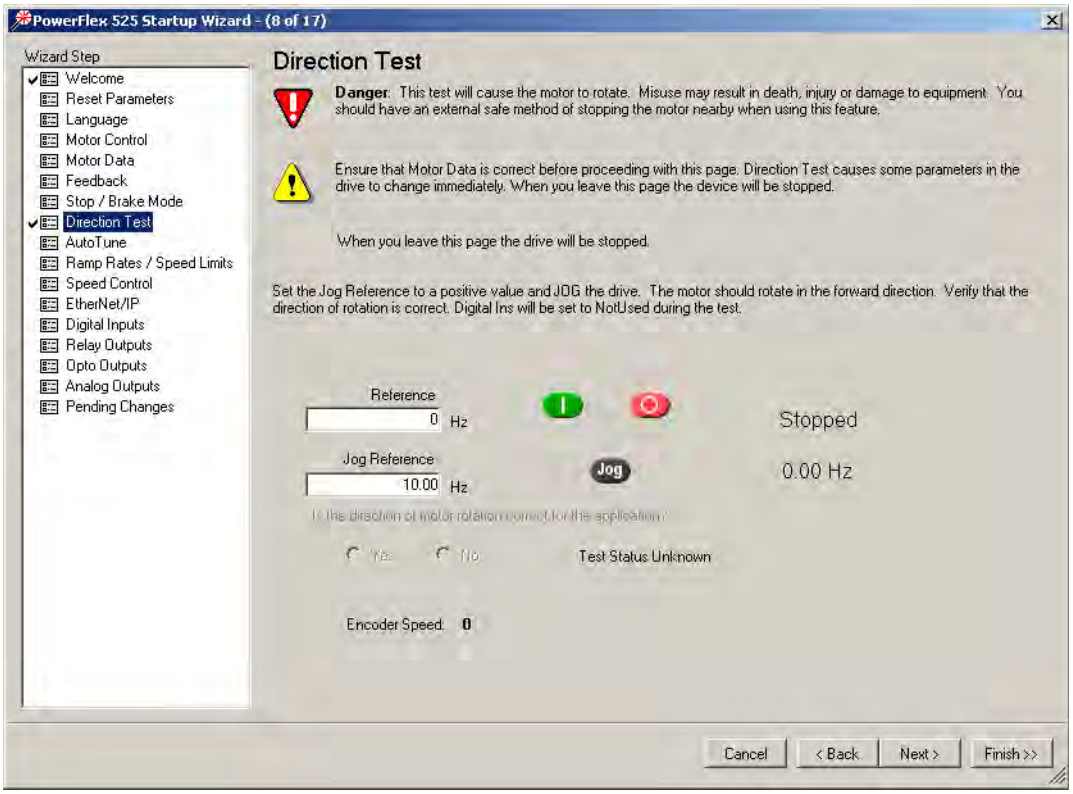

IMPORTANT If the drive was never operated before (new installation), verify that safeguards are in place to remove power safely from the drive during an unstable situation where the drive can produce undesired motion.

Auto Tune

Ensure the load is uncoupled and perform a Rotate Tune test.

The Auto Tune is used to identify the correct motor flux and stator electrical properties, including the following:

- IR volt drop, which is voltage drop over resistance.
- IXd volt drop, which is voltage drop over inductance.
- Flux current (estimated in Static Tune and measured in Rotate Tune test).
- Slip RPM, which is calculated from motor nameplate data. If an encoder is used, the Slip RPM becomes a measured value using the encoder.

Auto Tune Window

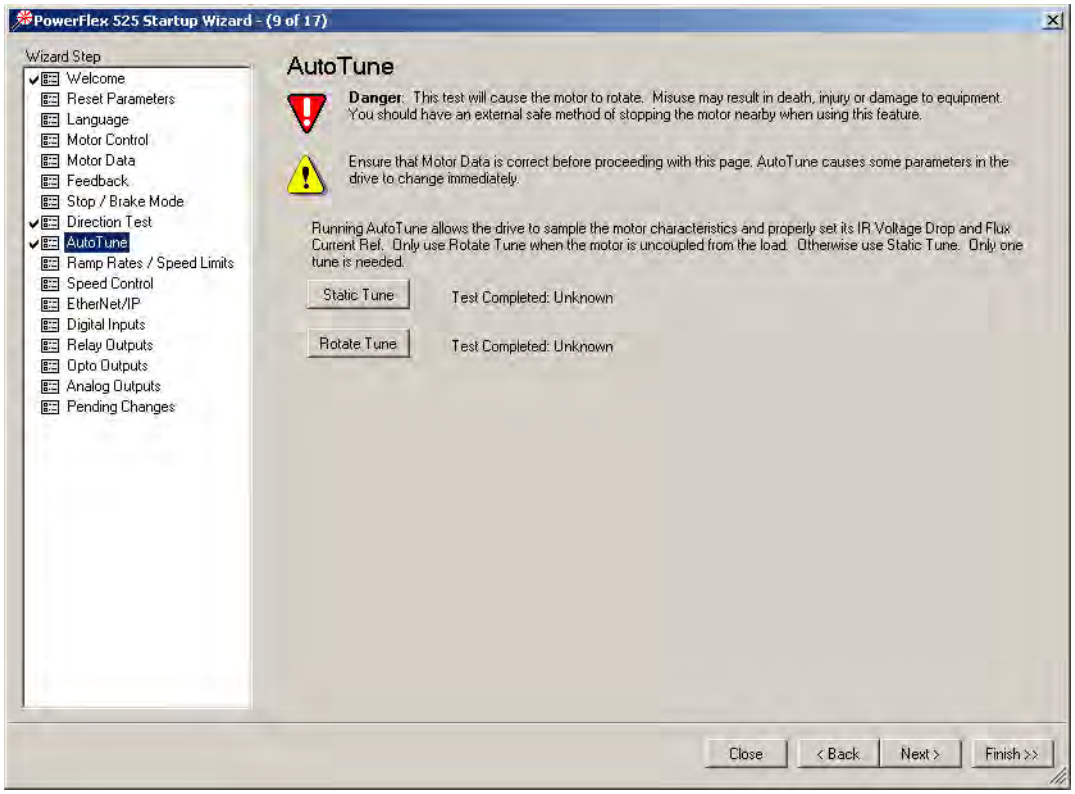

A properly tested motor and drive helps ensure higher starting torque and better performance at low speeds. Conversely, an improperly performed Auto Tune can cause the motor to exhibit instability at low speeds, uneven performances when running through the motor speed range, and can generate unnecessary faults such as overcurrent and overvoltage faults.

Static Tune

This test is used when the motor is connected to a high friction load and cannot easily be uncoupled from the motor, or when the load cannot be rotated due to mechanical constraints or a limited range of movement. The Static Tune test does not generate any motor movement. The Static tune test results may not be as accurate as the Rotate Tune test.

Rotate Tune (preferred for PM motor tuning)

This test is used when the motor is not coupled to the load or the load is low friction. Rotate tune is generally used to better identify motor flux and stator electrical properties, which are used to automatically tune the torque current loop. The Rotate Tune test causes motor rotation at different speeds while it is executing.

ATTENTION: If the drive was never operated before (new installation), verify that safeguards are in place to remove power safely from the drive during an unstable situation where the drive can produce undesired motion.

After completing the configuration and running the Auto Tune test, you may need to perform additional configuration depending on whether you have an open loop or closed loop system.

For an open loop system (A535 [Motor Fdbk Type] = 0 “None”), you may need to adjust two parameters if you encounter momentary reverse startup after a Start command is issued.

For a closed loop system (A535 [Motor Fdbk Type] = 4 “Quadrature” or 5 “Quad Check”, you must perform an angle alignment after the Auto Tune test before running the motor normally.

See Additional PM Motor Configuration on page 262 for instructions.

Manual Configuration Using Drive Keypad

Besides using the PowerFlex 525 Startup Wizard in Connected Components Workbench, you can also manually configure the parameters by using the drive keypad. Make sure you have installed the PowerFlex 525 drive firmware revision 5.001 or later. For instructions, see Download Files on page 252.

To configure the parameters, do the following:

1. Reset all parameters to their default values.
   Set P053 [Reset to Defalts] = 2 “Factory Rset”
2. Select the Control Mode
   Set P039 [Torque Perf Mode] = 4 “PM Control”
3. Enter Motor nameplate data
   - Set P031 [Motor NP Volts]
   - Set P032 [Motor NP Hertz]
   - Set P033 [Motor OL Current]
   - Set P034 [Motor NP FLA]
   - Set P035 [Motor NP Poles]
   - Set P036 [Motor NP RMP]
   - Set P037 [Motor NP Power]
   - Set P043 [Minimum Freq]
   - Set P044 [Maximum Freq]
4. Set A440 [PWM Frequency] = 4.0 kHz (default)
5. Set A535 [Motor Fdbk Type]
   - = 4 “Quadrature” or 5 “Quad Check” (for Closed Loop PM)
     or
   - = 0 “None” (for Open Loop PM)
   - A536 [Encoder PPR]
6. Enter Stop mode and dynamic brake data, if any.
   - P045 [Stop Mode]
   - A437 [DB Resistor Sel]
7. Ensure the load is uncoupled and perform a Rotate Tune test
   Set P040 [Autotune] = 2 “Rotate Tune”
   Press the Start button (Take note of your Start Source settings P046, P048, and P050. Default setting of P046 = 1 “Keypad”)

ATTENTION: If the drive was never operated before (new installation), verify that safeguards are in place to remove power safely from the drive during an unstable situation where the drive can produce undesired motion.

After completing the configuration and running the Auto Tune test, you may need to perform additional configuration depending on whether you have an open loop or closed loop system.

For an open loop system (A535 [Motor Fdbk Type] = 0 “None”), you may need to adjust two parameters if you encounter momentary reverse startup after a Start command is issued.

For a closed loop system (A535 [Motor Fdbk Type] = 4 “Quadrature” or 5 “Quad Check”, you must perform an angle alignment after the Auto Tune test before running the motor normally.

See Additional PM Motor Configuration on page 262 for instructions.

Additional PM Motor Configuration

After completing the initial configuration, there are additional steps that need to be performed to complete the whole PM motor setup.

For an open loop PM motor (iPM and sPM) control, some parameters need to be adjusted to prevent reverse startup. For a closed loop PM motor (iPM), an angle alignment procedure needs to be performed before the motor is run normally.

Additional Setup for Open Loop PM Motor

After performing an autotune on an open loop PM motor, a momentary “reverse startup” may occur. To prevent this from occurring, perform the following steps:

1. Set A516 [PM Initial Sel] = 1 “HFI”.
2. Increase the value of A519 [PM HFI NS Cur] by 10%.
3. Perform a test run at a reference speed and check if the motor reverses.
4. If the motor reverses, repeat steps 2 and 3.
5. If A519 [PM HFI NS Cur] has reached its maximum value (200%):
   - reset the value to the default (100%)
   - set A516 [PM Initial Sel] = 2 “Six Pulse”
6. Perform a test run at a reference speed and check if the motor reverses.
7. If the motor reverses, repeat steps 2 and 3.
8. If A519 [PM HFI NS Cur] has reached its maximum value again and a reverse motor startup still occurs, the motor setup has failed.

Flowchart for Open Loop PM Motor (iPM and sPM) Setup

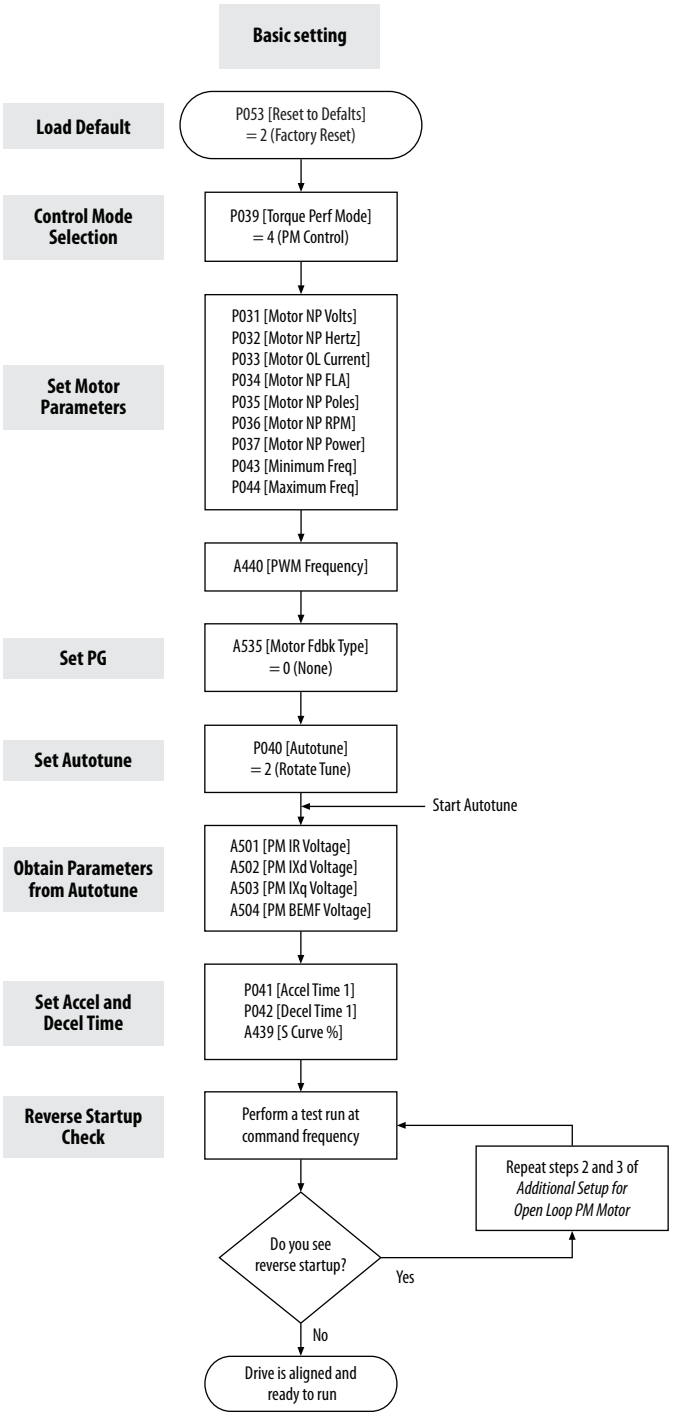

Additional Setup for Closed Loop PM Motor

After performing an autotune on an closed loop PM motor, a PM angle alignment needs to be performed to complete the setup.

Align the PM Angle

To align the PM angle, do the following:

1. Uncouple the load.
2. Set these parameters to the recommended value:
   - A517 [PM DC Inject Cur] = 60% (default is 30%)
   - A518 [PM Align Time] = 5.8 s (default is 0.7 s)
   - A580 [Current Loop BW] = 300 Hz (default is 0 Hz)
3. Set the desired speed (10...40 Hz recommended).
   Check the setting for P047 [Speed Reference 1]. Speed reference can be from POT, control panel of Connected Components Workbench, and so on.
4. Set the Start Source.
   Check the setting for P046 [Start Source 1]. Start source can be from POT, control panel of Connected Components Workbench, and so on.
5. Start the drive to run at the desired speed.
6. Drive will begin to align itself (move forward and reverse) and run to the desired speed.
7. Stop the drive. The drive is now aligned.

TIP The PM angle alignment only needs to be performed once unless the drive is power cycled or re-tuned.

IMPORTANT The PM angle alignment has failed when fault F012 (HW Overcurrent) or F013 (Ground Fault) is observed during acceleration and deceleration.

Adjustments if PM Angle Alignment has Failed

If the PM angle alignment has failed, do the following:

1. Cycle drive power or set A535 [Motor Fdbk Type] = 0 “None”, then set back to 4 “Quadrature” or 5 “Quad Check”.
2. Increase A517 [PM DC Inject Cur] by 50%.
3. Increase A518 [PM Align Time] by 0.2 s.
4. Repeat the Align the PM Angle instructions again, beginning from step 3.

Flowchart for Closed Loop PM Motor (iPM) Setup

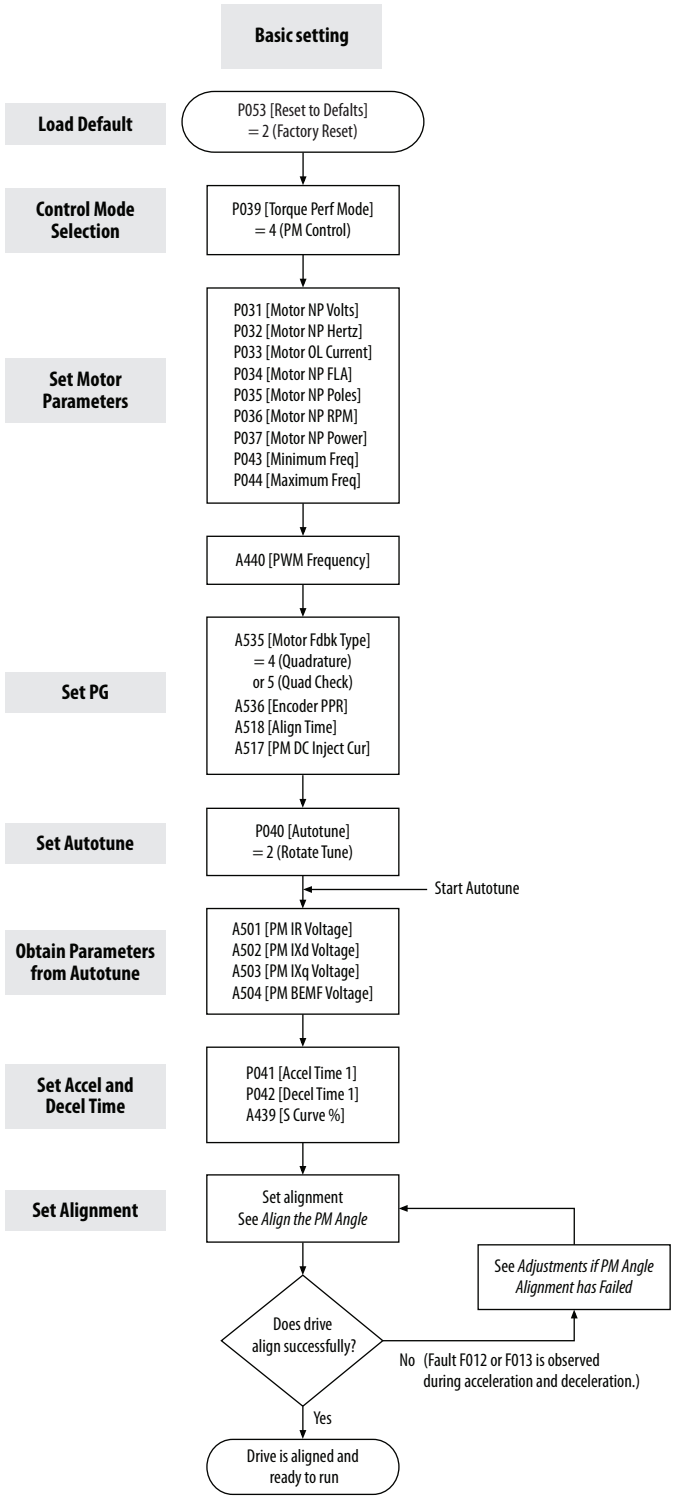

Optional Parameter Adjustments for Optimum Performance

There are a few parameters that you can use to obtain optimum performance during the test run. Usually, the default value of these parameters work well, but you may need to adjust them under different conditions.

1. A517 [PM DC Inject Cur]

   Maximum DC current in amps applied to the motor in order to reset the rotor position of a PM motor.

   Alignment has failed when fault F012 (HW Overcurrent) or F013 (Ground Fault) is observed during acceleration and deceleration.

   Default = 30%
   Increase 50 of A517 [PM DC Inject Cur] for each trial when PM speed response is slow after adding load.

2. A518 [PM Align Time]

   Magnetic pole reorientation time.

   Alignment failed when fault F012 (HW Overcurrent) or F013 (Ground Fault) is observed during acceleration and deceleration.

   Default = 0.7 s
   Increase A518 [PM Align Time] to > 4.7 s.

3. A527 [PM FWKn 1 Kp]

   The gain to ensure good performance in field weakening region.

   Default = 450%
   Increase 100 of A527 [PM FWKn 1Kp] for each trial when PM speed response is slow after adding load.
   Decrease 100 of A527 [PM FWKn 1Kp] for each trial when speed vibration is observed after adding load.

4. A580 [Current loop BW]

   Current loop bandwidth (0 = Auto calculate the control gain of current loop)

   Default = 0 Hz
   Increase 50 of A580 [Current Loop BW] for each trial when PM speed response is slow after adding load.
   Decrease 50 of A580 [Current Loop BW] for each trial when speed instability is observed after adding load.

5. A584 [PM Stable 2 Kp]

The gain for stabilization loop.

Default = 250%
Increase 100 of A584 [PM Stable 2 Kp] for each trial if fault F064 (Drive overload) is experienced at high load.
Applicable to open loop tuning especially for sPM motor. In most cases, the default value will work.

Notes:

Numerics

2-wire
  inputs, **50**
3-wire
  inputs, **50**

A

accel
  override priority, **51**
  selecting, **51**
accessing
  control terminals, **31**
  power terminals, **31**
applications
  safety, **237**
auxiliary contact
  drive, **34**, **36**

B

basic operation, **65**
  drive, **60**, **65**, **162**
  programming, **65**
  safety, **240**

C

circuit breakers
  inputs, **23**
  ratings, **23**
common bus
  drive, **36**
communications
  positioning, **225**
configuring
  RS485(DSI), **202**
control terminals
  accessing, **31**
counter
  programming, **209**, **212**

D

decel
  override priority, **51**
  selecting, **51**
derating
  factor, **125**
  temperature, **17**
digital inputs
  selecting, **50**
  start source, **50**
dimensions
  mounting, **16**, **185**
disconnect
  output, **34**
drive
  auxiliary contact, **34**, **36**
  basic operation, **60**, **65**, **162**
  common bus, **36**
  mount, **15**
  programming, **61**, **64**
  safety, **239**
drive damage
  preventing, **19**
  ungrounded distribution systems, **19**

E

encoder
  programming, **215**
  wiring, **216**
environment
  storage, **18**
Ethernet
  programming, **247**

F

fault monitoring
  ground, **21**
fuses
  rating, **23**

G

ground
  fault monitoring, **21**
  motor, **21**
  RFI filter, **22**
  safety, **21**
  shielding, **21**

H

homing
  automatic, **223**
  manual, **223**
  programming, **223**

I

inputs
  2-wire, **50**
  3-wire, **50**
  circuit breakers, **23**
  power, **20**

L

logic
  basic, **209**, **210**
  timed steps, **209**, **210**

M

Modbus
reading, **205**, **207**, **208**
writing, **203**, **205**, **208**
motor
ground, **21**
start, **34**
stop, **34**
mount
drive, **15**
mounting
dimensions, **16**, **185**

N

noise immunity
wiring, **37**, **202**

O

output
disconnect, **34**
override priority
accel, **51**
decel, **51**
speed reference, **49**
start source, **49**

P

parameters
AppView, **76**, **150**
CustomView, **151**
programming, **63**, **67**
PID
programming, **229**
positioning
communications, **225**
programming, **218**, **220**
power
inputs, **20**
power and control module
separating, **28**
power terminals
accessing, **31**
preventing
drive damage, **19**
programming, **65**
basic logic, **209**, **210**
counter, **209**, **212**
drive, **61**, **64**
encoder, **215**
Ethernet, **247**
homing, **223**
parameters, **63**, **67**
PID, **229**
positioning, **218**, **220**
pulse train, **215**
timed steps, **209**, **210**
timer, **209**, **211**
tools, **64**
pulse train
programming, **215**

R

rating
fuses, **23**
ratings
circuit breakers, **23**
reading
Modbus, **205**, **207**, **208**
recommended
wiring, **36**, **239**
reflected
wave protection, **34**
RFI filter
ground, **22**
RS485(DSI)
configuring, **202**

S

safety
applications, **237**
basic operation, **240**
drive, **239**
ground, **21**
testing, **238**
wiring, **239**
selecting
accel, **51**
decel, **51**
digital inputs, **50**
speed reference, **49**
start source, **49**
separating
power and control module, **28**
shielded
wiring, **33**
shielding
ground, **21**
speed reference
override priority, **49**
selecting, **49**
start
motor, **34**
start source
digital inputs, **50**
override priority, **49**
selecting, **49**
stop
motor, **34**
storage
environment, **18**

T

temperature
derating, **17**
wiring, **33**
testing
safety, **238**
timer
programming, **209**, **211**
tools
programming, **64**

U

unshielded
wiring, **33**

V

voltage reflections
wiring, **34**

W

wave protection
reflected, **34**
wiring
encoder, **216**
noise immunity, **37**, **202**
recommended, **36**, **239**
RS485 (DSI), **201**
safety, **239**
shielded, **33**
temperature, **33**
unshielded, **33**
voltage reflections, **34**
writing
Modbus, **203**, **205**, **208**

Notes:

Rockwell Automation Support

Rockwell Automation provides technical information on the Web to assist you in using its products. At http://www.rockwellautomation.com/support/, you can find technical manuals, a knowledge base of FAQs, technical and application notes, sample code and links to software service packs, and a MySupport feature that you can customize to make the best use of these tools.

Rockwell Automation provides compliance certification support at productcertification@ra.rockwell.com.
Rockwell Automation provides environmental compliance support at ProductStewardship@ra.rockwell.com.
Rockwell Automation provides country of origin certificates at RAEXMClassification@ra.rockwell.com.

For an additional level of technical phone support for installation, configuration, and troubleshooting, we offer TechConnect support programs. For more information, contact your local distributor or Rockwell Automation representative, or visit http://www.rockwellautomation.com/support/.

Installation Assistance

If you experience a problem within the first 24 hours of installation, review the information that is contained in this manual. You can contact Customer Support for initial help in getting your product up and running.

United States or Canada	1.440.646.3434
Outside United States or Canada	Use the Worldwide Locator at http://www.rockwellautomation.com/support/americas/phone_en.html, or contact your local Rockwell Automation representative.

New Product Satisfaction Return

Rockwell Automation tests all of its products to ensure that they are fully operational when shipped from the manufacturing facility. However, if your product is not functioning and needs to be returned, follow these procedures.

United States	Contact your distributor. You must provide a Customer Support case number (call the phone number above to obtain one) to your distributor to complete the return process.
Outside United States	Please contact your local Rockwell Automation representative for the return procedure.

Documentation Feedback

Your comments will help us serve your documentation needs better. If you have any suggestions on how to improve this document, complete this form, publication RA-DU002, available at http://www.rockwellautomation.com/literature/.

Rockwell Automation maintains current product environmental information on its website at http://www.rockwellautomation.com/rockwellautomation/about-us/sustainability-ethics/product-environmental-compliance.page.

www.rockwellautomation.com

Power, Control and Information Solutions Headquarters

Americas: Rockwell Automation, 1201 South Second Street, Milwaukee, WI 53204-2496 USA, Tel: (1) 414.382.2000, Fax: (1) 414.382.4444
Europe/Middle East/Africa: Rockwell Automation NV, Pegasus Park, De Kleetlaan 12a, 1831 Diegem, Belgium, Tel: (32) 2 663 0600, Fax: (32) 2 663 0640
Asia Pacific: Rockwell Automation, Level 14, Core F, Cyberport 3, 100 Cyberport Road, Hong Kong, Tel: (852) 2887 4788, Fax: (852) 2508 1846

PN-386600

Publication 520-UM001I-EN-E – July 2016

PN-386600

Supersedes Publication 520-UM001H-EN-E – April 2016

Copyright © 2016 Rockwell Automation, Inc. All rights reserved.

Technical Data

Allen-Bradley

PowerFlex Digital DC Drive

Table of Contents

Topic	Page
Additional Resources	2
Product Description	2
Standard Drives Program	3
Catalog Number Explanation	5
Standard Drives Product Selection	6
Factory Installed Options	8
User Installed Options	9
Installation Considerations	19
Circuit Protection	50
Mounting	66
Approximate Dimensions	67
PowerFlex DC Configured Drives	73
Specifications	79
Watts Loss and Fan Attributes	81

LISTEN. THINK. SOLVE.®

Additional Resources

These documents contain additional information concerning related products from Rockwell Automation.

Resource	Description
PowerFlex Digital DC Drive User Manual, publication 20P-UM001	Provides basic information needed to install, start-up, and troubleshoot the PowerFlex DC drive.
A Global Reference Guide for Reading Schematic Diagrams, publication 100-2.10	Provides a simple cross-reference of common schematic/wiring diagram symbols used throughout various parts of the world.
Guarding Against Electrostatic Damage, publication 8000-4.5.2	Explains the causes of ESD and how to guard against its effects.
Preventive Maintenance of Industrial Control and Drive System Equipment, publication DRIVES-TD001	Provides a checklist to use as a guide in performing preventive maintenance.
Safety Guidelines for the Application, Installation and Maintenance of Solid State Control, publication SGI-1.1	Provides general guidelines for the application, installation, and maintenance of solid state control in the form of individual devices or packaged assemblies incorporating solid state components.
Industrial Automation Wiring and Grounding Guidelines, publication 1770-4.1	Provides general guidelines for installing a Rockwell Automation industrial system.
Product Certifications website, http://www.ab.com	Provides declarations of conformity, certificates, and other certification details.

You can view or download publications at http://www.rockwellautomation.com/literature/. To order paper copies of technical documentation, contact your local Allen-Bradley distributor or Rockwell Automation sales representative.

For other information, contact Allen-Bradley Drives Technical Support:

Title	Online at . . .
Allen-Bradley Drives Technical Support	www.ab.com/support/abdrives

Product Description

The PowerFlex Digital DC drive provides digital control for precise speed and current regulation, easy programmability, extensive diagnostics, non-regenerative and regenerative operation, and is easily interfaced for integration into larger drive systems. PowerFlex DC drives are well suited to a variety of applications including extruding operations, finishing, drawing, and coating processes, applications exhibiting shock loads, high inertia, rapid accel/decel or continuous regeneration, and is an excellent choice for existing DC machinery upgrades. The compact design of this drive includes a fully contained power module and a common control structure for the entire range of horsepower. And, to make connectivity even easier, the PowerFlex DC drive provides a standard DPI interface that is compatible with all PowerFlex DPI communication products.

The standard hardware offering consists of an open type enclosure, armature converter, regulated field converter for field weakening or economy applications, an advanced regulator with integrated DPI functionality, DC tachometer and encoder capability.

Standard Drives Program

Packaging and Mounting

- **IP20, NEMA/UL Type Open** - For conventional mounting inside or outside a control cabinet.

Easy to Use Communication Tools

The PowerFlex Digital DC drive provides common communication tools that are familiar and easy to use, including the LCD Human Interface Module (HIM) and PC-based configuration tools.

- The LCD HIM provides:
  - Large and easy to read 7 line x 21 character, backlit display
  - Alternate function keys for shortcuts to common tasks
  - "Calculator-like" number pad for fast and easy data entry (Full Numeric version only)
  - Control keys for local start, stop, speed, and direction
  - Remote versions for panel mount applications
- PC-based Configuration tools include:
  - DriveExplorer™ and DriveExplorer Lite (v5.02 or higher). A simple and flexible "On-line" tool for monitoring and configuring while connected to a drive.
  - DriveTools™ SP (v4.01 or higher is required with a PowerFlex DC drive specific software patch. The patch can be downloaded from http://www.ab.com/support/abdrives/webupdate/). A suite of software tools which provide an intuitive means for programming, troubleshooting and maintaining Allen-Bradley drives, including the PowerFlex DC Drive Start-Up Wizard.
- Internal Communications allow you to integrate the drive into the manufacturing process. Status indicators for all internal communication options are visible on the cover for easy setup and monitoring of drive communications. You can easily manage information from "shop floor to top floor" and seamless integrate a complete system as you control, configure and collect data.

Drive Features

- Fast-acting **Current Limit** and **Voltage Regulation** result in maximum accel/decel without tripping.
- **High speed analog inputs** improve drive response to torque or speed commands.
- **Programming flexibility** allows parameters to be linked within the drive.
- **Field flashable firmware** through DPI interface.
- **Flying Start** delivers smooth and instantaneous connection into rotating loads, regardless of commanded direction, without the need for any speed feedback.
- **Single Phase Regulated Field supply** (10, 14, & 20A) standard on all frames.
- **Integral Process PI Control** can eliminate the need for a separate process loop controller.
- **Speed Regulation** - Open Loop or Closed Loop
  - Armature Feedback provides a 2000:1 rpm speed range
  - DC Tachometer Feedback provides up to 0.1% speed regulation
  - Encoder Feedback provides up to 0.1% speed regulation for the tightest application requirements.
- **Torque Regulation** - Open Loop or Closed Loop
  - Open Loop torque regulation provides ±5% regulation.
  - Encoder Feedback provides ±2% regulation and the ability to hold full load at zero speed.

Unsurpassed Capability in Network Communications

PowerFlex drives are fully compatible with the wide variety of Allen-Bradley DPI™ communication adapters, offering the following benefits:

ControlNet™	DeviceNet™	EtherNet/IP™	Interbus™	PROFIBUS™	Remote I/O	RS485 DF1	Description
✔	✔	✔					**(Unconnected Messaging)** permits other network devices (e.g. PanelView™) to communicate directly to a drive without routing the communication through the network scanner.
✔	✔	✔				✔	**Adapter Routing** - Plug PC into one drive and talk to all other Allen-Bradley drives on same network, without being routed through network scanner.
✔	✔	✔	✔	✔	✔	✔	Access to 100% of all parameters over the network.
	✔	✔		✔			**AutoBaud** capability makes initial connections less problematic.
	✔						**Change of State** significantly reduces network traffic by configuring control messages to be sent only upon customer defined states. Very flexible configuration for each node (Example: "reference must change by more than 5%").
	✔	✔					**Peer Control** provides master-slave type control between drives, where one or more slave drives (consumers) can run based on the status of a master drive (producer), which can also significantly reduce network traffic.
	✔						**ADR (Automatic Device Replacement)** saves significant time and effort when replacing a drive, by allowing the scanner to be configured to automatically detect a new drive and download the required parameter settings.
✔	✔	✔	✔	✔	✔	✔	**Flexible Fault Configuration** - Adapters can be programmed to take fault based actions as ramp to stop, coast-to-stop and hold last state, as well as send user configurable logic control and speed reference values. In addition, different actions can be taken based on whether the network experienced a serious problem (broken cable etc.) versus network idle condition (PLC set to "Program").

Catalog Number Explanation

Position

1-3	4	5	6	7	8-10	11	12	13	14	15	16
20P	4	1	A	D	4P1	R	A	0	N	N	N
a	*b*	*c*	*d*	*e*	*f*	*g*	*h*	*i*	*j*	*k*	*l*

a

Drive	
Code	Type
20P	PowerFlex DC

b

Motor Operation	
Code	Type
2	Two Quadrant Operation ∗
4	Four Quadrant Operation

∗ Not available for 230V AC input drives.

c

Input Type	
Code	Type
1	6 Pulse

d

Enclosure		
Code	Enclosure Rating	Conform. Coat
A	IP20, NEMA/UL Type Open	No

e

Input Voltage	
Code	Voltage
B	230V AC
D	460V AC ∗
E	600V AC
F	690V AC

∗ Use this code for 400V AC input applications.

f1

230V, 60 Hz Input				
Code	Hp	Armature Amps	Frame	Field Amps
7P0	1.5	7	A	10
9P0	2	9	A	10
012	3	12	A	10
020	5	20	A	10
029	7.5	29	A	10
038	10	38	A	10
055	15	55	A	10
073	20	73	A	14
093	25	93	A	14
110	30	110	A	14
146	40	146	B	20
180	50	180	B	20
218	60	218	B	20
265	75	265	B	20
360	100	360	B	20
434	125	434	B	20
521	150	521	C	20
700	200	700	C	20
875	250	875	D	40
1K0	300	1050	D	40

f2

460V, 60 Hz Input				
Code	Hp	Armature Amps	Frame	Field Amps
4P1	2	4.1	A	10
6P0	3	6	A	10
010	5	10	A	10
014	7.5	14	A	10
019	10	19	A	10
027	15	27	A	10
035	20	35	A	10
045	25	45	A	10
052	30	52	A	10
073	40	73	A	14
086	50	86	A	14
100	60	100	A	14
129	75	129	A	14
167	100	167	B	20
207	125	207	B	20
250	150	250	B	20
330	200	330	B	20
412	250	412	B	20
495	300	495	C	20
667	400	667	C	20
830	500	830	D	40
996	600	996	D	40
1K1	700	1162	D	70
1K3	800	1328	D	70
1K4	900	1494	D	70

f3 ∗

575V, 60 Hz Input				
Code	Hp	Armature Amps	Frame	Field Amps
067	50	67.5	B	20
101	75	101.3	B	20
135	100	135	B	20
270	200	270	B	20
405	300	405	B	20
540	400	504	C	20
675	500	675	C	20
810	600	810	D	40
1K0	800	1080	D	40
1K2	900	1215	D	40
1K3	1000	1350	D	40
1K6	1250	1668	D	40

f4 ∗

690V, 60 Hz Input				
Code	Hp	Armature Amps	Frame	Field Amps
452	400	452	C	20
565	500	565	C	20
678	600	678	D	40
791	700	791	D	40
904	800	904	D	40
1K0	900	1017	D	40
1K1	1000	1130	D	70
1K2	1100	1243	D	70
1K4	1250	1413	D	70
1K5	1400	1582	D	70

Catalog Number Explanation, continued

Position	1-3	4	5	6	7	8-10	11	12	13	14	15	16
	20P	4	1	A	D	4P1	R	A	0	N	N	N
	a	*b*	*c*	*d*	*e*	*f*	*g*	*h*	*i*	*j*	*k*	*l*

g

Field Supply	
Code	Type
R	Single-Phase Regulated

h

Packaging/Documentation		
Code	Shipping Carton	User Manual
A	Yes	Yes

i

HIM	
Code	Operator Interface
0	Blank Cover ∗

∗ Standard - for user installed options, see Human Interface and Wireless Interface Modules on page 9.

j

I/O Options∗	
Code	Control
N	None (8 - 24V DC Digital Inputs & Outputs, 3 Analog Outputs and 2 Analog Inputs are Standard)

∗ All I/O Options are purchased separately and are user installed. See I/O Options on page 9.

k

Communication Options	
Code	Description
N	None ∗

∗ Standard - for user installed options, see Communication Option Kits on page 10.

l

Cabinet Options	
Code	Type
N	None

Standard Drives Product Selection

IP20, NEMA/UL Type Open (Position d = A)

All drives are rated 150% overload for 60 seconds, 200% for three seconds.

230V AC, Three-Phase

Drive Output Rating			Non-Regenerative Drives[1]	Regenerative Drives	Frame Size
Normal Duty kW	Normal Duty HP	Amps	Cat. No.	Cat. No.	
1.2	1.5	7	20P21AB7P0RA0NNN	20P41AB7P0RA0NNN	A
1.5	2	9	20P21AB9P0RA0NNN	20P41AB9P0RA0NNN	A
2.2	3	12	20P21AB012RA0NNN	20P41AB012RA0NNN	A
3.7	5	20	20P21AB020RA0NNN	20P41AB020RA0NNN	A
5.5	7.5	29	20P21AB029RA0NNN	20P41AB029RA0NNN	A
7.5	10	38	20P21AB038RA0NNN	20P41AB038RA0NNN	A
11	15	55	20P21AB055RA0NNN	20P41AB055RA0NNN	A
15	20	73	20P21AB073RA0NNN	20P41AB073RA0NNN	A
18.5	25	93	20P21AB093RA0NNN	20P41AB093RA0NNN	A
22	30	110	20P21AB110RA0NNN	20P41AB110RA0NNN	A
30	40	146	20P21AB146RA0NNN	20P41AB146RA0NNN	B
37	50	180	20P21AB180RA0NNN	20P41AB180RA0NNN	B
45	60	218	20P21AB218RA0NNN	20P41AB218RA0NNN	B
56	75	265	20P21AB265RA0NNN	20P41AB265RA0NNN	B
75	100	360	20P21AB360RA0NNN	20P41AB360RA0NNN	B

Drive Output Rating			Non-Regenerative Drives[1]	Regenerative Drives	Frame Size
Normal Duty kW	Normal Duty HP	Amps	Cat. No.	Cat. No.	
93	125	434	20P21AB434RA0NNN	20P41AB434RA0NNN	B
112	150	521	20P21AB521RA0NNN	20P41AB521RA0NNN	C
149	200	700	20P21AB700RA0NNN	20P41AB700RA0NNN	C
186	250	875	20P21AB875RA0NNN	20P41AB875RA0NNN	D
224	300	1050	20P21AB1K0RA0NNN	20P41AB1K0RA0NNN	D

(1) Currently not available for sale.

460V AC, Three-Phase

Drive Output Rating			Non-Regenerative Drives	Regenerative Drives	Frame Size
Normal Duty kW	Normal Duty HP	Amps	Cat. No.	Cat. No.	
1.5	2	4.1	20P21AD4P1RA0NNN	20P41AD4P1RA0NNN	A
2.2	3	6	20P21AD6P0RA0NNN	20P41AD6P0RA0NNN	A
3.7	5	10	20P21AD010RA0NNN	20P41AD010RA0NNN	A
5.5	7.5	14	20P21AD014RA0NNN	20P41AD014RA0NNN	A
7.5	10	19	20P21AD019RA0NNN	20P41AD019RA0NNN	A
11	15	27	20P21AD027RA0NNN	20P41AD027RA0NNN	A
15	20	35	20P21AD035RA0NNN	20P41AD035RA0NNN	A
18.5	25	45	20P21AD045RA0NNN	20P41AD045RA0NNN	A
22	30	52	20P21AD052RA0NNN	20P41AD052RA0NNN	A
30	40	73	20P21AD073RA0NNN	20P41AD073RA0NNN	A
37	50	86	20P21AD086RA0NNN	20P41AD086RA0NNN	A
45	60	100	20P21AD100RA0NNN	20P41AD100RA0NNN	A
56	75	129	20P21AD129RA0NNN	20P41AD129RA0NNN	A
75	100	167	20P21AD167RA0NNN	20P41AD167RA0NNN	B
93	125	207	20P21AD207RA0NNN	20P41AD207RA0NNN	B
112	150	250	20P21AD250RA0NNN	20P41AD250RA0NNN	B
149	200	330	20P21AD330RA0NNN	20P41AD330RA0NNN	B
187	250	412	20P21AD412RA0NNN	20P41AD412RA0NNN	B
224	300	495	20P21AD495RA0NNN	20P41AD495RA0NNN	C
298	400	667	20P21AD667RA0NNN	20P41AD667RA0NNN	C
373	500	830	20P21AD830RA0NNN	20P41AD830RA0NNN	D
447	600	996	20P21AD996RA0NNN	20P41AD996RA0NNN	D
552	700	1162	20P21AD1K1RA0NNN	20P41AD1K1RA0NNN	D
597	800	1328	20P21AD1K3RA0NNN	20P41AD1K3RA0NNN	D
671	900	1494	20P21AD1K4RA0NNN	20P41AD1K4RA0NNN	D

575V AC, Three-Phase

Drive Output Rating			Non-Regenerative Drives	Regenerative Drives	Frame Size
Normal Duty kW	Normal Duty HP	Amps	Cat. No.	Cat. No.	
37	50	67.5	20P21AE067RA0NNN	20P41AE067RA0NNN	B
56	75	101.3	20P21AE101RA0NNN	20P41AE101RA0NNN	B
75	100	135	20P21AE135RA0NNN	20P41AE135RA0NNN	B
149	200	270	20P21AE270RA0NNN	20P41AE270RA0NNN	B
224	300	405	20P21AE405RA0NNN	20P41AE405RA0NNN	B
298	400	540	20P21AE540RA0NNN	20P41AE540RA0NNN	C
373	500	675	20P21AE675RA0NNN	20P41AE675RA0NNN	C
447	600	810	20P21AE810RA0NNN	20P41AE810RA0NNN	D
597	800	1080	20P21AE1K0RA0NNN	20P41AE1K0RA0NNN	D
671	900	1215	20P21AE1K2RA0NNN	20P41AE1K2RA0NNN	D
746	1000	1350	20P21AE1K3RA0NNN	20P41AE1K3RA0NNN	D
932	1250	1688	20P21AE1K6RA0NNN	20P41AE1K6RA0NNN	D

690V AC, Three-Phase

Drive Output Rating			Non-Regenerative Drives	Regenerative Drives	Frame Size
Normal Duty kW	Normal Duty HP	Amps	Cat. No.	Cat. No.	
298	400	452	20P21AF452RA0NNN	20P41AF452RA0NNN	C
373	500	565	20P21AF565RA0NNN	20P41AF565RA0NNN	C
447	600	678	20P21AF678RA0NNN	20P41AF678RA0NNN	D
552	700	791	20P21AF791RA0NNN	20P41AF791RA0NNN	D
597	800	904	20P21AF904RA0NNN	20P41AF904RA0NNN	D
671	900	1017	20P21AF1K0RA0NNN	20P41AF1K0RA0NNN	D
746	1000	1130	20P21AF1K1RA0NNN	20P41AF1K1RA0NNN	D
820	1100	1243	20P21AF1K2RA0NNN	20P41AF1K2RA0NNN	D
932	1250	1413	20P21AF1K4RA0NNN	20P41AF1K4RA0NNN	D
1044	1400	1582	20P21AF1K5RA0NNN	20P41AF1K5RA0NNN	D

Factory Installed Options

Each PowerFlex DC drive includes one encoder and DC analog tachometer input. No other factory installed options are available at this time.

User Installed Options

Human Interface and Wireless Interface Modules

20-HIM-A0

20-HIM-A3

20-HIM-A5

20-HIM-A6

20-HIM-C3S

20-HIM-C5S

Description	Handheld/Local (Drive Mount) Cat. No.	Remote (Panel Mount) IP66, NEMA/UL Type 4x/12 ∗ Cat. No.
No HIM (Blank Plate)	20-HIM-A0	–
LCD Display, Full Numeric Keypad	20-HIM-A3	20-HIM-C3S ‡
LCD Display, Programmer Only	20-HIM-A5	20-HIM-C5S ‡
Enhanced, LCD, Full Numeric	20-HIM-A6	

∗ For indoor use only.
‡ Includes a 1202-C30 interface cable (3 meters) for connection to drive.

Human Interface Module Accessories

Description	Cat. No.
Bezel Kit for LCD HIMs, NEMA/UL Type 1 ‡	20-HIM-B1
PowerFlex HIM Interface Cable, 1 m (39 in) ∗	20-HIM-H10
Cable Kit (Male-Female) ➢	
0.33 Meters (1.1 Feet)	1202-H03
1 Meter (3.3 Feet)	1202-H10
3 Meter (9.8 Feet)	1202-H30
9 Meter (29.5 Feet)	1202-H90
DPI/SCANport™ One to Two Port Splitter Cable	1203-S03

‡ Includes a 1202-C30 interface cable (3 meters) for connection to drive.
∗ Required only when HIM is used as handheld or remote.
➢ Required in addition to 20-HIM-H10 for distances up to a total maximum of 10 Meters (32.8 Feet).

I/O Option Kit

Description	Cat. No.
I/O Expansion board	20P-S5V62
115V AC to 24V DC 8 Channel I/O Converter Board	20P-S520L

Feedback Option Kit

Description	Cat. No.
Resolver Feedback Option Module	20P-RES-A0

User Installed Options, continued

Communication Option Kits

Description	Cat. No.
BACnet® MS/TP RS485 Communication Adapter	20-COMM-B
ControlNet™ Communication Adapter (Coax)	20-COMM-C
DeviceNet™ Communication Adapter	20-COMM-D
EtherNet/IP™ Communication Adapter	20-COMM-E
HVAC Communication Adapter ❖	20-COMM-H
Interbus™ Communication Adapter	20-COMM-I
PROFIBUS™ DP Communication Adapter	20-COMM-P
ControlNet™ Communication Adapter (Fiber)	20-COMM-Q
Remote I/O Communication Adapter	20-COMM-R
RS485 DF1 Communication Adapter	20-COMM-S
External Communications Kit Power Supply	20-XCOMM-AC-PS1
DPI External Communications Kit	20-XCOMM-DC-BASE
External DPI I/O Option Board ✦	20-XCOMM-IO-OPT1
Compact I/O to DPI/SCANport Module	1769-SM1
Serial Null Modem Adapter	1203-SNM
Smart Self-powered Serial Converter (RS232) includes 1203-SFC and 1202-C10 Cables	1203-SSS
Universal Serial Bus™ (USB) Converter includes 2m USB, 20-HIM-H10 & 22-HIM-H10 Cables	1203-USB

✦ For use only with External DPI Communications Kits 20-XCOMM-DC-BASE.

PC Programming Software

Description	
DriveTools™ SP Software ✦	See publication 9303-PL002… for ordering/pricing information.
DriveExplorer™ Software (Lite/Full) ✦ ❖	
Pocket DriveExplorer™ Software	

✦ Set-up wizards are available for use with DriveTools SP and DriveExplorer (Lite/Full) only.

❖ DriveExplorer Lite is available for free download at: http://www.ab.com/drives/driveexplorer/free_download.html

Isolation Transformers

Isolation Transformers are available for installations that have specific types of AC supply configurations or require drive protection due to AC line disturbances.

Three Phase Primary Voltage			Three Phase Secondary Voltage		
kVA	**kW (HP)**	**Voltage**	**230V AC Catalog Number**	**460V AC Catalog Number**	**575V AC Catalog Number**
5	1.2 - 2.2 (1.5 - 3)	230	1321-3TW005-AA	1321-3TW005-AB	N/A
		460	1321-3TW005-BA	1321-3TW005-BB	N/A
		575	1321-3TW005-CA	1321-3TW005-CB	N/A
7.5	3.7 (5)	230	1321-3TW007-AA	1321-3TW007-AB	N/A
		460	1321-3TW007-BA	1321-3TW007-BB	N/A
		575	1321-3TW007-CA	1321-3TW007-CB	N/A
11	5.5 (7.5)	230	1321-3TW011-AA	1321-3TW011-AB	N/A
		460	1321-3TW011-BA	1321-3TW011-BB	N/A
		575	1321-3TW011-CA	1321-3TW011-CB	N/A
14	7.5 (10)	230	1321-3TW014-AA	1321-3TW014-AB	N/A
		460	1321-3TW014-BA	1321-3TW014-BB	N/A
		575	1321-3TW014-CA	1321-3TW014-CB	N/A
20	11 (15)	230	1321-3TW020-AA	1321-3TW020-AB	N/A
		460	1321-3TW020-BA	1321-3TW020-BB	N/A
		575	1321-3TW020-CA	1321-3TW020-CB	N/A
27	15 (20)	230	1321-3TW027-AA	1321-3TW027-AB	N/A
		460	1321-3TW027-BA	1321-3TW027-BB	N/A
		575	1321-3TW027-CA	1321-3TW027-CB	N/A

Three Phase Primary Voltage			Three Phase Secondary Voltage		
kVA	kW (HP)	Voltage	230V AC Catalog Number	460V AC Catalog Number	575V AC Catalog Number
34	18.5 (25)	230	1321-3TW034-AA	1321-3TW034-AB	N/A
		460	1321-3TW034-BA	1321-3TW034-BB	N/A
		575	1321-3TW034-CA	1321-3TW034-CB	N/A
40	22 (30)	230	1321-3TW040-AA	1321-3TW040-AB	N/A
		460	1321-3TW040-BA	1321-3TW040-BB	N/A
		575	1321-3TW040-CA	1321-3TW040-CB	N/A
51	30 (40)	230	1321-3TW051-AA	1321-3TW051-AB	N/A
		460	1321-3TW051-BA	1321-3TW051-BB	N/A
		575	1321-3TW051-CA	1321-3TW051-CB	N/A
63	37 (50)	230	1321-3TH063-AA	1321-3TH063-AB	1321-3TH063-AC
		460	1321-3TH063-BA	1321-3TH063-BB	1321-3TH063-BC
		575	1321-3TH063-CA	1321-3TH063-CB	1321-3TH063-CC
75	45 (60)	230	1321-3TH075-AA	1321-3TH075-AB	1321-3TH075-AC
		460	1321-3TH075-BA	1321-3TH075-BB	1321-3TH075-BC
		575	1321-3TH075-CA	1321-3TH075-CB	1321-3TH075-CC
93	56 (75)	230	1321-3TH093-AA	1321-3TH093-AB	1321-3TH093-AC
		460	1321-3TH093-BA	1321-3TH093-BB	1321-3TH093-BC
		575	1321-3TH093-CA	1321-3TH093-CB	1321-3TH093-CC
118	75 (100)	230	1321-3TH118-AA	1321-3TH118-AB	1321-3TH118-AC
		460	1321-3TH118-BA	1321-3TH118-BB	1321-3TH118-BC
		575	1321-3TH118-CA	1321-3TH118-CB	1321-3TH118-CC
145	93 (125)	230	1321-3TH145-AA	1321-3TH145-AB	1321-3TH145-AC
		460	1321-3TH145-BA	1321-3TH145-BB	1321-3TH145-BC
		575	1321-3TH145-CA	1321-3TH145-CB	1321-3TH145-CC
175	112 (150)	230	1321-3TH175-AA	1321-3TH175-AB	1321-3TH175-AC
		460	1321-3TH175-BA	1321-3TH175-BB	1321-3TH175-BC
		575	1321-3TH175-CA	1321-3TH175-CB	1321-3TH175-CC
220	145 (200)	230	1321-3TH220-AA	1321-3TH220-AB	1321-3TH220-AC
		460	1321-3TH220-BA	1321-3TH220-BB	1321-3TH220-BC
		575	1321-3TH220-CA	1321-3TH220-CB	1321-3TH220-CC
275	187 (250)	230	1321-3TH275-AA	1321-3TH275-AB	1321-3TH275-AC
		460	1321-3TH275-BA	1321-3TH275-BB	1321-3TH275-BC
		575	1321-3TH275-CA	1321-3TH275-CB	1321-3TH275-CC
330	224 (300)	230	1321-3TH330-AA	1321-3TH330-AB	1321-3TH330-AC
		460	1321-3TH330-BA	1321-3TH330-BB	1321-3TH330-BC
		575	1321-3TH330-CA	1321-3TH330-CB	1321-3TH330-CC
440	298 (400)	230	N/A	1321-3TH440-AB	1321-3TH440-AC
		460	N/A	1321-3TH440-BB	1321-3TH440-BC
		575	N/A	1321-3TH440-CB	1321-3TH440-CC
550	373 (500)	230	N/A	1321-3TH550-AB	1321-3TH550-AC
		460	N/A	1321-3TH550-BB	1321-3TH550-BC
		575	N/A	1321-3TH550-CB	1321-3TH550-CC
660	448 (600)	230	N/A	1321-3TH660-AB	1321-3TH660-AC
		460	N/A	1321-3TH660-BB	1321-3TH660-BC
		575	N/A	1321-3TH660-CB	1321-3TH660-CC
770	522 (700)	230	N/A	1321-3TH770-AB	1321-3TH770-AC
		460	N/A	1321-3TH770-BB	1321-3TH770-BC
		575	N/A	1321-3TH770-CB	1321-3TH770-CC
880	597 (800)	230	N/A	1321-3TH880-AB	1321-3TH880-AC
		460	N/A	1321-3TH880-BB	1321-3TH880-BC
		575	N/A	1321-3TH880-CB	1321-3TH880-CC

AC Input Line Reactors and Contactors

If a DC Contactor is used, an AC Input contactor is not needed.

230V AC Input Drives

Non-Regenerative Drive Cat. No.	Regenerative Drive Cat. No.	DC Amps	AC Line Amps	HP	IP00 (Open Style) Line Reactor Cat No.	Line Reactor kW (HP)	AC Input Contactor Cat. No.
20P21AB7P0	20P41AB7P0	7	5.7	1.5	1321-3R8-A	.75 (1)	100-C12D10
20P21AB9P0	20P41AB9P0	9	7.4	2	1321-3R12-A	1.49 (2)	100-C12D10
20P21AB012	20P41AB012	12	9.8	3	1321-3R18-A	0.75-3.7 (1-5)	100-C12D10
20P21AB020	20P41AB020	20	16	5	1321-3R18-A	0.75-3.7 (1-5)	100-C23D10
20P21AB029	20P41AB029	29	24	7.5	1321-3R55-A	5.5-11 (7.5-15)	100-C30D10
20P21AB038	20P41AB038	38	31	10	1321-3R55-A	5.5-11 (7.5-15)	100-C37D10
20P21AB055	20P41AB055	55	45	15	1321-3R55-A	5.5-11 (7.5-15)	100-C60D10
20P21AB073	20P41AB073	73	60	20	1321-3R80-A	15 (20)	100-C60D10
20P21AB093	20P41AB093	93	76	25	1321-3R100-A	18.5-22 (25-30)	100-C85D10
20P21AB110	20P41AB110	110	90	30	1321-3R100-A	18.5-22 (25-30)	100-D110D11
20P21AB146	20P41AB146	146	119	40	1321-3R160-A	30-37 (40-50)	100-D140D11
20P21AB180	20P41AB180	180	147	50	1321-3R160-A	30-37 (40-50)	100-D180D11
20P21AB218	20P41AB218	218	178	60	1321-3RB250-A	45-56 (60-75)	100-D180D11
20P21AB265	20P41AB265	265	217	75	1321-3RB250-A	45-56 (60-75)	100-D250ED11
20P21AB360	20P41AB360	360	294	100	1321-3RB320-A	75 (100)	100-D300ED11
20P21AB434	20P41AB434	434	355	125	1321-3RB400-A	93 (125)	100-D420ED11
20P21AB521	20P41AB521	521	426	150	1321-3R500-A	112 (150)	100-D630ED11
20P21AB700	20P41AB700	700	572	200	1321-3R600-A	149 (200)	100-D630ED11
20P21AB875	20P41AB875	875	715	250	1321-3R750-A	186 (250)	100-D860ED11
20P21AB1K0	20P41AB1K0	1050	858	300	1321-3R850-A	224 (300)	100-D860ED11

460V AC Input Drives

Non-Regenerative Drive Cat. No.	Regenerative Drive Cat. No.	DC Amps	AC Line Amps	HP	IP00 (Open Style) Line Reactor Cat No.	Line Reactor kW (HP)	AC Input Contactor Cat. No.
20P21AD4P1	20P41AD4P1	4.1	3.3	2	1321-3R4-A	.55 (.75)	100-C12D10
20P21AD6P0	20P41AD6P0	6	4.9	3	1321-3R8-A	.75 (1)	100-C12D10
20P21AD010	20P41AD010	10	8.2	5	1321-3R18-B	1.5-7.5 (2-10)	100-C12D10
20P21AD014	20P41AD014	14	11.4	7.5	1321-3R18-B	1.5-7.5 (2-10)	100-C12D10
20P21AD019	20P41AD019	19	15.5	10	1321-3R18-B	1.5-7.5 (2-10)	100-C23D10
20P21AD027	20P41AD027	27	22.1	15	1321-3R55-B	11-22 (15-30)	100-C23D10
20P21AD035	20P41AD035	35	28.6	20	1321-3R55-B	11-22 (15-30)	100-C30D10
20P21AD045	20P41AD045	45	36.8	25	1321-3R55-B	11-22 (15-30)	100-C37D10
20P21AD052	20P41AD052	52	42.5	30	1321-3R55-B	11-22 (15-30)	100-C43D10
20P21AD073	20P41AD073	73	59.6	40	1321-3R80-B	30 (40)	100-C60D10
20P21AD086	20P41AD086	86	70.3	50	1321-3R100-B	37-45 (50-60)	100-C85D10
20P21AD100	20P41AD100	100	81.7	60	1321-3R100-B	37-45 (50-60)	100-C85D10
20P21AD129	20P41AD129	129	105.4	75	1321-3R160-B	56-75 (75-100)	100-D110D11
20P21AD167	20P41AD167	167	136.4	100	1321-3R160-B	56-75 (75-100)	100-D140D11
20P21AD207	20P41AD207	207	169.1	125	1321-3RB250-B	93-112 (125-150)	100-D180D11
20P21AD250	20P41AD250	250	204.3	150	1321-3RB250-B	93-112 (125-150)	100-D210ED11
20P21AD330	20P41AD330	330	269.6	200	1321-3RB320-B	149 (200)	100-D300ED11
20P21AD412	20P41AD412	412	336.6	250	1321-3RB400-B	186.4 (250)	100-D420ED11
20P21AD495	20P41AD495	495	404.4	300	1321-3R500-B	223.7 (300)	100-D420ED11
20P21AD667	20P41AD667	667	544.9	400	1321-3R600-B	298.3 (400)	100-D630ED11
20P21AD830	20P41AD830	830	678.1	500	1321-3R750-B	372.8 (500)	100-D860ED11

Non-Regenerative Drive Cat. No.	Regenerative Drive Cat. No.	DC Amps	AC Line Amps	HP	IP00 (Open Style) Line Reactor Cat No.	Line Reactor kW (HP)	AC Input Contactor Cat. No.
20P21AD996	20P41AD996	996	813.7	600	1321-3R850-B	447,4 (600)	100-D860ED11
20P21AD1K1	20P41AD1K1	1162	949.4	700	1321-3R1000-B	552 (700)	100-G860KD22
20P21AD1K3	20P41AD1K3	1328	1085.0	800	(1)	–	100-G860KD22
20P21AD1K4	20P41AD1K4	1494	1220.6	900	(2)	–	100-G1200KD12

(1) No Line Reactor available for this drive rating. Use the recommended Isolation Transformer: 1321-3TH880-BB.

(2) No Line Reactor or Isolation Transformer available for this drive rating - must be sourced locally.

575V AC Input Drives

Non-Regenerative Drive Cat. No.	Regenerative Drive Cat. No.	DC Amps	AC Line Amps	HP	IP00 (Open Style) Line Reactor Cat No.	Line Reactor kW (HP)	AC Input Contactor Cat. No.
20P21AE067	20P41AE067	67.5	55.1	50	1321-3R55-B	37 (50)	100-C60D10
20P21AE101	20P41AE101	101.25	82.7	75	1321-3R100-B	56 (75)	100-C85D10
20P21AE135	20P41AE135	135	110.3	100	1321-3R130-B	75 (100)	100-D110D11
20P21AE270	20P41AE270	270	220.6	200	1321-3RB250-B	149 (200)	100-D250ED11
20P21AE405	20P41AE405	405	330.9	300	1321-3RB320-B	224 (300)	100-D420ED11
20P21AE540	20P41AE540	540	441.2	400	1321-3RB500-B	298 (400)	100-D630ED11
20P21AE675	20P41AE675	675	551.5	500	1321-3R600-B	373 (500)	100-D630ED11
20P21AE810	20P41AE810	810	661.8	600	1321-3R600-B	447 (600)	100-D860ED11
20P21AE1K0	20P41AE1K0	1080	882.4	800	1321-3R750-B	597 (800)	100-G700KD22
20P21AE1K2	20P41AE1K2	1215	992.7	900	1321-3R850-B	671 (900)	100-G860KD22
20P21AE1K3	20P41AE1K3	1350	1103.0	1000	1321-3R1000-B	746 (1000)	100-G1000KD12
20P21AE1K6	20P41AE1K6	1687.5	1378.7	1250	(1)	–	(2)

(1) No Line Reactor or Isolation Transformer available for this drive rating - must be sourced locally.

(2) No AC Input Contactor available for this drive rating - must be sourced locally.

690V AC Input Drives

Non-Regenerative Drive Cat. No.	Regenerative Drive Cat. No.	DC Amps	AC Line Amps	HP	IP00 (Open Style) Line Reactor Cat No.	Line Reactor kW (HP)	AC Input Contactor Cat. No.
20P21AF452	20P41AF452	452	369	400	1321-3RB500-C	–	100-D420ED11
20P21AF565	20P41AF565	565	462	500	1321-3RB600-C	–	100-D630ED11
20P21AF678	20P41AF678	678	554	600	Line Reactors or Isolation Transformers for 690V AC input voltage drives must be sourced locally.	–	100-D630ED11
20P21AF791	20P41AF791	791	646	700		–	100-D860ED11
20P21AF904	20P41AF904	904	739	800		–	100-D860ED11
20P21AF1K0	20P41AF1K0	1017	831	900		–	100-D860ED11
20P21AF1K1	20P41AF1K1	1130	923	1000		–	100-G700KD22
20P21AF1K2	20P41AF1K2	1243	1016	1100		–	100-G860KD22
20P21AF1K4	20P41AF1K4	1412.5	1154	1250		–	100-G1200KD12
20P21AF1K5	20P41AF1K5	1582	1292	1400		–	100-G1200KD12

Dynamic Brake Resistor Kits and DC Output Contactors

See Alternate Dynamic Brake Resistor Kits and DC Output Contactors on page 16 for recommended alternate DC Output Contactors for 575V and 690V AC input drives, respectively.

230V AC Input Drives

Frame	Drive Current Rating Code	DC Amps	AC Line Amps	HP	Dynamic Brake Resistor Kit Cat. No.	Armature Voltage (Volts)	DB Resistor Size (ohms)	DB Resistor Size (Watts)	Brake Amps Required	DC Loop Contactor Cat. No.(3)	DC Contactor Crimp Lugs Cat. No.(4)
A	7P0	7	5.7	1.5	1370-DBL62	240	20	420	12.00	1370-DC56	1370-LG40
	9P0	9	7.4	2	1370-DBL63	240	20	420	12.00	1370-DC56	1370-LG40
	012	12	9.8	3	1370-DBL64	240	15	420	16.00	1370-DC56	1370-LG40
	020	20	16	5	1370-DBL65	240	8.6	420	27.91	1370-DC56	1370-LG40
	029	29	24	7.5	1370-DBL66	240	6	345	40.00	1370-DC56	1370-LG40
	038	38	31	10	1370-DBL67	240	5	330	48.00	1370-DC56	1370-LG40
	055	55	45	15	1370-DBL68	240	3.5	385	68.57	1370-DC56	1370-LG56
	073	73	60	20	1370-DBL69	240	2.6	385	92.31	1370-DC110	1370-LG92
	093	93	76	25	1370-DBL70	240	2	330	120.00	1370-DC110	1370-LG92
	110	110	90	30	1370-DBL71	240	2	330	120.00	1370-DC110	1370-LG110
B	146	146	119	40	1370-DBL72	240	0.7	280	342.86	1370-DC180	1370-LG160
	180	180	147	50	1370-DBL73	240	0.5	365	480.00	1370-DC180	1370-LG180
	218	218	178	60	1370-DBL74	240	0.5	365	480.00	1370-DC280	1370-LG228
	265	265	217	75	1370-DBL75	240	2	330	120.00	1370-DC280	1370-LG268
	360	360	294	100	1370-DBL76	240	1.4	290	171.43	(1)	(5)
	434	434	355	125	(1)	240	0.5	1458	651	(1)	(5)
C	521	521	426	150	(1)	240	0.322	6221	781	(1)	(5)
	700	700	572	200	(2)	240	–	–	–	(1)	(5)
D	875	875	715	250	(2)	240	–	–	–	(1)	(5)
	1K0	1050	858	300	(2)	240	–	–	–	(1)	(5)

(1) See Alternate Dynamic Brake Resistor Kits and DC Output Contactors Amp on page 16.
(2) No Dynamic Brake Resistor kit available for this drive rating - must be sourced locally.
(3) Coil voltage = 115V AC, 50/60Hz.
(4) See DC Contactor Crimp Lug Kit Specifications Amp on page 15 for more information.
(5) Wire and Lug size dependant on enclosure dimensions and local codes.

460V AC Input Drives

Frame	Drive Current Rating Code	DC Amps	AC Line Amps	HP	Dynamic Brake Resistor Kit Cat. No.	Armature Voltage (Volts)	DB Resistor Size (ohms)	DB Resistor Size (Watts)	Brake Amps Required	DC Loop Contactor Cat. No.(3)	DC Contactor Crimp Lugs Cat. No.(4)
A	4P1	4.1	3.3	2	1370-DBH63	500	81	255	6.17	1370-DC56	1370-LG40
	6P0	6	4.9	3	1370-DBH64	500	62	245	8.06	1370-DC56	1370-LG40
	010	10	8.2	5	1370-DBH65	500	45	245	11.11	1370-DC56	1370-LG40
	014	14	11.4	7.5	1370-DBH66	500	27	350	18.52	1370-DC56	1370-LG40
	019	19	15.5	10	1370-DBH67	500	20	420	25.00	1370-DC56	1370-LG40
	027	27	22.1	15	1370-DBH68	500	12	405	41.67	1370-DC56	1370-LG40
	035	35	28.6	20	1370-DBH69	500	5	330	100.00	1370-DC56	1370-LG40
	045	45	36.8	25	1370-DBH70	500	4.5	330	111.11	1370-DC56	1370-LG52
	052	52	42.5	30	1370-DBH71	500	3.5	385	142.86	1370-DC56	1370-LG52
	073	73	59.6	40	1370-DBH72	500	2.6	345	192.31	1370-DC110	1370-LG92
	086	86	70.3	50	1370-DBH73	500	2	345	250.00	1370-DC110	1370-LG92
	100	100	81.7	60	1370-DBH74	500	2	345	250.00	1370-DC110	1370-LG110
	129	129	105.4	75	1370-DBH75	500	1	270	500.00	1370-DC180	1370-LG140

Frame	Drive Current Rating Code	DC Amps	AC Line Amps	HP	Dynamic Brake Resistor Kit Cat. No.	Armature Voltage (Volts)	DB Resistor Size (ohms)	DB Resistor Size (Watts)	Brake Amps Required	DC Loop Contactor Cat. No.(3)	DC Contactor Crimp Lugs Cat. No.(4)
B	167	167	136.4	100	1370-DBH76	500	0.7	280	714.29	1370-DC180	1370-LG180
	207	207	169.1	125	1370-DBH77	500	0.7	280	714.29	1370-DC280	1370-LG228
	250	250	204.3	150	1370-DBH78	500	0.5	365	1000.00	1370-DC280	1370-LG268
	330	330	269.6	200	1370-DBH79	500	0.7	280	714.29	(1)	(5)
	412	412	336.6	250	(1)	500	0.808	7292	–	(1)	(5)
C	495	495	404.4	300	(1)	500	0.595	6069	–	(1)	(5)
	667	667	544.9	400	(1)	500	0.542	6439	–	(1)	(5)
D	800	830	678.1	500	(2)	500	0.463	6338	–	(1)	(5)
	960	996	813.7	600	(2)	500	0.322	6221	–	(1)	(5)
	1K1	1162	949.4	700	(2)	500	0.322	6221	–	(1)	(5)
	1K3	1328	1085.0	800	(2)	500	0.255	5718	–	(1)	(5)
	1K4	1494	1220.6	900	(2)	500	0.255	5718	–	(1)	(5)

(1) See Alternate Dynamic Brake Resistor Kits and DC Output Contactors Amp on page 16.
(2) No Dynamic Brake Resistor kit available for this drive rating - must be sourced locally.
(3) Coil voltage = 115V AC, 50/60Hz.
(4) See DC Contactor Crimp Lug Kit Specifications Amp on page 15for more information.
(5) Wire and Lug size dependant on enclosure dimensions and local codes.

DC Contactor Crimp Lug Kit Specifications

Use the information provided in the table below to assist you in ordering the correct Lug kit for your application.

Rated Motor Armature Current (1) *A DC*	DC Contactor Rating *A DC*	Armature Conductor Size (2) *AWG*	DB Conductor Size (3) *AWG*	Armature Conductor Crimp Lug Hole Size	DB Conductor Crimp Lug Hole Size	Lug Kit Catalog Number
4.1…35	56	8	8	#10	#10	1370-LG40
45…52	56	6	8	#10	#10	1370-LG52
55	56	4	8	#10	#10	1370-LG56
60…86	110	2	6	0.25 in.	0.25 in.	1370-LG92
100…110	110	1/0	4	0.25 in.	0.25 in.	1370-LG110
129	180	2/0	2	0.3125 in.	0.3125 in.	1370-LG140
146	180	3/0	2	0.3125 in.	0.3125 in.	1370-LG160
147…167	180	4/0	2	0.3125 in.	0.3125 in.	1370-LG180
207…218	280	300MCM	1/0	0.5 in.	0.375 in.	1370-LG228
250…265	280	400MCM	2/0	0.5 in.	0.375 in.	1370-LG268
266…280	280	500MCM	3/0	0.5 in.	0.375 in.	1370-LG280

(1) The Rated Motor Armature Current is taken directly from the motor nameplate or motor data. The current listed in this column is the maximum current allowed for the Armature Conductor Size (column 3) and the DC Contactor Rating (column 2).
(2) The armature conductors are sized by multiplying the Rated Motor Armature Current by 1.25 as provided for in NEC 420-22 (1987). The DC lug ratings are determined from NEC Table 310-16 (1987) for copper conductors, insulation temperature rated at 75° C (167° F) at an ambient temperature of 30° C (86° F). If conditions are other than shown in NEC Table 310-16, then refer to application codes.
(3) The dynamic braking (DB) conductors are sized as in footnote 2 above, but at half ampacity due to the short time duration of current flow in these conductors, and has been sized to satisfy NEMA Standard ICS 3-302.62 - Dynamic Braking. If the load inertia is larger than that of the motor, calculations must be made to determine correct conductor sizing and DB resistor wattage per NEMA Standard ICS 3-302.62.

Alternate Dynamic Brake Resistor Kits and DC Output Contactors

The following alternate dynamic brake resistor kits and/or DC output contactors may be used with the corresponding PowerFlex DC drives but must be sourced separately from the drive.

230V AC Input Drives

Frame	Drive Current Rating Code	DC Amps	AC Line Amps	HP	Dynamic Brake Resistor Kit Cat. No.	Armature Voltage (Volts)	DB Resistor Size (ohms)	DB Resistor Size (Watts)	Brake Amps Required	DC Loop Contactor Cat. No.(2)		DC Contactor Crimp Lugs Cat. No.(3)
										Drive w/No Dynamic Brake	Drive w Dynamic Brake	
B	360	360	294	100	1370-DBL76	240	1.4	290	171.43	ABB_EHDB360C2P-1L2S	ABB_EHDB360C-1L22SS	(4)
	434	434	355	125	CUTLER-HAMMER_G3AP50 (Qty 4 - two in series, two in parallel)	240	0.5	1458	651	ABB_EHDB520C2P-1L2S	ABB_EHDB520C-1L22SS	
C	521	521	426	150	HUBBELL_Y139W322GB	240	0.322	6221	781			
	700	700	572	200	(1)	240	–	–	–	ABB_EHDB800C2P-1L2S	ABB_EHDB800C-1L22SS	
D	875	875	715	250		240	–	–	–	ABB_EHDB960C2P-1L2S	ABB_EHDB960C-1L22SS	
	1K0	1050	858	300		240	–	–	–	SIEMENS-MFG_14-193-101-58-2 (Qty 2)	SIEMENS-MFG_14-193-101-58-2 (Qty 1)	

(1) No Dynamic Brake Resistor kit available for this drive rating - must be sourced locally.
(2) Coil voltage = 115V AC, 50/60Hz.
(3) See DC Contactor Crimp Lug Kit Specifications Amp on page 15 for more information.
(4) Wire and Lug size dependant on enclosure dimensions and local codes.

460V AC Input Drives

Frame	Drive Current Rating Code	DC Amps	AC Line Amps	HP	Dynamic Brake Resistor Kit Cat. No.	Armature Voltage (Volts)	DB Resistor Size (ohms)	DB Resistor Size (Watts)	Brake Amps Required	DC Loop Contactor Cat. No.(2)		DC Contactor Crimp Lugs Cat. No.(3)
										Drive w/No Dynamic Brake	Drive w Dynamic Brake	
B	330	330	269.6	200	1370-DBH79	500	0.7	280	714.29	ABB_EHDB360C2P-1L2S	ABB_EHDB360C-1L22SS	(4)
	412	412	336.6	250	HUBBELL_Y95W808GB	500	0.808	7292	–	ABB_EHDB520C2P-1L2S	ABB_EHDB520C-1L22SS	
C	495	495	404.4	300	HUBBELL_Y101W595GB	500	0.595	6069	–	ABB_EHDB520C2P-1L2S	ABB_EHDB520C-1L22SS	
	667	667	544.9	400	HUBBELL_Y109W542GB	500	0.542	6439	–	ABB_EHDB800C2P-1L2S	ABB_EHDB800C-1L22SS	
D	800	830	678.1	500	(1)	500	0.463	6338	–	ABB_EHDB960C2P-1L2S	ABB_EHDB960C-1L22SS	
	960	996	813.7	600		500	0.322	6221	–	SIEMENS-MFG_14-193-101-58-2 (Qty 2)	SIEMENS-MFG_14-193-101-58-2 (Qty 1)	
	1K1	1162	949.4	700		500	0.322	6221	–	SIEMENS-MFG_14-193-101-58-2 (Qty 2)	SIEMENS-MFG_14-193-101-58-2 (Qty 1)	
	1K3	1328	1085.0	800		500	0.255	5718	–	CUTLER-HAMMER_6702ED636-2 (Qty 2)	CUTLER-HAMMER_6702ED636-2 (Qty 1)	
	1K4	1494	1220.6	900		500	0.255	5718	–	CUTLER-HAMMER_6702ED636-2 (Qty 2)	CUTLER-HAMMER_6702ED636-2 (Qty 1)	

(1) No Dynamic Brake Resistor kit available for this drive rating - must be sourced locally.
(2) Coil voltage = 115V AC, 50/60Hz.
(3) See DC Contactor Crimp Lug Kit Specifications Amp on page 15 for more information.
(4) Wire and Lug size dependant on enclosure dimensions and local codes.

575V AC Input Drives

Frame	Drive Current Rating Code	DC Amps	AC Line Amps	Hp	Dynamic Brake Resistor Kit Cat. No.	Armature Voltage (Volts)	DB Resistor Size (ohms)	DB Resistor Size (Watts)	Brake Amps Required	DC Loop Contactor Cat. No.(2)		DC Contactor Crimp Lugs Cat. No.(3)
										Drive w/No Dynamic Brake	Drive w Dynamic Brake	
B	067	67.5	55.1	50	(1)	600	5.93	–	–	ABB_EHDB220C2P-1L2S	ABB_EHDB220C-1L22SS	(4)
	101	101	83	75		600	3.95	–	–	ABB_EHDB220C2P-1L2S	ABB_EHDB220C-1L22SS	
	135	135	110	100		600	2.96	–	–	ABB_EHDB220C2P-1L2S	ABB_EHDB220C-1L22SS	
	270	270	221	200		600	1.48	–	–	ABB_EHDB360C2P-1L2S	ABB_EHDB360C-1L22SS	
	405	405	331	300		600	0.988	–	–	ABB_EHDB520C2P-1L2S	ABB_EHDB520C-1L22SS	
C	540	540	441	400		600	0.741	–	–	ABB_EHDB650C2P-1L2S	ABB_EHDB650C-1L22SS	
	675	675	551	500		600	0.593	–	–	ABB_EHDB800C2P-1L2S	ABB_EHDB800C-1L22SS	
D	810	810	662	600		600	0.494	–	–	ABB_EHDB960C2P-1L2S	ABB_EHDB960C-1L22SS	
	1K0	1080	882	800		600	0.370	–	–	SIEMENS-MFG_14-193-101-58-2 (Qty 2)	SIEMENS-MFG_14-193-101-58-2 (Qty 1)	
	1K2	1215	993	900		600	0.329	–	–	SIEMENS-MFG_14-193-101-58-2 (Qty 2)	SIEMENS-MFG_14-193-101-58-2 (Qty 1)	
	1K3	1350	1103	1000		600	0.296	–	–	CUTLER-HAMMER_6702ED636-2 (Qty 2)	CUTLER-HAMMER_6702ED636-2 (Qty 1)	
	1K6	1688	1379	1250		600	0.237	–	–	CUTLER-HAMMER_6702ED636-2 (Qty 2)	CUTLER-HAMMER_6702ED636-2 (Qty 1)	

(1) No Dynamic Brake Resistor kit available for this drive rating - must be sourced locally.

(2) Coil voltage = 115V AC, 50/60Hz.

(3) See DC Contactor Crimp Lug Kit Specifications Amp on page 15 for more information.

(4) Wire and Lug size dependant on enclosure dimensions and local codes.

690V AC Input Drives

Frame	Drive Current Rating Code	DC Amps	AC Line Amps	Hp	Dynamic Brake Resistor Kit Cat. No.	Armature Voltage (Volts)	DB Resistor Size (ohms)	DB Resistor Size (Watts)	Brake Amps Required	DC Loop Contactor Cat. No.(2)		DC Contactor Crimp Lugs Cat. No.(3)
										Drive w/No Dynamic Brake	Drive w Dynamic Brake	
C	452	452	369	400	(1)	700	1.03	–	–	SIEMENS-MFG_14-193-101-58-2 (Qty 2)	SIEMENS-MFG_14-193-101-58-2 (Qty 1)	(4)
	565	565	462	500		700	0.826	–	–	SIEMENS-MFG_14-193-101-58-2 (Qty 2)	SIEMENS-MFG_14-193-101-58-2 (Qty 1)	
D	678	678	554	600		700	0.688	–	–	SIEMENS-MFG_14-193-101-58-2 (Qty 2)	SIEMENS-MFG_14-193-101-58-2 (Qty 1)	
	791	791	646	700		700	0.590	–	–	SIEMENS-MFG_14-193-101-58-2 (Qty 2)	SIEMENS-MFG_14-193-101-58-2 (Qty 1)	
	904	904	739	800		700	0.516	–	–	SIEMENS-MFG_14-193-101-58-2 (Qty 2)	SIEMENS-MFG_14-193-101-58-2 (Qty 1)	
	1K0	1017	831	900		700	0.459	–	–	SIEMENS-MFG_14-193-101-58-2 (Qty 2)	SIEMENS-MFG_14-193-101-58-2 (Qty 1)	
	1K1	1130	923	1000		700	0.413	–	–	SIEMENS-MFG_14-193-101-58-2 (Qty 2)	SIEMENS-MFG_14-193-101-58-2 (Qty 1)	
	1K2	1243	1016	1100		700	0.375	–	–	SIEMENS-MFG_14-193-101-58-2 (Qty 2)	SIEMENS-MFG_14-193-101-58-2 (Qty 1)	
	1K4	1413	1154	1250		700	0.330	–	–	CUTLER-HAMMER_6702ED636-2 (Qty 2)	CUTLER-HAMMER_6702ED636-2 (Qty 1)	
	1K5	1582	1292	1400		700	0.295	–	–	CUTLER-HAMMER_6702ED636-2 (Qty 2)	CUTLER-HAMMER_6702ED636-2 (Qty 1)	

(1) No Dynamic Brake Resistor kit available for this drive rating - must be sourced locally.

(2) Coil voltage = 115V AC, 50/60Hz.

(3) See DC Contactor Crimp Lug Kit Specifications Amp on page 15 for more information.

(4) Wire and Lug size dependant on enclosure dimensions and local codes.

Frame D Terminal Adapter Kits

The following frame D drives require the listed terminal adapter kits in order to meet UL installation requirements.

Voltage Class	Drive Current Rating Code	U, V, W Terminal Adapter Kit Number	C, D Terminal Adapter Kit Number
230	1K0	SK-20P-S726171	–
460	1K1		–
	1K3		–
	1K4		–
575	1K0		–
	1K2		–
	1K3		–
	1K6		SK-20P-S726173
690	1K0		–
	1K1		–
	1K2		–
	1K4		–
	1K5		–

Installation Considerations

The PowerFlex Digital DC drive has the following built in protective features to help simplify installation:

- Ground fault protection during start up and running ensures reliable operation
- Electronic motor overload protection increases motor life

There are many other factors that must be considered for optimal performance in any given application. The block diagram below highlights the primary installation considerations.

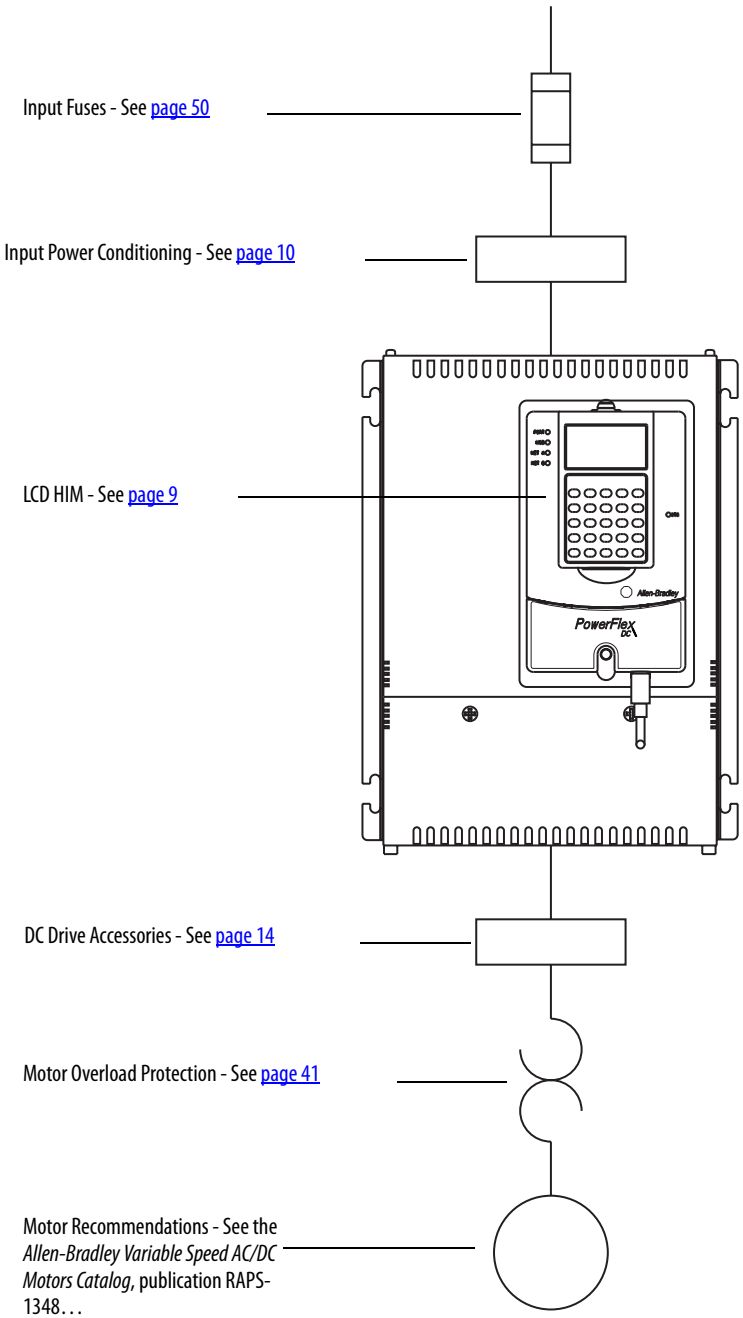

Power Wiring

AC Input Voltages

PowerFlex DC drives are rated for the following AC input voltages @ 50/60 Hz ±5%:

Mains Circuit (Terminals U, V, W)

- 230V ±10%, 3Ph
- 400V ±10%, 3Ph
- 440V ±10%, 3Ph
- 460V ±10%, 3Ph
- 480V ±10%, 3Ph
- 575V ±10%, 3Ph
- 690V ±10%, 3Ph

Field Circuit (Terminals U1, V1)

- 230V ±10%, 1Ph
- 400V ±10%, 1Ph
- 460V ±10%, 1Ph

Control Circuit (Terminals U2, V2)

- 115V ±15% or 230V ±15%, 1Ph

Note: For frame B and C drives only, a jumper must be placed between terminals SA-SB on the Switching Power Supply circuit board for the control circuits to work with 115V AC input. Refer to Frame B drives SA-SB Terminal Block Location on page 36 and Frame C Drives SA-SB Terminal Block Location on page 37 for terminal block locations.

DC Output Voltages

The output voltages below take into account an AC input undervoltage within the stated tolerance limits and a voltage drop of 4% due to an AC input line reactor. It is the same as the rated armature voltage suggested for the connected motor.

Armature Circuit

AC Input Voltage	DC Output Armature Voltage (Terminals C & D)	
(Terminals U, V, W)	Two Quadrant Drive	Four Quadrant Drive
230V ±10 %, 3Ph	260V	240V
400V ±10 %, 3Ph	470V	420V
440V ±10 %, 3Ph	530V	460V
460V ±10 %, 3Ph	560V	480V
480V ±10 %, 3Ph	580V	500V
575V ±10 %, 3Ph	680V	600V
690V ±10 %, 3Ph	810V	720V

Field Circuit

AC Input Voltage	DC Output Field Voltage(1) (Terminals C1 & D1)	
(Terminals U1 & V1)	Fixed Field	Adjustable Field
230V ±10 %, 1Ph	200V	200V
400V ±10 %, 1Ph	310V	310V
460V ±10%, 1Ph	360V	360V

(1) The max field voltage is equal to 0.85 x AC input line voltage

Typical Power Wiring Diagrams

The following diagram represents recommended power wiring configurations:

Power Wiring with AC Input Contactor

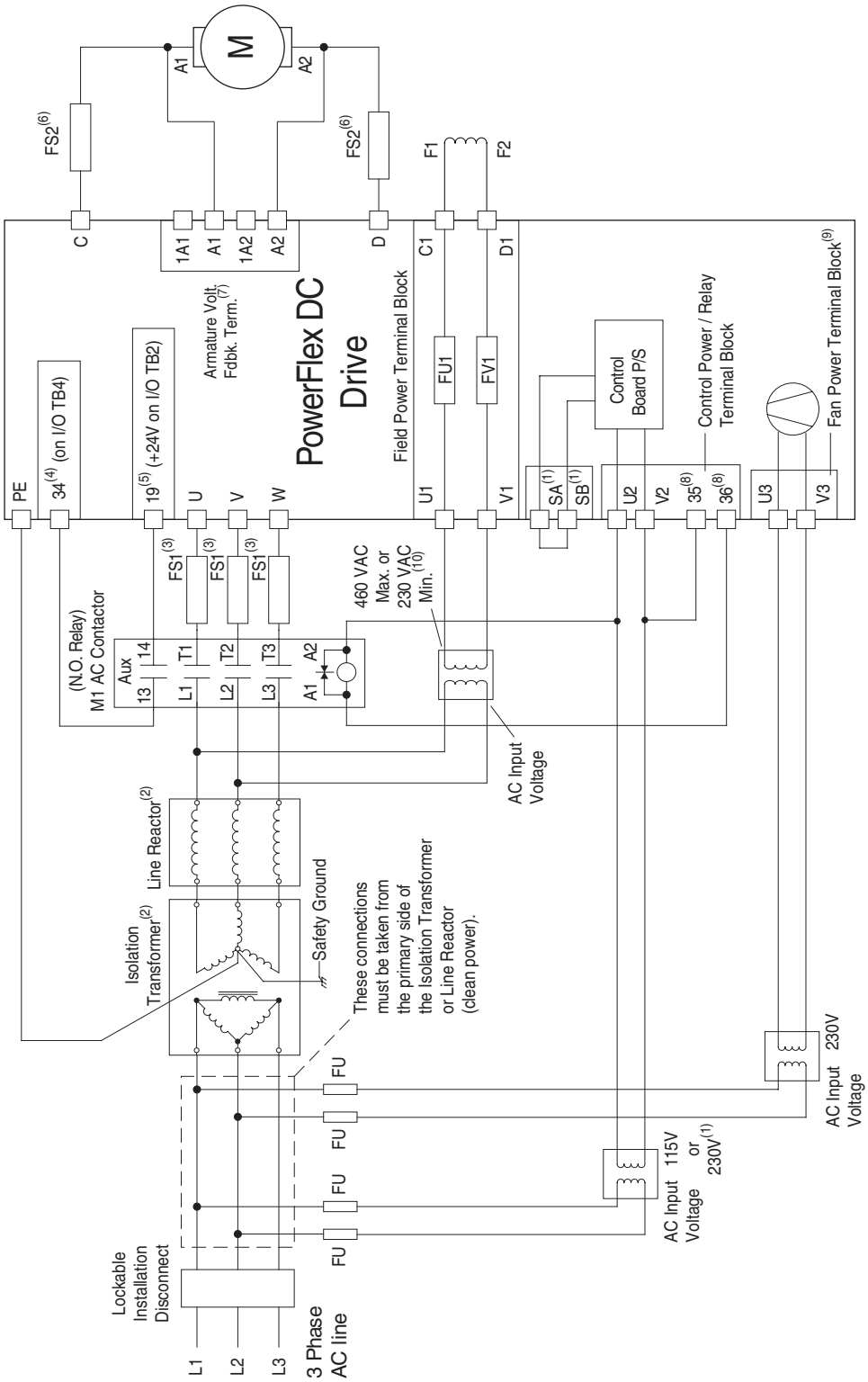

(1) For frame B and C drives only, a jumper is required between terminals SA and SB for 115V AC control input power. See Control Circuit Input Power on page 33 for more information.
(2) An Isolation Transformer and/or 3...5% impedance Line Reactor is required. If the Isolation Transformer provides the required 3...5% impedance, a Line Reactor is not required. See AC Input Line Reactors and Contactors on page 12 and Isolation Transformers on page 10 for recommendations.
(3) AC input fuses for the armature converter are customer supplied for frame A and B drives and are internally mounted on frame C and D drives. See Circuit Protection on page 50 for fuse recommendations.
(4) Par 140 [Digital In8 Sel] set to 31 "Contactor"
(5) If using the +24V internal power supply, terminal 18 (24V common) must be jumpered to terminal 35 (digital input common).
(6) Customer supplied armature output fuses are required on four quadrant and are recommended on two quadrant Frame A and B drives. See Circuit Protection on page 50 for fuse recommendations.
(7) Optional armature voltage feedback sensing not required with AC contactor.
(8) Par 1391 [ContactorControl] = 1 "AC Cntctr" and Par 1392 [Relay Out 1 Sel] = 25 "Contactor". **Important:** Terminal 35 and 36 are on the Control Power / Relay Terminal block, NOT the I/O terminal blocks. See Relay Outputs on page 41 for locations.
(9) Frame C & D drives only require an external power supply for the heatsink cooling fan. See Frame C Heatsink Cooling Fans Power Supply Terminals on page 38 and Frame D Heatsink Cooling Fan Power Supply Terminals on page 39 for more information.
(10) See Field Converter Connections on page 30.

Power Wiring with DC Output Contactor

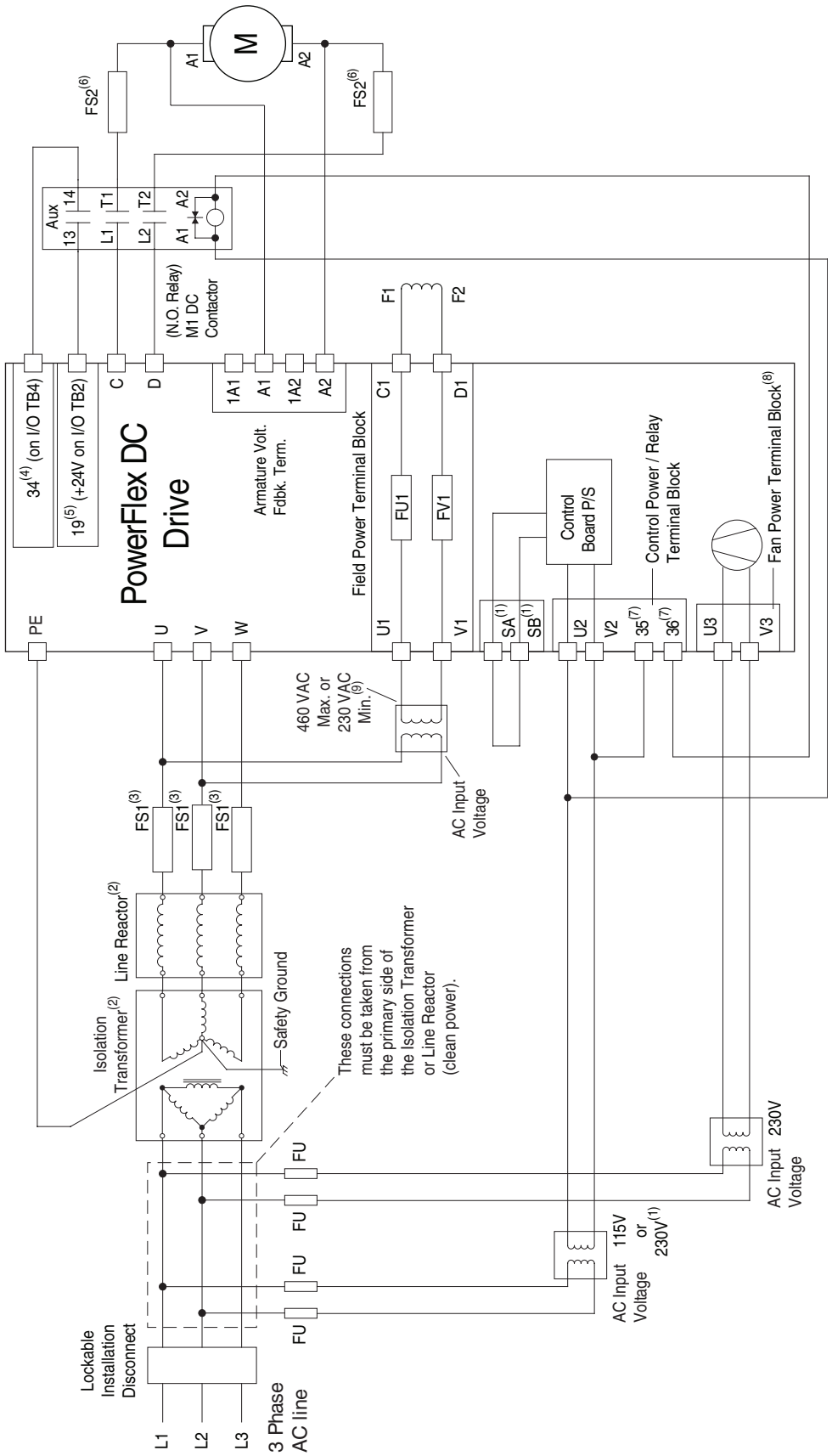

(1) For frame B and C drives only, a jumper is required between terminals SA and SB for 115V AC control input power. See Control Circuit Input Power on page 33 for more information.
(2) An Isolation Transformer and/or 3…5% impedance Line Reactor is required. If the Isolation Transformer provides the required 3…5% impedance, a Line Reactor is not required. See AC Input Line Reactors and Contactors on page 12 and Isolation Transformers on page 10 for recommendations.
(3) AC input fuses for the armature converter are customer supplied for frame A and B drives and are internally mounted on frame C and D drives. See Circuit Protection on page 50 for fuse recommendations.
(4) Par 140 [Digital In8 Sel] set to 31 "Contactor"
(5) If using the +24V internal power supply, terminal 18 (24V common) must be jumpered to terminal 35 (digital input common).
(6) Customer supplied armature output fuses are required on four quadrant and are recommended on two quadrant Frame A and B drives. See Circuit Protection on page 50 for fuse recommendations.
(7) Par 1391 [ContactorControl] = 3 "DC Cntctr" and Par 1392 [Relay Out 1 Sel] = 25 "Contactor". **Important:** Terminal 35 and 36 are on the Control Power / Relay Terminal block, NOT the I/O terminal blocks. See Relay Outputs on page 41 for locations.
(8) Frame C & D drives only require an external power supply for the heatsink cooling fan. See Frame C Heatsink Cooling Fans Power Supply Terminals on page 38 and Frame D Heatsink Cooling Fan Power Supply Terminals on page 39 for more information.
(9) See Field Converter Connections on page 30.

Power Wiring with DC Output/Dynamic Braking Contactor and a Dynamic Brake

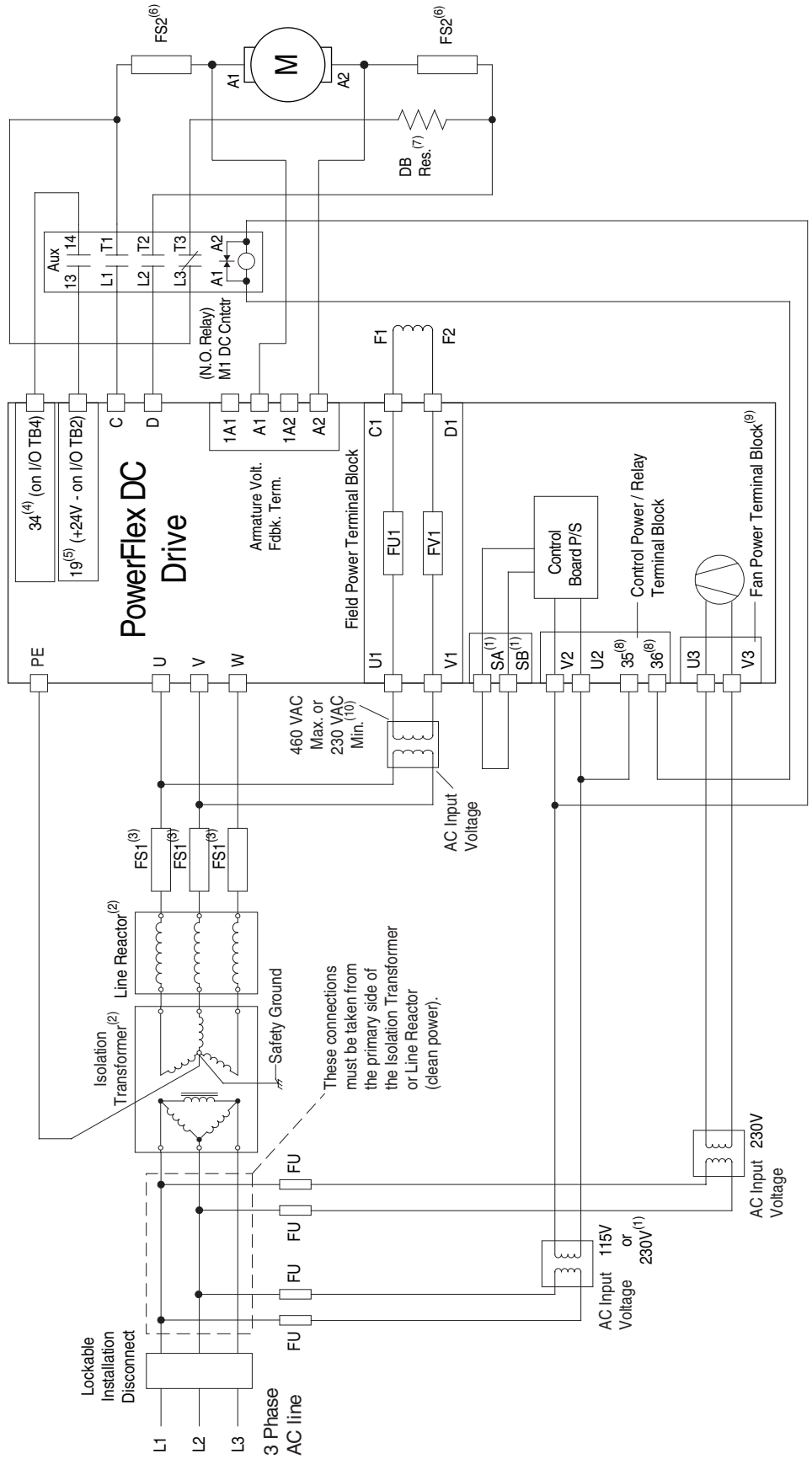

(1) For frame B and C drives only, a jumper is required between terminals SA and SB for 115V AC control input power. See Control Circuit Input Power on page 33 for more information.
(2) An Isolation Transformer and/or 3...5% impedance Line Reactor is required. If the Isolation Transformer provides the required 3...5% impedance, a Line Reactor is not required. See AC Input Line Reactors and Contactors on page 12 and Isolation Transformers on page 10 for recommendations.
(3) AC input fuses for the armature converter are customer supplied for frame A and B drives and are internally mounted on frame C and D drives. See Circuit Protection on page 50 for fuse recommendations.
(4) Par 140 [Digital In8 Sel] set to 31 "Contactor"
(5) If using the +24V internal power supply, terminal 18 (24V common) must be jumpered to terminal 35 (digital input common).
(6) Customer supplied armature output fuses are required on four quadrant and are recommended on two quadrant Frame A and B drives. See Circuit Protection on page 50 for fuse recommendations.
(7) The "Enable" input must be removed in order to perform a dynamic braking stop.
(8) Par 1391 [ContactorControl] = 3 "DC Cntctr" and Par 1392 [Relay Out 1 Sel] = 24 "ContactorDB". **Important:** Terminal 35 and 36 are on the Control Power / Relay Terminal block, NOT the I/O terminal blocks. See Relay Outputs on page 41 for locations.
(9) Frame C & D drives only require an external power supply for the heatsink cooling fan. See Frame C Heatsink Cooling Fans Power Supply Terminals on page 38 and Frame D Heatsink Cooling Fan Power Supply Terminals on page 39 for more information.
(10) See Field Converter Connections on page 30.

Armature Power Terminal Connections

Terminals	Description
U, V, W	Three phase AC input to the armature converter
C, D	DC output to the motor armature
PE	Safety ground

Frame A Armature Terminal Block Locations

Bottom View

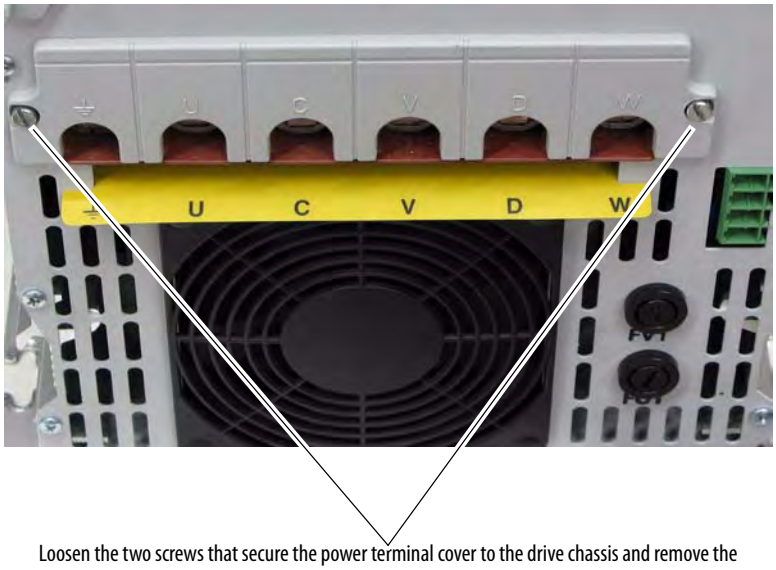

Loosen the two screws that secure the power terminal cover to the drive chassis and remove the terminal cover in order to connect the armature power wiring.

Front View

Note: Front view of drive shown with bottom protective and power terminal covers removed.

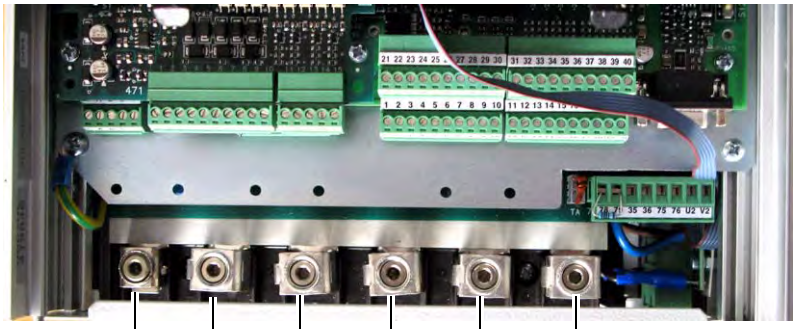

ATTENTION: Do not operate the drive with the power terminal cover removed. Operating the drive with the power terminal cover removed may result in a hazardous condition that could cause personal injury and/or equipment damage.

Frame B Armature Terminal Block Locations

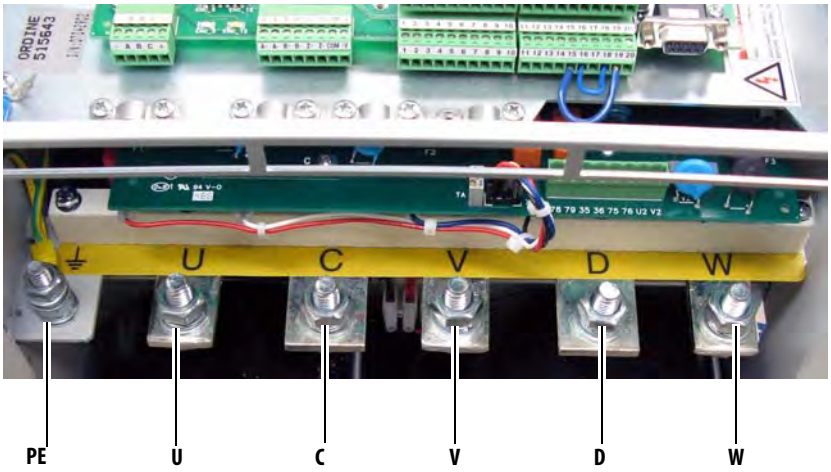

Frame C Armature Terminal Block Locations

Front View

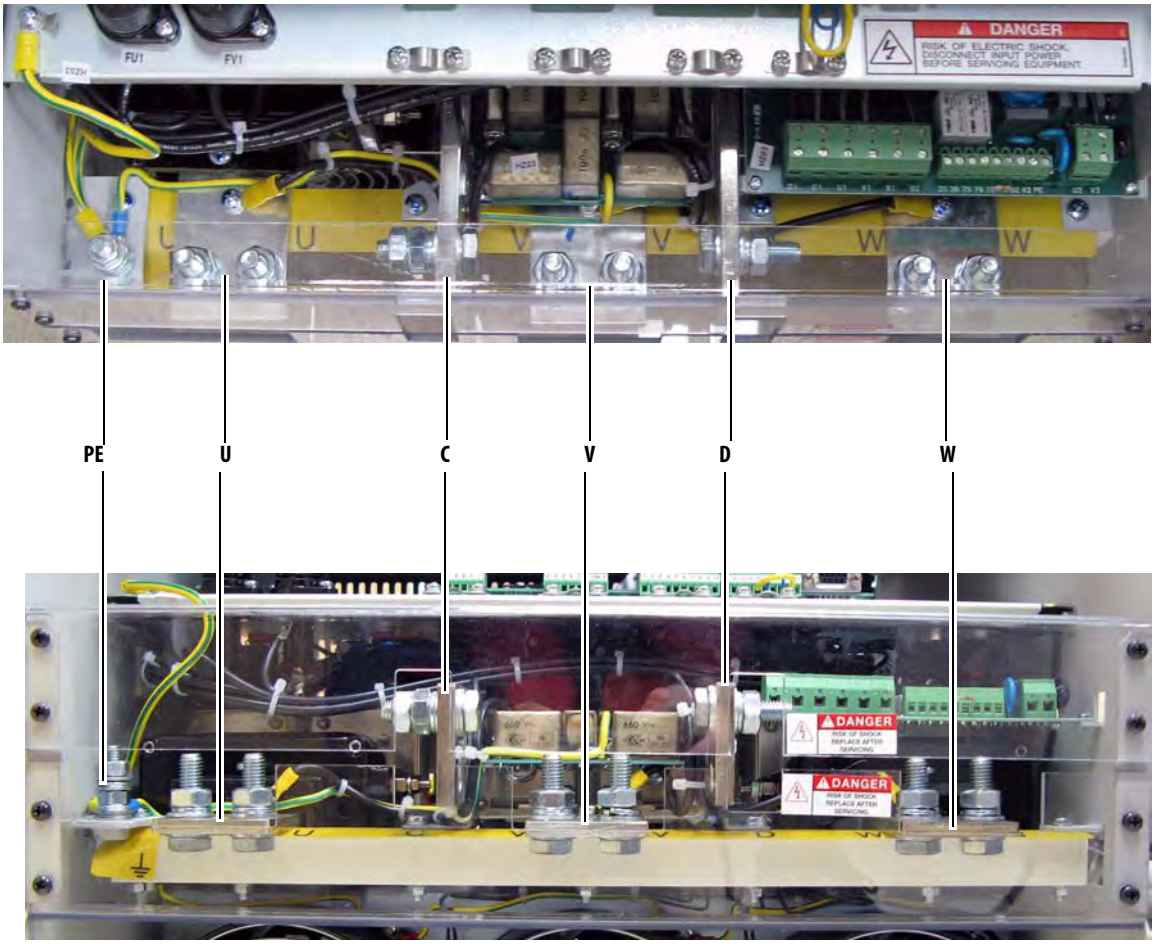

Bottom View

Frame D Armature Terminal Block Locations

Important: Certain frame D drives require the use of a terminal adapter kit(s) for terminals U, V, W, C and D.
Refer to Frame D Terminal Adapter Kits on page 18 for details.

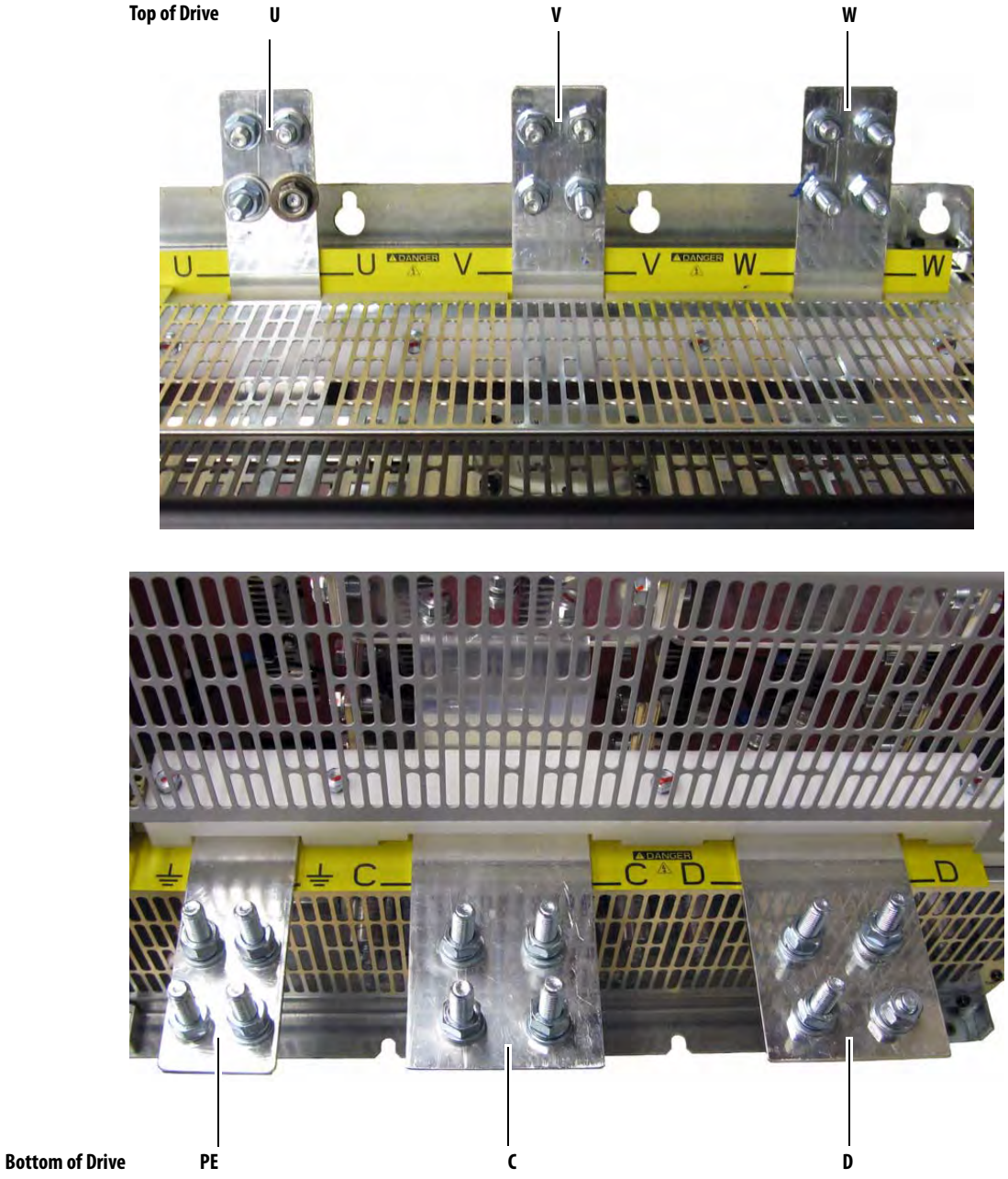

Armature Power Terminal and Ground (PE) Wire Sizes

Frame	Drive Current Rating Code[1]				Terminals	Wire Size and Type	Terminal Bolt Size (mm)	Tightening Torque N•m (lb•in)
	230V	460V	575	690				
A	7P0…055	4P1…052	–	–	U, V, W, C, D, PE	See "Cable and Wiring Recommendations" in the PowerFlex Digital DC Drive User Manual, publication 20P-UM001.	5	6 (53)
	073…110	073…129	–	–			Terminal Block	12 (106)
B	All	All	–	–	U, V, W, C, D		10	25 (221)
					PE		8	15 (132.75)
C	All	All	–	–	U, V, W, C, D		10	25 (221)
					PE		8	15 (132.75)
D	All	All	All	All	U, V, W, C, D, PE		12	45 (398.2)

(1) See Catalog Number Explanation on page 5, positions 8, 9 and 10 for corresponding drive HP rating, armature amp rating and field amp rating.

IMPORTANT Certain frame D drives require the use of a terminal adapter kit(s) for terminals U, V, W, C, and D. Refer to Frame D Terminal Adapter Kits on page 18 for details.

Armature Voltage Feedback Connections

When a DC output contactor or inverting fault breaker/fuse is used with the drive, and a speed feedback device (tachometer or encoder) is not used, the Armature Voltage Feedback terminals can be used to monitor the armature voltage at the motor regardless of the state of the contactor or inverting fault device. When this terminal block is not connected to the motor armature terminals, the terminals must be jumpered (as described in the table below) and the armature voltage feedback is monitored internally within the drive. In this case, when a DC contactor is used with the drive, a speed feedback device is not used, and the contactor opens, the drive will no longer receive the armature voltage feedback signal.

IMPORTANT By default, these terminals are jumpered - 1A1 to A1 and 1A2 to A2. If these terminals are not wired to the motor terminals, the jumpers must be installed.

Note that this terminal block is not present on drives shipped from the factory prior to those with v3.001 firmware installed. However, new Pulse Transformer boards shipped as replacement parts from the factory will contain this terminal block and can be used with any version of firmware.

Terminal	Description
1A1	Jumpered to A1 when internal armature voltage feedback is used. Not used when A1 is connected to motor terminal A1.
A1	Voltage feedback from motor terminal A1.
1A2	Jumpered to A2 when internal armature voltage feedback is used. Not used when A2 is connected to motor terminal A2.
A2	Voltage feedback from motor terminal A2.

Armature Voltage Feedback Circuit Wire Sizes and Terminal Specifications

Frame	Terminals	Wire Size and Type[1]	Tightening Torque N•m (lb•in)
A, B & C	1A1, A1, 1A2, A2	24…10 AWG/kcmils	0.5…0.6 (4.4…5.3)
D		22…8 AWG/kcmils	0.8…1.6 (7.1…14.2)

(1) Wire with an insulation rating of 600V or greater is recommended. See "Cable and Wiring Recommendations" in the PowerFlex Digital DC Drive User Manual, publication 20P-UM001, for cable spacing information.

Frame A Armature Voltage Feedback Circuit Terminal Block Location

Bottom of View of Drives

Drive with no fan

Drive with fan

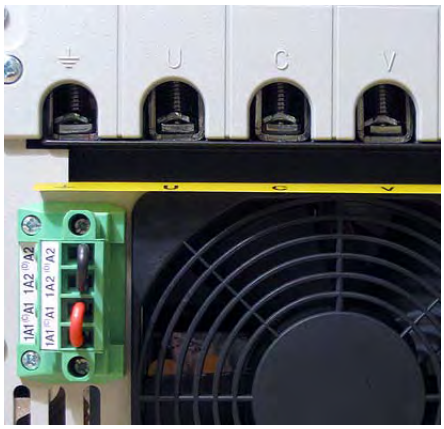

Shown with terminals jumpered for internal armature voltage feedback.

Frame B Armature Voltage Feedback Circuit Terminal Block Location

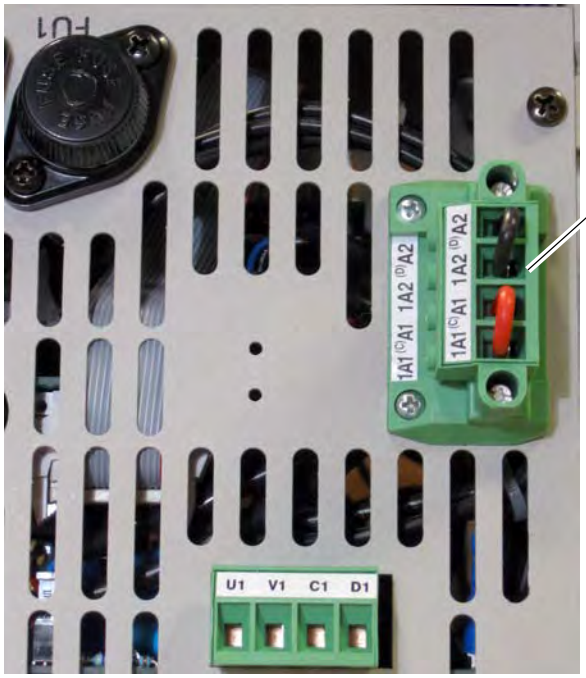

Top of Drive

Shown with terminals jumpered for internal armature voltage feedback.

Frame C Armature Voltage Feedback Circuit Terminal Block Location

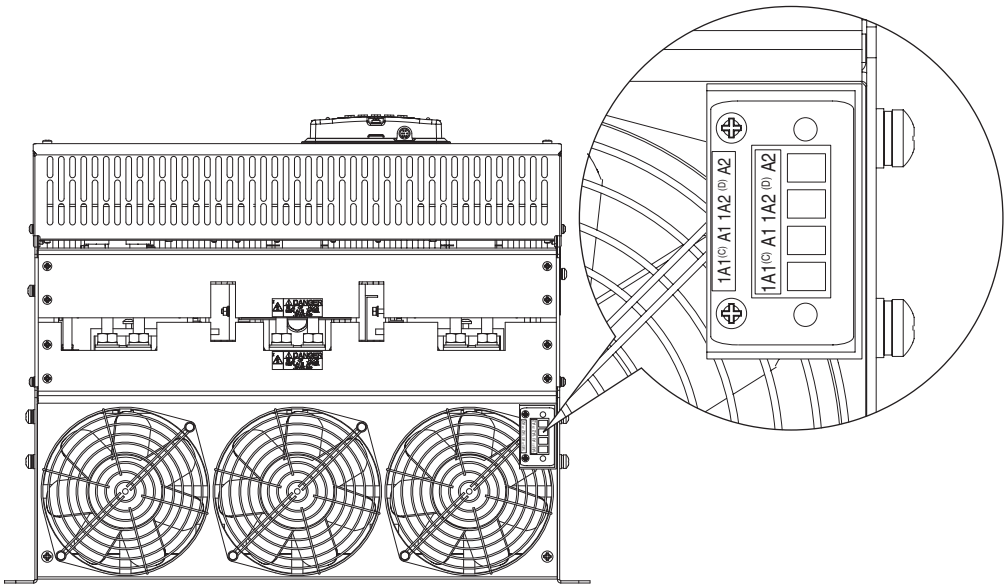

Bottom of Drive

Frame D Armature Voltage Feedback Circuit Terminal Block Location

Shown with terminals jumpered for internal armature voltage feedback.

Bottom of Drive, Left Side

Field Converter Connections

For 575V or 690V AC input drives only, a step down transformer with either a 230 VAC secondary, for a 150V motor field, or 460 VAC, for a 300V motor field, is required before the input to the field control circuit (terminals U1, V1).

Also, If the rated voltage of the DC motor field is not compatible with the field DC output voltage of the drive, an external field control transformer must be used. Refer to the following example for transformer selection information.

Example: 10 Hp, 240V Armature, 17.2A, 240V Field, 2.0 A motor

a. The field control transformer must have a 230V primary, a 460V secondary, and be single-phase, 60 Hz
b. kVA = 2 A x 460VAC x 1.5 = 1.38 kVA (1.5 kVA is closest)

In addition, the following configuration must to completed in the PowerFlex DC drive:

c. Control board DIP switch S14 must be set to select a value of 2 A.
d. Parameter 374 [Drv Fld Brdg Cur] must be programmed to match DIP switch S14 = "2."
e. Parameter 280 [Nom Mtr Fld Amps] must be programmed to the rated motor nameplate field current "2."

Field Converter Terminal Designations

Terminal	Description
U1, V1	Single-phase AC line input power to the field circuit.
C1, D1	DC output power to the motor field.

Frame A Field Circuit Terminal Block Location

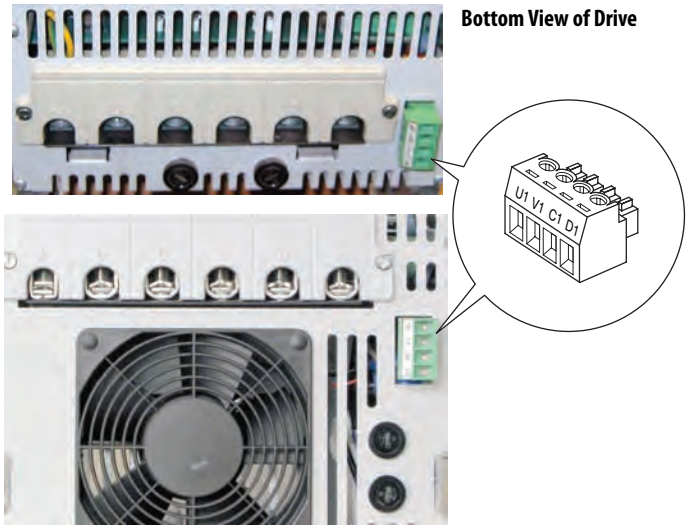

Frame B Field Circuit Terminal Block Location

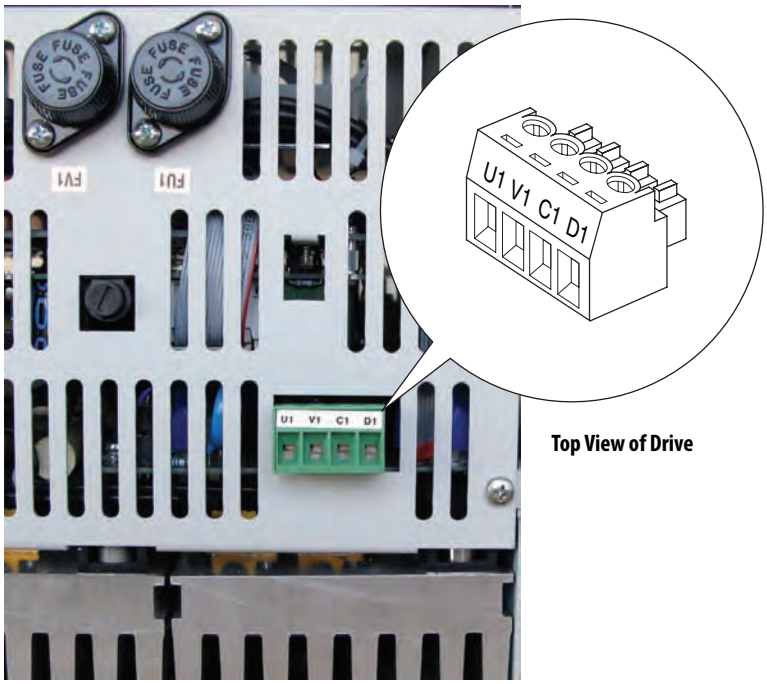

Top View of Drive

Frame C Field Circuit Terminal Block Location

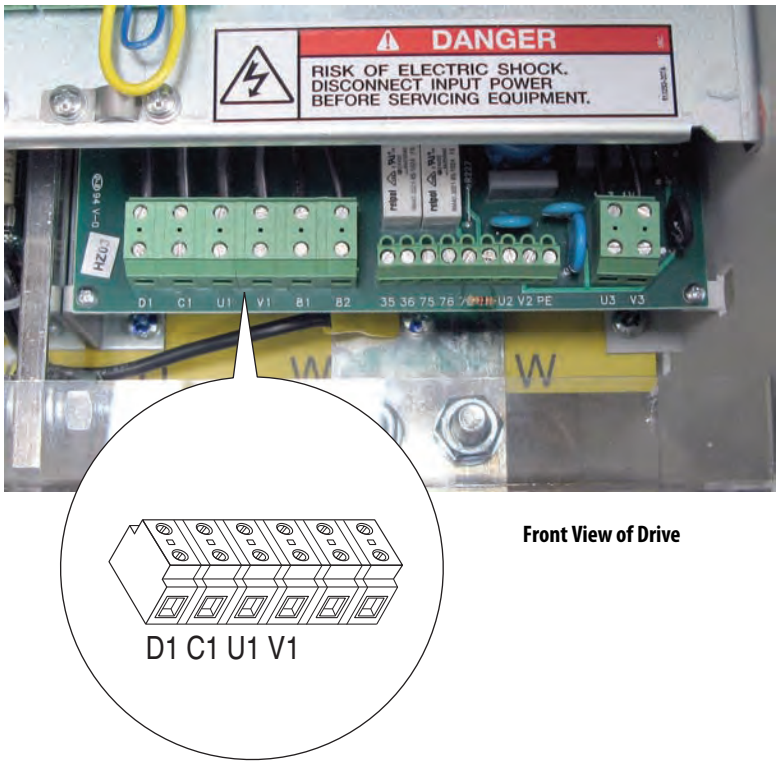

Front View of Drive

Frames A…C Field Circuit Wire Sizes and Terminal Specifications

Terminals	Wire Size and Type(1)	Tightening Torque N•m (lb•in)
U1, V1, C1, D1	24…10 AWG/kcmils	0.5…0.8 (4.4…7.1)

(1) See "Cable and Wiring Recommendations" in the PowerFlex Digital DC Drive User Manual, publication 20P-UM001, for cable spacing information.

Frame D Field Circuit Terminal Block Location

Frame D Field Circuit Wire Sizes and Terminal Specifications

Drive Current Rating Code[1]				Terminals	Wire Size[2]	Tightening Torque
230V	460V	575V	690V			N•m (lb•in)
875	830	810	678	U1, V1, C1, D1	6 AWG	4.0 (35.4)
1K0	996	1K0	791			
–	–	1K2	904			
–	–	1K3	1K0			
–	–	1K6	–			
–	1K1	–	1K1		2 AWG	
–	1K3	–	1K2			
–	1K4	–	1K4			
–	–	–	1K5			

(1) See Catalog Number Explanation on page 5, positions 8, 9 and 10 for corresponding drive HP rating, armature amp rating and field amp rating.

(2) See "Cable and Wiring Recommendations" in the PowerFlex Digital DC Drive User Manual, publication 20P-UM001, for cable spacing information.

Control Circuit Input Power

The control circuit must be powered by an external 230V AC or 115V AC single phase power supply. For frame B and C drives only, a jumper is required between terminals SA and SB for 115V AC control input power. Refer to Frame B drives SA-SB Terminal Block Location on page 36 and Frame C Drives SA-SB Terminal Block Location on page 37 for terminal block locations.

Control Circuit Terminal Designations

Terminal	Description
U2	Single-phase AC power for the control circuits.
V2	

Frame A Control Circuit Terminal Block Location

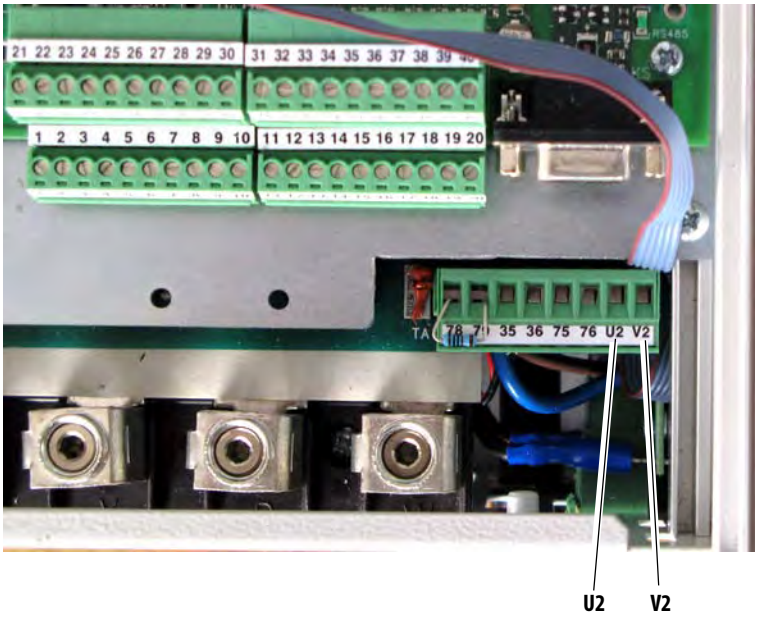

Frame B Control Circuit Terminal Block Location

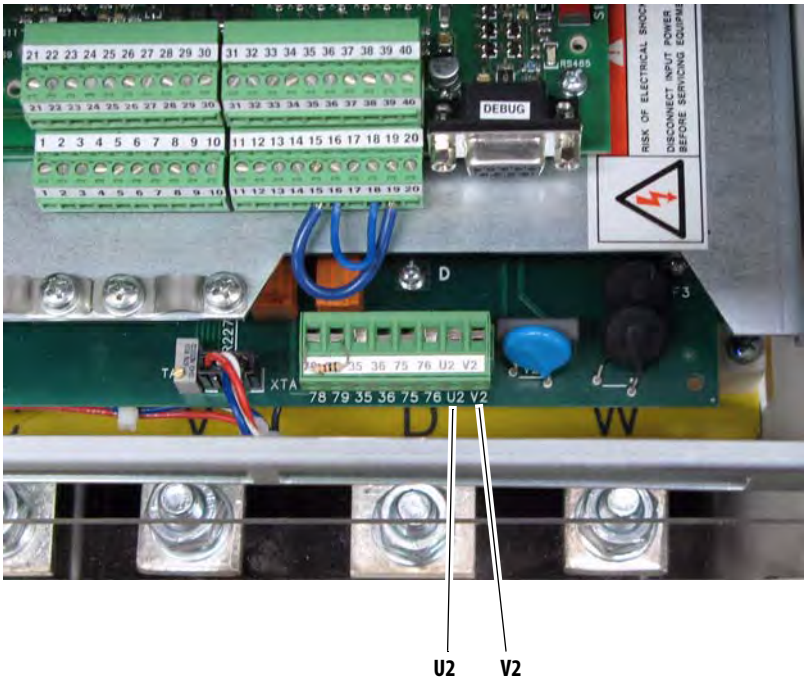

Frame C Control Circuit Terminal Block Location

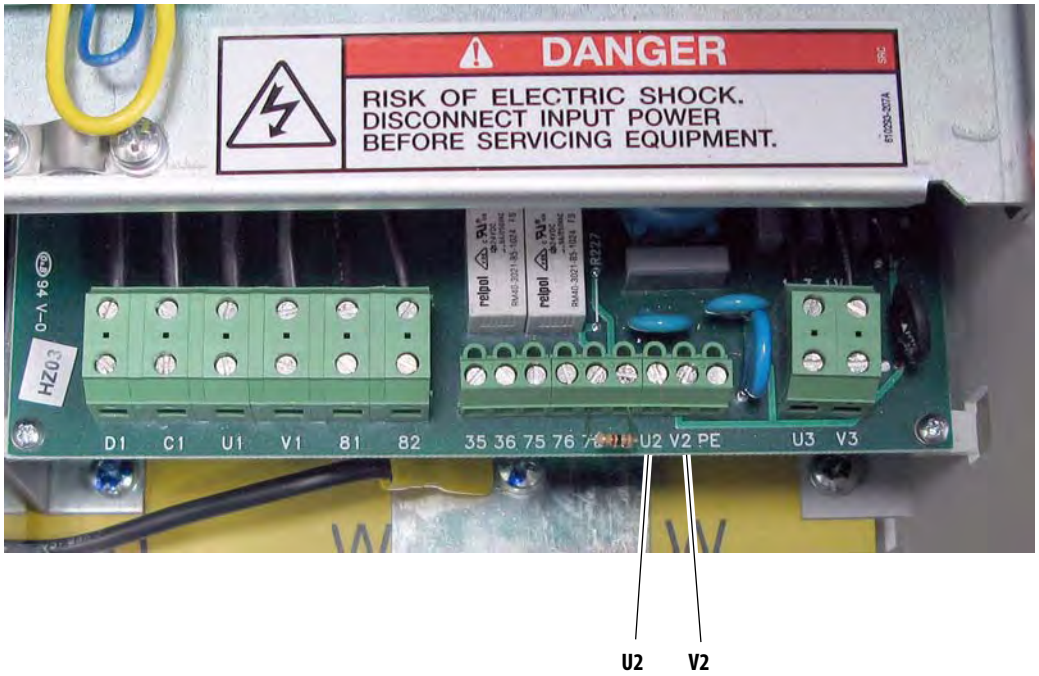

Frame D Control Circuit Terminal Block Location

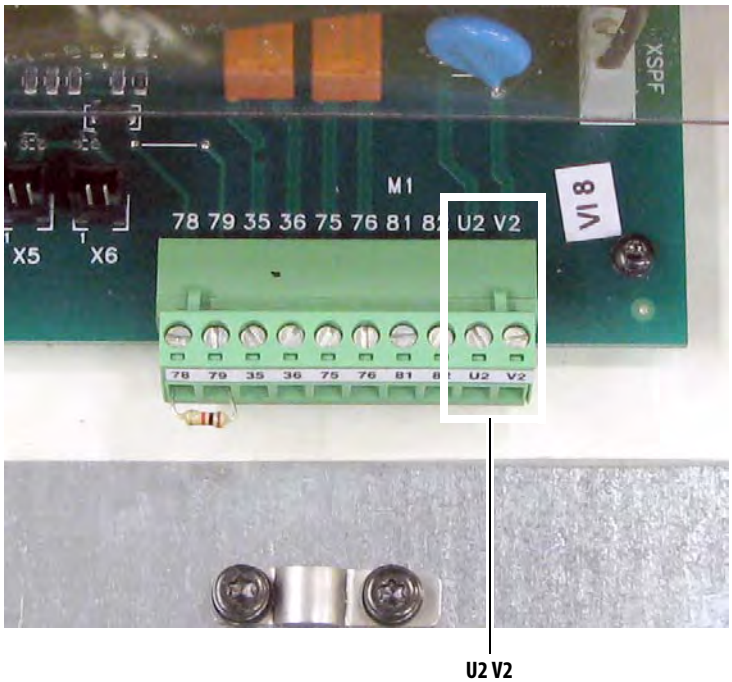

Control Circuit Wire Sizes

Terminals	Wire Size and Type[1]			Tightening Torque
	Flexible (mm^2)	Multi-core (mm^2)	AWG	N•m (lb•in)
U2, V2	0.14…1.5	0.14…2.5	26…14	0.5 (4.4)
PE	2.5…10	2.5…10	12…8	2.0 (18.0)

(1) See "Cable and Wiring Recommendations" in the PowerFlex Digital DC Drive User Manual, publication 20P-UM001, for cable spacing information.

Frame B drives SA-SB Terminal Block Location

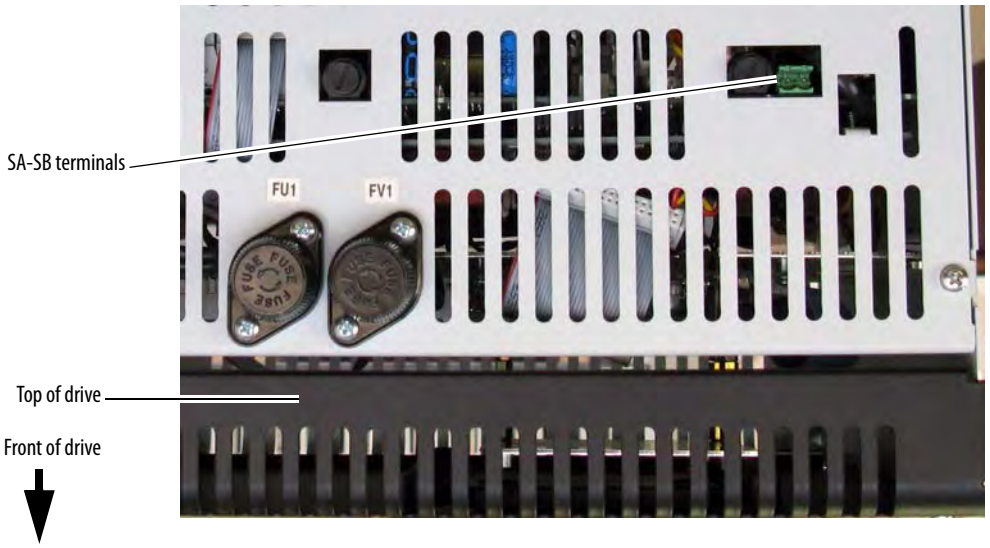

Frame C Drives SA-SB Terminal Block Location

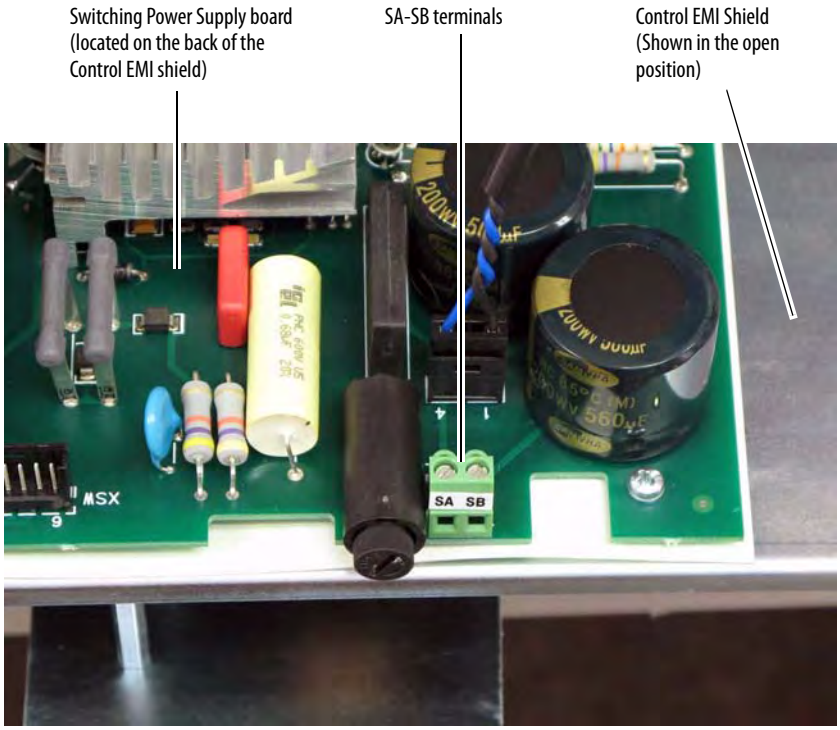

Front of drive shown with top protective cover removed.

Frame C Heatsink Cooling Fans Power Supply Terminals

Frame C drives require an external 230V AC power supply for the heatsink cooling fans. The power supply connections must be taken from the primary side of the installed Isolation Transformer or Line Reactor (clean power). Refer to Typical Power Wiring Diagrams on page 21.

In addition, the fan power input terminals U3 and V3 are required to be short circuit protected. This protection can be provided by using a circuit breaker. The circuit breaker must be selected to survive the short circuit available current of the feeder source for this circuit and the inrush current of the fan.

The rating of the circuit breaker should be sized mainly to protect the wiring from the circuit breaker connections to terminals U3 and V3, and not nuisance trip or blow from the inrush current.

Frame C Heatsink Cooling Fans Terminal Designations

Terminal	Description	Maximum Voltage	Maximum Current
U3	Single-phase AC input power for cooling fans.	230V AC	1 A
V3			

Frame C Heatsink Cooling Fans Wire Sizes and Terminal Specifications

Terminals	Wire Size and Type(1)			Tightening Torque
	Flexible (mm^2)	Multi-core (mm^2)	AWG	N•m (lb•in)
U3, V3	0.14…1.5	0.14…2.5	26…16	0.4 (3.5)

(1) See "Cable and Wiring Recommendations" in the PowerFlex Digital DC Drive User Manual, publication 20P-UM001, for cable spacing information.

Frame C Heatsink Cooling Fan Terminal Block Location

Frame D Heatsink Cooling Fan Power Supply Terminals

Frame D drives require an external 230V AC power supply for the heatsink cooling fan. The power supply connections must be taken from the primary side of the installed Isolation Transformer or Line Reactor (clean power). Refer to Typical Power Wiring Diagrams on page 21.

The fan power input terminals U3 and V3 are required to be short circuit protected. This protection can be provided by using a circuit breaker. The circuit breaker must be selected to survive the short circuit available current of the feeder source for this circuit and the inrush current of the fan.

The rating of the circuit breaker should be sized mainly to protect the wiring from the circuit breaker connections to terminals U3 and V3, and not nuisance trip or blow from the inrush current.

In addition, a N.C. contact (at terminals 31 and 32) can be connected to an external device to provide indication of a fan supply failure or can be wired to drive digital input terminals configured for 14 "Aux Fault" (via Pars133...144).

Frame D Heatsink Cooling Fan Terminal Designations

Terminal	Description	Maximum Voltage	Maximum Current
U3	Single-phase AC input power for cooling fans.	230V AC	2.4…3.3 A
V3			(50/60 Hz)
31	Normally closed contact.	250V AC	1 A
32			
PE	Safety ground		

Frame D Heatsink Cooling Fan Signal Wire Sizes and Terminal Specifications

Terminals	Wire Size and Type(1)			Tightening Torque
	Flexible (mm^2)	Multi-core (mm^2)	AWG	N•m (lb•in)
U3, V3, 31, 32, PE	0.14…1.5	0.14…2.5	28…12	0.5…0.6 (4.4…5.3)

(1) See "Cable and Wiring Recommendations" in the PowerFlex Digital DC Drive User Manual, publication 20P-UM001, for cable spacing information.

Frame D Heatsink Cooling Fan Terminal Block Location

Top of Drive, Left Side

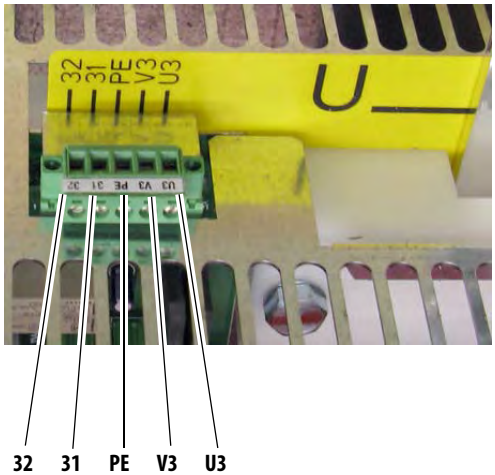

Frame C and D Armature Fuse Signal Terminals

Terminals 81 and 82 on frame C and D drives are connected to the internal armature circuit protection fuses and can be connected to an external device to provide indication that the fuses have opened. Alternatively, terminals 81 and 82 can be wired to drive digital input terminals configured for 64 "Invert Flt" (via Pars 133...144).

Armature Fuse Signal Terminal Designations

Terminal	Description	Maximum Voltage	Maximum Current
81	Internal armature fuse intervention signal.	250V AC	1 A
82			

Armature Fuse Signal Wire Size and Terminal Specifications

Terminals	Wire Size and Type(1)			Tightening Torque
	Flexible (mm^2)	Multi-core (mm^2)	AWG	N•m (lb•in)
81, 82	0.14…1.5	0.14…2.5	26…16	0.4 (3.5)

(1) See "Cable and Wiring Recommendations" in the PowerFlex Digital DC Drive User Manual, publication 20P-UM001, for cable spacing information.

Frame C Internal Armature Fuse Signal Terminal Block Location

Frame D Internal Armature Fuse Signal Terminal Block Location

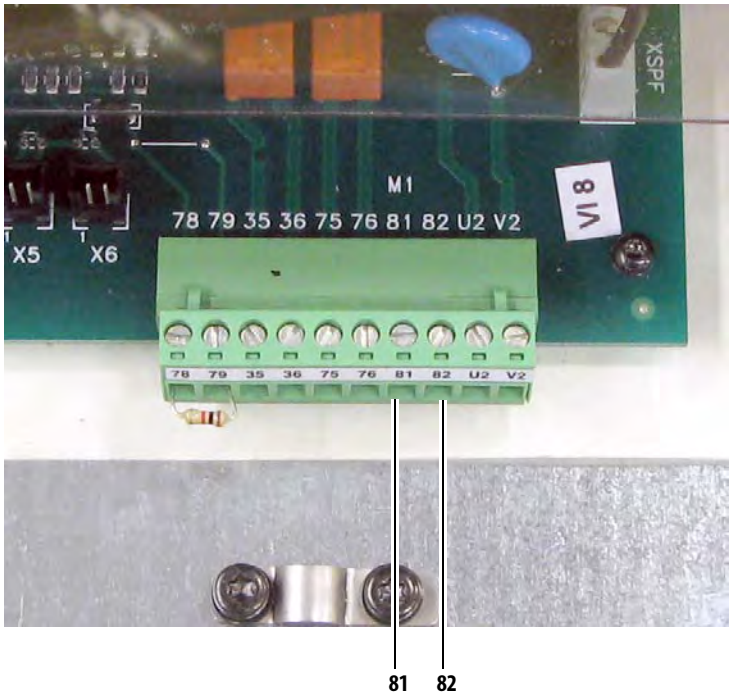

Relay Outputs

Terminals 35 and 36 and 75 and 76 are N.O. relay outputs. The relay output between terminals 35 and 36 is configured with parameter 1392 [Relay Out 1 Sel]. The relay output between terminals 75 and 76 is configured with parameter 629 [Relay Out 2 Sel]. Refer to "Using Contactors" in the PowerFlex Digital DC Drive User Manual, publication 20P-UM001, for more information.

Thermistors and Thermal Switches

To detect motor overheating and protect the motor from overloading, an external, user-supplied thermistor (PTC) or thermal switch must be connected to terminals 78 and 79. The drive's response to a motor over temperature fault is configured in parameter 365 [OverTemp Flt Cfg]. If a temperature sensor is not used, a 1k ohm resistor must be connected between terminals 78 and 79 (installed at the factory). The instructions for installing a thermal sensor are detailed below.

Thermistors (PTC)

PTC thermistors fitted in the motor can be connected directly to the drive via terminals 78 and 79. In this case the 1k ohm resistor is not required between terminals 78 and 79.

Thermal Switches (Klixon®) in the Motor Windings

"Klixon" type temperature-dependent contacts can disconnect the drive from the motor via an external control or can be configured as an external fault using a digital input on drive. They can also be connected to terminals 78 and 79 in order to indicate a drive "Motor Over Temp" fault (F16), though this is not recommended due to the noise sensitivity of the current threshold circuitry. If a thermal switch is used a 1k ohm resistor must be placed in series between the switch and one of the terminals.

Contact Relay and Thermistor Terminal Designations

Terminal	Description
35	Normally open contact. Configured with parameter 1392 [Relay Out 1 Sel] - set to 25 “Contactor” by default.
36	
75	Normally open contact. Configured with parameter 629 [Relay Out 2 Sel] - set to 5 “Ready” by default.
76	
78	Motor thermistor connections (PTC)
79	

Frame A Contact Relay and Thermistor Terminal Block Locations

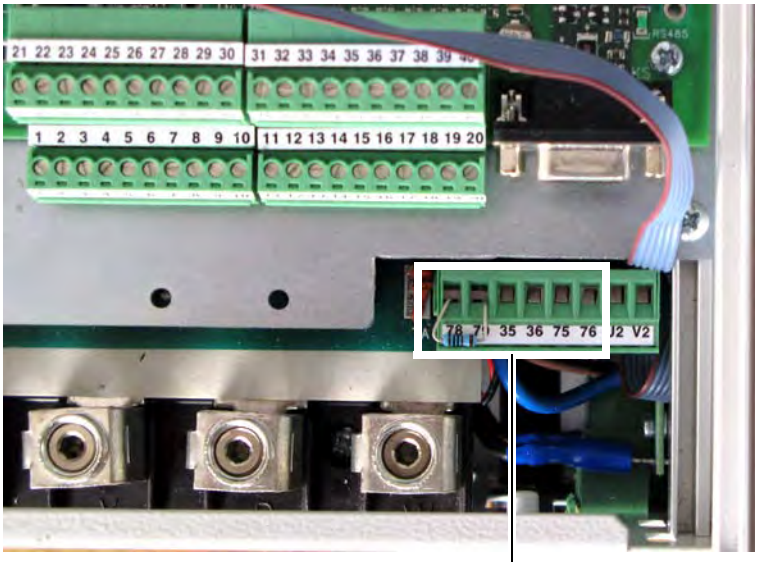

78 79 35 36 75 76

Note: Terminals 78 and 79 shown with 1k ohm resistor in place of temperature sensor.

Frame B Contact Relay and Thermistor Terminal Block Locations

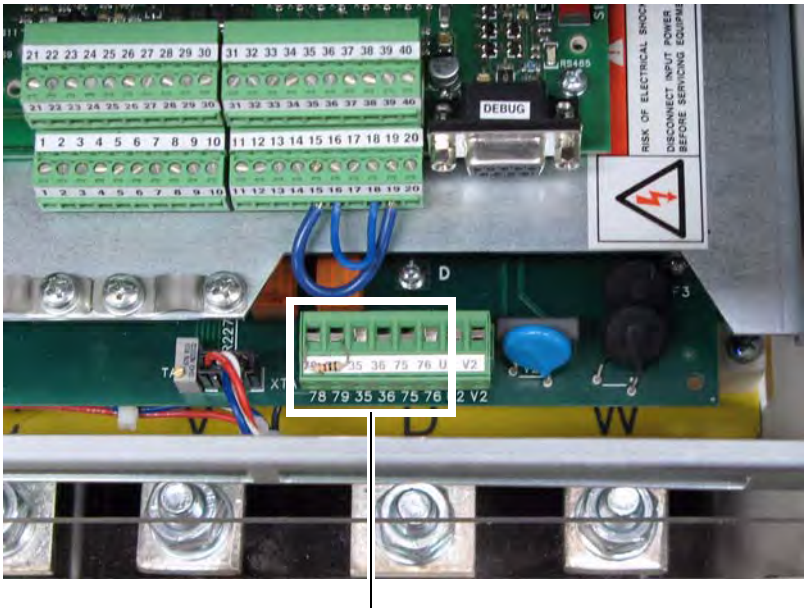

78 79 35 36 75 76

Frame C Contact Relay and Thermistor Terminal Block Locations

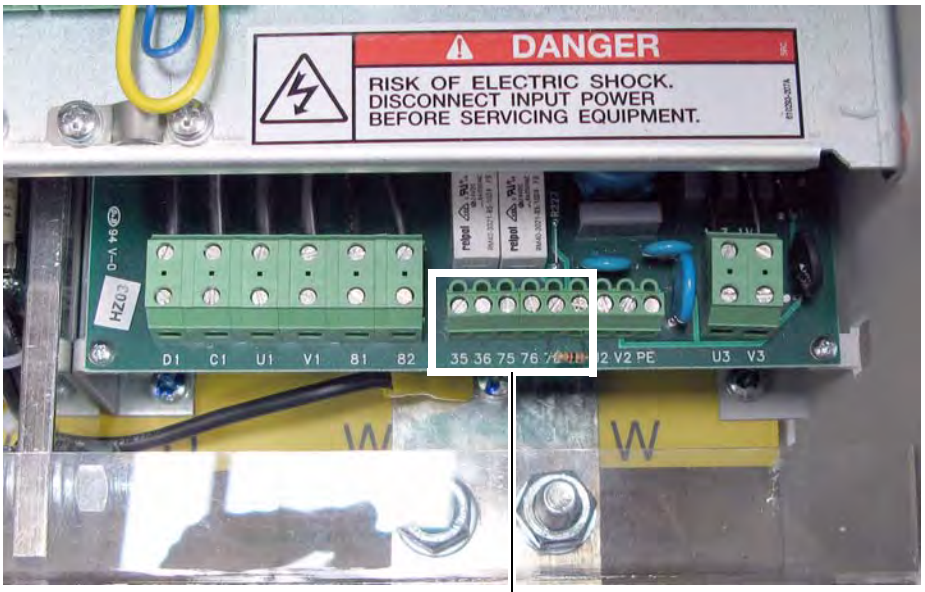

35 36 75 76 78 79

Frame D Contact Relay and Thermistor Terminal Block Locations

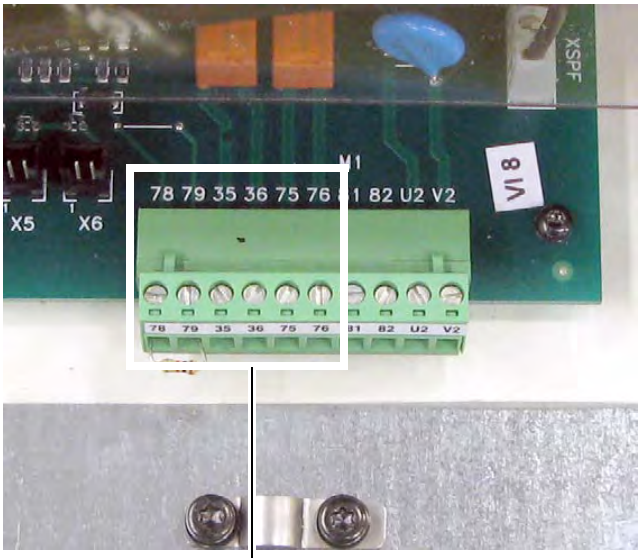

78 79 35 36 75 76

Located on control pan to the left of the HIM cradle.

Recommended Signal Wire Size for Relay Outputs and Thermistor/Thermal Switch Terminals

Signal Type	Terminals	Wire Size and Type[1]			Tightening Torque N•m (lb•in)
		Flexible (mm^2)	Multi-core (mm^2)	AWG	
Relay Outputs	35 & 36, 75 & 76	0.140…1.500	0.140…1.500	26…14	0.5 (4.4)
Thermistor and Thermal Switches	78 & 79				

(1) See "Cable and Wiring Recommendations" in the PowerFlex Digital DC Drive User Manual, publication 20P-UM001, for cable spacing information.

I/O Signal and Control Wiring

Eight (8) digital inputs, four (4) digital outputs, three (3) analog inputs, and two (2) analog outputs are available on the standard I/O terminal blocks provided with the drive. One digital input (1-8) must be configured for "Enable".

Additional digital and analog I/O is available when using the optional I/O Expansion circuit board. Refer to Appendix F - "Optional Analog and Digital I/O Expansion Circuit Board", in the PowerFlex Digital DC Drive User Manual, publication 20P-UM001, for more information. Also, you can use the optional 115V AC Converter circuit board to convert 115V AC digital input signals to 24V DC digital inputs signals to interface with the digital inputs on the standard I/O terminal blocks. Refer to Appendix G - "Optional 115V AC to 24V DC I/O Converter Circuit Board" in the PowerFlex Digital DC Drive User Manual, publication 20P-UM001, for more information. All I/O terminal blocks are located on the control board.

I/O Terminal Block Locations

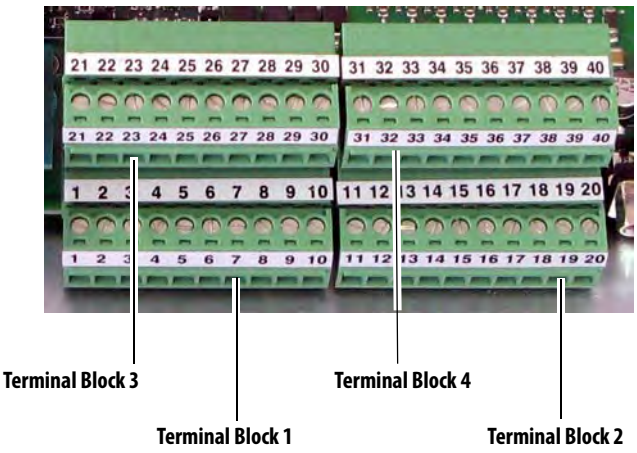

I/O Terminal Block 1 Designations

	No.	Signal	Description	Factory Default	Related Parameter
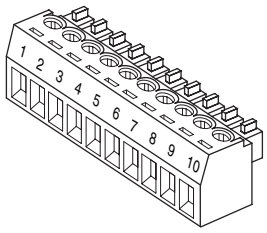	1	Analog Input 1 (+)	Isolated (1), bipolar, differential, ±10V / 0-20mA, or 4-20mA.	1 "Speed Ref A"	70 [Anlg In1 Sel]
	2	Analog Input 1 (–)			
	3	Analog Input 2 (+)	**Important:** 0-20mA or 4-20mA operation requires that switch S9, S10, and S11 on the Control board be in the "Off" position. Drive damage may occur if the switch is not in the correct position based on the type of input signal. Refer to "DIP Switch and Jumper Settings" in the PowerFlex Digital DC Drive User Manual, publication 20P-UM001.	0 "Off"	75 [Anlg In2 Sel]
	4	Analog Input 2 (–)			
	5	Analog Input 3 (+)		0 "Off"	80 [Anlg In3 Sel]
	6	Analog Input 3 (–)	Max ±10V, Max 0.25mA.		
	7	+10V Pot Reference	2-5k ohm load. Max ±10V, Max 10mA.	–	–
	8	–10V Pot Reference			
	9	Pot Common	For (+) and (–) 10V pot references.	–	–
	10	PE ground	PE ground to drive chassis.	–	–

(1) Differential Isolation - External source must be maintained at less than 160V with respect to PE. Input provides high common mode immunity.

I/O Terminal Block 2 Designations

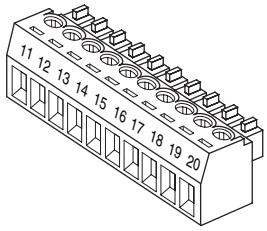

No.	Signal	Description	Factory Default	Related Parameter
11	Internal 0V		–	–
12	Digital Input 1	Max Volt. +30V, Max Cur. 15V/3.2mA, 24V/5mA, and 30V/6.4mA.	2 "Stop/CF"	133 [Digital In1 Sel]
13	Digital Input 2		3 "Start"	134 [Digital In2 Sel]
14	Digital Input 3		11 "Jog"	135 [Digital In3 Sel]
15	Digital Input 4		1 "Enable"(3)	136 [Digital In4 Sel]
16	Digital Input Common(1)		–	–
17	Not Used		–	–
18	24V Supply Common	Common for the internal power supply.	–	–
19	+24V DC Supply	Drive supplied control input power. Max. +20-30V, 200mA(2)	–	–
20	PE ground	PE ground to drive chassis.	–	–

(1) When using the internal +24V DC supply (terminal 19) for digital inputs 1-4, you must connect the digital input common (terminal 16) to the +24V supply common (terminal 18).
(2) The total current draw is the sum of encoder power, digital outputs and any other loads connected to terminal 19.
(3) A digital input (1-8) must be configured for "Enable".

I/O Terminal Block 3 Designations

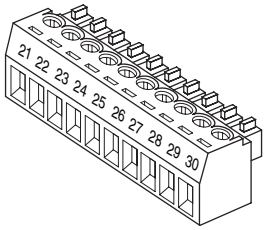

No.	Signal	Description	Factory Default	Related Parameter
21	Analog Output 1 (+)	Max. ±10V, Max. 5 mA.	12 "Motor Speed"	66 [Anlg Out1 Sel]
22	Analog Output 1 (–)			
23	Analog Output 2 (+)		13 "Motor Curr"	67 [Anlg Out2 Sel]
24	Analog Output 2 (–)			
25	Digital Output Common		–	–
26	Digital Output 1	Max. +30V, Max 50mA	5 "Ready"	145 [Digital Out1 Sel]
27	Digital Output 2		9 "Fault"	146 [Digital Out2 Sel]
28	Digital Output 3		2 "Spd Thresh"	147 [Digital Out3 Sel]
29	Digital Output 4		4 "CurrentLimit"	148 [Digital Out4 Sel]
30	+24V DC	Drive supplied power for Digital Outputs. Max. 30V, Max. 80mA.	–	–

I/O Terminal Block 4 Designations

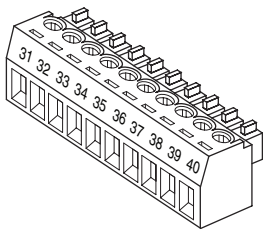

No.	Signal	Description	Factory Default	Related Parameter
31	Digital Input 5	Max Volt. +30V, Max Cur. 15V/3.2mA, 24V/5mA, and 30V/6.4mA.	17 "Speed Sel 1"	137 [Digital In5 Sel]
32	Digital Input 6		18 "Speed Sel 2"	138 [Digital In6 Sel]
33	Digital Input 7		19 "Speed Sel 3"	139 [Digital In7 Sel]
34	Digital Input 8		31 "Contactor"	140 [Digital In8 Sel]
35	Digital Input Common	**Important:** When using the internal +24V DC supply (terminal 19) for digital inputs 5-8, you must connect the digital input common (terminal 35) to the +24V supply common (terminal 18).	–	–
36-40	Not Used		–	–

Recommended Signal Wire Size for Analog I/O and Digital I/O

Signal Type	Terminal Block (Terminals)	Wire Size and Type(1)			Tightening Torque N•m (lb•in)
		Flexible (mm^2)	Multi-core (mm^2)	AWG	
Analog and Digital I/O	TB1…4 (1…40)	0.140…1.500	0.140…1.500	26…16	0.4 (3.5)

(1) See "Cable and Wiring Recommendations" in the PowerFlex Digital DC Drive User Manual, publication 20P-UM001, for cable spacing information.

Digital Encoder Terminal Block

The encoder connection cables should always be connected directly to the terminals on the encoder terminal block. The encoder cable must be made up of twisted pairs with the shield connected to the shield ground on the drive side. Do not connect the shield to ground on the motor side. In some cases (i.e., cable lengths that exceed 100 meters), it may be necessary to ground the shield of each twisted pair on the power supply. Refer to Appendix A of the PowerFlex Digital DC Drive User Manual, publication 20P-UM001, for Digital Encoder specifications.

Digital Encoder Terminal Designations

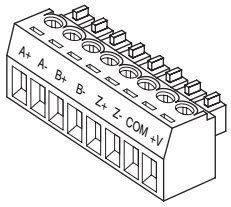

No.	Description	
A+	Encoder A	Single channel or quadrature A input
A-	Encoder A (NOT)	
B+	Encoder B	Dual channel quadrature B input
B-	Encoder B (NOT)	
Z+	Encoder Z	Pulse, marker or registration input (2)
Z-	Encoder Z (NOT)	
COM	+5/12-15V (1) DC Return	Internal power common
+V	+5/12-15V (1) DC Power	Internal power source 200 mA

(1) Selectable via switch S21 on the Control board. Refer to "DIP Switch and Jumper Settings" in the PowerFlex Digital DC Drive User Manual, publication 20P-UM001, for more information.

(2) Selectable via switch S20 on the Control board. Refer to "DIP Switch and Jumper Settings" in the PowerFlex Digital DC Drive User Manual, publication 20P-UM001, for more information.

Digital Encoder Terminal Block Location

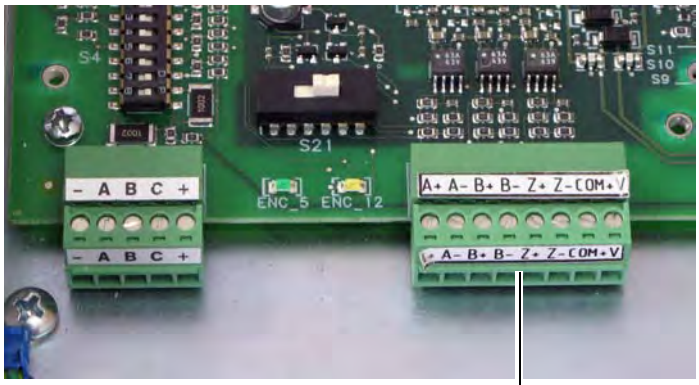

Digital Encoder terminal block

Sample Encoder Wiring

I/O	Connection Example
Encoder Power – (1) **Internal Drive Power** Internal (drive) +5/12-15V DC, 200mA	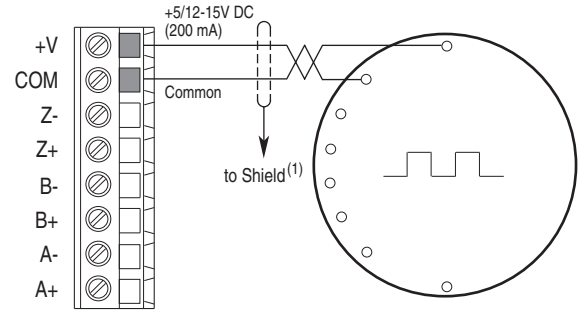
Encoder Power –External Power Source	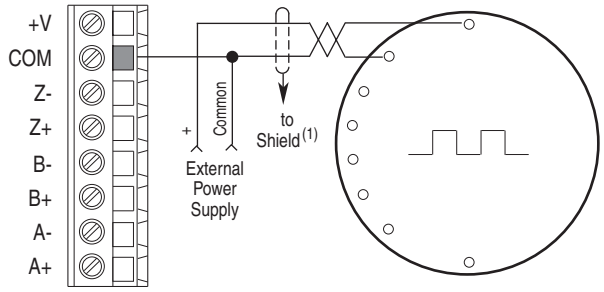
Encoder Signal –Single-Ended, Dual Channel	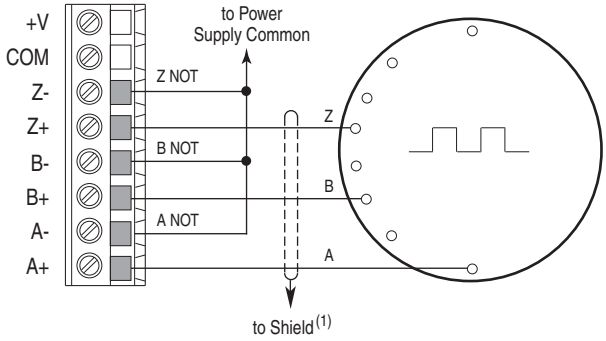
Encoder Signal –Differential, Dual Channel	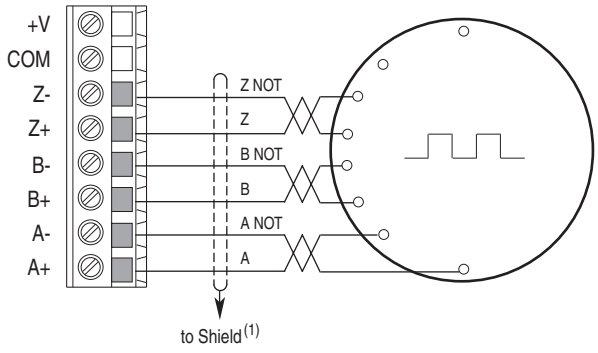

(1) Shield connection is on the drive Control EMI Shield. Refer to Digital Encoder Terminal Block Location on page 47.

DC Analog Tachometer Terminal Block

ATTENTION: The Drive can overspeed if DIP switch S4 is set incorrectly, or the tachometer is wired incorrectly. Failure to observe this precaution could result in damage to, or destruction of, the equipment.

DC Analog Tachometer Terminal Designations

	No.	Signal	Description
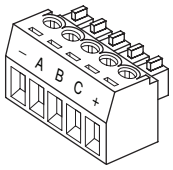	–	Negative input	–
	A	(Not Used)	
	B		
	C		
	+	Positive input Feedback polarity is determined during the start up routine.	22.7 / 45.4 / 90.7 / 181.6 / 302.9V(1) max voltage 8 mA max. current

(1) Maximum voltage depends on the configuration of DIP switch S4. Refer to the PowerFlex® Digital DC Drive User Manual, publication 20P-UM001 for information on jumper settings.

Analog Tachometer Terminal Block Location

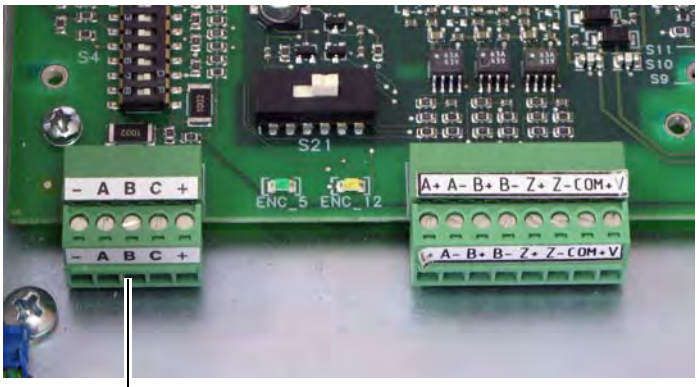

Analog Tachometer terminal block

Recommended Signal Wire Size for DC Analog Tachometer

Signal Type	Terminal Block (Terminals)	Wire Type and Size(1)			Tightening Torque N•m (lb•in)
		Flexible (mm^2)	multi-core (mm^2)	AWG	
DC Analog Tach	M3 (+ and –)	0.140…1.500	0.140…1.500	26…16	0.4 (3.5)

(1) See "Cable and Wiring Recommendations in the PowerFlex Digital DC Drive User Manual, publication 20P-UM001.

Resolver Feedback Module

The resolver feedback module (catalog number 20P-RES-A0), which provides a drive interface to a selection of compatible resolvers, must be ordered and purchased separately from the drive. The resolver option module includes the PowerFlex DC Drive Resolver Feedback Module Installation Instructions, publication 20P-IN071, which provides installation and wiring information. See "Resolver Type Selection" in the PowerFlex Digital DC Drive User Manual, publication 20P-UM001, for more information on compatible resolvers.

Circuit Protection

The tables on the following pages provide drive ratings and the recommended fuses for protecting the armature and field circuits. Externally mounted fuses (as indicated in the figures below) must be sourced separately when installing the drive. Internally mounted fuses are provided with the drive. See page 56 for frames C and D fuse information.

Frame A and B Fuse Designations

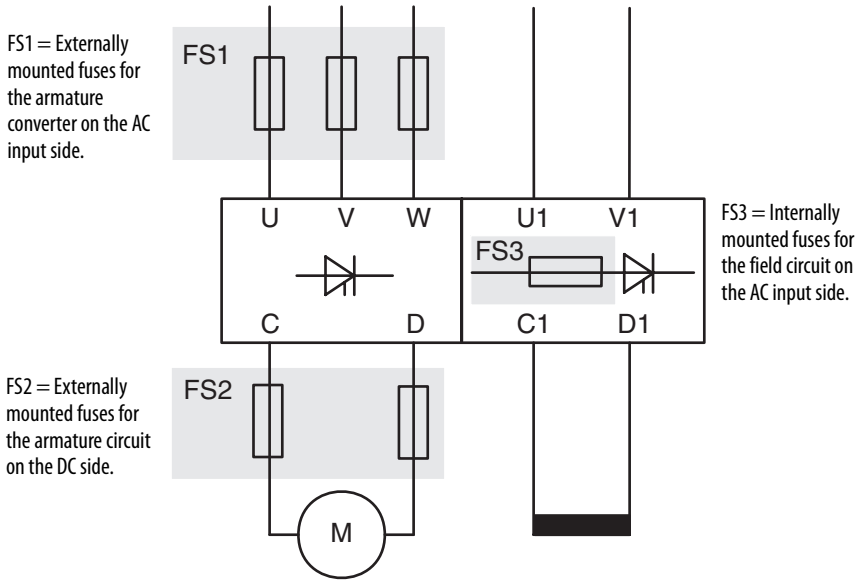

Frame A and B Recommended AC Input Line Fuses

AC input line fuses are externally mounted for frame A and B drives and must be sourced separately. See Fuse Code FS1 in Frame A and B Fuse Designations on page 50.

230V AC Input Drives

Frame	Drive Current Rating Code	DC Amps	AC Line Amps	Bussmann				Ferraz Shawmut (Gould Shawmut)	
				Ferrule FWP Type	Ferrule Fuse Block	North American FWP Type	North American Fuse Block	Ferrule A70QS Type	North American A70P / A70QS Type
A	7P0	7	5.7	FWP-10A14F	CH143D	FWP-10B	–	A70QS10-14F	A70P10-4
	9P0	9	7.4	FWP-15A14F		FWP-15B	–	A70QS16-14F	A70P15-4
	012	12	9.8	FWP-20A14F		FWP-20B	–	A70QS20-14F	A70P20-4
	020	20	16	FWP-25A14F		FWP-25B	–	A70QS25-14F	A70QS25-4
	029	29	24	FWP-40A22F	CH223D	FWP-40B	–	A70QS40-22F	A70QS40-4
	038	38	31	FWP-63A22F		FWP-60B	–	A70QS63-22F	A70QS60-4
	055	55	45	FWP-80A22F		FWP-80B	–	A70QS80-22F	A70QS80-4
	073	73	60	–	–	FWP-100A	–	–	A70QS100-4K
	093	93	76	–	–	FWP-150A	BH-1133	–	A70QS150-4K
	110	110	90	–	–	FWP-175A		–	A70QS175-4K
B	146	146	119	–	–	FWP-250A		–	A70QS250-4
	180	180	147	–	–	FWP-300A		–	A70QS300-4
	218	218	178	–	–	FWP-350A		–	A70QS350-4
	265	265	217	–	–	FWP-400	BH-3144	–	A70QS400-4
	360	360	294	–	–	FWP-600A		–	A70QS600-4K
	434	434	355	–	–	FWP-600A		–	A70QS600-4

460V AC Input Drives

Frame	Drive Current Rating Code	DC Amps	AC Line Amps	Bussmann				Ferraz Shawmut (Gould Shawmut)	
				Ferrule FWP Type	Ferrule Fuse Block	North American FWP Type	North American Fuse Block	Ferrule A70QS Type	North American A70P / A70QS Type
A	4P1	4.1	3.3	FWP-10A14F	CH143D	FWP-10B	–	A70QS10-14F	A70P10-4
	6P0	6	4.9	FWP-10A14F		FWP-10B	–	A70QS10-14F	A70P10-4
	010	10	8.2	FWP-20A14F		FWP-20B	–	A70QS20-14F	A70P25-4
	014	14	11.4	FWP-25A14F		FWP-25B	–	A70QS25-14F	A70P25-4
	019	19	15.5	FWP-25A14F		FWP-25B	–	A70QS25-14F	A70P25-4
	027	27	22.1	FWP-40A22F	CH223D	FWP-40B	–	A70QS40-22F	A70QS40-4
	035	35	28.6	FWP-63A22F		FWP-60B	–	A70QS63-22F	A70QS60-4
	045	45	36.8	FWP-80A22F		FWP-80B	–	A70QS80-22F	A70QS80-4
	052	52	42.5	FWP-80A22F		FWP-80B	–	A70QS80-22F	A70QS80-4
	073	73	59.6	–	–	FWP-100A	–	–	A70QS100-4K
	086	86	70.3	–	–	FWP-150A	BH-1133	–	A70QS150-4K
	100	100	81.7	–	–	FWP-175A		–	A70QS175-4K
	129	129	105.4	–	–	FWP-175A		–	A70QS175-4K
B	167	167	136.4	–	–	FWP-300A		–	A70QS300-4
	207	207	169.1	–	–	FWP-350A		–	A70QS350-4
	250	250	204.3	–	–	FWP-400A	BH-3144	–	A70QS400-4
	330	330	269.6	–	–	FWP-600A		–	A70QS600-4K
	412	412	336.6	–	–	FWP-600A		–	A70QS600-4

575V AC Input Drives

Frame	Drive Current Rating Code	DC Amps	AC Line Amps	Bussmann		Ferraz Shawmut (Gould Shawmut)
				North American FWP Type	North American FWP Fuse Block	North American A70QS Type
B	067	67.5	55.1	FWP-100A	–	A70QS100-4
	101	101.3	82.7	FWP-175A	BH-1133	A70QS175-4K
	135	135	110.3	FWP-225A		A70QS225-4
	270	270	220.6	FWP-450A	BH-3144	A70QS450-4
	405	405	330.9	FWP-600A		A70QS600-4K

Frame A and B Recommended Armature DC Output Fuses

Armature DC output fuses are externally mounted for frame A and B drives and must be sourced separately. These fuses are required on four quadrant drives only, but highly recommended on two quadrant drives. See Fuse Code FS2 in Frame A and B Fuse Designations on page 50.

230V AC Input Drives

Frame	Drive Current Rating Code	DC Amps	AC Line Amps	Bussmann				Ferraz Shawmut (Gould Shawmut)	
				Ferrule FWP Type	Ferrule Fuse Block	North American FWP Type	North American Fuse Block	Ferrule A70QS Type	North American A70P / A70QS Type
A	7P0	7	5.7	FWP-15A14F	CH142D	FWP-15B	–	A70QS16-14F	A70P15-4
	9P0	9	7.4	FWP-20A14F		FWP-20B	–	A70QS20-14F	A70P20-4
	012	12	9.8	FWP-25A14F		FWP-25B	–	A70QS25-14F	A70P25-4
	020	20	16	FWP-40A14F		FWP-40B	–	A70QS40-14F	A70QS40-4
	029	29	24	FWP-63A22F	CH222D	FWP-60B	–	A70QS63-22F	A70QS60-4
	038	38	31	FWP-80A22F		FWP-80B	–	A70QS80-22F	A70QS80-4
	055	55	45	–	–	FWP-125A	BH-1133	–	A70QS125-4K
	073	73	60	–	–	FWP-150A		–	A70QS150-4K
	093	93	76	–	–	FWP-200A		–	A70QS200-4K
	110	110	90	–	–	FWP-225A		–	A70QS250-4
B	146	146	119	–	–	FWP-300A		–	A70QS300-4
	180	180	147	–	–	FWP-350A		–	A70QS350-4
	218	218	178	–	–	FWP-450A	BH-3144	–	A70QS450-4
	265	265	217	–	–	FWP-600A		–	A70QS600-4K
	360	360	294	–	–	FWP-700A		–	A70QS700-4
	434	434	355	–	–	FWP-900A		–	A70P900-4

460V AC Input Drives

Frame	Drive Current Rating Code	DC Amps	AC Line Amps	Bussmann				Ferraz Shawmut (Gould Shawmut)	
				Ferrule FWP Type	Ferrule Fuse Block	North American FWP Type	North American Fuse Block	Ferrule A70QS Type	North American A70P / A70QS Type
A	4P1	4.1	3.3	FWP-10A14F	CH142D	FWP-10B	–	A70QS10-14F	A70P10-4
	6P0	6	4.9	FWP-15A14F		FWP-15B	–	A70QS16-14F	A70P15-4
	010	10	8.2	FWP-20A14F		FWP-20B	–	A70QS20-14F	A70P20-4
	014	14	11.4	FWP-30A14F		FWP-30B	–	A70QS32-14F	A70P30-4
	019	19	15.5	FWP-40A14F		FWP-40B	–	A70QS40-14F	A70QS40-4
	027	27	22.1	FWP-63A22F	CH222D	FWP-60B	–	A70QS63-22F	A70QS60-4
	035	35	28.6	FWP-80A22F		FWP-70B	–	A70QS80-22F	A70QS70-4
	045	45	36.8	FWP-100A22F		FWP-90B	–	–	A70QS90-4
	052	52	42.5	FWP-100A22F		FWP-100B	–	–	A70QS100-4
	073	73	59.6	–	–	FWP-150A	BH-1133	–	A70QS150-4K
	086	86	70.3	–	–	FWP-175A		–	A70QS175-4K
	100	100	81.7	–	–	FWP-200A		–	A70QS200-4K
	129	129	105.4	–	–	FWP-250A		–	A70QS250-4
B	167	167	136.4	–	–	FWP-350A		–	A70QS350-4
	207	207	169.1	–	–	FWP-400A	BH-3144	–	A70QS400-4
	250	250	204.3	–	–	FWP-500A		–	A70QS500-4K
	330	330	269.6	–	–	FWP-700A		–	A70QS700-4
	412	412	336.6	–	–	FWP-800A		–	A70QS800-4

575V AC Input Drives

Frame	Drive Current Rating Code	DC Amps	AC Line Amps	Bussmann		Ferraz Shawmut (Gould Shawmut)
				North American FWP Type	North American FWP Fuse Block	North American A70P / A70QS Type
B	067	67.5	55.1	FWP-125A	BH-1133	A70QS125-4K
	101	101.3	82.7	FWP-200A		A70QS200-4K
	135	135	110.3	FWP-250A		A70QS250-4
	270	270	220.6	FWP-600A	BH-3144	A70QS600-4K
	405	405	330.9	FWP-800A		A70QS800-4

Frame A and B Recommended Field Circuit Fuses

Field circuit fuses are internally mounted and provided with the drive. See Fuse Code FS3 in Frame A and B Fuse Designations on page 50. Also, see Frame A Field AC Input Line Fuses Location on page 55 and Frame B Field AC Input Line Fuses Location on page 56 for fuse locations.

230V AC Input Drives

Frame	Drive Current Rating Code	Field Amps	Type	Quantity	Bussmann	Ferraz Shawmut (Gould Shawmut)	SIBA
A	7P0	10	6 x 32 mm	2	FWH-016A6F	E085449	70 125 40.16
	9P0						
	012						
	020						
	029						
	038						
	055						
	073	14					
	093						
	110						
B	146	20	10 x 38 mm	2	FWC-25A10F	A60Q25-2	60 033 05.25
	180						
	218						
	265						
	360						
	434						

460V AC Input Drives

Frame	Drive Current Rating Code	Field Amps	Type	Quantity	Bussmann	Ferraz Shawmut (Gould Shawmut)	SIBA
A	4P1	10	6 x 32 mm	2	FWH-016A6F	E085449	70 125 40.16
	6P0						
	010						
	014						
	019						
	027						
	035						
	045						
	052						
	073	14					
	086						
	100						
	129						
B	167	20	10 x 38 mm	2	FWC-25A10F	A60Q25-2	60 033 05.25
	207						
	250						
	330						
	412						

575V AC Input Drives

Frame	Drive Current Rating Code	Field Amps	Quantity	Type	Bussmann	Ferraz Shawmut (Gould Shawmut)	SIBA
B	067	20	2	10 x 38 mm	FWC-25A10F	A60Q25-2	60 033 05.25
	101						
	135						
	270						
	405						

Frame A Field AC Input Line Fuses Location

Bottom View of Drive with Fan

Bottom View of Drive without Fan

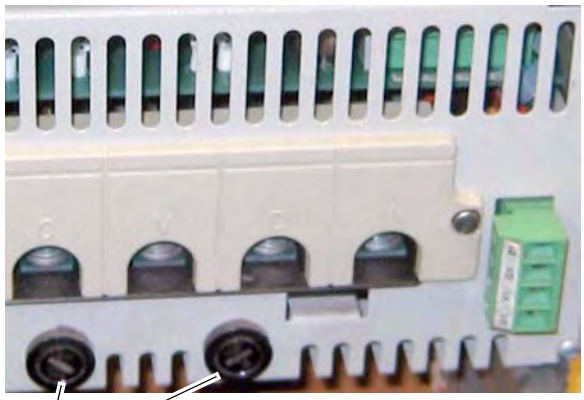

Field circuit fuses

Frame B Field AC Input Line Fuses Location

Top View of Drive

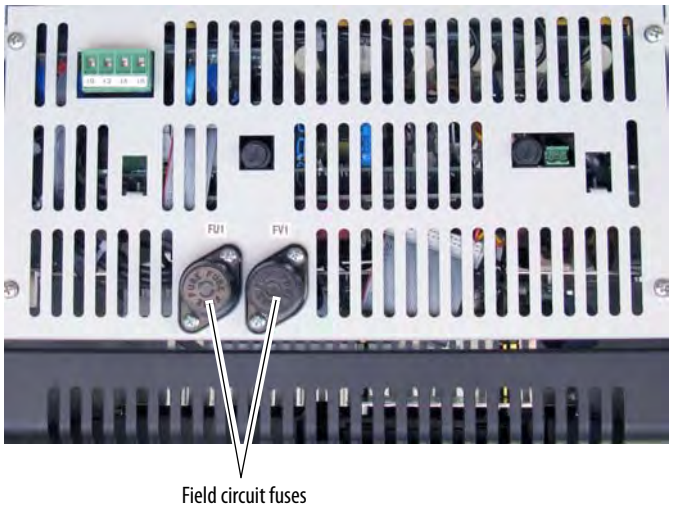

Frame C and D Fuse Designations

All fuses for armature and field circuit protection are internally mounted and provided with frame C and D drives.

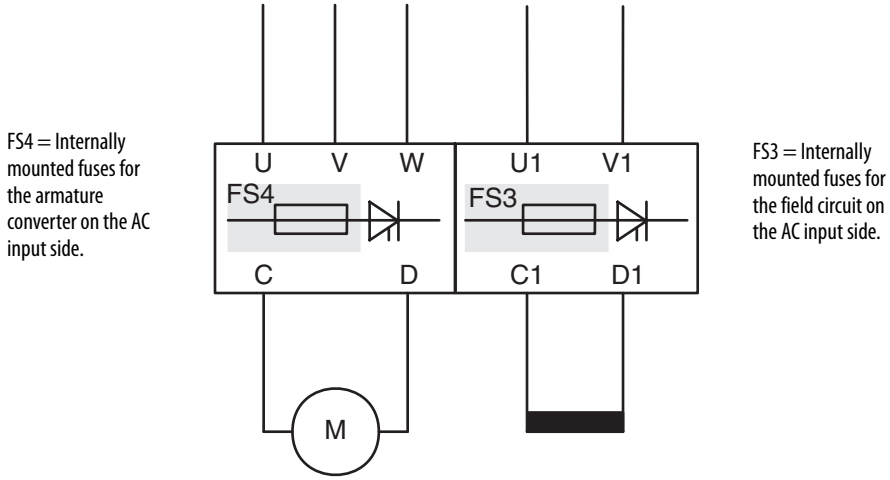

Frame C and D Recommended Field Circuit Fuses

Field circuit fuses for frames C and D drives are internally mounted (labeled FU1 and FV1) and provided with the drive. See Fuse Code FS3 in Frame C and D Fuse Designations on page 56. Also, see Frame C Field Circuit Fuse Location on page 58 and Frame D Field Circuit Fuse Location on page 58 for locations.

230V AC Input Drives

Frame	Drive Current Rating Code	Field Amps	Type	Qty	Bussmann	Ferraz Shawmut (Gould Shawmut)	SIBA
C	521	20	10 x 38 mm	2	FWC-25A10F	A60Q25-2	6003305.25
D	875	40	22 x 58 mm		FWP-50A22F	A70QS50-22F	5014006.50
	1K0						

460V AC Input Drives

Frame	Drive Current Rating Code	Field Amps	Type	Qty	Bussmann	Ferraz Shawmut (Gould Shawmut)	SIBA
C	495	20	10 x 38 mm	2	FWC-25A10F	A60Q25-2	6003305.25
	667					A60Q25-8	
D	830	40	22 x 58 mm		FWP-50A22F	A70QS50-22F	5014006.50
	996						
	1K1	70			FWP-100A22F	A70QS100-22F	5014006.100
	1K3						
	1K4						

575V AC Input Drives

Frame	Drive Current Rating Code	Field Amps	Type	Qty	Bussmann	Ferraz Shawmut (Gould Shawmut)	SIBA
C	540	20	10 x 38 mm	2	FWC-25A10F	A60Q25-2	6003305.25
	675					A60Q25-8	
D	810	40	22 x 58 mm		FWP-50A22F	A70QS50-22F	5014006.50
	1K0						
	1K2						
	1K3						
	1K6						

690V AC Input Drives

Frame	Drive Current Rating Code	Field Amps	Type	Qty	Bussmann	Ferraz Shawmut (Gould Shawmut)	SIBA
C	452	20	10 x 38 mm	2	FWC-25A10F	A60Q25-2	6003305.25
	565					A60Q25-8	
D	678	40	22 x 58 mm		FWP-50A22F	A70QS50-22F	5014006.50
	791						
	904						
	1K0						
	1K1	70			FWP-100A22F	A70QS100-22F	5014006.100
	1K2						
	1K4						
	1K5						

Frame C Field Circuit Fuse Location

Field AC input fuses are located on the Control EMI shield, which holds the Control board.

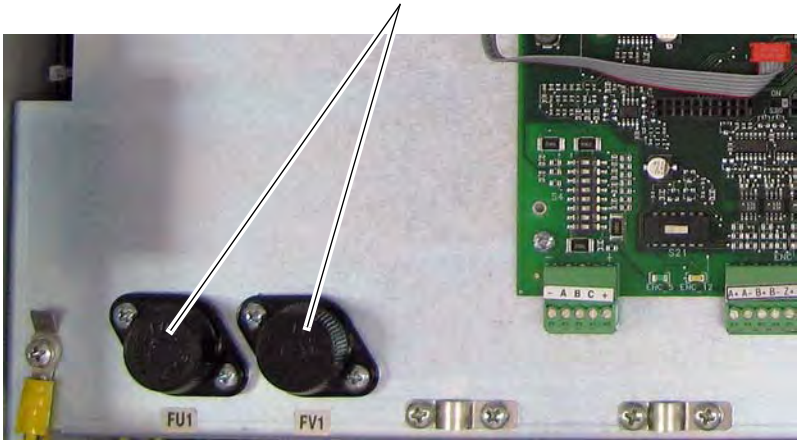

Frame D Field Circuit Fuse Location

Top, left side of drive control panel.

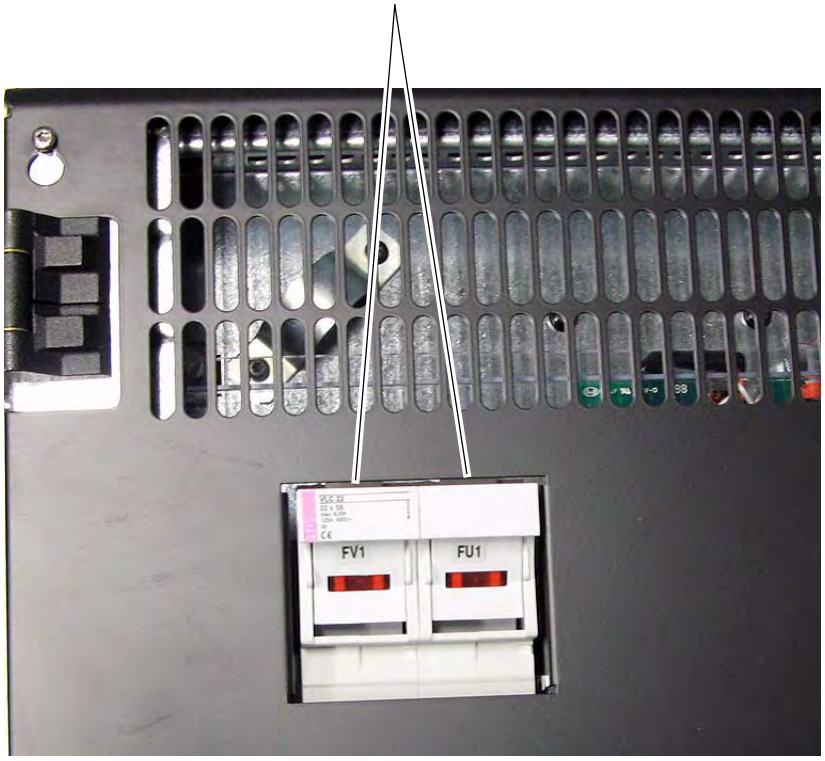

Fuses for Regenerative Frame C and D Drives

Leg fuses are internally mounted and provided with frames C and D drives. See Fuse Code FS4 in Frame C and D Fuse Designations on page 56. Also, see Frame C Regenerative Drive - Leg Fuse Location on page 60 and Frame D Regenerative Drive - Leg Fuse Location on page 61.

Recommended Leg Fuses - 230V AC Input Frame C Drives

Frame	Drive Current Rating Code	DC Amps	AC Line Amps	Qty	Bussmann	Ferraz Shawmut (Gould Shawmut)	SIBA
					Square Body - Flush End Contact		
C	521	521	426	6	170M5464 + switch 170H0069	6,9 URD 32 TTF 800 + switch MS 3-V1-5 BS	20 671 32.800 + switch 28 001 04
	700	700	571	6	170M5464 + switch 170H0069	6,9 URD 32 TTF 800 + switch MS 3V 1-5 BS	20 671 32.800 + switch 28 001 04

Recommended Leg Fuses - 230V AC Input Frame D Drives

Frame	Drive Current Rating Code	DC Amps	AC Line Amps	Qty	Bussmann	Ferraz Shawmut (Gould Shawmut)	SIBA
					Square Body - DIN 43653 Stud-Mount		
D	875	875	715	6	170M6263 + switch 170H0069	Y300263 + switch MS 3V 1-5 UR	20 635 32.900 + switch 28 001 04
	1K0	1050	858	6	170M6264 + switch 170H0069	Z300264 + switch MS 3V 1-5 UR	20 635 32.1000 + switch 28 001 04

Recommended Leg Fuses - 460V AC Input Frame C Drives

Frame	Drive Current Rating Code	DC Amps	AC Line Amps	Qty	Bussmann	Ferraz Shawmut (Gould Shawmut)	SIBA
					Square Body - Flush End Contact		
C	495	495	404.4	6	170M5462 + switch 170H0069	6,9 URD 32 TTF 630 + switch MS 3-V1-5 BS	20 671 32.630 + switch 28 001 04
	667	667	544.9	6	170M5464 + switch 170H0069	6,9 URD 32 TTF 800 + switch MS 3-V1-5 BS	20 671 32.800 + switch 28 001 04

Recommended Leg Fuses - 460V AC Input Frame D Drives

Frame	Drive Current Rating Code	DC Amps	AC Line Amps	Qty	Bussmann	Ferraz Shawmut (Gould Shawmut)	SIBA
					Square Body - DIN 43653 Stud-Mount		
D	830	830	678.1	6	170M6262 + switch 170H0069	X300262 + switch MS 3V 1-5 UR	20 635 32.800 + switch 28 001 04
	996	996	813.7	6	170M6264 + switch 170H0069	Z300264 + switch MS 3V 1-5 UR	20 635 32.1000 + switch 28 001 04
	1K1	1162	949.4	6	170M6265 + switch 170H0069	A300262 + switch MS 3V 1-5 UR	20 635 32.1100 + switch 28 001 04
	1K3	1328	1085.0	6	170M6266 + switch 170H0069	B300266 + switch MS 3V 1-5 UR	20 635 32.1250 + switch 28 001 04
	1K4	1494	1220.6	6	170M6267 + switch 170H0069	C300267 + switch MS 3V 1-5 UR	20 635 32.1400 + switch 28 001 04

Recommended Leg Fuses - 575V AC Input Frame C Drives

Frame	Drive Current Rating Code	DC Amps	AC Line Amps	Qty	Bussmann	Ferraz Shawmut (Gould Shawmut)	SIBA
					Square Body - Flush End Contact		
C	540	540	441	6	–	11 URD 72 TTF 0800 + switch MS 3V 1-5 BS	20 771 32.800 + switch 28 001 04
	675	675	551	6	–	11 URD 72 TTF 0800 + switch MS 3V 1-5 BS	20 771 32.800 + switch 28 001 04

Recommended Leg Fuses - 575V AC Input Frame D Drives

Frame	Drive Current Rating Code	DC Amps	AC Line Amps	Qty	Bussmann	Ferraz Shawmut (Gould Shawmut)	SIBA
					Square Body - DIN 43653 Stud-Mount		
D	810	810	661	6	170M6246 + switch 170H0069	J300572 + switch MS 3V 1-5 UR	20 735 32.800 + switch 28 001 04
	1K0	1080	881	6	170M6248 + switch 170H0069	L300574 + switch MS 3V 1-5 UR	20 735 32.1000 + switch 28 001 04
	1K2	1215	991	12	170M6244 + switch 170H0069	G300570 + switch MS 3V 1-5 UR	20 735 32.630 + switch 28 001 04
	1K3	1350	1102	12	170M6245 + switch 170H0069	H300571 + switch MS 3V 1-5 UR	20 735 32.700 + switch 28 001 04
	1K6	1688	1377	12	170M6246 + switch 170H0069	J300572 + switch MS 3V 1-5 UR	20 735 32.800 + switch 28 001 04

Recommended Leg Fuses - 690V AC Input Frame C Drives

Frame	Drive Current Rating Code	DC Amps	AC Line Amps	Qty	Bussmann	Ferraz Shawmut (Gould Shawmut)	SIBA
					Square Body - Flush End Contact		
C	452	452	369	6	170M5394 + switch 170H0069	12,5 URD 72 TTF 0500 + switch MS 3V 1-5 BS	20 771 32.500 + switch 28 001 04
	565	565	461	6	–	12,5 URD 72 TTF 0630 + switch MS 3V 1-5 BS	20 771 32.630 + switch 28 001 04

Recommended Leg Fuses - 690V AC Input Frame D Drives

Frame	Drive Current Rating Code	DC Amps	AC Line Amps	Qty	Bussmann	Ferraz Shawmut (Gould Shawmut)	SIBA
					Square Body - DIN 43653 Stud-Mount		
D	678	678	553	6	170M6244 + switch 170H0069	G300570 + switch MS 3V 1-5 UR	20 735 32.630 + switch 28 001 04
	791	791	645	6	170M6246 + switch 170H0069	J300572 + switch MS 3V 1-5 UR	20 735 32.800 + switch 28 001 04
	904	904	738	6	170M6247 + switch 170H0069	K300573 + switch MS 3V 1-5 UR	20 735 32.900 + switch 28 001 04
	1K0	1017	830	6	170M6248 + switch 170H0069	L300574 + switch MS 3V 1-5 UR	20 735 32.1000 + switch 28 001 04
	1K1	1130	922	12	170M6244 + switch 170H0069	G300570 + switch MS 3V 1-5 UR	20 735 32.630 + switch 28 001 04
	1K2	1243	1014	12	170M6244 + switch 170H0069	G300570 + switch MS 3V 1-5 UR	20 735 32.630 + switch 28 001 04
	1K4	1413	1153	12	170M6245 + switch 170H0069	H300571 + switch MS 3V 1-5 UR	20 735 32.700 + switch 28 001 04
	1K5	1582	1291	12	170M6246 + switch 170H0069	J300572 + switch MS 3V 1-5 UR	20 735 32.800 + switch 28 001 04

Frame C Regenerative Drive - Leg Fuse Location

Note: Drive shown with front covers removed and Control EMI shield lowered.

Leg fuses and switches are located on the bus bars behind the Control EMI shield, which holds the Control board.

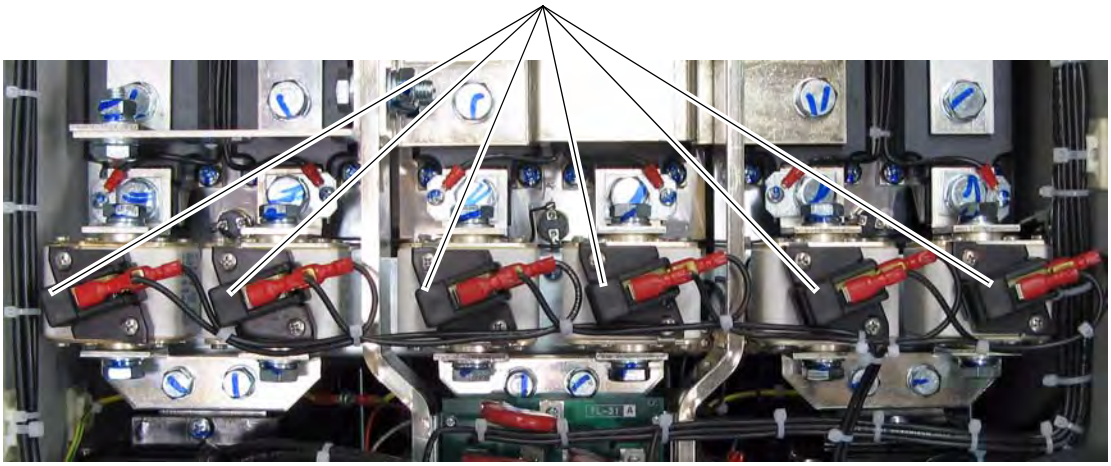

Frame D Regenerative Drive - Leg Fuse Location

Note: Drive shown with Control EMI shield in open position.

Leg fuses and switches are located on the bus bars behind the Control EMI shield, which holds the Control board.

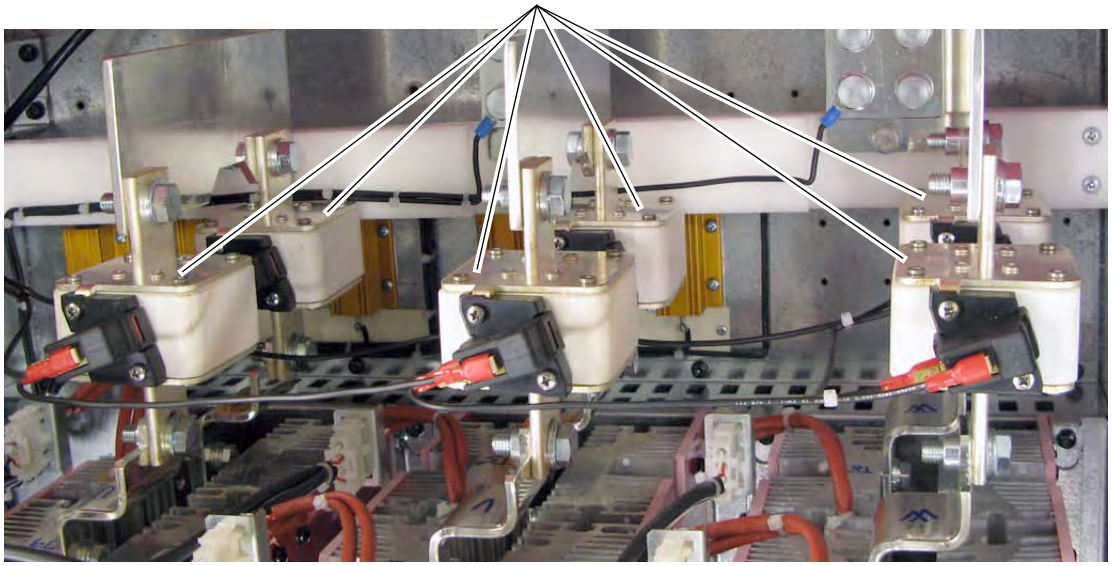

Fuses for Non-Regenerative Frame C and D Drives

AC input line and/or leg fuses are internally mounted and provided with frames C and D drives. See Fuse Code FS4 in Frame C and D Fuse Designations on page 56. Also, see Frame C Non-Regenerative Drive - AC Input Line Fuse Location on page 63.

Recommended AC Input Line Fuses - 230V AC Input Frame C

Frame	Drive Current Rating Code	DC Amps	AC Line Amps	Qty	Bussmann	Ferraz Shawmut (Gould Shawmut)	SIBA
					Square Body - Flush End Contact		
C	521	521	426	3	170M5466 + switch 170H0069	6,9 URD 32 TTF 1000 + switch MS 3-V1-5 BS	20 671 32.1000 + switch 28 001 04
	700	700	571	3	170M5466 + switch 170H0069	6,9 URD 32 TTF 1000 + switch MS 3V 1-5 BS	20 671 32.1000 + switch 28 001 04

Recommended Leg Fuses - 230V AC Input Frame D Drives

Frame	Drive Current Rating Code	DC Amps	AC Line Amps	Qty	Bussmann	Ferraz Shawmut (Gould Shawmut)	SIBA
					Square Body - DIN 43653 Stud-Mount		
D	875	875	715	6	170M6263 + switch 170H0069	Y300263 + switch MS 3V 1-5 UR	20 635 32.900 + switch 28 001 04
	1K0	1050	858	6	170M6264 + switch 170H0069	Z300264 + switch MS 3V 1-5 UR	20 635 32.1000 + switch 28 001 04

Recommended AC Input Line Fuses - 460V AC Input Frame C

Frame	Drive Current Rating Code	DC Amps	AC Line Amps	Qty	Bussmann	Ferraz Shawmut (Gould Shawmut)	SIBA
					Square Body - Flush End Contact		
C	495	495	404.4	3	170M5464 + switch 170H0069	6,9 URD 32 TTF 800 + switch MS 3-V1-5 BS	20 671 32.800 + switch 28 001 04
	667	667	544.9	3	170M5466 + switch 170H0069	6,9 URD 32 TTF 1000 + switch MS 3-V1-5 BS	20 671 32.1000 + switch 28 001 04

Recommended Leg Fuses - 460V AC Input Frame D Drives

Frame	Drive Current Rating Code	DC Amps	AC Line Amps	Qty	Bussmann	Ferraz Shawmut (Gould Shawmut)	SIBA
					Square Body - DIN 43653 Stud-Mount		
D	830	830	678.1	6	170M6262 + switch 170H0069	X300262 + switch MS 3V 1-5 UR	20 635 32.800 + switch 28 001 04
	996	996	813.7	6	170M6264 + switch 170H0069	Z300264 + switch MS 3V 1-5 UR	20 635 32.1000 + switch 28 001 04
	1K1	1162	949.4	6	170M6265 + switch 170H0069	A300262 + switch MS 3V 1-5 UR	20 635 32.1100 + switch 28 001 04
	1K3	1328	1085.0	6	170M6266 + switch 170H0069	B300266 + switch MS 3V 1-5 UR	20 635 32.1250 + switch 28 001 04
	1K4	1494	1220.6	6	170M6267 + switch 170H0069	C300267 + switch MS 3V 1-5 UR	20 635 32.1400 + switch 28 001 04

Recommended AC Input Line Fuses - 575V AC Input Frame C Drives

Frame	Drive Current Rating Code	DC Amps	AC Line Amps	Qty	Bussmann	Ferraz Shawmut (Gould Shawmut)	SIBA
					Square Body - Flush End Contact		
C	540	540	441	3	170M5466 + switch 170H0069	6,9 URD 32 TTF 1000 + switch MS 3V 1-5 BS	20 671 32.1000 + switch 28 001 04
	675	675	551	3	170M5466 + switch 170H0069	6,9 URD 32 TTF 1000 + switch MS 3V 1-5 BS	20 671 32.1000 + switch 28 001 04

Recommended Leg Fuses - 575V AC Input Frame D Drives

Frame	Drive Current Rating Code	DC Amps	AC Line Amps	Qty	Bussmann	Ferraz Shawmut (Gould Shawmut)	SIBA
					Square Body - DIN 43653 Stud-Mount		
D	810	810	661	6	170M6262 + switch 170H0069	X300262 + switch MS 3V 1-5 UR	20 635 32.800 + switch 28 001 04
	1K0	1080	881	6	170M6264 + switch 170H0069	Z300264 + switch MS 3V 1-5 UR	20 635 32.1000 + switch 28 001 04
	1K2	1215	991	6	170M6265 + switch 170H0069	A300262 + switch MS 3V 1-5 UR	20 635 32.1100 + switch 28 001 04
	1K3	1350	1102	6	170M6266 + switch 170H0069	B300266 + switch MS 3V 1-5 UR	20 635 32.1250 + switch 28 001 04
	1K6	1688	1377	12	170M6262 + switch 170H0069	X300262 + switch MS 3V 1-5 UR	20 635 32.800 + switch 28 001 04

Recommended AC Input Line Fuses - 690V AC Input Frame C Drives

Frame	Drive Current Rating Code	DC Amps	AC Line Amps	Qty	Bussmann	Ferraz Shawmut (Gould Shawmut)	SIBA
					Square Body - Flush End Contact		
C	452	452	369	6	170M5463 + switch 170H0069	6,9 URD 32 TTF 0700 + switch MS 3V 1-5 BS	20 671 32.700 + switch 28 001 04
	565	565	461	6	170M5465 + switch 170H0069	6,9 URD 32 TTF 0900 + switch MS 3V 1-5 BS	20 671 32.900 + switch 28 001 04

Recommended Leg Fuses - 690V AC Input Frame D Drives

Frame	Drive Current Rating Code	DC Amps	AC Line Amps	Qty	Bussmann	Ferraz Shawmut (Gould Shawmut)	SIBA
					Square Body - DIN 43653 Stud-Mount		
D	678	678	553	6	170M6260 + switch 170H0069	V300260 + switch MS 3V 1-5 UR	20 635 32.630 + switch 28 001 04
	791	791	645	6	170M6262 + switch 170H0069	X300262 + switch MS 3V 1-5 UR	20 635 32.800 + switch 28 001 04
	904	904	738	6	170M6263 + switch 170H0069	Y300263 + switch MS 3V 1-5 UR	20 635 32.900 + switch 28 001 04
	1K0	1017	830	6	170M6264 + switch 170H0069	Z300264 + switch MS 3V 1-5 UR	20 635 32.1000 + switch 28 001 04
	1K1	1130	922	6	170M6265 + switch 170H0069	A300262 + switch MS 3V 1-5 UR	20 635 32.1100 + switch 28 001 04
	1K2	1243	1014	6	170M6266 + switch 170H0069	B300266 + switch MS 3V 1-5 UR	20 635 32.1250 + switch 28 001 04
	1K4	1413	1153	6	170M6267 + switch 170H0069	C300267 + switch MS 3V 1-5 UR	20 635 32.1400 + switch 28 001 04
	1K5	1582	1291	12	170M6262 + switch 170H0069	X300262 + switch MS 3V 1-5 UR	20 635 32.800 + switch 28 001 04

Frame C Non-Regenerative Drive - AC Input Line Fuse Location

AC Input fuses and switches are located on the bus bars behind the Control EMI shield, which holds the Control board.

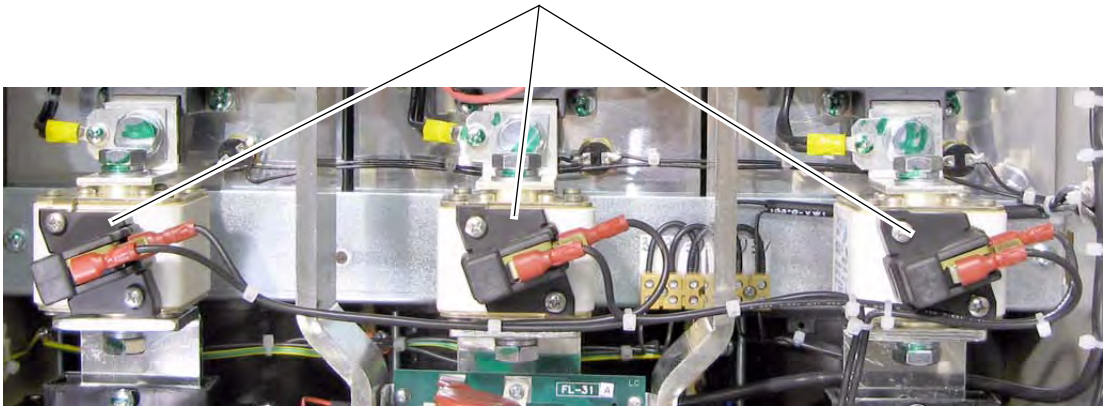

Note: Drive shown with front covers removed and Control EMI shield lowered.

Control Power Circuit Protection Fuses

The following fuses are used to protect the Switching Power Supply circuit.

IMPORTANT Verify the circuit board revision prior to ordering and installing fuses.

Frame	Circuit Board ID / Revision	Designation	Fuse (5 x 20 mm)
A	SW1-31 / H & below	F1	1 A, 250V, slow
	SW1-31 / I & above	F1	2.5 A, 250V, slow
B	SW2-32 / H & below	F1	3.15 A, 250V fast
		F2	2.5 A, 250V slow
	SW2-32 / I & above	F1	2.5 A, 250V slow
		F2	
C	SW3-32 / H & below	F1	3.15 A, 250V fast
		F2	2.5 A, 250V slow
	SW3-32 / I & above	F1	2.5 A, 250V slow
		F2	
D	SW1-31 / I & above	F1	2.5 A, 250V, slow

Frame A Switching Power Supply Fuse Location

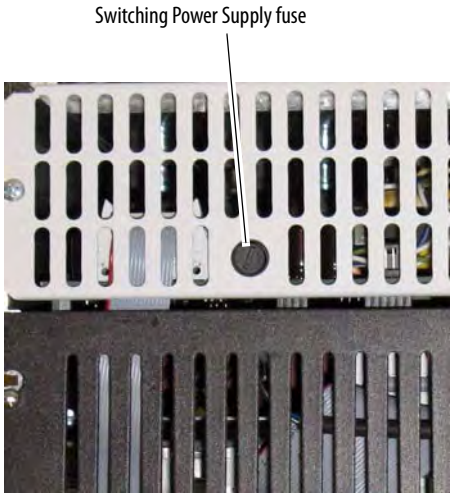

Frame B Switching Power Supply Fuse Location

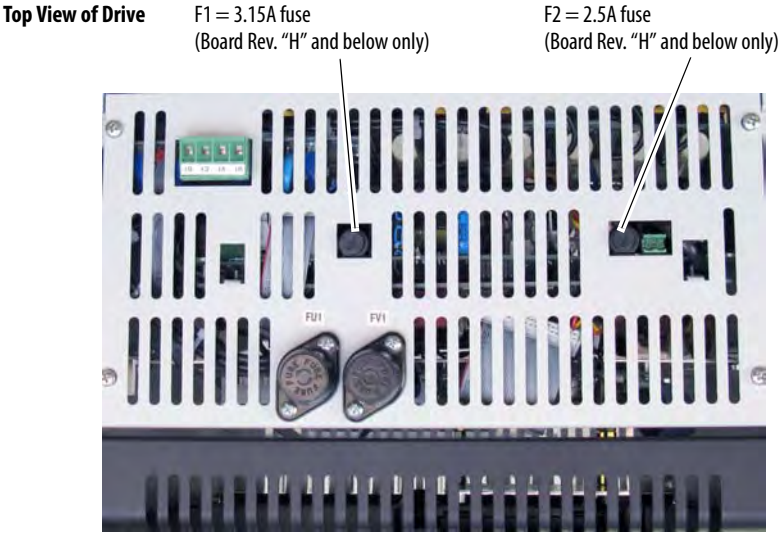

Frame C Switching Power Supply Fuse Location

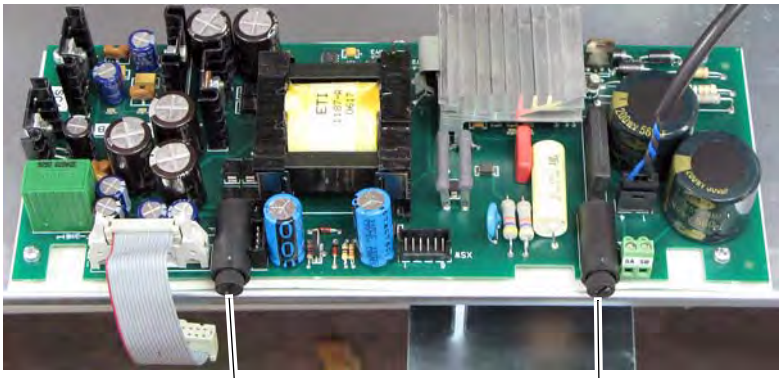

F1 = 3.15A fuse
(Board Rev. "H" and below only)

F2 = 2.5A fuse
(Board Rev. "H" and below only)

Fuses are located on the Switching Power Supply circuit board (SW-2) on the back of the Control EMI shield, which holds the Control board.

Frame D Switching Power Supply Circuit Board Fuse Location

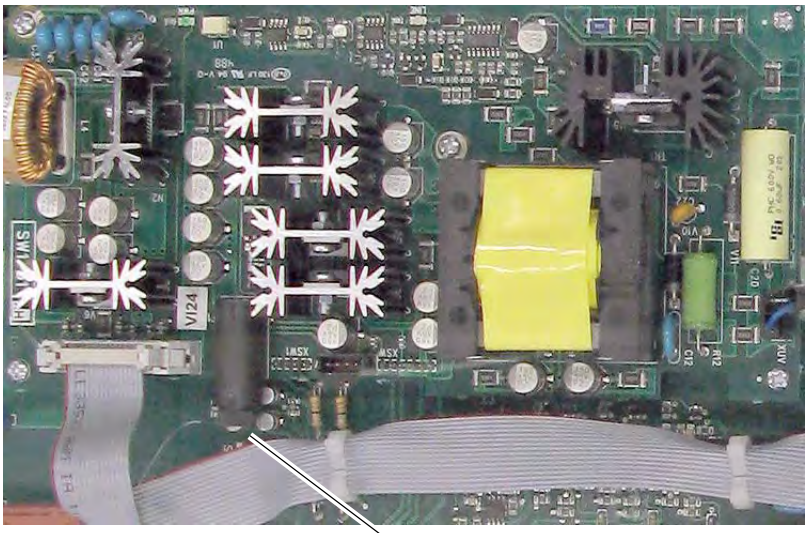

Switching Power Supply fuse holder

The Switching Power Supply circuit board is located on the Control EMI shield.

Mounting

Operating Conditions and Temperatures

PowerFlex DC drives are designed to operate at 0°...50° C (32°... 122° F) surrounding air temperature without derating. The drive must be mounted in a clean, dry location. Contaminants such as oils, corrosive vapors and abrasive debris must be kept out of the enclosure. NEMA/UL Type Open, IP20 enclosures are intended for indoor use primarily to provide a degree of protection against contact with enclosed equipment. These enclosures offer no protection against airborne contaminants.

Minimum Mounting Clearances

Minimum clearance requirements are intended to be from drive to drive. Other objects can occupy this space; however, reduced airflow may cause protection circuits to fault the drive. See Drive Enclosure Minimum Mounting Clearances below. The drive must be mounted in a vertical orientation as shown below and must not be mounted at an angle greater than 30° from vertical. In addition, inlet air temperature must not exceed the product specification.

Drive Enclosure Minimum Mounting Clearances

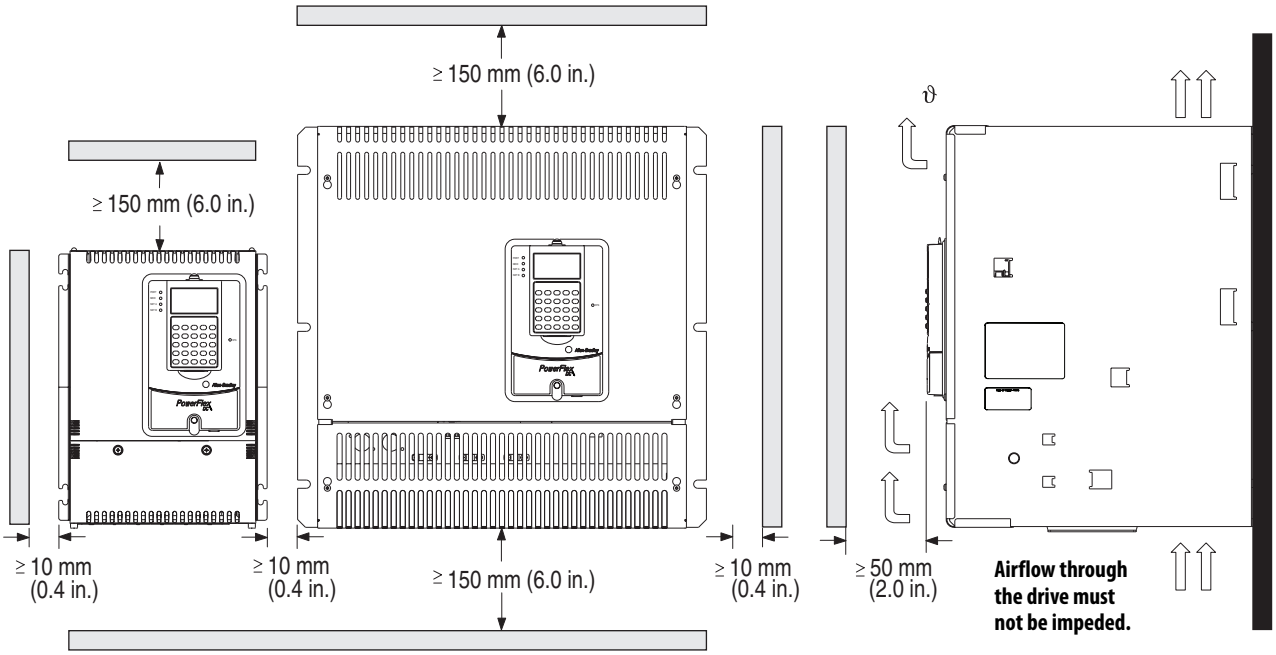

IMPORTANT Verify that all mounting screws are properly tightened before and after operation.

Approximate Dimensions

Frame A Dimensions

A	B	C	A1	A2	B1
mm (in.)	mm (in.)	mm (in.)	mm (in.)	mm (in.)	mm (in.)
267 (10.5)	359 (14.0)	287 (11.3)	7 (0.3)	250 (9.8)	275 (10.8)

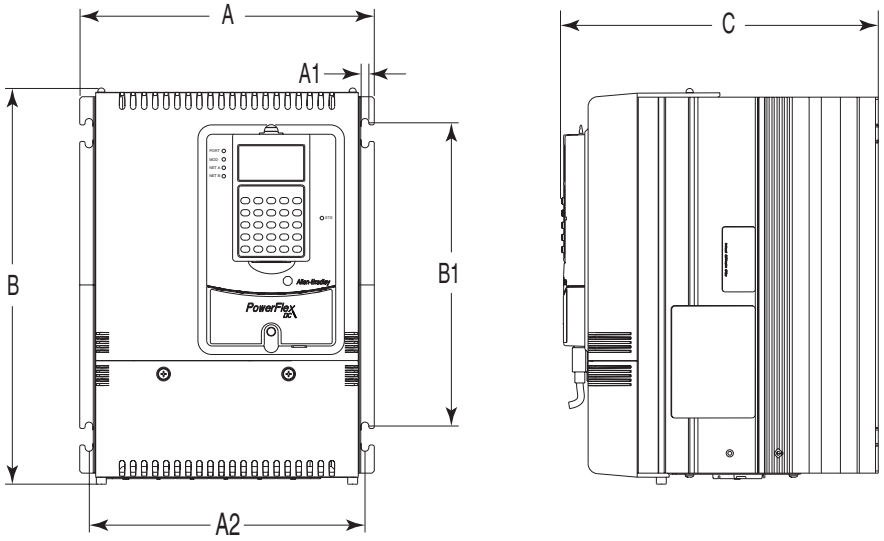

Frame A Weights

Drive w/ND Rating Code		Weight	
		Drive	Drive & Packaging
230V	460V	kg (lb)	kg (lb)
7P0	4P1	8.4 (19.5)	10.5 (23.1)
9P0	6P0		
012	010		
020	014		
–	019		
029	027		
038	035	8.8 (19.4)	11 (24.3)
055	045		
–	052		
073	073	10.8 (23.8)	13 (28.7)
093	086		
110	–		
–	100		
–	129		

Frame B Dimensions

A	A1	A2	A3	B	B1	C
mm (in.)	mm (in.)	mm (in.)	mm (in.)	mm (in.)	mm (in.)	mm (in.)
311 (12.2)	275 (10.8)	16.5 (0.65)	7 (0.3)	388 (15.3)	375 (14.8)	350 (13.8)

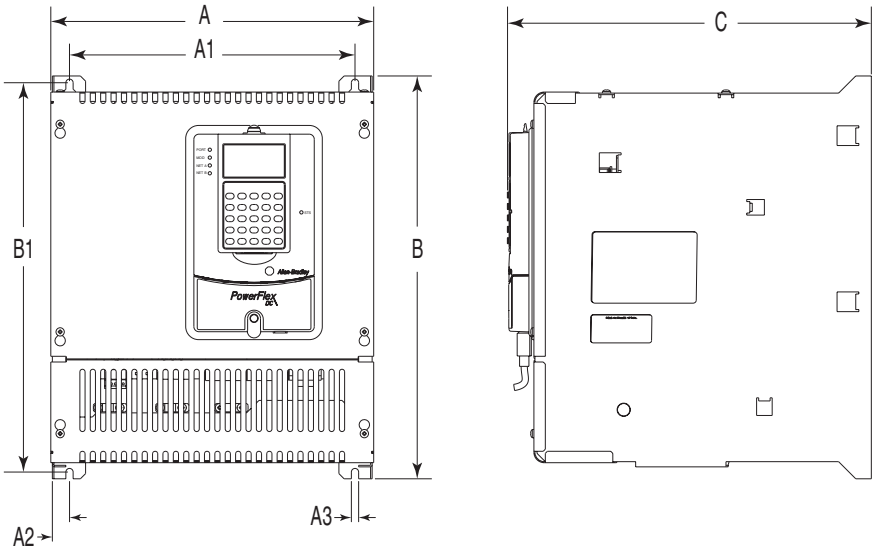

Terminal Details Dimensions in mm (in.)

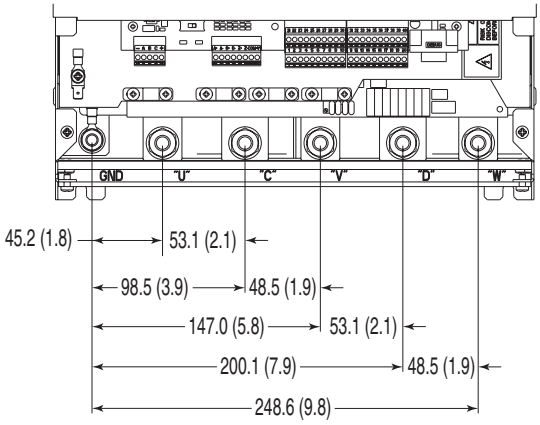

Frame B Weights

Drive w/ND Rating Code			Weight	
			Drive	Drive & Packaging
230V	460V	575V	kg (lb)	kg (lb)
146	167	067	25.5 (56.2)	27.5 (60.6)
180	207	101		
218	–	135		
265	250	270	29.5 (65.0)	31.5 (69.5)
360	330	405	32 (70.5)	34 (75)
434	412	–		

Frame C Dimensions

A	A1	B	B1	B2	B3	B4	B5	C
mm (in.)	mm (in.)	mm (in.)	mm (in.)	mm (in.)	mm (in.)	mm (in.)	mm (in.)	mm (in.)
521 (20.5)	499 (19.7)	511 (20.1)	400 (15.7)	200 (7.9)	55 (2.2)	56 (2.2)	10.5 (0.4)	416 (16.4)

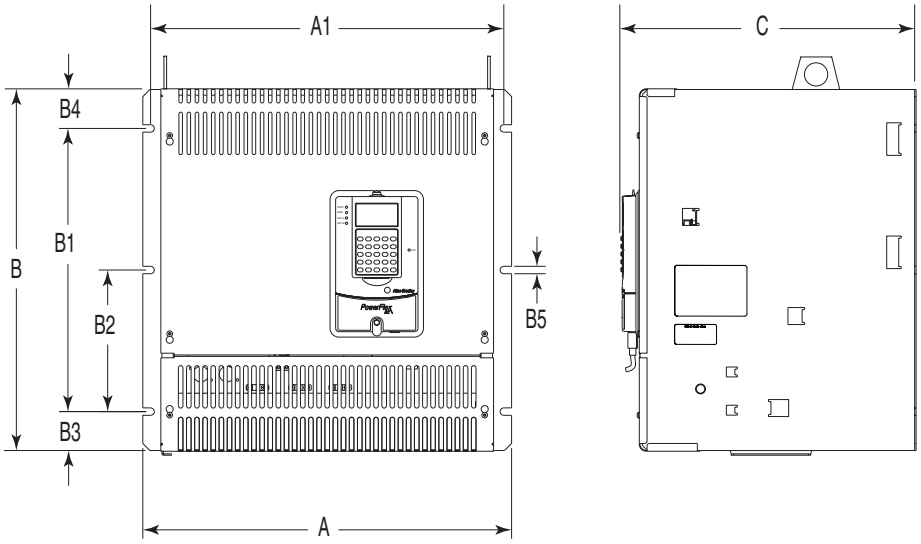

Terminal Details Dimensions in mm (in.)

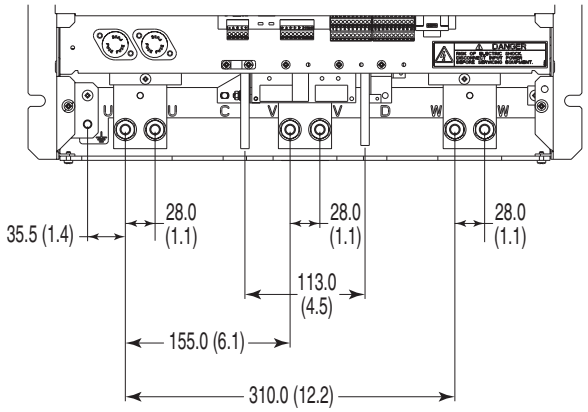

Frame C Weights

Drive w/ND Rating Code				Weight - Regenerative Drives		Weight - Non-regenerative Drives	
				Drive	Drive & Packaging	Drive	Drive & Packaging
230V	460V	575V	690V	kg (lb)	kg (lb)	kg (lb)	kg (lb)
–	495		–	61 (134.5)	83 (183.0)	57 (125.7)	79 (174.2)
521	667		–	65 (143.3)	87 (191.8)	62 (136.7)	84 (185.2)
700	–		–				
–	–	540	452	72 (158.7)	94 (207.2)	68 (150.0)	90 (198.4)
–	–	675	565				

Frame D Dimensions - Right Side and Front Views

Dimensions are shown in mm and (in.)

Dimensions of terminals U, V and W are the same.

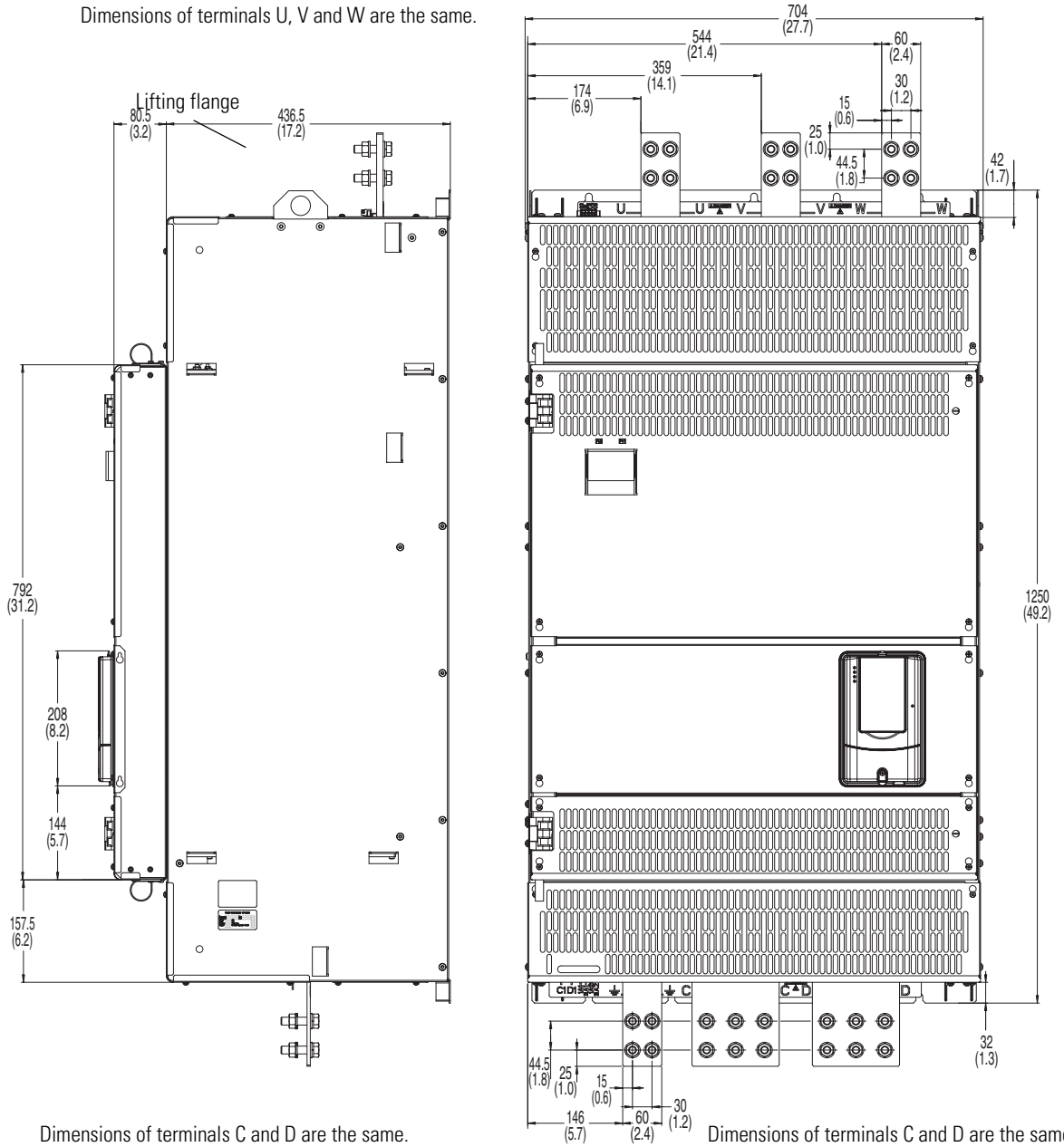

Dimensions of terminals C and D are the same.

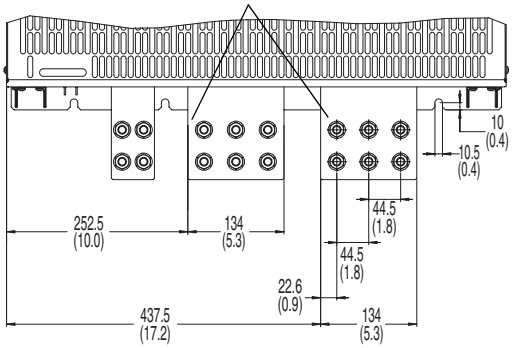

Dimensions of terminals C and D are the same.

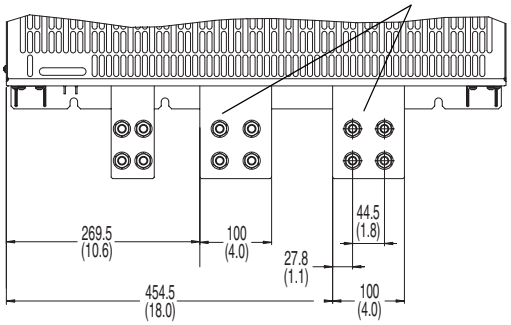

Frame D Dimensions - Left Side and Back Views

Dimensions are shown in mm and (in.)

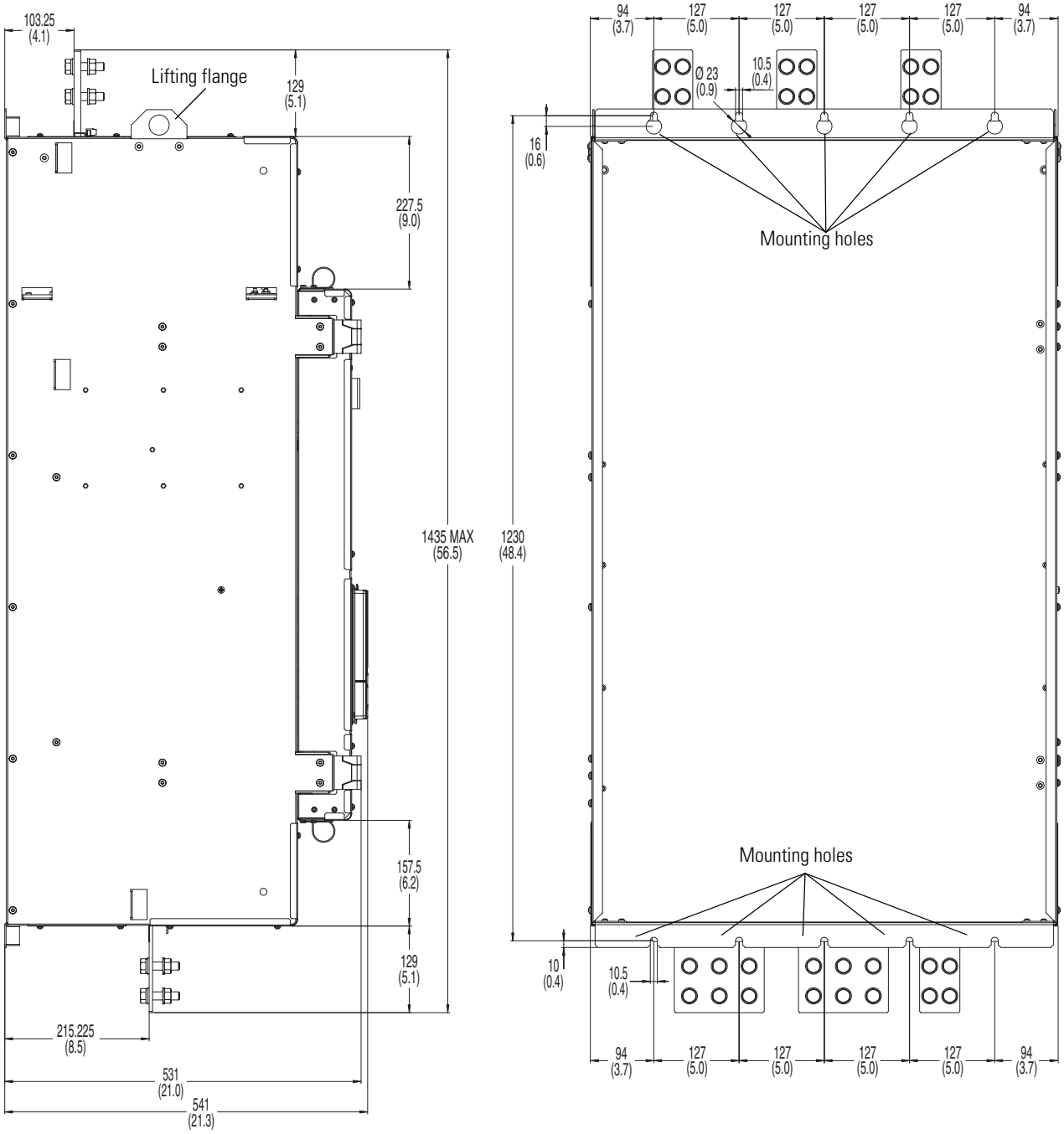

Frame D - 230V AC Input Drive Weights

Drive w/ND Rating Code	Weight - Regenerative Drives		Weight - Non-regenerative Drives	
	Drive	Drive & Packaging	Drive	Drive & Packaging
	kg (lb)	kg (lb)	kg (lb)	kg (lb)
875 1K0	203 (447.5)	281 (619.5)	152 (335.1)	230 (507.1)

Frame D - 460V AC Input Drive Weights

Drive w/ND Rating Code	Weight - Regenerative Drives		Weight - Non-regenerative Drives	
	Drive	Drive & Packaging	Drive	Drive & Packaging
	kg (lb)	kg (lb)	kg (lb)	kg (lb)
830	202 (445.3)	280 (617.3)	152 (335.1)	230 (507.1)
996				
1K1	215 (474.0)	293 (646.0)	165 (363.8)	243 (535.7)
1K3				
1K4				

Frame D - 575V AC Input Drive Weights

Drive w/ND Rating Code	Weight - Regenerative Drives		Weight - Non-regenerative Drives	
	Drive	Drive & Packaging	Drive	Drive & Packaging
	kg (lb)	kg (lb)	kg (lb)	kg (lb)
810	198 (436.5)	276 (608.5)	148 (326.3)	226 (498.2)
1K0				
1K2	215 (474.0)	293 (646.0)	165 (363.8)	243 (535.7)
1K3	222 (489.4)	300 (661.4)	172 (379.2)	250 (551.2)
1K6	241 (531.3)	319 (703.3)	191 (421.1)	269 (593.0)

Frame D - 690V AC Input Drive Weights

Drive w/ND Rating Code	Weight - Regenerative Drives		Weight - Non-regenerative Drives	
	Drive	Drive & Packaging	Drive	Drive & Packaging
	kg (lb)	kg (lb)	kg (lb)	kg (lb)
678	198 (436.5)	276 (608.5)	148 (326.3)	226 (498.2)
791				
904	200 (440.9)	278 (612.9)	150 (330.7)	228 (502.7)
1K0	202 (445.3)	280 (617.3)	152 (335.1)	230 (507.1)
1K1	215 (474.0)	293 (646.0)		
1K2			165 (363.8)	243 (535.7)
1K4	241 (531.3)	319 (703.3)	172 (379.2)	250 (551.2)
1K5			191 (421.1)	269 (593.0)

PowerFlex DC Configured Drives

Overview

The PowerFlex DC Configured Drives allow users to create drive packages based on their specific needs. This program enhances stand-alone drive functionality through additional control, power and packaging options, which are ideal for Original Equipment Manufacturers (OEM) and end users with special installation needs. This program consists of:

•Standard Configured Drives

•Engineer To Order Configured Drives

Standard Configured Drives

The Standard Configured Drives Program allows users to create drive packages based on their specific needs. A complete drive package may be specified by assembling a single catalog number string that includes a base drive and all required options. Packaging is available for 230 and 460V AC requirements in IP20, NEMA/UL Type 1 MCC style enclosures or rigid-panel mounted for installation in an existing enclosure. The program consists of a fully defined catalog string identified within this publication. Focused on higher volume, repeat business, the standard designs provide consistent manufacturing and minimizes customer resources by reducing engineering, manufacturing and installation time. Typical delivery is 6...8 weeks from order entry and can be ordered through the order entry system.

Engineer To Order Configured Drives (ETO)

The Engineer To Order Configured Drives Program offers users the ability to create drive packages beyond the Standard Configured Drives offering. Options may or may not be defined within this publication. Products can be ordered by contacting your Global Drives Systems representative at the central office location or one of the Local Drive Solution Centers. Our engineering experts will assist in defining the specific requirements of your application.

The Standard Configured Drive designs may be modified to meet the design criteria or a complete custom package can be designed for any application. The typical lead time of an ETO order is 8...12 weeks based on the lead time and availability of unique components of the design.

Benefits

- Simplified installation and start-up by use of common options assembled at the factory.
- Drive functionality exceeds options offered with a standard drive.
- Multiple packaging options specific to customer needs.
- Pre-engineered options for easy order entry, consistent manufacturing, high quality and reduced delivery time.
- Selectable configurations to meet application requirements.

Features

- Standard PowerFlex DC Digital drives and drive-related options.
- 6 pulse and 12 pulse.
- Enclosure options: IP20 MCC, IP42 Filter, IP00 (mounted on a panel), either conformal coated circuit boards or without.
- Pre-engineered options.
- Custom/engineered solutions.
- UL panel recognition from the factory for pre-engineered options.

Factory Installed Options

Enclosure Options

The PowerFlex Configured DC drives can be ordered in a IP20, NEMA/UL Type 1 MCC style enclosure or a IP43, NEMA/UL Type 1 with Fan & Filter MCC style enclosure. For both of these enclosures the drive, incoming disconnect and any specified operator devices will be mounted and wired in the cabinet or on the door as required. If a cabinet mounted input line reactor is specified, it will be mounted in the cabinet for drives ratings of 200 Hp or less. The drive may also be ordered on a rigid panel for installation in a users existing cabinet. For these designs the drive and all panel mounted parts will be mounted and wired. The incoming disconnect, operator devices and input line reactor will be shipped loose for customer mounting and wiring per local codes.

All MCC cabinets are 2286 mm H x 635 mm D (90 in. H x 25 in. D) with the width determined by the size of the drive and the options requested. The standard width enclosures are 508, 635, 889 mm (20, 25 and 35 in.) wide. The rigid panel mount designs are shipped on a 1981 mm H x 508 mm W or 813 mm W (78 in. H x 20 in. W or 32 in. W) panel to fit a standard 610 mm W X 914 mm W (24 in. W or 36 in. W) enclosure.

Human Interface Module (HIM) Options

The PowerFlex Configured DC drives can be ordered with a variety of HIM modules to meet the needs of each drive. The HIM's are installed on the door of the enclosures or shipped loose on the Open Panel designs. All designs have the door mounted bezel and interconnect cable to the drive. HIM's can be installed or updated in the field.

No HIM (Blank Plate)
Catalog Code: 0

LCD Display, Full
Numeric Keypad
Catalog Code: C

LCD Display,
Programmer Only
Catalog Code: E

I/O Options

The PowerFlex Configured DC drive has built-in configurable digital and analog I/O. The digital I/O is 24V DC and the analog I/O can be configured for voltage or current operation. Additional 24V DC and analog I/O can be added or an I/O conversion card can be added to accommodate 115V AC digital I/O.

I/O Options	
Control	Code
I/O Expansion Card (4 Additional 24V dc Digital Inputs & Outputs, 2 Analog Outputs)	A
115V ac Conversion Card (8 Digital Inputs & Outputs)	B
8 - 24V - dc Digital Inputs & Outputs, 3 Analog Outputs and 2 Analog Inputs	N

Communication Options

The PowerFlex Configured DC drives are fully compatible with Allen-Bradley drive's wide variety of DPI communication adapters, offering the following options.

Description	Catalog No.
ControlNet™ Communication Adapter (Coax)	C
DeviceNet™ Communication Adapter	D
EtherNet/IP™ Communication Adapter	E
Interbus™ Communication Adapter	I
LonWorks™ Communication Adapter	L
PROFIBUS™ DP Communication Adapter	P
ControlNet™ Communication Adapter (Fiber)	Q
Remote I/O Communication Adapter	R
None	N

Cabinet Options

The Configured Drive enclosure can be equipped with a variety of standard user option. These options are predefined as described below. Other options can be ordered through the ETO program.

Description	Catalog No.
None	N
Start and Stop PB's	1
Local/Remote SS	2
E-Stop PB	3
Jog	4
Blower Motor Starter	5
Options 1 & 2	A
Options 1 & 3	B
Options 1 & 4	C
Options 1 - 3	D
Options 1 - 4	E
Options 1 - 5	F
Options A & 4	G
Options A & 5	H
Options B & 4	J
Options B & 5	K

Certifications

The PowerFlex DC Drive is a UL/cUL certified product. The Configured Drive enclosure can also be built to UL/cUL certification and to CSA certification.

Description	Code
None (Drive unit is UL/cUL	N
UL/cUL	1
CSA Inspection & certification	2

Please contact your local distributor or sales office for product availability. Configured Drives offers Quick Ship and Pre-Engineered Programs.

Configured Drive Enclosure Dimensions

Frame 1

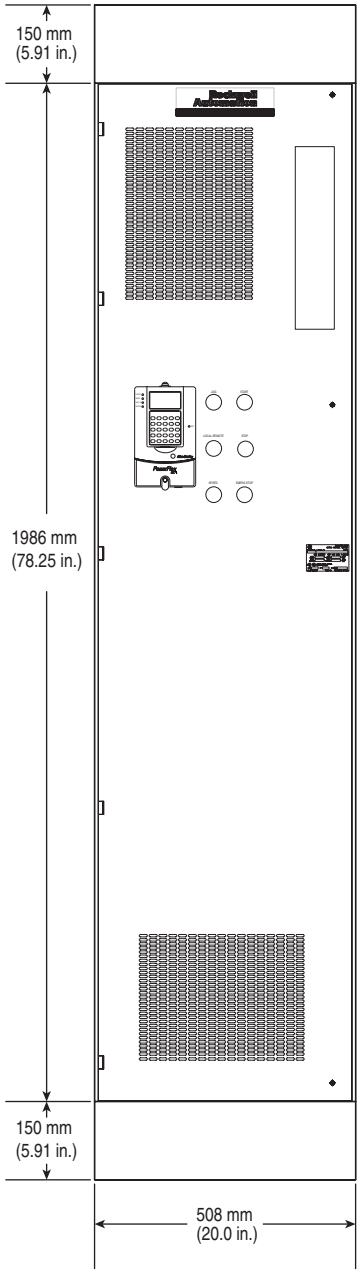

Frame 2

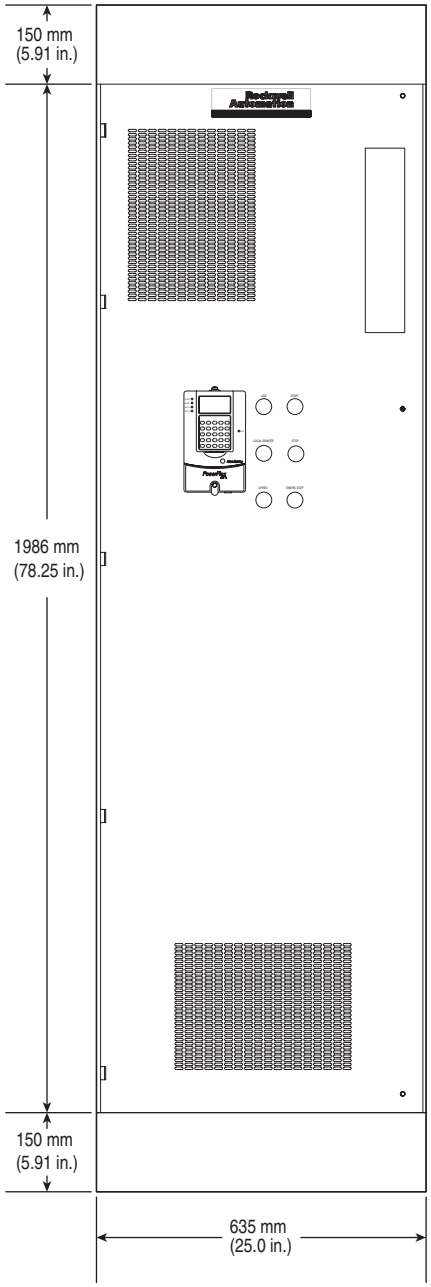

Configured Drive Enclosure Dimensions, continued

Frame 3

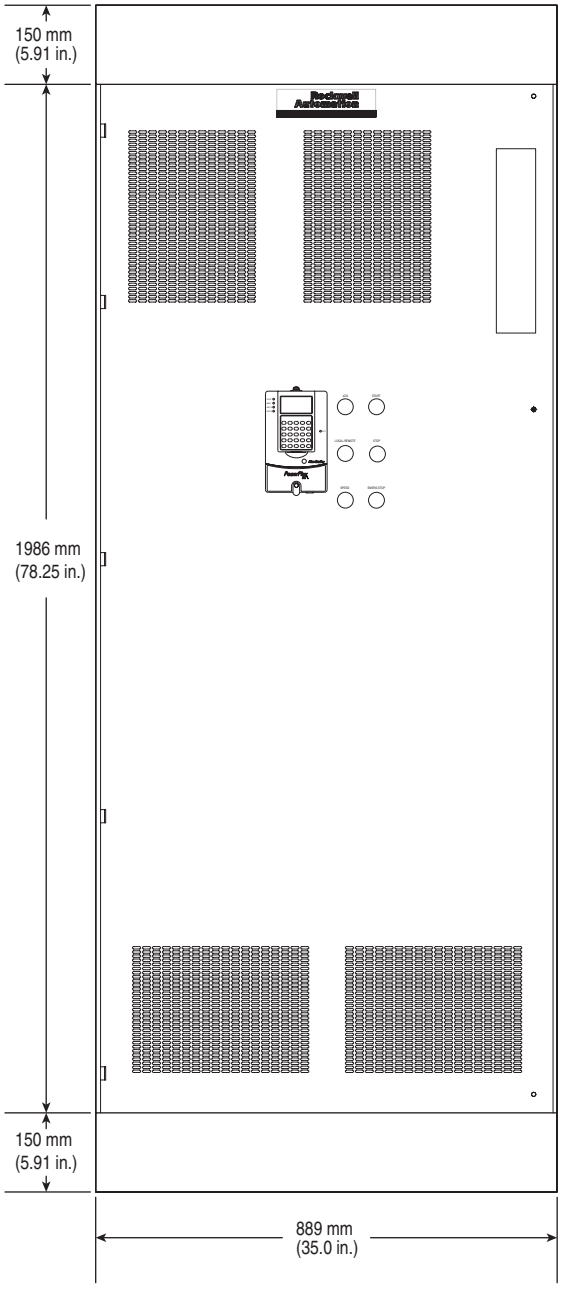

Specifications

Category	Specification	
Agency Certification	c UL us	According to file E59272 for the series of the approved devices.
	CE	In conformity with the following European Directives: EMC Directive (2004/108/EC) Low Voltage Directive (2006/95/EC) Standards applied: EN 50178: 1997 EN 61800-3: 2004
		Australian Communications and Media Authority In conformity with the following: Radio communications Act: 1992 Radio communications Standard: 2008 Radio communications Labelling Notice: 2008 Standards applied: EN 61800-3:2004
	The drive is also designed to meet the following specifications: NFPA 70 - US National Electrical Code	

Category	Specification	
Drive Type	Full Wave Regen, 6 Pulse, Regulated Field Supply	
Protection	Heat Sink Thermistor:	Monitored by microprocessor overtemp trip
	Drive Overcurrent Trip Software Overcurrent Trip: Hardware Overcurrent Trip:	 200% of rated current (typical) 220-300% of rated current (dependent on drive rating)
	Line transients:	Up to 2000 volts peak per IEC 6100-4-5
	Control Logic Noise Immunity:	Showering arc transients up to 1500V peak
	Power Ride-Thru:	15 milliseconds at full load
	Logic Control Ride-Thru:	0.5 seconds minimum, 2 seconds typical
	Ground Fault Trip:	Phase-to-ground on drive output
	Short Circuit Trip:	Phase-to-phase on drive output
Environment(1)	Altitude:	1000 m (3300 ft) max. without derating. De-rate output power by 1.2% for every 100 meters (328ft) above 1000 meters (3300ft).
	Maximum Surrounding Air Temperature IP20, NEMA Type Open:	0…50° C (32…122° F), typical. De-rate 1.25% for every 1° C over 50° C (122° F), to 55° C (131° F). Additional cooling is required for temps. above 55° C.
	Storage Temp. (all const.):	–25 to 55 degrees C (–13 to 131 degrees F)
	Atmosphere:	**Important:** Drive **must not** be installed in an area where the ambient atmosphere contains volatile or corrosive gas, vapors or dust. If the drive is not going to be installed for a period of time, it must be stored in an area where it will not be exposed to a corrosive atmosphere.
	Relative Humidity:	Operating: 5 to 85% non-condensing Storage: 5 - 95% non-condensing
	Shock:	15G peak for 11ms duration (±1.0 ms)
	Vibration:	0.152 mm (0.006 in.) displacement, 1G peak

(1) PowerFlex DC drives must be installed in a Pollution Degree 2 environment.

Category	Specification		
Drive Type	Full Wave Regen, 6 Pulse, Regulated Field Supply		
Electrical	Input Voltages:	230 to 690V AC +/- 10%, 3 Phase (See AC Input Voltages on page 20 for details.)	
	Input Frequency:	50/60 Hz +/- 5%	
	Max. Rate of Change of Input Frequency:	2 Hz/Sec.	
	Armature Output Voltage:	Two Quadrant Drives	Four Quadrant Drives
		260V DC @ 230V AC	240V DC @ 230V AC
		470V DC @ 400V AC	420V DC @ 400V AC
		530V DC @ 440V AC	460V DC @ 440V AC
		560V DC @ 460V AC	480V DC @ 460V AC
		580V DC @ 480V AC	500V DC @ 480V AC
		680V DC @ 575V AC	600V DC @ 575V AC
		810V DC @ 690V AC	720V DC @ 690V AC
	Output Horsepower (Cont.)	1.5…300 HP @ 230V AC 2…900 HP @ 460V AC 600…1250 HP @ 575V AC 600…1400 HP @ 690V AC	
	Output Current:	4.1…1688A	
	Overload Capability:	100% rated continuous current 150% rated current for one minute then fault 200% rated current for three seconds then fault	
	Field Output Voltage	200V DC @ 230V AC 310V DC @ 400V AC 360V DC @ 460V AC Maximum field output voltage is 0.85 x AC input line voltage.	
	Controller Current Overload:	150% rated current for one minute 200% rated current for three seconds	
	Max. Short Circuit Rating:	100,000 A	
Control	Speed Regulation:*	All operating modes: Max. speed: 8000 rpm Digital reference resolution: 0.25 rpm Analog reference resolution: ≥ 0.25 rpm	
		with Digital Incremental Encoder/Resolver Speed feedback resolution better than 0.5 rpm (based on encoder PPR or resolver resolution) Operating range better than 1000:1 rpm, bi-directional Performance Accuracy ±0.02% typical 170 rad/sec bandwidth	
		with DC Analog Tachometer Speed feedback resolution better than 2000:1 rpm Operating range better than 1000:1 rpm, bi-directional Performance accuracy ±0.1% 170 rad/sec bandwidth	
		with Armature Voltage Feedback Voltage feedback resolution better than 2000:1 rpm Operating range better than 100:1 rpm, bi-directional Performance accuracy: ±2.0% typical 80 rad/sec bandwidth	
		*Subject to motor specs. and current loop tuning.	
	Torque Regulation	Current feedback resolution better than 2000:1	
		Performance accuracy: 1.0% typical	
		500 rad/sec bandwidth	

Category	Specification	
Feedback Devices	Encoder	Type: Incremental, dual channel, two channel optional (with jumper), differential (recommended) or single-ended
		Input Voltage: Configurable for +2.5V - 5.2V (switch S21 in ENC_5 position) or +5.4V - 15.2V (switch S21 in ENC_12 position)
		Input Current: 4.5 mA / 6.8 - 10.9 mA each channel
		Quadrature: 90° ± 27° @ 25° C
		Duty cycle: 50% ± 10% Source/Sink capable
		Pulses Per Revolution: 100 to 32770
		Maximum Frequency: 150 kHz
		Maximum Cable Length: Shielded, 150m (0.75 mm^2), 125m (0.5 mm^2), 55m (0.22 mm^2)
	DC Analog Tachometer	Input Voltage: 22.7, 45.4, 90.7, 181.6, & 302.9V max.
		Input Current: 8 mA full scale
		Maximum Cable Length: Shielded, depends on the installation, typical 150m.
Inputs	Analog Inputs	Three configurable, isolated, differential
		±10V, 0-10V, 0-20mA or 4-20mA.
		Resolution: 11 Bit + sign
	Digital Inputs	Eight standard configurable, four additional configurable with the I/O Expansion circuit board.
		Max Voltage +30V DC input, 200mA (total current draw is the sum of encoder power, digital outputs and any other loads connected to terminal 19)
Outputs	Analog Outputs	Two standard configurable, two additional configurable with the I/O Expansion circuit board. Sampling rate 2 ms.
		± 10V, 5mA, bipolar (current is not bipolar)
		Resolution: 11 Bit + sign
	Digital Outputs	Four standard configurable, four additional configurable with the I/O Expansion circuit board.
		+ 30V, 50mA
	Relay Outputs	Two configurable, N.O. contacts
		Max. 250V AC, 1A AC1

Watts Loss and Fan Attributes

Watts loss and fan attributes data shown below is based on the rated current of the drive.

Frame A Drives

Drive Current Rating Code(1)		Total Watts Loss	Total Value for Fan (none or 1)		
@ 230 VAC	@ 460 VAC		AC Input Voltage	Rated Current (A)	Max. Air Flow Noise Level
7P0	4P1	131	(no fan)		
9P0	6P0				
012	010				
020	014				
–	019				
029	027	186			
038	035	254	(Internal power supply)		80 m^3/h 37 dB(A)
055	045				
–	052				
073	073	408			160 m^3/h 45 dB(A)
093	086	476			
110	–				
–	100	553			
–	129				

(1) Refer to Catalog Number Explanation on page 5, positions 8…10 for corresponding drive Hp rating, armature amp rating and field amp rating.

Frame B Drives

Drive			Total Value for All Fans (2)		
Current Rating Code(1)	AC Input Voltage	Total Watts Loss	AC Input Voltage	Rated Current	Max. Air Flow Noise Level
146	230	781	(Internal power supply)		320 m^3/h 48 dB(A)
180					
218		939			
265		1038			
360		1693			680 m^3/h 53 dB(A)
434					
167	460	781			320 m^3/h 48 dB(A)
207		939			
250		1038			
330		1248			
412		1693			680 m^3/h 53 dB(A)
067	575	400			320 m^3/h 48 dB(A)
101		553			
135		700			
270		1038			
405		1693			680 m^3/h 53 dB(A)

(1) Refer to Catalog Number Explanation on page 5, positions 8…10 for corresponding drive Hp rating, armature amp rating and field amp rating.

Frame C Drives

Drive			Total Value for All Fans (3) (2)		
Current Rating Code(1)	AC Input Voltage	Total Watts Loss	AC Input Voltage	Rated Current	Max. Air Flow Noise Level
521	230	2143	230 VAC	0.75 Amps	1050 m^3/h 62.5 dB(A)
700		2700			
495	460	2143			
667		2590			
540	575	2300			
675		2620			
452	690	1700			
565		2300			

(1) Refer to Catalog Number Explanation on page 5, positions 8…10 for corresponding drive Hp rating, armature amp rating and field amp rating.

(2) Fans on frames C drives must be powered by an external 230 V AC, 50/60 Hz power supply, connected to terminals U3 and V3.

Frame D Drives

Drive			Total Value for Fan (1) (2)		
Current Rating Code(1)	AC Input Voltage	Total Watts Loss	AC Input Voltage	Rated Current	Max. Air Flow Noise Level
875	230	2694	230 VAC	2.4A@50Hz and 3.3A@60Hz	2400 m^3/h 80 dB(A)
1K0		3284			
830	480	3200			
996		3568			
1K1		4189			
1K3		5229			
1K4		5117			
810	575	3122			
1K0		3819			
1K2		4679			
1K3		4879			
1K6		5720			
678	690	3174			
791		3582			
904		4028			
1K0		4064			
1K1		4509			
1K2		5368			
1K4		5543			
1K5		5886			

(1) Refer to Catalog Number Explanation on page 5, positions 8…10 for corresponding drive Hp rating, armature amp rating and field amp rating.

(2) Fans on frames D drives must be powered by an external 230 V AC, 50/60 Hz power supply, connected to terminals U3 and V3.

PowerFlex DC Stand-Alone Regulator

Catalog Number (1)	Total Watts Loss [W]	Total Value for Fans (2)		
		AC Input Voltage	Rated Current	Max. Air Flow Noise Level
23PMD4	303	(Internal power supply)		160 m^3/h 40 dB(A)
23PMD7	357			
23PMF4	374			
23PMF7	428			

(1) Refer to Stand-Alone Regulator "Catalog Numbers" in the PowerFlex DC Stand-Alone Regulator and Gate Amplifier User Manual, publication 23P-UM001, for a description of ratings.

Important User Information

Solid-state equipment has operational characteristics differing from those of electromechanical equipment. Safety Guidelines for the Application, Installation and Maintenance of Solid State Controls (publication SGI-1.1 available from your local Rockwell Automation sales office or online at http://www.rockwellautomation.com/literature/) describes some important differences between solid-state equipment and hard-wired electromechanical devices. Because of this difference, and also because of the wide variety of uses for solid-state equipment, all persons responsible for applying this equipment must satisfy themselves that each intended application of this equipment is acceptable.

In no event will Rockwell Automation, Inc. be responsible or liable for indirect or consequential damages resulting from the use or application of this equipment.

The examples and diagrams in this publication are included solely for illustrative purposes. Because of the many variables and requirements associated with any particular installation, Rockwell Automation, Inc. cannot assume responsibility or liability for actual use based on the examples and diagrams.

No patent liability is assumed by Rockwell Automation, Inc. with respect to use of information, circuits, equipment, or software described in this manual.

Reproduction of the contents of this manual, in whole or in part, without written permission of Rockwell Automation, Inc., is prohibited.

Documentation Feedback

Your comments will help us serve your documentation needs better. If you have any suggestions on how to improve this document, complete this form, publication RA-DU002, available at http://www.rockwellautomation.com/literature/.

Allen-Bradley, Rockwell Software, Rockwell Automation, and TechConnect are trademarks of Rockwell Automation, Inc.

Trademarks not belonging to Rockwell Automation are property of their respective companies.

www.rockwellautomation.com

Power, Control and Information Solutions Headquarters

Americas: Rockwell Automation, 1201 South Second Street, Milwaukee, WI 53204-2496 USA, Tel: (1) 414.382.2000, Fax: (1) 414.382.4444
Europe/Middle East/Africa: Rockwell Automation NV, Pegasus Park, De Kleetlaan 12a, 1831 Diegem, Belgium, Tel: (32) 2 663 0600, Fax: (32) 2 663 0640
Asia Pacific: Rockwell Automation, Level 14, Core F, Cyberport 3, 100 Cyberport Road, Hong Kong, Tel: (852) 2887 4788, Fax: (852) 2508 1846

Publication 20P-TD001E-EN-P - January 2012
Supersedes Publication Supersedes Publication 20P-TD001D-EN-P - January 2010

Copyright © 2012 Rockwell Automation, Inc. All rights reserved. Printed in the U.S.A.

GOULDS PUMPS

Installation, Operation, and Maintenance Manual

Model 3196 i-FRAME

ITT

ENGINEERED FOR LIFE

Table of Contents

Introduction and Safety 4
Introduction 4
Safety 4
Safety terminology and symbols 5
Environmental safety 6
User safety 6
Ex-approved products 8
Product approval standards 8
Product warranty 9

Transportation and Storage 11
Inspect the delivery 11
Inspect the package 11
Inspect the unit 11
Transportation guidelines 11
Pump handling 11
Lifting methods 11
Storage guidelines 14
Pump storage requirements 14
Frostproofing 15

Product Description 16
General description 3196 16
Part description 3196 17
General description i-*ALERT*® Condition Monitor 18
Nameplate information 19

Installation 22
Preinstallation 22
Pump location guidelines 22
Foundation requirements 22
Baseplate-mounting procedures 23
Prepare the baseplate for mounting 23
Install the baseplate using shims or wedges 24
Install the baseplate using jackscrews 24
Install the baseplate using spring mounting 27
Install the baseplate using stilt mounting 28
Baseplate-leveling worksheet 30
Install the pump, driver, and coupling 31
Pump-to-driver alignment 31
Alignment checks 31
Permitted indicator values for alignment checks 32
Alignment measurement guidelines 32
Attach the dial indicators for alignment 33
Pump-to-driver alignment instructions 33
C-face adapter 36
Grout the baseplate 36
Piping checklists 38
General piping checklist 38
Suction-piping checklist 39
Discharge piping checklist 42

Commissioning, Startup, Operation, and Shutdown 43
Preparation for startup 43
Remove the coupling guard 44
Check the rotation - Frame Mounted 46
Impeller-clearance check 46
Impeller clearances (3196 and HT 3196) 47
Impeller-clearance setting 47
Set the impeller clearance - dial indicator method (all except CV 3196) 48
Set the impeller clearance - feeler gauge method (all except CV 3196) 49
Couple the pump and driver 49
Install the coupling guard 50
Bearing lubrication 54
Shaft-sealing options 56
Mechanical seal options 56
Connection of sealing liquid for mechanical seals 57
Packed stuffing box option 57
Connection of sealing liquid for a packed stuffing box 57
Dynamic-seal option 58
Set an elastomeric face seal 58
Pump priming 58
Prime the pump with the suction supply above the pump 58
Prime the pump with the suction supply below the pump 59
Other methods of priming the pump 61
Start the pump 61
Activate the i-*ALERT*® Condition Monitor 62
i-*ALERT*® Condition Monitor routine operation 63
Pump operation precautions 64
Shut down the pump 65
Deactivate the i-*ALERT*® Condition Monitor 65
Reset the i-*ALERT*® Condition Monitor 65
Make the final alignment of the pump and driver 66

Maintenance 67
Maintenance schedule 67
Bearing maintenance 68
Lubricating-oil requirements 68
Regrease the grease-lubricated bearings 69
Lubricate the bearings after a shutdown period 71
Shaft seal maintenance 71
Mechanical-seal maintenance 71
Packed stuffing-box maintenance 72
Dynamic-seal maintenance 72
Disassembly 73
Disassembly precautions 73
Tools required 73
Drain the pump 74
Remove the coupling 74
Remove the back pull-out assembly 74
Remove the coupling hub 76
Impeller removal 77
Seal-chamber cover removal 79
Remove the seal-chamber cover (3196, CV 3196, HT 3196, LF 3196, 3796) 79
Remove the stuffing-box cover (3196, CV 3196, HT 3196, LF 3196, 3796) 80
Remove the dynamic seal 82
Remove the frame adapter (MTi, LTi, XLT-i, i17) 82
Remove the inboard labyrinth oil seal 83
Power-end disassembly 83

Disassemble the bearing frame 92
Guidelines for i-*ALERT*® Condition Monitor disposal 93
Disassemble the C-face adapter 93
Pre-assembly inspections 94
Replacement guidelines 94
Shaft and sleeve replacement guidelines 96
Bearing-frame inspection 96
C-face adapter inspection 97
Seal chamber and stuffing box cover inspection 98
Bearings inspection 99
Bearing-housing inspection 99
Bearing fits and tolerances 101
Reassembly 101
Assemble the rotating element and the bearing frame (STi and MTi) 101
Assemble the rotating element and the bearing frame (STi and MTi with duplex bearings) 104
Assemble the rotating element and the bearing frame (LTi) 107
Assemble the rotating element and the bearing frame (XLT-i and i17) 110
Assemble the rotating element and the bearing frame (XLT-i and i17 with duplex bearings) 113
Assemble the frame 117
INPRO labyrinth oil seal description 121
Assemble the INPRO labyrinth oil seal 122
Assemble the C-face adapter 122
Shaft sealing 122
Install the impeller 129
Attach the i-*ALERT*® Condition Monitor to the pump 131
Post-assembly checks 132
Install the back pull-out assembly (except HT 3196) 132
Assembly references 134
Spare parts 135
Interchangeability drawings 136
3196 interchangeability 136
Lubrication conversion 137
Frame lubrication conversion 137
Convert from greased-for-life or regreaseable to oil-lubricated bearings 137
Conversion from flood-oil to pure-oil mist 138
Convert from flood oil to regreaseable 138

Troubleshooting 139
Operation troubleshooting 139
Alignment troubleshooting 140
Assembly troubleshooting 140
i-*ALERT*® Condition Monitor troubleshooting 140

Parts Listings and Cross-Sectionals 141
Parts list 141

Certification: CE or CE ATEX 150
Certificates of conformance 150

Other Relevant Documentation or Manuals 156

Local ITT Contacts 157
Regional offices 157

Introduction and Safety

Introduction

Purpose of this manual

The purpose of this manual is to provide necessary information for:

- Installation
- Operation
- Maintenance

CAUTION:
Read this manual carefully before installing and using the product. Improper use of the product can cause personal injury and damage to property, and may void the warranty.

NOTICE:
Save this manual for future reference, and keep it readily available at the location of the unit.

Requesting other information

Special versions can be supplied with supplementary instruction leaflets. See the sales contract for any modifications or special version characteristics. For instructions, situations, or events that are not considered in this manual or in the sales documents, please contact the nearest ITT representative.

Always specify the exact product type and identification code when requesting technical information or spare parts.

Safety

WARNING:

- The operator must be aware of safety precautions to prevent physical injury.
- Any pressure-containing device can explode, rupture, or discharge its contents if it is over-pressurized. Take all necessary measures to avoid over-pressurization.
- Operating, installing, or maintaining the unit in any way that is not covered in this manual could cause death, serious personal injury, or damage to the equipment. This includes any modification to the equipment or use of parts not provided by ITT. If there is a question regarding the intended use of the equipment, please contact an ITT representative before proceeding.
- ⟨Ex⟩ This manual clearly identifies accepted methods for disassembling units. These methods must be adhered to. Trapped liquid can rapidly expand and result in a violent explosion and injury. Never apply heat to impellers, propellers, or their retaining devices to aid in their removal unless explicitly stated in this manual.
- If the pump/motor is damaged or leaking, do not operate as it may cause an electric shock, fire, explosion, liberation of toxic fumes, physical harm, or environmental damage. Correct/repair the problem prior to putting back in service.
- Do not change the service application without the approval of an authorized ITT representative.

CAUTION:
You must observe the instructions contained in this manual. Failure to do so could result in physical injury, damage, or delays.

Safety terminology and symbols

About safety messages

It is extremely important that you read, understand, and follow the safety messages and regulations carefully before handling the product. They are published to help prevent these hazards:

- Personal accidents and health problems
- Damage to the product
- Product malfunction

Hazard levels

Hazard level	Indication
DANGER:	A hazardous situation which, if not avoided, will result in death or serious injury
WARNING:	A hazardous situation which, if not avoided, could result in death or serious injury
CAUTION:	A hazardous situation which, if not avoided, could result in minor or moderate injury
NOTICE:	• A potential situation which, if not avoided, could result in undesirable conditions • A practice not related to personal injury

Hazard categories

Hazard categories can either fall under hazard levels or let specific symbols replace the ordinary hazard level symbols.
Electrical hazards are indicated by the following specific symbol:

Electrical Hazard:

These are examples of other categories that can occur. They fall under the ordinary hazard levels and may use complementing symbols:

- Crush hazard
- Cutting hazard
- Arc flash hazard

The Ex symbol

The Ex symbol indicates safety regulations for Ex-approved products when used in atmospheres that are potentially explosive or flammable.

Environmental safety

The work area

Always keep the station clean to avoid and/or discover emissions.

Waste and emissions regulations

Observe these safety regulations regarding waste and emissions:

- Appropriately dispose of all waste.
- Handle and dispose of the processed liquid in compliance with applicable environmental regulations.
- Clean up all spills in accordance with safety and environmental procedures.
- Report all environmental emissions to the appropriate authorities.

WARNING:
Do NOT send the product to the manufacturer if it has been contaminated by any nuclear radiation. Inform ITT so that accurate actions can take place.

Electrical installation

For electrical installation recycling requirements, consult your local electric utility.

Recycling guidelines

Always follow local laws and regulations regarding recycling.

User safety

General safety rules

These safety rules apply:

- Always keep the work area clean.
- Pay attention to the risks presented by gas and vapors in the work area.
- Avoid all electrical dangers. Pay attention to the risks of electric shock or arc flash hazards.
- Always bear in mind the risk of drowning, electrical accidents, and burn injuries.

Safety equipment

Use safety equipment according to the company regulations. Use this safety equipment within the work area:

- Helmet
- Safety goggles, preferably with side shields
- Protective shoes
- Protective gloves
- Gas mask
- Hearing protection
- First-aid kit
- Safety devices

NOTICE:
Never operate a unit unless safety devices are installed. Also see specific information about safety devices in other sections of this manual.

Electrical connections

Electrical connections must be made by certified electricians in compliance with all international, national, state, and local regulations. For more information about requirements, see sections dealing specifically with electrical connections.

Precautions before work

Observe these safety precautions before you work with the product or are in connection with the product:

- Provide a suitable barrier around the work area, for example, a guard rail.
- Make sure that all safety guards are in place and secure.
- Make sure that you have a clear path of retreat.
- Make sure that the product cannot roll or fall over and injure people or damage property.
- Make sure that the lifting equipment is in good condition.
- Use a lifting harness, a safety line, and a breathing device as required.
- Allow all system and pump components to cool before you handle them.
- Make sure that the product has been thoroughly cleaned.
- Disconnect and lock out power before you service the pump.
- Check the explosion risk before you weld or use electric hand tools.

Precautions during work

Observe these safety precautions when you work with the product or are in connection with the product:

CAUTION:
Read this manual carefully before installing and using the product. Improper use of the product can cause personal injury and damage to property, and may void the warranty.

- Never work alone.
- Always wear protective clothing and hand protection.
- Stay clear of suspended loads.
- Always lift the product by its lifting device.
- Beware of the risk of a sudden start if the product is used with an automatic level control.
- Beware of the starting jerk, which can be powerful.
- Rinse the components in water after you disassemble the pump.
- Do not exceed the maximum working pressure of the pump.
- Do not open any vent or drain valve or remove any plugs while the system is pressurized. Make sure that the pump is isolated from the system and that pressure is relieved before you disassemble the pump, remove plugs, or disconnect piping.
- Never operate a pump without a properly installed coupling guard.
- The coupling guard used in an ATEX classified environment must be constructed from a non-sparking material.

Hazardous liquids

The product is designed for use in liquids that can be hazardous to your health. Observe these rules when you work with the product:

- Make sure that all personnel who work with biologically hazardous liquids are vaccinated against diseases to which they may be exposed.
- Observe strict personal cleanliness.
- A small amount of liquid will be present in certain areas like the seal chamber.

Wash the skin and eyes

1. Follow these procedures for chemicals or hazardous fluids that have come into contact with your eyes or your skin:

Condition	Action
Chemicals or hazardous fluids in eyes	1. Hold your eyelids apart forcibly with your fingers. 2. Rinse the eyes with eyewash or running water for at least 15 minutes. 3. Seek medical attention.
Chemicals or hazardous fluids on skin	1. Remove contaminated clothing. 2. Wash the skin with soap and water for at least 1 minute. 3. Seek medical attention, if necessary.

Ex-approved products

Follow these special handling instructions if you have an Ex-approved unit.

Personnel requirements

These are the personnel requirements for Ex-approved products in potentially explosive atmospheres:

- All work on the product must be carried out by certified electricians and ITT-authorized mechanics. Special rules apply to installations in explosive atmospheres.
- All users must know about the risks of electric current and the chemical and physical characteristics of the gas, the vapor, or both present in hazardous areas.
- Any maintenance for Ex-approved products must conform to international and national standards (for example, IEC/EN 60079-17).

ITT disclaims all responsibility for work done by untrained and unauthorized personnel.

Product and product handling requirements

These are the product and product handling requirements for Ex-approved products in potentially explosive atmospheres:

- Only use the product in accordance with the approved motor data.
- The Ex-approved product must never run dry during normal operation. Dry running during service and inspection is only permitted outside the classified area.
- Before you start work on the product, make sure that the product and the control panel are isolated from the power supply and the control circuit, so they cannot be energized.
- Do not open the product while it is energized or in an explosive gas atmosphere.
- Make sure that thermal contacts are connected to a protection circuit according to the approval classification of the product, and that they are in use.
- Intrinsically safe circuits are normally required for the automatic level-control system by the level regulator if mounted in zone 0.
- The yield stress of fasteners must be in accordance with the approval drawing and the product specification.
- Do not modify the equipment without approval from an authorized ITT representative.
- Only use parts that are provided by an authorized ITT representative.

Product approval standards

Regular standards

All standard products are approved according to CSA standards in Canada and UL standards in USA. The drive unit degree of protection follows IP68. See the nameplate for maximum submersion, according to standard IEC 60529.

All electrical ratings and performance of the motors comply with IEC 600341.

Explosion-proofing standards

All explosion-proof products for use in explosive atmospheres are designed in compliance with one or more of the following approvals:

- EN, ATEX Directive 94/9/EC
- FM According to NEC
  - Class 1 Div 1 Groups “C”, and “D”
  - Class 2 Div 1 Groups “E”, “F”, and “G”
  - Class 3 Div 1 Hazardous Locations

ATEX/IECEx:

- Group: IIC
- Category: Ex ia
- Temperature Class: T4 (for ambients up to 100ºC)
- ATEX Marking: Ex II 1 G

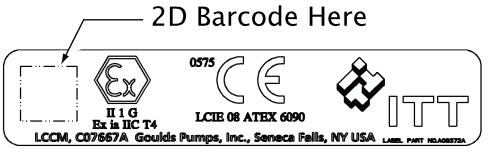

CSA certification

Intrinsically safe for:

- Class I, Div. 1, Groups A, B, C, D
- Class II, Div. 1, Groups E, F, G
- Class III
- Certified to Canadian and US requirements

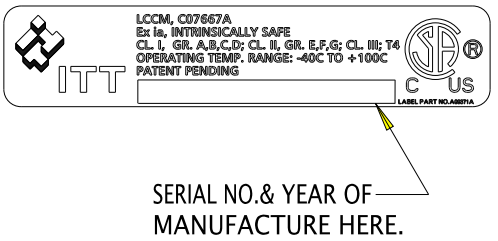

Product warranty

Coverage

ITT undertakes to remedy faults in products from ITT under these conditions:

- The faults are due to defects in design, materials, or workmanship.
- The faults are reported to an ITT representative within the warranty period.
- The product is used only under the conditions described in this manual.
- The monitoring equipment incorporated in the product is correctly connected and in use.
- All service and repair work is done by ITT-authorized personnel.
- Genuine ITT parts are used.
- Only Ex-approved spare parts and accessories authorized by ITT are used in Ex-approved products.

Limitations

The warranty does not cover faults caused by these situations:

- Deficient maintenance
- Improper installation
- Modifications or changes to the product and installation made without consulting ITT
- Incorrectly executed repair work
- Normal wear and tear

ITT assumes no liability for these situations:

- Bodily injuries
- Material damages
- Economic losses

Warranty claim

ITT products are high-quality products with expected reliable operation and long life. However, should the need arise for a warranty claim, then contact your ITT representative.

Transportation and Storage

Inspect the delivery

Inspect the package

1. Inspect the package for damaged or missing items upon delivery.
2. Note any damaged or missing items on the receipt and freight bill.
3. File a claim with the shipping company if anything is out of order.
   If the product has been picked up at a distributor, make a claim directly to the distributor.

Inspect the unit

1. Remove packing materials from the product.
   Dispose of all packing materials in accordance with local regulations.
2. Inspect the product to determine if any parts have been damaged or are missing.
3. If applicable, unfasten the product by removing any screws, bolts, or straps.
   For your personal safety, be careful when you handle nails and straps.
4. Contact your sales representative if anything is out of order.

Transportation guidelines

Pump handling

WARNING:

- Make sure that the unit cannot roll or fall over and injure people or damage property.
- These pumps might use carbon or ceramic silicon carbide components. Do not drop the pump or subject it to shock loads as this can damage the internal ceramic components.

NOTICE:

Use a forklift truck or an overhead crane with sufficient capacity to move the pallet with the pump unit on top. Failure to do so can result in equipment damage.

Lifting methods

WARNING:

- All lifting must be done in compliance with all applicable regulations/standards.
- Assembled units and their components are heavy. Failure to properly lift and support this equipment can result in serious physical injury and/or equipment damage. Lift equipment only at the specifically identified lifting points. Lifting devices such as hoist rings, shackles, slings and spreaders must be rated, selected, and used for the entire load being lifted.
- Crush hazard. The unit and the components can be heavy. Use proper lifting methods and wear steel-toed shoes at all times.
- Do not attach sling ropes to shaft ends.

Table 1: Methods

Pump type	Lifting method
A bare pump without lifting handles	Use a suitable sling attached properly to solid points like the casing, the flanges, or the frames.
A bare pump with lifting handles	Lift the pump by the handles.
A base-mounted pump	Use slings under the pump casing and the drive unit, or under the base rails.
Mounted on top of a Polyshield ANSI Combo	See separate information regarding the Polyshield ANSI Combo.

Examples

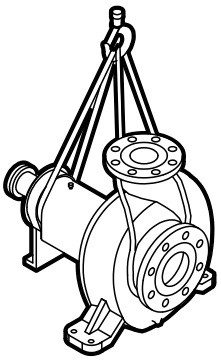

Figure 1: Example of a proper lifting method

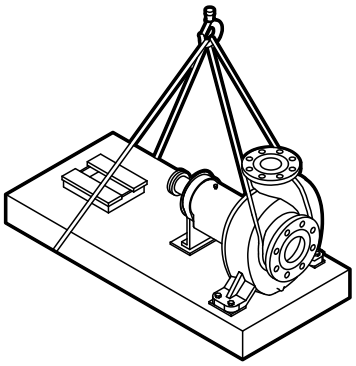

NOTICE:
Do not use this lifting method to lift a Polyshield ANSI Combo with the pump and motor mounted. Doing so may result in equipment damage.

Figure 2: Example of a proper lifting method

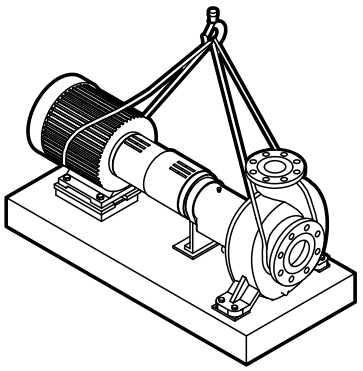

NOTICE:
Do not use this lifting method to lift a Polyshield ANSI Combo with the pump and motor mounted. Doing so may result in equipment damage.

Figure 3: Example of a proper lifting method

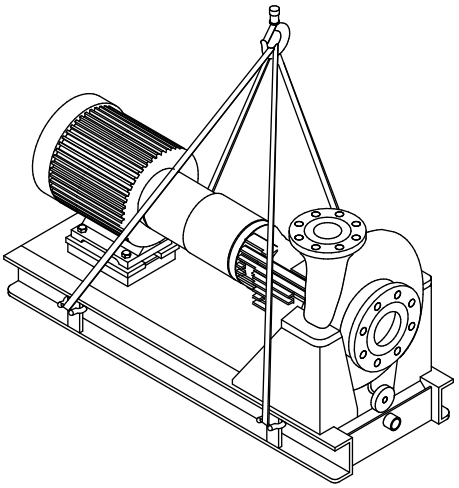

Figure 4: Example of a proper lifting method

NOTICE:
When lifting a unit that does not have a way to secure the strap on the suction flange, you must secure the strap around the frame adapter. Failure to do so may result in equipment damage.

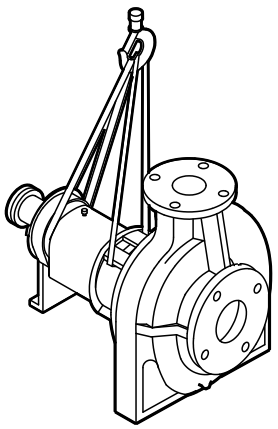

Figure 5: Example of a proper lifting method with a strap secured around the frame adapter

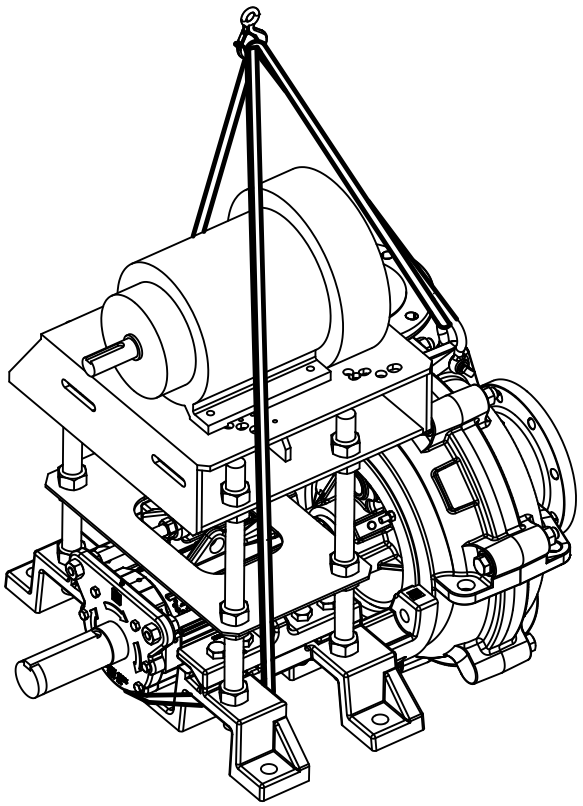

Figure 6: Example of offset overhead motor mount pump proper lifting method

Storage guidelines

Pump storage requirements

Storage requirements depend on the amount of time that you store the unit. The normal packaging is designed only to protect the unit during shipping.

Length of time in storage	Storage requirements
Upon receipt/short-term (less than six months)	• Store in a covered and dry location. • Store the unit free from dirt and vibrations.
Long-term (more than six months)	• Store in a covered and dry location. • Store the unit free from heat, dirt, and vibrations. • Rotate the shaft by hand several times at least every three months.

NOTICE:
Risk of damage to the mechanical seal or shaft sleeve on units supplied with cartridge mechanical seals. Make sure to install and tighten the centering clips and loosen the set screws in the seal locking ring.

Treat bearing and machined surfaces so that they are well preserved. Refer to drive unit and coupling manufacturers for their long-term storage procedures.

You can purchase long-term storage treatment with the initial unit order or you can purchase it and apply it after the units are already in the field. Contact your local ITT sales representative.

Frostproofing

Table 2: Situations when the pump is or is not frostproof

Situation	Condition
Operating	The pump is frostproof.
Immersed in a liquid	The pump is frostproof.
Lifted out of a liquid into a temperature below freezing	The impeller might freeze.

Product Description

General description 3196

The 3196 is a horizontal overhung, open impeller, centrifugal pump. This pump is ANSI B73.1 compliant.
The model is based on 5 power ends and 29 hydraulic sizes.

Figure 7: 3196 pump

This table shows the number of hydraulic sizes available for each drive-unit size group.

Drive-unit size group	Number of hydraulic sizes
STi	5
MTi	15
LTi	15
XLT-i	5
i-17	4

Part description 3196

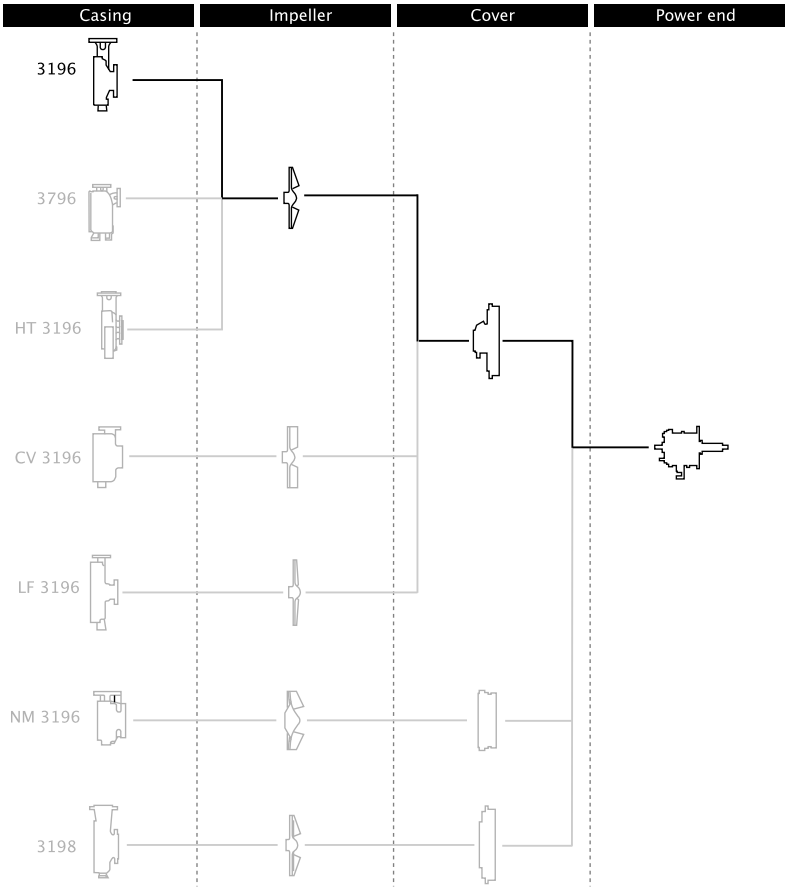

Figure 8: 3196 part description

Table 3: Casing

This table describes the pump casing parts.

Part	Description
Discharge	Top-centerline
Casing ventilation	Self venting
Gasket	Fully confined
Mounting method	Integral foot support for maximum resistance to misalignment due to piping loads.
Standard flange	ANSI flat-faced serrated flange
Optional flanges	One of the following flanges can be used: • ANSI class 150 raised-face serrated flange • ANSI class 300 flat-face serrated flange • ANSI class 300 raised-face serrated flange

Impeller

The impeller is

- fully open
- screwed onto the shaft

The threads are sealed from the pumped liquid by a Teflon O-ring for the 3196.

Cover

Standard seal

- The 3196 is available with a stuffing-box cover designed for a packing and a BigBore or a TaperBore PLUS seal chamber.

Optional seal

- a dynamic seal is available which uses a repeller to pump liquid out of the stuffing box while the pump operates. A static seal prevents leakage when the pump is shut down.

Table 4: Power end

This table describes the main parts of the power end.

Part	Description
Frame adapter	The ductile iron frame adapter has • a machined rabbet fitted to the seal chamber/ stuffing box cover • a precision dowel pin fitted to the bearing frame.

Power end	• Flood-oil lubrication is standard.
	• No machining is required to convert from oil to grease or oil-mist lubrication. Regreasable bearings and oil-mist lubrication are optional.
	• The oil level is checked through a sight glass.
	• The power end is sealed with labyrinth seals.
	• The power end is made in the following sizes:
	  • STi
	  • MTi
	  • LTi
	  • XLT-i
	  • i-17

Shaft	The shaft is available with or without a sleeve.
Bearings	The inboard bearing • carries only radial loads. • is free to float axially in the frame. • is a single-row deep-groove ball bearing The outboard bearing • is shouldered and locked to the shaft and housing to enable it to carry radial and thrust loads. • is a double-row angular-contact bearing, except for the LTi which uses a pair of single-row angular-contact ball bearings mounted back-to-back.

General description i-*ALERT*® Condition Monitor

Description

The i-*ALERT*® Condition Monitor is a compact, battery-operated monitoring device that continuously measures the vibration and temperature of the pump power end. The condition monitor uses blinking red LEDs to alert the pump operator when the pump exceeds pre-set vibration and temperature limits. This allows the pump operator to make changes to the process or the pump before a catastrophic failure occurs. The condition monitor is also equipped with a single green LED to indicate when it is operational and has sufficient battery life. (i-*ALERT*®*2* Bluetooth Equipment Health Monitor option available. The i-*ALERT*®*2* monitor allows customers to identify potential problems before they become costly failures. It tracks vibration, temperature and run-time hours and wirelessly syncs the data with a smart phone or tablet the i-*ALERT*®*2* mobile app. More information available on *http://www.ittproservices.com/aftermarket-products/monitoring/i-alert2/* (page)i-ALERT2.com).

Software License Agreement

BY USING THE i-*ALERT*® CONDITION MONITOR, YOU AGREE TO BE BOUND BY THE TERMS AND CONDITIONS OF THE FOLLOWING LICENSE AGREEMENT. PLEASE READ THIS AGREEMENT CAREFULLY.

ITT Corporation and its subsidiaries, affiliates, either directly, or through its authorized sublicensees ("ITT") grants you a limited, non-exclusive license to use the software embedded in this device ("Software") in binary executable form in the normal operation of the i-*ALERT*® condition monitor for monitoring the condition of an Goulds Pump Inc. model. Title, ownership rights, and intellectual property rights in and to the Software remain in ITT or its third-party providers. You agree that this license agreement does not need to be signed for it to take effect.

You acknowledge that this Software is the property of ITT and is protected under United States of America copyright laws and international copyright treaties. You further acknowledge that the structure, organization, and code of the Software are valuable trade secrets of ITT and/or its third-party providers and that the Software in source code form remains a valuable trade secret of ITT. You agree not to decompile, disassemble, modify, reverse assemble, reverse engineer, or reduce to human readable form the Software or any part thereof or create any derivative works based on the Software. You agree not to export or re-export the Software to any country in violation of the export control laws of the United States of America.

Alarm mode

The condition monitor enters alarm mode when either vibration or temperature limits are exceeded over two consecutive readings within a ten minute period. Alarm mode is indicated with two red flashing LEDs within two second intervals.

Temperature and vibration limits

Variable	Limit
Temperature	91°C | 195°F
Vibration	100% increase over the baseline level

Battery life

The i-*ALERT*® Condition Monitor battery is not replaceable. You must replace the entire unit once the battery runs out of power.

The battery life is not covered as part of the standard pump warranty.

This table shows the average condition monitor battery life under normal and alarm-mode operating conditions.

Condition monitor operational state	Battery life
Normal operating and environmental conditions	Three to five years
Alarm mode	One year

Nameplate information

Important information for ordering

Every pump has nameplates that provide information about the pump. The nameplates are located on the casing and the bearing frame.

When you order spare parts, identify this pump information:

- Model
- Size
- Serial number
- Item numbers of the required parts

Refer to the nameplate on the pump casing for most of the information. See Parts List for item numbers.

Nameplate types

Nameplate	Description
Pump casing Pump	Provides information about the hydraulic characteristics of the pump. The formula for the pump size is: Discharge x Suction - Nominal Maximum Impeller Diameter in inches. (Example: 2x3-8)
Bearing frame	Provides information about the lubrication system used.
ATEX	If applicable, your pump unit might have an ATEX nameplate affixed to the pump, the baseplate, or the discharge head. The nameplate provides information about the ATEX specifications of this pump.
IECEx	If applicable, your pump unit might have the following IECEx nameplate affixed to the pump and/or baseplate. The nameplate provides information about the IECEx specifications of this pump.

Nameplate on the pump casing using English units

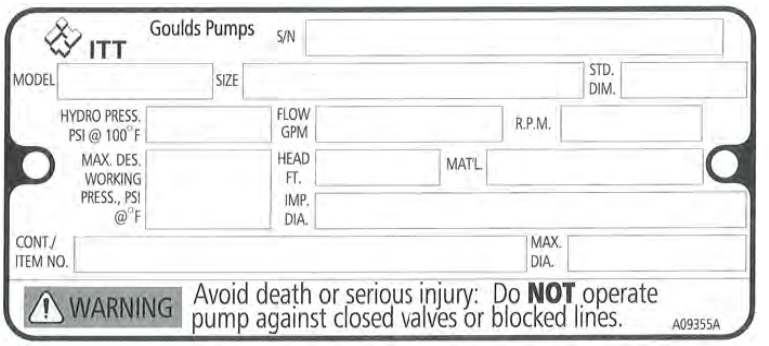

Figure 9: Nameplate on the pump casing using English units

Table 5: Explanation of nameplate on the pump casing

Nameplate field	Explanation
IMPLR. DIA.	Impeller diameter, in inches
MAX. DIA.	Maximum impeller diameter, in inches
GPM	Rated pump flow, in gallons per minute
FT HD	Rated pump head, in feet
RPM	Rated pump speed, revolutions per minute
MOD.	Pump model
SIZE	Size of the pump
STD. NO.	ANSI standard designation
MAT L. CONST.	Material of which the pump is constructed
SER. NO.	Serial number of the pump
MAX DSGN PSI @ 100ºF	Maximum pressure at 100ºF according to the pump design

Nameplate on the pump casing using metric units

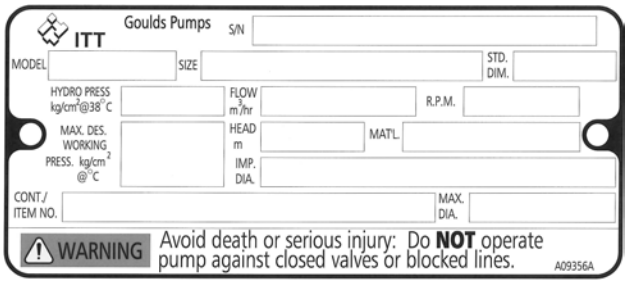

Figure 10: Metric units - nameplate on pump casing

Table 6: Explanation of the nameplate on the pump casing

Nameplate field	Explanation
IMPLR. DIA.	Impeller diameter
MAX. DIA.	Maximum impeller diameter
M^3/HR	Rated pump flow, in cubic meters per hour
M HD	Rated pump head, in meters
RPM	Rated pump speed, in revolutions per minute
MOD.	Pump model
SIZE	Size of the pump
STD. NO.	ANSI standard designation
MAT L. CONST	Material of which the pump is constructed
SER. NO.	Serial number of the pump
MAX. DSGN KG/CM^3 @ 20°C	Kilograms per cubic centimeter at 20°C

Nameplate on the bearing frame

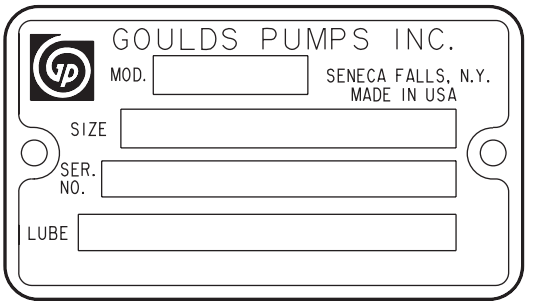

Figure 11: Nameplate on the bearing frame

Table 7: Explanation of the nameplate on the bearing frame

Nameplate field	Explanation
BRG. O. B.	Outboard bearing designation
BRG. I. B.	Inboard bearing designation
S/N	Serial number of the pump
LUBE	Lubricant, oil or grease

ATEX nameplate

Figure 12: ATEX nameplate

Nameplate field	Explanation
II	Group 2
2	Category 2
G/D	Pump can be used when gas and dust are present
T4	Temperature class

NOTICE:
Make sure that the code classifications on the pump are compatible with the specific environment in which you plan to install the equipment. If they are not compatible, do not operate the equipment and contact your ITT representative before you proceed.

Installation

Preinstallation

Precautions

WARNING:

- ⟨Ex⟩ When installing in a potentially explosive environment, make sure that the motor is properly certified.
- ⟨Ex⟩ You must earth (ground) all electrical equipment. This applies to the pump equipment, the driver, and any monitoring equipment. Test the earth (ground) lead to verify that it is connected correctly.
- Electrical connections must be made by certified electricians in compliance with all international, national, state, and local rules.

NOTICE:
Supervision by an authorized ITT representative is recommended to ensure proper installation. Failure to do so may result in equipment damage or decreased performance.

Pump location guidelines

WARNING:
Assembled units and their components are heavy. Failure to properly lift and support this equipment can result in serious physical injury and/or equipment damage. Lift equipment only at the specifically identified lifting points. Lifting devices such as hoist rings, shackles, slings and spreaders must be rated, selected, and used for the entire load being lifted.

Guideline	Explanation/comment
Keep the pump as close to the liquid source as practically possible.	This minimizes the friction loss and keeps the suction piping as short as possible.
Make sure that the space around the pump is sufficient.	This facilitates ventilation, inspection, maintenance, and service.
If you require lifting equipment such as a hoist or tackle, make sure that there is enough space above the pump.	This makes it easier to properly use the lifting equipment and safely remove and relocate the components to a safe location.
Protect the unit from weather and water damage due to rain, flooding, and freezing temperatures.	This is applicable if nothing else is specified.
Do not install and operate the equipment in closed systems unless the system is constructed with properly-sized safety devices and control devices.	Acceptable devices: • Pressure relief valves • Compression tanks • Pressure controls • Temperature controls • Flow controls If the system does not include these devices, consult the engineer or architect in charge before you operate the pump.
Take into consideration the occurrence of unwanted noise and vibration.	The best pump location for noise and vibration absorption is on a concrete floor with subsoil underneath.
If the pump location is overhead, undertake special precautions to reduce possible noise transmission.	Consider a consultation with a noise specialist.

Foundation requirements

Requirements

- The foundation must be able to absorb any type of vibration and form a permanent, rigid support for the unit.

- The location and size of the foundation bolt holes must match those shown on the assembly drawing provided with the pump data package.
- The foundation must weigh between two and three times the weight of the pump.
- Provide a flat, substantial concrete foundation in order to prevent strain and distortion when you tighten the foundation bolts.

Sleeve-type bolts

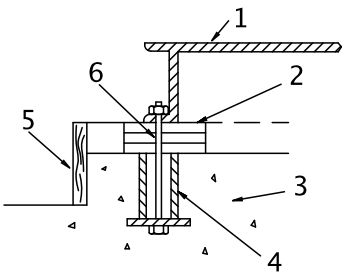

Figure 13: Sleeve type bolts

1. Baseplate
2. Shims or wedges
3. Foundation
4. Sleeve
5. Dam
6. Bolt

J-type bolts

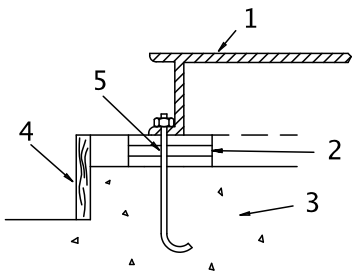

Figure 14: J-type bolts

1. Baseplate
2. Shims or wedges
3. Foundation
4. Dam
5. Bolt

Baseplate-mounting procedures

Prepare the baseplate for mounting

1. Remove all the attached equipment from the baseplate.
2. Clean the underside of the baseplate completely.
3. If applicable, coat the underside of the baseplate with an epoxy primer.
   Use an epoxy primer only if you used an epoxy-based grout.
4. Remove the rust-proofing coat from the machined mounting pads using an appropriate solvent.
5. Remove water and debris from the foundation-bolt holes.

Install the baseplate using shims or wedges

Required tools:

- Two sets of shims or wedges for each foundation bolt
- Two machinist's levels
- Baseplate-leveling worksheet

This procedure is applicable to cast iron and fabricated steel baseplates.

1. If you use sleeve-type bolts, fill the bolt sleeves with packing material or rags to prevent grout from entering the bolt holes.
2. Put the sets of wedges or shims on each side of each foundation bolt.
   The sets of wedges should have a height of between 19 mm | 0.75 in. and 38 mm | 1.50 in.

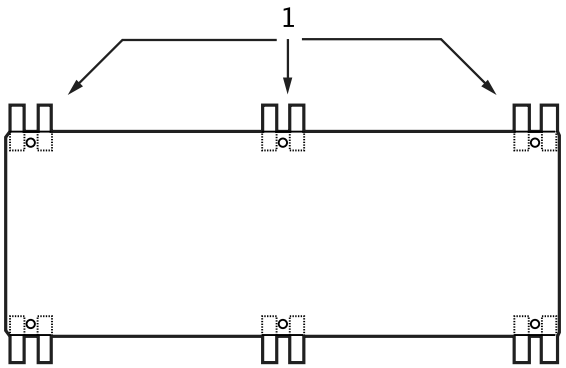

1. Shims or wedges

Figure 15: Top view

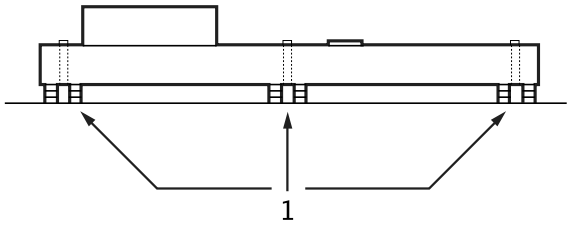

1. Shims or wedges

Figure 16: Side view

3. Lower the baseplate carefully onto the foundation bolts.
4. Put the machinist's levels across the mounting pads of the driver and the mounting pads of the pump.

NOTICE:
Remove all dirt from the mounting pads in order to make sure that you achieve the correct leveling. Failure to do so can result in equipment damage or decreased performance.

5. Level the baseplate both lengthwise and across by adding or removing shims or moving the wedges.
   These are the leveling tolerances:
   - A maximum difference of 3.2 mm | 0.125 in. lengthwise
   - A maximum difference of 1.5 mm | 0.059 in. across

   You can use the baseplate-leveling worksheet when you take the readings.
6. Hand-tighten the nuts for the foundation.

Install the baseplate using jackscrews

Tools required:

- Anti-seize compound

- Jackscrews
- Bar stock
- Two machinist's levels
- Baseplate-leveling worksheet

This procedure is applicable to the feature-fabricated steel baseplate and the advantage base baseplate.

1. Apply an anti-seize compound on the jackscrews.
   The compound makes it easier to remove the screws after you grout.
2. Lower the baseplate carefully onto the foundation bolts and perform these steps:
   a) Cut the plates from the bar stock and chamfer the edges of the plates in order to reduce stress concentrations.
   b) Put the plates between the jackscrews and the foundation surface.
   c) Use the four jackscrews in the corners in order to raise the baseplate above the foundation.
      Make sure that the distance between the baseplate and the foundation surface is between 19 mm | 0.75 in. and 38 mm | 1.50 in.
   d) Make sure that the center jackscrews do not touch the foundation surface yet.

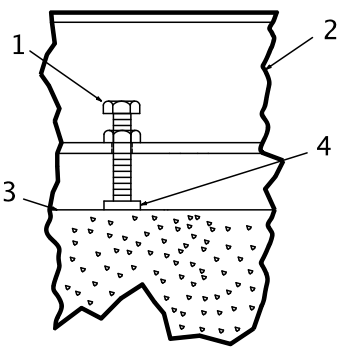

1. Jackscrew
2. Baseplate
3. Foundation
4. Plate

Figure 17: Jackscrews

3. Level the driver mounting pads:

NOTICE:
Remove all dirt from the mounting pads in order to make sure that you achieve the correct leveling. Failure to do so can result in equipment damage or decreased performance.

   a) Put one machinist's level lengthwise on one of the two pads.
   b) Put the other machinist's level across the ends of the two pads.

c) Level the pads by adjusting the four jackscrews in the corners.
Make sure that the machinist's level readings are as close to zero as possible, both lengthwise and across.
Use the baseplate-leveling worksheet when you take the readings.

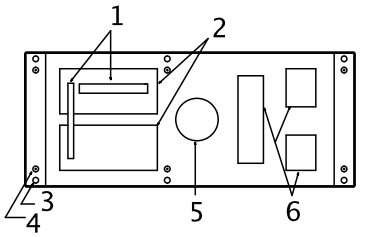

1. Machinist's levels
2. Driver's mounting pads
3. Foundation bolts
4. Jackscrews
5. Grout hole
6. Pump's mounting pads

Figure 18: Level driver mounting pads

4. Turn the center jackscrews down so that they rest on their plates on the foundation surface.
5. Level the pump mounting pads:

NOTICE:
Remove all dirt from the mounting pads in order to make sure that you achieve the correct leveling. Failure to do so can result in equipment damage or decreased performance.

---

a) Put one machinist's level lengthwise on one of the two pads.
b) Put the other level across the center of the two pads.
c) Level the pads by adjusting the four jackscrews in the corners.
Make sure that the machinist's level readings are as close to zero as possible, both lengthwise and across.

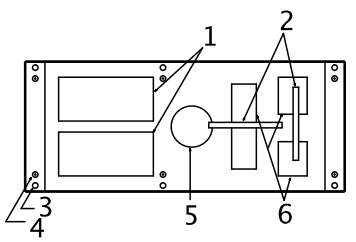

1. Driver's mounting pads
2. Machinist's levels
3. Foundation bolts
4. Jackscrews
5. Grout hole
6. Pump's mounting pads

Figure 19: Level pump mounting pads

6. Hand-tighten the nuts for the foundation bolts.
7. Check that the driver's mounting pads are level and adjust the jackscrews and the foundation bolts if necessary.
The correct level measurement is a maximum of 0.0167 mm/m | 0.002 in./ft .

Install the baseplate using spring mounting

NOTICE:
The spring-mounted baseplate is designed only to support piping loads from thermal expansion. You must support the suction and discharge piping individually. Failure to do so may result in equipment damage.

The foundation pads are not provided with the baseplate. Make sure that the foundation pads are 316 stainless-steel plates, which have a 16-20 micro-inch surface finish.

Before you start this procedure, make sure that the foundation pads are correctly installed on the foundation/floor (see the manufacturer's instructions).

1. Put the baseplate on a support above the foundation/floor.
   Make sure that there is enough space between the baseplate and the foundation/floor in order to install the spring assemblies.
2. Install the lower part of the spring assembly:
   a) Screw the lower jam nut onto the spring stud.
   b) Screw the lower adjusting nut onto the spring-stud, on top of the jam nut.
   c) Set the lower adjusting nut to the correct height.
      The correct height depends on the required distance between the foundation/floor and the baseplate.
   d) Put a washer, a follower, a spring, and one more follower onto the lower adjusting nut.
3. Install the spring assembly on the baseplate:
   a) Insert the spring assembly into the baseplate's anchorage hole from below.
   b) Put a follower, a spring, another follower, and a washer onto the spring stud.
   c) Fasten the spring assembly with the upper adjusting nut by hand.
4. Thread the upper jam nut onto the spring stud by hand.
5. Repeat steps 2 through 4 for all the spring assemblies.
6. Lower the baseplate so that the spring assemblies fit into the foundation pads.
7. Level the baseplate and make the final height adjustments:
   a) Loosen the upper jam nuts and adjusting nuts.
   b) Adjust the height and level the baseplate by moving the lower adjusting nuts.
   c) When the baseplate is level, tighten the top adjusting nuts so that the top springs are not loose in their followers.
8. Fasten the lower and upper jam nuts on each spring assembly.

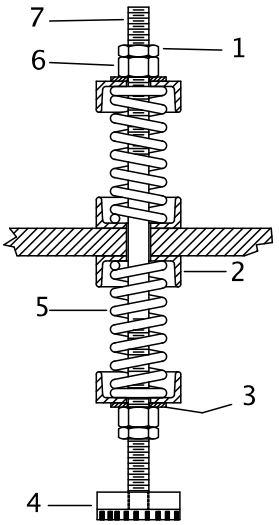

1. Upper jam nut
2. Follower
3. Washer
4. Foundation pads
5. Spring
6. Upper adjusting nut
7. Spring stud

Figure 20: Example of an installed spring assembly

Install the baseplate using stilt mounting

NOTICE:
The stilt-mounted baseplate is not designed to support static piping loads. Make sure to individually support the suction and discharge piping. Failure to do so may result in equipment damage.

1. Put the baseplate on a support above the foundation/floor.
   Make sure that there is enough space between the baseplate and the foundation/floor to install the stilts.
2. Install the lower part of the stilt assembly:
   a) Screw the lower jam nut and adjusting nut onto the stilt.
   b) Set the lower adjusting nut to the correct height.
      The correct height depends on the required distance between the foundation/floor and the baseplate.
   c) Put a washer onto the lower adjusting- nut.
3. Install the stilt assembly on the baseplate:
   a) Insert the stilt assembly into the baseplate's anchorage hole from below.
   b) Put a washer onto the stilt.
   c) Fasten the stilt assembly with the upper adjusting nut by hand.
4. Screw the upper jam nut onto the stilt by hand.
5. Repeat steps 2 through 4 for all the stilt assemblies.
6. Lower the baseplate so that the stilts fit into the foundation cups.
7. Level the baseplate and make the final height adjustments:
   a) Loosen the upper jam nuts and adjusting nuts.
   b) Adjust the height and level the baseplate by moving the lower adjusting nuts.
   c) When the baseplate is level, tighten the top adjusting nuts.
8. Fasten the lower and upper jam nuts on each stilt.

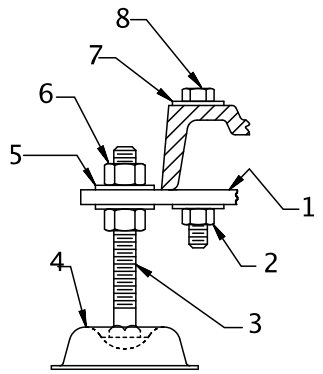

1. Mounting plate
2. Mounting nut
3. Stilt bolt
4. Foundation cups
5. Washer
6. Upper adjustment nut
7. Mounting washer
8. Mounting bolt

Figure 21: Example of an installed stilt assembly

Baseplate-leveling worksheet

Level measurements

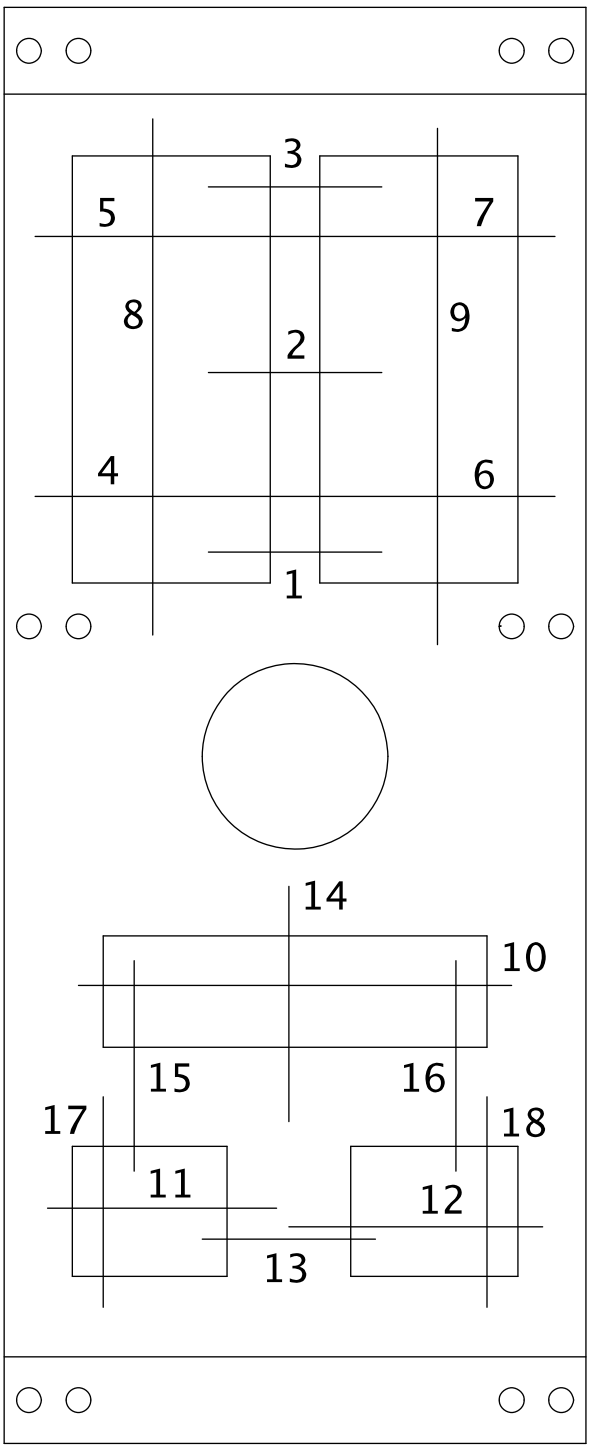

1)_____

2)_____

3)_____

4)_____

5)_____

6)_____

7)_____

8)_____

9)_____

10)_____

11)_____

12)_____

13)_____

14)_____

15)_____

16)_____

17)_____

18)_____

Install the pump, driver, and coupling

1. Mount and fasten the pump on the baseplate. Use applicable bolts.
2. Mount the driver on the . Use applicable bolts and hand tighten.
3. Install the coupling.
   See the installation instructions from the coupling manufacturer.

Pump-to-driver alignment

Precautions

WARNING:

- Follow shaft alignment procedures in order to prevent catastrophic failure of drive components or unintended contact of rotating parts. Follow the coupling installation and operation procedures from the coupling manufacturer.
- Ⓔx Always disconnect and lock out power to the driver before you perform any installation or maintenance tasks. Failure to disconnect and lock out driver power will result in serious physical injury.
  - Electrical connections must be made by certified electricians in compliance with all international, national, state, and local rules.
  - Refer to driver/coupling/gear manufacturers installation and operation manuals (IOM) for specific instructions and recommendations.

NOTICE:

Proper alignment is the responsibility of the installer and the user of the unit. Check the alignment of frame-mounted units before you operate the unit. Failure to do so can result in equipment damage or decreased performance.

Alignment checks

When to perform alignment checks

You must perform alignment checks under these circumstances:

- The process temperature changes.
- The piping changes.
- The pump has been serviced.

Types of alignment checks

Type of check	When it is used
Initial alignment (cold alignment) check	Prior to operation when the pump and the driver are at ambient temperature.
Final alignment (hot alignment) check	After operation when the pump and the driver are at operating temperature.

Initial alignment (cold alignment) checks

When	Why
Before you grout the baseplate	This ensures that alignment can be accomplished.
After you grout the baseplate	This ensures that no changes have occurred during the grouting process.
After you connect the piping	This ensures that pipe strains have not altered the alignment. If changes have occurred, you must alter the piping to remove pipe strains on the pump flanges.

Final alignment (hot alignment) checks

When	Why
After the first run	This ensures correct alignment when both the pump and the driver are at operating temperature.
Periodically	This follows the plant operating procedures.

Permitted indicator values for alignment checks

NOTICE:
The specified permitted reading values are valid only at operating temperature. For cold settings, other values are permitted. You must use the correct tolerances. Failure to do so can result in misalignment and reduced pump reliability.

When dial indicators are used to check the final alignment, the pump and drive unit are correctly aligned when these conditions are true:

- The Total Indicated Reading (T.I.R.) is at 0.05 mm | 0.002 in. or less at operating temperature.
- The tolerance of the indicator is 0.0127 mm per mm | 0.0005 in. per in. of indicator separation for the reverse dial indicator or laser method when the pump and driver are at operating temperature.

Cold settings for parallel vertical alignment

Introduction

This section shows the recommended preliminary (cold) settings for electric motor-driven pumps based on different temperatures of pumped fluid. Consult driver manufacturers for recommended cold settings for other types of drivers such as steam turbines and engines.

Recommended settings for models 3196, CV 3196, and LF 3196

Pumpage temperature	Recommended setting
10°C | 50°F	0.05 mm | 0.002 in., low
65°C | 150°F	0.03 mm | 0.001 in., high
120°C | 250°F	0.12 mm | 0.005 in., high
175°C | 350°F	0.23 mm | 0.009 in., high
218°C | 450°F	0.33 mm | 0.013 in., high
228°C | 550°F	0.43 mm | 0.017 in., high
343°C | 650°F	0.53 mm | 0.021 in., high
371°C | 700°F	0.58 mm | 0.023 in., high

Alignment measurement guidelines

Guideline	Explanation
Rotate the pump coupling half and the driver coupling half together so that the indicator rods have contact with the same points on the driver coupling half.	This prevents incorrect measurement.
Move or shim only the driver in order to make adjustments.	This prevents strain on the piping installations.
Make sure that the hold-down bolts for the driver feet are tight when you take indicator measurements.	This keeps the driver stationary since movement causes incorrect measurement.
Make sure that the hold-down bolts for the driver feet are loose before you make alignment corrections.	This makes it possible to move the driver when you make alignment corrections.
Check the alignment again after any mechanical adjustments.	This corrects any misalignments that an adjustment may have caused.

Attach the dial indicators for alignment

You must have two dial indicators in order to complete this procedure.

1. Attach two dial indicators on the pump coupling half (X):
   a) Attach one indicator (P) so that the indicator rod comes into contact with the perimeter of the driver coupling half (Y).
   This indicator is used to measure parallel misalignment.
   b) Attach the other indicator (A) so that the indicator rod comes into contact with the inner end of the driver coupling half.
   This indicator is used to measure angular misalignment.

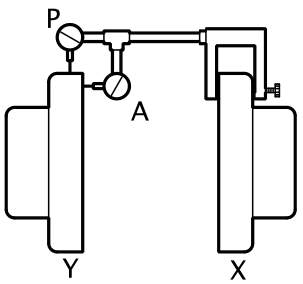

Figure 22: Dial indicator attachment

2. Rotate the pump coupling half (X) in order to check that the indicators are in contact with the driver coupling half (Y) but do not bottom out.
3. Adjust the indicators if necessary.

Pump-to-driver alignment instructions

Perform angular alignment for a vertical correction

1. Set the angular alignment indicator to zero at the top-center position (12 o'clock) of the driver coupling half (Y).
2. Rotate the indicator to the bottom-center position (6 o'clock).
3. Record the indicator reading.

When the reading value is...	Then...
Negative	The coupling halves are farther apart at the bottom than at the top. Perform one of these steps: • Add shims in order to raise the feet of the driver at the shaft end. • Remove shims in order to lower the feet of the driver at the other end.
Positive	The coupling halves are closer at the bottom than at the top. Perform one of these steps: • Remove shims in order to lower the feet of the driver at the shaft end. • Add shims in order to raise the feet of the driver at the other end.

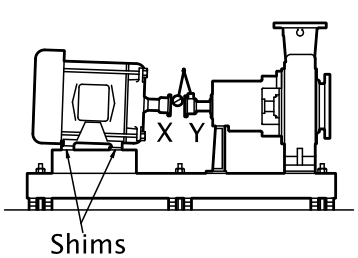

Figure 23: Side view of an incorrect vertical alignment

4. Repeat the previous steps until the permitted reading value is achieved.

Perform angular alignment for a horizontal correction

1. Set the angular alignment indicator (A) to zero on left side of the driver coupling half (Y), 90° from the top-center position (9 o'clock).
2. Rotate the indicator through the top-center position to the right side, 180° from the start position (3 o'clock).
3. Record the indicator reading.

When the reading value is...	Then...
Negative	The coupling halves are farther apart on the right side than the left. Perform one of these steps: • Slide the shaft end of the driver to the left. • Slide the opposite end to the right.
Positive	The coupling halves are closer together on the right side than the left. Perform one of these steps: • Slide the shaft end of the driver to the right. • Slide the opposite end to the left.

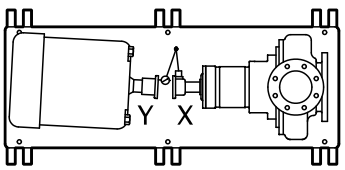

Figure 24: Top view of an incorrect horizontal alignment

4. Repeat the previous steps until the permitted reading value is achieved.

Perform parallel alignment for a vertical correction

Refer to the alignment table in "Permitted indicator values for alignment checks" (see Table of Contents for location of table) for the proper cold alignment value based on the motor temperature rise and the pump operating temperature.

Before you start this procedure, make sure that the dial indicators are correctly set up.

A unit is in parallel alignment when the parallel indicator (P) does not vary by more than 0.002 in. (0.05 mm) as measured at four points 90° apart at the operating temperature.

1. Set the parallel alignment indicator (P) to zero at the top-center position (12 o'clock) of the driver coupling half (Y).
2. Rotate the indicator to the bottom-center position (6 o'clock).
3. Record the indicator reading.

When the reading value is...	Then...
Negative	The pump coupling half (X) is lower than the driver coupling half (Y). Remove shims of a thickness equal to half of the indicator reading value under each driver foot.
Positive	The pump coupling half (X) is higher than the driver coupling half (Y). Add shims of a thickness equal to half of the indicator reading value to each driver foot.

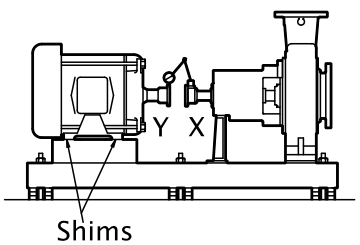

Figure 25: Side view of an incorrect vertical alignment

4. Repeat the previous steps until the permitted reading value is achieved.

NOTICE:
The specified permitted reading values are valid only at operating temperature. For cold settings, other values are permitted. You must use the correct tolerances. Failure to do so can result in misalignment and reduced pump reliability.

Perform parallel alignment for a horizontal correction

A unit is in parallel alignment when the parallel indicator (P) does not vary by more than 0.002 in. (0.05 mm) as measured at four points 90° apart at the operating temperature.

1. Set the parallel alignment indicator (P) to zero on the left side of the driver coupling half (Y), 90° from the top-center position (9 o'clock).
2. Rotate the indicator through the top-center position to the right side, 180° from the start position (3 o'clock).
3. Record the indicator reading.

When the reading value is...	Then...
Negative	The driver coupling half (Y) is to the left of the pump coupling half (X).
Positive	The driver coupling half (Y) is to the right of the pump coupling half (X).

4. Slide the driver carefully in the appropriate direction.

NOTICE: Make sure to slide the driver evenly. Failure to do so can negatively affect horizontal angular correction.

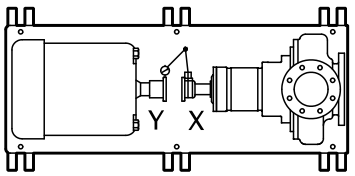

Figure 26: Top view of an incorrect horizontal alignment

5. Repeat the previous steps until the permitted reading value is achieved.

NOTICE:
The specified permitted reading values are valid only at operating temperature. For cold settings, other values are permitted. You must use the correct tolerances. Failure to do so can result in misalignment and reduced pump reliability.

Perform complete alignment for a vertical correction

A unit is in complete alignment when both the angular indicator (A) and the parallel indicator (P) do not vary by more than 0.05 mm | 0.002 in. as measured at four points 90° apart.

1. Set the angular and parallel dial indicators to zero at the top-center position (12 o'clock) of the driver coupling half (Y).
2. Rotate the indicators to the bottom-center position (6 o'clock).
3. Record the indicator readings.
4. Make corrections according to the separate instructions for angular and parallel alignment until you obtain the permitted reading values.

Perform complete alignment for a horizontal correction

A unit is in complete alignment when both the angular indicator (A) and the parallel indicator (P) do not vary by more than 0.05 mm | 0.002 in. as measured at four points 90° apart.

1. Set the angular and parallel dial indicators to zero at the left side of the driver coupling half (Y), 90° from the top-center position (9 o'clock).

2. Rotate the indicators through the top-center position to the right side, 180° from the start position (3 o'clock).
3. Record the indicator readings.
4. Make corrections according to the separate instructions for angular and parallel alignment until you obtain the permitted reading values.

C-face adapter

Intended use

The C-face adapter is a device that attaches the pump to the drive unit to minimize the axial and radial play between the two coupling halves.

Illustration

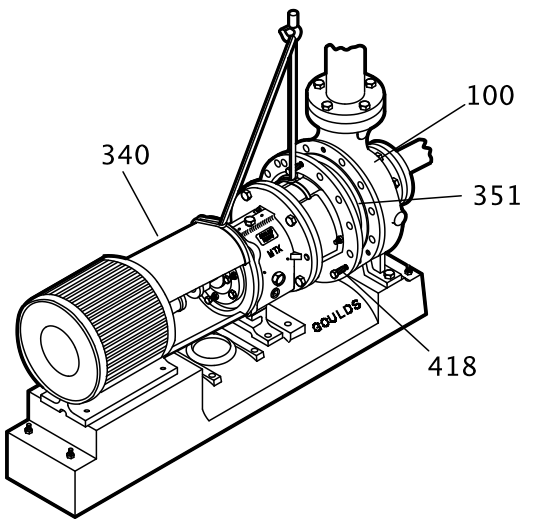

Figure 27: Example of the C-face adapter (340)

Alignment requirements

When you use a C-face adapter, you do not have to align the shaft. The rabbeted fittings of the drive unit to the adapter and the adapter to the bearing frame automatically align the shaft to within the specified limits.

Specified limits

A C-face adapter can attain a nominal alignment of 0.18mm | 0.007 in. Total Indicated Runout (T.I.R.). However, because of the stack-up of the machining tolerances of the various parts, the alignment can be as high as 0.38mm | 0.015 inches TIR.

If high reliability (with shaft alignments of less than 0.05mm | 0.002 in.) is required for the pump, use a foot-mounted drive unit on a precision-machined baseplate and perform a conventional alignment.

Grout the baseplate

Required equipment:

- Cleaners: Do not use an oil-based cleaner because the grout will not bond to it. See the instructions provided by the grout manufacturer.
- Grout: Non-shrink grout is recommended.

1. Clean all the areas of the baseplate that will come into contact with the grout.
2. Build a dam around the foundation.
3. Thoroughly wet the foundation that will come into contact with the grout.
4. Pour grout through the grout hole into the baseplate up to the level of the dam.

When you pour the grout, remove air bubbles from it by using one of these methods:

- Puddle with a vibrator.
- Pump the grout into place.

5. Allow the grout to set.

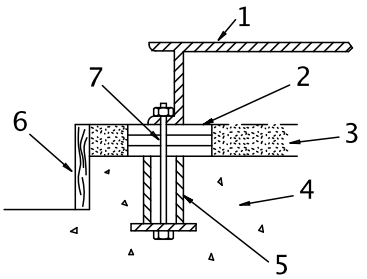

1. Baseplate
2. Shims or wedges
3. Grout
4. Foundation
5. Sleeve
6. Dam
7. Bolt

Figure 28: Pour grout into baseplate

6. Fill the remainder of the baseplate with grout, and allow the grout to set for at least 48 hours.

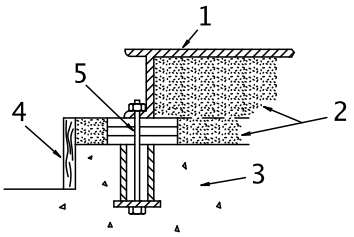

1. Baseplate
2. Grout
3. Foundation
4. Dam
5. Bolt

Figure 29: Fill remainder of baseplate with grout

7. Tighten the foundation bolts.

Piping checklists

General piping checklist

Precautions

CAUTION:

- Never draw piping into place by using force at the flanged connections of the pump. This can impose dangerous strains on the unit and cause misalignment between the pump and driver. Pipe strain adversely affects the operation of the pump, which results in physical injury and damage to the equipment.
- Vary the capacity with the regulating valve in the discharge line. Never throttle the flow from the suction side. This action can result in decreased performance, unexpected heat generation, and equipment damage.

Piping guidelines

Guidelines for piping are given in the Hydraulic Institute Standards available from the Hydraulic Institute at 9 Sylvan Way, Parsippany, NJ 07054-3802. You must review this document before you install the pump.

Checklist

Check	Explanation/comment	Checked
Check that all piping is supported independently of, and lined up naturally with, the pump flange.	This helps to prevent: • Strain on the pump • Misalignment between the pump and the drive unit • Wear on the pump bearings and the coupling • Wear on the pump bearings, seal, and shafting	
Keep the piping as short as possible.	This helps to minimize friction losses.	
Check that only necessary fittings are used.	This helps to minimize friction losses.	
Do not connect the piping to the pump until: • The grout for the baseplate or sub-base becomes hard. • The hold-down bolts for the pump and the driver are tightened.	—	
Make sure that all the piping joints and fittings are airtight.	This prevents air from entering the piping system or leaks that occur during operation.	
If the pump handles corrosive fluids, make sure that the piping allows you to flush out the liquid before you remove the pump.		
If the pump handles liquids at elevated temperatures, make sure that the expansion loops and joints are properly installed.	This helps to prevent misalignment due to linear expansion of the piping.	

Example: Installation for expansion

Correct	Incorrect
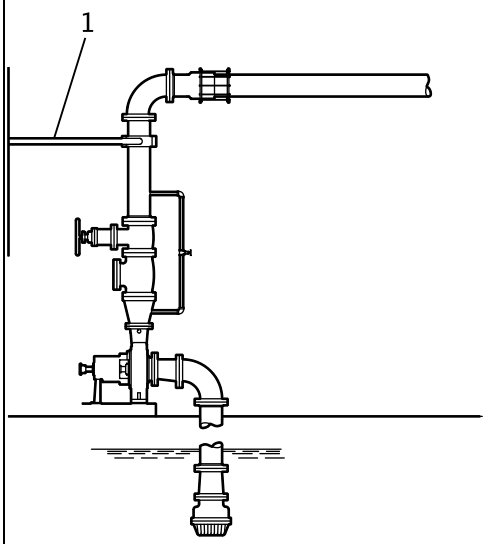 1. Expansion loop/joint	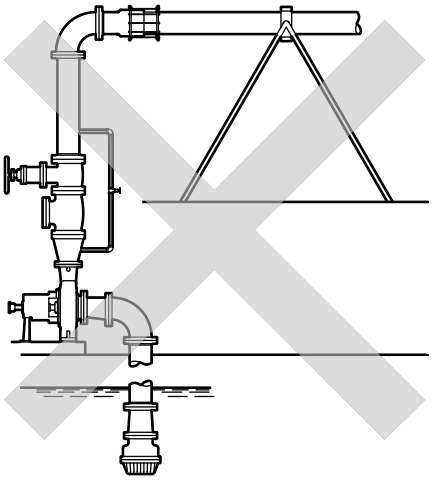

Fastening

WARNING:

- Only use fasteners of the proper size and material.
- Replace all corroded fasteners.
- Make sure that all fasteners are properly tightened and that there are no missing fasteners.

Suction-piping checklist

Performance curve reference

Net positive suction head available ($NPSH_A$) must always exceed NPSH required ($NPSH_R$) as shown on the published performance curve of the pump.

Suction-piping checks

Check	Explanation/comment	Checked
Check that the distance between the inlet flange of the pump and the closest elbow is at least five pipe diameters.	This minimizes the risk of cavitation in the suction inlet of the pump due to turbulence. See the Example sections for illustrations.	
Check that elbows in general do not have sharp bends.	See the Example sections for illustrations.	
Check that the suction piping is one or two sizes larger than the suction inlet of the pump. Install an eccentric reducer between the pump inlet and the suction piping.	The suction piping must never have a smaller diameter than the suction inlet of the pump. See the Example sections for illustrations.	
Check that the eccentric reducer at the suction flange of the pump has the following properties: • Sloping side down • Horizontal side at the top	See the example illustrations.	

Check	Explanation/comment	Checked
Suggested suction strainers are used. Check that they are at least three times the area of the suction piping. Monitor the pressure drop across the suction strainer. An increased pressure drop across the strainer of 5 psi (34.5 kPa) indicates that the strainer should be removed and cleaned. After a period of time (24 hours minimum) system flushing should be complete and the suction strainer can be removed.	Suction strainers help to prevent debris from entering the pump. Mesh holes with a minimum diameter of 1/16 in. (1.6 mm) are recommended. Liquids with specific gravity less than 0.60 a pressure drop across the suction strainer may be due to ice buildup. Ice buildup can cause turbulence, low pressure areas and pumpage vaporization.	
If more than one pump operates from the same liquid source, check that separate suction-piping lines are used for each pump.	This recommendation helps you to achieve a higher pump performance and prevent vapor locking especially with specific gravity of liquid less than 0.60.	
If necessary, make sure that the suction piping includes a drain valve and that it is correctly installed.	—	
Assure adequate insulation is applied for liquids with specific gravity less than 0.60.	To assure sufficient NPSHa.	

Liquid source below the pump

Check	Explanation/comment	Checked
Make sure that the suction piping is free from air pockets.	This helps to prevent the occurrence of air and cavitation in the pump inlet.	
Check that the suction piping slopes upwards from the liquid source to the pump inlet.	—	
If the pump is not self-priming, check that a device for priming the pump is installed.	Use a foot valve with a diameter that is at least equivalent to the diameter of the suction piping.	

Liquid source above the pump

Check	Explanation/comment	Checked
Check that an isolation valve is installed in the suction piping at a distance of at least two times the pipe diameter from the suction inlet.	This permits you to close the line during pump inspection and maintenance. Do not use the isolation valve to throttle the pump. Throttling can cause these problems: • Loss of priming • Excessive temperatures • Damage to the pump • Voiding the warranty	
Make sure that the suction piping is free from air pockets.	This helps to prevent the occurrence of air and cavitation in the pump inlet.	
Check that the piping is level or slopes downward from the liquid source.	—	
Make sure that no part of the suction piping extends below the suction flange of the pump.	—	
Make sure that the suction piping is adequately submerged below the surface of the liquid source.	This prevents air from entering the pump through a suction vortex.	

Example: Elbow close to the pump suction inlet

Correct	Incorrect
The correct distance between the inlet flange of the pump and the closest elbow must be at least five pipe diameters. 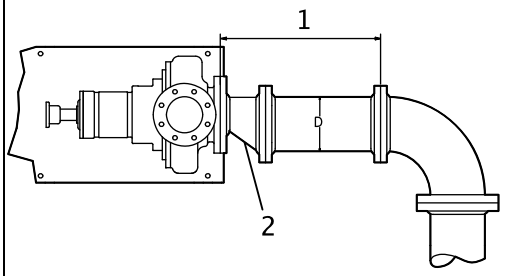 1. Enough distance to prevent cavitation 2. Eccentric reducer with a level top	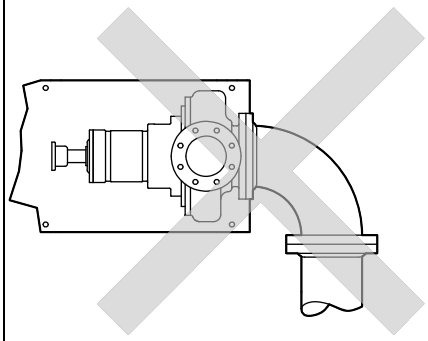

Example: Suction piping equipment

Correct	Incorrect
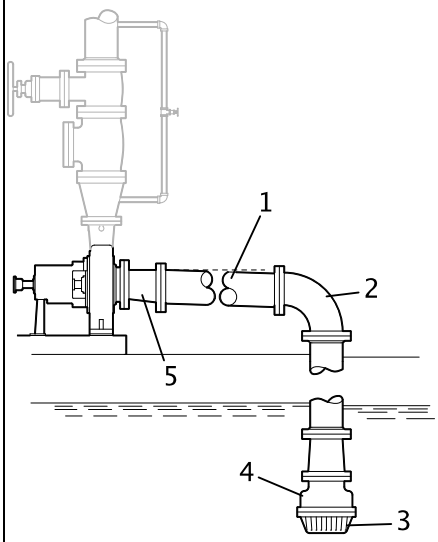 1. Suction pipe sloping upwards from liquid source 2. Long-radius elbow 3. Strainer 4. Foot valve 5. Eccentric reducer with a level top	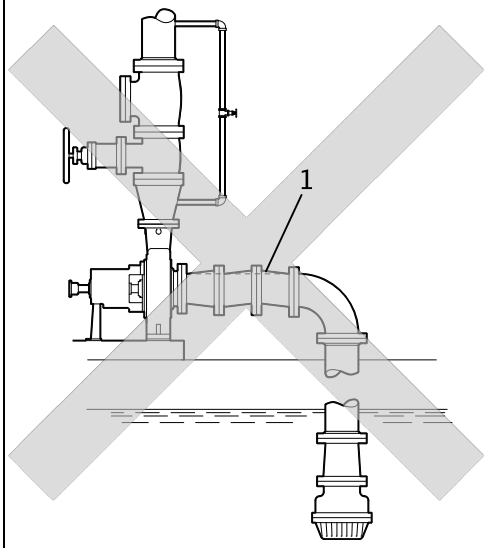 1. Air pocket, because the eccentric reducer is not used and because the suction piping does not slope gradually upward from the liquid source

Discharge piping checklist

Checklist

Check	Explanation/comment	Checked
Check that an isolation valve is installed in the discharge line. For specific gravity less than 0.60, minimize distance from pump discharge.	The isolation valve is required for: • Priming • Regulation of flow • Inspection and maintenance of the pump • Reduce risk of pumpage vaporization and vapor locking at low flow rates for low specific gravity liquids. See Example: Discharge piping equipment for illustrations.	
Check that a check valve is installed in the discharge line, between the isolation valve and the pump discharge outlet.	The location between the isolation valve and the pump allows inspection of the check valve. The check valve prevents damage to the pump and seal due to the back flow through the pump, when the drive unit is shut off. It is also used to restrain the liquid flow. See Example: Discharge piping equipment for illustrations.	
If increasers are used, check that they are installed between the pump and the check valve.	See Example: Discharge piping equipment for illustrations.	
If quick-closing valves are installed in the system, check that cushioning devices are used.	This protects the pump from surges and water hammer.	

Example: Discharge piping equipment

Correct	Incorrect
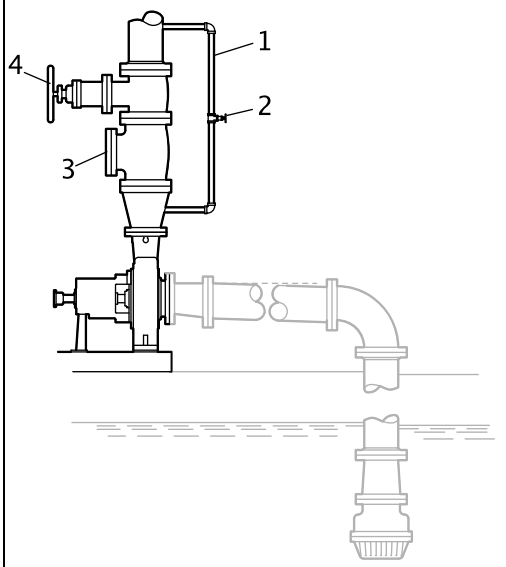	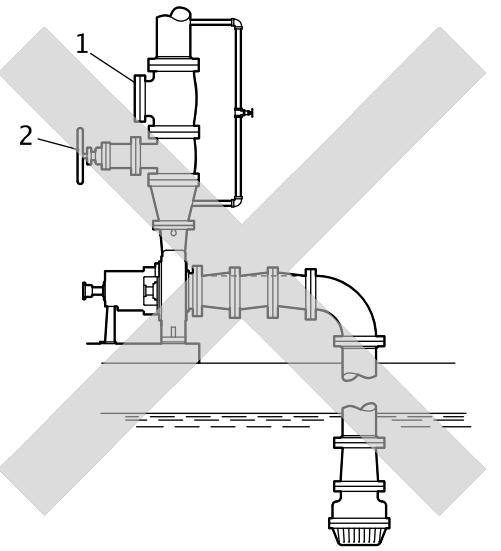
1. Bypass line 2. Shut-off valve 3. Check valve 4. Discharge isolation valve	1. Check valve (incorrect position) 2. The isolation valve should not be positioned between the check valve and the pump.

Commissioning, Startup, Operation, and Shutdown

Preparation for startup

DANGER:
Avoid death or serious injury. Explosion and/or seizure of pump can cause fire and/or burns. Never operate pump past the pressure and temperature limits shown on the nameplate on the pump.

WARNING:

- Failure to follow these precautions before you start the unit will lead to serious personal injury and equipment failure.
- Do not operate the pump below the minimum rated flows or with the suction or discharge valves closed. These conditions can create an explosive hazard due to vaporization of pumped fluid and can quickly lead to pump failure and physical injury.
- Avoid death or serious injury. Leaking fluid can cause fire and/or burns. Operating the pump above maximum rated flow shown on the pump curve leading to an increase in horsepower and vibration along with an increase in NPSHr resulting in mechanical seal and/or shaft failure and/or loss of prime.
- Avoid death or serious injury. Leaking fluid can cause fire and/or burns. Speed of pump must reach 2000 rpm for 2 pole motors and 1000 rpm for 4 pole motors within 10 seconds or an increase in vibration and rotor deflection and decrease in rotor stability leading to mechanical seal and/or shaft failure and/or pump seizure can occur.
- Never operate the pump without the coupling guard correctly installed.
- ⟨Ex⟩ Always disconnect and lock out power to the driver before you perform any installation or maintenance tasks. Failure to disconnect and lock out driver power will result in serious physical injury.
  - Electrical connections must be made by certified electricians in compliance with all international, national, state, and local rules.
  - Refer to driver/coupling/gear manufacturers installation and operation manuals (IOM) for specific instructions and recommendations.
- Operating the pump in reverse rotation can result in the contact of metal parts, heat generation, and breach of containment.
- Avoid death or serious injury. Explosion and/or seizure of pump can cause fire and/or burns. Assure balance line is installed and either piped to the pump suction or back to the suction vessel to avoid vaporization of pumped fluid.

DANGER:
Avoid death or serious injury. Leaking fluid can cause fire and/or burns. Assure all openings are sealed off prior to filling pump.

Precautions

NOTICE:

- Verify the driver settings before you start any pump.
- Make sure that the warm-up rate does not exceed 1.4°C | 2.5°F per minute.
- Risk of damage to the mechanical seal or shaft sleeve on units supplied with cartridge mechanical seals. Prior to startup, make sure to tighten the set screws in the seal locking ring and remove the centering clips.

You must follow these precautions before you start the pump:

- Flush and clean the system thoroughly to remove dirt or debris in the pipe system in order to prevent premature failure at initial startup.
- Bring variable-speed drivers to the rated speed as quickly as possible.
- Run a new or rebuilt pump at a speed that provides enough flow to flush and cool the close-running surfaces of the stuffing-box bushing.
- If temperatures of the pumped fluid will exceed 93°C | 200°F, then warm up the pump prior to operation. Circulate a small amount of fluid through the pump until the casing temperature is within 38°C | 100°F of the fluid temperature. Accomplish this by flowing fluid from pump inlet to discharge drain (optionally, the casing vent can be included in warm-up circuit but not required). Soak for (2) hours at process fluid temperature.

At initial startup, do not adjust the variable-speed drivers or check for speed governor or over-speed trip settings while the variable-speed driver is coupled to the pump. If the settings have not been verified, then uncouple the unit and refer to instructions supplied by the driver manufacturer.

Remove the coupling guard

1. Remove the nut, bolt, and washers from the slotted hole in the center of the coupling guard.
2. Slide the driver half of the coupling guard toward the pump.

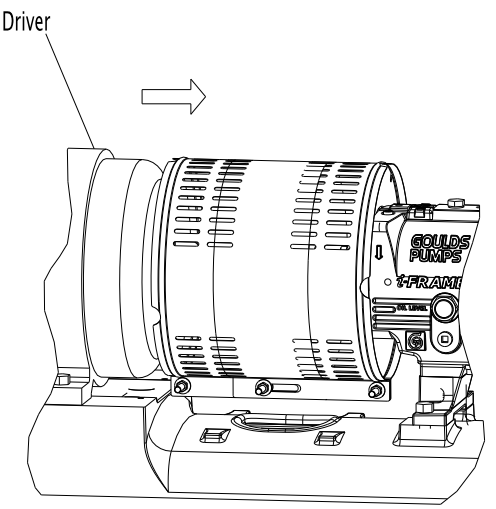

3. Remove the nut, bolt, and washers from the driver half of the coupling guard.

4. Remove the driver-side end plate.

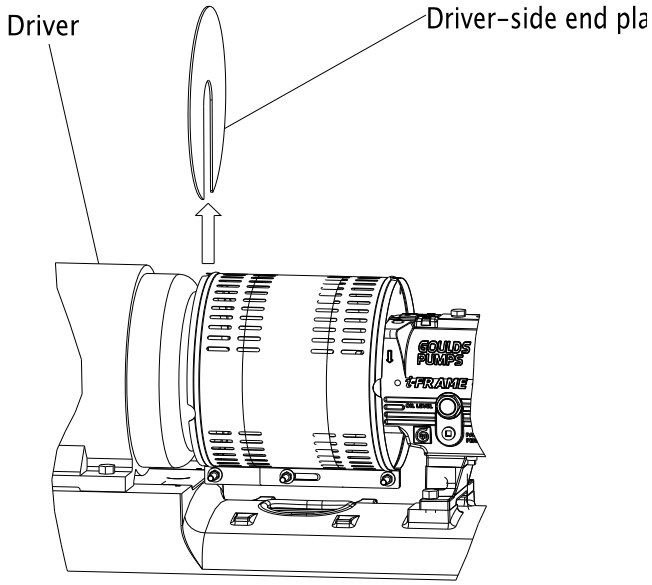

5. Remove the driver half of the coupling guard:
   a) Slightly spread the bottom apart.
   b) Lift upwards.

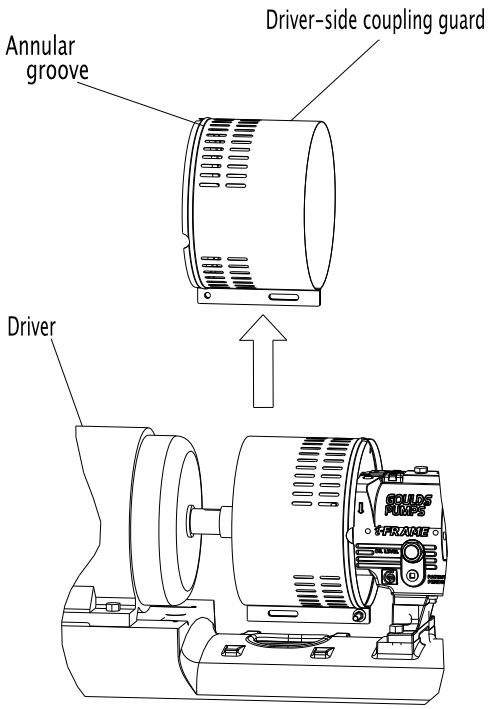

6. Remove the remaining nut, bolt, and washers from the pump half of the coupling guard.
   It is not necessary to remove the end plate from the pump side of the bearing housing. You can access the bearing-housing tap bolts without removing this end plate if maintenance of internal pump parts is necessary.
7. Remove the pump half of the coupling guard:
   a) Slightly spread the bottom apart.

b) Lift upwards.

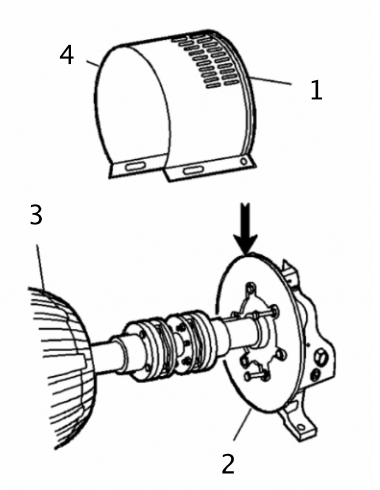

1. Annular groove
2. Pump-side end plate
3. Driver
4. Pump half of the coupling guard

Check the rotation - Frame Mounted

WARNING:

- Operating the pump in reverse rotation can result in the contact of metal parts, heat generation, and breach of containment.
- Ⓔx Always disconnect and lock out power to the driver before you perform any installation or maintenance tasks. Failure to disconnect and lock out driver power will result in serious physical injury.
  - Electrical connections must be made by certified electricians in compliance with all international, national, state, and local rules.
  - Refer to driver/coupling/gear manufacturers installation and operation manuals (IOM) for specific instructions and recommendations.

1. Lock out power to the driver.
2. Make sure that the coupling hubs are fastened securely to the shafts.
3. Make sure that the coupling spacer is removed.
   The pump ships with the coupling spacer removed.
4. Unlock power to the driver.
5. Make sure that everyone is clear, and then jog the driver long enough to determine that the direction of rotation corresponds to the arrow on the bearing housing or close-coupled frame.
6. Lock out power to the driver.

Impeller-clearance check

The impeller-clearance check ensures the following:

- The pump turns freely.
- The pump operates at optimal efficiency for long equipment life and low energy consumption.

Impeller clearances (3196 and HT 3196)

WARNING:
For pumpage temperatures greater than 93°C | 200°F, you must increase the cold (ambient) setting according to this table. Doing so prevents the impeller from contacting the casing due to differential expansion from the higher operating temperatures. Failure to do so may result in sparks, unexpected heat generation, and equipment damage.

NOTICE:
Do not set the maximum impeller setting to more than 0.13 mm | 0.005 in. greater than the values in this table. Doing so may result in a significant decrease in performance.

Table 8: Impeller clearances
This pump requires the impeller clearances in the following table.

Service temperature	STi	MTi/LTi	XLT-i/i17
	mm | in.	mm | in.	mm | in.
-29 to 93°C | -20 to 200°F	0.13 | 0.005	0.20 | 0.008	0.38 | 0.015
Up to 121°C | 250°F	0.15 | 0.006	0.22 | 0.009	0.41 | 0.016
Up to 149°C | 300°F	0.18 | 0.007	0.25 | 0.010	0.43 | 0.017
Up to 177°C| 350°F	0.22 | 0.009	0.30 | 0.012	0.48 | 0.019
Up to 204°C | 400°F	0.25 | 0.010	0.33 | 0.013	0.50 | 0.020
Up to 232°C | 450°F	0.28 | 0.011	0.35 | 0.014	0.53 | 0.021
Up to 260°C| 500°F	0.30 | 0.012	0.38 | 0.015	0.56 | 0.022
Up to 288°C | 550°F	0.33 | 0.013	0.41 | 0.016	0.58 | 0.023
Up to 316°C | 600°F	0.36 | 0.014	0.43 | 0.017	0.61 | 0.024
Up to 343°C | 650°F	0.40 | 0.016	0.48 | 0.019	0.66 | 0.026
Up to 371°C | 700°F	0.43 | 0.017	0.50 | 0.020	0.69 | 0.027

Impeller-clearance setting

Importance of a proper impeller clearance

A proper impeller clearance ensures that the pump runs at high performance.

WARNING:

- Ⓔx The impeller clearance setting procedure must be followed. Improperly setting the clearance or not following any of the proper procedures can result in sparks, unexpected heat generation, and equipment damage.
- If you use a cartridge mechanical seal, you must install the centering clips and loosen the set screws before you set the impeller clearance. Failure to do so could result in sparks, heat generation, and mechanical seal damage.

Impeller clearance methods

You can set the impeller clearance with either of these methods:

- Dial indicator method
- Feeler gauge method

Set the impeller clearance - dial indicator method (all except CV 3196)

WARNING:

Ⓔx Always disconnect and lock out power to the driver before you perform any installation or maintenance tasks. Failure to disconnect and lock out driver power will result in serious physical injury.

- Electrical connections must be made by certified electricians in compliance with all international, national, state, and local rules.
- Refer to driver/coupling/gear manufacturers installation and operation manuals (IOM) for specific instructions and recommendations.

1. Remove the coupling guard.
2. Set the indicator so that the button contacts either the shaft end or the face of the coupling.

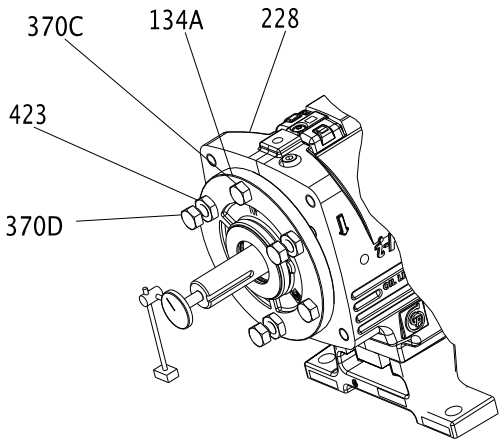

Figure 30: Dial indicator setting

3. Loosen the jam nuts (423) on the jack bolts (370D) , and then back the bolts out about two turns.
4. Tighten the locking bolts evenly (370C), bringing the bearing housing (134A) towards the frame (228) until the impeller contacts the casing.
5. Turn the shaft to ensure that there is contact between the impeller and the casing.
6. Set the indicator to zero and loosen the locking bolt (370C) about one turn.
7. Thread in the jack bolts (370D) until the jack bolts evenly contact the bearing frame.
8. Tighten the jack bolts evenly about one flat at a time, moving the bearing housing (134A) away from the bearing frame until the indicator shows the correct clearance.
   Refer to the impeller clearance table to determine the correct clearance.
9. Tighten the bolts evenly in this order:
   a) Tighten the locking bolts (370C).
   b) Tighten the jack bolts (370D).
   Make sure to keep the indicator reading at the proper setting.
10. Make sure the shaft turns freely.

Set the impeller clearance - feeler gauge method (all except CV 3196)

WARNING:

Ⓔx Always disconnect and lock out power to the driver before you perform any installation or maintenance tasks. Failure to disconnect and lock out driver power will result in serious physical injury.

- Electrical connections must be made by certified electricians in compliance with all international, national, state, and local rules.
- Refer to driver/coupling/gear manufacturers installation and operation manuals (IOM) for specific instructions and recommendations.

1. Lock out the driver power and remove the coupling guard.
2. Loosen the jam nuts (423B) on the jack bolts (371A), and then back the bolts out about two turns.

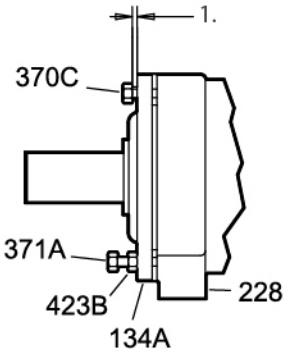

Figure 31: Loosen jam nuts

1. See impeller clearance table for distance

3. Evenly tighten the locking bolts (370C), bringing the bearing housing (134A) towards the frame (228) until the impeller contacts the casing.
4. Turn the shaft to ensure that there is contact between the impeller and the casing.
5. Use a feeler gauge to set the gap between the three locking bolts (370C) and the bearing housing (134A) to the correct impeller clearance.
   Refer to the impeller clearance table to determine the correct clearance.
6. Use the three jack bolts (370D) to evenly loosen the bearing housing (134A) until it contacts the locking bolts (370C).
7. Evenly tighten the jam nuts (423B).
8. Make sure the shaft turns freely.

Couple the pump and driver

WARNING:

Ⓔx Always disconnect and lock out power to the driver before you perform any installation or maintenance tasks. Failure to disconnect and lock out driver power will result in serious physical injury.

- Electrical connections must be made by certified electricians in compliance with all international, national, state, and local rules.
- Refer to driver/coupling/gear manufacturers installation and operation manuals (IOM) for specific instructions and recommendations.

Couplings must have proper certification to be used in an ATEX classified environment. Use the instructions from the coupling manufacturer in order to lubricate and install the coupling. Refer to driver/coupling/gear manufacturers IOM for specific instructions and recommendations.

Install the coupling guard

WARNING:

- Never operate a pump without a properly installed coupling guard. Personal injury will occur if you run the pump without a coupling guard.
- Electrical Connections must be made by certified electricians in compliance with all international, national, state, and local rules.
- Refer to driver/coupling/gear manufacturers IOM for specific instructions and recommendations.
- Ⓔx Always disconnect and lock out power to the driver before you perform any installation or maintenance tasks. Failure to disconnect and lock out driver power will result in serious physical injury.
  - Electrical connections must be made by certified electricians in compliance with all international, national, state, and local rules.
  - Refer to driver/coupling/gear manufacturers installation and operation manuals (IOM) for specific instructions and recommendations.
- The coupling used in an Ex-classified environment must be properly certified and must be constructed from a non-sparking material.
-

Required parts:

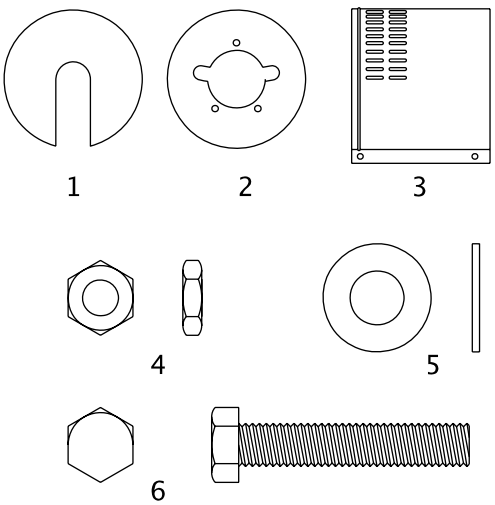

1. End plate, drive end
2. End plate, pump end
3. Guard half, 2 required
4. 3/8-16 nut, 3 required
5. 3/8 in. washer
6. 3/8-16 x 2 in. hex head bolt, 3 required

Figure 32: Required parts

1. De-energize the motor, place the motor in a locked-out position, and place a caution tag at the starter that indicates the disconnect.
2. Put the pump-side end plate in place.
   If the pump-side end plate is already in place, make any necessary coupling adjustments and then proceed to the next step.

If the pump size is...	Then...
STi, MTi, LTi	Align the pump-side end plate to the bearing frame. You do not need to adjust the impeller.

If the pump size is...	Then...
XLT-i	1. Align the end plate on the pump side to the bearing housing so that you meet these conditions: 1. The large slots on the end plate do not touch the bearing housing tap bolts. 2. The small slots align with the impeller adjusting bolts. 2. Fasten the end plate to the bearing housing using the jam nuts on the impeller adjusting bolts. 3. Check the impeller clearance. Refer to the impeller clearance table for the correct impeller clearance.

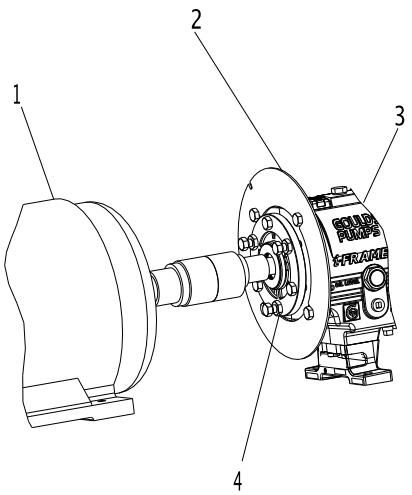

1. Driver
2. Pump end plate
3. Bearing housing
4. Jam nut

Figure 33: Pump-side end plate placement

3. Put the pump-half of the coupling guard in place:
   a) Slightly spread the bottom apart.
   b) Place the coupling guard half over the pump-side end plate.

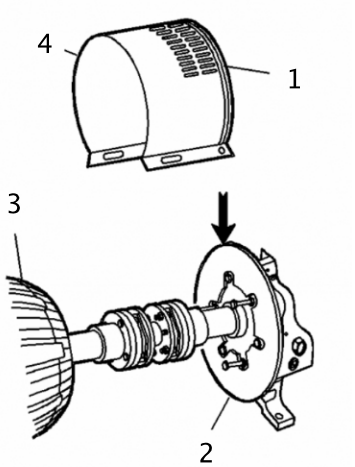

1. Annular groove
2. Pump-side end plate
3. Driver
4. Pump half of the coupling guard

Figure 34: Guard half installation

The annular groove in the coupling guard half must fit around the end plate.

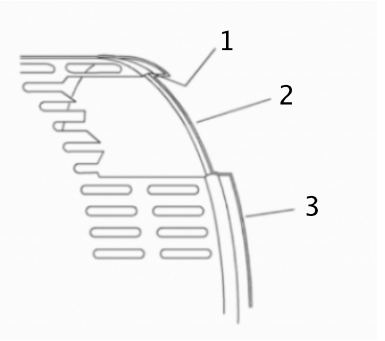

1. Annular groove
2. End plate (pump end)
3. Guard half

Figure 35: Annular groove in coupling guard

4. Use a bolt, a nut, and two washers to secure the coupling guard half to the end plate. Tighten securely.

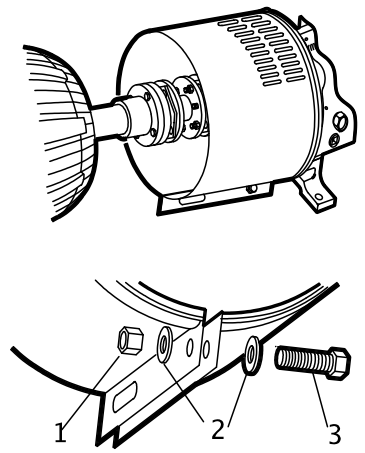

1. Nut
2. Washer
3. Bolt

Figure 36: Secure coupling guard half to end plate

5. Put the driver half of the coupling guard in place:
   a) Slightly spread the bottom apart.

b) Place the driver half of the coupling guard over the pump half of the coupling guard. The annular groove in the coupling guard half must face the motor.

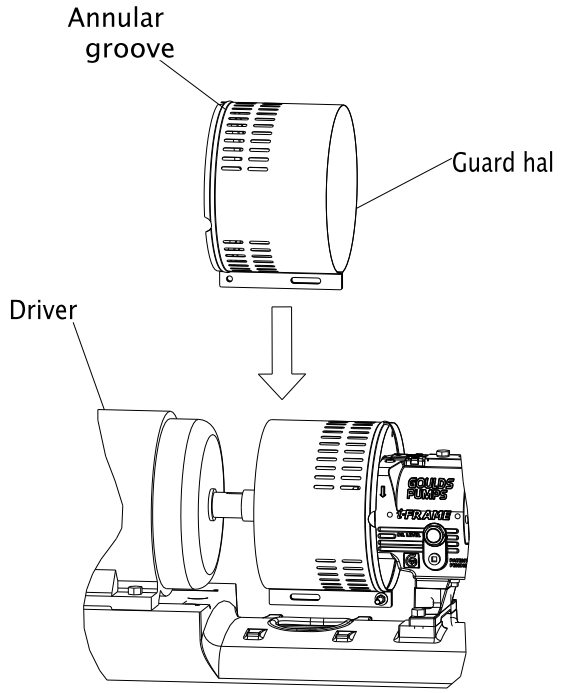

Figure 37: Placement of driver half of coupling guard

6. Place the driver-side end plate over the motor shaft.

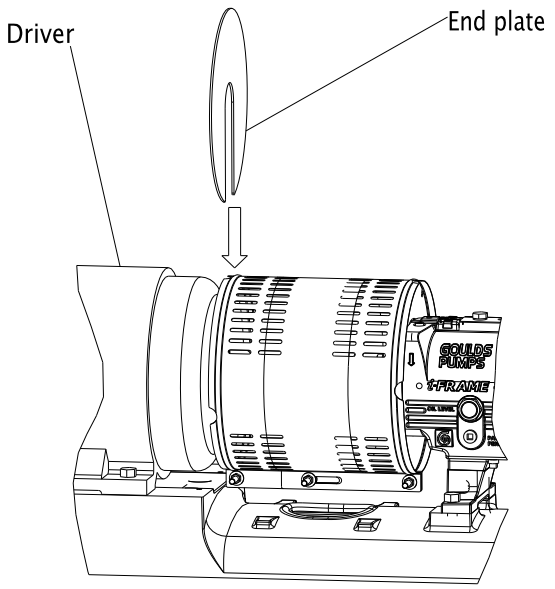

Figure 38: Placement of driver half of coupling guard

7. Place the driver-side end plate in the annular groove of the driver-half of the coupling guard.
8. Use a bolt, a nut, and two washers to secure the coupling guard half to the end plate. Hand-tighten only.
   The hole is located on the driver-side of the coupling guard half.

9. Slide the driver-half of the coupling guard towards the motor so that the coupling guard completely covers the shafts and coupling.

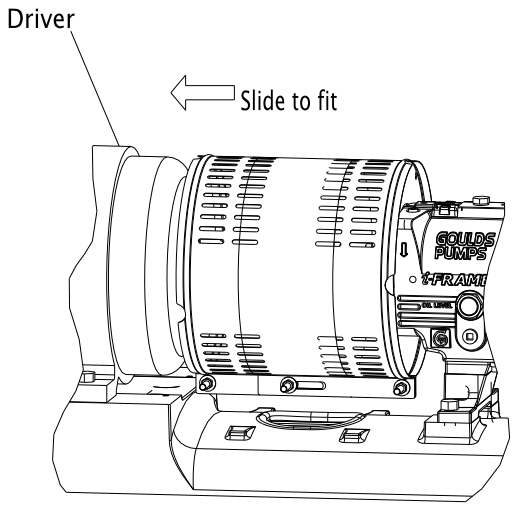

Figure 39: Slide driver-half of coupling guard towards motor

10. Use a nut, a bolt, and two washers to secure the coupling guard halves together.
11. Tighten all nuts on the guard assembly.

WARNING:
Never operate the pump without the coupling guard correctly installed.

Bearing lubrication

WARNING:
Ⓔx Make sure to properly lubricate the bearings. Failure to do so can result in excess heat generation, sparks, and premature failure.

NOTICE: Be certain to check the greasing on a pump that has been out of service for a long period of time and re-grease if necessary.

Pumps are shipped without oil. You must lubricate oil-lubricated bearings at the job site.

Grease-lubricated bearings are lubricated at the factory.

The bearing manufacturer fills greased-for-life bearings with grease and seals them at the factory. You do not need to lubricate or seal these bearings.

Oil volumes

Oil volume requirements

This table shows the required amount of oil for oil-lubricated bearings.

Frame	ml	Qts.	Oz.
STi	400	0.5	16
MTi	1400	1.5	47
LTi	1400	1.5	48
XLT-i and i17	3000	3	96

Lubricating-oil requirements

Oil requirements based on temperature

For the majority of operating conditions, bearing temperatures run between 49°C | 120°F and 82°C | 180°F, and you can use an oil of ISO viscosity grade 68 at 38°C | 100°F. If temperatures exceed 82°C | 180°F, refer to the table for temperature requirements.

Temperature	Oil requirement
Bearing temperatures exceed 82°C | 180°F	Use ISO viscosity grade 100 with bearing-frame cooling or finned-tube oil cooler. The finned-tube oil cooler is standard with the HT 3196 model and optional for all other models.
Pumped-fluid temperatures exceed 177°C | 350°F	Use synthetic lubrication.

Acceptable oil for lubricating bearings

Acceptable lubricants

Examples of acceptable high quality turbine oils with rust and oxidation inhibitors.

Brand	Lubricant type
Chevron	GTS Oil 68
Exxon	Teresstic EP 68
Mobil	DTE 26 300 SSU @ 38°C | 100°F
Philips	Mangus Oil 315
Shell	Tellus Oil 68
Sunoco	Sunvis 968
Royal Purple	SYNFILM ISO VG 68 Synthetic Lube

Examples of acceptable synthetic lubricants.

Brand	Lubricant type
Castrol	Hyspin R&O 220
Chevron	GST 220
Exxon	Teresstic 220
Mobil	DTE Oil BB SHC 630
Shell	Marlina 220 Tellus 220
Sunoco	Sunvis 9220
Texaco	Regal R&O 220 Rando HD 220
Royal Purple	Synfilm GT 220 Synergy 220

Lubricate the bearings with oil

Use a high-quality turbine oil with rust and oxidation inhibitors.

1. Remove the fill plug.
2. Fill the bearing frame with oil through the filler connection, which is located on top of the bearing frame.

Fill the bearing frame with oil until the oil level reaches the middle of the sight glass (319). The correct volume of oil required for each size of bearing frame can be found in the ‘Oil Volume Requirements’ section in the ‘Bearing Maintenance’ / ‘Maintenance’ portion of the IOM.

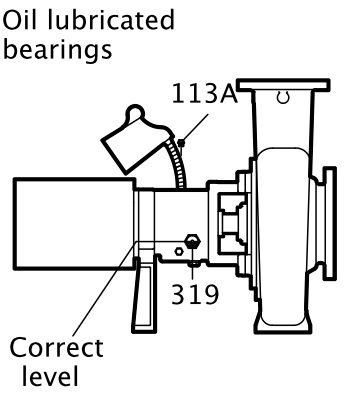

Figure 40: Oil filler connection

3. Replace the fill plug.

Lubricate the bearings with pure oil mist

Oil mist is an optional feature for this pump.
To lubricate bearings with pure oil mist, follow the instructions provided by the manufacturer of the oil-mist generator.
The inlet connections are on the top of the bearing frame.

Greased-for-life bearing lubrication

The bearing manufacturer fills greased-for-life bearings with grease and seals them at the factory. You do not need to lubricate or seal these bearings. Refer to the Maintenance chapter for re-greasing and maintenance procedures for these bearings.

Shaft-sealing options

In most cases, the manufacturer seals the shaft before shipping the pump. If your pump does not have a sealed shaft, see the Shaft-seal maintenance section in the Maintenance chapter.
This model uses these types of shaft seals:

- Cartridge mechanical seal
- Conventional inside-component mechanical seal
- Conventional outside-component mechanical seal
- Dynamic seal
- Packed-stuffing-box option

Mechanical seal options

Pumps are usually shipped with mechanical seals installed. If they are not, then refer to the mechanical seal manufacturer's installation instructions.
These are the mechanical seal options for this pump:

- Cartridge mechanical seal
- Conventional inside component mechanical seal
- Conventional outside component mechanical seal

Connection of sealing liquid for mechanical seals

Seal lubrication is required

Seal faces must have liquid film between them for proper lubrication. Locate the taps using the illustrations shipped with the seal.

Seal flushing methods

You can use these methods in order to flush or cool the seal:

Method	Description
Product flush	Run the piping so that the pump pushes the pumped fluid from the casing and injects it into the seal gland. If necessary, an external heat exchanger cools the pumped fluid before it enters the seal gland.
External flush	Run the piping so that the pump injects a clean, cool, compatible liquid directly into the seal gland. The pressure of the flushing liquid must be 0.35 to 1.01 kg/cm^2 | 5 to 15 psi greater than the seal chamber pressure. The injection rate must be 2 to 8 lpm | 0.5 to 2 gpm.
Other	You can use other methods that employ multiple gland or seal chamber connections. Refer to the mechanical seal reference drawing and piping diagrams.

Packed stuffing box option

WARNING:
Ⓔx Packed stuffing boxes are not allowed in an ATEX-classified environment.

The factory does not install the packing, lantern ring, or split gland.
These parts are included with the pump in the box of fittings. Before you start the pump, you must install the packing, lantern ring, and split gland according to the Packed stuffing box maintenance section in the Maintenance chapter.

Connection of sealing liquid for a packed stuffing box

WARNING:
Ⓔx Packed stuffing boxes are not allowed in an ATEX-classified environment.

NOTICE:
Make sure to lubricate the packing. Failure to do so may result in shortening the life of the packing and the pump.

You must use an external sealing liquid under these conditions:

- The pumped fluid includes abrasive particles.
- The stuffing-box pressure is below atmospheric pressure when the pump is running with a suction lift or when the suction source is in a vacuum. Under these conditions, packing is not cooled and lubricated and air is drawn into pump.

Conditions for application of an external liquid

Condition	Action
The stuffing box pressure is above atmospheric pressure and the pumped fluid is clean.	Normal gland leaks of 40 to 60 drops per minute is usually sufficient to lubricate and cool the packing. You do not need sealing liquid.
The stuffing box pressure is below atmospheric pressure or the pumped fluid is not clean.	An outside source of clean compatible liquid is required.
An outside source of clean compatible liquid is required.	You must connect the piping to the lantern ring connection with a 40 to 60 drops-per-minute leak rate. The pressure must be 1.01 kg/cm^2 | 15 psi above the stuffing box pressure.

Dynamic-seal option

WARNING:
Ⓔx Dynamic seals are not allowed in an ATEX-classified environment.

The dynamic seal consists of two parts:

- Repeller seal
- Secondary seal (one of the following):
  - Graphite packing
  - Elastomenic face seal

Table 9: Dynamic seal part function

Part	Function
Repeller seal	A repeller seal prevents liquid from entering the stuffing box during operation. The repeller normally does not require a flush. However, for services that allow a build-up of solids on the repeller, you must install a flush connection. If a danger of freezing exists, then you must install a drain connection to drain the repeller chamber.

Secondary seal (graphite packing)	This secondary seal prevents leaks during pump shutdown and is comprised of the following:
	• Graphite packing – Graphite packing provides adequate life running dry but can provide longer performance if lubricated with clean water or grease.
	  • If you lubricate with clean water, then the repeller reduces both the quantity and pressure of seal water that is necessary. If the suction head is less than the repeller capability, then the stuffing box pressure is the same as the atmospheric pressure. Water pressure for the seal must be high enough to overcome static head when the pump is not operating to keep pumped fluid out of the packing. There must be enough flow to cool the packing.
	  • If you lubricate with grease, then you must use spring-loaded grease lubricators to maintain a constant supply.
	• Elastomeric face seal – The elastomeric face seal consists of an elastomer rotary fitted to the shaft and a ceramic stationary seat fitted in the gland. To set an elastomeric face seal, refer to Set an elastomeric face seal. This seal is designed to run dry, so no flush is necessary.

Set an elastomeric face seal

This procedure ensures that the elastomeric seal attains proper contact. No other adjustments are necessary.

1. Remove the gland nuts.
2. Slide the gland back on the sleeve.
3. Pull the rotary back on the sleeve until the rotary is about 25 mm | 1 in. beyond the stuffing box face.
4. Push the gland back onto the studs, pushing the rotary back along the sleeve.
5. Tighten the gland nuts.

Pump priming

Prime the pump with the suction supply above the pump

1. Slowly open the suction isolation valve.
2. Open the air vents on the suction and discharge piping until the pumped fluid flows out.
3. Close the air vents.

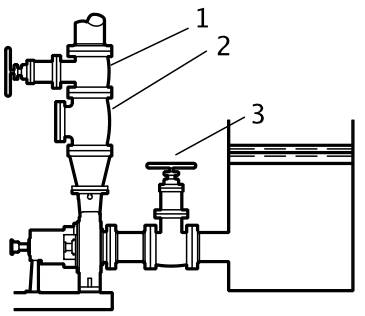

1. Discharge isolation valve
2. Check valve
3. Suction isolation valve

Figure 41: Suction supply above pump

Prime the pump with the suction supply below the pump

Use a foot valve and an outside source of liquid in order to prime the pump. The liquid can come from one of these sources:

- A priming pump
- A pressurized discharge line
- Another outside supply

1. Close the discharge isolation valve.
2. Open the air vent valves in the casing.
3. Open the valve in the outside supply line until only liquid escapes from the vent valves.
4. Close the vent valves.
5. Close the outside supply line.

This illustration is an example of priming the pump with a foot valve and an outside supply:

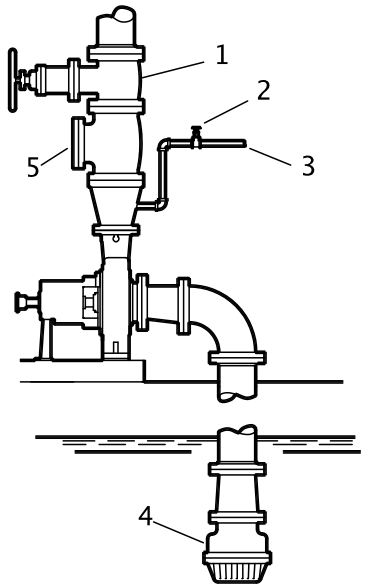

1. Discharge isolation valve
2. Shutoff valve
3. From outside supply
4. Foot valve
5. Check valve

Figure 42: Pump priming with suction supply below pump

This illustration is an example of priming the pump with a foot valve using a bypass around the check valve:

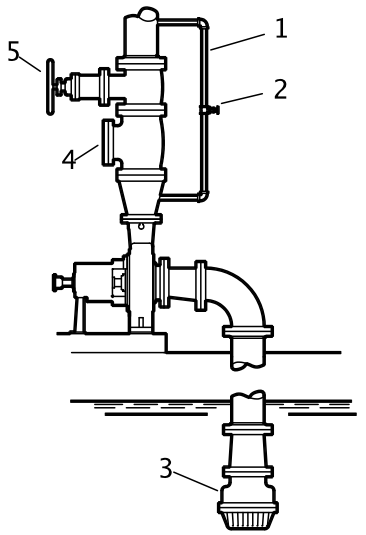

1. By-pass line
2. Shutoff valve
3. Foot valve
4. Check valve
5. Discharge isolation valve

Figure 43: Pump priming with suction supply below pump with foot valve using bypass around check valve

Other methods of priming the pump

You can also use these methods in order to prime the pump:

- Prime by ejector
- Prime by automatic priming pump

Start the pump

WARNING: Immediately observe the pressure gauges. If discharge pressure is not quickly attained, stop the driver immediately, reprime, and attempt to restart the pump.

CAUTION:

- Immediately observe the pressure gauges. If discharge pressure is not quickly attained, stop the driver, reprime, and attempt to restart the pump.
- Observe the pump for vibration levels, bearing temperature, and excessive noise. If normal levels are exceeded, shut down the pump and resolve the issue.
- On pure or purge-oil mist-lubricated units, remove the viewing port plugs to verify that oil mist flowing properly. Replace the plugs.
- On frame mounted units, ensure that the oil level is correct prior to starting pump. Close coupled pumps do not have oil lubricated bearings.
- Ensure all flush and cooling systems are operating correctly prior to starting pump.

Before you start the pump, you must perform these tasks:

- Open the suction valve.
- Open any recirculation or cooling lines.

1. Fully close or partially open the discharge valve, depending on system conditions.
2. Start the driver.
3. Slowly open the discharge valve until the pump reaches the desired flow.
4. Immediately check the pressure gauge to ensure that the pump quickly reaches the correct discharge pressure.
5. If the pump fails to reach the correct pressure, perform these steps:
   a) Stop the driver.
   b) Prime the pump again.
   c) Restart the driver.
6. Monitor the pump while it is operating:
   a) Check the pump for bearing temperature, excessive vibration, and noise.
   b) If the pump exceeds normal levels, then shut down the pump immediately and correct the problem.
   A pump can exceed normal levels for several reasons. See Troubleshooting for information about possible solutions to this problem.
7. Repeat steps 5 and 6 until the pump runs properly.

Activate the i-*ALERT*® Condition Monitor

WARNING:
Never heat the condition monitor to temperatures in excess of 100°C | 212°F. Heating to these temperatures could result in death or serious injury.

CAUTION:
Always wear protective gloves. The pump and condition monitor can be hot.

By using the i-*ALERT*® Condition monitor or the i-*ALERT*®*2* Bluetooth Equipment Health Monitor, you agree to be bound by the Terms and Conditions of the *Software License Agreement* (page 18)

The condition monitor is ready for activation when the pump is running and has reached a steady flow, pressure, and temperature. This process only takes a few minutes.

1. Place a small magnet on the condition monitor over the ITT logo and then remove it, as this example shows.

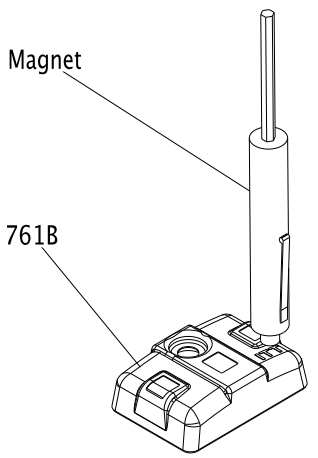

Figure 44: i-*ALERT*® condition monitor

When the condition monitor is activated it:

1. Displays a series of red LEDs followed by a solid green LED.
2. Collects eight samples that are spaced one second apart.
3. Averages these readings to establish the baseline vibration level.
4. Flashes a green LED after approximately twelve seconds.

For the first ten minutes, the green LED flashes every second for five consecutive flashes and then pauses to take a vibration reading. More frequent measurements (every six seconds) are taken in this startup period so that an alarm can be immediately detected.

i-*ALERT*® Condition Monitor routine operation

To install and/or activate the i-*ALERT*®*2* monitor, please refer to the i-*ALERT*®*2* IOM or *http://www.ittproservices.com/aftermarket-products/monitoring/i-alert2/* (page) (i-ALERT2.com). Routine operation instructions are also included in the i-*ALERT*®*2* IOM.

Measurement interval

This table shows the measurement intervals for the condition monitor during normal operation and when the monitor is in alarm mode.

Mode	Measurement interval
Normal operating mode	Five minutes
Alarm mode	Two minutes

When the condition monitor measures a reading beyond the specified temperature and vibration limits, the appropriate red LED flashes. After the process or pump condition that causes the alarm is corrected, the condition monitor returns to normal mode after one normal-level measurement.

Alarm mode

When the condition monitor is in alarm mode, you should investigate the cause of the condition and make necessary corrections in a timely manner.

Magnetic device considerations

Be careful when you use magnetic devices in close proximity of the condition monitor, such as magnetic vibration-monitoring probes or dial indicators. These magnetic devices can accidentally activate or deactivate the condition monitor resulting in improper alarm levels or loss of monitoring.

Pump operation precautions

General considerations

CAUTION:

- Vary the capacity with the regulating valve in the discharge line. Never throttle the flow from the suction side since this can result in decreased performance, unexpected heat generation, and equipment damage.
  Do not overload the driver. Driver overload can result in unexpected heat generation and equipment damage. The driver can overload in these circumstances:
  - The specific gravity of the pumped fluid is greater than expected.
  - The pumped fluid exceeds the rated flow rate.
- Do not operate pump past the maximum flow. For maximum flow refer to the pump performance curve.
- Do not overload the driver. Driver overload can result in unexpected heat generation and equipment damage. The driver can overload in these circumstances:
  - The specific gravity of the pumped fluid is greater than expected.
  - The pumped fluid exceeds the rated flow rate.
- Do not operate pump below hydraulic or thermal minimum flow. For hydraulic minimum flows refer to technical manual and pump performance curve. To calculate thermal minimum flow, refer to HI Centrifugal Pumps for Design and Application ANSI/HI 1.3-2000.
- Make sure to operate the pump at or near the rated conditions. Failure to do so can result in pump damage from cavitation or recirculation.

Operation at reduced capacity

WARNING:
Never operate any pumping system with a blocked suction and discharge. Operation, even for a brief period under these conditions, can cause confined pumped fluid to overheat, which results in a violent explosion. You must take all necessary measures to avoid this condition. If pump becomes plugged shut down and unplug prior to restarting pump.

CAUTION:

- The pump and system must be free of foreign objects. If pump becomes plugged, shut down and unplug prior to restarting pump.
- Avoid excessive vibration levels. Excessive vibration levels can damage the bearings, stuffing box or seal chamber, and the mechanical seal, which can result in decreased performance.
- Avoid increased radial load. Failure to do so can cause stress on the shaft and bearings.
- Avoid heat build-up. Failure to do so can cause rotating parts to score or seize.
- Avoid cavitation. Failure to do so can cause damage to the internal surfaces of the pump.

Operation under freezing conditions

NOTICE:
Do not expose an idle pump to freezing conditions. Drain all liquid that is inside the pump and the cooling coils. Failure to do so can cause liquid to freeze and damage the pump.

Shut down the pump

WARNING:
The pump can handle hazardous and toxic fluids. Identify the contents of the pump and observe proper decontamination procedures in order to eliminate the possible exposure to any hazardous or toxic fluids. Wear the proper personal protective equipment. Potential hazards include, but are not limited to, high temperature, flammable, acidic, caustic, explosive, and other risks. You must handle and dispose of pumped fluid in compliance with the applicable environmental regulations.

1. Slowly close the discharge valve.
2. Shut down and lock out the driver to prevent accidental rotation.

Deactivate the i-*ALERT*® Condition Monitor

NOTICE:
Always deactivate the condition monitor when the pump is going to be shut down for an extended period of time. Failure to do so will result in reduced battery life.

1. Touch and hold a small magnet to the condition monitor over the ITT logo until the red LEDs blink three times.
   This should take 10-15 seconds if the condition monitor is in normal operating mode and approximately five seconds if the condition monitor is in alarm mode.
2. Remove the magnet.

If the deactivation is successful, solid red LEDs will be displayed.

Reset the i-*ALERT*® Condition Monitor

To deactivate or reset the i-*ALERT*®*2* monitor, please refer to the i-*ALERT*®*2* IOM or i-ALERT2.com, *http://www.ittproservices.com/aftermarket-products/monitoring/i-alert2/* (page)

NOTICE:
Always reset the condition monitor when the pump is started after maintenance, system change, or down-time. Failure to do so may result in false baseline levels that could cause the condition monitor to alert in error.

1. Touch a magnet to the condition monitor over the ITT logo to turn the power on.The condition monitor begins to establish a new baseline vibration level.

Make the final alignment of the pump and driver

WARNING:

- ⟨Ex⟩ Always disconnect and lock out power to the driver before you perform any installation or maintenance tasks. Failure to disconnect and lock out driver power will result in serious physical injury.
  - Electrical connections must be made by certified electricians in compliance with all international, national, state, and local rules.
  - Refer to driver/coupling/gear manufacturers installation and operation manuals (IOM) for specific instructions and recommendations.
- Follow shaft alignment procedures in order to prevent catastrophic failure of drive components or unintended contact of rotating parts. Follow the coupling installation and operation procedures from the coupling manufacturer.
- ⟨Ex⟩ Alignment procedures must be followed to prevent unintended contact of rotating parts. Follow coupling manufacturer's installation and operation procedures.

You must check the final alignment after the pump and driver are at operating temperature. For initial alignment instructions, see the Installation chapter.

1. Run the unit under actual operating conditions for enough time to bring the pump, driver, and associated system to operating temperature.
2. Shut down the pump and the driver.
3. Remove the coupling guard.
   See Remove the coupling guard in the Maintenance chapter.
4. Check the alignment while the unit is still hot.
   See Pump-to-driver alignment in the Installation chapter.
5. Reinstall the coupling guard.
6. Restart the pump and driver.

Maintenance

Maintenance schedule

Maintenance inspections

A maintenance schedule includes these types of inspections:

- Routine maintenance
- Routine inspections
- Three-month inspections
- Annual inspections

Shorten the inspection intervals appropriately if the pumped fluid is abrasive or corrosive or if the environment is classified as potentially explosive.

Routine maintenance

Perform these tasks whenever you perform routine maintenance:

- Lubricate the bearings.
- Inspect the seal.

Routine inspections

Perform these tasks whenever you check the pump during routine inspections:

- Check the level and condition of the oil through the sight glass on the bearing frame.
- Check for unusual noise, vibration, and bearing temperatures.
- Check the pump and piping for leaks.
- Analyze the vibration.
- Inspect the discharge pressure.
- Inspect the temperature.
- Check the seal chamber and stuffing box for leaks.
  - Ensure that there are no leaks from the mechanical seal.
  - Adjust or replace the packing in the stuffing box if you notice excessive leaking.

Three-month inspections

Perform these tasks every three months:

- Check that the foundation and the hold-down bolts are tight.
- Check the packing if the pump has been left idle, and replace as required.
- Change the oil every three months (2000 operating hours) at minimum.
  - Change the oil more often if there are adverse atmospheric or other conditions that might contaminate or break down the oil.
- Check the shaft alignment, and realign as required.

Annual inspections

Perform these inspections one time each year:

- Check the pump capacity.
- Check the pump pressure.
- Check the pump power.

If the pump performance does not satisfy your process requirements, and the process requirements have not changed, then perform these steps:

1. Disassemble the pump.
2. Inspect it.

3. Replace worn parts.

Bearing maintenance

These bearing lubrication sections list different temperatures of the pumped fluid. If the pump is ATEX-certified and the temperature of the pumped fluid exceeds the permitted temperature values, then consult your ITT representative.

Bearing lubrication schedule

Type of bearing	First lubrication	Lubrication intervals
Oil-lubricated bearings	Add oil before you install and start the pump. Change the oil after 200 hours for new bearings.	After the first 200 hours, change the oil every 2000 operating hours or every three months.
Grease-lubricated bearings	Grease-lubricated bearings are initially lubricated at the factory.	Regrease bearings every 2000 operating hours or every three months.

Lubricating-oil requirements

Oil requirements based on temperature

For the majority of operating conditions, bearing temperatures run between 49°C | 120°F and 82°C | 180°F, and you can use an oil of ISO viscosity grade 68 at 38°C | 100°F. If temperatures exceed 82°C | 180°F, refer to the table for temperature requirements.

Temperature	Oil requirement
Bearing temperatures exceed 82°C	180°F	Use ISO viscosity grade 100 with bearing-frame cooling or finned-tube oil cooler. The finned-tube oil cooler is standard with the HT 3196 model and optional for all other models.
Pumped-fluid temperatures exceed 177°C	350°F	Use synthetic lubrication.

Oil volumes

Oil volume requirements

This table shows the required amount of oil for oil-lubricated bearings.

Frame	ml	Qts.	Oz.
STi	400	0.5	16
MTi	1400	1.5	47
LTi	1400	1.5	48
XLT-i and i17	3000	3	96

Acceptable oil for lubricating bearings

Acceptable lubricants

Examples of acceptable high quality turbine oils with rust and oxidation inhibitors.

Brand	Lubricant type
Chevron	GTS Oil 68
Exxon	Teresstic EP 68
Mobil	DTE 26 300 SSU @ 38°C | 100°F
Philips	Mangus Oil 315
Shell	Tellus Oil 68
Sunoco	Sunvis 968
Royal Purple	SYNFILM ISO VG 68 Synthetic Lube

Examples of acceptable synthetic lubricants.

Brand	Lubricant type
Castrol	Hyspin R&O 220
Chevron	GST 220
Exxon	Teresstic 220
Mobil	DTE Oil BB SHC 630
Shell	Marlina 220 Tellus 220
Sunoco	Sunvis 9220
Texaco	Regal R&O 220 Rando HD 220
Royal Purple	Synfilm GT 220 Synergy 220

Regrease the grease-lubricated bearings

NOTICE:
Make sure that the grease container, the greasing device, and the fittings are clean. Failure to do this can result in impurities entering the bearing housing when you regrease the bearings.

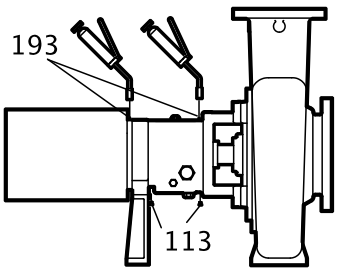

Figure 45: Bearing lubrication

1. Wipe dirt from the grease fittings.
2. Remove the two grease-relief plugs from the bottom of the frame.
3. Fill both of the grease cavities through the fittings with a recommended grease until the fresh grease comes out of the relief holes.
4. Make sure that the frame seals are seated in the bearing housing.
   If they are not, press them in place with the drains located at the bottom.
5. Reinstall the grease-relief plugs.
6. Wipe off any excess grease.
7. Recheck the alignment.

The bearing temperature usually rises after you regrease due to an excess supply of grease. Temperatures return to normal in about two to four operating hours as the pump runs and purges the excess grease from the bearings.

Lubricating-grease requirements

Precautions

NOTICE:

- Never mix greases of different consistencies (NLGI 1 or 3 with NLGI 2) or with different thickeners. For example, never mix a lithium-based grease with a polyurea-based grease. Doing so may result in decreased performance.
- Remove the bearings and old grease if you need to change the grease type or consistency. Failure to do so may result in equipment damage or decreased performance.

Bearing temperature

Bearing temperatures are generally about 18°C | 20°F greater than bearing-housing outer surface temperatures.
This table shows the type of grease required for the operating temperature of the pump.

Bearing temperature	Type of grease
-15°C to 110°C | 5°F to 230°F	Use a lithium-based mineral-oil grease with a consistency of NLGI 2.
Exceed 177°C | 350°F	Use a high-temperature grease. Mineral-oil greases should have oxidation stabilizers and a consistency of NGLI 3.

Grease recommendations based on temperature

Most pumps use Sunoco 2EP grease. High temperature units that can pump fluids with a temperature greater than 177°C | 350°F use Mobil SCH32.
This table shows which brand of grease to use when lubricating the pump.

Brand	When temperature of pumped fluid is less than 177°C | 350°F NLGI consistency 2	When temperature of pumped fluid is greater than177°C | 350°F NLGI consistency 3
Mobil	Mobilux EP2	SCH32
Exxon	Unirex N2	Unirex N3
Sunoco	Mutipurpose 2EP	N/A
SKF	LGMT 2	LGMT 3

Lubricate the bearings after a shutdown period

1. Flush out the bearings and bearing frame with a light oil to remove contaminants. During flushing, make sure to rotate the shaft slowly by hand.
2. Flush the bearing housing with the proper lubricating oil to ensure oil quality after cleaning.
3. Refer to "Reassembly" section for proper bearing greasing procedure.

Shaft seal maintenance

Mechanical-seal maintenance

WARNING:
⟨Ex⟩ The mechanical seal used in an Ex-classified environment must be properly certified. Prior to startup, make sure that all areas that could leak pumped fluid to the work environment are closed.

CAUTION:
Never operate the pump without liquid supplied to mechanical seal. If you run a mechanical seal dry, even for a few seconds, this can cause seal damage. Physical injury can occur if a mechanical seal fails.

Cartridge-type mechanical seals

Cartridge-type mechanical seals are commonly used. Cartridge seals are preset by the seal manufacturer and require no field settings. Cartridge seals installed by the user require disengagement of the holding clips prior to operation, allowing the seal to slide into place. If the seal has been installed in the pump by ITT, these clips have already been disengaged.

Other mechanical seal types

For other types of mechanical seals, refer to the instructions provided by the seal manufacturer for installation and setting.

Reference drawing

The manufacturer supplies a reference drawing with the data package. Keep this drawing for future use when you perform maintenance and seal adjustments. The seal drawing specifies the required flush fluid and attachment points.

Before you start the pump

Check the seal and all flush piping.

Mechanical seal life

The life of a mechanical seal depends on the cleanliness of the pumped fluid. Due to the diversity of operating conditions, it is not possible to give definite indications as to the life of a mechanical seal.

Packed stuffing-box maintenance

WARNING:

- Packed stuffing boxes are not allowed in an ATEX-classified environment.
- Never attempt to replace the packing until the driver is properly locked out and the coupling spacer is removed.

Accepted leakage rate

It is not necessary to shut down or disassemble the pump to inspect the packing operation. During normal operation, the packing should leak approximately one drop per second.

Adjustment of gland

Adjust the gland if the leakage rate is greater than or less than the specified rate.

Evenly adjust each of the two gland bolts with a one-quarter (1/4) turn until the desired leakage rate is obtained. Tighten the bolts to decrease the rate. Loosen the bolts to increase the rate.

Tightening of packing

NOTICE: Never over-tighten packing to the point where less than one drop per second is observed. Over-tightening can cause excessive wear and power consumption during operation.

If you cannot tighten the packing to obtain less than the specified leakage rate, then replace the packing.

Dynamic-seal maintenance

WARNING:

Dynamic seals are not allowed in an ATEX-classified environment.

About the dynamic seal

Dynamic seal parts do not wear substantially to affect operation and do not require maintenance unless the service is particularly abrasive or corrosive.

Repeller

The dynamic repeller prevents pumpage leaks through the stuffing box when the pump operates under published acceptable conditions.

Static seal

A static seal prevents leakage when the pump is shut down. A static seal is either of the following:

- a lip seal
- an elastomeric-face seal
- graphite packing

The only maintenance that the lip seal and the elastomeric-face seal require is replacement when leakage becomes excessive.

The graphite packing should be installed as stuffing-box packing and is designed to run dry.

Disassembly

Disassembly precautions

WARNING:

- (Ex) This manual clearly identifies accepted methods for disassembling units. These methods must be adhered to. Trapped liquid can rapidly expand and result in a violent explosion and injury. Never apply heat to impellers, propellers, or their retaining devices to aid in their removal unless explicitly stated in this manual.
- (Ex) Always disconnect and lock out power to the driver before you perform any installation or maintenance tasks. Failure to disconnect and lock out driver power will result in serious physical injury.
  - Electrical connections must be made by certified electricians in compliance with all international, national, state, and local rules.
  - Refer to driver/coupling/gear manufacturers installation and operation manuals (IOM) for specific instructions and recommendations.
- Crush hazard. The unit and the components can be heavy. Use proper lifting methods and wear steel-toed shoes at all times.
- The pump can handle hazardous and toxic fluids. Identify the contents of the pump and observe proper decontamination procedures in order to eliminate the possible exposure to any hazardous or toxic fluids. Wear the proper personal protective equipment. Potential hazards include, but are not limited to, high temperature, flammable, acidic, caustic, explosive, and other risks. You must handle and dispose of pumped fluid in compliance with the applicable environmental regulations.
- A small amount of liquid will be present in certain areas like the seal chamber.

NOTICE:

- Avoid injury. Worn pump components can have sharp edges. Wear appropriate gloves while handling these parts.
- Make sure that all replacement parts are available before you disassemble the pump for overhaul.

Tools required

In order to disassemble the pump, you need these tools:

- Bearing puller
- Brass drift punch
- Cleaning agents and solvents
- Dial indicators
- Feeler gauges
- Hex wrenches
- Hydraulic press
- Induction heater
- Leveling blocks and shims
- Lifting sling
- Micrometer
- Rubber mallet
- Screwdriver
- Snap-ring pliers
- Torque wrench with sockets
- Wrenches
- Lifting eyebolt (dependent on pump size)

Drain the pump

CAUTION:
- Allow all system and pump components to cool before you handle them to prevent physical injury.
- If your pump is a Model NM3171, NM3196, 3198, 3298, V3298, SP3298, 4150, 4550, or 3107 there is a possible risk of static electric discharge from plastic parts that are not properly grounded. If the pumped fluid is non-conductive, drain and flush the pump with a conductive fluid under conditions that will not allow for a spark to be released to the atmosphere.

1. Close the isolation valves on the suction and discharge sides of the pump.
   You must drain the system if no valves are installed.
2. Open the drain valve.
   Do not proceed until liquid stops coming out of the drain valve. If liquid continues to flow from the drain valve, the isolation valves are not sealing properly and you must repair them before you proceed.
3. Leave the drain valve open and remove the drain plug located on the bottom of the pump housing.
   Do not reinstall the plug or close the drain valve until the reassembly is complete.
4. Drain the liquid from the piping and flush the pump if it is necessary.
5. Disconnect all auxiliary piping and tubing.
6. Remove the coupling guard.

Remove the coupling

1. Disconnect the coupling.
2. Remove the C-face adapter.
3. Remove the coupling-guard pump end-plate.

Remove the back pull-out assembly

CAUTION:
Never remove the back pull-out assembly without assistance.

1. Is your bearing frame oil lubricated?
   - If No: Proceed to step 2.
   - If Yes:
     1. Remove the bearing-frame drain plug (408A) in order to drain oil from the bearing frame.
     2. Replace the plug after the oil is drained.

3. Remove the oil reservoir, if equipped.

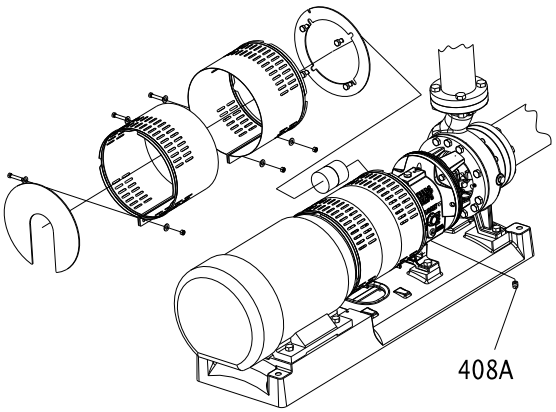

Figure 46: Back pull-out assembly removal (oil lubricated bearing frame)

NOTICE:
Oil analysis should be part of a preventive maintenance program that determines the cause of a failure. Save the oil in a clean container for inspection.

2. Does your pump use a C-face adapter?
   - If Yes: Place one sling from the hoist through the frame adapter (108) or frame (228A) for the STi and a second sling from the hoist through the C-face adapter.
   - If No: Place a sling from the hoist through the frame adapter (108) or the frame (228A) for the STi.

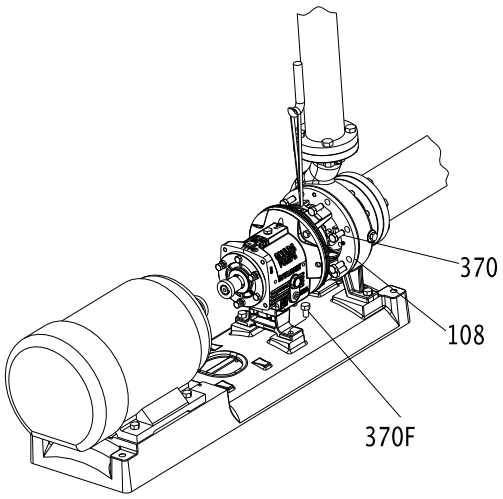

Figure 47: Back pull-out assembly removal (with C-face adapter)

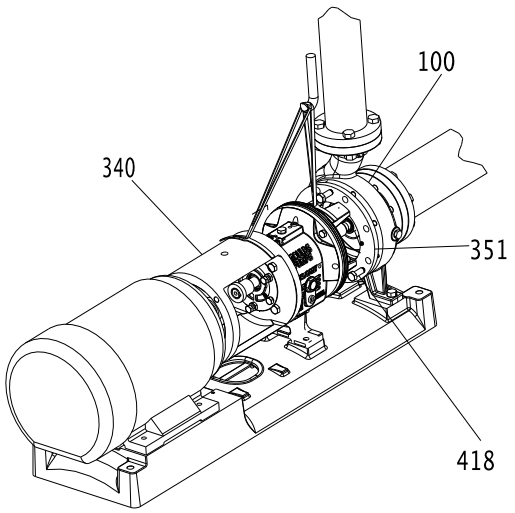

Figure 48: Back pull-out assembly removal (without C-face adapter)

3. Remove the hold-down bolts of the bearing frame foot.
4. Remove the casing bolts.

WARNING:
- Never use heat to disassemble the pump due to the risk of an explosion from trapped liquid.

5. Tighten the jackscrews evenly, using an alternating pattern, in order to remove the back pull-out assembly.
   You can use penetrating oil if the adapter to the casing joint is corroded.
6. Remove the back pull-out assembly from the casing (100).
7. Mark and remove the shims from under the frame foot and save them for reassembly.
8. Remove and discard the casing gasket.
   You will insert a new casing gasket during reassembly.
9. Remove the jackscrews.
10. Clean all gasket surfaces.
    Clean surfaces prevent the casing gasket from partially adhering to the casing due to binders and adhesives in the gasket material.

Remove the coupling hub

1. Clamp the frame adapter securely to the workbench.
2. Remove the coupling hub.

Mark the shaft for relocation of the coupling hub during reassembly.

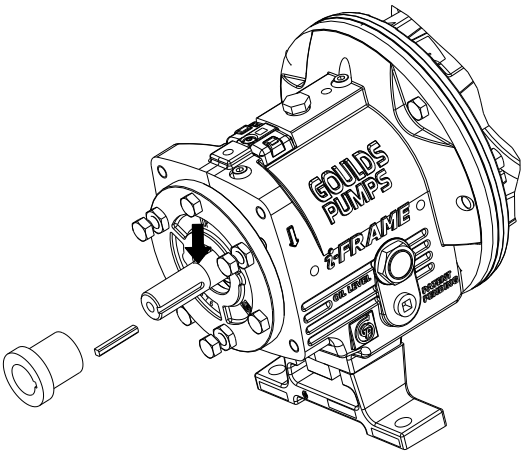

Figure 49: Coupling hub removal

Impeller removal

Remove the impeller (STi, MTi, and LTi)

WARNING:
Never apply heat to remove an impeller. The use of heat may cause an explosion due to trapped liquid, resulting in severe physical injury and property damage.

CAUTION:
Wear heavy work gloves when you handle impellers. The sharp edges can cause physical injury.

1. Slide the shaft wrench (A05107A or A01676A) over the shaft (122) and key.
2. Rotate the impeller (101) clockwise (viewed from the impeller end of the shaft) and raise the wrench off of the work surface.
3. To loosen the impeller, quickly turn it counter-clockwise (viewed from the impeller end of the shaft) while impacting the wrench handle on the workbench or a solid block.

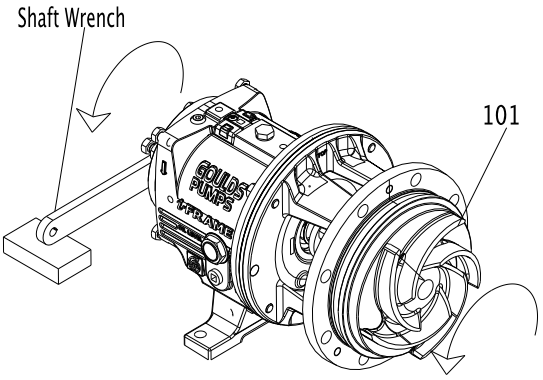

Figure 50: Loosen impeller

4. Repeat step 3 until the impeller becomes loose.
5. Remove and discard the impeller O-ring (412A).

You will insert a new O-ring during reassembly.

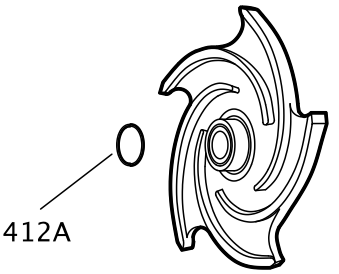

Figure 51: O-ring for models 3196, HT 3196, NM 3196, 3198, and 3796

If the impeller cannot be removed by the previous methods, cut the shaft between the gland and the frame, remove the impeller, stuffing-box cover, gland, sleeve, and shaft end as a unit. Do not apply heat.

Remove the impeller (XLT-i, and i17)

WARNING:
Never apply heat to remove an impeller. The use of heat may cause an explosion due to trapped liquid, resulting in severe physical injury and property damage.

CAUTION:
Wear heavy work gloves when you handle impellers. The sharp edges can cause physical injury.

Clamp the frame foot (241) to the workbench when you use this method to remove the impeller.

1. Remove the impeller plug (458Y) from the front of the impeller (101) and discard the Teflon gasket (428D).

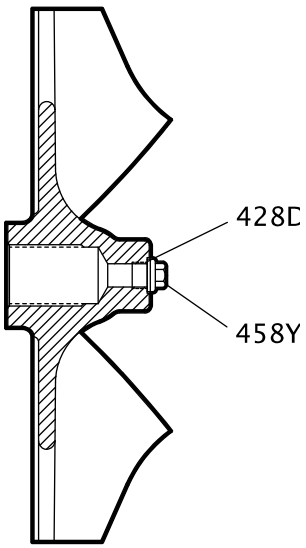

2. Spray penetrating oil through the plug hole into the cavity at the end of the shaft and let it penetrate for 15 minutes.
3. While waiting, rotate the shaft several times to distribute the oil.
4. Slide the shaft wrench (A05107A) over the shaft (122) and key.
5. Rotate the impeller clockwise (viewed from the impeller end of the shaft) and raise the wrench off of the work surface.

6. To loosen the impeller, quickly turn the impeller counter-clockwise (viewed from the impeller end of the shaft) while impacting the wrench handle on the workbench or a solid block.
7. Repeat step 6 until the impeller becomes loose.
8. If step 6 and 7 do not work then do this:
   a) Place a socket wrench over the cast nut on the impeller hub.
   b) Turn the impeller counter-clockwise (viewed from the impeller end of the shaft).

   Be sure that the impeller wrench rests on the workbench or a solid block and that the power end is secure on the work surface.
9. Remove and discard the impeller O-ring (412A).
   You will insert a new O-ring during reassembly.

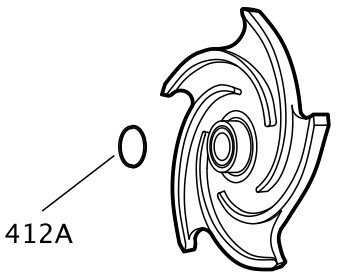

Figure 52: O-ring for models 3196 and HT 3196

If the impeller cannot be removed by the previous methods, cut the shaft between the gland and the frame, remove the impeller, stuffing-box cover, gland, sleeve, and shaft end as a unit. Do not apply heat.

Seal-chamber cover removal

Seal-chamber removal procedures

Choose from one of these procedures to remove the seal-chamber cover.

Table 10: Procedures for seal-chamber cover removal by model

Model	Procedure
3196, CV 3196, HT 3196, LF 3196, 3796	Remove the seal-chamber cover.
NM 3196, 3198	Remove the seal-chamber cover and/or backplate.

Remove the seal-chamber cover (3196, CV 3196, HT 3196, LF 3196, 3796)

1. Remove the gland stud nuts (355).
2. Remove the seal-chamber stud nuts (370H).

3. Remove the seal chamber (184).

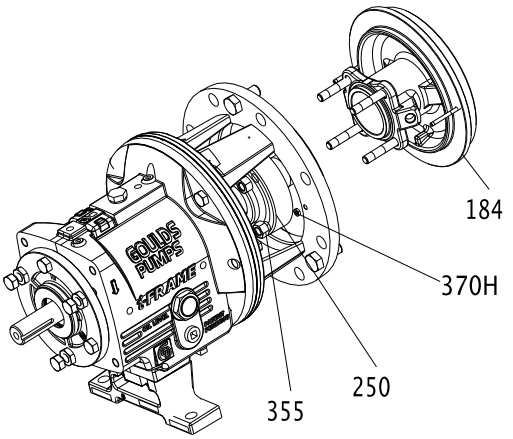

Figure 53: Seal chamber cover removal

4. Remove the shaft sleeve (126) if it is used.
   The mechanical seal is attached to the sleeve.

NOTICE:
Be careful with the stationary portion of the mechanical seal that is either clamped between the backplate and the gland or seated in the seal-chamber bore. Failure to do so may result in equipment damage.

5. Remove the rotary portion of the seal from the sleeve by loosening the setscrews and sliding it off the sleeve.
   Refer to the mechanical-seal instructions for more information.
6. Remove the gland (250), the stationary portion of the seal, and the O-ring (360Q).

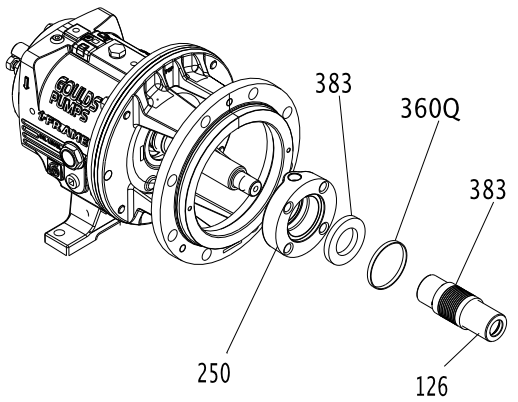

Figure 54: Gland removal

Remove the stuffing-box cover (3196, CV 3196, HT 3196, LF 3196, 3796)

1. Remove the gland nuts (355) and the gland (107).
2. Remove the stuffing-box-cover nuts (370H).

3. Remove the stuffing-box cover (184).

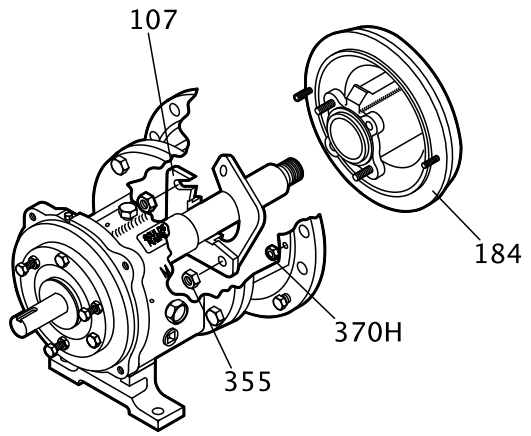

Figure 55: Stuffing box cover removal

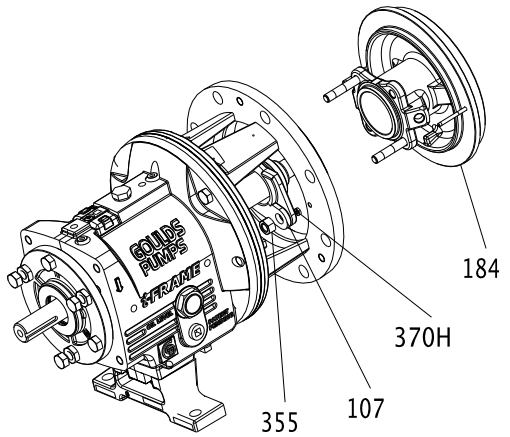

Figure 56: Stuffing box cover removal

4. Remove the shaft sleeve (126).

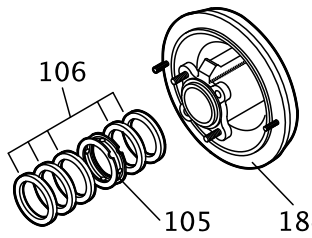

Figure 57: Remove the shaft sleeve

5. Remove the packing (106) and lantern ring (105) from the stuffing-box cover (184).

A lantern ring does not come with self-lubricating graphite packing.

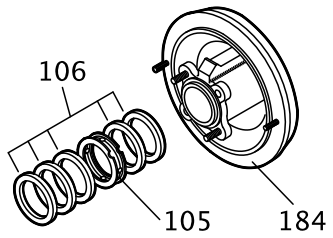

Figure 58: Packing and lantern ring removal

Remove the dynamic seal

1. Remove the stud nuts (370H).
2. Remove the dynamic-seal assembly.

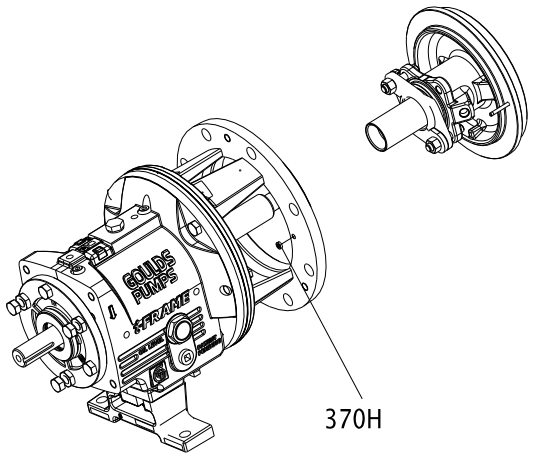

Figure 59: Dynamic seal removal

3. Remove the socket head cap screws (265).
4. Remove the packed stuffing box cover (184) and gasket (264).
5. Remove the repeller (262) from the backplate (444).

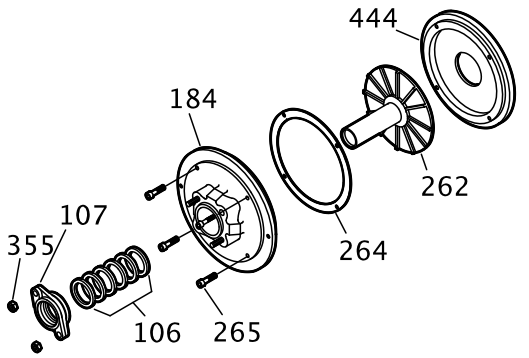

Figure 60: Repeller removal

Remove the frame adapter (MTi, LTi, XLT-i, i17)

The 3198 frame adapter is not interchangeable with the adapter of any other model.

1. Remove the dowel pins (469B) and the bolts (370B).
2. Remove the frame adapter (108).
3. Remove and discard the gasket (360D).

You will install a new gasket during reassembly.

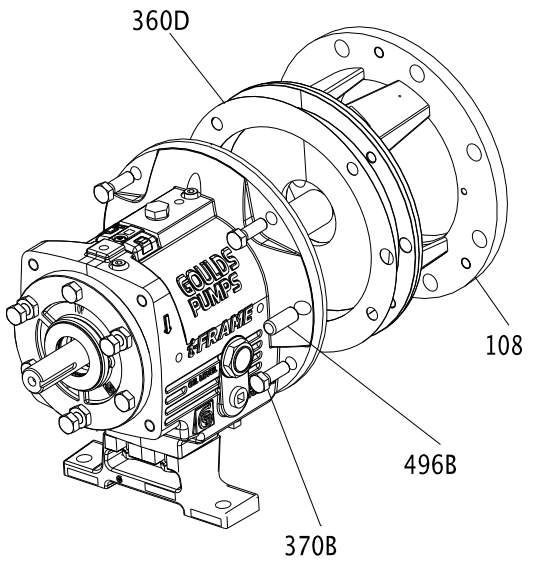

Remove the inboard labyrinth oil seal

Labyrinth oil-seal O-rings are part of the 3196 maintenance kits, and they are sold separately.

1. Determine the fit of your labyrinth oil seal.

Table 11: Labyrinth oil-seal fit

Model	Type of fit
STi	O-ring fit into the bearing-frame adapter (228A)
MTi, LTi, XLT-i and i17	O-ring fit into the frame adapter

2. Remove the O-rings (497H and 497J) and the seal (333A).

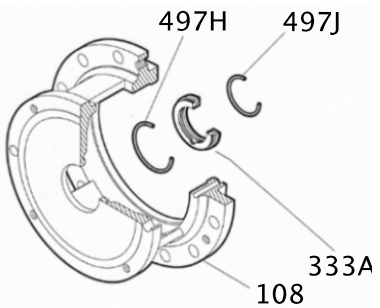

Figure 61: O-ring removal

Power-end disassembly

Disassemble the power end (STi, MTi)

1. Remove the clamp screws (370C) and back off the jam nuts (423).
2. Tighten the jack screws (370D) evenly to move the bearing housing (134) out of the bearing frame (228A).

3. Remove the shaft assembly from the bearing frame (228A).

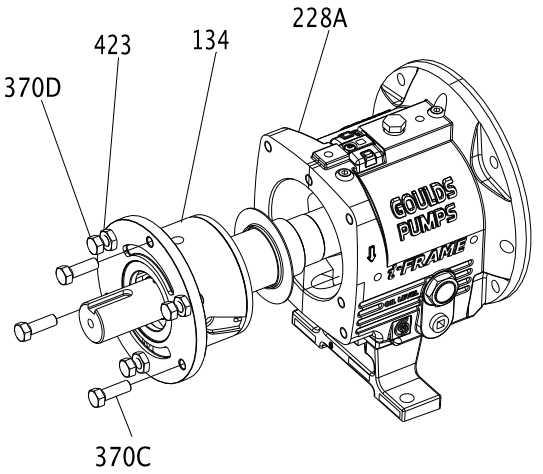

Figure 62: Shaft assembly removal

4. Remove the jack screws (370D) with nuts (423).
5. Remove the bearing housing O-ring (496) and the bearings.
6. Remove the outboard bearing retaining snap ring (361A).

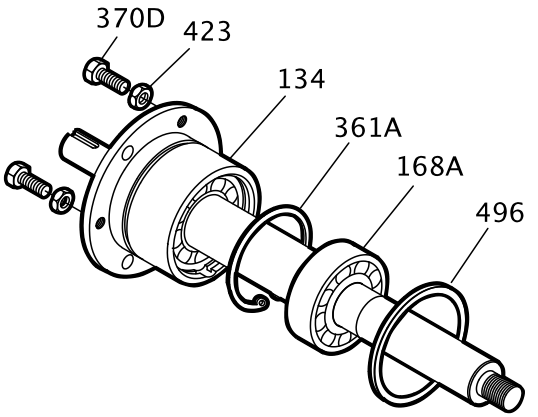

Figure 63: Outboard bearing retaining snap ring removal

7. Remove the bearing housing (134) and bearings (112A and 168A) from the shaft (122).

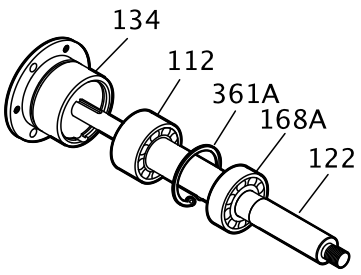

Figure 64: Bearing housing and bearings removal

8. Remove the bearing locknut (136) and bearing lock washer (382).
9. Remove the inboard bearing (168A).
10. Remove the outboard bearing (112A).

NOTICE:
Use force only on the inner race when you press bearings off the shaft. Do not use force in situations in which you might break a part. Doing so may result in equipment damage.

NOTICE:
Save the bearings for inspection. Do not reuse the bearings. Doing so may result in decreased performance.

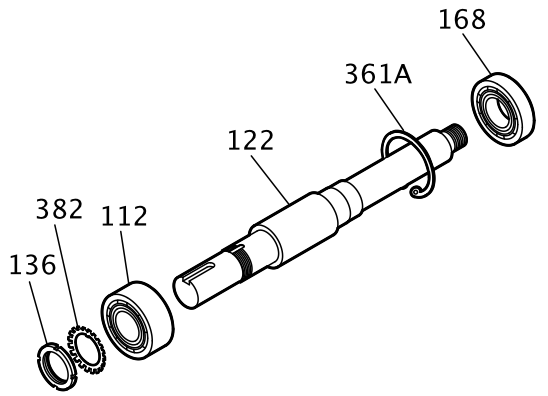

Figure 65: Outboard bearing removal

Disassemble the power end (STi and MTi with duplex bearings)

1. Remove the clamp screws (370C) and back off the jam nuts (423).
2. Tighten the jack screws (370D) evenly to move the bearing housing (134) out of the bearing frame (228A).
3. Remove the shaft assembly from the bearing frame (228A).

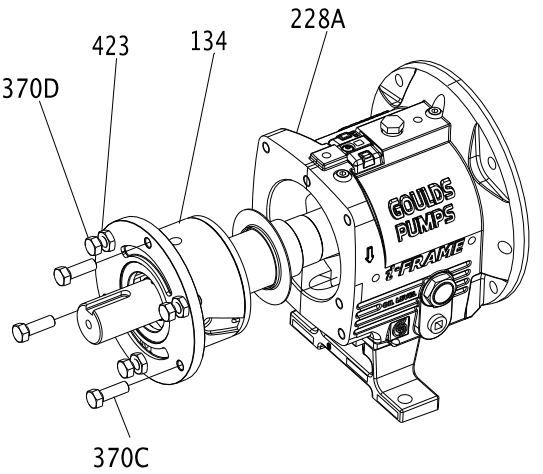

Figure 66: Shaft assembly removal

4. Remove the jack screws (370D) with the nuts (423).

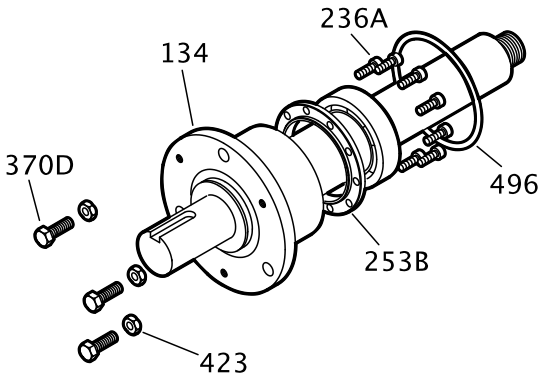

Figure 67: Jack screw removal

5. Remove the bearing housing O-ring (496).
6. Remove the clamp ring screws (236A) and separate the clamp ring (253B) from the bearing housing (134).
   You must remove the bearings before you can remove the clamp ring from the shaft.
7. Remove the bearing housing (134) and the bearings (112A and 168A) from the shaft (122).

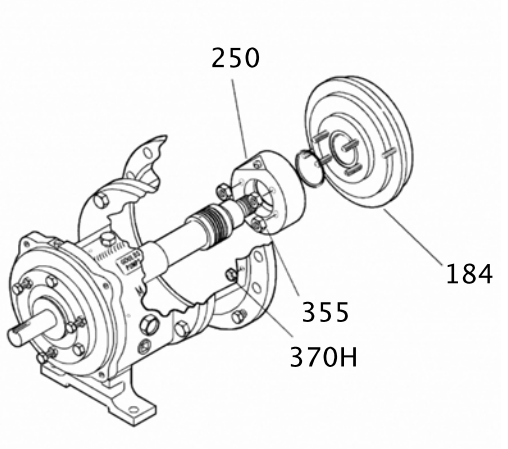

Figure 68: Bearing housing and bearing removal

8. Remove the inboard bearing (168A).

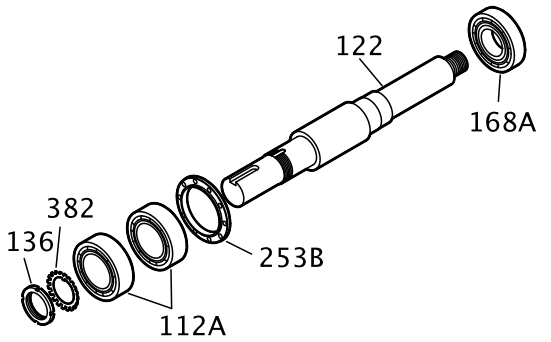

Figure 69: Inboard bearing removal

9. Remove the bearing locknut (136) and bearing lockwasher (382).
10. Remove the outboard bearings (112A).

NOTICE:
Use force only on the inner race when you press bearings off the shaft. Do not use force in situations in which you might break a part. Doing so may result in equipment damage.

NOTICE:
Save the bearings for inspection. Do not reuse the bearings. Doing so may result in decreased performance.

11. Remove the outboard labyrinth oil seal (332A) from the bearing housing (134). Remove the O-rings (497F and 497G) if it is necessary. Labyrinth oil seal O-rings are part of the 3196 maintenance kits and they are sold separately.

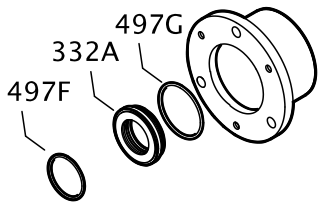

Figure 70: Outboard labyrinth oil seal removal

Disassemble the power end (LTi)

1. Remove the clamp screws (370C) and back off the jam nuts (423).
2. Evenly tighten the jack screws (370D) to move the bearing housing (134) out of the bearing frame (228A).
3. Remove the shaft assembly from the bearing frame (228A).

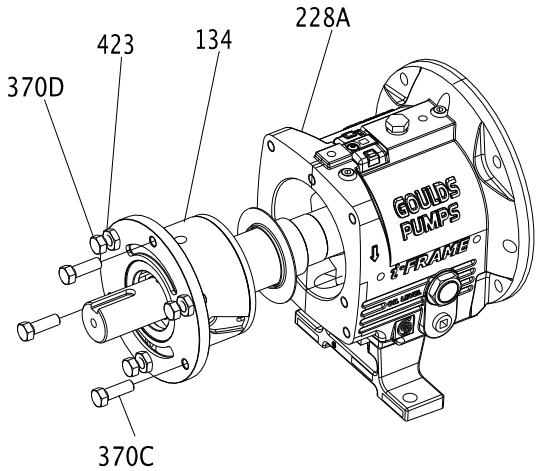

Figure 71: Shaft assembly removal

4. Remove the jack screws (370D) with the nuts (423).
5. Remove the clamp-ring screws (236A) and separate the clamp ring (253B) from the bearing housing (134).

You must remove the bearings before you can remove the clamp ring from the shaft.

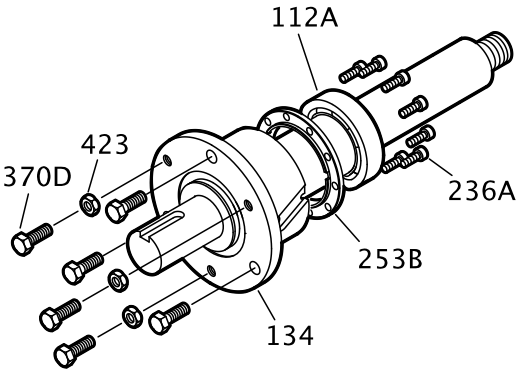

Figure 72: Clamp ring removal

6. Remove the bearing housing (134) and the bearings (112A and 168A) from the shaft (122).

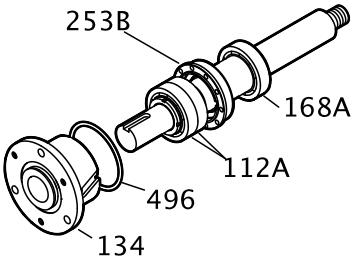

Figure 73: Bearing housing and bearing removal

7. Remove the bearing housing O-ring (496) and the inboard bearing (168A).

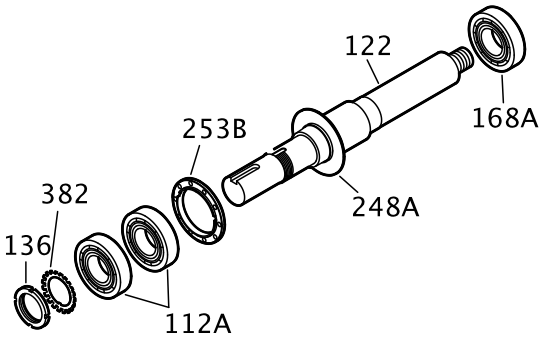

Figure 74: O-ring removal

8. Remove the bearing locknut (136) and the bearing lockwasher (382).
9. Remove the outboard bearings (112A) and the clamp ring (253B).

NOTICE:
Do not remove the oil flinger unless it is damaged. Doing so may result in unnecessary shutdown time or equipment damage.

NOTICE:
Use force only on the inner race when you press bearings off the shaft. Do not use force in situations in which you might break a part. Doing so may result in equipment damage.

NOTICE:
Save the bearings for inspection. Do not reuse the bearings. Doing so may result in decreased performance.

10. Remove the outboard labyrinth oil seal (332A) from the bearing housing (134).
11. Remove the O-rings (497F and 497G) if it is necessary.
    Labyrinth oil-seal O-rings are part of the 3196 maintenance kits, and they are sold separately.

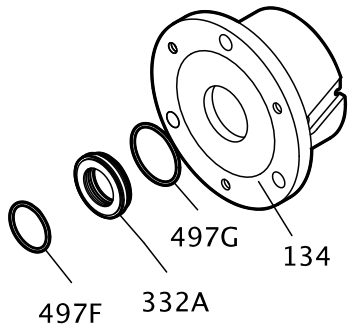

Figure 75: O-ring removal

Disassemble the power end (XLT-i and i17)

1. Remove the bearing frame from the frame foot (241) using the frame-foot bolts (370F).

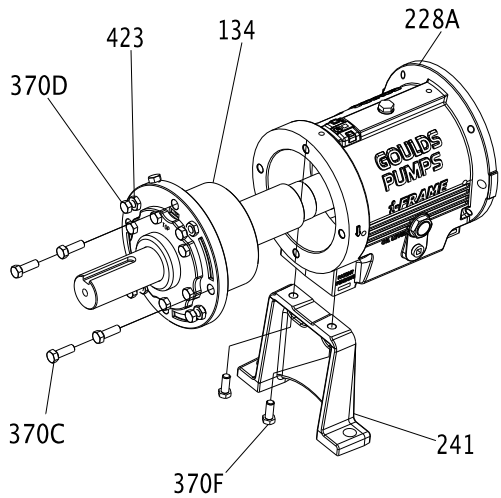

2. Remove the clamp screws (370C) and back off the jam nuts (423).
3. Tighten the jack screws (370D) evenly to move the bearing housing (134) out of the bearing frame (228A).
4. Remove the shaft assembly from the bearing frame (228A).
5. Remove the jack screws (370D), the nuts (423), and the bearing housing O-ring.

6. Remove the inboard bearing (168A).

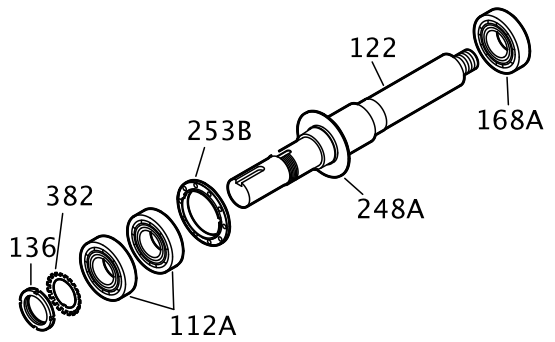

7. Remove the bolts (371C), the bearing end cover (109A), and the gasket (360C).
8. Remove the outboard labyrinth oil seal (332A) from the end cover (109A).
9. Remove the O-rings (497F and 497G) if it is necessary.
   Labyrinth oil-seal O-rings are part of the 3196 maintenance kits, and they are sold separately.

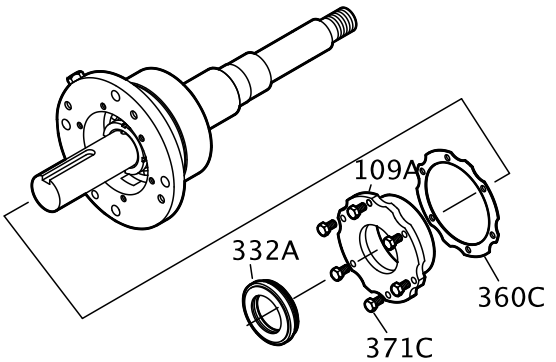

10. Remove the bearing housing (134) and the bearing (112A) from the shaft (122).

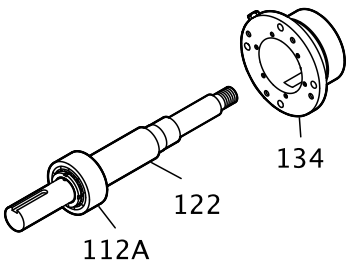

11. Remove the bearing locknut (136), the bearing lockwasher (382), and the outboard bearing (112A).

NOTICE:
Use force only on the inner race when you press bearings off the shaft. Do not use force in situations in which you might break a part. Doing so may result in equipment damage.

NOTICE:
Save the bearings for inspection. Do not reuse the bearings. Doing so may result in decreased performance.

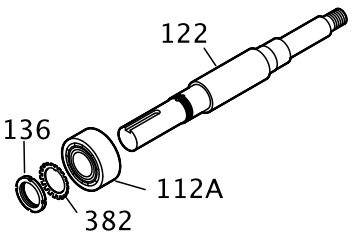

Disassemble the power end (XLT-i and i17 with duplex bearings)

1. Remove the bearing frame to frame foot (241) using the frame-foot bolts (370F).

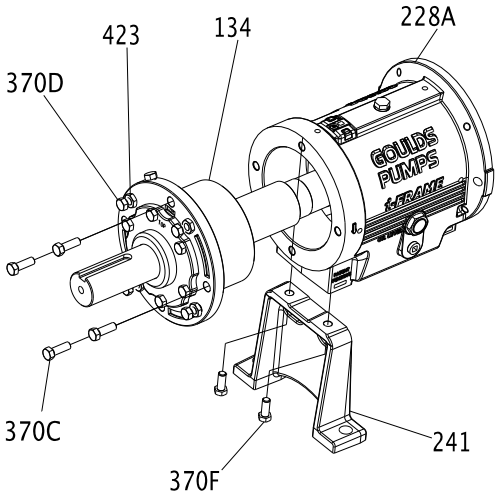

2. Remove the clamp screws (370C) and back off the jam nuts (423).
3. Tighten the jack screws (370D) evenly to move the bearing housing (134) out of the bearing frame (228A).
4. Remove the shaft assembly from the bearing frame (228A).
5. Remove the jack screws (370D) and the nuts (423).
6. Remove the bearing housing O-ring (496) and the inboard bearing (168A).

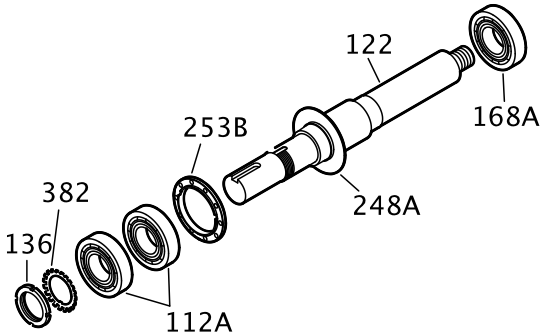

7. Remove the bolts (371C), the end cover (109A), and the gasket (360C).

8. If necessary, remove the outboard labyrinth oil seal (332A) from the end cover (109A) and remove the O-rings (497F and 497G).
   Labyrinth oil-seal O-rings are part of the 3196 maintenance kits, or they are sold separately.

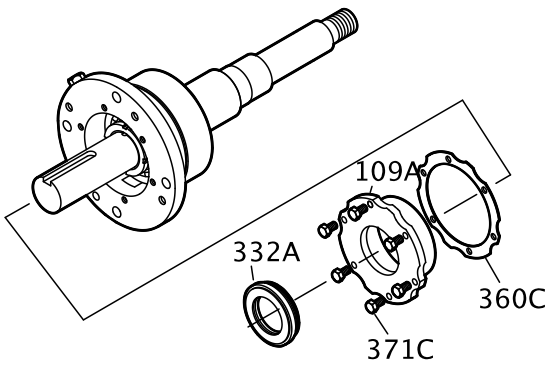

9. Remove the bearing housing (134) and bearings (112A) from the shaft (122) .

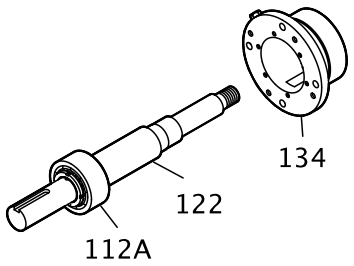

10. Remove the bearing locknut (136), the bearing lockwasher (382), and the outboard bearing (112A).

NOTICE:
Use force only on the inner race when you press bearings off the shaft. Do not use force in situations in which you might break a part. Doing so may result in equipment damage.

NOTICE:
Save the bearings for inspection. Do not reuse the bearings. Doing so may result in decreased performance.

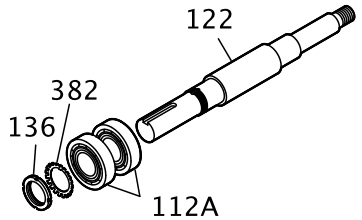

Disassemble the bearing frame

1. Remove these plugs from the bearing frame (228A).
   - oil-fill plug (113A)
   - oil-drain plug (408A)
   - sight-oiler plug (408J)
   - four oil mist/grease connection plugs (408H)

- oil-cooler inlet and outlet plugs (408L and 408M) or oil cooler

2. For the MTi and LTi models, remove the bearing frame foot-to-frame bolts (370F) and the frame foot (241).

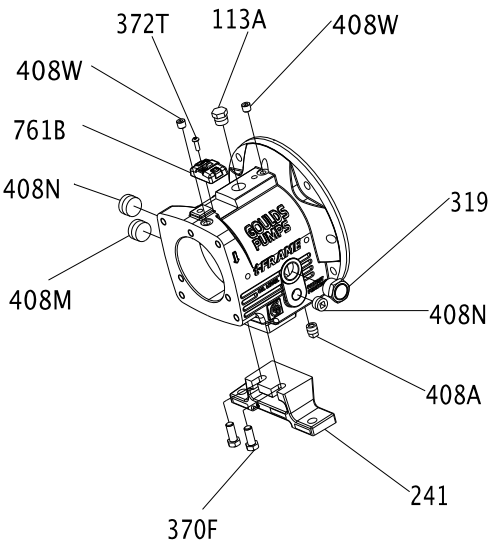

Figure 76: Plug removal

Guidelines for i-*ALERT*® Condition Monitor disposal

Precautions

WARNING:

- Never heat the condition monitor to temperatures in excess of 100°C | 212°F. Heating to these temperatures could result in death or serious injury.
- Never dispose of the condition monitor in a fire. This could result in death or serious injury.

Guidelines

The battery contained in the condition monitor does not contain enough lithium to qualify as reactive hazardous waste. Use these guidelines when disposing of the condition monitor.

- The condition monitor is safe for disposal in the normal municipal waste stream.
- Adhere to local laws when you dispose of the condition monitor.

Disassemble the C-face adapter

NOTICE:
You must properly support the motor with a clean, uncorroded eye bolt or a strap under both end bells. Failure to do so may result in equipment damage.

1. Loosen the motor-mounting bolts and remove the motor.

Table 12: Required number of motor-mounting bolts
This table shows the number of motor-mounting bolts.

Pump frame	Motor frame	Number of bolts
STi	All	4
MTi and LTi	143-286	4
	324-365	8

2. Loosen the bolts attached to the bearing-frame flange and remove the C-face adapter from the bearing frame.

Pre-assembly inspections

Guidelines

Before you assemble the pump parts, make sure you follow these guidelines:

- Inspect the pump parts according to the information in these pre-assembly topics before you reassemble your pump. Replace any part that does not meet the required criteria.
- Make sure that the parts are clean. Clean the pump parts in solvent in order to remove oil, grease, and dirt.

NOTICE:
Protect machined surfaces while you clean the parts. Failure to do so may result in equipment damage.

Replacement guidelines

Casing check and replacement

WARNING:
Avoid death or serious injury. Leaking fluid can cause fire and/or burns. Inspect and assure gasket sealing surfaces are not damaged and repair or replace as necessary.

Inspect the casing for cracks and excessive wear or pitting. Thoroughly clean gasket surfaces and alignment fits in order to remove rust and debris.

Repair or replace the casing if you notice any of these conditions:

- Localized wear or grooving that is greater than 3.2 mm | 1/8 in. deep
- Pitting that is greater than 3.2 mm | 1/8 in. deep
- Irregularities in the casing-gasket seat surface

Casing areas to inspect

The arrows point to the areas to inspect for wear on the casing:

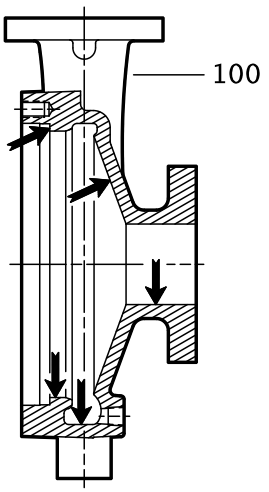

Figure 77: 3196, HT 3196, LF 3196, NM 3196, and 3198 casing

Impeller replacement

This table shows the criteria for replacing the impeller:

Impeller parts	When to replace
Impeller vanes	• When grooved deeper than 1.6 mm | 1/16 in., or • When worn evenly more than 0.8 mm | 1/32 in.
Pumpout vanes	When worn or bent more than 0.8 mm | 1/32 in.
Vane edges	When you see cracks, pitting, or corrosion damage

Impeller areas to inspect

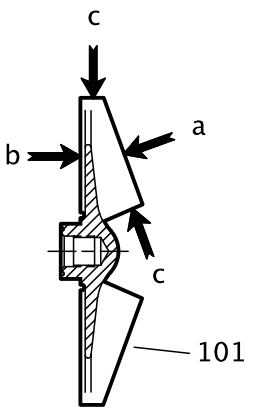

Figure 78: Areas to inspect for wear on the 3196 impeller.

Frame adapter check and replacement

- Replace the frame adapter if it has cracks or excessive corrosion damage.
- Make sure the gasket surface is clean.

Dynamic-seal repeller replacement

This table shows the criteria for replacing dynamic-seal repeller parts for the 3196, CV 3196, and LF 3196 pump models.

Dynamic seal part	When to replace
Dynamic-seal repeller vane	The grooves are deeper than 1.6 mm | 1/16 in. or are worn evenly more than 0.8 mm | 1/32 in..
Sleeve surface	The surface has grooves, pitting, or other damage.

Labyrinth seal replacement

Replace the labyrinth-seal O-ring if it has cuts and cracks.

Gaskets, O-rings, and seats replacement

WARNING:
Avoid death or serious injury. Leaking fluid can cause fire and/or burns. Replace any damaged or worn gaskets/o-rings.

- Replace all gaskets and O-rings at each overhaul and disassembly.
- Inspect the seats. They must be smooth and free of physical defects.
  In order to repair worn seats, skin cut them in a lathe while you maintain dimensional relationships with other surfaces.
- Replace parts if the seats are defective.

Shaft and sleeve replacement guidelines

Two types of sleeves

The 3198 is offered with either a metallic sleeve that uses the standard 3196 shaft or a Teflon sleeve. The Teflon sleeve requires a special shaft and a different inboard labyrinth oil seal.

Shaft measurements check

Replace the shaft (122) if any measurements exceed acceptable values. See Bearing fits and tolerances.

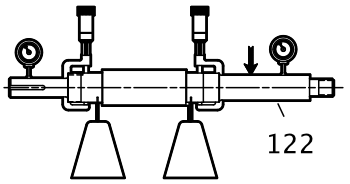

Figure 79: Shaft measurements check

Straightness check

Replace the shaft (122) if runout exceeds the values in this table:

Table 13: Shaft runout tolerances for sleeve fit and coupling fit

	Sleeve fit in millimeters | inches	Coupling fit in millimeters | inches
With sleeve	0.025 | 0.001	0.025 | 0.001
Without sleeve	0.051 | 0.002	0.025 | 0.001

Shaft and sleeve check

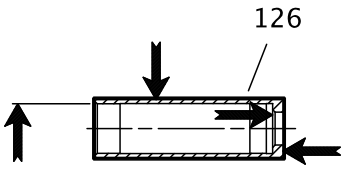

Figure 80: Shaft and sleeve check

- Check the shaft and sleeve (126) surface for grooves and pitting.
- Replace the shaft and sleeve if any grooves or pits are found.

Bearing-frame inspection

Checklist

Check the bearing frame for these conditions:

- Visually inspect the bearing frame and frame foot for cracks.
- Check the inside surfaces of the frame for rust, scale, or debris. Remove all loose and foreign material.
- Make sure that all lubrication passages are clear.
- If the frame has been exposed to pumped fluid, inspect the frame for corrosion or pitting.
- Inspect the inboard-bearing bores.
  If any bores are outside the measurements in the Bearing fits and tolerances table, replace the bearing frame.

Surface inspection locations

This figure shows the areas to inspect for wear on the bearing frame outside surface.

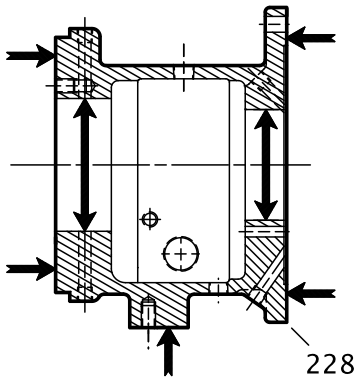

Figure 81: Outside surface inspection locations

This figure shows the areas to inspect for wear on the bearing frame inside surface.

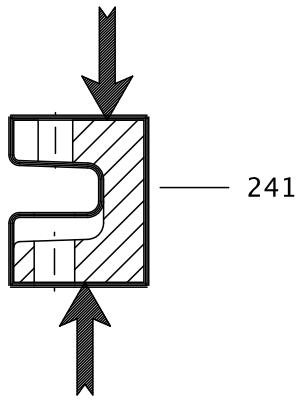

Figure 82: Inside surface inspection locations

C-face adapter inspection

Checklist

- Visually inspect the C-face adapter (340) for cracks.
- Check all surfaces for rust, scale, or debris and remove all loose and foreign material.
- Check for corrosion or pitting.

This figure shows the areas to inspect for cracks on the C-face adapter.

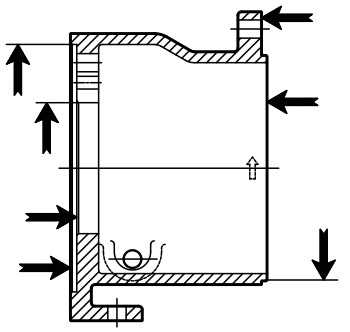

Figure 83: C-face adapter inspection locations

Seal chamber and stuffing box cover inspection

Checklist

Perform these checks when you inspect the seal chamber and stuffing box cover:

- Make sure that these surfaces are clean:
  - Seal chamber and stuffing box cover
  - Dynamic-seal backplate gasket
  - Mounting
- Make sure there is no pitting or wear greater than 3.2 mm | 1/8 in. deep. Replace the seal chamber and stuffing box cover if pitting or wear exceeds this measurement.
- Inspect the machined surfaces and mating faces noted in the figures.

These images point to the areas to inspect:

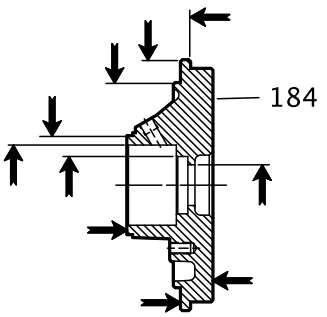

Figure 84: BigBore™ chamber

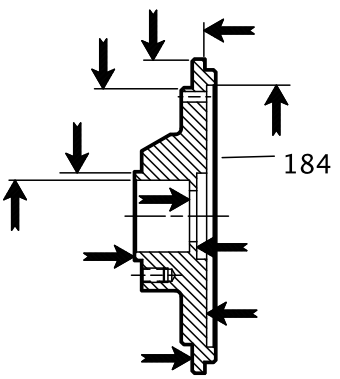

Figure 85: Stuffing box cover

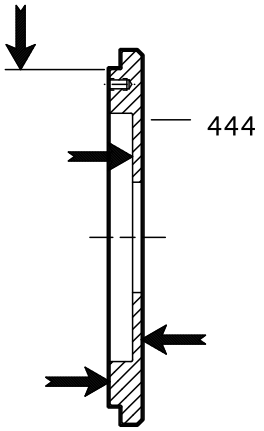

Figure 86: Dynamic-seal backplate

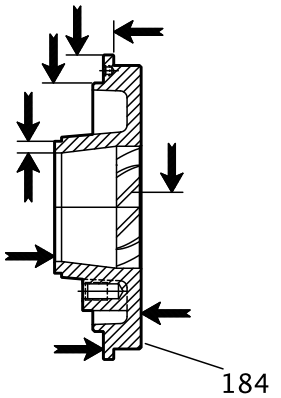

Figure 87: TaperBore™ Plus

Bearings inspection

Condition of bearings

Do not reuse bearings. The condition of the bearings provides useful information on operating conditions in the bearing frame.

Checklist

Perform these checks when you inspect the bearings:

- Inspect the bearings for contamination and damage.
- Note any lubricant condition and residue.
- Inspect the ball bearings to see if they are loose, rough, or noisy when you rotate them.
- Investigate any bearing damage to determine the cause. If the cause is not normal wear, correct the issue before you return the pump to service.

Bearing-housing inspection

Checklist

- Inspect the bearing-housing (134) bore according to the bearing fits and tolerances table.

- Replace the bearing housing if the dimensions exceed acceptable values. Reference: see Bearings fits and tolerances.
- Visually inspect the bearing housing for cracks and pits.

Checklist for specific models

This table shows bearing-housing checks that are required for specific models of pump.

Frame	Bearing-housing check
STi and MTi	Ensure that the snap-ring groove is not cracked.
LTi	Clear all grooves and holes.
XLT-i and i17	Clean the gasket surface.

Inspection locations

The following images point to the areas to inspect on the bearing housing.

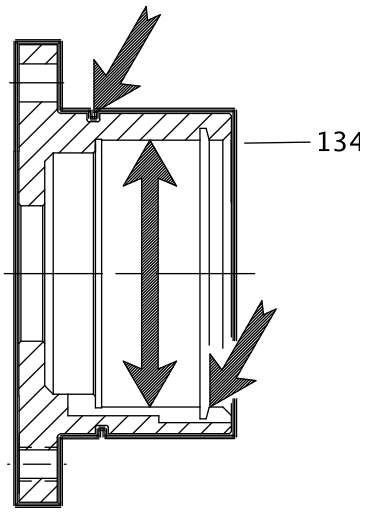

Figure 88: STi and MTi bearing housing

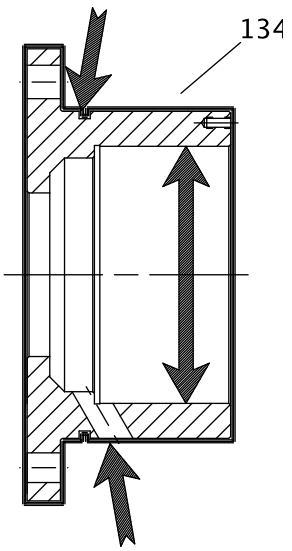

Figure 89: LTi bearing housing

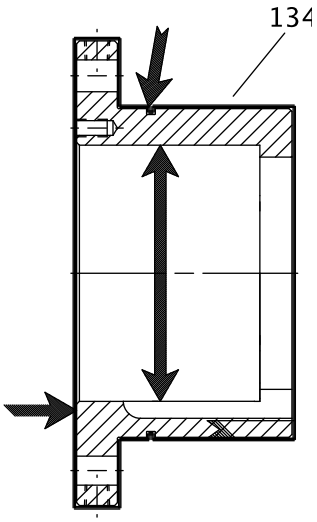

Figure 90: XLT-i and i17 bearing housing

Bearing fits and tolerances

Table 14: Bearing fits and tolerances table

This table references the bearing fits and tolerances according to the ABEC I standard.

	STi millimeters | inches	MTi millimeters | inches	LTi millimeters | inches	XLT-i, i-17 millimeters | inches
Shaft OD Inboard	35.014 | 1.3785 35.004 | 1.3781	45.014 | 1.7722 45.004 | 1.7718	55.016 | 2.1660 55.004 | 2.1655	65.016 | 2.5597 65.004 | 2.5592
Clearance	0.025 | 0.0010 tight 0.003 | 0.0001 tight	0.025 | 0.0010 tight 0.003 | 0.0001 tight	0.030 | 0.0012 tight 0.003 | 0.0001 tight	0.030 | 0.0012 tight 0.003 | 0.0001 tight
Bearing ID Inboard	35.001 | 1.3780 34.989 | 1.3775	45.001 | 1.7717 44.988 | 1.7712	55.001 | 2.1654 54.986 | 2.1648	65.001 | 2.5591 64.986 | 2.5585
Frame ID Inboard	72.000 | 2.8346 72.017 | 2.8353	100.000 | 3.9370 100.023 | 3.9379	120.000 | 4.7244 120.023 | 4.7253	140.000 | 5.5118 140.025 | 5.5128
Clearance	0.031 | 0.0012 loose 0.000 | 0.0000 loose	0.038 | 0.0015 loose 0.000 | 0.0000 loose	0.038 | 0.0015 loose 0.000 | 0.0000 loose	0.043 | 0.0017 loose 0.000 | 0.0000 loose
Bearing OD Inboard	72.000 | 2.8346 71.986 | 2.8341	100.000 | 3.9370 99.985 | 3.9364	120.000 | 4.7244 119.985 | 4.7238	140.000 | 5.5118 139.982 | 5.5111
Shaft OD Outboard	30.010 | 1.1815 30.002 | 1.1812	45.014 | 1.7722 45.004 | 1.7718	50.013 | 1.9690 50.003 | 1.9686	65.016 | 2.5597 65.004 | 2.5592
Clearance	0.020 | 0.0008 tight 0.003 | 0.0001 tight	0.025 | 0.0010 tight 0.003 | 0.0001 tight	0.025 | 0.0010 tight 0.003 | 0.0001 tight	0.030 | 0.0012 tight 0.003 | 0.0001 tight
Bearing OD Outboard	30.000 | 1.1811 29.990 | 1.1807	45.001 | 1.7717 44.988 | 1.7712	50.000 | 1.9685 49.987 | 1.9680	65.001 | 2.5591 64.986 | 2.5585
Housing OD Outboard	72.000 | 2.8346 72.017 | 2.8353	100.000 | 3.9370 100.022 | 3.9379	110.000 | 4.3307 110.023 | 4.3316	140.000 | 5.5118 140.025 | 5.5128
Clearance	0.031 | 0.0012 loose 0.000 | 0.0000 loose	0.038 | 0.0015 loose 0.000 | 0.0000 loose	0.038 | 0.0015 loose 0.000 | 0.0000 loose	0.043 | 0.0017 loose 0.000 | 0.0000 loose
Bearing OD Outboard	72.000 | 2.8346 71.986 | 2.8341	100.000 | 3.9370 99.985 | 3.9364	110.000 | 4.3307 109.985 | 4.3301	140.000 | 5.5118 139.982 | 5.5111

Reassembly

Assemble the rotating element and the bearing frame (STi and MTi)

CAUTION:
Wear insulated gloves when you use a bearing heater. Bearings get hot and can cause physical injury.

NOTICE:
Make sure that the pipe threads are clean, and that you apply thread sealant to the plugs and fittings. Failure to do so may result in equipment damage or decreased performance.

NOTICE:
Use an induction heater that heats as well as demagnetizes the bearings when you install bearings. Failure to do so may result in decreased performance.

1. Prepare the bearing frame (228) as follows (see the illustration):
   a) Install the oil-fill plug (113A).
   b) Install the oil-drain plug (408A).
   c) Install the sight glass (319).
   d) Install the sight oiler plug (408J).
   e) Install the plug for the oil-cooler inlet (408L).
   f) Install the plug for the oil-cooler outlet (408M).
   g) Install four oil-mist connection plugs (408H).
      Or: Install two grease fittings (193) and two grease-relief plugs (113).
   h) Attach the bearing-frame foot (241) and fasten the bolts (370F) by hand.

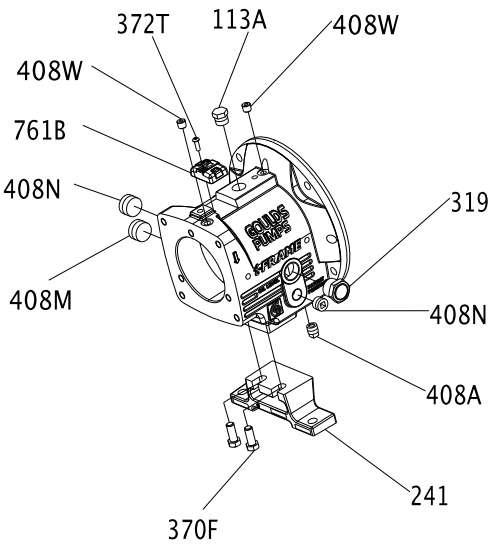

Figure 91: Oil mist connection plugs

2. Install the outboard bearing (112A) on the shaft (122).
   The regreaseable bearing has a single shield. The outboard bearing is installed with the shield toward the impeller.
   a) Inspect the shaft (122) to ensure that it is clean, dimensionally correct, and is free of nicks and burrs.
   b) Lightly coat the bearing seating with a thin film of oil.
   c) Remove the bearing (112) from its packaging.
   d) Wipe the preservative from the bearing (112) bore and outer diameter.
   e) Use an induction heater with a demagnetizing cycle to heat the bearing (112) to an inner ring temperature of 110 °C | 230 °F.
   f) Position the bearing (112) on the shaft (122) against the shoulder and snug the locknut (136) against the bearing until it is cool.
      The locknut prevents the bearing from moving away from the shaft shoulder as it cools.
   g) Remove the bearing locknut (136) after the bearing (112) cools.
3. Put the lockwasher (382) onto the shaft (122).

4. Thread the locknut (136) onto the shaft (122) and tighten it until it is snug.
5. Bend the tangs of the lockwasher into the slots of the locknut.
6. Put the bearing-retaining ring (361A) onto the shaft (122).
   Make sure that the flat side of the ring is towards the bearing.
7. Coat the inner surfaces of the bearings with lubricant.
8. Put the inboard bearing (168) onto the shaft (122).
   The regreasable bearing has a single shield. Make sure that the bearing is installed with the shield away from the impeller.

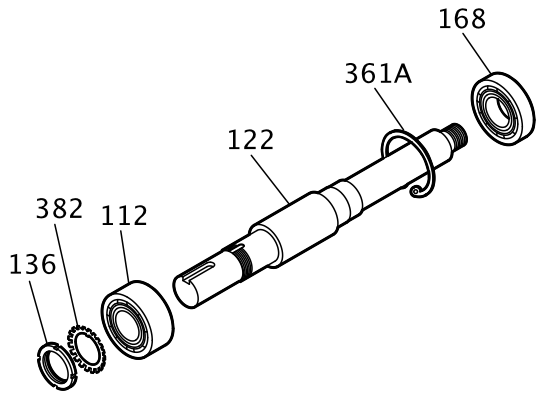

Figure 92: Inboard bearing reassembly

9. Prepare the shaft for assembly as follows (see the illustration):
   a) Install a new O-ring (496).
   b) Coat the outside of the outboard bearing (112A) with oil.
   c) Coat the bore of the bearing housing (134) with oil.
   d) Put the bearing housing (134) onto the shaft.
      Do not use force.
   e) Insert the bearing-retaining ring (361A) into the bore groove of the bearing housing (134).

   NOTICE:
   Ensure that the space between the ends of the retaining ring are located in the oil-return groove. Failure to do so may result in oil-flow obstruction.

   Make sure that the shaft rotates freely.
   f) Install the outboard labyrinth oil-seal (332A) into the bearing housing (134).
      Place the drain slots of the oil seal at the bottom position (6 o'clock).
      Make sure that the edges of the keyway are free from burrs. To protect the O-ring, cover the keyway lengthwise with a piece of electrical tape before you install the oil seal.

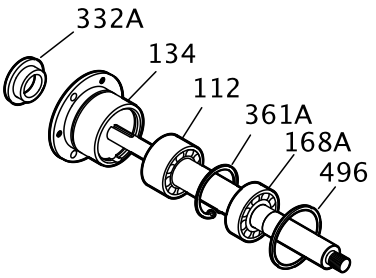

Figure 93: Outboard labyrinth oil-seal reassembly

10. Install the shaft assembly into the bearing frame as follows (see the illustration):
    a) Coat the outside of the bearing housing (134) with oil.

b) Coat all the internal surfaces of the bearing frame (228) with oil.
c) Install the shaft assembly into the bearing frame (228).
Make sure that the shaft rotates freely.
d) Install the clamp bolts (370C) in the bearing housing (134) and tighten by hand.
e) Install the jack bolts (370D) with the locknuts (423) in the bearing housing (134) and tighten by hand.

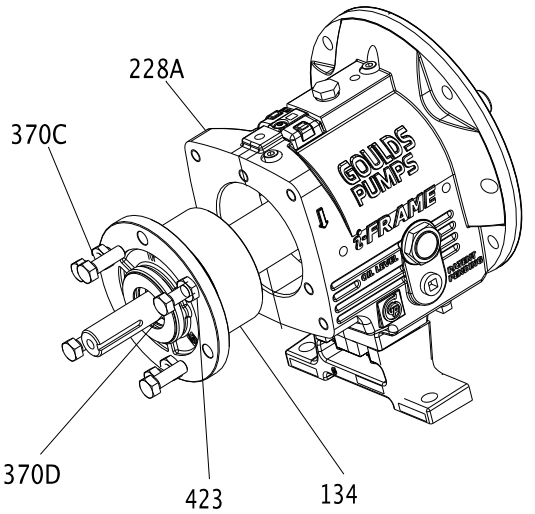

Figure 94: Jack bolt and locknut reassembly

Assemble the rotating element and the bearing frame (STi and MTi with duplex bearings)

CAUTION:
- Wear insulated gloves when you use a bearing heater. Bearings get hot and can cause physical injury.
- Use care when you handle the shaft because it can be heavy. Failure to do so could result in personal injury.

NOTICE:
Make sure that the pipe threads are clean, and that you apply thread sealant to the plugs and fittings. Failure to do so may result in equipment damage or decreased performance.

NOTICE:
Use an induction heater that heats as well as demagnetizes the bearings when you install bearings. Failure to do so may result in decreased performance.

1. Prepare the bearing frame (228) as follows (see the illustration):
   a) Install the oil-fill plug (113A).
   b) Install the oil-drain plug (408A).
   c) Install the sight glass (319).
   d) Install the sight oiler plug (408J).
   e) Install the plug for the oil-cooler inlet (408L).
   f) Install the plug for the oil-cooler outlet (408M).
   g) Install four oil-mist connection plugs (408H).
   Or: Install two grease fittings (193) and two grease-relief plugs (113).

h) Attach the bearing-frame foot (241) and fasten the bolts (370F) by hand.

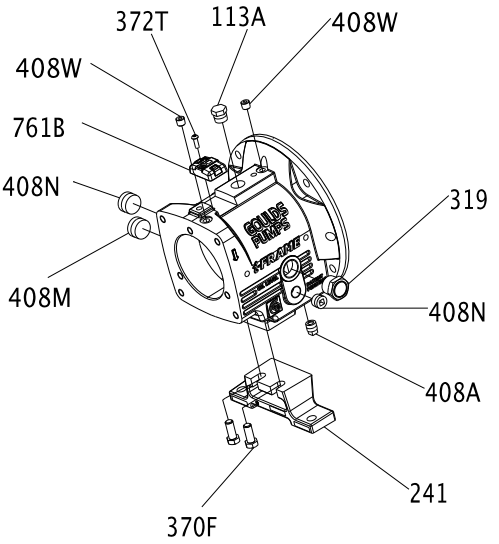

Figure 95: Bearing frame foot reassembly

2. Install the outboard bearings (112A) on the shaft (122).
   The regreasable bearing has a single shield. Make sure that the bearing is installed with the shield away from the impeller.
   The duplex bearings are mounted back-to-back. Make sure that the orientation of the bearings are correct.
   a) Inspect the shaft (122) to ensure that it is clean, dimensionally correct, and is free of nicks and burrs.

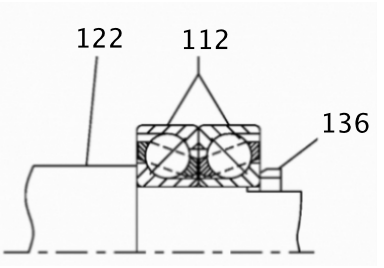

Figure 96: Shaft inspection

   b) Lightly coat the bearing seating with a thin film of oil.
   c) Remove the bearings (112) from their packaging.
   d) Wipe the preservative from the bearing (112) bore and outer diameter.
   e) Use an induction heater with a demagnetizing cycle to heat both bearings (112) to an inner ring temperature of 110 °C | 230 °F.
   f) Place both bearings (112) on the shaft (122) with the large outer races together (back-to-back).
   g) Position the bearings (112) on the shaft (122) against the shoulder and snug the locknut (136) against the bearings until they are cool.
      The locknut prevents the bearings from moving away from the shaft shoulder as they cool. Rotate the outer bearing rings relative to each other as they are placed on the shaft to assure good alignment.
   h) Remove the bearing locknut (136) after the bearings (112) are cool.
3. Put the lockwasher (382) onto the shaft (122).
4. Thread the locknut (136) onto the shaft (122) and tighten it until it is snug.
5. Bend the tangs of the lockwasher into the slots of the locknut.
6. Place the bearing-clamp ring (253B) onto the shaft (122).

Make sure that the orientation of the bearing-clamp ring is correct.

7. Coat the inner surfaces of the bearings with lubricant.
8. Put the inboard bearing (168) onto the shaft (122).

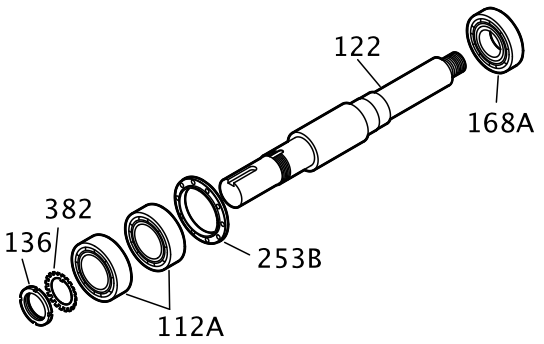

Figure 97: Inboard bearing reassemby

9. Install the bearing housing as follows (see the illustration):
   a) Coat the outside of the outboard bearing (112A) with oil.
   b) Coat the bore of the bearing housing (134) with oil.
   c) Put the bearing housing (134) onto the shaft.
      Do not use force.

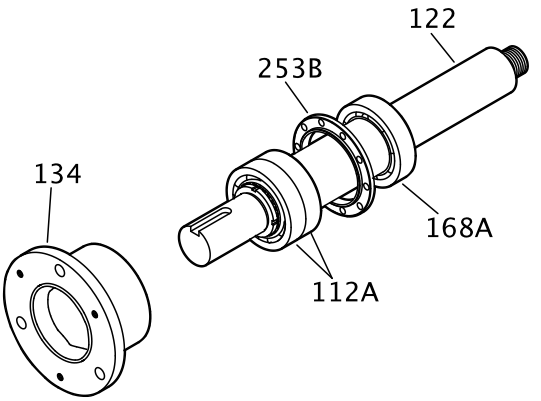

Figure 98: Bearing housing reassembly

10. Prepare the shaft for assembly as follows (see the illustration):
    a) Place the bearing-clamp ring (253B) onto the shaft (122).
    b) Fasten the clamp-ring bolts (236A) crosswise.
       See the specified torque values.
       Make sure that the shaft rotates freely.
    c) Install a new O-ring (496).

d) Install the outboard labyrinth oil-seal (332A) into the bearing housing (134).
Place the drain slots of the oil seal at the bottom position (6 o'clock).
Make sure that the edges of the keyway are free from burrs. To protect the O-ring, cover the keyway lengthwise with a piece of electrical tape before you install the oil seal.

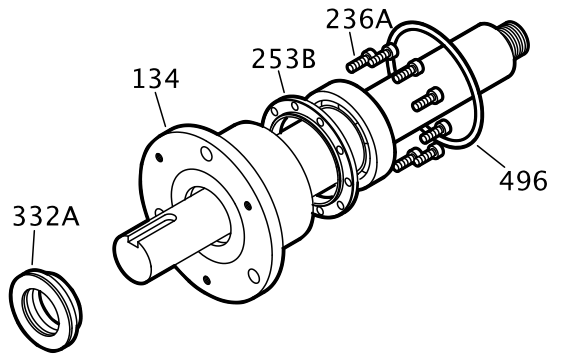

Figure 99: Outboard labyrinth oil seal reassembly

11. Install the shaft assembly into the bearing frame as follows (see the illustration):
    a) Coat the outside of the bearing housing (134) with oil.
    b) Coat all the internal surfaces of the bearing frame (228) with oil.
    c) Install the shaft assembly into the bearing frame (228).
    Make sure that the shaft rotates freely.
    d) Install the clamp bolts (370C) in the bearing housing (134) and tighten by hand.
    e) Install the jack bolts (370D) with the locknuts (423) in the bearing housing (134) and tighten by hand.

Assemble the rotating element and the bearing frame (LTi)

CAUTION:
Wear insulated gloves when you use a bearing heater. Bearings get hot and can cause physical injury.

NOTICE:
Make sure that the pipe threads are clean, and that you apply thread sealant to the plugs and fittings. Failure to do so may result in equipment damage or decreased performance.

NOTICE:
Use an induction heater that heats as well as demagnetizes the bearings when you install bearings. Failure to do so may result in decreased performance.

1. Prepare the bearing frame (228) as follows (see the illustration):
    a) Install the oil-fill plug (113A).
    b) Install the oil-drain plug (408A).
    c) Install the sight glass (319).
    d) Install the sight oiler plug (408J).
    e) Install the plug for the oil-cooler inlet (408L).
    f) Install the plug for the oil-cooler outlet (408M).
    g) Install four oil-mist connection plugs (408H).
    Or: Install two grease fittings (193) and two grease-relief plugs (113).

h) Attach the bearing-frame foot (241) and fasten the bolts (370F) by hand.

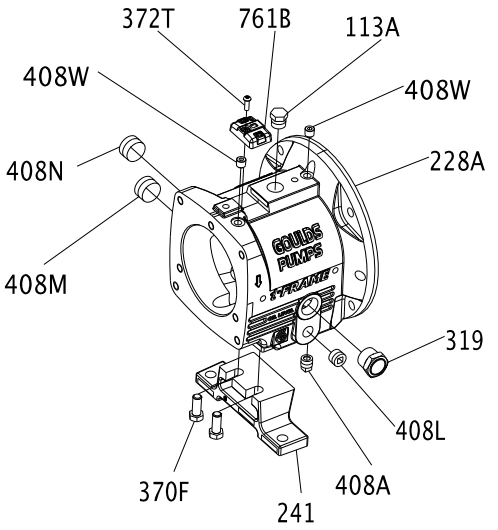

Figure 100: Attach the bearing-frame foot

2. Install the oil flinger (248A) onto the shaft (122).

NOTICE:
The oil flinger is press fitted onto the shaft. Use a properly sized driver. Failure to do so may result in damage to the oil flinger.

3. Place the bearing-clamp ring (253B) onto the shaft (122).
   Make sure that the orientation of the bearing-clamp ring is correct.
4. Install outboard bearings (112A) on shaft (122).
   The regreasable bearing has a single shield. Make sure that the bearing is installed with the shield away from the impeller.
   The duplex bearings are mounted back-to-back. Make sure that the orientation of the bearings are correct.
   a) Inspect the shaft (122) to ensure that it is clean, dimensionally correct, and is free of nicks and burrs.

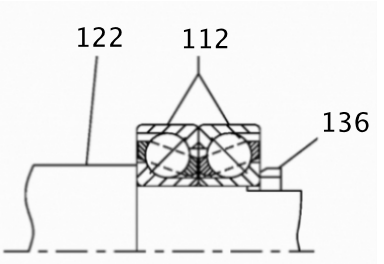

Figure 101: Shaft inspection

   b) Lightly coat the bearing seating with a thin film of oil.
   c) Remove the bearings (112) from their packaging.
   d) Wipe the preservative from the bearing (112) bore and outer diameter.
   e) Use an induction heater with a demagnetizing cycle to heat both bearings (112) to an inner ring temperature of 110 °C | 230 °F.
   f) Place both bearings (112) on the shaft (122) with the large outer races together (back-to-back).

g) Position the bearings (112) on the shaft (122) against the shoulder and snug the locknut (136) against the bearings until they are cool.
The locknut prevents the bearings from moving away from the shaft shoulder as they cool. Rotate the outer bearing rings relative to each other as they are placed on the shaft to assure good alignment.

h) Remove the bearing locknut (136) after the bearings (112) are cool.

5. Put the lockwasher (382) onto the shaft (122).
6. Thread the locknut (136) onto the shaft (122) and tighten it until it is snug.
7. Bend the tangs of the lockwasher into the slots of the locknut.
8. Coat the inner surfaces of the bearings with lubricant.
9. Put the inboard bearing (168) onto the shaft (122).

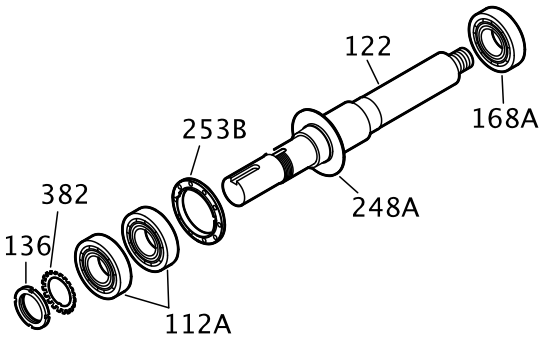

Figure 102: Inboard bearing reassembly

10. Install the bearing housing as follows (see the illustration):
    a) Coat the outside of the outboard bearing (112A) with oil.
    b) Coat the bore of the bearing housing (134) with oil.
    c) Put the bearing housing (134) onto the shaft.
    Do not use force.

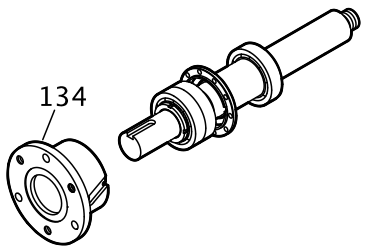

Figure 103: Bearing housing reassembly

11. Prepare the shaft for assembly as follows (see the illustration):
    a) Fasten the clamp-ring bolts (236A) crosswise.
    See the specified torque values.
    Make sure that the shaft rotates freely.
    b) Install a new O-ring (496).

c) Install the outboard labyrinth oil-seal (332A) into the bearing housing (134).
Place the drain slots of the oil seal at the bottom position (6 o'clock).
Make sure that the edges of the keyway are free from burrs. To protect the O-ring, cover the keyway lengthwise with a piece of electrical tape before you install the oil seal.

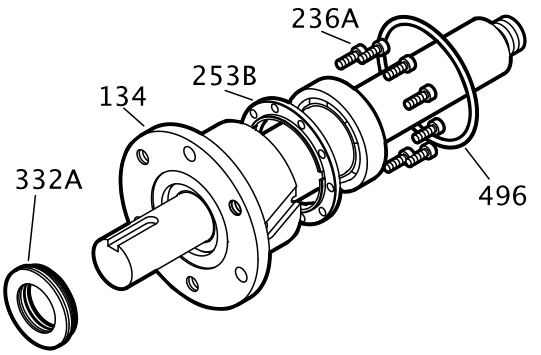

Figure 104: Outboard labyrinth oil-seal reassembly

12. Install the shaft assembly into the bearing frame as follows (see the illustration):
    a) Coat the outside of the bearing housing (134) with oil.
    b) Coat all the internal surfaces of the bearing frame (228) with oil.
    c) Install the shaft assembly into the bearing frame (228).
    Make sure that the shaft rotates freely.
    d) Install the clamp bolts (370C) in the bearing housing (134) and tighten by hand.
    e) Install the jack bolts (370D) with the locknuts (423) in the bearing housing (134) and tighten by hand.

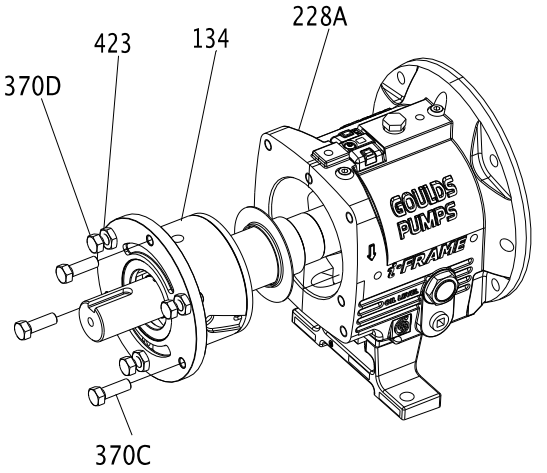

Figure 105: Jack bolt and locknut installation

Assemble the rotating element and the bearing frame (XLT-i and i17)

CAUTION:
- Wear insulated gloves when you use a bearing heater. Bearings get hot and can cause physical injury.
- Use care when you handle the shaft because it can be heavy. Failure to do so could result in personal injury.

NOTICE:
Make sure that the pipe threads are clean, and that you apply thread sealant to the plugs and fittings. Failure to do so may result in equipment damage or decreased performance.

NOTICE:
Use an induction heater that heats as well as demagnetizes the bearings when you install bearings. Failure to do so may result in decreased performance.

1. Prepare the bearing frame (228) as follows (see the illustration):
   a) Install the oil-fill plug (113A).
   b) Install the oil-drain plug (408A).
   c) Install the sight glass (319).
   d) Install the sight oiler plug (408J).
   e) Install the plug for the oil-cooler inlet (408L).
   f) Install the plug for the oil-cooler outlet (408M).
   g) Install four oil-mist connection plugs (408H).
      Or: Install two grease fittings (193) and two grease-relief plugs (113).

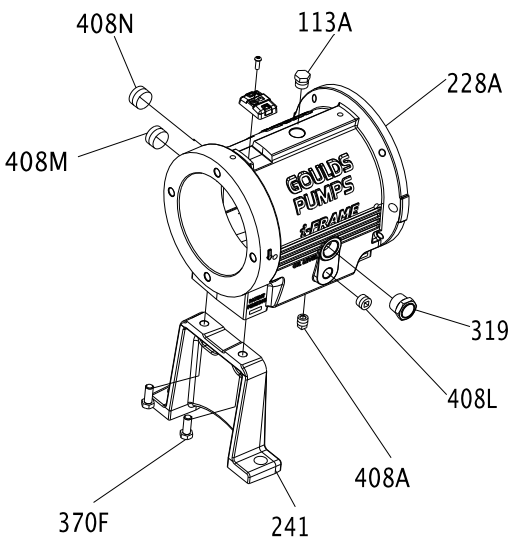

2. Install the outboard bearings (112A) on the shaft (122).
   The regreaseable bearing has a single shield. The outboard bearing is installed with the shield toward the impeller.
   a) Inspect the shaft (122) to ensure that it is clean, dimensionally correct, and is free of nicks and burrs.
   b) Lightly coat the bearing seating with a thin film of oil.
   c) Remove the bearing (112) from its packaging.
   d) Wipe the preservative from the bearing (112) bore and outer diameter.
   e) Use an induction heater with a demagnetizing cycle to heat the bearing (112) to an inner ring temperature of 110 °C | 230 °F.
   f) Position the bearing (112) on the shaft (122) against the shoulder and snug the locknut (136) against the bearing until it is cool.
      The locknut prevents the bearing from moving away from the shaft shoulder as it cools.
   g) Remove the bearing locknut (136) after the bearing (112) cools.
3. Put the lockwasher (382) onto the shaft (122).
4. Thread the locknut (136) onto the shaft (122) and tighten it until it is snug.

5. Bend the tangs of the lockwasher into the slots of the locknut.

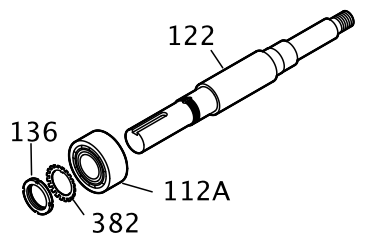

6. Install the bearing housing as follows (see the illustration):
   a) Coat the outside of the outboard bearing (112A) with oil.
   b) Coat the bore of the bearing housing (134) with oil.
   c) Put the bearing housing (134) onto the shaft.
   Do not use force.

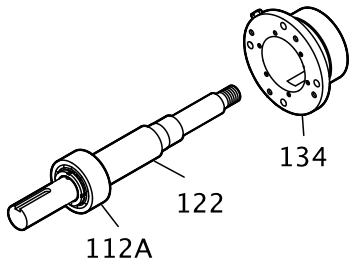

7. Fasten the gasket (360C) and the end cover (109A) with the bolts (371C).
   See the specified torque values.
   Make sure that the shaft rotates freely.

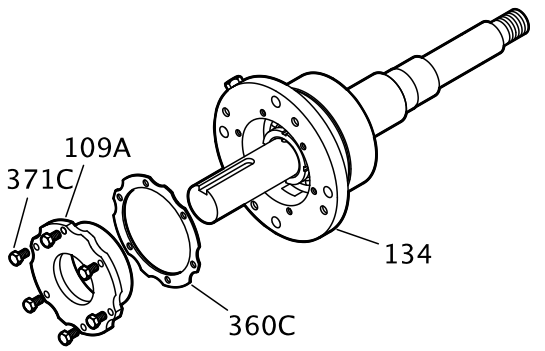

8. Install the inboard bearing as follows (see the illustration):
   a) Coat the inner surfaces of the bearings with lubricant.
   b) Put the inboard bearing (168) onto the shaft (122).
   The regreasable bearing has a single shield. Make sure that the bearing is installed with the shield away from the impeller.

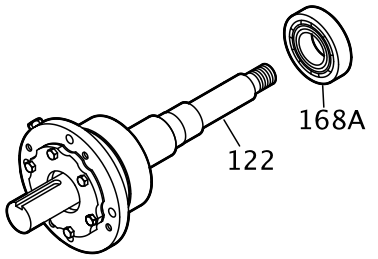

9. Install the remaining parts onto the bearing shaft as follows (see the illustration):
   a) Install a new O-ring (496).
   b) Install the outboard labyrinth oil-seal (332A) into the end cover (109A).
      Place the drain slots of the oil seal at the bottom position (6 o'clock).
      Make sure that the edges of the keyway are free from burrs. To protect the O-ring, cover the keyway lengthwise with a piece of electrical tape before you install the oil seal.

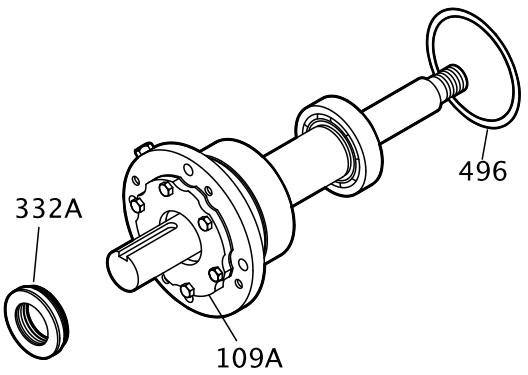

10. Install the shaft assembly into the bearing frame as follows (see the illustration):
    a) Coat the outside of the bearing housing (134) with oil.
    b) Coat all the internal surfaces of the bearing frame (228) with oil.
    c) Install the shaft assembly into the bearing frame (228).
       Make sure that the shaft rotates freely.
    d) Install the clamp bolts (370C) in the bearing housing (134) and tighten by hand.
    e) Install the jack bolts (370D) with the locknuts (423) in the bearing housing (134) and tighten by hand.
    f) Attach the bearing-frame foot (241) and fasten the bolts (370F) by hand.

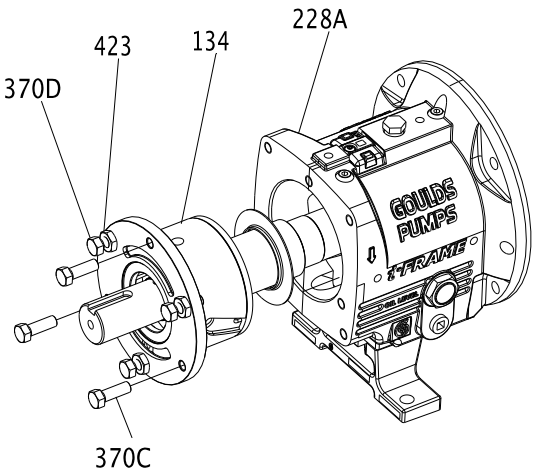

Assemble the rotating element and the bearing frame (XLT-i and i17 with duplex bearings)

CAUTION:

- Wear insulated gloves when you use a bearing heater. Bearings get hot and can cause physical injury.
- Use care when you handle the shaft because it can be heavy. Failure to do so could result in personal injury.

NOTICE:
Make sure that the pipe threads are clean, and that you apply thread sealant to the plugs and fittings. Failure to do so may result in equipment damage or decreased performance.

NOTICE:
Use an induction heater that heats as well as demagnetizes the bearings when you install bearings. Failure to do so may result in decreased performance.

1. Prepare the bearing frame (228) as follows (see the illustration):
   a) Install the oil-fill plug (113A).
   b) Install the oil-drain plug (408A).
   c) Install the sight glass (319).
   d) Install the sight oiler plug (408J).
   e) Install the plug for the oil-cooler inlet (408L).
   f) Install the plug for the oil-cooler outlet (408M).
   g) Install four oil-mist connection plugs (408H).
      Or: Install two grease fittings (193) and two grease-relief plugs (113).

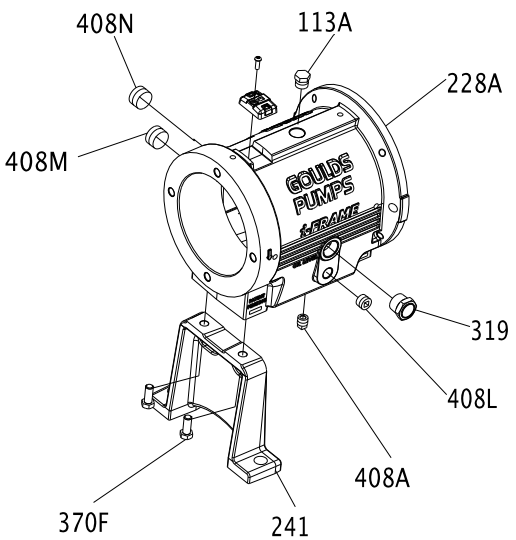

2. Install the outboard bearings (112A) on the shaft (122).
   The regreasable bearing has a single shield. Make sure that the bearing is installed with the shield away from the impeller.
   The duplex bearings are mounted back-to-back. Make sure that the orientation of the bearings are correct.
   a) Inspect the shaft (122) to ensure that it is clean, dimensionally correct, and is free of nicks and burrs.

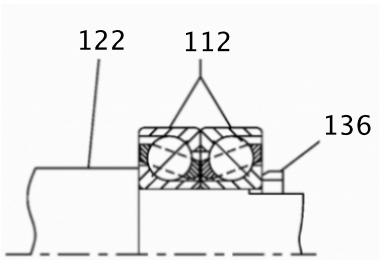

Figure 106: Shaft inspection

b) Lightly coat the bearing seating with a thin film of oil.
c) Remove the bearings (112) from their packaging.
d) Wipe the preservative from the bearing (112) bore and outer diameter.
e) Use an induction heater with a demagnetizing cycle to heat both bearings (112) to an inner ring temperature of 110 °C | 230 °F.
f) Place both bearings (112) on the shaft (122) with the large outer races together (back-to-back).
g) Position the bearings (112) on the shaft (122) against the shoulder and snug the locknut (136) against the bearings until they are cool.
The locknut prevents the bearings from moving away from the shaft shoulder as they cool. Rotate the outer bearing rings relative to each other as they are placed on the shaft to assure good alignment.
h) Remove the bearing locknut (136) after the bearings (112) are cool.

3. Put the lockwasher (382) onto the shaft (122).
4. Thread the locknut (136) onto the shaft (122) and tighten it until it is snug.
5. Bend the tangs of the lockwasher into the slots of the locknut.

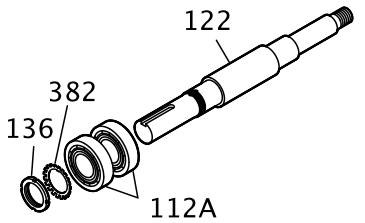

6. Install the bearing housing as follows (see the illustration):
a) Coat the outside of the outboard bearing (112A) with oil.
b) Coat the bore of the bearing housing (134) with oil.
c) Put the bearing housing (134) onto the shaft.
Do not use force.

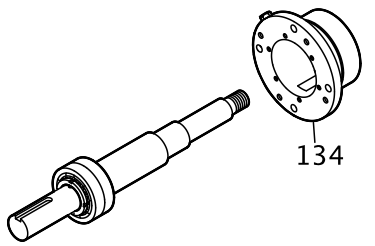

7. Fasten the gasket (360C) and the end cover (109A) with the bolts (371C).
See the specified torque values.
Make sure that the shaft rotates freely.

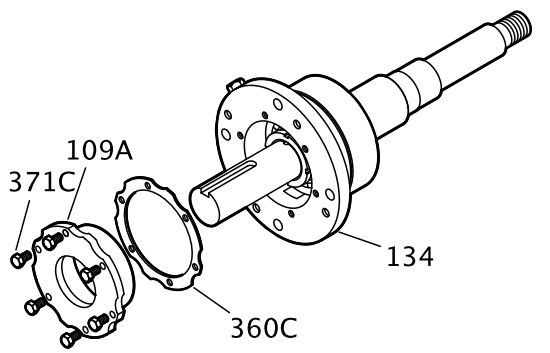

8. Install the inboard bearing as follows (see the illustration):
   a) Coat the inner surfaces of the bearings with lubricant.
   b) Put the inboard bearing (168) onto the shaft (122).
      The regreasable bearing has a single shield. Make sure that the bearing is installed with the shield away from the impeller.

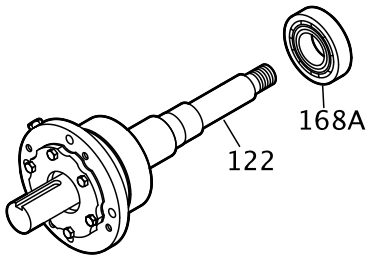

9. Install the remaining parts onto the bearing shaft as follows (see the illustration):
   a) Install a new O-ring (496).
   b) Install the outboard labyrinth oil-seal (332A) into the end cover (109A).
      Place the drain slots of the oil seal at the bottom position (6 o'clock).
      Make sure that the edges of the keyway are free from burrs. To protect the O-ring, cover the keyway lengthwise with a piece of electrical tape before you install the oil seal.

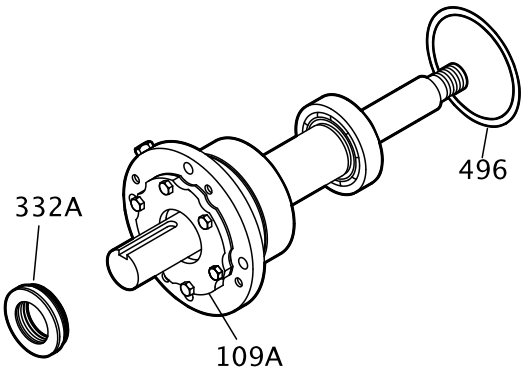

10. Install the shaft assembly into the bearing frame as follows (see the illustration):
    a) Coat the outside of the bearing housing (134) with oil.
    b) Coat all the internal surfaces of the bearing frame (228) with oil.
    c) Install the shaft assembly into the bearing frame (228).
       Make sure that the shaft rotates freely.
    d) Install the clamp bolts (370C) in the bearing housing (134) and tighten by hand.
    e) Install the jack bolts (370D) with the locknuts (423) in the bearing housing (134) and tighten by hand.

f) Attach the bearing-frame foot (241) and fasten the bolts (370F) by hand.

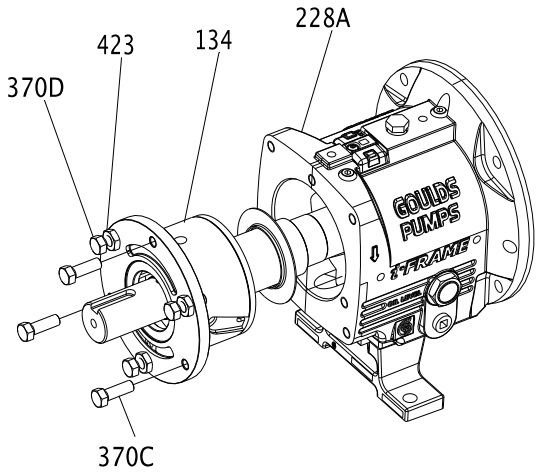

Assemble the frame

1. Support the frame assembly in a horizontal position.
2. Check the shaft-end play by moving the shaft forward and backward by hand, and note any indicator movement.
   If the total indicator reading is greater than the values in this table, then disassemble the shaft and determine the cause.

Table 15: Shaft-end play

Use this table as a reference for shaft-end play values.

Frame	Double row bearing	Duplex bearing
STi millimeters | inches	0.028 | 0.0011 0.048 | 0.0019	0.018 | 0.0007 0.025 | 0.0010
MTi millimeters | inches	0.033 | 0.0013 0.053 | 0.0021	0.023 | 0.0009 0.030 | 0.0012
LTi millimeters | inches	Not applicable	0.025 | 0.0010 0.038 | 0.0015
XLT-i millimeters | inches	0.036 | 0.0014 0.058 | 0.0023	0.025 | 0.0010 0.038 | 0.0015

Frame	Double row bearing	Duplex bearing

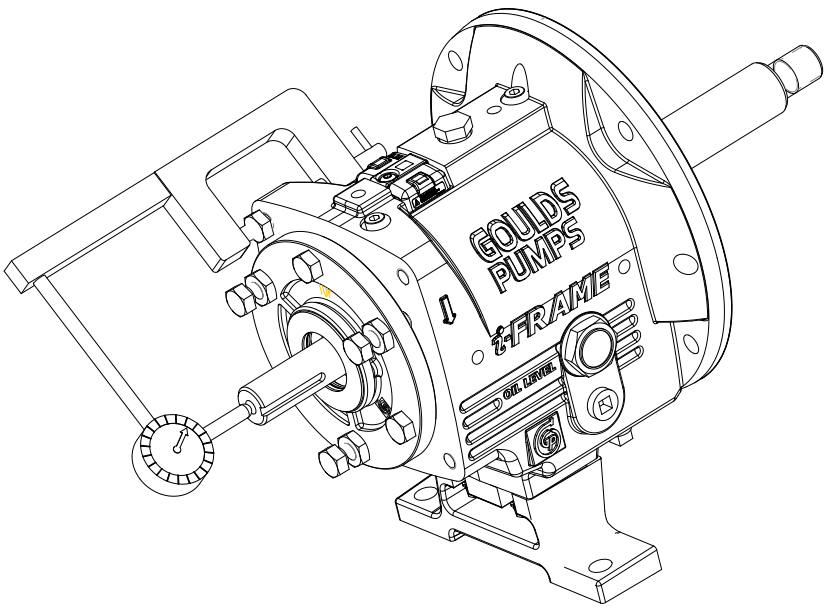

Figure 107: Check shaft end play

3. Check the shaft-sleeve (126) runout.
   a) Install the shaft sleeve.
   b) Thread the impeller on the shaft until hand tight.
   c) Rotate the shaft 360º.
   d) If the total indicator reading is greater than 0.051 mm | 0.002 in., then disassemble the shaft sleeve and determine the cause.

e) Remove the impeller and shaft sleeve.

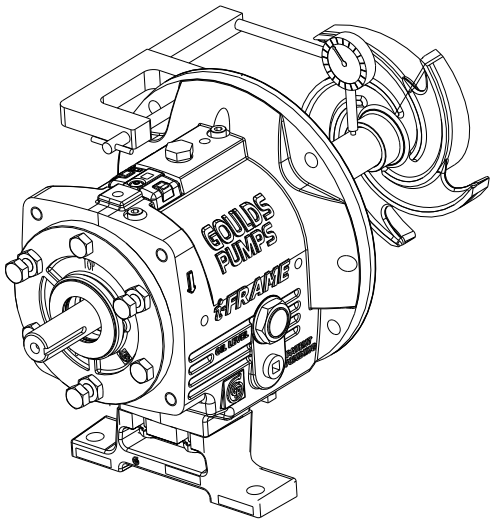

Figure 108: Remove impeller and shaft sleeve

4. Check the frame-face run-out by rotating the shaft so that the indicator measures the fit for 360º.
   If the total indicator reading is greater than 0.025 mm | 0.001 in., then disassemble and determine the cause.

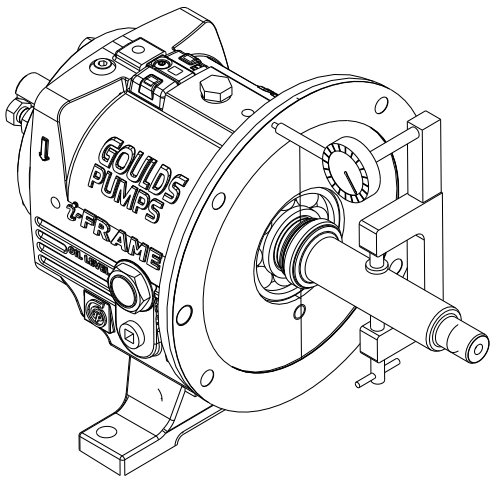

Figure 109: Check frame-face run-out

5. Place the manila gasket (360D) on the frame (228), and hold the gasket in place by inserting the dowel pins (469B) in their holes.
   The gasket is designed to fit only one way.
6. Install the frame adapter.
   a) Place the frame adapter (108) onto the frame assembly.

b) Align the bolt holes and dowel locations on the frame adapter with the bolt holes and dowel locations on the frame.

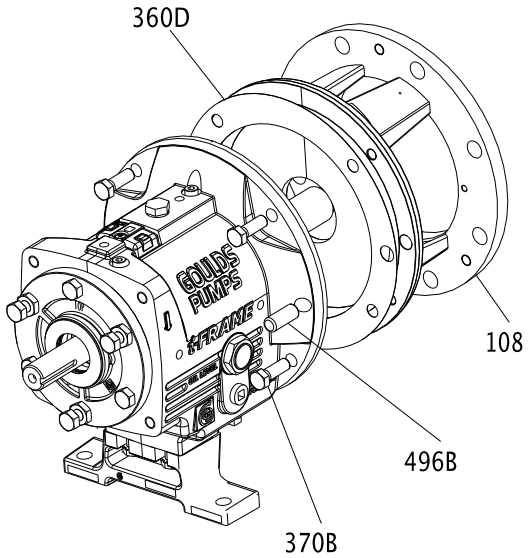

Figure 110: Align bolt holes and dowel locations

c) Install the dowel pins (469B) and bolts (370B). Tighten the bolts in a criss-cross pattern according to the specifications in the bolt torque values table.

d) Rotate the shaft 360º to check the adapter fit.
If the total indicator reading is greater than 0.13 mm | 0.005 in., then determine the cause and correct it before you proceed.

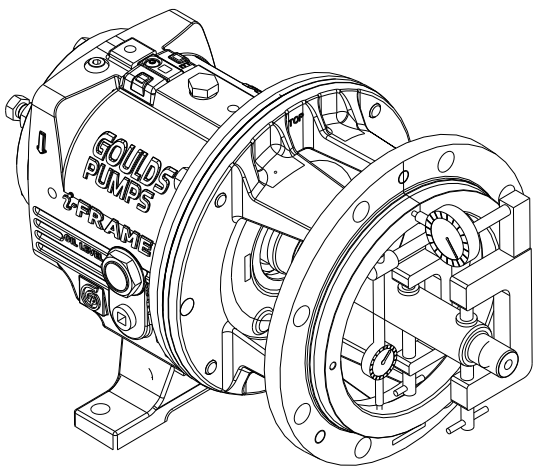

Figure 111: Check adapter fit

7. Install the labyrinth oil-seal (333A) into the adapter (108) and the bearing frame (228). The labyrinth oil seal is an O-ring fit.
8. Position the labyrinth oil-seal drain slots at the bottom (6 o'clock) position.

Refer to Assemble the INPRO labyrinth oil-seal for more information on the labyrinth oil-seal installation.

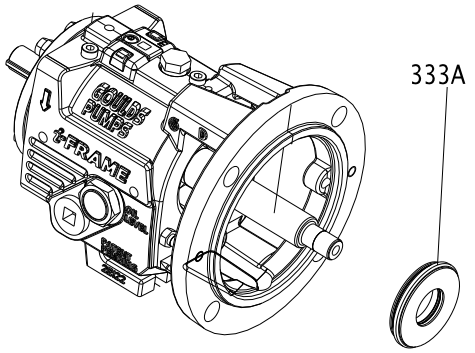

Figure 112: Position labyrinth oil-seal drain slots

INPRO labyrinth oil seal description

Description

The INPRO VBXX-D Labyrinth Oil Seal consists of the rotor (1), the stator (2), and the VBX Ring (3). The rotor (1) fits over the shaft and is held in place by an elastomeric drive ring (4). The drive ring causes the rotor to turn with the shaft and provides a positive, static seal against the shaft. Since there is no metal-to-metal contact, there are no friction or wear concerns.

NOTICE:
The INPRO VBX is a one-piece design. Do not attempt to separate the rotor from the stator before or during installation. Doing so may result in equipment damage.

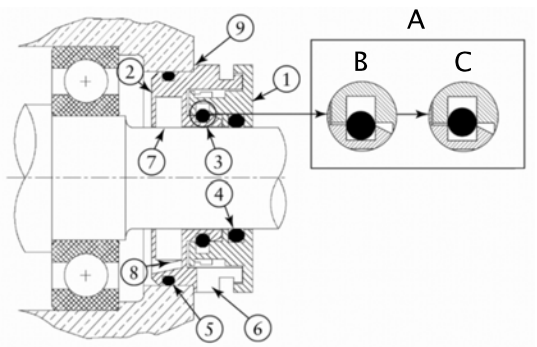

A	"VBX" O-ring action
B	Static
C	Dynamic
1	Rotor
2	Stator
3	"VBX" ring
4	Rotor drive ring
5	Stator gasket
6	Expulsion port
7	D groove
8	Lube return
9	Location shoulder

Figure 113: INPRO labyrinth oil seal

Assemble the INPRO labyrinth oil seal

1. Wrap electrical tape around the coupling end of the shaft to cover the keyway.

NOTICE:
The edges of the keyway can be sharp. Make sure to cover the keyway with tape. Failure to do so may result in cutting the O-ring and damaging the seal.

2. Lightly lube the shaft and the drive ring (4) with lubricant.
   Lubricant helps in the installation process. Be sure that the lubricant is compatible with the O-ring material and the pump-system standards.
3. Use an arbor press to install the outboard INPRO VBXX-D into the bearing cover with the expulsion port (6) at the 6 o'clock position.
   Press the outboard INPRO VBXX-D down to where the stator location ramp (9) starts to avoid angular misalignment. There is a nominal 0.051 mm | 0.002 in. interference fit.
4. Discard any residual material from the stator gasket (5).
5. Complete the applicable step in this table depending on the model of your pump.

Pump model	Action
STi	Press the inboard seal along the shaft into the bearing frame.
All other models	After you install the frame adapter on the bearing frame, press the inboard seal over the shaft and into the adapter.

Assemble the C-face adapter

1. Mount the pump and the motor-coupling hubs if they are not already mounted.
2. Slide the C-face adapter over the pump shaft and mount it against the bearing-frame flange using four bolts.
3. Mount the motor to the C-face adapter using either four or eight motor bolts.

Table 16: Motor-bolt torque values for C-face adapter to frame
This table contains the motor-bolt torque values for assembling the C-face adapter to a frame.

Frame	Lubricated threads	Dry threads
STi	27 Nm | 20 ft-lb	41 Nm | 30 ft-lb
MTi	27 Nm | 20 ft-lb	41 Nm | 30 ft-lb
LTi	27 Nm | 20 ft-lb	41 Nm | 30 ft-lb

Table 17: Motor-bolt torque values for C-face adapter to motor
This table contains the motor-bolt torque values for assembling the C-face adapter to a motor.

Frame	Lubricated threads	Dry threads
143TC-145TC	11 Nm | 8 ft-lb	16 Nm | 12 ft-lb
182TC-286TC	20 ft-lb (27 Nm)	41 Nm | 30 ft-lb
324TC-365TC	39 ft-lb (53 Nm)	80 Nm | 59 ft-lb

Shaft sealing

WARNING:
Ⓔx The mechanical seal used in an Ex-classified environment must be properly certified. Prior to startup, make sure that all areas that could leak pumped fluid to the work environment are closed.

NOTICE:
Ⓔx The mechanical seal must have an appropriate seal-flush system. Failure to do so will result in excess heat generation and seal failure.

Methods for sealing the shaft

These sections discuss the methods that you can use to seal the shaft.

- Seal the shaft with a dynamic seal.
- Seal the shaft with a cartridge-mechanical seal.
- Seal the shaft with a conventional inside-component mechanical seal.
- Seal the shaft with a conventional outside-component mechanical seal.
- Seal the shaft with a packed stuffing box.

Seal the shaft with a dynamic seal

1. Place the backplate (444) with the flat side down on the bench.

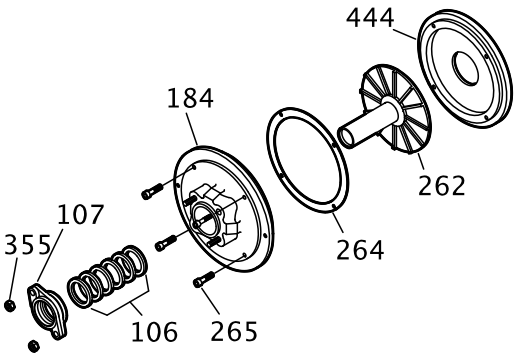

Figure 114: Backplate placement

2. Place the repeller (262) in the backplate (444) with the sleeve side up.
3. Place a Teflon gasket (264) on the backplate (444) and align the holes in the gasket with the holes in the backplate.
4. Place a stuffing-box cover (184) on the backplate (444) and align the holes in the gasket with the holes in the backplate.
5. Install four socket-head capscrews (265) and tighten them securely.
6. Install a new sealing element into the gland.
7. Install a gasket (360Q) and gland (107) on the stuffing-box cover (184).
8. Install the nuts (355).
9. Install a dynamic-seal assembly and nuts (370H).

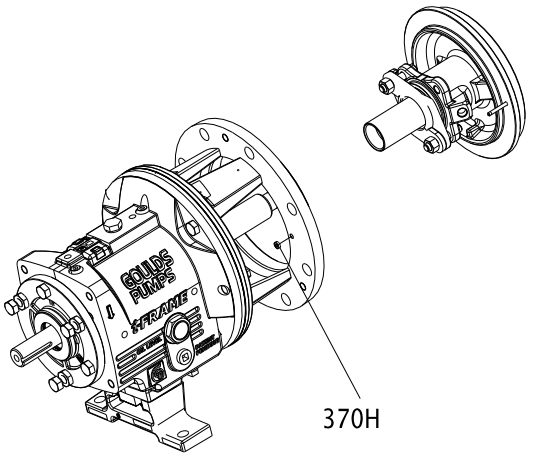

Figure 115: Dynamic seal installation

10. Check the stuffing-box-cover runout and rotate the indicator through 360 degrees.

An indicator reading that is greater than 0.013 mm | 0.005 in. indicates a problem.

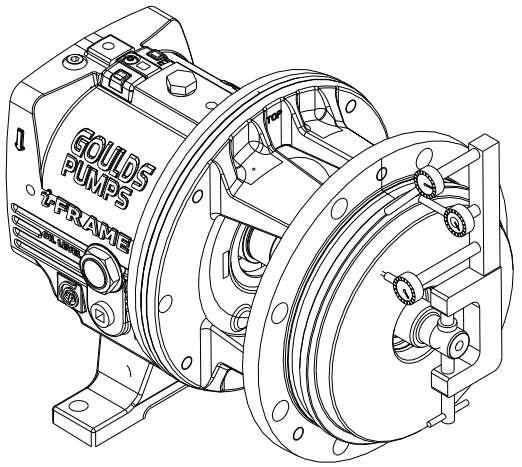

Figure 116: Checking for stuffing-box-cover runout

Seal the shaft with a packed stuffing box

WARNING:
Ex Packed stuffing boxes are not allowed in an ATEX-classified environment.

Pumps are shipped without the packing, lantern ring, or split gland installed. These parts are included with the box of fittings shipped with each pump and must be installed before startup.

1. Carefully clean the stuffing-box bore.
2. Twist the packing enough to get it around the shaft.

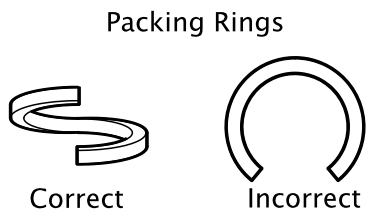

Figure 117: Packing rings

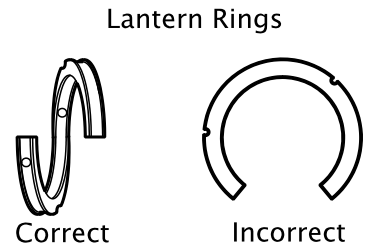

Figure 118: Lantern rings

Figure 119: Stuffing box water connections

3. Insert the packing and stagger the joints in each ring by 90°.
   Install the stuffing-box parts in this order:
   a) Two packing rings
   b) One lantern ring (two-piece)
   c) Three packing rings

NOTICE:
Make sure that the lantern ring is located at the flushing connection to ensure that flush is obtained. Failure to do so may result in decreased performance.

4. Install the gland halves and evenly hand-tighten the nuts.

Seal the shaft with a cartridge mechanical seal

WARNING:
Ⓔx The mechanical seal used in an Ex-classified environment must be properly certified. Prior to startup, make sure that all areas that could leak pumped fluid to the work environment are closed.

NOTICE:
Ⓔx The mechanical seal must have an appropriate seal-flush system. Failure to do so will result in excess heat generation and seal failure.

1. Slide the cartridge seal onto the shaft or sleeve until it contacts the inboard labyrinth oil seal.
2. Assemble the seal chamber.
3. Slide the cartridge seal into the seal chamber and secure using the four studs and nuts.
4. Continue with the pump reassembly.
5. Set the impeller clearance.
   Refer to the Impeller clearance setting topic for more information.
6. Tighten the setscrews in the seal locking ring in order to secure the seal to the shaft.
7. Remove the centering clips from the seal.

Seal the shaft with a conventional inside-component mechanical seal

WARNING:
Ⓔx The mechanical seal used in an Ex-classified environment must be properly certified. Prior to startup, make sure that all areas that could leak pumped fluid to the work environment are closed.

NOTICE:
Ⓔx The mechanical seal must have an appropriate seal-flush system. Failure to do so will result in excess heat generation and seal failure.

1. Assemble the seal chamber:

a) Install a seal-chamber cover or a backplate (184) and fasten with nuts (370H) with .

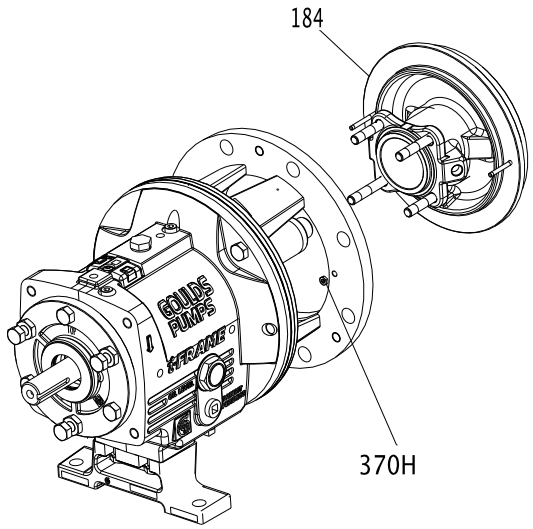

Figure 120: Assemble seal-chamber

b) Check the seal-chamber cover runout.

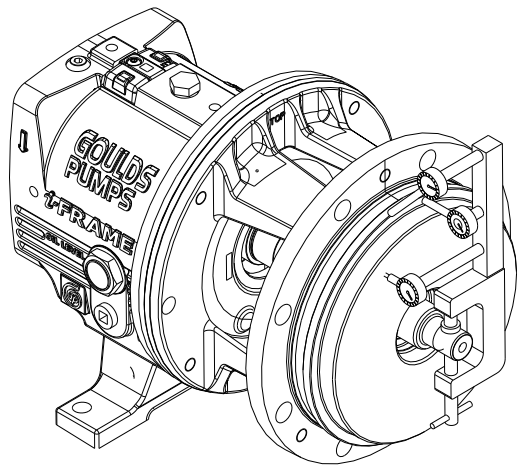

Figure 121: Check seal-chamber cover runout

Rotate the indicator through 360º. If the total indicator reading is greater than 0.13 mm | 0.005 inches, determine the cause and correct the issue before you proceed.

c) Install the shaft sleeve (126).

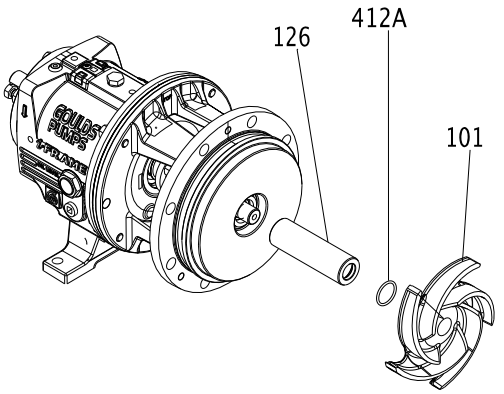

Figure 122: Install shaft sleeve

2. Mark the shaft and sleeve at the face of the seal chamber.
3. Continue the complete reassembly of the pump, except for the mechanical seal.
4. Set the impeller clearance.
   Refer to the Impeller Clearance Setting section for more information.
5. Scribe a line on the marked shaft and sleeve at the face of the seal chamber.
6. Remove the casing, the impeller, and the seal chamber.
7. If applicable, slide the gland, with the stationary seat and gland gasket installed, onto the shaft until it contacts the inboard labyrinth oil seal.
8. Install the mechanical-seal rotary unit according to the manufacturer's instructions.
   Use the scribed line and the seal-reference dimension.
9. Reinstall the seal chamber.
10. Slide the gland on the seal-chamber studs and secure them with the gland nuts.
    Tighten the nuts evenly so that the gland is seated on the seal-chamber pilot and is perpendicular to the shaft.
11. Complete the reassembly of the pump.

Seal the shaft with a conventional outside-component mechanical seal

WARNING:
⟨Ex⟩ The mechanical seal used in an Ex-classified environment must be properly certified. Prior to startup, make sure that all areas that could leak pumped fluid to the work environment are closed.

NOTICE:
⟨Ex⟩ The mechanical seal must have an appropriate seal-flush system. Failure to do so will result in excess heat generation and seal failure.

1. Assemble the seal chamber.

a) Install the seal-chamber cover or backplate (184) and fasten with nuts (370H).

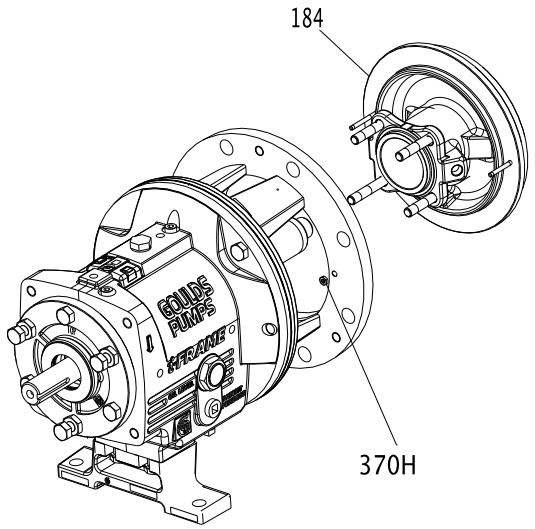

Figure 123: Seal-chamber cover or backplate installation

b) Check the seal-chamber cover runout.

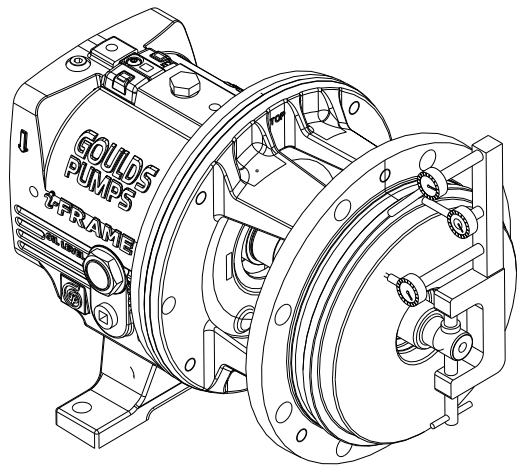

Figure 124: Check seal-chamber cover runout

Rotate the indicator through 360 degrees. If the total indicator reading is greater than 0.13 mm | 0.005 in., determine the cause and correct the issue before you proceed.

c) Install the shaft sleeve (126).

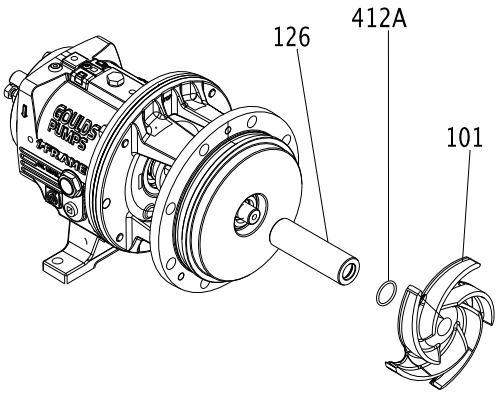

Figure 125: Install shaft sleeve

2. Mark the shaft and sleeve at the face of the seal chamber.
3. Continue the complete reassembly of the pump, except for the mechanical seal.
4. Set the impeller clearance.
   Refer to the Impeller clearance setting section for more information.
5. Scribe a line on the marked shaft and sleeve at the face of the seal chamber.
6. Remove the casing, the impeller, and the seal chamber.
7. Install the mechanical-seal rotary unit per the manufacturer's instructions.
   Use the scribed line as the seal-reference dimension. Be sure to secure the rotary unit in place using the set screws in the locking ring.
8. Install the gland, with the stationary seat and gland gaskets installed, on the seal chamber.
9. Reinstall the seal chamber.
10. Complete the reassembly of the pump.

Install the impeller

CAUTION:
Wear heavy work gloves when you handle impellers. The sharp edges can cause physical injury.

1. Install the impeller.

Pump size	Action
STi, MTi, and LTi	Install the impeller (101). Use a new impeller O-ring (412A).
XLT-i and i17	Install the impeller (101) and a Teflon washer (428D) on the plug (458Y). Use a new impeller O-ring (412A).

2. Attach a shaft wrench and a coupling key on the shaft.
   a) When the impeller (101) makes firm contact with the sleeve (126), raise the shaft wrench (counterclockwise, viewed from the impeller end of the shaft) off of the bench and slam it down (clockwise, viewed from the impeller end of shaft).

b) Apply a few sharp raps to tighten the impeller (101).

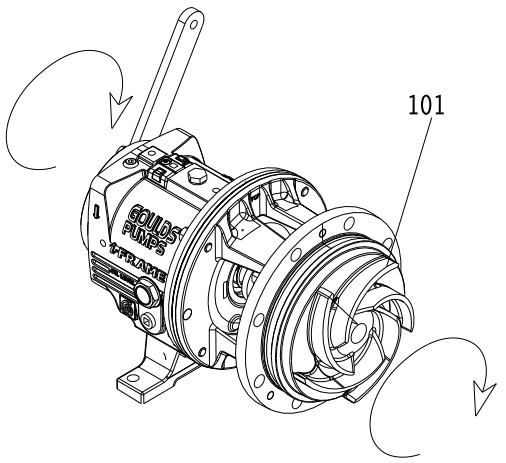

Figure 126: Tighten the impeller

3. Loosen the clamp bolts (370C) and the jack bolts (370D).
4. Measure the gap between the impeller (101) and the seal chamber and stuffing-box cover (184) with a feeler gauge.

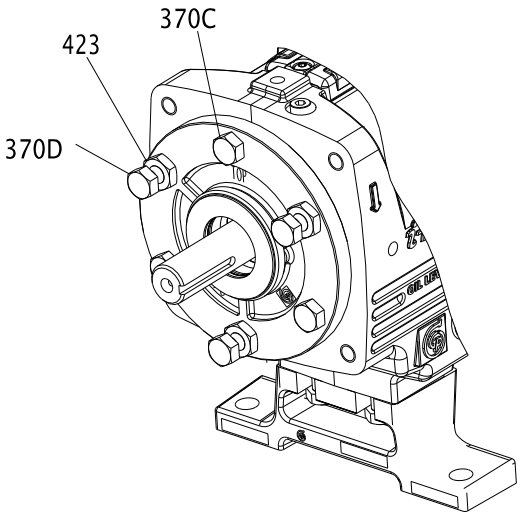

Figure 127: Loosen clamp bolts

5. When you reach a 0.030 in. (0.76 mm) clearance, tighten the clamp bolts (370C), jack bolts (370D), and lock nuts (423).
   This approximates the impeller position when it is set to 0.38 mm | 0.015 in. from the casing. Perform a final impeller adjustment after you install the impeller into the casing.
6. Check the impeller (101) runout.

Check vane tip to vane tip. If the total indicator reading is greater than 0.13 mm | 0.005 in., determine the cause and correct the issue before you proceed.

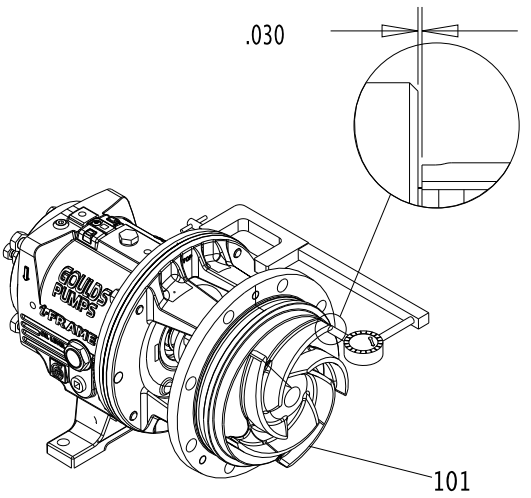

Figure 128: Check impeller run out

For more information on how to set the impeller clearances, refer to the Impeller-clearance checks and Impeller-clearance setting sections in Commissioning, Startup, Operation, and Shutdown.

Attach the i-*ALERT*® Condition Monitor to the pump

CAUTION:
Always wear protective gloves. The pump and condition monitor can be hot.

Tools required:

- 5/32 inch hex wrench

1. Attach the condition monitor (761B) to the bearing frame (228A) using the hex-head screw (372T) provided.

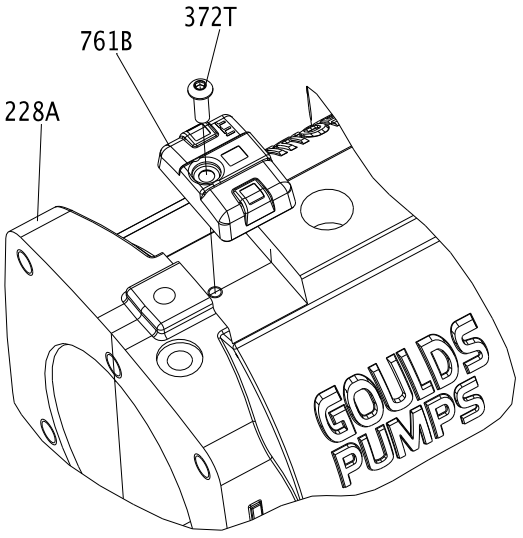

Figure 129: Attach condition monitor to bearing frame

2. Tighten the hex-head screw with a 5/32 inch hex wrench to 8 Nm | 6 ft-lbs.

Post-assembly checks

Perform these checks after you assemble the pump, then continue with pump startup:

- Rotate the shaft by hand in order to make sure that it rotates easily and smoothly and that there is no rubbing.
- Open the isolation valves and check the pump for leaks.

Install the back pull-out assembly (except HT 3196)

CAUTION:
Never remove the back pull-out assembly without assistance.

1. Clean the casing fit and install the casing gasket (351) on the seal chamber and stuffing-box cover.
2. Loosen the clamping bolts (370C) and jack bolts (370D) on the bearing housing.

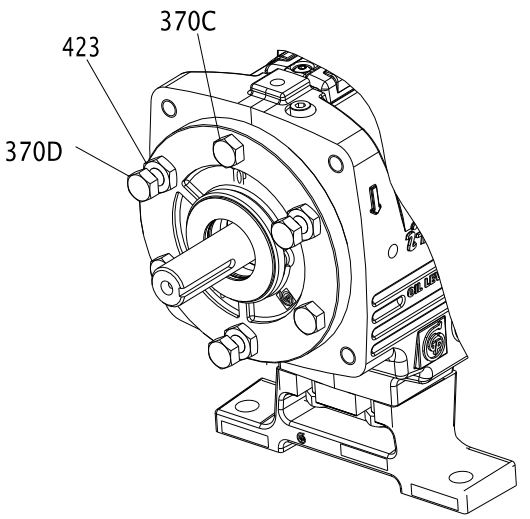

Figure 130: Loosen clamp bolts and jack bolts on bearing housing

3. Install the back pull-out assembly in the casing.

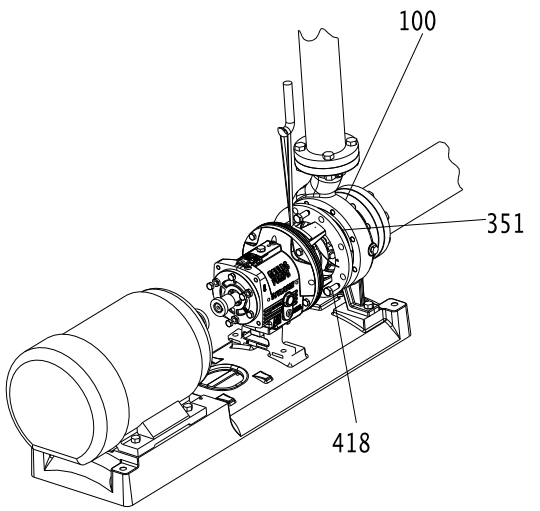

Figure 131: Install back pull-out assembly

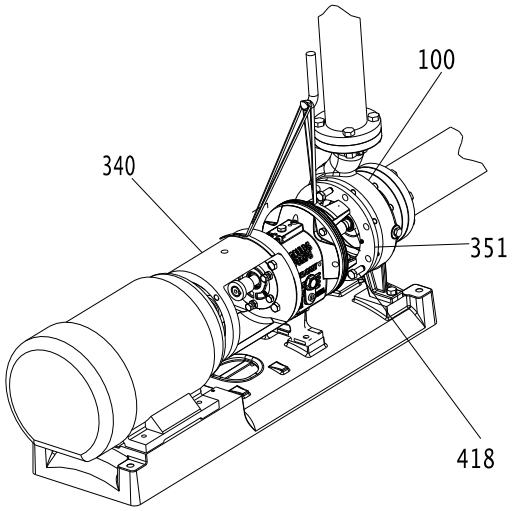

Figure 132: Install back pull-out assembly

4. Install and then hand-tighten the casing bolts (370).
   Refer to the bolt torque values for information on how to tighten the casing bolts.
5. Install and tighten the casing jackscrews (418).

NOTICE:
Do not overtighten the casing jackscrews. Doing so may result in equipment damage.

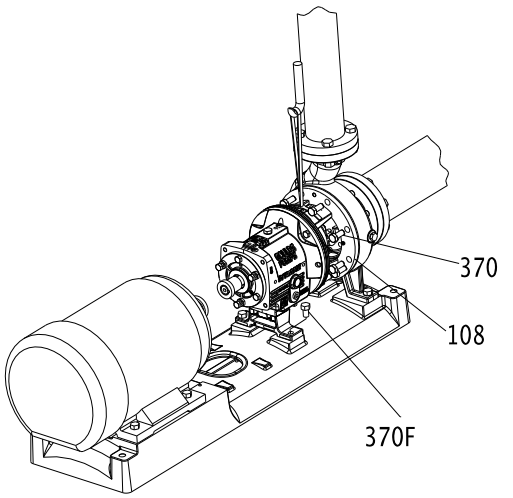

Figure 133: Install and tighten casing jackscrews

6. Reinstall the shims under the frame foot and tighten the frame foot to the baseplate.
   Make sure that you use the proper shim. Mount a dial indicator in order to measure the distance between the top of the frame and the baseplate. Make sure that the distance does not change as you tighten the frame-foot bolts.
7. Check the total clearance of the impeller in the casing.
   With new parts, an acceptable range is 0.76 mm | 0.030 in. to 1.65 mm | 0.065 in. If the impeller clearance is outside of this range, you either have the incorrect parts, an improper installation, or too much pipe strain. Determine the cause and correct the problem before you proceed.
8. Adjust the impeller clearance.
   Refer to the Impeller clearance setting section for more information.
9. Replace the auxiliary piping.

10. Fill the pump with the proper lubricant. See Lubricating-oil requirements.
11. Reinstall the coupling guard.
    See Install the coupling guard for more information.

NOTICE:
Risk of damage to the mechanical seal or shaft sleeve on units supplied with cartridge mechanical seals. Prior to startup, make sure to tighten the set screws in the seal locking ring and remove the centering clips.

Assembly references

Bolt torque values

Table 18: Bolt torque, Nm | lb-ft
This table provides the bolt torque values.

Location	Frame	3196, CV 3196, LF 3196, 3796		NM 3196		3198	
		Lube	Dry	Lube	Dry	Lube	Dry
Casing bolts (370) or casing nuts (425)	6-in. STi	Refer to the maximum torque values in Nm | lb-ft for casing bolts table.		36 | 27	53 | 40	N/A	N/A
	8-in. STi			27 | 20	40 | 30	47 | 35	71 | 53
	MTi, LTi			36 | 27	53 | 40	47 | 35	71 | 53
	XLT-i, i17			N/A	N/A	N/A	N/A
Frame-to-adapter bolts	All	27 | 20	40 | 30	27 | 20	40 | 30	27 | 20	40 | 30
Bearing-clamp ring bolts (236A) - duplex bearing only	STi, MTi	1.1* | 10	1.9* | 17	1.1* | 10	1.9* | 17	1.1* | 10	1.9* | 17
	LTi	6.2* | 55	9.4* | 83	6.2* | 55	9.4* | 83	6.2* | 55	9.4* | 83
Bearing end cover bolts (371C)	XLT-i, i17	12 | 9	16 | 12	N/A	N/A	N/A	N/A
Dynamic seal cap-screws (265)	STi, MTi, LTi	6.2* | 55	9.4 * | 83	N/A	N/A	N/A	N/A
	XLT-i, i17	12 | 9	16 | 12	N/A	N/A	N/A	N/A
* Values are in Nm | lb-in.							

Table 19: Maximum torque values in Nm | lb-ft for casing bolts
This table provides the maximum torque values for casing bolts.

		Models 3196, CV 3196 LF 3196, 3796 with 68 kg | 150 lb casing flanges				Model HT 3196 and all models with 136 kg | 300 lb casing flanges	
		Material specification					
		Ductile iron casing with A307 Grade B casing bolts		Alloy casing with (304SS) F593 Grade 1 or (316SS F593) Grade 2 casing bolts		Ductile iron and alloy casings with A193 grade B7 casing bolts	
Frame	Casing bolt diameter (in.)	Lube	Dry	Lube	Dry	Lube	Dry
8 in. STi	0.50	27 | 20	41 | 30	47 | 35	73 | 54	79 | 58	118 | 87
6 in. STi	0.625	53 | 39	80 | 59	96 | 71	145 | 107	156 | 115	235 | 173
MTi	0.625	53 | 39	80 | 59	96 | 71	145 | 107	156 | 115	235 | 173
LTi	0.625	53 | 39	80 | 59	96 | 71	145 | 107	156 | 115	235 | 173
XLT-i	0.625	53 | 39	80 | 59	96 | 71	145 | 107	156 | 115	235 | 173
i17	7/8	153 | 113	230 | 170	191 | 141	287 | 212	447 | 330	671 | 495

Shaft-end play

Table 20: Shaft-end play
Use this table as a reference for shaft-end play values.

Frame	Double row bearing	Duplex bearing
STi millimeters | inches	0.028 | 0.0011 0.048 | 0.0019	0.018 | 0.0007 0.025 | 0.0010

Frame	Double row bearing	Duplex bearing
MTi millimeters | inches	0.033 | 0.0013 0.053 | 0.0021	0.023 | 0.0009 0.030 | 0.0012
LTi millimeters | inches	Not applicable	0.025 | 0.0010 0.038 | 0.0015
XLT-i millimeters | inches	0.036 | 0.0014 0.058 | 0.0023	0.025 | 0.0010 0.038 | 0.0015

Bearing types

Table 21: Bearing types

Frame	Inboard bearing	Outboard bearing	
		Double row	Duplex
STi	6207	3306	7306
MTi	6309	3309	7309
LTi	6311	Not applicable	7310
XLT-i, i17	6313	3313	7313

Spare parts

Always state the serial number and indicate the part name and item number from the relevant sectional drawing when you order spare parts. It is imperative for service reliability to have a sufficient stock of readily available spare parts.

- Impeller (101)
- Shaft (122A)
- Shaft sleeve (126)
- Outboard bearing (112A)
- Inboard bearing (168A)
- Casing gasket (351)
- Frame-to-adapter gasket (360D)
- Bearing-housing retaining ring (361A)
- Bearing lockwasher (382)
- Bearing locknut (136)
- Impeller O-ring (412A)
- Bearing-housing O-ring (496)
- Outboard labyrinth-seal rotary O-ring (497F)
- Outboard labyrinth-seal stationary O-ring (497G)
- Inboard labyrinth-seal rotary O-ring (497H)
- Inboard labyrinth-seal stationary O-ring (497J)
- Lantern ring half (105) (packed stuffing box)
- Stuffing box packing (106) (packed stuffing box)
- Packing gland (107) (packed stuffing box)
- Impeller gasket (428D) (XLT-i and i17 only)

Interchangeability drawings

3196 interchangeability

Table 22: 3196 interchangeability drawing

Description	Shaft and Bearing Frame Assembly	Adapter	Seal Chamber	Impeller	Casing	Size
Model 3196 STi 1–3/8 in. Shaft Dia. Max BHP-40 HP	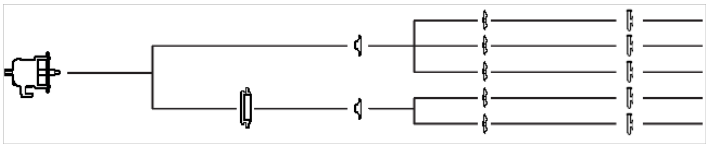					1x1.5-6 A 1.5x3-6 A 2x3-6 AC 1X1.5-8 A 1.5X3-8 A
Model 3196 MTi 1–3/4 in. Shaft Dia. Max BHP-122 HP	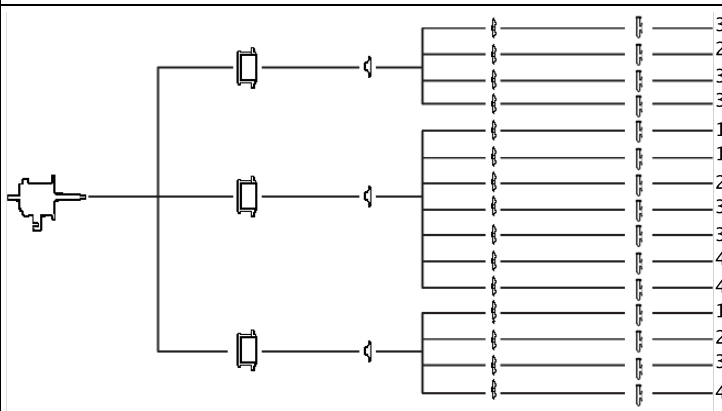					3X4-7 A70 2X3-8 A60 3X4-8 A70 3X4-8G A70 1X2-10 A05 1.5X3-10 A5 2X3-10 A60 3X4-10 A70 3X4-10H A4 4X6-10 A80 4X6-10H A8 1.5X3-13 A2 2X3-13 A30 3X4-13 A40 4X6-13 A80
Model 3196 LTi 2–1/8 in. Shaft Dia. Max BHP-200 HP	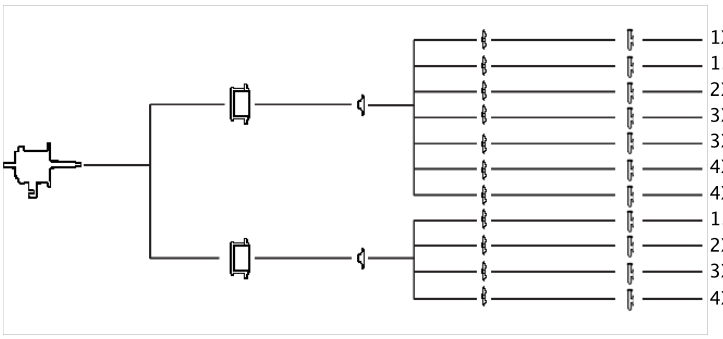					1X2-10 A05 1.5X3-10 A5 2X3-10 A60 3X4-10 A70 3X4-10H A4 4X6-10G A8 4X6-10H A8 1.5X3-13 A2 2X3-13 A30 3X4-13 A40 4X6-13 A80
Model 3196 XLT-i 2–1/2 in. Shaft Dia. Max BHP-250 HP 17 in. XLT-i has 2–3/4 in. Shaft Dia. Max BHP-350 HP	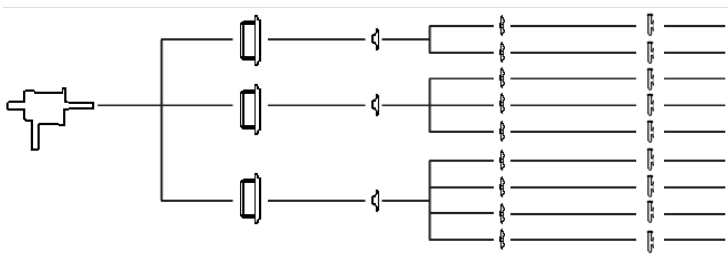					6X8-13 A90 8X10-13 A100 6X8-15 A110 8X10-15 A120 8X10-15G A12 8X10-15H A12 4X6-17 A105 6X8-17 A110 8X10-17 A120

Lubrication conversion

Frame lubrication conversion

NOTICE:

- Never mix greases of different consistencies (NLGI 1 or 3 with NLGI 2) or with different thickeners. For example, never mix a lithium-based grease with a polyurea-based grease. Doing so may result in decreased performance.
- Remove the bearings and old grease if you need to change the grease type or consistency. Failure to do so may result in equipment damage or decreased performance.

Use a grease that is suitable for high temperatures when you have frame pumpage temperatures greater than 177°C | 350°F. Ensure that mineral-oil greases have oxidation stabilizers and a consistency of NLGI 3.

Table 23: Lubricating-grease requirements

Most pumps use Sunoco 2EP grease. High temperature units with a pumpage temperature greater than 177°C | 350° F use Mobil SCH32.
This table shows which brand of grease to use when lubricating the pump.

	Pumpage temperature less than 177°C | 350°F	Pumpage temperature greater than 177°C | 350°F
NGLI consistency	2	3
Mobil	Mobilux EP2	SCH32
Exxon	Unirex N2	Unirex N3
Sunoco	Mutipurpose 2EP	N/A
SKF	LGMT 2	LGMT 3

Convert from greased-for-life or regreaseable to oil-lubricated bearings

1. Remove the plug from the oil-return slot in the frame located under the radial bearing. Use this table as a guide.

Pump model	Action
STi	Remove the epoxy from the return slot.
MTi, LTi, XLT-i, and i-17	Remove the set screw installed in the oil-return hole.

2. Remove the plug from the oil-return hole in the bearing housing (134).
3. Replace both bearings with unshielded, oil-lubricated bearings.

Table 24: Bearing types

Frame	Inboard bearing	Outboard bearing	
		Double row	Duplex
STi	6207	3306	7306
MTi	6309	3309	7309
LTi	6311	Not applicable	7310
XLT-i, i17	6313	3313	7313

4. Remove the grease fittings (193) to prevent accidental greasing.
   Two plugs (408H) are required to replace the two grease fittings.

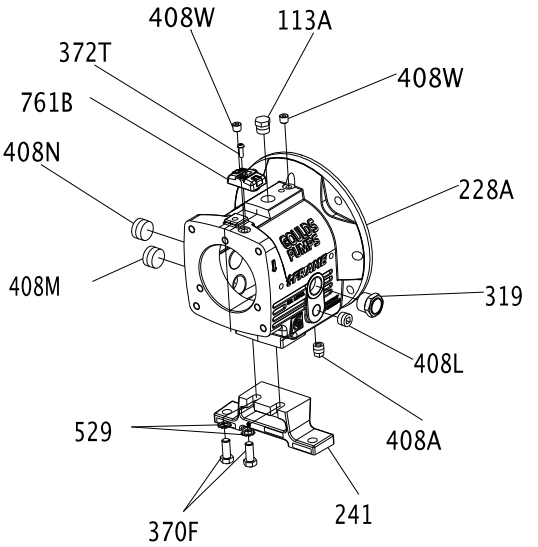

Figure 134: Replace two grease fittings with two plugs

Item Number	Size	Description	Quantity
113	1/4"-18 NPT	External hex/square head pipe plug	2
113A	1/2"-14 NPT	External hex/square head pipe plug	1
193	1/4"-18 NPT	Grease fitting	2
228	- - - -	Bearing frame	1
241	- - - -	Frame foot	1
370F	1/2"	Hex cap screw	2
408A	3/8"-18 NPT	External square head pipe plug (magnetic)	1
408J	1/4"-18 NPT	External hex/square head pipe plug	1
408L	1/2"-14 NPT	Square countersunk headless pipe plug	1
408M	1" 11-1/2" NPT	Square countersunk headless pipe plug	1
529	1/2"	Light helical spring lock washer	2

Conversion from flood-oil to pure-oil mist

Consult your local ITT representative for further information on this topic.

Convert from flood oil to regreaseable

Consult your local ITT representative for further information on this topic.

Troubleshooting

Operation troubleshooting

Symptom	Cause	Remedy
The pump is not delivering liquid.	The pump is not primed.	Re-prime the pump and check that the pump and suction line are full of liquid.
	The suction line is clogged.	Remove the obstructions.
	The impeller is clogged.	Back-flush the pump in order to clean the impeller.
	The shaft is rotating in the wrong direction.	Change the rotation. The rotation must match the arrow on the bearing housing or pump casing.
	The foot valve or suction pipe opening is not submerged enough.	Consult an ITT representative for the proper submersion depth. Use a baffle in order to eliminate vortices.
	The suction lift is too high.	Shorten the suction pipe.
The pump is not producing the rated flow or head.	The gasket or O-ring has an air leak.	Replace the gasket or O-ring.
	The stuffing box has an air leak.	Replace or readjust the mechanical seal.
	The impeller is partly clogged.	Back-flush the pump in order to clean the impeller.
	The clearance between the impeller and the pump casing is excessive.	Adjust the impeller clearance.
	The suction head is not sufficient.	Make sure that the suction-line shutoff valve is fully open and that the line is unobstructed.
	The impeller is worn or broken.	Inspect and replace the impeller if necessary.
The pump starts and then stops pumping.	The pump is not primed.	Re-prime the pump and check that the pump and suction line are full of liquid.
	The suction line has air or vapor pockets.	Rearrange the piping in order to eliminate air pockets.
	The suction line has an air leak.	Repair the leak.
The bearings are running hot.	The pump and driver are not aligned properly.	Realign the pump and driver.
	There is not sufficient lubrication.	Check the lubricant for suitability and level.
	The lubrication was not cooled properly.	Check the cooling system.
The pump is noisy or vibrates.	The pump and driver are not aligned properly.	Realign the pump and driver.
	The impeller is partly clogged.	Back-flush the pump in order to clean the impeller.
	The impeller or shaft is broken or bent.	Replace the impeller or shaft as necessary.
	The foundation is not rigid.	Tighten the hold-down bolts of the pump and motor. Make sure the baseplate is properly grouted without voids or air pockets.
	The bearings are worn.	Replace the bearings.
	The suction or discharge piping is not anchored or properly supported.	Anchor the suction or discharge piping as necessary according to recommendations in the Hydraulic Institute Standards Manual.
	The pump is cavitating.	Locate and correct the system problem.
The mechanical seal is leaking excessively.	The packing gland is not adjusted properly.	Tighten the gland nuts.
	The stuffing box is not packed properly.	Check the packing and repack the box.
	The mechanical seal parts are worn.	Replace the worn parts.
	The mechanical seal is overheating.	Check the lubrication and cooling lines.
	The shaft sleeve is scored.	Machine or replace the shaft sleeve as necessary.
The motor requires excessive power.	The discharge head has dropped below the rated point and is pumping too much liquid.	Install a throttle valve. If this does not help, then trim the impeller diameter. If this does not help, then contact your ITT representative.
	The liquid is heavier than expected.	Check the specific gravity and viscosity.
	The stuffing-box packing is too tight.	Readjust the packing. If the packing is worn, then replace the packing.
	Rotating parts are rubbing against each other.	Check the parts that are wearing for proper clearances.
	The impeller clearance is too tight.	Adjust the impeller clearance.

Alignment troubleshooting

Symptom	Cause	Remedy
Horizontal (side-to-side) alignment cannot be obtained (angular or parallel).	The driver feet are bolt-bound.	Loosen the pump's hold-down bolts, and slide the pump and driver until you achieve horizontal alignment.
	The baseplate is not leveled properly and is probably twisted.	1. Determine which corners of the baseplate are high or low. 2. Remove or add shims at the appropriate corners. 3. Realign the pump and driver.

Assembly troubleshooting

Symptom	Cause	Remedy
There is excessive shaft end play.	The internal clearance of the bearings exceeds the recommended amount.	Replace the bearings with a bearing of the correct type.
	The snap ring is loose in the bearing-housing groove.	Re-seat the snap ring.
There is excessive shaft and sleeve runout.	The sleeve is worn.	Replace the sleeve.
	The shaft is bent.	Replace the shaft.
There is excessive bearing-frame flange runout.	The shaft is bent.	Replace the shaft.
	The flange of the bearing frame is distorted.	Replace the bearing-frame flange.
There is excessive frame-adapter runout.	There is corrosion on the frame adapter.	Replace the frame adapter.
	The adapter-to-frame gasket is not seated properly.	Re-seat the frame adapter and make sure that the adapter-to-frame gasket is seated properly.
There is excessive seal chamber or stuffing-box cover runout.	The seal chamber or the stuffing-box cover is not properly seated in the frame adapter.	Re-seat the seal chamber or stuffing-box cover.
	There is corrosion or wear on the seal chamber or stuffing-box cover.	Replace the seal chamber or stuffing-box cover.
There is excessive vane-tip runout of the impeller.	The vane is bent.	Replace the impeller.

i-*ALERT*® Condition Monitor troubleshooting

To troubleshoot t the i-*ALERT*®*2* monitor, please refer to the i-*ALERT*®*2* IOM or i-ALERT2.com.

Symptom	Cause	Remedy
There are no green or red flashing LEDs.	The battery is dead.	Replace the condition monitor.
	The unit is deactivated.	Activate the condition monitor.
	The unit is malfunctioning.	Consult your ITT representative for a warranty replacement.
The red LEDs are flashing, but the temperature and vibration are at acceptable levels.	The baseline is bad.	Check the temperature and vibration levels and reset the condition monitor.
	The unit is malfunctioning.	Consult your ITT representative for a warranty replacement.

Parts Listings and Cross-Sectionals

Parts list

Table 25: Construction material and quantity

Item	Quantity	Part name	Pump Material				
			All D.I.	D.I. With 316 SS impeller	All 316SS	All CD4MCu	All Alloy 20
100	1	Casing	1012	1012	1203	1216	1204
101	1	Impeller	1013	1203	1203	1216	1204
105	1	Lantern Ring	Teflon				
106	1 set	Stuffing Box Packing	Non-asbestos braid				
107	1	Gland—Packed Box	1203			1204	
108	1	Frame Adapter	1013				
109C	1***	Outboard Bearing End Cover	1001				
112A	1	Outboard Bearing	Double row angular contact (duplex pair for LTi)				
113	2	Plug—Grease Relief	2210				
113B	1	Plug—Oil Fill	2210				
122	1	Shaft—Without Sleeve	2229			2230	
122	1	Shaft—With Sleeve	2238				
126	1	Shaft Sleeve	2229				2230
134	1	Bearing Housing	1001				
136	1	Bearing Locknut	Steel				
168A	1	Radial Bearing	Single row ball				
184	1	Seal Chamber/Stuffing Box Cover	1012	1012	1203	1216	1204
193	2	Grease Fitting	Steel				
228	1	Bearing Frame	STi 1013, All others - 1001				
236A	10	Cap Screw—Bearing Clamp Ring	2210				
239	1	Support, Casing	–	–	2201*	2201*	2201*
241	1	Frame Foot	1001				
248	1	Oil Thrower	2210				
250	1	Gland—Mechanical Seal	Material varies				
253B	1	Bearing Clamp Ring	2210				
319	1	Sight Glass	Glass/steel				
332A	1	Outboard Labyrinth Seal w/O-rings	Brass ASTM B505-96				
333A	1	Inboard Labyrinth Seal w/O-rings	Brass ASTM B505-96				
351	1	Casing Gasket	Aramid fiber w/EPDM				
353	4	Gland Stud	2228				
355	4	Gland Stud Nut	2228				
358	1	Plug—Casing Drain	2210		2229	2230	
358Y	1 ***	Plug, Impeller	2229			2230	
360C	1 ***	Gasket—Thrust End Cover	Buna				
360D	1	Gasket—Frame-to-Adapter	Buna				
360Q	1	Gasket—Gland-to-Stuffing Box Cover	Material varies				
361A	1	Retaining Ring	Steel				
370	****	Bolt—Adapter to Case	2210		2228		
370B	4	Bolt—Frame-to-Adapter	2210				
370C	**	Clamp Bolt —Bearing Housing	2210				
370D	**	Jack Bolt—Bearing Housing	2210				
370F	2	Bolt—Frame Foot to Frame	2210				
370H	2	Stud—Stuffing Box Cover-to-Adapter	2228				
370Y	2	Bolt—Cap Casing to Support	–	–	2210*		
371C	6 ***	Cap Screw-End Cover to Bearing Housing	2210				
382	1	Bearing Lockwasher	Steel				
383	1	Mechanical Seal	Material varies				
400	1	Coupling Key	2210				

Item	Quantity	Part name	Pump Material				
			All D.I.	D.I. With 316 SS impeller	All 316SS	All CD4MCu	All Alloy 20
408A	1	Plug—Oil Drane	2210				
408H	4	Plug—Oil Mist Connection	2210				
408J	1	Plug—Oiler	2210				
408L	1	Plug—Oil Cooler Inlet	2210				
408M	1	Plug—Oil Cooler Outlet	2210				
408N	1	Plug—Sight Glass	2210				
412A	1	O-Ring, Graphoil Impeller	–	–	*		
418	3	Jack Bolt—Adapter-to-Case	2228				
423	3	Jam Nut—Bearing Housing Jack Bolt	2210				
423B	2	Hex Nut—Stuffing Box Cover to Adapter	2228				
428	1	Gasket, Plug	Teflon				
437	1	Lockwasher, Casing to Support	–	–	2210*		
458Y	1 ***	Plug, Impeller	2229			2230	
469B	2	Dowel Pin—Frame-to-Adapter	Steel				
494	1	Tube Element, Finned Cooled	304SS / Copper				
496	1	O-Ring Bearing Housing	Buna N				
412A	1	O-Ring—Impeller	Viton				
497F	1	O-Ring—Outboard Labyrinth Rotor	Viton				
497G	1	O-Ring—Outboard Labyrinth Stator	Viton				
497H	1	O-Ring—Inboard Labyrinth Rotor	Viton				
497J	1	O-Ring—Inboard Labyrinth Stator	Viton				
497L	1	O-Ring Internal (inboard)	Viton				
497N	1	O-Ring Internal (outboard)	Viton				
503	1	Adapter Ring	1013				
529	1	Lockwasher—Frame Foot-to-Bearing Frame	Steel				
555	1	Tube, Finned Cooling Assembly	304AA / Copper				
555A	1	Tube, Ftg Male (Frame Cooling)	Brass				
555B	2	Connector, Thermocouple (Frame Cooling)	Brass				
555C	2	Elbow, Female (Frame Cooling)	Brass				
555D	1	Conn TC Sealed PWR	Cast iron				
761B	1	i-*ALERT*® Condition Monitor	Stainless steel/epoxy				

Table 26: Construction material and quantity (continued)

Item	Quantity	Part name	Pump Material				
			All 317SS	All Monel	All Nickel	All Hastelloy C	All Hastelloy B
100	1	Casing	1209	1119	1601	1215	1217
101	1	Impeller	1209	1119	1601	1215	1217
105	1	Lantern Ring	Teflon				
106	1 set	Stuffing Box Packing	Non-asbestos braid				
107	1	Gland—Packed Box	1209	1119	1601	1215	1217
108	1	Frame Adapter	1013				
109C	1***	Outboard Bearing End Cover	1001				
112A	1	Outboard Bearing	Double row angular contact (duplex pair for LTi)				
113	2	Plug—Grease Relief	2210				
113B	1	Plug—Oil Fill	2210				
122	1	Shaft—Less Sleeve	2232	2150	2155	2248	2247
122	1	Shaft—With Sleeve	2229				
126	1	Shaft Sleeve	2232	2150	2155	2248	2247
134	1	Bearing Housing	1001				
136	1	Bearing Locknut	Steel				
168A	1	Radial Bearing	Single row ball				
184	1	Seal Chamber/Stuffing Box Cover	1209	1119	1601	1215	1217
193	2	Grease Fitting	Steel				

Item	Quantity	Part name	Pump Material				
			All 317SS	All Monel	All Nickel	All Hastelloy C	All Hastelloy B
228	1	Bearing Frame	STi-1013, All others - 1001				
236A	10	Cap Screw—Bearing Clamp Ring	2210				
239	1	Support, Casing	–	–	–	2201*	–
241	1	Frame Foot	1001				
248	1	Oil Thrower	2210				
250	1	Gland—Mechanical Seal	Material varies				
253B	1	Bearing Clamp Ring	2210				
319	1	Sight Glass	Glass/steel				
332A	1	Outboard Labyrinth Seal w/O-rings	Brass ASTM B505-96				
333A	1	Inboard Labyrinth Seal w/O-rings	Brass ASTM B505-96				
351	1	Casing Gasket	Aramid fiber w/EPDM				
353	4	Gland Stud	2232	2150	2155	2248	2247
355	4	Gland Stud Nut	2232	2150	2155	2248	2247
358	1	Plug—Casing Drain	2232	2150	2156	2248	2247
358Y	1 ***	Plug, Impeller	2232	2150	2156	2248	2156
360C	1 ***	Gasket—Thrust End Cover	Buna				
360D	1	Gasket—Frame-to-Adapter	Buna				
360Q	1	Gasket—Gland-to-Stuffing Box Cover	Material varies				
361A	1	Retaining Ring	Steel				
370	****	Bolt—Adapter to Case	2228				
370B	4	Bolt—Frame-to-Adapter	2210				
370C	**	Clamp Bolt —Bearing Housing	2210				
370D	**	Jack Bolt—Bearing Housing	2210				
370F	2	Bolt—Frame Foot to Frame	2210				
370H	2	Stud—Stuffing Box Cover-to-Adapter	2228				
370H	2	Bolt—Cap Casing to Support	–	–	–	2210*	–
371C	6 ***	Cap Screw-End Cover to Bearing Housing	2210				
382	1	Bearing Lockwasher	Steel				
383	1	Mechanical Seal	Material varies				
400	1	Coupling Key	2210				
408A	1	Plug—Oil Drane	2210				
408H	4	Plug—Oil Mist Connection	2210				
408J	1	Plug—Oiler	2210				
408L	1	Plug—Oil Cooler Inlet	2210				
408M	1	Plug—Oil Cooler Outlet	2210				
408N	1	Plug—Sight Glass	2210				
412A	1	O-Ring, Graphoil Impeller	–	–	–	*	–
418	3	Jack Bolt—Adapter-to-Case	2228				
423	3	Jam Nut—Bearing Housing Jack Bolt	2210				
423B	2	Hex Nut—Stuffing Box Cover to Adapter	2228				
428	1	Gasket, Plug	Teflon				
437	1	Lockwasher, Casing to Support	–	–	–	2210*	–
458Y	1***	Plug, Impeller	2232	2150	2155	2248	2247
469B	2	Dowel Pin—Frame-to-Adapter	Steel				
494	1	Tube Element, Finned Cooled	304SS / Copper				
496	1	O-Ring Bearing Housing	Buna N				
412A	1	O-Ring—Impeller	Viton				
497F	1	O-Ring—Outboard Labyrinth Rotor	Viton				
497G	1	O-Ring—Outboard Labyrinth Stator	Viton				
497H	1	O-Ring—Inboard Labyrinth Rotor	Viton				
497J	1	O-Ring—Inboard Labyrinth Stator	Viton				
497L	1	O-Ring Internal (inboard)	Viton				
497N	1	O-Ring Internal (outboard)	Viton				
503	1	Adapter Ring	1013				

Item	Quantity	Part name	Pump Material				
			All 317SS	All Monel	All Nickel	All Hastelloy C	All Hastelloy B
529	1	Lockwasher—Frame Foot-to-Bearing Frame	Steel				
555	1	Tube, Finned Cooling Assembly	304AA / Copper				
555A	1	Tube, Ftg Male (Frame Cooling)	Brass				
555B	2	Connector, Thermocouple (Frame Cooling)	Brass				
555C	2	Elbow, Female (Frame Cooling)	Brass				
555D	1	Conn TC Sealed PWR	Cast iron				
761B	1	i-*ALERT*® Condition Monitor	Stainless steel/epoxy				

Table 27: Construction material and quantity (continued)

Item	Quantity	Part name	Pump Material (3196, HT 3196, CV 3196, 3796)	Pump Material (NM 3196)	Pump Material (3198)
			All Titanium	Vinylester	D.I./Teflon
100	1	Casing	1220	6929	9639
101	1	Impeller	1220	6929	6944
105	1	Lantern Ring	Teflon	–	–
106	1 set	Stuffing Box Packing	Non-asbestos braid	–	–
107	1	Gland—Packed Box	1220	–	–
108	1	Frame Adapter	1013		
109C	1***	Outboard Bearing End Cover	1001		
112A	1	Outboard Bearing	Double row angluar contact (duplex pair for LTi)		
113	2	Plug—Grease Relief	2210		
113B	1	Plug—Oil Fill	2210		
122	1	Shaft—Less Sleeve	2156	2229	–
122	1	Shaft—With Sleeve	2229		6947
126	1	Shaft Sleeve	2156	2229	–
134	1	Bearing Housing	1001		
136	1	Bearing Locknut	Steel		
168A	1	Radial Bearing	Single row ball		
184	1	Seal Chamber/Stuffing Box Cover	1220	6929	9639
193	2	Grease Fitting	Steel		
228	1	Bearing Frame	STi - 1013, All others - 1001		
236A	10	Cap Screw—Bearing Clamp Ring	2210		
239	1	Support, Casing	–	–	–
241	1	Frame Foot	1001		
248	1	Oil Thrower	2210		
250	1	Gland—Mechanical Seal	Material varies		
253B	1	Bearing Clamp Ring	2210		
319	1	Sight Glass	Glass/steel		
332A	1	Outboard Labyrinth Seal w/O-rings	Brass ASTM B505-96		
333A	1	Inboard Labyrinth Seal w/O-rings	Brass ASTM B505-96		
351	1	Casing Gasket	Aramid fiber w/EPDM		
353	4	Gland Stud	2156	2229	2229
355	4	Gland Stud Nut	2156	2229	2229
358	1	Plug—Casing Drain	2156	–	–
358Y	1 ***	Plug, Impeller	2156	–	–
360C	1 ***	Gasket—Thrust End Cover	Buna		
360D	1	Gasket—Frame-to-Adapter	Buna		
360Q	1	Gasket—Gland-to-Stuffing Box Cover	Material varies		
361A	1	Retaining Ring	Steel		
370	****	Bolt—Adapter to Case	2228		
370B	4	Bolt—Frame-to-Adapter	2210		
370C	**	Clamp Bolt —Bearing Housing	2210		
370D	**l	Jack Bolt—Bearing Housing	2210		
370F	2	Bolt—Frame Foot to Frame	2210		

Item	Quantity	Part name	Pump Material (3196, HT 3196, CV 3196, 3796)	Pump Material (NM 3196)	Pump Material (3198)
			All Titanium	Vinylester	D.I./Teflon
370H	2	Stud—Stuffing Box Cover-to-Adapter	2228		
370Y	2	Bolt—Cap Casing to Support	–	–	–
371C	6 ***	Cap Screw-End Cover to Bearing Housing	2210		
382	1	Bearing Lockwasher	Steel		
383	1	Mechanical Seal	Material varies		
400	1	Coupling Key	2210		
408A	1	Plug—Oil Drane	2210		
408H	4	Plug—Oil Mist Connection	2210		
408J	1	Plug—Oiler	2210		
408L	1	Plug—Oil Cooler Inlet	2210		
408M	1	Plug—Oil Cooler Outlet	2210		
408N	1	Plug—Sight Glass	2210		
412A	1	O-Ring, Graphoil Impeller	–	–	–
418	3	Jack Bolt—Adapter-to-Case	2228		
423	3	Jam Nut—Bearing Housing Jack Bolt	2210		
423B	2	Hex Nut—Stuffing Box Cover to Adapter	2228		
428	1	Gasket, Plug	Teflon		
437	1	Lockwasher, Casing to Support	–	–	–
458Y	1 ***	Plug, Impeller	2156	–	–
469B	2	Dowel Pin—Frame-to-Adapter	Steel		
494	1	Tube Element, Finned Cooled	304SS / Copper		
496	1	O-Ring Bearing Housing	Buna N		
412A	1	O-Ring—Impeller	Viton		
497F	1	O-Ring—Outboard Labyrinth Rotor	Viton		
497G	1	O-Ring—Outboard Labyrinth Stator	Viton		
497H	1	O-Ring—Inboard Labyrinth Rotor	Viton		
497J	1	O-Ring—Inboard Laybrinth Stator	Viton		
497L	1	O-Ring Internal (inboard)	Viton		
497N	1	O-Ring Internal (outboard)	Viton		
503	1	Adapter Ring	1013		
529	1	Lockwasher—Frame Foot-to-Bearing Frame	Steel		
555	1	Tube, Finned Cooling Assembly	304AA / Copper		
555A	1	Tube, Ftg Male (Frame Cooling)	Brass		
555B	2	Connector, Thermocouple (Frame Cooling)	Brass		
555C	2	Elbow, Female (Frame Cooling)	Brass		
555D	1	Conn TC Sealed PWR	Cast iron		
761B	1	i-*ALERT*® Condition Monitor	Stainless steel/epoxy		

Table 28: Key to table symbols

–	Not applicable
*	Only applicable for HT 3196
**	3 for STi, MTi, LTi 4 for XLT-i, i17
***	XLT-I and i17 only
****	4 for 6 in. STi 8 for 8 in. STi and MTi 16 for 13 in. MTi, LTi , XLT-I 24 for 15 in. XLT-I 12 for 10 in. MTi, LTi , i17

Table 29: Material-code reference

Material	Goulds material code	ASTM	Din	ISO	JIS
Cast Iron	1001	A48 CLASS 20			
Ductile Iron	1012	A395 Gr60-40-18			
Ductile Iron	1013	A536 Gr60-42-10			
CD4MCu	1041	A744 CD4MCU			
Monel	1119	A494 GrM-35-1			
316SS	1203	A744 CF-8M	1.4408		G5121 (SC514)
Alloy 20	1204	A744CN-7M	1.4500		
317SS	1209	A744CG-8M	1.4448		
Hastelloy C	1215	A494 CW-6M			
CD4MCu	1216	A744CD4MCU	9.4460		
Hastelloy B	1217	A494 N-7M			
Titanium	1220	B367 GrC-3			
Nickel	1601	A494 GrCZ100			
Monel	2150	B164 UNS N04400			
Nickel	2155	B160 UNS N02200			
Titanium	2156	B348 Gr2			
Carbon Steel	2201	A576 Gr. 1018 and 1020			
Carbon Steel	2210	A108Gr1211			
304SS	2228	A276 Type 304			
316SS	2229	A276 Type 316			
Alloy 20	2230	B473 (N08020)			
317SS	2232	A276			
4150 Steel	2237	A322Gr4150			
4140 Steel	2238	A434Gr4140			
4140 Steel	2239	A193 Gr. B7			
Alloy B-2	2247	B335 (N10665)			
Alloy C-276	2248	B574 (N10276)			
GMP-2000	6929	N/A			
PFA Lined Steel	6944	N/A			
PFA Lined 316SS	6947	N/A			
PFA Lined Ductile Iron	9639	N/A			

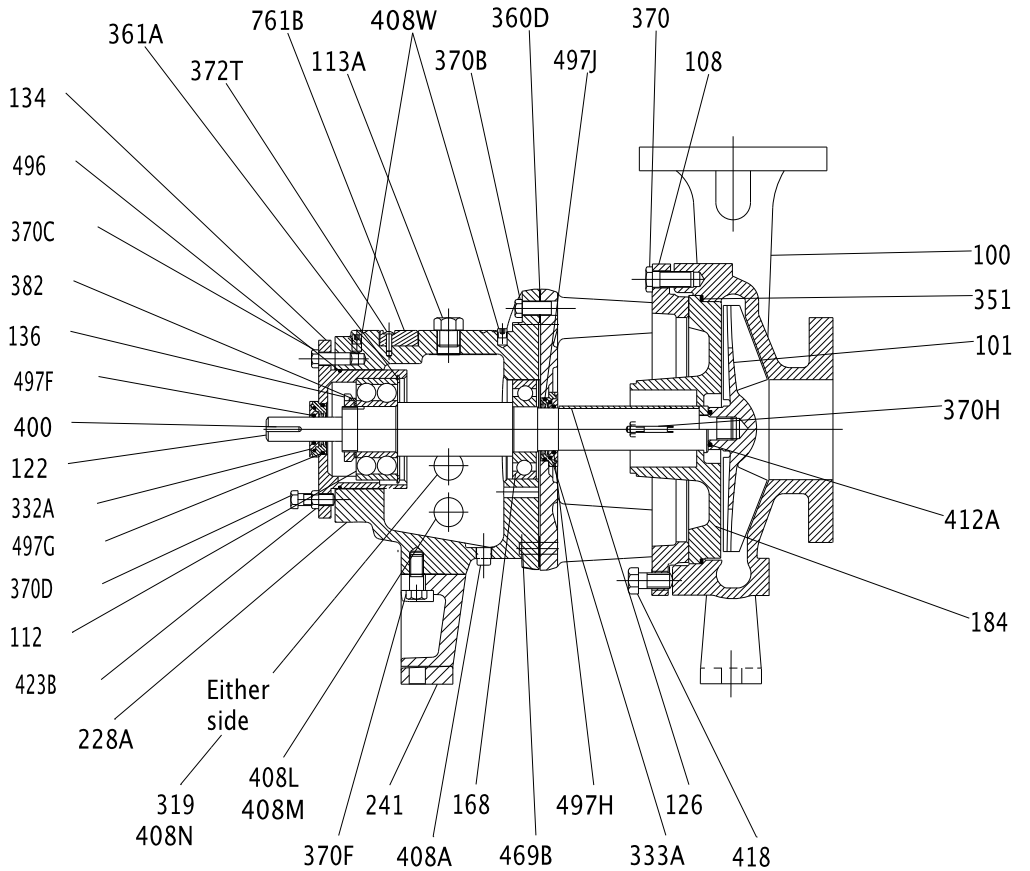

Figure 135: 3196 cross-sectional drawing

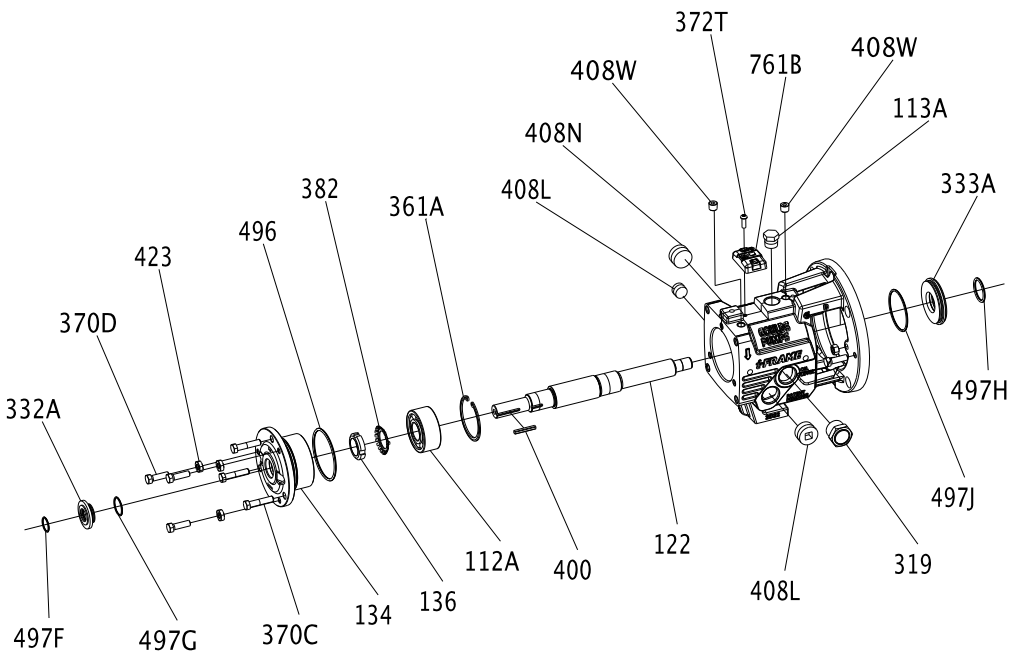

Figure 136: STi bearing-frame exploded view

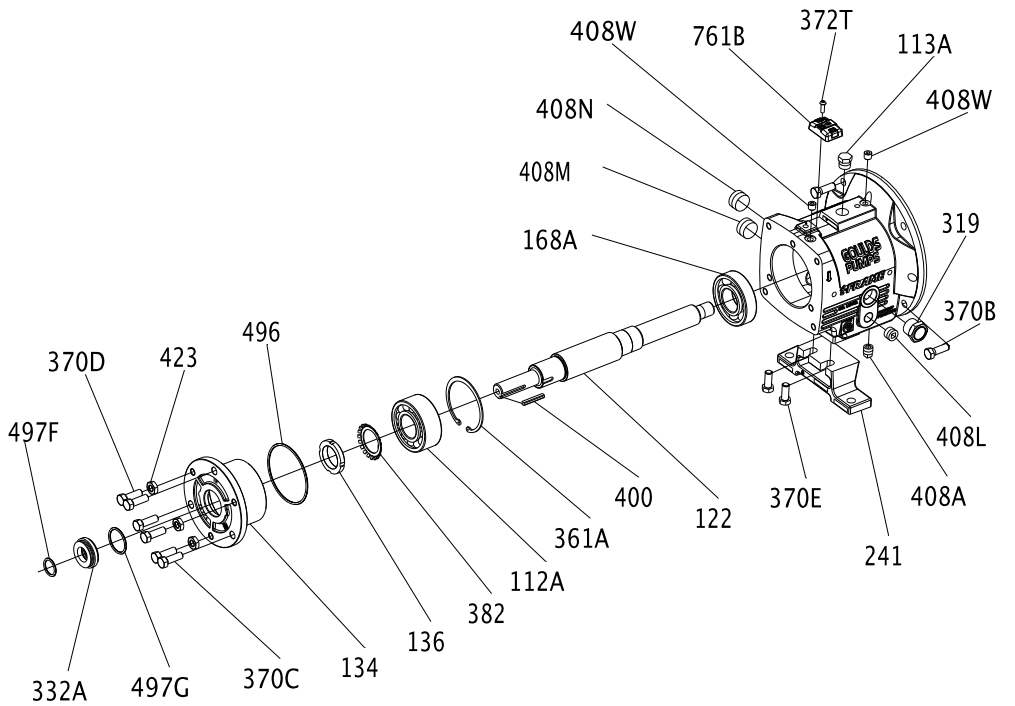

Figure 137: MTi bearing-frame exploded view

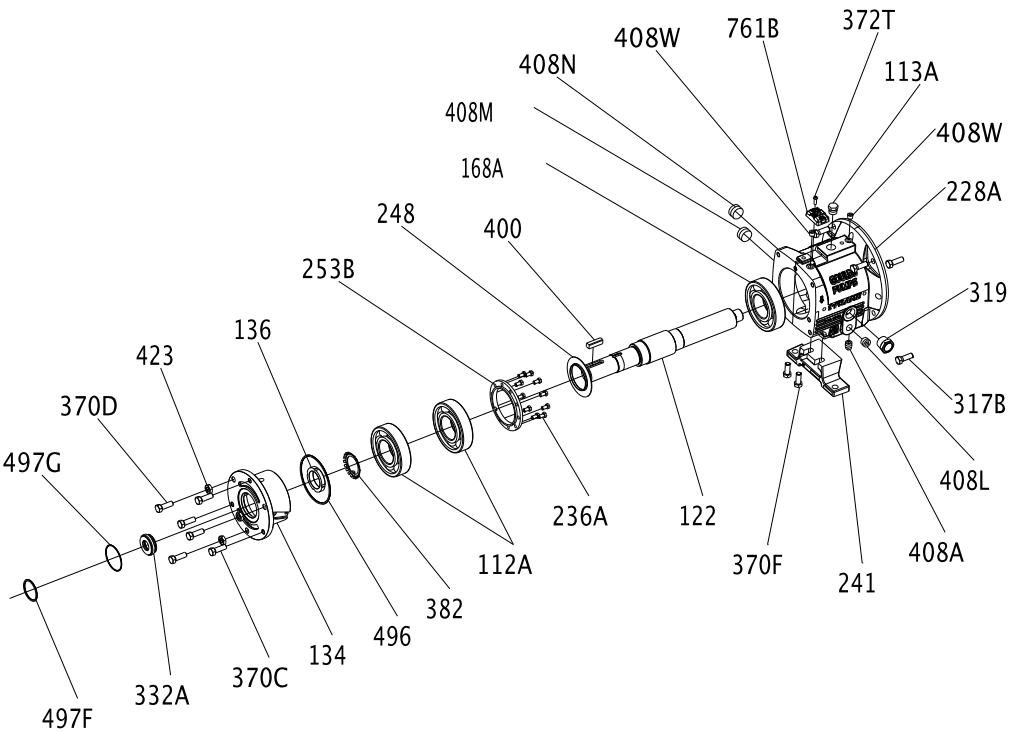

Figure 138: LTi bearing-frame exploded view

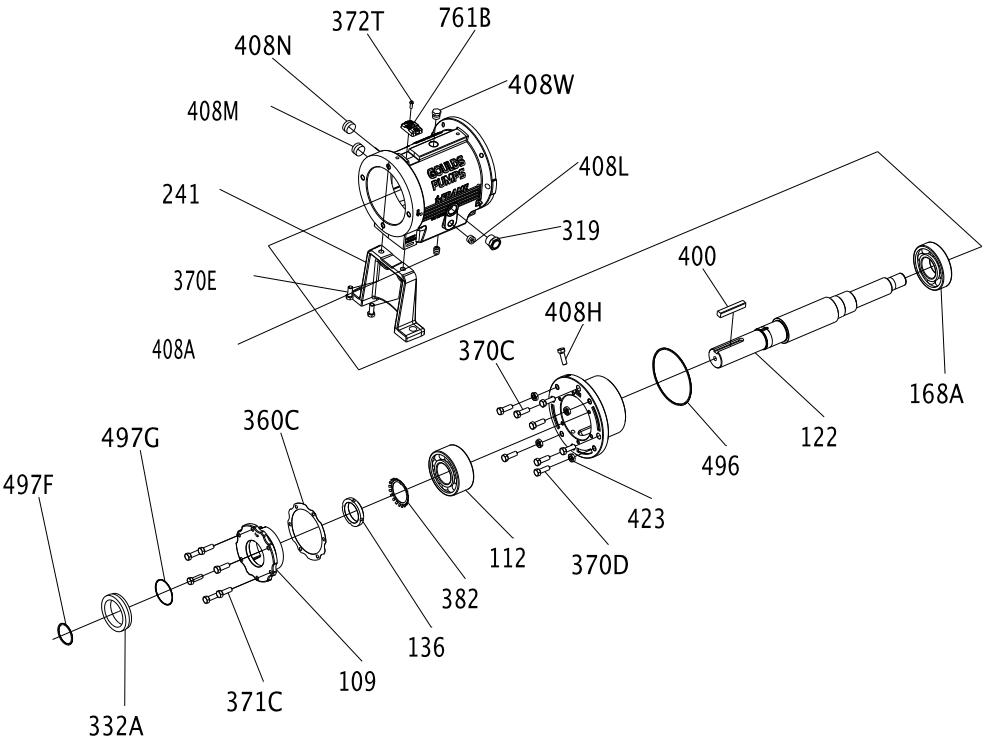

Figure 139: XLT-i bearing-frame exploded view

The finned-tube oil cooler is standard on HT 3196 and optional on all other models.

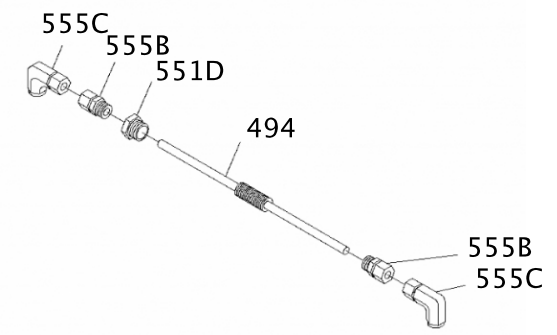

Figure 140: Finned-tube oil cooler exploded view

Certification: CE or CE ATEX

Certificates of conformance

CSA Certificate

CSA INTERNATIONAL

Certificate of Compliance

Certificate: 1992883 Master Contract: 236924

Project: 2254252 Date Issued: 2009/12/16

Issued to: ITT Corporation
240 Fall St
Seneca Falls, NY 13148
USA
Attention: Anthony Stavale

The products listed below are eligible to bear the CSA Mark shown with adjacent indicators 'C' and 'US' for Canada and US or with adjacent indicator 'US' for US only or without either indicator for Canada only.

C SP US

D. Simpson, Certifier

Issued by: D. Simpson, Certifier

PRODUCTS

CLASS 2258 03 - PROCESS CONTROL EQUIPMENT - Intrinsically Safe and Non-Incendive Systems - For Hazardous Locations

CLASS 2258 83 - PROCESS CONTROL EQUIPMENT-Intrinsically Safe and Non-Incendive - Systems-For Hazardous Locations-Certified to U.S. Standards

Class I, Division 1, Group A, B, C and D, Class II, Group E, F and G; Class III

- Condition Monitor, Model LCCM, p/n C07657A, battery operated (non-replaceable, non-rechargeable), intrinsically safe, temperature code T4 (at max ambient of 100C).

APPLICABLE REQUIREMENTS

CAN/CSA-C22.2 No. 0-M91 - General Requirements – Canadian Electrical Code, Part II

CAN/CSA-C22.2 No.157-92 - Intrinsically Safe and Non-Incendive Equipment for Use in Hazardous Locations

UL Std No.913, Ed. 7 - Intrinsically Safe Apparatus and Associated Apparatus for Use in Class I, II and III, Division 1, Hazardous Locations

CSA INTERNATIONAL

Certificate: 1992883 **Master Contract:** 236924

Project: 2254251 **Date Issued:** 2009/12/16

UL Std No. 969, 4th Edition - UL standard for safety marking and labeling systems

MARKINGS

- submittor s identification
- model designation
- date code or serial number
- Hazardous Location designations
- temperature code rating
- maximum ambient temperature
- the CSA Mark, with the C/US indicator
- the warning, WARNING- NOT FOR USE IN ATMOSPHERES CONTAINING ACETIC ACID
- the words "Ex ia" and "Intrinsically safe"

ATEX notification

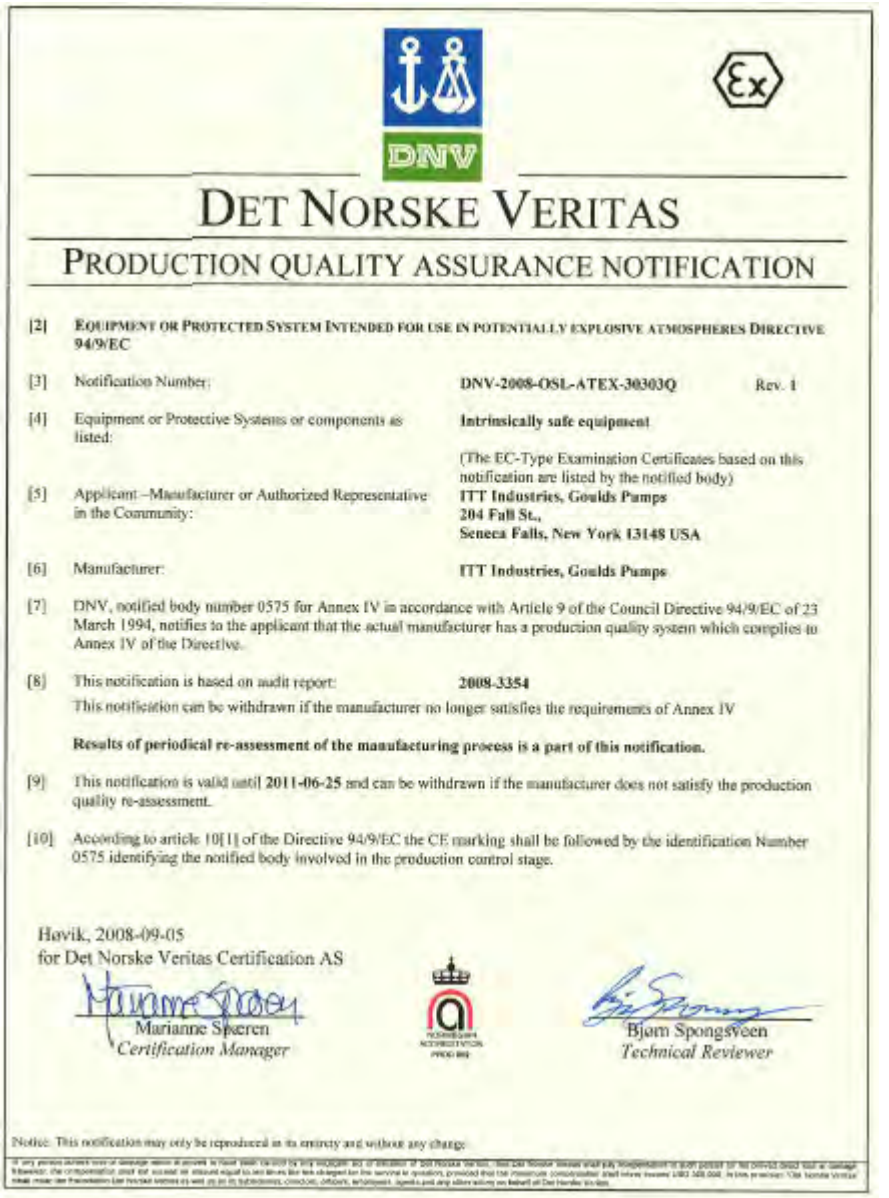

DET NORSKE VERITAS

PRODUCTION QUALITY ASSURANCE NOTIFICATION

[2] EQUIPMENT OR PROTECTED SYSTEM INTENDED FOR USE IN POTENTIALLY EXPLOSIVE ATMOSPHERES DIRECTIVE 94/9/EC

[3] Notification Number: **DNV-2008-OSL-ATEX-30303Q** Rev. 1

[4] Equipment or Protective Systems or components as listed: **Intrinsically safe equipment**

(The EC-Type Examination Certificates based on this notification are listed by the notified body)

[5] Applicant –Manufacturer or Authorized Representative in the Community: **ITT Industries, Goulds Pumps**
204 Fall St.,
Seneca Falls, New York 13148 USA

[6] Manufacturer: **ITT Industries, Goulds Pumps**

[7] DNV, notified body number 0575 for Annex IV in accordance with Article 9 of the Council Directive 94/9/EC of 23 March 1994, notifies to the applicant that the actual manufacturer has a production quality system which complies to Annex IV of the Directive.

[8] This notification is based on audit report: **2008-3354**
This notification can be withdrawn if the manufacturer no longer satisfies the requirements of Annex IV

Results of periodical re-assessment of the manufacturing process is a part of this notification.

[9] This notification is valid until **2011-06-25** and can be withdrawn if the manufacturer does not satisfy the production quality re-assessment.

[10] According to article 10[1] of the Directive 94/9/EC the CE marking shall be followed by the identification Number 0575 identifying the notified body involved in the production control stage.

Høvik, 2008-09-05
for Det Norske Veritas Certification AS

Marianne Speren
Certification Manager

Bjørn Spongsveen
Technical Reviewer

Notice: This notification may only be reproduced in its entirety and without any change.

IECEx Certificate of Conformity

IECEx Certificate of Conformity

INTERNATIONAL ELECTROTECHNICAL COMMISSION
IEC Certification Scheme for Explosive Atmospheres

for rules and details of the IECEx Scheme visit www.iecex.com

Certificate No.: IECEx LCI 08.0038 Issue No.: 0 Certificate history:

Status: Current

Date of Issue: 2008-09-16 Page 1 of 3

Applicant: **ITT Corp.**
Goulds pumps
240 Fall Street
Seneca Falls, NY 13148
United States of America

Electrical Apparatus: **Condition Monitor**
Optional accessory:

Type of Protection: **ia**

Marking: **ITT Corp.**
Goulds pumps
240 Fall Street
Seneca Falls, NY 13148
U.S.A.
Condition Monitor
Type : LCCM, p/n C07667A
Ex ia IIC T4
Tamb : -40°C à 100°C

Approved for issue on behalf of the IECEx Certification Body: Marc Gilleux

Position: Ex Certification Manager

Signature: (for printed version)

Date: le 16 Septembre 2008

1. This certificate and schedule may only be reproduced in full.
2. This certificate is not transferable and remains the property of the issuing body.
3. The Status and authenticity of this certificate may be verified by visiting the Official IECEx Website.

Certificate issued by:

Laboratoire Central des Industries Electriques (LCIE)
33 Avenue du General Leclerc
FR-92260 Fontenay-aux-Roses
France

IECEx Certificate of Conformity

Certificate No.: IECEx LCI 08.0038

Date of Issue: 2008-09-16 Issue No.: 0

Page 2 of 3

Manufacturer: **ITT Corp.**
Goulds pumps
240 Fall Street
Seneca Falls, NY 13148
United States of America

Manufacturing location(s):

This certificate is issued as verification that a sample(s), representative of production, was assessed and tested and found to comply with the IEC Standard list below and that the manufacturer's quality system, relating to the Ex products covered by this certificate, was assessed and found to comply with the IECEx Quality system requirements. This certificate is granted subject to the conditions as set out in IECEx Scheme Rules, IECEx 02 and Operational Documents as amended

STANDARDS:
The electrical apparatus and any acceptable variations to it specified in the schedule of this certificate and the identified documents, was found to comply with the following standards

IEC 60079-0 : 2004 Electrical apparatus for explosive gas atmospheres - Part 0: General requirements
Edition: 4.0
IEC 60079-11 : 2006 Explosive atmospheres - Part 11: Equipment protection by intrinsic safety "i"
Edition: 5

This Certificate does not indicate compliance with electrical safety and performance requirements other than those expressly included in the Standards listed above.

TEST & ASSESSMENT REPORTS:
A sample(s) of the equipment listed has successfully met the examination and test requirements as recorded in

Test Report:

FR/LCIEx/TR08.0043/00

Quality Assessment Report:
NO/DNV/QAR08.0006/00

Chinese Certificate of Conformity

CONFORMITY CERTIFICATE OF EXPLOSION-PROOF

PCEC

Certificate No.: CE082171

Name of Product:	Condition Monitor
Type of Product:	LCCM, p/n C07667A
Marking:	Exia II CT4
Technical Documents:	/
Drawing No.:	C07667A
Note (s):	1.The power is supplied by PANASONIC battery. The battery type is BR2477A 3V. 2.The manufacturer address: Goulds pumps, 240 Fall Street, Seneca Falls, NY 13148, U.S.A.

By verifying the drawings and technical documents and checking samples, the product complies with the following standards currently valid in P.R.China:

GB3836.1-2000 GB3836.4-2000

Issued to: ITT Corp.

Date of Expire: 2013-12-22

Date of Issue: 2008-12-22

Center seal

Director

Xu Gang

PCEC has been approved by

Supervision & Test Center of Ex- products of China Petroleum & Chemical Industry

注: 本证仅对与送检样品一致的产品有效.
Note: This certificate is only valid for the products that are in accord with sample(s) tested and verified.
中心地址:中国天津市卫丁字沽三号路85号 邮政编码:300131 电话/传真:022-26651066/26689116
Center Add: No.85 No.3 Road DingZiGu Tianjin China Post code: 300131 Tel/ Fax: 022-26651066/26689116
E-mail:csc@pcec.com.cn http://www.pcec.com.cn

Other Relevant Documentation or Manuals

For additional documentation

For any other relevant documentation or manuals, contact your ITT representative.

Local ITT Contacts

Regional offices

Region	Address	Telephone	Fax
North America (Headquarters)	ITT - Goulds Pumps 240 Fall Street Seneca Falls, NY 13148 USA	+1 315-568-2811	+1 315-568-2418
Asia Pacific	ITT Industrial Process 10 Jalan Kilang #06-01 Singapore 159410	+65 627-63693	+65 627-63685
Europe	ITT - Goulds Pumps Millwey Rise Industrial Estate Axminster, Devon, England EX13 5HU	+44 1297-630250	+44 1297-630256
Latin America	ITT - Goulds Pumps Camino La Colina # 1448 Condominio Industrial El Rosal Huechuraba Santiago 8580000 Chile	+562 544-7000	+562 544-7001
Middle East and Africa	ITT - Goulds Pumps Achileos Kyrou 4 Neo Psychiko 115 25 Athens Greece	+30 210-677-0770	+30 210-677-5642

Visit our website for the latest version of this document and more information:
http://www.gouldspumps.com

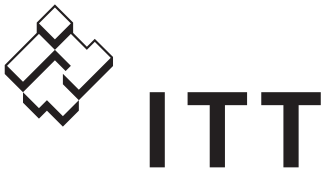

ENGINEERED FOR LIFE

240 Fall Street
Seneca Falls, NY 13148
USA
Tel. 1-800-446-8537
Fax (315) 568-2418

© 2016 ITT Corporation
The original instruction is in English. All non-English instructions are translations of the original instruction.

Form IOM.3196.i-FRAME.en-US.2016-04

PRO services

Installation, Operation, and Maintenance Manual

i-*ALERT®2* Equipment Health Monitor

ITT

ENGINEERED FOR LIFE

Table of Contents

Introduction and Safety 2
Introduction 2
Inspect the package 2
Limited warranty 2
Safety 3
Safety terminology and symbols 3
Safety regulations for Ex-approved products in potentially explosive atmosphere 3
Product approval standards 4

Product Description 7
General description i-*ALERT®2* Condition Monitor 7

Installation 8
Attach the i-*ALERT®2* Equipment Health Monitor to the pump 8

Commissioning, Startup, Operation, and Shutdown 11
Activate the i-*ALERT®2* Equipment Health Monitor 11
Reset the i-*ALERT®2* Equipment Health Monitor 12
i-*ALERT®2* Equipment Health Monitor routine operation 13

Maintenance 14
Guidelines for i-*ALERT®2* Equipment Health Monitor disposal 14

Troubleshooting 15
i-*ALERT®2* Equipment Health Monitor troubleshooting 15

Introduction and Safety

Introduction

Purpose of this manual

The purpose of this manual is to provide necessary information for:

- Installation
- Operation
- Maintenance

CAUTION:
Read this manual carefully before installing and using the product. Improper use of the product can cause personal injury and damage to property, and may void the warranty.

NOTICE:
Save this manual for future reference, and keep it readily available at the location of the unit.

Requesting other information

For instructions, situations, or events that are not considered in this manual or in the sales documents, please contact your ITT representative. Always specify the exact product type and identification code when requesting technical information or spare parts.

Inspect the package

1. Inspect the package for damaged or missing items upon delivery.
2. Note any damaged or missing items on the receipt and freight bill.
3. File a claim with the shipping company if anything is out of order.
   If the product has been picked up at a distributor, make a claim directly to the distributor.

Limited warranty

Goulds Pumps, Inc. ("Goulds") warrants to the original purchaser that your i-*ALERT®2* Equipment Health Monitor (the "Product") shall be free from defects in materials and workmanship under normal use for a period of one (1) year from the date of shipment. This Limited Warranty does not cover software embedded in the Product and the services provided by Goulds to owners of the Product.

Due to the varied ways that Product(s) can be accessed and/or configured during use, battery life is excluded from warranty. It is your responsibility to backup any data, software, or other materials you may have stored or preserved on the Product. It is likely that such data, software, or other materials will be lost or reformatted during service, and Goulds will not be responsible for any such damage or loss. Recovery and reinstallation of software programs and user data are not covered under this Limited Warranty. The Limited Warranty does not apply to any software, even if packaged or sold with the Product or embedded in the Product. We are not liable for any damage a mobile app may inflict on companion product

To view the full details of the Limited Product Warranty please go to: www.i-alert.com/warranty

Safety

WARNING:

- The operator must be aware of safety precautions to prevent physical injury.
- Operating, installing, or maintaining the unit in any way that is not covered in this manual could cause death, serious personal injury, or damage to the equipment. This includes any modification to the equipment or use of parts not provided by ITT. If there is a question regarding the intended use of the equipment, please contact an ITT representative before proceeding.
- Installation, Operation and Maintenance manuals clearly identify accepted methods for disassembling units. These methods must be adhered to.

Observe all safety messages highlighted in other sections of this manual.

Safety terminology and symbols

About safety messages

It is extremely important that you read, understand, and follow the safety messages and regulations carefully before handling the product. They are published to help prevent these hazards:

- Personal accidents and health problems
- Damage to the product
- Product malfunction

Hazard levels

Hazard level	Indication
DANGER:	A hazardous situation which, if not avoided, will result in death or serious injury
WARNING:	A hazardous situation which, if not avoided, could result in death or serious injury
CAUTION:	A hazardous situation which, if not avoided, could result in minor or moderate injury
NOTICE:	• A potential situation which, if not avoided, could result in undesirable conditions • A practice not related to personal injury

Safety regulations for Ex-approved products in potentially explosive atmosphere

Description of ATEX

The ATEX directives are a specification enforced in EU for electrical and non-electrical equipment. ATEX deals with the control of potentially explosive atmospheres and the standards of equipment and protective systems used within these atmospheres. The relevance of the ATEX requirements is not limited to Europe. You can apply these guidelines to equipment installed in any potentially explosive atmosphere.

Description of ETL

The ETL Mark is proof of product compliance to North American safety standards. Authorities Having Jurisdiction(AHJs) and code officials across the US and Canada accept the ETL Listed Mark as proof of product compliance to published industry standards.

Description of IECEx

The IECEx certificates of conformity attest that a sample of the Ex product, have been independently tested and found to comply with the International Standards. It also attests that the manufacturing site has been audited to verify that the manufacturer's quality system meets IECEx requirements.

Safety regulations regarding the Battery

Do not charge, short circuit, crush, dissemble, heat above 100°C (212°F), incinerate or expose contents to water.

Personal requirements

ITT disclaims all responsibility for work done by untrained and unauthorized personnel.
These are the personnel requirements for Ex-approved products in potentially explosive atmospheres:

- All users must know about the risks of electric current and the chemical and physical characteristics of the gas and/or vapor present in hazardous areas.
- The installation for Ex-approved products must be made in conformity to the international or national standards (IEC/EN 60079-17).

Product approval standards

Intrinsic safe standards

North America USA and Canada certifications

Standards tested to:

UL 913
UL 60079-0
UL 60079-11
CSA-C22.2 No. 157-92
CSA-C22.2 No. 60079-0:11
CSA-C22.2 No. 60079-11:14
Markings USA:
Class I, II, III; Division 1; Groups C, D, E, F, G
Class I; Zone 0, AEx ia IIB Ga (Groups C & D)
Markings Canada:
Class I, II, III; Division 1; Groups C, D, E, F, G
Ex ia IIB Ga (Groups C & D)
Ambient temperature: -40°C to 60°C | -40°F to 140°F

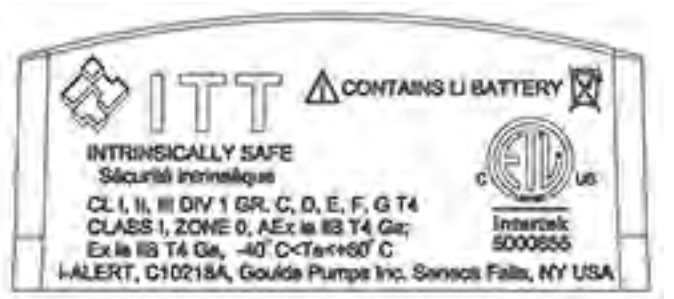

Europe and Worldwide certifications

Standards tested to:

ATEX

EN 60079-0:2012
EN 60079-11:2012
EN 60079-26:2007+COR1:2011
EN 50303:2000

IECEx

IEC 60079-0:2011
IEC 60079-11:2011
IEC 60079-26:2006

ATEX & IECEx Markings

I M1 Ex ia I Ma
II 1G Ex ia IIB T4 Ga
II 1D Ex ia IIIC Da T200°C Da
Ambient Temperature: -40°C to +60°C | -40°F to +140°F

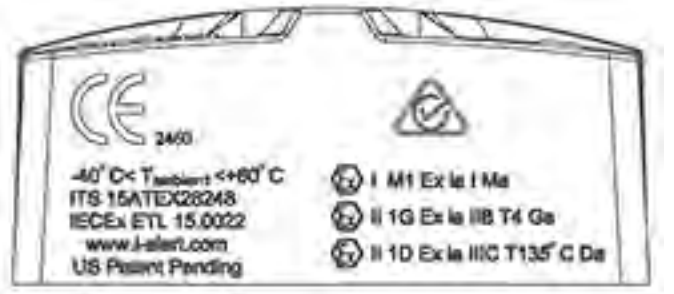

Electromagnetic compatibility certifications

Standards for testing i-*ALERT2* Equipment Health Monitor

Radiated Emissions
FCC 47CFR 15 Subpart B:2014
EN 61000-6-4:2007
Electro-Static Discharge Immunity Test
(EN 61000-4-2:1995 per EN 61000-6-2:2007 +AMD 1 Cor 12)
(EN 61000-4-2:2009 per ETSI EN 301 489-1 V1.9.2
Radiated, Radio-Frequency, Electromagnetic Immunity
(EN 61000-4-3:2002 per EN 61000-6-2:2007 +AMD 1 Cor 12)
(EN 61000-4-3:2006+A1:2008+A2:2010 per ETSI EN 301 489-1 V1.9.2
Power Frequency Magnetic Field Immunity Test
(EN 61000-4-8 1993 per EN 61000-6-2:2007 +AMD 1 Cor 12)

Standards for testing Bluetooth radio

Industry Canada, Interference-Causing Equipment Standard for Information Technology Equipment (ITE)
ICES-003 Issue 5 August 2012
Electromagnetic compatibility (EMC). Generic standards. Immunity for industrial environments
CENELEC EN 61000-6-2:2007 +AMD 1 Cor 12
Electromagnetic compatibility (EMC) Generic standards - Emission standard for industrial environments
CENELEC EN 61000-6-4:2007
Electromagnetic Compatibility (EMC) standard for radio equipment and services;
Part 1: Common technical requirements
ETSI EN 301 489-1 V1.9.2 (2011-09)
ElectroMagnetic Compatibility (EMC) standard for radio equipment;

Part 17: Specific conditions for Broadband Data Transmission Systems
ETSI EN 301 489-17 V2.2.1 (2012-09)

FCC Regulatory Information

The FCC identifier for the radio module contained in the i-*ALERT®2* device is **FCC ID: T7VPAN17**.

The radio module in the i-*ALERT®2* device meets the requirements for modular transmitter approval as detailed in FCC public Notice DA00-1407. Transmitter Operation is subject to the following two conditions:

1. Operation is subject to the following two conditions: (1) This device may not cause harmful interference, and
2. This device must accept any interference received, including interference that may cause undesired operation.

The FCC requires the user to be notified that any changes or modifications made to this device that are not expressly approved by ITT may void the user's authority to operate the equipment. This equipment has been tested and found to comply with the limits for a Class B digital device, pursuant to Part 15 of the FCC Rules. These limits are designed to provide reasonable protection against harmful interference in a residential installation. This equipment generates, uses and can radiate radio frequency energy and, if not installed and used in accordance with the instructions, may cause harmful interference to radio communications. However, there is no guarantee that interference will not occur in a particular installation. If this equipment does cause harmful interference to radio or television reception, which can be determined by turning the equipment off and on, the user is encouraged to try to correct the interference by one or more of the following measures:

- Reorient or relocate the receiving antenna.
- Increase the separation between the equipment and receiver.
- Connect the equipment into an outlet on a circuit different from that to which the receiver is connected.
- Consult the dealer or an experienced radio/TV technician for help

RF Exposure

To comply with FCC RF Exposure requirements, do not modify, remove or change the antenna on the radio module contained within the i-*ALERT®2* device.

The radiated output power of the radio with mounted ceramic antenna **(FCC ID: T7VPAN17)** is far below the FCC radio frequency exposure limits. Nevertheless, the radio shall be used in such a manner that the potential for human contact during normal operation is minimized.

Industry Canada Certification

The radio module contained in the i-*ALERT®2* device is licensed to meet the regulatory requirements of Industry Canada (IC), license**: IC: 216Q-PAN17.**

IC Notice

The radio module within the i-*ALERT®2* device complies with Canada RSS-GEN Rules. The device meets the requirements for modular transmitter approval as detailed in RSS-GEN.

Operation is subject to the following two conditions:

1. This device may not cause harmful interference, and
2. This device must accept any interference received, including interference that may cause undesired operation.

European R&TTE declaration of conformity

The Bluetooth module contained within the i-*ALERT®2* device is in compliance with the essential requirements and other relevant provisions of Directive 1999/5/EC. As a result of the conformity assessment procedure described in Annex III of the Directive 1999/5/EC.

The i-*ALERT®2* device can be used in the following countries: Austria, Belgium, Cyprus, Czech Republic, Denmark, Estonia, Finland, France, Germany, Greece, Hungary, Ireland, Italy, Latvia, Lithuania, Luxembourg, Malta, Poland, Portugal, Slovakia, Slovenia, Spain, Sweden, The Netherlands, the United Kingdom, Switzerland, and Norway.

Product Description

General description i-*ALERT®2* Condition Monitor

Description

The i-*ALERT®2* Equipment Health Monitor is a compact, battery-operated monitoring device that continuously measures the vibration and temperature of the pump. The i-*ALERT®2* Equipment Health Monitor uses blinking red LED and wireless notification to alert the pump operator when the pump exceeds vibration and temperature limits. This allows the pump operator to make changes to the process or the pump before catastrophic failure occurs. The Equipment Health Monitor is also equipped with a single green LED to indicate when it is operational and has sufficient battery life.

The i-*ALERT®2* Equipment Health Monitor also contains a Bluetooth radio that communicates to certain Bluetooth 4.0 equipped devices through a mobile application.

Data is shared between the i-*ALERT®2* Equipment Health Monitor, the mobile application, phone, and the data servers.

The i-*ALERT®2* Equipment Health Monitor will communicate sensor related data (such as vibration, temperature, runtime information, and device statistics) stored in the device to the mobile application. The mobile application will send commands to the device.

The Mobile application will back up device data as well as app usage information on the data servers.

The data servers will send the mobile application equipment technical data.

For full details about data storage and rights please review the Privacy Policy.

Alarm mode

The i-*ALERT®2* Equipment Health Monitor enters alarm mode when either vibration or temperature limits are exceeded over two consecutive readings within a 10 minute period. Alarm mode is indicated with 1 (one) red flashing LED within 2 (two) second intervals.

Warning and alarm values

Variable	Limit
Temperature (default)	80°C | 176°F
Vibration Alarm (0.1-1.5 ips)	100% increase over the baseline level
Vibration Warning (0.1-1.5 ips)	75% increase over the baseline level

Battery life

The i-*ALERT®2* Equipment Health Monitor battery is not replaceable. You must replace the entire unit once the battery runs out of power. The battery life is not covered as part of the standard 5-year pump warranty.

The following determines the “normal operating conditions” in which the 3-year battery life is determined:

- Temperature: 18°C | 65°F
- Dashboard connections (including trend download): Once per day
- FFT and Time Waveform usage: One tri-axial request per 14 days
- Operation time in Alarm: 25% of time

Installation

Attach the i-*ALERT*®*2* Equipment Health Monitor to the pump

CAUTION:
Always wear protective gloves. The equipment and the i-*ALERT*®*2* device can be hot.

Mounting options

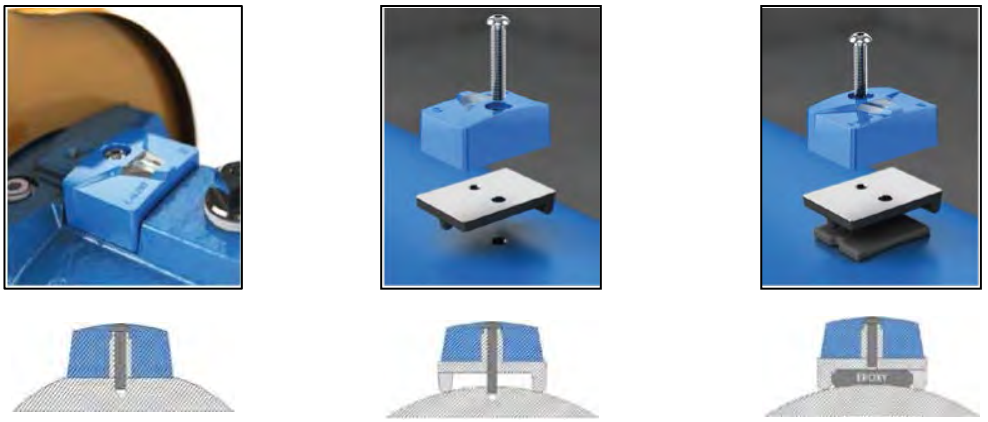

Figure 1: Mounting options

Mill a Slot	Drill and Tap	Epoxy[1]
Screw: ¼-28 x 1.125in	Screw: ¼-28 x 1.5in	Screw: ¼-28 x 1.125in
Slot: 2.25in L x 1.6in W	Tap: ¼-28 UNF x ¼in deep	Epoxy: application specific
Temperature: ****	Temperature: ***	Temperature: **
Vibration: ****	Vibration: ***	Vibration: ***
Prep Time: **	Prep Time: ***	Prep Time: ****

Epoxy[1] Not included

Epoxy recommendation

The epoxy used should be a two-part putty in stick form (not liquid) type, which contains metallic particles in order to enhance heat transfer. Epoxy of this type is commonly found at hardware and home improvement stores. The temperature range required and specific application determine the epoxy choice. Mount i-*ALERT*®*2* device to base using provided ¼-28 cap screw. Torque screw to 6 lb-ft. using a 5/32" size Allen Head wrench prior to the application of the epoxy.

Location selection

The i-*ALERT*®*2* device should be mounted on pumps or other rotating equipment as shown in the first image under “Mounting Options" (above) with the LED’s aligned with the shaft in order to maintain the preferred axis orientation shown below. Care should be taken to locate the device over the bearings, and to avoid placement on compliant surfaces such as coupling guards, and other light sheet metal. It is preferable to have one device over each bearing, but if that is not possible, monitoring the drive end is essential.

Figure 2: Location selection

App installation and registration

For installation guidance, video links can be found at the following site:
http://www.ittproservices.com/aftermarket-products/monitoring/i-alert2-condition-monitor/ (page)
To download the latest App, search for" i-ALERT2 condition monitor" in the Apple App Store.

Available on the App Store

To access the App it is necessary to create an account using a valid email in the registration tab on the login page.

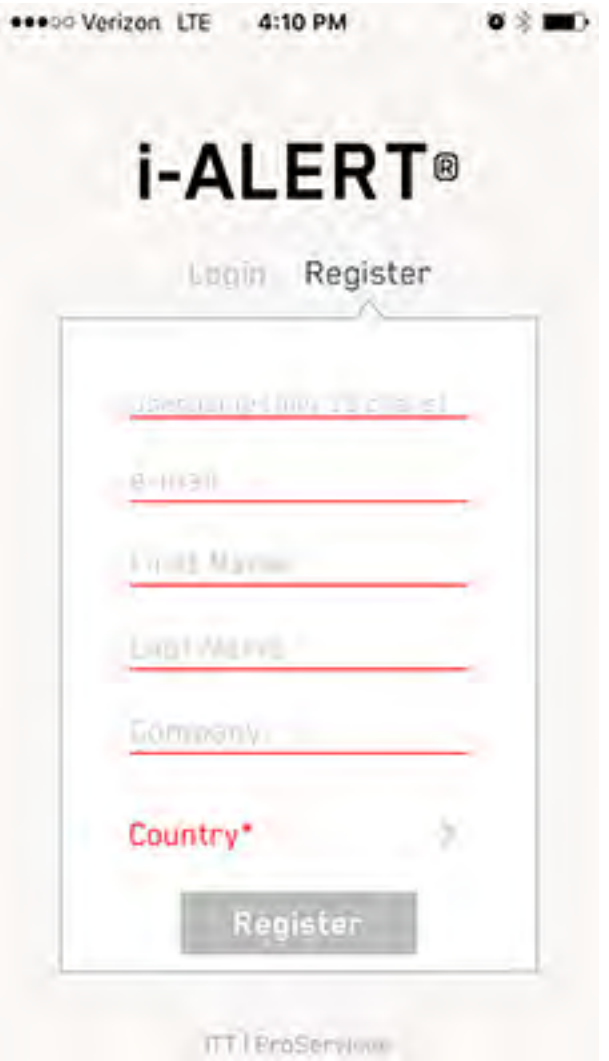

Figure 3: i-*ALERT®2* registration

Commissioning, Startup, Operation, and Shutdown

Activate the i-*ALERT*®*2* Equipment Health Monitor

Figure 4: i-*ALERT*®*2* Equipment Health Monitor activation

Steps to activate the i-*ALERT*®*2* Equipment Health Monitor

1. Remove the sticker.
2. The i-*ALERT*®*2* will look for light.

NOTICE: If in a dark environment use light source to activate.

3. When activated a sequence of flashing LEDs will start to indicate that the unit is powered on.
4. When sequence is completed the green LED will flash every 5 sec under normal operating conditions.

WARNING:
Never heat the condition monitor to temperatures in excess of 100°C | 212°F. Heating to these temperatures could result in death or serious injury.

CAUTION:
Always wear protective gloves. The pump and condition monitor can be hot.

Reset the i-*ALERT*®*2* Equipment Health Monitor

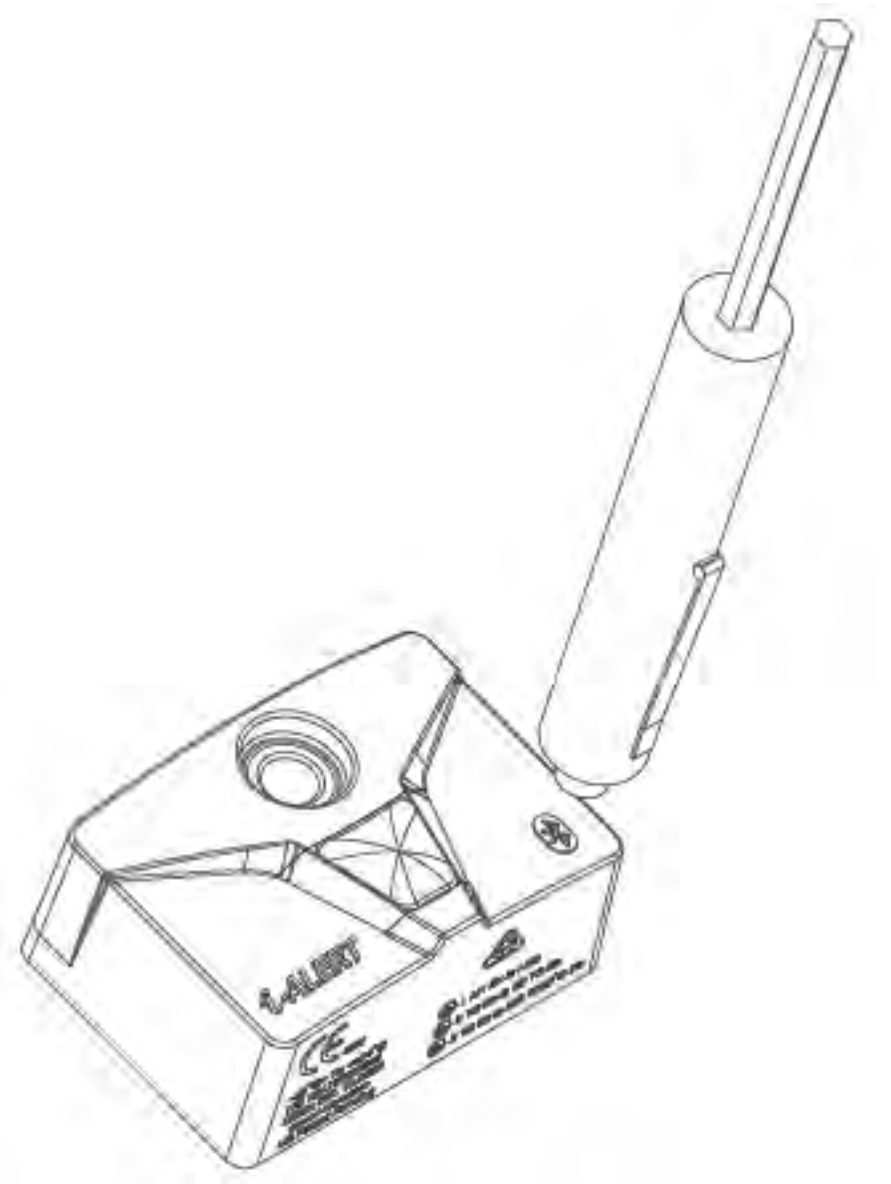

Figure 5: i-*ALERT*®*2* Equipment Health Monitor reset

The LEDs correspond to an i-*ALERT*®*2* Equipment Health monitor function.
When using the magnet over the BlueTooth icon you can change an i-*ALERT*®*2* Equipment Health monitor function. Lifting a magnet off on an LED will

Sequence	LED	When you lift the magnet off
1	Red	Nothing
2	Blue	Bluetooth is turned OFF/ON
3	Green	Unit is shut down
4	After flashing all colors stops	Unit is reset

i-*ALERT*®*2* Equipment Health Monitor routine operation

Measurement interval

The measurement interval for the condition monitor during normal and alarm operation is 5 minutes.

When the monitor measures a reading beyond the specified temperature and vibration limits, the appropriate red LED flashes (after 2 consecutive readings). After the process or pump condition that causes the alarm is corrected, the condition monitor returns to normal mode after one normal-level measurement.

Alarm mode

The condition monitor's alarm mode is activated after two consecutive readings. When the alarm mode is on, you should investigate the cause of the condition and make necessary corrections in a timely manner.

Magnetic device considerations

Be careful when you use magnetic devices in close proximity of the condition monitor, such as magnetic vibration-monitoring probes or dial indicators. These magnetic devices can accidentally activate or deactivate the condition monitor resulting in improper alarm levels or loss of monitoring.

Wireless integration

A Bluetooth Low Energy Radio is utilized to communicate condition monitoring information to a mobile Smart device that the operator can easily view and react to.

Maintenance

Guidelines for i-*ALERT*®*2* Equipment Health Monitor disposal

Precautions

WARNING:

- Never heat the condition monitor to temperatures in excess of 100°C | 212°F. Heating to these temperatures could result in death or serious injury.
- Never dispose of the condition monitor in a fire. This could result in death or serious injury.

Guidelines

This Product Contains Lithium Thionyl Chloride therefore the local Waste management companies can provide assistance in the disposal of the device that contain this type of battery.

Troubleshooting

i-*ALERT*®*2* Equipment Health Monitor troubleshooting

Symptom	Cause	Remedy
There are no red, green, or blue flashing LED.	The battery is dead.	Replace the equipment health monitor.
	The unit is in sleep mode.	Activate the condition monitor using magnet.
	The unit is malfunctioning.	Consult your ITT representative for a warranty replacement.
The red LED is flashing, but the temperature and vibration are at acceptable levels.	The baseline is set below normal operating limits.	Check the temperature and vibration levels and request new baseline. Or manually change alarm limits.
	The unit is malfunctioning.	Consult your ITT representative for a warranty replacement.

For connection issues with smart devices, please visit *www.i-ALERT.com* (page)

For ITT's privacy Policy, click here: *http://itt.com/privacy/* (page)

For User SW License Agreement, click here: *http://www.ittproservices.com/AppPrivacyPolicy* (page)

Visit our website for the latest version of this document and more information:
http://www.i-ALERT2.ittproservices.com

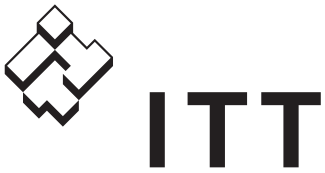

ENGINEERED FOR LIFE

Goulds Pumps Inc.
240 Fall Street
Seneca Falls, NY 13148
USA
Tel. 1-800-446-8537
Fax 1-315-568-2418

© 2016 ITT Corporation
The original instruction is in English. All non-English instructions are translations of the original instruction.

Form IOM.i-ALERT2.en-US.2016-03

SIEMENS

SITRANS

Pressure transmitter SITRANS P, DS III series with HART

Operating Instructions

7MF4.33..

Introduction 1

Safety instructions 2

Description 3

Installing/mounting 4

Connecting 5

Operation 6

Operating functions through HART 7

Functional safety 8

Commissioning 9

Service and maintenance 10

Technical data 11

Dimension drawings 12

Spare parts/accessories 13

Appendix A

List of abbreviations B

09/2012
A5E00047092-08

Legal information

Warning notice system

This manual contains notices you have to observe in order to ensure your personal safety, as well as to prevent damage to property. The notices referring to your personal safety are highlighted in the manual by a safety alert symbol, notices referring only to property damage have no safety alert symbol. These notices shown below are graded according to the degree of danger.

⚠ DANGER

indicates that death or severe personal injury **will** result if proper precautions are not taken.

⚠ WARNING

indicates that death or severe personal injury **may** result if proper precautions are not taken.

⚠ CAUTION

indicates that minor personal injury can result if proper precautions are not taken.

NOTICE

indicates that property damage can result if proper precautions are not taken.

If more than one degree of danger is present, the warning notice representing the highest degree of danger will be used. A notice warning of injury to persons with a safety alert symbol may also include a warning relating to property damage.

Qualified Personnel

The product/system described in this documentation may be operated only by **personnel qualified** for the specific task in accordance with the relevant documentation, in particular its warning notices and safety instructions. Qualified personnel are those who, based on their training and experience, are capable of identifying risks and avoiding potential hazards when working with these products/systems.

Proper use of Siemens products

Note the following:

⚠ WARNING

Siemens products may only be used for the applications described in the catalog and in the relevant technical documentation. If products and components from other manufacturers are used, these must be recommended or approved by Siemens. Proper transport, storage, installation, assembly, commissioning, operation and maintenance are required to ensure that the products operate safely and without any problems. The permissible ambient conditions must be complied with. The information in the relevant documentation must be observed.

Trademarks

All names identified by ® are registered trademarks of Siemens AG. The remaining trademarks in this publication may be trademarks whose use by third parties for their own purposes could violate the rights of the owner.

Disclaimer of Liability

We have reviewed the contents of this publication to ensure consistency with the hardware and software described. Since variance cannot be precluded entirely, we cannot guarantee full consistency. However, the information in this publication is reviewed regularly and any necessary corrections are included in subsequent editions.

Siemens AG
Industry Sector
Postfach 48 48
90026 NÜRNBERG
GERMANY

Order number: A5E00047092
℗ 10/2012 Technical data subject to change

Copyright © Siemens AG 2012.
All rights reserved

Table of contents

1 Introduction....9

1.1 Purpose of this documentation....9

1.2 Product information....9

1.3 History....9

1.4 Scope of the instructions....10

1.5 Checking the consignment....10

1.6 Transportation and storage....11

1.7 Notes on warranty....11

2 Safety instructions....13

2.1 Precondition for use....13
2.1.1 Laws and directives....13
2.1.2 Conformity with European directives....13

2.2 Use in hazardous areas....14

3 Description....17

3.1 System configuration....17

3.2 Application range....18

3.3 Structure....19

3.4 Nameplate layout....21

3.5 Measuring point label layout....22

3.6 Functional principle....23
3.6.1 Overview of mode of operation....23
3.6.2 Operation of the electronics....23
3.6.3 Measuring cell operation....24
3.6.3.1 Measuring cell for gauge pressure....25
3.6.3.2 Measuring cell for differential pressure and flow rate....26
3.6.3.3 Measuring cell for level....27
3.6.3.4 Measuring cell for absolute pressure from the differential pressure series....28
3.6.3.5 Measuring cell for absolute pressure from the gauge pressure series....29
3.6.3.6 Measuring cell for gauge pressure, front-flush membrane....29
3.6.3.7 Measuring cell for absolute pressure, front-flush membrane....30

3.7 Remote seal....31

3.8 SIMATIC PDM....31

4 Installing/mounting....33

4.1 Basic safety instructions....33
4.1.1 Installation location requirements....37
4.1.2 Proper mounting....38

4.1.2.1 Incorrect mounting....38
4.2 Disassembly....39
4.3 Installation (except level)....39
4.3.1 Instructions for installation (except level)....39
4.3.2 Installation (except level)....40
4.3.3 Fastening....41
4.4 "Level" installation....43
4.4.1 Instructions for level installation....43
4.4.2 Installation for level....44
4.4.3 Connection of the negative pressure line....45
4.5 "Remote seal" installation....47
4.5.1 Remote seal installation....47
4.5.2 Installation of the remote seal with the capillary line....49
4.6 Turing the measuring cell against housing....54
4.7 Rotating the display....55
5 Connecting....57
5.1 Basic safety instructions....57
5.1.1 Unsuitable cables and/or cable glands....57
5.2 Connecting the device....60
5.3 Connecting the Han plug....62
5.4 Connecting the M12 connector....63
6 Operation....65
6.1 Overview of operation....65
6.2 Basic safety instructions....66
6.3 Instructions for operation....66
6.4 Display....67
6.4.1 Display elements....67
6.4.2 Units display....68
6.4.3 Error display....69
6.4.4 Mode display....70
6.4.5 Status display....70
6.4.6 Overflow range....71
6.5 Local operation....72
6.5.1 Local control elements....72
6.5.2 Operation using buttons....74
6.5.3 Start of scale value/full scale value....75
6.5.3.1 Difference between setting and adjusting....75
6.5.3.2 Setting/adjusting the start of scale value....79
6.5.3.3 Setting/adjusting the full scale value....80
6.5.4 Setting/adjusting electrical damping....82
6.5.5 Blind start of scale value/full scale value....83
6.5.5.1 Difference between setting/adjusting and blind setting/adjusting....83
6.5.5.2 Blind setting of start of scale value....84
6.5.5.3 Blind setting of full scale value....85

6.5.5.4 Blind adjusting of the start of scale value....86
6.5.5.5 Blind adjustment of the full scale value....86
6.5.6 Trimming the zero point....87
6.5.7 Current transmitter....88
6.5.8 Output current in case of fault....89
6.5.9 buttons and function lock....90
6.5.10 Releasing key lock or function lock....91
6.5.11 Flow rate measurement (only differential pressure)....91
6.5.12 Measured value display....94
6.5.13 Unit....95

7 Operating functions through HART....99

7.1 Operating functions through HART communication....99
7.2 Process tag data....100
7.3 Selecting the measuring modes....100
7.3.1 Overview of measuring modes....100
7.3.2 Measuring mode selector....101
7.3.3 Variable mapper....101
7.3.4 Measuring mode "Pressure"....101
7.3.5 Customized characteristic curve....102
7.3.6 Measuring mode "Level"....103
7.3.7 Measuring mode "Flow rate"....106
7.3.8 Measuring mode "User"....108
7.3.9 Measured value status....110
7.3.10 Analog output....114
7.3.11 Scaling the display value....115
7.4 Setting zero point and limit point....116
7.5 Blind setting of zero point and limit point....117
7.6 Zero point calibration (position correction)....117
7.7 Electrical damping....118
7.8 Fast response mode....118
7.9 Current sensor....118
7.10 Fault current....118
7.11 Setting the current limits....119
7.12 Key lock and write protection....120
7.13 Measured value display....121
7.14 Selection of the physical unit....122
7.15 Bar graph....123
7.16 Sensor calibration....123
7.16.1 Sensor trim....123
7.16.2 Trimming the sensor....124
7.17 Current sensor trim....124
7.18 Factory calibration....125

7.19 Static configuration data....126
7.20 Flow rate measurement (only differential pressure)....127
7.21 Diagnostic functions....128
7.21.1 Overview....128
7.21.2 Operating hours counter....129
7.21.3 Calibration timer and service timer....129
7.21.4 Min/max indicator....130
7.21.5 Limit modules....131
7.22 Simulation....133
7.22.1 Overview of simulation....133
7.22.2 Simulation as fixed value....134
7.22.3 Simulation with a ramp function....134
7.23 Limit monitor....134
8 Functional safety....137
8.1 General safety instructions....137
8.1.1 Safety-instrumented system....137
8.1.2 Safety Integrity Level (SIL)....138
8.2 Device-specific safety information for single-channel operation (SIL 2)....140
8.2.1 Safety function....140
8.2.2 Settings....140
8.2.3 Requirements....141
8.2.4 Behavior in case of faults....142
8.2.5 Maintenance/Checking....142
8.2.6 Safety characteristics....142
8.3 Device-specific safety information for redundant operation (SIL 3)....143
8.3.1 Safety function....143
8.3.2 Requirements....144
8.3.3 Settings....145
8.3.4 Behavior in case of faults....146
8.3.5 Maintenance/Checking....146
8.3.6 Safety characteristics....147
8.4 Add-on parts....147
8.4.1 Checking a device with add-on pneumatic block....148
8.4.2 Checking a device with add-on remote seal....148
9 Commissioning....149
9.1 Basic safety instructions....149
9.2 Introduction to commissioning....150
9.3 gauge pressure, absolute pressure from the differential pressure series and absolute pressure from the gauge pressure series....151
9.3.1 Commissioning for gases....151
9.3.2 Commissioning with steam or liquid....152
9.4 Differential pressure and flow rate....153
9.4.1 Safety notes for commissioning with differential pressure and flow rate....153
9.4.2 Commissioning in gaseous environments....154
9.4.3 Commissioning for liquids....155

9.4.4 Commissioning with vapor....157
10 Service and maintenance....159
10.1 Basic safety instructions....159
10.2 Maintenance and repair work....162
10.2.1 Defining the maintenance interval....162
10.2.2 Checking the gaskets....163
10.2.3 Display in case of a fault....163
10.2.4 Changing the measuring cell and application electronics....164
10.3 Cleaning....164
10.3.1 Servicing the remote seal measuring system....165
10.4 Return procedure....166
10.5 Disposal....166
11 Technical data....169
11.1 Overview of technical data....169
11.2 Input point....170
11.3 Output....177
11.4 Measuring accuracy....177
11.5 Operating conditions....183
11.6 Construction....187
11.7 Display, keyboard and auxiliary power....191
11.8 Certificates and approvals....192
11.9 HART communication....194
12 Dimension drawings....195
12.1 SITRANS P, DS III series for gauge pressure and absolute pressure from the gauge pressure series....195
12.2 SITRANS P, DS III series for differential pressure, flow rate and absolute pressure from the differential pressure series....197
12.3 SITRANS P, DS III series for level....200
12.4 SITRANS P, DS III series (flush mounted)....202
12.4.1 Note 3A and EHDG....203
12.4.2 Connections as per EN and ASME....203
12.4.3 F&B and pharma flange....204
12.4.4 PMC Style....208
12.4.5 Special connections....209
13 Spare parts/accessories....211
13.1 Order data....211
13.2 Order data for SIMATIC PDM....213
A Appendix....215
A.1 Certificate....215

A.2 Literature and standards....215
A.3 Literature and catalogs....215
A.4 Overview of HART operating structure....217
A.5 Technical support....220
B List of abbreviations....221
B.1 Functional safety....221
Glossary....223
Index....227

Introduction 1

1.1 Purpose of this documentation

These instructions contain all information required to commission and use the device. It is your responsibility to read the instructions carefully prior to installation and commissioning. In order to use the device correctly, first review its principle of operation.

The instructions are aimed at persons mechanically installing the device, connecting it electronically, configuring the parameters and commissioning it, as well as service and maintenance engineers.

1.2 Product information

The programming manual is an integral part of the CD, which is either supplied or can be ordered. The programming manual is also available on the Siemens homepage.

On the CD, you will also find the catalog extract with the ordering data, the Software Device Install for SIMATIC PDM for additional installation, and the required software.

See also

Product information on SITRANS P in the Internet (http://www.siemens.com/sitransp)

Catalog process instrumentation (http://www.siemens.com/processinstrumentation/catalogs)

1.3 History

This history establishes the correlation between the current documentation and the valid firmware of the device.

The documentation of this edition applies to the following firmware:

Edition	Firmware identifier nameplate	System integration	Installation path for PDM
09/2012	FW: 11.03.03, FW: 11.03.04, FW: 11.03.05, FW: 11.03.06	PDM 6.0[1)]; Dev. Rev.3 DD Rev.2	SITRANS P DSIII.2
	[1)] up to SP05 Hotfix 5		

The most important changes in the documentation when compared with the respective previous edition are given in the following table.

Edition	Remark
09/2012	The following chapters have been changed: • "General safety notices" chapter • "Mounting" chapter • "Functional safety" chapter • "Technical data" chapter

1.4 Scope of the instructions

Table 1-1 "7MF4.33" stands for:

Order number	SITRANS P, DS III series for
7MF4033	Gauge pressure
7MF4133	Gauge pressure, flush mounted diaphragm
7MF4233	Absolute pressure from the gauge pressure series
7MF4333	Absolute pressure from the differential pressure series
7MF4433	Differential pressure and flow rate, PN 32/160 (MAWP 464/2320 psi)
7MF4533	Differential pressure and flow rate, PN 420 (MAWP 6092 psi)
7MF4633	Level

1.5 Checking the consignment

1. Check the packaging and the device for visible damage caused by inappropriate handling during shipping.
2. Report any claims for damages immediately to the shipping company.
3. Retain damaged parts for clarification.
4. Check the scope of delivery by comparing the shipping documents with your order for correctness and completeness.

⚠ WARNING

Using a damaged or incomplete device

Danger of explosion in hazardous areas.

- Do not use any damaged or incomplete devices.

See also

Return procedure (Page 166)

1.6 Transportation and storage

To guarantee sufficient protection during transport and storage, observe the following:

- Keep the original packaging for subsequent transportation.
- Devices/replacement parts should be returned in their original packaging.
- If the original packaging is no longer available, ensure that all shipments are properly packaged to provide sufficient protection during transport. Siemens cannot assume liability for any costs associated with transportation damages.

⚠ CAUTION

Insufficient protection during storage

The packaging only provides limited protection against moisture and infiltration.

- Provide additional packaging as necessary.

Special conditions for storage and transportation of the device are listed in "Technical data" (Page 169).

1.7 Notes on warranty

The contents of this manual shall not become part of or modify any prior or existing agreement, commitment or legal relationship. The sales contract contains all obligations on the part of Siemens as well as the complete and solely applicable warranty conditions. Any statements regarding device versions described in the manual do not create new warranties or modify the existing warranty.

The content reflects the technical status at the time of publishing. Siemens reserves the right to make technical changes in the course of further development.

Safety instructions 2

2.1 Precondition for use

This device left the factory in good working condition. In order to maintain this status and to ensure safe operation of the device, observe these instructions and all the specifications relevant to safety.

Observe the information and symbols on the device. Do not remove any information or symbols from the device. Always keep the information and symbols in a completely legible state.

Symbol	Explanation
	Consult operating instructions

2.1.1 Laws and directives

Observe the test certification, provisions and laws applicable in your country during connection, assembly and operation. These include, for example:

- National Electrical Code (NEC - NFPA 70) (USA)
- Canadian Electrical Code (CEC) (Canada)

Further provisions for hazardous area applications are for example:

- IEC 60079-14 (international)
- EN 60079-14 (EC)

2.1.2 Conformity with European directives

The CE mark on the device is a sign of conformity with the following European directives:

Electromagnetic Compatibility EMC 2004/108/EC	Directive of the European Parliament and of the Council on the approximation of the laws of the Member States relating to electromagnetic compatibility and repealing Directive 89/336/EEC.
Atmosphère explosible ATEX 94/9/EC	Directive of the European Parliament and the Council on the approximation of the laws of the Member States concerning equipment and protective systems intended for use in potentially explosive atmospheres.
Pressure Equipment Directive PED 97/23/EC	Directive of the European Parliament and of the Council on the approximation of the laws of the Member States concerning pressure equipment.

The standards applied can be found in the EC declaration of conformity for the device.

⚠ WARNING

Improper device modifications

Danger to personnel, system and environment can result from modifications to the device, particularly in hazardous areas.

- Only carry out modifications that are described in the instructions for the device. Failure to observe this requirement cancels the manufacturer's warranty and the product approvals.

Due to the large number of possible applications, each detail of the described device versions for each possible scenario during commissioning, operation, maintenance or operation in systems cannot be considered in the instructions. If you need additional information not covered by these instructions, contact your local Siemens office or company representative.

Note

Operation under special ambient conditions

We highly recommend that you contact your Siemens representative or our application department before you operate the device under special ambient conditions as can be encountered in nuclear power plants or when the device is used for research and development purposes.

2.2 Use in hazardous areas

Qualified personnel for hazardous area applications

Persons who install, assemble, commission, operate and service the device in a hazardous area must have the following specific qualifications:

- They are authorized, trained or instructed in operating and maintaining devices and systems according to the safety regulations for electrical circuits, high pressures, aggressive and hazardous media.
- They are authorized, trained, or instructed in carrying out work on electrical circuits for hazardous systems.
- They are trained or instructed in maintenance and use of appropriate safety equipment according to the pertinent safety regulations.

⚠ WARNING

Unsuitable device for the hazardous area

Danger of explosion.

- Only use equipment that is approved for use in the intended hazardous area and labelled accordingly.

See also

Technical data (Page 169)

⚠ WARNING

Loss of safety of device with type of protection "Intrinsic safety Ex i"

If the device has already been operated in non-intrinsically safe circuits or the electrical specifications have not been observed, the safety of the device is no longer ensured for use in hazardous areas. There is a danger of explosion.

- Connect the device with type of protection "Intrinsic safety" solely to an intrinsically safe circuit.
- Observe the specifications for the electrical data on the certificate and in Chapter "Technical data (Page 169)".

⚠ WARNING

Use of incorrect device parts in potentially explosive environments

Devices and their associated device parts are either approved for different types of protection or they do not have explosion protection. There is a danger of explosion if device parts (such as covers) are used for devices with explosion protection that are not expressly suited for this type of protection. If you do not adhere to these guidelines, the test certificates and the manufacturer warranty will become null and void.

- Use only device parts that have been approved for the respective type of protection in the potentially explosive environment. Covers that are not suited for the "explosion-proof" type of protection are identified as such by a notice label attached to the inside of the cover with "Not Ex d Not SIL".
- Do not swap device parts unless the manufacturer specifically ensures compatibility of these parts.

⚠ WARNING

Risk of explosion due to electrostatic charge

To prevent the build-up of an electrostatic charge in a hazardous area, the key cover must be closed during operation and the screws tightened.

The key cover may be opened temporarily at any time for the purposes of operating the transmitter, even during plant operation; the screws should then be tightened again.

NOTICE

Electrostatic-sensitive devices

The device contains electrostatic-sensitive devices (ESD). ESD can be destroyed by voltages far too low to be detected by humans. These voltages can occur if you simply touch a component part or the electrical connections of a module without being electrostatically discharged. The damage to a module caused by overvoltage cannot normally be detected immediately; it only becomes apparent after a longer period of operating time has elapsed.

Protective measures against the discharge of static electricity:

- Make sure that no power is applied.
- Before working with modules, make sure that you discharge static from your body, for example by touching a grounded object.
- Devices and tools used must be free of static charge.
- Hold modules only by their edges.
- Do not touch connector pins or conductor tracks on a module with the ESD notice.

Description

3

3.1 System configuration

Overview

The pressure transmitter can be used in a number of system configurations:

- as a stand-alone version, supplied with the necessary auxiliary power
- as part of a complex system environment, e.g. SIMATIC S7

System communication

Communication is via the HART protocol, using:

- HART Communicator (load 230 ... 1100 Ω)
- PC with HART modem, on which appropriate software is installed, e.g. SIMATIC PDM (load 230 ... 500 Ω)
- Control system which can communicate via the HART protocol, e.g. SIMATIC PCS7

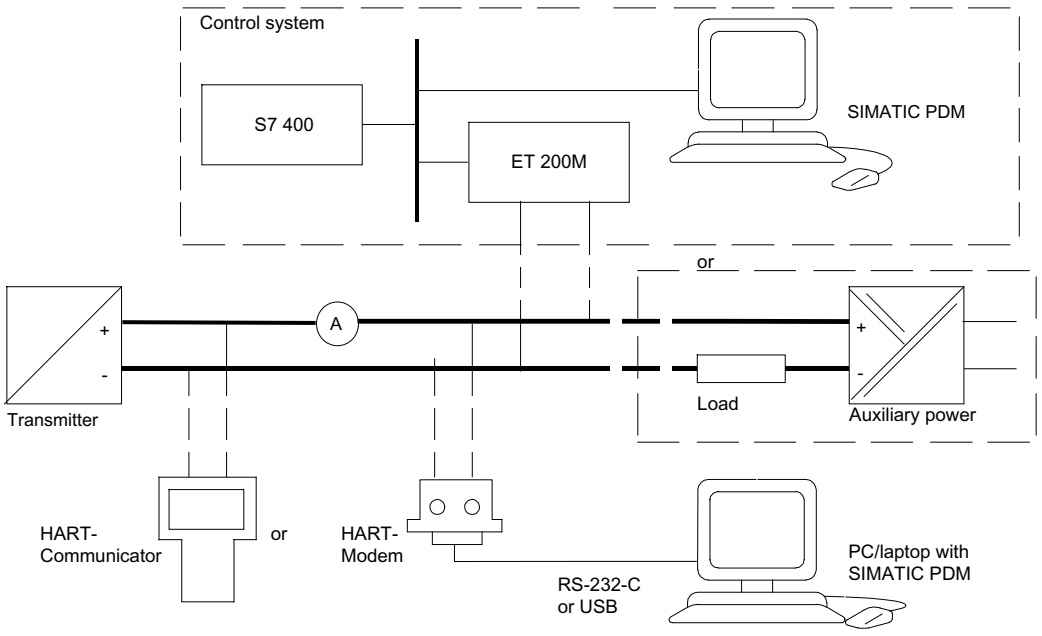

Figure 3-1 Possible system configurations

3.2 Application range

Overview

Depending on the version, a transmitter measures corrosive, non-corrosive and hazardous gases, vapors and liquids.

You can use the transmitter for the following types of measurement:

- Gauge pressure
- Absolute pressure
- Differential pressure

With appropriate parameter settings and the necessary add-on parts (e.g. flow orifices and remote seals), the pressure transmitter can also be used for the following measurements:

- Level
- Volume
- Mass
- Volumetric flow
- Mass flow rate

The output signal is always a load-independent direct current between 4 and 20 mA.

You can install the "intrinsically-safe" or "explosion-proof" version of the transmitter in hazardous areas. The devices have an EC type examination certificate and comply with the appropriate harmonized European CENELEC directives.

Transmitters with remote seals of different shapes can be delivered for special applications. For example, measuring high-viscosity substances is a special application.

Gauge pressure

This version measures aggressive, non-aggressive and hazardous gases, vapors and liquids.

The smallest span is 0.01 bar g (0.145 psi g), and the largest 700 bar g (10153 psi g).

Differential pressure and flow rate

This version measures corrosive, non-corrosive and hazardous gases, vapors and liquids. You can use this version for the following measurement types:

- differential pressure, e.g. effective differential pressure
- Gauge pressure, suitable for small positive or negative pressure value
- in combination with a restrictor device: flow rate q ~ $\sqrt{\Delta p}$

The smallest measuring span is 1 mbar (0.0145 psi), the largest 30 bar (435 psi).

Level

This version with mounting flange measures the level of non-corrosive, corrosive and hazardous liquids in open and closed containers. The smallest measuring span is 25 mbar (0.363 psi), the largest 5 bar (72.5 psi). The nominal diameter of the mounting flange is DN 80 or DN 100 or 3" or 4".

The negative connection of the measuring cell is kept open when measuring the level of open containers. This measurement is referred to as "measurement against atmosphere". The negative connection is normally connected with the container when measuring the level of closed containers. This balances the static pressure.

Wetted parts are made of various materials, depending on corrosion resistance requirements.

Absolute pressure

This version measures the absolute pressure of aggressive, non-aggressive and hazardous gases, vapors and liquids.

There are two series: a "differential pressure" series and a "gauge pressure" series. The "differential pressure" series is distinguished by a high overload capability.

The smallest measuring span of the "differential pressure" series is 8.3 mbar a (0.12 psi a), and the largest is 100 bar a (1450 psi a).

The smallest measuring span of the "gauge pressure" series is 8.3 mbar a (0.12 psi a), and the largest is 30 bar a (435 psi a).

3.3 Structure

Depending on a customer-specific order, the device comprises different parts.

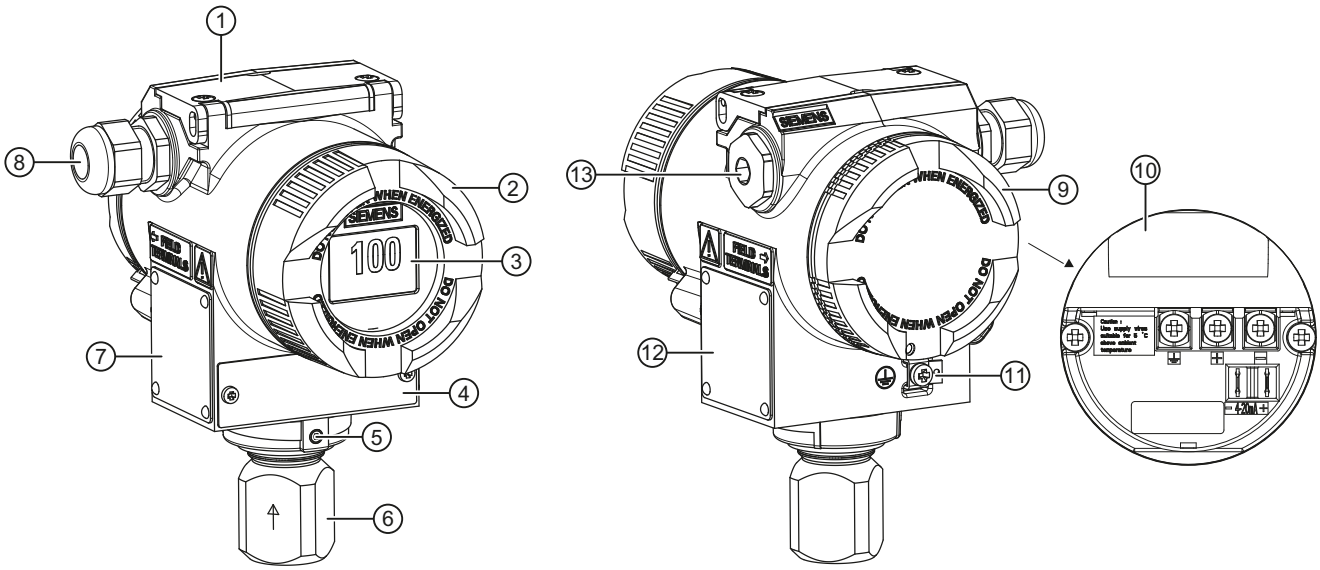

①	Key cover	⑧	Cable inlet, optionally with cable gland
②	Cover (front), optionally with inspection window	⑨	Cover (rear) for electrical terminal compartment
③	Display (optional)	⑩	Electrical terminal compartment
④	Measuring point label	⑪	Protective conductor connector/equipotential bonding terminal
⑤	Retaining screw; twist proofing of the measuring cell in relation to the electronics enclosure	⑫	Nameplate (approval information)
⑥	Process connection	⑬	Blanking plug
⑦	Nameplate (general information)		

Figure 3-2 View of the transmitter: Left: Front right: Rear view

- The electronics enclosure is made of die cast aluminum or precision cast stainless steel.
- The housing has a removable circular cover at the front and the back.
- Depending on the device version, the front cover ② may be designed as an inspection window. You can read the measured values straight off the digital display through this inspection window.
- The cable inlet ⑧ to the electrical terminal compartment is at the side; either the left or right-hand one can be used. The unused opening is closed with a blanking plug ⑬.
- The protective conductor terminal/equipotential bonding terminal ⑪ is located at the back of the enclosure.
- The electrical terminal compartment ⑩ for the auxiliary power and shield is accessible when you remove the back cover ⑨.
- The measuring cell with a process connection ⑥ is located in the lower section of the enclosure. This measuring cell is secured against twisting by a retaining screw ⑤. Thanks to the modular structure of the transmitter, the measuring cell, the electronic unit or the network card can be replaced if required.
- On the upper face of the enclosure you can see crosshead screws which secure the key cover ①, under which there are 3 keys for local operation.

3.4 Nameplate layout

Nameplate with general information

The nameplate bearing the Order No. and other important information, such as design details and technical data, is on the side of the enclosure.

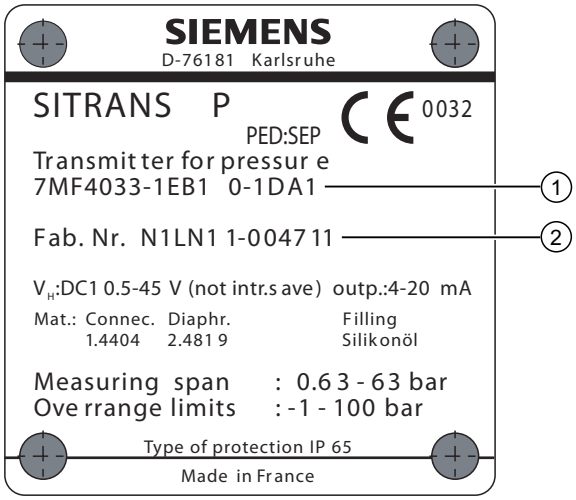

① Order number (machine-readable product code) ② Serial number

Figure 3-3 Example of a nameplate

Nameplate with approval information

On the opposite side is the nameplate with approval information. This nameplate shows e.g. the hardware and firmware versions. Certificate information is also listed if the transmitter is an ex-version.

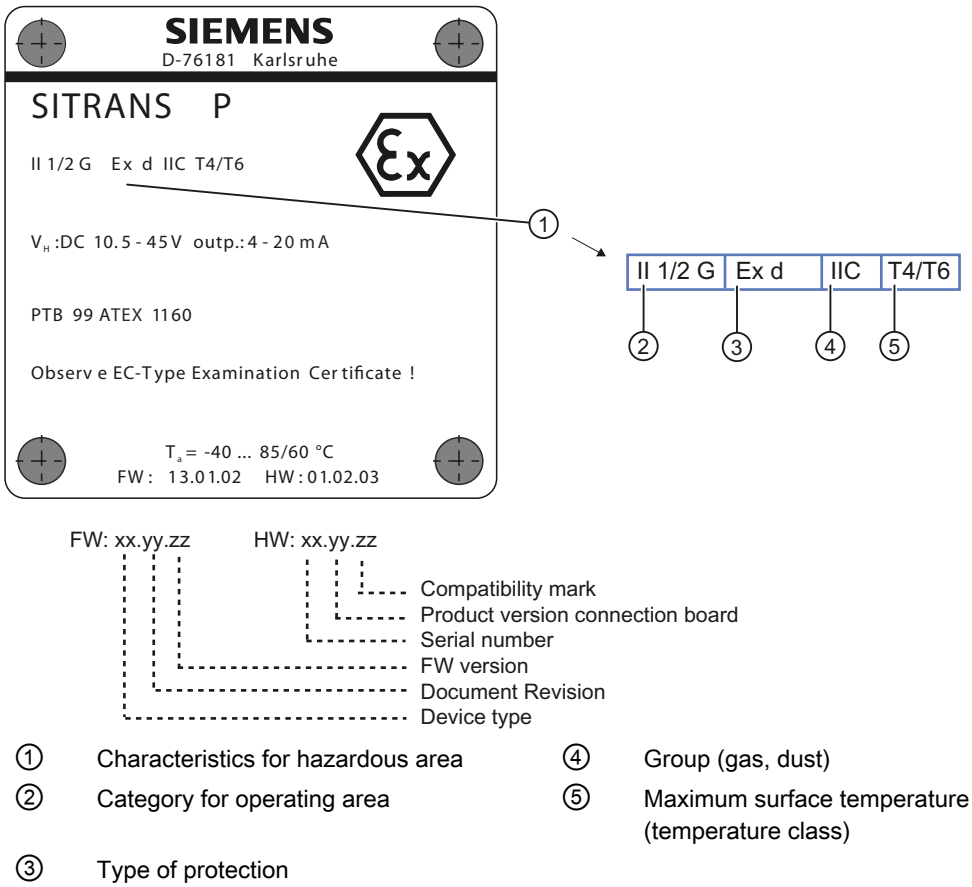

① Characteristics for hazardous area
② Category for operating area
③ Type of protection
④ Group (gas, dust)
⑤ Maximum surface temperature (temperature class)

Figure 3-4 Example of a nameplate

3.5 Measuring point label layout

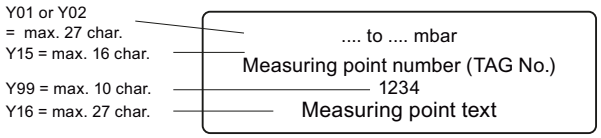

Figure 3-5 Example of measuring point label

3.6 Functional principle

3.6.1 Overview of mode of operation

This chapter describes how the transmitter works.

First the electronics are described, and then the physical principle of the sensors which are used with the various device versions for the individual measurement types.

3.6.2 Operation of the electronics

Description

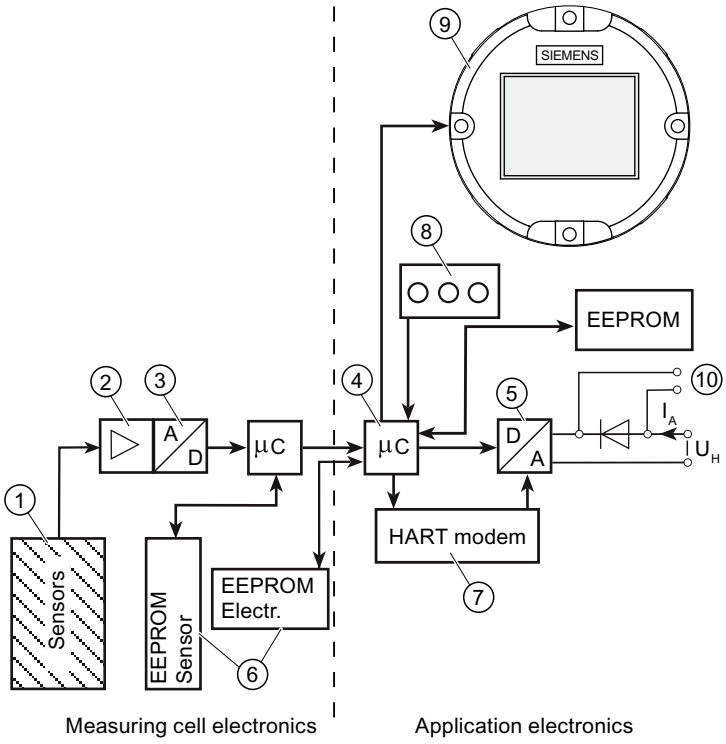

①	Measuring cell sensor	⑦	HART modem
②	Measuring amplifier	⑧	Buttons (local operation)
③	Analog-to-digital converter	⑨	Display
④	Microcontroller	⑩	Connection for external ammeter
⑤	Digital-to-analog converter	I_A	Output current
⑥	Each with an EEPROM in the measuring cell and in the electronics	U_H	Auxiliary power

Figure 3-6 Operation of the electronics with HART communication

Function

- The input pressure is converted into an electrical signal by the sensor ①.
- This signal is amplified by the measuring amplifier ② and digitized in an analog-to-digital converter ③.
- The digital signal is analyzed in a microcontroller ④ and corrected with regard to linearity and thermal characteristics.
- The digital signal is then converted in a digital-to-analog converter ⑤ into the output current of 4 to 20 mA. A diode circuit provides reverse voltage protection.
- You can make an uninterrupted current measurement with a low resistance ammeter at the connection ⑩.
- The measuring cell-specific data, electronics data and parameter assignment data are saved in two EEPROMs ⑥. The first memory is linked to the measuring cell, the second to the electronics.

Operation

- The buttons ⑧ can be used to call up individual functions, so-called modes.
- If you have a device with a display ⑨, you can use it to track the mode settings and other device messages.
- The basic mode settings can be changed with a computer and HART modem ⑦ via PDM.

3.6.3 Measuring cell operation

⚠ CAUTION

If the measurement signal fails because of sensor breakage, the seal diaphragm may also be destroyed. In the worst case scenario, the process medium leaks from the reference pressure opening in the devices used for gauge pressure with a measuring span of ≤ 63 bar.

In the following sections, the process variable to be measured is called general inlet pressure.

Overview

The following modes of operation are described:

- Gauge pressure
- Absolute pressure
- Differential pressure and flow rate
- Level

The following process connections are available, for example:

- G1/2 B, 1/2-14 NPT
- Male thread: M20

- Flange connection in accordance with EN 61518
- Flush-mounted process connections

3.6.3.1 Measuring cell for gauge pressure

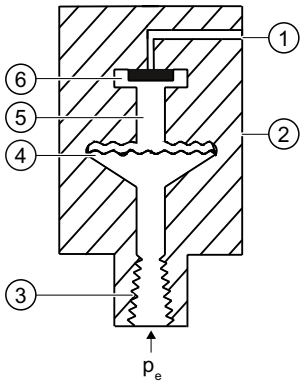

①	Reference pressure opening	⑤	Filling liquid
②	Measuring cell	⑥	Gauge pressure sensor
③	Process connection	p_e	Inlet pressure
④	Seal diaphragm		

Figure 3-7 Function chart of measuring cell for gauge pressure

The inlet pressure (p_e) is transferred to the gauge pressure sensor ⑥ via the seal diaphragm ④ and the fill fluid ⑤, displacing its measuring diaphragm. The displacement changes the resistance of the four piezoresistors (bridge circuit) of the gauge pressure sensor. The change in the resistance causes a bridge output voltage proportional to the inlet pressure.

Transmitters with measuring span ≤ 63 bar measure the inlet pressure against atmosphere, those with measuring spans ≥ 160 bar against vacuum.

3.6.3.2 Measuring cell for differential pressure and flow rate

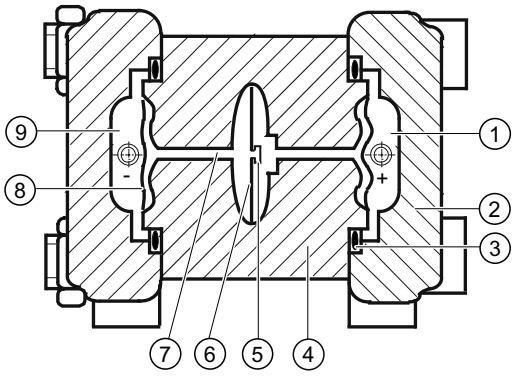

①	Inlet pressure P_+	⑥	Overload diaphragm
②	Pressure cap	⑦	Filling liquid
③	O-ring	⑧	Seal diaphragm
④	Measuring cell body	⑨	Inlet pressure P_-
⑤	Differential pressure sensor		

Figure 3-8 Function chart of the measuring cell for differential pressure and flow rate

- Differential pressure is transmitted to the differential pressure sensor ⑤ through the seal diaphragms ⑧ and the filling liquid ⑦.
- When measuring limits are exceeded, the seal diaphragm ⑧ is displaced until the seal diaphragm ② rests on the measuring cell body ④. The differential pressure sensor ⑤ is thus protected against overloading since no further deflection of the overload diaphragm ⑥ is possible.
- The seal diaphragm ⑧ is displaced by the differential pressure. The displacement changes the resistance of the four piezoresistors (bridge circuit) of the differential pressure sensor.
- The change in the resistance causes a bridge output voltage proportional to the differential pressure.

3.6.3.3 Measuring cell for level

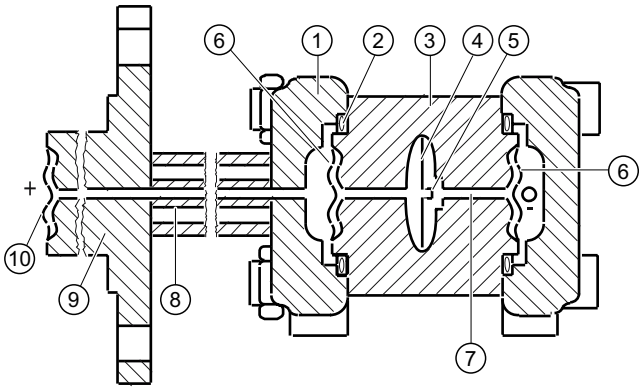

①	Pressure cap	⑥	Seal diaphragm on the measuring cell
②	O-ring	⑦	Filling liquid of the measuring cell
③	Measuring cell body	⑧	Capillary tube with the fill fluid of the mounting flange
④	Overload diaphragm	⑨	Flange with a tube
⑤	Differential pressure sensor	⑩	Seal diaphragm on the mounting flange

Figure 3-9 Function chart of the measuring cell for level

- The inlet pressure (hydrostatic pressure) works hydraulically on the measuring cell through the seal diaphragm ⑩ on the mounting flange ⑩.
- Differential pressure at the measuring cell is transmitted to the differential pressure sensor ⑤ through the seal diaphragms ⑥ and the filling liquid ⑦.
- When measuring limits are exceeded, the overload diaphragm ④ is displaced until one of the seal diaphragms ⑥ or ⑩ rests on the measuring cell body ③. The seal diaphragms ⑥ thus protect the differential pressure sensor ⑤ from overload.
- The seal diaphragm ⑥ is displaced by the differential pressure. The displacement changes the resistance of the four doped piezoresistors in the bridge circuit.
- The change in the resistance causes a bridge output voltage proportional to the differential pressure.

3.6.3.4 Measuring cell for absolute pressure from the differential pressure series

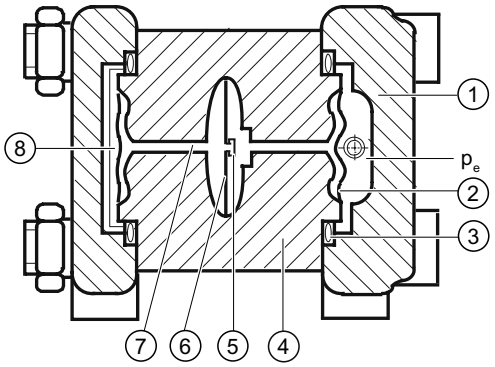

①	Pressure cap	⑥	Overload diaphragm
②	Seal diaphragm on the measuring cell	⑦	Measuring cell filling liquid
③	O-ring	⑧	Reference pressure
④	Measuring cell body	p_e	Pressure input variable
⑤	Absolute pressure sensor		

Figure 3-10 Function chart of measuring cell for absolute pressure

- Absolute pressure is transmitted to the absolute pressure sensor ⑤ through the seal diaphragm ② and the filling liquid ⑦.
- When measuring limits are exceeded, the overload diaphragm ⑥ is displaced until the seal diaphragm ② rests on the measuring cell body ④. The seal diaphragm thus protects the absolute pressure sensor ⑤ from overload.
- The difference between the inlet pressure (p_e) and the reference pressure ⑧ on the negative side of the measuring cell displaces the seal diaphragm ②. The displacement changes the resistance of the four piezoresistors (bridge circuit) of the absolute pressure sensor.

- The change in the resistance causes a bridge output voltage proportional to the absolute pressure.

3.6.3.5 Measuring cell for absolute pressure from the gauge pressure series

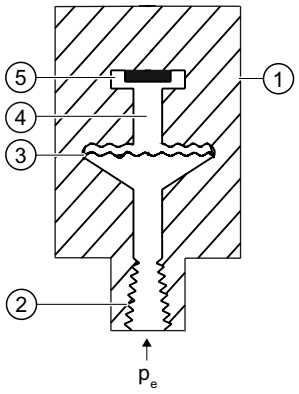

①	Measuring cell	④	Filling liquid
②	Process connection	⑤	Absolute pressure sensor
③	Seal diaphragm	⑥	Inlet pressure

Figure 3-11 Function chart of measuring cell for absolute pressure

The inlet pressure (p_e) is transferred to the absolute pressure sensor ⑤ via the seal diaphragm ③ and the fill fluid ④, displacing its measuring diaphragm. The displacement changes the resistance of the four piezoresistors (bridge circuit) of the absolute pressure sensor. The change in the resistance causes a bridge output voltage proportional to the inlet pressure.

3.6.3.6 Measuring cell for gauge pressure, front-flush membrane

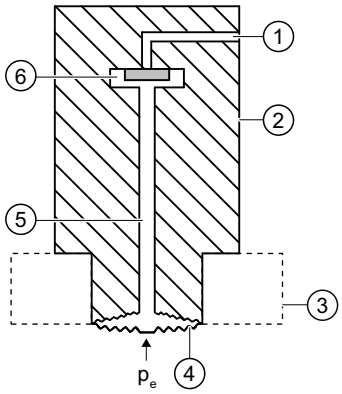

①	Reference pressure opening	⑤	Filling liquid
②	Measuring cell	⑥	Gauge pressure sensor
③	Process connection	p_e	Inlet pressure
④	Seal diaphragm		

Figure 3-12 Function chart of the measuring cell for gauge pressure, flush mounted diaphragm

The inlet pressure (p_e) is transferred to the gauge pressure sensor ⑥ via the seal diaphragm ④ and the filling liquid ⑤, displacing its measuring diaphragm. The displacement changes the resistance of the four piezoresistors (bridge circuit) of the gauge pressure sensor. The change in the resistance causes a bridge output voltage proportional to the inlet pressure.

Transmitters with measuring span ≤ 63 bar measure the inlet pressure against atmosphere, those with measuring spans ≥ 160 bar against vacuum.

3.6.3.7 Measuring cell for absolute pressure, front-flush membrane

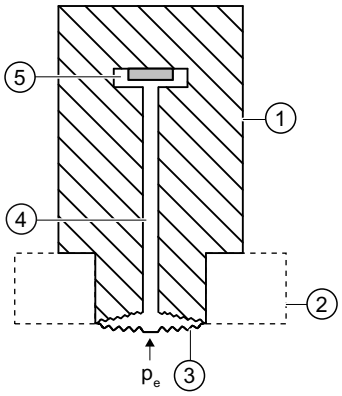

①	Measuring cell	④	Filling liquid
②	Process connection	⑤	Absolute pressure sensor
③	Seal diaphragm	p_e	Inlet pressure

Figure 3-13 Function chart of the measuring cell for absolute pressure, flush mounted diaphragm

The inlet pressure (p_e) is transferred to the absolute pressure sensor ⑤ via the seal diaphragm ③ and the filling liquid ④, and displaces its measuring diaphragm. The displacement changes the resistance of the four piezoresistors (bridge circuit) of the absolute pressure sensor. The change in the resistance causes a bridge output voltage proportional to the inlet pressure.

3.7 Remote seal

Product description

- A remote seal measuring system comprises the following elements:
  - Remote seal
  - Transmission line, e.g. capillary line
  - Measuring device

  Note
  Malfunction of the remote seal measuring system

  If you separate the components of the remote seal measuring system, this results in malfunctioning of the system.

  Do not separate the components under any circumstances.

- The measuring system based on a hydraulic principle is used to transfer pressure.
- The capillary line and the remote seal diaphragm are the most sensitive components in the remote seal measuring system. The material thickness of the remote seal diaphragm is only ~ 0.1 mm.
- The smallest of leakages in the transmission system leads to the loss of transmission fluid.
- The loss of transmission fluid results in inaccuracies in the measurement and failure of the measuring system.
- In order to avoid leaks and measuring errors, please observe the installation and maintenance instructions in addition to the safety notes.

3.8 SIMATIC PDM

SIMATIC PDM is a software package for configuring, parameter assignment, commissioning, diagnostics and maintenance of this device and other process devices.

SIMATIC PDM offers simple monitoring of process values, alarms, and device status information of the transmitter.

SIMATIC PDM allows the process device data to be:

- displayed
- set
- modified
- saved
- diagnosed
- checked for plausibility
- managed
- simulated

Installing/mounting

4

4.1 Basic safety instructions

⚠ WARNING

Wetted parts unsuitable for the process media

Danger of injury or damage to device.

Hot, toxic and corrosive media could be released if the process medium is unsuitable for the wetted parts.

- Ensure that the material of the device parts wetted by the process medium is suitable for the medium. Refer to the information in "Technical data" (Page 169).

⚠ WARNING

Incorrect material for the diaphragm in Zone 0

Danger of explosion in the hazardous area. In the case of operation with intrinsically safe supply units of category "ib" or devices of the flameproof enclosure version "Ex d" and simultaneous use in Zone 0, transmitter explosion protection depends on the tightness of the diaphragm.

- Ensure that the material used for the diaphragm is suitable for the process medium. Refer to the information in the section "Technical data (Page 169)".

⚠ WARNING

Unsuitable connecting parts

Danger of injury or poisoning.

In case of improper mounting hot, toxic and corrosive process media could be released at the connections.

- Ensure that connecting parts (such as flange gaskets and bolts) are suitable for connection and process media.

Note

Material compatibility

Siemens can provide you with support concerning selection of sensor components wetted by process media. However, you are responsible for the selection of components. Siemens accepts no liability for faults or failures resulting from incompatible materials.

⚠ WARNING

Exceeded maximum permissible operating pressure

Danger of injury or poisoning.

The maximum permissible operating pressure depends on the device version. The device can be damaged if the operating pressure is exceeded. Hot, toxic and corrosive process media could be released.

- Make sure that the device is suitable for the maximum permissible operating pressure of your system. Refer to the information on the nameplate and/or in "Technical data (Page 169)".

⚠ WARNING

Exceeded maximum ambient or process media temperature

Danger of explosion in hazardous areas.

Device damage.

- Make sure that the maximum permissible ambient and process media temperatures of the device are not exceeded. Refer to the information in Chapter "Technical data (Page 169)".

⚠ WARNING

Open cable inlet or incorrect cable gland

Danger of explosion in hazardous areas.

- Close the cable inlets for the electrical connections. Only use cable glands or plugs which are approved for the relevant type of protection.

⚠ WARNING

Incorrect conduit system

Danger of explosion in hazardous areas as result of open cable inlet or incorrect conduit system.

- In the case of a conduit system, mount a spark barrier at a defined distance from the device input. Observe national regulations and the requirements stated in the relevant approvals.

See also

Technical data (Page 169)

⚠ WARNING

Incorrect mounting at Zone 0

Danger of explosion in hazardous areas.

- Ensure sufficient tightness at the process connection.
- Observe the standard IEC/EN 60079-14.

⚠ WARNING

Danger with "flameproof enclosure" protection

Danger of explosion in hazardous areas. An explosion may be caused by hot gas escaping from the flameproof enclosure if there is too little space between it and the fixed parts.

- Ensure that there is a space of at least 40 mm between the flameproof joint and the fixed parts.

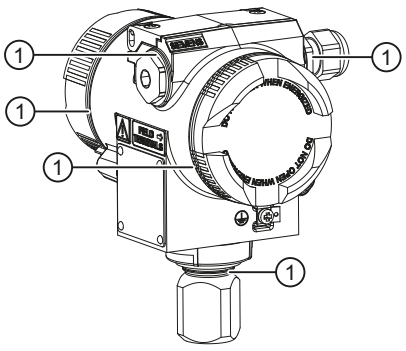

① Flameproof joint

⚠ WARNING

Loss of explosion protection

Danger of explosion in hazardous areas if the device is open or not properly closed.

- Close the device as described in Chapter "Connecting the device (Page 60)".

⚠ WARNING

Use of incorrect device parts in potentially explosive environments

Devices and their associated device parts are either approved for different types of protection or they do not have explosion protection. There is a danger of explosion if device parts (such as covers) are used for devices with explosion protection that are not expressly suited for this type of protection. If you do not adhere to these guidelines, the test certificates and the manufacturer warranty will become null and void.

- Use only device parts that have been approved for the respective type of protection in the potentially explosive environment. Covers that are not suited for the "explosion-proof" type of protection are identified as such by a notice label attached to the inside of the cover with "Not Ex d Not SIL".
- Do not swap device parts unless the manufacturer specifically ensures compatibility of these parts.

⚠ CAUTION

Hot surfaces resulting from hot process media

Danger of burns resulting from surface temperatures above 70 °C (155 °F).

- Take appropriate protective measures, for example contact protection.
- Make sure that protective measures do not cause the maximum permissible ambient temperature to be exceeded. Refer to the information in Chapter "Technical data (Page 169)".

⚠ CAUTION

External stresses and loads

Damage to device by severe external stresses and loads (e.g. thermal expansion or pipe tension). Process media can be released.

- Prevent severe external stresses and loads from acting on the device.

4.1.1 Installation location requirements

⚠ WARNING

Insufficient air supply

The device may overheat if there is an insufficient supply of air.

- Install the device so that there is sufficient air supply in the room.
- Observe the maximum permissible ambient temperature. Refer to the information in the section "Technical data (Page 169)".

⚠ CAUTION

Aggressive atmospheres

Damage to device through penetration of aggressive vapors.

- Ensure that the device is suitable for the application.

NOTICE

Direct sunlight

Increased measuring errors.

- Protect the device from direct sunlight.

Make sure that the maximum ambient temperature is not exceeded. Refer to the information in the section Technical data (Page 169).

4.1.2 Proper mounting

4.1.2.1 Incorrect mounting

NOTICE

Incorrect mounting

The device can be damaged, destroyed, or its functionality impaired through improper mounting.

- Before installing ensure there is no visible damage to the device.
- Make sure that process connectors are clean, and suitable gaskets and glands are used.
- Mount the device using suitable tools. Refer to the information in Chapter "Technical data (Page 169)", for example installation torques requirements.

⚠ CAUTION

Loss of degree of protection

Damage to device if the enclosure is open or not properly closed. The degree of protection specified on the nameplate or in Chapter "Technical data (Page 169)" is no longer guaranteed.

- Make sure that the device is securely closed.

See also

Connecting the device (Page 60)

4.2 Disassembly

⚠ WARNING

Incorrect disassembly

The following dangers may result through incorrect disassembly:

- Injury through electric shock
- Danger through emerging media when connected to the process
- Danger of explosion in hazardous area

In order to disassemble correctly, observe the following:

- Before starting work, make sure that you have switched off all physical variables such as pressure, temperature, electricity etc. or that they have a harmless value.
- If the device contains dangerous media, it must be emptied prior to disassembly. Make sure that no environmentally hazardous media are released.
- Secure the remaining connections so that no damage can result if the process is started unintentionally.

4.3 Installation (except level)

4.3.1 Instructions for installation (except level)

Conditions

Note

Compare the desired operating data with the data on the nameplate.

Please also refer to the information on the remote seal if this is fitted.

Note

Protect the transmitter against:

- Direct heat radiation
- Rapid temperature fluctuations
- Heavy contamination
- Mechanical damage
- Direct sunlight

The installation location is to be as follows:

- Easily accessible
- As close as possible to the measuring point
- Vibration-free
- Within the permitted ambient temperature values

Installation configuration

The transmitter may in principle be configured above or below the pressure tapping point. The recommended configuration depends on the aggregate state of the medium.

Installation configuration for gases

Install the transmitter above the pressure tapping point.

Lay the pressure tubing with a constant gradient to the pressure tapping point, so that any condensation produced can drain in the main line and thereby avoid corruption of the measured values.

Installation configuration for vapor and liquid

Install the transmitter below the pressure tapping point.

Lay the pressure tubing with a constant gradient to the pressure tapping point so that any gas pockets can escape in the main line.

4.3.2 Installation (except level)

Note

Damage to measuring cell

When installing the process connection of the pressure transmitter, do not rotate the housing. Rotating the housing may damage the measuring cell.

To avoid damage to the device, tighten the threaded nuts of the measuring cell using a wrench.

Procedure

Attach the transmitter to the process connection with an appropriate tool.

See also

Introduction to commissioning (Page 150)

4.3.3 Fastening

Fastening without the mounting bracket

You can fasten the transmitter directly on the process connection.

Fastening with the mounting bracket

You can fasten the mounting bracket as follows:

- On a wall or a mounting frame using two screws
- On a vertical or horizontal mounting tube (Ø 50 to 60 mm) using a tube bracket

Fasten the transmitter mounting bracket using the two screws provided.

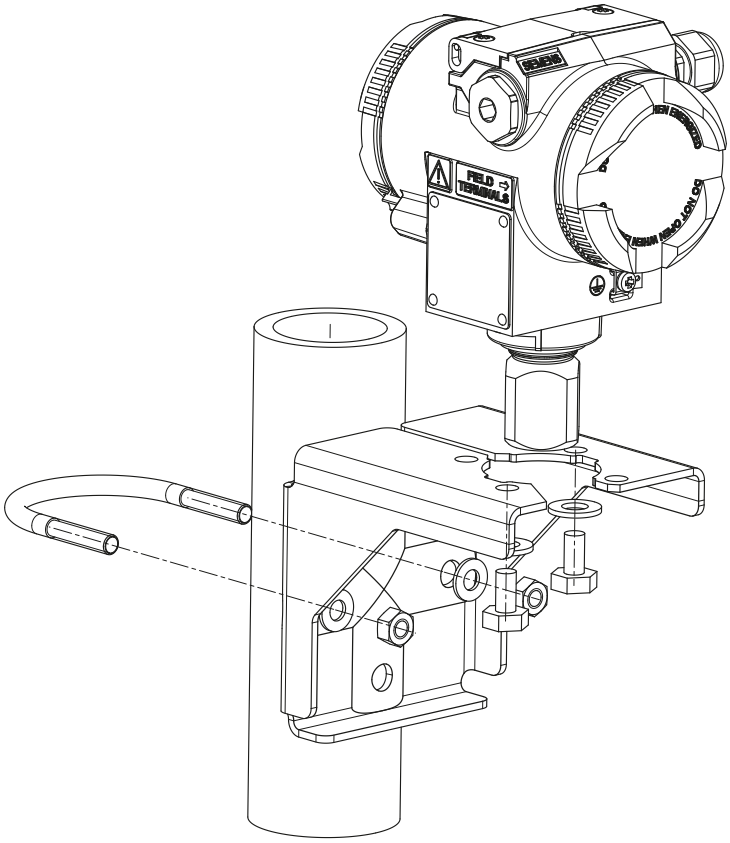

Figure 4-1 Fastening the transmitter on the mounting bracket

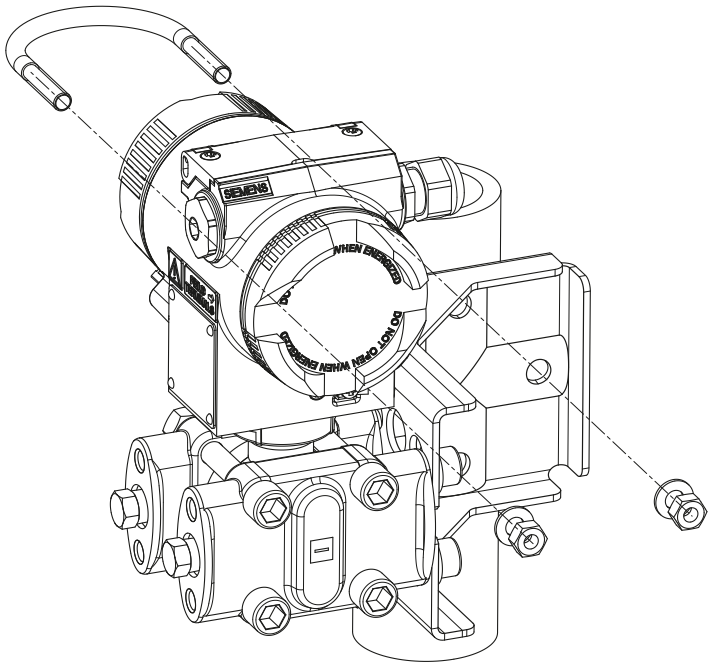

Figure 4-2 An example of fastening the transmitter on the mounting bracket in the case of differential pressure and horizontal differential pressure lines

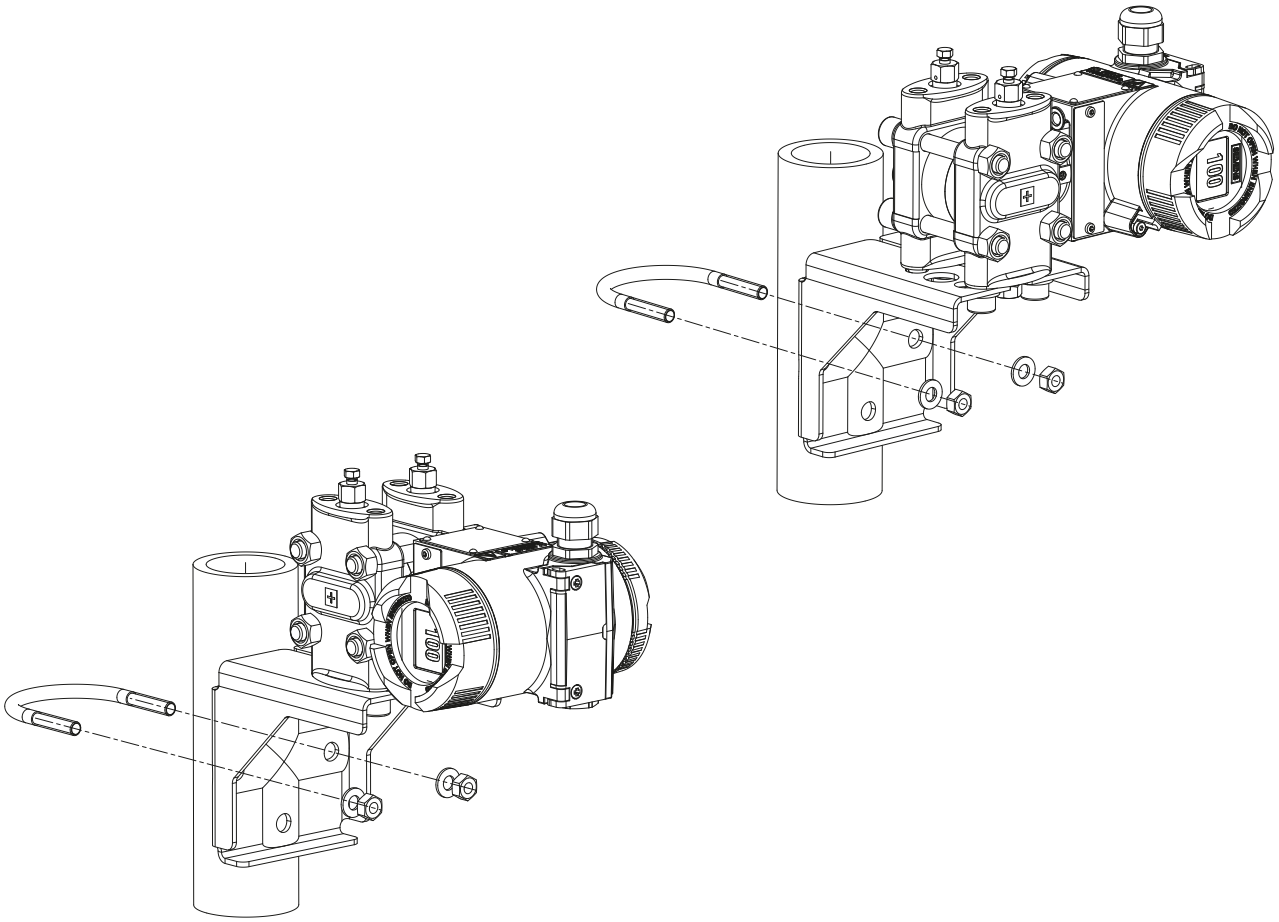

Figure 4-3 An example of fastening on the mounting bracket in the case of differential pressure and vertical differential pressure lines

4.4 "Level" installation

4.4.1 Instructions for level installation

Requirements

Note

Compare the desired operating data with the data on the nameplate.

Please also refer to the information on the remote seal if this is fitted.

Note

Protect the transmitter from:

- Direct heat
- Rapid temperature changes
- Severe soiling
- Mechanical damage
- Direct sunlight

Note

Select the height of the mounting flange such that the pressure transmitter is always mounted below the lowest fill height to be measured.

The installation location is to be as follows:

- Easily accessible
- The measuring point must be as close as possible
- Vibration-free
- Within the permitted ambient temperature values

4.4.2 Installation for level

Note

Seals are required for the installation. The seals must be compatible with the medium to be measured.

Seals are not included in the delivery.

Procedure

To install the transmitter for level, proceed as follows:

1. Attach the seal to the container's mating flange.
   Ensure that the seal is centrically positioned and that it does not restrict the movement of the flange's seal diaphragm in any way as otherwise the tightness of the process connection is not guaranteed.
2. Screw on the transmitter's flange.
3. Observe the installation position.

4.4.3 Connection of the negative pressure line

Assembly on an open container

A line is not required when taking measurements in an open container since the negative chamber is connected with the atmosphere.

Ensure that no dirt enters the open connection ports, for example by using connection screws with a 7MF4997-1CP bleed valve.

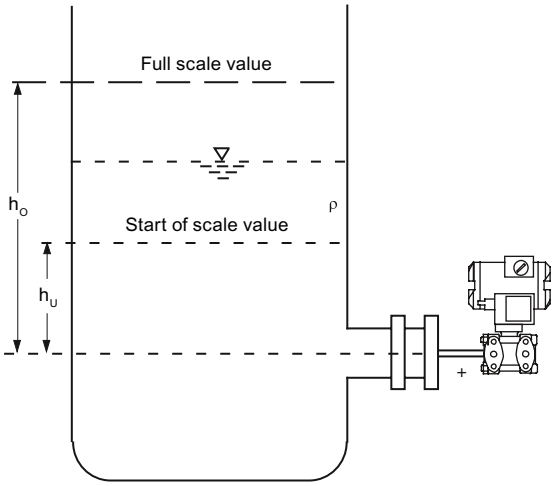

Measurement assembly on an open container

Formula:

Start of scale value: $p_{MA} = \rho \cdot g \cdot h_U$

Full-scale value: $p_{ME} = \rho \cdot g \cdot h_O$

h_U	Lower filling level	Δp_{MA}	Start of scale value
h_O	Upper filling level	Δp_{ME}	Full-scale value
p	Pressure	ρ	Density of the measured medium in the container
		g	Acceleration due to gravity

Assembly on a closed container

When taking measurements in a closed container without or with little condensate formation, the negative pressure line is not filled. Lay the line in such a way that pockets of condensate do not form. Install a condensation container if required.

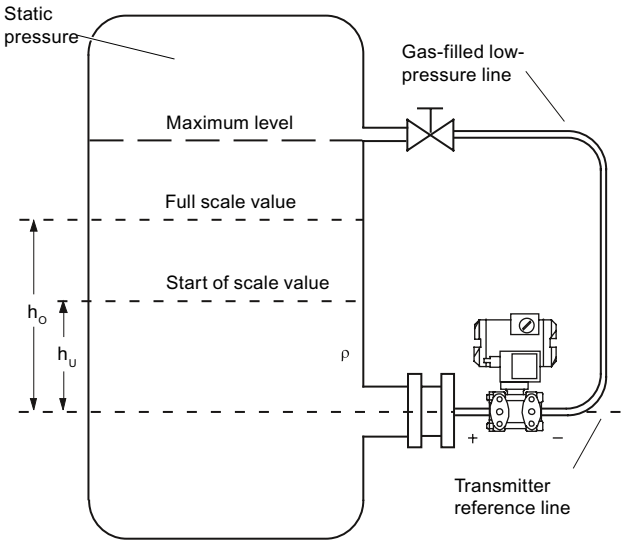

Measurement assembly on a closed container (no or little condensate separation)

Formula:

Start-of-scale value: $\Delta p_{MA} = \rho \cdot g \cdot h_U$

Full-scale value: $\Delta p_{ME} = \rho \cdot g \cdot h_O$

h_U	Lower filling level	Δp_{MA}	Start of scale value
h_O	Upper filling level	Δp_{ME}	Full-scale value
p	Pressure	ρ	Density of the measured medium in the container
		g	Acceleration due to gravity

When taking measurements in a closed container with strong condensate formation, you must fill the negative pressure line (mostly with the condensate of the measured medium) and install a condensate pot. You can cut off the device using the dual pneumatic block 7MF9001-2.

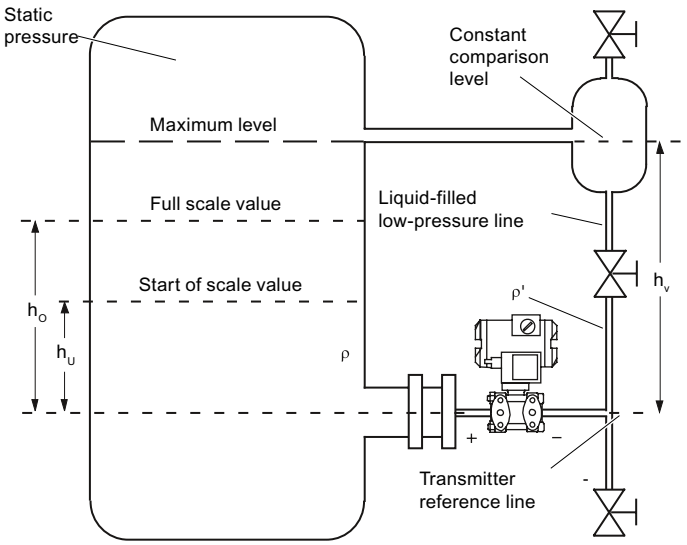

Formula:

Start-of-scale value:
$\Delta p_{MA} = g \cdot (h_U \cdot \rho - h_V \cdot \rho')$

Full-scale value:
$\Delta p_{MA} = g \cdot (h_O \cdot \rho - h_V \cdot \rho')$

Measurement assembly on a closed container (strong condensate formation)

h_U	Lower filling level	Δp_{MA}	Start of scale value
h_O	Upper filling level	Δp_{ME}	Full-scale value
h_V	Gland distance	ρ	Density of the measured medium in the container
p	Pressure	ρ '	Density of fluid in the negative pressure line corresponds to the prevailing temperature there
		g	Acceleration due to gravity

The process connection on the negative side is a female thread $^1/_4$-18 NPT or an oval flange.

Lay the line for the negative pressure using a seamless steel tube 12 mm x 1.5 mm.

4.5 "Remote seal" installation

4.5.1 Remote seal installation

General installation instructions

- Keep the measuring system in the factory packing until it is installed in order to protect it from mechanical damage.
- When removing from the factory packing and installing: ensure that damage to and mechanical deformations in the membrane are prevented.

- Never loosen the sealed filling screws on the remote seal and the measuring instrument.
- Do not cause damage to the remote separating membrane; scratches on the remote separating membrane, e.g. due to sharp-edged objects, are the main starting points for corrosion.
- Select suitable gaskets for sealing.
- Use a gasket having an adequately large inner diameter for flanging. Insert the gasket concentrically; contact with the membrane leads to deviations in measurements.
- When using gaskets made of soft materials or PTFE: follow the guidelines of the gasket manufacturer, especially regarding the tightening torque and setting cycles.
- At the time of installation, use suitable fastening components such as screws and nuts that are compliant with fitting and flange standards.
- Excessive tightening of screwed joints on the process connection may displace the zero point on the pressure transmitter.

Note

Commissioning

If a shut-off valve exists, open the shut-off valve slowly when commissioning in order to avoid pressure surges.

Note

Permissible ambient and operating temperatures

Install the pressure measuring device such that the permissible limits of ambient and measured medium temperatures are not overshot or undershot even with the consideration of the effect of convection and heat radiation.

- Note the effect of temperature on the measuring accuracy.
- When selecting the remote seals, ensure that fittings and flange components have adequate pressure-temperature resistance by selecting suitable materials and pressure ratings. The pressure rating specified on the remote seal applies to reference conditions according to IEC 60770.
- For the maximum permissible pressure at higher temperatures, please refer to the standard specified on the remote seal.

Using remote seals with pressure measuring device for hazardous areas:

- When using remote seals with pressure measuring device for hazardous areas, the permissible limits of ambient temperatures for the transmitter must not be exceeded. Hot surfaces on the cooling section (capillaries or cooling elements) are a possible source of ignition. Initiate suitable measures.
- When remote seals with a flame arrestor are used, the pressure measuring instrument determines the permissible ambient temperature. In the case of potentially explosive gaseous atmosphere, the temperature around the flame arrestor must not exceed +60 °C.

4.5.2 Installation of the remote seal with the capillary line

Notes

- Do not rest the measurement assembly on the capillary line.
- Do not bend capillary lines; risk of leakages and/or risk of considerable increase in the setting time of the measuring system.
- Owing to the risk of bending and breakages, pay attention to mechanical overloads at the joints such as capillary line-remote seal and capillary line-measuring device.
- Unwinding the excess capillary lines with a radius of at least 150 mm.
- Fasten the capillary line such that there are no vibrations.
- Permissible height differences:
  - When installing the pressure measuring device above the measuring point, keep the following in mind: the height difference of $H_{1max.}$ for remote seal measuring systems with silicone, glycerin or paraffin oil filling. = 7 m must not be exceeded.
  - If halocarbon oil is used as the filling liquid, this maximum height difference is only $H_{1max.}$ = 4 m, see installation types A and B.

If negative overpressure is observed during measurements, reduce the permissible height difference accordingly.

Installation type for gauge pressure and level measurements (open containers)

Installation type A

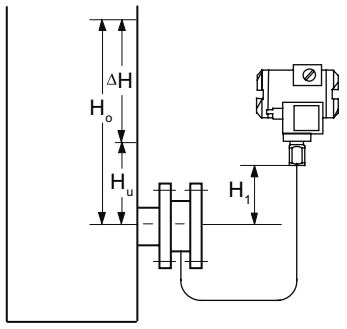

Start of scale value:
$p_{MA} = \rho_{FL} * g * H_U + \rho_{oil} * g * H_1$
Full-scale value:
$p_{ME} = \rho_{FL} * g * H_O + \rho_{oil} * g * H_1$

Pressure transmitter above the measuring point

Installation type B

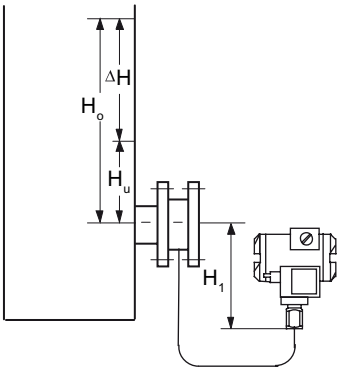

Pressure transmitter below the measuring point

Start of scale value:
$p_{MA} = \rho_{FL} * g * H_U - \rho_{oil} * g * H_1$
Full-scale value:
$p_{ME} = \rho_{FL} * g * H_O - \rho_{oil} * g * H_1$

$H_1 \leq 7$ m (23 ft); with halocarbon oil as the filling liquid, only $H_1 \leq 4$ m(13.1 ft)

Key

p_{MA}	Start of scale value
p_{ME}	Full-scale value
ρ_{FL}	Density of the process medium in the container
ρ_{oil}	Density of the filling oil in the capillary line of the remote seal
g	Acceleration due to gravity
H_U	Lower filling level
H_O	Upper filling level
H_1	Distance between the container flange and the pressure transmitter

For absolute pressure measurements (vacuum), install the measuring device at least at the height of the remote seal or below it (see installation types C).

Installation types for absolute pressure measurements (closed containers)

Installation type C_1

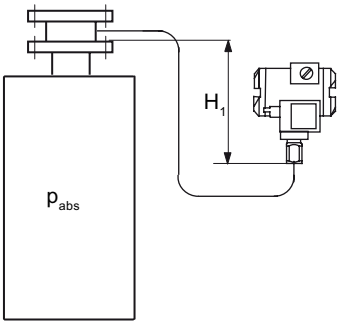

Start of scale value:
$p_{MA} = p_{start} + \rho_{oil} * g * H_1$
Full-scale value:
$p_{ME} = p_{end} + \rho_{oil} * g * H_1$

Installation type C_2

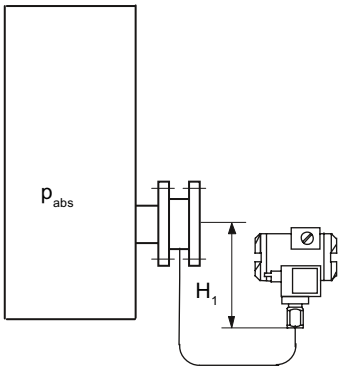

Pressure transmitter for absolute pressure always below the measuring point: $H_1 \geq 200$ mm (7.9 inch)

Key

p_{MA}	Start of scale value
p_{ME}	Full-scale value
p_{start}	Start of scale pressure
p_{end}	Full scale pressure
ρ_{oil}	Density of the filling oil in the capillary line of the remote seal
g	Acceleration due to gravity
H_1	Distance between the container flange and the pressure transmitter

Note

Effects of temperature

Keep the following instructions in mind in order to minimize keep the effects of temperature in remote seal measuring systems with the differential pressure measuring device:

Install the device such that the positive and negative sides are symmetrical as far as ambient effects, especially ambient temperatures, are concerned.

Installation type for differential pressure and flow rate measurements

Installation type D

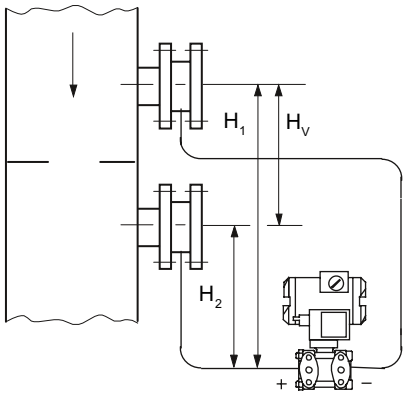

Start of scale value:
$p_{MA} = p_{start} - \rho_{oil} * g * H_V$
Full-scale value:
$p_{ME} = p_{end} - \rho_{oil} * g * H_V$

Key

p_{MA}	Start of scale value
p_{ME}	Full-scale value
p_{start}	Start of scale pressure
p_{end}	Full scale pressure
ρ_{oil}	Density of the filling oil in the capillary line of the remote seal
g	Acceleration due to gravity
H_V	Gland distance

Installation types for level measurements (closed containers)

Installation type E

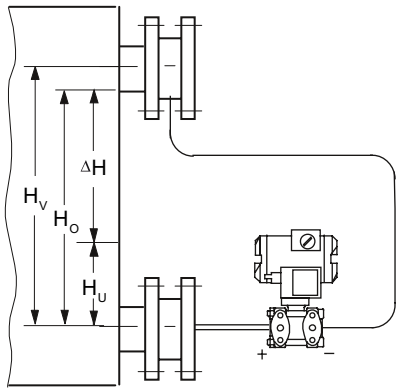

Start of scale value:
$p_{MA} = \rho_{FL} * g * H_U - \rho_{oil} * g * H_V$
Full-scale value:
$p_{ME} = \rho_{FL} * g * H_U - \rho_{oil} * g * H_V$

Key

p_{MA}	Start of scale value
p_{ME}	Full-scale value
ρ_{FL}	Density of the process medium in the container
ρ_{oil}	Density of the filling oil in the capillary line of the remote seal
g	Acceleration due to gravity
H_U	Lower filling level
H_O	Upper filling level
H_V	Gland distance

Installation type G

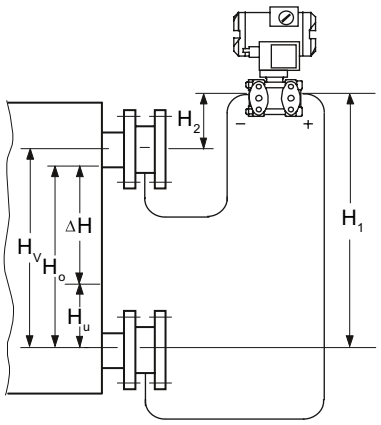

$H_1 \leq 7$ m (23 ft), for halocarbon oil, however only H1 ≤ 4 m (13.1 ft)

Start of scale value:
$p_{MA} = \rho_{FL} * g * H_U - \rho_{oil} * g * H_V$

Full-scale value:
$p_{ME} = \rho_{FL} * g * H_O - \rho_{oil} * g * H_V$

Pressure transmitter for differential pressure above the upper measuring point, no vacuum

Installation type H

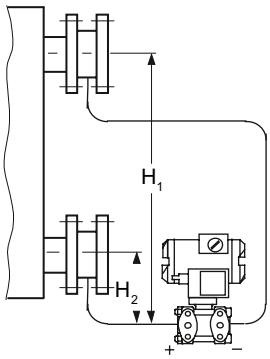

Start of scale value:
$p_{MA} = \rho_{FL} * g * H_U - \rho_{oil} * g * H_V$

Full-scale value:
$p_{ME} = \rho_{FL} * g * H_O - \rho_{oil} * g * H_V$

Below the lower measuring point

Installation type J

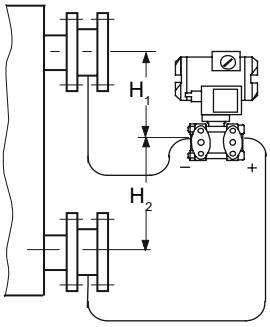

Between the measuring points, no vacuum

$H_2 \leq 7$ m (23 ft); with halocarbon oil as the filling liquid, only $H_2 \leq 4$ m(13.1 ft)

Start of scale value:

$p_{MA} = \rho_{FL} * g * H_U - \rho_{oil} * g * H_V$

Full-scale value:

$p_{ME} = \rho_{FL} * g * H_O - \rho_{oil} * g * H_V$

Key

p_{MA}	Start of scale value
p_{ME}	Full-scale value
ρ_{FL}	Density of the process medium in the container
ρ_{oil}	Density of the filling oil in the capillary line of the remote seal
g	Acceleration due to gravity
H_U	Lower filling level
H_O	Upper filling level
H_V	Gland distance

4.6 Turing the measuring cell against housing

Description

You can turn the measuring cell against the housing. Turning simplifies the transmitter operation in the case of an angled installation environment. The buttons and the current connection can thus also be operated for an external measuring device. The display also remains visible in enclosure covers with an inspection window.

Only limited turning is permissible! The turning range ① is marked at the foot of the electronic housing. An orientation mark ③ is provided at the throat of the measuring cell. This mark must remain in the marked section when turning.

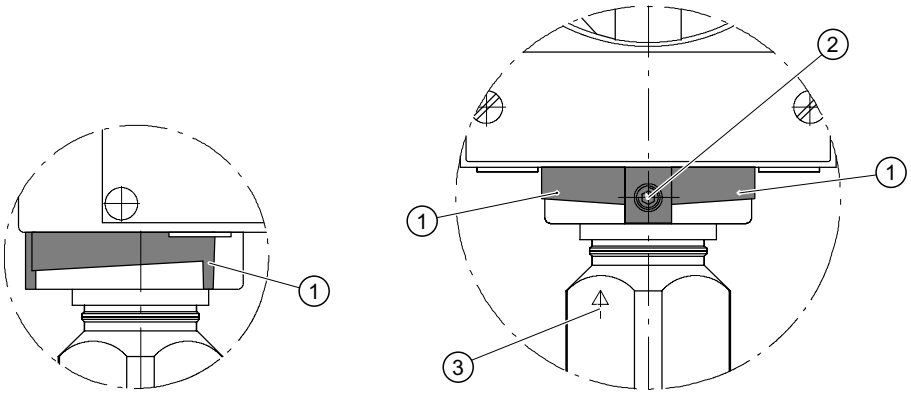

① Turning range
② Retaining screw
③ Orientation mark

Figure 4-4 Example: turning range of transmitters for pressure and absolute pressure from the gauge pressure series

The turning range for transmitters for differential pressure and flow rate, absolute pressure from the differential pressure series and level is identified in a similar manner.

Procedure

NOTICE
Follow the turning range, otherwise electrical connections of the measuring cell may get damaged.

1. Loosen the retaining screw ② (Allen screw 2.5 mm).
2. Turn the electronic housing against the measuring cell. Follow the marked turning range ① while doing so.
3. Tighten the retaining screw (torque: 3.4 to 3.6 Nm).

4.7 Rotating the display

You can rotate the display in the electronics enclosure. This makes it easier to read the display if the device is not being operated in a vertical position.

Procedure

1. Unscrew the cover of the electrical cable compartment. See section Structure (Page 19). An identification text "FIELD TERMINAL" is provided at the side of the housing.
2. Unscrew the display. Depending on the application position of the transmitter, you can reinstall it at four different positions. You can turn it by ±90° or ±180°.

3. Screw the covers back on as far as they will go.
4. Secure the covers with the cover catch.

Connecting 5

5.1 Basic safety instructions

5.1.1 Unsuitable cables and/or cable glands

⚠ WARNING

Unsuitable cables and/or cable glands

Danger of explosion in hazardous areas.

- Only use suitable cables and cable glands complying with the requirements specified in Chapter "Technical data (Page 169)".
- Tighten the cable glands in accordance with the torques specified in Chapter "Technical data (Page 169)".
- When replacing cable glands use only cable glands of the same type.
- After installation check that the cables are seated firmly.

⚠ WARNING

Hazardous contact voltage in versions with 4-conductor extension

Danger of electrocution in case of incorrect connection.

- For the electrical connection, refer to the information in Chapter "Technical data (Page 169)".

⚠ WARNING

Improper power supply

Danger of explosion in hazardous areas as result of incorrect power supply, e.g. using direct current instead of alternating current.

- Connect the device in accordance with the specified power supply and signal circuits. The relevant specifications can be found in the certificates, in Chapter "Technical data (Page 169)" or on the nameplate.

⚠ WARNING

Unsafe extra-low voltage

Danger of explosion in hazardous areas due to voltage flashover.

- Connect the device to an extra-low voltage with safe isolation (SELV).

⚠ WARNING

Lack of equipotential bonding

Danger of explosion through compensating currents or ignition currents through lack of equipotential bonding.

- Ensure that the device is potentially equalized.

Exception: It may be permissible to omit connection of the equipotential bonding for devices with type of protection "Intrinsic safety Ex i".

⚠ WARNING

Unprotected cable ends

Danger of explosion through unprotected cable ends in hazardous areas.

- Protect unused cable ends in accordance with IEC/EN 60079-14.

⚠ WARNING

Improper laying of shielded cables

Danger of explosion through compensating currents between hazardous area and the non-hazardous area.

- Only ground shielded cables that run into the hazardous area at one end.
- If grounding is required at both ends, use an equipotential bonding conductor.

⚠ WARNING

Connecting device in energized state

Danger of explosion in hazardous areas.

- Connect devices in hazardous areas only in a de-energized state.

Exceptions:

- Circuits of limited energy may also be connected in the energized state in hazardous areas.
- Exceptions for type of protection "Non-sparking nA" (Zone 2) are regulated in the relevant certificate

⚠ WARNING

Incorrect selection of type of protection

Danger of explosion in areas subject to explosion hazard.

This device is approved for several types of protection.

1. Decide in favor of one type of protection.
2. Connect the device in accordance with the selected type of protection.
3. In order to avoid incorrect use at a later point, make the types of protection that are not used permanently unrecognizable on the nameplate.

NOTICE

Ambient temperature too high

Damage to cable sheath.

- At an ambient temperature ≥ 60 °C (140 °F), use heat-resistant cables suitable for an ambient temperature at least 20 °C (68 °F) higher.

NOTICE

Incorrect measured values with incorrect grounding

The device must not be grounded via the "+" connection. It may otherwise malfunction and be permanently damaged.

- If necessary, ground the device using the "-" connection.

Note

Electromagnetic compatibility (EMC)

You can use this device in industrial environments, households and small businesses.

For metal housings there is an increased electromagnetic compatibility compared to high-frequency radiation. This protection can be increased by grounding the housing, see Chapter "Connecting the device (Page 60)".

Note

Improvement of interference immunity

- Lay signal cables separate from cables with voltages > 60 V.
- Use cables with twisted wires.
- Keep device and cables in distance to strong electromagnetic fields.
- Use shielded cables to guarantee the full specification according to HART.
- Refer to HART communication information in Chapter "Technical data (Page 169)".

5.2 Connecting the device

Opening the device

1. Unscrew the cover of the electrical cable compartment. An identification text "FIELD TERMINAL" is provided at the side of the housing.

Connecting the device

1. Lead the connecting cable through the cable gland ③.
2. Connect the device to the plant with the protective conductor connection ⑦.

3. Connect the wires to the terminals "+" and "-". ④
   Observe the correct polarity. If necessary, ground the device using the "-" connection by connecting the "-" connection to the ground terminal ⑨.
4. If necessary, connect the shield to the screw of the ground terminal ⑨. The ground terminal is electrically connected to the external protective conductor connection.

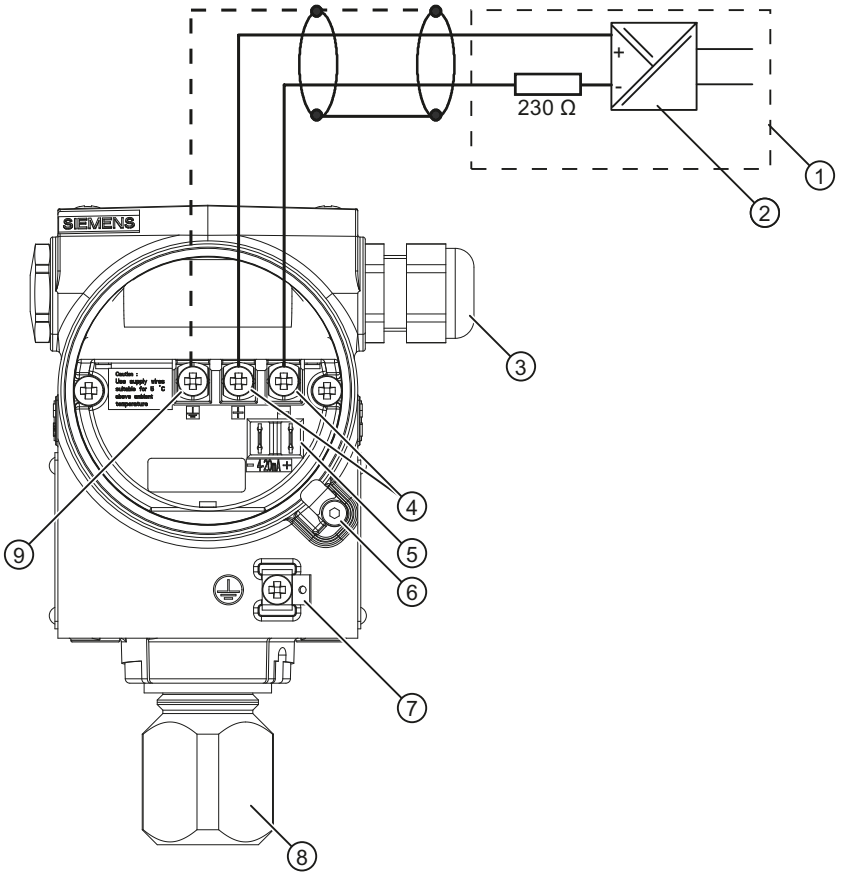

①	Feed separator with integrated load	⑤	Test connector for direct current measuring device or connection for external display
②	Auxiliary power	⑥	Safety catch
③	Cable entry for auxiliary power/analog output	⑦	Protective conductor connection/ equipotential bonding terminal
④	Connecting terminals	⑧	Process connection
		⑨	Ground terminal

Figure 5-1 Electrical connection, power supply

Closing the device

1. Screw the covers ④⑦ back on as far as they will go.
2. Secure each cover with the cover catch ③⑥.

3. Close the key cover ①.
4. Tighten the screws in the key cover.
5. Check the tightness of the blanking plugs ⑤ and cable gland ② in accordance with the degree of protection.

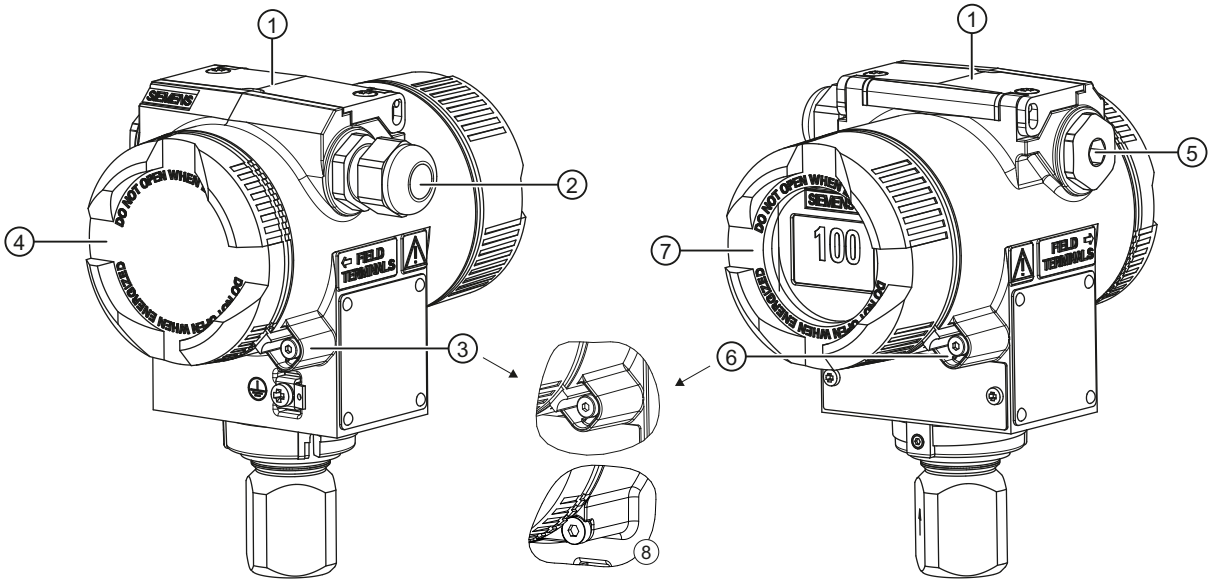

①	Key cover	⑤	Blanking plug
②	Cable gland	⑥	Safety catch (front)
③	Safety catch (back)	⑦	Cover (front), optionally with inspection window
④	Cover (rear) for electrical terminal compartment	⑧	Safety catch for stainless steel enclosure

Figure 5-2 View of the transmitter: Left: Back right: Front view

See also

Structure (Page 19)

5.3 Connecting the Han plug

⚠ WARNING

The connector may only be used for Ex ia devices and non-Ex devices; otherwise the safety required for the approval is not guaranteed.

Note

Observe the protection class of the Han plug when defining the protection class.

The contact parts for the coupling socket are also supplied.

Procedure

1. Slide the sleeve and the screwed joint on the cable.
2. Strip approx. 8 mm of the cable ends.
3. Crimp the contact parts on the cable ends.
4. Assemble the coupling socket.

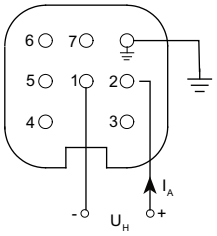

I_A Output current
U_H Auxiliary power

Connector pin assignment with Han 7D or Han 8D plug

5.4 Connecting the M12 connector

Procedure

CAUTION

A conductive connection must not exist between the shield and the connector housing.

WARNING

The connector may only be used for Ex ia devices and non-Ex devices; otherwise the safety required for the approval is not guaranteed.

Note

Observe the protection class of the M12 connector when defining the protection class.

For devices in which a connector is already available on the housing, the connection is established using a cable jack.

1. Thread the parts of the cable jack as described by the connector manufacturer.
2. Strip approximately 18 mm of the bus cable ①.
3. Twist the shield.
4. Thread the shield in the insulating sleeve.
5. Draw 8 mm of shrink sleeve over the cable, wires and shield up to the reference edge ②.

6. Screw the cable ends and the shield in the pin insert.
7. Fix the parts of the cable jack as described by the connector manufacturer.

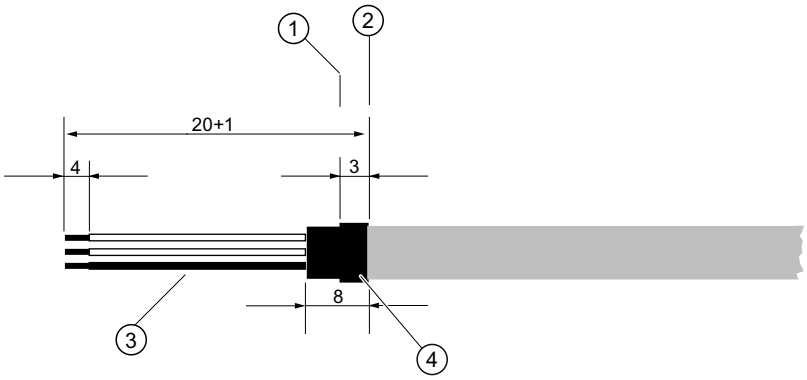

Figure 5-3 Preparing the connecting cable

①	Reference edge for stripping	③	Insulating sleeve over the shield
②	Reference edge for the dimension specifications for cable assembly	④	Shrink sleeve

Pin assignment

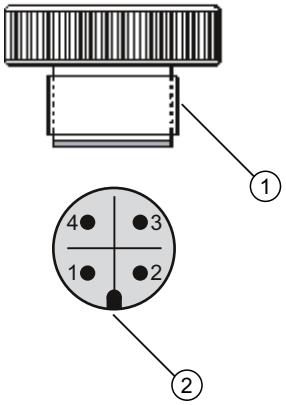

Layout for M12 connector

①	M12 x 1 thread
②	Positioning catch
1	+
2	Not connected
3	-
4	Shield

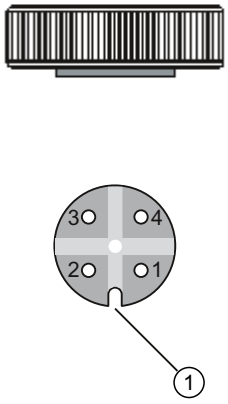

Layout for M12 jack

①	Positioning slot
1	+
2	Not connected
3	-
4	Shield
	Middle jack contact not connected

Operation

6

6.1 Overview of operation

Introduction

The following description contains an overview of the operating functions that you can execute using the pressure transmitter, and the safety notes that are to be observed when doing so. You can operate the transmitter on-site through HART communication. First, the on-site operation and then, the operating functions using HART are described.

Contents of the chapter

- Basic safety instructions (Page 66)
- Instructions for operation (Page 66)
- Display (Page 67)
- Local operation (Page 72)

Overview of operating functions

You can configure basic settings of the pressure transmitter using the buttons on the device. You can configure all settings through HART communication.

The following table describes the basic operating functions. More operating functions for special applications are accessible through HART. **Basic variables** of the device are marked in bold.

Table 6-1 Operating functions

Function	Using buttons	Using HART
Start of scale value	Yes	Yes
Full scale value	Yes	Yes
Electrical damping	Yes	Yes
Blind adjustment of the start of scale value	Yes	Yes
Blind adjustment of the full scale value	Yes	Yes
Zero point calibration (position correction)	Yes	Yes
Current transmitter	Yes	Yes
Fault current	Yes	Yes
Keyboard lock and write protection	Yes	Yes, release except for write protection
Unit type, unit	Yes	Yes

Function	Using buttons	Using HART
Characteristic curve (lin., rad.) (Not relevant for absolute and gauge pressure)	Yes	Yes
Customized characteristic curve	No	Yes
Diagnostic function	No	Yes

More operating functions for special applications are accessible through HART.

If a device does not have a display, its operations are limited. This is however not applicable for selecting functions using HART.

6.2 Basic safety instructions

Note

Incorrect reproduction of the process pressure

If you have changed the basic functions of the pressure transmitter, the display and the measurement output could be set such that the actual process pressure is not reproduced.

Therefore, check the basic parameters before commissioning.

6.3 Instructions for operation

The following rules are applicable for the operation of the pressure transmitter:

- The device counts numerical values always in an ascending order step by step starting from the least significant digit displayed.
  If you keep the button pressed for a longer time, it counts the next higher digit displayed. This procedure is used for fast coarse adjustment over a wide number range. Release the [↑] or [↓] button again for fine adjustment. Press the button again.

Violations of the measured value limits are output on the display by ⬆ or ⬇.

- The keyboard must have been unlocked in order to operate the device using the keyboard.
- If you are operating the transmitter locally, write access is denied through HART during this time.
  However, it is always possible to read the data, e.g. measured values.

Note

The setting is saved and the measured values are automatically displayed again if more than two minutes have passed after a button was pressed for the last time.

The operating instructions in the "Local operation without display" section apply if the device has been delivered with a blind cover.

6.4 Display

6.4.1 Display elements

Structure

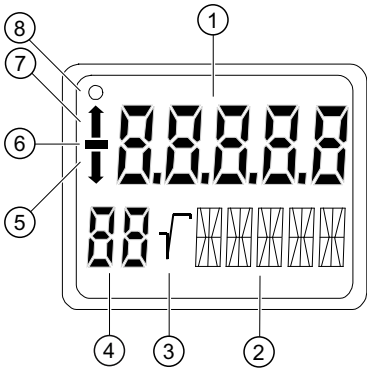

①	Measured value	⑤	Violation of lower limit
②	Unit/bar graph	⑥	Symbol for measured value
③	Root display	⑦	Violation of higher limit
④	Mode/button lock	⑧	Communication display

Figure 6-1 Display layout

Description

The display is used for the local display of the measured value ① with:

- Unit ②
- Mode ④
- Sign ⑥
- Statuses ⑤ and ⑦

Depending on the customer setting, the displayed measured value ① represents the following:

- The current emitted by the transmitter
- The percentage measurement value of the adjusted measurement type, e.g. level, related to the adjusted measurement range.
- The measurement value in a selectable physical unit

The *Violation of lower limit* ⑤ and *Violation of upper limit* ⑦ displays are also referred to as status since they have meanings dependent on the settings.

If the communication display ⑧ blinks, this indicates an active communication.

6.4.2 Units display

Description

The unit display comprises five 14-segment fields for representing the unit as a percentage value, physical unit or current value. A bar graph showing the percentage measured value range from 0 to 100% can be displayed as an alternative to the unit. The bar graph function is disabled by default.

Display

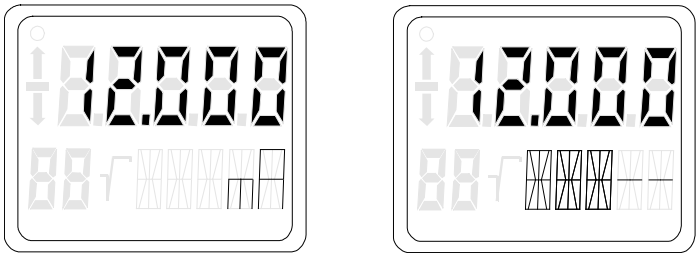

Figure 6-2 Examples for measured value display for current and bar graph

The following messages may appear as a ticker in the bottom line of the display. They have no influence on the current output.

Table 6-2 Message as ticker

Ticker	Meaning
"DIAGNOSTIC WARNING"	Is always displayed if: • An event configured by the user is to be signaled with a warning. For example: – Limit reached – Event counter for limit values exceeded – Calibration time expired – Current saturation reached • The status of one of the device variables is "UNCERTAIN".
"SIMULATION"	Is always displayed when the simulation of a pressure value or temperature value is active.

See also

Measured value status (Page 110)

6.4.3 Error display

Description

If hardware faults, software errors or diagnostic alarms occur in the transmitter, the message "Error" appears in the measured value display.

A ticker appears in the bottom line of the display indicating the type of error. This diagnostic information is also available via HART communication.

Display

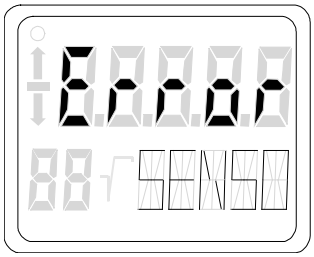

Figure 6-3 Example of error message

The following messages may appear as a ticker in the bottom line of the display.

Ticker	Meaning
"HARDWARE FIRMWARE ALARM"	Contains hardware faults such as: • incorrect checksum • incorrect EEPROM data • Defective EEROM • RAM fault • ROM fault • inconsistent data • EEPROMs not initialized
"DIAGNOSTIC ALARM"	Is always displayed if • an event configured by the user is to be signaled with an alarm. For example: – Limit reached – Event counter for limit values exceeded – Calibration time expired – Current saturation reached • the status of one of the device variables is "BAD".
"SENSOR BREAK"	Appears when there is a sensor break.

See also

Measured value status (Page 110)

6.4.4 Mode display

Description

The selected active mode is shown in the mode display.

Display

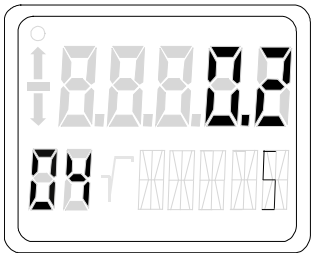

Figure 6-4 Example for mode display

In the example, a damping of 0.2 seconds was set in mode 4.

6.4.5 Status display

Description

The arrows of the status display have a different meaning depending on the mode setting. The table below shows the meanings of the arrows in the respective functions.

Meaning

Table 6-3 Meaning of the arrow displays

Function	Mode	Display ↑	Display ↓
Adjusting start of scale value	2	if the upper current limit is exceeded	if the value falls below the lower current limit
Adjusting full scale value	3	if the upper current limit is exceeded	if the value falls below the lower current limit
Adjusting damping	4	if the upper damping value is exceeded only for the pressure device version	if the value falls below the lower damping value only for the pressure device version
Blind adjustment of the start of scale value	5	if the upper sensor limit is exceeded	if the value falls below the lower sensor limit
Blind adjustment of the full scale value	6	if the upper sensor limit is exceeded	if the value falls below the lower sensor limit

Function	Mode	Display ↑	Display ↓
Position correction	7	if the max span is exceeded by more than 5% of the upper current limit	if the value falls below the lower current limit
Root application point	12	if the root application point of 15% is exceeded	if the value falls below the root application point of 5%
Keyboard operation	2, 3, 5, 6	when the span to be adjusted is larger than the maximum span	when the span to be adjusted is smaller than the minimum span
Normal operation		Current exceeds the upper saturation limit Pressure exceeds the upper sensor limit.	Current falls below the lower saturation limit Pressure falls below the lower sensor limit.

6.4.6 Overflow range

Description

The output signal is divided into defined ranges:

- Measuring range
- Saturation limits
- Fault current

The transmitter emits the output current according to the device variables selected as primary variable (PV). The working range of the current lies between 4 mA and 20 mA.

Meaning

When the measurement limits are exceeded or not reached, the measured values are correctly displayed in the overflow range.

A ticker is displayed in the bottom line of the display showing alternately the message UNDER or OVER and the selected unit. The possible overflow range can be adjusted via HART communication. If either of the overflow limits are violated, the output current remain constant. Violations of the measured value limits are output on the display by ↑ or ↓.

Note

The setting of the overflow range and the fault current range can be freely selected via HART communication.

Reference

NAMUR recommendation NE43 dated 03.02.2003

"Standardization of the signal level for the breakdown information of digital transmitters"

See also

Fault current (Page 118)
Setting the current limits (Page 119)

6.5 Local operation

6.5.1 Local control elements

Introduction

The transmitter can be operated on-site using the keys. Selectable modes can be used to choose and execute the functions described in the table. The number of available functions is limited if the device does not have a display.

Control elements

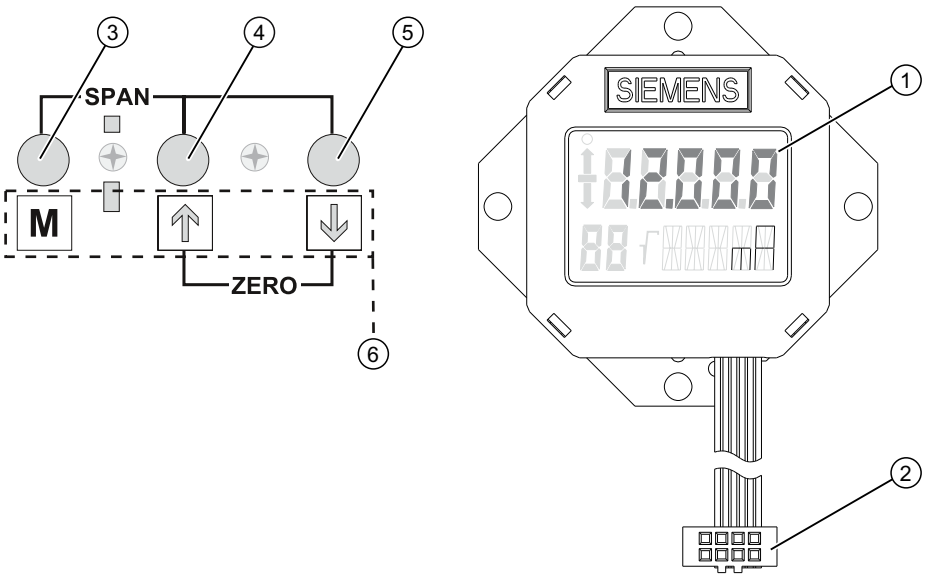

①	Display	④	Increment key
②	Connecting plug for the display	⑤	Decrement key
③	Mode key	⑥	Key symbols shown in the key cover

Figure 6-5 Position of keys and display

Operating functions

Note

Zero point calibration

For absolute pressure transmitters, the start of scale value is at vacuum.

A zero point calibration with transmitters which do not measure absolute pressure leads to faulty settings.

Table 6-4 Operating functions using keys

Function	Mode	Key function			Display, explanations
	[M]	[↑]	[↓]	[↑] and [↓]	
Measured value	The modes are selected here.				The current measured value is displayed as you have adjusted it in the "Measured value display, mode 13" function.
Start of scale value (only in "Pressure" measuring mode)	2	Current higher	Current lower	Set to 4 mA	Output current in mA
Full scale value (only in "Pressure" measuring mode)	3	Current higher	Current lower	Set to 20 mA	Output current in mA
Electrical damping	4	Damping higher	Damping lower	Set to 0	Time constant T63 in seconds Adjustment range: 0.0 s to 100.0 s
Start of scale value in the so-called blind adjustment	5	Pressure higher	Pressure lower	Set the start of scale value to 0	Start of scale value in the selected pressure unit
Full scale value in the so-called blind adjustment	6	Pressure higher	Pressure lower	Set the full scale value to upper measuring limit	Full scale value in the selected pressure unit
Zero point calibration (position correction)	7	Correction value higher	Correction value lower	execute	Ventilate the transmitter for gauge pressure, differential pressure, flow rate or level. Evacuate the transmitter for absolute pressure (< 0.1‰ of the measuring span). (Start of scale value remains unaffected) Measured value in pressure unit
Current transmitter	8	Current higher	Current lower	switch on	constant output current in mA "3.6"; "4", "12", "20" or "22.8" Switch off using the [M] key.
Output current in case of fault	9	Switch between lower fault current and upper fault current.		lower fault current	selected output current possible: Fault current limits adjusted by user

Function	Mode	Key function			Display, explanations	
	[M]	[↑]	[↓]	[↑] and [↓]		
Key lock or function lock	10	Switch between the five functions		–	0	None
					LA	all locked
					LO	all locked except for start of scale value
					LS	all locked except for start of scale value and full scale value
					L	Write protection Operation via HART not possible.
Characteristic curve[1)]	11	Switch between the four functions		linear	lin	linear
					srlin	square root extracting (linear up to the application point)
					sroff	Square root extracting (deactivated up to the application point)
					srli2	square root extracting (linear up to the application point 10%)
Application point of the square root extracting characteristic curve[1)]	12	Greater	Smaller	10% flow rate	Adjustment range of 5 to 15% flow rate.	
Measured value display	13	Select from three options.		–	• Display type (input value) • Output current in mA • Measured value in %	
Unit	14	Select from the table for measured value display.		In each case, the first value from the table of the physical unit	Physical unit	
[1)] Not relevant for gauge and absolute pressure)						

See also

Overview of operation (Page 65)

Operating functions through HART communication (Page 99)

6.5.2 Operation using buttons

Introduction

This overview informs you about the most important safety notes to be observed when operating the pressure transmitter. Furthermore, the overview guides you in adjusting the operating functions on site.

Condition

The keyboard must have been unlocked in order to operate the device using the buttons.

Procedure

In the default setting, the device is in the measured value display.

To adjust the operating functions, proceed as follows:

1. Loosen both the screws of the keyboard cover and lift it upwards.
2. Keep pressing the [M] button until the desired mode is displayed.
3. Keep pressing the [↑] or [↓] button until the desired value is displayed.
4. Press the [M] button.
   Now you have saved the values and the device goes to the next mode.
5. Close the keyboard cover using the two screws.

Note

The setting is saved and the measured values are automatically displayed again if more than two minutes have passed after a button was pressed for the last time.

See also

Releasing key lock or function lock (Page 91)

6.5.3 Start of scale value/full scale value

6.5.3.1 Difference between setting and adjusting

Introduction

In "Pressure" measuring mode, you can set or adjust the start of scale value and full scale value using the buttons. Modes 2 and 3 are used for this. Rising and falling characteristic curves can be realized with appropriate use of the buttons. If the transmitter is not in "Pressure" measuring mode, this mode is skipped in local operation.

Difference

The difference between setting and adjusting lies in the calculation.

Setting with reference pressure

Condition

Two reference pressures p_{r1} and p_{r2} are available. The reference pressures are initialized by the process or generated by a pressure sensor.

When setting, a desired start of scale value or a full scale value is allocated to the standard current values (4 mA or 20 mA). After setting, the span given on the nameplate may no longer correspond to the setting.

Depending on the series and measuring range, a maximum downscaling of 1:100 can be achieved (measuring span ratio = r, turn down).

The correlation between the measured pressure and the output current generated is linear. The square root extracting characteristic curve for differential pressure transmitters is an exception. Calculate the output current using the following formula.

$$I = \frac{p - MA}{ME - MA} * 16\ mA + 4\ mA$$

I	Output current	MA_{actual}	Old start of scale value
p	Pressure	ME_{actual}	Old full scale value
MA	Start of scale value	MA_{target}	New start of scale value
ME	Full scale value	ME_{target}	New full scale value

Figure 6-6 Current calculation formula for setting

Example of setting with reference pressure

A Initial situation
B Setting start of scale value
C Setting full scale value

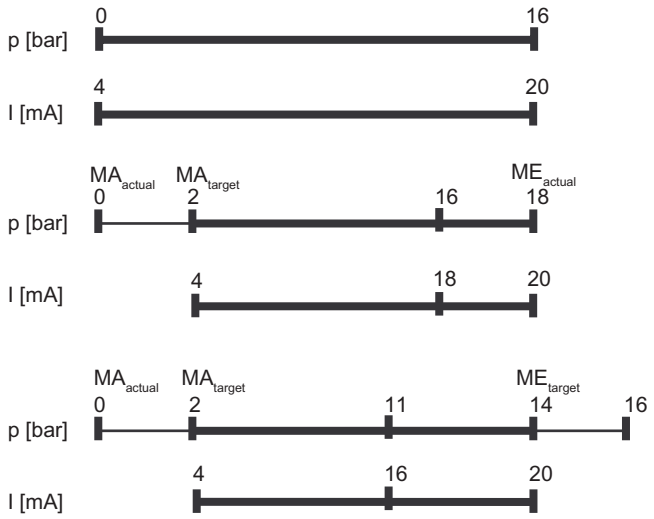

Explanations for the example of setting with reference pressure

A The measuring range is from 0 to 16 bar. You are changing the start of scale value from 0 to 2 bar and the full scale value from 16 to 14 bar. The measuring span is then 12 bar.

B 2 bar process pressure is created.

Use the [M] button to set the transmitter to mode 2. To set the start of scale value, press the [↑] and [↓] buttons simultaneously for 2 seconds.

If there is 2 bar input pressure, the transmitter produces an output current of 4 mA.

C 14 bar process pressure is created.

Use the [M] button to set the transmitter to mode 3. To set the full scale value, press the [↑] and [↓] buttons simultaneously for 2 seconds.

If there is 14 bar input pressure, the transmitter produces an output current of 20 mA.

D The output current can be calculated for any input pressure using the "current calculation formula for setting".

Note

If the value exceeds or falls below the preset measuring limits by more than 20% when setting, the setting function is not carried out. The old value is retained in this case.

With a marked elevation of the zero point, the full scale value must therefore previously be reduced such that it still lies within the permitted range after elevation of the zero point. This setting function is only possible in "Pressure" measuring mode.

Adjusting with reference pressure

Condition:

The reference pressure, the adjusted start of scale value and adjusted full scale value are known.

When adjusting, a start of scale value or a full scale value can be allocated to a desired current value with the aid of a reference pressure. This function is particularly suitable when the required pressures for the start of scale value and the full scale value are not available After adjustment, the measuring range specified on the nameplate may no longer correspond to the setting made.

Using the formulae below, the current to be set for the desired start of scale value and the full scale value can be calculated.

To calculate the output currents when setting the start of scale value or the full scale value, the reference pressure must be selected such that a value between 4 and 20 mA results for the current.

$$I = \frac{p - MA}{ME - MA} * 16\ mA + 4\ mA$$

$$I_{ME} = \frac{p_{ref} - MA_{target}}{ME_{target} - MA_{target}} * 16\ mA + 4\ mA$$

I	Output current	MA_{actual}	Old start of scale value
I_{MA}	Current to be adjusted with MA_{target}	ME_{actual}	Old full scale value
I_{ME}	Current to be adjusted with ME_{target}	MA_{target}	New start of scale value
p	Pressure	ME_{target}	New full scale value
p_{ref}	Existing reference pressure		

Figure 6-7 Current calculation formula for setting with reference pressure

Example of adjusting with reference pressure

A Initial situation
B Calculating start of scale value
C Calculating full scale value

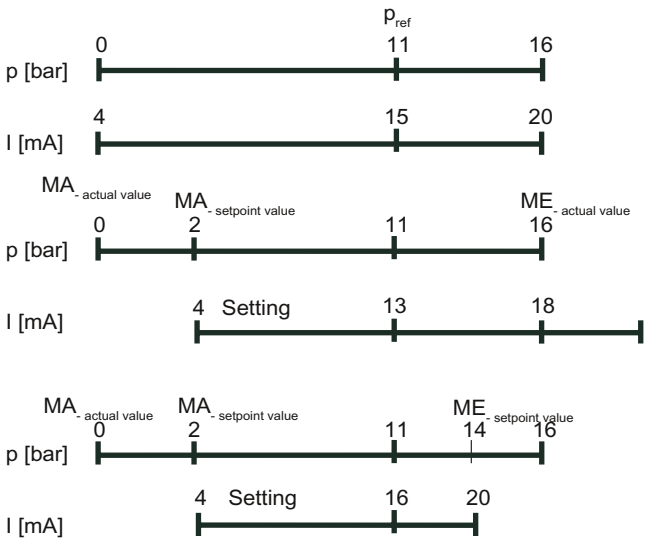

Explanations for the example of adjusting with reference pressure

A The measuring range is from 0 to 16 bar. You are changing the start of scale value from 0 to 2 bar and the full scale value from 16 to 14 bar. The measuring span is then 12 bar.

   A reference pressure of 11 bar is created.

B Use the [M] button to set the transmitter to mode 2.

   The "Current calculation formula for adjusting with reference pressure" can be used to calculate the current to be adjusted for the desired start of scale value I_{MA} (13 mA at 2 bar) with the existing reference pressure. It can be adjusted with the [↑] or [↓] buttons I_{MA}.

C Use the [M] button to set the transmitter to mode 3.

   The "Current calculation formula for adjusting" can be used to calculate the current to be adjusted for the desired full scale value I_{ME} (16 mA at 14 bar) with the existing reference pressure. It can be adjusted with the [↑] or [↓] buttons I_M.

Note

If the preset measuring limits are exceeded or fallen below by more than 20% during adjustment, the resulting current cannot be set above these limits.

With a marked elevation of the zero point, the full scale value must therefore previously be reduced such that it still lies within the permitted range after elevation of the zero point.

See also

Unit (Page 95)

6.5.3.2 Setting/adjusting the start of scale value

NOTICE
Inadvertent adjustment of parameters on devices without display or without visible display
Key lock is canceled if you press the [M] key for longer than 5 seconds, see chapter "Releasing key lock or function lock (Page 91)". In the case of a device without display or without a visible display, you could inadvertently change parameters. • Always press the [M] key for less than 5 seconds.

Introduction

Set or adjust the start of scale value of the pressure transmitter in mode 2.

You can also adjust the start of scale value or the full scale value separately as well as adjust both these values one after the other.

Condition

You are familiar with the correct operation of the transmitter and the associated safety notes.

You have selected a reference pressure that corresponds to the start of scale value and is within the permissible tolerance range.

The transmitter is in "Pressure" measuring mode.

Setting start of scale value

To set the output current of the start of scale value to 4 mA, proceed as follows:

1. Create the reference pressure.
2. Set mode 2.
3. Set the start of scale value to 4 mA.
4. Save with the [M] button.

Adjusting start of scale value

If you do not set the output current but constantly adjust it, you need to calculate the currents to be adjusted mathematically.

To the adjust the output current of the start of scale value, proceed as follows:

1. Create the reference pressure.
2. Set mode 2.
3. Adjust the output current of the start of scale value to the calculated value.
4. Save with the [M] button.

Setting the start-of-scale value without a display

You have a device with a cover that does not have an inspection window and you wish to set the start of scale value.

To set the output current of the start of scale value to 4 mA, proceed as follows:

1. Create the reference pressure.
2. Press the [↑] and [↓] buttons simultaneously.
   The device has set the start of scale value to 4 mA.
3. When you release the buttons, the device saves the adjusted value automatically.

Setting the start-of-scale value without a display

You have a device with a cover that does not have an inspection window and you do not wish to set the start of scale value, but adjust it.

You will need an ammeter for this purpose.

To the adjust the output current of the start of scale value, proceed as follows:

1. Connect the ammeter to the test connector.
2. Create the reference pressure.
3. Adjust the output current of the start of scale value using the [↑] or [↓] button.
4. When you release the button, the device saves the adjusted value automatically.

6.5.3.3 Setting/adjusting the full scale value

Introduction

Set or adjust the full scale value of the pressure transmitter in mode 3.

You can also adjust the start of scale value or the full scale value separately as well as adjust both these values one after the other.

Condition

You are familiar with the correct operation of the transmitter and the associated safety notes.

You have selected a reference pressure that corresponds to the full scale value and is within the permissible tolerance range.

The transmitter is in "Pressure" measuring mode.

Setting full scale value

To set the output current of the full scale value to 20 mA, proceed as follows:

1. Create the reference pressure.
2. Set mode 3.

3. Set the full scale value to 20 mA.
4. Save with the [M] button.

Adjusting full scale value

If you do not set the output current but constantly adjust it, you need to calculate the currents to be adjusted mathematically.

To the adjust the output current of the full scale value, proceed as follows:

1. Create the reference pressure.
2. Set mode 3.
3. Adjust the output current of the full scale value to the calculated value.
4. Save with the [M] button.

Setting the full-scale value without a display

You have a device with a cover that does not have an inspection window and you wish to set the full scale value.

To set the output current of the full scale value to 20 mA, proceed as follows:

1. Create the reference pressure.
2. Press and hold the [M] button.
3. Also press the [↑] and [↓] buttons simultaneously.
   The device has set the full scale value to 20 mA.
4. When you release the buttons, the device saves the adjusted value automatically.

Setting the full-scale value without a display

You have a device with a cover that does not have an inspection window and you do not wish to set the full scale value, but adjust it continuously.

You will need an ammeter for this purpose.

To the adjust the output current of the full scale value, proceed as follows:

1. Connect the ammeter to the test connector.
2. Create the reference pressure.
3. Press and hold the [M] button.
4. Adjust the output current of the full scale value to the calculated value using the [↑] or [↓] button.
5. When you release the button, the device saves the adjusted value automatically.

6.5.4 Setting/adjusting electrical damping

Difference between setting and adjusting

You can set or adjust the time constant of electrical damping using the buttons. Setting means that the time constant is automatically set to 0 seconds. Adjusting means that the time constant is adjusted between 0 and 100 seconds using the steps of 0.1 seconds. This electrical damping also has an effect on the built-in basic damping of the device.

Condition for "setting"

You are familiar with the correct operation of the transmitter and the associated safety notes.

Setting electrical damping

To set electrical damping to 0 seconds, proceed as follows:

1. Set mode 4.
2. Press the [↑] and [↓] buttons simultaneously.
3. Save with the [M] button.

Result

Electrical damping has been set to 0 seconds.

Condition for "adjusting"

The default setting of steps is an interval of 0.1 seconds. If you press the [↑] or [↓] button for a longer time, the step is increased.

Adjusting electrical damping

To adjust electrical damping, proceed as follows:

1. Set mode 4.
2. Adjust the desired damping.
3. Save with the [M] button.

Result

Electrical damping has been set to the desired time constant.

6.5.5 Blind start of scale value/full scale value

6.5.5.1 Difference between setting/adjusting and blind setting/adjusting

Differences

In contrast to setting/adjusting with a reference pressure, you do not need a reference pressure for blind setting/adjusting. You can adjust a value in the physical variable "pressure" without a reference pressure, and an output current with a reference pressure.

Blind adjusting

First select the desired physical unit. Then, adjust two pressure values using the [↑] and [↓] buttons and save them in the device. These theoretical pressure values are allocated to the standard current values 4 mA and 20 mA.

Depending on the series and measuring range, a maximum downscaling of 1:100 can be achieved (measuring span ratio = r, turn down).

The correlation between the measured pressure and the output current generated is linear. The square root extracting characteristic curve for differential pressure transmitters is an exception.

Example of blind adjusting

A Initial situation
B Blind adjustment of the start of scale value
C Blind adjustment of the full scale value

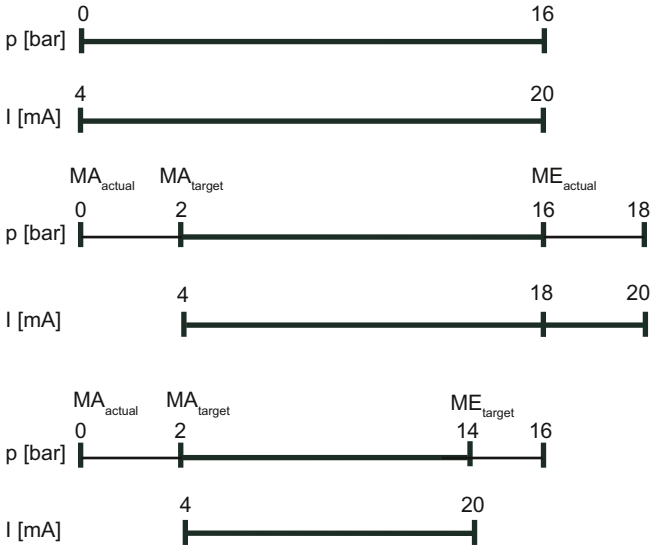

I	Output current	p	Pressure
MA_{actua}	Old start of scale value	MA_{target}	New start of scale value
ME_{actua}	Old full scale value	ME_{target}	New full scale value

Explanations for the blind adjusting example

A The measuring range is from 0 to 16 bar. You are changing the start of scale value from 0 to 2 bar and the full scale value from 16 to 14 bar. The measuring span is then 12 bar.
In this example you create no pressure.

B Use the [M] button to switch the transmitter to mode 5. To adjust the start of scale value to 2 bar, press one of the [↑] or [↓] buttons.
If there is 2 bar input pressure, the transmitter produces an output current of 4 mA.

C Use the [M] button to switch the transmitter to mode 6. To adjust the full scale value to 14 bar, press one of the [↑] or [↓] buttons.
If there is 14 bar input pressure, the transmitter produces an output current of 20 mA.

Note

If the preset measuring limits are exceeded or fallen below by more than 20% during adjustment, the resulting current cannot be set above these limits.

With a marked elevation of the zero point, the full scale value must therefore previously be reduced such that it still lies within the permitted range after elevation of the zero point.

Setting without reference pressure

Blind setting resets the start of scale value to the lower sensor limit and the full scale value to the upper sensor limit.

Note

If the value exceeds or falls below the preset measuring limits by more than 20% when setting, the setting function is not carried out. The old value is retained in this case.

With a marked elevation of the zero point, the full scale value must therefore previously be reduced such that it still lies within the permitted range after elevation of the zero point.

6.5.5.2 Blind setting of start of scale value

Introduction

Blind setting resets the start of scale value to the lower sensor limit.

Note

Changes in modes 5 and 6 have an exclusive effect on pressure scaling. This does not affect the scaling for level or customized characteristic curve. Therefore, only measured pressure values and pressure units are displayed in these modes.

Condition

You are familiar with the correct operation of the transmitter and the associated safety notes.

You have not created any reference pressure and have selected a pressure unit.

Procedure

To the set the start of scale value blindly, proceed as follows:

1. Set mode 5.
2. Press the [↑] and [↓] buttons simultaneously for 2 seconds.

6.5.5.3 Blind setting of full scale value

Introduction

Blind setting resets the full scale value to the upper sensor limit.

Note

Changes in modes 5 and 6 have an exclusive effect on pressure scaling. This does not affect the scaling for level or customized characteristic curve. Therefore, only measured pressure values and pressure units are displayed in these modes.

Condition

You are familiar with the correct operation of the transmitter and the associated safety notes.

You have not created any reference pressure and have selected a pressure unit.

Procedure

To the set the full scale value blindly, proceed as follows:

1. Set mode 6.
2. Press the [↑] and [↓] buttons simultaneously for 2 seconds.

6.5.5.4 Blind adjusting of the start of scale value

Introduction

In the case of blind adjustment, adjust the pressure value of the start of scale value continuously and without a reference pressure.

Note

Changes in modes 5 and 6 have an exclusive effect on pressure scaling. This does not affect the scaling for level or customized characteristic curve. Therefore, only measured pressure values and pressure units are displayed in these modes.

You can toggle between rising and falling characteristic curves.

Condition

You are familiar with the correct operation of the transmitter and the associated safety notes.

You have not created any reference pressure and have selected a pressure unit.

Procedure

To the adjust the pressure value of the start of scale value blindly, proceed as follows:

1. Set mode 5.
2. Adjust the pressure value of the start of scale value.
3. Save with the [M] button.

6.5.5.5 Blind adjustment of the full scale value

Introduction

In the case of blind adjustment, adjust the pressure value of the full scale value continuously and without a reference pressure.

Note

Changes in modes 5 and 6 have an exclusive effect on pressure scaling. This does not affect the scaling for level or customized characteristic curve. Therefore, only measured pressure values and pressure units are displayed in these modes.

You can toggle between rising and falling characteristic curves by swapping the start of scale value and the full scale value.

Condition

You are familiar with the correct operation of the transmitter and the associated safety notes.

You have not created any reference pressure and have selected a pressure unit.

Procedure

To the adjust the pressure value of the full scale value blindly, proceed as follows:

1. Set mode 6.
2. Adjust the pressure value of the full scale value.
3. Save with the [M] button.

6.5.6 Trimming the zero point

Introduction

The zero point is calibrated in mode 7. Zero point calibration corrects zero point errors resulting from the installation position of the pressure transmitter. The device type determines the way in which you proceed.

SIMATIC PDM or the HART communicator will display the total of all zero point corrections.

Condition

You are familiar with the correct operation of the transmitter and the associated safety notes.

Zero point calibration for gauge pressure transmitter

To calibrate the zero point, proceed as follows:

1. Pressurize the transmitter.
2. Set mode 7.
3. Press the [↑] and [↓] keys simultaneously for 2 seconds.
4. Save using the [M] key.

Zero point calibration for absolute pressure transmitter

Note

You need a reference pressure known to you which lies within the measuring limits.

To calibrate the zero point, proceed as follows:

1. Create the reference pressure.
2. Set mode 7.
3. Set the reference pressure on the display.
4. Save using the [M] key.

6.5.7 Current transmitter

Introduction

In mode 8, switch the pressure transmitter into the constant current operation. You can connect an external current transmitter in the constant current operation. The current then no longer corresponds to the process variable. The following output current can be adjusted irrespective of the input pressure:

- 3.6 mA
- 4.0 mA
- 12.0 mA
- 20.0 mA
- 22.8 mA

You can use HART communication to adjust intermediate values.

Procedure

To switch on the constant current operation, proceed as follows:

1. Set mode 8.
   "Cur" in the display stands for current.
2. Press the [↑] and [↓] buttons simultaneously.
3. Select constant current.

Switching off the constant current operation

To switch off the constant current operation, proceed as follows:

Press the [M] button in mode 8.

6.5.8 Output current in case of fault

Introduction

When a fault occurs, the upper fault current is displayed in the basic setting. In mode 9, you can choose between the output of the upper and lower fault current. The standard values 3.6 mA and 22.8 mA are set.

The standard values of the upper and lower fault current can be changed via HART communication.

Condition

You are familiar with the correct operation of the transmitter and the associated safety notes.

Procedure

To change the fault current, proceed as follows:

1. Set mode 9.
2. Select the fault current.
3. Save using the [M] key.

Note

If a current saturation interrupt is active, the setting of the output current may deviate from your setting in the case of a fault.

Resetting fault current

To reset the fault current to the basic setting, proceed as follows:

Press the [↑] and [↓] [M] keys simultaneously.

Fault causes

Fault currents may be triggered by:

- FW alarm
- HW alarm
- Diagnostic interrupt
- Sensor breakage
- Measured value status BAD

Reference

NAMUR recommendation NE43 dated 02/03/2003
"Standardization of the signal level for the breakdown information of digital transmitters"

6.5.9 buttons and function lock

Introduction

In mode 10, you can disable the functions that can be executed using buttons. Application example for a lock is e.g. safeguarding the saved parameters.

Lock options

You have the following lock options on the pressure transmitter:

Table 6-5 Meaning of lock modes

Lock mode	Meaning
0	The device can be operated by means of the keys and HART communication.
LA	Keys on the transmitter are locked. Exception: • Releasing key lock The device can be operated by means of HART communication.
LO	Keys on the transmitter are partially locked. Exception: • Setting start of scale value • Releasing key lock The device can be operated by means of HART communication.
LS	Keys on the transmitter are partially locked. Exception: • Setting start of scale value • Setting full scale value • Releasing key lock The device can be operated by means of HART communication.
L	Write protection Operation via keys and HART communication is blocked. Exception: • Releasing key lock

Note

If you want to select the LO or LS lock, we recommend you first select the measured value display of "Current" in "mA" or "%" in mode 13. Otherwise, a change in the output variable using the [↑] and [↓] buttons is not detected.

If the blind cover is provided, the LS lock mode is effective, i.e. only the zero point and the span can be changed. If you continuously operate the device with the blind cover, ensure that the LS lock mode is constantly set.

Condition

You are familiar with the correct operation of the transmitter and the associated safety notes.

Note

In the measured value display function, check whether the desired setting is displayed.

Procedure

To disable the buttons, proceed as follows:

1. Set mode 10.
2. Select the desired lock mode.
3. Confirm the lock mode with the [M] button.

6.5.10 Releasing key lock or function lock

Releasing key lock

⚠ WARNING

In the case of devices used for safety-relevant applications, only authorized personnel may release the key lock, e.g. overflow protection.

To release a set key lock (LA, LO, LS) using buttons, proceed as follows:

Press the [M] button for 5 seconds.

Releasing the write protection

To release a write protection for HART (L) using buttons, proceed as follows:

Press the [M] button for 5 seconds.

6.5.11 Flow rate measurement (only differential pressure)

Introduction

The characteristic curve representing the relationship between the output current and input pressure can be adjusted in mode 11. Adjust the root application point in mode 12.

You can select the following characteristic curve types of the output current:

- linear "lin": proportional to differential pressure
- square root extracting "sroff": proportional to flow rate, deactivated up to the application point
- square root extracting "srlin": proportional to flow rate, linear up to the application point
- square root extracting "srli2": proportional to flow rate, two-step linear up to the application point

Variable application point

The output current for the "srlin" and "sroff" functions can be displayed linearly or set to zero below the application point of the square root extracting characteristic curve.

Fixed application point

The "srli2" function has a permanently defined application point of 10%. The range up to this point contains two linear characteristic curve sections. The first section ranges from the zero point to 0.6% of the output value and 0.6% of the pressure value. The second section has a higher gradient and it goes up to the root application point at 10% of the output value and 1% of the pressure value. See the following figure for this purpose.

Procedure

Proceed as follows to set or adjust the type of characteristic curve:

1. Set mode 11.
2. Select the type of characteristic curve.
   To set the characteristic curve to "linear", press the [↑] and [↓] buttons simultaneously.
3. Save with the [M] button.

Proceed as follows to set or adjust the root application point: This procedure is not applicable for "srli2":

1. Set mode 12.
2. Select an application point between 5 and 15%.
   To set the application point to 10%, press the [↑] and [↓] buttons simultaneously.
3. Save with the [M] button.

Note

Mode 12 cannot be selected if the "linear" or "srli2" measuring mode has been adjusted in mode 11.

If the square root extracting characteristic curve has been adjusted in mode 11 and if the measured value display has been set to "Pressure" in mode 13, the root sign and the differential pressure corresponding to the flow rate are displayed.

The "srli2" square root extraction function is set as default in "Flow rate" measuring mode.

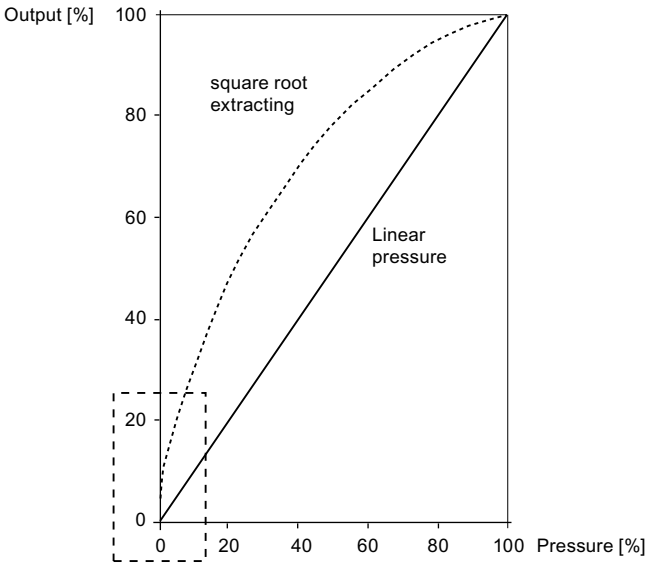

The dotted rectangle has been magnified in the form of the following characteristic curves in order to show the behavior of characteristic curves.

Characteristic curves and application point of square root extracting characteristic curves

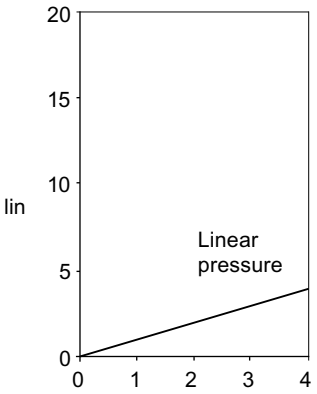

Characteristic curve "lin":

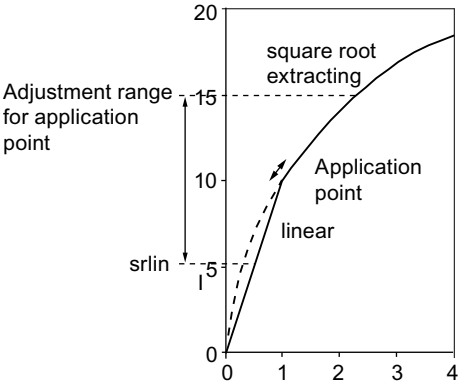

Square root extracting characteristic curve "srlin"

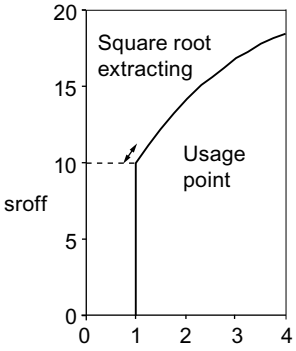

Characteristic curve "sroff"

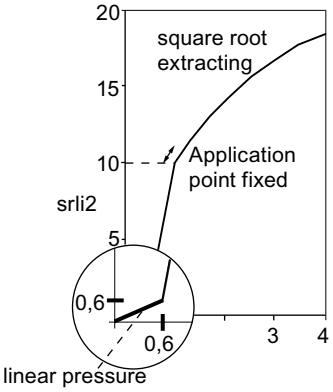

Characteristic curve "srli2"

6.5.12 Measured value display

Note

To use the operating functions with the buttons, first set the device variable (DV) parameters with a host system such as SIMATIC PDM. You will finds details of the relation between primary variable (PV) assignment and the DV in the following section:

Measuring mode "Pressure" (Page 101)

Introduction

In mode 13, adjust the following types of measured value display:

- mA
- %
- Display of the PV selected via HART. (Default setting: P pressure)

Table 6-6 Display of measuring mode/device variables

Display	DV	Meaning
P	0	Pressure
t-SE	1	Sensor temperature
t-EL	2	Electronics temperature
P-UNC	3	Pressure (untrimmed)
LEVEL	4	Level
Vol	5	Volume
MASS	6	Mass
V-Flo	7	Volumetric flow rate (not relevant for gauge or absolute pressure)
M-Flo	8	Mass flow rate (not relevant for gauge or absolute pressure)
CUSt	9	Users

Condition

You are familiar with the correct operation of the transmitter and the associated safety notes.

Procedure

To select the display type, proceed as follows:

1. Set mode 13.
2. Select the measured value display.
3. Save with the [M] button.

See also

Measured value display (Page 121)

6.5.13 Unit

Introduction

In mode 14, select the physical unit in which the measured value display of the device should be shown.

Condition

You are familiar with the correct operation of the transmitter and the associated safety notes.

You have already selected the desired measured value display via HART.

Procedure

To adjust the physical unit, proceed as follows:

1. Set mode 14.
2. Select a unit.
   Press the [↑] and [↓] buttons simultaneously to set the unit to the first value in the following table depending on the measuring mode set.
3. Save with the [M] button.

Instructions for selecting the unit

- Unit selection depends on the type of measurement set. For example, only pressure units are available in "Pressure" measuring mode and only level units are available in the "Level" measuring mode.
- The displayed measured value is always converted into the new unit. "9.9.9.9.9" appears on the display when its display capacity is exceeded.
- The selected unit is visible on the display in the measuring mode only if you have selected the display of a physical unit via HART. "mA" or "%" will be displayed if you have not selected mode 13, "Measuring mode".

Units

Table 6-7 Units available for pressure

Pressure units	Display		Pressure units	Display
mbar	mbar		Psi	PSi
bar	bar		Pa	Pa
mm water column (20°C / 68°F)	mmH2O		KPa²	KPa
Inch water column (20°C / 68°F)	inH2O		MPa	MPa
Feet water column (20°C / 68°F)	FTH2O		g/cm2	Gcm2
mm mercury column	mmHG		Kg/cm2	KGcm2
Inch mercury column	in_HG		Torr	TORR
mm water column (4°C / 39 °F)	m4H2O		ATM	ATM
Inch water column (4°C / 39°F)	i4H2O			

Table 6-8 Units available for level

Level unit	Display		Level unit	Display
Feet	FT		cm	cm
Inch	inch		mm	mm
M	m			

Table 6-9 Units available for mass

Mass unit	Display		Mass unit	Display
Gram	G		Long ton	lTon
Kilogram	KG		Pound	lb
Ton	T		Ounce	OZ
Short ton	STon			

Table 6-10 Units available for mass flow rate

Mass flow rate unit	Display		Mass flow rate unit	Display
g / s	G/S		Pound / s	P/S
g / min	G/m		Pound / min	lb/m
g / h	G/h		Pound / h	lb/h
Kg / s	KG/S		Pound / d	lb/d
Kg / min	KG/m		Short ton / min	ShT/m
Kg / h	KG/h		Short ton / h	ShT/h
Kg / d	KG/d		Short ton / d	ShT/d
T / min	T/m		Long ton / h	lT/h
T / h	T/h		Long ton / d	lT/d
T / d	T/d			

Table 6-11 Units available for temperature

Temperature unit	Display		Temperature unit	Display
° Celsius	° / C		Kelvin	K
° Fahrenheit	° / F		Rankine	R

Table 6-12 Units available for volume

Volume unit	Display		Volume unit	Display
M3	m3		Buschels	buShl
Liter	L		yard3	Yd3
Hectoliter	HL		Feet3	FT3
US gallon	Gal		inch3	in3
British gallon	in Gal		Standard l	STdL
British barrel	bbl		Standard m3	STdm3
British barrel liquid	bblli		Standard feet3	STFT3

Table 6-13 Units available for volumetric flow

Unit of volumetric flow	Display		Unit of volumetric flow	Display
m3 / second	m3/S		Gallon / hour	Gal/h
m3 / minute	m3/m		Gallon / day	Gal/d
m3 / hour	m3/H		Million gallon / day	MGl/D
m3 / day	m3/d		British gallons/second	iGl/S
Liter / second	L/S		British gallons/minute	iGl/m
Liters/minute	L/m		British gallons/hour	iGl/h
Liters/hour	L/h		British gallons/day	iGL/d
Million liter / day	mL/d		Standard m3 / hour	Sm3/h
Feet3 / second	FT3/S		Standard l / hour	STL/h
Feet3 / minute	FT3/m		Standard feet3 / minute	SFT3m
Feet3 / hour	FT3/h		British barrel liquid / second	bbl/S
Feet3 / day	FT3/d		British barrel liquid / minute	bbl/m
Gallon / second	Gal/S		British barrel liquid / hour	bbl/h
Gallons/minute	Gal/m		British barrel liquid / day	bbl/d

See also

Selection of the physical unit (Page 122)

Operating functions through HART 7

7.1 Operating functions through HART communication

Condition

You can operate the transmitter through HART communication. The following is required for this purpose:

- A HART communicator or PC software such as SIMATIC PDM.
- A HART modem to connect a PC with the transmitter or a lead to connect a HART communicator with the transmitter.

Introduction

The full functionality of the transmitter is available via HART communication. The HART communicator and PC software are not supplied with the transmitter. How to connect and operate a HART communicator or the PC software is described in separate operating instructions or in the online help for both these tools.

Fundamental description

The input signal is provided in the form of digital information in the following variables through HART communication:

- Pressure
- Level
- Volume
- Mass
- Volumetric flow
- Mass flow rate
- User programmable "characteristic curve"

As soon as you have set up the HART communication and the transmitter, you can adapt the transmitter to your relevant measuring task. When doing so you are assisted by the selectable measuring modes "Pressure", "Level", "Flow rate" and a user programmable "Characteristic curve". One or more device variables are permanently allocated to each measuring mode in order to execute corresponding measuring tasks.

See also

Overview of operation (Page 65)

7.2 Process tag data

You can store your process tag data in user definable fields. The following table contains information about the structure of these fields and the format in which you can enter information in these fields:

Table 7-1 Process tag data

Field	Explanations
Tag designation	Eight characters
Date	Day:Month:Year
Description	16 characters
Message	32 characters
Works number	Integer number
Tag designation long	32 characters
Freely definable material parameter	21 x 16 characters

7.3 Selecting the measuring modes

7.3.1 Overview of measuring modes

Overview

The transmitter can be set for the corresponding measuring task using a few parameters. You can select the following measuring modes:

- Pressure
- Level
- Flow rate
- Users: user programmable characteristic curve

You can use the measuring mode selector to activate measuring modes "Level", "Flow rate" and "User".

Selecting the device variables

One or more device variables are permanently allocated to each measuring mode. The following device variables are always active and are therefore always displayed:

- Pressure
- Sensor temperature
- Electronics temperature
- Pressure (untrimmed)

The following device variables are activated only when the allocated measuring mode is activated and parameterized simultaneously:

- "Level", "Volume" and "Mass" are allocated to the "Level" measuring mode.
- "Volumetric flow" and "Mass flow rate" are classified as "Flow rate" measuring mode.
- "User" is allocated to the "User" measuring mode.

The inactive device variables have the CONSTANT status.

7.3.2 Measuring mode selector

You can use this switch to toggle between measuring modes "Pressure", "Level", "Flow rate" and a characteristic curve programmable by a "User".
If a measuring mode has been selected using the measuring mode selector, it has to be configured. This does not mean that this block has an automatic effect on the current output (4 to 20 mA). For that, you need to switch the corresponding device variable to the primary variable (PV) using a so-called variable mapper.

7.3.3 Variable mapper

Introduction

In this transmitter, the dynamic variable that determines the behavior of current output is always called the primary variable (PV). You need to use the variable mapper for a number of purposes, including selecting which device variable is to be switched to PV. The variable selected as PV using a PC program such as SIMATIC PDM or using the HART Communicator is scaled once again in the analog output stage to a zero value and a limit value. These two values then correspond to the current values 4 and 20 mA.

As soon as the PV is switched over using the variable mapper, the start of scale value and full scale value in the analog output stage are preset to the limit values of the new device variables. You can define these limit values within the individual block functions.

The dynamic variables "Primary", "Secondary", "Tertiary" and "Quarternary" (PV, SV, TV, QV) can be interconnected with any active device variables. Various different measuring mode examples are conceivable with a 4 bar pressure transmitter.

See also

Measured value status (Page 110)

7.3.4 Measuring mode "Pressure"

The "Pressure" measuring mode contains the "Sensor trim" function, and is always active since it is the standard measuring mode. When the measuring mode selector is set to "Off", further measuring variables are not derived from the "Pressure" measuring variable. Except the first

four variables, all other device variables are marked as inactive and have the CONSTANT status. These four variables are mapped with dynamic variables PV, SV, TV and QV by default.

Switching an inactive device variable to the primary variable (PV) generates an error message since the variable currently does not have a valid measured value. This message is displayed in SIMATIC PDM or the HART communicator.

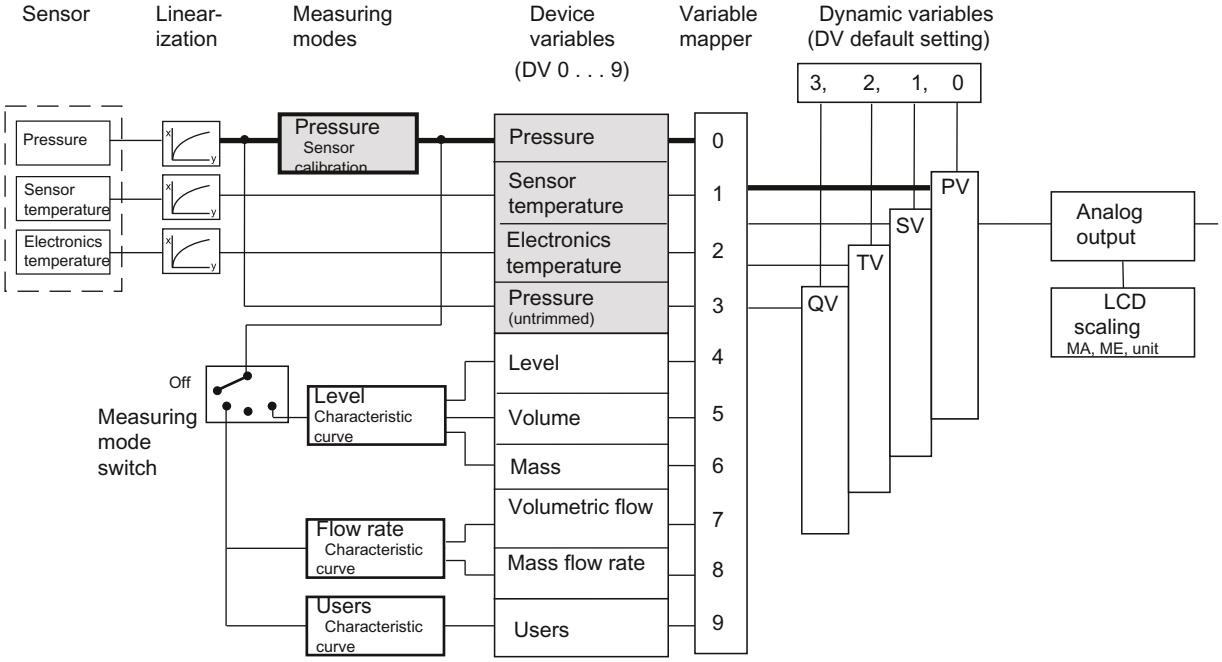

DV	Device variable
MA	Start of scale value
ME	Full scale value
PV	Primary variable
QV	Quarternary variable
SV	Secondary variable
TV	Tertiary variable

Figure 7-1 Measuring mode "Pressure"

7.3.5 Customized characteristic curve

Introduction

The customized "characteristic curve" is continuously active as an identical function in the three following measuring modes "Level", "Flow rate" and "User". This means that the customized "characteristic curve" always provides a result for the following function, thus also influencing the measured value status of the affected device variables.

In the device, the characteristic curve vertices are only provided once in the EEPROM. Therefore, if the measuring mode is changed, you will usually need to adjust the characteristic curve accordingly.

The characteristic curve function expects at least two and at the most 30 characteristic curve vertices as input parameters. Characteristic curve vertices are entered in pairs of values x %;y %. The values for the x-coordinate are only accepted by the device when they run monotonically. The y-coordinates, on the other hand, may also be non-monotonic. A warning will however be issued by the configuring device, which you as the user have to recognize and acknowledge. The output of the characteristic curve is not explicitly stored in a device variable, but rather is directly interconnected with the input of the next function block in each case. The pairs of values 0%;0% and 100%;100% are set as default values. In principle, rising and falling characteristic curves can be configured. With regard to the device variable status, rising characteristic curves are however preferred. Otherwise the meanings of HIGH LIMIT and LOW LIMIT are swapped.

See also

Measured value status (Page 110)

7.3.6 Measuring mode "Level"

Description

Once you have configured the measuring mode "Level", the device variables "Level", "Volume" and "Mass" are activated. They are all inferred from the measured pressure. The "Level" block here represents a series of permanently interconnected functions which you need to configure

with appropriate parameters. Only then will you be given a meaningful measured value for the three device variables.

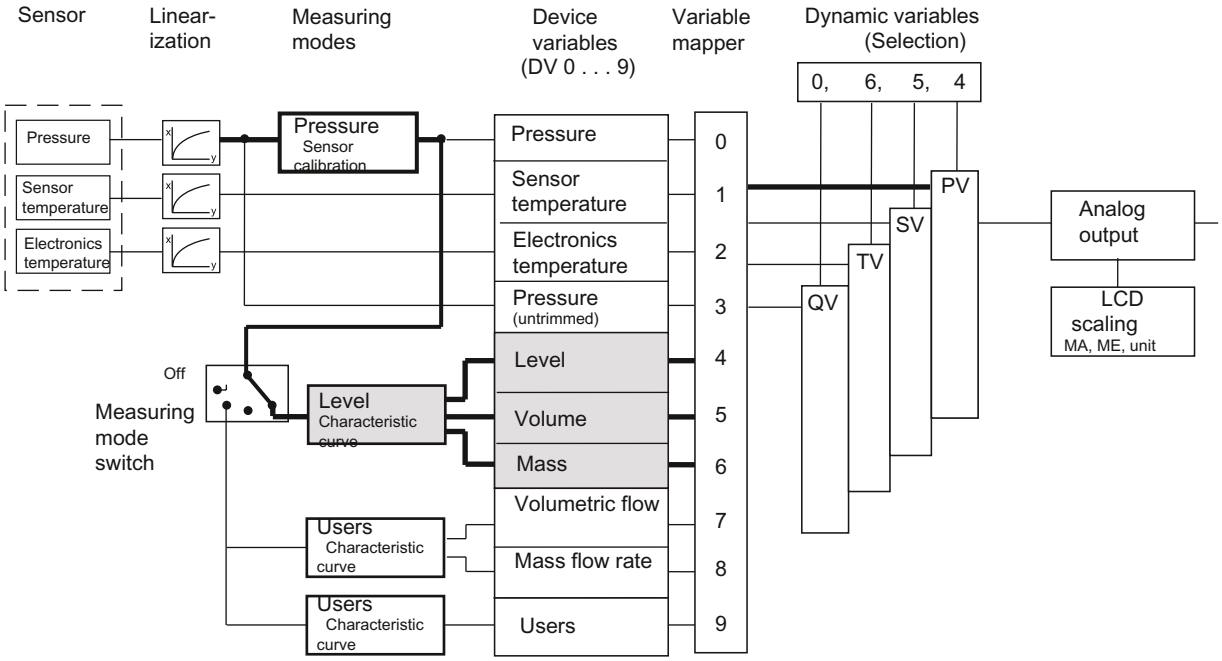

DV	Device variable
MA	Start of scale value
ME	Full scale value

Figure 7-2 Measuring mode "Level"

Functions of the "Level" block

The first function, "Input scaling, pressure", sets the pressure range used by the following functions in all three blocks in the same way. Ideally, this range corresponds to the sensor limits of the transmitter. In the following calculation examples, 0 and 4 bar are assumed for these sensor limits for all blocks. You can however also set a downscaling, e.g. 1:2. The downscaling of 1:2 means that 50% of the rated measuring range, here 2 bar, can control the following characteristic curve 100%.

Use the "Output scaling, level" to set the measuring limits for the measuring mode "Level" with a unit from the level range. Parameter settings in this example are 10 and 20 m. At 0 bar process pressure, 10 m is displayed in DV4 and 20 m is displayed at 2 bar. The values for the start of scale value and the full scale value, which are effective for the analog output, are configured in the "analog output" block.

In the calculation example, the two pairs of values 0%;0% and 100%;100% are configured for the customized "characteristic curve". This is the default setting. The measured value from the pressure scaling is transferred 1:1 in this example.

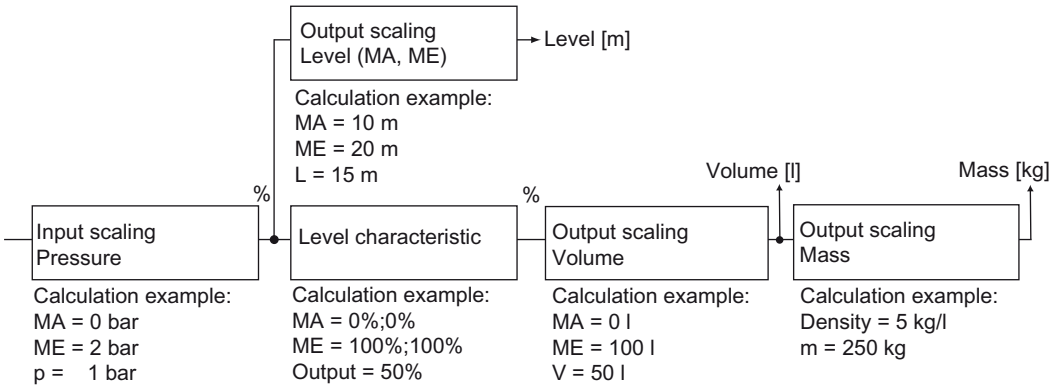

:

DV [x]	Device variable x
L	Level
m	Mass
MA	Start of scale value
ME	Full scale value
P	Pressure
V	Volume

Figure 7-3 Functions of the "Level" block

Configure the "Output scaling, volume" with a unit from the volume range and the measuring limits for the device variable "Volume". The characteristic curve output directly affects the volume scaling input.
In the calculation example, for the measuring limits from 0 and 100 l, a volume of 50 l is yielded for process pressure of 1 bar.

The "Level" parameter setting also still automatically activates the device variable for the mass. If you have not yet configured a value for the density, the initial value of 1 kg/l is preset. In the calculation example for the "Mass" device variable, a mass of 250 kg is derived at a density of 5 kg/l.

Note

When the density changes, the measuring range limits have to be adjusted accordingly.

You can configure all parameter settings for the "Level" block in SIMATIC PDM or the HART communicator. Activate the "Level" measuring mode for this purpose. For all settings, the measuring limits may be exceeded by +/-20%. Values which lie above or below that will be rejected by the device.

7.3.7 Measuring mode "Flow rate"

Description

When you activate the "Flow rate" measuring mode, only two other device variables are active: volumetric flow and mass flow rate. If another block was active earlier, the corresponding device variables remain inactive and have the "CONSTANT" status. The "Flow rate" block here represents a series of permanently interconnected functions which you need to configure with appropriate parameters.

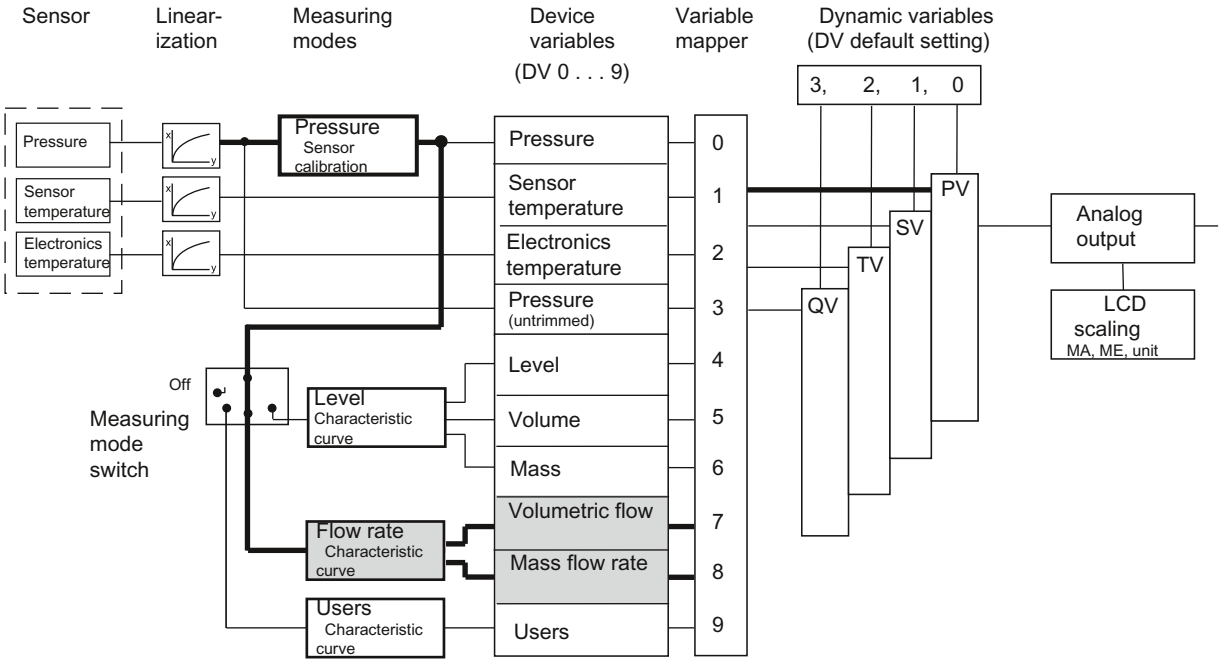

DV	Device variable
MA	Start of scale value
ME	Full scale value

Figure 7-4 Measuring mode "Flow rate"

Functions of the "Flow rate" block

The "Input scaling, pressure" function defines the pressure range of 0 to 2 bar that is interpreted as 0 and 100% by the following square root extracting function. A process pressure of 0.5 bar has been assumed in the following figure.

In the "Flow rate" measuring mode, a square root extracting characteristic curve "srlin2" is plotted with a fixed root application point of 10%.
In the calculation example, the input value for the "square root extracting function" is approximately 25% at a process pressure of 0.5 bar. The output value is approximately 50%.

Note

When using the "Flow rate" block, other square root extracting characteristic curves must be deactivated if required.

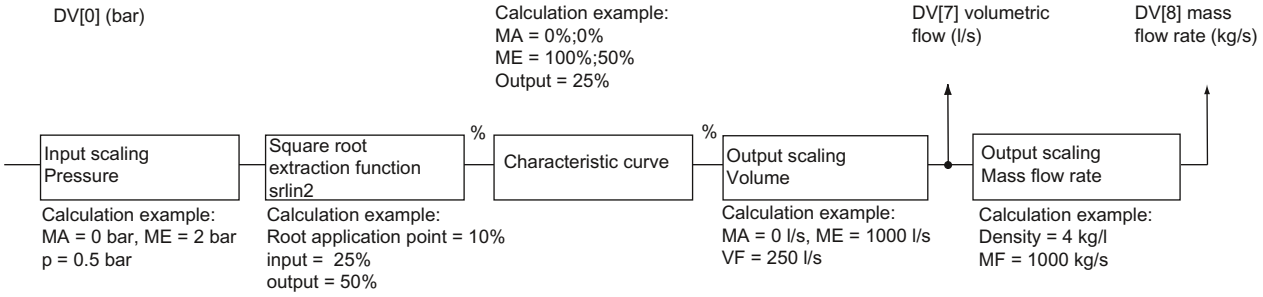

DV [x]	Device variable x	MF	Mass flow rate
MA	Start of scale value	p	Pressure
ME	Full scale value	VF	Volumetric flow

Figure 7-5 Functions of the "Flow rate" block

In the calculation example, the two pairs of values 0%;0% and 100%;50 % are configured for the customized "characteristic curve". This setting corresponds to a bisection of the input value for all output values.

Configure the output scaling "volumetric flow" with a unit from the volume flow range and the measuring limits for the device variable "Volumetric flow". In the calculation example, 0 l/s and 1000 l/s are defined as lower and upper measuring limits. The volumetric flow rate is 250 l/s at a process pressure of 0.5 bar.

The "Mass flow rate" device variable is automatically activated when the "Flow rate" block is configured. If you have not yet configured a value for the density, the initial value of 1 kg/l is preset.
In the calculation example, a mass of 1000 kg/s is derived for the "Mass flow rate" device variable at a value of 4 kg/l. The density value entered is only used to calculate the mass flow rate. The entered value of density has no effect on the diaphragm calculation that is to be carried out by the user.

In SIMATIC PDM or the HART communicator, the "Flow rate" block is configured in an online dialog box in an extremely compact manner. In this online dialog box, you can compile all values in a menu and transfer them to the device collectively.

7.3.8 Measuring mode "User"

Description

The "User" measuring mode is the simplest of the measuring modes that you can select with the measuring mode selector. Only one further device variable, "User", is activated in this measuring mode in addition to the four standard device variables. The variables "Level", "Volume", "Mass", "Volumetric flow" and "Mass flow rate" are marked as inactive and are given the status CONSTANT.

In the "User" measuring mode, you have an option to define a customized unit for output scaling. This customized unit is, e.g. a specific quantity of liquid. This quantity of liquid depends on the input process pressure.
Example: Fill the beverages in cans having a capacity of 0.33 l. You can now define a customized unit "Can" that is exactly equal to 0.33 l. The quantity of "cans" depends on the input process pressure.

Note

Permissible input values

All alphabetic a...z, A...Z and numeric 0...9 inputs are allowed for the customized unit. The following characters are also allowed:
° " $ / < > * , _ + - = @

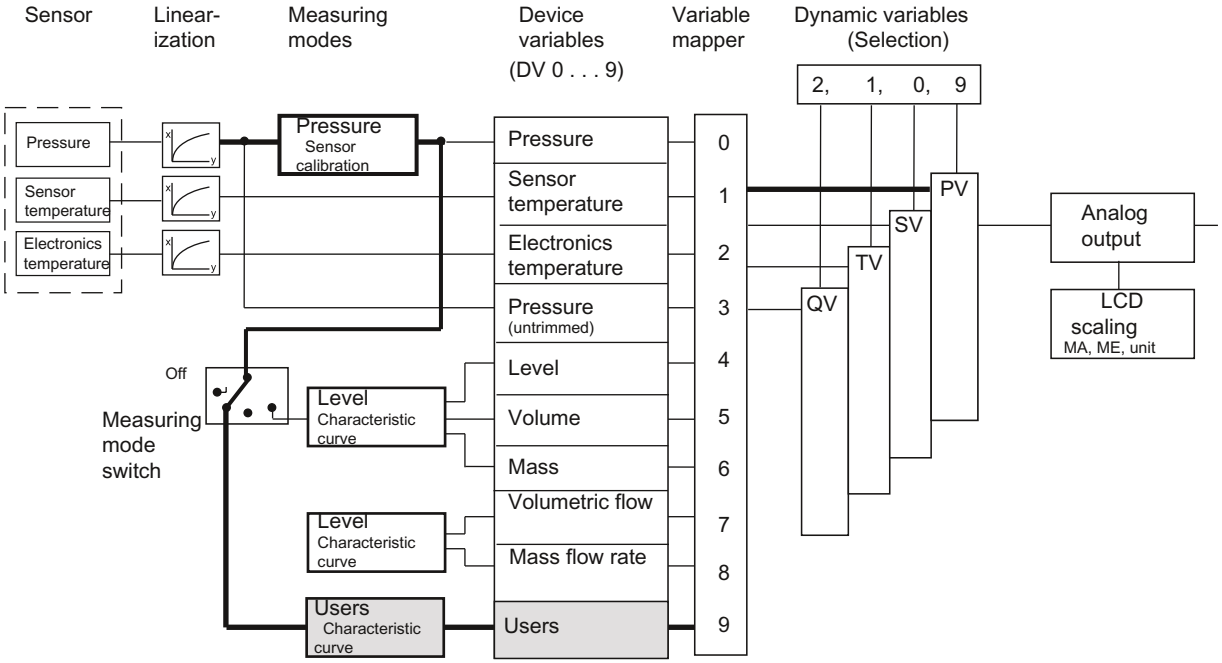

DV	Device variable	MA	Start of scale value
PV	Primary variable	ME	Full scale value
SV	Secondary variable		
TV	Tertiary variable		
QV	Quarternary variable		

Figure 7-6 Measuring mode "User"

Functions of the "User" block

The first function, "Input scaling, pressure", defines the pressure range which is used by the customized characteristic curve. Ideally, this range corresponds to the sensor limits.
In the calculation example, 0 and 2 bar are assumed. This means that with process pressure of 0.5 bar, there is a value of 25% on the characteristic curve.

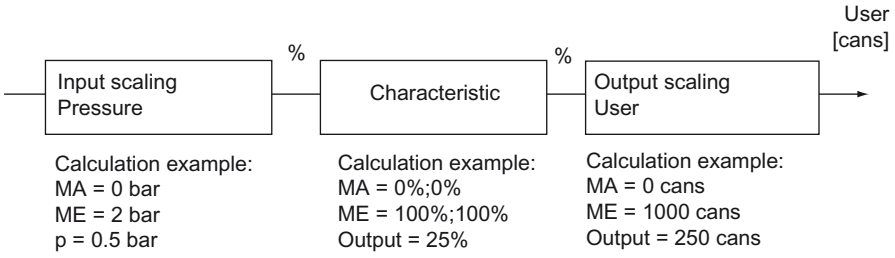

DV [x]	Device variable x	MA	Start of scale value
p	Pressure	ME	Full scale value

Figure 7-7 Functions of the "User" block

In the calculation example, the two pairs of values 0%;0% and 100%;100% are configured for the customized "characteristic curve". Any curve shapes can be calculated with the help of 30

characteristic curve vertices. These curve shapes can be stored in the device using SIMATIC PDM or the HART communicator.
In the calculation example, the value at the input of the characteristic curve is transferred 1:1 to the output.

In the calculation example, a number of filled cans is set for the output scaling. You can enter up to five characters for any given unit. Do not confuse this with the user-programmable display unit of the "Analog output" block.
In the calculation example, you have a start of scale value of 0 cans and a full scale value of 1000 cans. At a process pressure of 0.5 bar, you get a value of 250 cans for the "User" device variable.

See also

Analog output (Page 114)

Measured value status (Page 110)

7.3.9 Measured value status

Introduction

Every device variable is assigned a status byte to indicate the quality of the measured values. This status byte can have the following values:

- BAD
- GOOD
- MANUAL
- UNCERTAIN

The following values are also possible:

- CONSTANT
- HIGH LIMIT
- LOW LIMIT

A higher-level diagnosis program can display and analyze these states.

GOOD status

During smooth, uninterrupted operation, the measured value status of all active device variables is GOOD.

BAD/CONSTANT status

All inactive device variables have CONSTANT/BAD status.

If a variable having the BAD status is an output value for calculation, the measured value is BAD.

The basic measured values, namely pressure and temperatures, have the BAD status in the following cases:

- The analog-to-digital converter does not function.
- Linearization values in the EEPROM are defective.
- If the two end points of the customized characteristic curve are exceeded for the status of the device variables of the following function.

UNCERTAIN status

If a pressure value exceeds or falls below the sensor limits of the device by more than 20%, the corresponding measured value and the variables inferred from it are UNCERTAIN.

If the analog-to-digital converter for pressure control is over/underrange, the status is UNCERTAIN.

HIGH LIMIT and LOW LIMIT

If the analog-to-digital converter is overrange, the HIGH LIMIT label is allocated. If the analog-to-digital converter is underrange, the LOW LIMIT label is allocated.

Change in status

If the status of a device variable changes and it was right at the front of the sequence of operations for a block, e.g. pressure, then all variables that are derived from it will take on the same status. In the following example, the device variable "Pressure" has the BAD status. Since the measuring mode selector is set to "USER", the device variable "User" is also given the BAD status.

The reasons for changes in the status of a device variable are summarized in the table. If there were several reasons for a change in status, MANUAL always has the highest priority. BAD has the second highest and UNCERTAIN the third highest priority.

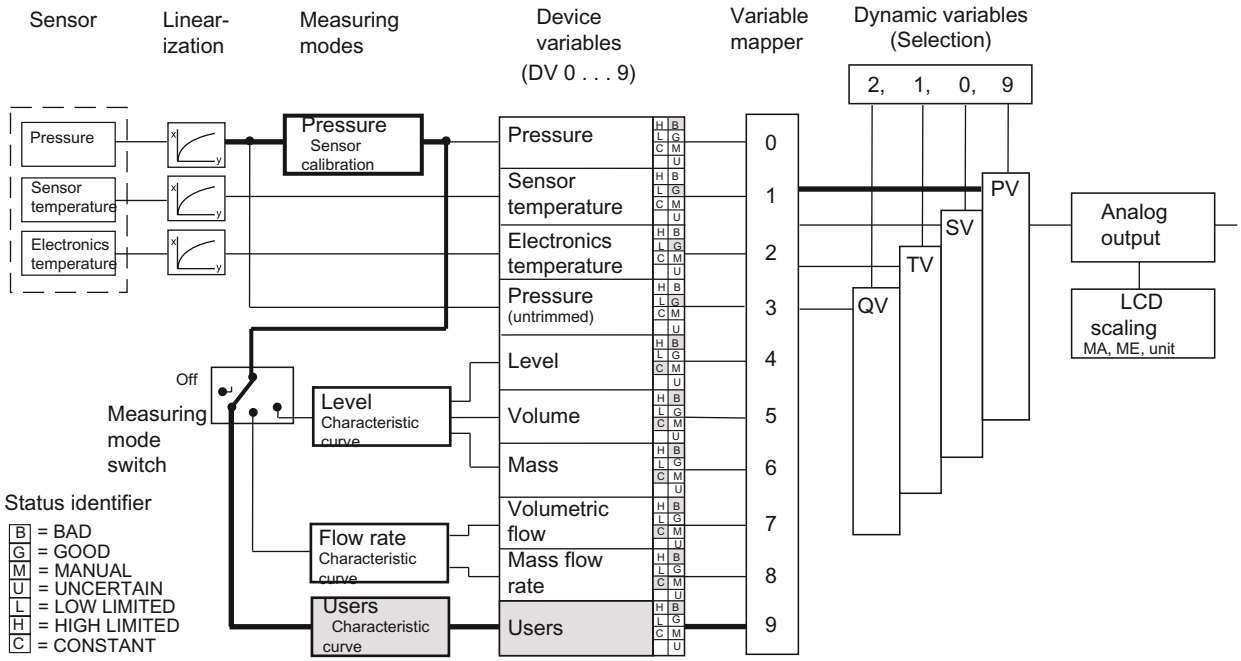

DV	Device variable	MA	Start-of-scale value
PV	Primary variable	ME	Full-scale value
SV	Secondary variable		
TV	Tertiary variable		
QV	Quarternary variable		

Figure 7-8 Device status dependency

Table 7-2 Events which result in a change of status

DV	Measuring mode	BAD	MANUAL	UNCERTAIN	CONSTANT	HIGH LIMIT	LOW LIMIT
0	Pressure	DV3 = BAD, fault in linearization	When DV0 is simulated	DV3 = UNCERTAIN	-	DV3 = HIGH LIMIT	DV3 = LOW LIMIT
1	Sensor temperature	DV2 = BAD, analog-to-digital converter in over/ underrange, fault in linearization	When DV1 is simulated	DV1 more than 20% outside the sensor limits DV2 = UNCERTAIN DV2 = MANUAL	-	Analog-to-digital converter in overrange	Analog-to-digital converter in underrange
2	Electronics temperature	Analog-to-digital converter in over/ underrange, fault in linearization	When DV2 is simulated	DV2 more than 20% outside the sensor limits	-	Analog-to-digital converter in overrange	Analog-to-digital converter in underrange

DV	Measuring mode	BAD	MANUAL	UNCERTAIN	CONSTANT	HIGH LIMIT	LOW LIMIT
3	Pressure (untrimmed)	Analog-to-digital converter in over/ underrange, DV1 sensor breakage, DV2 = BAD, fault in linearization	-	Analog-to-digital converter in overrange/ underrange, DV3 more than 20% outside the sensor limits DV2 = MANUAL	-	Analog-to-digital converter in overrange	Analog-to-digital converter in underrange
4	Level	If DV0 = BAD	When DV0 is simulated	DV0= UNCERTAIN	DV not active	DV0 = HIGH LIMIT	DV0 = LOW LIMIT
5	Volume	DV0 = BAD, Characteristic curve is faulty	When DV0 is simulated	DV0 = UNCERTAIN, input value is outside the specified characteristic curve range	Characteristic curve is faulty DV not active	DV4 = HIGH LIMIT, Characteristic curve for maximum value with gradient 0	DV4 = LOW LIMIT, Characteristic curve for minimum value with gradient 0
6	Mass	DV5 = BAD	When DV0 is simulated	DV5= UNCERTAIN	DV not active, DV5 = CONSTANT	DV5 = HIGH LIMIT	DV5 = LOW LIMIT
7	Volumetric flow (not absolute and gauge pressure)	DV0 = BAD, characteristic curve is faulty	When DV0 is simulated	DV0 = UNCERTAIN, input value is outside the specified characteristic curve range	Characteristic curve is faulty, DV not active	DV4 = HIGH LIMIT, Characteristic curve for maximum value with gradient 0	DV4 = LOW LIMIT, Characteristic curve for minimum value with gradient 0
8	Mass flow rate (not absolute and gauge pressure)	DV5 = BAD	When DV0 is simulated	DV5= UNCERTAIN	DV not active DV5 = CONSTANT	DV5 = #HIGH LIMIT	DV5 = LOW LIMIT
9	Users	DV0 = BAD, Characteristic curve is faulty	When DV0 is simulated	DV0 = UNCERTAIN, input value is outside the specified characteristic curve range	Characteristic curve is faulty DV not active	DV0 = HIGH LIMIT, Characteristic curve for maximum value with gradient 0	DV0 = LOW LIMIT, Characteristic curve for minimum value with gradient 0

If you use falling characteristic curves in the blocks, the meanings of HIGH LIMIT and LOW LIMIT are swapped around.

If you mix falling and rising characteristic curves, the meanings will be swapped each time a falling characteristic curve is run.

7.3.10 Analog output

Introduction

The "Analog output" block converts the value provided by the dynamic primary variable (PV) into a current value of 4 to 20 mA. When you actuate the measuring mode selector, you automatically define the start of scale value and the full scale value to the current values 4 and 20 mA, respectively. Limit values of corresponding device variables are used for scaling the analog output by default. You have entered these limits when setting the parameters of your measuring mode.

Example for measuring mode "Level"

This means that for a "Level" device variable as PV, 10 m corresponds to the value for 4 mA and 20 m corresponds to the value for 20 mA. You can change this presetting again in the "Analog output" block. This is done by restricting the range of the "Level" device variable for scaling the output current to e.g. 12 to 18 m. This downscaling has no effect on the previous block scaling. In this case, a current of 4 mA is output for a measured height of 12 m, and a current of 20 mA for 18 m.

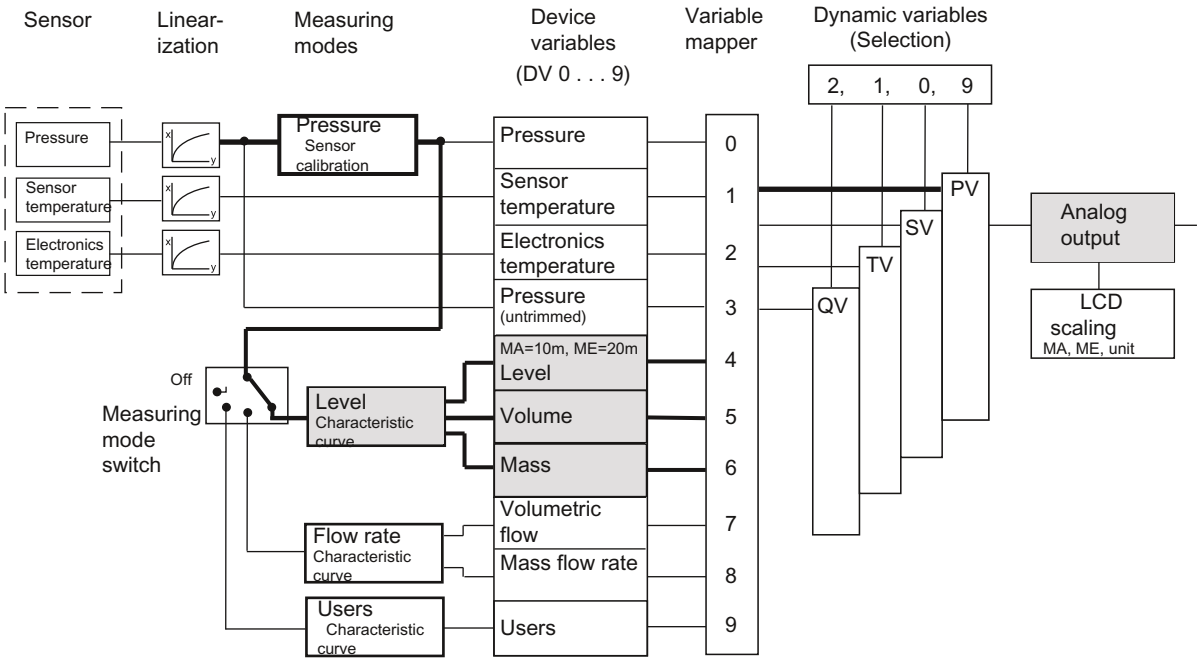

DV	Device variable	MA	Start of scale value
PV	Primary variable	ME	Full scale value
SV	Secondary variable		
TV	Tertiary variable		
QV	Quarternary variable		

Figure 7-9 "Analog output" scaling

Description of measuring mode "Level"

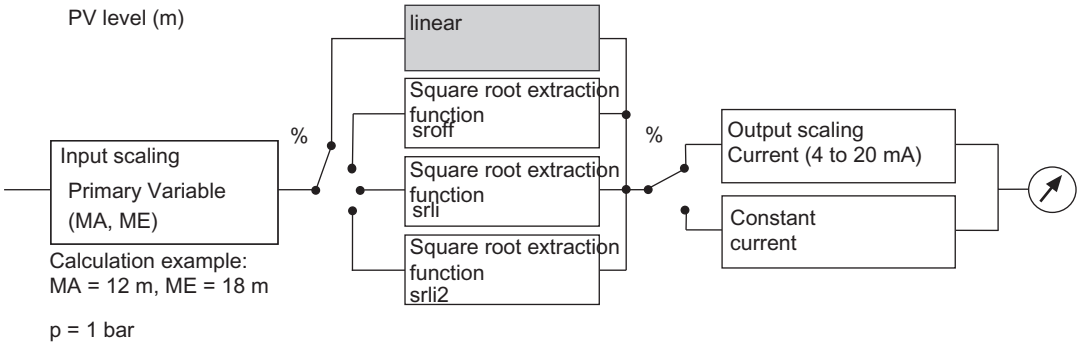

MA	Start of scale value	p	Pressure
ME	Full scale value	PV	Primary variable

Figure 7-10 "Analog output" block

Note

If, when setting the analog output, the values for the start of scale value zero and the full scale value are more than 20% below or above the limit values of the set PV (set using the variable mapper), the values will be rejected by the device. The values configured previously are retained. Similarly, the span must not fall below the minimum.

Minimum span = ME - MA

The square root extracting function can only be selected in the "Pressure" measuring mode.

The "srlin2" square root extracting function is set as default in the "Flow rate" measuring mode.

7.3.11 Scaling the display value

Introduction

You can scale the value shown in the display as you wish and allocate it any unit of 5 characters. The scaling of the value is independent of the selection of the measuring mode selector, the primary variable (PV) and the display unit defined. Use the "Display settings" item in SIMATIC PDM or the HART communicator for this purpose.

The percent value of the PV is the basis for this scaling. This percent value is also used to scale the current output. In SIMATIC PDM, this item is referred to as "Setting the PV output scaling". After selecting the "Display settings" menu item, you must enter a start-of-scale value, a full-scale value and a unit string.

This display option has the highest priority amongst all options. A switch over to %, mA or any other unit is not possible in this status. You need to deactivate the LCD scaling again for this purpose.

Example

In the Level measuring mode, the start of scale value is assumed as 0 m and the full scale value as 10 m in the example illustrated in the following picture. The value of 2 m is displayed at a process pressure of 0.4 bar.

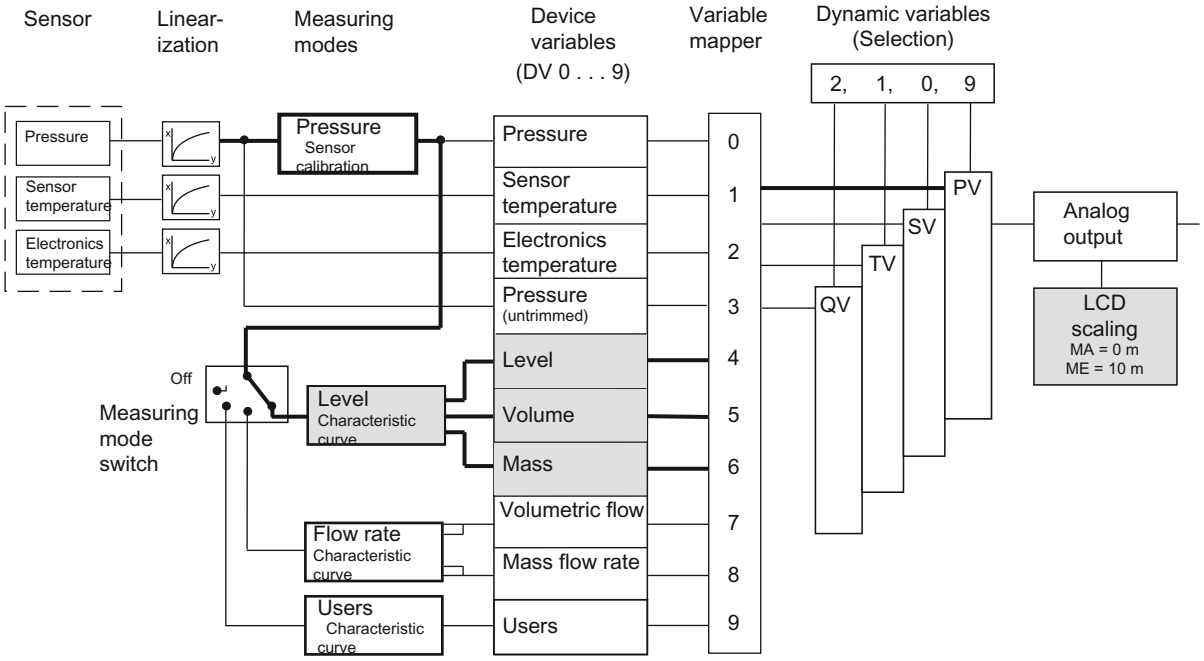

DV	Device variable	MA	Start-of-scale value
PV	Primary variable	ME	Full-scale value
SV	Secondary variable		
TV	Tertiary variable		
QV	Quarternary variable		

Figure 7-11 Free LCD scaling

7.4 Setting zero point and limit point

You can set the zero point and the limit point using the SIMATIC PDM or HART Communicator. You can use this function to realize rising or falling characteristic curves.

The pressure unit can be set separately for the display and for HART communication.

See also

Difference between setting and adjusting (Page 75)

7.5 Blind setting of zero point and limit point

- The start of scale value and the full scale value can be set without creating a reference pressure.
- Both values can be selected as any point within the sensor limits.
- The maximum downscaling is 1:100, depending on the series and the measuring range.

7.6 Zero point calibration (position correction)

Description

A zero point calibration is used to correct a zero point error resulting from the installation position.

Procedure

- Pressurize the device or evacuate it (at absolute pressure, < 0.1 ‰ of the measuring span).
- Perform the zero point calibration using SIMATIC PDM or the HART Communicator.
- If you do not have a vacuum, perform a trimming of the lower sensor calibration point at a known reference pressure.

CAUTION

For absolute pressure transmitters, the zero point is at vacuum. A zero point calibration with a pressurized transmitter will lead to faulty settings!

Note

The effective measuring range is reduced by the amount of the upstream pressure.

Example:

With an upstream pressure of 100 mbar, the effective measuring range of a 1-bar transmitter is reduced to a point between 0 and 0.9 bar.

See also

Trimming the sensor (Page 124)

7.7 Electrical damping

Description

You can set the time constant of electrical damping to a point within a range from 0 to 100 s. It always applies to the "Pressure" device variable (DV0) and thus to the measured values derived from it.

7.8 Fast response mode

Description

This mode is only intended for special applications such as fast recognition of jumps in pressure, e.g. pressure drop in the event of pipe breakage. The internal recording of measured values is sped up at the cost of accuracy. From your point of view, an increased low-frequency noise is caused for the measured value. For this reason, good accuracy can only be achieved by setting the measuring span to the maximum.

7.9 Current sensor

Description

The transmitter can be switched to constant current operation for test purposes. In that case, the current no longer corresponds to the process variable. A "C" will appear in the mode display of the display.

7.10 Fault current

Description

You can use this function to set the size of the lower (< 4 mA) and upper (> 20 mA) fault current. Both signal a hardware/firmware fault, sensor breakage, or that the alarm limit has been reached (diagnostic interrupt). ERROR will in this case appear in the display. You can obtain a detailed guide to the display using SIMATIC PDM or the HART Communicator.

Reference

NAMUR recommendation NE43 dated 03.02.2003
"Standardization of the signal level for the breakdown information of digital transmitters"

See also

Error display (Page 69)

Limit modules (Page 131)

7.11 Setting the current limits

Description

The level of the upper and lower fault current and the upper and lower saturation limits can be freely selected within the preset limits of the current output signal.

The specified accuracy of the current output signal is only valid within the current limits 4 to 20 mA.

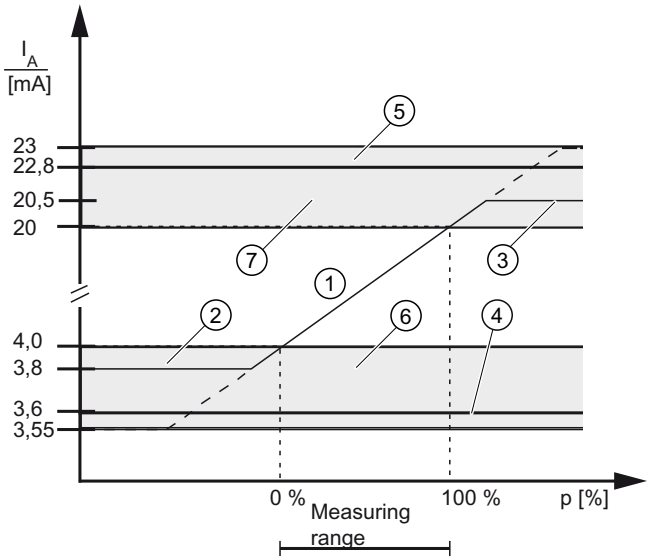

① Linear control range
② Lower saturation limit (default value)
③ Upper saturation limit (default value)
④ Lower fault current value (default value)
⑤ Upper fault current value (default value)
⑥ Recommended setting range for lower fault current range and lower control range limit
⑦ Recommended setting range for upper fault current range and upper control range limit

Figure 7-12 Current limits

7.12 Key lock and write protection

Introduction

You can use this function to lock the keys or activate write protection to safeguard the saved parameters.

Lock options

You have the following lock options:

Table 7-3 Meaning of the HART lock modes

Lock mode	Meaning
0	The device can be operated by means of the keys and HART communication.
LA	Keys on the transmitter are locked. Exception: • Releasing key lock The device can be operated by means of HART communication.
LO	Keys on the transmitter are partially locked. Exception: • Setting start of scale value • Releasing key lock The device can be operated by means of HART communication.
LS	Keys on the transmitter are partially locked. Exception: • Setting start of scale value • Setting full scale value • Releasing key lock The device can be operated by means of HART communication.
LL	Write protection You can now only release the lock using HART communication.

See also

buttons and function lock (Page 90)

Releasing key lock or function lock (Page 91)

7.13 Measured value display

Introduction

You can use this function to set one of three options for the device display:

- Display in mA
- Display in % (of the set measuring range)
- Display in a physical unit

Table 7-4 Display of measuring mode/device variables

DV	Description
0	Pressure
1	Sensor temperature
2	Electronics temperature
3	Pressure (untrimmed)
4	Level
5	Volume
6	Mass
7	Volumetric flow rate (not relevant to gauge or absolute pressure)
8	Mass flow rate (not relevant to gauge or absolute pressure)
9	Users

Points to note for "Pressure" DV

If the device variable (DV) is set to "Pressure", you can configure the displayed pressure unit with an extension, GAUGE (G) or ABS (A). The add-on has no effect on the real measured value.

To do so, select the option Gauge or Absolute under the "Pressure display type" menu item.

There are two options for the display:

- If the pressure unit is < 5 characters, an A or a G is added at the end, respectively.
- If the pressure unit is ≥ 5 characters, the letters GAUGE or ABS flash alternately with the pressure unit.

Figure 7-13 Add-on with example GAUGE

Note

The change of the display with GAUGE or ABS does not change the physical pressure used by the transmitter, rather only the nature of the display.

See also

Measured value display (Page 94)

7.14 Selection of the physical unit

Introduction

You can use this function to select a unit from a table with predefined units.

Description

The only units available will be those of the device variable that was mapped as the Primary Variable (PV).

The unit can be set separately for the display and for HART communication. You can also choose to link the setting of the two units.

See also

Unit (Page 95)

7.15 Bar graph

Description

You can use this to switch on the "Bar graph" function in the device display as an alternative to the unit display. The "Bar graph" function is disabled in the factory state.

See also

Display elements (Page 67)

7.16 Sensor calibration

7.16.1 Sensor trim

Description

The sensor trim can be used to set the characteristic curve of the transmitter at two sensor trim points. The results are then correct measured values at the sensor trim points. The sensor trim points can be selected as any points within the nominal range.

Devices that are not turned down prior to delivery are trimmed at 0 bar and the upper limit of the nominal range; devices that are turned down prior to delivery are trimmed at the lower and upper limits of the set pressure measuring range.

Application examples

- For a particular device that is not turned down (e.g. 63 bar), the typical measured value is 50 bar. To attain the highest possible accuracy for this value, set the upper sensor calibration at 50 bar.
- A 63-bar transmitter is turned down to 4 to 7 bar. You can attain the highest possible accuracy by selecting 4 bar for the lower sensor calibration point and 7 bar for the upper.
- A 250-mbar absolute pressure transmitter shows 25 mbar at 20 mbar (abs). A reference pressure of 100 mbar is available. You can carry out zero point correction by performing a lower sensor trim at 100 mbar.

Note

The accuracy of the test device should be at least three times as high as that of the transmitter.

7.16.2 Trimming the sensor

Trim the sensor at the lower trim point

The pressure at which the lower sensor trim is to be performed is applied at the transmitter. Via SIMATIC PDM or the HART Communicator, you instruct the transmitter to accept this pressure.

This represents an offset shift of the characteristic curve.

Trim the sensor at the upper trim point

The pressure at which the upper sensor trim is to be performed is applied at the transmitter. Via SIMATIC PDM or the HART Communicator, you instruct the transmitter to accept this pressure.

A gradient correction is thereby applied to the characteristic curve. The lower sensor trim point is not affected by this. The upper trim point needs to be greater than the lower trim point.

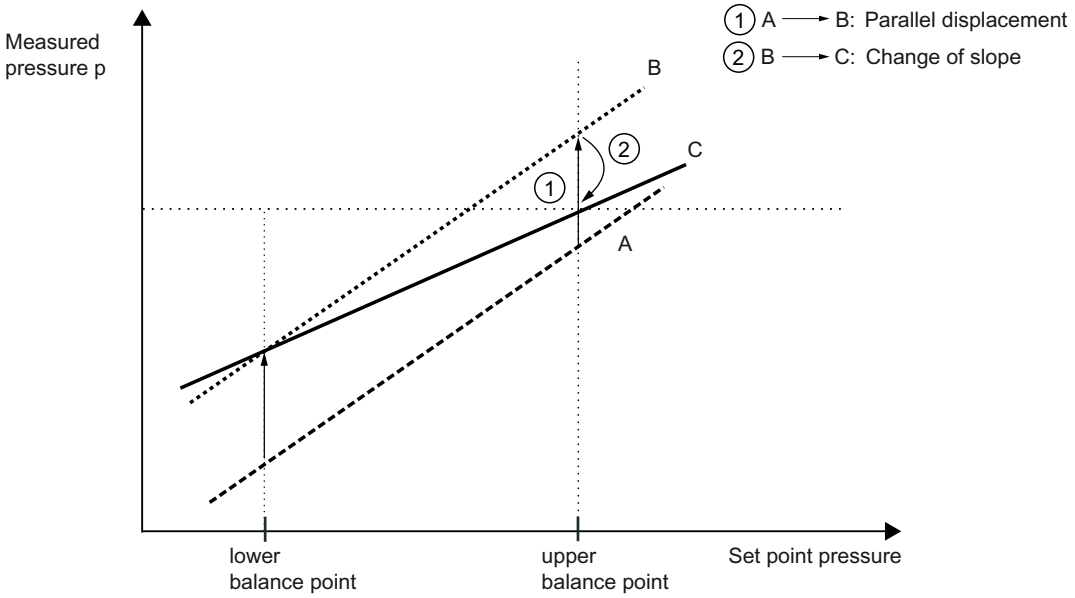

A Original characteristic

B Characteristic curve after lower sensor trim

C Characteristic curve after upper sensor trim

Figure 7-14 Sensor calibration

7.17 Current sensor trim

The current that is output by the transmitter can be trimmed independently of the pressure measuring circuit. This function is designed for compensating inaccuracies in the processing chain following the transmitter.

Example of an application

The current is to be measured as a voltage drop from 1 to 5 V at a resistance of 250 Ohm +/- 5%. To trim the tolerance of the resistance, set the current transmitter so that the voltage drop at 4 mA is exactly 1 V and at 20 mA is exactly 5 V.

- Trim at 4 mA:
  Use the current transmitter trim menu option to instruct the transmitter to output 4 mA. Read the measured value at an ammeter and input it. The transmitter uses this value for offset correction of the current.
- Trim at 20 mA:
  Use the current transmitter trim menu option to instruct the transmitter to output 20 mA. Read the measured value at an ammeter and input it. The transmitter uses this value for gradient correction of the current. The value for 4 mA is not affected by this.

Note

If a multimeter is used, it must always be sufficiently accurate.

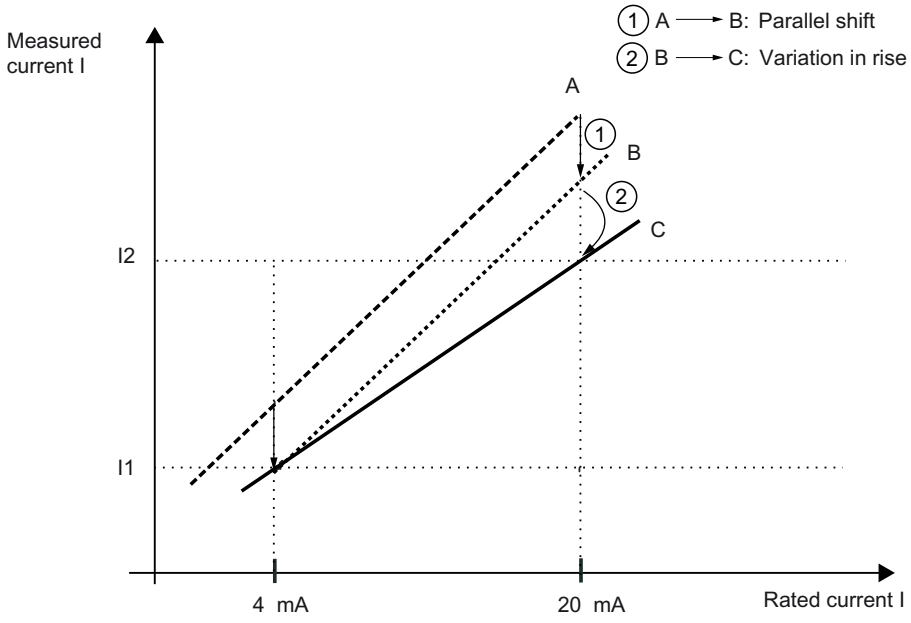

A Original characteristic

B Characteristic curve after current transmitter trim 4 mA

C Characteristic curve after current transmitter trim 20 mA

Figure 7-15 Current transmitter trim

7.18 Factory calibration

Introduction

You can use factory calibration to reset the transmitter to the factory state.

Description

You can use the menu-guided interface of SIMATIC PDM or HART Communicator to select the range of parameters to be reset:

1. Current trim
2. Sensor zero point calibration (position correction)
3. Pressure corrections (zero point calibration and sensor trim)
4. All parameters relevant for the processing of measured values, such as zero point, limit point, electrical damping, display unit, current trim, zero point calibration (position correction), sensor trim, measuring speed, interrupt current limits, interrupt setting, overflow ranges of current.
5. Variable mapper. This performs the following setting:
   PV= Pressure, SV= Sensor temp., TV= Electronics temp., QV= Non-linearized pressure

PV	Primary variable
SV	Secondary variable
TV	Tertiary variable
QV	Quarternary variable

See also

Factory calibration - FAQ (http://support.automation.siemens.com/WW/view/en/10806940/133000)

7.19 Static configuration data

Description

A further menu command in the corresponding operating program allows you to read and also write a series of sensor-specific material data. With the factory state, this data is pre-allocated according to the particular device model. These values are not contained in the "Factory calibration" function; in other words, changes in the device are permanently saved.

List of variable material parameters:

- Flange type
- Flange material
- Remote seal type
- Filling medium
- O-ring material
- Remote seal
- Remote seal diaphragm material
- Number of remote seals
- Sensor filling medium

- Sensor seal diaphragm material
- Transmitter model
- Housing material
- Tube length
- Process connection
- Electrical connection
- Process connection screw material
- Vent valve position

For a series of these material data items, you can enter any designation of your choice under the option "Special". This applies to the following parameters:

- Process connection
- Flange type
- Process connection screws
- O-ring material
- Material of vent valve
- Vent valve position
- Remote seal type
- Remote seal
- Diaphragm material
- Remote seal filling medium

You can use up to 16 characters for each entry.

7.20 Flow rate measurement (only differential pressure)

Description

For the "Differential pressure and flow rate" device version, you can select the characteristic curve of output current as follows without actuating the measuring mode selector:

- linear "lin": proportional to differential pressure
- square root extracting "sroff": proportional to flow rate, deactivated up to the application point
- square root extracting "srlin": proportional to flow rate, linear up to the application point
- square root extracting "srlin2": proportional to flow rate, two-step linear up to the application point

Variable application point

The output current for the "srlin" and "sroff" functions can be displayed linearly or set to zero below the application point of the square root extracting characteristic curve.

Fixed application point

The "srlin2" function has a permanently defined application point of 10%. The range up to this point contains two linear characteristic curve sections. The first section ranges from the zero point to 0.6% of the output value and 0.6% of the pressure value. The second section has a higher gradient and it goes up to the root application point at 10% of the output value and 1% of the pressure value.

See also

Flow rate measurement (only differential pressure) (Page 91)

7.21 Diagnostic functions

7.21.1 Overview

Description

HART communication allows you to activate and evaluate a wide range of diagnostic functions from a central control room or onsite:

- Calibration/service timer
- Min/max indicator
- Limit monitoring modules
- Simulation of measured pressure and temperature values
- Limit monitoring of all device variables

The diagnostics strategy employed for the transmitter incorporates a diagnostic warning and a diagnostic interrupt for diagnostic functions for monitoring limit values, e.g. for monitoring current saturation. This warning and interrupt can be configured:

- Diagnostic warning: The device transmits via HART communication the diagnostic event that has occurred. The current output value is unaffected. The message "Diagnostic Warning" alternates with the unit on the display.
- Diagnostic interrupt: The device goes into the fault current state. The message "Diagnostic Warning" or "Diagnostic Alarm" appears on the display, along with the message ERROR. In addition, the diagnostic event is made available via HART communication.

In the default settings, all warnings and alarms are switched off. You can choose to set either the diagnostic warning only or the diagnostic interrupt and warning. For HART communication, use the HART Communicator or PC software such as SIMATIC PDM. To see the steps

required, refer to the attached table for operation of the HART Communicator or the help functions in the SIMATIC PDM software.

7.21.2 Operating hours counter

Description

An operating hours counter can be read via HART communication for the electronics and another for the sensor. For HART communication, use the HART Communicator or PC software such as SIMATIC PDM. The counters are activated the first time the transmitter is put into operation. If the device is separated from its power supply, the counter readings are automatically stored in the non-volatile memories. That means that the current counter readings can be accessed at the next restart. The operating hours counters cannot be reset.

7.21.3 Calibration timer and service timer

Description

To ensure regular calibration of the electronics and for service work on the sensor, you activate a two-stage timer in each case. On expiry of the first time period, a calibration or service request is made. On expiry of a second time span set by parameter as a time difference, a diagnostic alarm is reported and a fault current is output.

The calibration intervals for the electronics are calculated using the following formula:

$$\text{Calibration interval} = \frac{\text{required accuracy} - \text{probable total error}}{\text{Stability/month}}$$

For performance of the calibration work, you must acknowledge the requests and alarms. Then you can reset the timer. In addition, there is a facility to deactivate the monitoring function.

The following procedure applies for acknowledgement of requests and alarms:

As long as the warning/alarm limit has not been reached, the following applies:

1. "Reset the timer" this resets the timer, which then restarts from 0. The monitoring remains active.
2. "Alarm/Acknowledge the request" this has no effect; the timer continues to run and the monitoring remains active.

When the warning/alarm limit has been reached, the following applies:

1. "Alarm/Acknowledge the request" resets the request / alarm message, but allows the timer to continue to run. In this state, a new alarm or warning is not possible since the time limits have already been exceeded.
2. "Reset timer" resets the request / alarm message, also resets the timer. It acknowledges the interrupt or warning at the same time. The timer immediately starts running again from zero and will report again when the warning/alarm limit is next reached. The next calibration interval is therefore immediately active.

7.21.4 Min/max indicator

Description

The measuring transmitter provides three min/max indicator pairs, which you can use to monitor the three measured variables Pressure, Sensor temperature, and Electronics temperature for negative and positive peak values. For each measured value, a resettable min/max indicator saves the maximum and minimum peak values in long-term storage in the two non-volatile memories. Consequently, the values are available even after the device is restarted. The min/max indicators are also updated during a simulation.

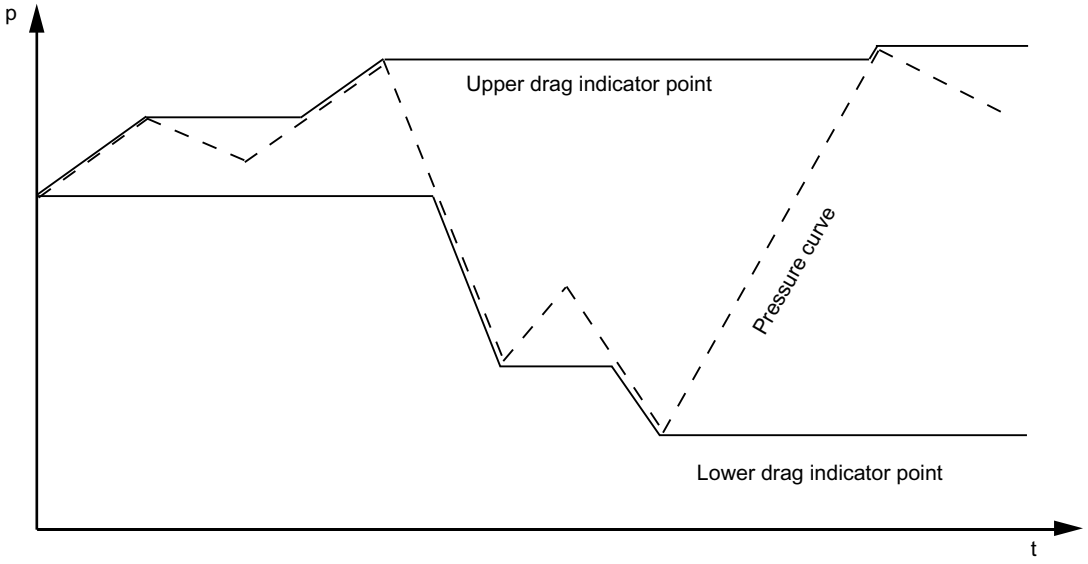

p Pressure t Time

Figure 7-16 Basic representation of min/max indicators

7.21.5 Limit modules

Introduction

The diagnostic functions of this device give you an option to monitor the measured values in programmable limits. If the limits are not adhered to, the device sends a warning through HART communication or notifies a higher-level instance about an analog fault current.

Monitoring of current saturation

You can monitor the current output in the saturation range using a simple limit module. This limit module is configured and activated via HART communication. For HART communication, use a HART communicator or PC software such as SIMATIC PDM.

You need to set two time periods to configure the limit module:
The first time period specifies how long the current output is allowed to be in saturation before an interrupt is triggered and the device outputs its set fault current. This first time period is the response time.
The second time period specifies the duration of the interrupt. This second time period is the stop time.

Different outputs of the fault current corresponding to the set response and stop times are shown in the following example.

Configuring the direction of fault current

The current value is proportional to pressure within the saturation limits. When the saturation limits are exceeded, the direction of fault current can however vary from the direction of saturation. The upper or the lower fault current is displayed depending on the parameter settings of the direction of fault current.

You can configure the direction of fault current for a current saturation interrupt depending on your requirements. The following settings are possible under the current saturation menu:

Active interrupt value	The applicable settings are those under the current interrupt type menu command.
Inverse interrupt value	The applicable settings are the inverse settings under the current interrupt type menu command.
Saturated interrupt value	The fault current is output in the direction of current saturation.
Inverse saturated interrupt value	The fault current is output in the opposite direction to current saturation.

The difference between different settings is evident in examples 3 and 4 in the following figure. Example 3 shows the direction of fault current with the "Saturated current value" setting. Example 4 shows the direction of fault current with the "Active upper interrupt value" setting.

Example

The configured saturation limits in the following figures are 3.8 mA and 20.5 mA.

Example 1: the response time starts at t_1. At t_1, current reaches the configured saturation limit of 20.5 mA for the first time. At t_2, the response time ends. The stop time begins and the interrupt is triggered. Time t_3 is the configured end of the stop time. At t_3, the interrupt is immediately revoked even if the current then drops below the saturation limit again.

Example 2: the duration of the current saturation is shorter than the response time (t_1, t_2). In that case, the device does not go into "fault current" state.

Example 3: the current drops below the lower saturation limit only for a short time. The fault current is not switched off until after the end of the stop time (t_3). The direction of fault current corresponds to the "Saturated interrupt value" setting. The fault current is output in the direction of current saturation.

Example 4: the current drops below the lower saturation limit only for a short time. The fault current is not switched off until after the end of the stop time (t_3). The direction of fault current corresponds to the "Active upper interrupt value" setting. The upper fault current is outputted although the direction of current saturation is downward.

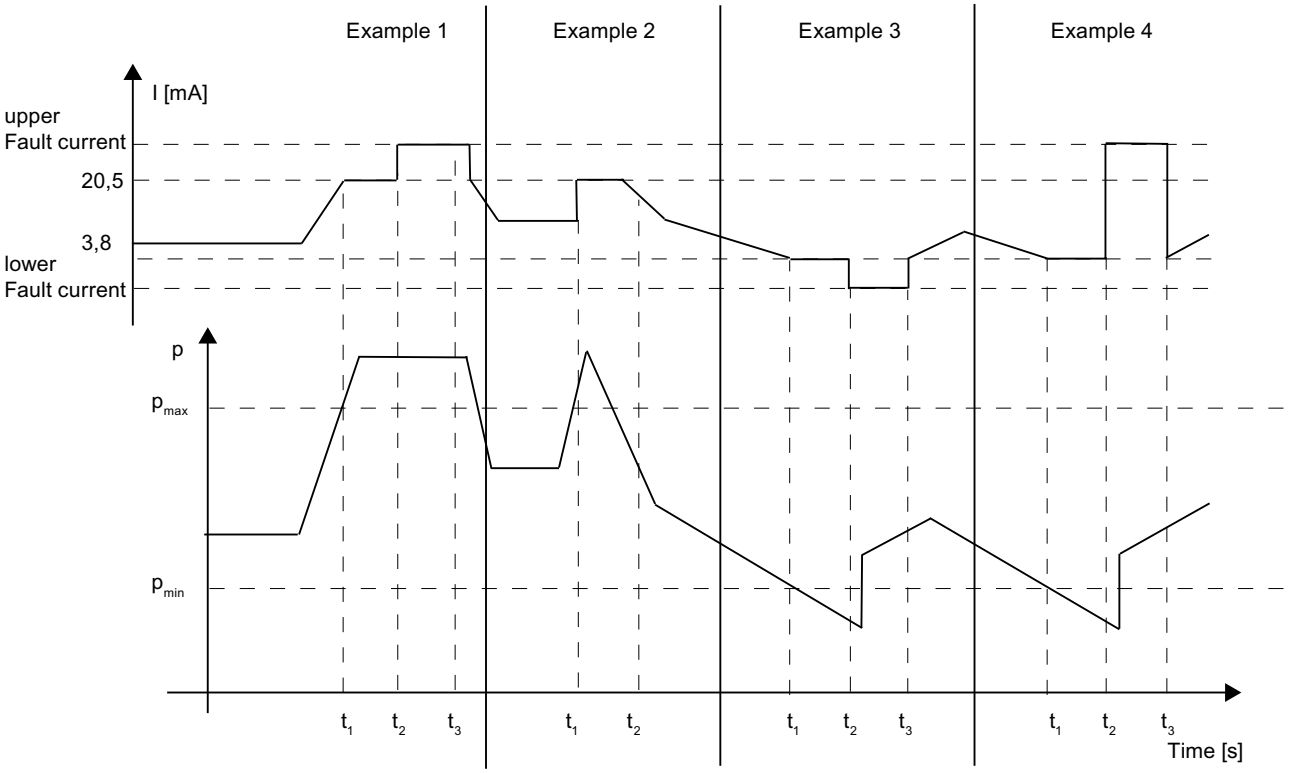

Figure 7-17 Four examples of saturation monitoring

See also

Fault current (Page 118)

7.22 Simulation

7.22.1 Overview of simulation

Description

With the "Simulation" diagnostic function, you can receive and process simulated measurement data onsite or in the control room without having process pressure or a temperature value. This allows you to run individual process sequences in the "cold" state and thus simulate process states. In addition, if you inject simulation values you can test the line routing from the control room to the individual transmitter.

The value to be simulated can be provided as a fixed value or in the form of a ramp function. Simulation of pressure and temperature values is handled in the same way in terms of parameter settings and function, so the following will only deal with the general simulation procedures "Fixed value" and "Ramp function".

For reasons of safety, all simulation data are held only in the non-volatile user memory. This means that when the device is restarted any simulation which may be active will be shut down. You can simulate the pressure and both temperature values. It should be noted here that changing the temperatures by simulation will have no effect on the measured pressure value.

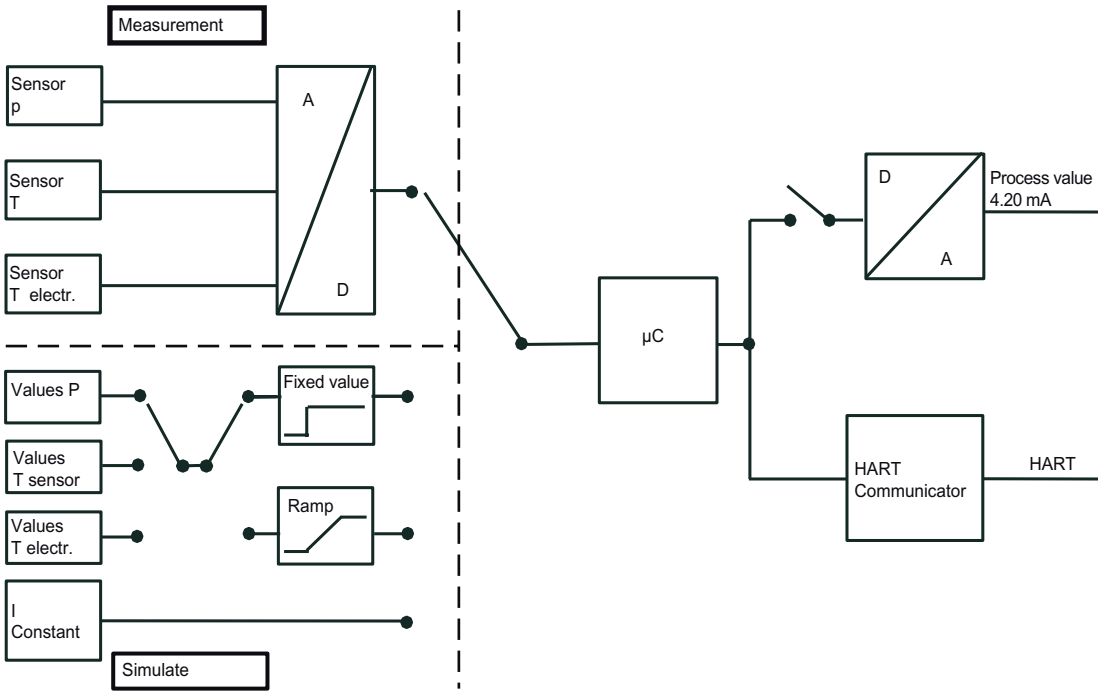

Figure 7-18 Block diagram of simulation

7.22.2 Simulation as fixed value

Description

Taking the physical unit into account you can set a fixed simulation value for all three possible simulation paths. You can simulate the pressure value and both temperature values simultaneously. While pressure simulation is activated, the transmitter will not react to changes in the process pressure. The output value for the current adjusts itself in accordance with the preset pressure value. Simulation of the temperature values has no effect on the current output. It can only be observed via HART communication.

7.22.3 Simulation with a ramp function

Description

In addition to the adjustable fixed values for all three simulation paths, you can, as a second option, also configure one ramp function in each case. Adjustable lower and upper values together determine the limits between which the simulation values with a rising or falling tendency can move. The step width can be calculated with the step number, which is also adjustable. You can specify the rate of rise of the ramp via the duration of the individual ramp steps.

$$\text{Increment} = \frac{\text{Upper range value} - \text{Lower range value}}{\text{Number of steps}}$$

7.23 Limit monitor

Description

You can activate up to three limit monitors in order to monitor any of the device variables. The limit monitor monitors a value at an upper or lower limit value. If this limit is violated it sends a diagnostic warning or a diagnostic interrupt. Select the "Limit Monitor" menu command in SIMATIC PDM or in the HART communicator. You can program the following values for each of the three limit monitors:

Table 7-5 Parameter of the limit monitor

Monitoring variable	You will be shown a list of the active device variables. This list is independent of the measuring mode selected.
Limit monitoring: warning / interrupt	Select whether a warning or a warning plus an interrupt should be triggered when a limit is violated.
Limit monitoring: upper / lower	Specify here whether a device variable monitors the upper limit, the lower limit, or both limits.
Upper limit value	Upper limit value in the unit of the device variable.
Lower limit value	Lower limit value in the unit of the device variable.

Hysteresis	Operating point for chatter suppression in the case of small pressure changes.
Response time	The time which must pass after the limit is violated before this violation is registered.
Stop time	The time for which a limit interrupt or warning will always be sustained even when the event which triggered it is no longer present.

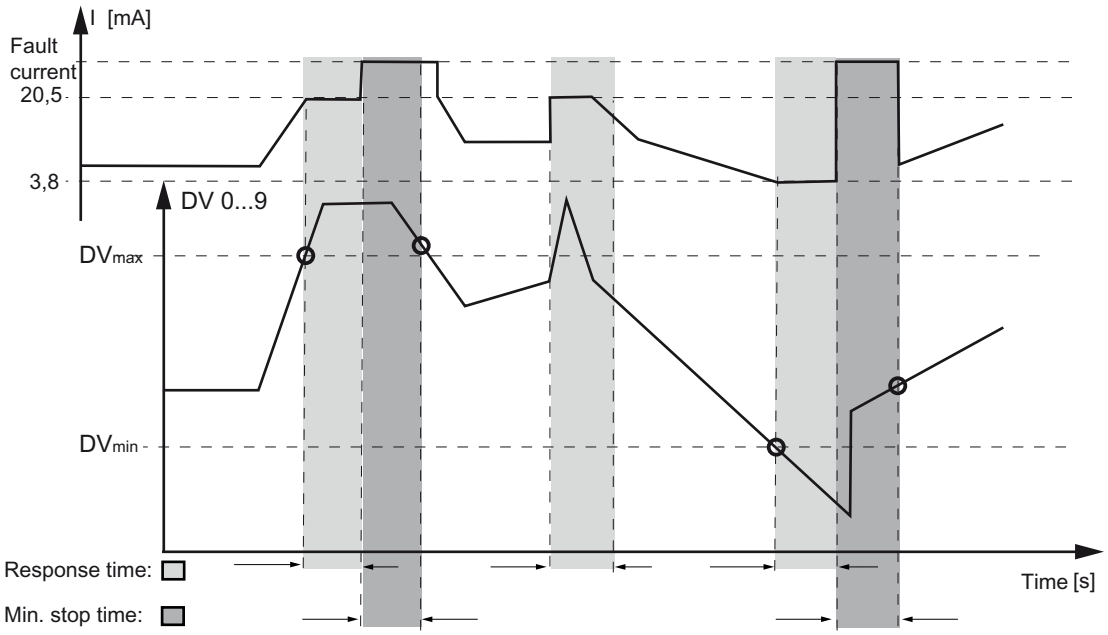

Figure 7-19 Trip levels for the limit monitor

You can count the limit violations for each limit monitor by activating an event counter that provides separate, cumulative totals of upper and lower limit violations. A diagnostic warning and / or a diagnostic interrupt can be issued once a certain number of violations is reached, a number which you can also program. You can program the following values for the event counter:

Table 7-6 Parameters of the event counter

Event counter: upper limit	Select here whether a warning or a warning plus an interrupt should be triggered when the comparison value is exceeded.
Event counter: lower limit	Select here whether a warning or a warning plus an interrupt should be triggered when the comparison value is not met.
Comparison value: upper limit	Specify here the number of overflows at which a warning or a warning plus an interrupt should be triggered.
Comparison value: upper limit	Specify here the number of underflows at which a warning or a warning plus an interrupt should be triggered.
Limit monitoring, warning/interrupt: upper limit	Select whether a warning or a warning plus an interrupt should be triggered when the event counter upper limit is violated.
Limit monitoring, warning/interrupt: lower limit	Select whether a warning or a warning plus an interrupt should be triggered when the event counter lower limit is violated.

Reset event counter upper limit	Here you can reset the upper limit counter to zero. A new event is not possible until the counter has been reset.
Reset event counter lower limit	Here you can reset the lower limit counter to zero. A new event is not possible until the counter has been reset.
Warning/interrupt acknowledgement	Here you can acknowledge each warning or interrupt separately.

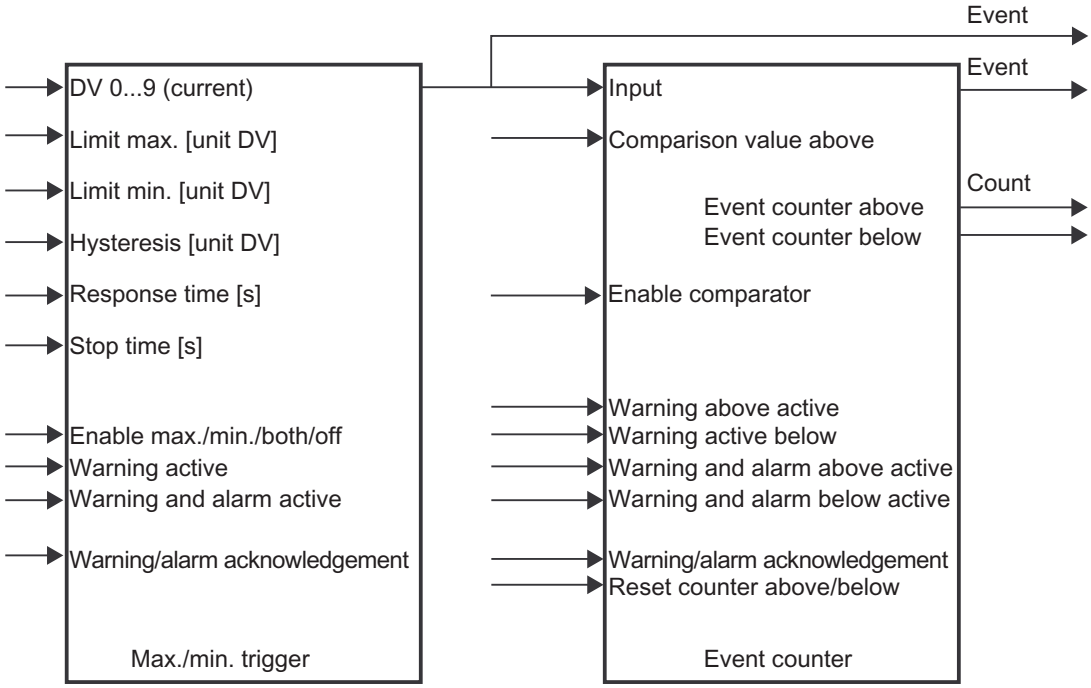

Figure 7-20 Limit monitor and event counter

Messages from the limit monitor and from the event counter can be acknowledged separately. Resetting the event counter starts a new monitoring interval.

Functional safety

8

8.1 General safety instructions

8.1.1 Safety-instrumented system

This chapter describes the functional safety in general and not specific to a device. The devices in the examples are selected as representative examples. The device-specific information follows in the next chapter.

Description

The combination of transmitter, automation system and final controlling element forms a safety-instrumented system that performs a safety function.

Functional principle of single-channel operation

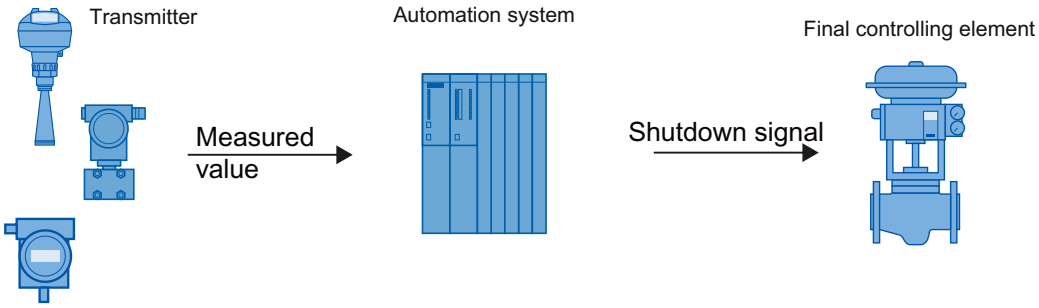

Figure 8-1 Safety-instrumented system for single-channel operation

The transmitter generates a process-related measured value that is transferred to the automation system. The automation system monitors this measured value. If the measured value exceeds the range of the high or low limit, the automation system generates a shutdown signal for the connected final controlling element, which switches the associated valve to the specified safety position.

Function principle of multi-channel operation

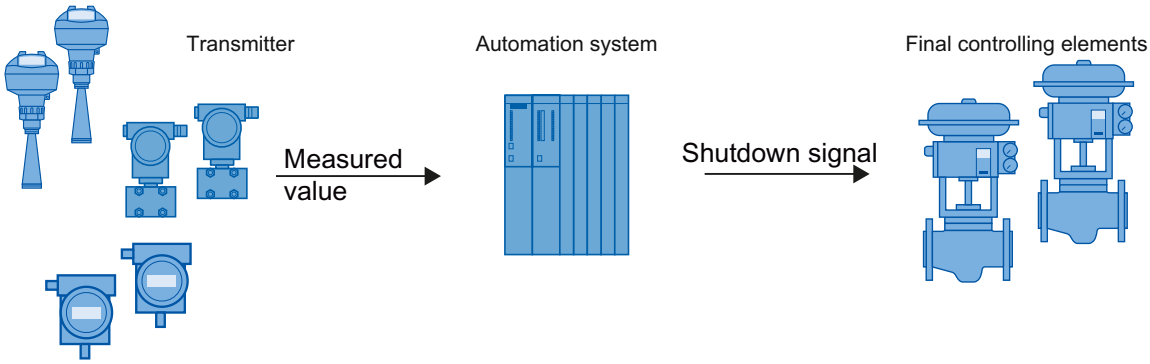

Figure 8-2 Safety-instrumented system (SIL3)

The transmitter generates process-related measured values that are transferred to the automation system. The automation system monitors these measured values. In the event of a fault, the automation system generates shutdown signals for connected final controlling elements that set the associated valve to the defined safety position.

Faults are:

- Violations of the preset high or low limits
- Simultaneously incoming measured values which are different from one another

8.1.2 Safety Integrity Level (SIL)

The international standard IEC 61508 defines four discrete Safety Integrity Levels (SIL) from SIL 1 to SIL 4. Every level corresponds to a probability range for the failure of a safety function.

Description

The following table shows the dependency of the SIL on the "average probability of dangerous failures of a safety function of the entire safety-instrumented system" (PFD_{AVG}) The table deals with "Low demand mode", i.e. the safety function is required a maximum of once per year on average.

Table 8-1 Safety Integrity Level

SIL	Interval
4	$10^{-5} \leq PFD_{AVG} < 10^{-4}$
3	$10^{-4} \leq PFD_{AVG} < 10^{-3}$
2	$10^{-3} \leq PFD_{AVG} < 10^{-2}$
1	$10^{-2} \leq PFD_{AVG} < 10^{-1}$

The "average probability of dangerous failures of the entire safety-instrumented system" (PFD_{AVG}) is normally split between the three sub-systems in the following figure.

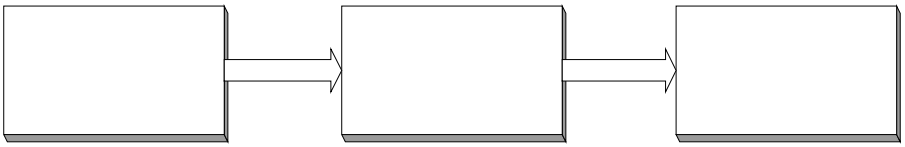

Figure 8-3 PFD distribution

The following table shows the achievable Safety Integrity Level (SIL) for the entire safety-instrumented system for type A/B subsystems depending on the safe failure fraction (SFF) and the hardware fault tolerance (HFT).

- Type A sub-systems include analog transmitters and shut-off valves **without** complex components, e.g. microprocessors (see also IEC 61508, Section 2).
- Type B subsystems include analog transmitters and shut-off valves **with** complex components, e.g. microprocessors (also see IEC 61508, Section 2).

SFF	HFT for type A sub-system			HFT for type B sub-system		
	0	1	2	0	1 (0) [1]	2 (1) [1]
< 60 %	SIL 1	SIL 2	SIL 3	Not permitted	SIL 1	SIL 2
60 to 90 %	SIL 2	SIL 3	SIL 4	SIL 1	SIL 2	SIL 3
90 to 99 %	SIL 3	SIL 4	SIL 4	SIL 2	SIL 3	SIL 4
> 99 %	SIL 3	SIL 4	SIL 4	SIL 3	SIL 4	SIL 4

[1] Operational reliability in accordance with IEC 61511-1, Section 11.4.4

Operational reliability

According to IEC 61511-1, Section 11.4.4, the hardware fault tolerance (HFT) can be reduced by one (values in brackets) for transmitters and final controlling elements with complex components if the following conditions apply to the device:

- The device is proven in operation.
- The user can configure only the process-related parameters, e.g. control range, signal direction in case of a fault, limiting values, etc.
- The configuration level of the firmware is blocked against unauthorized operation.
- The function requires SIL of less than 4.

8.2 Device-specific safety information for single-channel operation (SIL 2)

8.2.1 Safety function

Safety function for pressure transmitters

The safety function of SITRANS P refers to the measurement of pressures. An additional safety accuracy of 2% of the measuring range (complete span) must be added to the application-specific measuring error for an output current of 4 to 20 mA.

Total tolerance (safety function) = ± [application-specific measuring error + 2% safety accuracy].

Pressure transmitter safety accuracy: the maximum effect of an uncritical individual error on the measured value.

The diagnostics function will respond within 4 seconds in the worst-case scenario.

Note

Use of remote seals

If remote seals are used, the application-specific measurement error is the product of the transmitter and remote seal measurement errors.

⚠ WARNING

Disregarding conditions for fulfilling the safety function

Disregard can result in a malfunction of the process plant or application, e.g. process pressure too high, maximum level exceeded.

The binding settings and conditions are listed in the chapters "Settings (Page 140)" and "Safety characteristics (Page 142)".

These conditions must be strictly observed in order to fulfill the safety function.

8.2.2 Settings

The following settings must be adhered to after installing and commissioning as per the Operating Instructions:

Operation/configuration

While operating/configuring, ensure that the technical data of the pressure transmitter are adhered to in their respective version.

Checking the safety function

Note

You should check the safety function while the device is mounted, if possible. If this is not possible, you can also check the safety function when the device is not mounted. Make sure that the transmitter is mounted in the same position for testing as it is in in the system.

Note

If the transmitter is locked in Mode 10, deactivate the lock to check the safety function.

We recommend that:

- You check the status for warnings and alarms.
- You check the measurement value limits.
- Simulate various currents and the minimum and maximum fault currents.
- Check the measuring accuracy, which must be within the range of the application-specific measuring error for the safety function.
  - Set the measured value display to a unit of pressure in Mode 13.
  - Check the zero point, e.g. in a pressureless state, for gauge and differential pressure.
  - Check the zero point for absolute pressure, e.g. by applying a defined pressure.
  - Check the upper limit of the measuring range (URL) and the upper limit of the span set (URV) for gauge, absolute and differential pressure by applying a defined pressure.
  - Reset the measured value display to the required value in Mode 13.
- Check the triggering of the safety function.

Protection against configuration changes

After parameterizing/commissioning:

1. Set the lock mode in Mode 10 to write protection "L".
   Operation via keys and HART communication is blocked.
2. Protect the keys from unintended change in the parameters, e.g. by lead-sealing.

8.2.3 Requirements

Requirements

Functional safety has the following requirements:

- Only one DS III device is required for single-channel operation in accordance with SIL 2.
- Functional safety up to SIL 2 in accordance with IEC 61508/IEC 61511-1. The firmware version is listed in the "SIL Declaration of Conformity".

- Explosion protection for corresponding versions
- Electromagnetic compatibility in compliance with EN 61326

8.2.4 Behavior in case of faults

Repairs

Defective devices should be sent in to the repair department with details of the fault and the cause. When ordering replacement devices, please specify the serial number of the original device. You will find the serial number on the nameplate.

The address of the responsible SIEMENS repair center, contacts, spare parts lists, etc. can be found on the Internet.

8.2.5 Maintenance/Checking

Interval

We recommend that the functioning of the pressure transmitters be checked at regular intervals of one year.

Checking the safety function

Check the safety function as detailed in the chapter Settings (Page 140).

Checking safety

You should regularly check the safety function of the entire safety circuit in accordance with IEC 61508/61511. The testing intervals are determined in calculations for each individual safety circuit in a system (PFD_{AVG}).

Electronics and measuring cell

The safety function of the transmitter is ensured only if you use the electronics, measuring cell, display and connection board delivered by the factory. These components cannot be replaced.

8.2.6 Safety characteristics

The safety characteristics necessary for using the system are listed in the "SIL declaration of conformity". These values apply under the following conditions:

- The SITRANS P pressure transmitter is only used in applications with a low demand for the safety function (low demand mode).
- Communication with the HART protocol is used only for the following:
  - Device configuration
  - Reading diagnostics values
  - However, it is not used for operations critical to safety. In particular, the simulation function must not be activated in safety-related operation.
- The safety-related parameters/settings have been entered by local operation or HART communication before commencing safety-related operation. They are checked on the local display.
  (see "Settings" section)
- The safety function test has been concluded successfully.
- The transmitter is blocked against unwanted and unauthorized changes/operation.
- The current signal of 4 to 20 mA of the transmitter is evaluated by a safe system.
- Fault rates are calculated on the basis of a Mean Time To Repair (MTTR) of eight hours (order option C20) or 72 hours (order option C23).

See also

Settings (Page 140)

8.3 Device-specific safety information for redundant operation (SIL 3)

8.3.1 Safety function

Safety function for pressure transmitters

The safety function of SITRANS P refers to the measurement of pressures. An additional safety allowance of 2% of the measuring range (complete span) must be added to the application-specific measuring error for an output current of 4 to 20 mA.

Total tolerance (safety function) = ± [application-specific measuring error + 2% safety allowance].

Pressure transmitter safety allowance: the maximum effect of an uncritical individual error on the measured value.

The diagnostics function will respond within 4 seconds in the worst-case scenario.

Note

Use of remote seals

If remote seals are used, the application-specific measurement error is the product of the transmitter and remote seal measurement errors.

WARNING

Disregarding conditions for fulfilling the safety function

Disregard can result in a malfunction of the process plant or application, e.g. process pressure too high, maximum level exceeded.

The binding settings and conditions are listed in the chapters "Settings (Page 145)" and "Safety characteristics (Page 147)".

These conditions must be strictly observed in order to fulfill the safety function.

8.3.2 Requirements

Requirements

Functional safety has the following requirements:

- Two DS III devices are required for redundant operation in accordance with SIL 3. Operation with one DS III is not permissible.
- Functional safety up to SIL 3 in accordance with IEC 61508/IEC 61511-1. The firmware version is listed in the "SIL Declaration of Conformity".
- Explosion protection for corresponding versions
- Electromagnetic compatibility in compliance with EN 61326

Description

The sensor, logic unit/control system and final controlling element combine to form a safety-instrumented system, which executes a safety function. The focal point of this description is the sensor. Please refer to the corresponding standards for the requirements placed on the PLC and final controlling element.

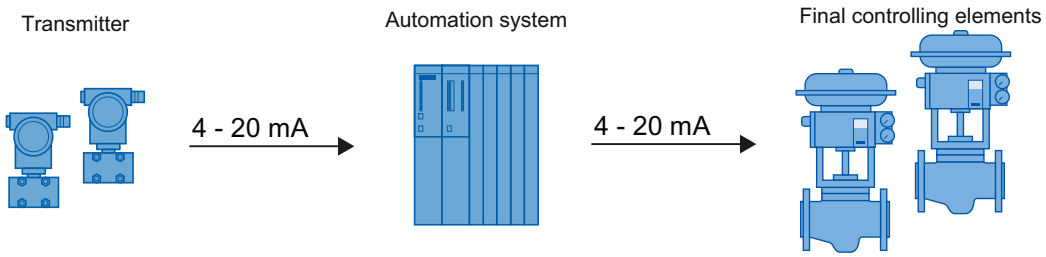

Figure 8-4 Safety-instrumented system in redundant operation

The PLC program must monitor the measured values of both DS III devices. As soon as the measured values differ by e.g. 2% or more, the system must be brought into the safe state and the fault must be located.

Note

Switching-off of system at high monitoring accuracy

The two transmitters are connected to the process at different positions. Actual differences in pressure ≥ the total tolerance (safety function) can occur when the process is started up or if there are other pressure variations. A difference in pressure ≥ the total tolerance (safety function) will shut down the system.

- Match the monitoring accuracy of the PLC to the process.
- Mount the two transmitters exposed to equal conditions.

8.3.3 Settings

Observe the following settings following installing and commissioning as per the Operating Instructions:

Operation/configuration

While operating/configuring, ensure that the technical data of the pressure transmitters in their respective versions is adhered to.

Checking the safety function

Note

You should check the safety function while the device is mounted, if possible. If this is not possible, you can also check the safety function when the device is not mounted. Make sure that the transmitter is mounted in the same position for testing as it is in in the system.

Note

If the transmitter is locked in Mode 10, deactivate the lock to check the safety function.

We recommend for both pressure transmitters:

- You check the status for warnings and alarms.
- You check the measurement value limits.
- Simulate various currents and the minimum and maximum fault currents.

- Check the measuring accuracy, which must be within the range of the application-specific measuring error for the safety function.
  - Set the measured value display to a unit of pressure in Mode 13.
  - Check the zero point, e.g. in a pressureless state, for gauge and differential pressure.
  - Check the zero point for absolute pressure, e.g. by applying a defined pressure.
  - Check the upper limit of the measuring range (URL) and the upper limit of the span set (URV) for gauge, absolute and differential pressure by applying a defined pressure.
  - Reset the measured value display to the required value in Mode 13.
- Check the triggering of the safety function.

Protection against configuration changes

After parameterizing/commissioning:

1. Set the lock mode in Mode 10 to write protection "L".
   Operation via keys and HART communication is blocked.
2. Protect the keys from unintended change in the parameters, e.g. by lead-sealing.

8.3.4 Behavior in case of faults

Repairs

Defective devices should be sent in to the repair department with details of the fault and the cause. When ordering replacement devices, please specify the serial number of the original device. You will find the serial number on the nameplate.

The address of the responsible SIEMENS repair center, contacts, spare parts lists, etc. can be found on the Internet.

8.3.5 Maintenance/Checking

Interval

We recommend that the functioning of the pressure transmitters be checked at regular intervals of one year.

Checking the safety function

Check the safety function as detailed in the chapter Settings (Page 145).

Checking safety

You should regularly check the safety function of the entire safety circuit in accordance with IEC 61508/61511. The testing intervals are determined in calculations for each individual safety circuit in a system (PFD_{AVG}).

Electronics and measuring cell

The safety function of the transmitter is ensured only if you use the electronics, measuring cell, display and connection board delivered by the factory. These components cannot be replaced.

8.3.6 Safety characteristics

The safety characteristics necessary for using the system are listed in the "SIL Declaration of Conformity". These values apply under the following conditions:

- Two DS III devices are required for redundant operation in accordance with SIL 3. The PLC program must monitor the measured values of both DS III devices. The system must be put into safe mode as soon as the measured values differ too greatly.
- SITRANS P pressure transmitters are only used in applications with a low demand for the safety function (low demand mode).
- Communication with the HART protocol is used only for the following:
  - Device configuration
  - Reading diagnostics values
  - However, it is not used for operations critical to safety. In particular, the simulation function must not be activated in safety-related operation.
- The safety-related parameters/settings have been entered by local operation or HART communication before commencing safety-related operation. They are checked on the local display.
  (see the "Settings" section)
- The safety function test has been concluded successfully.
- The transmitters are protected from accidental and unauthorized changes/operation.
- The transmitter current signal of 4 to 20 mA is evaluated by a safe system.
- Fault rates are calculated on the basis of a mean time to recovery (MTTR) of 8 hours (order option C20) or 72 hours (order option C23).

8.4 Add-on parts

This chapter contains safety information for add-on parts.

⚠ WARNING

Add-on parts unsuitable for process medium

Danger of injury or damage to device.

If the process medium is not suitable for the parts which come into contact with it, hot and/or toxic or corrosive substances could be released.

- Refer to the information in the chapter "Technical data (Page 169)".
- Make sure that the add-on parts are suitable for the corresponding application with regard to materials, temperature of process medium, and pressure.

8.4.1 Checking a device with add-on pneumatic block

Procedure

1. Check the connection between the transmitter and pneumatic block and between the pneumatic block and pipelines in the plant for leaks.
2. Observe the safety information and specifications in chapter Installing/mounting (Page 33).
3. Check the following valves for correct positioning and absence of leaks:
   - Process valves
   - Equalizer valve
   - Vent valves
   - Blowout valves or plugs
4. Observe the safety information and specifications in chapter Commissioning (Page 149).

8.4.2 Checking a device with add-on remote seal

Procedure

1. Check the connection between the transmitter and remote seal and between the remote seal and the plant for leaks.
2. Observe the safety information and specifications in chapter Installing/mounting (Page 33).

Commissioning 9

9.1 Basic safety instructions

⚠ DANGER

Toxic gases and liquids

Danger of poisoning when the device is vented.

If toxic process media are measured, toxic gases and liquids can be released when the device is vented.

- Before venting ensure that there are no toxic gases and liquids in the device. Take the appropriate safety measures.

⚠ WARNING

Improper commissioning in hazardous areas

Device failure or danger of explosion in hazardous areas.

- Do not commission the device until it has been mounted completely and connected in accordance with the information in Chapter "Technical data (Page 169)".
- Before commissioning take the effect on other devices in the system into account.

⚠ WARNING

Opening device in energized state

Danger of explosion in areas subject to explosion hazard.

- Only open the device in a de-energized state.
- Check prior to commissioning that the cover, cover locks, and cable inlets are assembled in accordance with the directives.

Exception: Devices having the type of protection "Intrinsic safety Ex i" may also be opened in energized state in hazardous areas.

Note

Hot surfaces

Hot process medium and high ambient temperatures lead to hot surfaces which can cause burns.

- Take corresponding protective measures, for example wear protective gloves.

9.2 Introduction to commissioning

Following commissioning, the transmitter is immediately ready for use.

To obtain stable measured values, the transmitter needs to be allowed to warm up for five minutes or so after the power supply is switched on.

The operating data must correspond to the values specified on the nameplate. If you switch on the auxiliary power, the transmitter will operate.

The following commissioning cases are typical examples. Configurations different from those listed here may be meaningful depending on the system configuration.

9.3 gauge pressure, absolute pressure from the differential pressure series and absolute pressure from the gauge pressure series

9.3.1 Commissioning for gases

Usual arrangement

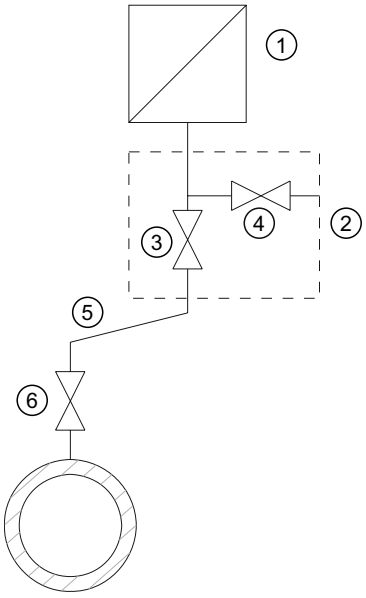

Measuring gases above the pressure tapping point

Special arrangement

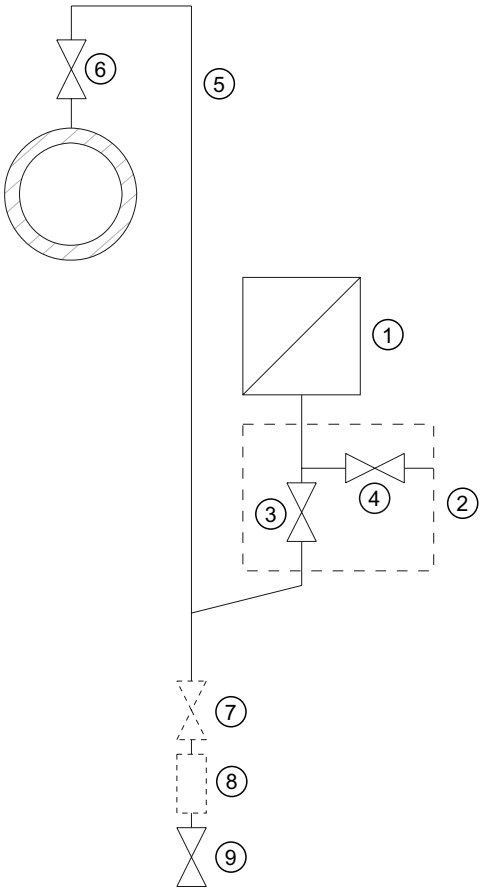

Measuring gases below the pressure tapping point

①	Pressure transmitter	⑤	Pressure line
②	Shut-off module	⑥	Shut-off valve
③	Shut-off valve to process	⑦	Shut-off valve (optional)
④	Shut-off valve for test connection or for bleed screw	⑧	Condensate vessel (optional)
		⑨	Drain valve

Condition

All valves are closed.

Procedure

To commission the transmitter for gases, proceed as follows:

1. Open the shut-off valve for the test connection ④.
2. Via the test connection of the shut-off fitting ②, apply the pressure corresponding to the start of scale value to the pressure transmitter ①.
3. Check the start of scale value.
4. If the start of scale value differs from the value desired, correct it.
5. Close the shut-off valve for the test connection ④.
6. Open the shut-off valve ⑥ at the pressure tapping point.
7. Open the shut-off valve for the process ③.

9.3.2 Commissioning with steam or liquid

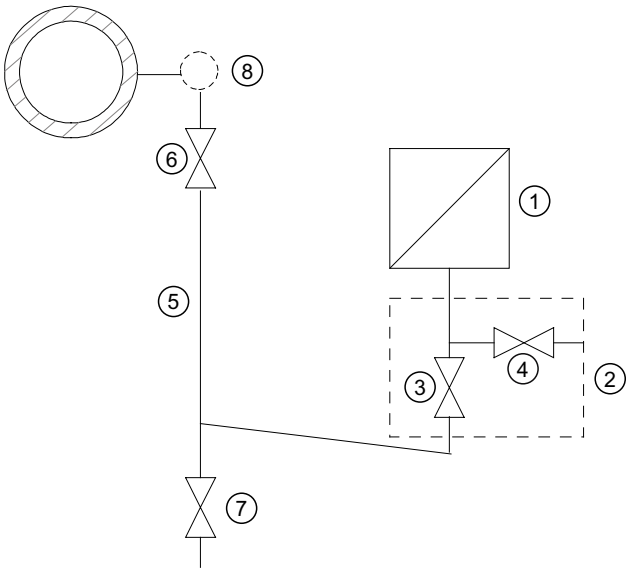

① Pressure transmitter
② Shut-off fitting
③ Shut-off valve to process
④ Shut-off valve for test connection or for bleed screw
⑤ Pressure line
⑥ Shut-off valve
⑦ Blow-out valve
⑧ Compensation vessel (steam only)

Figure 9-1 Measuring steam

Requirement

All valves are closed.

Procedure

To commission the transmitter for steam or liquid, proceed as follows:

1. Open the shut-off valve for the test connection ④.
2. Via the test connection of the shut-off module ②, apply the pressure corresponding to the start of scale value to the pressure transmitter ①.
3. Check the start of scale value.
4. If the start of scale value differs from the value desired, correct it.
5. Close the shut-off valve for the test connection ④.
6. Open the shut-off valve ⑥ at the pressure tapping point.
7. Open the shut-off valve for the process ③.

9.4 Differential pressure and flow rate

9.4.1 Safety notes for commissioning with differential pressure and flow rate

⚠ WARNING

Incorrect or improper operation

If the lock screws are missing or are not sufficiently tight, and/or if the valves are operated incorrectly or improperly, it could lead to serious physical injuries or considerable damage to property.

Measure

- Take care that the locking screw and/or the vent valve are screwed in and tightened.
- Ensure that the valves are operated correctly and properly.

⚠ WARNING

Hot mediums

In the case of hot mediums, the individual operational steps should be carried out one after the other. Otherwise, it could lead to excessive heating, thus causing damage to the valves and the transmitter.

9.4.2 Commissioning in gaseous environments

Usual arrangement

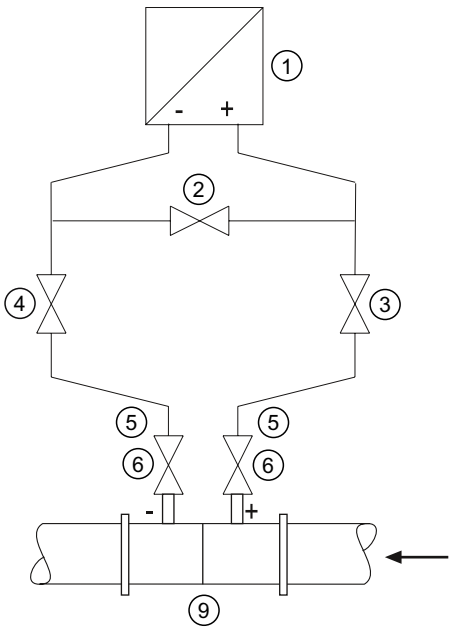

Special arrangement

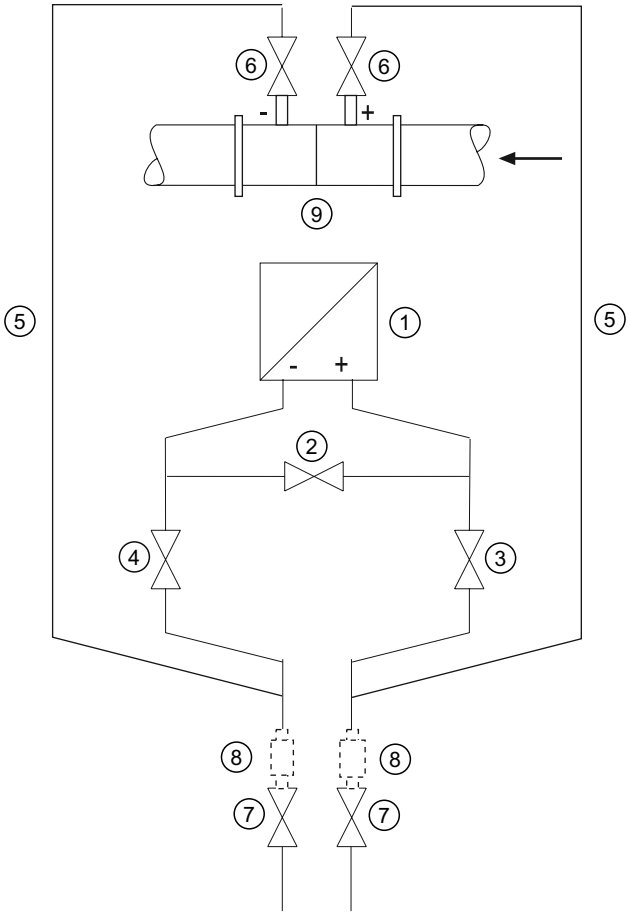

① Pressure transmitter
② Stabilizing valve
③, ④ Differential pressure valves
⑤ Differential pressure lines
⑥ Shut-off valves
⑦ Drain valves
⑧ Condensate vessels (optional)
⑨ Differential pressure transducer

Transmitter **above** the differential pressure transducer

Transmitter **below** the differential pressure transducer

Condition

All shut-off valves are closed.

Procedure

To commission the transmitter for gases, proceed as follows:

1. Open both the shut-off valves ⑥ at the pressure tapping point.
2. Open the stabilizing valve ②.

3. Open the differential pressure valve (③ or ④).
4. Check and if required correct the zero point when the start of scale value is 0 mbar (4 mA).
5. Close the stabilizing valve ②.
6. Open the other differential pressure valve (③ or ④).

9.4.3 Commissioning for liquids

Usual arrangement

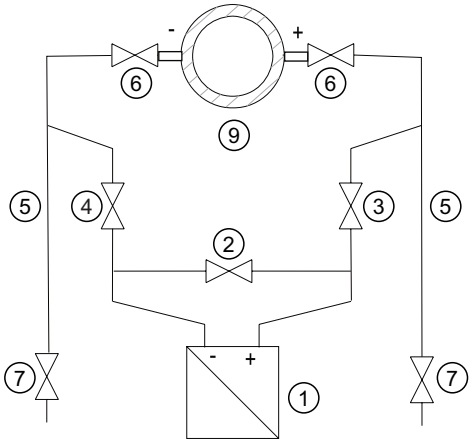

Special arrangement

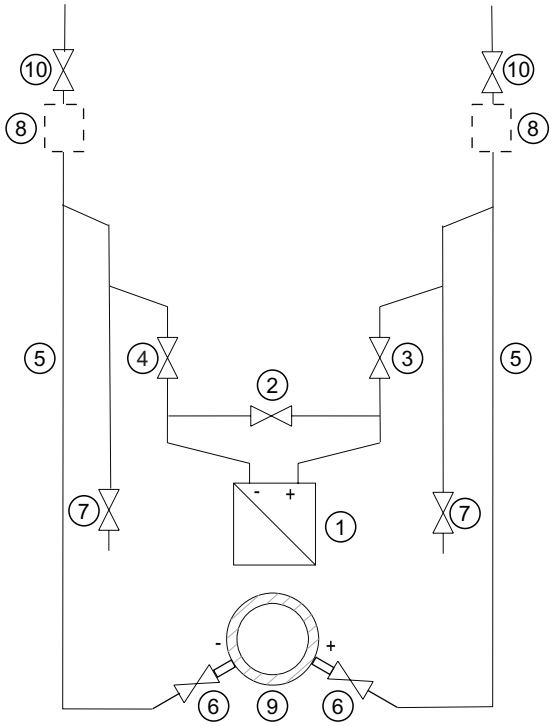

① Pressure transmitter
② Equalizer valve
③, ④ Differential pressure valves
⑤ Differential pressure lines
⑥ Shut-off valves
⑦ Drain valves
⑧ Gas collector vessels (optional)
⑨ Differential pressure transducer
⑩ Vent valves

Transmitter **below** the differential pressure transducer

Transmitter **above** the differential pressure transducer

Condition

All valves are closed.

Procedure

⚠ WARNING
The transmitter should not be depressurized if toxic substances are being used.

To commission the transmitter with liquids, proceed as follows:

1. Open both the shut-off valves ⑥ at the pressure tapping point.
2. Open the equalizer valve ②.
3. With **transmitters below the differential pressure transducer**, open both the blowout valves one after the other ⑦ until the air-free liquid emerges.
   In the case of a **transmitter above the differential pressure transducer**, open both the vent valves one after the other ⑩ until the liquid emerges.
4. Close both drain valves ⑦ or vent valves ⑩.
5. Open the differential pressure valve ③ and the vent valve on the positive side of the transmitter ① slightly, until fluid escapes without bubbles.
6. Close the vent valve.
7. Open the vent valve on the negative side of the transmitter ① slightly, until fluid escapes without bubbles.
8. Close the differential pressure valve ③.
9. Open the differential pressure valve ④ until the liquid emerges and then close it.
10. Close the vent valve on the negative side of the transmitter ①.
11. Open the differential pressure valve ③ by rotating it in half a turn.
12. Check and if required adjust the zero point (4 mA) if the start-of-scale value is 0 bar.
13. Close the equalizer valve ②.
14. Open the differential pressure valves (③ and ④) completely.

9.4.4 Commissioning with vapor

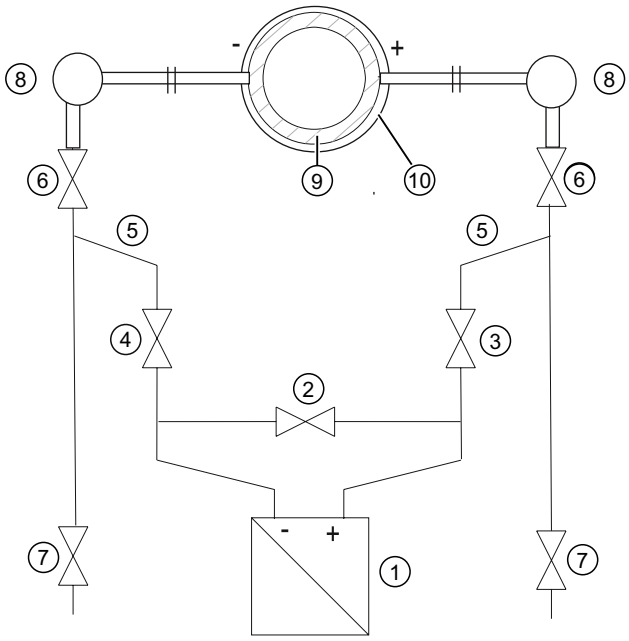

①	Pressure transmitter	⑦	Drain valves
②	Stabilizing valve	⑧	Condensate pots
③, ④	Differential pressure valves	⑨	Differential pressure transducer/Orifice plate
⑤	Differential pressure lines	⑩	Insulation
⑥	Shut-off valves		

Figure 9-2 Measuring steam

Condition

All valves are closed.

Procedure

NOTICE
The measuring result is error-free only if the differential pressure lines ⑤ have equally high condensate columns with the same temperature. The zero calibration must be repeated if required if these conditions are fulfilled. If the shut-off valves ⑥ and the differential pressure valves ③ are open at the same time and the stabilizing valve ② is opened, there is a possibility of the transmitter ① being damaged due to the streaming vapor.

To commission the transmitter for vapor, proceed as follows:

1. Open both the shut-off valves ⑥ at the pressure tapping point.
2. Open the stabilizing valve ②.

3. Wait until the steam in the differential pressure lines ⑤ and in the equalizing vessels ⑧ has condensed.
4. Open the differential pressure valve ③ and the vent valve on the positive side of the transmitter ① slightly, until condensate escapes without bubbles.
5. Close the vent valve.
6. Open the vent valve on the negative side of the transmitter ① slightly, until condensate escapes without bubbles.
7. Close the differential pressure valve ③.
8. Open the differential pressure valve ④ slightly, until condensate escapes without bubbles, then close it.
9. Close the vent valve on the negative side ①.
10. Open the differential pressure valve ③ by rotating it in half a turn.
11. Check and if required correct the zero point in case of start of scale value 0 bar (4 mA).
12. Close the stabilizing valve ②.
13. Fully open the differential pressure valves ③ and ④.
14. You can briefly open the drain valves ⑦ to clean the line. Close before steam starts to leak.

Service and maintenance 10

10.1 Basic safety instructions

WARNING

Impermissible repair of explosion protected devices

Danger of explosion in areas subject to explosion hazard.

- Repair must be carried out by Siemens authorized personnel only.

WARNING

Impermissible accessories and spare parts

Danger of explosion in areas subject to explosion hazard.

- Only use original accessories or original spare parts.
- Observe all relevant installation and safety instructions described in the instructions for the device or enclosed with the accessory or spare part.

WARNING

Use of incorrect device parts in potentially explosive environments

Devices and their associated device parts are either approved for different types of protection or they do not have explosion protection. There is a danger of explosion if device parts (such as covers) are used for devices with explosion protection that are not expressly suited for this type of protection. If you do not adhere to these guidelines, the test certificates and the manufacturer warranty will become null and void.

- Use only device parts that have been approved for the respective type of protection in the potentially explosive environment. Covers that are not suited for the "explosion-proof" type of protection are identified as such by a notice label attached to the inside of the cover with "Not Ex d Not SIL".
- Do not swap device parts unless the manufacturer specifically ensures compatibility of these parts.

⚠ WARNING

Maintenance during continued operation in a hazardous area

There is a danger of explosion when carrying out repairs and maintenance on the device in a hazardous area.

- Isolate the device from power.

- or -

- Ensure that the atmosphere is explosion-free (hot work permit).

⚠ WARNING

Commissioning and operation with pending error

If an error message appears, correct operation in the process is no longer guaranteed.

- Check the gravity of the error
- Correct the error
- If the error still exists:
  - Take the device out of operation.
  - Prevent renewed commissioning.

See also

Display in case of a fault (Page 163)

⚠ WARNING

Hot, toxic or corrosive process media

Danger of injury during maintenance work.

When working on the process connection, hot, toxic or corrosive process media could be released.

- As long as the device is under pressure, do not loosen process connections and do not remove any parts that are pressurized.
- Before opening or removing the device ensure that process media cannot be released.

⚠ WARNING

Improper connection after maintenance

Danger of explosion in areas subject to explosion hazard.

- Connect the device correctly after maintenance.
- Close the device after maintenance work.

Refer to Chapter "Connecting (Page 57)".

⚠ WARNING

Use of a computer in a hazardous area

If the interface to the computer is used in the hazardous area, there is a danger of explosion.

- Ensure that the atmosphere is explosion-free (hot work permit).

⚠ CAUTION

Releasing key lock

Improper modification of parameters could influence process safety.

- Make sure that only authorized personnel may cancel the key locking of devices for safety-related applications.

⚠ CAUTION

Hot surfaces

Danger of burns during maintenance work on parts having surface temperatures exceeding 70 °C (158 °F).

- Take corresponding protective measures, for example by wearing protective gloves.
- After carrying out maintenance, remount touch protection measures.

⚠ CAUTION

Hazardous voltage with open device in versions with 4-conductor extension

Danger of electrocution when the enclosure is opened or enclosure parts are removed.

- Disconnect the device before you open the enclosure or remove enclosure parts.
- Observe the special precautionary measures if maintenance is required while the device is live. Have maintenance work carried out by qualified personnel.

NOTICE

Electrostatic-sensitive devices

The device contains electrostatic-sensitive devices (ESD). ESD can be destroyed by voltages far too low to be detected by humans. These voltages can occur if you simply touch a component part or the electrical connections of a module without being electrostatically discharged. The damage to a module caused by overvoltage cannot normally be detected immediately; it only becomes apparent after a longer period of operating time has elapsed.

Protective measures against the discharge of static electricity:

- Make sure that no power is applied.
- Before working with modules, make sure that you discharge static from your body, for example by touching a grounded object.
- Devices and tools used must be free of static charge.
- Hold modules only by their edges.
- Do not touch connector pins or conductor tracks on a module with the ESD notice.

10.2 Maintenance and repair work

10.2.1 Defining the maintenance interval

⚠ WARNING

No maintenance interval has been defined

Device failure, device damage, and risk of injury.

- Define a maintenance interval for regular tests in line with device use and empirical values.
- The maintenance interval will vary from site to site depending on corrosion resistance.

10.2.2 Checking the gaskets

Inspect the seals at regular intervals

Note
Incorrect seal changes

Incorrect measured values will be displayed. Changing the seals in a process flange of a differential pressure measuring cell can alter the start-of-scale value.

- Changing seals in devices with differential pressure measuring cells may only be carried out by personnel authorized by Siemens.

Note
Using the wrong seals

Using the wrong seals with flush-mounted process connections can cause measuring errors and/or damage the diaphragm.

- Always use seals which comply with the process connection standards or are recommended by Siemens.

1. Clean the enclosure and seals.
2. Check the enclosure and seals for cracks and damage.
3. Grease the seals if necessary.
   - or -
4. Replace the seals.

10.2.3 Display in case of a fault

Check the start of scale value of the device from time to time.

Differentiate between the following in case of a fault:

- The internal self test has detected a fault, e.g. sensor break, hardware fault/Firmware fault.
  Displays:
  - Display: "ERROR" display and ticker with an error text
  - Analog output: Factory setting: Failure current 3.6 or 22.8 mA

  Or depending on the parameterization
  - HART: detailed error breakdown for display in the HART communicator or SIMATIC PDM
- Grave hardware faults, the processor is not functioning.
  Displays:
  - Display: no defined display
  - Analog output: failure current < 3.6 mA

In case of defect, you can replace the electronic unit by following the warning notes and the provided instruction manual.

See also

Error display (Page 69)

10.2.4 Changing the measuring cell and application electronics

Related

Each of the individual components "Measuring cell" and "Electronics" has a non-volatile memory (EEPROM).

Measuring cell data (e.g.: measuring range, measuring cell material, oil filling) and application-specific electronics data (e.g.: downscaling, additional electrical damping) are located in the measuring cell EEPROM. Application-specific data are lost when the measuring cell is changed. Application-specific data are not lost when the application electronics are changed.

You can backup application-specific data before changing the measuring cell and reload them afterwards. Use an input device which supports the HART protocol. (e.g. HART communicator, PC with HART modem and HART software or PC with HART modem and PDM software). Factory settings will be used if application-specific data are not backed up before the measuring cell is changed.

Technical developments enable advanced functions to be implemented in the firmware of the measuring cell or application electronics. Further technical developments are indicated by modified firmware statuses (FW). The firmware status does not affect whether the modules can be replaced. However, the scope of functions is limited to the function of existing components.

If a combination of certain firmware versions of measuring cell and application electronics is not possible for technical reasons, the device will identify this problem and go into "Fault current" mode. This information is provided via the HART interface.

10.3 Cleaning

⚠ WARNING

Dust layers above 5 mm

Danger of explosion in hazardous areas. Device may overheat du to dust build up.

- Remove any dust layers in excess of 5 mm.

NOTICE
Penetration of moisture into the device
Device damage.
• Make sure when carrying out cleaning and maintenance work that no moisture penetrates the inside of the device.

Cleaning the enclosure

- Clean the outside of the enclosure and the display window using a cloth moistened with water or a mild detergent.
- Do not use aggressive cleaning agents or solvents. Plastic components or painted surfaces could be damaged.

⚠ WARNING
Electrostatic charge
Danger of explosion in hazardous areas if electrostatic charges develop e.g. when cleaning plastic enclosures with a dry cloth.
• Prevent electrostatic charging in hazardous areas.

10.3.1 Servicing the remote seal measuring system

The remote seal measuring system usually does not need servicing.

If the mediums are contaminated, viscous or crystallized, it could be necessary to clean the diaphragm from time to time. Use only a soft brush and a suitable solvent to remove the deposits from the diaphragm. Do not use corrosive cleaning agents. Prevent the diaphragm from getting damaged due to sharp-edged tools.

NOTICE
Improper cleaning of diaphragm
Device damage. The diaphragm can be damaged.
• Do not use sharp or hard objects to clean the diaphragm.

10.4 Return procedure

Enclose the bill of lading, return document and decontamination certificate in a clear plastic pouch and attach it firmly to the outside of the packaging.

Required forms

- Delivery note
- Return goods delivery note (http://www.siemens.com/processinstrumentation/returngoodsnote)
  with the following information:
  - Product (item description)
  - Number of returned devices/replacement parts
  - Reason for returning the item(s)
- Decontamination declaration (http://www.siemens.com/sc/declarationofdecontamination)
  With this declaration you warrant "that the device/replacement part has been carefully cleaned and is free of residues. The device/replacement part does not pose a hazard for humans and the environment."
  If the returned device/replacement part has come into contact with poisonous, corrosive, flammable or water-contaminating substances, you must thoroughly clean and decontaminate the device/replacement part before returning it in order to ensure that all hollow areas are free from hazardous substances. Check the item after it has been cleaned. Any devices/replacement parts returned without a decontamination declaration will be cleaned at your expense before further processing.

The forms can be found on the Internet as well as in the documentation which comes with the device.

10.5 Disposal

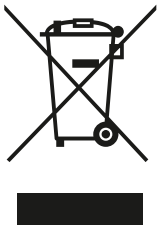

Devices identified by this symbol may not be disposed of in the municipal waste disposal services under observance of the Directive 2002/96/EC on waste electronic and electrical equipment (WEEE).

They can be returned to the supplier within the EC or to a locally approved disposal service. Observe the specific regulations valid in your country.

Note

Special disposal required

The device includes components that require special disposal.

- Dispose of the device properly and environmentally through a local waste disposal contractor.

Technical data

11

11.1 Overview of technical data

Introduction

The following overview of technical data provides you with a quick and easy access to relevant data and characteristic numbers.

Remember that the tables partially contain the data of the three communication types HART, PROFIBUS and Foundation Fieldbus. This data deviates in many cases. Therefore, adhere to the communication type used by you when using the technical data.

Contents of the chapter

- Input point (Page 170)
- Output (Page 177)
- Measuring accuracy (Page 177)
- Operating conditions (Page 183)
- Construction (Page 187)
- Display, keyboard and auxiliary power (Page 191)
- Certificates and approvals (Page 192)
- HART communication (Page 194)

11.2 Input point

Gauge pressure input						
	HART			**PROFIBUS PA or Foundation Fieldbus**		
Measured variable	Gauge pressure					
Span (continuously adjustable) or measuring range, max. operating pressure (in accordance with 97/23/EC Pressure Equipment Directive) and max. test pressure (in accordance with DIN 16086) (max. 120 bar for oxygen measurement)	Measuring span	Maximum operating pressure MAWP (PS)	Maximum permissible test pressure	Measuring range	Maximum permissible operating pressure	Maximum test pressure
	0.01 … 1 bar g (0.15 … 14.5 psi g)	4 bar g (58 psi g)	6 bar g (87 psi g)	1 bar g (14.5 psi g)	4 bar g (58 psi g)	6 bar g (87 psi g)
	0.04 … 4 bar g (0.58 … 58 psi g)	7 bar g (102 psi g)	10 bar g (145 psi g)	4 bar g (58 psi g)	7 bar g (102 psi g)	10 bar g (145 psi g)
	0.16 … 16 bar g (2.3 … 232 psi g)	21 bar g (305 psi g)	32 bar g (464 psi g)	16 bar g (232 psi g)	21 bar g (305 psi g)	32 bar g (464 psi g)
	0.63 … 63 bar g (9.1 … 914 psi g)	67 bar g (972 psi g)	100 bar g (1450 psi g)	63 bar g (914 psi g)	67 bar g (972 psi g)	100 bar g (1450 psi g)
	1.6 … 160 bar g (23 … 2321 psi g)	167 bar g (2422 psi g)	250 bar g (3626 psi g)	160 bar g (2321 psi g)	167 bar g (2422 psi g)	250 bar g (3626 psi g)
	4 … 400 bar g (58 … 5802 psi g)	400 bar g (5802 psi g)	600 bar g (8702 psi g)	400 bar g (5802 psi g)	400 bar g (5802 psi g)	600 bar g (8702 psi g)
	7,0 ... 700 bar g (102 ... 10153 psi g)	800 bar g (11603 psi g)	800 bar g (11603 psi g)	700 bar g (10153 psi g)	800 bar g (11603 psi g)	800 bar g (11603 psi g)
Lower measuring limit						
• Measuring cell with silicon oil filling	30 mbar a (0.44 psi a)					
• Measuring cell with inert liquid	30 mbar a (0.44 psi a)					
Upper measuring limit	100% of max. span (max. 120 bar g (1740 psi g) for oxygen measurement)			100% of max. measuring range (max. 120 bar g (1740 psi g) for oxygen measurement)		
Start-of-scale value	between the measuring limits (continuously adjustable)					

gauge pressure input, with flush mounted diaphragm						
	HART			**PROFIBUS PA or Foundation Fieldbus**		
Measured variable	Gauge pressure					
Measuring span (continuously adjustable) or measuring range, max permissible operating pressure and max. permissible test pressure	Span	Maximum operating pressure MAWP (PS)	Maximum test pressure	Measuring range	Maximum operating pressure	Maximum test pressure
	0.01 … 1 bar g (0.15 … 14.5 psi g)	4 bar g (58 psi g)	6 bar g (87 psi g)	1 bar g (14.5 psi g)	4 bar g (58 psi g)	6 bar g (87 psi g)
	0.04 … 4 bar g (0.58 … 58 psi g)	7 bar g (102 psi g)	10 bar g (145 psi g)	4 bar g (58 psi g)	7 bar g (102 psi g)	10 bar g (145 psi g)
	0.16 … 16 bar g (2.3 … 232 psi g)	21 bar g (305 psi g)	32 bar g (464 psi g)	16 bar g (232 psi g)	21 bar g (305 psi g)	32 bar g (464 psi g)
	0.6 … 63 bar g (9.1 … 914 psi g)	67 bar g (972 psi g)	100 bar g (1450 psi g)	63 bar g (914 psi g)	67 bar g (972 psi g)	100 bar g (1450 psi g)
Lower measuring limit						
• Measuring cell with silicon oil filling	100 mbar a (1.45 psi a)					
• Measuring cell with inert liquid	100 mbar a (1.45 psi a)					
• Measuring cell with neobee	100 mbar a (13.05 psi a)					
Upper measuring limit	100% of maximum measuring span			100 % of the max. measuring range		

Absolute pressure input, with flush-mounted diaphragm						
	HART			**PROFIBUS PA or Foundation Fieldbus**		
Measured variable	Gauge pressure					
Span (continuously adjustable) or measuring range, max. operating pressure and max. test pressure	Span	Maximum operating pressure MAWP (PS)	Maximum test pressure	Measuring range	Maximum operating pressure	Maximum test pressure
	43 … 1300 mbar a (17 ... 525 inH_2O)	2.6 bar a (37.7 psi a)	10 bar a (145 psi a)	1.3 bar a (18.9 psi a)	2.6 bar a (37.7 psi a)	10 bar a (145 psi a)
	160 … 5000 mbar a (2.32 … 72.5 psi a)	10 bar a (145 psi a)	30 bar a (435 psi a)	5 bar a (72.5 psi a)	10 bar a (145 psi a)	30 bar a (435 psi a)
	1 … 30 bar a (14.5 … 435 psi a)	45 bar a (653 psi a)	100 bar a (1450 psi a)	30 bar a (435 psi a)	45 bar a (653 psi a)	100 bar a (1450 psi a)
	Depending on the process connection, the span may differ from these values			Depending on the process connection, the measuring range may differ from these values		

Absolute pressure input, with flush-mounted diaphragm						
	HART			**PROFIBUS PA or Foundation Fieldbus**		
Lower measuring limit	0 bar a (0 psi a)					
Upper measuring limit	100% of maximum span			100 % of max. measuring range		

DS III input with PMC connection						
	HART			**PROFIBUS PA or Foundation Fieldbus**		
Measured variable	Gauge pressure					
Measuring span (continuously adjustable) or measuring range, max permissible operating pressure and max. permissible test pressure	Span	Maximum operating pressure MAWP (PS)	Maximum test pressure	Measuring range	Maximum permissible operating pressure	Maximum permissible test pressure
	0.01 … 1 bar g (0.15 … 14.5 psi g) [1]	4 bar g (58 psi g)	6 bar g (87 psi g)	1 bar g (14.5 psi g) [1]	4 bar g (58 psi g)	6 bar g (87 psi g)
	0.04 … 4 bar g (0.58 … 58 psi g)	7 bar g (102 psi g)	10 bar g (145 psi g)	4 bar g (58 psi g)	7 bar g (102 psi g)	10 bar g (145 psi g)
	0.16 … 16 bar g (2.3 … 232 psi g)	21 bar g (305 psi g)	32 bar g (464 psi g)	16 bar g (232 psi g)	21 bar g (305 psi g)	32 bar g (464 psi g)
Lower measuring limit						
• Measuring cell with silicon oil filling [2]	100 mbar a (1.45 psi a)					
• Measuring cell with inert liquid [2]	100 mbar a (1.45 psi a)					
• Measuring cell with neobee [2]	100 mbar a (13.05 psi a)					
Upper measuring limit	100% of maximum span			100 % of max. measuring range		

[1] 1 bar g (14.5 psi g) only in PMC-Style Standard, not in Minibolt

[2] For PMC-Style Minibolt, the measuring span should not be less than 500 mbar

Absolute pressure input (from the gauge pressure series)						
	HART			**PROFIBUS PA or Foundation Fieldbus**		
Measured variable	Absolute pressure					
Measuring span (continuously adjustable) or measuring range, max permissible operating pressure (as per 97/23/EC pressure device guideline) and max. permissible test pressure (as per DIN 16086)	Span	Maximum operating pressure MAWP (PS)	Maximum test pressure	Measuring range	Maximum operating pressure	Maximum test pressure
	8.3 … 250 mbar a (3 ... 100 inH_2O)	1.5 bar a (21.8 psi a)	6 bar a (87 psi a)	250 mbar a (100 inH_2O)	1.5 bar a (21.8 psi a)	6 bar a (87 psi a)
	43 … 1300 mbar a (17 ... 525 inH_2O)	2.6 bar a (37.7 psi a)	10 bar a (145 psi a)	1.3 bar a (18.9 psi a)	2.6 bar a (37.7 psi a)	10 bar a (145 psi a)
	160 … 5000 mbar a (2.32 … 72.5 psi a)	10 bar a (145 psi a)	30 bar a (435 psi a)	5 bar a (72.5 psi a)	10 bar a (145 psi a)	30 bar a (435 psi a)
	1 … 30 bar a (14.5 … 435 psi a)	45 bar a (653 psi a)	100 bar a (1450 psi a)	30 bar a (435 psi a)	45 bar a (653 psi a)	100 bar a (1450 psi a)
Lower measuring limit						
• Measuring cell with silicon oil filling	0 mbar a (0 psi a)					
• Measuring cell with inert liquid						
for process temperature -20°C < ϑ ≤ 60°C (-4°F < ϑ ≤ +140°F)	30 mbar a (0.44 psi a)					
for process temperature 60°C < ϑ ≤ 100°C (max. 85°C for measuring cell 30 bar) (140°F < ϑ ≤ 212°F (max. 185°F for measuring cell 435 psi))	30 mbar a + 20 mbar a • (ϑ - 60 °C)/°C (0.44 psi a + 0.29 psi a • (ϑ - 108 °F)/°F)					
Upper measuring limit	100% of max. span (max. 120 bar g (1740 psi g) for oxygen measurement)			100% of max. measuring range (max. 120 bar g (1740 psi g) for oxygen measurement)		
Start-of-scale value	between the measuring limits (continuously adjustable)					

Absolute pressure input (from the differential pressure series)				
	HART		**PROFIBUS PA or Foundation Fieldbus**	
Measured variable	Absolute pressure			
Measuring span (continuously adjustable) or measuring range and max permissible operating pressure (as per 97/23/EC pressure device guideline)	Span	Maximum operating pressure MAWP (PS)	Measuring range	Maximum operating pressure
	8.3 … 250 mbar a (3 ... 100 inH_2O)	32 bar a (464 psi a)	250 mbar a (100 inH_2O)	32 bar a (464 psi a)
	43 … 1300 mbar a (17 ... 525 inH_2O)	32 bar a (464 psi a)	1300 mbar a (525 inH_2O)	32 bar a (464 psi a)
	160 … 5000 bar a (2.32 … 72.5 psi a)	32 bar a (464 psi a)	5 bar a (72.5 psi a)	32 bar a (464 psi a)
	1 … 30 bar a (14.5 … 435 psi a)	160 bar a (2320 psi a)	30 bar a (435 psi a)	160 bar a (2320 psi a)
	5.3 … 100 bar a (76.9 … 1450 psi a)	160 bar a (2320 psi a)	100 bar a (1450 psi a)	160 bar a (2320 psi a)
Lower measuring limit				
• Measuring cell with silicon oil filling	0 mbar a (0 psi a)			
• Measuring cell with inert liquid				
for process temperature -20°C < ϑ ≤ 60°C (-4°F < ϑ ≤ +140°F)	30 mbar a (0.44 psi a)			
for process temperature 60°C < ϑ ≤ 100°C (max. 85°C for measuring cell 30 bar) (140°F < ϑ ≤ 212°F (max. 185°F for measuring cell 435 psi))	30 mbar a + 20 mbar a • (ϑ - 60 °C)/°C (0.44 psi a + 0.29 psi a • (ϑ - 108 °F)/°F)			
Upper measuring limit	100% of max. span (max. 120 bar g (1740 psi g) for oxygen measurement)		100% of max. measuring range (max. 120 bar g (1740 psi g) for oxygen measurement)	
Start of scale value	between the measuring limits (continuously adjustable)			

Differential pressure and flow rate input				
	HART		**PROFIBUS PA or Foundation Fieldbus**	
Measured variable	Differential pressure and flow rate			
Measuring span (continuously adjustable) or measuring range and max permissible operating pressure (as per 97/23/EC pressure device guideline)	Span	Maximum operating pressure MAWP (PS)	Measuring range	Maximum permissible operating pressure
	1 … 20 mbar (0.4015 … 8.031 inH_2O)	32 bar (464 psi)	20 mbar (8.031 inH_2O)	32 bar a (464 psi)
	1 … 60 mbar (0.4015 … 24.09 inH_2O)	160 bar (2320 psi)	60 mbar (24.09 inH_2O)	160 bar (2320 psi)
	2.5 … 250 mbar (1.004 … 100.4 inH_2O)		250 mbar (100.4 inH_2O)	
	6 … 600 mbar (2.409 … 240.9 inH_2O)		600 mbar (240.9 inH_2O)	
	16 … 1600 mbar (6.424 … 642.4 inH_2O)		1600 mbar (642.4 inH_2O)	
	50 … 5000 mbar (20.08 … 2008 inH_2O)		5 bar (2008 inH_2O)	
	0.3 … 30 bar (4.35 … 435 psi)		30 bar (435 psi)	
	2.5 … 250 mbar (1.004 … 100.4 inH_2O)	420 bar (6091 psi)	250 mbar (100.4 inH_2O)	420 bar (6091 psi)
	6 … 600 mbar (2.409 … 240.9 inH_2O)		600 mbar (240.9 inH_2O)	
	16 … 1600 mbar (6.424 … 642.4 inH_2O)		1600 mbar (642.4 inH_2O)	
	50 … 5000 mbar (20.08 … 2008 inH_2O)		5 bar (2008 inH_2O)	
	0.3 … 30 bar (4.35 … 435 psi)		30 bar (435 psi)	
Lower measuring limit				
• Measuring cell with silicon oil filling	-100% of max. measuring range (-33 % for 30 bar (435 psi) measuring cell) or 30 mbar a (0.44 psi a)			
• Measuring cell with inert liquid				

Differential pressure and flow rate input		
	HART	**PROFIBUS PA or Foundation Fieldbus**
for process temperature of -20°C < ϑ ≤ 60°C (-4°F < ϑ ≤ +140°F)	-100% of max. measuring range (-33 % for 30 bar (435 psi) measuring cell) or 30 mbar a (0.44 psi a)	
for process temperature 60°C < ϑ ≤ 100°C (max. 85°C for measuring cell 30 bar) (140°F < ϑ ≤ 212°F (max. 185°F for measuring cell 435 psi))	• -100% of max. measuring range (-33% for 30 bar (435 psi) measuring cell) • 30 mbar a + 20 mbar a • (ϑ - 60 °C)/°C (0.44 psi a + 0.29 psi a • (ϑ - 108 °F)/°F)	
Upper measuring limit	100% of max. span (max. 120 bar g (1740 psi g) for oxygen measurement)	100% of max. measuring range (max. 120 bar g (1740 psi g) for oxygen measurement)
Start of scale value	between the measuring limits (continuously adjustable)	

Level input				
	HART		**PROFIBUS PA or Foundation Fieldbus**	
Measured variable	Level			
Measuring span (continuously adjustable) or measuring range and max permissible operating pressure (as per 97/23/EC pressure device guideline)	Span	Maximum operating pressure MAWP (PS)	Measuring range	Maximum permissible operating pressure
	25 … 250 mbar (10 ... 100 inH_2O)	see the mounting flange	250 mbar (100 inH_2O)	see the mounting flange
	25 … 600 mbar (10 … 240 inH_2O)		600 mbar (240 inH_2O)	
	53 … 1600 mbar (21 … 640 inH_2O)		1600 mbar (640 inH_2O)	
	160 … 5000 mbar (2.32 … 72.5 psi)		5 bar (72.5 psi)	
Lower measuring limit				
• Measuring cell with silicon oil filling	-100% of the max. measuring range or 30 mbar a (0.44 psi a) depending on the mounting flange			
• Measuring cell with inert liquid	-100% of the max. measuring range or 30 mbar a (0.44 psi a) depending on the mounting flange			
Upper measuring limit	100% of maximum span		100 % of max. measuring range	
Start of scale value	between the measuring limits continuously adjustable			

11.3 Output

Output		
	HART	**PROFIBUS PA or Foundation Fieldbus**
Output signal	4 … 20 mA	Digital PROFIBUS-PA or Foundation Fieldbus signal
• Lower limit (continuously adjustable)	3.55 mA, set to 3.84 mA in the factory	–
• Upper limit (continuously adjustable)	23 mA, set to 20.5 mA or optionally 22.0 mA in the factory	–
• Ripple (without HART communication)	I_{SS} ≤ 0.5 % of the max. output current	–
adjustable time constants damping coefficient	0 … 100 s, continuously adjustable	0 … 100 s, continuously adjustable
Adjustable time constants (T63) with local operation	0 … 100 s, in steps of 0.1 s Factory-set to 2 s	0 … 100 s, in steps of 0.1 s Factory-set to 2 s
• Current transmitter	3.55 … 23 mA	–
• Failure signal	3.55 … 23 mA	–
Load	Resistor R [Ω]	–
• Without HART communication	$R = \frac{U_H - 10{,}5\ V}{23\ mA}$	–
	U_H Power supply in V	
• With HART communication		–
HART communicator (Handheld)	R =230 … 1100 Ω	–
SIMATIC PDM	R =230 … 500 Ω	–
Characteristic curve	• Linearly increasing or linearly decreasing • Linear increase or decrease or square root extracting increasing (only for DS III differential pressure and flow rate)	
Bus physics	–	IEC 61158-2
Polarity-independent	–	Yes

11.4 Measuring accuracy

Measuring accuracy (as per EN 60770-1) gauge pressure		
	HART	**PROFIBUS PA or Foundation Fieldbus**
Reference conditions	• Rising characteristic curve • Start of scale value 0 bar • Seal diaphragm: stainless steel • Measuring cell with silicon oil filling • Room temperature 25°C (77°F)	
	• Measuring span ratio r r = maximum measuring span or set measuring span	–

Measuring accuracy (as per EN 60770-1) gauge pressure		
	HART	**PROFIBUS PA or Foundation Fieldbus**
Measurement deviation with cut-off point setting, including hysteresis and repeatability.		
Linear characteristic curve		≤ 0,075 %
• r ≤ 10	≤ (0.0029 • r + 0.071) %	–
• 10 < r ≤ 30	≤ (0.0045 • r + 0.071) %	–
• 30 < r ≤ 100	≤ (0.005 • r + 0.05) %	–
Repeatability	Included in the measuring deviation	
Hysteresis	Included in the measurement deviation	
Settling time T_{63} without electrical damping	approx. 0.2 s	
Long-term drift at ±30°C (±54°F)		In 5 years ≤ 0.25 %
• 1- to 4-bar measuring cell	In 5 years ≤ (0.25 • r) %	
• 16- to 400-bar measuring cell	In 5 years ≤ (0.125 • r) %	
• 700-bar measuring cell	In 5 years ≤ (0.25 • r) %	
Ambient temperature influence	As percentage	
• at -10 … +60 °C (14 … 140 °F)	≤ (0.08 • r + 0.1) %	≤ 0,3 %
• at -40 … -10°C and +60 … +85 °C (-40 … 14°F and 140 … 185°F)	≤ (0.1 • r + 0.15) % per 10 K	≤ 0.25 % per 10 K
Influence of mounting position	≤ 0.05 mbar g (0.000725 psi g) per 10° inclination correction via zero offset	
Power supply influence	In percent per change in voltage 0.005 % per 1 V	–
Measuring value resolution	–	$3 • 10^{-5}$ of the rated measuring range

Gauge pressure measuring accuracy, with flush mounted diaphragm		
	HART	**PROFIBUS PA or Foundation Fieldbus**
Reference conditions	• Rising characteristic curve • Start of scale value 0 bar • Seal diaphragm: stainless steel • Measuring cell with silicon oil filling • Room temperature 25°C (77°F)	
	• Measuring span ratio r r = maximum measuring span or set measuring span	–
Measurement deviation with limit setting, including hysteresis and repeatability.		
Linear characteristic curve		≤ 0,075 %

Gauge pressure measuring accuracy, with flush mounted diaphragm		
	HART	**PROFIBUS PA or Foundation Fieldbus**
• r ≤ 10	≤ (0.0029 • r + 0.071) %	–
• 10 < r ≤ 30	≤ (0.0045 • r + 0.071) %	–
• 30 < r ≤ 100	≤ (0.005 • r + 0.05) %	–
Settling time T_{63} without electrical damping	Approx. 0.2 s	
Long-term drift at ±30° C (±54° F)	In 5 years ≤ (0.25 • r) %	In 5 years ≤ 0.25%
Ambient temperature influence	In percent	
• At -10 … +60 °C (14 … 140 °F)	≤ (0.1 • r + 0.2) %	≤ 0,3 %
• at -40 … -10°C and +60 … +85°C (-40 … 14°F and 140 … 185°F)	≤ (0.1 • r + 0.15) % per 10 K	≤ 0.25 % per 10 K
Process temperature influence	In pressure per temperature change	
• Temperature difference between process temperature and ambient temperature	3 mbar per 10 K (0.04 psi per 10 K)	
Influence of mounting position	In pressure per change in angle 0.4 mbar (0.006 psi) per 10° inclination Correction via zero offset	
Power supply influence	In percent per change in voltage 0.005 % per 1 V	–
Measured value resolution	–	3 • 10^{-5} of the rated measuring range

Measuring accuracy (as per EN 60770-1) DS III with PMC connection		
	HART	**PROFIBUS PA or Foundation Fieldbus**
Reference conditions	• Rising characteristic curve • Start of scale value 0 bar • Seal diaphragm: stainless steel • Measuring cell with silicon oil filling • Room temperature 25°C (77°F)	
	• Measuring span ratio r r = maximum measuring span or set measuring span	–
Measurement deviation with limit setting, including hysteresis and repeatability.		
Linear characteristic curve		≤ 0,075 %
• r ≤ 10	≤ (0.0029 • r + 0.071) %	–
• 10 < r ≤ 30	≤ (0.0045 • r + 0.071) %	–
• 30 < r ≤ 100 *)	≤ (0.005 • r + 0.05) %	–
Repeatability	Included in the measurement deviation	
Hysteresis	Included in the measurement deviation	
Settling time T_{63} without electrical damping	Approx. 0.2 s	

Measuring accuracy (as per EN 60770-1) DS III with PMC connection		
	HART	**PROFIBUS PA or Foundation Fieldbus**
Long-term drift at ±30° C (±54° F)	In 5 years ≤ (0.25 • r) %	In 5 years ≤ 0.25%
Ambient temperature influence	In percent	
• At -10 … +60 °C (14 … 140 °F)	≤ (0.08 • r + 0.1) %	≤ 0,3 %
• at -40 … -10°C and +60 … +85°C (-40 … 14°F and 140 … 185°F)	≤ (0.1 • r + 0.15) % per 10 K	≤ 0.25 % per 10 K
Process temperature influence	In pressure per temperature change	
• Temperature difference between process temperature and ambient temperature	3 mbar per 10 K (0.04 psi per 10 K)	
Influence of mounting position	In pressure per change in angle ≤ 0.1 mbar g (0.00145 psi g) per 10° inclination correction via zero offset	
Power supply influence	In percent per change in voltage 0.005 % per 1 V	–
Measured value resolution	–	3 • 10^{-5} of the rated measuring range

*) not for 4 bar PMC Minibolt

Absolute pressure measuring accuracy (from gauge and differential pressure series)		
	HART	**PROFIBUS PA or Foundation Fieldbus**
Reference conditions	• Rising characteristic curve • Start of scale value 0 bar • Seal diaphragm: stainless steel • Measuring cell with silicon oil filling • Room temperature 25°C (77°F)	
	• Measuring span ratio r r = maximum measuring span or set measuring span	–
Measurement deviation with limit setting, including hysteresis and repeatability.		
Linear characteristic curve		≤ 0,1 %
• r ≤ 10	≤ 0,1 %	–
• 10 < r ≤ 30	≤ 0,2 %	–
Settling time T_{63} without electrical damping	approx. 0.2 s	
Long-term drift at ±30°C (±54°F)	per year ≤ (0.1 • r) %	per year ≤ 0.1 %
Ambient temperature influence	In percent	
• At -10 … +60 °C (14 … 140 °F)	≤ (0.1 • r + 0.2) %	≤ 0,3 %
• at -40 … -10°C and +60 … +85°C (-40 … 14°F and 140 … 185°F)	≤ (0.1 • r + 0.15) % per 10 K	≤ 0.25 % per 10 K

Absolute pressure measuring accuracy (from gauge and differential pressure series)		
	HART	**PROFIBUS PA or Foundation Fieldbus**
Influence of mounting position	In pressure per change of angle • for absolute pressure (from the gauge pressure series): 0.05 mbar (0.000725 psi) per 10° inclination • for absolute pressure (from the differential pressure series): 0.7 mbar (0.001015 psi) per 10° inclination Correction via zero offset	
Power supply influence	In percent per change in voltage 0.005 % per 1 V	–
Measured value resolution	–	3 • 10^{-5} of the rated measuring range

Differential pressure and flow rate measuring accuracy		
	HART	**PROFIBUS PA or Foundation Fieldbus**
Reference conditions	• Rising characteristic curve • Start of scale value 0 bar • Seal diaphragm: stainless steel • Measuring cell with silicon oil filling • Room temperature 25°C (77°F)	
	• Measuring span ratio r r = maximum measuring span or set measuring span	–
Measurement deviation with limit setting, including hysteresis and repeatability.		
Linear characteristic curve		≤ 0,075
• r ≤ 10	≤ (0.0029 • r + 0.071) %	–
• 10 < r ≤ 30	≤ (0.0045 • r + 0.071) %	–
• 30 < r ≤ 100	≤ (0.005 • r + 0.05) %	–
Square root extracting characteristic curve (flow rate > 50%)		≤ 0,1 %
• r ≤ 10	≤ 0,1 %	–
• 10 < r ≤ 30	≤ 0,2 %	–
square root extracting characteristic curve (flow rate 25 … 50%)		≤ 0,2 %
• r ≤ 10	≤ 0,2 %	–
• 10 < r ≤ 30	≤ 0,4 %	–
Settling time T_{63} without electrical damping	• approx. 0.2 s • approx 0.3 s for measuring cell 20 and 60 mbar (0.29 and 0.87 psi)	
Long-term drift at ±30°C (±54°F)	≤ (0.25 • r) % per five years static pressure max. 70 bar g (1015 psi g)	≤ 0.25 % per five years static pressure max. 70 bar g (1015 psi g)
• 20 mbar (0.29 psi) measuring cell	≤ (0.2 • r) % per year	≤ 0.2 % per year
• 250, 600, 1600 and 5000 mbar (0.29, 0.87, 2.32 and 7.25 psi) measuring cell	≤ (0.125 • r) % every 5 years	≤ 0.125% every 5 years

Differential pressure and flow rate measuring accuracy		
	HART	**PROFIBUS PA or Foundation Fieldbus**
Effect of the ambient temperature (double values for measuring cell 20 mbar g (0.29 psi g))	As percentage	
• At -10 … +60°C (14 … 140°F)	≤ (0.08 • r + 0.1) %	≤ 0,3 %
• At -40 … -10°C and +60 … +85°C (-40 … 14°F and 140 … 185°F)	≤ (0.1 • r + 0.15) % per 10 K	≤ 0.25 % per 10 K
Effect of static pressure		
• At the start of scale value	≤ (0.1 • r) % per 70 bar (1015 psi)	≤ 0.1% per 70 bar (1015 psi)
Measuring cell 20 mbar (0.29 psi)	≤ (0.15 • r) % per 32 bar (464 psi)	≤ 0.15 % per 32 bar (464 psi)
• On the measuring span	≤ 0.15 % per 70 bar (1015 psi)	-
Measuring cell 20 mbar (0.29 psi)	≤ 0.2 % per 32 bar (464 psi)	-
Influence of mounting position	In pressure per change of angle ≤ 0.7 mbar (0.001015 psi) per 10° inclination Correction via zero offset	
Power supply influence	In percent per change in voltage 0.005 % per 1 V	–
Measured value resolution	–	3 • 10^{-5} of the rated measuring range

Level measuring accuracy		
	HART	**PROFIBUS PA or Foundation Fieldbus**
Reference conditions	• Rising characteristic curve • Start of scale value 0 bar • Seal diaphragm: stainless steel • Measuring cell with silicon oil filling • Room temperature 25°C (77°F)	
	• Measuring span ratio r r = maximum measuring span or set measuring span	–
Measurement deviation with limit setting, including hysteresis and repeatability.		
Linear characteristic curve		≤ 0,075
• r ≤ 10	≤ 0,15 %	–
• 10 < r ≤ 30	≤ 0,3 %	–
• 30 < r ≤ 100	≤ (0.0075 • r + 0.075) %	–
Settling time T_{63} without electrical damping	approx. 0.2 s	
Long-term drift at ±30°C (±54°F)	≤ (0.25 • r) % per five years static pressure max. 70 bar g (1015 psi g)	≤ 0.25 % per five years static pressure max. 70 bar g (1015 psi g)
Ambient temperature influence	As percentage	
• At -10 … +60°C (14 … 140°F) (0.4 instead of 0.2 at 10 < r ≤ 30)		

Level measuring accuracy		
	HART	**PROFIBUS PA or Foundation Fieldbus**
Measuring cell 250 mbar (3.63 psi)	≤ (0.5 • r + 0.2) %	≤ 0,7 %
Measuring cell 600 mbar (8.7 psi)	≤ (0.3 • r + 0.2) %	≤ 0,5 %
Measuring cell 1.6 and 5 bar (23.2 and 72.5 psi)	≤ (0.25 • r + 0.2) %	≤ 0,45 %
• At -40 … -10°C and +60 … +85°C (-40 … 14°F and 140 … 185°F) (double values for 10 < r ≤ 30)		
Measuring cell 250 mbar (3.63 psi)	≤ (0.25 • r + 0.15) %/10 K (≤ (0.25 • r + 0.15) %/18°F)	≤ 0.4 %/10 K (≤ 0.4 %/18°F)
Measuring cell 600 mbar (8.7 psi)	≤ (0.15 • r + 0.15) %/10 K (≤ (0.15 • r + 0.15) %/18°F)	≤ 0.3 %/10 K (≤ 0.3 %/18°F)
Measuring cell 1.6 and 5 bar (23.2 and 72.5 psi)	≤ (0.12 • r + 0.15) %/10 K (≤ (0.12 • r + 0.15) %/18°F)	≤ 0.27 %/10 K (≤ 0.27 %/18°F)
Effect of static pressure		
• At the start of scale value		
Measuring cell 250 mbar (0.29 psi)	≤ (0.3 • r) % per nominal pressure	≤ 0.3 % per nominal pressure
Measuring cell 600 mbar (8.7 psi)	≤ (0.15 • r) % per nominal pressure	≤ 0.15 % per nominal pressure
Measuring cell 1.6 and 5 bar (23.2 and 72.5 psi)	≤ (0.1 • r) % per nominal pressure	≤ 0.1 % per nominal pressure
• On the measuring span	≤ (0.1 • r) % per nominal pressure	≤ 0.1 % per nominal pressure
Influence of mounting position	depending on the fill fluid in the mounting flange	
Power supply influence	In percent per change in voltage 0.005 % per 1 V	
Measuring value resolution	–	3 • 10^{-5} of the rated measuring range

11.5 Operating conditions

Rated conditions for gauge pressure and absolute pressure (from the gauge pressure series)	
Installation conditions	
Ambient conditions	
• Ambient temperature	
Note	Observe the temperature class in hazardous areas.
Measuring cell with silicon oil filling	-40 … +85 °C (-40 … +185 °F)
Measuring cell with inert liquid	-20 … +85 °C (-4 … +185 °F)
Display	-30 … +85 °C (-22 … +185 °F)
Storage temperature	-50 … +85 °C (-58 … +185 °F)
• Climate class	
Condensation	Permitted

Rated conditions for gauge pressure and absolute pressure (from the gauge pressure series)	
• Degree of protection in accordance with EN 60529	IP65, IP68
• Degree of protection in accordance with NEMA 250	NEMA 4X
• Electromagnetic Compatibility	
Interference emission and interference immunity	As per EN 61326 and NAMUR NE 21
Medium conditions	
• Process temperature	
Measuring cell with silicon oil filling	-40 … +100 °C (-40 … +212 °F)
Measuring cell with inert liquid filling	-20 … +100 °C (-4 … +212 °F)
With extension to Zone 0	-20 … +60 °C (-4 … +140 °F)

Conditions of use for gauge pressure and absolute pressure with flush-mounted diaphragm	
Installation conditions	
Ambient temperature	
Note	Observe the temperature class in explosive atmospheres.
• Measuring cell with silicon oil filling	-40 … +85 °C (-40 … +185 °F)
• Measuring cell with inert liquid filling	-20 … +85 °C (-4 … +185 °F)
• Measuring cell with Neobee (FDA-compliant)	-10 … +85 °C (14 … 185 °F)
• Display	-30 … +85 °C (-22 … +185 °F)
• Storage temperature	-50 … +85 °C (-58 … +185 °F) (for Neobee: -20 ... + 85 °C (-4 ... +185 °F)) (for high-temperature oil: -10 ... + 85 °C (14 ... 185 °F))
Climate class	
Condensation	permitted
• Degree of protection in accordance with EN 60 529	IP65, IP68
• Degree of protection in accordance with NEMA 250	NEMA 4X
Electromagnetic compatibility	
• Emitted interference and interference immunity	In accordance with EN 61326 and NAMUR NE 21
Process medium conditions	
Process medium temperature[1)]	
• Measuring cell with silicon oil filling	-40 … +150°C (-40 … +302 °F) -40 … +200°C (-40 … +392 °F) with cooling extension
• Measuring cell with inert liquid filling	-20 … +100 °C (-4 … +212 °F) -20 … +200°C (-4 … +392 °F) with cooling extension

Conditions of use for gauge pressure and absolute pressure with flush-mounted diaphragm	
• Measuring cell with Neobee (FDA-compliant)	-10 … +150°C (14 … 302 °F) -10 … +200°C (14 … 392 °F) with cooling extension
• Measuring cell with high-temperature oil filling	-10 ... +250 °C (14 ... 482 °F) with cooling extension

[1] Observe the temperature limits in the process connection standards (e.g. DIN 32676 and DIN 11851) for the maximum process medium temperature for flush-mounted process connections.

Rated conditions DS III with PMC connection	
Installation conditions	
Ambient temperature	
Note	Observe the temperature class in hazardous areas.
• Measuring cell with silicon oil filling	-40 … +85 °C (-40 … +185 °F)
• Display	-30 … +85 °C (-22 … +185 °F)
• Storage temperature	-50 … +85 °C (-58 … +185 °F)
Climate class	
Condensation	Permitted
• Degree of protection in accordance with EN 60529	IP65, IP68
• Degree of protection in accordance with NEMA 250	NEMA 4X
Electromagnetic compatibility	
• Emitted interference and interference immunity	In accordance with EN 61326 and NAMUR NE 21
Process medium conditions	
• Process medium temperature	-40 … +100 °C (-40 … +212 °F)

Rated conditions for absolute pressure (from the differential pressure series), differential pressure and flow rate	
Installation conditions	
• Installation instruction	any
Ambient conditions	
• Ambient temperature	
Note	Observe the temperature class in hazardous areas.
Measuring cell with silicon oil filling	-40 … +85 °C (-40 … +185 °F)
• Measuring cell 30 bar (435 psi)	• -40 … +85°C (-40 … +185 °F) • for flow rate: -20 … +85°C (-4 … +185 °F)
Measuring cell with inert liquid filling	-20 … +85 °C (-4 … +185 °F)
Display	-30 … +85 °C (-22 … +185 °F)
Storage temperature	-50 … +85 °C (-58 … +185 °F)
• Climate class	
Condensation	Permitted

Rated conditions for absolute pressure (from the differential pressure series), differential pressure and flow rate	
• Degree of protection in accordance with EN 60529	IP65, IP68
• Degree of protection in accordance with NEMA 250	NEMA 4X
• Electromagnetic compatibility	
Emitted interference and interference immunity	In accordance with EN 61326 and NAMUR NE 21
Process medium conditions	
• Process medium temperature	
Measuring cell with silicon oil filling	-40 … +100 °C (-40 … +212 °F)
• Measuring cell 30 bar (435 psi)	• -40 … +85 °C (-40 … +185 °F) • With flow: -20 … +85 °C (-4 … +185 °F)
Measuring cell with inert liquid filling	-20 … +100 °C (-4 … +212 °F)
• Measuring cell 30 bar (435 psi)	• -40 … +85 °C (-40 … +185 °F) • With flow: -20 … +85 °C (-4 … +185 °F)
In conjunction with dust explosion protection	-20 … +60°C (-4 … +140°F)

Rated conditions for level	
Installation conditions	
• Installation instruction	specified through the flange
Ambient conditions	
• Ambient temperature	
Note	Observe the allocation of the max. permissible operating temperature to the max. permissible operating pressure of the relevant flange connection.
Measuring cell with silicon oil filling	-40 … +85 °C (-40 … +185 °F)
Display	-30 … +85 °C (-22 … +185 °F)
Storage temperature	-50 … +85 °C (-58 … +185 °F)
• Climate class	
Condensation	Permitted
• Degree of protection in accordance with EN 60529	IP65
• Degree of protection in accordance with NEMA 250	NEMA 4X
• Electromagnetic compatibility	
Emitted interference and interference immunity	In accordance with EN 61326 and NAMUR NE 21
Medium conditions	
• Process temperature	
Measuring cell with silicon oil filling	• Plus side: see the mounting flange • Minus side: -40 … +100°C (-40 … +212°F)

11.6 Construction

Construction for gauge pressure and absolute pressure (from the gauge pressure series)			
Weight	Approx. 1.5 kg (3.3 lb) for aluminum enclosure		
Material			
• Wetted parts materials			
Process connection	Stainless steel, mat. no. 1.4404/316L or Hastelloy C4, mat. no. 2.4610		
Oval flange	Stainless steel, mat. no. 1.4404/316L		
Seal diaphragm	Stainless steel, material no. 1.4404/316L or Hastelloy C276, material no. 2.4819		
• Non-wetted parts materials			
Electronics housing	• Copper-free die cast aluminum GD-AlSi 12 or stainless steel precision casting, mat. no. 1.4408 • Standard: Polyester-based paint Option: 2 coats: Coat 1: epoxy-based; coat 2: polyurethane • Stainless steel nameplate		
Mounting bracket	Steel or stainless steel		
Measuring cell filling	• Silicone oil • Neobee M20 • Inert liquid (max. 120 bar g (2320 psi g) for oxygen measurement)		
Process connection	G$^1/_2$B connection pin in accordance with DIN EN 837-1; $^1/_2$-14 NPT female thread or oval flange (PN 160 (MAWP 2320 psi g)) with M10 fastening screw thread in accordance with DIN 19213 or $^7/_{16}$-20 UNF in accordance with EN 61518. Male thread M20 x 1.5 and $^1/_2$-14 NPT.		
Electrical connection	Cable inlet using the following cable glands: • Pg 13.5 • M20 x 1.5 and ½-14 NPT or Han 7D/Han 8D connector[1)] – Cable diameter: 6 to 12 mm; types of protection "nA" and "ic" (Zone 2): 8 to 12 mm or a suitable cable gland for smaller diameters • M12 connector		
Torque for cable gland nut made of	Plastic	Metal	Stainless steel
	2.5 Nm (1.8 ft lb)	4.2 Nm (3.1 ft lb)	4.2 Nm (3.1 ft lb)

[1)] Han 8D is identical to Han 8U.

Construction for gauge pressure, with flush mounted diaphragm	
Weight	Approx 1.5 … 13.5 kg (3.3 … 30 lb) with aluminum enclosure
Material	
• Wetted parts materials	
Process connection	Stainless steel, mat. no. 1.4404/316L
Seal diaphragm	Stainless steel, mat. no. 1.4404/316L
• Non-wetted parts materials	

Construction for gauge pressure, with flush mounted diaphragm			
Electronics housing	• Non-copper aluminum die casting GD-AlSi 12 or stainless steel precision casting, mat. no. 1.4408 • Standard: Polyester-based paint Option: 2 coats: Coat 1: epoxy-based; coat 2: polyurethane • Stainless steel nameplate		
Mounting bracket	Steel or stainless steel		
Measuring cell filling	• Silicone oil • Neobee M20 • Inert liquid		
Process connection	• Flanges as per EN and ASME • F&B and Pharma flange, clamp and threaded connectors • NEUMO BioConnect/BioControl • PMC connections for the paper industry		
Electrical connection	Cable inlet using the following cable glands: • Pg 13.5 • M20x1.5 • ½-14 NPT • Han 7D/Han 8D plug[1)] • M12 connector		
Torque for cable gland nut made of	Plastic	Metal	Stainless steel
	2.5 Nm (1.8 ft lb)	4.2 Nm (3.1 ft lb)	4.2 Nm (3.1 ft lb)

1) Han 8D is identical to Han 8U.

DS III construction with PMC connection	
Weight	Approx. 1.5 kg (3.3 lb) for aluminum enclosure
Material	
• Wetted parts materials	
Gasket (standard)	PTFE flat gasket
O-ring (minibolt)	• FPM (Viton) • FFPM or NBR (optional)
Seal diaphragm	Hastelloy C276, mat. No. 2.4819
• Non-wetted parts materials	
Electronics housing	• Non-copper aluminum die casting GD-AlSi 12 or stainless steel precision casting, mat. no. 1.4408 • Standard: Polyester-based paint Option: 2 coats: Coat 1: epoxy-based; coat 2: polyurethane • Stainless steel nameplate
Mounting bracket	Steel or stainless steel
Measuring cell filling	• Silicone oil • Inert liquid
Process connection	

DS III construction with PMC connection			
• Standard	• Flush mounted • $1^1/_2$" • PMC Standard design		
• Minibolt	• Flush mounted • 1" • PMC Minibolt design		
Electrical connection	Cable inlet using the following cable glands: • Pg 13.5 • M20 x 1.5 • ½-14 NPT • Han 7D/Han 8D plug[1)] • M12 connector		
Torque for cable gland nut made of	Plastic	Metal	Stainless steel
	2.5 Nm (1.8 ft lb)	4.2 Nm (3.1 ft lb)	4.2 Nm (3.1 ft lb)

1) Han 8D is identical to Han 8U.

Design for absolute pressure (from the differential pressure series), differential pressure and flow rate	
Weight	Approx. 4.5 kg (9.9 lb) for aluminum enclosure
Material	
• Wetted parts materials	
Seal diaphragm	Stainless steel, mat. no. 1.4404/316L, Hastelloy C276, mat. no. 2.4819, Monel, mat. no. 2.4360, tantalum or gold
Pressure caps and locking screw	Stainless steel, mat. no. 1.4408 to PN 160, mat. no. 1.4571/316Ti for PN 420, Hastelloy C4, 2.4610 or Monel, mat. no. 2.4360
O-ring	FPM (Viton) or optionally: PTFE, FEP, FEPM and NBR
• Non-wetted parts materials	
Electronics housing	• Non-copper aluminum die casting GD-AlSi 12 or stainless steel precision casting, mat. no. 1.4408 • Standard: Polyester-based paint Option: 2 coats: Coat 1: epoxy-based; coat 2: polyurethane • Stainless steel nameplate
Pressure cap screws	Stainless steel
Mounting bracket	Steel or stainless steel
Measuring cell filling	• Silicone oil • Neobee M20 • Inert liquid (max. 120 bar g (2320 psi g) for oxygen measurement)
Process connection	$^1/_4$-18 NPT female thread and flat connection with $^7/_{16}$-20 UNF fastening screw thread in accordance with EN 61518 or M10 fastening screw thread in accordance with DIN 19213 (M12 for PN 420 (MAWP 6092 psi))

Design for absolute pressure (from the differential pressure series), differential pressure and flow rate			
Electrical connection	Screw terminals Cable inlet using the following cable glands: • Pg 13.5 • M20 x 1.5 • ½-14 NPT or Han 7D/Han 8D connector[1)] • M12 connector		
Torque for cable gland nut made of	Plastic	Metal	Stainless steel
	2.5 Nm (1.8 ft lb)	4.2 Nm (3.1 ft lb)	4.2 Nm (3.1 ft lb)

1) Han 8D is identical to Han 8U.

Construction for level	
Weight	
• as per EN (pressure transmitter with mounting flange, without tube)	approx 11 … 13 kg (24.2 … 28.7 lb)
• as per ASME (pressure transmitter with mounting flange, without tube)	approx 11 … 18 kg (24.2 … 39.7 lb)
Material	
• Wetted parts materials	
Plus side	
• Seal diaphragm on the mounting flange	Stainless steel, mat. no. 1.4404/316L, Monel 400, mat. no. 2.4360, Hastelloy B2, mat. no. 2.4617, Hastelloy C276, mat. no. 2.4819, Hastelloy C4, mat. no. 2.4610, tantalum, PTFE, ECTFE
• Sealing surface	smooth as per EN 1092-1, form B1 or ASME B16.5 RF 125 … 250 AA for stainless steel 316L, EN 2092-1 form B2 or ASME B16.5 RFSF for the remaining materials
Sealing material in the pressure caps	
• for standard applications	Viton
• for underpressure applications on the mounting flange	Copper
Minus side	
• Seal diaphragm	Stainless steel, mat. no. 1.4404/316L
• Pressure caps and locking screws	Stainless steel, mat. no. 1.4408
• O-ring	FPM (Viton)
• Non-wetted parts materials	
Electronics housing	• Non-copper aluminum die casting GD-AlSi 12 or stainless steel precision casting, mat. no. 1.4408 • Standard: Polyester-based paint Option: 2 coats: Coat 1: epoxy-based; coat 2: polyurethane • Stainless steel nameplate
Pressure cap screws	Stainless steel
Measuring cell filling	Silicone oil

Construction for level			
• Mounting flange fill fluid	Silicon oil or a different design		
Process connection			
• Plus side	Flange as per EN and ASME		
• Minus side	$^1/_4$-18 NPT female thread and flat connection with M10 fastening screw thread in accordance with DIN 19213 (M12 for PN 420 (MAWP 6092 psi)) or $^7/_{16}$-20 UNF in accordance with EN 61518		
Electrical connection	Screw terminals Cable inlet using the following cable glands: • Pg 13.5 • M20 x 1.5 • ½-14 NPT or Han 7D/Han 8D connector[1)] • M12 connector		
Torque for nut with			
• Cable gland made of plastic	2.5 Nm (1.8 ft lb)		
• Cable gland made of metal	4.2 Nm (3.1 ft lb)		
• Cable gland made of stainless steel	4.2 Nm (3.1 ft lb)		
Torque for cable gland nut made of	Plastic	Metal	Stainless steel
	2.5 Nm (1.8 ft lb)	4.2 Nm (3.1 ft lb)	4.2 Nm (3.1 ft lb)

[1)] Han 8D is identical to Han 8U.

11.7 Display, keyboard and auxiliary power

Display and user interface	
Keys	3 for on-site programming directly at the device
Display	• With or without integrated display (optional) • Cover with inspection window (optional)

Auxiliary power U_H		
	HART	**PROFIBUS PA or Foundation Fieldbus**
Terminal voltage at transmitter	• DC 10.5 V … 45 V • In the case of intrinsically safe operation 10.5 V … 30 V DC	–
Ripple	U_{SS} ≤ 0.2 V (47 … 125 Hz)	–
Noise	U_{eff} ≤ 1.2 V mV (0.5 to 10 kHz)	–
Auxiliary power	–	Bus-powered
Separate supply voltage	–	Not necessary
Bus voltage		
• Not	–	9 … 32 V
• For intrinsically safe operation	–	9 … 24 V
Current consumption		

Auxiliary power U_H		
	HART	**PROFIBUS PA or Foundation Fieldbus**
• Max. basic current	–	12.5 mA
• Starting current ≤ basic current	–	Yes
• Max. current in event of fault	–	15.5 mA
Error shut-down electronics (FDE) present	–	Yes

11.8 Certificates and approvals

Certificates and approvals		
	HART	**PROFIBUS PA or Foundation Fieldbus**
Classification according to Pressure Equipment Directive (PED 97/23/EC)	• for gases of Fluid Group 1 and liquids of Fluid Group 1; meets requirements of Article 3 Para. 3 (good engineering practice) • only for flow rate: for gases of Fluid Group 1 and liquids of Fluid Group 1; fulfills the basic safety requirements as per article 3, Para 1 (appendix 1); classified as category III, module H conformity evaluation by TÜV Nord	
Drinking water	In preparation	
Explosion protection		
• Intrinsic safety "i"	PTB 11 ATEX 2011 X	
Marking	(Ex) II 1/2G Ex ia/ib IIC T4/T5/T6 Ga/Gb	
Permissible ambient temperature	-40 … +85 °C (-40 … +185 °F) Temperature class T4 -40 … +70 °C (-40 … +158 °F) Temperature class T5 -40 … +60 °C (-40 … +140 °F) Temperature class T6	
Connection	To a certified intrinsically safe circuit with the max. values: U_i = 30 V, I_i = 100 mA, P_i = 750 mW, R_i = 300 Ω	FISCO supply unit U_0 = 17.5 V, I_0 = 380 mA, P_0 = 5.32 W Linear barrier U_0 = 24 V, I_0 = 174 mA, P_0 = 1 W
Effective inner capacitance	C_i = 6 nF	C_i = 1.1 nF
Effective inner inductance	L_i = 0.4 mH	L_i = 7 µH
• Flameproof enclosure encapsulation "d"	PTB 99 ATEX 1160	
Marking	(Ex) II 1/2 Ex d IIC T4, T6 Ga/Gb	
Permissible ambient temperature	-40 … +85 °C (-40 … +185 °F) Temperature class T4 -40 … +60 °C (-40 … +140 °F) Temperature class T6	
Connection	To a circuit with the operating values: U_H = 10.5 … 45 V DC	To a circuit with the operating values: U_H = 9 … 32 V DC
• Dust explosion protection for Zone 20 and 20/21	PTB 01 ATEX 2055	

Certificates and approvals			
		HART	**PROFIBUS PA or Foundation Fieldbus**
	Marking	(Ex) II 1 D IP65 T 120 °C, (Ex) II 1/2 D IP65 T 120 °C	
	Permissible ambient temperature	-40 ... +85 °C (-40 ... +185 °F)	
	max. surface temperature	120°C (248°F)	
	Connection	To a certified intrinsically safe circuit with the max. values: U_i = 30 V, I_i = 100 mA, P_i = 750 mW, R_i = 300 Ω	FISCO supply unit U_0 = 17.5 V, I_0 = 380 mA, P_0 = 5.32 W Linear barrier U_0 = 24 V, I_0 = 250 mA, P_0 = 1.2 W
	Effective inner capacitance	C_i = 6 nF	C_i = 1.1 nF
	Effective inner inductance	L_i = 0.4 mH	L_i = 7 µH
•	Dust explosion protection for Zone 22	PTB 01 ATEX 2055	
	Marking	(Ex) II 2 D IP65 T 120 °C	
	Connection	To a circuit with the operating values: U_H = 10.5 … 45 V DC; P_{max} = 1.2 W	To a circuit with the operating values: U_H = DC 9 … 32 V; P_{max} = 1.2 W
•	Type of protection "n" (Zone 2)	PTB 11 ATEX 2011 X	
	Marking	(Ex) II 2/3 G Ex nA II T4/T5/T6 Gc (Ex) II 2/3 G Ex ic IIC T4/T5/T6 Gc	
	Connection "nA"	U_n = 45 V	U_m = 32 V
	Connection "ic"	To a circuit with the operating values: U_i = 45 V	FISCO supply unit U_O =17.5 V, I_O = 570 mA Linear barrier U_0 = 32 V, I_0 = 132 mA, P_0 = 1 W
	Effective inner capacitance	C_i = 6 nF	C_i = 1.1 nF
	Effective inner inductance	L_i = 0.4 mH	L_i = 7 µH
•	Explosion protection in accordance with FM	Certificate of Compliance 3008490	
	Designation (XP/DIP) or IS; NI; S	CL I, DIV 1, GP ABCD T4 ... T6; CL II, DIV 1, GP EFG; CL III; CL I, ZN 0/1 AEx ia IIC T4 ... T6; CL I, DIV 2, GP ABCD T4 ... T6; CL II, DIV 2, GP FG; CL III	
	Permissible ambient temperature	T_a = T4: -40 ... +85 °C (-40 ... +185 °F) T_a = T5: -40 ... +70 °C (-40 ... +158 °F) T_a = T6: -40 ... +60 °C (-40 ... +140 °F)	
	Entity parameters	As per "control drawing" A5E00072770A: U_i = 30 V, I_i = 100 mA, P_i = 750 mW, R_i = 300 Ω, C_i = 6 nF, L_i = 0.4 mH	As per "control drawing" A5E00072770A: U_{max} = 17.5 V, I_{max} = 380 mA, P_{max} = 5.32 W, C_{max} = 6 nF, L_{max} = 0.4 mH
•	Explosion protection as per CSA	Certificate of Compliance 1153651	
	Designation (XP/DIP) or (IS)	CL I, DIV 1, GP ABCD T4 ... T6; CL II, DIV 1, GP EFG; CL III; Ex ia IIC T4 ... T6: CL I, DIV 2, GP ABCD T4 ... T6; CL II, DIV 2, GP FG; CL III	
	Permissible ambient temperature	T_a = T4: -40 ... +85 °C (-40 ... +185 °F) T_a = T5: -40 ... +70 °C (-40 ... +158 °F) T_a = T6: -40 ... +60 °C (-40 ... +140 °F)	
	Entity parameters	As per "control drawing" A5E00072770A: U_i = 30 V, I_i = 100 mA, P_i = 750 mW, R_i = 300 Ω, L_i = 0.4 mH, C_i = 6 nF	

11.9 HART communication

HART communication	
Load for a	
• HART communicator connection	230 … 1100 Ω
• HART modem	230 … 500 Ω
Cable	2-wire, shielded: ≤ 3.0 km (1.86 miles), multi-wired, shielded: ≤ 1.5 km (0.93 miles)
Protocol	HART Version 5.x
PC/laptop requirements	IBM-compatible, user memory > 32 MB, hard disk > 70 MB, depending on the type of modem: RS 232 interface or USB connection, VGA graphic
Software for computer	SIMATIC PDM

Dimension drawings

12

12.1 SITRANS P, DS III series for gauge pressure and absolute pressure from the gauge pressure series

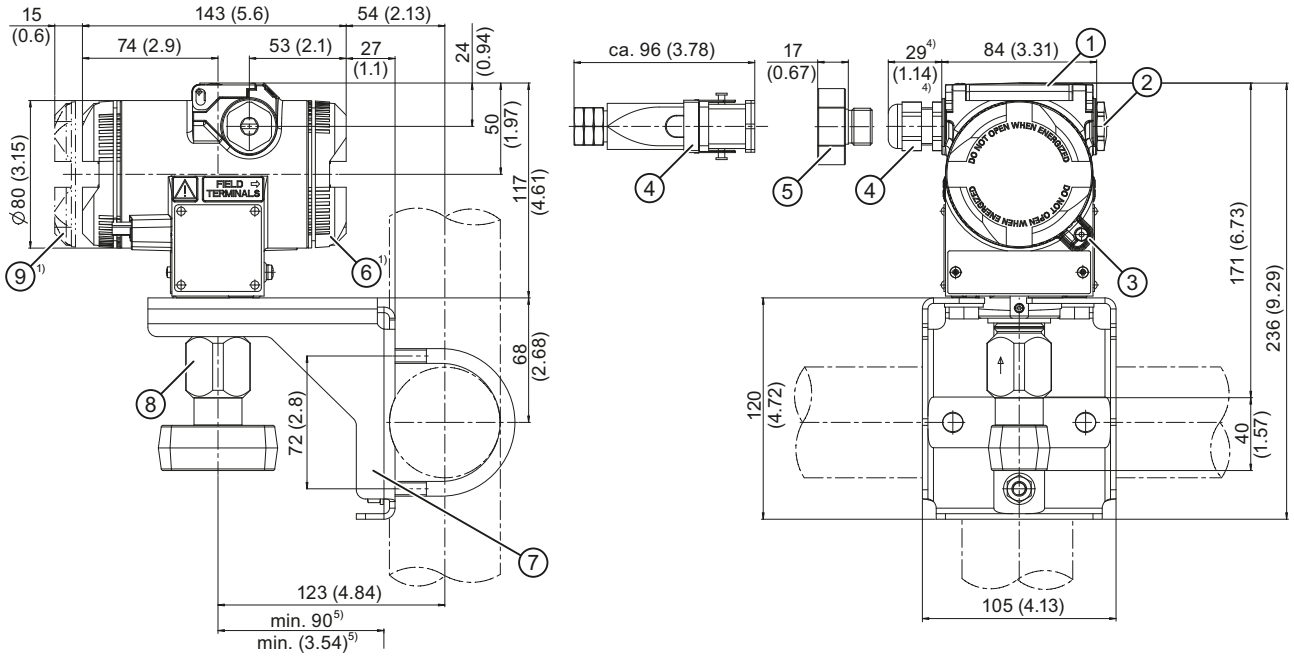

① Key cover
② Blanking plug
③ Cover catch (only for "flameproof enclosure" type of protection)
④ Electrical connection:
- Threaded joint Pg 13.5 (adapter)[2)3)],
- Threaded joint M20 x 1.5[3),]
- Threaded joint $^1/_2$-14 NPT
- Han 7D/Han 8D plug[2) 3)]
- M12 connector

⑤ Han 7D/Han 8D adapter
⑥ Connection side
⑦ Mounting bracket (optional)
⑧ Process connection:
- $^1/_2$-14 NPT,
- Connection pin G$^1/_2$A or
- Oval flange

⑨ Electronics side, display (longer for cover with inspection window)

1) Take additional 20 mm (0.79 inches) thread length into account
2) Not with "flameproof enclosure" type of protection
3) Not for "FM + CSA [is + XP]" type of protection
4) For Pg 13.5 with adapter approx 45 mm (1.77 inches)
5) Minimum distance for rotating

Figure 12-1 Pressure transmitter SITRANS P, DS III series for absolute pressure, from gauge pressure series, dimensions in mm (inches)

12.2 SITRANS P, DS III series for differential pressure, flow rate and absolute pressure from the differential pressure series

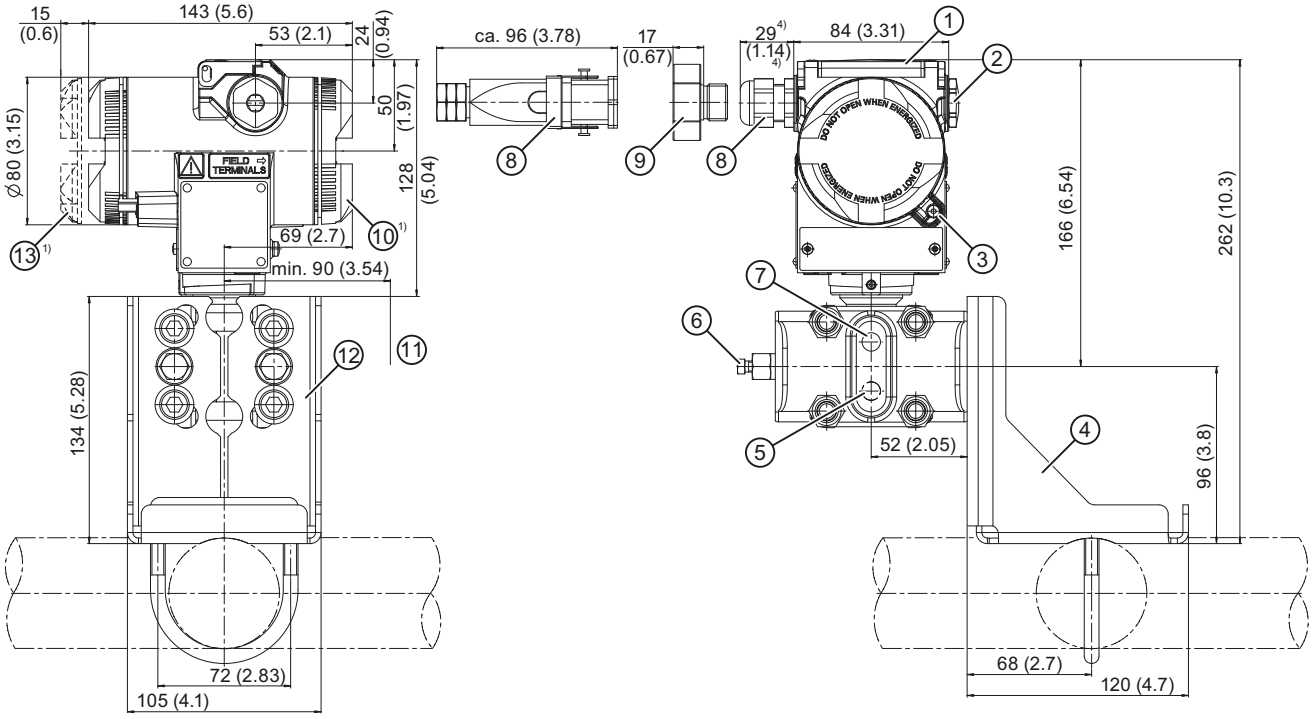

① Key cover
② Blanking plug
③ Cover catch (only for "flameproof enclosure" type of protection)
④ Mounting bracket (optional)
⑤ Lateral ventilation for gas measurement (addition H02)
⑥ Sealing plug, with valve (optional)
⑦ Lateral ventilation for liquid measurement
⑧ Electrical connection:
- Pg 13.5 gland (adapter)[2)3)]
- M20 x 1.5 gland[3)]
- $^1/_2$-14 NPT gland
- Han 7D/Han 8D plug[2) 3)]
- M12 connector

⑨ Han 7D/Han 8D adapter
⑩ Connection side
⑪ Space for enclosure rotation[5)]
⑫ Process connection: $^1/_4$-18 NPT (EN 61518)
⑬ Electronics side, display (longer for cover with inspection window)

1) Take an additional 20 mm (0.79 inches) thread length into account
2) Not with "flameproof enclosure" type of protection
3) Not for "FM + CSA [is + XP]" type of protection
4) For Pg 13.5 with adapter, approx 45 mm (1.77 inches)
5) 92 mm (3.62 inches) minimum distance for rotating the enclosure with display

Figure 12-2 Pressure transmitter SITRANS P, DS III series for differential pressure and flow rate, dimensions in mm (inches)

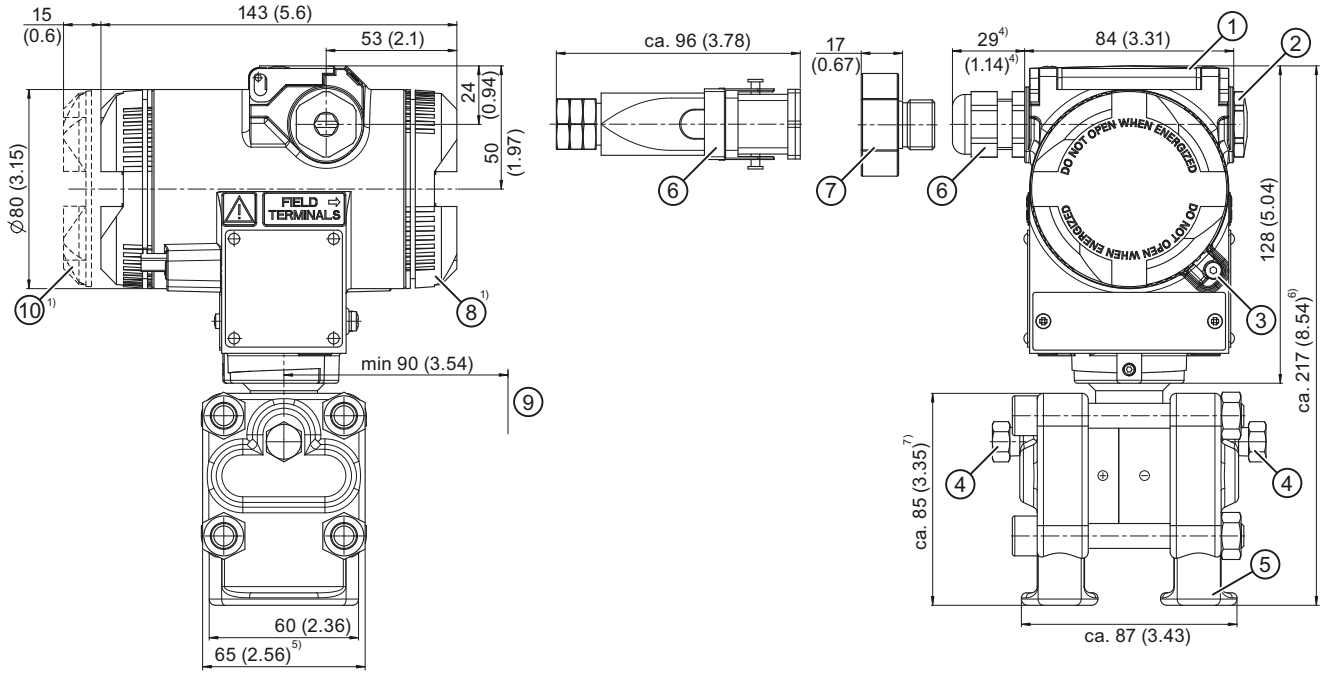

① Key cover
② Blanking plug
③ Cover catch (only for "flameproof enclosure" type of protection)
④ Sealing plug, with valve (optional)
⑤ Process connection: $^1/_4$-18 NPT (EN 61518)
⑥ Electrical connection:
- Pg 13.5 gland (adapter)[2)3)]
- M20 x 1.5 gland[3)]
- $^1/_2$-14 NPT gland
- Han 7D/Han 8D plug[2) 3)]
- M12 connector

⑦ Han 7D/Han 8D adapter
⑧ Connection side
⑨ Space for enclosure rotation[8)]
⑩ Electronics side, display (longer for cover with inspection window)

1) Take an additional 20 mm (0.79 inches) thread length into account
2) Not with "flameproof enclosure" type of protection
3) Not for "FM + CSA [is + XP]" type of protection
4) For Pg 13.5 with adapter, approx 45 mm (1.77 inches)
5) 74 mm (2.9 inch) for PN ≥ 420 (MAWP ≥ 6092 psi)
6) 219 mm (8.62 inches) for PN ≥ 420 (MAWP ≥ 6092 psi)
7) 91 mm (3.6 inches) for PN ≥ 420 (MAWP ≥ 6092 psi)
8) 92 mm (3.62 inches) minimum distance for rotating the enclosure with display

Figure 12-3 Pressure transmitter SITRANS P, DS III series for differential pressure and flow rate with caps for vertical differential pressure lines, dimensions in mm (inches)

12.3 SITRANS P, DS III series for level

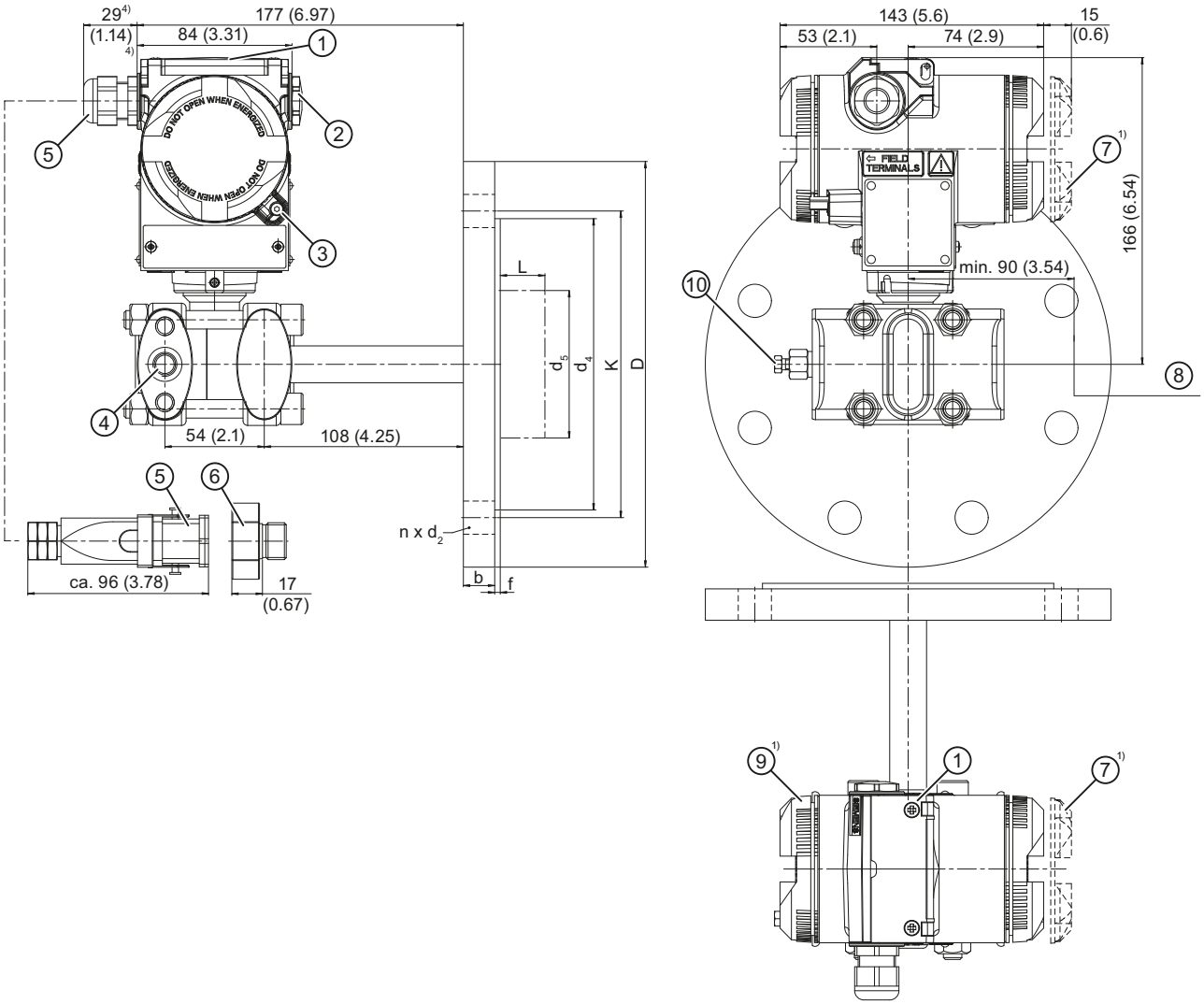

① Key cover
② Blanking plug
③ Cover catch (only for "flameproof enclosure" type of protection)
④ Process connection: Minus side $^1/_4$-18 NPT (EN 61518)
⑤ Electrical connection:
- Pg 13.5 gland (adapter)[2)3)]
- M20 x 1.5 gland[3)]
- $^1/_2$-14 NPT gland
- Han 7D/Han 8D plug[2) 3)]
- M12 connector

⑥ Han 7D/Han 8D adapter
⑦ Electronics side, display (longer for cover with inspection window)
⑧ Space for enclosure rotation[5)]
⑨ Connection side
⑩ Sealing plug with valve (optional)

1) Take an additional 20 mm (0.79 inches) thread length into account
2) Not with "flameproof enclosure" type of protection
3) Not for "FM + CSA [is + XP]" type of protection
4) For Pg 13.5 with adapter, approx 45 mm (1.77 inches)
5) 92 mm (3.62 inches) minimum distance for rotating the enclosure with display

Figure 12-4 Pressure transmitter SITRANS P, DS III series for level, including mounting flange, dimensions in mm (inches)

12.4 SITRANS P, DS III series (flush mounted)

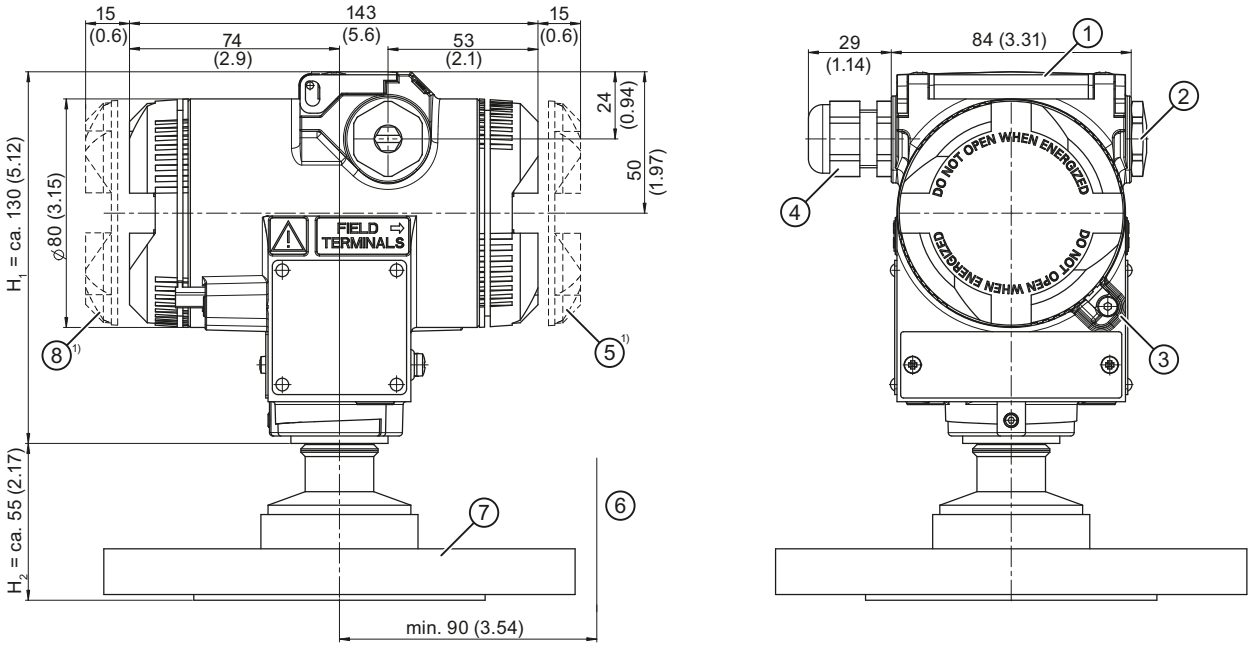

①	Key cover	⑤	Connection side
②	Blanking plug	⑥	Space for enclosure rotation[2)]
③	Cover catch (only for flameproof enclosure)	⑦	Process connection
④	Cable gland	⑧	Electronics side, display (longer for cover with inspection window)

1) Take additional 20 mm (approx.) thread length into account

2) 92 mm (3.62 inches) minimum distance for rotating the enclosure with display

Figure 12-5 SITRANS P DS III (flush mounted)

The screen consists of a SITRANS P DS III with an example flange. On this screen, the height is divided into H_1 and H_2.

H_1 Height of the device up to a defined cut

H_2 Height of the flange up to this defined cut

In the flange dimensions, only the height H_2 is specified.

12.4.1 Note 3A and EHDG

Note

Approvals

The references to the approvals for "EHEDG" and "3A" refer to the respective process connections and are not device-specific. Please refer to the technical data of the respective transmitter to see whether the desired certificate is available for your device/flange combination.

12.4.2 Connections as per EN and ASME

Flange as per EN

EN 1092-1

	DN	PN	⌀D	H_2
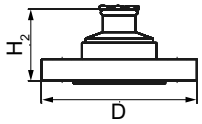	25	40	115 mm (4.5")	Approx. 52 mm (2")
	25	100	140 mm (5.5")	
	40	40	150 mm (5.9")	
	40	100	170 mm (6.7")	
	50	16	165 mm (6.5")	
	50	40	165 mm (6.5")	
	80	16	200 mm (7.9")	
	80	40	200 mm (7.9")	

Threaded connections

G3/4", G1" and G2" In accordance with DIN 3852

	DN	PN	⌀D	H_2
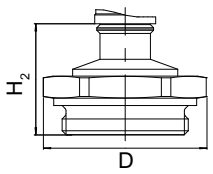	¾"	63	37 mm (1.5")	Approx. 45 mm (1.8")
	1"	63	48 mm (1.9")	Approx. 47 mm (1.9")
	2"	63	78 mm (3.1")	Approx. 52 mm (2")

Flanges as per ASME

ASME B 16.5				
	DN	**CLASS**	**⌀D**	**H_2**
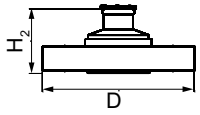	1"	150	110 mm (4.3")	Approx. 52 mm (2")
	1"	300	125 mm (4.9")	
	1½"	150	130 mm (5.1")	
	1½"	300	155 mm (6.1")	
	2"	150	150 mm (5.9")	
	2"	300	165 mm (6.5")	
	3"	150	190 mm (7.5")	
	3"	300	210 mm (8.1")	
	4"	150	230 mm (9.1")	
	4"	300	255 mm (10.0")	

12.4.3 F&B and pharma flange

Connections as per DIN

DIN 11851				
	DN	**PN**	**⌀D**	**H_2**
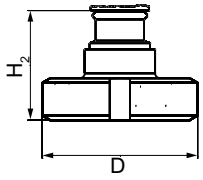	50	25	92 mm (3.6")	Approx. 52 mm (2")
	80	25	127 mm (5.0")	

DIN 11864-1 Form A - sterile threaded sockets				
	DN	**PN**	**⌀D**	**H_2**
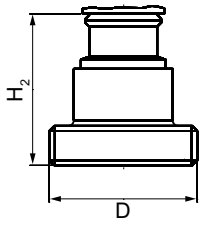	25	40	52 mm (2")	Approx. 52 mm (2")
	40	40	65 mm (2.6")	
	50	40	78 mm (3.1")	
	100	40	130 mm (5.1")	
Approvals	EHEDG			

DIN 11864-2 Form A - sterile collar flange

	DN	PN	⌀D	H_2
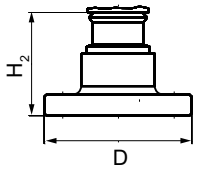	50	16	94 mm (3.7")	Approx. 52 mm (2")
	65	16	113 mm (4.4")	
	80	16	133 mm (5.2")	
	100	16	159 mm (6.3")	

Approvals	EHEDG

DIN 11864-2 Form A - sterile groove flange

	DN	PN	⌀D	H_2
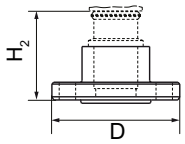	50	16	94 mm (3.7")	Approx. 52 mm (2")
	65	16	113 mm (4.4")	
	80	16	133 mm (5.2")	
	100	16	159 mm (6.3")	

Approvals	EHEDG

DIN 11864-3 Form A - sterile collar sockets

	DN	PN	⌀D	H_2
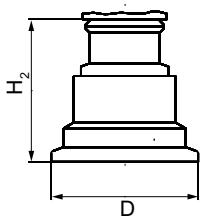	50	25	77.5 mm (3.1")	Approx. 52 mm (2")
	65	25	91 mm (3.6")	
	80	16	106 mm (4.2")	
	100	16	130 mm (5.1")	

Approvals	EHEDG

Tri-Clamp as per DIN 32676

	DN	PN	⌀D	H_2
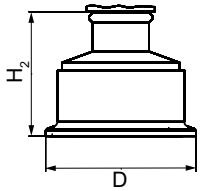	50	16	64 mm (2.5")	Approx. 52 mm (2")
	65	16	91 mm (3.6")	

Other connections

Varivent® connector				
	DN	**PN**	**⌀D**	**H_2**
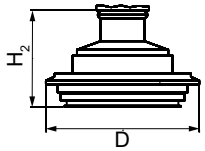	40-125	40	84 mm (3.3")	Approx. 52 mm (2")
Approvals	EHEDG			

Connection in accordance with DRD				
	DN	**PN**	**⌀D**	**H_2**
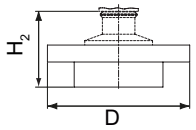	65	40	105 mm (4.1")	Approx. 52 mm (2")

BioConnect™ connectors

BioConnect™ screwed joint				
	DN	**PN**	**⌀D**	**H_2**
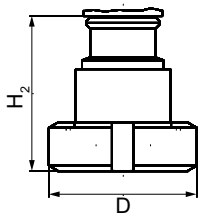	50	16	82 mm (3.2")	Approx. 52 mm (2")
	65	16	105 mm (4.1")	
	80	16	115 mm (4.5")	
	100	16	145 mm (5.7")	
	2"	16	82 mm (3.2")	
	2½"	16	105 mm (4.1")	
	3"	16	105 mm (4.1")	
	4"	16	145 mm (5.7")	
Approvals	EHEDG			

BioConnect™ flange connector

	DN	PN	⌀D	H_2
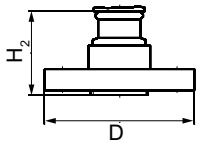	50	16	110 mm (4.3")	Approx. 52 mm (2")
	65	16	140 mm (5.5")	
	80	16	150 mm (5.9")	
	100	16	175 mm (6.9")	
	2"	16	100 mm (3.9")	
	2½"	16	110 mm (4.3")	
	3"	16	140 mm (5.5")	
	4"	16	175 mm (6.9")	
Approvals	EHEDG			

BioConnect™ clamp connector

	DN	PN	⌀D	H_2
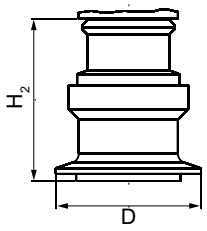	50	16	77.4 mm (3.0")	Approx. 52 mm (2")
	65	10	90.9 mm (3.6")	
	80	10	106 mm (4.2")	
	100	10	119 mm (4.7")	
	2"	16	64 mm (2.5")	
	2½"	16	77.4 mm (3.0")	
	3"	10	90.9 mm (3.6")	
	4"	10	119 mm (4.7")	
Approvals	EHEDG			

Connect S™ flanged joint

	DN	PN	⌀D	H_2
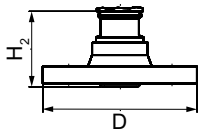	50	16	125 mm (4.9")	Approx. 52 mm (2")
	65	10	145 mm (5.7")	
	80	10	155 mm (6.1")	
	100	10	180 mm (7.1")	
	2"	16	125 mm (4.9")	
	2½"	10	135 mm (5.3")	
	3"	10	145 mm (5.7")	
	4"	10	180 mm (7.1")	
Approvals	EHEDG			

Other connections

BioControl™ connector				
	DN	**PN**	**⌀D**	**H_2**
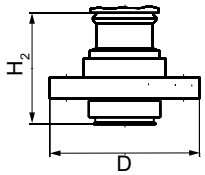	50	16	90 mm (3.5")	Approx. 52 mm (2")
	65	16	120 mm (4.7")	
Approvals	EHEDG			

12.4.4 PMC Style

Connections for the paper industry

PMC Style Standard				
	DN	**PN**	**⌀D**	**H_2**
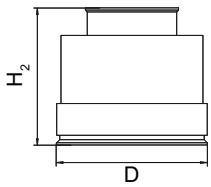	–	–	40.9 mm (1.6")	Approx. 36.8 mm (1.4")
	M44x1.25 cap nut			

PMC-Style Minibolt				
	DN	**PN**	**⌀D**	**H_2**
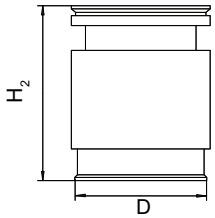	–	–	26.3 mm (1.0")	Approx. 33.1 mm (1.3")

12.4.5 Special connections

Tank connection

TG52/50 and TG52/150				
	DN	**PN**	**⌀D**	**H_2**
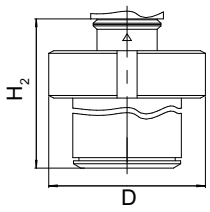	TG52/50			
	43.5 mm	10	63 mm (2.5")	Approx. 63 mm (2.5")
	TG52/150			
	43.5 mm	10	63 mm (2.5")	Approx. 170 mm (6.7")

SMS connectors

SMS sockets with union nut				
	DN	**PN**	**⌀D**	**H_2**
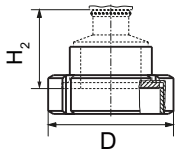	2"	25	84 mm (3.3")	Approx. 52 mm (2.1")
	2½"	25	100 mm (3.9")	
	3"	25	114 mm (4.5")	

SMS threaded sockets				
	DN	**PN**	**⌀D**	**H_2**
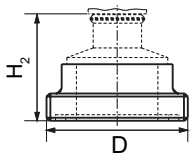	2"	25	70 x 1/6 mm (2.8")	Approx. 52 mm (2.1")
	2½"	25	85 x 1/6 mm (3.3")	
	3"	25	98 x 1/6 mm (3.9")	

IDF connectors

IDF sockets with union nut

	DN	PN	⌀D	H_2
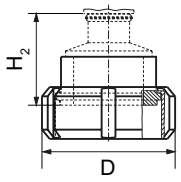	2"	25	77 mm (3.0")	Approx. 52 mm (2.1")
	2½"	25	91 mm (3.6")	
	3"	25	106 mm (4.2")	

IDF threaded sockets

	DN	PN	⌀D	H_2
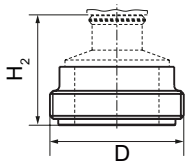	2"	25	64 mm (2.5")	Approx. 52 mm (2.1")
	2½"	25	77.5 mm (3.1")	
	3"	25	91 mm (3.6")	

Spare parts/accessories

13

13.1 Order data

In order to ensure that the ordering data you are using is not outdated, the latest ordering data is always available on the Internet:

Process instrumentation catalog (http://www.siemens.com/processinstrumentation/catalogs)

Selection and order data	Order no.
CD "sitrans p - pressure transmitters" with documentation in German/ English/French/Spanish/Italian, etc.	A5E00090345
HART modem	
• With serial interface RS232	7MF4997-1DA[1) D)]
• With USB interface	7MF4997-1DB[1) D)]
Weld-in support for PMC connection	
For Series SITRANS P, Series DS III and SITRANS P300	
• PMC Style Standard: Thread 1½"	7MF4997-2HA
• PMC-Style Minibolt: flush mounted 1"	7MF4997-2HB
Gaskets for PMC connection, (1 set = 5 pieces)	
• PTFE gasket for PMC Style Standard: Thread 1½"	7MF4997-2HC
• Viton gasket for PMC Style Minibolt: flush mounted 1"	7MF4997-2HD
Weld-in adapter for PMC connection	
For connection of weld-in support delay during welding for:	
• PMC Style Standard: Thread 1½"	7MF4997-2HE
• PMC-Style Minibolt: flush mounted 1"	7MF4997-2HF

1) Available from stock

D) Subject to export regulations AL: N, ECCN, EAR99H

Selection and order data	Order no.
Mounting bracket and fastening parts	
For SITRANS P, Series DS III, DS III PA and DS III FF	
For gauge pressure transmitter (7MF403.-.....-..C.)	
For transmitter for absolute pressure (7MF423.-.....-..C.)	
• Made of steel	7MF4997-1AB
• Made of stainless steel	7MF4997-1AH
Mounting bracket and fastening parts	
For SITRANS P, Series DS III, DS III PA and DS III FF	
For gauge pressure transmitter (7MF403.-.....-..A., -..B. and -..D.)	

Selection and order data	Order no.
For transmitter for absolute pressure (7MF423.-.....-..A., -..B. and -..D.)	
• Made of steel	7MF4997-1AC
• Made of stainless steel	7MF4997-1AJ
Mounting bracket and fastening parts	
For SITRANS P, Series DS III, DS III PA and DS III FF	
Differential pressure transmitter with flange thread	
• Made of steel	
For thread M10 (7MF433.-... and 7MF443.-...)	7MF4997-1AD
For thread M12 (7MF453.-...)	7MF4997-1AE
• Made of stainless steel	
For thread M10 (7MF433.-... and 7MF443.-...)	7MF4997-1AK
For thread M12 (7MF453.-...)	7MF4997-1AL
Mounting bracket and fastening parts	
For SITRANS P, Series DS III, DS III PA and DS III FF	
Differential and absolute transmitter with flange thread 7/16-20 UNF (7MF433.-..., 7MF443.-... and 7MF453.-...)	
• Made of steel	7MF4997-1AF
• Made of stainless steel	7MF4997-1AM
Cover	
For SITRANS P, Series DS III, DS III PA and DS III FF	
• Made of aluminum die casting, including gasket	
Without inspection window	7MF4997-1BB
With inspection window	7MF4997-1BE
• Made of stainless steel, including gasket	
Without inspection window	7MF4997-1BC
With inspection window	7MF4997-1BF
Analog display	
• Scale 0 ... 100%	7MF4997-1BN
• Customer-specific scale division as per the plain text specifications	7MF4997-1BP-Z Y20: .....
Digital display	
For SITRANS P, Series DS III, DS III PA and DS III FF	
Including the fastening material	7MF4997-1BR
Measuring point label	
• not labeled (five pieces)	7MF4997-1CA
• labeled (one piece) Specifications as per Y01 or Y02, Y15 and Y16 (refer to SITRANS P transmitter)	7MF4997-1CB-Z Y..: .....
Fastening screws, 50 pieces for: • Measuring point label • Earthing and connecting terminals • Digital display	7MF4997-1CD
Locking screws, (1 set = 2 pieces) for pressure cap	

Selection and order data	Order no.
• Made of stainless steel	7MF4997-1CG
• Made of Hastelloy	7MF4997-1CH
Vent valves, complete (1 set = 2 pieces)	
• Made of stainless steel	7MF4997-1CP
• Made of Hastelloy	7MF4997-1CQ
Electronics	
• For SITRANS P, Series DS III	7MF4997-1DK
• For SITRANS P, Series DS III PA	7MF4997-1DL
• For SITRANS P, Series DS III FF	7MF4997-1DM
Network card	
• For SITRANS P, Series DS III	7MF4997-1DN
• For SITRANS P, Series DS III PA and DS III FF	7MF4997-1DP
Sealing rings for pressure caps made of	
• FPM (Viton)	7MF4997-2DA
• PTFE (Teflon)	7MF4997-2DB
• FEP (with silicon core, suitable for food)	7MF4997-2DC
• FFPM (Kalrez, Compound 4079)	7MF4997-2DD
• NBR (Buna N)	7MF4997-2DE

13.2 Order data for SIMATIC PDM

You can find ordering data in the Catalog FI 01 "Field devices for process automation in the Chapter "Communication and software > Software > SIMATIC PDM - Process Device Manager".

Appendix A

A.1 Certificate

The certificates can be found on the enclosed CD and on the Internet under:

Certificates (http://www.siemens.com/processinstrumentation/certificates)

A.2 Literature and standards

No.	Standard	Description
/1/	IEC 61508 Section 1-7	Functional safety of following systems: • Safety-instrumented • Electrical • Electronic • Programmable Target group: Manufacturers and suppliers of equipment
/2/	IEC 61511 Section 1-3	Functional safety - Safety systems for the process industry Target group: Planners, constructors and users

A.3 Literature and catalogs

Table A-1

No.	Title	Publisher	Order no.
/1/	PNO guidelines PROFIBUS PA	PNO Technologiefabrik Haid-und-Neu-Str. 7 D-76131 Karlsruhe	2.091
/2/	Catalog ST 70 **SIMATIC** Products for Totally Integrated Automation	Siemens AG	E86060-K4670-A111-B1
/3/	Catalog ST 70 N**SIMATIC News** Products for Totally Integrated Automation	Siemens AG	E86060-K4670-A151-A3

No.	Title	Publisher	Order no.
/4/	Catalog ST 80 **SIMATIC HMI** operation and observation products	Siemens AG	E86060-K4680-A101-B4
/5/	Catalog IK PI **Industrial Communication**	Siemens AG	Internet address: IK PI Catalog (http://www.automation.siemens.com/net/html_76/support/printkatalog.htm) E86060-K6710-A101-B5

A.4 Overview of HART operating structure

The following overview applies to the HART communicator operating structure.

2 Online	1 (PV meas) *)						
	2 (PV) status						
	3 Module type						
	4 Identification	1 Operation Unit	1 Tag				
			2 Long Tag --> M **)				
			3 Descriptor				
			4 Message				
			5 Date				
		2 Device	1 Manufacturer				
			2 Model				
			3 Device identification				
			4 Distributor				
			5 MLFB Order Number	1 MLFB Order No --> M			
			6 Measurement type				
			7 Fabrication-No				
			8 Final asembly number				
			9 Sensor serial number				
			10 Revisions	1 Universal rev.			
				2 Field device rev.			
				3 Software rev.			
				4 Hardware rev.			
		3 Basic Parameters	1 Pressure unit				
			2 LSL (Lower Sensor Limit)				
			3 USL (Upper Sensor Limit)				
			4 Minimum Span				
			5 LRV (Lower Range Value)				
			6 URV (Upper Range Value))				
			7 Pressure damping				
			8 Pressure xfer function	xfer = transfer			
	5 Config Inp/Outp	1 Quick-Setup & Meas.	1 PV, Current, Status	1 (PV meas) *)			
				2 AO (analogue output)			
				3 (PV) % range			
				4 Status see --->	6 Diagnosis/Service		
				5 Measurement type			
			2 Meas.Val. & Status	1 Pressure Values	1 Pressure		
					2 Pres status		
					3 Untrimmed pressure		
					4 Untrimmed pres status		
				2 Temperature Values	1 Sens-Temp		
					2 Sens-Temp status		
					3 Electr-Temp		
					4 Electr-Temp status		
				3 Level, Vol, Mass Values (shown if valid items)	1 Level		
					2 Level status		
					3 Volume		
					4 Volume status		
					5 Mass		
					6 Mass status		
				4 Vol-, Mass- & Flow (shown if valid items)	1 Vol-Flow		
					2 Vol-Flow status		
					3 Mass-Flow		
					4 Mass-Flow status		
				5 Appl & Stat (shown if valid items)	1 Customer		
					2 Customer Status		
			3 Quick-Setup	1 Tag			
				2 Ext TAG --> M			
				3 PV is			
				4 (PV) unit			
				5 Position correction	1 Position corr --> M		
				6 LRV			
				7 URV			
				8 Pressure damping			
				9 Pressure xfer function			
		2 Input	1 Config Pres/Temp	1 Pressure sensor	1 Pressure		
					2 Untrimmed pres		
					3 Pressure units	1 Pres abs/rel	
						2 Pressure unit	
						3 Untrimmed pres unit	
				2 Temperature sensor	1 Sens-Temp		
					2 Electr-Temp		
					3 Temp units	1 Sens-Temp unit	
						2 Electr-Temp unit	
				3 Pres units see -->	1 Pressure sensor		
				4 Temp units see -->	2 Temperature sensor		
			2 Display Process Variables	1 Prozess variables	1 (PV measurement)		
					2 (PV) %rnge		
					3 AO		
					4 (SV measurement)		
					5 (TV measurement)		
					6 (QV measurement)		
			3 Meas Switch/Mapper	1 measurement			
				2 PV is			
				3 SV is			
				4 TV is			
				5 QV is			
				6 (measurement) config e.g. Level	1 Input scaling	1 Pres abs/rel	
						2 Pressure unit	
						3 Input LRV	
						4 Input URV	
					2 Level scaling e.g. Level scaling	1 Level unit	
						2 Level LRV	
						3 Level URV	

to be continued

continuance 5 Config Inp/Outp	continuance 2 Input	continuance 3 Meas Switch/Mapper	continuance 6 (measurement) config e.g. Level	3 Volume scaling	1 Volume unit 2 Vol LRV 3 Vol URV 2 Density unit 3 Density 3 Mass unit
			6 (measurement) config e.g. Flow	1 Input scaling	1 Pres abs/rel 2 Pressure unit 3 Input LRV 4 Input URV
				2 Flow scaling	1 Vol flow unit 2 Vol flow LRV 3 Vol flow URV 2 Density unit 3 Density 3 Mass flow unit
			6 (measurement) config e.g. Customer	1 Input scaling	1 Pres abs/rel 2 Pressure unit 3 Input LRV 4 Input URV
				3 Customer scaling	1 Cust unit (5 Ch) 2 Cust LRV 3 Cust URV
			7 Unser linearization if Level, Flow or Customer this is valid - otherwise not	1 Special Curve status --> 2 No curve points 3 Setup special char --> M 4 Display special char --> M	only if meas not pres
		4 Meas.Limits & Span	1 Module range		
			2 Active Device Variables	1 Pressure	1 Pressure unit 2 Pres USL 3 Pres LSL 4 Trimpoint sum 5 Pres min.span
				2 Sens-Temp	1 Sens-Temp unit 2 Sens-Temp USL 3 Sens-Temp LSL 4 Sens-Temp min.span
				3 Electr-Temp	1 Electr-Temp unit 2 Electr-Temp USL 3 Electr-Temp LSL 4 Electr-Temp min.span
				4 Untrimmed Pres	1 Untrimmed Pres unit 2 Untrimmed Pres USL 3 Untrimmed Pres LSL 4 Untr Pres min.span
			additional if measurement is mapped to level	5 Level	1 Level unit 2 Level USL 3 Level LSL 4 Level min.span
			additional if measurement is mapped to level	6 Volume	1 Volume unit 2 Volume USL 3 Volume LSL 4 Volume min.span
			additional if measurement is mapped to level	7 Mass	1 Mass unit 2 Mass USL 3 Mass LSL 4 Mass min.span
			additional if measurement is mapped to flow	5 Vol-Flow	1 Vol-Flow unit 2 Vol-Flow USL 3 Vol-Flow LSL 4 Vol-Flow min.span
			additional if measurement is mapped to flow	6 Mass-Flow	1 Mass-Flow unit 2 Mass-Flow USL 3 Mass-Flow LSL 4 Mass-Flow min.span
			additional if measurement is mapped to customer	5 Customer	1 (PV) unit 2 Customer USL 3 Customer LSL 4 Customer min. span
	3 Output	1 Analog output	1 Analog output		
			2 Percent range		
			3 Zero and Span	1 Zero/Span set	1 Apply values >1 2 Out Scaling PV >2
			4 Pres xfer function		
			5 Startpoint square root		
				>1 Out Scaling PV	1 Unit 2 LRV 3 URV 4 LSL 5 USL
				>2 Apply values	1 Apply values --> M
			6 Current Limits	1 Lower AO Limit 2 Upper AO Limit	
			7 Alarms	1 AO Alarm Type 2 Alarm LRV 3 Alarm URV	
		2 Sensor trim points	1 Lower sensor trim point 2 Upper sensor trim point		
		3 HART output	1 Polling address 2 Num request preambles 3 Num response preambles		
	4 Local meter	1 Meter type 2 Unit tracking 3 Local Display unit			
to be continued					

	continuance 5 Config Inp/Outp	continuance 4 Local Meter	4 LCD Settings	1 LCD Scaling, if On:	2 LCD Unit	
			5 Bargraph		3 LCD LRV	
					4 LCD URV	
			6 Access Control	1 Lokal keys control mode		
				2 Write protect		
				3 Set write protect --> M		
		5 Mech. Construction Mech = mechanical	1 No of electronic changes			
			2 Design	1 Sensor	1 Fill fluid	
					2 Isolation material	
					3 O ring material	
					4 Module range	
				2 Remote Seal	1 Number remote seal (RS)	
					2 RS type	
					3 RS isolator material	
					4 RS fill fluid	
					5 Extension length	
					6 Extension type	
					7 Capillar length	
			3 Process Connection	1 Process Connection		
				2 DrainVent / plug mat		
				3 DrainVent / plug pos		
				4 Process flange bolt		
				5 Flange type		
				6 Flange material		
			4 Electronic Connection	1 Electr housing material		
				2 Electr connection		
	6 Certif & Approv	1 Explos. Protection				Explos = Explosion Certif = Certification Approv = Approval
	7 Diagnosis/Service	1 Status	1 Status summary			
			2 Extended device status			
			3 Simulation status			
			4 Hardw/Firmw status	1 Status group 2		
				2 Status group 3		
				3 Status group 4		
				4 Status group 5		
			5 Diag Alarm Status	1 Status group 15		
				2 Status group 16		
			6 Diag Warn Status	1 Status group 19		
				2 Status group 20		
		2 Device	1 Selftest/Reset	1 Selftest --> M		
				2 Display Test --> M		
				3 Master reset --> M		
				4 Changes Config	1 Config changed counter	
			2 Sensor trim	1 Restore mfgr trims --> M		mfgr = manufacturer
				2 Sensor trim	1 Sensor trim points	1 Lower sensor trim point
						2 Upper sensor trim point
					2 Sensor trim	1 Pres zero trim--> M
						2 Lower sensor trim --> M
						3 Upper sensor trim --> M
					3 Trimpoint summary	
				3 Trim analog output	1 D/A trim --> M	
					2 Scaled D/A trim --> M	
				4 Position correction	1 Position corr --> M	
			3 Simulation/Test	1 Loop test --> M	Simulation AO	
				2 Inputs --> M	Simulation Fixed / Ramp	
			4 Access Control	1 Local keys control mode		
				2 Write protect		
				3 Set write protect --> M		
		3 Diagnostic settings	1 W/A time unit	W/A = warning/alarm		
			2 Calib interval	1 Calib status		
				2 W/A acknowledge --> M		
				3 Calib timer	1 Calib time	
					2 Reset timer --> M	
				4 Calib warning		
				5 Calib alarm		
				6 W/A activation		
			3 Service interval	1 Service status		
				2 W/A acknowledge --> M		
				3 Service timer	1 Service time	
					2 Reset timer --> M	
				4 Service warning		
				5 Service alarm		
				6 W/A activation		
			4 AO saturation	1 AO alarm type		
				2 Saturation alarm		
				3 Alarm duration		
				4 Alarm activation		
			5 Limiter setup	1 Display limiter --> M		
				2 Setup limiter --> M		
				3 Limiter status --> M		
				4 Limiter: Ack W/A --> M		Ack = acknowledge
				5 CmpCnt: Ack W/A --> M		CmpCnt =
				6 Reset counter. --> M		Comparation Counter
		4 View	1 Operating hours	1 Operating hours Electr		
				2 Operating hours Sensor		
			3 Min/Max pointer	1 Pressure pointer	1 Pres max	
					2 Pres min	
					3 Reset pointer --> M	
				2 Electr-Temp pointer	1 Electr-Temp max	
					2 Electr- Temp min	
					3 Reset pointer --> M	
				3 Sens-Temp pointer	1 Sens-Temp max	
					2 Sens-Temp min	
					3 Reset pointer --> M	

A.5 Technical support

Technical Support

You can contact Technical Support for all IA and DT products:

- Via the Internet using the **Support Request:**
  Support request (http://www.siemens.com/automation/support-request)
- E-mail (mailto:support.automation@siemens.com)
- **Phone:** +49 (0) 911 895 7 222
- **Fax:** +49 (0) 911 895 7 223

Further information about our technical support is available on the Internet at
Technical Support (http://www.siemens.com/automation/csi/service)

Service & Support on the Internet

In addition to our documentation, we offer a comprehensive knowledge base on the Internet at:

Services & Support (http://www.siemens.com/automation/service&support)

There you will find:

- The latest product information, FAQs, downloads, tips and tricks.
- Our newsletter with the latest information about our products.
- A Knowledge Manager to find the right documents for you.
- Our bulletin board, where users and specialists share their knowledge worldwide.
- Your local contact partner for Industry Automation and Drives Technologies in our partner database.
- Information about field service, repairs, spare parts and lots more under "Services."

Additional Support

Please contact your local Siemens representative and offices if you have any questions about the products described in this manual and do not find the right answers.

Find your contact partner at:

Partner (http://www.automation.siemens.com/partner)

Documentation for various products and systems is available at:

Instructions and manuals (http://www.siemens.com/processinstrumentation/documentation)

See also

Product information on SITRANS P in the Internet (http://www.siemens.com/sitransp)

Process instrumentation catalog (http://www.siemens.com/processinstrumentation/catalogs)

List of abbreviations

B

List of abbreviations

Table B-1 Units

Abbreviation	In full	Meaning
bar a	bar absolute	Pressure unit for absolute pressure
bar g	bar gauge	Pressure unit for gauge pressure
lb	Pfund (engl.: Pound)	Unit of weight
psi a	psi absolute	Pressure unit for absolute pressure
psi g	psi gauge	Pressure unit for gauge pressure

Table B-2 Other abbreviations

Abbreviation	In full	Meaning
PED	Pressure equipment directive	
HART	Highway Addressable Remote Transducer	Standardized protocol for transmission of information between field device and automation system.
LRL	Engl.: Lower Range Limit	Lower end of the measuring range
LRV	Engl.: Lower Range Value	Lower end of the set measuring span
MA	Start of scale value	Lower end of the set measuring span
ME	Full scale value	Upper end of the set measuring span
MAWP	Engl.: Maximum Allowable Working Pressure (PS)	Maximum permissible operating pressure
NFPA	National Fire Protection Association	US - American Fire Protection Organization
F&B	Food and beverage industry	
PDM	Engl.: Process Device Manager	Tool for communication with HART devices (manufacturer: Siemens)
URL	Engl.: Upper Range Limit	Upper end of the measuring range
URV	Engl.: Upper Range Value	Upper end of the set measuring span

B.1 Functional safety

Abbreviation	Full term in English	Meaning
FIT	Failure in Time	Frequency of failure Number of faults withing 10^9 hours
HFT	Hardware Fault Tolerance	Hardware fault tolerance: Capability of a function unit to continue executing a required function in the presence of faults or deviations.

Abbreviation	Full term in English	Meaning
MooN	"M out of N" voting	Classification and description of the safety-instrumented system in terms of redundancy and the selection procedures used. A safety-instrumented system or part that consists of "N" independent channels. The channels are connected to each other in such a way that "M" channels are in each case sufficient for the device to perform the safety instrumented function. Example: Pressure measurement: 1oo2 architecture. A safety-instrumented system decides that a specified pressure limit has been exceeded if one out of two pressure sensors reaches this limit. In a 1oo1 architecture, there is only one pressure sensor.
MTBF	Mean Time Between Failures	Average period between two failures
MTTR	Mean Time To Restoration	Average period between the occurrence of a fault in a device or system and restoration of functionality
PFD	Probability of Failure on Demand	Probability of dangerous failures of a safety function on demand
PFD_{AVG}	Average Probability of Failure on Demand	Average probability of dangerous failures of a safety function on demand
SFF	Safe Failure Fraction	Proportion of safe failures: Proportion of failures without the potential to bring the safety-instrumented system into a dangerous or non-permissible functional status.
SIL	Safety Integrity Level	The international standard IEC 61508 defines four discrete Safety Integrity Levels (SIL 1 to SIL 4). Each level corresponds to a range of probability for failure of a safety function. The higher the Safety Integrity Level of the safety-instrumented system, the lower the probability that it will not execute the required safety functions.
SIS	Safety Instrumented System	A safety-instrumented system (SIS) executes the safety functions that are required to achieve or maintain a safe status in a system. It consists of a sensor, logic unit/control system and final controlling element.
TI	Test Interval	Testing interval of the protective function

Glossary

ATEX

ATEX is an abbreviation of the French term "Atmosphère explosible" (potentially explosive atmosphere). ATEX stands for both EC directives in the area of explosion protection: ATEX product directive 94/9/EC and ATEX operating directive 1999/92/EC.

Auxiliary power supply

Auxiliary power supply refers to an electrical supply or reference voltage which some electrical circuits require apart from the standard supply. The auxiliary power supply can, for example, be specially stabilized, have a particular level or polarity and/or other properties which are important for the correct functioning of switch components.

Auxiliary voltage

→ *Auxiliary power supply*

Dangerous failure

Failure with the potential to bring the safety-instrumented system into a dangerous or non-functional status.

EEPROM

EEPROM (Electrically Erasable Programmable Read-Only Memory): a non-volatile, electronic memory module.

EEPROMs are often used where individual bytes of data (e.g. configuration data or runtime meters) change over time and must be stored safely in the event of a mains power failure.

Fail-safe

The capability of a control to maintain the safe state of the controlled device, e.g. machine, process, or to bring the device to a safe state even when faults/failures occur.

Failure/Fault

Failure:
A resource is no longer capable of executing a required function.

Fault:
Undesired state of a resource indicated by the incapability of executing a required function.

Fault

→ *Failure/Fault*

Fault tolerance

Fault tolerance N means that a device can execute the intended task even when N faults exist. The device fails to execute the intended function in case of N+1 faults.

Final controlling element

Converter that converts electrical signals into mechanical or other non-electrical variables.

Firmware

Firmware (FW) is software that is embedded on a chip in electronic devices – in contrast to software which is saved on hard disks, CD-ROMs or other media. These days, firmware is mostly stored in a flash memory or EEPROM.

Firmware usually contains the elementary functions for controlling the device, as well as input and output routines.

Frequency shift keying

Frequency shift keying is a simple form of modulation, where the digital values 0 and 1 modulate the actual current signal by means of two different frequencies.

Frequency Shift Keying (FSK)

→ *Frequency shift keying*

HART

HART (Highway Addressable Remote Transducer) is a standardized, widely used communications system used to structure industrial fieldbusses. The communications system provides digital communications for multiple participants (field devices) via a common databus. HART is based especially on the equally widely used 4/20 mA standard for the transfer of analog sensor signals. The cabling from existing older systems can be used directly and both systems operated in parallel.

HART specifies several protocol levels in the OSI model. It facilitates the transfer of process and diagnostics data and control signals between field devices and high-level control systems. Standardized parameter sets can be used for the manufacture-independent operation of all HART devices.

Typical applications include transmitters for measuring mechanical and electrical dimensions.

MAWP (PS)

Maximum Allowable Working Preassure (PS)

Non-volatile memory

→ *EEPROM*

Risk

The combination of probability of a damage occurring and its magnitude.

Safety function

Defined function executed by a safety-instrumented system with the objective of achieving or maintaining a safe system status taking into account a defined dangerous occurrence.

Example:
Limit pressure monitoring

Safety Instrumented Function

→ *SIF*

Safety Integrity Level

→ *SIL*

Safety-instrumented system

A safety-instrumented system executes the safety functions that are required to achieve or maintain a safe status in a system. It consists of a sensor, logic unit/control system and final controlling element.

Example:
A safety-instrumented system is made up of a pressure transmitter, a limit signal sensor and a control valve.

Sensor

Converter that converts mechanical or other non-electrical variables into electrical signals.

SIF

A part/function of a safety-instrumented system that reduces the risk of a dangerous failure occurring.

SIL

The international standard IEC 61508 defines four discrete Safety Integrity Levels (SIL) from SIL 1 to SIL 4. Each level corresponds to the probability range for the failure of a safety function. The higher the SIL of the safety-instrumented system, the higher probability that the required safety function will work.

The achievable SIL is determined by the following safety characteristics:

- Average probability of dangerous failure of a safety function in case of demand (PFD_{AVG})
- Hardware fault tolerance (HFT)
- Safe failure fractions (SFF)

srli2

→ *srlin2*

srlin2

"srli2" or "srlin2" is a type of square root extracting characteristic curve for the output current. This characteristic curve type is proportional to the flow rate, linear in two levels up to the application point and has a pre-defined application point of 10%.

"srli2" or "srlin2" are synonymous and technically there is no difference between them. The abbreviation "srli2" is used in sections that refer to the on-site operation of the pressure transmitter. The reason for the abbreviation is that the pressure transmitter display is restricted to five characters. The abbreviation "srlin2" is used for HART operation.

Index

PV
Primary variable, 102
QV
Quarternary variable, 102
SV
Secondary variable , 102
TV
Tertiary variable, 102

3

3A, 203

A

Acknowledgement, 129
Additional Support, 220
Ambient temperature, 183, 184, 185, 186
Influence, 178, 179, 180, 182
Analog output, 114
Analog output block, 114
Analog output stage, 101
Appendix, 215
Approval
3A, 203
EHEDG, 203
Approval plate, 22
Arrow display, 70

B

Bar graph, 123
Basic variables, 65
Blind adjustment, 117
Bridge output voltage, 25, 26, 27

C

Calibration
Current transmitter, 124
Sensor, 123
Calibration interval, 130
Calibration timer, 129
Certificate, 215
Certificates, 13
Certification, 215
Characteristic curve
lin, 92
srlin , 92
srlin2 , 92
sroff, 92
Characteristics
Safety, 142, 147
Configuration data, 126
Connector
M12, 63
Constant current operation, 88, 118
Control system, 137
Correct usage, (See improper device modifications)
Current limit, 119
Current transmitter, 88, 118
Customer Support Hotline, 220

D

Device
Electrostatic-sensitive, 16, 162
Device variable, 71, 110
DV, 102
Diagnostic interrupt, 118, 128
Diagnostic warning, 128
Differential pressure, 18, 19, 91, 127
Direct sunlight, 37
Display of unit, 68
Downscaling, 76
DV
Device variable, 102
Dynamic variable (DV), 101

E

EHEDG, 203
Electrical damping, 118
Electromagnetic compatibility, 184, 185, 186
Electromagnetic Compatibility
Compatibility, 142
Electronics, 142, 147
Electrostatic-sensitive device (ESD), 16, 162
EMC, 184, 185, 186
Equalizer valve, 156
Error display, 69

F

Factory calibration, 125
Failure current, 118
Fast recording of measured values, 118
Fast Response Mode, 118
Filling liquid, 25, 27, 28
Final controlling element , 137
Firmware, 9
Firmware version
    Safety Integrity Level, 141, 144
Flange, 27, 44
Full-scale value
    Set, 75
Function chart, 29

H

Han plug, 62
HART
    Modem, 17
HART communicator, 99
Hazardous area
    Laws and directives, 13
History, 9
Hotline, 220

I

Improper device modifications, 14
Input scaling, 104, 106, 109
Install
    Remote seal, 47
Installation, 40
Internet, 220

K

Keyboard lock, 90

L

L (level), 105
LCD scaling, 115
Level, 19
Limit monitor, 134
lin, 92, 127
Load, 177

M

M12 connector, 63
MA
    Start of scale value, 102
Maintenance, 142, 146
Mapper, 101, (Also see: Variable mapper)
Mass, 104, 105
MAWP, 221
ME
    Full scale value, 102
Measured value display, 75, 94
Measured value status, 111
Measuring accuracy, 141, 146
Measuring cell
    Differential pressure and flow rate , 26
    Absolute pressure, 29
    Gauge pressure, 25
    Level, 27
Measuring mode, 75, 100, 102, 106
Measuring mode selector, 101, 102
Measuring span, 76
Message
    OVER, 71
    UNDER, 71
Mounting bracket, 41
Mounting flange, 27
MTTR, 143, 147
MWP, (See MAWP)

N

Nameplate, 21

O

Operating structure , 217
operation
    Local, 75
Output scaling, 104, 110
Output scaling , 107

P

Pair of min/max pointer, 130
Pairs of values, 107, 110
Plug
    Han, 62
Position correction, 87

Pressure simulation, 134
Pressure unit, 122
Primary variable, 71, 94
Process connection, 20
PV
    Primary variable, 94

Q

Qualified personnel, 14

R

Ramp function, 133, 134
Remote seal
    Description, 31
    Install, 47
    Maintenance, 165
Response time, 131
Root application point, 92, 106

S

Safety
    Checking, 142, 147
Safety function, 140, 143
    Checking, 141, 142, 145, 146
Safety Integrity Level , 141, 144
Saturation limit , 119
Scope of delivery, 10
sensor calibration, 123
Service, 220
Service timer, 129
Settings, 140, 145
Shut-off valve, 153, 154, 156, 157
Signal range, 71
SIL 2, 137
Simulation, 130, 133
Single-channel operation, 137
Span, 76
srlin, 92, 127
srlin2, 92, 127
sroff, 92, 127
Stabilizing valve, 154, 155, 157
Start-of-scale value
    Set, 75
Stop time, 131
Structure, 19
Support, 220

T

Tank connection, 209
Technical data, 140, 145
Test certificates, 13
Transmitter, 137
Trimming
    lower trim point , 124
    upper trim point, 124
Turning range, 54

V

Variable mapper, 101
Vent valve, 127, 156, 158
Volume, 105

W

Write protection, 90, 141, 146

Z

Zero point calibration, 87, 117

www.siemens.com/processautomation

Siemens AG
Industry Automation (IA)
Sensors and Communication
Process Analytics
76181 KARLSRUHE
DEUTSCHLAND

Subject to change without prior notice
A5E00047092-08
© Siemens AG 2012

A5E00047092

A5E00047092

www.siemens.com/processautomation

OPERATION AND MAINTENANCE MANUAL

(1) MODEL 10 GRANULAR ACTIVATED CARBON ADSORPTION SYSTEM

FOR

KIRTLAND AFB ALBUQUERQUE, NM

SOLD TO: TECHSAS, INC.
BACLIFF, TX

PREPARED BY
CALGON CARBON CORPORATION
MOON TOWNSHIP, PA

CALGON CARBON PROJECT NUMBER: **CTO.150010.KRTAF**
CUSTOMER PURCHASE ORDER NUMBER: **560245**
DATE: OCTOBER, 2016

THIS MANUAL IS THE PROPERTY OF CALGON CARBON CORPORATION AND IS NOT TO BE REPRODUCED IN WHOLE OR PART, NOR EMPLOYED FOR ANY PURPOSE OTHER THAN SPECIFICALLY PERMITTED IN WRITING BY CALGON CARBON CORPORATION.

SAFETY DEPENDS ON YOU

Calgon Carbon Corporation's equipment is designed and built with safety in mind. However, proper installation and operation can increase your overall safety.

DO NOT INSTALL, OPERATE OR REPAIR THIS EQUIPMENT WITHOUT READING THIS MANUAL AND THE SAFETY PRECAUTIONS CONTAINED THROUGHOUT.

BE SURE THAT ALL INSTALLATION, OPERATION, MAINTENANCE AND REPAIR PROCEDURES ARE PERFORMED ONLY BY QUALIFIED INDIVIDUALS.

SAFETY HIGHLIGHTS

READ AND UNDERSTAND THE FOLLOWING SAFETY HIGHLIGHTS.

⚠ WARNING

This statement appears where the information must be followed exactly to avoid serious personal injury or loss of life

⚠ CAUTION

This statement appears where the information must be followed exactly to avoid minor personal injury or damage to equipment.

QUESTIONS, TROUBLESHOOTING, SPARE PARTS

Call Calgon Carbon Corporation at 1-800-422-7266

CALGON CARBON CORPORATION ♦ COPYRIGHT 2016 ♦ ALL RIGHTS RESERVED

TABLE OF CONTENTS

SECTION 1 SYSTEM DESCRIPTION

1.1. Introduction
1.2. Model 10 Specifications and Operating Conditions
1.3. General System Description

SECTION 2 INSTALLATION

2.1. Introduction
2.2. Foundations
2.3. Equipment Installation
2.4. General Handling and Lifting Instructions
2.5. Recommended Unloading and Placement Procedures

SECTION 3 OPERATION

3.1. Pre-Operation Check-Out
3.2. Filling An Adsorber With Carbon
3.3. Wetting (Deaerating The Carbon)
3.4. Backwashing and Backflushing
  3.4.1 Backwash / Backflush – General
  3.4.2 Backwashing An Adsorber
  3.4.3 Re-Starting System After Backwashing
3.5. Start-Up
  3.5.1 Series Flow
  3.5.2 Parallel Flow
3.6. Steady State Operation
  3.6.1 Monitoring
  3.6.2 Valve Operation
  3.6.3 Adsorber Sequencing – V-214A Lead, V-214B Lag
  3.6.4 Adsorber Sequencing – Taking Adsorber V-214A Off-Line
  3.6.5 Adsorber Sequencing – V-214A Back On-Line as the Lag Vessel
  3.6.6 Adsorber Sequencing – Taking Adsorber V-214B Off-Line
  3.6.7 Adsorber Sequencing – V-214B Back On-Line as the Lag Vessel
  3.6.8 Adsorber Sequencing – Adsorber Sequencing – Parallel Operation
3.7. Shutdown
  3.7.1 Short Term Shutdowns
  3.7.2 Extended Shutdowns
3.8. Troubleshooting Guide

CALGON CARBON CORPORATION ♦ COPYRIGHT 2016 ♦ ALL RIGHTS RESERVED

SECTION 4 CARBON TRANSFER PROCEDURE

4.1. Standard Trailer
4.2. Site Requirements
4.3. Spent Carbon Transfer to Trailer
4.3.1 Spent Carbon Transfer
4.3.2 Drain Water From Trailer
4.4. Fresh Carbon Transfer From Trailer
4.4.1. Fill The Trailer With Water
4.4.2. Transfer Carbon To Adsorber

SECTION 5 GENERAL INFORMATION

5.1. Maintenance
5.2. Safety Considerations
5.2.1. Oxygen Deficiency Due To Activated Carbon
5.2.2 Emergency Procedures
5.2.3. Pressure Relief Warning
5.3. Record Keeping

SECTION 6 ACTIVATED CARBON / ADSORPTION INFORMATION

6.1. Adsorption
6.2. Activated Carbon And How It Works
6.3. Factors Affecting Adsorption
6.4. Additional Adsorption Theory
6.5. Glossary

SECTION 7 CARBON DATA

- Activated Carbon Product Bulletin/Specifications
- Safety Data Sheet

CALGON CARBON CORPORATION ♦ COPYRIGHT 2016 ♦ ALL RIGHTS RESERVED

SECTION 8 OPERATING INFORMATION

Figure 1 – Vessel V-214A to V-214B Series Flow
Figure 2 – Vessel V-214B On-Line Vessel V-214A Carbon Transfer
Figure 3 – Series Flow Vessel V-214B to V-214A
Figure 4 – Vessel V-214A On-Line Vessel V-214B Carbon Transfer
Figure 5 – Parallel Flow Vessel V-214A and V-214B
Figure 6 – Vessel V-214B On-Line Vessel V-214A Backwashing
Figure 7 – Vessel V-214A On-Line Vessel V-214B Backwashing
Figure 8 – Calgon Carbon Standard Trailer
Figure 9 – Calgon Carbon Triple Compartment Trailer
Carbon Acceptance Canister Instructions
Spare Parts Program
Warranty
Video Agreement

- Model 10 Pressure Drop Curve – Series & Backwash
- Curve: Rate Of Wetting Versus Time For Granular Activated Carbon
- Curve: Percent Bed Expansion
- Application Bulletin: Disinfection Of Granular Activated Carbon
- ASME Section VIII - U1A Forms

SECTION 9 SPECIFICATIONS AND CATALOG CUT SHEETS

SECTION 10 SHIPPING SPECIFICATION

SECTION 11 DRAWINGS

SECTION 1

SYSTEM DESCRIPTION

SECTION 1

SYSTEM DESCRIPTION

1.1 INTRODUCTION

This manual covers a general description and operating procedures for a Model 10 Granular Carbon Adsorption System. This system is designed to treat liquid streams containing organic compounds amenable to adsorption using Calgon Carbon Corporation's granular activated carbon products. If the guidelines in this manual are read and followed carefully, the system can be operated efficiently and safely with minimal operating expense.

The recommended operating practices set forth in this manual are patterned to suit normal operating conditions. Different conditions may require modifications of these operating practices. Since varying operating conditions or problems may arise over long-term operation, the skill and judgment of the operating personnel should be exercised when needed.

This manual should be available to operating personnel and engineers so that the operating instructions are followed. Operators should record all operating data and maintenance work (overhauls, repairs, etc.) in an operator's logbook. Only trained personnel should operate the system and perform maintenance. If further information beyond what is contained in this manual is required, please contact the nearest Calgon Carbon Corporation regional sales office for assistance.

1.2 MODEL 10 SPECIFICATIONS AND OPERATING CONDITIONS

1. Adsorber Vessel Specifications:

- For Adsorber Vessel Specifications refer to Vessel Arrangement Drawing found in Section 11.
- For System Pressure Drop refer to the Pressure Drop Curve found in Section 8.

BACKWASHING INFORMATION:

Bed Expansion: 25%

- For Backwash Expansion Rates refer to the Bed Expansion Curve found in Section 8.

CALGON CARBON CORPORATION ♦ COPYRIGHT 2016 ♦ ALL RIGHTS RESERVED

2. System Weights and Dimensions (Approximate):

- For System Weights and Dimensions refer to the General Arrangement Drawing found in Section 11.

3. Vessel Accessories/Piping

Piping:

Process Piping:	8" Sch. 40 Carbon Steel
Carbon Transfer Piping:	4" Sch. 40 Carbon Steel (fill)
	4" PPL Lined Carbon Steel (discharge)
Backwash Piping:	8" Sch. 40 Carbon Steel

VESSEL NOZZLES	NUMBER	SIZE	FLANGE TYPE
Side Manway	1	20"	150#F.F.
Top Manway	1	14"x18"	Elliptical F.F.
Process In	1	8"	150# F.F.
Process Out	1	8"	150# F.F.
Carbon Inlet/Vent	1	4"	150# F.F.
Carbon Outlet	1	4"	150# F.F.
BW In			At Process Outlet
BW Out			At Process Inlet
Air Release	1	2”	150# F.F.
Sample Taps	3	2"	150# F.F.

Pressure Relief:

Pressure Relief Device:	Rupture Disk
Rupture Disk Material of Construction:	Graphite
Rupture Disk Stamped Burst Pressure:	125 psig
Rupture Disk Recommended Operating Ratio:	80%
Recommended Maximum Inlet Pressure:	100 psig

4. Carbon

Carbon Type:	OLC AW
Mesh Size:	12 x 40
Initial Fill:	40,000 Lbs. (Quantity per System)
Quantity per vessel:	20,000 Lbs.

CALGON CARBON CORPORATION ♦ COPYRIGHT 2016 ♦ ALL RIGHTS RESERVED

5. Materials of Construction List

WETTED CONTINUOUSLY		
ITEM	CCC SPECIFICATION NUMBER	MATERIAL OF CONSTRUCTION
Process and Carbon Fill Piping	C2 --	Sch. 40 Carbon Steel Pipe Cast Iron Fittings EPDM Gaskets
Process Valves	FLOWLINE	Ductile Iron Body Nylon Coated Ductile Iron Disk 416 Stainless Steel Shaft EPDM Seat
Carbon Discharge Piping	L1	PPL Lined Steel PPL Lined Cast Iron Fittings
Carbon Exchange Valves	4.08	316SS Body, Ball and Stem TFE Seats and Seals
Instrument and Flush Connection Piping	C13 S6	Sch. 40 Galvanized Carbon Steel 316 SS Tube and Fittings
Instrument and Flush Connection Valves	4.03	Bronze/Brass Body, Ball and Stem TFE Seats and Seals
Pressure Gauges	PI-217	316SS Bourdon Tube 316SS Connection
Rupture Disks	PSE-577	Graphite
Expansion Joints	24.06	Neoprene
Vessel Lining	VS7	Plasite 4110 Vinyl Ester
Vessel Manway Gaskets	G46	EPDM, Off-White
Underdrain Materials	22.106	Polypropylene Septa Ivory Rubber Gasket Polypropylene Expanding Ring
Basket Strainer	22.53	316 SS
Air/Vacuum Release	Crispin	AL Series
Vent and Sample Piping	S15	316 SS Pipe and Fittings
WETTED INTERMITTENTLY OR FOR SHORT TIME PERIODS		
Quick Connect Couplings	32.40 32.60	Malleable iron Aluminum

CALGON CARBON CORPORATION ♦ COPYRIGHT 2016 ♦ ALL RIGHTS RESERVED

6. Carbon Delivery

	STANDARD TRAILER (15 PSIG HOPPER)	MULTI COMPARTMENT TRAILER
Carbon (Lbs-dry):	20,000 (dry)	20,000 For GAC exchange 40,000 initial fill
Utility Requirements: Air (SCFM): (PSIG): Water (GPM): (PSIG):	 100 100 (**) 100 --	 100 100 (**) 100 --
Water Required to Fill Trailer (Gallons): Dry Carbon: Pre-Wetted Carbon:	 5,000 4,200	Compartment End Center 2,800 5,000 2,500 4,200
Height Clearance (Ft):	13	14
Overall Length: approx.	57’	62’
Empty Weight (Lbs):	32,000	37,000
Filled Weight (Lbs): Dry Carbon: Wet Carbon (Before Drain): (After Drain):	 52,000 94,000 72,000	For GAC Exchange 57,000 99,000 77,000

(*) Unloading accomplished with eductor
(**) Regulated down to 15 psig max.

1.3 GENERAL SYSTEM DESCRIPTION

The Model 10 Adsorption System is a unit consisting of two (2) vertical pressure vessels, each containing 20,000 pounds of granular activated carbon (total of 40,000 pounds per system). The vessels are complete with underdrain. Process piping and carbon transfer piping is shipped loose for installation in the field. The adsorber vessels are free-standing vessels, with the central piping assembly preassembled.

After connecting the influent and effluent piping to the system, the vessels may be operated in a series or parallel configuration.

Granular activated carbon will be delivered to the site in Calgon Carbon Corporation's bulk trailers for unloading directly as a water slurry into an empty adsorber.

CALGON CARBON CORPORATION ♦ COPYRIGHT 2016 ♦ ALL RIGHTS RESERVED

The stream to be treated is pumped to the adsorption system at a flow rate compatible with the design capacity of the unit. The adsorption system is operated in a downflow mode with the granular carbon beds in a series or parallel configuration.

In a series system, flow is directed into the top of the first vessel (lead adsorber) and flows down through the carbon. From the bottom of the lead adsorber, the stream flows into the top of the second adsorber (polish adsorber). Effluent from the polish vessel flows into the effluent line for discharge to a point determined by the client.

Initially, the impurities are adsorbed onto the carbon in the upper portion of the lead bed. As this top layer of carbon becomes saturated, adsorption takes place lower in the bed. Eventually all the carbon in the lead adsorber becomes saturated and the contaminant concentration of the effluent from the adsorber increases until it approaches or equals the influent concentration.

When the carbon in a vessel is exhausted, an empty trailer is sent to the site to remove the load of spent carbon. Pending completion of carbon acceptance by Calgon Carbon, the carbon will be returned to one of our plant sites for thermal reactivation.

The spent carbon is transferred from the adsorber to the bulk trailer by first filling the adsorber with water. The adsorber is then pressurized using compressed air as the motive force to facilitate the carbon transfer to the trailer.

Once the spent carbon transfer operation is completed, a charge of fresh carbon can be transferred into the empty adsorber. This is accomplished by filling the bulk trailer with water and placing a water cushion in the adsorber. The bulk trailer is then pressurized with compressed air to facilitate the carbon transfer into the adsorber.

In series operation, when the lead bed is taken out of service, flow may be directed to the polish adsorber (now the lead bed) for uninterrupted operation. After the first adsorber is emptied and then filled with fresh carbon, it can be placed on-stream in the polish position. At this point, the second adsorber becomes the lead bed of the two-stage operation. Series operation achieves the most efficient use of the carbon.

In parallel operation, the influent flow is directed to both vessels through a common inlet line. When contaminant breakthrough is detected from one or both vessels, the system is shut down for carbon replacement. If breakthrough occurs from only one bed, it is possible for the other adsorber to remain on-stream at its normal or a slightly higher flow rate. However, this is normally not done and both carbon beds are replaced. Parallel operation is used in situations where the carbon usage rate is low, the mass transfer zone is short, and/or two stage operations is not required.

CALGON CARBON CORPORATION ♦ COPYRIGHT 2016 ♦ ALL RIGHTS RESERVED

After start-up, records should be kept of pertinent data such as flow rate, pressure drop across each bed, total dissolved solids, temperature, pH, and/or specific performance requirements such as toxicity, BOD, COD, and TOC organic contaminant levels.

CALGON CARBON CORPORATION ♦ COPYRIGHT 2016 ♦ ALL RIGHTS RESERVED

SECTION 2

INSTALLATION

SECTION 2

INSTALLATION

2.1 INTRODUCTION

This section describes the offloading and installation of the modular carbon system. In addition to the instructions below, refer to the Shipping Specification included with this manual for instruction on shipping and handling of large adsorber systems.

2.2 FOUNDATIONS

The equipment can be set on a permanent or temporary foundation. A temporary foundation could be a steel skid or plate, paved area or concrete foundation to which the adsorber vessels can be secured. Any foundation, either temporary or permanent, must be adequate to support the operating weight of the unit. See the Calgon Carbon Corporation general arrangement drawing for the dimensions and weights of the system.

Before installation of a permanent system, the adsorber tanks should be oriented on the foundation to ensure that the inlet and outlet opening and anchor lugs are positioned properly. Anchoring can be installed either in the foundation or at time of vessel installation, provided local codes or regulations are satisfied. The outline of the adsorbers should be marked on the foundation.

2.3 EQUIPMENT INSTALLATION

A crane is required to off-load the vessels and piping skid. Lifting lugs are provided on all the vessels. A properly trained and experienced rigging crew should be employed to set the equipment. The vessels should be set on the foundation in a level position and be anchored as required by local codes and seismic regulations. Each vessel must be individually set.

1. The following instructions are typical for large modular adsorber systems. Refer to the project drawings for specific details; i.e. dimensions, weights and pipe sizes.
2. Before the equipment is shipped, a site visit is recommended to review specific site conditions that may affect delivery or installation. Special note should be made for:
    - Overhead clearances – power lines, trees, plant piping
    - Access to site – fences, trees, locations within neighborhood or plant
    - Soil conditions – Can the delivery truck get close to the installation site?
    - Foundations – Properly cured? Correct size to accept new system?

CALGON CARBON CORPORATION ♦ COPYRIGHT 2016 ♦ ALL RIGHTS RESERVED

3. Receive adsorption equipment in accordance with plant site requirements. Typically, one truck is used to ship the equipment. Shipment is normally comprised of the following items:

   - (2) Adsorber Vessels; Refer to project specific drawings for exact vessel dimensions and weight.
   - (12) Prefabricated pipe spools.
   - (1) Crate of hardware; Containing bolts, gaskets, pipe supports and u-bolts, gages etc.
   - (1) Valve Rack; Refer to the following table for the weight of a pipe rack.

Pipe Size	Weight
6”	2,800 lbs.
8”	3,900 lbs.
10”	6,300 lbs.

   Refer to the project drawings and material list enclosed in the crate for a comprehensive account of components provided for the particular job being installed.

4. Off load the equipment from truck to the pre-prepared mounting location. Set equipment on properly formulated foundation ensuring weight loading, anchor bolt depth, smooth level surface and adequate dimension for equipment footprint. For recommended lifting procedures refer to the section titled Lifting & Handling Guidelines.

5. The following installation steps can be accomplished in utilizing a crane for one day. Refer to the installation drawing, Figure 1, for generalized details and the project drawings for more specific details.
   - Set one vessel in proper location on the foundation
   - Position valve rack at the estimated point of hook-up. Make sure that vessel and valve rack are set true and level to plan.
   - Align the effluent nozzle on the bottom head, the effluent pipe, and rubber expansion joint with the appropriate valve rack connection.
   - Bolt-up snug when alignment is satisfactory.
   - Align the influent piping to the designated valve rack connection and connect expansion joint piping with tank nozzle on the top of the vessel, and bolt-up snuggly.
   - Attach all pipe bracket supports and u-bolts as provided.
   - When it is determined that complete line up is acceptable finish bolting both effluent and influent lines.
   - Set the second vessel into position and line up second vessel with valve rack and effluent/influent piping as previously described.
   - When accomplished finish the bolt-up.

CALGON CARBON CORPORATION ♦ COPYRIGHT 2016 ♦ ALL RIGHTS RESERVED

- When completely satisfied with installation bolt vessels to foundation using predetermined anchor bolt hardware.
- Connect (1) carbon fill, and (1) carbon discharge line to each vessel.
- Install the vessel sample ports and connecting hardware as detailed on the project drawings.
- Mount pressure gauges and instruments as shown on project drawings.
- Install the Carbon Acceptance Canister.
- If equipment is supplied with an electrical panel, run power feed to the panel and make connections per the interconnection drawing.

6. The customer should connect from the connections on the pipe rack; influent, effluent, backwash supply and backwash outlet, to the plant supply piping. Gaskets and bolts supplied by the customer.
   Client supplied effluent piping for the adsorption system should include an anti-siphon loop or adequate backpressure to ensure that the water level in the vessels covers the media during operation.

   The pressure relief discharges to the backwash outlet/vent line. The backwash outlet/vent line should have unrestricted flow to atmosphere.

7. Each vessel has underdrain nozzles pre-installed by CCC. For internal underdrains; ring type and internal cones, the septa should be checked for tightness before the manway covers are closed and secured.

8. The system is now ready for hydro testing and disinfection as required.

2.4 GENERAL HANDLING AND LIFTING INSTRUCTIONS

The recommended lift points are shown on the installation drawing; lifting lugs on vessel top head, vessel leg anchor base plates and location shown on the valve rack.

1. Always make lift attachments to the designated lift points when using chains or cables. Never lift using a vessel nozzle.
2. Operators of hoisting and moving equipment must follow proper rigging procedures at all times.
3. Always lift - NEVER roll or slide equipment.
4. When moving equipment, do not drop or allow hard impact. Do not allow cables, hooks, or spanner bars to swing against or slide over the vessel.
5. Never allow tools to strike or drop on equipment (especially inside or outside of vessels).
6. Never allow bare metal chains or cable to slide against the metal surface of equipment causing marring, deformation or serious defects in the metal.

CALGON CARBON CORPORATION ♦ COPYRIGHT 2016 ♦ ALL RIGHTS RESERVED

7. Avoid temporarily bracing vessels or equipment with metal structures, wood is acceptable for this application. Avoid striking vessel with tools or instruments of any kind.
8. All ladders used inside vessels shall have ends protected. Ladders shall have rubber protectors to prevent damaging the lining.
9. Workmen entering a lined vessel must wear soft-soled shoes, free of grit. Workmen must follow plant and OSHA requirements for confined space entry.

2.5 RECOMMENDED UNLOADING AND PLACEMENT PROCEDURES (REFER TO SHIPPING SPECIFICATION VS13)

1. Vessel and miscellaneous equipment unloading shall be accomplished in such a manner as to avoid damage to finished surfaces. Adequate padding may be necessary around the lifting point. Wooden chalks and crating should be carefully removed where necessary.
2. Utilize chains, nylon slings, or a spreader bar for hoisting vessels. The angle between the lifting point and the top of the equipment must always be 60° or greater. Workmen shall keep control over the vessel with guidelines. No metal rigging may come in contact with the vessel except for specifically designed lift points or lifting lugs.
3. A crane is required to off-load, move and hoist into position the vessels and piping assemblies. Lift points are provided on all pieces. A properly trained and experienced rigging crew shall be employed to set the equipment. The equipment shall be set on a solid foundation, made level as possible and anchored as required by local codes and seismic regulations. Each vessel must be individually set.
4. Piping connection points to vessels and valve rack shall be free of mechanical stress. Do not force pipe connections to these points for damage can result.
5. Follow safe anchor bolt installation practices.
6. Dirt marks shall be cleaned from the surface of all Equipment upon completion of the installation. Marred paint resulting on Vessels and all equipment pieces shall be touched up with a paint of comparable color and quality. More severe damage requires appropriate surface cleaning and preparation before primer and finishing paint are applied.

CALGON CARBON CORPORATION ♦ COPYRIGHT 2016 ♦ ALL RIGHTS RESERVED

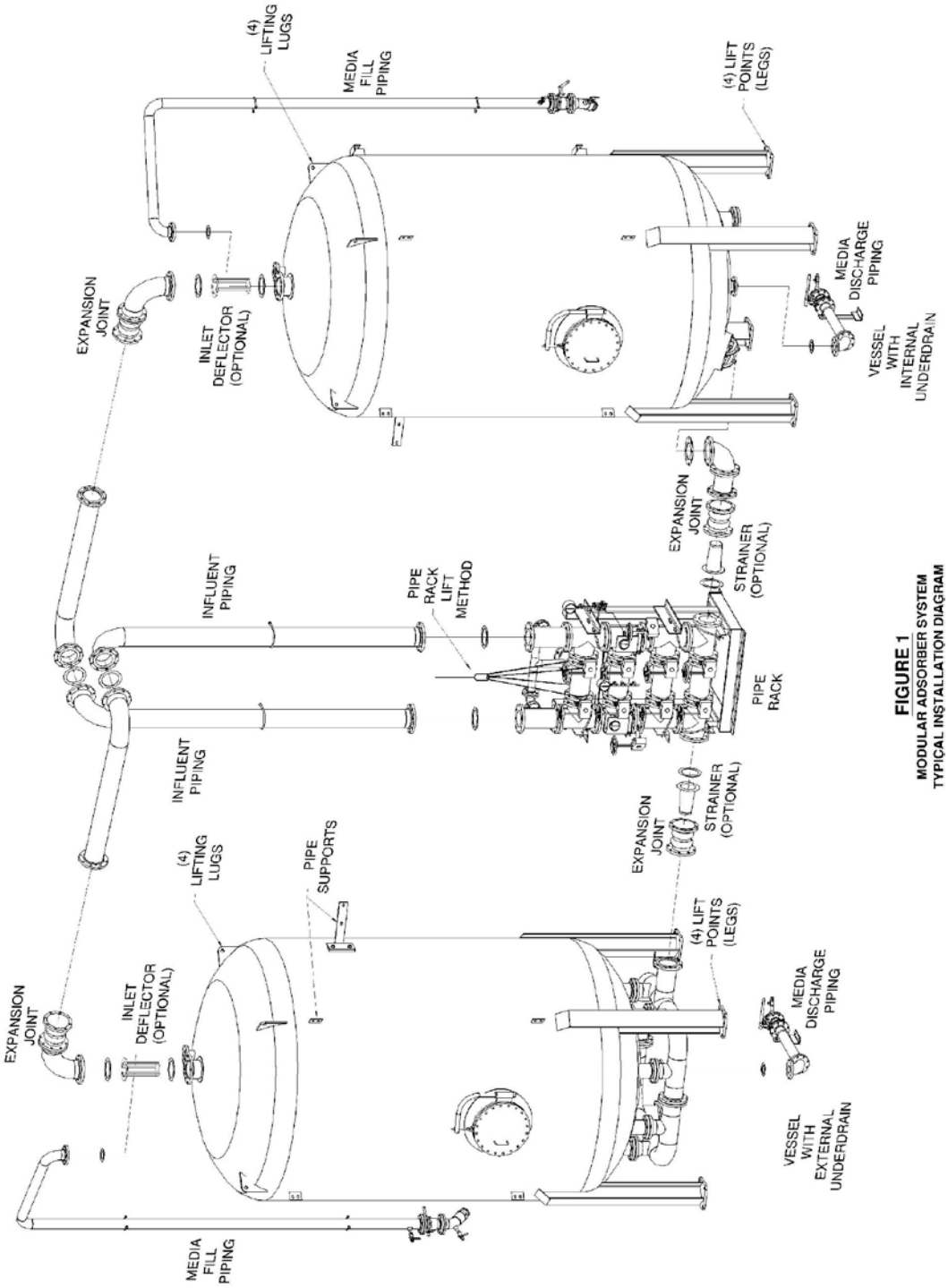

FIGURE 1
MODULAR ADSORBER SYSTEM
TYPICAL INSTALLATION DIAGRAM

SECTION 3

OPERATION

SECTION 3

OPERATION

3.1 PRE-OPERATION CHECK-OUT

All equipment and systems affiliated with the granular carbon adsorption system such as pumps, filters, etc. should be checked out according to the manufacturer's instructions. Specific activities to complete before operating the adsorption equipment should include the following:

1. Check all piping connections for proper installation and tightness.
2. Ensure that all gauges and instruments are functional and installed correctly. Re-zero or re-calibrate if necessary.
3. Close all valves in the adsorber piping system.
4. Install the carbon acceptance canister (if provided) after checking to ensure it is filled with carbon.

For potable water treatment installations, the client will be responsible for cleaning and disinfecting the vessels and piping prior to filling the system with carbon. The procedures to complete this step in the installation process are the responsibility of the client.

3.2 FILLING AN ADSORBER WITH CARBON

After the system has been checked, the adsorbers are ready to be filled with granular activated carbon. The carbon is transferred to the adsorbers as water slurry from Calgon Carbon trailers. The detailed procedures for making the transfer are given in Section 4.

The trailer driver connects the necessary hoses and operates all the valves on the trailer. A plant operator should be available to operate the valves on the adsorber system.

After all the carbon is transferred from the trailer, the driver disconnects the hoses and closes the valves on the trailer. The plant operator closes the valves in the vent and carbon fill lines on the adsorber. The adsorber is now ready to be backwashed or backflushed.

CALGON CARBON CORPORATION ♦ COPYRIGHT 2016 ♦ ALL RIGHTS RESERVED

3.3 WETTING (DEAERATING THE CARBON)

In a typical bed of virgin carbon, the pore volume is approximately 40% of the bed volume. Carbon which is shipped dry will contain air in these pores. Therefore, the carbon must be properly wetted prior to being placed on stream. If this is not done, the air within these pores will displace into the void spaces between the carbon particles during operation and cause high pressure drop and channeling in the adsorbers. These problems can cause premature breakthrough of contaminants. Air will not migrate out of the bed during normal downflow operation.

The time required for wetting is a function of liquid temperature and viscosity. Generally, a minimum wetting period of 24 hours is required using water at ambient temperatures, although a period of up to 72 hours is preferred for complete wetting. After wetting, backwashable adsorbers should be backwashed to remove air and segregate the carbon by size.

As an alternative, the Calgon Carbon Service trailer containing fresh carbon may be filled with water and allowed to stand for several hours. When the fresh carbon is transferred to the adsorber, the adsorber should be backwashed to eliminate any remaining air.

After the carbon has been wetted, the adsorber should be drained and then backfilled until water flows out the system vent line. The adsorber should be filled up-flow at 2 gpm/ft^2 maximum. For a Model 10 System this is 150 gpm, maximum.

If the unit must be placed on-stream before the carbon has been wetted, the adsorbers should be drained and backfilled when the pressure drop becomes prohibitive or after two days of operation, whichever occurs first.

For process applications, the same procedure is required. If the process liquid cannot be diluted with water and the carbon must be wetted with the process liquid there will be a significant heat of adsorption. In this case, Calgon Carbon should be contacted for specific instructions on the method to be used for wetting.

CALGON CARBON CORPORATION ♦ COPYRIGHT 2016 ♦ ALL RIGHTS RESERVED

3.4 BACKWASHING AND BACKFLUSHING

3.4.1 BACKWASH/BACKFLUSH -- GENERAL

Backwashing and backflushing are procedures involving running clean, contaminant-free water upflow through the adsorber. Backwashing or backflushing of a carbon bed can be done after fresh carbon has been transferred into an adsorber and wetted, or during operation to remove sediment from the top of the bed.

If the adsorbers are to be backwashed during operation, they should be backwashed prior to startup. The reasons for backwashing before placing fresh carbon on-line are to:

1. Size segregate the carbon so subsequent backwashing will return the carbon to the same relative position in the bed.
2. Remove any remaining air from the bed.
3. Remove carbon fines which can, in some cases, lead to excessive pressure drop and flow restriction.

Backwashing is done during operation to remove:

1. Sediment from the top of the bed.
2. Carbon fines that may be plugging the underdrain nozzles.
3. Air that is binding the bed. The need to backwash is indicated by an increased bed pressure drop.

Backwashing an adsorber results in expanding the carbon bed, removing air, suspended solids and carbon fines and classifying the carbon particles. The backwash flow rate depends upon the carbon particle mesh size and the water temperature (refer to the bed expansion curve in Section 8). Model 10 units are designed with significant straight side height to permit 30% bed expansion, and the selected backwash rate should limit the bed expansion to a maximum of 25%.

For your system, refer to Section 1.2 for the design backwash water flow rate. Note that this rate assumes a 55˚F backwash water source. Use the bed expansion curve in Section 8 to determine a backwash rate if the water source is at a different temperature.

CALGON CARBON CORPORATION ♦ COPYRIGHT 2016 ♦ ALL RIGHTS RESERVED

In a system that is not designed for backwashing, an operation termed backflushing can be used to remove fines from the upper portion of the bed. This operation will not remove fines from the lower portion of the bed because it does not expand the bed. Expansion of the bed allows the fines at the bottom of the bed to move to the top. However, fines do not always cause high pressure drop, and their removal is not always necessary.

The backflushing rate is 2 to 3 gpm/ft^2 and this is not significant enough to expand the carbon bed. For the Model 10 adsorber this is a flow rate from 150 gpm to 225 gpm. Flow rates of less than 225 gpm will not expand the bed; therefore, size segregation of the bed will not occur. The time required for backflushing is 30 to 45 minutes.

Normally when backwashing or backflushing, a clean external water source is used. The stream should be compatible with the system and free of suspended solids and organic contaminants which might affect adsorption. If necessary, effluent from the adsorber system may be used as the water source. In this case a tank with storage capacity for 15 minutes of backwash water (20,000 gallons) will be necessary.

When normal downflow operation is started after backwashing, the initial 5 to 15 minutes of effluent flow will be dark due to a small quantity of fines. Under normal operating conditions, this condition will clear up.

3.4.2 BACKWASHING AN ADSORBER (FIGURES 6 AND 7 IN SECTION 8)

In this mode, a clean external source is used as the source for the backwash water. Note that the lead adsorber is taken out of service while the backwashing procedure takes place. It is recommended that the entire system be taken off-line to retain all process conditions. However, for continuous flow, the lag adsorber can remain on-line while the lead bed is being backwashed.

For a system operating in parallel, only the vessel needing backwashed should be taken off-line when backwashing is required.

1. Isolate the adsorber to be backwashed. If adsorber V-214A is to be backwashed, refer to Section 3.6.4 for valve sequencing. If adsorber V-214B is to be backwashed, refer to Section 3.6.6 for sequencing. If entire system is taken off-line, make sure source is turned off (i.e., pump) and all valves at system are closed.
2. Open the vent valve (V6 for adsorber V-214A, V5 for adsorber V-214B).

CALGON CARBON CORPORATION ♦ COPYRIGHT 2016 ♦ ALL RIGHTS RESERVED

3. Open the backwash water inlet valve (V8 for adsorber V-214A, V7 for adsorber V-214B) and start the backwash pump. Backwash flow should be increased to design flow gradually, avoiding water hammer.

The backwash water enters the vessel through the effluent line and flows up through the underdrain and the carbon bed. The backwash water discharge from the vent line should be observed for clarity to determine the duration of backwashing. Backwashing for high pressure drop should take approximately 10 minutes. If excessive sediment and turbidity exists in the untreated water, the backwashing times may have to be increased to 15 minutes. A fresh carbon fill should be backwashed to classify the carbon. The time required for this step is approximately 15 minutes or until the backwash discharge is free of fines.

3.4.3 RE-STARTING SYSTEM AFTER BACKWASHING

The valve sequence given below describes the steps taken to bring a system on-line after backwashing. The valve numbers refer to bringing adsorber V-214A back on-line in the lead position. Valve numbers applying to placing adsorber V-214B back in the lead position are in parentheses.

1. Close the backwash water inlet valve V8. (V7)
2. Close vent valve V6. (V5)
3. Open cross-over valves V10, V12. (V9, V11)
4. Open influent valve V2. (V1)
5. Close influent valve V1. (V2)

3.5 START-UP

3.5.1 SERIES FLOW

The adsorber system is normally operated in a series mode. Valves in the influent and effluent lines are opened or closed, as required, to set the operation of the carbon vessels in the desired configuration. The first bed in the system is called the lead bed. The second bed is referred to as the polish or lag bed.

The following sequence of steps should be followed to bring an adsorption system on-line in the series mode:

1. Check that all the valves in the adsorption system are closed.

2. Open the valve in the effluent line from the polish adsorber (V4 for adsorber V-214A, V3 for adsorber V-214B).
3. Open the valves in the cross-over line between the adsorbers (V10. V12 for V-214A in the lead position, V9, V11 for V-214B in the lead position).
4. Start the feed pump and open the valve in the pump discharge line.
5. Slowly open the valve in the influent line to the lead adsorber (V2 for adsorber V-214A, V1 for adsorber V-214B) and allow the pressure to increase to the operating level.

At this point, flow should be established downflow through both vessels and they will be on-line in series.

Set the flow rate to the system at the desired value after flow is established to the unit. The flow control meters and control instrumentation will be provided by the client as required for the system.

In order to obtain full utilization of the carbon and prevent air entrapment and channeling in the bed, the water level must remain above the carbon bed. To prevent the bed from draining due to gravity or loss of influent supply, a vacuum break (anti-siphon) loop or backpressure should be included by the client in the effluent piping. This start-up sequence assumes that an anti-siphon loop is present in the effluent piping. If no anti-siphon loop or backpressure is present, start the system by starting the pump and opening the valves in the opposite order of the sequence given previously (i.e., open the influent valve first, followed by the cross-over valves and effluent valve).

After the system is operating at steady state, water flow to the Carbon Acceptance Canister (CAC) can be started. The GAC in the canister must first be wetted, refer to Section 3.3 for wetting instructions and Section 8 for information on the carbon acceptance canister.

3.5.2 PARALLEL FLOW

The following sequence of steps should be followed to bring an adsorption system on-line in the parallel mode:

1. Check that all the valves in the adsorption system are closed.
2. Open the valves in the effluent lines from the adsorbers (V3 and V4).
3. Start the feed pump and open the valve in the pump discharge line.

4. Slowly open the valve in the influent line to one adsorber (either V1 or V2) and allow the pressure to increase to the operating level.
5. Slowly open the valve in the influent line to the other adsorber (either V1 or V2) and allow the pressure to increase to the operating level.

At this point, flow should be established downflow through both vessels and they will be on-line in parallel.

Set the flow rate to the system at the desired value after flow is established to the unit. The flow control meters and control instrumentation will be provided by the client as required for the system.

In order to obtain full utilization of the carbon and prevent air entrapment and channeling in the bed, the water level must remain above the carbon bed. To prevent the bed from draining due to gravity or loss of influent supply, a vacuum break (anti-siphon) loop or backpressure should be included by the client in the effluent piping. This start-up sequence assumes that an anti-siphon loop is present in the effluent piping. If no anti-siphon loop or backpressure is present, start the system by starting the pump and opening the valves in the opposite order of the sequence given previously (i.e., open the influent valves first, followed by the effluent valves).

For parallel operation, flow is established to each vessel by opening the valves as indicated previously. Changing the flow to one vessel may result in a flow change to the other vessel. This occurs because the vessels share a common influent and effluent line. Flow meters can be installed in the individual influent lines to each vessel to balance the flow to each unit if required.

After the system is operating at steady state, water flow to the Carbon Acceptance Canister (CAC) can be started. The GAC in the canister must first be wetted, refer to Section 3.3 for wetting instructions and Section 8 for information on the carbon acceptance canister.

CALGON CARBON CORPORATION ♦ COPYRIGHT 2016 ♦ ALL RIGHTS RESERVED

3.6 STEADY STATE OPERATION

Once flow is established to both vessels and the flow rate is set, no further adjustments are made during normal operation. The operator should establish a routine to check the adsorbers and to collect operating data. This data can be used to establish a maintenance schedule, to determine when backwashing/backflushing is necessary, or to determine when fresh carbon is needed.

3.6.1 MONITORING

Sample connections are provided on the influent and effluent lines from each vessel to take periodic samples for analysis.

Pressure gauges are provided to determine the pressure drop across each carbon bed. Taking periodic pressure readings will provide the operator with historic data for troubleshooting purposes. In the event that operating conditions change, the operator has the capability of taking corrective action.

3.6.2 VALVE OPERATION

All valves should be operated in a slow and even motion. Abrupt opening and closing of the valves can shock the system. Since complete shut-off of flow while a pump is operating could cause damage to the pump, the valves should be operated in the proper sequence in order to always maintain flow through the system. If the vessels are identified as V-214A and V-214B then the corresponding valve positions during adsorption are given as follows:

PROCESS VALVE NUMBER	SERIES V-214A TO V-214B (FIGURE 1)	V-214B SINGLE OPERATION (FIGURE 2)	SERIES V-214B TO V-214A (FIGURE 3)	V-214A SINGLE OPERATION (FIGURE 4)	PARALLEL OPERATION (FIGURE 5)
V-1	Closed	Open	Open	Closed	Open
V-2	Open	Closed	Closed	Open	Open
V-3	Open	Open	Closed	Closed	Open
V-4	Closed	Closed	Open	Open	Open
V-5	Closed	Closed	Closed	Closed	Closed
V-6	Closed	Closed	Closed	Closed	Closed
V-7	Closed	Closed	Closed	Closed	Closed
V-8	Closed	Closed	Closed	Closed	Closed
V-9	Closed	Closed	Open	Closed	Closed
V-10	Open	Closed	Closed	Closed	Closed
V11	Closed	Closed	Open	Closed	Closed
V12	Open	Closed	Closed	Closed	Closed

Refer to Section 8 for the figures referenced in this table.

Single stage operation occurs for short time periods, such as during carbon transfer or backwashing, or during other routine maintenance on one of the adsorber vessels.

NOTE: FLOW SEQUENCE CHANGES (AS DESCRIBED IN THE FOLLOWING SECTIONS) SHOULD BE PERFORMED ONLY WHEN CARBON CHANGEOUTS, BACKWASHING, OR OTHER VESSEL MAINTENANCE IS REQUIRED.

3.6.3 ADSORBER SEQUENCING: V-214A LEAD, V-214B LAG

This sequence should be used to start up the system in series mode from V-214A to V-214B. Refer to Section 3.5.1 for additional details.

Starting valve position: All valves closed.

- Open valve V3
- Open valve V10, V12
- Open valve V1, V2

At this point, flow should be established from V-214A to V-214B.

3.6.4 ADSORBER SEQUENCING: TAKING ADSORBER V-214A OFF-LINE

When adsorber V-214A is taken off-line for carbon transfer or backwashing, all of the process flow should be sent through adsorber V-214B.

Starting valve position: Series flow from V-214A to V-214B.

- Open valve V1
- Close valve V10, V12
- Close valve V2

Flow should now be established through adsorber V-214B with adsorber V-214A off-line for carbon transfer or backwashing.

CALGON CARBON CORPORATION ♦ COPYRIGHT 2016 ♦ ALL RIGHTS RESERVED

3.6.5 ADSORBER SEQUENCING: V-214A BACK ON-LINE AS LAG VESSEL

After adsorber V-214A is filled with fresh carbon, it should be placed on-line in the polish position, with adsorber V-214B moved to the lead position.

Starting valve position: Single stage flow to V-214B.

- Open valve V9, V11
- Open valve V4
- Close valve V3

Flow should now be established from adsorber V-214B into adsorber V-214A.

3.6.6 ADSORBER SEQUENCING: TAKING ADSORBER V-214B OFF-LINE

When adsorber V-214B is taken off-line for carbon transfer or backwashing, all of the process flow should be sent through adsorber V-214A.

Starting valve position: Series flow from V-214B to V-214A.

- Open valve V2
- Close valve V9, V11
- Close valve V1

Flow should now be established through adsorber V-214A with adsorber V-214B off-line for carbon transfer or backwashing.

3.6.7 ADSORBER SEQUENCING: V-214B BACK ON-LINE AS LAG VESSEL

After adsorber V-214B is filled with fresh carbon, it should be placed on-line in the polish position, with adsorber V-214A moved to the lead position.

Starting valve position: Single stage flow to V-214A.

- Open valve V10, V12
- Open valve V3
- Close valve V4

Flow should now be established from adsorber V-214A into adsorber V-214B.

CALGON CARBON CORPORATION ♦ COPYRIGHT 2016 ♦ ALL RIGHTS RESERVED

3.6.8 ADSORBER SEQUENCING: PARALLEL OPERATION

The following sequence should be used to start up the system in parallel mode. Refer to Section 3.5.2 for details.

Starting valve position: All valves closed.

- Open valves V3 and V4
- Open valves V1 and V2

Flow should now be established through the system in parallel. When carbon transfer or backwashing is required, the system should be shut down until the operation is complete.

3.7 SHUTDOWN

3.7.1 SHORT TERM SHUTDOWNS

For short duration shutdowns lasting less than one or two weeks, little needs to be done. Close all valves in the adsorber piping system, and open the vent line valves on each vessel. The feed pumps should be shut down and the valves closed in the lines to and from the pumps. Any drain valves in the pump casing should be opened for the duration of the shutdown. Freeze protection measures such as draining lines at the low points should be taken when there is a chance of freezing. Freeze protection measures are usually the responsibility of the client.

3.7.2 EXTENDED SHUTDOWNS

For extended shutdowns, in addition to the steps in Section 3.7.1, the adsorbers should be drained of all water.

When the adsorbers are started up again, the carbon beds may require disinfection. If disinfection is required, the procedures to disinfect a carbon bed can be found in Section 8 of this manual. Once the disinfection is complete, backwashable adsorbers should be backwashed prior to start-up.

After disinfection, bring the adsorber back on-line in the downflow mode, monitor the effluent for coliform count and monitor the pressure drop.

CALGON CARBON CORPORATION ♦ COPYRIGHT 2016 ♦ ALL RIGHTS RESERVED

3.8 TROUBLESHOOTING GUIDE

PROBLEM		PROBABLE CAUSE		REMEDY
High pressure drop across adsorber.	1.	Bed not flooded. Bed is air bound.	1.	Open vent valve or carbon inlet valve to release pressure. Add water upflow to fill vessel. Establish constant forward flow, then close valve.
	2.	High feed pump pressure.	2.	Throttle feed pump.
	3.	High suspended solids loading or carbon fines around the nozzles.	3.	Test feed for suspended solids. Install influent filter. Backwash/backflush the adsorber.
	4.	Improper valve settings.	4.	Check valve sequence.
	5.	Carbon in effluent strainer.	5.	Shut down system. Clean out retainer and effluent line. Remove carbon from adsorber. Inspect vessel using side manway and repair damaged underdrain in adsorber.
Carbon in the effluent.	1.	Internal mechanical (i.e. underdrain) failure.	1.	Determine which adsorber is causing the problem, then remove carbon and make repairs. In addition, inspect carbon retainer in effluent line and replace if necessary.
Leaking flange.	1.	Loose bolts.	1.	Tighten bolts.

CALGON CARBON CORPORATION ♦ COPYRIGHT 2016 ♦ ALL RIGHTS RESERVED

3.8 TROUBLESHOOTING GUIDE

PROBLEM		PROBABLE CAUSE		REMEDY
Excessive flow out vent line.	1.	Broken rupture disk.	1.	Check the following conditions before replacing disk: 1) Check downstream valving to make sure that the system is not plugged off. 2) Check feed pump pressure to make sure it is not too high. 3) Check process valve sequence. 4) Check that excessive pressure build-up did not occur in closed vessels during extended shutdowns. Once the potential source of overpressurization is removed, replace rupture disk.
Sudden high contaminant concentration in effluent.	1.	Carbon heel from improper transfer.	1.	Wait until contaminant flushes out. Review transfer procedures.
	2.	Leaking valve.	2.	Repair/replace valve.
	3.	Mass transfer zone has extended into effluent.	3.	Replace carbon.

3.8 TROUBLESHOOTING GUIDE

Problem		PROBABLE CAUSE		REMEDY
Premature breakthrough of organics in the effluent.	1.	Influent concentration change.	1.	Confirm by analyzing effluent sample(s) before changing carbon.
	2.	Air in the influent stream.	2.	Open vent valve and fill bed upflow with water as required.
	3.	Background TOC or colloids present.	3.	Change carbon.
	4.	Leaking valves.	4.	Check operation of valves in influent and effluent lines.
	5.	Incorrect valve sequence.	5.	Sequence the flow through the system properly.
Carbon heel in empty vessel.	1.	Insufficient rinse water.	1.	Provide additional rinse water flow.
	2.	Mechanical failure.	2.	Check vessel internal parts and make repairs.
	3.	Foreign material on the carbon.	3.	Rinse vessel to remove carbon.

CALGON CARBON CORPORATION ♦ COPYRIGHT 2016 ♦ ALL RIGHTS RESERVED

SECTION 4

CARBON TRANSFER PROCEDURE

SECTION 4

CARBON TRANSFER PROCEDURE

4.1 STANDARD TRAILER

The procedures that are detailed in this section of the manual are for Calgon Carbon's standard carbon trailer. Carbon may be delivered in any of two types of trailers; the standard (single compartment) trailer, or the multi compartment trailer.

The multi compartment trailer (Figure 9 in Section 8) is built to hold 10,000 pounds of carbon in each end section and 20,000 pounds in its center section. The multi compartment trailer arrives at the site with fresh carbon in the end sections. First, spent carbon is transferred to the center section of the trailer and then the fresh carbon is transferred from the end compartments to the adsorber.

In cold weather conditions, steam may be used to thaw the trailer and transfer lines if necessary. Contact Calgon Carbon for trailer steaming procedures if required.

4.2 SITE REQUIREMENTS

A flat paved area is needed to support the Calgon Carbon service trailer which may weigh up to 100,000 pounds. The overhead clearance required for the adsorption system is 13 to 14 feet. Diagrams of the trailers with on-board piping are shown in Figures 8 and 9 in Section 8.

The utility and piping requirements to connect to the adsorber and trailer are as follows:

ADSORBER

Plant Air Line	3/4" Universal air connection 100 scfm at 30 psig min. (Attaches to 3/4" flush connection on carbon fill line above carbon inlet valve)
Plant Water Line	100 gpm (max) at 30 psig min. (Attach at drain connection using a 2" female Kamlock, or through backwash inlet using an 8" 150 lb. flanged connection)

CALGON CARBON CORPORATION ♦ COPYRIGHT 2016 ♦ ALL RIGHTS RESERVED

Trailer (See Figure 8 in Section 8)

Plant Air Line	3/4" Universal air connection (for both industrial and food grade trailer) 100 scfm regulated to 15 psig max.
Plant Water Line	4" Kamlock connection (female for industrial trailer, male for food grade trailer) 100 gpm regulated to 15 psig max. (Connect to Trailer Carbon Fill or Discharge Line)

4.3 SPENT CARBON TRANSFER TO TRAILER

Spent carbon transfer from the adsorber to the trailer is accomplished by pressurizing the adsorber with plant air. When the transfer is complete, the spent carbon in the trailer is drained of water. Prior to disconnecting any lines, the air supply must be shut off, and the adsorber and all transfer lines must be vented.

4.3.1 Spent Carbon Transfer

A. Prepare for Spent Carbon Transfer:

1. Close all adsorber valves.
2. Connect the adsorber carbon outlet line to the trailer carbon fill line using 4" flexible hose.
3. Open the center manway of the trailer or trailer vent valve T1 for venting.
4. Open valve T2 in the trailer carbon fill line.
5. Check that the adsorber is full of water.
6. To aid the initial phase of transferring spent carbon, fill the transfer line with water. To do this, use a 3/4" water hose to fill the transfer line with water at the adsorber carbon outlet valve's flush-out connection.

B. Transfer Spent Carbon

1. Open the 3/4" air line valve slowly and pressurize the adsorber to 25 to 30 psig.
2. Open the 4" adsorber carbon outlet valve (V14 for adsorber V-214A, V13 for adsorber V-214B) and transfer the spent carbon to the trailer.
3. As the trailer starts to fill with carbon slurry, open the trailer septa valves T8, T9, and T10 to drain off excess motive water.

CALGON CARBON CORPORATION ♦ COPYRIGHT 2016 ♦ ALL RIGHTS RESERVED

The transfer should take 20 to 30 minutes. The transfer will end with a loss of pressure in the adsorber and the sound of air in the transfer line.

A small heel of carbon may remain in the adsorber. This material will have to be removed. Close the carbon outlet valve on the adsorber and add plant water to the adsorber for 2-3 minutes (through the drain connection or backwash inlet). Leave the 3/4" air line open. When the adsorber pressure reaches 25 psig, open the adsorber carbon outlet valve (V14 for adsorber V-214A, V13 for adsorber V-214B) and transfer the remaining amount of carbon into the trailer.

C. End Transfer

1. Close the plant air line valve.
2. Vent the tank and lines through the trailer vent valve T1.
3. Open the adsorber vent valve (V5 or V6) to further aid the venting.
4. Close the adsorber carbon outlet valve (V14 for adsorber V-214A, V13 for adsorber V-214B).
5. Using a 3/4" water hose at the adsorber carbon discharge line flush-out connection, flush out the transfer line for a few minutes to remove all traces of carbon. Bleed the water hose and remove it.

4.3.2 Drain Water From Trailer

A. Prepare for Draining Water

1. Close all valves on the trailer. Close the trailer manway.
2. Connect the plant air line to the 3/4" connection on trailer carbon fill line using the air line hose.
3. Connect the trailer carbon discharge/drain line to the drain line in the trench by means of a 4" flexible hose.

B. Draining Trailer

1. Pressurize the trailer to 15 psig by slowly opening plant air line valve T4 on the trailer.
2. Open 2" trailer septa valves T8, T9, and T10.

By pressurizing the trailer, water will be drained in less time than if drained by gravity.

CALGON CARBON CORPORATION ♦ COPYRIGHT 2016 ♦ ALL RIGHTS RESERVED

C. End Draining

1. When the carbon is completely drained, close the air line valve T4 on the trailer.
2. Vent trailer slowly through trailer vent valve T1.
3. When venting is complete, close all valves on the trailer and disconnect all hoses.

The trailer is now full of drained spent carbon and is ready for return to Calgon Carbon for reactivation.

4.4 FRESH CARBON TRANSFER FROM TRAILER

Fresh carbon is transferred in a slurry using plant air pressure. The trailer is first filled with water to create the slurry. The carbon slurry hose on the trailer is connected to the adsorber fill line and the trailer carbon discharge line. After putting a water cushion in the adsorber, the trailer is pressurized and the carbon slurry is transferred to the empty adsorber. Prior to disconnecting any lines, the air supply must be shut off, and the trailer and all transfer lines must be vented.

Under no circumstances should the standard and triple compartment trailers be connected to a pressure source exceeding 15 psig.

4.4.1 Fill The Trailer With Water

If the carbon is wetted prior to delivery, about 4000 gallons of water will be required. If the carbon is dry, about 5000 gallons of water will be required. The trailer may be filled either upflow or downflow.

A. Filling Operation

1. Connect water line to the trailer (carbon fill line if filling downflow, carbon discharge line if filling upflow) using a 4" flexible hose.
2. Open one top manway to vent trailer during filling.
3. Open trailer vent line valve T1.
4. Open trailer water line valve (valve T2 if filling downflow, valves T8, T9, and/or T10 if filling upflow).
5. Open plant water line valve slowly and fill the trailer.

CALGON CARBON CORPORATION ♦ COPYRIGHT 2016 ♦ ALL RIGHTS RESERVED

The trailer will be filled with approximately 4000 to 5000 gallons of water. The trailer filling shall be visually determined by observing the water level through the manway or by metering the desired amount.

B. End Filling Operation

1. Close plant water line valve.
2. Close trailer water line valve (T2 for downflow, T8, T9, and T10 for upflow), manways, and trailer vent valve T1.
3. Disconnect hose.

4.4.2 Transfer Carbon To Adsorber

A. Prepare for Transfer

Place about 3000 gallons of water in the adsorber. This water cushion helps to protect the underdrain system and vessel lining. If the amount of water cannot be measured, fill the vessel until water flows from the lowest sample point nozzle. After water flows from this point, continue to fill the vessel for several minutes to allow the water cushion to rise several more inches.

1. Connect the adsorber fill line to the trailer carbon discharge/drain line using 4" flexible hose.
2. Connect the 3/4" plant air line to the trailer carbon fill line using the air line hose.
3. Close all valves on the adsorber.
4. Open the adsorber vent valve (V5 or V6).
5. To aid the initial phase of transferring fresh carbon, fill the transfer line with water. To do this, use a 3/4" water hose to fill the transfer line with water, at the carbon inlet valve's flush-out connection.

B. Transfer Fresh Carbon

1. Pressurize the trailer to 15 psig by slowly opening the plant air line valve and then slowly opening valve T4 in the trailer carbon fill line.
2. Open the adsorber fill line valve (V16 for adsorber V-214A, V15 for adsorber V-214B).

CALGON CARBON CORPORATION ♦ COPYRIGHT 2016 ♦ ALL RIGHTS RESERVED

3. The Calgon Carbon trailer driver will open the trailer carbon outlet valves T5, T6, and T7 to empty the respective hoppers.
4. If a water cushion is utilized, open an adsorber drain valve shortly after starting the transfer. This is done to reduce the amount of water that overflows at the end of the transfer. The disposal of the excess motive water is provided by the customer.

C. End Transfer

1. Close the plant air valve and vent the trailer through the adsorber vent valve.
2. Close the adsorber drain valve if it was utilized during the transfer.
3. Slowly open trailer vent valve T1 for additional venting.
4. When completely vented, close the adsorber fill line valve (V16 for adsorber V-214A, V15 for adsorber V-214B), disconnect the hoses, and close the trailer valves.
5. Refer to Sections 3.3 and 3.4.2 for instructions on wetting and backwashing/backflushing the adsorber.
6. After the adsorber has been backwashed/backflushed, shut off the plant water and close the vent valve on the adsorber.

CALGON CARBON CORPORATION ♦ COPYRIGHT 2016 ♦ ALL RIGHTS RESERVED

SECTION 5

GENERAL INFORMATION

SECTION 5

GENERAL INFORMATION

5.1 MAINTENANCE

As preventative maintenance, periodic inspection of the vessel internal parts should be made to ensure that the underdrain, vessel lining, and nozzles are in good condition. As a minimum, the adsorber should be inspected once per year, or during carbon transfers if the on-line period exceeds one year. Any nozzles showing signs of fatigue or surface area restriction due to pluggage of the nozzle slots should be replaced. Nozzles should be physically checked to ensure that they are tightly secured.

Systems with high backwash frequencies and rigorous backwash requirements should be inspected more frequently. The vessel must be fully emptied to allow inspection of the interior of the vessel. Follow the safety guidelines listed in the following sections when entering enclosed vessels. Calgon Carbon Operations personnel should be present during internal vessel inspections.

Pressure gauges should be installed on influent and effluent piping to determine the pressure drop across the carbon bed. Taking periodic pressure readings will give the operator the capability of monitoring the pressure drop across the carbon vessels over time. If a pressure increase is observed, then corrective action can be taken before the pressure drop becomes a problem.

To protect the vessel from high pressure, a safety device is provided to relieve pressure at the design rating of the vessels.

In order to prevent carbon from entering the effluent stream, a carbon retainer screen is installed in the expansion joint located in the effluent line from each adsorber. In the event of an underdrain nozzle failure, the strainer will fill with carbon and the pressure drop will increase to a point where the system flow is reduced. If this should occur, the system should be operated in single vessel mode (see Figure 2 or Figure 4 in Section 8) until the damaged underdrain in the other vessel is repaired.

CALGON CARBON CORPORATION ♦ COPYRIGHT 2016 ♦ ALL RIGHTS RESERVED

5.2 SAFETY CONSIDERATIONS

5.2.1 Oxygen Deficiency Due To Activated Carbon

Studies have shown that low oxygen content exists in vessels containing wet drained granular activated carbon. The laboratory experiments conducted since that time also have revealed that commercial activated carbons in a wet or moist condition will lower the oxygen content of an isolated space.

Preliminary indications of this research are:

1) The phenomenon occurs with all types of wet activated carbon.

2) The rate of oxygen uptake naturally varies with the degree of exposure of the wet carbon to the air. Thus, it is relatively rapid in a drained bed.

3) There is some indication of a limit to the carbon's capacity for oxygen, but until more is known, it would be prudent to assume that all carbons (fresh, used, reactivated) will also exhibit this characteristic. Similarly, although these tests were run with water, it should be assumed that the phenomenon will occur in other liquid and vapor systems.

Based on the properties of wet activated carbon, a confined space entry procedure should be established for any facility using carbon in confined vessels.

All confined spaces, including those containing activated carbon, should be presumed to be hazardous. Appropriate safety measures should always be taken before entering, as well as when workers are in a confined space. OSHA regulations applicable to respiratory protection in oxygen deficient atmospheres should be strictly adhered to.

CALGON CARBON CORPORATION ♦ COPYRIGHT 2016 ♦ ALL RIGHTS RESERVED

5.2.2 Emergency Procedures

In the event a malfunction which causes a shutdown of an adsorber should occur, the flow can either be switched to the second adsorber in the system or the flow can be stopped.

If a major leak or similar problem develops, flow to the adsorber should be stopped immediately and steps taken to correct the problem. Proper safety procedures should be observed at all times to prevent damage to the equipment or injury to personnel.

5.2.3 Pressure Relief Warning

TO AVOID VESSEL DAMAGE AND ENDANGERMENT OF OPERATING PERSONNEL, DO NOT BLOCK THE PRESSURE RELIEF DEVICE FROM VENTING TO ATMOSPHERE.

5.3 RECORD KEEPING

Normally, operating data is taken for: 1) flow rates, 2) which beds are in service, 3) pressure drop across each unit, and 4) necessary analytical work for influent and effluent to each adsorber. This may include: pH, TOC level, BOD, COD, toxicity, organic contaminant levels, and inorganic levels.

CALGON CARBON CORPORATION ♦ COPYRIGHT 2016 ♦ ALL RIGHTS RESERVED

SECTION 6

ACTIVATED CARBON / ADSORPTION INFORMATION

SECTION 6

ACTIVATED CARBON / ADSORPTION INFORMATION

6.1 ADSORPTION

There are two types of adsorption: physical and chemical.

Physical adsorption is usually explained in terms of surface structure (or energy per unit volume) of the solid. While molecules in the interior of any solid material are subject to equal forces in all directions, the molecules on the material's surface are subjected to unbalanced forces. This results in an imbalance with inward forces toward the solids. Molecules that are either gaseous or liquid then become attracted (adsorbed) to the solid's surface.

The attractive forces, known as London Dispersion Forces, are the same forces responsible for surface tension and condensation of vapors to liquid. These forces are a type of Van der Waals force and range from very weak to moderately strong. Physical adsorption is reversible and changing the process variables in a system can cause molecules to be desorbed.

Chemical adsorption is a chemical reaction between a molecule in a solution or vapor with the surface of an adsorbent such as activated carbon. The chemical reaction is usually irreversible. An example of chemical adsorption is chlorine removal from water. The chemical reaction of chlorine with carbon and water forms Cl- and CO3= ions.

An important aspect to any adsorbent is the amount of pore volume it contains per unit volume or per net weight. Examples of adsorbents are activated carbon, silica gel, activated gel, alumina, and zeolite.

6.2 ACTIVATED CARBON AND HOW IT WORKS

Any organic material with high carbon content (coal, wood, peat, coconut shells, etc.) can be used as the raw material for making activated carbons of various activities and properties. When making high quality granular activated carbon from coal, the raw material is ground and a binder is added to give the end product suitable hardness. The mixture is then re-compacted and crushed to give it the desired particle size. The carbon is then activated by thermally decomposing and removing carbon from the structure in a reducing atmosphere at about 1800°F. Furnace temperature and the furnace atmosphere are controlled to produce the desired adsorption properties in the product.

CALGON CARBON CORPORATION ♦ COPYRIGHT 2016 ♦ ALL RIGHTS RESERVED

The resultant product has an incredibly large internal pore volume per unit particle volume and a network of submicroscopic pores where the adsorption takes place. About 40% of the particle volume is used to contain adsorbates. One pound of activated carbon contains an effective total area of over 100 acres.

Activated carbon normally removes adsorbates (contaminants or desired products) from a solution (solute) through physical adsorption. The adsorbate would have to differ from the solute. For example, in aqueous solutions the solute should be more neutral or non-polar and have a higher molecular weight.

Many factors affect carbon adsorption in liquids, such as pH, flow rate, temperature, solubility, concentration of adsorbate, type and number of different adsorbates, viscosity, and the level of adsorbate removal required.

In any stream, there are four steps that occur in order for adsorption to take place. First, the adsorbate molecule must migrate through the bulk of solution toward the carbon particle. This is known as bulk diffusion. Second, the adsorbate penetrates the surface film to reach the exterior surface of the carbon. This is known as film diffusion. Third, the adsorbate diffuses through the transport or large pores. This is known as pore diffusion. Fourth, the adsorbate is adsorbed deep into the micropore structure of the activated carbon. In most water applications, the rate limiting step is the pore diffusion step.

In a typical fixed bed carbon system, the liquid flows down through an adsorber. Initially, the adsorbate is adsorbed onto the top most portion of the carbon. The rate of adsorption will determine the depth of carbon (mass transfer zone) that is utilized to remove the adsorbates. The varying concentration in the mass transfer zone is known as the wavefront.

Eventually, the wavefront moves through the bed and contamination breaks through into the effluent from the bed. This is known as the breakpoint. In a single or parallel adsorber system, the contaminants are usually monitored until the effluent approaches the allowable limit. The adsorber is then taken off-line and the spent carbon is removed. The adsorber is then refilled with fresh carbon and brought back on-line. In a series mode, the mass transfer zone in the first or lead bed is allowed to pass through the adsorber into the second bed. Usually, when adsorbing multiple components, the first two or three compounds that are being monitored in the effluent from the lead bed are allowed to approach their influent levels, at which point the adsorber is taken off-line.

CALGON CARBON CORPORATION ♦ COPYRIGHT 2016 ♦ ALL RIGHTS RESERVED

6.3 FACTORS AFFECTING ADSORPTION

Concentration: With each adsorbate, a high concentration will result in a higher adsorption capacity for that adsorbate on the carbon. For example, if an adsorbate has a one percent loading at 1 mg/l, it might have a three percent loading at 10 mg/l. However, the volume of carbon required to treat a fixed volume of solution will go up if the concentration goes up.

When the concentration of the feedstream changes dramatically, such as when a spill occurs upstream of a potable water plant intake, undesirable effects may occur. Concentrations at the intake of the plant may go up 100 to 1000 times the normal influent concentration. The activated carbon would adsorb the contamination with a higher capacity, if adsorptive capacity was available.

However, upon passage of the spill past the intake, the activated carbon may desorb some of the high level contamination to fresh carbon downstream of the mass transfer zone or into the effluent. When upsets occur, a conservative approximation is to assume that additional carbon is exhausted by the excess contaminant at the original loading rate for the normal influent level.

Another example is when the contaminant concentration in the influent decreases for a period of time. In this instance the adsorbate will start to desorb. The rate of desorption is slower than the rate of adsorption. Therefore, a conservative estimate of the overall effect is that a fixed volume at the reduced influent level will exhaust as much carbon as if the influent concentration was consistently high.

A steady feed concentration will help minimize the amount of carbon that is used in an application. A steady feed would usually be considered to be +/-25% of the average concentration. However, the carbon bed will act to average out upsets and variations, except when the bed is nearly exhausted.

Flow Rate: In many applications, the flow rate to the adsorber is varied because the flow demand changes. As the flow changes, so does the mass transfer zone (MTZ). These changes are approximated by a directly proportional relationship between MTZ length and flow rate. For example, if the MTZ is 1 foot at 250 gpm, it would be 2 feet at 500 gpm. If the flow rate is increased dramatically, the MTZ is further lengthened because some desorption may take place, resulting in less efficient operation. For the optimum carbon usage, the flow rate should be steady (if possible).

In a series configuration, increasing the flow rate usually has a minimal impact. In a parallel mode, this impact is more substantial since the carbon is usually taken off line on the basis of the effluent quality. since the MTZ is lengthened the on-stream time will be shortened.

CALGON CARBON CORPORATION ♦ COPYRIGHT 2016 ♦ ALL RIGHTS RESERVED

Viscosity: As viscosity increases in a system, the time to adsorb lengthens, and thus the MTZ lengthens. In a process application the temperature of the feedstream may be raised to offset increases in viscosity, but if the temperature is raised too high degradation of product may occur or the adsorption capacity of the carbon may be reduced. In water applications, viscosity has minimal impact because it is relatively low.

Temperature: In liquid phase systems, the adsorptive capacity is usually lowered at higher temperatures because the solubility is increased.

Feedstream pH: The pH of the feedstream can impact adsorption efficiency. This impact may be substantial since the pH affects the ionization of the adsorbate. Usually, the more ionic adsorbates have less adsorption capacity. Therefore, organic acids adsorb better at lower pH levels, while organic bases adsorb better at higher pH levels.

Water Characteristics: On each start-up of fresh carbon, the pH of the effluent stream may rise. This occurs because species like sulfates, nitrates and chlorine adsorb and displace alkaline species. The pH will return to normal, depending on water characteristics, after 250 to 350 bed volumes have been treated. If this is a problem, then either acid should be added to the effluent, or the carbon should be allowed to stand in a sodium sulfate solution for 10 to 12 hours.

The carbon has a capacity for sodium sulfate of 1% by weight. Therefore, the water in contact with the carbon should contain a quantity of sodium sulfate at least equal to 2% by weight of the carbon. In a 20,000 pound adsorber this would be 400 pounds of Na2SO4 in 5,000 gallons of water.

Solubility: The water solubility of a particular compound is a very good indicator of its adsorptivity. Generally, the more soluble a compound is, the more difficult it is to be adsorbed. Also, a more water soluble compound has a longer MTZ.

Suspended Solids: Suspended solids should usually be taken out of the feedstream before the carbon adsorbers. Suspended solids (>10 microns) will usually be filtered out within the first 6" of carbon and the pressure drop across the carbon will increase. If the pressure drop increases too much, the unit should be backwashed or backflushed. Normally, feed streams containing suspended solids of more than 50 ppm are pre-filtered.

CALGON CARBON CORPORATION ♦ COPYRIGHT 2016 ♦ ALL RIGHTS RESERVED

If the suspended solids are finer than 10 microns, the solids will usually not be filtered out by the carbon. The solids would then pass through the carbon into the effluent. This condition is very undesirable because the solids often contain dissolved or attached adsorbate and premature breakthrough can appear to occur. For materials to adsorb they must be in solution, so they can diffuse into the pore structure.

Immiscible Oils and Greases: Immiscible oils and greases have to be separated from the feedstream before the carbon adsorbers. If they are not removed, they may coat the carbon particles with a fine film. The adsorbates will not be able to pass through this film, and the carbon will not be effectively utilized. Oils and grease can also behave as a suspended, immiscible solid.

Heat of Adsorption: Heat is often given off when molecules are adsorbed. The amount of heat is conservatively estimated at two (2) times the heat of vaporization. In a process stream where the solvent is an organic liquid, a heat-up potential exists if the carbon has not been previously wetted and deaerated properly. Refer to Section 3.3 of this manual for wetting procedures.

Water has too low a heat of adsorption to cause a problem for aqueous solutions.

Competitive Adsorption: In most carbon applications (process, wastewater, groundwater, and potable water), more than one adsorbing compound is in the feedstream. Some of these compounds must be adsorbed while others may be permitted to pass through the carbon bed.

Unfortunately, the activated carbon cannot tell which of the molecules must be adsorbed. All of the components in the feedstream will compete for adsorption space, making the removal of target components less efficient. Therefore, competitive adsorption can cause premature breakthrough of the target component.

6.4 ADDITIONAL ADSORPTION THEORY

Desorption/Displacement: Desorption is the opposite of adsorption and may occur for many reasons. Changes in the feedstream components, temperature, pH, and feedstream concentration may promote desorption. In order to minimize desorption and optimize carbon usage, the feedstream should be stable (if possible). The rate at which desorption takes place is usually much slower than the adsorption rate.

CALGON CARBON CORPORATION ♦ COPYRIGHT 2016 ♦ ALL RIGHTS RESERVED

If a more strongly adsorbed organic enters the feed it will desorb the target adsorbate. This forces the target adsorbate to re-adsorb deeper in the carbon bed, and eventually breakthrough will occur.

Roll-Over in Competitive Adsorption: When an adsorber system runs beyond breakthrough, the more weakly adsorbed components originally in the feedstream can be desorbed into the effluent. The resulting concentrations may exceed the inlet concentrations. This phenomenon is known as roll-over. In a properly operated column system, roll-over of key components will not be observed in the effluent.

Effect of Bacteria: Higher pressure drops can be a result of bacteria growth in some wastewater applications. This is due to bacteria slime and exhaust gasses from the bacteria. If backwashing does not get rid of the pressure drop problem, then either NaOH washing or higher temperatures will control bacteria growth. Usually, sodium hydroxide washing is used in lined vessels. Do not use biocides, chlorine, or other additives, since they will adsorb and reduce carbon life without affecting the bacteria.

Refer to Section 8 for sodium hydroxide washing procedures.

6.5 GLOSSARY

The following terms are commonly used to describe adsorption theory, activated carbon, and adsorption systems.

ABRASION NUMBER -- A test performed on a particulate material to define the resistance of the particles to degrade on handling. It is calculated by contacting a sample with steel balls in a Ro-Tap machine and determining the ratio of the final to the original mean particle diameter.

ACTIVATED CARBON -- A carbonaceous material that is a crude form of graphite with a random and amorphous structure. The structure is highly porous, over a broad range of pore sizes, from visible to molecular cracks and crevices.

ACID WASHED ACTIVATED CARBON -- Activated carbon which has been washed with an acid solution for the purpose of dissolving the iron from the carbon. Acid washed carbons are usually used in systems/processes operating at low pH.

ADSORBATE -- Any substance that is or can be adsorbed on the adsorbent.

ADSORBENT -- Any solid having the ability to concentrate significant quantities of other substances on its surface. Activated carbon is an adsorbent.

ADSORBER -- A vessel designed to hold granular activated carbon.

CALGON CARBON CORPORATION ♦ COPYRIGHT 2016 ♦ ALL RIGHTS RESERVED

ADSORPTION -- A phenomenon where an adsorbate is physically attracted to the surface of the adsorbent.

ADSORPTION ISOTHERM -- A graphic depiction of the capacity of an adsorbent to adsorb a specific adsorbate. The measurements of capacity are performed at constant temperature using either varying amounts of the adsorbate or adsorbent.

ADSORPTION PORES -- The finest pores in the carbon structure. Pores which have adsorption capacity.

AGGLOMERATED -- Material that has formed into a solid mass.

AIR SCOURING -- A process that uses pressurized air to break-up any agglomerations in a carbon bed. Air is blown into the bottom of the bed before the bed is backwashed. Air scouring capability must be incorporated into the system design during the design phase.

APPARENT DENSITY -- A physical property that is defined as the mass per unit volume of a granular material under specified conditions. The apparent density includes the carbon skeleton volume plus the pore and void volumes.

ASH -- The noncombustible mineral matter that is contained in activated carbon and is the residue that remains after the combustion of a carbonaceous material. The measurement of ash is performed under specified conditions and is normally defined on a weight percent basis.

BACKWASH -- An operating method used to remove suspended solids from a carbon bed. Water is pumped into the bottom of the adsorber, flows upward through the carbon bed, and exits through the backwash outlet. The upward flow expands the bed and removes carbon fines, entrained air and suspended solids. The percent bed expansion (up to 50%) and time required for backwashing are a function of the backwash rate and water temperature.

BACKFLUSH -- A process similar to backwashing, but the flow rate is not high enough to expand the bed more than five percent.

CARBON HEEL -- Any quantity of spent carbon not removed from an adsorber before recharging the vessel with fresh carbon.

CARBON TETRACHLORIDE ACTIVITY -- A measurement of the increase in weight of a sample of activated carbon after air saturated with carbon tetrachloride is passed through the sample. The test is performed at a given temperature and the results are reported as weight percent.

CALGON CARBON CORPORATION ♦ COPYRIGHT 2016 ♦ ALL RIGHTS RESERVED

CARBON TRAILER -- A bulk trailer used to transport 20,000 pound (or less) loads of granular carbon to/from the customer's plant site.

CHEMISORPTION -- A chemical process that binds an adsorbate to the surface of an adsorbent by forces whose energy levels approximate those of a chemical bond.

COLOR BODIES -- Complex molecules which impart color (usually undesirable) to a solution. Carbon adsorption is often used for color removal applications.

COUNTER-CURRENT OPERATION -- A mode of operation where the flow of liquid is opposite the movement of the adsorbent. This method of operation produces the lowest carbon usage rate or highest efficiency.

CRITICAL BED DEPTH -- The distance between the fresh carbon and the spent carbon for a bed of activated carbon. In other words, it is the portion of the bed which is partially spent and the zone where adsorption takes place. The critical bed depth is measured in feet. For a single column system, this is the amount of carbon that is not completely utilized when the effluent objective is reached and the carbon is taken off-stream.

DEAERATION (WETTING) -- The process of removing air (gases) from a carbon bed and the carbon pores. The volume of air in activated carbon is in the void space and pore volume, which typically accounts for 80% of the total volume in a carbon bed (the carbon skeleton accounts for the other 20%).

DESORPTION -- The opposite of adsorption. A phenomenon where an adsorbed substance leaves the surface of the adsorbent.

EDUCTOR -- A device to motivate a slurry of activated carbon and water slurry through hoses and pipes. An eductor has no moving parts and utilizes pressurized water as the motive force.

FRESH CARBON--New carbon that is placed into an adsorber. Fresh carbon can be either virgin carbon or newly reactivated carbon.

HARDNESS NUMBER -- A measurement of the resistance of a granular carbon to the degradation action of steel balls in a Ro-Tap machine. This number is calculated by using the weight of granular carbon retained on a particular sieve after the carbon has been in vigorous contact with the steel balls.

HEAT OF ADSORPTION -- The heat given off when molecules are adsorbed.

IODINE NUMBER -- The measurement of the amount of iodine adsorbed by one gram of carbon. The concentration of iodine is 0.02N. The iodine number is reported as milligrams of iodine.

LAG ADSORBER -- The second bed of carbon through which the liquid passes in a series operated adsorption system. The lag vessel contains carbon that is partially spent when the carbon in the lead adsorber is completely spent.

LEAD ADSORBER -- The first bed of carbon through which the liquid passes in a series operated adsorption system. The lead vessel contains carbon that is the first to become spent.

MASS TRANSFER ZONE -- The adsorption gradient that exists in the carbon bed. It corresponds to the gradual transition of the carbon from spent to fresh.

MESH SIZE -- The measurement of the particle size of granular activated carbons determined by the U.S. Sieve Series. Particle size distribution within a mesh series is typically given in the specification of the particular Calgon Carbon carbon.

MOLASSES NUMBER -- A ratio of the optical densities of a molasses solution treated with a standard activated carbon compared to a molasses solution treated with the activated carbon in question.

MOISTURE -- The measurement of the amount of water adsorbed on activated carbon. Moisture is reported as percent. For Calgon Carbon's coal based products the moisture specification is less than 2% as packed.

PARALLEL FLOW -- The mode of operation when two or more adsorbers are operated so that the influent flow is distributed equally to each adsorber.

PARTICLE DENSITY -- A measurement of the weight per unit volume of granular activated carbon as determined by the displacement of mercury. Particle density is typically reported as g/cc. The particle density includes the carbon skeleton volume plus the pore volume.

POLISH ADSORBER -- See Lag Adsorber.

PORE VOLUME -- A measurement of the volume of pores in a unit weight of carbon. The pore volume is determined by obtaining the difference in the volumetric displacement of carbon in mercury and helium at standard conditions.

PRESSURE RELIEF DEVICE -- A device such as a rupture disk or a pressure relief valve which prevents a vessel from exceeding its design pressure.

REAL DENSITY -- A measurement of the weight per unit volume of the skeleton only of a carbon granule. This measurement excludes the pore volume and the inter-particle void space. This property is determined by helium displacement and is approximately 2.1 g/cc for coal-based carbons.

CALGON CARBON CORPORATION ♦ COPYRIGHT 2016 ♦ ALL RIGHTS RESERVED

REACTIVATED CARBON (REACT CARBON) -- Granular carbon that has been thermally reactivated for re-use as fresh carbon in adsorption systems.

REACTIVATION -- A process to remove adsorbates from spent granular activated carbons using vaporization and oxidation at temperatures greater than 1000NF. Reactivated carbon can be reused. Depending on the application the performance of the reactivated carbon can be less than, equal to, or better than virgin carbon. This is a type of carbon regeneration.

SERIES FLOW (LEAD-LAG OPERATION) -- A mode of operation where two or more adsorbers are operated so that each adsorber treats the entire influent flow, one after the other. When the carbon in the lead bed is spent, the carbon is replaced with fresh carbon and this adsorber is placed in the lag (polish) position.

SPECIFIC HEAT -- A physical property that is defined as the ratio of the quantity of heat required to raise the temperature of a compound through a particular temperature interval compared to the corresponding heat quantity for water. For Calgon Carbon carbons this value is approximately 0.20 cal/g/°C at temperatures less than 200°C.

SPENT CARBON -- Carbon that has adsorbed organic contaminants and must be removed from the system so that the effluent quality specifications are not exceeded.

SURFACE AREA -- A measurement of the total surface area available for adsorption inside the pores of activated carbon. Surface area is determined by the Brunauer, Emmett, and Teller method (BET Method), which uses the adsorption of nitrogen at liquid nitrogen temperature. Surface area is usually expressed in square meters per gram of carbon. The surface area of Calgon Carbon carbons ranges from 700 to 1200 square meters per gram.

TRANSFER TANK -- A storage tank designed to hold a charge of spent carbon. The purpose of the tank is to save on freight as only one truck is needed to deliver fresh carbon and return the spent carbon for reactivation.

TRANSPORT PORES -- Pores larger than the largest adsorption pores. These pores function as a diffusion path to transport adsorbates. Adsorption does not occur in these pores even at saturated conditions.

UNDERDRAIN -- A device located inside the adsorber to collect the fluid being treated. The underdrain permits the fluid to flow into the piping network while retaining the granular carbon in the vessel**.**

VENT -- A pipe line from an adsorber or transfer tank to an unrestricted sewer or the atmosphere.

VIRGIN CARBON -- Fresh granular activated carbon that has not been used.

CALGON CARBON CORPORATION ♦ COPYRIGHT 2016 ♦ ALL RIGHTS RESERVED

VOIDS -- The space (volume) between the carbon granules. For Calgon Carbon carbons the typical range is 37% to 43% by volume.

WATER CUSHION -- The water added to an adsorber or transfer tank before charging the vessel with carbon. This is done to protect the underdrain, nozzles and lining.

WAVE FRONT -- See Mass Transfer Zone

SECTION 7

CARBON DATA

OLC AW 12x40

Coconut Acid Washed Granular Activated Carbon

Applications

Liquid Chemical

Water Processing

Point-of-Entry/ Point-of-Use

Bottle & Brewing

Remediation Water Treatment

Industrial Wastewater

Pond/Aquarium/ Swim

OLC AW 12x40 coconut activated carbon can be used in a variety of water, wastewater and process liquid applications for the removal of dissolved organic compounds. OLC AW 12x40 has been used in applications such as process water purification, wastewater treatment and industrial chemical purification.

Description

OLC AW 12x40 is an acid washed coconut activated carbon for the removal of dissolved organic contaminants from water, wastewater and process liquids. These contaminants include taste and odor compounds, organic color, total organic carbon (TOC) and industrial chemicals such as chlorinated solvents (TCE, PCE). The pore structure enables it to be used for adsorption of both high and low molecule weight impurities from waters and liquids. The carbon is especially effective for adsorbing trace organic compounds such as vinyl chloride, methylene chloride, MTBE and THM's/disinfection by-products. OLC AW 12x40 is certified to NSF/ANSI 61 standard and complies with the requirements for activated carbon as defined by the Food Chemicals Codex (FCC) (8th Edition) published by the U.S. Pharmacopeia.

Features / Benefits

- Coconut carbon
- Low ash
- High hardness relative to other raw materials
- Acid washed to prevent ash leaching in acidic solutions
- A strongly adsorbing pore structure optimal for the treatment of chlorine and other organics
- Hardness and abrasion resistance required for thermal reactivation and minimizing generation of fines in operations requiring backwashing
- Pore structure provides a wide range of contaminant removal capabilities

Specifications	OLC AW 12x40
Iodine Number, mg/g	1050 min
Ash, wt%	3 max
Moisture (As packaged), wt%	5 max
Acid Soluble Ash, wt%	1.0 max
pH (Extractable) (ASTM)	6 min / 8 max
Hardness Number	97 min
Water Solubles, wt%	1 max
12 US Mesh [1.70 mm], wt%	5 max
< 40 US Mesh [0.425 mm] (PAN), wt%	5 max

Safety Message

Wet activated carbon can deplete oxygen from air in enclosed spaces. If use in an enclosed space is required, procedures for work in an oxygen deficient environment should be followed.

1.800.4CARBON calgoncarbon.com

© Copyright 2015 Calgon Carbon Corporation, All Rights Reserved

Typical Pressure Drop (OLC AW 12x40)

Based on a backwashed and segregated bed

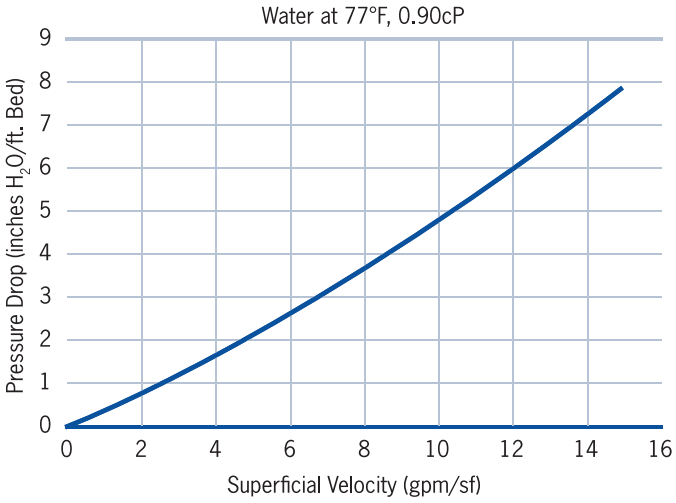

Typical Bed Expansion During Backwash

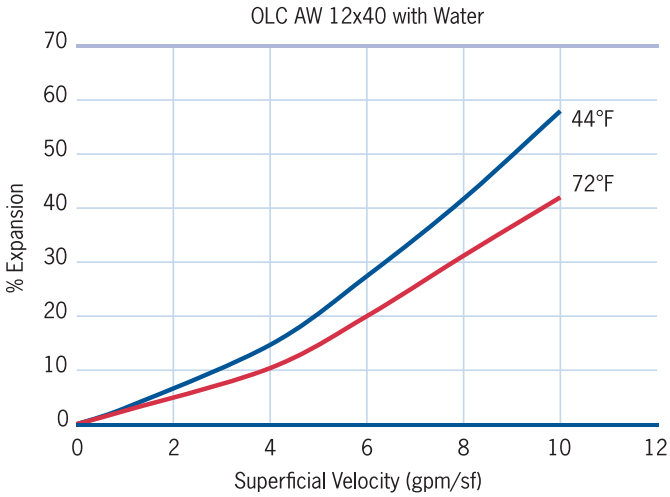

Design Considerations

OLC AW 12x40 coconut activated carbon is typically applied in down-flow packed-bed operations using both pressure and gravity systems. Design considerations for a carbon system is based on the user's operating conditions, the treatment objectives desired, and the chemical nature of the compound(s) being adsorbed. In general, downflow superficial velocity can be from 1 gpm/ft2 to 10 gpm/ft2, depending on the application and contact times can vary from 7.5 minutes to hours. Design may vary based on the type of liquid, contaminants to remove, and desired treatment objectives.

Safety Message

Wet activated carbon can deplete oxygen from air in enclosed spaces. If use in an enclosed space is required, procedures for work in an oxygen deficient environment should be followed.

© Copyright 2015 Calgon Carbon Corporation, All Rights Reserved

OLC AW 12X40
Safety Data Sheet

Issued: 04/20/2015
Supersedes: 12/30/2011
Version: 1.0

SECTION 1: Identification of the Substance/Mixture and of the Company/Undertaking

1.1. Product identifier

Product name : OLC AW 12X40

Product form : Substance

CAS No : 7440-44-0

Product code : 12146

Synonyms : Activated Carbon

1.2. Relevant identified uses of the substance or mixture and uses advised against

Use of the substance/mixture : Adsorbent

1.3. Details of the supplier of the safety data sheet

Calgon Carbon Corporation
P.O. Box 717
Pittsburgh, PA 15230
412-787-6700

1.4. Emergency telephone number

Emergency number : CHEMTREC (24 HRS): 1-800-424-9300

SECTION 2: Hazards Identification

2.1. Classification of the substance or mixture

GHS-US classification

Combustible Dust H232

Not classified as a simple asphyxiant. Product does not displace oxygen in the ambient atmosphere, but slowly adsorbs oxygen from a confined space when wet. Under conditions of anticipated and recommended use, product does not pose an asphyxiation hazard.

2.2. Label elements

GHS-US labeling

Signal word (GHS-US) : **Warning**

Hazard statements (GHS-US) : H232 - May form combustible dust concentrations in air

2.3. Other hazards

Other hazards not contributing to the classification : Wet activated carbon can deplete oxygen from air in enclosed spaces. If use in an enclosed space is required, procedures for work in an oxygen deficient environment should be followed.

2.4. Unknown acute toxicity (GHS-US)

No data available

SECTION 3: Composition/Information on Ingredients

3.1. Substance

Name	Product identifier	%
Activated Carbon	(CAS No) 7440-44-0	< 100

3.2. Mixture

Not applicable

SECTION 4: First Aid Measures

4.1. Description of first aid measures

First-aid measures general : If exposed or concerned, get medical attention/advice. Show this safety data sheet to the doctor in attendance. Wash contaminated clothing before re-use. Never give anything to an unconscious person.

First-aid measures after inhalation : IF INHALED: Remove to fresh air and keep at rest in a comfortable position for breathing.

First-aid measures after skin contact : IF ON SKIN (or clothing): Remove affected clothing and wash all exposed skin with water for at least 15 minutes.

First-aid measures after eye contact : IF IN EYES: Immediately flush with plenty of water for at least 15 minutes. Remove contact lenses if present and easy to do so. Continue rinsing.

First-aid measures after ingestion : IF SWALLOWED: Rinse mouth thoroughly. Do not induce vomiting without advice from poison control center or medical professional. Get medical attention if you feel unwell.

4.2. Most important symptoms and effects, both acute and delayed

Symptoms/injuries : Not expected to present a significant hazard under anticipated conditions of normal use. However, dust may cause irritation and redness of the eyes, irritation of the skin and respiratory system. The effects of long-term, low-level exposures to this product have not been determined.

4.3. Indication of any immediate medical attention and special treatment needed

No additional information available

SECTION 5: Firefighting Measures

5.1. Extinguishing media

Suitable extinguishing media : Water spray. Carbon dioxide. Dry chemical. Foam. Sand.

Unsuitable extinguishing media : None known.

5.2. Special hazards arising from the substance or mixture

Fire hazard : Dust may be combustible under specific conditions. May be ignited by heat, sparks or flames.

Explosion hazard : Dust may form explosive mixture in air.

Reactivity : No dangerous reactions known under normal conditions of use. Carbon oxides may be emitted upon combustion of material.

5.3. Advice for firefighters

Firefighting instructions : Wear NIOSH-approved self-contained breathing apparatus suitable for the surrounding fire. Use water spray or fog for cooling exposed containers. Evacuate area.

SECTION 6: Accidental Release Measures

6.1. Personal precautions, protective equipment and emergency procedures

General measures : Evacuate area. Keep upwind. Ventilate area. Spill should be handled by trained clean-up crews properly equipped with respiratory equipment and full chemical protective gear (see Section 8).

6.1.1. For non-emergency personnel

No additional information available

6.1.2. For emergency responders

No additional information available

6.2. Environmental precautions

Prevent entry to sewers and public waters. Avoid release to the environment. Product is not soluble, but can cause particulate emission of discharged into waterways. Dike all entrances to sewers and drains to avoid introducing material to waterways. Notify authorities if product enters sewers or public waters.

6.3. Methods and material for containment and cleaning up

For containment : Sweep or shovel spills into appropriate container for disposal. Minimize generation of dust.

Methods for cleaning up : Sweep or shovel spills into appropriate container for disposal. Minimize generation of dust. Dispose of material in compliance with local, state, and federal regulations.

6.4. Reference to other sections

No additional information available

SECTION 7: Handling and Storage

7.1. Precautions for safe handling

Precautions for safe handling : Avoid dust formation. Avoid contact with skin, eyes and clothing. Do not handle until all safety precautions have been read and understood. Wash hands and other exposed areas with mild soap and water before eating, drinking or smoking and when leaving work. Keep away from sources of ignition - No smoking.

7.2. Conditions for safe storage, including any incompatibilities

Storage conditions : Keep container tightly closed in a cool, dry, and well-ventilated place. Keep away from ignition sources.

SECTION 8: Exposure Controls/Personal Protection

8.1. Control parameters

Activated Carbon (7440-44-0)*	
OSHA PEL (TWA) (mg/m³)	≤ 5 (Respirable Fraction) ≤ 15 (Total Dust)

*Exposure limits are for inert or nuissance dust. No specific exposure limits have been established for this activated carbon product by OSHA or ACGIH.

8.2. Exposure controls

Appropriate engineering controls : Provide adequate general and local exhaust ventilation. Use process enclosures, local exhaust ventilation, or other engineering controls to control airborne levels below recommended exposure limits. Use explosion-proof equipment with flammable materials. Ensure adequate ventilation, especially in confined areas. Wet activated carbon can deplete oxygen from air in enclosed spaces. If use in an enclosed space is required, procedures for work in an oxygen deficient environment should be followed.

Personal protective equipment : Gloves. Safety glasses. Insufficient ventilation: wear respiratory protection.

Hand protection : Gloves should be classified under Standard EN 374 or ASTM F1296. Suggested glove materials are: Neoprene, Nitrile/butadiene rubber, Polyethylene, Ethyl vinyl alcohol laminate, PVC or vinyl. Suitable gloves for this specific application can be recommended by the glove supplier.

Eye protection : Use eye protection suitable to the environment. Avoid direct contact with eyes.

Skin and body protection : Wear long sleeves, and chemically impervious PPE/coveralls to minimize bodily exposure.

Respiratory protection : Use NIOSH-approved dust/particulate respirator. Where vapor, mist, or dust exceed PELs or other applicable OELs, use NIOSH-approved respiratory protective equipment.

SECTION 9: Physical and Chemical Properties

9.1. Information on basic physical and chemical properties

Physical state	: Solid
Appearance	: Granular, powder, or pelletized substance
Color	: Black
Odor	: Odorless
Odor threshold	: No data available
pH	: No data available
Relative evaporation rate (butylacetate=1)	: Not applicable
Melting point	: Not applicable
Freezing point	: Not applicable
Boiling point	: Not applicable
Flash point	: No data available
Auto-ignition temperature	: > 220 °C
Decomposition temperature	: No data available
Flammability (solid, gas)	: > 220 °C
Vapor pressure	: Not applicable
Relative vapor density at 20 °C	: Not applicable
Apparent density	: 0.4 - 0.7 g/cc
Solubility	: Insoluble.
Log Pow	: Not applicable
Log Kow	: Not applicable
Viscosity, kinematic	: Not applicable
Viscosity, dynamic	: Not applicable
Explosive properties	: No data available
Oxidising properties	: No data available
Explosive limits	: No data available

9.2. Other information

No additional information available

SECTION 10: Stability and Reactivity

10.1. Reactivity

No dangerous reactions known under normal conditions of use.

10.2. Chemical stability

Stable under use and storage conditions as recommended in section 7.

10.3. Possibility of hazardous reactions

None known.

10.4. Conditions to avoid

Avoid dust formation. Heat. Ignition sources. Exposure to high concentrations of organic compounds may cause bed temperature to rise.

10.5. Incompatible materials

Alkali metals. Strong oxidizing agents.

10.6. Hazardous decomposition products

Carbon monoxide (CO), carbon dioxide (CO_2).

SECTION 11: Toxicological Information

11.1. Information on toxicological effects

Acute toxicity : Not classified

Activated Carbon (7440-44-0)	
LD50 oral rat	> 2000 mg/kg

Skin corrosion/irritation : Not classified

Serious eye damage/irritation : Not classified

Respiratory or skin sensitisation : Not classified

Germ cell mutagenicity : Not classified

Carcinogenicity : Not classified

Silica: Crystalline, quartz (14808-60-7)	
IARC group	1 - Carcinogenic to humans
The International Agency for Research on Cancer (IARC) has classified "silica dust, crystalline, in the form of quartz or cristobalite" as carcinogenic to humans (group 1). However these warnings refer to crystalline silica dusts and do not apply to solid activated carbon containing crystalline silica as a naturally occuring, bound impurity. As such, we have not classified this product as a carcinogen in accordance with the US OSHA Hazard Communication Standard (29 CFR §1910.1200) but recommend that users avoid inhalation of product in a dust form.	

Reproductive toxicity : Not classified

Specific target organ toxicity (single exposure) : Not classified

Specific target organ toxicity (repeated exposure) : Not classified

Aspiration hazard : Not classified

Symptoms/injuries : Not expected to present a significant hazard under anticipated conditions of normal use. However, dust may cause irritation and redness of the eyes, irritation of the skin and respiratory system. The effects of long-term, low-level exposures to this product have not been determined.

SECTION 12: Ecological Information

12.1. Toxicity

No additional information available

12.2. Persistence and degradability

No additional information available

12.3. Bioaccumulative potential

No additional information available

12.4. Mobility in soil

No additional information available

12.5. Other adverse effects

No additional information available

SECTION 13: Disposal Considerations

13.1. Waste treatment methods

Waste treatment and disposal methods : Vacuum or shovel material into a closed container. Dispose in a safe manner in accordance with local/national regulations. Do not allow the product to be released into the environment. Subject to Calgon Carbon technical approval, non-powdered activated carbons may be reactivated to allow recycle and reuse.

Additional information : Activated carbon is an adsorbent media; hazard classification is generally determined by the adsorbate. Consult U.S. EPA guidelines listed in 40 CFR 261.3 for more information on hazardous waste disposal.

SECTION 14: Transport Information

14.1. In accordance with DOT

Not classified as hazardous for domestic land transport

UN-No.(DOT) : None on finished product

DOT NA no. : None on finished product

Proper Shipping Name (DOT) : Not regulated

Department of Transportation (DOT) Hazard Classes : None on finished product

Hazard labels (DOT) : None on finished product

Packing group (DOT) : None on finished product

DOT Quantity Limitations Passenger aircraft/rail (49 CFR 173.27) : None on finished product

14.2. Transport by sea

Not classified as hazardous for water transport

IMO / IMDG

UN/NA Identification Number : None on finished product

UN- Proper Shipping Name : Not regulated

Transport Hazard Class : None on finished product

14.3. Air transport

Not classified as hazardous for air transport

ICAO / IATA

UN/NA No : None on finished product

UN- Proper Shipping Name : Not regulated

Transport Hazard Class : None on finished product

Packing Group : None on finished product

Marine Pollutant : None on finished product

14.4. Additional information

Other information : Under the UN classification for activated carbon, all activated carbons have been identified as a class 4.2 product. However, this product type or an equivalent has been tested according to the *United Nations Transport of Dangerous Goods* test protocol for a "self-heating substance" (*United Nations Transportation of Dangerous Goods, Manual of Tests and Criteria, Part III, Section 33.3.1.6 - Test N.4 - Test Method for Self Heating Substances)* and it has been specifically determined that this product type or an equivalent does not meet the definition of a self-heating substance (class 4.2) or any other hazard class, and therefore should not be listed as a DOT hazardous material.

SECTION 15: Regulatory Information

15.1. US Federal regulations

OLC AW 12X40
All chemical substances in this product are listed in the EPA (Environment Protection Agency) TSCA (Toxic Substances Control Act) Inventory or are exempt

Cobalt (7440-48-4)	
Listed on the United States TSCA (Toxic Substances Control Act) inventory Listed on United States SARA Section 313	
SARA Section 313 - Emission Reporting	0.1 %

15.2. International regulations

No additional information available

15.3. US State regulations

California Proposition 65

WARNING: This product contains, or may contain, trace quantities of a substance(s) known to the state of California to cause cancer, birth defects, or other reproductive harm.

Silica: Crystalline, quartz (14808-60-7)				
U.S. - California - Proposition 65 - Carcinogens List	U.S. - California - Proposition 65 - Developmental Toxicity	U.S. - California - Proposition 65 - Reproductive Toxicity - Female	U.S. - California - Proposition 65 - Reproductive Toxicity - Male	No significance risk level (NSRL)
Yes	No	No	No	NA
Cobalt (7440-48-4)				
U.S. - California - Proposition 65 - Carcinogens List	U.S. - California - Proposition 65 - Developmental Toxicity	U.S. - California - Proposition 65 - Reproductive Toxicity - Female	U.S. - California - Proposition 65 - Reproductive Toxicity - Male	No significance risk level (NSRL)
Yes	No	No	No	NA
Titanium dioxide (13463-67-7)				
U.S. - California - Proposition 65 - Carcinogens List	U.S. - California - Proposition 65 - Developmental Toxicity	U.S. - California - Proposition 65 - Reproductive Toxicity - Female	U.S. - California - Proposition 65 - Reproductive Toxicity - Male	No significance risk level (NSRL)
Yes	No	No	No	NA

Aluminum oxide (1344-28-1)
U.S. - New Jersey - Right to Know Hazardous Substance List U.S. - Massachusetts - Right to Know List U.S. - Pennsylvania - RTK (Right to Know) - Environmental Hazard List
Calcium sulfate (7778-18-9)
U.S. - Massachusetts - Right to Know List U.S. - New Jersey - Right to Know Hazardous Substance List U.S. - Pennsylvania - RTK (Right to Know) List
Silica: Crystalline, quartz (14808-60-7)
U.S. - New Jersey - Right to Know Hazardous Substance List U.S. - Pennsylvania - RTK (Right to Know) List U.S. - Massachusetts - Right to Know List

SECTION 16: Other Information

Indication of changes : Revision 1.0: New SDS Created.

Revision Date : 04/20/2015

Other information : Author: CJS.

For internal use only : PR #1

Prepared according to Federal Register / Vol. 77, No. 58 / Monday, March 26, 2012 / Rules and Regulations

NFPA health hazard : 0 - Exposure under fire conditions would offer no hazard beyond that of ordinary combustible materials.

NFPA fire hazard : 1 - Must be preheated before ignition can occur.

NFPA reactivity : 0 - Normally stable, even under fire exposure conditions, and are not reactive with water.

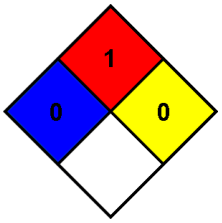

HMIS III Rating

Health : 0

Flammability : 1

Physical	: 0
Personal Protection	:

This information is based on our current knowledge and is intended to describe the product for the purposes of health, safety and environmental requirements only. It should not therefore be construed as guaranteeing any specific property of the product. The information is this document applies to this specific material as supplied. It may not be valid if product is used in combination with other materials. It is the user's responsibility to determine the suitability and completeness of this information for their particular use. While the information and recommendations set forth herein are believed to be accurate as of the date hereof, Calgon Carbon Corporation makes no warranty with respect to the same, and disclaims all liability for reliance thereon.

SECTION 8

OPERATING INFORMATION

SECTION 8

OPERATING INFORMATION

FIGURE 1 VESSEL V-214A TO V-214B SERIES FLOW

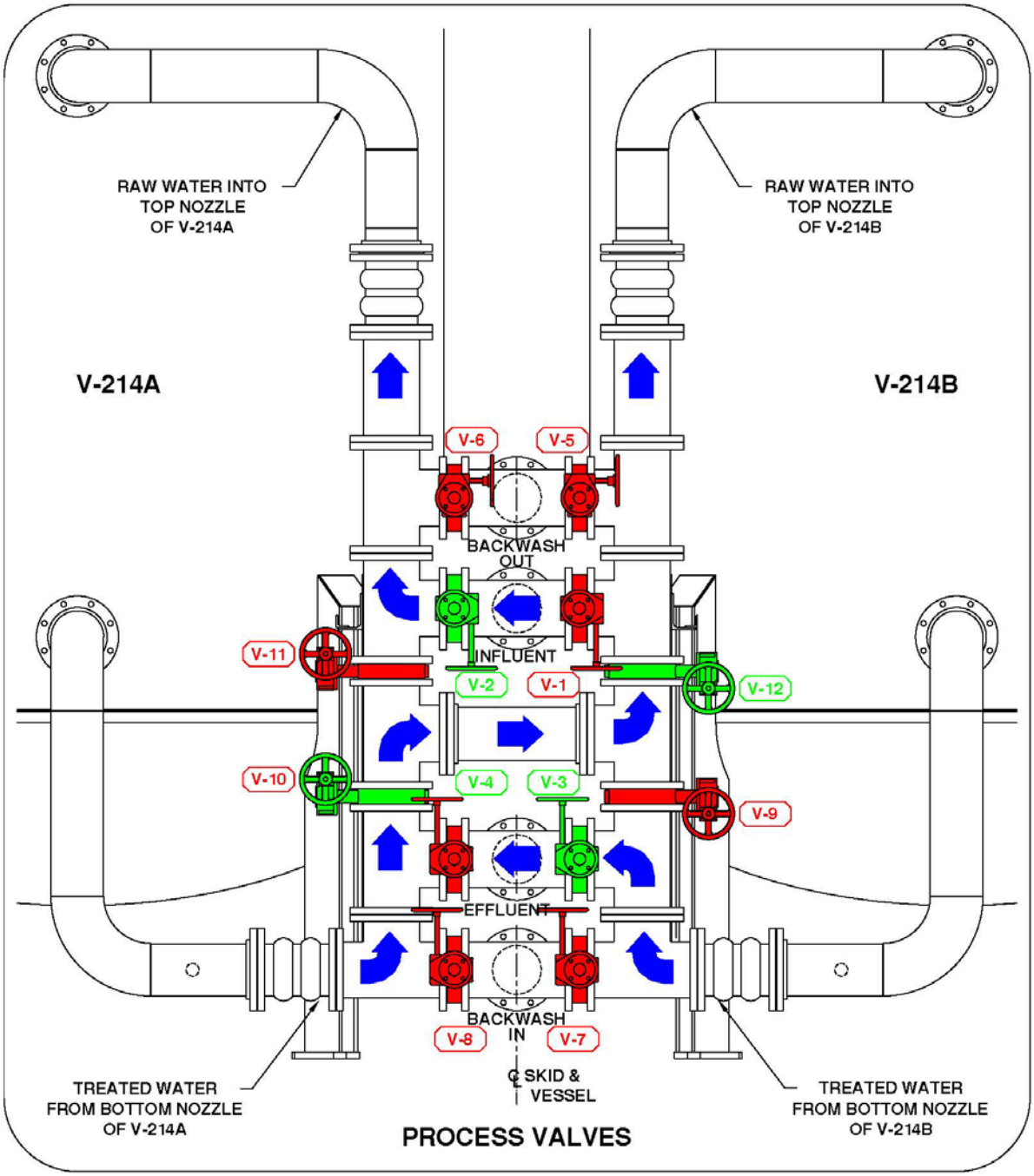

FIGURE 2 VESSEL V-214B ON-LINE VESSEL V-214A CARBON TRANSFER

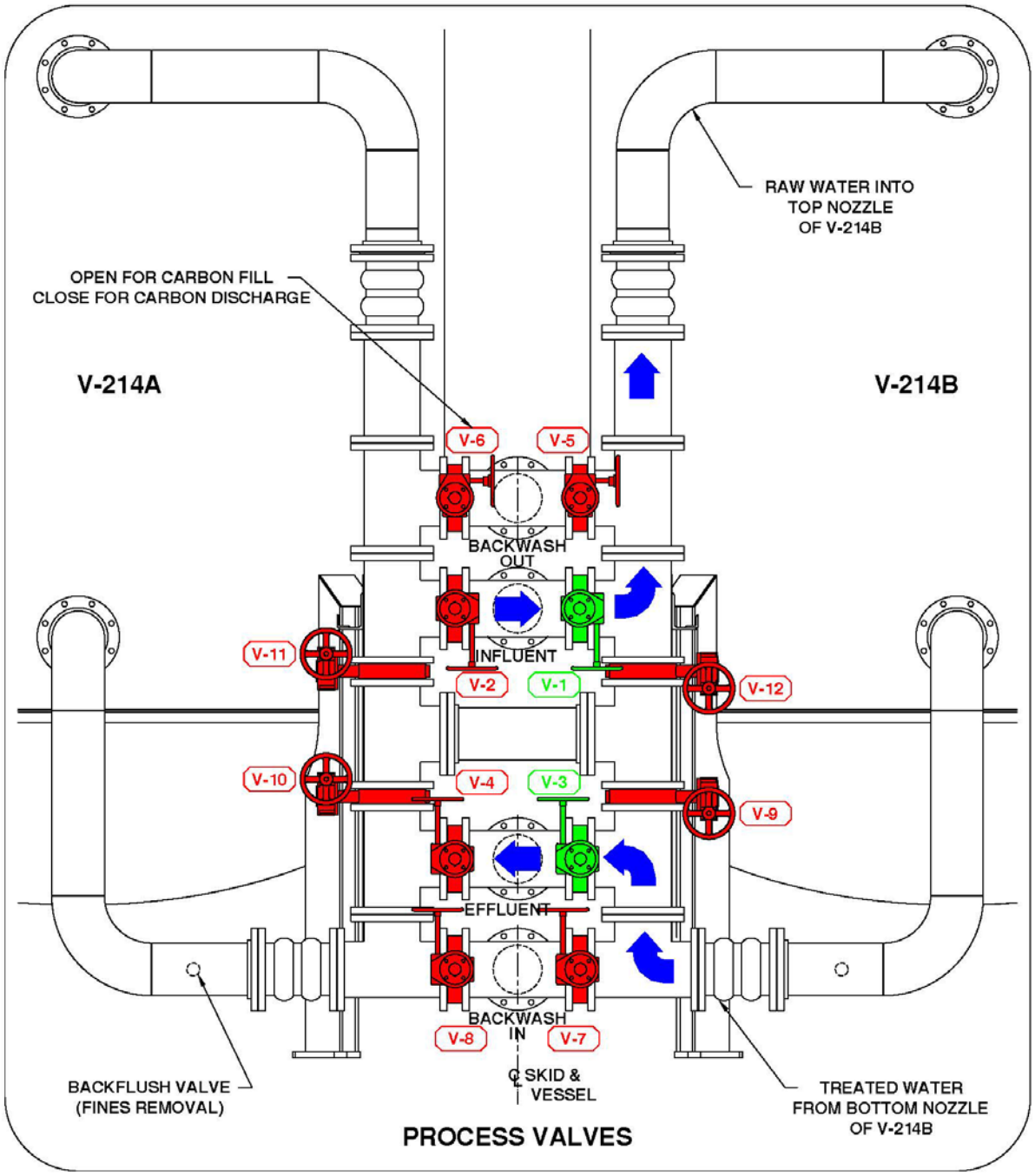

FIGURE 3 SERIES FLOW VESSEL V-214B TO V-214A

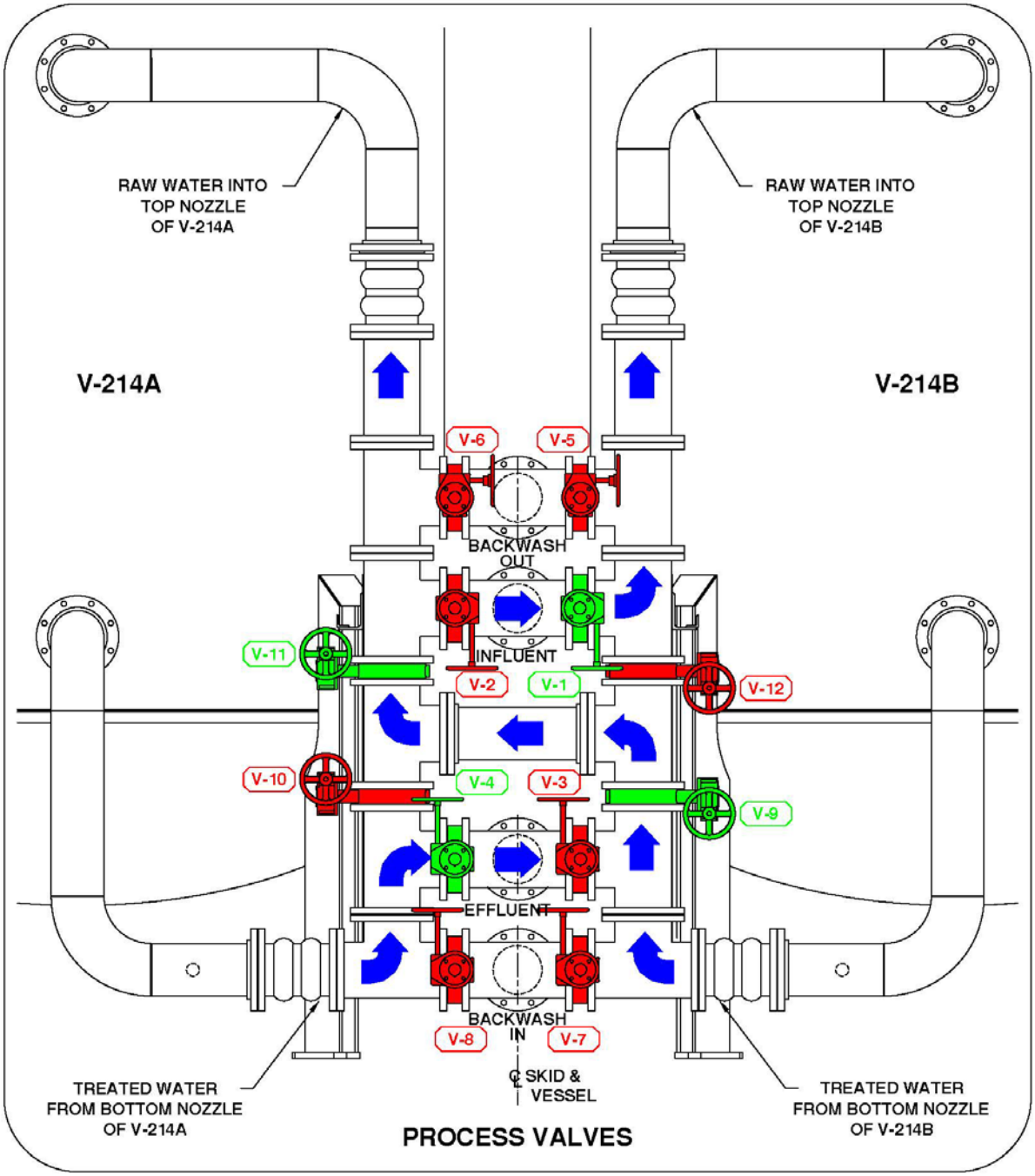

FIGURE 4 VESSEL V-214A ON-LINE VESSEL V-214B CARBON TRANSFER

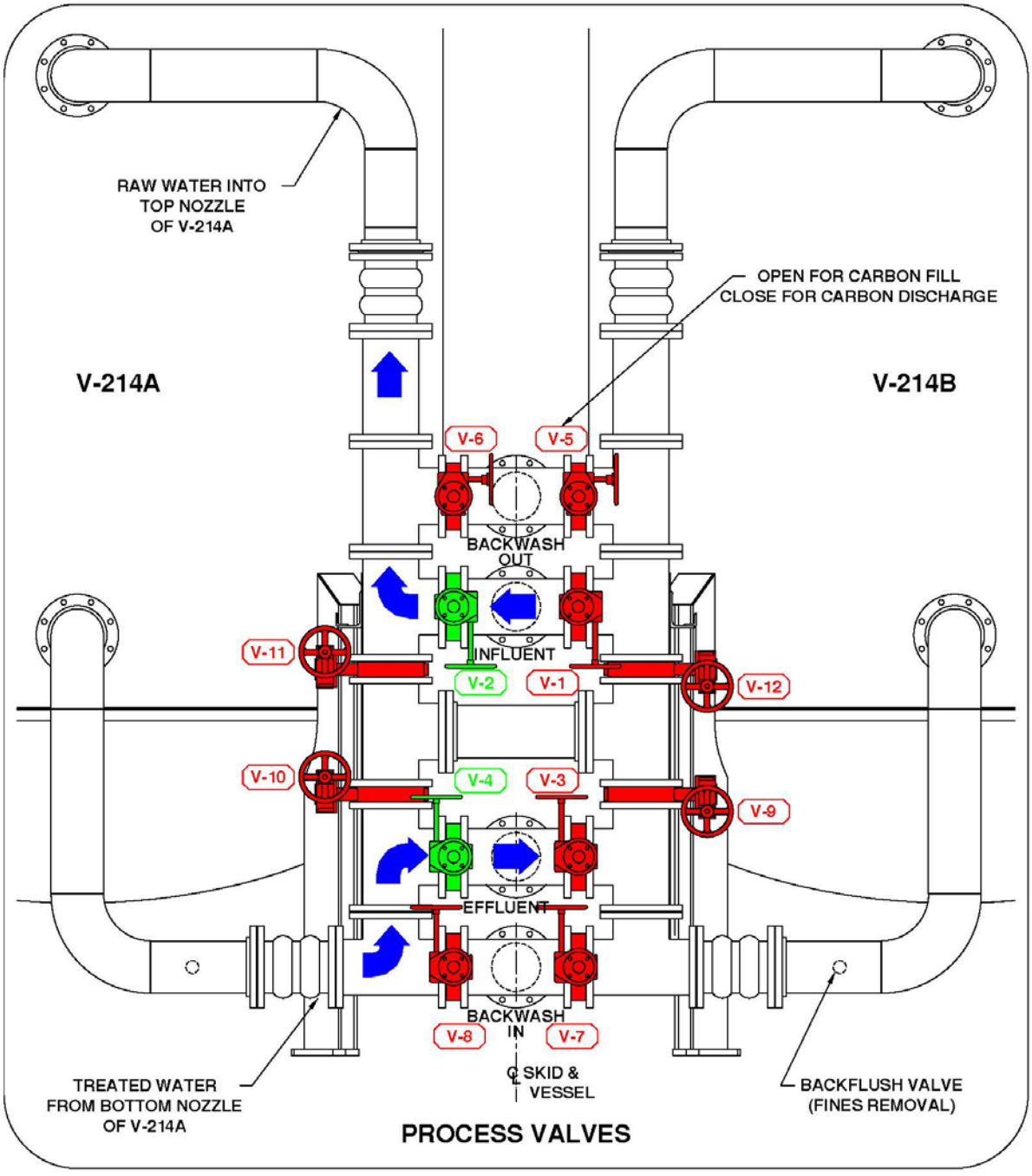

FIGURE 5 PARALLEL FLOW VESSEL V-214A AND V-214B

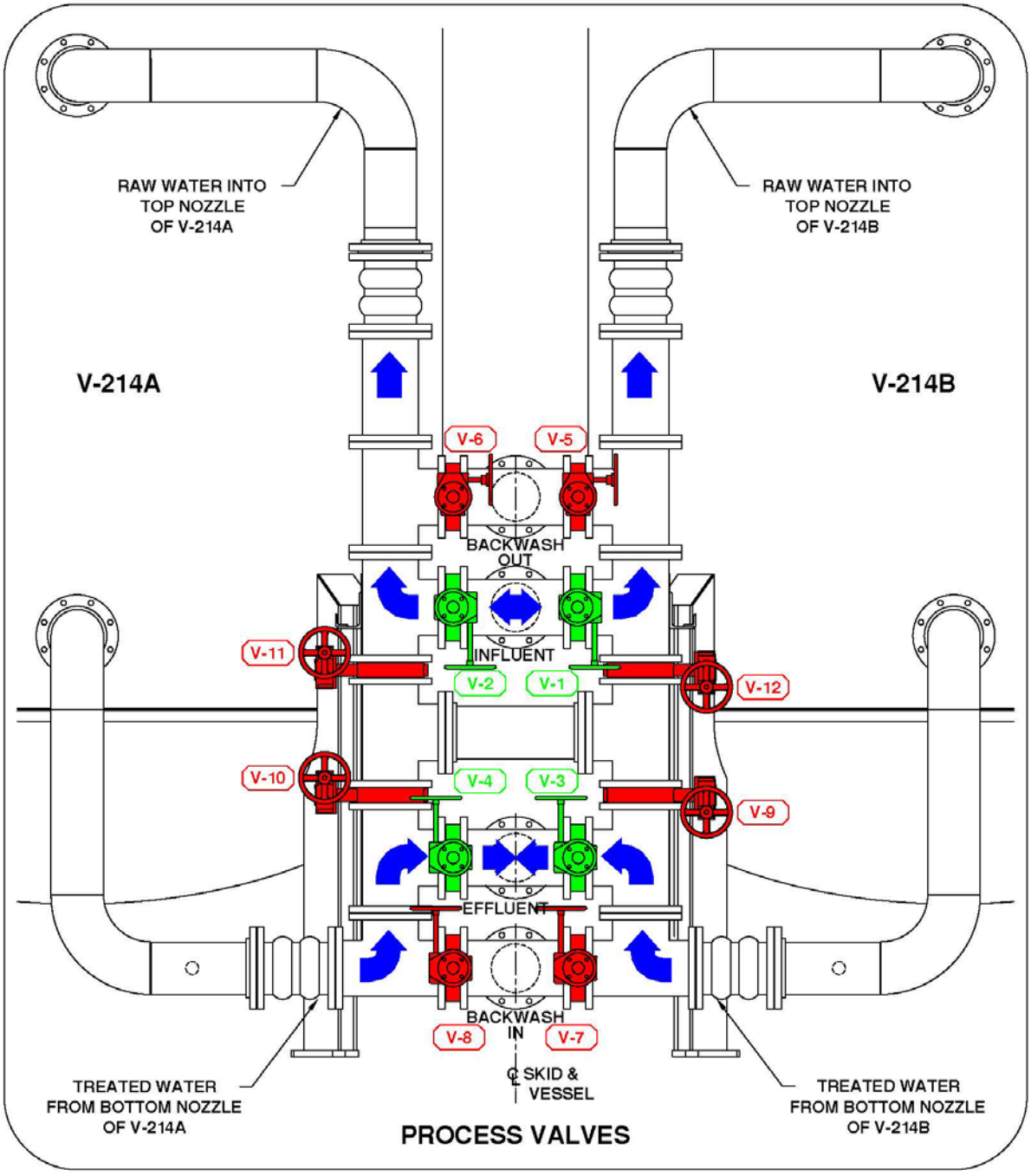

FIGURE 6 VESSEL V-214B ON-LINE VESSEL V-214A BACKWASHING

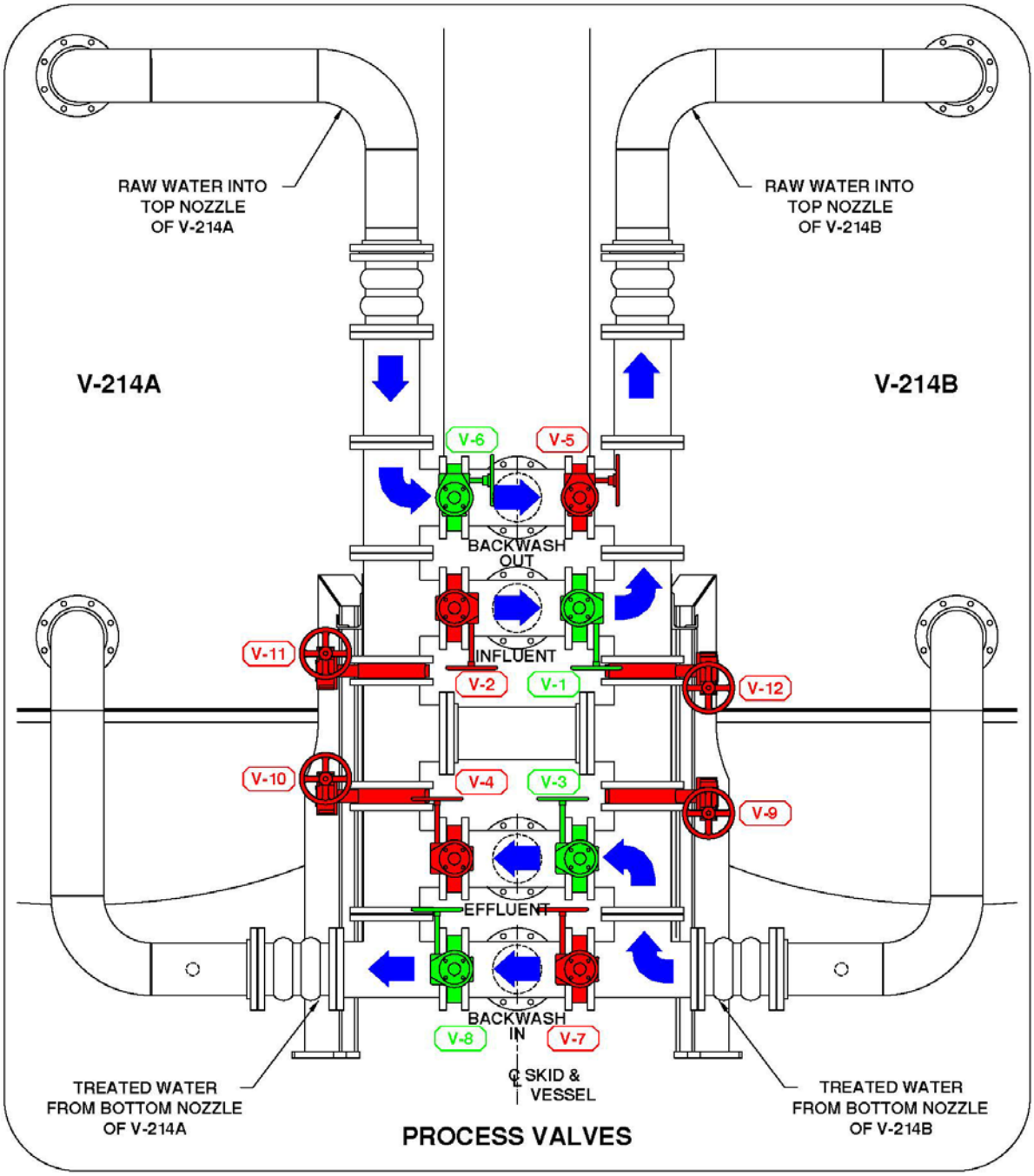

FIGURE 7 VESSEL V-214A ON-LINE VESSEL V-214B BACKWASHING

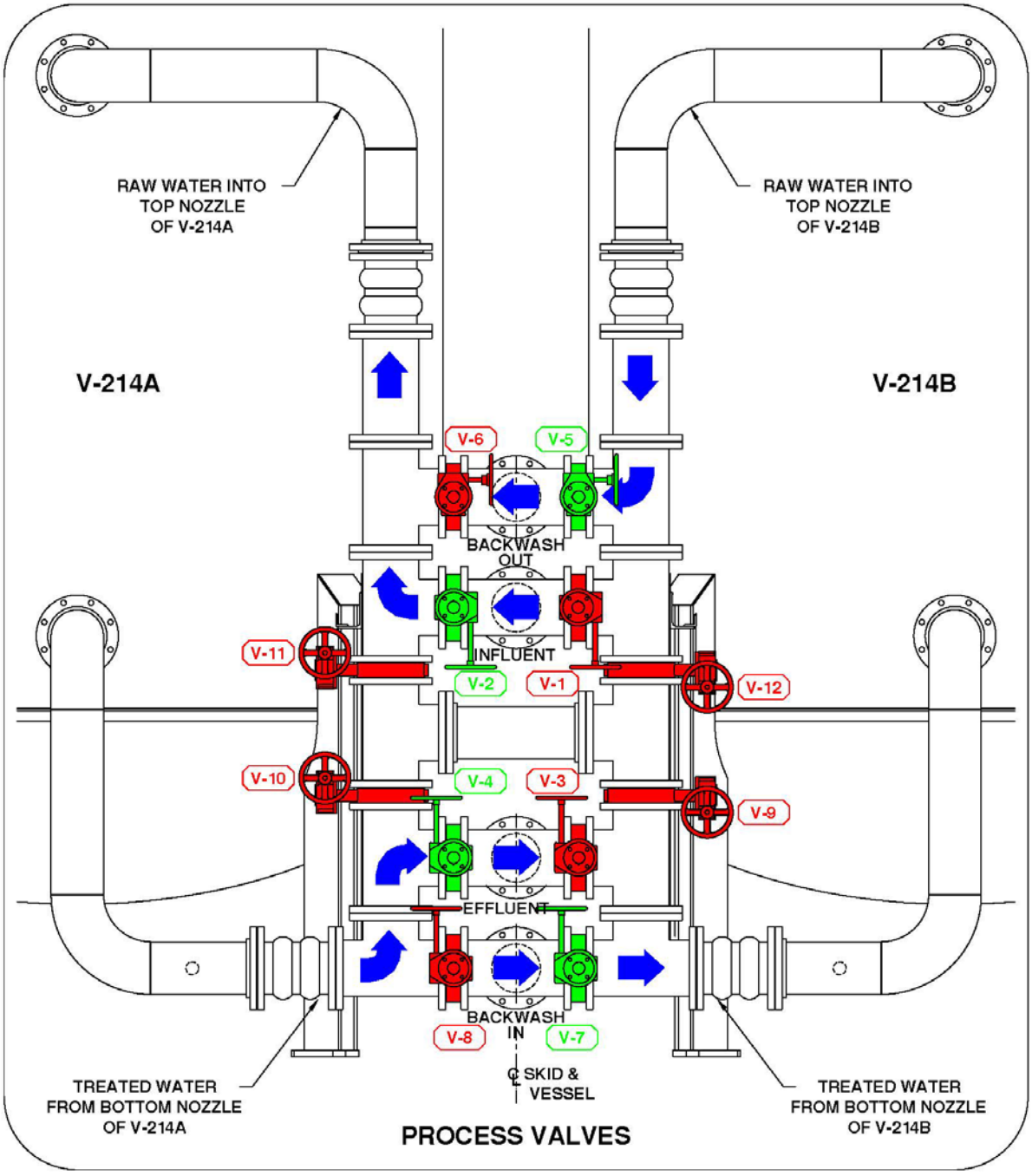

FIGURE 8 STANDARD TRAILER

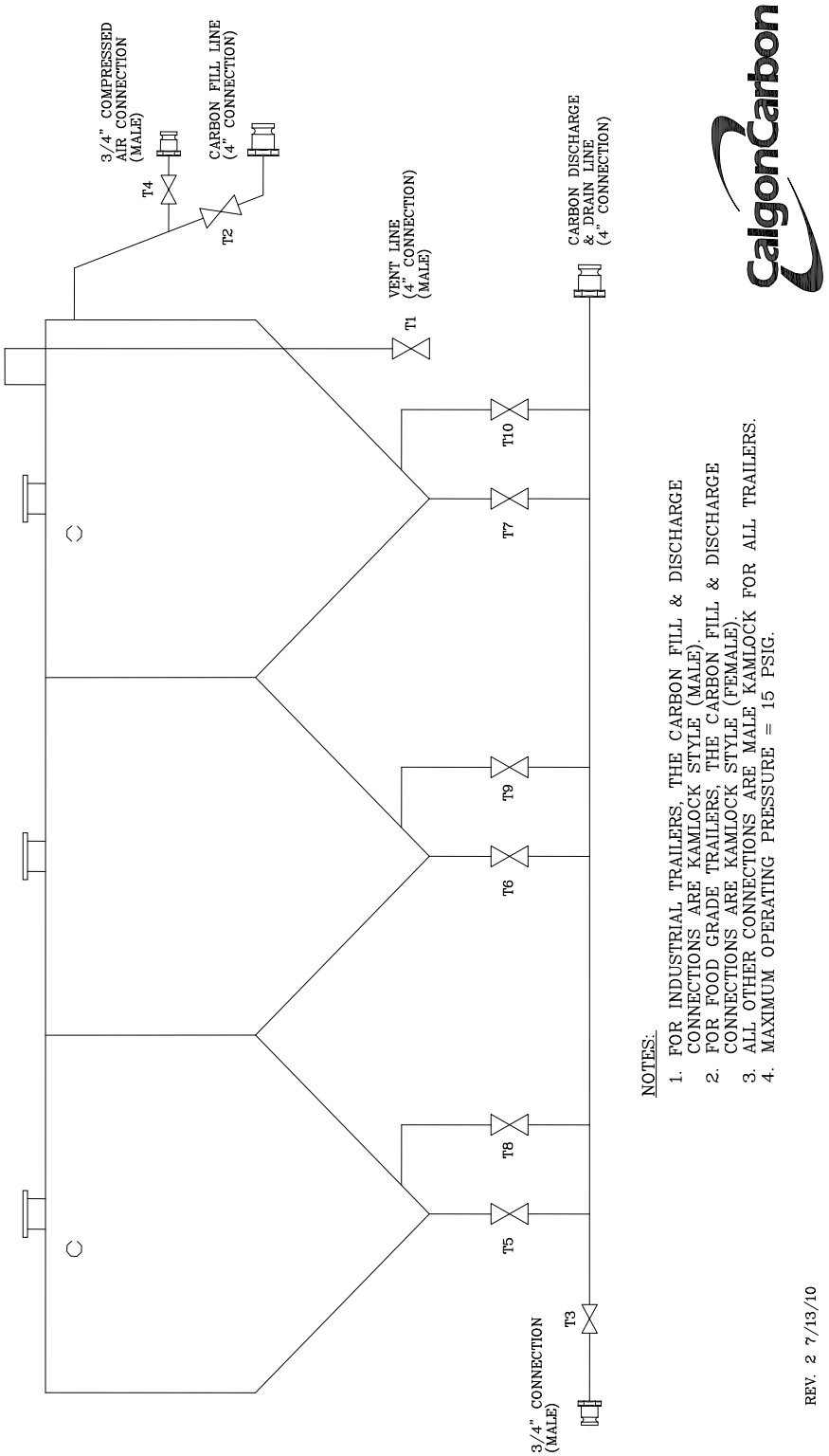

FIGURE 9 TRIPLE COMPARTMENT TRAILER

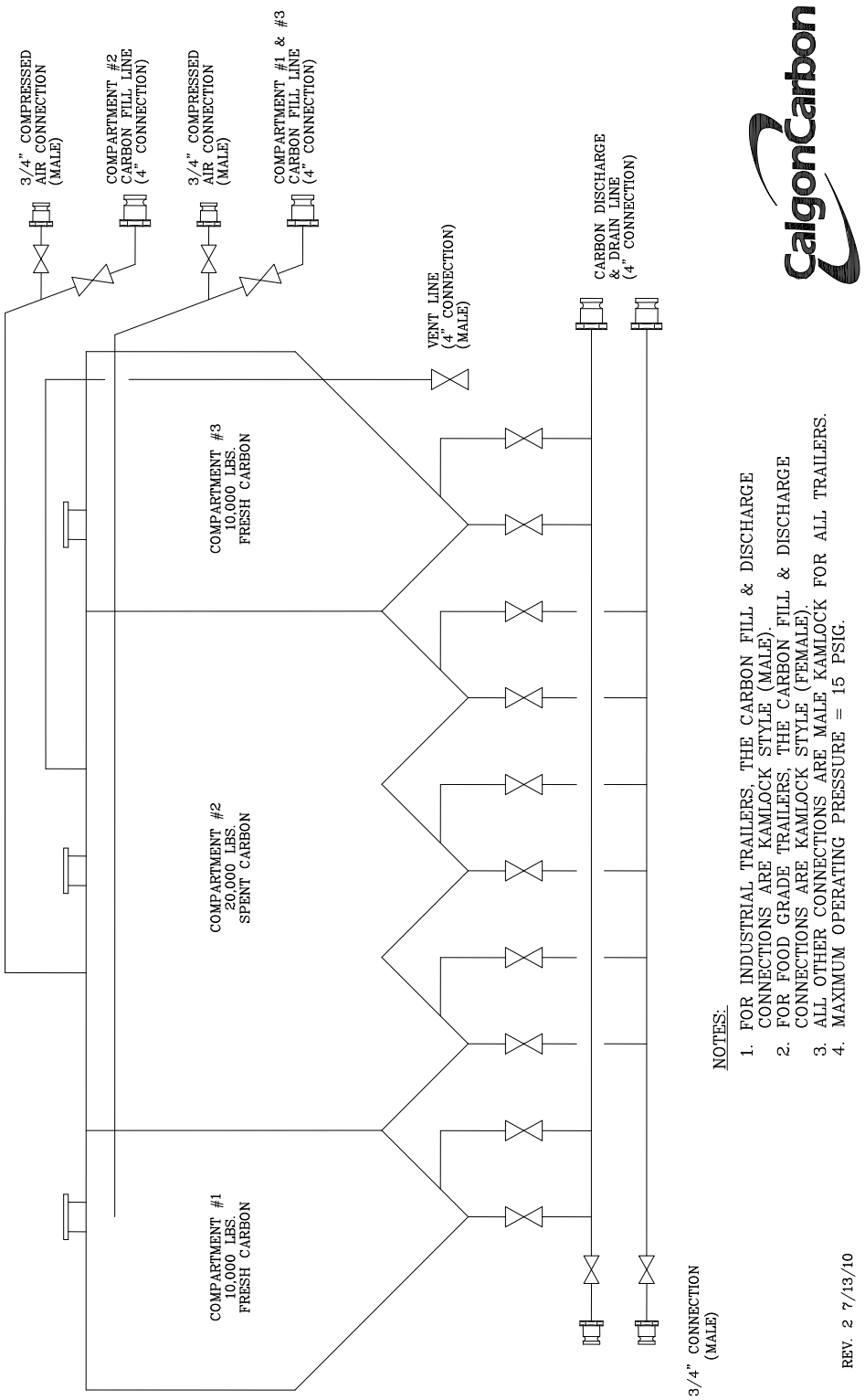

CARBON ACCEPTANCE CANISTER (CAC) INSTRUCTIONS

1. Connect the carbon acceptance canister (CAC) as shown on the drawing below. Start the adsorption system according to the operating manual. All valves in the influent and effluent lines to the CAC should be closed.

2. Open the top 2" plug on the CAC. Slowly fill the CAC with clean, hot water. If hot water is not available, ambient temperature water will be acceptable. Capacity of the CAC is approximately one (1) gallon.

3. For optimum performance, the water needs to be adsorbed into the carbon. To achieve this, allow the CAC to stand full with water for approximately 24 hours. After the water has been adsorbed, replace the plug in the top of the CAC.

4. Open both valves in the CAC effluent line. One valve, C-4, is located near the adsorption system's main effluent header and the other valve, C-3, is located near the CAC.

5. Disconnect the tubing on the CAC influent line at the isolation valve C-1 located on the system's main influent header.

6. Slowly open the CAC influent valve, C-2, to allow clean effluent water to back flow through the CAC to purge the lines and backflush the CAC. Allow about 5 gallons of clean water to flow through the CAC.

7. Close the valve, C-2, in the CAC influent line to stop the flow. Reconnect the tubing to the CAC influent isolation valve, C-1.

8.; Slowly open both of the valves in the CAC influent line to allow untreated water to flow through the CAC.

9. If the carbon adsorption system is to be backwashed or shutdown, close the influent valve, C-2, and the effluent valve, C-3, on the CAC, and open the top plug in the canister to vent the CAC. Once the adsorption system is placed back into service, tighten the plug and open the CAC influent and effluent valves.

10. The CAC should be left in service according to the following guidelines:

    a. If the adsorption system is operating in parallel mode, the CAC should be left on-line for about 1/10 th of the anticipated bed life.

    b. If the adsorption system is operating is series mode, the CAC

should be left on-line for about 1/5 th of the anticipated bed life.

11. After the CAC has been on-line for the recommended time period, it needs to be returned for carbon acceptance testing. The CAC is taken out of service by closing all of the valves in both the CAC influent and effluent lines. After the valves are closed, disconnect the effluent tubing connector at the CAC. Slowley open the top plug to vent the CAC. Slowly open the CAC effluent valve, C-3, and drain the water from the CAC to a suitable container. Ensure that all necessary safety precautions are taken depending on the hazardous nature of the process liquid. Open the CAC influent valve C-2 and carefully disconnect the tubing from the influent isolation valve, C-1, on the system header. Allow the liquid in the influent tubing to drain through the CAC and into the container.

12. Close the CAC influent valve C-2 and effluent valve C-3. Replace the top plug and remove the CAC from the adsorption system. Ship the CAC with the influent and effluent valves attached and closed. This is required to ensure that no water leaks from the CAC during shipment.

    Ship the CAC to: Calgon Carbon Corporation
    3000 GSK Drive
    Moon Township, PA 15108
    Attention: Carbon Acceptance Department

Contact the Calgon Carbon Sales Office in your area for additional information.

Unit Specifications

Max. Operating Pressure:	125 psig
Body and Septa:	PVC
Valves	PPL
Tubing	PPL
Flow Control Valve	Nickel Plated Brass

MEDIA ACCEPTANCE CANISTER

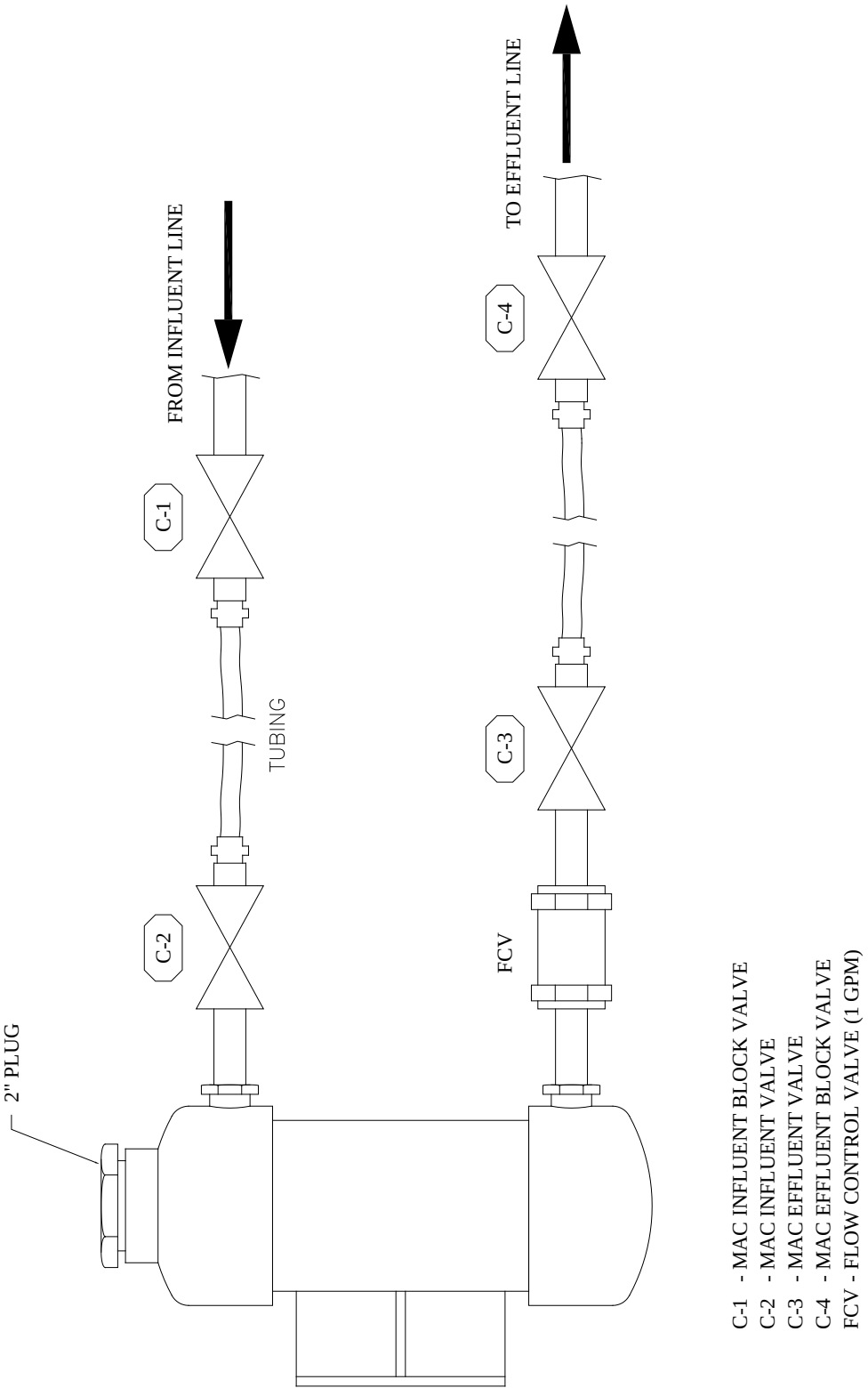

CALGON CARBON CORPORATION
SPARE PARTS PROGRAM

INTRODUCTION: Calgon Carbon Corporation has developed a standard product line of engineered treatment systems for air and water applications. Much of the fabrication, and assembly of these systems is done at Calgon Carbon's own facility; therefore most of the system parts and components are maintained in inventory. As a service to customers to provide a source of specified parts in a timely manner, these parts and components are available for purchase. Prices a valid for one year from the date on the list, after this time, the prices may be subject to revision.

ORDER ENTRY: The purchase order for spare parts should be entered using the spare parts order form provided. This form should be sent to:

Calgon Carbon Corporation
Order Service Department
P.O. Box 717
Pittsburgh, PA 15230-0717

Orders can also be placed via fax to 1-412-787-6323
Verbal orders can be placed by calling the Order Services Department at 1-412-787-6700

SHIPPING: Order shipping options are either Rush (next day delivery by UPS) or Normal (one week delivery by UPS). Other shipping directions should be requested at the time of ordering. Shipping charges will be added to the total price of the order.

SALES TAX: Sales tax will be added to the invoice unless a sales tax exemption certificate is provided with the order.

PAYMENT: An invoice will be sent to the billing address upon shipment of the order. Payment terms are net 30 days after shipment.

WARRANTY: Calgon Carbon Corporation warrants that the equipment sold hereunder shall be free of defects in material and workmanship for a period of one (1) year from the date of shipment. This warranty does not apply to problems associated with normal wear and tear, improper maintenance, negligence, misuse, abuse or failure to operate the equipment in strict accordance with the operating and maintenance plan provided. For those items provided by, but not directly manufactured by Calgon Carbon, the manufacturer=s warranty shall apply, provided warranty coverage exceeds that which is provided by Calgon Carbon. All other warranties, either expressed or implied, are hereby disclaimed, including, but not limited to, the warranty of merchantability and fitness for the particular purpose.

LIMITATIONS OF LIABILITY: The purchaser's exclusive remedy for any cause of action arising out of this transaction, including but not limited to breach of warranty, negligence and /or indemnification, is expressly limited to the maximum of the purchase price of the equipment sold hereunder. All claims of whatsoever nature shall be deemed waived unless made in writing within forty-five (45) days of the occurrence giving rise to the claim. In no event shall Calgon Carbon for any reason or pursuant to any provision of the warranty be liable for the incidental or consequential damages, or damages in excess of the purchase price of the equipment supplied, loss of profit, or fines imposed by Government agencies.

CALGON CARBON CORPORATION ♦ COPYRIGHT 2016 ♦ ALL RIGHTS RESERVED

WARRANTY

WARRANTIES: Seller warrants that the carbon adsorption system sold hereunder shall be free from defects in materials and workmanship for a period of one (1) year from the date of system start-up or eighteen (18) months from date of system shipment, whichever comes first. The warranty does not apply to problems associated with normal wear and tear, improper maintenance, negligence, misuse, or the failure to operate the system in strict accordance with the operating and maintenance plan provided. For those items provided by, but not directly manufactured by the Seller, the manufacturer's warranty shall apply provided warranty coverage exceeds that which is provided by the Seller. All other warranties, either express or implied, are hereby disclaimed including but not limited to the warranty of merchantability and fitness for a particular purpose.

Seller warrants that any/all activated carbon provided hereunder shall conform to the specifications for such grade as published from time to time by the Seller. There are no warranties made with regard to the activated carbon or system to be sold hereunder other than those contained in this paragraph or stated elsewhere in the proposal. All other warranties express or implied, are hereby disclaimed including, but not limited to, the warranty of merchantability and fitness for a particular purpose.

This warranty is limited to the replacement and/or repair by the Seller of any parts or materials which in the Seller's determination are defective. This warranty does not cover any charges by the Buyer for replacement of parts, adjustments or repairs, or any other work unless such charges shall be assumed or authorized in advance in writing by the Seller.

LIMITATION OF LIABILITY: Seller's liability and the Buyer's exclusive remedy for any cause of action arising out of this transaction, including but not limited to breach of warranty, negligence and/or indemnification is expressly limited to a maximum of the purchase price of the carbon adsorption system sold hereunder. All claims of whatsoever nature shall be deemed waived unless made in writing within forty-five (45) days of the occurrence giving rise to the claim. In no event shall the Seller for any reason or pursuant to any provision of these warranties be liable for incidental or consequential damages, or damages in excess of the purchase price of the system supplied, nor shall the Seller be liable for loss of profits or fines imposed by Governmental agencies.

FORCE MAJEURE: Except as otherwise provided hereafter, neither party shall be liable to the other party for failure to perform any of its obligations hereunder due to Act of God, accident, fire, flood, riot, war, sabotage, explosion, strike, labor disturbance, national defense requirements, governmental law, ordinance, rule or regulation, whether valid or invalid, extraordinary failure of equipment or apparatus, inability to obtain electricity or other type of energy, raw material, labor, equipment or transportation, or any similar or different contingency beyond the party's reasonable control which would make performance impractical whether or not the contingency is of the same class as those enumerated above. The party invoking Force Majeure shall provide the other party of its estimate as to when the Force Majeure condition will end. The minimum term of this agreement shall be extended by the duration of any Force Majeure period.

SECURITY INTEREST: Buyer represents that the System is equipment to be used for business, and shall remain personal property. Buyer grants the Seller a security interest in the System to secure the payment of the purchase price. Buyer will not sell, lease, transfer or encumber the System and will keep it free from any and all liens and security interests until the Seller has been paid in full and shall execute any and all necessary documents to protect such security interests.

MODIFICATION OR WAIVER OF PROVISIONS: This proposal cannot be modified except by agreement in writing signed by the Seller. A waiver or repeated waiver by the Seller of any provision or the breach of any provision shall not constitute a further waiver of such provision or breach.

ENTIRE AGREEMENT: The proposal, as signed by both parties, including the General Terms of Sale and any attachments referenced in the proposal, embodies the entire agreement between Buyer and Seller. The parties shall not be bound by or liable for any statement, representation, promise or understanding not set forth herein. Nothing contained in correspondence or discussions prior to the date of the agreement has any effect on this agreement unless specifically incorporated herein. No changes, modifications of, or additions to any portion of the agreement shall be valid unless reduced to writing, agreed to and signed by both parties, and incorporated into the agreement.

CALGON CARBON CORPORATION ♦ COPYRIGHT 2016 ♦ ALL RIGHTS RESERVED

NOTE: TO CUSTOMERS INTERESTED IN VIDEOTAPING CALGON CARBON CORPORATION REPRESENTATIVES DURING OPERATOR TRAINING SESSIONS, CARBON TRANSFERS, SYSTEM INSPECTIONS, OR OTHER SITE ACTIVITIES PRIOR WRITTEN PERMISSION FROM CALGON CARBON CORPORATION IS REQUIRED BEFORE VIDEOTAPING MAY COMMENCE.

VIDEOTAPING AGREEMENT

This agreement is made this ___ day of _____, 19___, by and between Calgon Carbon Corporation, hereinafter referred to as "CCC", a Delaware corporation and _____, (hereinafter referred to as "Owner-Operator").

In consideration for allowing Owner to videotape "CCC" personnel performing maintenance or service, or demonstrating the operation of _____ (the equipment) the Owner-Operator and "CCC" agree as follows:

The video tape is used at Owner-Operator's own risk and is not intended nor is it to be used as a substitute for safe operating procedure in accord with industry standard, training, safety instruction or the operation and maintenance manuals. CCC ASSUMES NO LIABILITY FOR THE COMPLETENESS OR ACCURACY OF THE VIDEO TAPE. ANY CLAIM FOR INJURY OR PROPERTY DAMAGE WHICH ARISES OUT OF OR IN CONNECTION WITH THE USE OF THE VIDEO TAPE BY THE OWNER-OPERATOR, ITS EMPLOYEES, OR AGENTS IS THE SOLE RESPONSIBILITY OF THE OWNER-OPERATOR.

OWNER-OPERATOR AGREES TO HOLD CCC HARMLESS AND PAY ALL LEGAL EXPENSESAND JUDGEMENTS INCLUDING PUNITIVE DAMAGES, RESULTING FROM LITIGATION WHERE THE TAPE IS ENTERED INTO EVIDENCE.

This tape is for the Owner-Operators own use, and the Owner agrees to not sell or transfer the tape to any other party.

CCC must receive a copy of the tape and reserves the right to final edit the tape at Owner-Operator's expense.

Owner-Operator must affix the label CCC provides to ALL the tapes and read the following statement on the tape both at the beginning and end of the taped presentation.

THIS IS NOT A CCC TRAINING OF SAFETY INSTRUCTION TAPE. FOR SAFETY OR TRAINING INSTRUCTIONS YOU MUST CONSULT THE OPERATION AND MAINTENANCE MANUAL AND/OR CCC PERSONNEL, AND FOLLOW SAFE OPERATING PROCEDURE IN ACCORD WITH INDUSTRY STANDARDS

Notwithstanding the reasonableness of the agreements herein, in the event that a court of competent jurisdiction determines that any part of the agreement set forth in paragraphs 1, 2, 3, 4, and 5 be held invalid or unenforceable, the provisions of this video agreement shall be deemed severable, and the remaining parts shall be valid and enforceable as though the invalid and unenforceable parts had not been included in the agreement.

When this agreement is accepted and signed by the Owner-Operator and accepted by CCC the video taping may start. It is understood that Owner-Operator's camera operator will not hinder or distract CCC personnel during their work.

Accepted by: _____ *Accepted by:* _____
(Owner-Operator)

_____ _____
(Signature) *(Signature)*

_____ _____
(Position) *(Position)*

By signing this, the signer is verifying they have authorization to make such agreements binding on the Owner-Operator.

Pressure Drop Curve
Model 10, 20,000 # OLC 12 x 40 Carbon, 8" Piping
60 deg. F., 80 spec. 22.106 septas

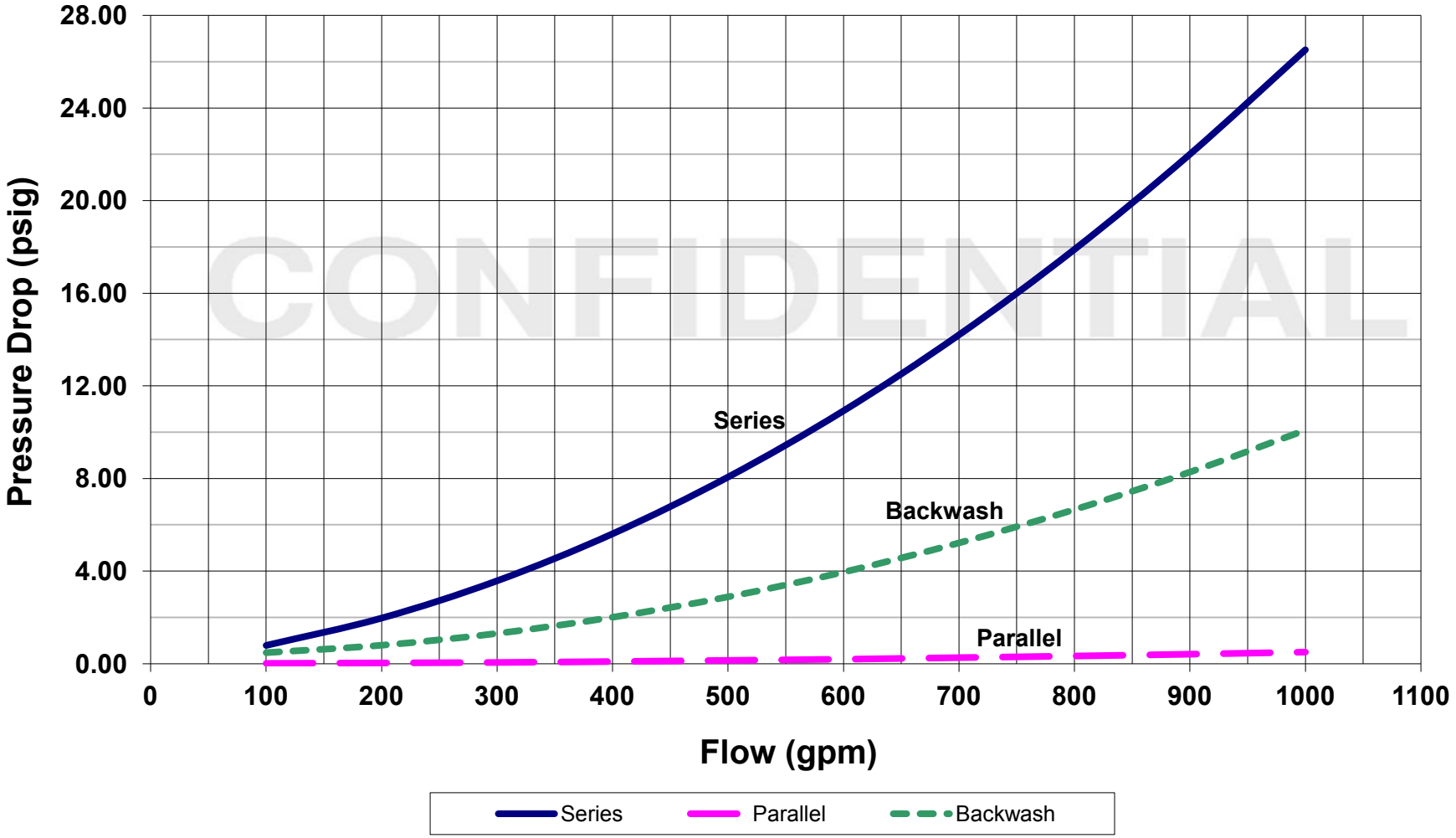

Wetting Times for GAC
80° F. Water

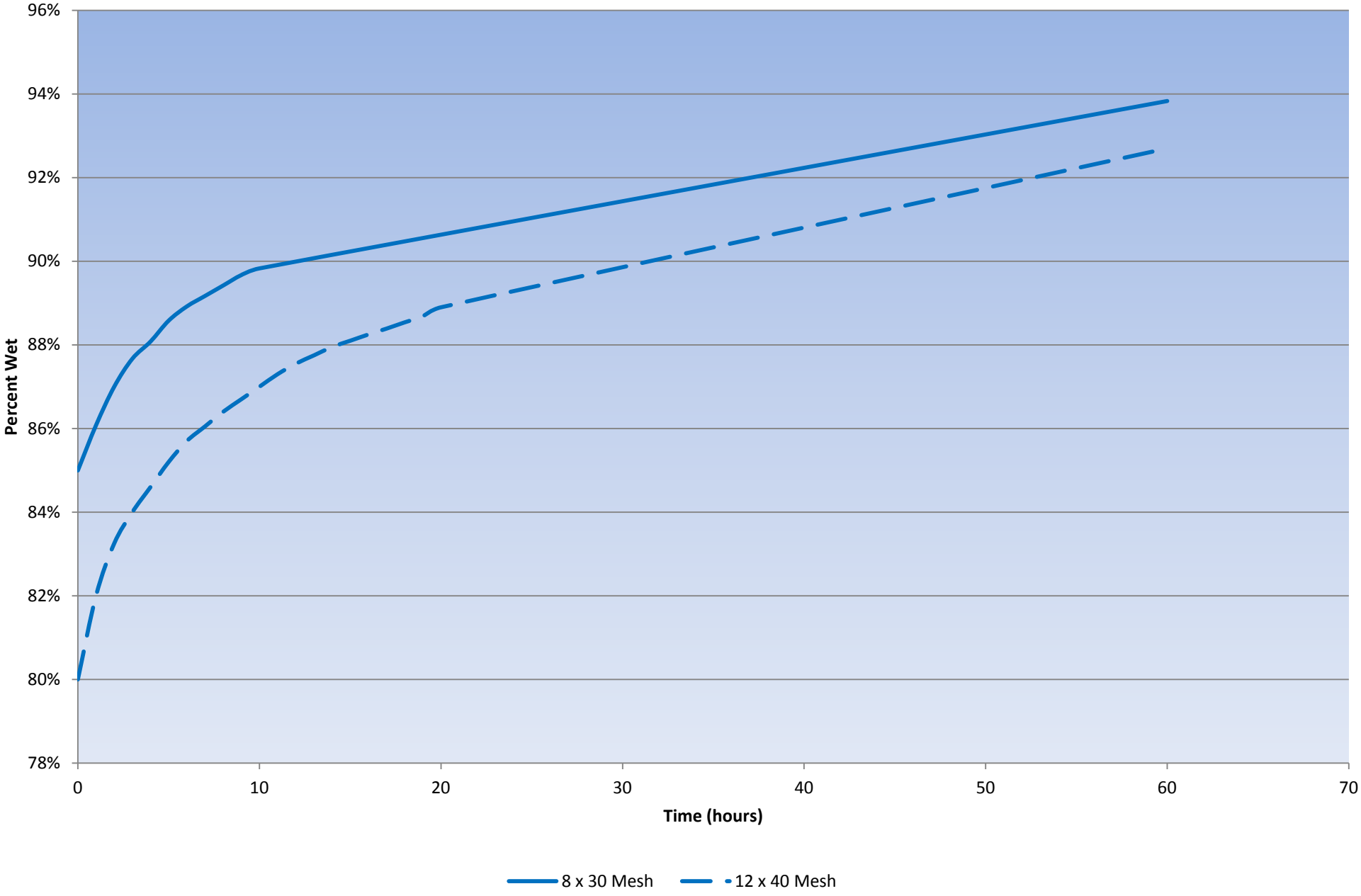

Bed Expansion Curve

Water at 60F, 12 x 40 Mesh Coconut GAC

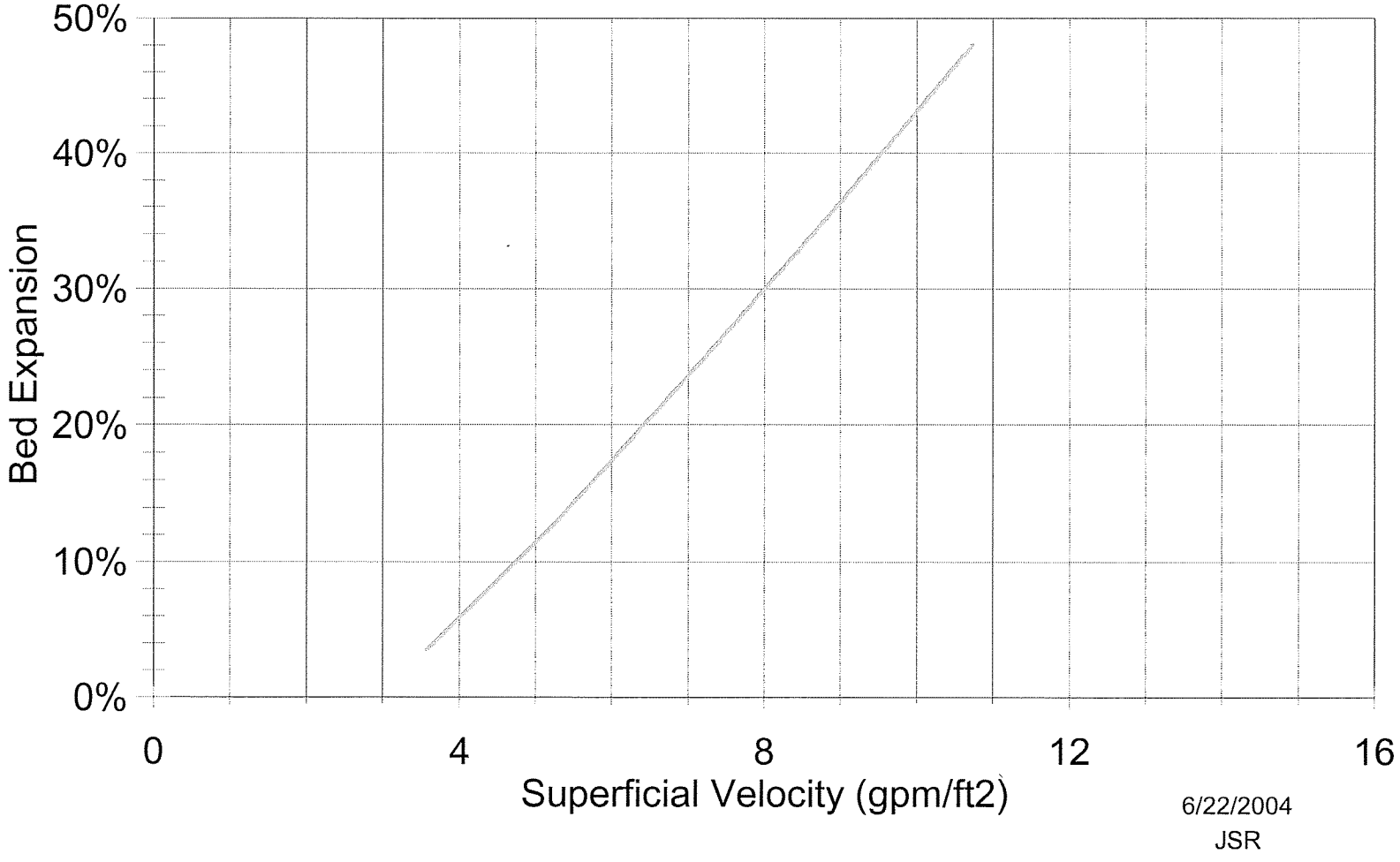

6/22/2004
JSR

Disinfection Of Granular Activated Carbon

CALGON CARBON CORPORATION

Introduction

There are situations where it becomes necessary to disinfect granular activated carbon (GAC) beds due to the presence of bacteria. The bacteria are usually present because of oxygen depletion in wastewater and potable water applications, and low temperatures (>140ºF) in food-related applications (sugars, etc.). The procedure described below is intended for in situ disinfection of carbon in an adsorber containing 20,000 pounds of GAC. By adjusting the amount of sodium hydroxide, larger or smaller carbon beds can be disinfected with this procedure.

Caution Due to the hazardous nature of sodium hydroxide (NaOH) and hydrochloric acid (HCl), appropriate protective clothing such as a face shield, goggles, gloves and impervious clothing must be worn when handling these chemicals. For specific instructions, refer to your plant procedures and/or material safety data sheets for these chemicals. Materials of construction must be compatible with NaOH and HCl.

Disinfection

1. Take the adsorber off line and make sure that a line on top of the adsorber is open to serve as a vent.
2. Drain the water from the adsorber through the adsorber effluent line.
3. Pump 5% sodium hydroxide into the adsorber through the effluent line. For Calgon Carbon's backwashable Model 10 and Model 12 adsorbers, the required volumes are 7,000 and 6,000 gallons, respectively. See step 9a for an alternate procedure.
4. Stop pumping when the NaOH solution overflows through the vent line.
5. Allow the carbon to soak in the sodium hydroxide for at least four hours.
6. Drain NaOH solution from the adsorber through the adsorber effluent line.

Neutralization

7. Wash the carbon by adding contaminant-free or clean water through the effluent line for 7-10 hours at a flow of 1.3-3 gpm/ft^2 in order to wash out the residual sodium hydroxide and neutralize the carbon. The disinfection is then complete.

8a. An alternate, faster procedure for neutralizing the carbon includes acid treatment. After the sodium hydroxide solution is drained from the adsorber, pump 5 gallons of reagent grade hydrochloric acid (37% HCl) into the adsorber through the effluent line.

8b. Fill the adsorber with clean water by backfilling through the effluent line at 3-5 gpm/ft^2 so as to thoroughly mix the content of the adsorber. Shut off the backfill water when it begins to overflow through the vent line.

8c. Allow the carbon to soak for 60 minutes, then drain the adsorber. Check the pH of the water, which should be in the range of 8 to 10.

8d. Wash the carbon by adding clean water through the effluent line at a rate of 1.3-3 gpm/ft^2 until the pH of the effluent water matches the influent water or within desired pH range. Disinfection is then complete.

Alternate Disinfection Procedure

9a. After step 2, add ~ 1,000 gallons of clear water through the effluent line.

9b. After completing step 9a, pump the contents of two 55-gallon drums of 50% sodium hydroxide into the adsorber through the effluent line.

9c. Fill the adsorber with clean water by backfilling through the effluent line at 3-5 gpm/ft^2 so as to thoroughly mix the contents of the adsorber.

9d. Shut off the backfill water when it begins to overflow through the vent line. Check the pH of the water exiting the vent line. It should be 13 or higher.

10. Go to step 5.

Safety Message

Wet activated carbon preferentially removes oxygen from air. In closed or partially closed containers and vessels, oxygen depletion may reach hazardous levels. If workers are to enter a vessel containing carbon, appropriate sampling and work procedures for potentially low oxygen spaces should be followed, including all applicable Federal and State requirements.

CALGON CARBON CORPORATION

Making Water and Air Safer and Cleaner

Calgon Carbon Corporation
P.O. Box 717
Pittsburgh, PA USA 15230-0717
1-800-422-7266
Tel: 412-787-6700
Fx: 412-787-6713

Chemviron Carbon
European Operations of
Calgon Carbon Corporation
Zoning Industriel C de Feluy
B-7181 Feluy, Belgium
Tel: + 32 (0) 64 51 18 11
Fx: + 32 (0) 64 54 15 91

Calgon Carbon Asia
65 Chulia Street
#37-03 OCBC Centre
Singapore 049513
Tel: +65 6 221 3500
Fx: +65 6 221 3554

Your local representative

Copyright© 2005 Calgon Carbon Corporation, all rights reserved.

FORM U-1A MANUFACTURER'S DATA REPORT FOR PRESSURE VESSELS

(Alternative Form for Single Chamber, Completely Shop or Field Fabricated Vessels Only)

As Required by the Provisions of the ASME Boiler and Pressure Vessel Code Rules, Section VIII, Division 1

1. Manufactured and certified by Calgon Carbon Corporation, 4301 Grand Avenue, Neville Island, Pennsylvania, 15225
(Name and address of Manufacturer)

2. Manufactured for Techsas Inc., 4819 West Bayshore Drive, Bacliff, Texas, 77518
(Name and address of Purchaser)

3. Location of Installation Kirtland Air Force, UNKNOWN, Albuqquerque, New Mexico, 87105
(Name and address)

4. Type vertical tank (Horizontal or vertical, tank) | V-214A to V-214B (Manufacturer's serial number) | N/A (CRN) | 91157783 REV.2 and 91157785 REV.1 (Drawing number) | 1646-1647 (National Board number) | 2016 (Year built)

5. ASME Code, Section VIII, Division 1 | 2015/ N/A [Edition and Addenda, if applicable (date)] | N/A (Code Case numbers) | N/A (Special service per UG-120(d))

6. Shell: SA-516 Gr. 70 (Material spec. number, grade) | 0.5000 in (Nominal thickness) | 0.0000 in (Corr. allow.) | 9' 11.0000" (ID) (Inner diameter) | 11' 8.0000" [Length (overall)]

Body Flanges on Shells												
									Bolting			
No.	Type	ID	OD	Flange Thk	Min Hub Thk	Material	How Attached	Location	Num & Size	Bolting Material	Washer (OD, ID, thk)	Washer Material
0	0	0.0"	0.0"	0	0	0	0	0	0 - 0	0	0	0

7. Seams: Welded Type 1 [Long. (welded, dbl., sngl., lap, butt)] | Spot [R.T.(spot or full)] | 85% (Eff.,%) | N/A (H.T. temp) | N/A (Time, hr) | Welded Type 1 [Girth. (welded, dbl., sngl., lap, butt)] | Spot [R.T. (spot or full)] | 100% (Eff., %) | 1 (No. of courses)

8. Heads: (a) Material SA-516 Gr.70 (Spec. no., grade) (b) Material SA-516 Gr.70 (Spec. no., grade)

	Location (Top, Bottom, Ends)	Minimum Thickness	Corrosion Allowance	Crown Radius	Knuckle Radius	Elliptical Ratio	Conical Apex Angle	Hemispherical Radius	Flat Diameter	Side to Pressure (Convex or Concave)
(a)	Top	0.4375	0.0000	0.0000"	0.0000	2:1	0	0.0000"	00000	Concave
(b)	Bottom	0.4375	0.0000	0.0000"	0.0000	2:1	0	0.0000"	00000	Concave

Body Flanges on Heads												
									Bolting			
	Location	Type	ID	OD	Flange Thk	Min Hub Thk	Material	How Attached	Num & Size	Bolting Material	Washer (OD, ID, thk)	Washer Material
(a)	N/A	N/A	N/A	N/A	N/A	N/A	N/A	N/A		N/A	N/A	N/A

9. MAWP 125 psi (Internal) None (External) at max. temp. 140 °F (Internal) None (External)

Min. design metal temp. -20 °F at 125 psi . Hydro, pneu., or comb. test pressure HYDRO AT at 163 psi .

Proof test N/A .

10. Nozzles, inspection and safety valve openings:

Purpose (Inlet, Outlet, Drain, etc.)	No.	Diameter or Size	Type	Material		Nozzle Thickness		Reinforcement Material	Attachment Details		Location (Insp. Open.)
				Nozzle	Flange	Nom.	Corr.		Nozzle	Flange	
Carbon Outlet Inlet	2	4"	FFSO	SA-106B	SA-105	0.5310	xxxx	xxxx	UW-16.1(e)	xxx	Head
Influent / Effluent	2	8"	FFSO	SA-106B	SA-105	0.5000	xxxx	xxxx	UW-16.1(e)	xxx	Shell
Manway	1	20"	FFSO	SA-106B	SA-105	0.5930	xxxx	SA-516 70	UW-16.1(e)	xxx	Shell
Manway	1	14" X 18"	Elliptical	SA-106C	SA-516 Gr. 70	1.0000	xxxx	xxxx	UW-16.1	(y-1)	Head
Sample Point	3	2"	FFSO	SA-106B	SA-105	0.1540	xxxx	xxxx	UW-16.1(e)	xxx	Shell
Air Release	1	2"	FFSO	SA-106B	SA-105	0.1540	xxxx	xxxx	UW-16.1(e)	xxx	Shell
xxx	x	x	x	x	x	x	x	x	x	x	x
xxx	x	x	x	x	x	x	x	x	x	x	x
xxx	x	x	x	x	x	x	x	x	x	x	x
xxx	x	x	x	x	x	x	x	x	x	x	x

Additional Nozzles - See Attached U-4...

11. Supports: Skirt None (Yes or no) Lugs 4 (Number) Legs 4 (Number) Other 8 clips (Describe) Attached Head / Shell and welded (Where and how)

12. Remarks: Manufacturer's Partial Data Reports properly identified and signed by Commissioned Inspectors, have been furnished for the following items of the report:

N/A
(Name of part, item number, Manufacturer's name and identifying stamp)

Hydro Test in vertical position - impact testing exempt per UG-20 (f) & UCS-66 (b)- over pressure protection provided by others.

FORM U-1A (Back)

NB Number 1646-1647

CERTIFICATE OF SHOP/FIELD COMPLIANCE

We certify that the statements made in this report are correct and that all details of design, material, construction, and workmanship of this vessel conform to the ASME BOILER AND PRESSURE VESSEL CODE, Section VIII, Division 1. "U" Certificate of Authorization Number 27471 expires December 24, 2017 .

Date 07/27/2016 Co. name **Calgon Carbon Corporation** (Manufacturer) Signed Theresa Loehring (Representative)

CERTIFICATE OF SHOP/FIELD INSPECTION

Vessel constructed by **Calgon Carbon Corporation** at **4301 Grand Avenue, Neville Island, Pennsylvania, 15225**

I, the undersigned, holding a valid commission issued by The National Board of Boiler and Pressure Vessel Inspectors and employed by Arise, of Brecksville,OH

have inspected the component described in this Manufacturer's Data Report on July 27, 2016 , and state that, to the best of my knowledge and belief, the Manufacturer has constructed this pressure vessel in accordance with ASME BOILER AND PRESSURE VESSEL CODE, Section VIII, Division 1. By signing this certificate neither the Inspector nor his/her employer makes any warranty, expressed or implied, concerning the pressure vessel described in this Manufacturer's Data Report. Furthermore, neither the Inspector nor his/her employer shall be liable in any manner for any personal injury or property damage or a loss of any kind arising from or connected with this inspection.

Date 07/27/2016 Signed Mark Gorist (Authorized Inspector) Commissions 15002A [National Board (incl. endorsements)]

FORM U-4 MANUFACTURER'S DATA REPORT SUPPLEMENTARY SHEET

As Required by the Provisions of the ASME Boiler and Pressure Vessel Code Rules, Section VIII, Division 1

1. Manufactured and certified by Calgon Carbon Corporation, 4301 Grand Avenue, Neville Island, Pennsylvania, 15225
(Name and address of Manufacturer)

2. Manufactured for Techsas Inc., 4819 West Bayshore Drive, Bacliff, Texas, 77518
(Name and address of Purchaser)

3. Location of installation Kirtland Air Force, UNKNOWN, Albuqquerque, New Mexico, 87105
(Name and address)

4. Type vertical tank (Horizontal, vertical, or sphere) | N/A (Tank, separator, heat exch., etc.) | V-214A to V-214B (Manufacturer's serial number)

N/A (CRN)	91157783 REV.2 and 91157785 REV.1 (Drawing number)	1646-1647 (National Board number)	2016 (Year built)

Data Report Item Number | Remarks

Purpose (Inlet, Outlet, Drain, etc.)	No.	Diameter or Size	Type	Material		Nozzle Thickness		Reinforcement Material	Attachment Details		Location (Insp. Open.)
				Nozzle	Flange	Nom.	Corr.		Nozzle	Flange	
xxx	x	x	x	x	x	x	x	x	x	x	x
xxx	x	x	x	x	x	x	x	x	x	x	x
xxx	x	x	x	x	x	x	x	x	x	x	x
xxx	x	x	x	x	x	x	x	x	x	x	x
xxx	x	x	x	x	x	x	x	x	x	x	x
xxx	x	x	x	x	x	x	x	x	x	x	x
xxx	x	x	x	x	x	x	x	x	x	x	x
xxx	x	x	x	x	x	x	x	x	x	x	x
xxx	x	x	x	x	x	x	x	x	x	x	x
xxx	x	x	x	x	x	x	x	x	x	x	x
xxx	x	x	x	x	x	x	x	x	x	x	x
xxx	x	x	x	x	x	x	x	x	x	x	x
xxx	x	x	x	x	x	x	x	x	x	x	x
xxx	x	x	x	x	x	x	x	x	x	x	x
xxx	x	x	x	x	x	x	x	x	x	x	
xxx	x	x	x	x	x	x	x	x	x	x	x
xxx	x	x	x	x	x	x	x	x	x	x	x
xxx	x	x	x	x	x	x	x	x	x	x	x
xxx	x	x	x	x	x	x	x	x	x	x	x
xxx	x	x	x	x	x	x	x	x	x	x	x
xxx	x	x	x	x	x	x	x	x	x	x	x
xxx	x	x	x	x	x	x	x	x	x	x	x
xxx	x	x	x	x	x	x	x	x	x	x	x
xxx	x	x	x	x	x	x	x	x	x	x	x

Certificate of Authorization: Type "U" No. 27471 Expires December 24, 2017

Date 07/27/2016 Name **Calgon Carbon Corporation** (Manufacturer) Signed Theresa Lochner (Representative)

Date 07/27/2016 Name Mark Gouin (Authorized Inspector) Commissions: 15002A [National Board (incl. endorsements)]

SECTION 9

SPECIFICATIONS AND CATALOG CUT SHEETS

AL SERIES

Air and Vacuum Valves

Crispin Air and Vacuum Valves

Valve Function

- Allows large quantities of air to be vented from systems being filled with liquid
- Features Vacuum Function

Features

- Meets AWWA C-512
- Peripheral guide system for unobstructed closure
- Drip tight closure
- Standard Buna-N seating material
- Available in sizes 1/2” thru 24”

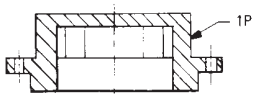

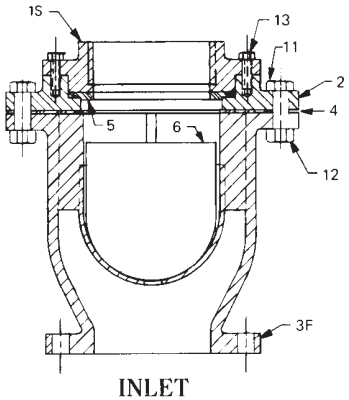

INLET

With Stainless Steel Trim

The Crispin Air and Vacuum Unit, with its orifice the same diameter as its inlet, allows large quantities of air to be vented from systems being filled with liquid. The same holds true in reverse for vacuum conditions when the system is drained.

Its design is such that the velocity of air passing through the valve will not blow the float shut at normal design volumes. It will not close until the arrival of liquid in the valve, and will not open to vent accumulating air as long as the system is under pressure and in operation.

Air and Vacuum Valves are available with stainless steel floats and either standard top or protectop in sizes up to and including 24.” All CRISPIN Air and Vacuum Valves have also guides which direct the float onto the seat upon closure. These guides are peripheral to the float, and fixed to the body or the cup and hanger assembly.

This peripheral guide system allows unobstructed closure because there are no guide bushings to collect dirt and then bind, and there are no shafts to bend or deform, which would prevent a drip tight seal.

Parts List for Air & Vacuum 1” – 24”

PART NO.	ITEM	MATERIAL (standard)
1S*	Top	Cast Iron
1P*	Protectop	Cast Iron
2	Flange	Cast Iron
3	Body, Screwed	Cast Iron
3F*	Body, 125 (1”-4” Threaded) ANSI Flanged	Cast Iron
3FH*	Body, 250 ANSI Flanged	Cast Iron
4	Gasket	Armstrong
5	Seat	Buna-N Rubber
6S	Float	Stainless Steel
11	Bolt	Steel
12	Nut	Steel
13	Bolt	Steel
14* (not shown)	Domed Screened Hood	HRCQ Steel

* Part No.’s 1P, 1S, 3F, 3FH and 14 are at customer’s option
For ease of maintenance, some of the above parts are provided as kits or assemblies.
Note: Prices and Materials are Subject to Change Without Notice

AL Crispin Valve, 600 Fowler Ave., Berwick, PA 18603 • 1-800-AIR-VALV • T: (570) 752-4524 • F: (570) 752-4962 • WWW.CRISPINVALVE.COM • sales@crispinvalve.com

Crispin Air and Vacuum Valves

Air and Vacuum Valve Detail*

MODEL	INLET	OUTLET	TRIM	HEIGHT	WIDTH	WEIGHT (lbs)
A5	1/2" NPT	1/2" NPT	IBBT	4 7/8"	4 3/4"	7
AL10	1" NPT	1" NPT	S/S	6 1/8"	6 1/4"	16
AL20	2" NPT	2" NPT	S/S	9 1/2"	8 3/4"	42
AL21	2" 125# Flg.	2" NPT	S/S	13 1/8"	8 3/4"	48
AL22	2" 250# Flg.	2" NPT	S/S	13 3/8"	8 3/4"	48
AL30	3" NPT	3" NPT	S/S	11 5/8"	11 1/2"	92
AL31	3" 125# Flg.	3" NPT	S/S	15 3/4"	11 1/2"	112
AL32	3" 250# Flg.	3" NPT	S/S	15 15/16"	11 1/2"	120
AL40	4" NPT	4" NPT	S/S	14 1/2"	14"	154
AL41	4" 125# Flg.	4" NPT	S/S	17 5/16"	14"	170
AL42	4" 250# Flg.	4" NPT	S/S	17 13/16"	14"	181
AL61	6" 125# Flg.	6" NPT	S/S	15 13/16"	15"	174
AL62	6" 250# Flg.	6" NPT	S/S	16 1/4"	15"	195
AL81	8" 125# Flg.	8" NPT	S/S	18 1/16"	17 3/4"	265
AL82	8" 250# Flg.	8" NPT	S/S	18 9/16"	17 3/4"	295
AL101	10" 125# Flg.	10" NPT	S/S	22 1/16"	21"	500
AL102	10" 250# Flg.	10" NPT	S/S	22 3/4"	21"	550
ALI21	12" 125# Flg.	12" hooded	S/S	28 1/2"	28"	725
AL122	12" 250# Flg.	12" hooded	S/S	30"	28"	778
AL141	14" 125# Flg.	14" hooded	S/S	31 1/2"	30"	970
AL142	14" 250# Flg.	14" hooded	S/S	32 1/4"	30"	1,157
AL161	16" 125# Flg.	16" hooded	S/S	36 1/2"	32 3/4"	1,025
AL162	16" 250# Flg.	16" hooded	S/S	37 1/2"	32 3/4"	1,115

Crispin valves are hydrostatically tested at 150% of their maximum working pressure.

*Consult factory for sizes above 16".

Submittal Sheet for Crispin AL Series

1”–4” Air & Vacuum Valve

Manufactured in compliance with ANSI/AWWA C512 **Date: October, 2001**

SUBMITTAL SHEET FOR AL SERIES

Specifications

Air & Vacuum Valve(s) shall be installed at high points in the main line or as directed by the engineer to release the air in the main during filling, or allow it to enter the system when draining, or when the system is subject to negative pressure.

The valve(s) shall operate by sealing the Buna-N rubber outlet seat with a peripheral float as the liquid enters the valve chamber to raise the float. All Crispin Valves are hydrostatically tested at 150% of their maxiumum working pressure.

1”-4”—The valve(s) shall be constructed with a cast iron body, and top flange with stainless steel trim, and shall have a_____” NPT screwed inlet and outlet, or ANSI Class (125, 250) flanged inlet with NPT screwed outlet. The peripheral guided float shall be stainless steel.

The valve(s) shall be Crispin Model_____, as manufactured by Crispin-Multiplex Manufacturing Co., Berwick, PA.

Option: A protectop shall be supplied to prevent debris from entering the outlet of the valve.

Option: [Where pressures are greater than 300 PSIG.] the valves shall be ANSI Class_____flanged inlet connection and shall have a (steel, stainless steel, or ductile iron) body, top and inlet flange.

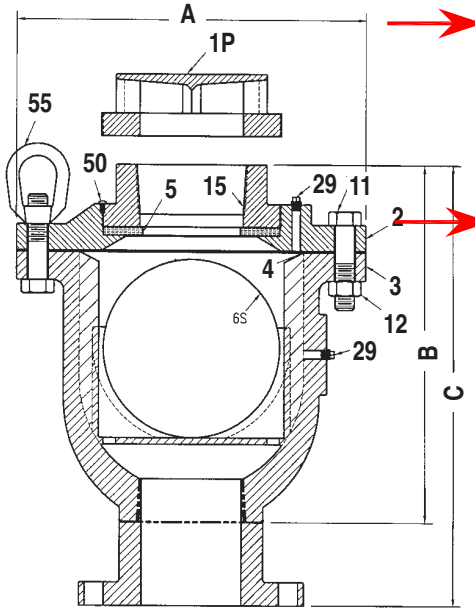

Standard operating pressure for Crispin Air Valves is 20 to 150 PSIG. Please check one of the following if your operating needs differ:

____ 2 to 40 PSIG
____ 151 to 300 PSIG

Size Specifications

MODEL	INLET SIZE	OUTLET SIZE	A	B	C	WEIGHT
*AL10	1” NPT	1” NPT	6.25	6.25		16
AL20	2” NPT	2” NPT	8.75	9.75		44
**AL21	2” 125# FLG	2” NPT	8.75		13.25	50
**AL22	2” 250# FLG	2” NPT	8.75		13.50	52
AL30	3” NPT	3” NPT	11.50	11.75		92
AL31	3” 125# FLG	3” NPT	11.50		15.75	112
AL32	3” 250# FLG	3” NPT	11.50		16.00	120
AL40	4” NPT	4” NPT	14.00	14.50		154
AL41	4” 125# FLG	4” NPT	14.00		17.50	170
AL42	4” 250# FLG	4” NPT	14.00		18.00	181

* Protectop not available ** Includes ANSI CL. 125 or 250 companion FLG & NPL
*** Parts are interchangable and optional at customer’s request

Air & Vacuum Parts List

ITEM	DESCRIPTION	MATERIAL	ASTM
***1S	TOP	CAST IRON	A126 CL. B
**1P	PROTECTOP	CAST IRON	A126 CL. B
2	FLANGE	CAST IRON	A126 CL. B
3F	BODY	CAST IRON	A126 CL. B
4	GASKET	ARMSTRONG N—8092	N/A
5	SEAT	BUNA—N RUBBER	D2000
6S	FLOAT	STAINLESS STEEL	A240
11	BOLT	STEEL	A307
12	NUT	STEEL	A563
29	PLUG	BRASS	B505
50	INTERFERENCE PIN	STAINLESS STEEL	A582
55	EYE BOLT	STEEL	A563

Crispin Valve, 600 Fowler Ave., Berwick, PA 18603 • 1-800-AIR-VALV • T: (570) 752-4524 • F: (570) 752-4962 • WWW.CRISPINVALVE.COM • sales@crispinvalve.com

Flow Line 70/71

Wafer & Lug Style
Sizes 2" - 12"

Flow Line™
Valve and Controls

Cartridge Seated Butterfly Valves

KEY FEATURES

Body

- One piece ribbed wafer and lugged body is Polyester coated as standard for a superior appearance and excellent resistance to external corrosion.
- Heavy duty ISO 5211 Top plate is slotted for ease of actuation and engineered to accept direct mounting of operators.
- Standard extended neck provides full clearance for 2” of insulation.

Disc

- Streamlined design offers higher Cv and lower pressure drop.

Shaft

- Triple shaft seals support the primary seal on machined radius of the disc. Our triple shaft seals ensure a dry stem design.
- Two secondary shaft seals are located inside the seat shaft holes and an environmental shaft seal eliminates contaminants from entering the shaft bore.
- Two self lubricated bronze bearings offer consistent torque valves and eliminate side loading.

Seat and Flange Seals

- Field replaceable, phenolic bonded cartridge seat provides no movement of the elastomer which is a common failure point of many resilient flexible seat designs.
- Torque fluctuation is eliminated by our phenolic bonded elastomer seats.
- Our dual purpose primary flange seal is widened offering additional compression of the elastomer against various flanges resulting in a positive seal.
- This resulting primary flange seal provides a smooth flow conduit for media and prevents build up in crevices created by traditional seat designs.
- Molded secondary flange seals assure no leakage when used with weld neck, slip on, and threaded flanges and eliminates the need for gaskets or O-rings.

Disc/Shaft Connection

- A high strength Double D drive ensures a positive shaft to disc connection.
- Disc floats inside the seat for positive sealing and extended seat life.
- No pins or bolts are exposed to flow.
- Offset shaft retainers mechanically retain the shaft in the body ensuring a blow out proof design.

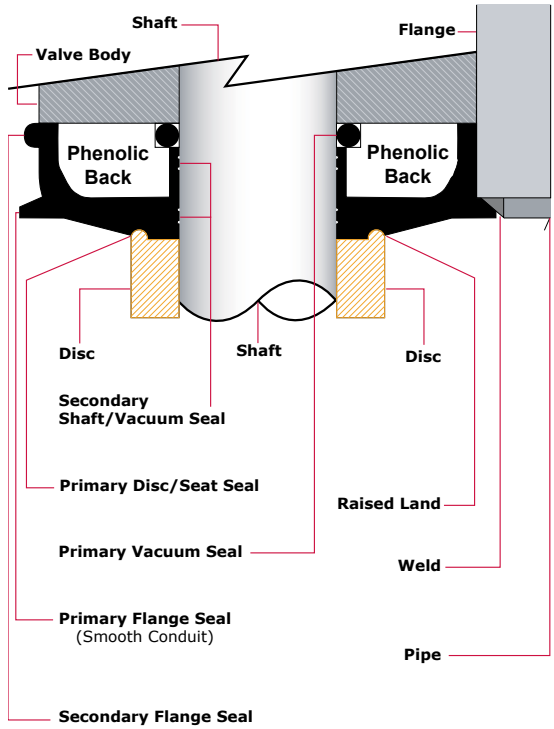

Shaft Sealing Method

- Disc shaft holes surrounded by a 360˚ machined radius are in constant contact with the flatted area of the seat.
- This design is far superior to resilient flexible seat designs that depend on the “squeeze” effect of the disc and seat interference which allows leakage behind the seat and up the shaft.
- The Flow Line shaft seal is achieved through a continuous pressure exerted from the flatted area of the seat to the machined radius of the disc.
- This sealing mechanism is further enhanced by forces exerted on the seat and shaft providing a secondary seal resulting in media free disc, shaft and seat connection.

Applicable Standards

ANSI B16.1	Conforms to ANSI Class 125 flange drilling.
ANSI B16.5	Conforms to ANSI 150 flange drilling.
ANSI B16.42	Conforms to ANSI Class 150 flange drilling, body wall thickness and pressure-temperature ratings.
ANSI B16.104	Exceeds Class VI shutoff requirements.
API 609	Butterfly Valve Category A.
AWWA C504	Diameter of stainless steel shaft exceeds AWWA Class 75B standard. Body wall thickness exceeds the AWWA Class 150B standard for butterfly valves.
MSS SP-25	Markings and identification conform to the requirements.
MSS SP-67	Butterfly Valves
ISO 5211	Actuator Mounting
USCG	Category “A” Title 46, CFR, Part 56

ENGINEERING

DIMENSIONS

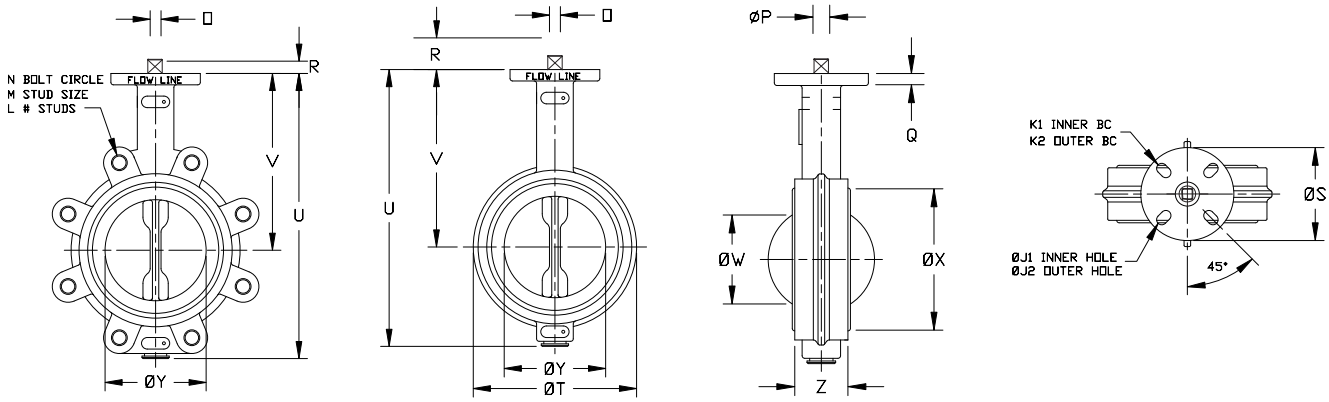

Valve Size	Z	Y	X	W	V	U	T	S	R	Q	P	O	Lug Drilling			Top Plate Drilling					Weight
													N	M	L	K1	K2	#holes	J1	J2	(lb)
2	1.74	2.25	2.65	1.46	5.62	8.44	4.12	4.00	0.827	.44	.551	0.551	4.75	5/8-11	4	2.76	3.25	4	.39	.41	8
2-1/2	1.86	2.81	3.15	2.14	6.12	9.19	4.88	4.00	0.827	.44	.551	0.551	5.50	5/8-11	4	2.76	3.25	4	.39	.41	10
3	1.86	3.31	3.78	2.74	6.38	9.69	5.38	4.00	0.827	.44	.551	0.551	6.00	5/8-11	4	2.76	3.25	4	.39	.41	11
4	2.11	4.19	4.78	3.60	7.12	11.00	6.88	4.00	0.827	.44	.551	0.551	7.50	5/8-11	8	2.76	3.25	4	.39	.41	17
5	2.24	5.06	5.84	4.58	7.75	12.12	7.75	4.00	1.063	.44	.670	.670	8.50	3/4-10	8	2.76	3.25	4	.39	.41	23
6	2.24	6.06	7.03	5.62	8.25	13.25	8.75	4.00	1.063	.44	.670	.670	9.50	3/4-10	8	2.76	3.25	4	.39	.41	29
8	2.54	7.94	8.96	7.43	9.44	15.56	11.00	6.00	1.063	.56	.866	0.866	11.75	3/4-10	8	4.02	5.00	4	.53	.53	44
10	2.74	10.00	11.09	9.38	11.25	18.69	13.38	6.00	1.063	.56	.866	0.866	14.25	7/8-9	12	4.02	5.00	4	.53	.53	66
12	3.24	11.94	13.09	11.35	12.19	21.69	16.12	6.00	1.063	.56	.866	0.866	17.00	7/8-9	12	4.02	5.00	4	.53	.53	99

CLASS II TORQUES (Inch-Pounds)

Shutoff Pressure	2"	2 1/2"	3"	4"	5"	6"	8"	10"	12"
50 PSI SHUTOFF	66	96	150	225	350	450	750	1325	2250
75 PSI SHUTOFF	98	141	237	261	504	651	1050	1778	2990
100 PSI SHUTOFF	103	148	249	343	531	685	1105	1872	3147
125 PSI SHUTOFF	107	155	260	376	553	714	1151	1950	3279
150 PSI SHUTOFF	110	158	265	384	564	728	1275	1989	3345
175 PSI SHUTOFF	121	175	283	417	632	814	1337	2320	3923
200 PSI SHUTOFF	132	192	300	450	700	900	1500	2650	4500
250 PSI SHUTOFF	145	211	318	486	770	990	1695	2995	5085
285 PSI SHUTOFF	160	232	337	528	847	1089	1915	3384	5746

Cv VALUES

Valve Size	10°	20°	30°	40°	50°	60°	70°	80°	90°
2	2	3.5	8	21	40	87	108	141	170
2-1/2	3	5	11	27	52	121	172	253	332
3	8	16	23	50	92	147	224	420	473
4	17	33	57	110	182	297	462	773	913
5	47	94	143	231	380	578	908	1485	1650
6	91	182	248	396	627	902	1386	2063	2178
8	116	231	330	528	858	1452	2508	4158	4257
10	223	446	633	935	1320	2090	3630	6710	7095
12	303	605	825	1320	2063	3135	5528	10230	10780

Class II

- Valve to be operated a minimum of once a month.
- Temperature well within resilient seat limits.
- Line media is a self lubricating. (Aqueous liquids)
- Minor chemical attacks on seat.
- Disc corrosion and media deposits to be mild.

Notes:
1. This chart to be used as a guide only.
2. These torque ratings do not apply to every possible service criteria, which may affect seating and unseating torque.
3. Torque values are applicable to Flow Line Series 70/71.
4. Do not apply a safety factor to the above torque values when sizing actuators.
5. Dynamic Torque should always be a consideration when sizing valves with high differential pressures.
6. For 3 way tee assemblies multiply the above torques by 1.5.

SPECIFICATIONS

HOW TO ORDER

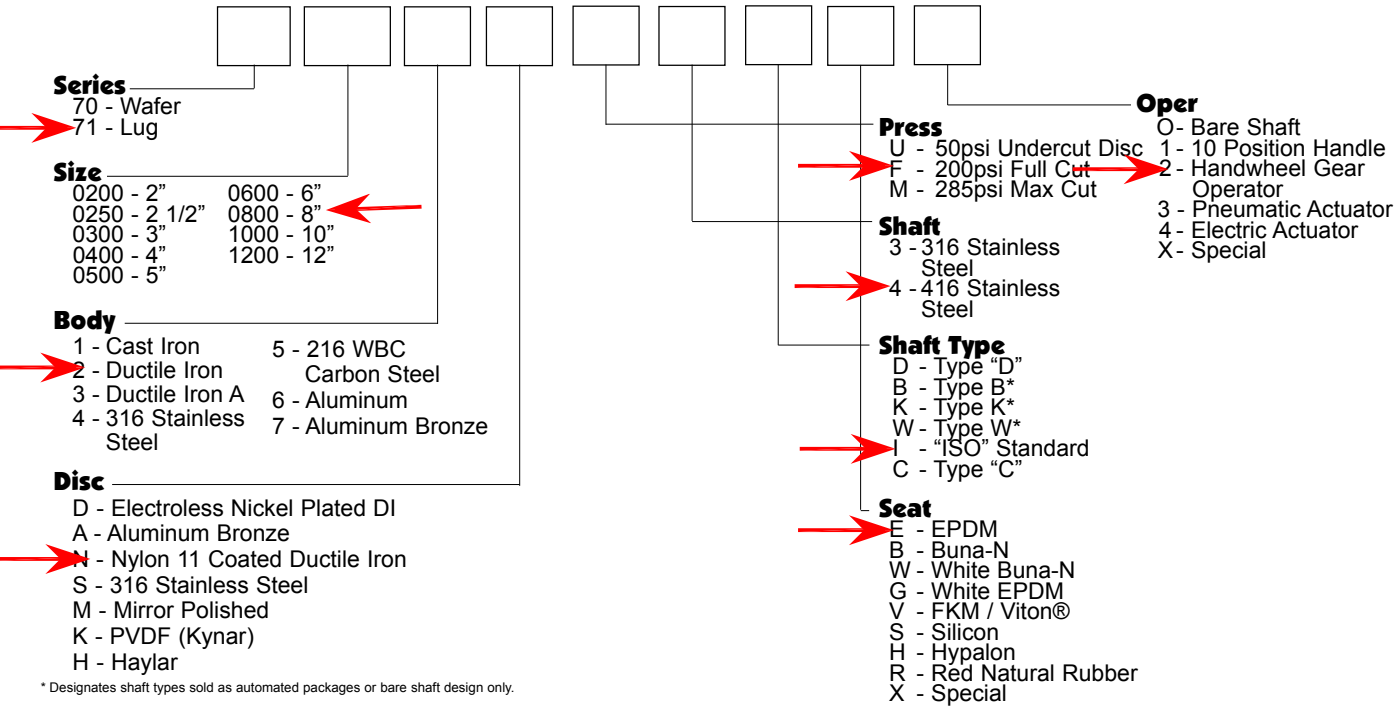

* Designates shaft types sold as automated packages or bare shaft design only.

Recommended Specifications

- Polyester coated ribbed wafer or lug bodies to provide extended necks for insulation and be able to install between ANSI 125/150 flanges. Lug design in sizes 2” - 12” to be fully rated for dead end service without any modification.
- Streamlined disc design with no pins or screws in the flow path and designed for high Cv and lower pressure drop.
- Upper and lower shaft design to utilize triple shaft seals as standard.
- Blow out proof design utilizing a Double D drive for a positive disc/shaft connection.
- Pressure responsive 360° sealing design will use constant pressure between machined radius on disc and flatted area of the seat.
- Valve to be Flow Line Series 70 wafer or Flow Line Series 71 lug design.

Components

Qty	Description	Qty	Description
1	Body	2	Shaft Retainers
1	Disc	1	Bearing Retainer
1	Upper Shaft	1	Environmental Shaft Seal
1	Lower Shaft	2	Secondary Shaft Seals
1	Seat	1	Thrust Bearing
		1	Inboard Bearing

Materials of Construction 2” - 12”

Body

- Cast Steel ASTM A-216 WCB
- 316 Stainless Steel ASTM A-351 CF8M
- Cast Iron ASTM A-126 Class B
- Ductile Iron ASTM A-536 (65-45-12)
- Ductile Iron ASTM A-395 (60-40-18)

Disc

- Electroless Nickel Plated Ductile Iron ASTM A-536 (65-45-12)
- Aluminum Bronze ASTM B-148 (954)
- Nylon 11 Coated Ductile Iron ASTM A-536 Grade (65-45-12)
- 316 Stainless Steel ASTM A-351 (CF8M)

Stem

- 316 Stainless Steel ASTM A-276 Type 316
- 416 Stainless Steel ASTM A-582 Type 416

Seat

EPDM - FDA Food Grade	-30 to + 275
Buna-N - FDA Food Grade	0 to +180
White Buna-N - FDA Food Grade	0 to + 180
Viton® - FDA Food Grade	0 to + 375
Silicon - FDA Food Grade	-80 to + 450
Hypalon	0 to + 180
Red Natural Rubber	0 to + 150

Viton® is a registered trademark of the E.I. DuPont De Nemours Company. FKM is the ASTM D1418 designation for Flourinated Hydrocarbon elastomers such as Viton® (DuPont) and Flourel® (3M).

FEATURES

- **Slotted ISO 5211 top plate and shaft for flexibility of direct mounting options**
- **Environmental shaft seal to keep contaminants from entering shaft bore**
- **Offset shaft retainers mechanically retain the shaft ensuring a blow out proof design**
- **One piece ribbed Polyester coated body with extended neck**
- **Streamlined disc with no pins or screws in flow path**
- **Primary seal provides a smooth flow conduit and prevents media buildup in crevices normally found with traditional designs**
- **Independent seals provide full vacuum rating**

- **High strength upper and lower shafts with triple shaft seals**
- **Two self lubricated bronze bearings to eliminate side loading**
- **Double D Drive for a positive disc/shaft connection with no pins or bolts exposed to flow**
- **Proven pressure responsive 360° sealing method uses constant pressure between machined radius on disc and flatted area of the seat that eliminates the "squeeze" of the interference seat design our competition relies on**
- **Phenolic bonded cartridge seat with primary and secondary seals provide no movement of the elastomer**
- **Two secondary shaft seals located inside the seat shaft holes**

The **Series 70 wafer** style and **Series 71 lug** style are heavy duty cartridge seated butterfly valves compatible ANSI 125/150 weld neck, slip on, and threaded flange standards. 2" - 12" valves are fully rated to 200 psi, bi-directional, dead end service. Valves with undercut discs to 50 psi are also available through the size range. Valves with Max cut Disc to 285 psi are also available through size range. All Series 70/71 valves, regardless of the rated working pressure, are vacuum rated to 29.92" of Mercury Gauge (0 Micron).

COATINGS

Flow Line Series 70 and 71 butterfly valve bodies are Polyester coated as standard. Polyester is a significant upgrade to paint or two part epoxy coatings. Our standard Polyester coating offers outstanding protection against abrasion and corrosion. The Flow Line Polyester coating is not affected by outdoor exposure and maintains excellent resistance to UV rays.

TEST	RESULT
Salty Fog Test	No change in excess of 2000 hours
Outdoor Weathering (UV Rays)	No noticeable change in excess of 12 months
50% Sulfuric Acid Test	No change for 48 hours

INSTALLATION, MAINTENANCE AND ASSEMBLY

Handle Kit

The Flow Line Handle Kit is designed for manual on/off and throttling service for quarter turn, resilient seated butterfly valves ranging from 2" - 12". The Polyester coated ductile iron handle kit includes the handle assembly with a locking lever and bolt on plate notched at 10 degree increments. The notched plate also includes on/off stops to prevent over travel of the handle and can be used with a padlock as standard. Other available options include an Infinite Throttling Handle Kit, Memory Stop and a 2" Square Nut.

Handwheel Gear Operator

The Flow Line Handwheel Gear Operator is designed for manual on/off and throttling service for quarter turn butterfly valves ranging from 2" - 12". The handwheel gear operator is constructed with a heavy duty, Polyester coated ductile iron housing, is completely self lubricated and weatherproof. Along with the gear operator, it also includes a valve position indicator, ductile iron handwheel and mechanical travel stops for field adjustment. Other available options include a Chainwheel Kit, Padlock Kit and a 2" Square Nut.

Actuation

Series 21 spring return actuators are available throughout the size range.

Series 50 solenoid valves are available in 1/8", 1/4", and 1/2"NPT.

Series 52 and 53 limit switches provide local and remote valve position.

Series 55 and 56 positioners are available with either a 3-15 psi or 4-20 MADC signal.

Installation

To install, simply close the valve, position between the flanges and assemble the valve to the flanges with studs or cap screws. Do not use flange gaskets. Flow Line Series 70 and 71 butterfly valves can be installed with the disc closed. Before hand tightening the flange bolts, fully open the disc to ensure disc O.D. clearance with pipe I.D. Hand tighten the flange bolts and close the valve to check for valve disc and pipe clearance. If contact is made, reposition as necessary and tighten all flange bolts to proper torque specification.

Maintenance and Repair

No regular maintenance or lubrication is required. Factory assembly procedures provide adequate lubrication for the life of the valve. To replace any component, remove valve from the line by fully closing valve disc. Spread flanges, remove all bolts then remove valve from line.

Testing

All Flow Line Series 70 and 71 butterfly valves are bi-directionally tested to 130 percent of rated working pressure. Test certification is available upon request at time of order.

Flanges

ANSI 125/150 cast iron, steel, raised face, flat faced weld neck, slip on and threaded flanges are suitable for use with Flow Line butterfly valves. Please contact the factory for proposed installation with plastic flanges.

Warranty

All products manufactured by Flow Line Valve and Controls are warranted against defects in material and workmanship for a period of 2 years from date of installation.

All statements, technical information and recommendations in the bulletin are for general use only. Flow Line Valve and Controls is not responsible for suitability or compatibility of these products in relation to system requirements. Consult Flow Line Valve and Controls distributors or factory for the specific requirements and material selection for your intended application. Flow Line Valve and Controls reserves the right to change or modify product design or product without prior notice. Flow Line Valve and Controls is not responsible for editorial or pictorial errors within this literature.

Flow Line Valve and Controls

110 Main Project Rd. Schriever, LA 70395
Phone (985) 414-6004 Fax (985) 414-6072
Toll 800-815-9226
www.flowlinevalves.com

Doc. No. FLBV1
© Flow Line

Series 71
Technical Drawing 71-001
Date: June 2009/Page 1 of 1

VALVE SIZE	Z	Y	X	W	V	U	S	R	Q	P	N	LUG DRILLING M	L	K1	TOP PLATE DRILLING K2	#holes	J1	J2	WGT. (LB)
2	1.74	2.25	2.65	1.46	5.62	8.44	4.00	.827	.44	.551	4.75	5/8-11	4	2.76	3.25	4	.39	41	8
2-1/2	1.86	2.81	3.15	2.14	6.12	9.19	4.00	.827	.44	.551	5.50	5/8-11	4	2.76	3.25	4	.39	.41	10
3	1.86	3.31	3.78	2.74	6.38	9.69	4.00	.827	.44	.551	6.00	5/8-11	4	2.76	3.25	4	.39	.41	11
4	2.11	4.19	4.78	3.60	7.12	11.00	4.00	.827	.44	.551	7.50	5/8-11	8	2.76	3.25	4	.39	.41	17
5	2.24	5.06	5.84	4.58	7.75	12.12	4.00	1.063	.44	.670	8.50	3/4-10	8	2.76	3.25	4	.39	.41	23
6	2.24	6.06	7.03	5.62	8.25	13.25	4.00	1.063	.44	.670	9.50	3/4-10	8	2.76	3.25	4	.39	.41	29
8	2.54	7.94	8.96	7.43	9.44	15.56	6.00	1.063	.56	.866	11.75	3/4-10	8	4.02	5.00	4	.53	.53	44
10	2.74	10.00	11.09	9.38	11.25	18.69	6.00	1.063	.56	.866	14.25	7/8-9	12	4.02	5.00	4	.53	.53	66
12	3.24	11.94	13.09	11.35	12.19	21.69	6.00	1.063	.56	.866	17.00	7/8-9	12	4.02	5.00	4	.53	.53	99

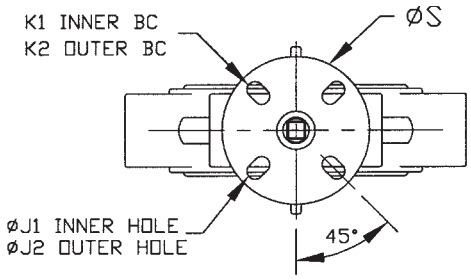

ITEM	DESCRIPTION	MATERIAL	REMARKS
4	STEM		
3	DISC		
2	SEAT		
1	BODY		

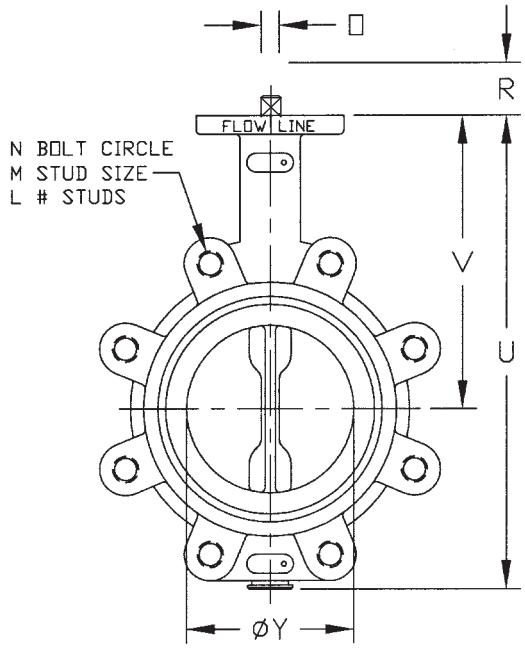

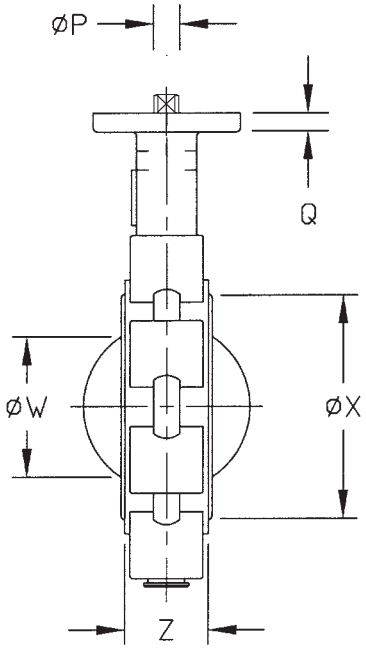

VALVE SIZE	FLANGE DRILLING	**DIMENSIONAL DATA SHEET**	PART NO.
PRESSURE RATING		**BUTTERFLY VALVE**	DRAWING NO. 71-001 / REV B
CUSTOMER/PROJECT		**SERIES 71**	DATE 6/09
INQ./PO NO.		**SIZES 2”-12”**	
ORDER NO.			
CERTIFIED BY	DATE		

Flow Line Valve and Controls, Inc.
PO Box 677, 110 Main Project Rd • Schriever, LA 70395 • Phone (985) 414-6004 • Fax (985) 414-6072
www.flowlinevalves.com

DIMENSIONS
Series 17 Chain Wheel

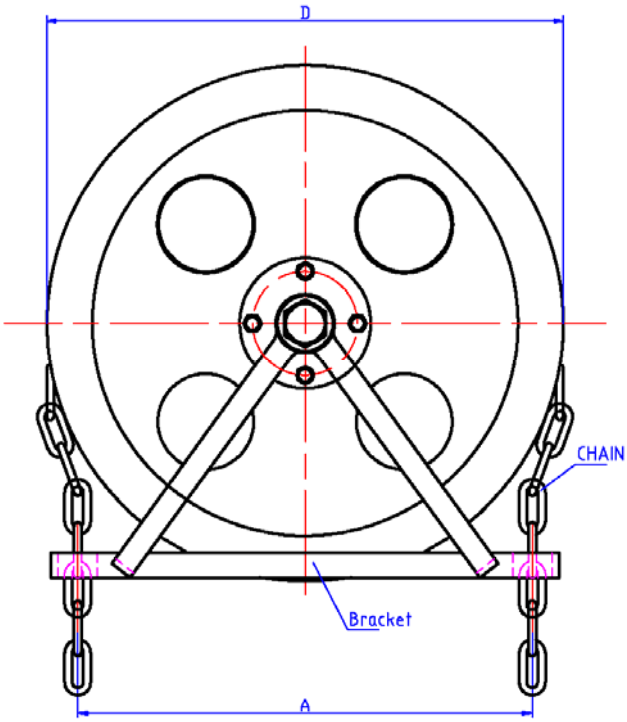

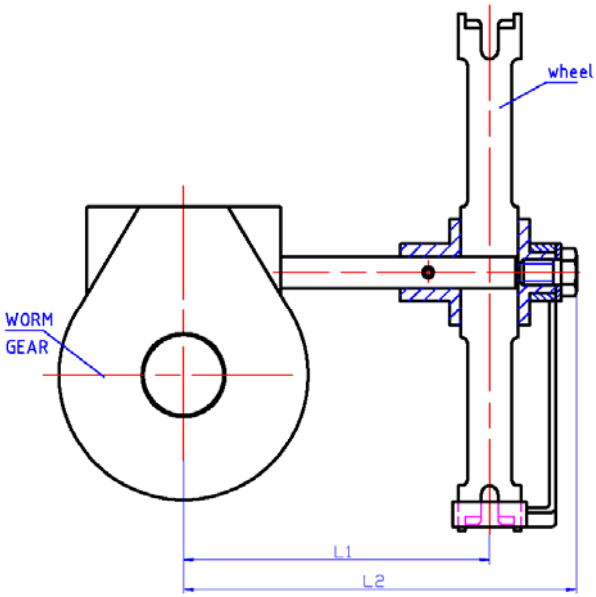

PART #	USE WITH GEAR OPERATOR PART #	D	L1	L2	A	SHAFT BORE*
17-32200	15-00202 15-00225 15-00203	7.87"	3.62"	5.62"	7.08"	0.629"
	15-00204 15-00205 15-00206	200 mm	92 mm	143 mm	180 mm	16 mm
17-32290	15-00208 15-00210	11.41"	6.41"	8.46"	10.62"	0.748"
	15-00212 15-00214	290 mm	163 mm	215 mm	270 mm	19 mm
17-32410	15-00216 15-00218	16.14"	10.10"	12.32"	14.96"	0.984"
	15-00220 15-00224	410 mm	257 mm	313 mm	380 mm	25 mm

* Standard shaft bore sizes, custom sizes available

Flow Line Controls, Inc.
P.O. Box 677 · Schriever, LA 70395 · Phone: 985-414-6003 · Toll Free 1-800-815-9226 ·Fax 985-414-6072
www.flowlinecontrols.com

 © 2009 Flow Line

Dimensions

Series 15 Gear Operator
Size: 15-00204, 15-00206,
and 15-00210

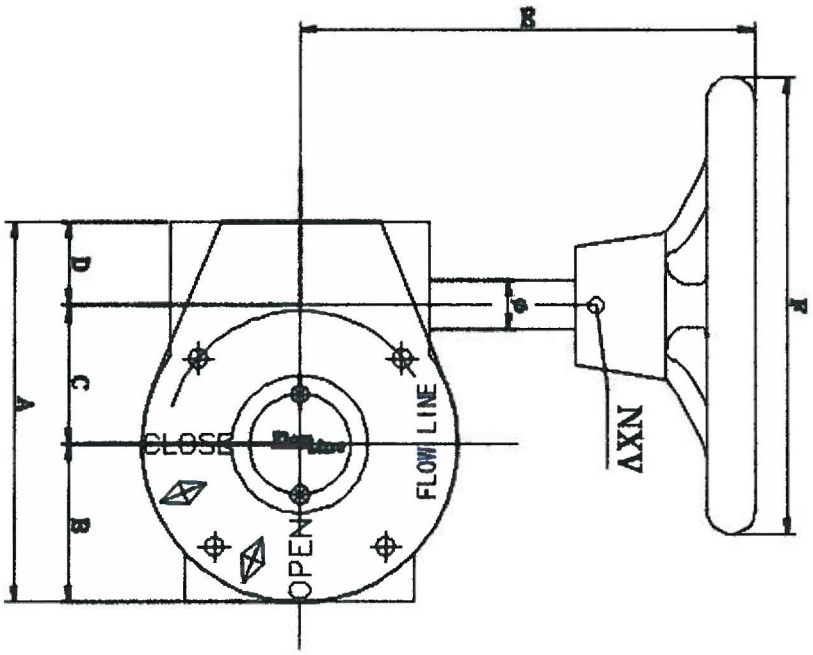

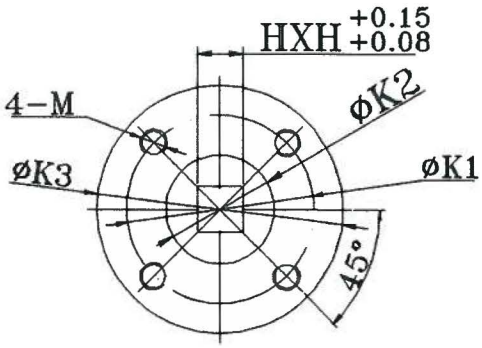

IS05211

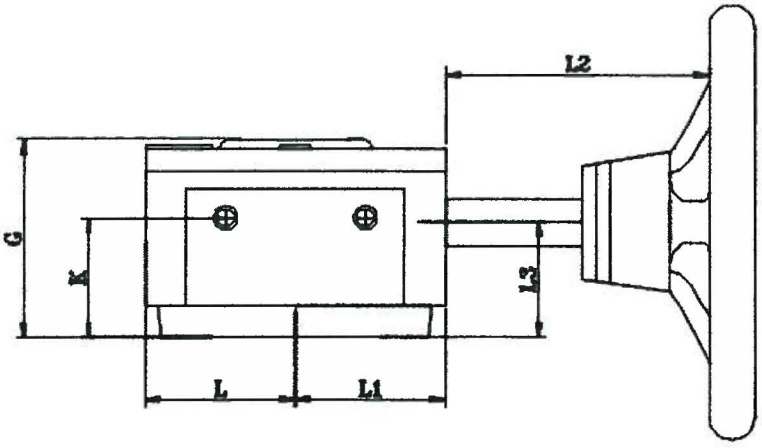

DIMENSIONS ARE INCHES UNLESS NOTED

SIZE	PART #	RATIO	A	B	C	D	E	F	G	H*H	K	L	L1	L2	L3	ISO5211	K1	K2	K3	M	ø	NXV	Torque Output
2"-4"	15-00204	24:1	4.88	2.00	1.77	1.10	6.14	7.48	2.56	14*14	1.57	2.05	2.05	4.05	1.57	F07	2.76	1.77	3.54	M8	0.63	5x36mm	1328
5"-6"	15-00206	24:1	4.88	2.00	1.77	1.10	6.14	7.48	2.56	17*17	1.57	2.05	2.05	4.05	1.57	F07	2.76	1.77	3.54	M8	0.63	5x36mm	1328
8"-10"	15-00210	30:1	6.73	2.87	2.6	1.14	9.25	11.37	3.15	22*22	1.73	2.87	2.87	6.41	1.73	F10	4.01	1.89	4.92	M10	0.75	6x45mm	4425

Drawn By: DAP
Revision: A
Date: 3-1-2016

DAP

Flow Line Valve and Controls, LLC
P.O. Box 677; 110 Main Project Road, Schriever, LA 70395
Phone: (985) 414-6004 Fax: (985) 414-414-6072
www.flowlinevalves.com

	BALL VALVES MATERIAL SPECIFICATION	SPEC NO:
CalgonCarbon	FORGED BRONZE, BRASS, OR BARSTOCK BRASS BODY REGULAR PORT BALL VALVE	4.03

SAP PART NUMBER:

CCC DRAWING NUMBER:

MATERIAL: Bronze or forged brass or barstock brass body regular port ball valve, blow-out proof stem, ball and seat retainer design to permit valve to be dead ended in either flow direction, chrome plated bronze or brass ball and stem, PTFE seats and seals (furnish glass fiber reinforced PTFE seats and graphited stem seal if required to meet pressure and temperature rating), wrench handle operated, threaded ends.

RATING: 500 PSIG @ 100 DEG. F.
150 PSIG @ 366 DEG. F.

MANUFACTURER: DuraValve / Siral or Equal.

SIZES: 1/4" thru 2"

MODELS: VRN5000 or Equal

GENERAL REQUIREMENTS:

PROPRIETARY AND CONFIDENTIAL
THIS DOCUMENT AND DESIGN DETAILS ARE THE PROPERTY OF CALGON CARBON CORPORATION AND ARE NOT TO BE REPRODUCED IN WHOLE OR PART, NOR EMPLOYED FOR ANY PURPOSE OTHER THAN SPECIFICALLY PERMITTED IN WRITING BY CALGON CARBON CORPORATION. THIS DOCUMENT IS LOANED AND SUBJECT TO RETURN ON DEMAND.

Issue Date: 01/01/89 Revision Date: 08/14/2003

Approved by Gerald Kirner on 02/09/2006

CALGON CARBON
SPECIFICATION 4.03

Ultra Pure™
A HAMMOND VALVE PRODUCT

UP8901* 1/4"-3"

Brass Ball Valve For Potable Water
Two-Piece • Full-Port
600 PSIG WOG
Threaded Ends

Dimensions and workmanship conform to MSS SP-110
ASME A112.4.14
***Also Available UP8901-07**
Designed in accordance with the requirements of California AB 1953, Vermont S 152 and Senate Bill S3874

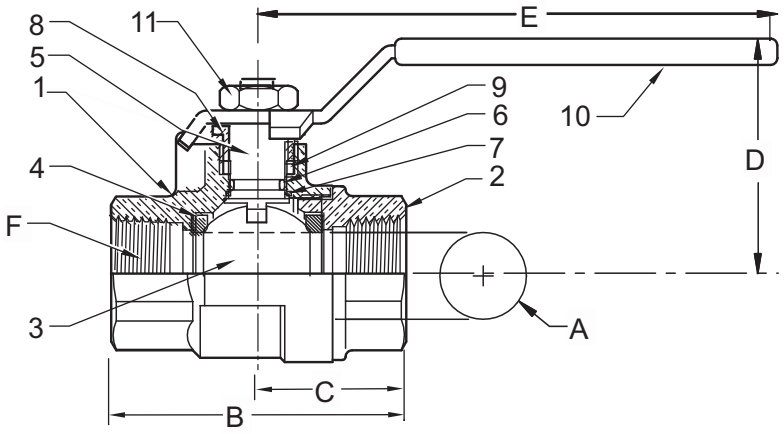

TESTED AND CERTIFIED UNDER INDUSTRY STANDARDS — WaterQuality

C SP US — ANSI Z 21.15a, ASME B16.44 — CGA 9.1a

C UL US — UL 125, UL 842 — **

MATERIAL LIST

ITEM	PART	MATERIALS	ASTM SPEC.
1	Body	Brass, Forged	B283 C27450
2	Tailpiece	Brass, Forged	B283 C27450
3	Ball	Brass w/Chrome	C27450
4	Ball Seal	PTFE	Commercial
5	Stem	Brass	C27450
6	O-Ring	Buna-N	D2006
7	Thrust Washer	PTFE	Commercial
8	Gland Nut	Brass	B16
9	Packing	PTFE	Commercial
10	Handle	Zinc Plated Steel	Commercial
11	Handle Nut	Zinc Plated Steel	Commercial

DIMENSIONS

Valve Size	UNITS	1/4"	3/8"	1/2"	3/4"	1"	1-1/4"	1-1/2"	2"	2-1/2"	3"
A	INCHES	0.39	0.39	0.51	0.76	1.00	1.26	1.50	2.00	2.48	2.95
	mm	9.9	9.9	12.7	19.3	25	32.0	38.1	51.0	63	74.9
B	INCHES	1.87	1.87	2.25	2.62	3.06	3.5	3.75	4.38	5.16	6
	mm	47	47	57	67	78	89	95	111	131.1	152.4
C	INCHES	0.95	0.95	1.12	1.31	1.91	2.21	1.87	2.19	2.58	3
	mm	24	24	61	33	49	56	47	56	65.5	76.2
D	INCHES	1.42	1.42	1.46	1.93	2.1	2.33	2.52	2.96	3.94	4.37
	mm	36	36	37	49	53	59	64	75	100.1	111
E	INCHES	3.14	3.14	3.14	4.35	4.35	5.00	5.00	6.90	7.87	7.87
	mm	80	80	80	110	110	127	127	175	199.9	199.9
F	THREAD SIZE	1/4" NPT	3/8" NPT	1/2" NPT	3/4" NPT	1" NPT	1-1/4" NPT	1-1/2" NPT	2" NPT	2-1/2" NPT	3" NPT
Cv		12	12	18	40	72	112	161	287	307	323
TORQUE	in-lb	16	16	19	58	69	89	124	210	445	563
	N.m	1.8	1.8	2.1	6.5	7.8	10	14	24	50	64
WEIGHT	lbs	0.33	0.34	0.47	0.89	1.24	1.66	2.34	4.94	7.4	10.47
	Kg	0.149	0.155	0.213	0.403	0.565	0.755	1.064	2.245	3.35	4.75

Hammond Valve
16550 W. Stratton Drive
New Berlin, WI 53151
Phone: 262-432-2702
Fax: 262-432-2703

Rev 11

*Same design as Milwaukee UPBA-475B.

Note: Lead free refers to the wetted surface of the pipe, fittings and fixtures in potable water systems that have a weighted average lead content ≤0.25%. Source: California Health and Safety Code (116875).

The information presented on this sheet is correct at the time of publication. Hammond Valve reserves the right to change design, and/or material specifications without notice. For the Installation, Operation and Maintenance Manual (IOM) see the engineering section on our website. For the most current information access www.hammondvalve.com
Hammond Valve is a registered trade mark of Milwaukee Valve Company.

HAMMONDVALVE

INSTALLATION -BALL VALVE ,THREADED END

1) Thoroughly clean and prepare the piping system before valve installation.
2) Remove the valve end caps if present, and inspect the valve ports and seating surfaces for cleanliness just prior to installation.
3) Support the valve to prevent unnecessary stresses induced by connecting pipe.
4) Be sure the rating of the valve is compatible with the intended service conditions.
5) Operate the valve from the full open to closed position.
6) PTFE thread sealant is recommended when making up connections. Consult the sealant manufacturer's instructions for proper use. Install on pipe and not on the valve.
7) Care should be used to not over tighten the valve onto the pipe, as it is possible to distort the internal parts of the valve.
8) Because bronze is a softer metal than steel, always put the pipe in a vise and turn the valve onto the pipe end. Always use a smooth-jawed wrench on the valve end on the same side of the valve to which the pipe or fitting is being installed to prevent distortion of the internal parts of the valve or transmission of torque and stress into the body joint. Pipe Wrenches should be used on a pipe and fittings only.
9) Take precaution also to prevent loosening body to tailpiece connection by reverse rotation during installment/alignment. Such loosening could comprise body to tailpiece sealing.
10) Verify the tightness of the packing nut after installation.

OPERATION

1) Ball valves are designed to be opened by rotating the lever handle in a counterclockwise direction, and closing in a clockwise direction. The handle indicates the ball port direction.
2) Under certain conditions, throttling flow in the near-closed position can destroy the valve seats. Consult factory for throttling service.

INSPECTION & MAINTENANCE

1) Periodic inspection and preventative maintenance is not required other than adjustment of stem packing, and cycling of the valve from open to closed position.
2) If a valve develops a packing leak, adjust the packing nut to increase the pressure on the stem packing. The packing nut should be turned in a clockwise direction approximately ¼ turn, or until the leakage stops. **Do not repack valves under pressure.**
3) Repair or replacement of two piece ball valves internal parts is not recommended. Damage can occur to the body and tailpiece during disassembly that would make the valve inoperable.

REPAIR PARTS Not available for ULTRA-PURE valves.

CalgonCarbon	BALL VALVES MATERIAL SPECIFICATION	SPEC NO:
	STAINLESS STEEL AND ENTRY FULL BORE BALL VALVE	4.08

SAP PART NUMBER:

CCC DRAWING NUMBER:

MATERIAL: Stainless steel and entry full bore ball valve 1/2" thru 4" size (Reduced Port for 6" & 8" Acceptable) with blow-out proof stem and seat retainer design to permit valve to be dead ended in either flow direction. Valve has lockable feature to lock the valve in either the open or shut position. Type 316 stainless steel body, ball and stem, TFE seats and seals, wrench operated, 150 lb. ANSI B16.5 flanged ends, raised face, 1/2" thru 4" size Face-to-face dimensions to conform to ANSI B16.10 for steel gate valves. Screwed body inserts not acceptable. Gear Operator for 6" and 8" size valves. No asbestos allowed.

RATING: 275 PSIG @ 100 DEG. F. or 110 PSIG @ 353 DEG. F.

MANUFACTURER: Modentic VL-11, Sharpe Valve #50116-R, or equal

SIZES: 1/2" thru 8"

MODELS: Modentic Figure No. VL-11-150 , Figure No. BV-150, or equal.

Issue Date: 01/01/89 Revision Date: 09/15/99

Approved by Joseph P. McMahon on 07/17/2001

CCC SPEC. 4.08

SHARPE® VALVES

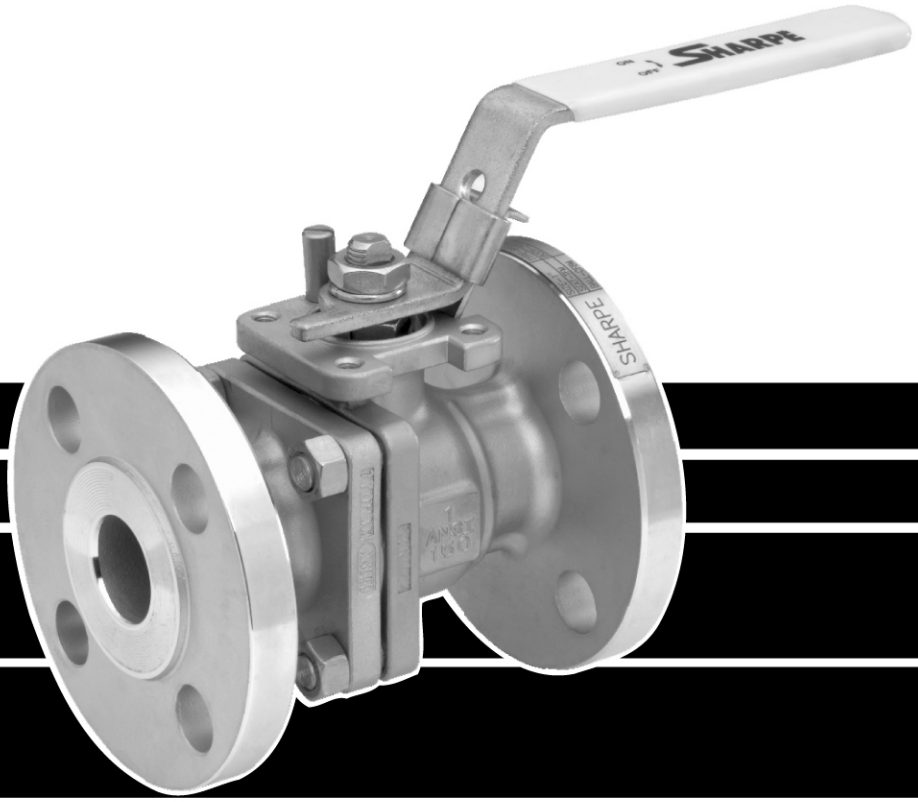

FLANGED FULL PORT BALL VALVE SERIES 50 / CLASS 150

SERIES 50
VALVE PARTS AND IDENTIFICATION

CLASS 150
BLOW OUT PROOF STEM
LOCKING DEVICE

APPLICABLE STANDARDS	
Wall Thickness	ASME B 16.34
Face to Face Dimensions	ASME B 16.10
Flange Dimensions	ASME B 16.5
Pressure Tests	ASME B 16.34 API 598 (Optional)
Basic Design	ASME B16.34

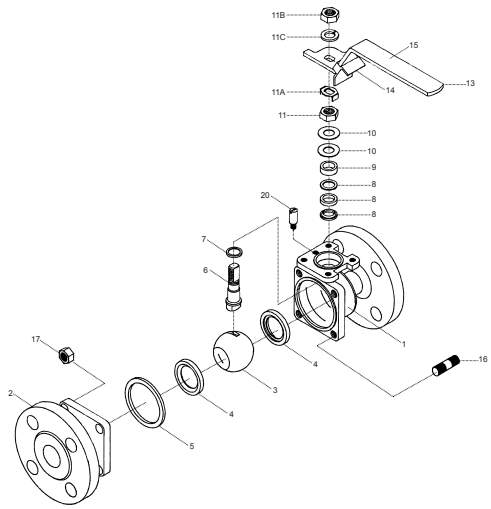

1/2" - 2"

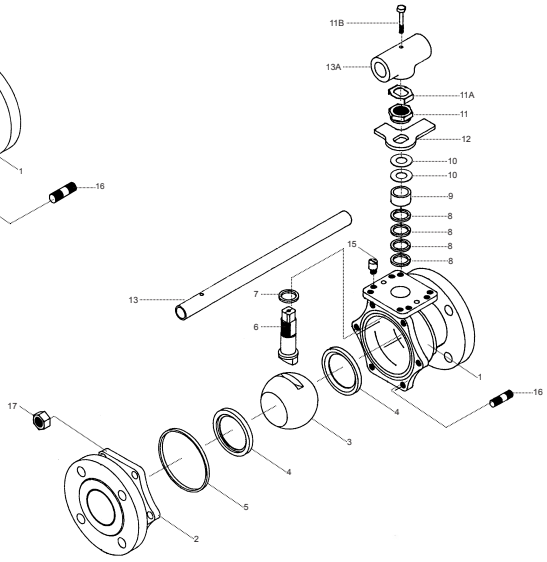

2-1/2" - 4"

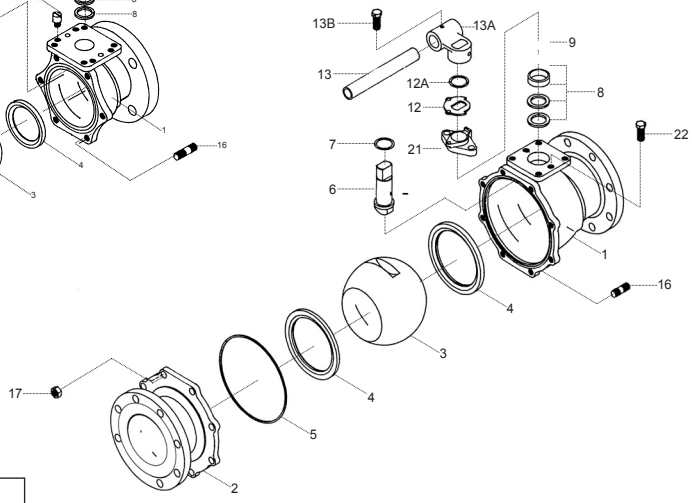

6" - 8"

PART NO.	PART	QTY.	MATERIAL
1	Body	1	316 Stainless Steel ASTM A351 CF8M Alloy 20 ASTM A351 CN7M Carbon Steel ASTM A216 WCB Hastelloy C ASTM A494 GR CW-12MW Monel ASTM A494 GR M35-1
2	End Connector	1	316 Stainless Steel ASTM A351 CF8M Alloy 20 ASTM A351 CN7M Carbon Steel ASTM A216 WCB Hastelloy C ASTM A494 GR CW-12MW Monel ASTM A494 GR M35-1
3	Ball	1	316 Stainless Steel Alloy 20 Hastelloy C
4	Seat	2	TFM(Super TFE) TFE Reinforced TFE NOVA PEEK
5	Body Seal	1	TFE
6	Stem	1	316 Stainless Steel Alloy 20 Hastelloy C 17-4PH (Option)
7	Thrust Bearing	2	Reinforced TFE
8	Stem Packing	3/4	Reinforced TFE
9	Gland Packing	1	304 Stainless Steel
10	Belleville Washer (1/2"-4")	2/4	304 Stainless Steel
11	Packing Nut (1/2"-4")	1	304 Stainless Steel
11A	Lock Tab	1	Stainless Steel
11B	Handle Nut	1	304 Stainless Steel
11C	Lock Washer	1	304 Stainless Steel (1/2"-2")

*See Dimensions

PART NO.	PART	QTY.	MATERIAL
12	Stopper	1	304 Stainless Steel
12A	Snap Ring	1	Stainless Steel (6"-8")
13	Handle	1	304 Stainless Steel (1/2"-2") Galvanized Steel (2-1/2"-4") Ductile Iron (6"-8")
13A	Wrench Block	1	Stainless Steel
13B	Hex Head Bolt	1	304 Stainless Steel
14	Locking Device (1/2"-2")	1	304 Stainless Steel
15	Sleeve	1	Vinyl
16	Body Stud	SEE* N	A193 B8 (SST) A193 B7 (CS)
17	Nut	SEE* N	A194 8 (SST) A194 2H (CS)
20	Stop Pin (1/2"-2") (2-1/2"-4")	1 2	304 Stainless Steel 304 Stainless Steel
21	Gland Flange (6"-8")	1	304 Stainless Steel
22	Gland Bolts (6"-8")	2	304 Stainless Steel

SERIES 50
DIMENSIONS

1/2” - 2”

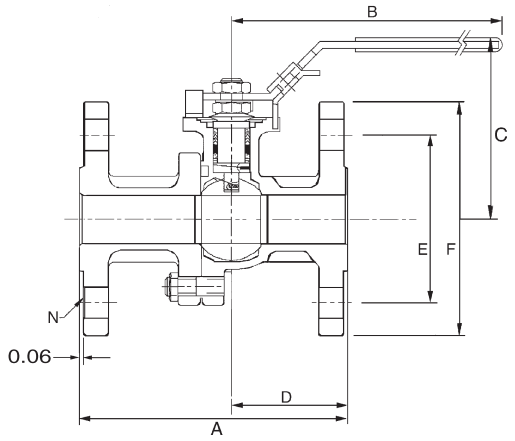

2-1/2” - 4”

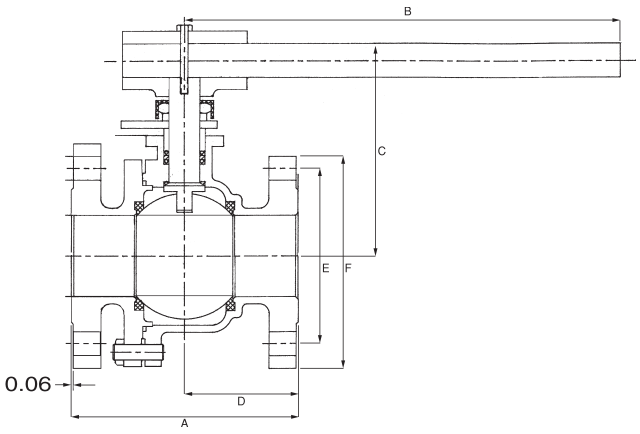

6” - 8”

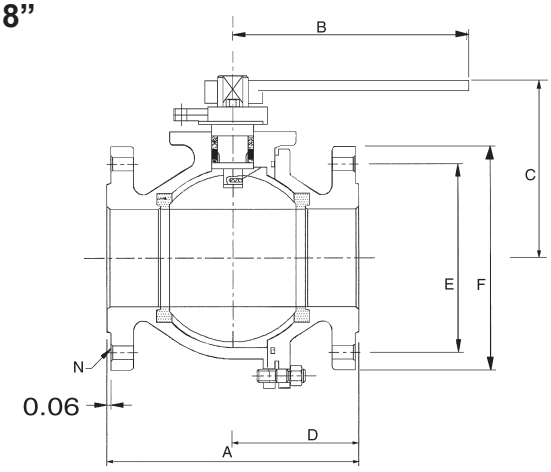

CV DATA	
1/2”	26
3/4”	50
1”	94
1-1/2”	260
2”	480
2-1/2”	750
3”	1300
4”	2300
6”	5400
8”	10000

PORT	
1/2”	0.59
3/4”	0.78
1”	1.00
1-1/2”	1.50
2”	2.00
2-1/2”	2.55
3”	3.00
4”	4.00
6”	6.00
8”	7.88

WEIGHT (lbs.)	
1/2”	4
3/4”	6
1”	8
1-1/2”	15
2”	20
2-1/2”	36
3”	45
4”	75
6”	135
8”	290

SIZE	A	B	C	D	E	F	N	G	H	I	J	K	W
1/2”	4.25	4.75	3.60	1.80	2.38	3.50	4	1.39	3/8-24 UNF	.22	.28	.63	M5
3/4”	4.62	4.75	3.75	2.00	2.75	3.85	4	1.39	3/8-24 UNF	.22	.28	.63	M5
1”	5.00	6.22	3.75	2.12	3.13	4.25	4	1.39	7/16-20 UNF	.30	.30	.90	M6
1-1/2”	6.50	9.00	4.50	2.76	3.56	5.00	4	1.94	9/16-18 UNF	.35	.42	1.18	M8
2”	7.00	9.00	4.80	3.08	4.75	6.00	4	1.94	9/16-18 UNF	.35	.42	1.18	M8
2-1/2”	7.50	13.75	6.70	3.09	5.50	7.00	4	2.84	M20	.55	.55	1.83	M10
3”	8.00	13.75	7.00	3.74	6.00	7.48	4	2.84	1-14 UNS	.745	.66	1.83	M10
4”	9.00	13.75	7.70	4.46	7.50	9.01	8	2.84	1-14 UNS	.745	.66	1.83	M10
6”	15.50	38.97	11.22	7.61	9.50	10.98	8	3.89	1.02	1.64	1.46	3.00	M12
8”	18.00	38.97	11.57	8.34	11.75	13.50	8	4.59	1.02	1.64	1.46	3.00	M12

The dimensions above are for information only, not for construction. For complete actuator mounting dimensions refer to Engineering Bulletin EB-2003.

1/2" - 4"

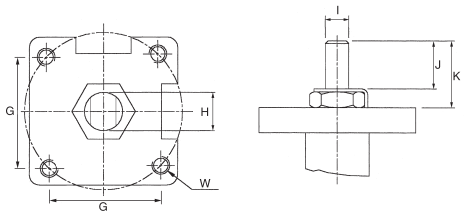

6" - 8"

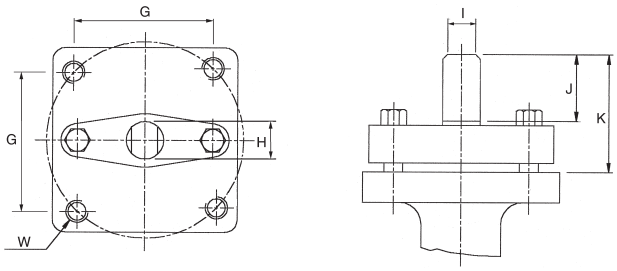

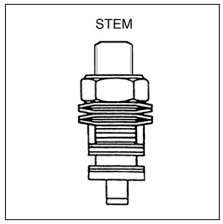

1/2" - 4"
STEM ARRANGEMENT
FOR ACTUATORS

SEAT PRESSURE/TEMPERATURE RATING SERIES 50

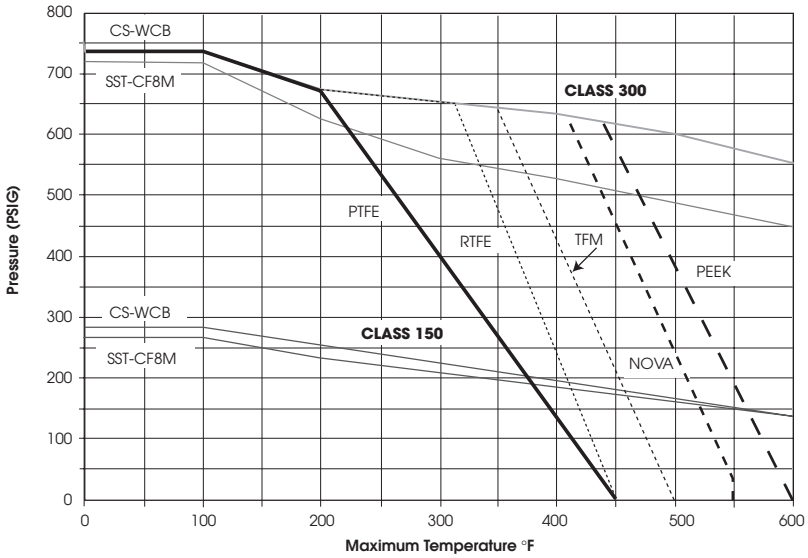

HOW TO ORDER

VALVE SIZE	VALVE SERIES	CLASS	ALLOY	SEATS	OPTIONS
1/2" 3/4" 1" 1-1/2" 2" 2-1/2" 3" 4" 6" 8"	50	150# = 11	2 = Alloy 20 4 = Carbon Steel 6 = Stainless Steel 5 = Hastelloy C 3 = Monel	T = TFE R = RTFE N = NOVA P = Peek M = TFM™	X = Oxygen Service OH = Oval Handle F = Fugitive Emissions Certified ANSI 593.00.01 E = Extended Stem L = Lockable Extended Stem D = Leak detection Stem GO = Gear Operator 7 = 17- 4PH Stem A = Nace

3/4" 50 11 6 T X

SHARPE® VALVES
A Division of Smith-Cooper International, LLC

Toll-Free 1-877-7SHARPE
(877) 774-2773
Fax: (708) 562-9250
E-Mail: info@sharpevalves.com
www.sharpevalves.com
1260 Garnet Drive
Northlake, Illinois 60164 U.S.A.

Due to continuous development of our product range we reserve the right to change the dimensions and information contained in the leaflet as required.
TFM is a registered trademark of Dyneon, LLC.

CalgonCarbon	BALL VALVES MATERIAL SPECIFICATION	SPEC NO:
	STAINLESS STEEL END ENTRY REGULAR PORT BALL VALVE	4.57

SAP PART NUMBER:

CCC DRAWING NUMBER:

MATERIAL: Stainless steel end entry regular port ball valve with blowout proof stem and seat retainer design to permit valve to be dead ended in either flow direction. ASTM A-296, Grade CF8M Type 316 stainless steel body, ball and stem, TFE seats and seals, wrench operated, threaded ends. Screwed body inserts or tail pieces not acceptable.

RATING: 80 PSIG @ 400 DEG. F. or 1500 PSIG @ 150 DEG. F.

MANUFACTURER: Modentic, Sharpe Valve #54576, Jamesbury, or equal.

SIZES: 1/4" thru 2"

MODELS: Modentic Figure No. V-008, Jamesbury Bulletin 210, Trueline - N600LL, or equal

Issue Date: 01/01/89 Revision Date: 09/15/99

Approved by Joseph P. McMahon on 07/17/2001

Series 50M76

2-Piece Ball Valve

SHARPE®

Valves, Automation & Controls

Features

- Full port
- 1000 WOG
- 316 Stainless Steel
- Locking device
- Blow-out proof stem
- Oval handle available

Dimensions

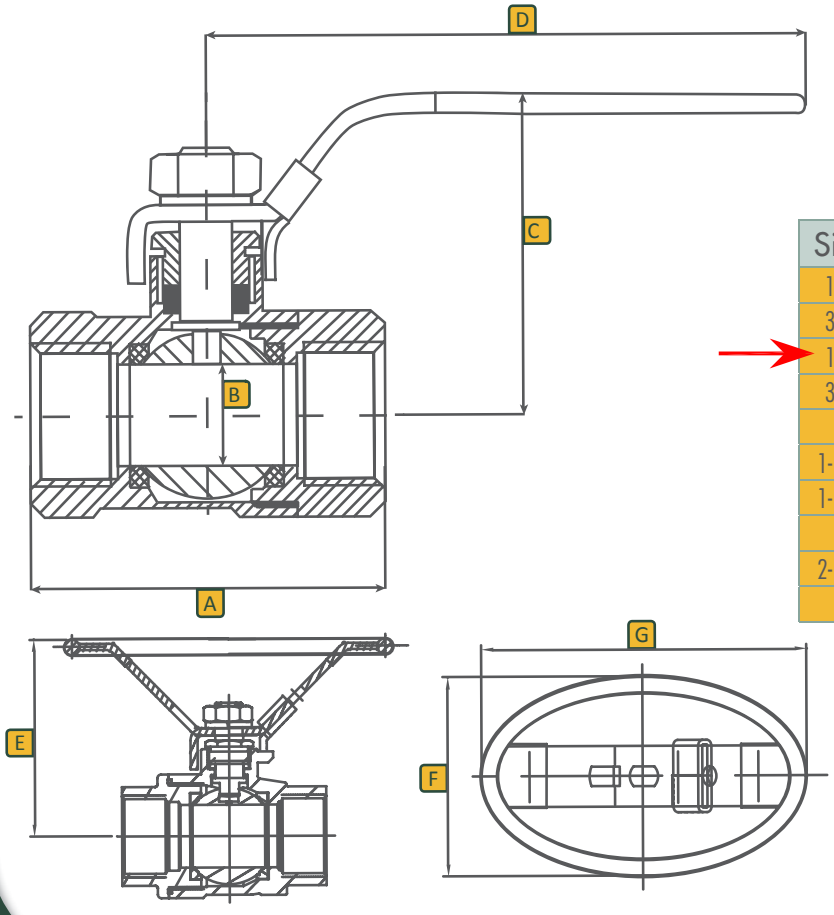

Dimensions (Inches)

Size	A	B	C	D	E	F	G
1/4	2.00	0.43	1.81	4.00	1.06	2.16	3.39
3/8	2.00	0.43	1.81	4.00	1.06	2.16	3.39
1/2	2.36	0.50	1.89	4.00	1.06	2.16	3.39
3/4	2.75	0.80	2.04	5.00	1.34	2.76	4.33
1	3.25	1.00	2.44	5.75	1.53	3.18	5.26
1-1/4	3.80	1.25	2.56	5.75	1.53	3.18	5.26
1-1/2	4.33	1.50	2.96	7.50	1.97	4.13	6.30
2	5.27	2.00	3.25	7.50	1.97	4.13	6.30
2-1/2	6.58	2.50	5.00	9.73	-	-	-
3	7.55	3.00	5.40	9.73	-	-	-

SHARPE - SERIES 50M76 | 2-Piece Ball Valve

Toll Free (877) 774-2773 | Local (708) 562-9221 | Fax (708) 562-0890 | www.sharpevalves.com

Parts & Materials

No.	Part Name	Qty	Material
1	Body	1	316 Stainless Steel
2	Ball	1	316 Stainless Steel
3	Cap	1	316 Stainless Steel
4	Seat	2	RTFE
5	Gasket	1	PTFE
6	Stem	1	316 Stainless Steel
7	Stem Packing	1 Set	PTFE
8	Handle	1	304 Stainless Steel
9	Nut	1	304 Stainless Steel
10	Thrust Washer	1	PTFE
11	Galand Nut	1	304 Stainless Steel
12	Spring Washer	1	304 Stainless Steel
13	Handle Cover	1	Plastic
14	Locking Pad	1	304 Stainless Steel

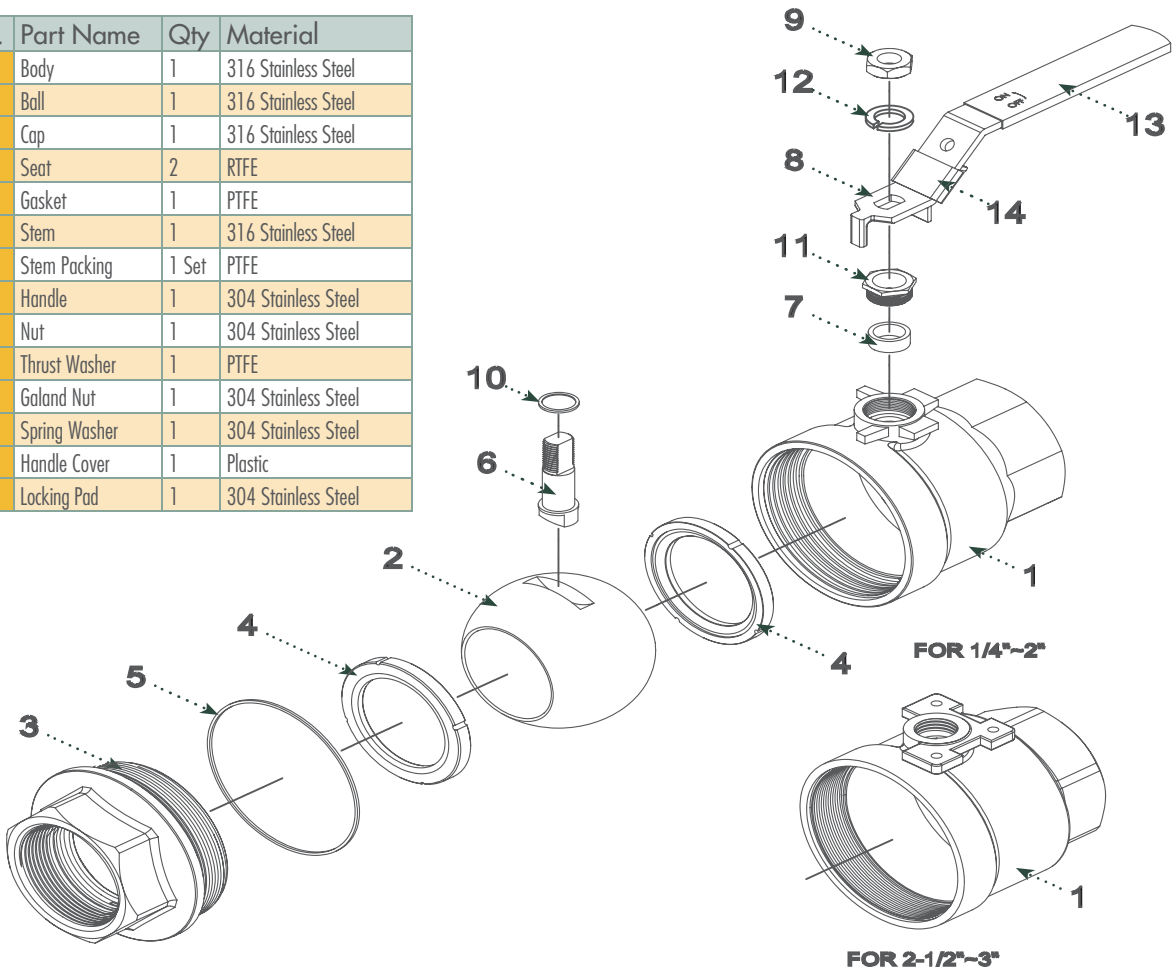

Technical Information

Size	Cv	Weight-Lbs
1/4	6	0.5
3/8	6	0.5
1/2	24	0.7
3/4	35	1.1
1	47	2.0
1-1/4	81	3.0
1-1/2	105	4.8
2	241	8.0
2-1/2	319	14.0
3	580	20.0

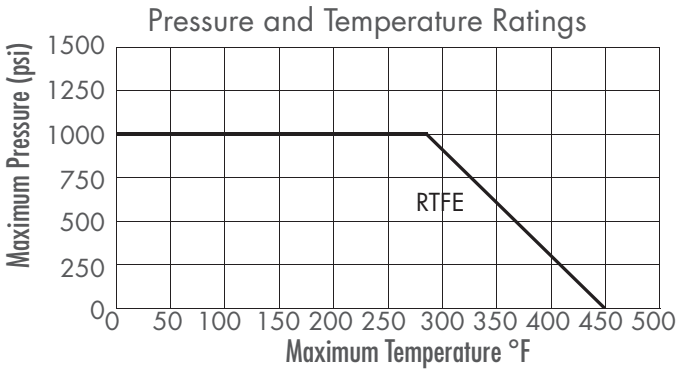

Ordering

Fig: 1/2 - 50M76
Description: 1/2" - Series 50M76

Size		Series	Options	
1/4	1-1/4	50M76	OH	Oval Handle
3/8	1-1/2			
1/2	2			
3/4	2-1/2			
1	3			

Due to continuous development of our product range, we reserve the right to change the dimensions and information for this product as required.

CalgonCarbon	STRAINERS MATERIAL SPECIFICATION	SPEC NO:
	SAMPLE PORT SEPTUM, TYPE 316 STAINLESS STEEL	22.29

SAP PART NUMBER: 1058440

CCC DRAWING NUMBER: 90100025

MATERIAL: Sample port septum, Type 316 stainless steel, 0.060" wedge wire with 0.008" slot opening, Septum to be 1" O.D. x 1 1/2" long with 1/2" threaded half-coupling one end and 1/8" thk. cap other end, Overall Length= 2 9/16"

MANUFACTURER: Orthos or equal

Issue Date: Revision Date: 10/22/2010

Approved by Joseph P. McMahon on 10/22/2010

BILL OF MATERIAL

ITEM	QUANTITY	SAP#	DESCRIPTION	MATERIAL
A	1		1/2" HALF COUPLING, 3000#, THREADED	316L SS
B	1		WEDGE WIRE, 1" O.D. X 1 1/2"LG., 0.060" WIRE W/0.008" SLOT	316L SS
C	1		CAP, 1" O.D. X 1/8" THK.	316L SS

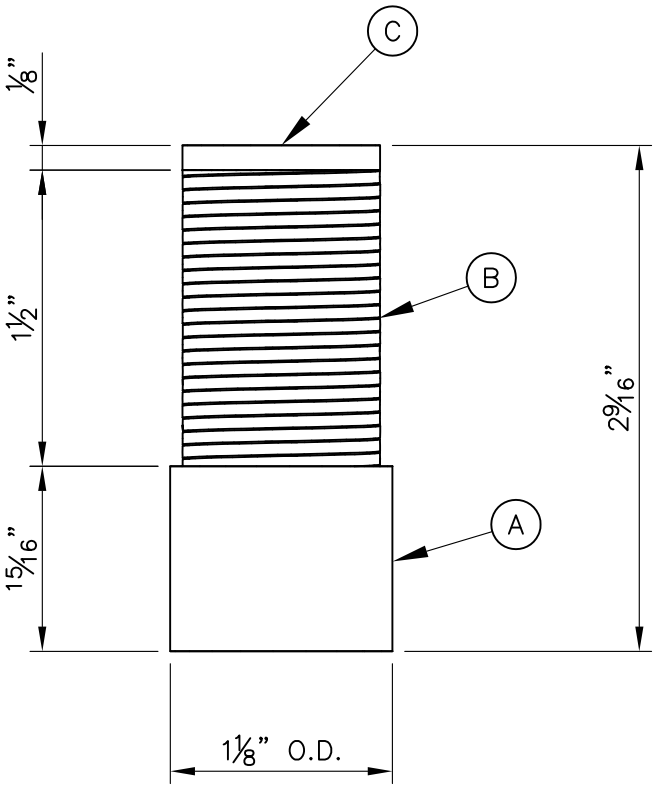

PLAN

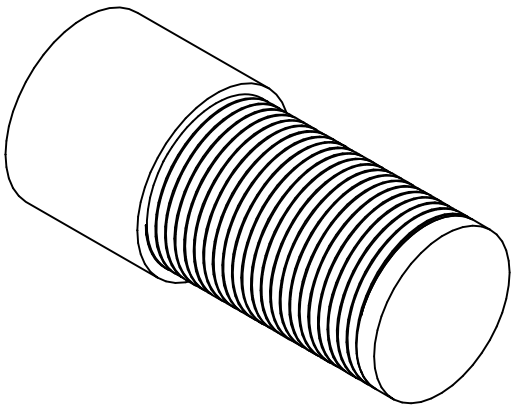

ISO

SAP NUMBER: 1058440

THIS DRAWING AND DESIGN IS THE PROPERTY OF CALGON CARBON CORPORATION AND IS NOT TO BE REPRODUCED IN WHOLE OR IN PART NOR EMPLOYED FOR ANY PURPOSE OTHER THAN SPECIFICALLY PERMITTED IN WRITING BY CALGON CARBON CORPORATION. THIS DRAWING LOANED SUBJECT TO RETURN ON DEMAND.

	NAME	DATE
DRAFTER	RES	10-21-2010
DESIGNER		
CHECKER		
APPROVAL		
PROJECT No.	STANDARD	

REV	DESCRIPTION	APP	DATE
2			
1			
0	ISSUED FOR FABRICATION	RES	10/21/10

REVISIONS

CalgonCarbon

CLIENT

TITLE
1/2" SAMPLE PORT
SEPTA DETAIL
CCC SPEC. 22.29

DWG. Size	SHEET No.	SCALE
A	1 OF 1	NONE

DWG. No. 90100025 REV. 0

V:\Products\Septa\90100025 Septa Spec 22.29.dwg Oct 07, 2014 - 11:12am

CalgonCarbon	STRAINERS MATERIAL SPECIFICATION	SPEC NO:
	BASKET STRAINER, TYPE 316 STAINLESS STEEL	22.53

SAP PART NUMBER:

CCC DRAWING NUMBER:

MATERIAL: Perforated basket strainer (Carbon Retainer) for 150 lb. Raised Face Flanges, type 316 stainless steel construction. Basket is to be Fabricated from 14 Gage 316 stainless steel with 1/8" holes drilled on 3/16" centers and covered with 40 mesh 316 stainless steel screen, this will then be covered by a 4 mesh 316 stainless steel support screen (0.063" wire diameter).

RATING: Support Screen is to be designed for 125 PSIG if plugged in forward or reverse flow.

MANUFACTURER: Mack Iron Works Company, or equal.

SIZES: 2" thru 12"

MODELS: Mack Iron Works Company Series PB-R/FF, Style PBL or equal.

Issue Date: 01/01/90 Revision Date: 08/23/90

Approved by Matthew R. McGowan on 06/16/99

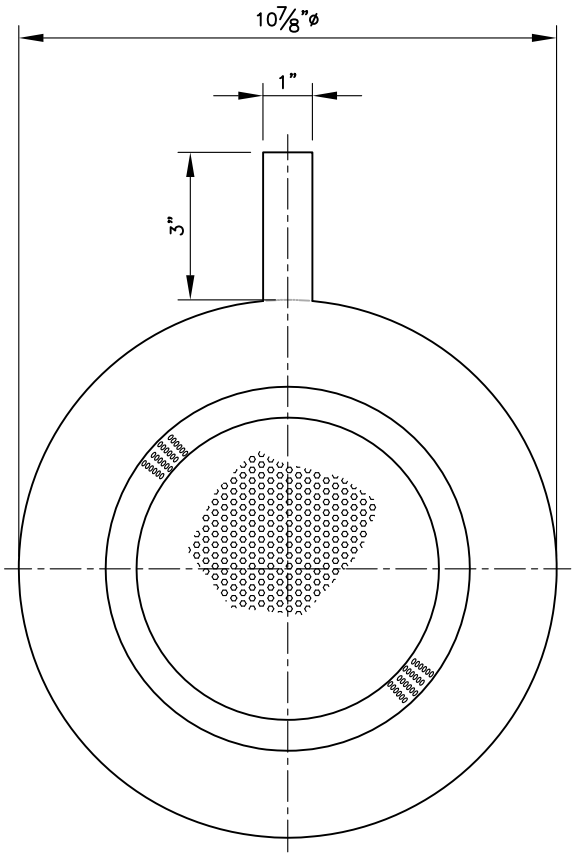

FRONT

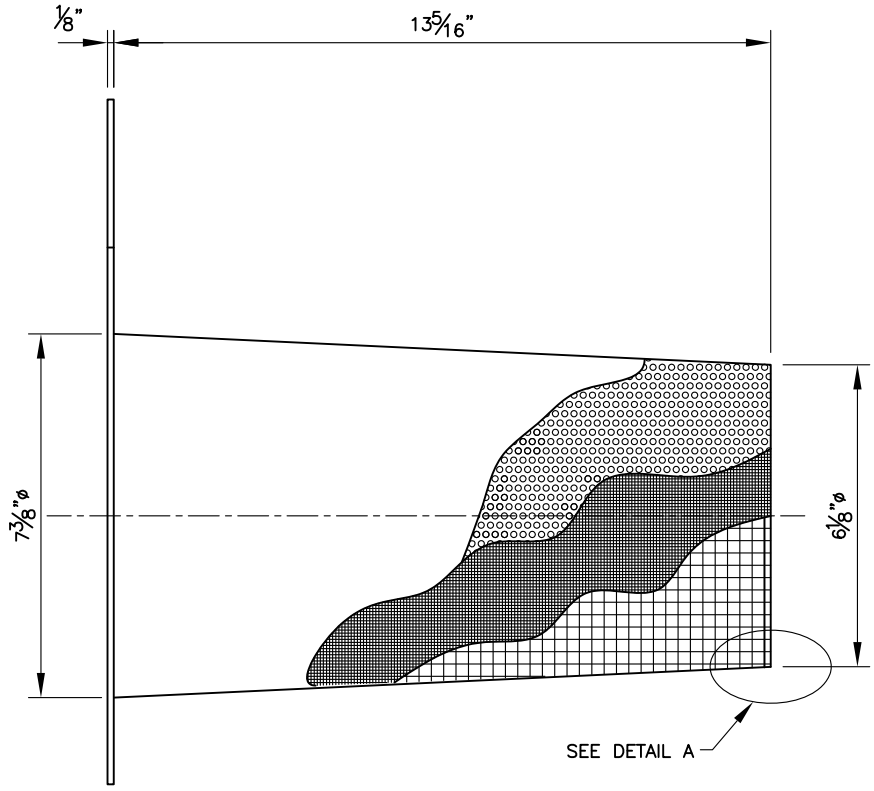

SIDE

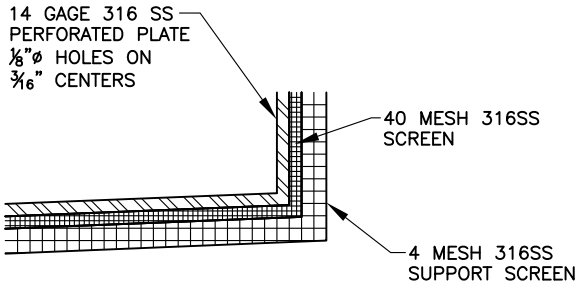

DETAIL A

THIS DRAWING AND DESIGN IS THE PROPERTY OF CALGON CARBON CORPORATION AND IS NOT TO BE REPRODUCED IN WHOLE OR IN PART NOR EMPLOYED FOR ANY PURPOSE OTHER THAN SPECIFICALLY PERMITTED IN WRITING BY CALGON CARBON CORPORATION. THIS DRAWING LOANED SUBJECT TO RETURN ON DEMAND.

	NAME	DATE
DRAFTER	BKM	8/29/06
DESIGNER		
CHECKER	RES	4/3/07
APPROVAL		
PROJECT No.	STANDARD	

REV	DESCRIPTION	APP	DATE
2			
1			
0	ISSUED FOR FABRICATION	RES	4/3/07

REVISIONS

CalgonCarbon

CLIENT: STANDARD

TITLE: 8" STRAINER, 316L SS
CCC SPEC 22.53
DETAILS

DWG. Size	SHEET No.	SCALE
A	1 OF 1	NONE

DWG. No. 90060220 REV. 0

V:\Products\Strainers\90060220 8inch Strainer.dwg Jul 24, 2013 – 9:21am

CalgonCarbon	STRAINERS MATERIAL SPECIFICATION	SPEC NO:
	FILTER NOZZLE, POLYPROPYLENE	22.106

SAP PART NUMBER:

CCC DRAWING NUMBER:

MATERIAL:

Filter Nozzle, 0.008"(0.2mm) Slot, 1" WW thread x 45 MM long with 3/4" six point nut, polypropylene construction. Expanding ring, 32 MM diameter 1" WW thread for 12-17 MM plate thickness, polypropylene construction. Pipe saddle, FDA approved Rubber to suit a schedule 80 PVC pipe, the pipe header size shall be specified by Calgon Carbon Corporation. All polypropylene parts used in this manufacture shall be virgin grade material and an ivory color.

MANUFACTURER: Orthos or equal.

MODELS: Orthos type C2, or equal.

Issue Date: 03/08/2005 Revision Date:

Approved by Gerald Kirner on 03/08/2005

Technical Information

Design

For general purposes the filter nozzles should be placed on 6" centers, with 8" centers being the maximum recommended (subject to the filter media, single or multi-layer, depth of bed, etc.). The filter nozzles are available in a wide variety of slot sizes to suit the media; and airtubes and tailpipes for air or water backwash can be provided as required.

Consistency of the Material

Filter nozzles made of polypropylene are resistant to many chemicals including the following examples:

@ 140°F / 60°C

- ammonia 10%
- formaldehyde 10%
- isopropanol all concentrations
- methanol 50%
- caustic soda solution 50%
- hydrochloric acid 10%
- sulfuric acid 10%
- soda water
- ozone (68°F / 20°C, 50 pphm)

In addition to virgin polypropylene (max. temperature 140°F), all filter nozzles are also available in glass fiber reinforced polypropylene (max. temperature 230°F) and Kynar (max. temperature 275°F). Other available materials include stainless steel, alloy 20 and hastelloy.

Installation Specifications

Recommended Torque	4.0 ft. lbs.
Max RPM	430

In lower temperatures polypropylene becomes more brittle. If nozzles are to be installed in cold weather, we recommend that all polypropylene materials are first warmed before installation.

When using with hot water (max. continuous temperature up to 230°F / 110°C, polypropylene with chemically combined 30% glass fiber is recommended.

PVDF is recommended for hot water with a continuous temperature of up to 275°F / 135°C. (Conditionally resistant to concentrated caustic solutions.)

Color Coded Polypropylene Nozzles

Slot Size	Color
0.2	ivory
0.3	green
0.35	white
0.5	grey
0.7	yellow
0.8	blue
1.0	black
1.5	orange
2.0	green

All specifications are subject to change without notice.

Conversion Chart

Multiply units in left column by proper factor below

LENGTH	in.	ft.	mm	cm	m
1 inch	1	0.0833	25.4	2.540	0.0254
1 foot	12	1	304.8	30.48	0.3048
1 millimeter	0.0394	0.0033	1	0.100	0.001
1 centimeter	0.3937	0.0328	10	1	0.01
1 meter	39.37	3.281	1000	100	1
AREA	**in.²**	**cm²**			
1 inch²	1	6.452			
1 centimeter²	0.1550	1			
VOLUME	**liter**	**U.S. gal.**			
1 liter	1	0.2642			
1 U.S. gallon	3.785	1			
VOLUME RATE	**gallon / min.**	**m³ / hr.**	**liter / hr.**		
1 gallon/minute	1	0.227	227		
1 m³/hour	4.403	1	1000		
1 liter/hour	0.063	0.001	1		
PRESSURE	**lbs. / in.²**	**ft. water at 39.2°F**	**bar**		
1 pound/in.²	1	2.307	0.069		
1 foot water	0.4335	1	0.0299		
1 Bar	14.50	33.45	1		

Filter Nozzles

Model C2

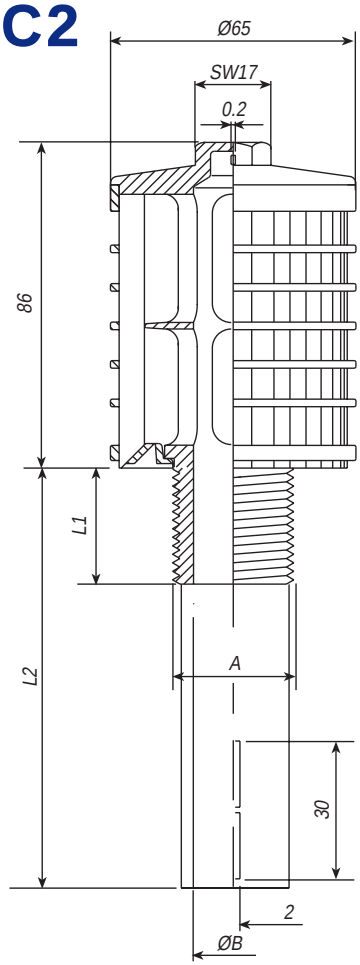

All dimensions in mm
unless otherwise noted.

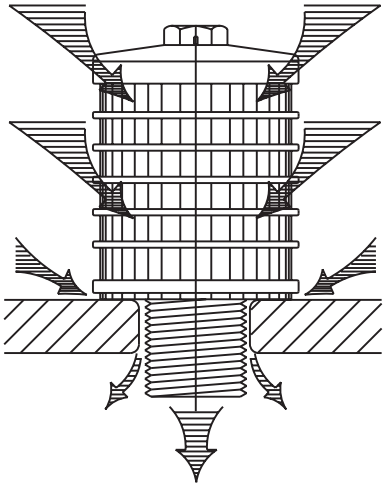

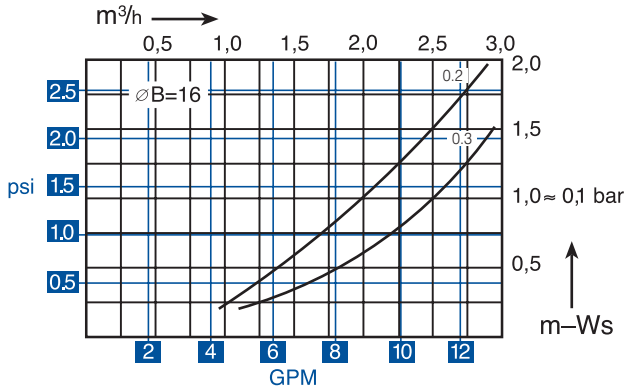

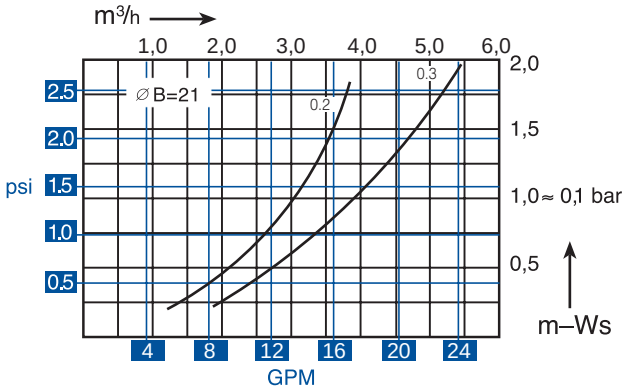

Model C2 Ordering Information

Slots	Thread	ØA	Thread Length — L1	Shaft — L2	ØB
36 x 0.2 = 3.70 cm²	3/4" NPT				16 = 2.00 cm²
36 x 0.3 = 5.50 cm²	1" NPT				21 = 3.40 cm²
	M24	24	20, 45, + 5 + 5...	L1, 80, 110, 140, 200, *up to* 400	16 = 2.00 cm²
	1" WW	25.4	45	L1, 80, 110, 140, 200, *up to* 400	16 = 2.00 cm²
	1-1/4" WW	32	20, 30, 45,	L1, 80, 110, 140, 200, *up to* 400	21 = 3.40 cm²
	G3/4"	26.5	20, 45, + 5 + 5...	L1, 80, 110, 140, 200, *up to* 400	16 = 2.00 cm²

Nuts / Washers / Expanding Rings

Model MU60

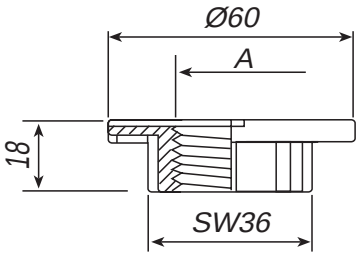

Model MU43

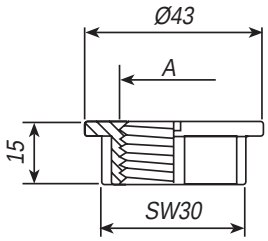

Model MUZ

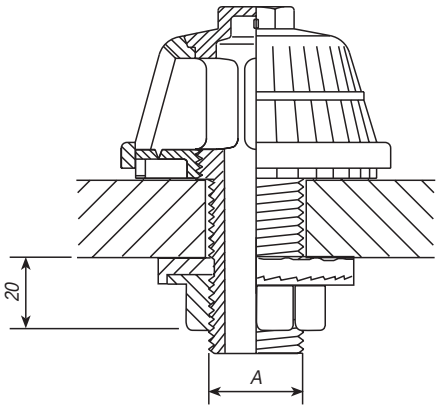

All dimensions in mm unless otherwise noted.

Ordering Information (Nuts)

Model #	Thread (A)
MU60	1-1/4" WW, 1" WW, M24
MU43	1" WW, M24, M20
MUZ	M24

Model DP

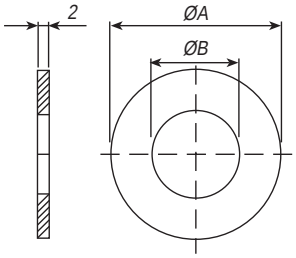

Model DG

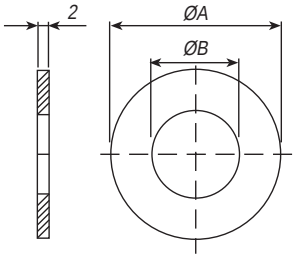

All dimensions in mm unless otherwise noted.

Ordering Information (Washers)

Model #	ØA	ØB	Material
DP	50	32	PP
	70	30	
		27	
		25	
		21	
DG	50	32	Rubber
	70	27	
		25	
		21	

Model DB65

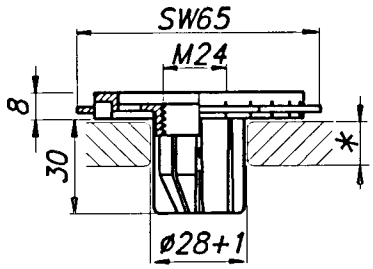

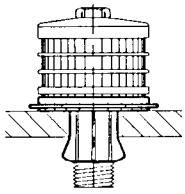

Model KSPB

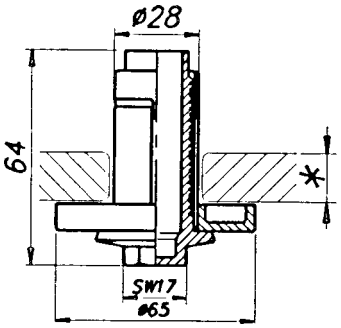

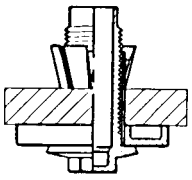

All dimensions in mm unless otherwise noted.

Ordering Information (Expanding Rings)

Model #	Plate Thickness
DB65	8 - 12
	12 - 17
	17 - 22

Model #	Plate Thickness
KSPB	8 - 28
	25 - 45

CalgonCarbon	EXPANSION JOINTS MATERIAL SPECIFICATION	SPEC NO:
	RUBBER EXPANSION JOINT, DOUBLE ARCH TYPE	24.06

SAP PART NUMBER:

CCC DRAWING NUMBER:

MATERIAL: Rubber expansion joint, double arch type, molded neoprene reinforced with multiple plies of nylon. Joint allows 4 way movement and 30 DEG. angular misalignment. Has loose steel backing flanges to be galvanized or zinc plated, 150 # drilling. No gaskets required. Control unit assemblies for pressures specified as 135 psi or greater.

RATING: 225 psi @ 170 DEG. F.

MANUFACTURER: Dynex, Inc., Proco Products, Inc., or Approved Equal.

SIZES: 1" thru 12"

MODELS: Dynex Series 702, Proco Products, Inc., Model 242-A-NN-4, with "blue" I.D. label or Approved Equal.

Issue Date: 01/01/89 Revision Date: 08/30/99

Approved by Matthew R. McGowan on 08/30/99

PROCO

The Expansion Joint and Check Valve People

CCC SPEC 24.06

Molded Spherical Joints Style 240/242

Proco Style 240/242 Molded Spherical Joints

Proco Style 240/242 Spherical Molded Expansion Joints are designed for piping systems to absorb pipe movements, relieve stress, reduce system noise/vibration, compensate for misalignment/offset and to protect rotating mechanical equipment against start-up surge forces.

The molded style 240 single sphere and 242 twin sphere designed bellows are inherently stronger than the conventional hand-built style spool arch type. Internal pressure within a "sphere" is exerted in all directions, distributing forces evenly over a larger area. The spherical design "flowing arch" reduces turbulence and sediment buildup.

Features and Benefits:

Absorbs Directional Movement

Thermal movements appear in any rigid pipe system due to temperature changes. The Style 240 and Style 242 spherical arch expansion joints allow for axial compression or axial extension, lateral deflection as well as angular movement. (Note: Rated movements in this publication are based on one plane movements. Multiple movement conditions are based on a multiple movement calculation. Contact Proco for information when designing multiple pipe movements.)

Easy Installation with Rotating Metallic Flanges

The floating metallic flanges freely rotate on the bellows, compensating for mating flange misalignment, thus speeding up installation time. Gaskets are not required with the Style 240 or Style 242, provided the expansion joints are mated against a flat face flange as required in the installation instructions.

Flange Materials/Drilling

The Proco Style 240 and Style 242 molded expansion joints are furnished complete with plated carbon steel flanges for corrosion protection. 304 or 316 stainless steel flanges are available upon request as well as ANSI 250/300 lb., BS-10, DIN PN10 & PN16 and JIS-10K drilling.

Absorbs Vibration, Noise and Shock

The Proco Style 240 and Style 242 molded expansion joints effectively dampen and insulate downstream piping against the transmission of noise and vibration generated by mechanical equipment. Noise and vibration caused by equipment can cause stress in pipe, pipe guides, anchors and other equipment downstream. Water hammer and pumping impulses can also cause strain, stress or shock to a piping system. Install the Style 240 or Style 242 molded expansion joints to help compensate for these system pressure spikes.

Wide Service Range with Low Cost

Engineered to operate up to 300 PSIG or 265°F, the Proco Style 240 and Style 242 can be specified for a wide range of piping requirements. Compared to conventional hand-built spool type joints, you will invest less money when specifying the mass-produced, consistent high quality, molded single or twin sphere expansion joints.

Material Identification

All Style 240 or Style 242 molded expansion joints have branded elastomer designations. Neoprene Tube/Neoprene Cover (NN) and Nitrile Tube/Neoprene Cover (NP) elastomer designated joints meet the Coast Guard Requirements and conform to ASTM F1123-87. 240C/NP-9 joints have ABS certification.

Large Inventory

Proco Products, Inc. maintains one of the largest inventories of rubber expansion joints in the world. Please contact us for price and availability.

Table 1: Available Styles • Materials

For Specific Elastomer Recommendations, See: **PROCO** "Chemical To Elastomer Guide"

240-A	240-C	240-AV,D,E,M	242-A,B,C	PROCO Material Code	Cover Elastomer [1]	Tube Elastomer [2]	Maximum Operating Temp. °F	Identifying Color Band/Label
		X	X	/BB[3]	Chlorobutyl	Chlorobutyl	250°	Black
		X	X	/EE[3]	EPDM	EPDM	250°	Red
X	X			/EE[3,4]	EPDM	FDA-EPDM	250°	Red
		X		/EQ[3]	EPDM	FDA-EPDM	250°	Red
X	X			/EE-9[3,5]	EPDM	EPDM	265°	DBL Red
	X			/ET-9[3,6]	EPDM	PTFE	265°	Red
	X			/HH	CSM	CSM	212°	Green
		X	X	/NH	Neoprene	CSM	212°	Green
	X			/NJ	Neoprene	FDA-Nitrile	212°	White
	X	X	X	/NN	Neoprene	Neoprene	225°	Blue
	X			/NT[6]	Neoprene	PTFE	225°	Blue
X	X	X	X	/NP	Neoprene	Nitrile	212°	Yellow
X	X			/NP-9[7]	Neoprene	Nitrile-ABS	212°	DBL Yellow

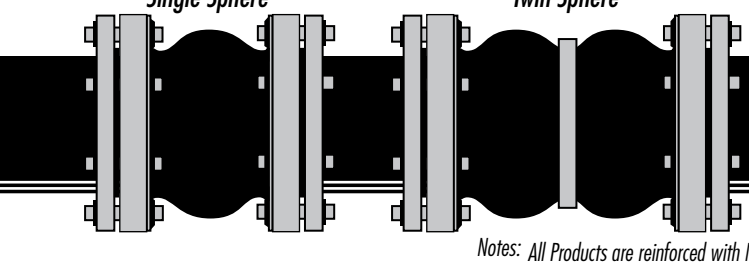

Protecting Piping and Equipment Systems from Stress/Motion

Notes:
All Products are reinforced with Nylon Tire Cord, except 240-A and 240-C which are reinforced with Polyester.
1. *All NN & NP elastomer designated joints meet the Coast Guard Requirements and conform to ASTM F 1123-87 and are marked accordingly.*
2. *Branding Label will be marked as "Food Grade".*
3. *BB, EE or EE-9 are good for 300°F blower service at 20 PSI or less.*
4. *240-A & 240-C expansion joints have black EPDM tube, but are FDA compliant.*
5. *EE-9 joints are peroxide cured.*
6. *Products with PTFE loose liner are not intended for vacuum service.*
7. *NP-9 joints have ABS certification.*
8. *All elastomers above are not intended for steam service.*

Information subject to change without notice.

Style 242 Twin Sphere Performance Data

Table 3: Sizes • Movements • Pressures • Flange Standards • Weights

NOMINAL Pipe Size I.D.	Neutral Length	PROCO Style Number [1]	242 Movement Capability: From Neutral Position [2]					Pressure [4]		Standard Flange Drilling Dimensions [8]					Weight in lbs	
			Axial Compression Inches	Axial Extension Inches	Lateral Deflection Inches	Angular Deflection Degrees	Thrust Factor [3]	Positive PSIG [5]	Vacuum [6] Inches of Hg	Flange O.D. Inches	Bolt Circle Inches	Number of Holes	Size of Holes Inches	Bolt Hole [7] Thread	Exp. Joint & Flanges	Control Unit Set (2 Rod)
1 (25)	10.00	242-C	2.000	1.188	1.750	45	4.43	225	26	4.25	3.13	4	0.625	—	5.2	3.6
1.25 (32)	7.0	**242-A**	2.000	1.188	1.750	45	6.34	225	26	4.63	3.5	4	0.625	1/2-13 UNC	5.3	3.5
	7.0	242-HA						300					0.625	—	6.5	3.5
	10.00	242-C						225					0.625	—	6.2	3.6
1.5 (40)	6.00	242-B	2.000	1.188	1.750	45	6.49	225	26	5.0	3.88	4	0.625	—	6.1	4.6
	6.00	242-HB						300					0.625	—	7.6	4.6
	7.00	**242-A**						225					0.625	1/2-13 UNC	6.8	4.8
	7.00	242-HA						300					0.625	—	8.3	4.8
	10.00	242-C						225					0.625	—	7.7	5.1
2 (50)	6.00	242-B	2.000	1.188	1.750	45	7.07	225	26	6.0	4.75	4	0.750	—	9.0	6.6
	7.00	**242-A**						225		6.0	4.75	4	0.750	—	9.0	7.0
	10.00	242-C						235		6.0	4.75	4	0.750	5/8-11 UNC	10.2	7.3
	6.00	Q-242-HB						300		6.0	4.75	4	0.750	—	10.5	6.6
	7.00	Q-242-HA						300		6.5	5.00	8	0.750	—	10.5	7.0
2.5 (65)	6.00	242-B	2.000	1.188	1.750	43	11.05	225	26	7.0	5.5	4	0.750	—	12.9	7.6
	7.00	**242-A**						225					0.750	—	13.3	8.0
	10.00	242-C						225					0.750	5/8-11 UNC	14.5	8.4
	6.00	Q-242-HB						300					0.750	—	15.3	7.6
	7.00	Q-242-HA						300					0.750	—	15.8	8.0
3 (80)	7.00	**242-A**	2.000	1.188	1.750	38	13.36	225	26	7.5	6.0	4	0.750	5/8-11 UNC	14.3	8.6
	9.00	242-B						225		7.5	6.0	4	0.750	—	15.2	9.0
	10.00	242-C						225		7.5	6.0	4	0.750	—	15.8	9.1
	12.00	242-C						300		7.5	6.0	4	0.750	—	16.0	9.9
	7.00	Q-242-HA						300		8.25	6.62	8	0.875	—	18.2	8.6
3.5 (90)	10.00	242-C	2.000	1.188	1.750	34	18.67	225	26	8.5	7.0	8	0.750	—	20.6	8.1
4 (100)	9.00	**242-A**	2.000	1.375	1.562	34	22.69	225	26	9.0	7.5	8	0.750	5/8-11 UNC	20.3	8.0
	10.00	242-C						225		9.0	7.5	8	0.750	—	21.3	8.2
	12.00	242-C						225		9.0	7.5	8	0.750	—	22.0	8.2
	9.00	Q-242-HA						300		10.0	7.88	8	0.750	3/4-10 UNC	26.4	8.0
5 (125)	9.00	**242-A**	2.000	1.375	1.562	29	30.02	225	26	10.0	8.5	8	0.875	—	24.5	8.3
	10.00	242-C						225		10.0	8.5	8	0.875	—	25.5	9.1
	12.00	242-C						225		10.0	8.5	8	0.875	—	26.0	9.1
	9.00	Q-242-HA						300		11.0	9.25	8	0.875	—	31.4	8.3
6 (150)	9.00	**242-A**	2.000	1.375	1.562	25	41.28	225	26	11.0	9.5	8	0.875	3/4-10 UNC	29.5	11.7
	10.00	242-C						225		11.0	9.5	8	0.875	—	30.5	11.9
	12.00	242-C						225		11.0	9.5	8	0.875	—	31.0	12.0
	14.00	242-C						225		11.0	9.5	8	0.875	—	32.0	12.0
	9.00	Q-242-HA						300		12.5	10.62	12	0.875	—	38.6	11.7
8 (200)	9.00	242-B	2.375	1.375	1.375	19	63.62	225	26	13.5	11.75	8	0.875	—	42.3	14.5
	10.00	242-C						225		13.5	11.75	8	0.875	—	43.4	15.0
	12.00	242-C						225		13.5	11.75	8	0.875	—	44.0	15.2
	13.00	**242-A**						225		13.5	11.75	8	0.875	—	43.8	15.4
	14.00	242-C						225		13.5	11.75	8	0.875	3/4-10 UNC	46.0	16.0
	9.00	Q-242-HB						300		15.0	13.0	12	1.000	—	55.4	14.5
	13.00	Q-242-HA						300		15.0	13.0	12	1.000	—	57.5	15.4

See Notes Page 6

Style 242 Twin Sphere Performance Data

Table 3: Sizes • Movements • Pressures • Flange Standards • Weights

NOMINAL Pipe Size I.D.	Neutral Length	PROCO Style Number [1]	242 Movement Capability: From Neutral Position [2]					Pressure [4]		Standard Flange Drilling Dimensions [8]					Weight in lbs	
			Axial Compression Inches	Axial Extension Inches	Lateral Deflection Inches	Angular Deflection Degrees	Thrust Factor [3]	Positive PSIG [5]	Vacuum [6] Inches of Hg	Flange O.D. Inches	Bolt Circle Inches	Number of Holes	Size of Holes Inches	Bolt Hole [7] Thread	Exp. Joint & Flanges	Control Unit Set (2 Rod)
10 (250)	12.00	242-B	2.375	1.375	1.375	15	103.87	225	26	16.0	14.25	12	1.000	—	64.1	23.5
	13.00	**242-A**						225		16.0	14.25	12	1.000	—	65.5	24.5
	14.00	242-C						225		16.0	14.25	12	1.000	7/8-9 UNC	66.7	24.5
	12.00	Q-242-HB						275		17.5	15.25	16	1.125	—	86.5	23.5
	13.00	Q-242-HA						275		17.5	15.25	16	1.125	—	88.4	24.5
12 (300)	12.00	242-B	2.375	1.375	1.375	13	137.89	225	26	19.0	17.00	12	1.000	—	94.0	30.0
	13.00	**242-A**						225		19.0	17.00	12	1.000	—	95.0	31.0
	14.00	242-C						225		19.0	17.00	12	1.000	7/8-9 UNC	99.1	31.0
	12.00	Q-242-HB						275		20.5	17.75	16	1.250	—	110.0	30.0
	13.00	Q-242-HA						275		20.5	17.75	16	1.250	—	110.0	31.0
14 (350)	13.75	**242-A**	1.750	1.118	1.118	9	182.65	150	26	19.0	18.75	12	1.125	—	112.0	32.0
16 (400)	12.00	242-C	1.750	1.118	1.118	8	240.53	125	26	23.5	21.25	16	1.125	—	124.0	28.8
	12.00	242-HC						175					1.125	—	160.0	28.8
	13.75	**242-A**						125					1.125	—	132.0	30.8
	13.75	242-HA						175					1.125	—	170.2	30.8
18 (450)	12.00	242-C	1.750	1.118	1.118	7	298.65	125	26	25.0	22.75	16	1.250	—	138.0	35.1
	13.75	**242-A**						125					1.250	—	146.0	36.1
	13.75	242-HA						175					1.250	—	181.2	36.1
20 (500)	12.00	242-C	1.750	1.118	1.118	7	363.05	125	26	27.5	25.0	20	1.250	—	172.0	35.0
	13.75	**242-A**						125					1.250	—	182.0	35.5
	13.75	242-HA						175					1.250	—	182.0	35.5
24 (600)	12.00	242-C	1.750	1.118	1.118	5	510.70	110	26	32.5	29.5	20	1.375	—	190.0	47.0
	13.75	**242-A**						110					1.375	—	220.0	48.0
	13.75	242-HA						160					1.375	—	266.2	48.0
30 (750)	12.00	242-C	1.750	1.118	1.118	4	779.31	110	26	38.75	36.0	28	1.375	—	270.0	62.0

NOTES:

Standard Proco Style 242-A Expansion Joints shown in Bold Type are considered Standards and are inventoried in large quantities.

1. *"HW" denotes Heavy Weight Construction. For sizes 2" I.D. thru 12" I.D., Proco will only offer these items with 300 lb. drilling and are denoted by Q-242-HW. All Q-240-HW units will only be sold with control units.*

2. *Movements shown in the above tables are non-concurrent.*

3. *Calculation of Thrust (Thrust Factor). When expansion joints are installed in the pipeline, the static portion of the thrust is calculated as a product of the area of the I.D. of the arch of the expansion joint times the maximum pressure (design, test or surge) that will occur in the line. The result is a force expressed in pounds.*
Take design, surge or test pressure X thrust factor to calculate end thrust.

"Effective Area"

Thrust Factor=

$T = \frac{\pi}{4}(D)^2, (P)$

T= Thrust
P= PSI (Design, Test or Surge)
D= Arch I.D.

4. *Pressure rating is based on 170°F operating temperature. The pressure rating is reduced at higher temperatures.*

5. *Pressures shown at maximum "operating pressure". Test pressure is 1.5 times "operating pressure". Burst pressure is 4 times "operating pressure". If factory hydro-test is required, an additional joint per size must be purchased and tested. Once hydro-tested this joint may not be sent to field for installation as the beaded end will have taken a (compressed) set and can not be reused.*

6. *Vacuum rating is based on neutral installed length, without external load. Products should not be installed in extension for vacuum applications. Flattening of the arch in extended mode will cause the arch to collapse.*

7. *Style 242A/NN (neoprene elastomer only) expansion joints 1.0" I.D. thru 12" I.D. are available with tapped (threaded) holes and must be specified at time of order.*

8. *In addition to standard 150 lb. drilled flanges, Proco can provide expansion joints listed above in 300 lb. drilling, BS-10 (British) drilling, Metric PN10 and PN16 drilling and JIS 10kg/cm drilling.*

Style 240/242 Drilling Chart

Table 4: Flange Drilling

NOMINAL Pipe Size Inch (mm)	American 125/150# Conforms to ANSI B16.1 and B16.5						American 250/300# Conforms to ANSI B16.1 and B16.5					British Standard 10:1962 Conforms to BS 10 Table E				
	Flange Thickness	Flange O.D.	Bolt Circle	No. of Holes	Drilled Hole Size	Threaded Hole Size	Flange Thickness	Flange O.D.	Bolt Circle	No. of Holes	Hole Size	Flange Thickness	Flange O.D.	Bolt Circle	No. of Holes	Hole Size
1 (25)	0.55 (14.0)	4.25 108.0	3.13 79.4	4 4	0.62 15.9	1/2 - 13 UNC	0.63 16.0	4.88 124.0	3.5 88.9	4 4	0.75 19.1	0.59 15.0	4.5 114.0	3.25 82.6	4 4	0.62 15.9
1.25 (32)	0.55 (14.0)	4.63 118.0	3.5 88.9	4 4	0.62 15.9	1/2 - 13 UNC	0.63 16.0	5.25 133.0	3.88 98.4	4 4	0.75 19.1	0.59 15.0	4.75 121.0	3.44 87.3	4 4	0.62 15.9
1.5 (40)	0.55 (14.0)	5.0 127.0	3.88 98.4	4 4	0.62 15.9	1/2 - 13 UNC	0.63 16.0	6.12 156.0	4.50 114.3	4 4	0.88 22.2	0.59 15.0	5.25 133.0	3.88 98.4	4 4	0.62 15.9
2 (50)	0.63 (16.0)	6.0 152.0	4.75 120.7	4 4	0.75 19.1	5/8 - 11 UNC	0.71 18.0	6.50 165.0	5.00 127.0	8 8	0.75 19.1	0.63 16.0	6.0 152.01	4.5 114.3	4 4	0.75 19.1
2.5 (65)	0.71 18.0	7.0 178.0	5.5 139.7	4 4	0.75 19.1	5/8 - 11 UNC	0.71 18.0	7.5 191.0	5.88 149.2	8 8	0.88 22.2	0.71 18.0	6.5 165.0	5.0 127.0	4 4	0.75 19.1
3 (80)	0.71 18.0	7.5 191.0	6.0 152.4	4 4	0.75 19.1	5/8 - 11 UNC	0.79 20.0	8.25 210.0	6.62 168.2	8 8	0.88 22.2	0.71 18.0	7.25 184.0	5.75 146.1	4 4	0.75 19.1
3.5 (90)	0.71 18.0	8.5 216.0	7.0 177.8	8 8	0.75 19.1	5/8 - 11 UNC	0.79 20.0	9.0 229.0	7.25 184.2	8 8	0.88 22.2	0.71 18.0	8.0 203.0	6.5 165.1	8 8	0.75 19.1
4 (100)	0.71 18.0	9.0 229.0	7.5 190.5	8 8	0.75 19.1	5/8 - 11 UNC	0.79 20.0	10.0 254.0	7.88 200.0	8 8	0.88 22.2	0.71 18.0	8.5 216.0	7.0 177.8	8 8	0.75 19.1
5 (125)	0.79 20.0	10.0 254.0	8.5 215.9	8 8	0.88 22.2	3/4 - 10 UNC	0.87 22.0	11.0 279.0	9.25 235.0	8 8	0.88 22.2	0.79 20.0	10.0 254.0	8.25 209.6	8 8	0.75 19.1
6 (150)	0.87 22.0	11.0 279.0	9.5 241.3	8 8	0.88 22.2	3/4 - 10 UNC	0.87 22.2	12.5 318.0	10.62 269.9	12 12	0.88 22.2	0.87 22.2	11.0 279.0	9.25 235.0	8 8	0.88 22.2
8 (200)	0.87 22.0	13.5 343.0	11.75 298.5	8 8	0.88 22.2	3/4 - 10 UNC	0.95 24.0	15.0 381.0	13.0 330.2	12 12	1.00 25.4	0.87 1 22.2	3.25 337.0	11.5 292.1	8 8	0.88 22.2
10 (250)	0.95 24.0	16.0 406.0	14.25 362.0	12 12	1.00 25.4	7/8 - 9 UNC	1.02 26.0	17.5 445.0	15.25 387.4	16 16	1.13 28.6	0.95 24.0	116.0 406.0	14.0 355.6	12 12	0.88 22.2
12 (300)	0.95 24.0	19.0 483.0	17.0 431.8	12 12	1.00 25.4	7/8 - 9 UNC	1.02 26.0	20.5 521.0	17.75 450.9	16 16	1.25 31.8	0.95 24.0	18.0 457.0	16.0 406.4	12 12	1.00 25.4
14 (350)	1.02 26.0	21.0 533.0	18.75 476.3	12 12	1.13 28.6	1 - 8 UNC	1.10 28.0	23.0 584.0	20.25 514.4	20 20	1.25 31.8	1.02 26.0	20.75 527.0	18.5 469.9	12 12	1.00 25.4
16 (400)	1.10 28.0	23.5 597.0	21.25 539.8	16 16	1.13 28.6	1 - 8 UNC	1.18 30.0	25.5 648.0	22.5 571.5	20 20	1.38 34.9	1.10 28.0	22.75 578.0	20.5 520.7	12 12	1.00 25.4
18 (450)	1.18 30.0	25.0 635.0	22.75 577.9	16 16	1.25 31.8	1 1/8 - 7 UNC	1.18 30.0	28.0 711.0	24.75 628.7	24 24	1.38 34.9	1.18 30.0	25.25 641.0	23.0 584.2	16 16	1.00 25.4
20 (500)	1.18 30.0	27.5 699.0	25.0 635.0	20 20	1.25 31.8	1 1/8 - 7 UNC	1.18 30.0	30.5 775.0	27.0 685.8	24 24	1.38 34.9	1.18 30.0	27.75 705.0	25.25 641.4	16 16	1.00 25.4
24 (600)	1.18 30.00	32.06 813.0	29.5 749.3	20 20	1.38 34.9	1 1/4 - 7 UNC	1.18 30.0	36.0 914.0	32.0 812.8	24 24	1.62 41.3	1.18 30.0	32.5 826.0	29.75 755.7	16 16	1.25 31.8
30 (750)	1.26 32.0	38.75 984.0	36.0 914.4	28 28	1.38 34.9	1 1/4 - 7 UNC	1.26 32.0	43.0 1092.0	39.25 997.0	28 28	2.00 50.8	1.26 32.0	39.25 997.0	36.5 927.1	20 20	1.38 34.9

Installation Instructions for Non-Metallic Expansion Joints with Beaded End Flanges

1. Service Conditions:

Make sure the expansion joint rating for temperature, pressure, vacuum*, movements and selection of elastomeric materials match the system requirements. Contact the manufacturer if the system requirements exceed those of the expansion joint selected.
(*Vacuum service for spherical rubber connectors: Vacuum rating is based on neutral installed length. These products should not be installed "extended" on vacuum applications.)

2. Alignment:

Expansion joints are not designed to make up for piping misalignment errors. Piping misalignment should be no more than 1/8" in any direction. Misalignment of an expansion joint will reduce the rated movements and can induce severe stress of the material properties, thus causing reduced service life.

3. Anchoring:

Anchors are required wherever the piping system changes direction. Expansion joints should be located as close as possible to anchor points. If an anchoring system is not used, it is recommended that control rods be installed on the expansion joint to prevent excessive movements from occurring due to pressure thrust of the line.

4. Pipe Support:

Piping must be supported so expansion joints do not carry any pipe weight.

5. Mating Flanges:

Install the expansion joint against the mating pipe flanges and install bolts so that the bolt head is against the expansion joint flange. Flange-to-flange dimension of the expansion joint must match the breech opening*. (*A spherical rubber connector must be compressed 1/8" to 3/16" during installation in order to obtain a correct installed face-to-face dimension.)

Make sure the mating flanges are clean and are a flat-faced type. When attaching beaded end flange expansion joints to raised face flanges, the use of metal gaskets are required to prevent metal flange faces from cutting rubber bead during installation.
Never install expansion joints next to wafer type check or butterfly valves. Serious damage to the rubber flange bead can result due to lack of flange mating surface and/or bolt connection.

6. Bolting Torque:

Table 8 shows the recommended torque values for non-metallic expansion joints with beaded end type-flanges: Tighten bolts in stages by alternating around the flange. Use the recommended torque values in Table 8 to achieve a good seal. Never tighten an expansion joint to the point that there is metal-to-metal contact between the expansion joint flanges and the mating flanges. A slight bulge in the rubber beaded end should create a flush tight seal.
Note: Torque values are approximate due to mating flange surfaces, installation offsets, operating pressures and environmental conditions.

7. Storage:

Ideal storage is in a warehouse with a relatively dry, cool location. Store flanges face down on a pallet or wooden platform. Do not store other heavy items on top of the expansion joints. Ten year shelf life can be expected with ideal conditions. If storage must be outdoors, place on a wooden platform and joints should not be in contact with the ground. Cover with a tarpaulin.

8. Large Joint Handling:

Do not lift with ropes or bars through the bolt holes. If lifting through the bore, use padding or a saddle to distribute the weight. Make sure cables or forklift tines do not contact the rubber. Do not let expansion joints sit vertically on the edges of the flanges for any period of time.

9. Additional Tips:

A. Do not insulate over a non-metallic expansion joint. This facilitates inspection of the tightness of the joint bolting.
B. It is acceptable (but not necessary) to lubricate the expansion joint flanges with a thin film of graphite dispersed in glycerin or water to ease disassembly at a later time.
C. Do not weld in the near vicinity of a non-metallic joint.
D. If expansion joints are to be installed underground, or will be submerged in water, contact manufacturer for specific recommendations.
E. If the expansion joint will be installed outdoors, make sure the cover material will withstand ozone, sunlight, etc.
F. Check the tightness of lead-free flanges two or three weeks after installation and retighten if necessary.

Warning: Expansion joints may operate in pipelines or equipment carrying fluids and/or gasses at elevated temperature and pressures and may transport hazardous materials. Precautions should be taken to protect personnel in the event of leakage or splash. Rubber joints should not be installed in areas where inspection is impossible. Make sure proper drainage is available in the event of leakage when operating personnel are not available.

Installation Instructions for Non-Metallic Expansion Joints with Beaded End Flanges

Table 8:	Bolt-Torque				
Nominal Pipe Size Expansion Joint I.D. Inch /(mm)	Step 1 FT-LBS (Nm)	Rest	Step 2 FT-LBS (Nm)	Rest	Step 3 FT-LBS (Nm)
1 (25)	18 (25)	30 Min	30 (40)	60 Min	45-60 (60-80)
1.25 (32)	18 (25)	30 Min	30 (40)	60 Min	45-60 (60-80)
1.5 (40)	18 (25)	30 Min	30 (40)	60 Min	45-60 (60-80)
2 (50)	18 (25)	30 Min	30 (40)	60 Min	45-60 (60-80)
2.5 (65)	18 (25)	30 Min	35 (50)	60 Min	50-60 (70-80)
3 (80)	25 (35)	30 Min	45 (60)	60 Min	60-75 (80-100)
3.5 (90)	25 (35)	30 Min	45 (60)	60 Min	60-75 (80-100)
4 (100)	25 (35)	30 Min	45 (60)	60 Min	60-75 (80-100)
5 (125)	25 (35)	30 Min	45 (60)	60 Min	60-75 (80-100)
6 (150)	30 (40)	30 Min	50 (70)	60 Min	60-75 (80-100)
8 (200)	30 (40)	30 Min	50 (70)	60 Min	60-75 (80-100)
10 (250)	30 (40)	30 Min	50 (70)	60 Min	75-85 (100-115)
12 (300)	30 (40)	30 Min	50 (70)	60 Min	75-85 (100-115)
14 (350)	30 (40)	30 Min	60 (80)	60 Min	75-95 (110-130)
16 (400)	30 (40)	30 Min	60 (80)	60 Min	75-95 (110-130)
18 (450)	30 (40)	30 Min	60 (80)	60 Min	90-95 (120-130)
20 (500)	30 (40)	30 Min	65 (90)	60 Min	95-185 (130-250)
24 (600)	30 (40)	30 Min	65 (90)	60 Min	95-185 (130-250)
30 (750)	30 (40)	30 Min	65 (90)	60 Min	95-220 (130-300)

Note: Bolt torque based on new bolts and nuts

Right: Flanges with correct ID help prevent damage to rubber.

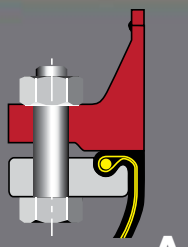

Wrong: Insure matting flanges I.D. is flush with rubber.

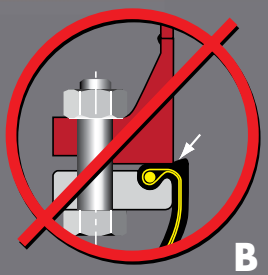

Right: Weld neck flanges with correct ID prevent damage to rubber.

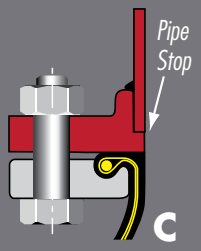

Wrong: Uneven end of pipe can cause damage to rubber.

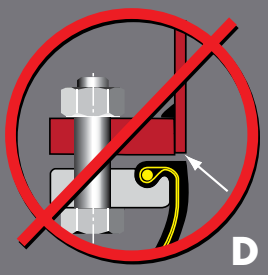

Right: In case of B, D, F an additional metal gasket can be used to prevent damage to rubber.

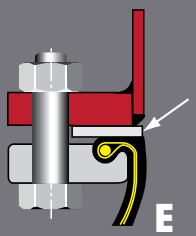

Wrong: Inner edge of flanges damages rubber.

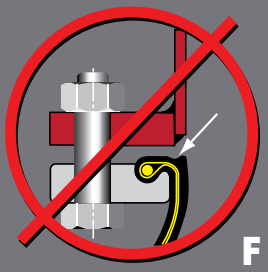

Right: Well rounded smooth edge prevents damage to rubber.

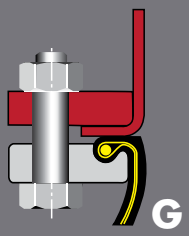

Tighten opposing nuts/bolts gradually according to the following sequence

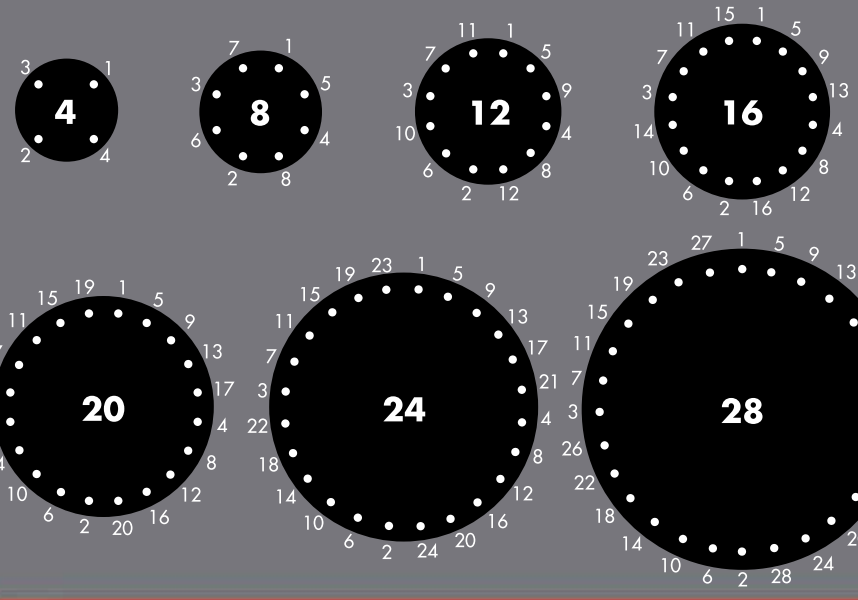

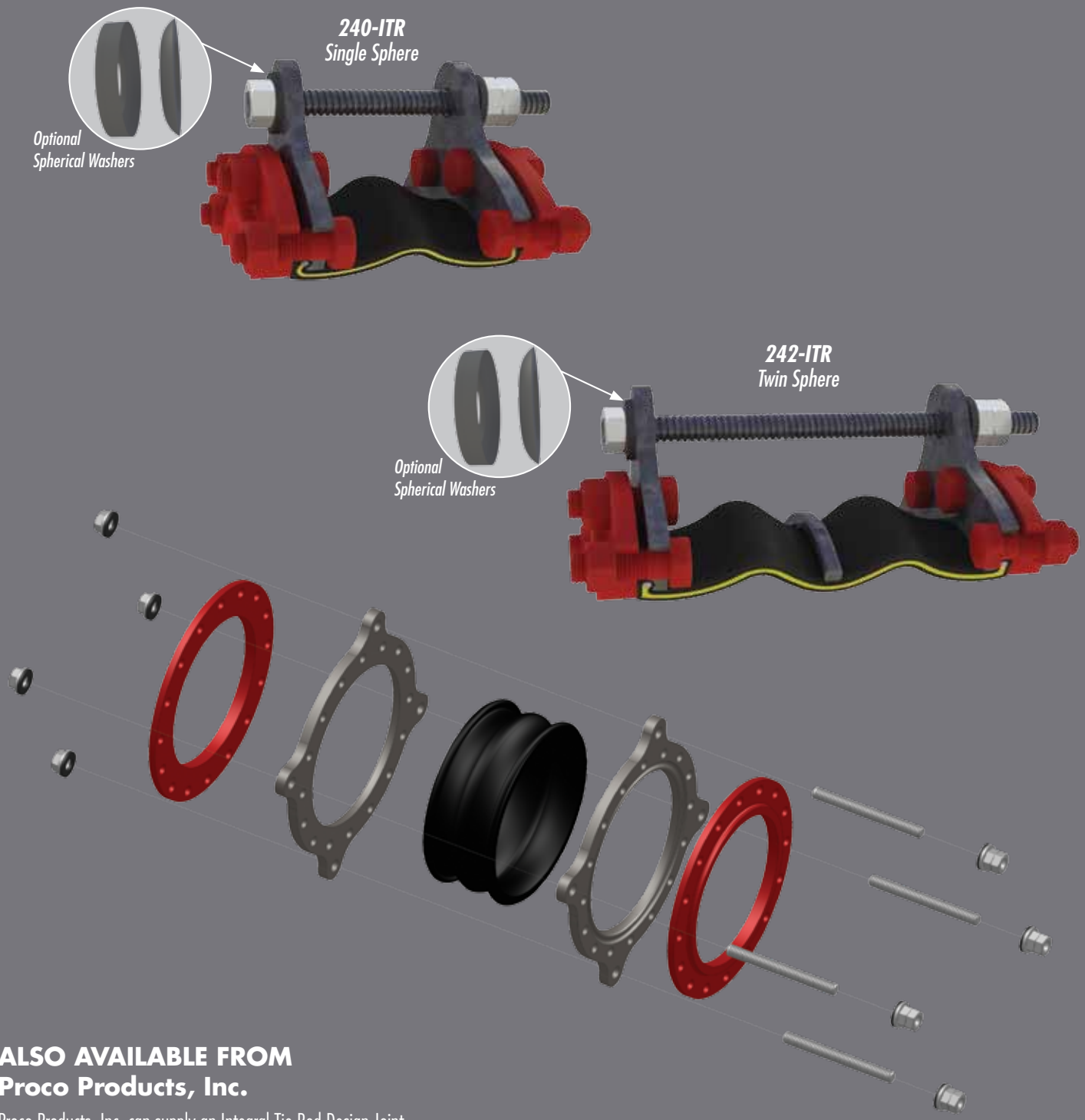

ALSO AVAILABLE FROM
Proco Products, Inc.

Proco Products, Inc. can supply an Integral Tie Rod Design Joint when space prohibits use of typical rod designs.

PROCO PRODUCTS, INC.

2431 North Wigwam Dr. (95205)
P.O. Box 590 • Stockton, CA
95201-0590 • USA

Toll-Free Phone: (800) 344-3246
Facsimile: (209) 943-0242
(209) 943-6088
email: sales@procoproducts.com
website: http://www.procoproducts.com

NATIONWIDE AND CANADA

INTERNATIONAL

American Water Works Association

IDCO Industrial Distributor Co-op

NAHAD Charter Listed Member — Safety · Quality · Reliability

Fluid Sealing Association FSA

Water Environment Federation® — Preserving & Enhancing the Global Water Environment — MEMBER

REPRESENTED BY:

Revised 3/11

CalgonCarbon	HOSE FITTINGS MATERIAL SPECIFICATION	SPEC NO:
	UNIVERSAL HOSE COUPLING - MALLEABLE IRON	32.40

SAP PART NUMBER:

CCC DRAWING NUMBER:

MATERIAL: Universal Hose Coupling, Malleable iron, male pipe thread on one end with other end for connecting to universal coupling.

RATING: 90 psig @ 140 DEG. F.

MANUFACTURER: Chicago Pneumatic, or equal.

SIZES:
1/4" - C-36844Y
3/8" - C-36843Y
1/2" - C-36842Y
3/4" - C-36841Y
1" - C-36840Y

NOTE: Above model number includes one standard type rubber gasket No. C-101158Y for air service. For water service use neoprene gasket No. C-101160Y.

Issue Date: Revision Date:

Approved by Joseph P. McMahon on 10/30/98

HOSE END

Ductile Iron (machined serrations)

hose size	part number	list each
3/8	UH-38	7.98
1/2	UH-2	4.99
5/8	UH-58	7.61
3/4	UH-3	5.15
1	UH-4	6.88

Brass (machined serrations)

3/8	UHB-38	–
1/2	UHB-2	12.60
5/8	UHB-58	–
3/4	UHB-3	14.49
1	UHB-4	18.59

316 Stainless (machined serrations)

1/2	UHSS-2	43.47
3/4	UHSS-3	36.71
1	UHSS-4	40.57

FEMALE NPT

Ductile Iron

npt size	part number	list each
3/8	UF-38	6.88
1/2	UF-2	6.30
3/4	UF-3	5.93
1	UF-4	7.72

Brass

3/8	UFB-38	–
1/2	UFB-2	–
3/4	UFB-3	–
1	UFB-4	–

316 Stainless

1/2	UFSS-2	44.71
3/4	UFSS-3	38.75
1	UFSS-4	41.73

MALE NPT

Ductile Iron

npt size	part number	list each
3/8	UM-38	6.88
1/2	UM-2	5.72
3/4	UM-3	6.09
1	UM-4	6.83

Brass

3/8	UMB-38	–
1/2	UMB-2	–
3/4	UMB-3	–
1	UMB-4	–

316 Stainless

1/2	UMSS-2	44.71
3/4	UMSS-3	38.75
1	UMSS-4	41.73

BLANK END

Ductile Iron

size	part number	list each
All	UB	9.82

Brass

All	UBB	–

THREE WAY

Ductile Iron

size	part number	list each
All	UTW	17.85

Brass

All	UTWB	–

UNIVERSAL WASHER

Nitrile

size	part number	list each
All	UG	0.53

Never use Universal Washers in UniversaLock Couplings

SAFETY CLIP

size	part number	list each
All	SC	0.26

TWO-BOLT UNIVERSAL CLAMP

Ductile Iron

hose o.d. min to max	part no.	list each
3/4 to 15/16	UC-2	5.78
1 to 1-1/4	UC-3	5.83
1-1/4 to 1-17/32	UC-4	10.08

DISTRIBUTOR AUTHORIZATION

Safety is of paramount concern to everyone. Due to the volatile nature of compressed air, and in accordance with our ISO 9000 quality system, we reserve the right to restrict sales of our UniversaLock® Couplings to only those distributors authorized by Campbell Fittings.

Please contact our customer service department for more information.

HOSE END

Ductile Iron (machined serrations)

hose size	part number	list each
1/2	ULH-2	19.10
3/4	ULH-3	19.10
1	ULH-4	19.10

MALE END

Ductile Iron

npt size	part number	list each
1/2	ULM-2	19.10
3/4	ULM-3	19.10
1	ULM-4	19.10

FEMALE END

Ductile Iron

npt size	part number	list each
1/2	ULF-2	19.10
3/4	ULF-3	19.10

UNIVERSALOCK WASHER

Nitrile

size	part number	list each
All	ULW	2.13

Never use UniversaLock Washers in standard Universal Couplings

CalgonCarbon	HOSE FITTINGS MATERIAL SPECIFICATION	SPEC NO:
	QUICK DISCONNECT MALE ADAPTER - ALUMINUM	32.60

SAP PART NUMBER:

CCC DRAWING NUMBER:

MATERIAL: Quick disconnect male adapter, Aluminum, male NPT on one end with other end for connecting to quick disconnect female coupler.

RATING: 150 psig @ 100 DEG. F.

MANUFACTURER: Dixon, Ever-Tite

SIZES: 1/2" thru 4"

MODELS: Dixon "Andrews" line, type F, Ever-Tite Part F, or equal.

Issue Date: 04/16/90 Revision Date: 09/15/99

Approved by Matthew R. McGowan on 09/27/99

"EZ BOSS-LOCK"

No more fumbling with clamps, wire, clips or pins . .
Just close the handles and the locking mechanism is engaged.

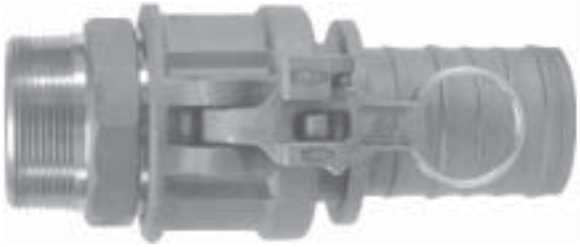

Unlike other safety couplings . . .

- **The EZ Boss-Lock is extremely EASY TO OPEN!!!** *The release lever is under your thumb when you want to open the fitting.* **ERGONOMIC.**
- **The EZ Boss-Lock is resistant to accidental disconnection when being dragged.** *The release lever opens in the direction opposite to the cam arm, so movements that tend to open the release lever also tend to close the cam arm!!!*
- **The EZ Boss-Lock alerts you if it is not properly engaged.** *If the rotating lever is not flush with the handle, it is not properly engaged.*
- **The EZ Boss-Lock has no sliding pins to jam**. *The EZ Boss-Lock's rotating action helps keep the locking device free of debris.*
- **The EZ Boss-Lock has no sliding pins to pop open.** *The EZ Boss-Lock is designed to protect critical parts from impact and to withstand rugged use.*
- **The EZ Boss-Lock can be supplied with special shanks custom suited to your needs.** *The EZ Boss-Lock is available with Swaged and PF shank designs, for hard to couple chemical hoses.*
- **The EZ Boss-Lock cam arm assemblies are made of investment cast Stainless Steel with plated Carbon Steel pull rings.**
- **The EZ Boss-Lock is easier to insert into the hose tubes on Tank Trucks, and easier to use in restricted spaces.** *This is due to the smaller maximum O.D. and a more snag free exterior.*
- **The EZ Boss-Lock Cam Arm assemblies can be retrofitted onto Undamaged Stainless Steel Boss-Lock.** *This allows you to protect your investment in Stainless Steel Boss-Lock couplings while you upgrade.*
- **The EZ Boss-Lock is Made in the USA.**

All measurements in this brochure are for reference only and are subject to change. Where dimensions are critical, please consult the factory. For products not shown or special application questions, please consult the factory.

CAM & GROOVE LINE DRAWINGS

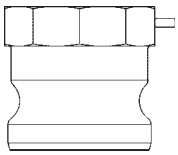

TYPE A
(male adapter x female NPT)

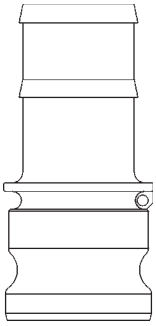

TYPE E
(male adapter x hose shank)

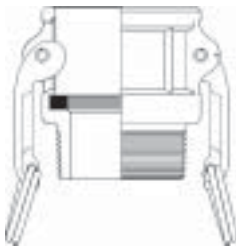

TYPE B
(female coupler x male NPT)

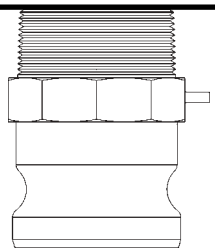

TYPE F
(male adapter x male NPT)

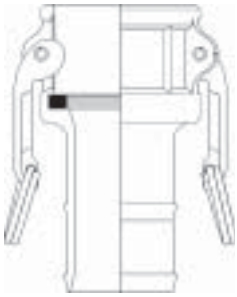

TYPE C
(female coupler x hose shank)

TYPE DC *
(dust cap)

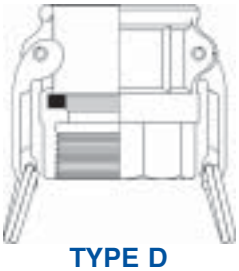

TYPE D
(female coupler x female NPT)

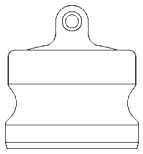

TYPE DP *
(dust plug)

NOTE: Line drawings are representative of the Dixon / "Andrews" line of cam and groove.

** Dust Caps and Dust Plugs are NOT to be used in Pressure Applications for safety and environmental reasons.*

WARNING:
SAFETY ALERT
UNDER NO CIRCUMSTANCES should Cam and Groove couplings be used for compressed air or steam service!

6 Dixon "Andrews" / "Boss-Lock" Type F Adapters

Male Adapter x Male NPT

Size	Aluminum Part #	Aluminum Hard Coat Part #	Brass Part #	Unplated Malleable Iron Part #	Plated Malleable Iron Part #	Stainless Steel Part #
1/2"	***50-F-AL***	***----***	***50-F-BR***	***----***	***----***	***50-F-SS***
3/4" x 1/2"	***7550-F-AL***	***----***	***7550-F-BR***	***----***	***----***	***7550-F-SS***
3/4"	***75-F-AL***	***----***	***75-F-BR***	***----***	***75-F-PM***	***75-F-SS***
1"	***100-F-AL***	***----***	***100-F-BR***	***----***	***100-F-PM***	***100-F-SS***
1 1/4"	***125-F-AL***	***----***	***125-F-BR***	***----***	***----***	***125-F-SS***
1 1/2"	***150-F-AL***	***150-F-ALH***	***150-F-BR***	***150-F-MI***	***150-F-PM***	***150-F-SS***
2"	***200-F-AL***	***200-F-ALH***	***200-F-BR***	***200-F-MI***	***200-F-PM***	***200-F-SS***
2 1/2"	***250-F-AL***	***----***	***250-F-BR***	***----***	***250-F-PM***	***250-F-SS***
3"	***300-F-AL***	***300-F-ALH***	***300-F-BR***	***300-F-MI***	***300-F-PM***	***300-F-SS***
4"	***400-F-AL***	***400-F-ALH***	***400-F-BR***	***400-F-MI***	***400-F-PM***	***400-F-SS***
5"	***500-F-AL***	***----***	***----***	***----***	***----***	***----***
6"	***600-F-AL***	***600-F-ALH***	***600-F-BR***	***----***	***600-F-PM***	***600-F-SS***
8" AND*	***800-F-AL***	***----***	***----***	***----***	***----***	***----***
8" BL*	***801-F-AL***	***----***	***----***	***----***	***----***	***----***

* "Andrews" and "Boss-Lock" Cam and Groove Couplings **DO NOT INTERCHANGE IN THE 8" SIZE.**

SAFETY ALERT

- The 8" "Boss-Lock" were designed to interchange with 8" Cam & Groove Couplings manufactured by P.T. Coupling.

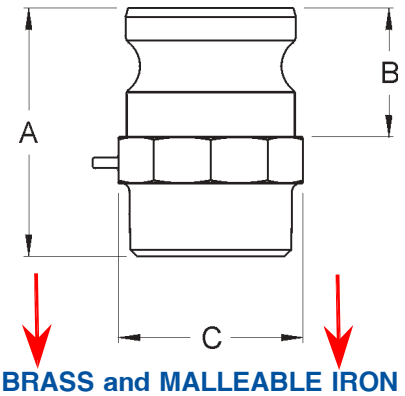

ALUMINUM, BRASS and MALLEABLE IRON DIMENSIONS

Size	1/2"	3/4 x 1/2"	3/4"	1"	1 1/4"	1 1/2"	2"	2 1/2"	3"	4"	5"	6"	8" AND	8" BL
A Overall Length	2 1/8	2 7/16	2 1/16	2 3/8	2 15/16	3 5/32	3 17/32	4 3/8	4 15/32	4 21/32	4 1/2	5 17/32	6 15/16	6 3/8
B Adapter Length	1	1	1	1 5/16	1 9/16	1 5/8	1 7/8	1 15/16	2	2 1/16	2 5/16	2 1/4	3 9/16	3 1/16
C Distance Across Flats	1	1 5/16	1 3/8	1 1/2	1 7/8	2 1/4	2 11/16	3 1/4	3 3/4	5	6 1/2*	8 1/32*	10 5/8*	10 5/8*

STAINLESS STEEL DIMENSIONS

Size	1/2"	3/4 x 1/2"	3/4"	1"	1 1/4"	1 1/2"	2"	2 1/2"	3"	4"	5"	6"	8" AND	8" BL
A Overall Length	2 1/8	2 1/4	2 1/16	2 23/32	2 15/16	3 1/8	3 21/32	4 5/16	4 17/32	4 59/64	------	4 15/16	------	------
B Adapter Length	1	1	1	1 5/16	1 9/16	1 5/8	1 7/8	1 15/16	2	2 1/16	------	2 1/4	------	------
C Distance Across Flats	1	1 5/16	1 5/16	1 1/2	1 7/8	2 1/4	2 11/16	3 1/4	3 3/4	5	------	7 3/4*	------	------

* Distance Over Lugs

CalgonCarbon	CARBON STEEL PIPE MATERIAL SPECIFICATION	SPEC NO:
	CARBON STEEL PIPE WITH STEEL FITTINGS	C02

SAP PART NUMBER:

CCC DRAWING NUMBER:

MATERIAL:
Carbon steel pipe with steel fittings

RATING:
125 PSIG @ 350 DEG. F, 200 PSIG @ 150 DEG. F, Includes corrosion allowance of 0.050" min.

CONSTRUCTION:
Screwed for 1 1/2" and smaller, welded and/or flanged for 2" and larger.

PIPE:
Carbon steel, ASTM A53, Grade B: Threaded, schedule 80, seamless, 1 1/2" and smaller, plain end, schedule 40, seamless, 2" to 10", Plain end, 3/8" wall, seamless, 12" and above.

FITTINGS:
3000 lb ANSI B16.11, forged steel, threaded ends, 1 1/2" and smaller. Schedule 40, ANSI B16.9, ASTM A234, Grade WPB, carbon steel, butt welding ends, 2"-12". 3/8" wall, ANSI B16.9, ASTM A234, Grade WPB, carbon steel, butt welding ends, 14" to 24", or 125# flanged cast iron elbows and tees, ASTM A126, Class B with 125# ANSI B16.1 drilling with dimensions per ANSI A21.10 (AWWA C110). Location of tapped holes for drains shall be in accordance with ANSI B16.1. Use thread-o-lets on branch connections 1-1/2" and smaller, use stub-in or reducing tee connections for 2" and above.

UNIONS:
3000 lb forged steel, ASTM A105, Grade 2, integral steel seat, ground joint, threaded ends.

FLANGES:
150 lb ANSI B16.5, ASTM A105 forged carbon steel, slip-on, weld neck, or MSS lap joint/stub end for 2" and larger, threaded 1 1/2" and smaller. Where bolting to flat face cast iron flanges, flanges shall be furnished with a flat face. Others shall be raised face.

Issue Date: 12/01/89 Revision Date: 03/25/2008

Approved by Joseph P. McMahon on 03/25/2008

CalgonCarbon	CARBON STEEL PIPE MATERIAL SPECIFICATION	SPEC NO:
	GALVANIZED CARBON STEEL PIPE	C13

SAP PART NUMBER:

CCC DRAWING NUMBER:

MATERIAL: Galvanized carbon steel pipe with galvanized iron or steel fittings.

RATING: 275 PSIG @ -20 to 150 DEG. F
215 PSIG @ 350 DEG. F Includes corrosion allowance of 0.050" minimum.

CONSTRUCTION: Screwed 3" and smaller
No bending permitted

PIPE: Galvanized carbon steel, ASTM A53:
Threaded, schedule 40, butt welded seam 2" and smaller.
Threaded schedule 40, butt welded seam or seamless, 2 1/2" and 3".

FITTINGS: 150 lb., ANSI B16.3, ASTM A197, galvanized malleable iron, banded, threaded ends.

UNIONS: 150 LB., ASTM A197, galvanized malleable iron, integral iron seat, ground joint, threaded ends.

FLANGES: 150 lb., ANSI B16.5, ASTM A105, Grade 1, galvanized forged carbon steel, threaded.

Where bolting to flat face cast iron flanges, steel flanges shall be furnished with a flat face. Others shall be raised face

ORIFICE FLANGES: Instrument item.

BOLTING: See attached Fastener Specification F03.

GASKETS: See attached Gasket Specification G02.

Issue Date: 12/01/89 Revision Date: 04/10/92

Approved by Gerald Kirner on 11/09/2005

CalgonCarbon	FASTENER MATERIAL SPECIFICATION	SPEC NO:
		F03

SAP PART NUMBER:

CCC DRAWING NUMBER:

MATERIAL:
Hex Bolt, low or medium carbon steel, ASTM A307 Grade B.
1/4" through 4" Proof load 55,000 psi.
1/4" through 4" Tensile strength: 60,000 psi minimum, 100,000 psi maximum.
Zinc plated.
Threads to be UNC unless specified UNF bolts to include (1) heavy hex nut, ASTM A563, Grade A.

Issue Date: 01/01/89 Revision Date: 07/16/2001

Approved by Matthew R. McGowan on 07/16/2001

CalgonCarbon	GASKET MATERIAL SPECIFICATION	SPEC NO:
	1/8" EPDM RUBBER (FDA)	G-46

SAP PART NUMBER:

CCC DRAWING NUMBER:

MATERIAL:	EPDM, Color: Off-White, 1/8" thick.
RATING:	Durometer (Shore A +/- 5): 60
MANUFACTURER:	Garlock or equal.
SIZES:	Pipe gasket flange dimension per ANSI B16.21
MODELS:	Garlock- 8316 or equal.
SPECIFICATIONS:	Meets FDA Requirements

SERVICE CONDITIONS:
Temperature: -40 thru 300 degrees F. Pressure: 250 psig

Issue Date: 03/12/2008 Revision Date: 03/25/2008

Approved by Joseph P. McMahon on 03/26/2008

CalgonCarbon	PRESSURE INDICATING GAGES MATERIAL SPECIFICATION	SPEC NO:
	PI-213 TO PI-218; PI-448 TO PI-560	IS008

SAP PART NUMBER:

CCC DRAWING NUMBER:

MATERIAL: As listed below:

Case:	4-1/2" size, stainless steel, steel, brass, aluminum and phenol.
Socket:	1/2" NPT male bottom connection, stainless steel.
Dial:	White litho with black figures.
Pointer:	Balanced micrometer.
Bourdon Tube:	Stainless steel.
Movement:	Stainless steel and Delrin.
Accuracy:	1% of full range.
Liquid Fill:	None

RATING: Temperature range of -4 DEG. F. to +150 DEG. F.

MANUFACTURER: Ashcroft, WIKA

MODELS: Ashcroft "Duragauge" - 1279, WIKA 232.34

NOTES: As listed below:

1. Spec. IS008 replaces Spec. No. 7209A-CS263
2. This specification replaces the Specs. listed below.

RANGE: As listed below:

ITEM NO.	SCALE RANGE	REPLACES THESE ITEMS	
PI-213	0-15 PSIG	PI-101,7	SPEC. No. 7209A-CS161,2 (IS001,2)
PI-214	0-30 PSIG	PI-102,8	SPEC. No. 7209A-CS161,2 (IS001,2)
PI-215	0-60 PSIG	PI-103,9	SPEC. No. 7209A-CS161,2 (IS001,2)
PI-216	0-100 PSIG	PI-104,10	SPEC. No. 7209A-CS161,2 (IS001,2)
PI-217	0-160 PSIG	PI-105,11	SPEC. No. 7209A-CS161,2 (IS001,2)
PI-218	0-200 PSIG	PI-106,12	SPEC. No. 7209A-CS161,2 (IS001,2)
PI-448	0-300 PSIG		
PI-557	0-300 PSIG *		
PI-449	0-400 PSIG		
PI-556	0-400 PSIG *		
PI-450	0-800 PSIG		
PI-558	0-800 PSIG *		
PI-559	0-1500 PSIG		
PI-560	0-1500 PSIG *		*With Steam Coil Siphon

GENERAL REQUIREMENTS:

Tag each assembly with Item No. and Service.

Issue Date: 01/01/89 Revision Date: 12/16/2005

Approved by Gerald Kirner on 03/21/2006

Bourdon Tube Pressure Gauges
Solid-Front Process Gauge - SS Wetted Parts
Type 232.34 - Dry Case
Type 233.34 - Liquid-filled Case

Applications

- For applications with high dynamic pressure pulsations or vibration a liquid filled case and socket restrictor are available
- Suitable for corrosive environments and gaseous or liquid media that will not obstruct the pressure system
- Process industry: chemical/petrochemical, power stations, mining, on and offshore, environmental technology, mechanical engineering and plant construction

Special features

- Excellent load-cycle stability and shock resistance
- Solid front thermoplastic case
- Positive pressure ranges to 30,000 psi
- All lower mount connection gauges are factory prepared for liquid filling

(LBM: must install membrane prior to field filling)

Bourdon Tube Pressure Gauge Model 232.34

Standard Features

Design
ASME B40.100

Sizes
4½" & 6" (115 & 160 mm) dial size

Accuracy class
± 0.5% of span (ASME B40.100 Grade 2A)
± 1.0% of span (ASME B40.100 Grade 1A)
(for 20,000 psi range and above)

Ranges
Vacuum / Compound to 200 psi
Pressure from 15 psi to 30,000 psi
or other equivalent units of pressure or vacuum

Working pressure

Steady:	full scale value
Fluctuating:	0.9 x full scale value
Short time:	1.5 x full scale value

Operating temperature
Ambient: -40°F to +150°F (-40°C to +66°C) - dry
-4°F to +150°F (-20°C to +66°C) - glycerine filled
-40°F to +150°F (-40°C to +66°C) - silicone filled
Medium: max. +212°F (+100°C) (See Note 1 on reverse)

Temperature error
Additional error when temperature changes from reference temperature of 68°F (20°C) ±0.4% for every 18°F (10°C) rising or falling. Percentage of span.

Weather protection
Weather resistant (NEMA 3 / IP54) - without membrane
Weather tight (NEMA 4X / IP65) - dry case or filled case with membrane installed

Pressure connection
Material: 316L stainless steel
Lower mount (LM) or lower back mount (LBM)
1/4" or 1/2" NPT with M4 internal tap

Restrictor
Material: Stainless steel (0.6 mm)

Bourdon tube
Material: 316L stainless steel
≤ 1,000 PSI: C-type
≥ 1,500 PSI: helical type

Movement
Stainless steel. Internal stop pin at 1.3 x full scale
Overload and underload stops - standard
Dampened movement - optional

Dial
White aluminum with black lettering, stop pin at 6 o'clock

Pointer
Black aluminum, adjustable

Case
Black fiberglass-reinforced thermoplastic (POCAN)
Solid front, blowout back
Turret-style case with built in rear flange lugs

WIKA
Part of your business

Window
Clear acrylic with Buna-N gasket

~~Case filling~~
~~Glycerine 99.7% - Type 233.34~~

Cycle testing
400,000 - 2,000,000* cycles, depending upon pressure range

* Liquid filled

Note 1: The maximum continuous media temperature for this gauge is 212°F. However, higher temperatures can be maintained safely for short term exposure per table to the right. The user should consider temperature error and gauge component degradation when exposing gauge to any media or ambient temperature above 212°F. For continuous use in either ambient or media temperatures above 212°F, a diaphragm seal or other heat dissipating means is recommended. Consult factory for technical inquiries and application assistance.

~~Optional extras~~

- ~~Silicone dampened movement~~
- ~~Panel mounting adaptor kit (field assembled)~~
- ~~Silicone case filling~~
- ~~Halocarbon case filling~~
- ~~Cleaned for oxygen service~~
- ~~Instrument glass or safety glass window~~
- ~~Drag pointer (maximum reading indicator)~~
- ~~Alarm contacts switches (magnetic or inductive)~~
- ~~Special process connections~~
- ~~Custom dial layout~~
- ~~External zero adjustment~~

Short term, intermittent maximum media temperature limits
(Optional glass window required for all these temperatures)

500°F (260 °C) -	Dry Gauge
250°F (130°C) -	Liquid filled gauge
300°F (150°C) -	Dampened movement gauge

Dimensions

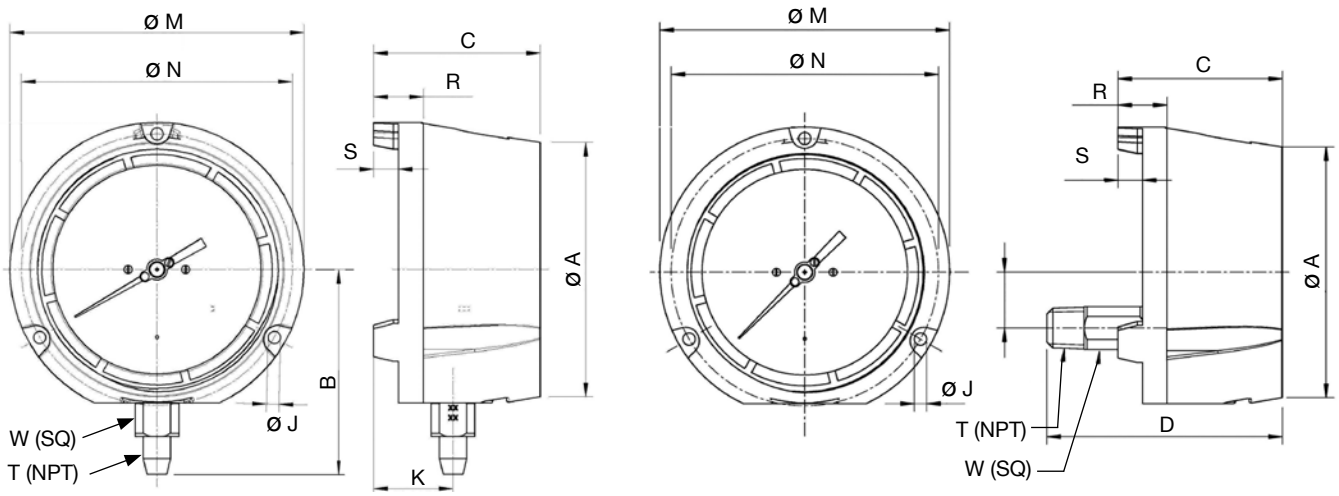

Size		A	B	C	D	J	K	L	M	N	R	S	T	W	Weight[1]	
4.5”	mm	128	103	84	120.3	6.3	40	28.5	148	136.5	25	12.5		22	2 lb.	dry
	in	5	4.06	3.31	4.74	0.248	1.57	1.12	5.83	5.37	0.99	0.49	1/2”	0.87	3 lb.	filled
6”	mm	164	122.5	88	123.4	7.1	40.2	28.5	190	177.8	25.4	12.7		22	3 lb.	dry
	in	6.46	4.82	3.46	4.86	0.28	1.58	1.12	7.5	7	1	0.5	1/2”	0.87	4 lb.	filled

[1] Weight without optional accessories

Ordering information
Pressure gauge model / Nominal size / Scale range / Size of connection / Optional extras required
Specifications and dimensions given in this leaflet represent the state of engineering at the time of printing.
Modifications may take place and materials specified may be replaced by others without prior notice.

WIKA Instrument Corporation
1000 Wiegand Boulevard
Lawrenceville, GA 30043
Tel (770) 513-8200 Toll-free 1-888-WIKA-USA
Fax (770) 338-5118
E-Mail info@wika.com
www.wika.com

CalgonCarbon	RUPTURE DISKS MATERIAL SPECIFICATION	SPEC NO:
	PSE-155 TO PSE-157;PSE-252;PSE-301 TO PSE-306;PSE-577;PSE-580	IS015

SAP PART NUMBER:

CCC DRAWING NUMBER:

MATERIAL: Impervious graphite.

Type: Standard.
Vacuum Support: Furnish for disks with bursting pressure of 15 psig or less.

FLANGES: 150 # ANSI RF or FF companion flanges (furnished by others)

MANUFACTURER: Zook, BS&B or equal.

SIZES: As listed below:

ITEM NO.	SIZE	BURSTING PRESSURE
PSE-155	1"	75 PSIG +/- 5%
PSE-156	1-1/2"	75 PSIG +/- 5%
PSE-157	2"	75 PSIG +/- 5%
PSE-170	2"	125 PSIG +/- 5%
PSE-252	3"	75 PSIG +/- 5%
PSE-301	3"	35 PSIG +/- 5%
PSE-302	3"	50 PSIG +/- 5%
PSE-303	3"	65 PSIG +/- 5%
PSE-304	3"	87 PSIG +/- 5%
PSE-305	3"	150 PSIG +/- 5%
PSE-306	3"	75 PSIG +/- 5%
PSE-307	3"	100 PSIG +/- 5%
PSE-577	3"	125 PSIG +/- 5%
PSE-580	4"	125 PSIG +/- 5%

MODELS: Zook - Mono Type Disk, BS&B - Monobloc Model MB or equal

SPECIFICATIONS: ASME UD stamp required.

NOTES: As listed below:

1 - Tag with Item No. and Service.
2 - IS015 replaces Spec. No. 7209a-CS172

SERVICE CONDITIONS:
As listed below:

Fluid Under Disks:	Water
Pressure Fluctuation:	Back Pressure:
Temperature:	40 to 150 degrees F.
Operating Pressure:	80% of bursting pressure.
Back Pressure:	Atmospheric.

GENERAL REQUIREMENTS:
As listed Below:

Bursting Pressure:	See table above
Coincident Temperature:	150 degrees F.
Relieving Capacity:	In accordance with ASME

Issue Date: 04/06/90 Revision Date: 08/15/2012

Approved by Joseph P. McMahon on 08/15/2012

CCC SPEC. IS015
PSE-577

Bulletin no. 6000-3

ZOOK®

Graphite Rupture Disks

ASME CERTIFIED

ISO 9001

ZOOK Enterprises, LLC
16809 Park Circle Drive
Box 419
Chagrin Falls, OH 44022 U.S.A.

Local **440.543.1010**
U.S.A. Toll Free **800.543.1043**
Fax **440.543.4930**
E-Mail **zook@zook.cc**
www.zook.cc

ZOOK Rupture Disks provide many exclusive performance and service benefits. Information contained in this bulletin **should not** be applied to other rupture disks including impervious graphite designs of similar appearance.

ZOOK® Graphite Rupture Disks…

protect equipment and personnel from the effects of overpressurization in static and dynamic pressurized systems. The disk is designed to rupture at a predetermined burst rating when installed in a piping system.

Each disk is made from a single piece of graphite, a high-purity form of carbon, which is impregnated with phenolic resin. The resulting material, called impervious graphite, is impermeable and is resistant to most corrosives.

Easy to install and maintain, disks:

- are tamperproof
- have no springs or moving parts
- mount directly between standard flanges without special holders.

Options and accessories increase the flexibility of standard disks. TFE coated disks offer stick-resistant surfaces. Special gaskets and stainless steel armor are also available. Spacer rings let you replace metal rupture disks without requiring piping modification. For unique applications, our engineering department will work with you to create a custom-designed disk.

ZOOK is the first and largest company in the world committed to manufacturing QUALITY impervious graphite rupture disks, through product innovations and superior service. ZOOK is the first graphite rupture disk manufacturer to earn the ASME Code UD symbol stamp and certificate of authorization. Also, ZOOK's quality management system is certified to ISO 9001 and TÜV standards.

In addition:

- ZOOK offers 1-day shipment of disks with over 100 rating and diameter combinations. Service personnel are also available 24 hours-a-day, 7 days-a-week, 365 days-a-year to handle your emergency shut-down needs
- produces a standard line of graphite disks as small as 1/2" diameter and disks with burst ratings as low as 0.25 psig
- tests disk performance at cryogenic and elevated temperatures

Applications

ZOOK Disks enhance *SAFETY* in chemical, petrochemical, pharmaceutical, food, medical, and related processing systems around the world. Other applications include: storage tanks, tank trailers, rail cars, barges, pressured switchgear, and air conditioning compressors.

ZOOK Disks also increase *system efficiency* by:

- eliminating back pressure effects on overpressure devices in common vent lines
- solving sourcing and cost problems for disks used with highly corrosive fluids
- offering ultra low rated pressure settings
- preventing relief valves from fouling and leaking

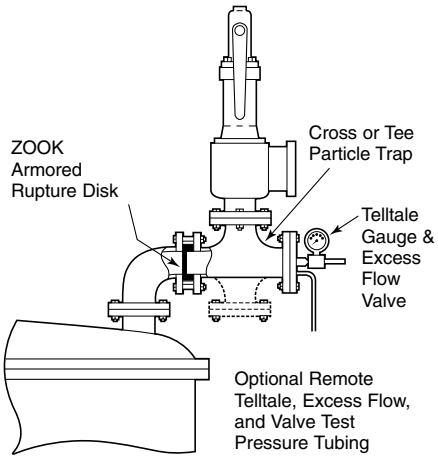

Installation

ZOOK Graphite Rupture Disks fit directly between standard flanges without the need for additional holders.

A flow arrow on each disk indicates proper orientation.

Armor provides additional protection from extraneous stress to the disk resulting from misaligned piping. Armor is standard on selected diameter and burst ratings and is required in fire case and toxic services. See ARMOR, page 7, for more information.

Gaskets should be ring type, non-metallic, relatively soft, and properly sized. See GASKETS, page 8, for more information.

Normal good practice should be followed when making flange connections. Particular attention should be paid to ensure:

- concentric alignment of the disk and gaskets
- uniform cross-tightening of flange bolts
- adequate support of piping to withstand external loading and thrust during blowdown
- protection of personnel and equipment against high velocity open discharge of process material and rupture disk particles

METAL Rupture Disk Installation

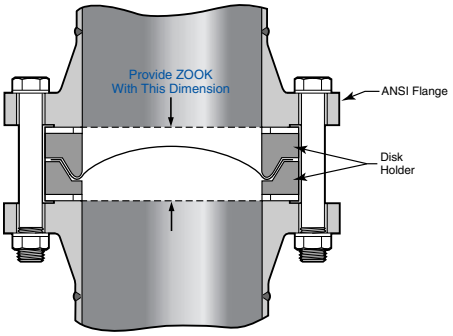

Graphite Rupture Disk Replacement

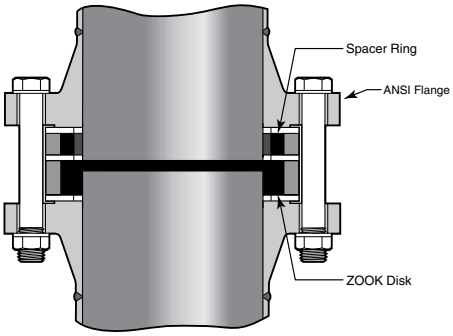

When replacing a metal rupture disk with a ZOOK Graphite Rupture Disk, a graphite lined armored spacer ring can be provided to fill the space of existing flange face-to-face distance, eliminating the need for piping modifications.

Detailed installation instructions are provided with each disk.

MONO Type Disks

the best choice for low and intermediate burst ratings

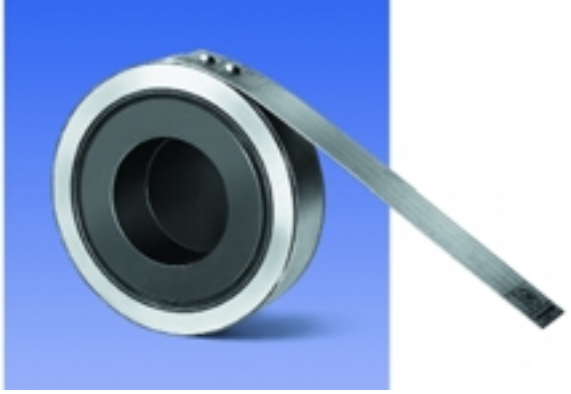

- Sizes 1/2″ thru 24″ diameters
- Designed to fit ANSI Class 150 flanges (Higher ratings to fit Class 300 flanges are furnished in the INVERTED and DUPLEX Type Disks)
- Burst ratings 0.25 to 150 psig
- 0% manufacturing range
- Operating pressures to 90% of the disk's marked burst pressure (Consult ZOOK for operating ratio for burst pressures below 15 psig)
- Temperature ratings –290°F to +700°F (–179°C to +371°C). Maximum temperature rating without insulation is 430°F (221°C) or 700°F (371°C) with insulation. Consult ZOOK for higher temperature ratings. The specified temperature shall be at the disk location at the time when the disk is expected to rupture
- Counterbored side of the disk contacts the process media
- Vacuum supports are available for ratings below 25 psig
- May be configured to withstand high back pressure generated in closed piping systems – request Bak-Pressure™ bulletin
- Stocked MONO Disks, ready for immediate shipment

  Sizes: 1″, 1-1/2″, 2″, 3″, 4″, 6″, 8″ to fit ANSI Class 150 flanges

  Burst Ratings: 10, 15, 20, 25, 30, 40, 50, 75, 100, 125, 150 psig @ 72°F (22°C)

Note: Sizes 6″ and 8″ with burst ratings 125 and 150 psig @ 72°F (22°C) are stocked in INVERTED type

- ASME UD stamping available

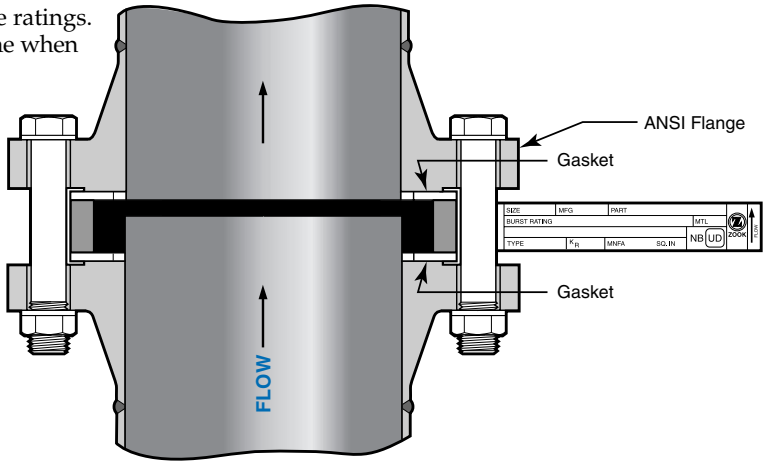

Certified Flow Resistance Factor (K_r)

Support Style	K_r
MONO – no support	0.26
MONO – with bar	2.40
MONO – with cross	5.40
MONO – with ring	6.44
MONO – with plate	15.70

Required Vacuum Support Style for Full Vacuum Service

Size	Burst Rating	Support Style
1″	below 25 psig	MONO – with ring
1-1/2″	below 25 psig	MONO – with bar
2″ - 14″	9 to 25 psig	MONO – with bar
2″ - 14″	5 to below 9 psig	MONO – with cross
2″ - 14″	below 5 psig	MONO – with plate

Specifications – ANSI Class 150

Disk Sizes	Minimum net flow area (MNFA) Sq. inches					Disk Dimensions				Burst Ratings psig	
	Full Bore	Vacuum support style				Diameter		Thickness*			
		Ring	Bar	Cross	Plate	I.D.	O.D.	Standard Disk	Insulated Unit	Min.	Max.
1/2″	0.19	N/A	N/A	N/A	N/A	1/2″	1-3/4″	5/8″	1-3/4″	25	150
3/4″	0.44	N/A	N/A	N/A	N/A	3/4″	2-1/8″	5/8″	1-3/4″	25	150
1″	0.78	0.44	0.60	0.47	0.32	1″	2-1/2″	7/8″	2-1/4″	10	150
1-1/2″	1.76	N/A	1.34	1.05	0.72	1-1/2″	3-1/4″	7/8″	2-1/4″	7	150
2″	3.14	N/A	2.39	1.86	1.30	2″	4″	7/8″	2-1/4″	3	150
3″	7.06	N/A	5.56	4.31	2.95	3″	5-1/4″	7/8″	2-1/4″	2	150
4″	12.56	N/A	10.56	8.81	5.47	4″	6-3/4″	7/8″	2-1/4″	1.5	150
6″	28.27	N/A	22.27	17.27	12.05	6″	8-5/8″	7/8″	2-1/4″	1	100
8″	50.26	N/A	40.26	31.82	21.14	8″	10-7/8″	1-1/8″	2-3/4″	0.50	100
10″	78.53	N/A	63.53	50.78	32.66	10″	13-1/4″	1-1/2″	3-3/8″	0.25	100
12″	113.09	N/A	89.09	69.09	47.24	12″	16″	2″	4-3/8″	0.25	75
14″	137.88	N/A	108.06	83.31	58.07	13-1/4″	17-5/8″	2-1/4″	4-7/8″	0.25	50
16″	182.65	N/A	144.52	112.65	84.49	15-1/4″	20-1/8″	2-1/2″	5-3/8″	0.25	50
18″	233.70	N/A	181.95	153.70	104.31	17-1/4″	21-1/2″	2-3/4″	5-7/8″	0.25	50
20″	291.03	N/A	233.28	184.53	122.49	19-1/4″	23-3/4″	3″	6-3/8″	0.25	40
24″	424.55	N/A	354.80	294.05	190.61	23-1/4″	28-1/8″	3″	6-3/8″	0.25	25

*Standard disk thickness does not include gaskets.
Insulated unit thickness includes all gaskets

Note: Maximum pressure rating of ANSI Class 150 flanges is 290 psig @ 100°F (38°C). The maximum pressure rating is lower at higher temperatures. Reference ASME/ANSI B16.5

Technical Data

Testing Method

Standard disks are rated at the specified burst pressure without applying a Manufacturing Design Range (MDR) by bursting two or more disks to establish burst accuracy. Where higher than room temperature (+40°F to +100°F) service is specified, oven tests can be conducted, or disks can be room temperature tested with compensation made using a temperature curve developed specifically for our disks. (These disks are designated *Chart Compensated Disks.*)
ASME disks are tested at the specified coincident temperature.

ASME Code and Jurisdictional Regulations

Most jurisdictions require ASME Code compliance on Boiler and Pressure Vessel construction. All pressure vessels within the scope of the ASME Code Section VIII, Div. 1 shall be provided with pressure relief devices. It is the responsibility of the ***user*** to ensure that the required devices are properly installed prior to initial operation of the pressure vessels.

If company policy or jurisdictional regulation requires ASME Code compliance, the rupture disk devices used for pressure vessel overpressure protection shall bear the ASME Code UD symbol. The UD marking is the manufacturer's declaration that the device was manufactured in full compliance with the ASME Code.

Disks specified to ASME Code requirements are rated using a 0% MDR unless a special MDR is specified and agreed upon. 0% MDR disks are marked with the specified burst rating. Refer to the certified type for the flow resistance factors (K_r) and the Minimum Net Flow Area (MNFA).

Pressure Ratings and Burst Tolerances

Burst ratings range from 0.25 psig to above 1000 psig for sizes 1/2″ thru 24″. Refer to minimum and maximum values in tables provided for each disk. Standard burst tolerances are:

Pressure Rating psig @ 72°F (22°C)	Burst Tolerance
Above 40	±5%
15 to 40	±2.0 psi
5 to less than 15	±1.0 psi
Above 1 to less than 5	±0.75 psi
1 or less	+0.75 psi /−0

Consult ZOOK for tighter burst tolerance

Corrosion Resistance

Depending on the type and options, disks handle almost any corrosive except free fluorine. See CORROSION Guide, page 8.

Vacuum

Disks are self-supporting up to full vacuum at burst ratings of 25 psig and higher. At lower pressures, integral vacuum supports are available only for MONO Disks. External vacuum supports are available for DUPLEX Disks. Consult ZOOK for partial vacuum services.

Dimensional Standards

Standard disks fit directly between ANSI Class 150 or 300 flanges with flat or raised faces. Flat ring gaskets are required and can be attached to the disk before shipment. Consult ZOOK for flange requirements other than ANSI.

Capacity and Flow Resistance

Full bore opening at time of rupture is a consistent characteristic of ZOOK Disks and results in very low flow resistance values (K_r). Refer to K_r values in tables provided for each disk type.

Service Life

Indefinite service life is normal in static systems. Replacement is unnecessary at operating-pressure to burst-rating ratios to 90%. In cycling service, this ratio should be lowered.

Burst Sensors

For remote and quick detection of a ruptured condition, ZOOK offers the ZENSOR™: Rupture disk and sensing element are integral parts of the electrical circuit to eliminate false readings. Model BA: An external re-usable and replaceable indicator. Specify Model BA-L for optional leak detection.

Armor

Armor is available on any standard style, size and rating of graphite rupture disk. Standard material is Carbon Steel (316SS optional). Armor is required on the following:

- Disks for ANSI Class 300 flanges
- TWO-WAY Type Disks
- Disks rated for temperatures above 338°F (170°C), regardless of disk style or flange class
- Disks for ANSI Class 150 flanges. See table at right with the following sizes and burst ratings:

Sizes	Rated Over psig @ 72°F (22°C)
1/2″ - 3″	150
4″	100
6″ - 10″	75
12″ - 24″	50

Where fire or blowdown temperatures exceeding 338°F (170°C) are design considerations, armor is required. Armored disks typically withstand the same conditions, i.e. blowdown temperatures, as the piping.

Disks not covered above are furnished unarmored unless armor is specifically ordered. Armor is highly recommended for:

- added safety
- greater reliability
- easier installation

WARNING

If a disk ruptures, material may:

- vent at high velocity with significant reaction thrust force
- contain disk particles and other solids and liquids
- be toxic or flammable.

The end user must make provisions to prevent personal injury and equipment damage. Use of disks described in this bulletin are intended for use only by persons with requisite technical skill and at their own discretion and risk. Because application, installation, and use are beyond our control, we make no warranties expressed or implied and do not assume any liability exceeding purchase price of the disk.

It is the responsibility of the end user to fully understand his process and determine the disk needed to properly protect the system.

Gaskets

Gaskets used with graphite disks are stocked in the following materials: Neoprene, Non-asbestos, solid PTFE, and PTFE envelope. Gaskets can be supplied loose or attached to the disk (Note: field installation of gaskets NOT recommended on TWO-WAY Disks or Insulted Units)

When supplying your own gaskets, follow dimensions in the chart, especially the inside diameter which provides proper clearance to ensure accurate burst. 1/8″ thick gasket is recommended. Gaskets for INSULATED Disks are made from high-temperature material and are always supplied attached.

Gasket Dimensions

Disk Size	Flanges			
	ANSI Class 150		ANSI Class 300	
	I.D.	O.D.	I.D.	O.D.
1/2″	3/4″	1-3/4″	3/4″	2″
3/4″	1″	2-1/8″	1″	2-1/2″
1″	1-5/16″	2-1/2″	1-5/16″	2-3/4″
1-1/2″	1-29/32″	3-1/4″	1-29/32″	3-5/8″
2″	2-1/2″	4″	2-1/2″	4-1/4″
3″	3-3/4″	5-1/4″	3-3/4″	5-3/4″
4″	5″	6-3/4″	4-3/4″	7″
6″	7-1/8″	8-5/8″	7-1/8″	9-3/4″
8″	8-7/8″	10-7/8″	9″	12″
10″	11-5/8″	13-1/4″	N/A	N/A
12″	13-3/4″	16″	N/A	N/A
14″	14-1/2″	17-5/8″	N/A	N/A
16″	17″	20-1/8″	N/A	N/A
18″	19-1/2″	21-1/2″	N/A	N/A
20″	21-3/4″	23-3/4″	N/A	N/A
24″	25″	28-1/8″	N/A	N/A

Corrosion Guide

Refer to the chart to determine which disk is best suited for your system fluid. Corrosives not shown can typically be accommodated by our unlined Graphite Disks. If in doubt, use the DUPLEX Disk or contact ZOOK to obtain a material sample for testing.

INSULATED Disks cannot be used with liquids, hydrofluoric and phosphoric acids or concentrated alkalis.

	MONO and INVERTED Disks	DUPLEX Disks*
Aluminum Hydroxide	No	Yes
Ammonium Hydroxide	No	Yes
Bromine (free)*	No	Yes
Calcium Chlorate	No	Yes
Calcium Hydroxide	No	Yes
Calcium Hypochlorite	No	Yes
Chloral	No	Yes
Chlorine (free)	No	Yes
Chromic Acid (plating)	No	Yes
Fluorine (free)	No	No
Hydrofluoric Acid	No	Yes
Iodine (free)	No	Yes
Molten Metal Alkalis	Yes	Yes
Nitric Acid	No	Yes
Oleum	No	Yes
Ozone	No	Yes
Potassium Chlorate	No	Yes
Potassium Hydroxide	No	Yes
Potassium Hypochlorite	No	Yes
Sodium Chlorate	No	Yes
Sodium Hydroxide	No	Yes
Sodium Hypochlorite	No	Yes
Sulfur Trioxide	No	Yes
Sulfuric Acid	No	Yes

*Upon request we will furnish liners in Kynar, FEP, PFA, or PTFE

Other Rupture Disks

Metal Rupture Disks and Disk Holders...

- Forward and Reverse-Acting Designs
- Full range of burst ratings and materials
- Non-fragmenting designs available
- Available with insert holders for bubbletight, metal-to-metal sealing

Sanitary Rupture Disks...

protect sanitary piping systems

- Metal or Graphite materials
- Ideal for food, pharmaceutical, medical, biotech other high purity systems
- Full range of burst ratings
- Comply with FDA requirements
- Full size range available
- No special holders or fittings required

Rail Car Rupture Disks...

can be used for a full year without change-out (regardless of number of trips)

- 60, 100, 135 or 165 psig burst ratings
- Meets or exceeds AAR A5.03 and A5.04 specifications
- Steel armored for added safety and greater reliability

Bak-Pressure™ Disks...

guard against excess pressure in common piping systems

- Burst ratings from 0.25 to over 1000 psig
- Sizes from 1/2″ thru 24″

Transportation Rupture Disks...

protect over-the-road tank trailers and intermodal tanks

- Sizes from 2″ thru 4″
- Metal or graphite materials available
- Stocked burst ratings: 30, 35, 40, 45, and 50 psig in graphite disks
- Last up to one year without change-out

For more information on any ZOOK Graphite Rupture Disks or to place an order contact:

ZOOK Enterprises, LLC
16809 Park Circle Drive
Box 419
Chagrin Falls, OH 44022

Local **440.543.1010**
U.S.A. Toll Free **800.543.1043**
Fax **440.543.4930**
E-Mail **zook@zook.cc**
www.zook.cc

CalgonCarbon	LINED PIPE MATERIAL SPECIFICATION	SPEC NO:
	PLASTIC LINED STEEL PIPE WITH PLASTIC LINED FLANGED FITTINGS	L01

SAP PART NUMBER:

CCC DRAWING NUMBER:

MATERIAL: Plastic lined steel pipe with plastic lined flanged fittings.

RATING: 150 PSIG @ minus 20 DEG. to plus 225 DEG. F.

CONSTRUCTION: Flanged 1" to 8", Crane Resistoflex brand piping system using polypropylene resin lined steel pipe and lined cast iron flanged fittings. Each spool piece and fitting to be furnished with ends of plastic liner formed over flanged ends to form a molded raised face.

PIPE: Schedule 40, ANSI B36.10, ASTM A53, steel pipe with lining.

FITTINGS: 125 lb., ANSI B16.1, ASTM A126, Class A, cast iron flanged with lining.

FLANGES: 125 lb., ANSI B16.1, ASTM A126, Class A, cast iron, threaded, flat face with smooth finish, drilled and chamfered.

BOLTING: See attached Fastener Specification F03.

FIELD FABRICATION: For piping not shop fabricated Contractor must have special tools and equipment to cut the lined pipe and form the molded raised face on the job. See Crane Resistoflex Design Manual for necessary equipment and instructions.

LINING: Thermally stabilized polypropylene resin.

Issue Date: 08/04/2009 Revision Date: 08/04/2009

Approved by Joseph P. McMahon on 08/13/2009

CalgonCarbon	STAINLESS STEEL PIPE MATERIAL SPECIFICATION	SPEC NO:
	INSTRUMENT PIPING, HEAT TRACING, ETC.	S06

SAP PART NUMBER:

CCC DRAWING NUMBER:

MATERIAL: Stainless steel tubing and flareless compression fittings, and stainless steel pipe and fittings.

RATING: 150 PSIG @ 365 DEG. F.
300 PSIG @ 100 DEG. F.

CONSTRUCTION: For tubing systems 1" and smaller. Pipe and screwed pipe fittings to be used for take-off connections on larger pipe, manifolding, connections to screwed instruments, equipment, etc. Tubing to be used for all other piping in the system.

PIPE NIPPLES: ASTM A312, Type 316, seamless, Schedule 80S, ANSI B36.19, annealed and pickled.

PIPE FITTINGS: Type 316 stainless steel screwed fittings, dimensions per ANSI B16.3, forged, wrought or cast material rated 150 lb. Camco Fittings Co., or equal.

TUBING: Type 316 stainless steel seamless tubing, 0.035" wall thickness, annealed and pickled, hardness 70-74 Rockwell "B", 1/4 O.D.

TUBE FITTINGS: Type 316 stainless steel, flareless compression fittings, Crawford Fitting Company "Swagelok", or equal.

Issue Date: 01/01/89 Revision Date:

Approved by Joseph P. McMahon on 07/24/98

CalgonCarbon	STAINLESS STEEL PIPE MATERIAL SPECIFICATION	SPEC NO:
	TYPE 316 STAINLESS STEEL PIPE AND FITTINGS	S15

SAP PART NUMBER:

CCC DRAWING NUMBER:

MATERIAL: Type 316 stainless steel pipe and fittings.

RATING: 150 PSIG @ 365 DEG. F.
300 PSIG @ 100 DEG.F.

CONSTRUCTION: Screwed for 3" and smaller

PIPE: Threaded, Schedule 40S, ASTM A312, Type316, welded, ANSI B36.19, annealed and pickled.

FITTINGS: Type 316 stainless steel screwed fittings, general dimensions to conform to ANSI B16.3 for malleable iron screwed fittings. Forged, wrought or cast material rated 150 Lb. @ 365 DEG.F., Camco Fittings Co., or equal.

FLANGES: Type 316 stainless steel, threaded, MSS-SP-51, 150 Lb. flat face, serrated finish.

ORIFICE FLANGES: Instrument Item.

BOLTING: See attached Fastener Specification F03.

GASKETS: See attached Gasket Specification G02.

Issue Date: 12/01/89 Revision Date: 06/20/2001

Approved by Gerald Kirner on 06/21/2001

SECTION 10

SHIPPING SPECIFICATION

SPECIFICATION NUMBER: VS-13

SHIPPING OF STANDARD METAL ADSORBER SYSTEMS

1.0 INTRODUCTION

1.1 The following Calgon Carbon Corporation shipping, and handling instructions are designed to protect the mechanical integrity and the surface finish of the adsorber vessels and/or piping comprising an adsorption system. Proper handling procedures are required to ensure against damage to the new equipment.

1.2 The shipping and handling instructions outlined here are only recommendations and do not relieve any party from full responsibility for proper inspection, handling, shipping preparation, transporting, or unloading of the equipment. Also, the purchaser should be aware that failure to take the precautions outlined here may invalidate the equipment warranty.

2.0 GENERAL HANDLING AND LIFTING INSTRUCTIONS

2.1 Calgon Carbon Corporation equipment is designed with specific locations for lifting and will withstand normal handling procedures. The lifting lugs, shown on the general arrangement installation drawing, are generally located on top of the vessel. Fork tubes are located near the bottom of the equipment.

Refer to the project drawings is required before handling the equipment.

2.2 Normal precautions to follow to prevent equipment damage are as follows:

2.2.1 Operators of hoist equipment must follow proper safety and rigging procedures at all times.

2.2.2 Always lift -- ***NEVER*** roll or slide the vessels or piping.

2.2.3 When moving equipment, do not drop or allow hard impact. Do not allow cables, hooks, or spanner bars to swing against the vessel.

2.2.4 Never allow tools to strike or drop on equipment (especially inside or outside of vessels).

2.2.5 All ladders used inside vessels should have ends protected. They should be wood construction; if not, ladders must have rubber protectors to prevent damaging the lining.

2.2.6 Workmen entering a lined vessel must wear soft-soled shoes, free of grit. Workmen must follow plant and OSHA requirements for confined space entry.

2.2.7 Always make lifting attachments to the lifting lugs when using chains or cables. Never lift from the nozzles.

2.2.8 Never lift a vessel by using any fitting or appurtenance other than the lift lugs. When lift lugs are not provided as part of the equipment, nylon web rigging slings must be used by attachment directly to the corners of the structural frame. It is recommended that the nylon web be protected with rubber pads or sheets to prevent cutting or tearing across the corners.

CALGON CARBON CORPORATION ♦ COPYRIGHT 2016 ♦ ALL RIGHTS RESERVED

3.0 PREPARATION FOR SHIPMENT

3.1 Calgon Carbon Corporation and their representatives are to take reasonable precautions when preparing equipment for shipment. Normally, a flat-bed truck will be used to transport the vessels, pipe rack and piping to the customer. Any hold-down location where a chain or strap contacts a painted surface must be protected with rubber sheeting, carpeting or other similar material.

3.2 Vessel loading will be the responsibility of the fabrication shop. Securing the load on the truck will be the responsibility of the truck driver. Painted surfaces must be protected from damage.

3.3 The pipe rack loading, if supplied, is the responsibility of the fabrication shop. The truck driver is to secure the rack to the truck bed. Points of contact are to be padded to protect the equipment.

3.4 All loose piping is to be loaded in such a manner as to avoid damage to painted surfaces. No chains are to be in direct contact with piping. Padding is to be used. Loading of loose piping will be the responsibility of the fabrication shop. The truck driver is to secure the piping to the truck bed.

4.0 SHIPPING REQUIREMENTS

4.1 Systems are typically shipped on one (1) truck. An additional truck may be required due to specific height or weight restrictions.

4.2 Once the vessels, pipe racks or loose piping are loaded onto a truck, they shall not be unloaded again until they reach their final destination.

4.3 No vessels, pipe racks or loose piping shall be shipped without a complete bill of lading which itemizes all parts. Also, no shipment shall be made without the completed packing list for crated parts which has been initialed by the person who packed and the person doing the checking.

5.0 INSPECTION UPON RECEIPT

5.1 The purchaser should arrange for an inspector or an authorized person at the jobsite to inspect and also supervise the off-loading of the system.

5.2 Check the bill of lading against the equipment received.

5.3 If damage has occurred during transit, it must be noted on the delivery receipt prior to signing acceptance. If damage has occurred, a claim should be filed promptly with the delivery carrier. If excessive damage is found:

- Do not unpack or unload the equipment
- Document the extent of the damage with photographs
- Contact your Calgon Carbon representative

5.4 If no claim is filed, the purchaser accepts all further responsibility for damaged equipment.

5.5 If damage has occurred and is not repaired by Calgon Carbon Corporation prior to the equipment being put into service, the purchaser accepts all future responsibility for the effects of equipment failure resulting from such damage.

CALGON CARBON CORPORATION ♦ COPYRIGHT 2016 ♦ ALL RIGHTS RESERVED

6.0 RECOMMENDED INSPECTION PROCEDURES

The following should be used as a guideline in making an inspection of the equipment prior to unloading.

6.1 The adsorber vessel exterior should be visually examined for damage. Any sign of impacting may result in cracked or flaking of the vessel interior lining. If this damage has occurred, it is required that the manway be opened and the interior lining be visually inspected.

6.2 Check the equipment for any signs of breakage, abrasion, shifting or rotation that may have resulted in damage to the paint on vessels, pipe rack, or loose piping.

6.3 Upon discovering minor or major damage, contact your Calgon Carbon representative to report your findings.

7.0 UNLOADING

7.1 Calgon Carbon Corporation specifically does not assume responsibility for the unloading of vessels, pipe racks or piping. Shipment will be considered complete when the equipment arrives at the jobsite and prior to removal of the equipment from the truck by the purchaser. The presence of Calgon Carbon Corporation representative(s) at the delivery or installation site does not relieve the purchaser of any of his responsibility for proper handling procedures.

7.2 All instructions shown in the Unloading/Foundations Section of the Calgon Carbon Corporation Operation and Maintenance Manual for this equipment shall be followed.

7.3 Vessel and pipe rack unloading shall be accomplished in such a manner as to avoid damage to finished surfaces. Adequate padding may be necessary around the lifting point.

7.4 The use of chains, slings, or a spreader bar is required for hoisting vessels and the pipe rack. The angle between the lifting point and the top of the equipment must always be 60° or greater. Workmen should keep control over the vessel with guidelines.

8.0 INSTALLATION

8.1 All instructions shown in Installation Section of the Calgon Carbon Corporation Operation and Maintenance Manual for this equipment shall be followed.

**** REVISIONS * ****

This specification has been revised as indicated below. The new pages added and/or the existing pages revised are attached as replacements for those previously issued.

REVISION	DATE	BY	PAGE	REMARKS
A	1-15-93	JMcM	All	Issued for Comment
B	5/19/93	JPM	All	Issued for Comment
C	9/1/93	JPM	2-3	Issued for Comment
D	10/12/93	JPM	3	Issued for Comment
E	11/13/07	JSR	All	
F	02/29/2008	RES	All	Modified to include vapor-phase equipment

ISSUED: JANUARY 15, 1993

CALGON CARBON CORPORATION ♦ COPYRIGHT 2016 ♦ ALL RIGHTS RESERVED

SECTION 11

DRAWINGS

SECTION 11

DRAWINGS

DRAWING INDEX

DRAWING NUMBER	REVISION	TITLE
91157779	0	Model 10 Carbon Adsorber System, 8" Piping, Non-Potable, Flow Diagram
91157780	0	Model 10 System, 125 PSIG, 10 ø Vessel, 8" Piping, General Arrangement; Sheets 1 & 2
91157781	1	Model 10, 125 PSIG, 10 Ft. Dia., V-214A Vessel Arrangement; Sheets 1 & 2
91157782	1	Model 10, 125 PSIG, 10 Ft. Dia., V-214B Vessel Arrangement; Sheets 1 & 2

CALGON CARBON CORPORATION ♦ COPYRIGHT 2016 ♦ ALL RIGHTS RESERVED

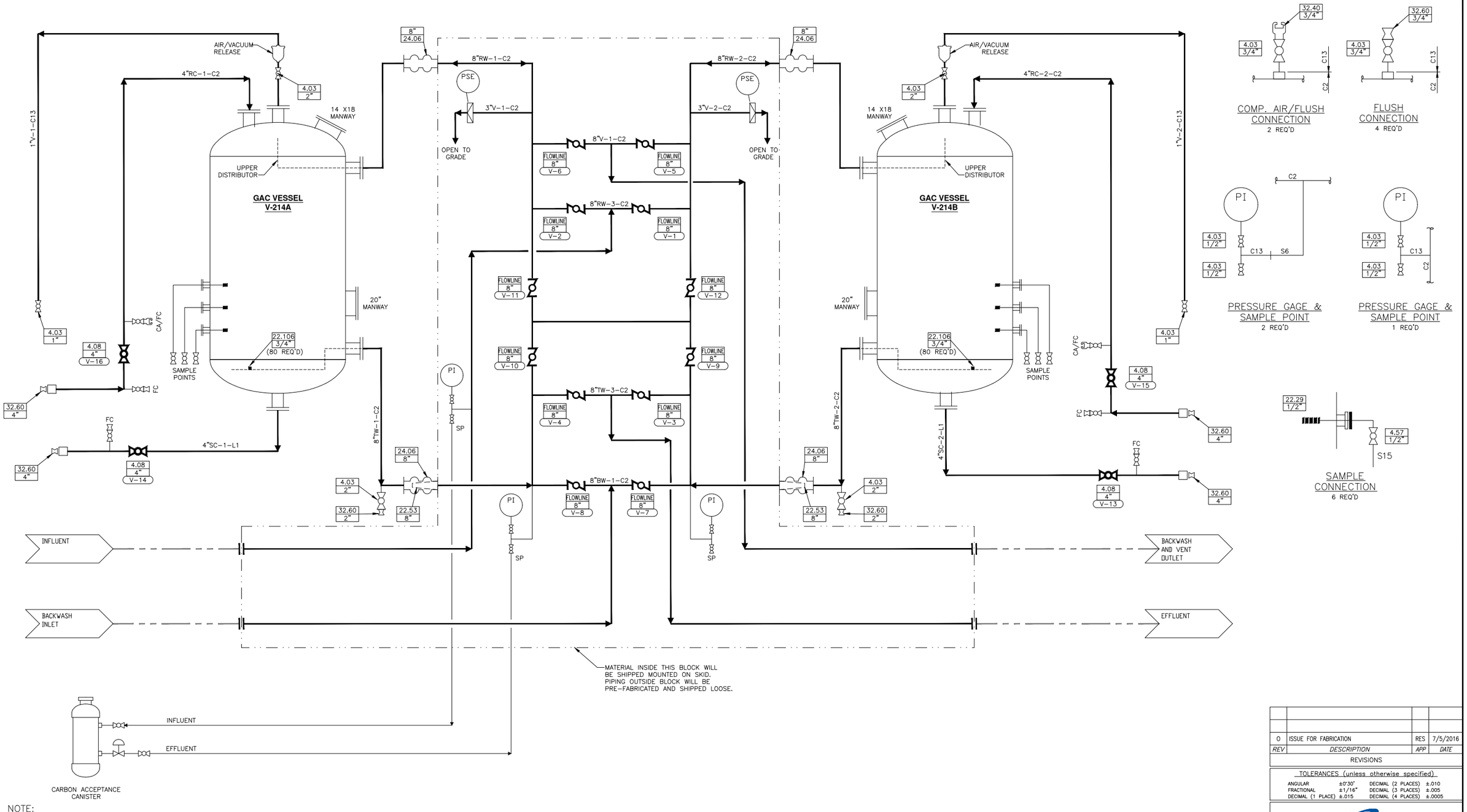

NOTE:
FOR CAC INSTALLATION, SEE O&M MANUAL.

MEDIA	INSTRUMENTATION	DESIGN CONDITIONS	LEGEND	ADSORBERS	UTILITY REQUIREMENTS
MEDIA: OLC AW 12 X 40 QUANTITY PER VESSEL: 20,000 LBS. SERVICE: NON-POTABLE	PI 217 PSE 577 FOR 100 psig MAX. OPER. PRESS. AIR/VACUUM RELEASE - CRISPIN AL SERIES PROCESS VAVLES - FLOWLINE W/ NYLON COATED DISC	FLOW RATE - 700 GPM (SERIES) 1400 GPM (PARALLEL) INFLUENT PRESSURE - 100 PSIG MAX. INFLUENT TEMP. - 120°F MAX. BACKWASH RATE - 550 GPM @ 60° F ELECTRIC POWER - 120 V, 60~ SINGLE PHASE, 15 AMP	BW - BACKWASH WATER FC - FLUSH CONNECTION RC - REACT.(OR VIRGIN) CARBON RW - RAW WATER SC - SPENT CARBON SLURRY SP - SAMPLE PORT TW - TREATED WATER V - VENT	10'-0" O.D. x 10'-0" S.S. ASME 2:1 ELLIPTICAL TOP AND BOTTOM HEADS. CARBON STEEL CONSTRUCTION. ASME SECT. VIII, DIV. 1 W/ PLASITE 4110 LINING 125 PSIG @ 140°F DESIGN.	AIR, CARBON TRANSFER - 100 SCFM @ 30 PSIG MIN. PLANT WATER - 100 GPM @ 30 PSIG MIN.

THIS DRAWING AND DESIGN IS THE PROPERTY OF CALGON CARBON CORPORATION AND IS NOT TO BE REPRODUCED IN WHOLE OR IN PART NOR EMPLOYED FOR ANY PURPOSE OTHER THAN SPECIFICALLY PERMITTED IN WRITING BY CALGON CARBON CORPORATION. THIS DRAWING LOANED SUBJECT TO RETURN ON DEMAND.

	NAME	DATE
DRAFTER	JPARRISH	12/11/2015
DESIGNER		
CHECKER	RES	7/5/2016
APPROVAL		
PROJECT No.	CTO.150010.KRTAF	

REV	DESCRIPTION	APP	DATE
0	ISSUE FOR FABRICATION	RES	7/5/2016

REVISIONS

TOLERANCES (unless otherwise specified)

ANGULAR	±0°30'	DECIMAL (2 PLACES)	±.010
FRACTIONAL	±1/16"	DECIMAL (3 PLACES)	±.005
DECIMAL (1 PLACE)	±.015	DECIMAL (4 PLACES)	±.0005

CalgonCarbon

CLIENT
KIRTLAND AFB
ALBUQUERQUE, NM

TITLE
MODEL 10 CARBON ADSORBER SYSTEM
8" PIPING, NON-POTABLE
FLOW DIAGRAM

DWG. Size	SHEET No.	SCALE
D	1 OF 1	NONE

DWG. No. 91157779 REV. 0

V:\2015\CTO.150010.KRTAF\Drawings\Process\91157779 P&ID.dwg Oct 12, 2016 - 2:11pm

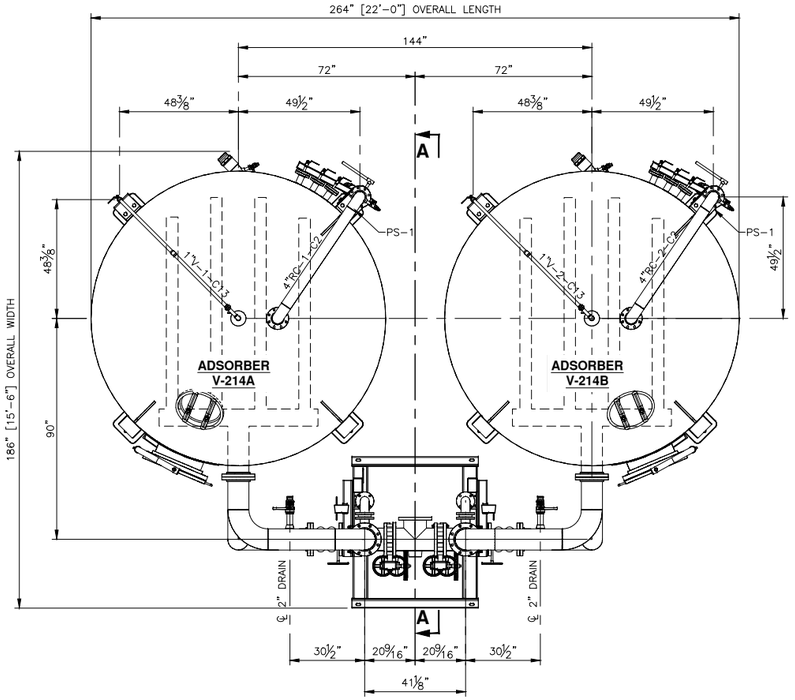

PLAN

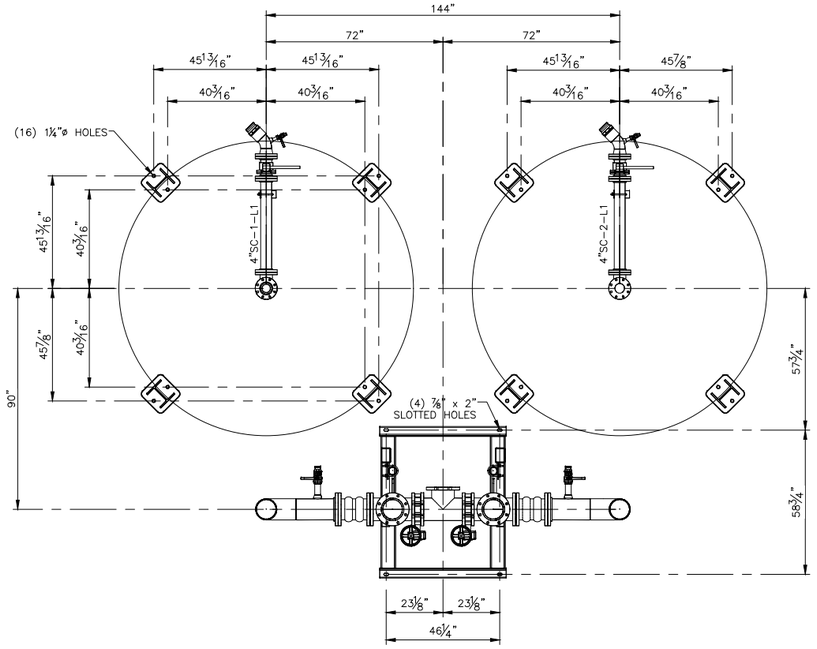

LOWER PLAN

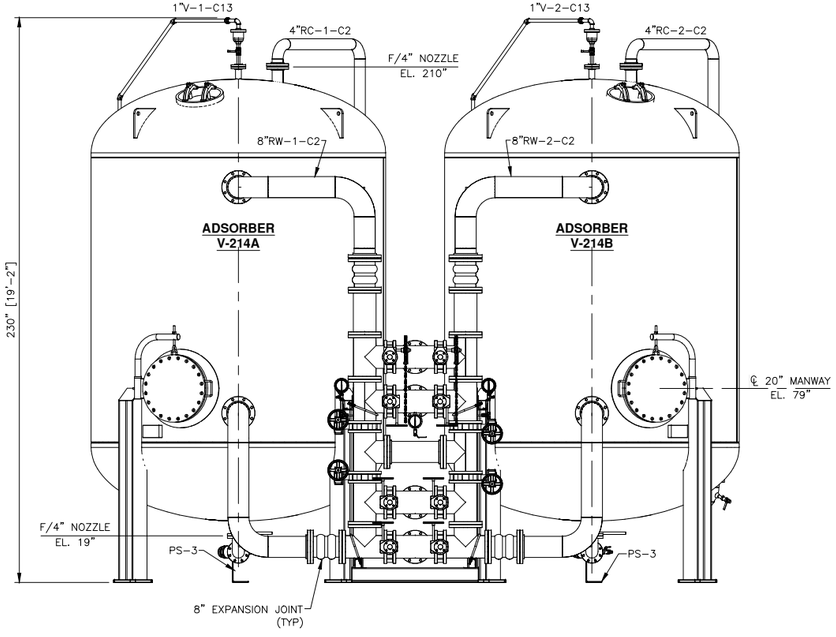

ELEVATION

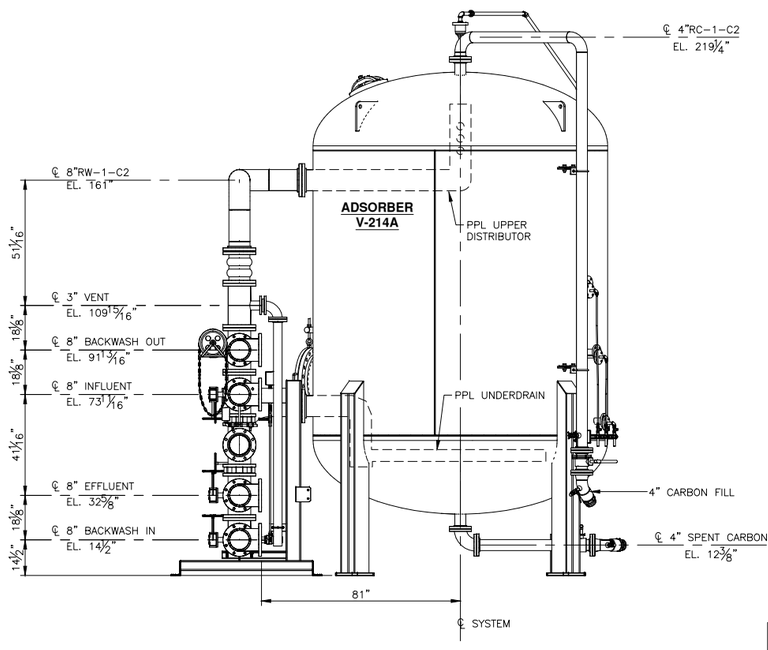

SECTION A-A

SYSTEM DATA	
DESIGN CONDITIONS	125 PSIG @ 140° F
DESIGN CODE	ASME SECTION VIII DIVISION1
APPROXIMATE WEIGHTS (LB.)	
VESSEL (EMPTY)	14,100
CARBON (PER VESSEL)	20,000
VESSEL (OPERATING)	90,000
SYSTEM (EMPTY)	40,000
SYSTEM (OPERATING)	214,000

NOTE:
1.) PIPE PAINTED TO MATCH VESSEL.

PIPE SUPPORT SCHEDULE			
ITEM#	REQ'D	DRAWING#	DESCRIPTION
PS-1	4	90110065	RAW CARBON
PS-2	4	90110118	AIR / VACUUM RELEASE
PS-3	2	91168001	SPENT CARBON
PS-4	2	91167959	SAMPLE/UNDER CONE VENT

REV	DESCRIPTION	APP	DATE
0	ISSUE FOR FABRICATION	RES	6/29/2016

REVISIONS

TOLERANCES (unless otherwise specified)

ANGULAR	±0°30"	DECIMAL (2 PLACES)	±.010
FRACTIONAL	±1/16"	DECIMAL (3 PLACES)	±.005
DECIMAL (1 PLACE)	±.015	DECIMAL (4 PLACES)	±.0005

THIS DRAWING AND DESIGN IS THE PROPERTY OF CALGON CARBON CORPORATION AND IS NOT TO BE REPRODUCED IN WHOLE OR IN PART NOR EMPLOYED FOR ANY PURPOSE OTHER THAN SPECIFICALLY PERMITTED IN WRITING BY CALGON CARBON CORPORATION. THIS DRAWING LOANED SUBJECT TO RETURN ON DEMAND.

	NAME	DATE
DRAFTER	JPARRISH	12/15/2015
DESIGNER		
CHECKER	JFS	6/28/2016
APPROVAL		
PROJECT No.	CTO.150010.KRTAF	

CalgonCarbon

CLIENT
KIRTLAND AFB
ALBUQUERQUE, NM

TITLE
MODEL 10 SYSTEM, 125 PSIG
10'ø VESSEL, 8" PIPING
GENERAL ARRANGEMENT

DWG. Size	SHEET No.	SCALE
D	1 OF 2	NONE
DWG. No. 91157780		REV. 0

V:\2015\CTO.150010.KRTAF\Drawings\General Arrangements\91157780 GA.dwg Oct 12, 2016 - 2:17pm

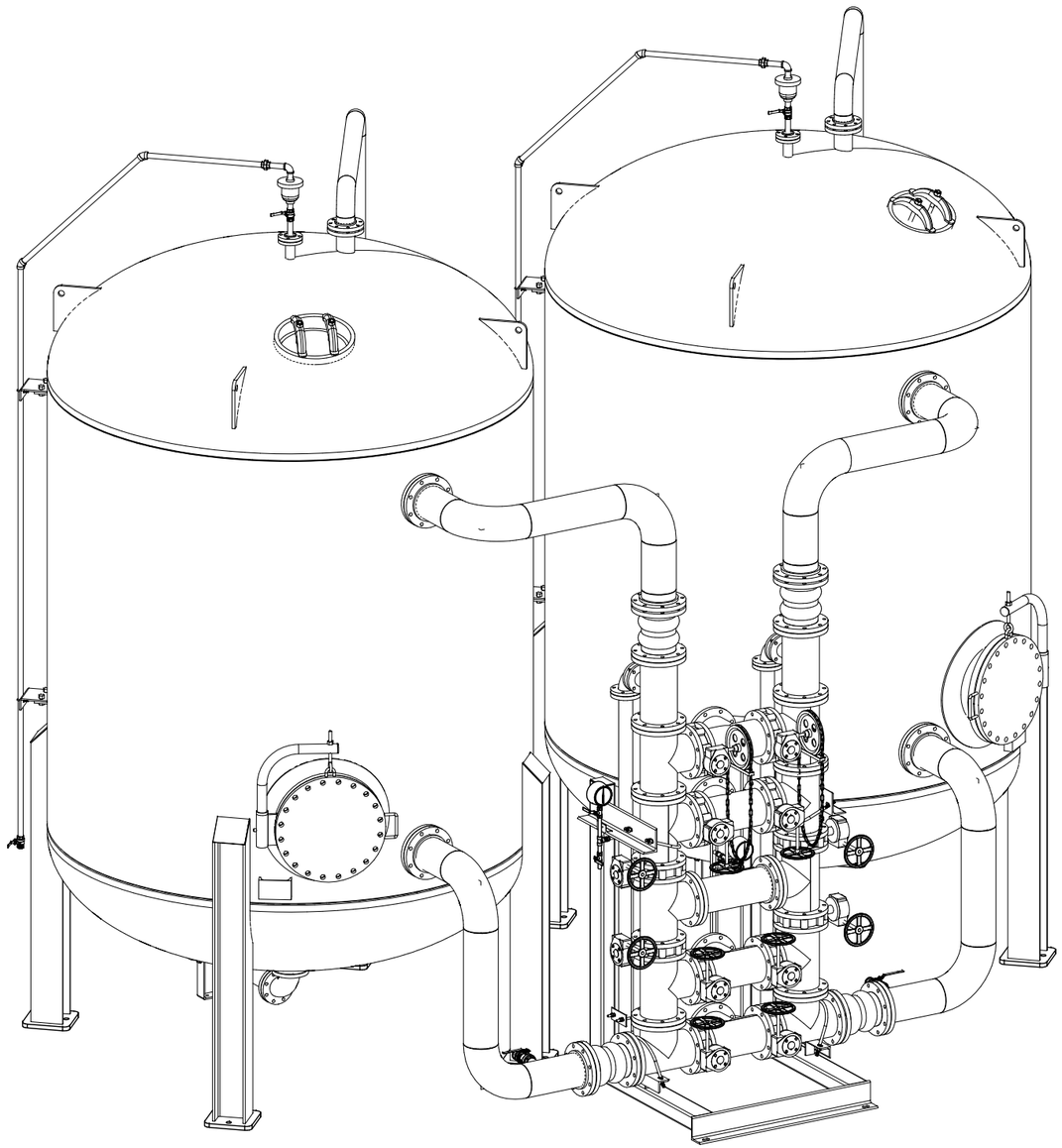

ISOMETRIC FRONT VIEW

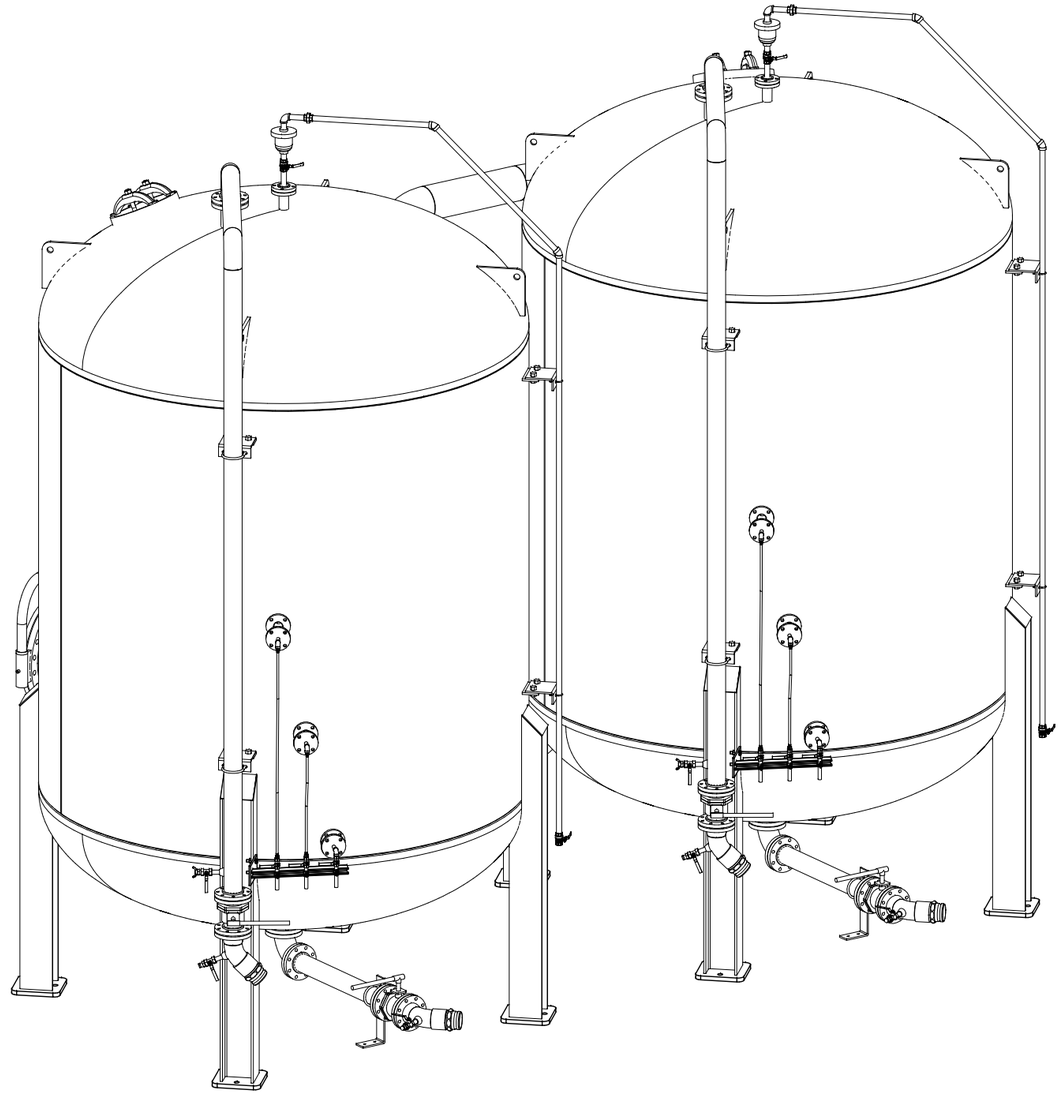

ISOMETRIC REAR VIEW

0	ISSUE FOR FABRICATION	RES	6/29/2016
REV	*DESCRIPTION*	*APP*	*DATE*

REVISIONS

TOLERANCES (unless otherwise specified)

ANGULAR	±0°30"	DECIMAL (2 PLACES)	±.010
FRACTIONAL	±1/16"	DECIMAL (3 PLACES)	±.005
DECIMAL (1 PLACE)	±.015	DECIMAL (4 PLACES)	±.0005

THIS DRAWING AND DESIGN IS THE PROPERTY OF CALGON CARBON CORPORATION AND IS NOT TO BE REPRODUCED IN WHOLE OR IN PART NOR EMPLOYED FOR ANY PURPOSE OTHER THAN SPECIFICALLY PERMITTED IN WRITING BY CALGON CARBON CORPORATION. THIS DRAWING LOANED SUBJECT TO RETURN ON DEMAND.

	NAME	DATE
DRAFTER	JPARRISH	12/15/2015
DESIGNER		
CHECKER	JFS	6/28/2016
APPROVAL		
PROJECT No.	CTO.150010.KRTAF	

CalgonCarbon

CLIENT
KIRTLAND AFB
ALBUQUERQUE, NM

TITLE
MODEL 10 SYSTEM, 125 PSIG
10'ø VESSEL, 8" PIPING
GENERAL ARRANGEMENT

DWG. Size D	*SHEET No.* 2 OF 2	*SCALE* NONE	
DWG. No. 91157780		*REV.* 0	

V:\2015\CTO.150010.KRTAF\Drawings\General Arrangements\91157780 GA.dwg Oct 12, 2016 - 2:19pm

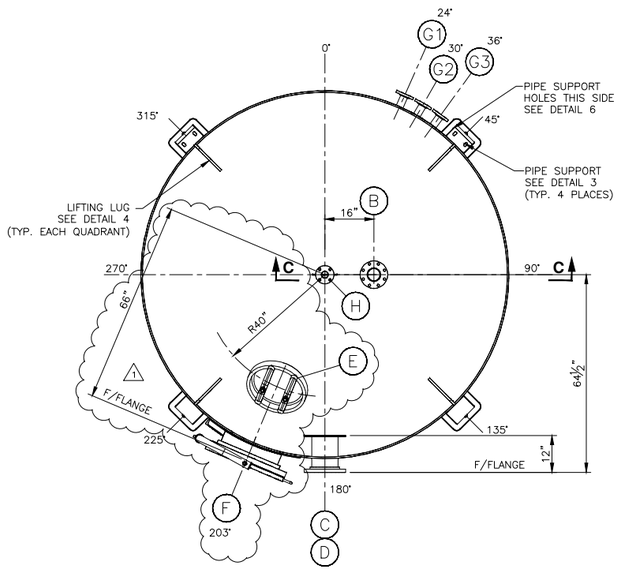

PLAN

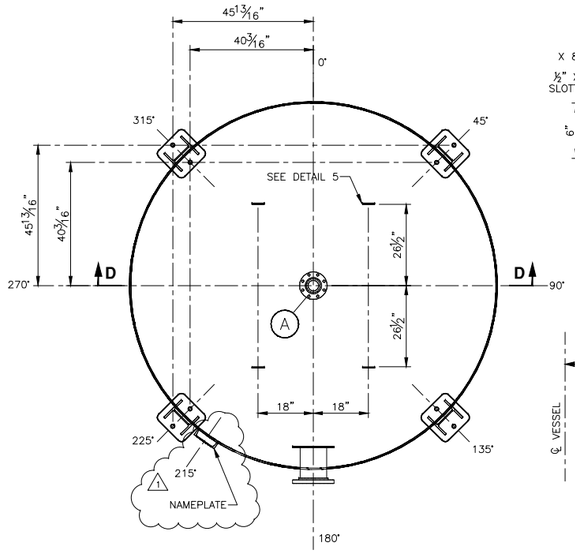

SECTION A-A

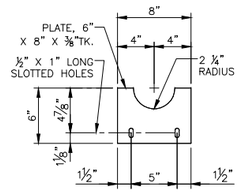

DETAIL 7
UPPER DISTRIBUTOR CLIP

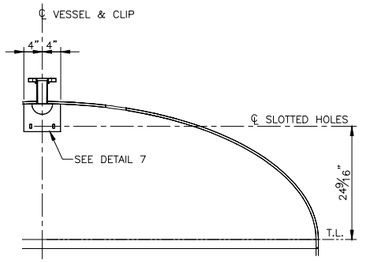

SECTION C-C

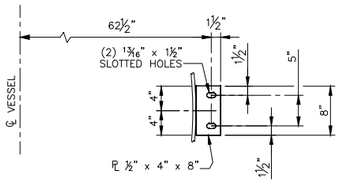

DETAIL 3
PIPE SUPPORT
(4) REQ'D

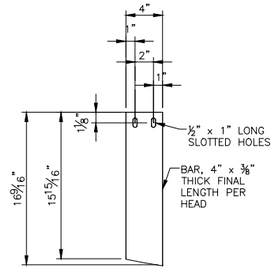

DETAIL 5
UNDER DRAIN CLIP
(4) REQ'D

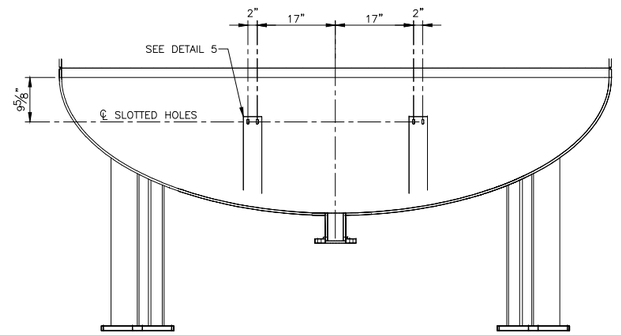

SECTION D-D
UNDER DRAIN CLIP

VESSEL DESCRIPTION	VESSEL V-214A	
REFERENCES	VESSEL SPECIFICATION VS1	
DESIGN CONDITIONS	125 PSIG @ 140° F	
OPERATING CONDITIONS		
PROCESS FLUID	WATER, S.G. = 1.0	
WALL THICKNESS	PER CODE REQUIREMENTS	
MATERIALS OF CONSTRUCTION	SHELL	SA-516 GR. 70
	TOP HEAD	SA-516 GR. 70
	BOT. HEAD	SA-516 GR. 70
	NOZZLES	SA-106 GR. B (UNLESS NOTED)
	FLANGES	SA-105 (UNLESS NOTED)
	LINING	PLASITE 4110 35-45 MIL NOMINAL DFT PER CCC SPEC. VS-7
	FORCE CURED PER NSF 61 CRITERIA	NO
	SUPPORTS	A-992
	BOLTING	MANWAY: A-325 GR 1, GALVANIZED NOZZLES: A-307 GR B, ZINC PLATED
	GASKETS	EPDM (45-55 DUROMETER)
TYPE CONSTRUCTION	FUSION WELDED	
CORROS. ALLOW	NONE	
CODE	ASME SECTION VIII, DIVISION 1, LATEST EDITION	
INSPECTION	BY CALGON & CODE AGENCY	
STAMPING	ASME "U", NBR	
TESTING	HYDROSTATIC PER CODE	
STRESS RELIEF	PER CODE	
RADIOGRAPH	PER CODE AND CALGON CALCULATIONS	
NAMEPLATE	ASME	
STENCILS	LINED TANK – DO NOT WELD OR BURN	
SEISMIC LOAD	IBC 2006, Ss = .458, SITE CLASS D, I = 1.25	
INSULATION	NONE – SEE NOTE 6	
SURFACE PREP	EXTERIOR	BRUSH BLAST PER SSPC-SP7
	INTERIOR	WHITE METAL BLAST PER SSPC-SP5
1 PAINTING	PRIMER COAT	SHERWIN-WILLIAMS RECOATABLE EPOXY PRIMER (LIGHT GRAY)
	FINISH COAT	SHERWIN-WILLIAMS ACROLON 218 PER CCC SPEC. RS-15. COLOR: SW7425 – WHITE 5-7 MILS DFT TOTAL COATING
CAPACITIES	FULL	7,700 GAL
	OPERATING	7,700 GAL AT 100% FILL
	MEDIA	20,000 LBS.
WEIGHTS	EMPTY	14,100 LBS.
	FULL H_2O	79,000 LBS.
	FULL PRODUCT	34,100 LBS. (DRY CARBON)
	OPERATING	90,000 LBS.

NOZZLE SCHEDULE

MARK	REQ'D	SIZE	DRILLING	FACING	DESCRIPTION
A	1	4"	150#	F.F.	CARBON OUTLET
B	1	4"	150#	F.F.	CARBON INLET/VENT
C	1	8"	150#	F.F.	INFLUENT
D	1	8"	150#	F.F.	EFFLUENT
E	1	14X18	ELLIP.		MANWAY W/ ¼" THK. GASKET
F	1	20"	150#	F.F.	MANWAY W/BLIND FLANGE & GASKET
G	3	2"	150#	F.F.	SAMPLE POINT
H	1	2"	150#	F.F.	AIR RELEASE

NOTES:

1. ALL INTERIOR WELDS & EDGES TO BE GROUND TO 1/8" RADIUS MIN.
2. ALL NOZZLES MUST BE FLUSH ON INSIDE OF SHELL, U.O.N
3. 20" MANWAY FLG. TO BE SECURED WITH (2) BOLTS. REMAINDER OF BOLTS & NUTS TO BE PACKAGED AND SHIPPED IN THE CRATE.
4. REMOVE ALL WATER & DIRT AFTER HYDROTEST.
5. REMOVE ALL WELD SPATTER.
6. CONTACT CCC FOR HEAT TRACE REQUIREMENTS.
7. ALL FLANGE BOLT HOLES TO STRADDLE CENTERLINES.
8. FOR MANWAY DETAIL SEE DWG. 90110066.

ELEVATION
SEE PLAN FOR TRUE ORIENTATION

DETAIL 2
SAMPLE POINT
(3) REQ'D

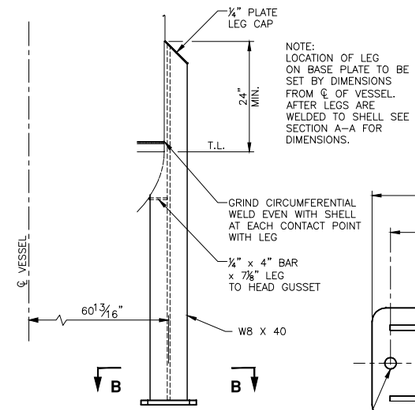

DETAIL 1
VESSEL SUPPORT LEG
(4) REQ'D

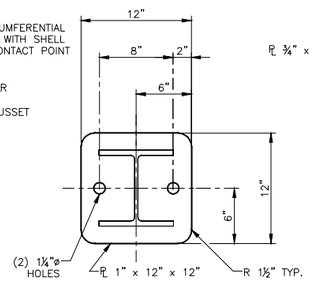

SECTION B-B
BASE PLATE
(4) REQ'D

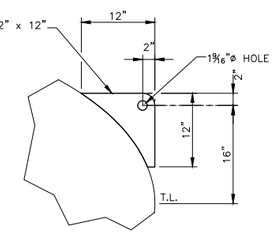

DETAIL 4
LIFTING LUG
(4) REQ'D

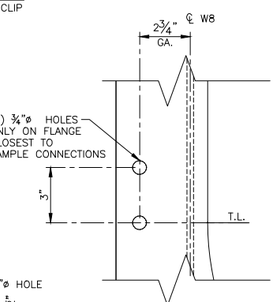

DETAIL 6
AT LEG LOCATED AT 45° ONLY

REV	DESCRIPTION	APP	DATE
1	MANWAYS, SAMPLE NOZZLE, PAINT & COLOR	MHS	7/6/2016
0	ISSUE FOR FABRICATION	MHS	5/16/2016

REVISIONS

TOLERANCES (unless otherwise specified)

ANGULAR	±0°30'	DECIMAL (2 PLACES)	±.010
FRACTIONAL	±1/16"	DECIMAL (3 PLACES)	±.005
DECIMAL (1 PLACE)	±.015	DECIMAL (4 PLACES)	±.0005

THIS DRAWING AND DESIGN IS THE PROPERTY OF CALGON CARBON CORPORATION AND IS NOT TO BE REPRODUCED IN WHOLE OR IN PART NOR EMPLOYED FOR ANY PURPOSE OTHER THAN SPECIFICALLY PERMITTED IN WRITING BY CALGON CARBON CORPORATION. THIS DRAWING LOANED SUBJECT TO RETURN ON DEMAND.

	NAME	DATE
DRAFTER	JPARRISH	12/18/2015
DESIGNER		
CHECKER	M. SAULSBERY	5/16/2016
APPROVAL		
PROJECT No.	CTO.150010.KRTAF	

CalgonCarbon

CLIENT: KIRTLAND AFB ALBUQUERQUE, NM

TITLE: MODEL 10, 125 PSIG 10 FT DIA. VESSEL ARRANGEMENT

DWG. Size	SHEET No.	SCALE
D	1 OF 2	NONE

DWG. No. 91157781 REV. 1

C:\Users\jparrish\oppdata\local\temp\AcPublish_2096\91157781 PV1 Ves Argt.dwg Jul 06, 2016 - 11:24am

BILL OF MATERIAL					
ITEM	QTY.	DESCRIPTION	MATERIAL	SAP No.	CCC SPEC
1	80	SEPTA	PPL	---	22.106
2	1	DECAL, DANGER, MANWAY	---	1058401	---
3	2	DECAL, CALGON LOGO	---	1059524	---
4	2	DECAL, LINED TANK	---	1025014	---
5	1	DECAL, DANGER, ELLIPTICAL MANWAY	---	1002706	---
6	1	GASKET, ELLIPTICAL 14" X 18" X ¼" THICK	WHITE EPDM	1053980	G46
7	1	GASKET, 20", 150#, ⅛" THICK	WHITE EPDM	1054140	G46
8	20	BOLT, 1 ⅛" X 5" LG, HVY. HEX W/ NUT, GALVANIZED	A-325 GR 1	1060550	---

MATERIAL FOR ONE VESSEL, TWO REQUIRED

NOTES:

1.) LOCATE MANWAY DANGER DECALS ITEMS (2) & (5) AS SHOWN.

2.) LOCATE LINED TANK DECALS ITEM (4) NEAR BOTTOM WELD SEAM TO CLEAR PIPING.

3.) LOCATE CCC LOGOS ITEM (3) AT 0° & 180°, HEIGHT AS SHOWN.

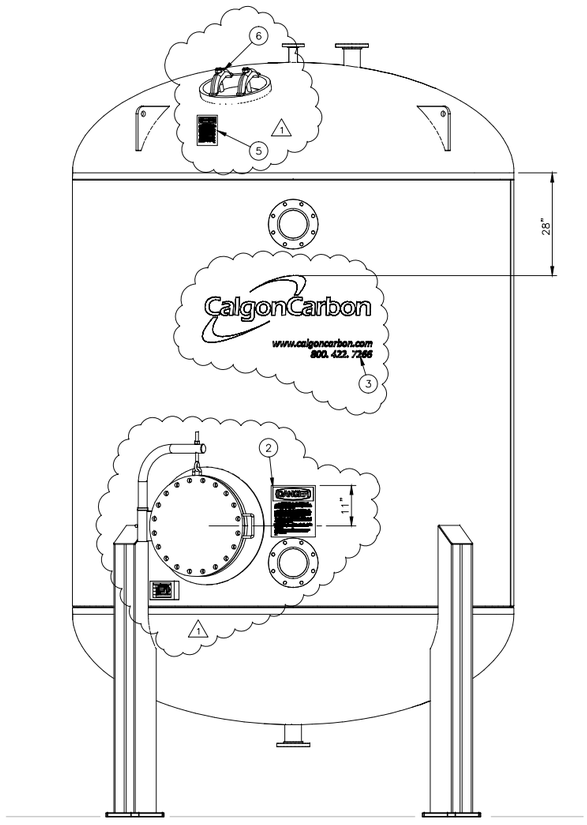

FRONT ELEVATION

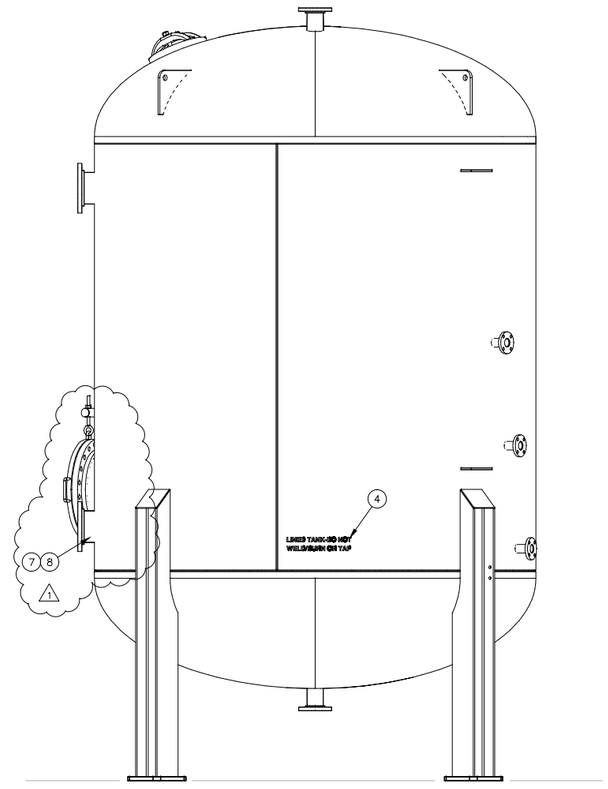

RIGHT ELEVATION

THIS DRAWING AND DESIGN IS THE PROPERTY OF CALGON CARBON CORPORATION AND IS NOT TO BE REPRODUCED IN WHOLE OR IN PART NOR EMPLOYED FOR ANY PURPOSE OTHER THAN SPECIFICALLY PERMITTED IN WRITING BY CALGON CARBON CORPORATION. THIS DRAWING LOANED SUBJECT TO RETURN ON DEMAND.

	NAME	DATE
DRAFTER	JPARRISH	12/18/2015
DESIGNER		
CHECKER	M. SAULSBERY	5/16/2016
APPROVAL		
PROJECT No.	CTO.150010.KRTAF	

REV	DESCRIPTION	APP	DATE
1	MANWAYS, SAMPLE NOZZLE, PAINT & COLOR	MHS	7/6/2016
0	ISSUE FOR FABRICATION	MHS	5/16/2016

REVISIONS

TOLERANCES (unless otherwise specified)

ANGULAR	±0°30'	DECIMAL (2 PLACES)	±.010
FRACTIONAL	±1/16"	DECIMAL (3 PLACES)	±.005
DECIMAL (1 PLACE)	±.015	DECIMAL (4 PLACES)	±.0005

CalgonCarbon

CLIENT: KIRTLAND AFB
ALBUQUERQUE, NM

TITLE: MODEL 10, 125 PSIG
10 FT DIA.
VESSEL ARRANGEMENT

DWG. Size	SHEET No.	SCALE
D	2 OF 2	NONE

DWG. No. 91157781 REV. 1

C:\Users\jparrish\oppdata\local\temp\AcPublish_2096\91157781 PV1 Ves Arrgt.dwg Jul 06, 2016 - 11:24am

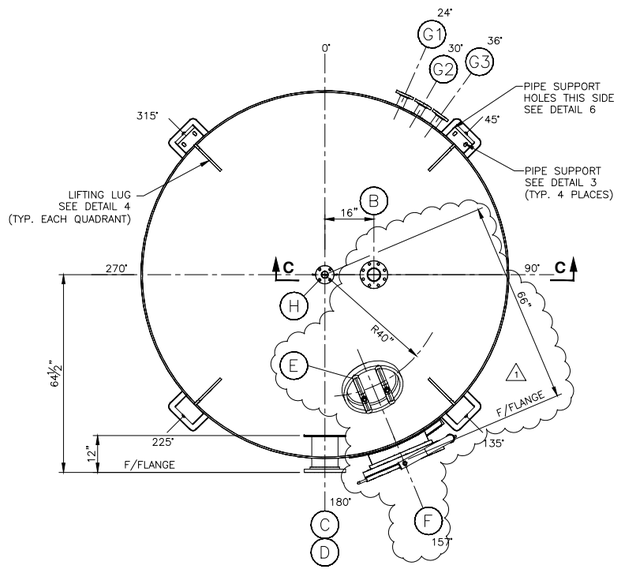

PLAN

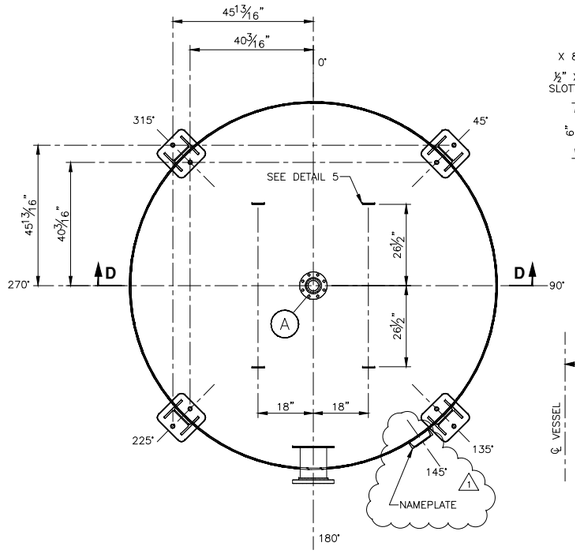

SECTION A-A

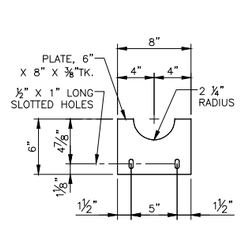

DETAIL 7
UPPER DISTRIBUTOR CLIP

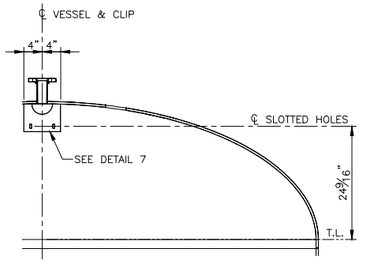

SECTION C-C

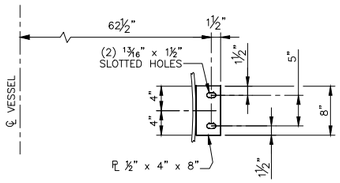

DETAIL 3
PIPE SUPPORT
(4) REQ'D

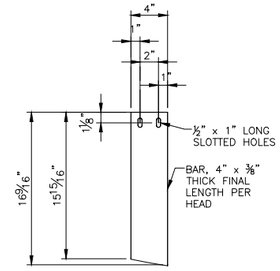

DETAIL 5
UNDER DRAIN CLIP
(4) REQ'D

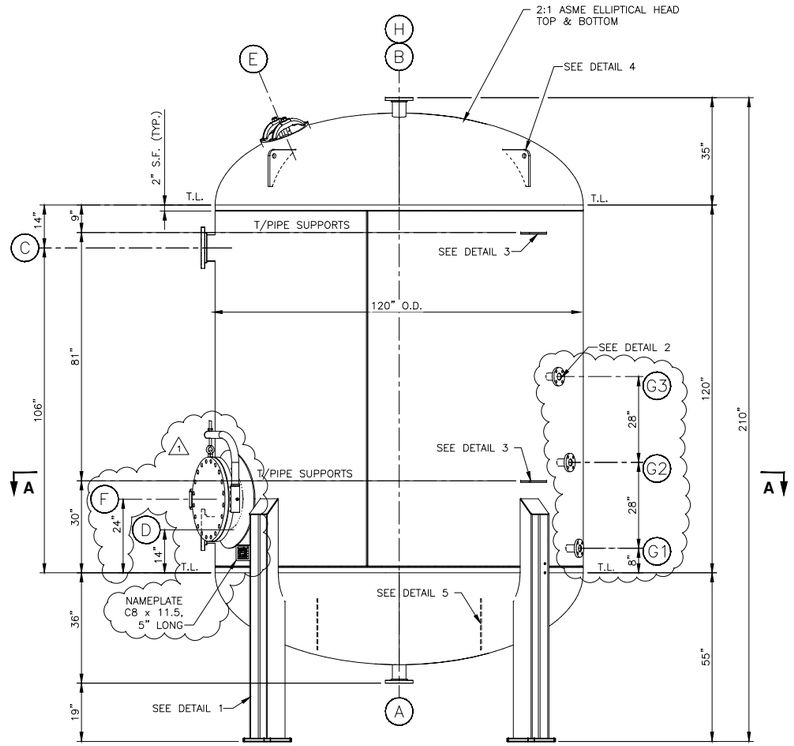

ELEVATION
SEE PLAN FOR TRUE ORIENTATION

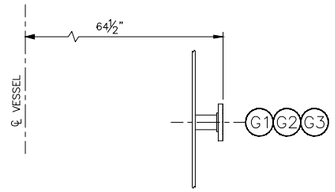

DETAIL 2
SAMPLE POINT
(3) REQ'D

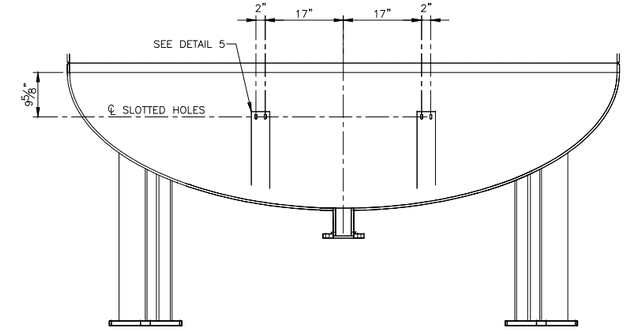

SECTION D-D
UNDER DRAIN CLIP

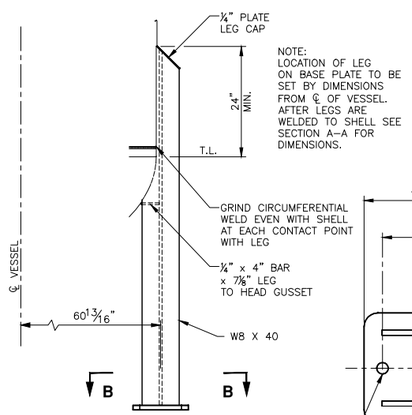

DETAIL 1
VESSEL SUPPORT LEG
(4) REQ'D

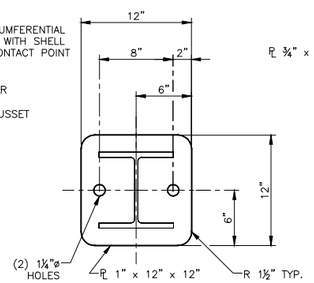

SECTION B-B
BASE PLATE
(4) REQ'D

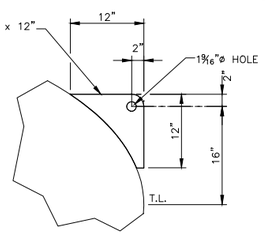

DETAIL 4
LIFTING LUG
(4) REQ'D

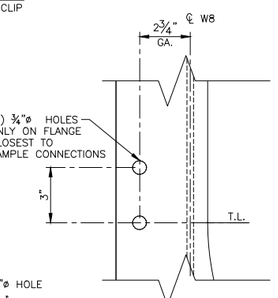

DETAIL 6
AT LEG LOCATED AT 45° ONLY

VESSEL DESCRIPTION	VESSEL V-214B
REFERENCES	VESSEL SPECIFICATION VS1
DESIGN CONDITIONS	125 PSIG @ 140° F
OPERATING CONDITIONS	
PROCESS FLUID	WATER, S.G. = 1.0

WALL THICKNESS	PER CODE REQUIREMENTS		
MATERIALS OF CONSTRUCTION	SHELL	SA-516 GR. 70	
	TOP HEAD	SA-516 GR. 70	
	BOT. HEAD	SA-516 GR. 70	
	NOZZLES	SA-106 GR. B (UNLESS NOTED)	
	FLANGES	SA-105 (UNLESS NOTED)	
	LINING	PLASITE 4110 35-45 MIL NOMINAL DFT PER CCC SPEC. VS-7	
	FORCE CURED PER NSF 61 CRITERIA		NO
	SUPPORTS	A-992	
	BOLTING	MANWAY: A-325 GR 1, GALVANIZED NOZZLES: A-307 GR B, ZINC PLATED	
	GASKETS	EPDM (45-55 DUROMETER)	

TYPE CONSTRUCTION	FUSION WELDED	
CORROS. ALLOW	NONE	
CODE	ASME SECTION VIII, DIVISION 1, LATEST EDITION	
INSPECTION	BY CALGON & CODE AGENCY	
STAMPING	ASME "U", NBR	
TESTING	HYDROSTATIC PER CODE	
STRESS RELIEF	PER CODE	
RADIOGRAPH	PER CODE AND CALGON CALCULATIONS	
NAMEPLATE	ASME	
STENCILS	LINED TANK - DO NOT WELD OR BURN	
SEISMIC LOAD	IBC 2006, Ss = .458, SITE CLASS D, I = 1.25	
INSULATION	NONE - SEE NOTE 6	
SURFACE PREP	EXTERIOR	BRUSH BLAST PER SSPC-SP7
	INTERIOR	WHITE METAL BLAST PER SSPC-SP5
1 PAINTING	PRIMER COAT	SHERWIN-WILLIAMS RECOATABLE EPOXY PRIMER (LIGHT GRAY)
	FINISH COAT	SHERWIN-WILLIAMS ACROLON 218 PER CCC SPEC. RS-15. COLOR: SW7425 - WHITE 5-7 MILS DFT TOTAL COATING
CAPACITIES	FULL	7,700 GAL
	OPERATING	7,700 GAL AT 100% FILL
	MEDIA	20,000 LBS.
WEIGHTS	EMPTY	14,100 LBS.
	FULL H_2O	79,000 LBS.
	FULL PRODUCT	34,100 LBS. (DRY CARBON)
	OPERATING	90,000 LBS.

NOZZLE SCHEDULE

MARK	REQ'D	SIZE	DRILLING	FACING	DESCRIPTION
A	1	4"	150#	F.F.	CARBON OUTLET
B	1	4"	150#	F.F.	CARBON INLET/VENT
C	1	8"	150#	F.F.	INFLUENT
D	1	8"	150#	F.F.	EFFLUENT
E	1	14X18	ELLIP.		MANWAY W/ ¼" THK. GASKET
F	1	20"	150#	F.F.	MANWAY W/BLIND FLANGE & GASKET
G	3	2"	150#	F.F.	SAMPLE POINT
H	1	2"	150#	F.F.	AIR RELEASE

NOTES:

1. ALL INTERIOR WELDS & EDGES TO BE GROUND TO 1/8" RADIUS MIN.
2. ALL NOZZLES MUST BE FLUSH ON INSIDE OF SHELL, U.O.N
3. 20" MANWAY FLG. TO BE SECURED WITH (2) BOLTS. REMAINDER OF BOLTS & NUTS TO BE PACKAGED AND SHIPPED IN THE CRATE.
4. REMOVE ALL WATER & DIRT AFTER HYDROTEST.
5. REMOVE ALL WELD SPATTER.
6. CONTACT CCC FOR HEAT TRACE REQUIREMENTS.
7. ALL FLANGE BOLT HOLES TO STRADDLE CENTERLINES.
8. FOR MANWAY DETAIL SEE DWG. 90110066.

REV	DESCRIPTION	APP	DATE
1	MANWAYS, SAMPLE NOZZLES, PAINT & COLOR	MHS	7/6/2016
0	ISSUE FOR FABRICATION	MHS	5/16/2016

REVISIONS

TOLERANCES (unless otherwise specified)

ANGULAR	±0°30'	DECIMAL (2 PLACES)	±.010
FRACTIONAL	±1/16"	DECIMAL (3 PLACES)	±.005
DECIMAL (1 PLACE)	±.015	DECIMAL (4 PLACES)	±.0005

THIS DRAWING AND DESIGN IS THE PROPERTY OF CALGON CARBON CORPORATION AND IS NOT TO BE REPRODUCED IN WHOLE OR IN PART NOR EMPLOYED FOR ANY PURPOSE OTHER THAN SPECIFICALLY PERMITTED IN WRITING BY CALGON CARBON CORPORATION. THIS DRAWING LOANED SUBJECT TO RETURN ON DEMAND.

	NAME	DATE
DRAFTER	JPARRISH	12/18/2015
DESIGNER		
CHECKER	M. SAULSBERY	5/16/2016
APPROVAL		
PROJECT No.	CTO.150010.KRTAF	

CalgonCarbon

CLIENT: KIRTLAND AFB ALBUQUERQUE, NM

TITLE: MODEL 10, 125 PSIG 10 FT DIA. VESSEL ARRANGEMENT

DWG. Size	SHEET No.	SCALE
D	1 OF 2	NONE

DWG. No. 91157782 REV. 1

C:\Users\jparrish\oppdata\local\temp\AcPublish_2096\91157782 PV2 Ves Arrgt.dwg Jul 06, 2016 - 11:24am

BILL OF MATERIAL					
ITEM	QTY.	DESCRIPTION	MATERIAL	SAP No.	CCC SPEC
1	80	SEPTA	PPL	---	22.106
2	1	DECAL, DANGER, MANWAY	---	1058401	---
3	2	DECAL, CALGON LOGO	---	1059524	---
4	2	DECAL, LINED TANK	---	1025014	---
5	1	DECAL, DANGER, ELLIPTICAL MANWAY	---	1002706	---
6	1	GASKET, ELLIPTICAL 14" X 18" X ¼" THICK	WHITE EPDM	1053980	G46
7	1	GASKET, 20", 150#, ¼" THICK	WHITE EPDM	1054140	G46
8	20	BOLT, 1 ⅛" X 5" LG, HVY. HEX W/ NUT, GALVANIZED	A-325 GR 1	1060550	---

MATERIAL FOR ONE VESSEL, TWO REQUIRED

NOTES:

1.) LOCATE MANWAY DANGER DECALS ITEMS (2) & (5) AS SHOWN.

2.) LOCATE LINED TANK DECALS ITEM (4) NEAR BOTTOM WELD SEAM TO CLEAR PIPING.

3.) LOCATE CCC LOGOS ITEM (3) AT 0° & 180°, HEIGHT AS SHOWN.

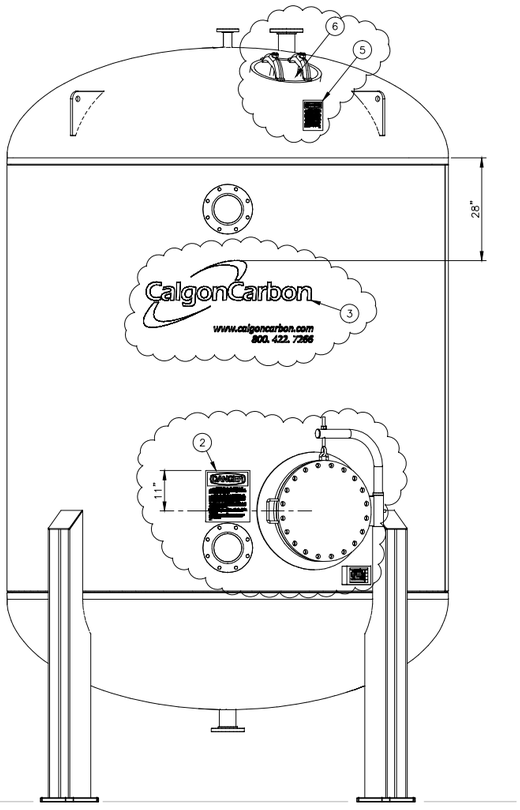

FRONT ELEVATION

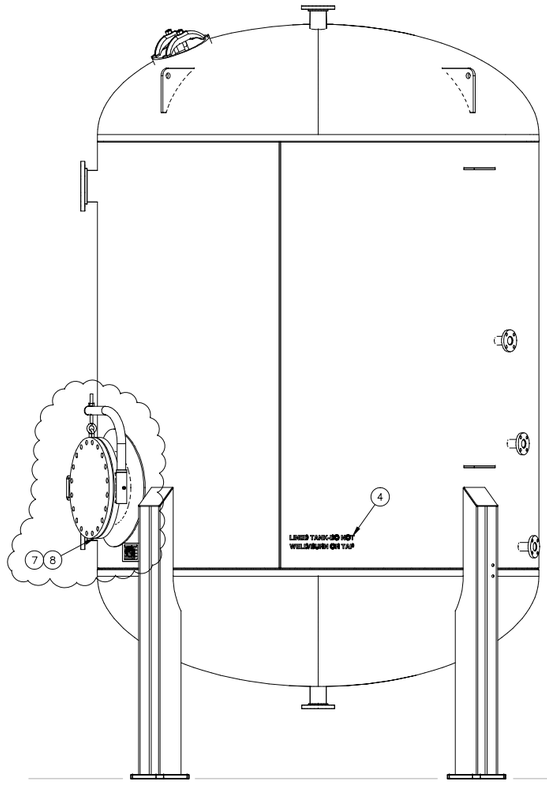

RIGHT ELEVATION

THIS DRAWING AND DESIGN IS THE PROPERTY OF CALGON CARBON CORPORATION AND IS NOT TO BE REPRODUCED IN WHOLE OR IN PART NOR EMPLOYED FOR ANY PURPOSE OTHER THAN SPECIFICALLY PERMITTED IN WRITING BY CALGON CARBON CORPORATION. THIS DRAWING LOANED SUBJECT TO RETURN ON DEMAND.

	NAME	DATE
DRAFTER	JPARRISH	12/18/2015
DESIGNER		
CHECKER	M. SAULSBERY	5/16/2016
APPROVAL		
PROJECT No.	CTO.150010.KRTAF	

REV	DESCRIPTION	APP	DATE
1	MANWAYS, SAMPLE NOZZLES, PAINT & COLOR	MHS	7/6/2016
0	ISSUE FOR FABRICATION	MHS	5/16/2016

REVISIONS

TOLERANCES (unless otherwise specified)

ANGULAR	±0°30'	DECIMAL (2 PLACES)	±.010
FRACTIONAL	±1/16"	DECIMAL (3 PLACES)	±.005
DECIMAL (1 PLACE)	±.015	DECIMAL (4 PLACES)	±.0005

CalgonCarbon

CLIENT: KIRTLAND AFB
ALBUQUERQUE, NM

TITLE: MODEL 10, 125 PSIG
10 FT DIA.
VESSEL ARRANGEMENT

DWG. Size	SHEET No.	SCALE
D	2 OF 2	NONE

DWG. No. 91157782 REV. 1

C:\Users\jparrish\appdata\local\temp\AcPublish_2096\91157782 PV2 Ves Arrgt.dwg Jul 06, 2016 - 11:24am

Status Date: **31-Jan-2018**

SUBMITTAL LOG
KIRTLAND AFB BULK FUELS FACILITY
CONTRACT NUMBER W912DR-12-D-0006 DM01
KAFB-106239 Conveyance Line Installation

Submittal Tracking #	Subcontractor	Spec. Section/ Doc.	Paragraph	Document Description/Title	Submittal Deadline	Submittal/ Resubmittal Date	Approval Date Date	Status	Comments
1	RMCI, Inc.	40 05 13	Pipelines, Liquid Process Piping	HDPE Pipe and Fittings	7/20/17 10:16 AM	7/21/17 3:00 PM	7/25/17 8:21 AM	Complete	
2	RMCI, Inc.	00 00 00	No Spec	Bilco Hatches	7/20/17 12:25 PM	7/25/17 11:00 AM	7/28/17 2:42 PM	Complete	
3	RMCI, Inc.	00 00 00	No Spec	Directional Drill Conduit	8/1/17 8:00 AM	8/2/17 8:00 AM	8/2/17 9:55 AM	Complete	
4	RMCI, Inc.	00 00 00	No Spec	Concrete Mix Design	8/1/17 8:00 AM	8/2/17 8:00 AM	8/2/17 9:48 AM	Complete	
5	RMCI, Inc.	31 00 00	Earthwork	Buried Warning Tape	8/1/17 8:00 AM	8/2/17 8:00 AM	8/2/17 9:52 AM	Complete	
6	RMCI, Inc.	40 05 13	Pipelines, Liquid Process Piping	Nuts, Bolts, Gasket Kits	8/1/17 8:00 AM	8/31/17 12:07 PM	9/6/17 10:26 AM	Complete	
7	RMCI, Inc.	00 00 00	No Spec	Tracer Wire	8/1/17 8:00 AM	8/16/17 8:30 AM	8/16/17 3:39 PM	Complete	
8	RMCI, Inc.	40 05 13	Pipelines, Liquid Process Piping	Steel Piping	8/1/17 8:00 AM	8/16/17 8:30 AM	8/16/17 3:29 PM	Complete	
9	RMCI, Inc.	40 05 13	Pipelines, Liquid Process Piping	Check Valve	8/1/17 8:00 AM	9/13/17 7:50 AM	9/13/17 4:40 PM	Complete	Resubmitted on 9/13/17
10	RMCI, Inc.	40 05 13	Pipelines, Liquid Process Piping	Pipe Supports	8/1/17 8:00 AM	8/3/17 12:50 PM	8/3/17 3:34 PM	Complete	
11	RMCI, Inc.	41 05 13	Pipelines, Liquid Process Piping	Wall Sleeve and Link Seal	8/1/17 8:00 AM	8/16/17 8:45 AM	8/16/17 3:22 PM	Complete	
12	RMCI, Inc.	40 05 13	Pipelines, Liquid Process Piping	Leak Detection System	8/1/17 8:00 AM	8/4/17 8:48 AM	8/7/17 10:30 AM	Complete	
13	RMCI, Inc.	00 00 00	No Spec	Basecourse Underneath Electrical Pad	9/7/17 12:13 PM	9/7/17 3:20 PM	9/12/17 3:21 PM	Complete	
14	RMCI, Inc.	00 00 00	No Spec	Gavel Underneath Electrical Pad	9/7/17 12:17 PM	9/7/17 3:20 PM	9/12/17 3:29 PM	Complete	
15	RMCI, Inc.	00 00 00	No Spec	Fencing and Gates	9/7/17 2:03 PM	9/11/17 9:45 PM	9/12/17 3:39 PM	Complete	
16	RMCI, Inc.	00 00 00	No Spec	Precast Vault Submittals	9/11/17 1:00 PM	9/13/17 7:50 AM	9/18/17 12:55 PM	Complete	
17	RMCI, Inc.	00 00 00	No Spec	Precast Vault Concrete Mix Design Submittals	9/11/17 1:00 PM	9/13/17 7:50 AM	9/14/17 12:24 PM	Complete	
18	RMCI, Inc.	00 00 00	No Spec	Pipe Coating	10/30/17 1:00 PM	11/1/17 9:00 AM	11/6/17 9:31 AM	Complete	
19	RMCI, Inc.	32 92 19	Seeding	Seed Certifications	11/17/17 10:00 AM	11/28/17 10:45 AM	11/28/17 3:30 PM	Complete	Resubmitted on 11/28/17
	RMCI, Inc.	31 00 00	Earthwork	Density Test Reports	As Completed	With Daily CQM Reports	With Daily CQM Reports	Complete	POST COMPLETION SUBMITTAL
	RMCI, Inc.	41 05 13	Pipelines, Liquid Process Piping	Hydrostatic Test Reports	As Completed	With Daily CQM Reports	With Daily CQM Reports	Complete	POST COMPLETION SUBMITTAL
	RMCI, Inc.	42 05 13	Pipelines, Liquid Process Piping	Pneumatic Test Reports	As Completed	With Daily CQM Reports	With Daily CQM Reports	Complete	POST COMPLETION SUBMITTAL
	RMCI, Inc.	43 05 13	Pipelines, Liquid Process Piping	Fusion Test Reports	As Completed	With Daily CQM Reports	With Daily CQM Reports	Complete	POST COMPLETION SUBMITTAL
	RMCI, Inc.	44 05 13	Pipelines, Liquid Process Piping	Fusion Welder Certifications	As Completed	With Daily CQM Reports	With Daily CQM Reports	Complete	POST COMPLETION SUBMITTAL
	RMCI, Inc.	00 00 00	No Spec	Concrete Test Reports	As Completed	With Daily CQM Reports	With Daily CQM Reports	Complete	POST COMPLETION SUBMITTAL
	RMCI, Inc.	00 00 00	No Spec	Electronic As-Builts	12/29/17 5:00 PM	12/29/17 5:00 PM			POST COMPLETION SUBMITTAL
	RMCI, Inc.	00 00 00	No Spec	Asphalt Mix Design					NOT NEEDED
	RMCI, Inc.	00 00 00	No Spec	Asphalt Test Reports					NOT NEEDED
	Wilson Electric	00 00 00	No Spec	Metering	8/7/17 3:30 PM	8/8/17 2:30 PM	8/14/17 11:58 AM	Complete	
	Wilson Electric	00 00 00	No Spec	MV Cable	8/7/17 3:30 PM	12/7/17 12:51 PM	12/7/17 1:43 PM	Complete	Resubmitted on 12/7/17
	Wilson Electric	00 00 00	No Spec	MV Terminations	8/7/17 3:30 PM	8/8/17 2:30 PM	8/14/17 11:44 AM	Complete	
	Wilson Electric	00 00 00	No Spec	Breaker/junction boxes	8/15/17 12:30 PM	8/16/17 11:00 AM	8/21/17 1:38 PM	Complete, with clarification	Wilson Electric Response: "The breakers in the Sentron Unit are what Siemens says are what are needed for adequate protection. They did say that the breakers can be changed out in the field with what is specified"
	Wilson Electric	00 00 00	No Spec	Transformer	8/15/17 12:30 PM	10/9/17 1:15 PM	10/10/17 2:54 PM	Complete	Resubmitted 10/9/17
	Wilson Electric	00 00 00	No Spec	Pull Boxes	8/16/17 5:07 PM	8/17/17 8:50 AM	8/24/17 12:04 PM	Complete	
	Wilson Electric	00 00 00	No Spec	Fiber Optic System	8/25/17 3:51 PM	9/6/17 2:30 PM	9/12/17 7:26 AM	Complete	
	Wilson Electric	00 00 00	No Spec	Pulling Plan					Identified at Preparatory Phase Meeting, instructed by USACE on 12-20-17 that a pulling plan would not be required as all of the runs were straight runs.
	Wilson Electric	00 00 00	No Spec	VLF Testing Certifications	As Completed	With Daily CQM Reports	With Daily CQM Reports	Complete	Identified at Preparatory Phase Meeting
8	Techsas, Inc.	00 00 00	No Spec	KAFB-106239 VFD	10/2/17 3:31 PM	11/21/17 9:05 AM	11/22/17 12:56 PM	Complete	10/10/17 15:33 USACE requested additional information requiring resubmittal
9	Techsas, Inc.	00 00 00	No Spec	PLC and Instrumentation	10/2/17 3:31 PM	10/13/17 9:30 AM	10/17/17 3:23 PM	Complete	
10	Techsas, Inc.	00 00 00	No Spec	Well Pump and Components	10/2/17 3:31 PM	10/31/17 12:00PM	10/6/17 9:49 AM	Complete	
11	Techsas, Inc.	00 00 00	No Spec	Recovery Well Vault Components	10/2/17 3:31 PM	10/13/17 9:30 AM	12/7/17 11:14 AM	Complete	Resubmitted on 12/05/17
	I&C Solutions			None					NOT NEEDED
	EA	00 00 00	No Spec	Existing Conveyance Line Drainage Plan	9/26/17 5:00 PM	9/27/17 3:27 PM	10/2/17 12:25 PM	Complete	
					--END OF LOG--				

DEPARTMENT OF THE ARMY
ALBUQUERQUE DISTRICT, CORPS OF ENGINEERS
ALBUQERQUE DISTRICT OFFICE
4101 JEFFERSON PLAZA NE
ALBUQUERQUE, NM 87109

SUBMITTAL REVIEW VERIFICATION SHEET

PROJECT TITLE: Kirtland BFF Mid-Plume Pump and Treat System Expansion
CONTRACT NUMBER: W912DR-12-D-0006 DM01
DATE RECEIVED: 7-21-2017
DATE REVIEWED: 7-25-2017

DESCRIPTION OF ITEMS REVIEWED:

1. HDPE Pipe and Fittings

NO EXCEPTIONS TAKEN.	X
EXCEPTIONS AS NOTED ON DRAWINGS AND/OR ATTACHED SHEETS(S). RESUBMISSION NOT REQUIRED.	
EXCEPTIONS AS NOTED ON DRAWINGS AND/OR ATTACHED SHEETS(S). RESUBMISSION REQUIRED.	
RECEIPT ACKKNOWLEDGED.	

Notes:

NOTE: ITEMS REVIEWED AS TO GENERAL LAYOUT ONLY. DIMENSIONS AND QUANTITIES NOT CHECKED. REVIEW DOES NOT RELIEVE CONTRACTOR OF RESPONSIBILITIES FOR ANY ERRORS WHICH MAY EXIST AS CONTRACTOR SHALL BE RESPONSIBLE FOR DIMENSIONS AND DESIGN OF ADEQUATE CORRECTIONS, DETAILS AND SATISFACTORY CONSTRUCTION OF WORK.

SIGNATURE SANCHEZ.AMY.ELIZABETH.1454434338 Digitally signed by SANCHEZ.AMY.ELIZABETH.1454434338 DN: c=US, o=U.S. Government, ou=DoD, ou=PKI, ou=USA, cn=SANCHEZ.AMY.ELIZABETH.1454434338 Date: 2017.07.25 08:17:21 -06'00' **DATE** 07/25/2017

EA Engineering, Science, and Technology, Inc., PBC

Submittal Review Sheet 1

Project Name: **Kirtland BFF Mid-Plume Pump and Treat System Expansion**			Date Received: **07/20/2017**
Project Owner: **Kirtland Air Force Base**			Checked By: **Tyler Curley**
Contractor: **RMCI, Inc.**	Engineer: **EA Engineering, Science and Technology, Inc., PBC.**		Log Page: **NA**
Address: **6211 Chappell Rd NE, Albuquerque, NM 87113**	Address: **320 Gold Ave. SW, Suite 1300 Albuquerque, NM 87102**		EA No.: 62599DM01
			Spec. Section: **40 05 13 - Pipelines Liquid Process Piping**
			Drawing/Detail No.:
ATTN: Philip Johnson	ATTN: **Devon Jercinovic**	1st Sub	Re-Sub
Date Transmitted: **07/20/2017**	Prev. Transmittal Date:		

Item No.	No. Copies	Description	Manufacturer	Mfg/Vendor Dwg or Detail	Action Taken*
1	1	HDPE Pipe and Fittings	Harrington Industrial Plastics LLC		**B**

The Action Designated Above is in Accordance with the Following Legend:

A – Furnish as Submitted
B – Furnish as Noted
C – Revise and Re-submit
1. Not enough information for review.
2. No reproducible submitted.
3. Copies illegible.
4. Not enough copies submitted.
5. Wrong sequence number.
6. Wrong resubmittal number.
7. Wrong Spec. Section.
8. Wrong form used.
9. See Comments.

D – Rejected
E – Engineer's Review not Required
1. Submittal not required.
2. Supplemental Information. Submittal retained for Information purposes only.
3. Information reviewed and approved on prior submittal.
4. See Comments.

Review is for general compliance with Contract Documents. No responsibility is assumed for correctness of dimensions or detail. Contractor is required to specify deviations from contract requirements. Lack of exceptions noted by Engineer does not waive Contractor's obligation to comply with Drawings and Specifications.

Comments:
Items reviewed and confirmed to meet requirements
(Reviewed Material in Parentheses)
Issues in Bold

- Piping material is PE 4710 for both the carrier and containment piping instead of PE 4710/3608 as specified. The pressure rating of the containment pipe is 125 psi when using PE 4710 compared to 100 psi of the specified PE 3608. Due to the higher pressure rating of the PE 4710 I feel this is an acceptable material. Spec sheet provided to RMCI by manufacturer is included and replaces the Spec sheet in the submittal (page 23 of the submittal).

EA Engineering, Science, and Technology, Inc., PBC

By: _____ Date: 7/21/17

Distribution: [1] Contractor [1] Engineer [1] Owner

Asahi/America, Inc.

SPECIFICATION FOR
FLUID-LOK HDPE DUAL CONTAINMENT PIPE

SECTION 1500 MECHANICAL

1. GENERAL

1.1.1 Summary

This specification shall govern the materials and installation of High Density Polyethylene dual contained system of pipe and structures. Materials identified in ASTM D-2657 shall be purchased and installed according to this specification. The general contractor shall be responsible for the overall operation of the complete system. The mechanical contractor shall be responsible for the acceptable condition of the containment piping. No deviation from this specification shall be allowed without express written consent of the engineer.

1.1.2 References

ASME B31.3 Hydrostatic Testing Guidelines

AWW C901-Polyethylene Pressure Pipe, Tubing and Fittings, ½" through 3" for Water
AWWA C906-Polyethylene (PE) Pressure Pipe and Fittings, 4" through 63" for Water Distribution.

ASTM F714-Polyethylene Plastic Pipe Based on Outside Diameter (3" to 63")

NSF Std #14-Plastic Piping Components & Related Materials

ASTM C-1147-Practice for Determining Short Term Tensile Weld Strength of Chemical Resistance

ASTM D-638-Test Method of Tensile Properties of Plastics

ASTM D-790-Test Method for Flexural Properties of Unreinforced and Reinforced Plastics and Electrical Insulating Materials

ASTM D-1238-Test Method for Flow Rates of Thermal Plastics by Extrusion Plastometer

ASTM D-1248-Specification for Polyethylene Plastics Molding and Extrusion Materials

ASTM F-1248-Determination of Environmental Stress Crack Resistance (ESCR) of Polyethylene Pipe

ASTM D-1505-Test Method for Density of Plastics by the Density Gradient Technique

ASTM D-1599-Test Method for Short Time Hydraulic Failure Pressure of Plastic Pipe, Tubing and Fittings

ASTM D-1693-Test Method for Environmental Stress Cracking of Ethylene Plastics

ASTM D-2122-Method for Determining Dimensions of Thermal Plastic Pipe and Fittings

ASTM D-2239-Polyethylene Plastic Pipe (SIDR-PR). (Iron Pipe Size; Inside Diameter)

ASTM D-2513- Specification for Thermoplastic Gas Pressure Pipe, Tubings and Fittings

ASTM D-2657-Guideline for Polyolefin Thermoplastic Butt Fusion Heat Welding

ASTM D-2737-Polyethylene Plastic Tubing (Copper Tube Size; Outside Diameter)

ASTM D-2837- Method for Obtaining Hydrostatic Design Basis for Thermal Plastic Pipe Materials

ASTM D-3035-Polyethylene (PE) Plastic (DR-PR) Based on Controlled Outside Diameter (1/2" to 24")

ASTM D-3350-Specification for Polyethylene Plastics Pipe and Fittings Material

ASTM D-4218-Test Method for Carbon Black Content in Polyethylene Compounds by the Muffle-Furnace Technique
Plastic Piping Institute Best Practices TR 31/9-79

1.1.3 Definitions

Product pipe = Inside pipe or carrier pipe
Containment Pipe – Outer pipe

1.1.4 System Description

A. System shall be a double-containment piping system produced on High Density Polyethylene on both the product and containment pipe.
B. System shall provide the ability to incorporate leak detection as specified within the Leak Detection Section. Access tees, pull ropes and low-point instrumentation taps shall be provided as specified by leak detection vendor or contract drawings.
C. System shall provide full containment of all accessories such as floor drains, cleanouts, valves and tanks, etc.

1.2 System Performance Requirements

System shall handle the following:

Description	Product Pipe	Containment Pipe
Operation Pressure		
Operating Temperature		
Test Pressure		
Media concentration		

1.2.1 Submittals

Submit the following:

A. Product data for each type of double containment specified including details of construction relative to materials, dimensions of individual components, profiles and finishes.
B. Product certificates signed by manufacturer of double containment product stating compliance with stated requirements.
C. Welder certificates certifying that welders comply with the installation procedures as outlined by ASTM D 2657 Section 9 prior to construction.
D. Qualifications of firms supplying double containment piping. Firms must have a minimum of 10 years experience in the design, installation and operation of a thermoplastic double-wall piping system.

1.2.2 Quality Assurance

A. Obtain components from a single source having responsibility and accountability to answer and resolve problems regarding proper installation, compatibility, performance and acceptance.
B. Design, fabricate and install double-containment piping to meet ASME/ANSI B31.3 where applicable manufacturer shall provide thermal stress analysis demonstrating the ability of the double-containment piping system to handle the stated piping conditions with a restrained or a flexible design, as follows:

1. **Restrained Design**
   The system shall be restrained with no accommodation for inner-pipe movement. Location of anchors shall be responsibility of manufacturer.

2. **Flexible Design**
   The system shall be a flexible design with provisions to allow inner and outer pipe ability to move independent of one another. Anchors will be selectively used to direct thermal expansion into expansion loops, offsets, etc. Size, location and quantity of expansion loops, etc., shall be responsibility of manufacturer.

1.2.3 Delivery, Storage and Handling

A. Deliver double-containment piping as a factory assembled unit with protective wrapping/coverings.

B. Store products on elevated platforms in a dry location with protection from elements.
C. Lift, support and transport double-containment piping per manufacturer's recommendations.

1.2.4 Warranty
Warranty period is one year after date of substantial completion of installation.

1.2.5 Extra Materials
Turn over to owner at end of construction necessary welding equipment as suggested by manufacturer for repair and maintenance of the double-containment product.

PART 2. PRODUCTS

2.1 Manufacturers
Subject to the compliance with requirements and products that may be incorporated into the work include Fluid-Lok by Asahi/America, Inc. of Malden, Massachusetts 1-800-343-3618.

2.2 Materials
A. PIPE AND FITTINGS

The pipe used to fabricate the system supplied under this specification shall be high density, extra high molecular weight polyethylene pipe. The pipe and fittings shall conform to ASTM D-3350 with minimum cell classification values of 345464C. The pipe and fittings shall be made from the same polyethylene resin base which meets this specification.

B. PHYSICAL PROPERTIES OF PIPE COMPOUND

Density – the density shall be no less than 0.955 gms/ccm as referenced in ASTM D1505.

Melt Index-the melt index shall be no greater than 0.15 gms/10 minutes when tested in accordance with ASTM D 1238.

Flex Modulus-flexural modulus shall be 135,000 psi as referenced in ASTM D638.

Tensile Strength at yield-tensile strength shall be 3,200 to less than 3,500 psi as referenced in ASTM D638.

ESCR-Environmental Stress Crack Resistance shall be in excess of 5,000 hours with zero failures when tested in accordance with ASTM D 1693-Condition C.

Hydrostatic Design Basis shall be 1,600 psi at 23 degrees C when tested in accordance with ASTM D2837.

Tested according to ASTM F 1248, ring specimen ESCR is zero failures in more than 1,000 hours.

No slow-crack growth pipe ring failures in more than 32 days of testing at 1,600 psi, cycled at 9 RPMs according to Battelle Rotary Test.

The HDPE pipe extruder and resin manufacturer shall be the same company. Third party testing data may be required by the engineer to certify the manufacturer's material data.

Chemical resistance date from the pipe manufacturer on the application will be provided as part of the submittal. The engineer may require a certification letter from the manufacturer as part of the submittal.

C. PIPE DIMENSIONS AND SDR

Pipe supplied under this specification shall have IPS (Iron Pipe Size) OD and shall meet ASTM D 3035. Pipe sizes shall be as specified in the following table. The dual containment combination, inner by outer pipe, the ID and OD of the carrier and containment, and the SDRs shall be as specified herein.

Pipe Size	Carrier ID	Carrier OD	Carrier SDR	Cont ID	Cont OD	Const SDR

Fittings shall be manufactured to the same IPS ID and OD as the pipe.

All molded and fabricated fittings shall meet the pressure requirements of the system as specified and based on ASTM D2837 Hydrostatic Design Basis for Thermoplastic Pipes.

All molded fittings shall be manufactured per ASTM D3261.

Pipe joints and fittings shall be supplied to the job site ready for simultaneous butt-fusion.

Cleanouts shall be installed every 600 feet or as per the drawings. Cleanouts shall be capped with metallic blind flanges and a full blind gasket (to prevent condensation on the inside of the metal blind) for easy access. (Alternate: Position cleanouts in leak detection manholes, valve boxes or well heads).

Carrier pipe support shall be with full round centralizers welded to the carrier pipe. Centralizer support spacing per Plastic Piping Institute standards and manufacturer's recommendations.

The centralizers shall be machined for accuracy from pipe grade resin ½" sheet stock HDPE. Centralizers have openings at 6 o'clock and 12 o'clock per the drawings. The opening at 6 o'clock will permit the flow of liquid between the carrier pipe and the containment pipe. Then minimum vertical opening shall be .75 inches or greater including allowance for internal beads. The minimum horizontal opening shall be 1.25 inches. The opening at 12 o'clock shall be the same dimensions.

The OD of the centralizer shall match the ID of the containment piping as closely as possible.

All pipe and fittings with a carrier pipe diameter of 8" or larger and all piping with a carrier pipe of 6" DR 11 or lower DR (thicker wall) shall have the centralizers extrusion welded to the carrier pipe based on the specified support spacing above. End centralizers shall be extrusion welded to the carrier pipe and the containment piping at the ends of all pipe and fittings.

The pipe and fitting manufacturer shall provide documentation that the fabricator/welders have a minimum of 2 years experience fabricating dual containment systems and shall show compliance with ASTM C 1147.

Force Transfer Dogbones™ shall be used to anchor the differential and the total forces from thermal expansion / contraction. The Force Transfer Dogbone™ shall be a mass anchor machined from solid high density polyethylene pipe grade resin. The coupling shall anchor the inner carrier pipe and the outer containment pipe to an external anchor point. Force Transfer Dogbones™ shall be used to protect fittings from thermal expansion as required by the manufacturer's thermal analysis of the system based on the standards outlined in this specification.

Force Transfer Dogbones™ shall simultaneously fused into the system.

Solid Force Transfer Dogbones™ shall be used to segment the annular space as required and drawn.

Force Transfer Dogbones™ shall be ported unless indicated on the drawings. Ports shall provide a continuous annular space and match the openings in the centralizers. POSITION PORTS PROPERLY DURING INSTALLATION.

End termination/Force Transfer Dogbones™ shall be used to seal the system at both ends. The coupling shall be simultaneously butt fused to the carrier and containment pipe to seal the annular space. No other closure or termination will be allowed. This fitting will also provide the transition to single wall piping.

Tie-ins to other piping systems and/or equipment where butt-fusion is not applicable shall be with HDPE flange adapters and coated metal back-up rings, unless otherwise specified by the engineer on the drawings. Mechanical compression or clamp style fittings will not be allowed under this specification.

PART 3. EXECUTION

3.1 Installation

A. Install double-containment piping to comply with manufacturer's recommended procedures.
B. Installers shall be pre-qualified through sufficient training in butt fusion techniques according to ASTM D2657 Section 9.
C. Hot gas welding shall not be allowed for wetted components.
D. Manufacturer/Manufacturer's Representative shall provide on-site training in the assembly, installation and operation of double-containment systems.
E. Install continuous running pull rope for installation of leak detection cable if required. Manufacturer shall supply pipe spools with pull rope in place.

3.2 Testing

Pressure Systems

Testing shall be conducted in accordance with manufacturer's recommendations. The owner shall be notified at the time of test and choose to be present.

A. Product Pipe
Should be tested hydrostatically to 150% of operating pressure per ASME B31.3 part 345 or per local code.

B. Containment Pipe
The containment piping shall be hydrostatically tested to 150% of operating pressure per ASME B31.3 or per local codes. The product pipe must be pressurized to the same pressure as the test to prevent collapsing of product pipe.

Alternate to containment pipe hydrostatic test.

To avoid moisture in the containment space, an air test can be conducted on the containment pipe. Pressure test is recommended at 5 psi and shall not exceed 10 psi. The inner carrier shall be full of water and under pressure to avoid any possible collapse.

When testing with air, the ambient temperature should be above 32°F and extra safety precautions for personnel shall be put in place during the test.

Drainage Systems

C. Product Pipe
Product pipe shall be tested to 10 feet of H_2O or less. Compressed air or gas may be used at 10 psi where conditions warrant at temperatures above 45°F. Systems with elevation changes greater than 20 feet of H_2O shall be tested at 1-1/2 times the elevation head. Fabricated fittings shall not be used for these systems; pressure fittings should be used in their place.

D. Containment Pipe
Containment pipe should be tested per 3.2.C. Compressed air/gas shall be used for systems where electronic leak detection shall be used to prevent contamination of the annular space with moisture. In no case shall a test pressure of greater than 10 psi of compressed gas/air be allowed. Ambient temperature shall be above 32°F when using air/gas for testing.

Simultaneous Pipe

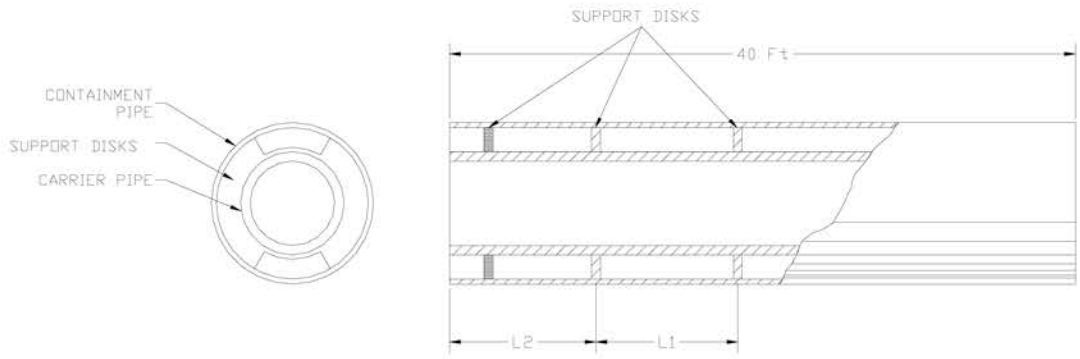

SDR Rating	11 x 11	11 x 17	11 x 26	17 x 26	26 x 26	26 x 32.5
Part Number	4001	4002	4085	4005	4695	4977

Size	Standard SDR	Size Code	L1	L2
1" x 3"	11 x 11	134	34.25	35.25
1" x 4"	11 x 17	401	34.25	35.25
1.5" x 4"	11 x 17	415	34.25	35.25
2" x 4"	11 x 17	420	37.0	38.0
2" x 6"	11 x 17	530	37.0	38.0
3" x 6"	11 x 17	531	48.0	49.0
	11 x 26		48.0	49.0
	17 x 26		43.75	44.75
4" x 8"	11 x 17	583	53.25	54.25
	11 x 26		53.25	54.25
	17 x 26		48.0	49.0
6" x 10"	11 x 17	627	60.0	61.0
	17 x 26		60.0	61.0
	26 x 26		53.25	54.25
8" x 12"	17 x 26	660	68.5	69.5
	26 x 32.5		60.0	61.0
10" x 14"	17 x 26	702	68.5	69.5
12" x 16"	26 x 26	690	80.0	81.0
12" x 18"	17 x 26	711	80.0	81.0

in inches
More sizes and SDRs available

Asahi America Inc. 35 Green St Malden Ma 02148 Office 1-781-321-5409 Fax 1-781-321-4421
Email: asahi@asahi-america.com
Internet: www.asahi-america.com

22.5° Elbow
Part Number + Size Code

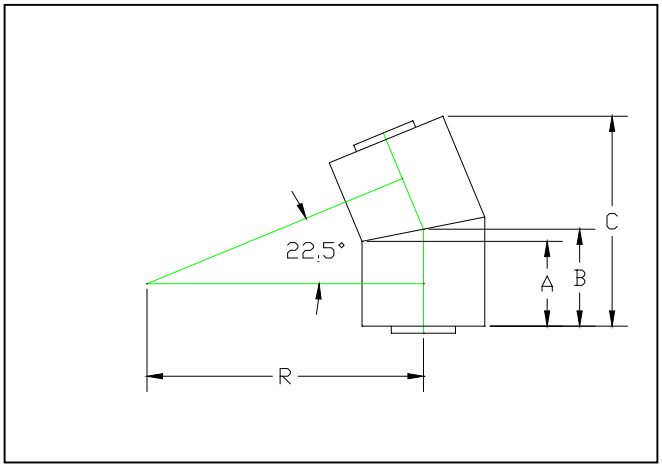

SDR RATING	11 x 11	11 x 17	11 x 26	17 x 26	26 x 26	26 x 32.5
PART # Number	4957	4958	4959	4960	4961	4981

SIZE	Standard SDR	Size Code	A	B	C	R
1” x 3”	11 x 11	134	3.0”	3.5”	7.4”	7.4
1” x 4” 1.5” x 4” 2” x 4”	11 x 17	401 415 420	5.0”	5.6”	11.6”	11.6”
2” x 6”	11 x 17	530	6.0”	6.9”	14.5”	14.5”
3” x 6”	11 x 17 11 x 26 17 x 26	531	6.0”	6.9”	14.5”	14.5”
4” x 8”	11 x 17 11 x 26 17 x 26	583	6.0”	7.1”	15.5”	15.5”
6” x 10”	11 x 17 17 x 26 26 x 26	627	6.0”	7.4”	16.6”	16.6”
8” x 12”	17 x 26 26 x 32.5	660	8.0”	9.7”	21.3”	21.3”
10” x 14”	17 x 26	702	8.0”	9.9”	22.0”	22.0”
12” x 16”	26 x 26	690	10.0”	12.1”	26.7”	26.7”

Asahi America Inc. 35 Green St Malden Ma 02148 Office 1-781-321-5409 Fax 1-781-321-4421
Email: asahi@asahi-america.com
Internet: www.asahi-america.com

45° Elbow
Part Number + Size Code

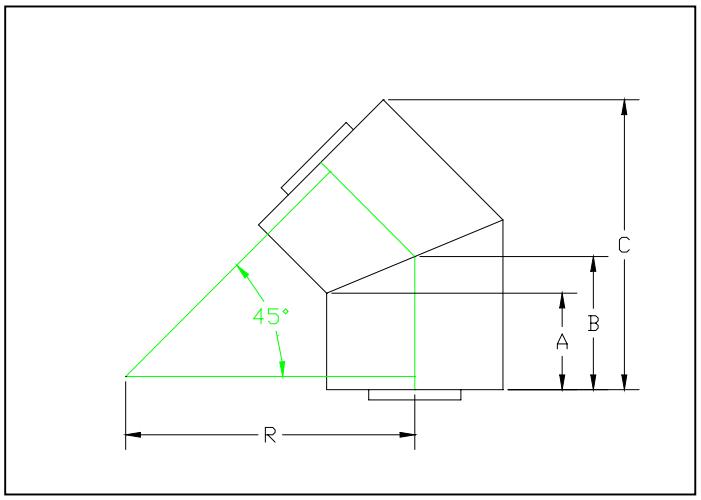

SDR RATING	11 x 11	11 x 17	11 x 26	17 x 26	26 x 26	26 x 32.5
PART # Number	4021	4022	4025	4026	4027	4693

SIZE	Standard SDR	Size code	A	B	C	R
1” x 3”	11 x 11	134	C.F.	C.F.	C.F.	C.F.
1” x 4” 1.5” x 4” 2” x 4”	11 x 17	401 415 420	4.7”	5.0”	10.13”	10.13”
2” x 6”	11 x 17	530	5.13”	6.5”	13.44”	13.44”
3” x 6”	11 x 17 11 x 26 17 x 26	531	5.13”	6.5”	13.44”	13.44”
4” x 8”	11 x 17 11 x 26 17 x 26	583	4.71”	6.5”	14.14”	14.14”
6” x 10”	11 x 17 26 x 26 17 x 26	627	5.77”	8.0”	17.46”	17.46”
8” x 12”	17 x 26 26 x 32.5	660	5.86”	8.5”	19.02”	19.02”
10” x 14”	17 x 26	702	C.F.	C.F.	C.F.	C.F.
12” x 16”	26 x 26	690	C.F.	C.F.	C.F.	C.F.
12” x 18”	17 x 26	711	C.F.	C.F.	C.F.	C.F.

45° Lateral
Part Number + Size Code

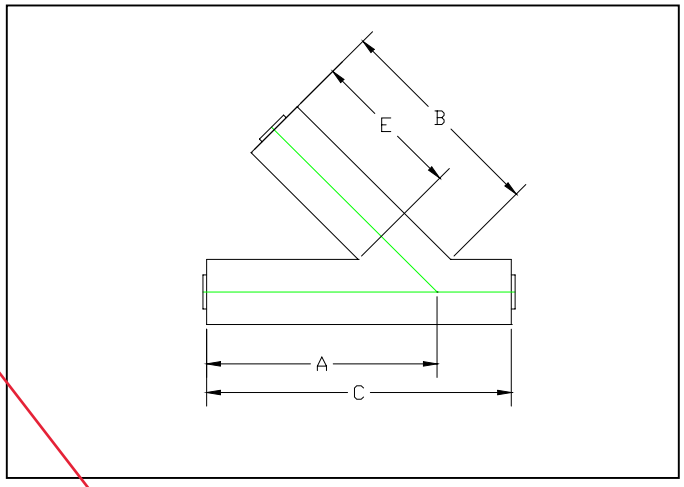

SDR RATING	11 x 17	11 x 26	17 x 26	26 x 26	26 x 32.5
PART # Number	4047	4087	4048	4052	4053

SIZE	Standard SDR	Size code	A	B	C	E	Gusset Thickness
2” x 4”	11 x 17	420	19.5”	19.5”	26.5”	14.1”	N/R
2” x 6”	11 x 17	530	27.6”	27.9”	35.5”	19.9”	N/R
3” x 6”	11 x 17 11 x 26 17 x 26	531	27.6”	27.9”	35.5”	19.9”	N/R
4” x 8”	11 x 17 11 x 26 17 x 26	583	30.4”	30.4”	40.2”	20.0”	N/R
6” x 10”	11 x 17 17 x 26 26 x 26	627	40.3”	35.0”	50.5”	20.0”	1.0”
8” x 12”	17 x 26 26 x 23.5	660	44.0”	35.4”	54.6”	20.0”	1.0”
10” x 14”	17 x 26	702	47.3”	38.9”	58.2”	22.0”	1.0”
12” x 16”	26 x 26	690	55.3”	45.3”	66.0”	26.0”	1.0”
12” x 18”	17 x 26	711	59.5”	49.7”	71.2”	28.0”	1.5”

90° Elbow
Part Number + Size Code

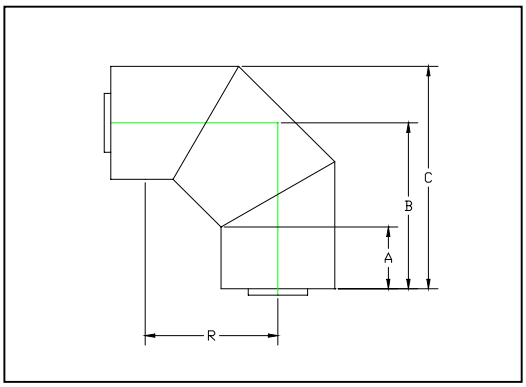

SDR RATING	11 x 11	11 x 17	11 x 26	17 x 26	26 x 26	26 x 32.5
PART # Number	4011	4012	4015	4016	4017	4974

SIZE	Standard SDR	Size code	A	B	C	R
1” x 3”	11 x 11	134	C.F.	C.F.	C.F.	C.F.
1” x 4” 1.5” x 4” 2” x 4”	11 x 17	401 415 420	4.07”	8.54”	10.79”	6.5”
2” x 6”	11 x 17	530	5.13”	11.45”	14.76”	8.9”
3” x 6”	11 x 17 11 x 26 17 x 26	531	5.13”	11.45”	14.76”	8.9”
4” x 8”	11 x 17 11 x 26 17 x 26	583	4.71”	12.66	16.97”	10.05”
6” x 10”	11 x 17 17 x 26 26 x 26	627	5.77”	14.72”	20.09”	11.93”
8” x 12”	17 x 26 26 x 32.5	660	5.86”	15.92	22.3”	13.0”
10” x 14”	17 x 26	702	C.F.	C.F.	C.F.	C.F.
12” x 16”	26 x 26	690	C.F.	C.F.	C.F.	C.F.
12” x 18”	17 x 26	711	C.F.	C.F.	C.F.	C.F.

Access Port with Flange
Part Number + Size Code

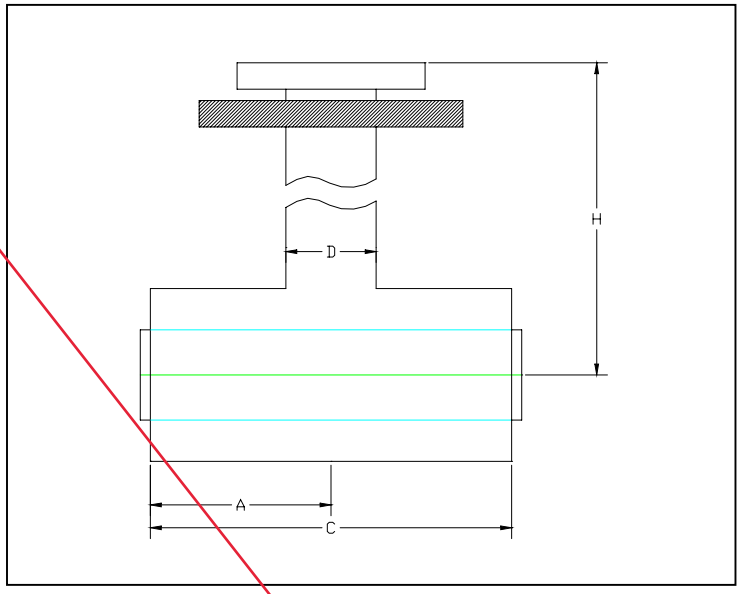

SDR RATING	11 x 11	11 x 17	11 x 26	11 x 32.5	17 x 17	17 x 26	17 x 32.5	26 x 26	26 x 32.5	32 x32
PART # Number	4916	4917			4918					

SIZE	Size code	A	C	D	H
1” x 4”	401	6.0”	12.0”	4.5”	Varies
2” x 6” 3” x 6”	530 531	9.0”	18.0”	4.5”	Varies
3” x 8” 4” x 8”	582 583	9.0”	18.0”	4.5”	Varies
6” x 10”	627	9.0”	18.0”	4.5”	Varies
8” x 12”	660	9.0”	18.0”	4.5”	Varies

Asahi America Inc. 35 Green St Malden Ma 02148 Office 1-781-321-5409 Fax 1-781-321-4421
Email: asahi@asahi-america.com
Internet: www.asahi-america.com

Dogbone End Termination

Part Number + Size Code

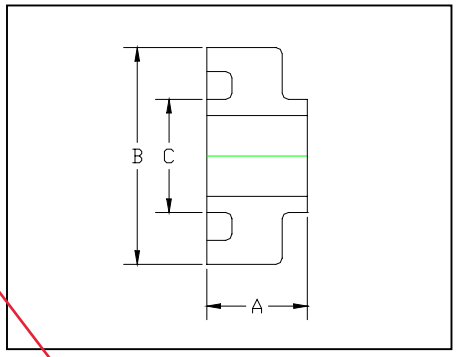

SDR RATING	11 x 11	11 x 17	11 x 26	17 x 26	26 x 26	26 x 32.5
PART # Number	4940	4941	4938	4939	4947	4948

SIZE (SDRxSDR)	Size code	A	B	C
1” x 3” (11 x 11)	134	2.5”	3.5”	1.315”
1” x 4” (11 x 17)	401	2.5”	4.5”	1.315”
1.5” x 4” (11 x 17)	415	2.5”	4.5”	1.9”
2” x 4” (11 x 17)	420	2.5”	4.5”	2.375”
2” x 6” (11 x 17)	530	3.0”	6.625”	2.375”
3” x 6” (11 x 17)	531	3.0”	6.625”	3.5”
3” x 6” (11 x 26)	531	3.0”	6.625”	3.5”
3” x 6” (17 x 26)	531	3.0”	6.625”	3.5”
4” x 8” (11 x 17)	583	4.0”	8.625“	4.5”
4” x 8” (11 x 26)	583	3.0”	8.625”	4.5”
4” x 8” (17 x 26)	583	3.0”	8.625”	4.5”
6” x 10” (11 x 17)	627	4.0”	10.75”	6.625”
6” x 10” (17 x 26)	627	3.0”	10.75”	6.625”
6” x 10” (26 x 26)	627	3.0”	10.75”	6.625”
8” x 12” (17 x 26)	660	4.0”	12.75”	8.625”
8” x 12” (26 x 32)	660	3.0”	12.75”	8.625”
10” x 14” (17 x 26)	702	4.0”	14.0”	10.75”
10” x 16” (17 x 26)	633	4.0”	16.0”	10.75”
10” x 16” (26 x 26)	633	4.0”	16.0”	10.75”
12” x 16” (26 x 26)	690	4.0”	16.0”	12.75”
12” x 18” (17 x 26)	711	4.0”	18.0”	12.75”

Fabricated Tee

Part Number + Size Code

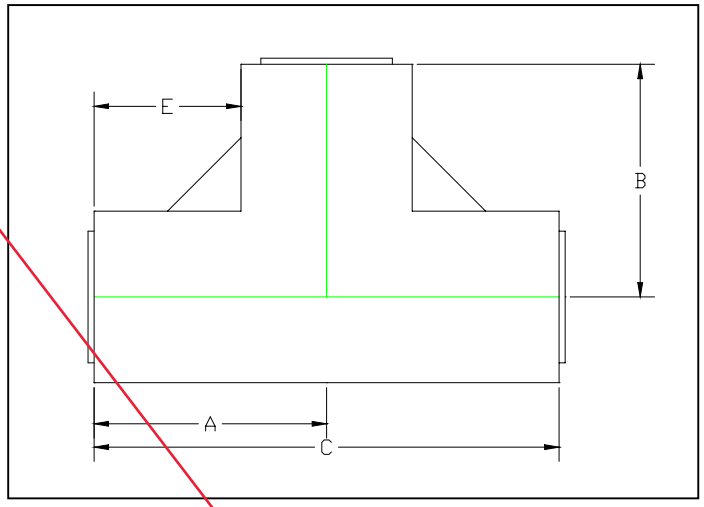

SDR RATING	11 x 17	11 x 26	17 x 26	26 x 26	26 x 32.5
PART # Number					

SIZE	Standard SDR	Size code	A	B	C	E
6” x 10”	11 x 17 17 x 26 26 x 26	627	13.5”	16”	27.5”	8.1”
8” x 12”	17 x 26 26 x 32.5	660	24.0”	24.0”	48.0”	17.6”
10” x 14”	17 x 26	702	24.0”	24.0”	48.0”	17.0”
12” x 16”	26 x 26	690	24.0”	24.0”	48.0”	16.0”
12” x 18”	17 x 26	711	24.0”	24.0”	48.0”	15.0”

Asahi America Inc. 35 Green St Malden Ma 02148 Office 1-781-321-5409 Fax 1-781-321-4421
Email: asahi@asahi-america.com
Internet: www.asahi-america.com

Long Sweep 45° Elbow

Part Number + Size Code

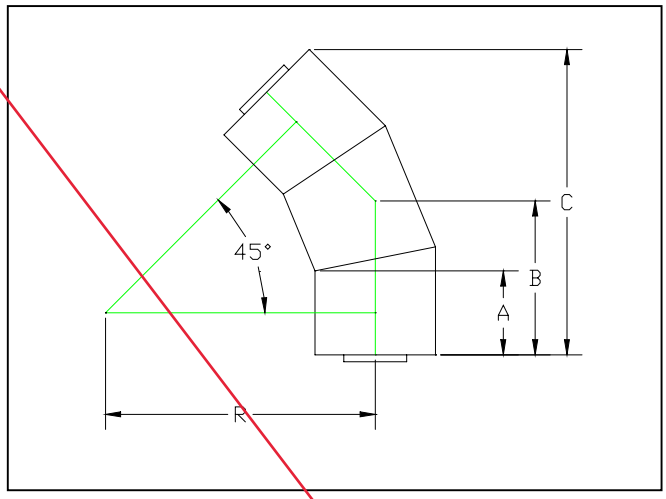

SDR RATING	11 x 11	11 x 17	11 x 26	11 x 32.5	17 x 17	17 x 26	17 x 32.5	26 x 26	26 x 32.5	32 x32
PART # Number	4121	4022	4025	4028	4029	4026	4023	4027	4056	4024

SIZE	Size code	A	B	C	R
1” x 3”	134	3.0”	5.4”	10.4”	9.3”
1” x 4” 1.5” x 4” 2” x 4”	401 415 420	5.0”	8.5”	16.1”	14.2”
2” x 6” 3” x 6”	530 531	6.0”	10.6”	20.5”	18.4”
3” x 8” 4” x 8”	582 583	6.0”	11.0”	21.9”	19.4”
6” x 10”	627	6.0”	11.5”	23.4”	20.4”
8” x 12”	660	8.0”	15.0”	30.0”	26.5”
10” x 14”	702	8.0”	15.3”	30.9”	27.1”
10” x 16” 12” x 16”	633 690	10.0”	18.7”	37.6”	33.1”
12” x 18”	711	10.0”	19.1”	39.0”	34.1”
14” x 20”	717	11.0”	21.1”	43.1”	37.7”
16” x 22”	735	11.0”	21.5”	44.5”	38.7”
18” x 24”	738	11.0”	21.9”	45.9”	39.7”
20” x 28”	785	10.0”	21.2”	46.1”	39.0”
22” x 30”	789	10.0”	21.6”	47.9”	40.1”
24” x 32”	793	10.0”	22.1”	48.9”	41.1”

Asahi America Inc. 35 Green St Malden Ma 02148 Office 1-781-321-5409 Fax 1-781-321-4421
Email: asahi@asahi-america.com
Internet: www.asahi-america.com

Long Sweep
60° Elbow
Part Number + Size Code

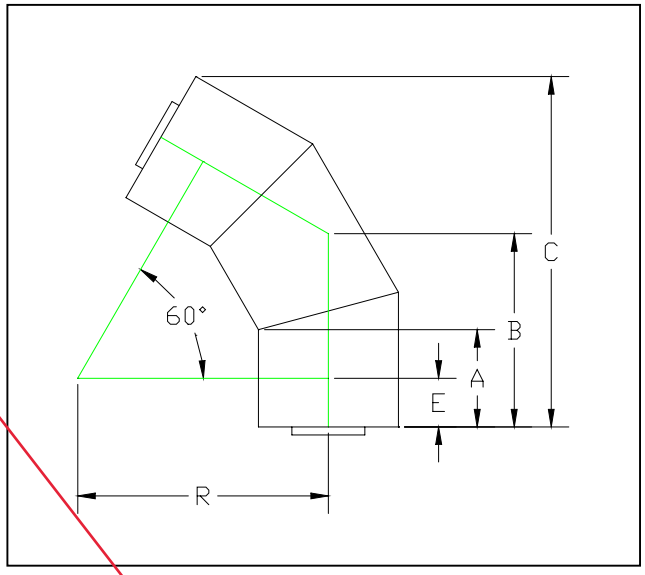

SDR RATING	11 x 11	11 x 17	11 x 26	11 x 32.5	17 x 17	17 x 26	17 x 32.5	26 x 26	26 x 32.5	32 x32
PART # Number	4121	4022	4025	4028	4029	4026	4023	4027	4056	4024

SIZE	Size code	A	B	C	E	R
1” x 3”	134	3.0”	5.4”	10.4”	1.5”	9.3”
1” x 4” 1.5” x 4” 2” x 4”	401 415 420	5.0”	8.5”	16.1”	2.5”	14.2”
2” x 6” 3” x 6”	530 531	6.0”	10.6”	20.5”	3.0”	18.4”
3” x 8” 4” x 8”	582 583	6.0”	11.0”	21.9”	3.0”	19.4”
6” x 10”	627	6.0”	11.5”	23.4”	3.0”	20.4”
8” x 12”	660	8.0”	15.0”	30.0”	4.0”	26.5”
10” x 14”	702	8.0”	15.3”	30.9”	4.0”	27.1”
10” x 16” 12” x 16”	633 690	10.0”	18.7”	37.6”	5.0”	33.1”
12” x 18”	711	10.0”	19.1”	39.0”	5.0”	34.1”
14” x 20”	717	11.0”	21.1”	43.1”	5.5”	37.7”
16” x 22”	735	11.0”	21.5”	44.5”	5.5”	38.7”
18” x 24”	738	11.0”	21.9”	45.9”	5.5”	39.7”
20” x 28”	785	10.0”	21.2”	46.1”	5.0”	39.0”
22” x 30”	789	10.0”	21.6”	47.9”	5.0”	40.1”
24” x 32”	793	10.0”	22.1”	48.9”	5.0”	41.1”

Asahi America Inc. 35 Green St Malden Ma 02148 Office 1-781-321-5409 Fax 1-781-321-4421
Email: asahi@asahi-america.com
Internet: www.asahi-america.com

Long Sweep
90° Elbow

Part Number + Size Code

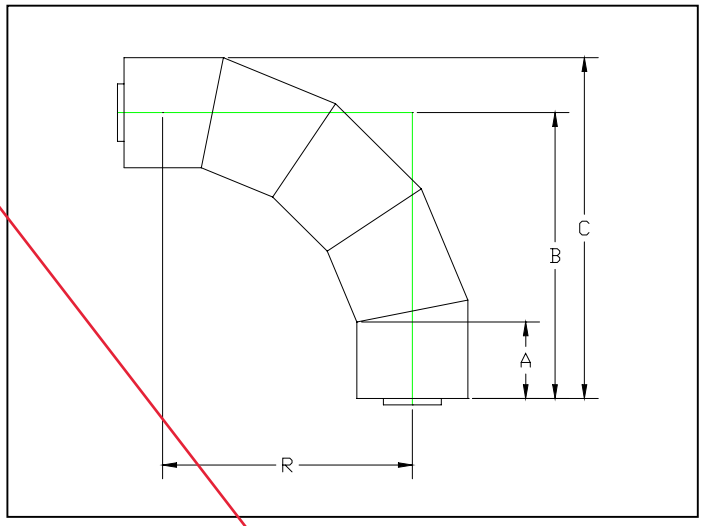

SDR RATING	11 x 11	11 x 17	11 x 26	11 x 32.5	17 x 17	17 x 26	17 x 32.5	26 x 26	26 x 32.5	32 x32
PART # Number										

SIZE	Size code	A	B	C	R
1” x 3”	134	3.0”	10.8”	12.5”	9.3”
1” x 4” 1.5” x 4” 2” x 4”	401 415 420	5.0”	16.8”	19.1”	14.2
2” x 6” 3” x 6”	530 531	6.0”	21.4”	24.7”	18.3”
3” x 8” 4” x 8”	582 583	6.0”	22.4”	26.7”	19.4”
6” x 10”	627	6.0”	23.5”	28.8”	20.1”
8” x 12”	660	8.0”	30.5”	36.8”	26.5”
10” x 14”	702	8.0”	31.0”	38.0”	27.1”
10” x 16” 12” x 16”	633 690	10.0”	38.1”	46.1”	33.1”
12” x 18”	711	10.0”	39.1”	48.1”	34.1”
14” x 20”	717	11.0”	43.2”	53.2”	37.7”
16” x 22”	735	11.0”	44.2”	55.2”	38.7”
18” x 24”	738	11.0”	45.2”	57.2”	39.7”
20” x 28”	785	10.0”	44.1”	58.1”	39.0”
22” x 30”	789	10.0”	45.1”	60.1”	40.1”
24” x 32”	793	10.0”	46.1”	62.1”	41.1”

Asahi America Inc. 35 Green St Malden Ma 02148 Office 1-781-321-5409 Fax 1-781-321-4421
Email: asahi@asahi-america.com
Internet: www.asahi-america.com

Tee

Part Number + Size Code

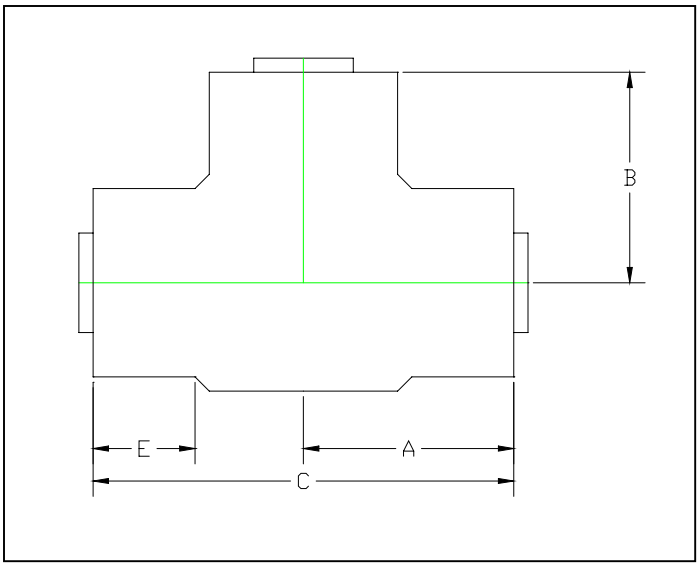

SDR RATING	11 x 11	11 x 17	11 x 26
PART # Number	4031	4032	4091

SIZE	Size code	A	B	C	E
1” x 3”	134	5.9”	5.6”	11.8”	3.0”
1” x 4” 1.5” x 4” 2” x 4”	401 415 420	6.7”	5.6”	13.9”	3.0”
2” x 6” 3” x 6”	530 531	8.9”	7.8”	17.8”	3.75”
4” x 8”	583	11.8”	9.5”	23.6”	4.0”

Asahi America Inc. 35 Green St Malden Ma 02148 Office 1-781-321-5409 Fax 1-781-321-4421
Email: asahi@asahi-america.com
Internet: www.asahi-america.com

P-Trap

Part Number + Size Code

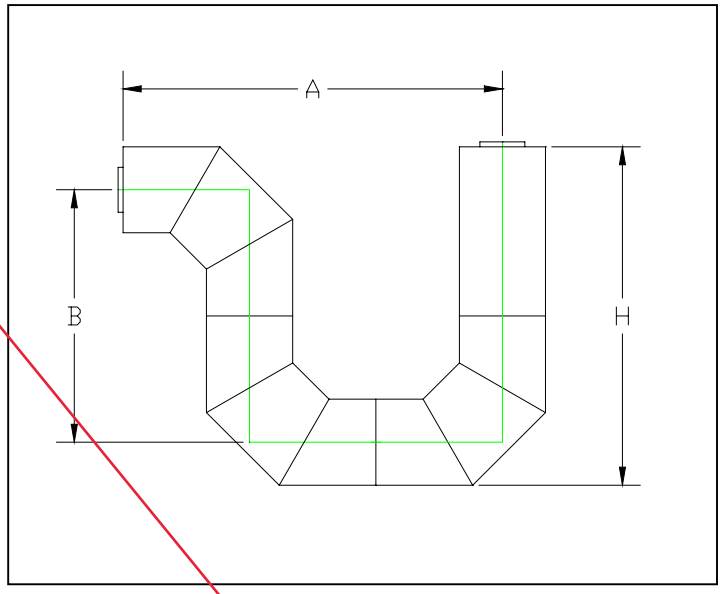

SDR RATING	11 x 11	11 x 17	11 x 26	11 x 32.5	17 x 17	17 x 26	17 x 32.5	26 x 26	26 x 32.5	32 x32
PART # Number	4901	4902	4097	4903	4904	4975	4905	4949	4950	4906

SIZE	Size code	A	B	H
1” x 3”	(134)	15.39”	10.26”	13.76”
1” x 4” 1.5” x 4” 2” x 4”	(401) (415) (420)	25.62”	17.08”	21.58”
2” x 6” 3” x 6”	(530) (531)	34.35”	22.90”	29.52”
3” x 8” 4” x 8”	(582) (583)	37.98”	25.32”	33.94”
6” x 10”	(627)	44.16”	29.44”	40.18”

Asahi America Inc. 35 Green St Malden Ma 02148 Office 1-781-321-5409 Fax 1-781-321-4421
Email: asahi@asahi-america.com
Internet: www.asahi-america.com

Reducers

Part Number + Size Code

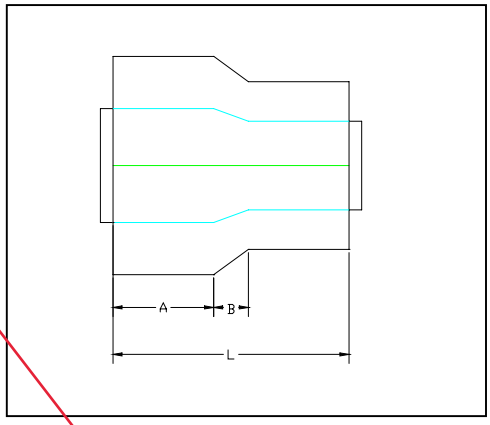

SDR RATING	11 x 11	11 x 17	11 x 26	11 x 32.5	17 x 17	17 x 26	17 x 32.5	26 x 26	26 x 32.5	32 x32
PART # Number	4071	4072	4096	4073						4074

SIZE	Size code	A	B	L
1” x 4” to 1” x 3” 1.5” x 4” to 1” x 3” 2” x 4” to 1” x 3”		3.13”	2.38”	8.62”
2” x 6” to 1” x 3” 3” x 6” to 1” x 3”		5.12”	2.36”	11.42”
2” x 6” to 1” x 4” 2” x 6” to 1.5” x 4” 2” x 6” to 2” x 4” 3” x 6” to 1” x 4” 3” x 6” to 1.5” x 4” 3” x 6” to 2” x 4”		3.0”	1.875	7.5”
4” x 8” to 2” x 6” 4” x 8” to 3” x 6”		4.0”	1.38”	9.38”
6” x 10” to 4” x 8” 8” x 12” to 4” x 8”		6.0”	4.0”	16.0”
8” x 12” to 6” x 10”		6.0”	4.0”	16.0”
10” x 14” to 8” x 12”		7.0”	4.0”	16.0”
10” x 16” to 10” x 14” 12” x 16” to 10” x 14”		7.0”	4.0”	18.0”
12” x 18” to 10” x 16” 12” x 18” to 12” x 16”		7.0”	4.0”	18.0”

Restraint Dogbone
Part Number + Size Code

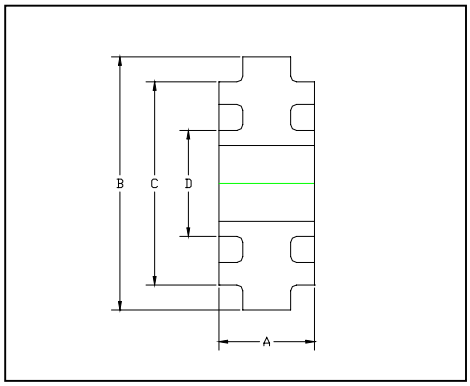

SDR RATING	11 x 11	11 x 17	11 x 26	11 x 32.5	17 x 17	17 x 26	17 x 32.5	26 x 26	26 x 32.5	32 x32
PART # Number	4951	4952	4953			4954		4955	4956	

SIZE (SDRxSDR)	Size code	A	B	C	D
1” x 3” (11 x 11)	134	2.5”	6.0”	3.5”	1.315”
1” x 4” (11 x 17)	401	2.5”	6.625”	4.5”	1.315”
1.5” x 4” (11 x 17)	415	2.5”	6.625”	4.5”	1.9”
2” x 4” (11 x 17)	420	2.5”	6.625”	4.5”	2.375”
2” x 6” (11 x 17)	530	3.0”	8.625”	6.625”	2.375”
3” x 6” (11 x 17)	531	3.0”	8.625”	6.625”	3.5”
3” x 6” (11 x 26)	531	3.0”	8.625”	6.625”	3.5”
3” x 8” (11 x 17)	582	4.0”	10.75”	8.625”	3.5”
4” x 8” (11 x 17)	583	4.0”	10.75”	8.625“	4.5”
4” x 8” (11 x 26)	583	3.0”	10.75”	8.625”	4.5”
4” x 8” (17 x 26)	583	3.0”	10.75”	8.625”	4.5”
6” x 10” (11 x 17)	627	4.0”	12.75”	10.75”	6.625”
6” x 10” (17 x 26)	627	3.0”	12.75”	10.75”	6.625”
6” x 10” (26 x 26)	627	3.0”	12.75”	10.75”	6.625”
8” x 12” (17 x 26)	660	4.0”	15.0”	12.75”	8.625”
8” x 12” (26 x 32)	660	3.0”	15.0”	12.75”	8.625”
10” x 14” (17 x 26)	702	4.0”	18.0”	14.0”	10.75”
10” x 16” (17 x 26)	633	4.0”	20.0”	16.0”	10.75”
10” x 16” (26 x 26)	633	4.0”	20.0”	16.0”	10.75”
12” x 16” (26 x 26)	690	4.0”	20.0”	16.0”	12.75”
12” x 18” (17 x 26)	711	4.0”	22.0”	18.0”	12.75”
14” x 20” (17 x 26)	717	4.0”	24.0”	20.0”	14.0”
16” x 22” (26 x 32)	735	4.0”	26.0”	22.0”	16.0”
18” x 24” (26 x 32)	738	4.0”	28.0”	24.0”	18.0”
20” x 28” (26 x 32)	785	4.0”	32.0”	28.0”	20.0”
22” x 30” (26 x 32)	789	4.0”	34.0”	30.0”	22.0”
24” x 32” (26 x 32)	793	4.0”	36.0”	32.0”	24.0”

Force Transfer Dogbone End Termination with Plug
Part Number + Size Code

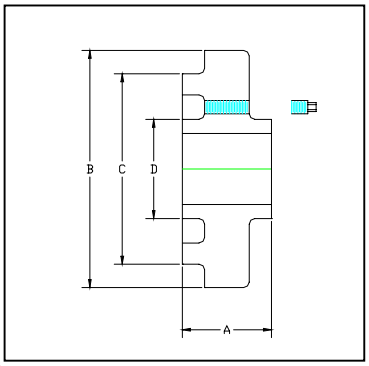

SDR RATING	11 x 11	11 x 17	11 x 26	17 x 26	26 x 26	26 x 32.5
PART # Number						

SIZE (SDRxSDR)	Size code	A	B	C	D
1” x 3” (11 x 11)	134	2.5”	6.0”	3.5”	1.315”
1” x 4” (11 x 17)	401	2.5”	6.625”	4.5”	1.315”
1.5” x 4” (11 x 17)	415	2.5”	6.625”	4.5”	1.9”
2” x 4” (11 x 17)	420	2.5”	6.625”	4.5”	2.375”
2” x 6” (11 x 17)	530	3.0”	8.625”	6.625”	2.375”
3” x 6” (11 x 17)	531	3.0”	8.625”	6.625”	3.5”
3” x 6” (11 x 26)	531	3.0”	8.625”	6.625”	3.5”
3” x 6” (17 x 26)	531	3.0”	8.625”	6.625”	3.5”
4” x 8” (11 x 17)	583	4.0”	10.75”	8.625“	4.5”
4” x 8” (11 x 26)	583	3.0”	10.75”	8.625”	4.5”
4” x 8” (17 x 26)	583	3.0”	10.75”	8.625”	4.5”
6” x 10” (11 x 17)	627	4.0”	12.75”	10.75”	6.625”
6” x 10” (17 x 26)	627	3.0”	12.75”	10.75”	6.625”
6” x 10” (26 x 26)	627	3.0”	12.75”	10.75”	6.625”
8” x 12” (17 x 26)	660	4.0”	15.0”	12.75”	8.625”
8” x 12” (26 x 32)	660	3.0”	15.0”	12.75”	8.625”
10” x 14” (17 x 26)	702	4.0”	18.0”	14.0”	10.75”
12” x 16” (26 x 26)	690	4.0”	20.0”	16.0”	12.75”
12” x 18” (17 x 26)	711	4.0”	22.0”	18.0”	12.75”

Restraint Dogbone End Termination
Part Number + Size Code

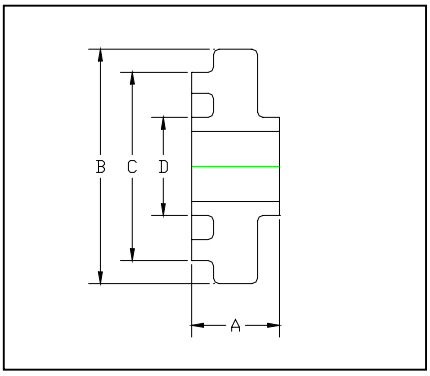

SDR RATING	11 x 11	11 x 17	11 x 26	17 x 26	26 x 26	26 x 32.5
PART # Number						

SIZE (SDRxSDR)	Size Code	A	B	C	D
1” x 3” (11 x 11)	134	2.5”	6.0”	3.5”	1.315”
1” x 4” (11 x 17)	401	2.5”	6.625”	4.5”	1.315”
1.5” x 4” (11 x 17)	415	2.5”	6.625”	4.5”	1.9”
2” x 4” (11 x 17)	420	2.5”	6.625”	4.5”	2.375”
2” x 6” (11 x 17)	530	3.0”	8.625”	6.625”	2.375”
3” x 6” (11 x 17)	531	3.0”	8.625”	6.625”	3.5”
3” x 6” (11 x 26)	531	3.0”	8.625”	6.625”	3.5”
3” x 6” (17 x 26)	531	3.0”	8.625”	6.625”	3.5”
4” x 8” (11 x 17)	583	4.0”	10.75”	8.625“	4.5”
4” x 8” (11 x 26)	583	3.0”	10.75”	8.625”	4.5”
4” x 8” (17 x 26)	583	3.0”	10.75”	8.625”	4.5”
6” x 10” (11 x 17)	627	4.0”	12.75”	10.75”	6.625”
6” x 10” (17 x 26)	627	3.0”	12.75”	10.75”	6.625”
6” x 10” (26 x 26)	627	3.0”	12.75”	10.75”	6.625”
8” x 12” (17 x 26)	660	4.0”	15.0”	12.75”	8.625”
8” x 12” (26 x 32)	660	3.0”	15.0”	12.75”	8.625”
10” x 14” (17 x 26)	702	4.0”	18.0”	14.0”	10.75”
10” x 16” (17 x 26)	633	4.0”	20.0”	16.0”	10.75”
10” x 16” (26 x 26)	633	4.0”	20.0”	16.0”	10.75”
12” x 16” (26 x 26)	690	4.0”	20.0”	16.0”	12.75”
12” x 18” (17 x 26)	711	4.0”	22.0”	18.0”	12.75”
14” x 20” (17 x 26)	717	4.0”	24.0”	20.0”	14.0”
16” x 22” (26 x 32)	735	4.0”	26.0”	22.0”	16.0”
18” x 24” (26 x 32)	738	4.0”	28.0”	24.0”	18.0”
20” x 28” (26 x 32)	785	4.0”	32.0”	28.0”	20.0”
22” x 30” (26 x 32)	789	4.0”	34.0”	30.0”	22.0”
24” x 32” (26 x 32)	793	4.0”	36.0”	32.0”	24.0”

Fluid-Lok® - HDPE

Fluid-Lok® HDPE double containment piping system is available in high density polyethylene and has the widest variety of sizes and wall thickness options. Fluid-Lok® provides a cost-effective piping material with sound engineering design to create a reliable HDPE double wall system for environmental protection. The system is designed around centralizing the carrier pipe inside the containment pipe and locking the two components together. Once inner and outer pipe and fittings are fabricated and locked together, all field welds are performed as in a single wall piping system; inner and outer welds are joined reliably at the same time.

Supply Range

Standard Sizes: 1x3 though 24x32
Materials: PE 4710, PE 3608

Welding Methods:
Simultaneous butt fusion

Features and Benefits

- Homogenous material inside and out, providing equal chemical resistance on the carrier and containment pipe.
- Many leak detection options. Systems can be provided with continuous leak detection cable, low- point sensors, or manual observation ports.
- Custom components can also be supplied for each specific project including:
  - Thermoplastic manholes
  - Double contained valve boxes
  - Observation ports
  - Double contained tanks
  - Custom fittings and assemblies

Sample Specification

System shall be a double containment piping system produced with high density polyethylene on both the product and containment pipe and shall provide the ability to incorporate leak detection as specified. Access tees, pull ropes and low-point instrumentation taps shall be provided as specified by leak detection specifications or contract drawings.

Please consult Asahi/America for expanded product sample specification.

Why Choose Fluid-Lok®?

Available in various SDR combinations to allow cost savings when high pressures are not required (sizes 3x6 and up).

Domestically made HDPE 4710/3608 conforming with Buy American Act requirements.

Fluid-Lok® Ideal Applications

- **Landfill**
- **Ground water remediation**
- **Mining slurry**

ASAHI/AMERICA®

JM Eagle *Building essentials for a better tomorrow™*

POLYETHYLENE WATER & SEWER

SUBMITTAL AND DATA SHEET

Carrier Piping

HDPE IRON PIPE SIZE (I.P.S.) PRESSURE PIPE

ANSI/NSF-61, 14 LISTED

PE 4710		DR 7 (333 psi)			DR 9 (250 psi)			DR 11 (200 psi)		
PIPE SIZE	AVG. O.D.	MIN. T.	AVG. I.D.	WEIGHT LB/FT	MIN. T.	AVG. I.D.	WEIGHT LB/FT	MIN. T.	AVG. I.D.	WEIGHT LB/FT
1/2	0.840	0.120	0.586	0.12	0.093	0.643	0.10	0.076	0.679	0.08
3/4	1.050	0.150	0.732	0.19	0.117	0.802	0.15	0.095	0.849	0.12
1	1.315	0.188	0.916	0.29	0.146	1.005	0.23	0.120	1.061	0.20
1-1/4	1.660	0.237	1.158	0.46	0.184	1.270	0.37	0.151	1.340	0.31
1-1/2	1.900	0.271	1.325	0.61	0.211	1.453	0.49	0.173	1.533	0.41
2	2.375	0.339	1.656	0.95	0.264	1.815	0.77	0.216	1.917	0.64
3	3.500	0.500	2.440	2.06	0.389	2.675	1.66	0.318	2.826	1.39
4	4.500	0.643	3.137	3.40	0.500	3.440	2.75	0.409	3.633	2.30
5-3/8	5.375	0.768	3.747	4.85	0.597	4.109	3.92	0.489	4.338	3.29
5	5.563	0.795	3.878	5.20	0.618	4.253	4.20	0.506	4.490	3.52
6	6.625	0.946	4.619	7.36	0.736	5.065	5.96	0.602	5.349	4.99
7	7.125	0.976	5.056	8.52	0.792	5.446	6.89	0.648	5.751	5.78
8	8.625	1.232	6.013	12.48	0.958	6.594	10.09	0.784	6.963	8.46
10	10.750	1.536	7.494	19.40	1.194	8.219	15.68	0.977	8.679	13.14
12	12.750	1.821	8.889	27.28	1.417	9.746	22.07	1.159	10.293	18.49
14	14.000	2.000	9.760	32.90	1.556	10.107	26.61	1.273	11.301	22.30
16	16.000	2.286	11.154	42.97	1.778	12.231	34.75	1.455	12.915	29.12
18	18.000	2.571	12.549	54.37	2.000	13.760	43.97	1.636	14.532	36.84
20	20.000	2.857	13.943	67.13	2.222	15.289	54.28	1.818	16.146	45.49
22	22.000	3.143	15.337	81.23	2.444	16.819	65.68	2.000	17.76	55.05
24	24.000	3.429	16.732	96.67	2.667	18.346	78.18	2.182	19.374	65.52
26	26.000	—	—	—	2.889	19.875	91.75	2.364	20.988	76.90
28	28.000	—	—	—	3.111	21.405	106.40	2.545	22.605	89.15
30	30.000	—	—	—	3.333	22.934	122.13	2.727	24.219	102.35
32	32.000	—	—	—	—	—	—	2.909	25.833	116.46
34	34.000	—	—	—	—	—	—	3.091	27.447	131.48
36	36.000	—	—	—	—	—	—	3.273	29.061	147.41

I.D. : Inside Diameter
O.D. : Outside Diameter
T. : Wall Thickness

* For data, sizes, or classes not reflected in these charts, please contact JM Eagle™ for assistance.

Revised 3/7/2013. This information may have been updated. Please download the latest version at www.jmeagle.com

JM Eagle *Building essentials for a better tomorrow™*

Containment Piping

HDPE IRON PIPE SIZE (I.P.S.) PRESSURE PIPE (continued)

ANSI/NSF-61, 14 LISTED

PE 4710		DR 13.5 (160 psi)			DR 17 (125 psi)			DR 19 (111 psi)		
PIPE SIZE	AVG. O.D.	MIN. T.	AVG. I.D.	WEIGHT LB/FT	MIN. T.	AVG. I.D.	WEIGHT LB/FT	MIN. T.	AVG. I.D.	WEIGHT LB/FT
1/2	0.840	—	—	—	—	—	—	—	—	—
3/4	1.050	0.078	0.885	0.10	—	—	—	—	—	—
1	1.315	0.097	1.109	0.16	—	—	—	—	—	—
1-1/4	1.660	0.123	1.399	0.26	—	—	—	—	—	—
1-1/2	1.900	0.141	1.601	0.34	—	—	—	—	—	—
2	2.375	0.176	2.002	0.53	0.140	2.078	0.43	—	—	—
3	3.500	0.259	2.951	1.16	0.206	3.063	0.94	0.184	3.110	0.84
4	4.500	0.333	3.794	1.91	0.265	3.938	1.55	0.237	3.998	1.39
5-3/8	5.375	0.398	4.531	2.73	0.316	4.705	2.21	0.283	4.775	1.99
5	5.563	0.412	4.690	2.92	0.327	4.870	2.36	0.293	4.942	2.13
6	6.625	0.491	5.584	4.15	0.390	5.798	3.35	0.349	5.885	3.02
7	7.125	0.528	6.006	4.80	0.419	6.237	3.88	0.375	6.330	3.49
8	8.625	0.639	7.270	7.03	0.507	7.550	5.68	0.454	7.663	5.12
10	10.750	0.796	9.062	10.92	0.632	9.410	8.82	0.566	9.550	7.95
12	12.750	0.944	10.749	15.36	0.750	11.160	12.41	0.671	11.327	11.19
14	14.000	1.037	11.802	18.52	0.824	12.253	14.98	0.737	12.438	13.49
16	16.000	1.185	13.488	24.19	0.941	14.005	19.55	0.842	14.215	17.61
18	18.000	1.333	15.174	30.61	1.059	15.755	24.75	0.947	15.992	22.29
20	20.000	1.481	16.860	37.79	1.176	17.507	30.53	1.053	17.768	27.52
22	22.000	1.630	18.544	45.75	1.294	19.257	36.86	1.158	19.545	33.30
24	24.000	1.778	20.231	54.44	1.412	21.007	43.99	1.263	21.322	39.63
26	26.000	1.926	21.917	63.89	1.529	22.759	51.61	1.368	23.100	46.51
28	28.000	2.074	23.603	74.09	1.647	24.508	59.87	1.474	24.875	53.94
30	30.000	2.222	25.289	85.04	1.765	26.258	68.74	1.579	26.653	61.92
32	32.000	2.370	26.976	96.76	1.882	28.010	78.18	1.684	28.430	70.45
34	34.000	2.519	28.660	109.26	2.000	29.760	88.28	1.790	30.205	79.54
36	36.000	2.667	30.346	122.49	2.118	31.510	98.98	1.895	31.983	89.17
42	42.000	3.111	35.404	166.70	2.471	36.761	134.72	2.211	37.314	121.37
48	48.000	3.556	40.462	217.76	2.824	42.013	175.97	2.526	42.644	158.52
54	54.000	—	—	—	3.177	47.265	222.67	2.842	47.975	200.63

* For data, sizes, or classes not reflected in these charts, please contact JM Eagle™ for assistance.

Revised 3/7/2013. This information may have been updated. Please download the latest version at www.jmeagle.com

DOUBLE WALL SYSTEMS

Installing any piping system properly requires preplanning. The installation is more than the welding of components. It requires the proper environment, material inventory, welding equipment, tools, and thorough training. This guide is to assist in the planning and installation of a double wall pipe system either in a pipe rack or trench.

This guide will concentrate on Duo-Pro and Fluid-Lok systems, as produced and supplied by Asahi/America, Inc. Duo-Pro and Fluid-Lok systems are similar with only a few minor exceptions. Both systems are highly engineered systems, fabricated from single wall components to provide the widest variety of selection and performance for all circumstances. By the time a Duo-Pro system arrives on site, most of the engineering and design layout work should have been completed.

Covered in this guide are the steps to plan and complete a successful installation.

Step 1. Welding Environment
Step 2. Tool Selection
Step 3. Material Handling
Step 4. Training and Preparation
Step 5. Tool Commission and Daily Checks
Step 6. Pipe Cutting
Step 7. Weld Preparation
Step 8. Weld Inspection
Step 9. Hanging
Step 10. Trenching and Burial
Step 11. System Testing
Step 12. Repair Procedures

Step 1. Welding Environment

Asahi/America does not set requirements for proper welding environments. As the installer, it is necessary to choose the environment based on the installation type, timing or quality goal. In most systems, pipe is either going into a pipe rack, beneath a floor or wall, or buried underground. In all these cases, conducting welds in the actual final location may not always be the most convenient location for welding. In fact, in most cases, it is preferable to prefabricate spool piece components and conduct final welds or hook-up in the pipe rack.

If possible, set up a welding area to build the spool pieces. The weld area should be situated in an area that has reduced exposure to wind, possible rain, and extreme cold temperatures. Building spool pieces inside a weld shop may prove advantageous. A fairly controlled environment and organized work space will improve efficiency and quality of the system to be installed.

Not all welding can be conducted in a shop and eventually field welds will need to be done. Some systems will be installed completely outside, with all the welds perhaps conducted in place.

When welding outside, several factors have to be considered. It is always important not to weld in the rain. Rain will damage equipment and improperly influence the weld. For rainy days, a shelter or tent should be constructed over equipment. In addition to rain, high winds and cold temperatures, below 40° F, will negatively influence the welding process. If these conditions are not avoidable, a heated tent structure is recommended. For specific recommendations by tool type, consult the Asahi/America Engineering Department.

When conducting field welds in a pipe rack or in a trench, it is important to have the location of the weld well planned. Vertical welds in any location will prove difficult to conduct and should be avoided. The field weld that connects up prefabricated spool pieces should be a pipe-to-pipe weld whenever possible. Pipe-to-pipe welds are easier to align and level, making the weld easier to conduct in possibly tight quarters.

In all field welds, in the rack or in a trench, it is important to have ample room for welding equipment and to choose the proper welding equipment. In some underground installations, it may be necessary to increase the width of the trench in weld locations. Many underground systems are welded above ground and then lowered down into the trench to avoid placing equipment in narrow trenches. The same is true in crowded pipe racks. Many times it will prove more efficient to prefab spools and use flanges or unions to connect them together in the pipe rack. Consult Asahi/America for the design and use of a double contained flange.

Step 2. Tool Selection

The selection of the type of welding method conducted on a double wall industrial piping project should be based on the following criteria:

- Material
- Sizes to be installed
- Welding location
- Type of installation
- Similar to dissimilar material
- Available expertise

For assembling double containment piping systems made from PVDF, PP, E-CTFE, and HDPE, there are many choices of equipment available, each having its advantages and disadvantages. On all Asahi/America's standard double wall containment systems, butt fusion is the only joining system offered due to its ideal functionality in this application. Tables F-15 and F-16 contain data on available welding equipment. There is no one right piece of equipment that can handle all sizes and materials. It is absolutely critical to have the right equipment on site for proper installation.

ASAHI/AMERICA
Rev. EDG–02/A
P.O. Box 653 • 35 Green Street, Malden, MA 02148 • Tel: (800) 343-3618, (781) 321-5409
Fax: (800) 426-7058 • Internet: http://www.asahi-america.com • Email: asahi@asahi-america.com

Table F-15. Equipment Selection: Simultaneous Fusion

Description	Pro 150 x 150	Pro 150 x 45	Pro 45 x 45	PVDF x PVDF	HDPE SDR 11 x 11	HDPE SDR 11 x 17	HDPE SDR 17 x 17
Shop 4	1 x 3: A	2 x 4: A	2 x 4: A	1 x 3: A	1 x 3: A	1 x 3: A	1 x 3: A
Miniplast	2 x 4: A	—	—	2 x 4: A	2 x 4: A	2 x 4: A	2 x 4: A
Shop 12	2 x 4: A	2 x 4: A	2 x 4: A	2 x 4: A	2 x 4: A	2 x 4: A	2 x 4: A
	3 x 6: A	3 x 6: A	3 x 6: A	3 x 6: A	3 x 6: A	3 x 6: A	3 x 6: A
	4 x 8: B	4 x 8: B	4 x 8: B	4 x 8: B	4 x 8: B	4 x 8: B	4 x 8: B
	6 x 10: X	6 x 10: B	6 x 10: B	6 x 10: B	6 x 10: X	6 x 10: X	6 x 10: x
Field 6	2 x 4: A	2 x 4: A	2 x 4: A	2 x 4: A	2 x 4: A	2 x 4: A	2 x 4: A
	3 x 6: A	3 x 6: A	3 x 6: A	3 x 6: A	3 x 6: A	3 x 6: A	3 x 6: A
Field 12	3 x 6: A	3 x 6: A	3 x 6: A	3 x 6: A	3 x 6: A	3 x 6: A	3 x 6: A
	4 x 8: A	4 x 8: A	4 x 8: A	4 x 8: A	4 x 8: A	4 x 8: A	4 x 8: A
	6 x 10: A	6 x 10: A	6 x 10: A	6 x 10: A	6 x 10: A	6 x 10: A	6 x 10: A
	8 x 12: B	8 x 12: A	8 x 12: B	—	8 x 12: B	8 x 12: B	8 x 12: B
Field 20	4 x 8: B	4 x 8: B	4 x 8: B	—	4 x 8: B	4 x 8: B	4 x 8: B
	6 x 10: A	6 x 10: A	6 x 10: A	—	6 x 10: A	6 x 10: A	6 x 10: A
	8 x 12: A	8 x 12: A	8 x 12: A	—	8 x 12: A	8 x 12: A	8 x 12: A
	10 x 14: A	10 x 14: A	10 x 14: A	—	10 x 14: A	10 x 14 A	10 x 14: A
	12 x 16: A	12 x 16: A	12 x 16: A	—	12 x 16: A	12 x 16: A	12 x 16: A
	—	14 x 18: A	14 x 18: A	—	—	14 x 18: A	14 x 18: A
	—	16 x 20: A	16 x 20: A	—	—	16 x 20: A	16 x 20: A
MacElroy 1-4	X	X	X	X	1 x 3 A	1 x 3 A	—
	X	X	X	X	1 x 4 A	1 x 4 A	—
	X	X	X	X	1.5 x 4 A	1.5 x 4 A	—
	X	X	X	X	2 x 4 A	2 x 4 A	—
MacElroy 2-8	X	X	X	X	2 x 4 A	2 x 4 A	—
	X	X	X	X	3 x 6 A	3 x 6 A	3 x 6 A
	X	X	X	X	4 x 8 A	4 x 8 A	4 x 8 A
MacElroy 4-12	X	X	X	X	4 x 8 A	4 x 8 A	4 x 8 A
	X	X	X	X	6 x 10 A	6 x 10 A	6 x 10 A
	X	X	X	X	8 x 12 A	8 x 12 A	8 x 12 A
MacElroy 6-18	X	X	X	X	6 x 10 A	6 x 10 A	6 x 10 A
	X	X	X	X	8 x 12 A	8 x 12 A	8 x 12 A
	X	X	X	X	10 x 14 or 10 x 16 A	10 x 14 or 10 x 16 A	10 x 14 or 10 x 16 A
	X	X	X	X	12 x 16 or 12 x 18 A	12 x 16 or 12 x 18 A	12 x 16 or 12 x 18 A
MacElroy 8-24	X	X	X	X	8 x 12 B	8 x 12 B	8 x 12 B
	X	X	X	X	10 x 14 or 10 x 16 B	10 x 14 or 10 x 16 B	10 x 14 or 10 x 16 B
	X	X	X	X	12 x 16 or 12 x 18 A	12 x 16 or 12 x 18 A	12 x 16 or 12 x 18 A
	X	X	X	X	14 x 20 or 14 x 22 A	14 x 20 or 14 x 22 A	14 x 20 or 14 x 22 A
	X	X	X	X	16 x 22 or 16 x 24 A	16 x 22 or 16 x 24 A	16 x 22 or 16 x 24 A
	X	X	X	X	18 x 24 A	18 x 24 A	18 x 24 A

A: Recommended. B: Will work, but a better choice is available. X: Not recommended.

Table F-16. Equipment Selection: Staggered Welding

Description	Pro 150 x 150	Pro 150 x 45	Pro 45 x 45	PVDF x Pro 150	PVDF x Pro 45	PVDF x PVDF
1 x 4	Shop 4 Shop 10	Shop 4 Shop 10	DNA	Shop 4 Shop 10	DNA	Shop 4 Shop 10
2 x 4	Shop 4 Shop 10	Shop 4 Shop 10	DNA	Shop 4 Shop 10	Shop 4 Shop 10	Shop 4 Shop 10
3 x 6	Shop 10	Shop 10	DNA	Shop 10	Shop 10	Shop 10
4 x 8	Shop 10	Shop 10	Shop 10	Shop 10	Shop 10	Shop 10
6 x 10	Shop 10 carrier Field 12 containment	Shop 10 carrier Field 12 containment	Shop 10 carrier Field 12 containment	Shop 10 carrier Field 12 containment	Shop 10 carrier Field 12 containment	Shop 10 carrier Field 12 containment
8 x 12	Shop 10 carrier Field 12 containment	Shop 10 carrier Field 12 containment	Shop 10 carrier Field 12 containment	Shop 10 carrier Field 12 containment	Shop 10 carrier Field 12 containment	Shop 10 carrier Field 12 containment
10 x 14	Shop 10 carrier Field 12 containment	Shop 10 carrier Field 12 containment	Shop 10 carrier Field 12 containment	Shop 10 carrier Field 12 containment	Shop 10 carrier Field 12 containment	Shop 10 carrier Field 12 containment

P.O. Box 653 • 35 Green Street, Malden, MA 02148 • Tel: (800) 343-3618, (781) 321-5409
Fax: (800) 426-7058 • Internet: http://www.asahi-america.com • Email: asahi@asahi-america.com

Step 3. Material Handling

When pipe, fittings, and fabrications arrive on site, they should be inspected to ensure the proper components have arrived and no damage has occurred during shipment. Asahi/America goes to great lengths to ensure that pipe and fittings are properly packaged for shipment. If damage occurs, the freight company should be notified immediately.

Preferably, pipe should be stored inside or in a trailer. Care should be taken to properly support pipe during storage. Use the hanging criteria for the proper support distance. Pipe can be stacked during storage. Heavier pipes of larger dimensions should be stored at the bottom. However, it may prove more practical to segregate by size for easier access during the project. Pipe should not be stored above the recommended maximum height of 4 feet.

If material is stored outside, it is preferable to cover with a tarp in case of rain. PVDF is UV resistant, but polypropylene will degrade over time when exposed directly to UV. Depending on the size of the pipe and the wall thickness, it could cause physical damage that could reduce the allowable pressure rating. In all cases, the UV will cause a color change over time that may not be acceptable for aesthetic reasons. In general, covering polypropylene during storage is recommended.

Fittings are best kept in their boxes or bags, as they are shipped in separate containers by size, style, and material. This will allow for simplified picking and inventory control throughout the project.

Step 4. Training and Preparation

A double containment system is a critical utility within a plant. It is often under flooring or underground where it is not easily accessible. In addition, double containment systems also are in overhead piping and provide additional needed safety for plant personnel from a leak in a hazardous chemical system. A repair to a system can prove difficult and costly. One bad weld can cause hours of repair and frustration, as well as lost revenue. For these reasons, it is critical to receive training at the time of job start-up and use certified personnel throughout the course of a project.

Tool operation is only one of several factors in a thorough training course. Operators, inspectors, and managers need to understand the physical nature of the material, how to properly handle it, how to inspect welds, how to identify potential problems, how to properly maintain equipment and finally, how best to tie into a line and test it.

During Asahi/America's certified training sessions, all of the above topics are discussed. For the installation of a double containment system, the following training sessions are available:

- Tool Operator Training
- Quality Control Inspection

Both of these can be conducted on site during the time of the start-up. The depth of training in a double containment piping system is based on the system type to be installed. Systems that require staggered fusion are more involved to install and may require the operation of different equipment.

In addition to the above on-site training, Asahi/America also offers courses that are held at the corporate office for the following topics:

- Certified Maintenance and Repair
- Certified Trainer (prerequisites apply)

Consult with Asahi/America's Engineering Department for dates and availability of corporate programs.

During the on-site training process, Asahi/America certified trainers will set recommendations for the class size based on the tool type. In general, groups of four are recommended for the welding operation portion of the training. Typically, two groups can be certified in one day on the welding portion of the seminar. On simple installations, it may be faster; and on more complex installations, it may be longer. To reduce the distraction within the class, it is important that only personnel who will be conducting the weld operation during the project participate in the training. It is also recommended that if a third party QC is to be used that they also attend the full training course to fully understand the welding process and QC parameters.

Preparation

To best use training time, preparation should be made prior to the trainers' arrival on site. A recommended list of preparations follows.

- Ensure that project material is on site. It is not critical to have all material, but enough to start the project. Once training is complete, it is practical for the trainer to oversee the beginning portion of the installation. Many times new questions and challenges arise once the actual installation starts. In addition, if there is a significant period of time between the training and actual installation, operators may forget portions of the training or different operators may now be slated for the welding operation. Both scenarios require additional training.
- Ensure required tools are on site. Do not open the tools until a certified trainer is present. If more tools are ordered during a project, this is no longer required as proper unpacking and set up of the equipment is covered in the training process.
- Ensure that the correct power is available. Many pieces of equipment require 220 Volt single or three phase power supply. Consult with the factory or distributor at the time of tool ordering.
- If possible, have a conference room with an overhead projector available for the classroom portion of the training. If this is not available, select an area where all personnel will be able to see and hear the trainer for this portion of the discussion.

P.O. Box 653 • 35 Green Street, Malden, MA 02148 • Tel: (800) 343-3618, (781) 321-5409
Fax: (800) 426-7058 • Internet: http://www.asahi-america.com • Email: asahi@asahi-america.com

- Ensure that pipe samples are available for the training session. Asahi/America does not normally provide samples for the training.
- Ensure extra components such as welding rod, support discs, and hot air welders are ordered and available at the time of training. Such components.will be required throughout the project.

Formal training can be the key factor in starting a project off in the right direction. Take advantage of this service while on site. Asahi/America also offers field technicians for hire to oversee project welding and training for any specified amount of time. Contact the Asahi/America Engineering Department for more information.

Step 5. Tool Commission and Daily Checks

Checking equipment and welding technique daily is recommended. This is particularly important on larger projects where there are many welders on site. This daily check will allow QA to ensure all welders are up to speed on tool operation, welding technique, and inspection. Most problems in the field occur due to improper usage of equipment, rather than equipment failure.

During the initial training of the project, many welds are produced in the presence of a qualified trainer. These welds should be kept and used for the daily checks. Each welder should conduct one coupon test weld and submit it to QA. The coupons should be compared to initial samples. Inspection should include bead formation, sizing, and weld label.

Conducting preventive maintenance to the equipment at the beginning of each day is also required. The maintenance recommended varies on each weld tool type. Consult the Operation Manual for items to be checked daily.

By keeping equipment in good operating condition and ensuring all operators are up to speed, tool problems or welding errors are less likely to occur.

Step 6. Pipe Cutting

Cutting plastic pipe can be handled in a variety of methods. In small dimensions, 1/2" through 4", roll wheel pipe cutters are commonly available and work well. These types of cutters are similar to a tube cutter, but only larger. When using a roll cutter on PP or PE, it is important to ensure the wheel has a larger radius than the wall thickness of the pipe so it will cut all the way through. A roll cutter will only cut single wall pipe. It can be used to cut the inner and outer pipe separately, but if a pipe is already fabricated into a double contained configuration, a roll cutter cannot be used. Poly-Flo systems cannot be cut using a roll cutter.

In most sizes, band saws, vertical or horizontal, will work very well for plastic. Since plastic pipes can have a very heavy wall thickness, it is important to travel slowly through the band saw to avoid the blade from bending and creating an angled cut. For smaller pipe sizes and Poly-Flo pipes up to 2 x 3, a circular blade chop saw will also provide neat and accurate cuts. A miter box chop saw is also very useful if angled welds are to be done in the field.

If only manual saws are available, a hack saw will certainly cut through small dimensions, but avoid using a fine blade as it will take considerable time. In addition, reciprocating saws are generally not the best choice as the blades are only long enough to cut one wall at a time. If too fine of a blade is used, the material will become hot and can fuse itself back together partially behind the blade travel.

Step 7. Weld Preparation

The type of material and system will dictate welding method and tool selection. One important factor in welding a Duo-Pro or Fluid-Lok system is the alignment of the support discs. To allow the pulling of cable, it is necessary to have the disc openings aligned at the pipe bottom.

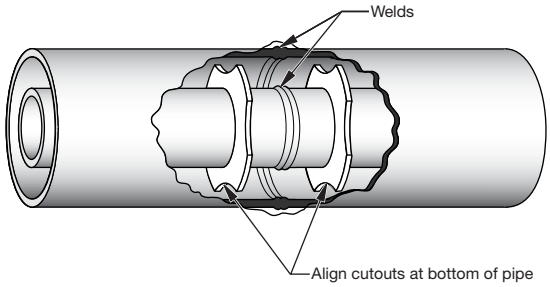

Figure F-93. Support disc alignment

In a Poly-Flo system, it is important to rotate the pipe ribs. Since a Poly-Flo system cannot accommodate leak detection cable, rotating the ribs is recommended to allow a possible leak to make its path to the bottom annular space.

The cold weld is more difficult to identify, and virtually impossible to detect with the naked eye. Two cross-sectional views of a pipe wall that has been welded are shown in Figure F-79. Weld 1 is a good fusion joint, while Weld 2 is a cold weld. Notice in the cold weld there is very little material joined together in the pipe wall area. The molten material has been forced to the outer and inner bead, and the unheated sections of the pipe have been forced together in the pipe wall region. In the proper Weld 1, you can see there is material joined together in the pipe wall, as well as in the inner and outer beads.

P.O. Box 653 • 35 Green Street, Malden, MA 02148 • Tel: (800) 343-3618, (781) 321-5409
Fax: (800) 426-7058 • Internet: http://www.asahi-america.com • Email: asahi@asahi-america.com

Step 8. Weld Inspection

To ensure a safe and on-time system start-up, initiating a standard inspection process is recommended on each project. This quality assurance measure can be conducted by a third party QC or can be done by each individual operator after each weld. A recommended inspection report for recording quality assurance on each weld is attached to the end of Section F. Use the recommendation of this weld inspection guide in conjunction with the equipment manual to achieve the best project results.

To inspect butt-fusion joints, the inspector should look for the following characteristics on each weld.

- Welds should have two beads that are 360° around the pipe.
- Beads should be of consistent height and width.
- Beads should have a rounded shape.
- Beads should be free of burrs or foreign material.
- A bead on either side should not reduce greatly in width or disappear.
- Components welded should be properly aligned and cannot be misaligned by more than 10% of the wall thickness.

When welding the inner and outer pipe and fitting simultaneously, the outer bead will provide an accurate depiction of the inner weld. If the outer pipe appears improperly aligned, the inner pipe will also be out of alignment. For simultaneous fusion, it is necessary to ensure the carrier component is flush in length with the containment component. Check on each part with a straight edge after the planing and prior to the heating step of welding. Other methods include marking the ends of the carrier in four locations 90° apart prior to planing. If planing on the containment pipe is complete and all the original marks on the carrier have been removed by the planer, then both parts are flush.

Figure F-94 shows a detail of a standard butt-fusion bead formation.

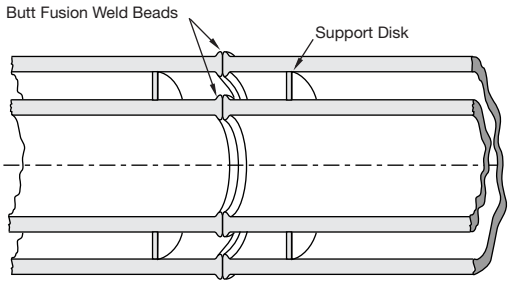

Figure F-94. Typical butt-fusion weld bead

Butt-fusion beads will vary in size and a little in shape with different materials. In general, PP and HDPE will have larger bead formations in comparison to PVDF. With PP and HDPE, there will be a pronounced double-bead formation that will be simple to identify. With PVDF, there will also be a double-bead formation, but not as pronounced. The material will appear to flow more together, making what appears to be one single weld. However, upon examination, you will always see the seam where the components were joined. In addition, when butt welding PVDF pipe to fittings, the fitting bead will be larger than the pipe bead. This is normal as the resin used to produce PVDF fittings flows at a higher rate when melted compared to the resin used to extrude pipes. Mechanically, there will be no issues on strength of the joint, only the appearance of the weld.

Since outside temperatures and conditions will have some effect on bead sizes, there is no formal specification for the size of the bead. Also, measuring each bead would be time consuming. During the training process, welding one of each size to use as a rough gauge for the project may prove useful. These sample coupons can be referred to on a regular basis to check welding throughout the project.

If bead formations do not meet the inspection criteria, they should be rejected. Consult the operation manual for each tool on how to correct the problem. If problems persist, contact Asahi/America for assistance. Many times these issues can be cleared up quickly over the phone, avoiding waste in time and material. Never continue welding if proper fusion cannot be accomplished. This will only add to problems at a later time.

Limitations of Inspection

Following proper weld procedures in conjunction with a thorough inspection process will lead to a safe and reliable system. However, a weld cannot be 100% judged by viewing it after the fusion is complete. Bad welds with obvious problems can be identified, such as missing beads, small beads, and misalignment, but other problems may not be easily found.

A cold weld occurs when an operator either maintains too high a force during the heat soak time or joins the material together at too high a force. Molten material is then pushed to the outer bead and cooler material is forced together inside the weld.

P.O. Box 653 • 35 Green Street, Malden, MA 02148 • Tel: (800) 343-3618, (781) 321-5409
Fax: (800) 426-7058 • Internet: http://www.asahi-america.com • Email: asahi@asahi-america.com

The problem with inspecting a cold weld is the outer bead is the same as a good joint. Since the occurrence of a cold weld is difficult to find and inspect, it is important to use proper welding procedures when joining the material. The issue of inspecting and avoiding a cold weld is no different than a PVC joint that has not been primed prior to cementing. You cannot tell after the weld is made, but if you correctly follow procedures, it will not occur. Cold welds can be avoided with the following operating techniques on all butt fusion and socket fusion equipment.

- Ensure proper heating element temperature throughout the project.
- Use the correct welding parameters by pipe size, wall thickness, and material.
- Do not delay between removal of heating element and joining of material.
- Do not slam material together after heating. Material should be joined quickly, but the pressure build up should be smooth and even.
- Do not join components together above the joining force.

Step 9. Hanging

Hanging any thermoplastic double wall system is not that much different than hanging a metal system. Typically, the spacing between hangers is shorter due to the flexibility of plastic. In addition, the type of hanger is important.

Hangers should be placed based on the spacing requirements provided in Appendix A. Since thermoplastic materials vary in strength and rigidity, it is important to select hanging distances based on the material you are hanging. Also, operating conditions must be considered. If the pipe is operated at a higher temperature, the amount of hangers will generally be increased. Finally, if the system is exposed to thermal cycling, the placement of hangers, guides, and anchors is critical In these cases. The hanger locations should be identified by the system engineer and laid out to allow for expansion and contraction of the pipe over its life of operation.

When selecting hangers for a system, it is important to avoid using a hanger that will place a pinpoint load on the pipe when tightened. For example, a U-bolt hanger is not acceptable for high-purity thermoplastic piping systems. See Figures F-95 and F-96.

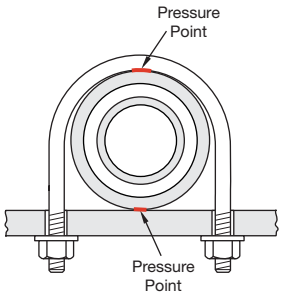

Figure F-95. Effects of U-bolt on pipe– not recommended

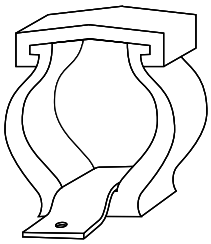

Figure F-96. Recommended hanger

Hangers that secure the pipe 360° around the pipe are preferred. Thermoplastic clamps are also recommended over metal clamps, as they are less likely to scratch the pipe in the event of movement. If metal clamps are specified for the project, they should be inspected for rough edges that could damage the pipe. Ideally, if a metal clamp is being used, an elastomeric material should be used in between the pipe and the clamp. This is a must for PVDF and E-CTFE systems, which are less tolerant to scratching.

P.O. Box 653 • 35 Green Street, Malden, MA 02148 • Tel: (800) 343-3618, (781) 321-5409
Fax: (800) 426-7058 • Internet: http://www.asahi-america.com • Email: asahi@asahi-america.com

Step 10. Trenching and Burial

Proper trenching and burial of a pipe system requires engineering prior to an installation. Asahi/America's *Engineering Manual* (Section C) provides a comprehensive guide to burial calculations load tolerance of thermoplastic pipe. This information should be supplied and be specified prior to installation. Refer to Asahi/America's manual for the burial calculations.

For installation purposes, it is important to look at several factors as the installer of underground piping.

- Soil conditions should match that of the specification and/or drawings.
- Trenches should be dug according to plan.
- Pipe should be surrounded by specified soil type and compaction.
- Accommodations for welding in the trench should be made.
- Safety issues of being in a trench should always be observed.

For each underground installation, burial designs will specify depth of trench and width of trench. The wider the trench, the more load the pipe will see upon compaction. Therefore, it is important to follow trench design closely to avoid excess load on the pipe. In addition to the trench details, the type of soil becomes important. Different types of soils have differing densities and will create differing loads on the buried pipe. If the soil does not match that of the design, it needs to be rechecked or different top fill may be required.

The surrounding material of the pipe is also important. Items such as large rocks may cause pinpoint loads on the pipe that could eventually damage the pipe. Figure F-97 depicts a recommended cross section of a trench and proper fill material and compaction.

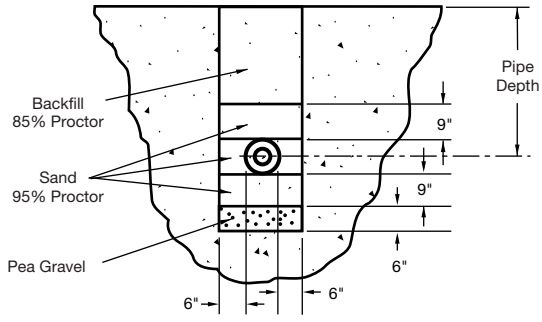

Figure F-97. Trench detail

Welding in a trench should also be preplanned. It is common that all welding is done above ground, and then, the welded components are all lowered into the trench. In many instances it may be necessary to weld in the trench. For conducting welds in a trench, it is important to allocate space for the machine as it will be wider than the pipe itself. Widening of the trench may be required to accommodate the machine.

Step 11. System Testing

Procedures for testing installed sections of Duo-Pro systems must take into account factors affecting both carrier and containment pipes. Basic recommendations may be given, but a comprehensive testing program should be developed for each and every system design. The program should be developed based on the needs and characteristics of the particular system at hand.

All pressure tests must be conducted prior to backfilling a buried system.

Carrier Pipe, Pressure System

If the carrier piping is intended for pressure service greater than 10 feet of head, a hydrostatic pressure test must be conducted.

In any hydrostatic pressure test, provisions must be made to vent all air out of the inner pipe. If necessary, special high-point vents should be installed to bleed any trapped air. Air pockets can create a dangerous situation if a cold weld exists and is found during a test. Compressed air pockets can contribute to extensive propagation of fault lines when a failure occurs. Compressed air or gas should not be used for pressure testing of any carrier pipe in excess of 10 psi.

Pressure tests should be conducted at a maximum of 150 percent of the operating pressure of the lowest rated component of the system.

F

Filling the System
The piping should be capped off at the end of the spool section to be tested and fitted with an adapter to allow tie-in for testing. All flanges in the vertical position should be left open at this point. Bleed off air through the relief valves.

Introduce water very slowly into the system at the low point. In no instance should the water velocity exceed two feet per second. When the water fills all vertical risers, the flanges can be resealed. The relief valves should be left open until it is certain that all air is out of the system.

The system can then be brought up to pressure through gradual steps using a hand pump or other similar equipment.

Do not use city water pressure to accomplish this step if the water pressure in the city mains is greater than the pressure test to be conducted.

Conducting the Test
The test should be done in gradual steps of 10 psi for Pro 150/PE 150, 5 psi for Pro 45/PE 45, or 10 psi for PVDF until the desired pressure is achieved. There will be some gradual drop in pressure due to natural creep effects and elongation of the pipe wall. Also, there could be some drop occurring due to thermal expansion effects where there are sudden environmental temperature changes.

After one hour, check the pressure gauge. If there is a decrease without an indication of leakage, pump the pressure back up to the test pressure. If the total pressure drops more than 10% after the second pressurization, the test can be considered a failed test. Check the system for leaks or other problems. Otherwise, continue the pressure test for a minimum of two hours up to a recommended duration of 12 hours or as required by local code requirements.

Cyclic Hydrostatic Testing
In critical applications, the inner piping should be tested hydrostatically for more than one cycle. To test for more than one cycle, do not empty the system and start all over. Instead, drop the system pressure down to below 5 psi, and then raise it back in gradual steps of 10 to 20 psi to the desired test pressure. Follow the same procedures as described above. Repeat this procedure for as many cycles as required up to a maximum recommendation of seven cycles.

Note: Do not use fabricated drainage fittings in pressurized systems where a pressure over 10 feet of head is required. Use molded pressure fittings in these applications.

Carrier Pipe, Drainage Systems
Inner piping that is intended for drainage service (10 feet of head or less) should be tested by implementing a 10-foot standing water test. A 10-foot standing water test consists of welding or attaching in some manner a 10-foot riser to the upstream (high end) of the system. It is not unusual that there are several high points (branch connections) in a system. It is important that every riser or branch connection be affixed with a 10-foot riser in order to ensure that every point in the system will see 10 feet of head. In fact, at the low point, the system will see a pressure equal to 10 feet of head plus the value of the elevation change. A maximum of 20 feet of head must not be exceeded in a drainage system.

To consider a standing water test acceptable, the water level after 12 hours should be at a level equal to the level at the start of the test, minus normal evaporation and expansion due to temperature fluctuations. Compressed air or gas should not be used for pressure testing of any carrier pipe in excess of 10 psi.

Containment Pipe, Pressure Systems

If outer piping is designed and required to withstand the same pressure as the inside piping, then a hydrostatic pressure test should be conducted for both inner and outer pipes. This is for situations where the inner pipe pressure is greater than 10 psi. It is important to remember that when the annular space is pressurized during this situation, two pipes are involved. A plastic pipe is always less capable of withstanding external pressure than internal pressure. The inner pipe should be kept full of water at a pressure equal to the pressure test of the outer pipe.

Equal pressure on the carrier and containment is necessary for the following reasons:

1. To prevent possible collapse of the inner piping during the test.
2. Both the inner and outer piping will elongate equally, thus minimizing any differential stress or stress buildup between the two pipes.
3. In the event of a carrier failure, the containment piping must handle the same pressure as the carrier. The inner pipe will continue to pressurize the outer pipe until the two reach an equilibrium.

P.O. Box 653 • 35 Green Street, Malden, MA 02148 • Tel: (800) 343-3618, (781) 321-5409
Fax: (800) 426-7058 • Internet: http://www.asahi-america.com • Email: asahi@asahi-america.com

Filling the System
The outer piping can be filled after the inner test is conducted or at the same time as the inner pipe. The system should be filled in the exact same way as described for pressurized carrier pipe.

Do not use city water pressure to accomplish this step if the water pressure in the city mains is greater than the pressure test to be conducted.

In many cases, it is not an advantage to conduct a hydrostatic test on the annular space, as it is very difficult to dry the space after the test. An air test can be used as an alternative. The pressure should be no higher than 10 psi, and extra safety precautions must be made for surrounding personnel. In all cases, the ambient temperature should be above 32° F. The carrier pipe should also be filled with water and pressurized any time a test is conducted on the annular space.

Conducting the Test

Testing is conducted on the containment in the same manner as the carrier. The test should be done in gradual steps of 10 psi for Pro 150/PE 150, or 5 psi for Pro 45/PE 45 until the desired test pressure is achieved. There will be some gradual drop in pressure due to natural creep effects and elongation of the pipe wall. Also, there could be some drop occurring due to thermal expansion effects where there are sudden ambient changes.

After one hour, check the pressure gauge. If there is a decrease without an indication of leakage, pump the pressure back up to the test pressure. If the total pressure drops more than 10% after this second pressurization, the test can be considered a failed test. Check the system for leaks or other problems. In larger systems and pipelines exposed to large changes in temperature, it may take several tries to get the pressure to remain constant. Otherwise, continue the pressure test for a minimum of two hours up to a recommended duration of 12 hours. A cyclic hydrostatic test as described above for the inner pipes may be used where appropriate.

Note: Do not use fabricated drainage fittings in pressurized systems where a pressure exceeding 10 feet of head is required. Use molded pressure fittings in these applications.

Containment Pipe, Drainage Systems
Outer piping that is intended for drainage capability (10 feet of head or less) or that is flowing open ended, should be tested by implementing a 10-foot standing water test. It should be noted that the carrier pipe pressure must be maintained equal to the outer pipe pressure at all points in order that the inner pipe does not collapse. Pro 45/PE 45 inside carrier pipe is common in some large-diameter systems such as drainage mains. In order to test these systems, special consideration must be given to ensure that the inner pipe is kept under equal pressure with the outer pipe.

The standing water test should be conducted in the same manner as the inside pipes. A riser should be attached to every vertical riser equal to 10 feet, and the system filled with water. The level should be checked after 12-18 hours, and if no fluid has escaped (minus normal evaporative losses and expansion due to temperature fluctuation), the test should be considered successful. It should be noted that the total of the elevational change plus 10 feet should not exceed the sum of 20 feet.

In order not to trap fluid in the annular space, a low-pressure compressed air or nitrogen test (≤10 psi) may be used. Note that if this type of test is used, the carrier inner pipe must be filled with fluid and kept to at least the level of the pressure in the annular space to prevent collapse. If this type of test is used, it is required to "soap" each joint thoroughly to check for visual leaks. In addition, the pressure gauge must also be checked after 2-12 hours for indication. Again, any time compressed air is used, extra safety precautions should be taken. Air tests should be done at 32° F or higher ambient temperature.

Annular Test, Drainage Systems

The purpose of the annular test is to test both the carrier and containment simultaneously. For low-pressure drainage systems, an annular test can be conducted to reduce test time. This type of test can only be used on drainage systems using Pro 150 carrier.

Cap off the carrier and containment pipe, and provide a pressure gauge on each. Using low-pressure compressed air (≤10 psi), charge the annular space. In a tight system, the containment gauge should read 10 psi (minus losses due to creep), and the carrier gauge should be zero. If there is a leak in the containment piping, the containment gauge will begin to drop. If, however, there is a leak in the carrier piping, the inner piping will become pressurized. See Figure F-98 for typical test results. Pressure should be maintained on the system for 2-12 hours to ensure against a possible slow leak.

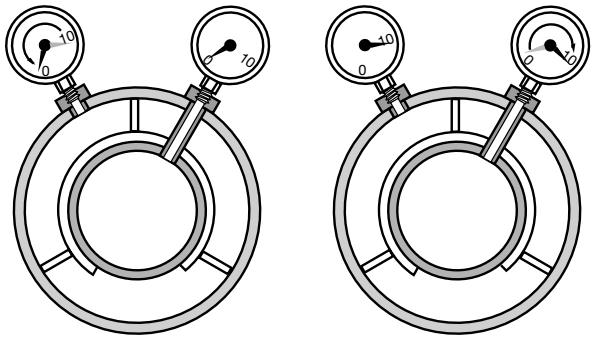

(a) Leak Out of Containment Pipe (b) Leak In to Carrier Pipe

Figure F-98. Annular pressure test leak indications

P.O. Box 653 • 35 Green Street, Malden, MA 02148 • Tel: (800) 343-3618, (781) 321-5409
Fax: (800) 426-7058 • Internet: http://www.asahi-america.com • Email: asahi@asahi-america.com

Drying the Annular Space

If the annular space is contaminated with water due to the test procedures or other unforeseen events, it is essential that all moisture be removed thoroughly to minimize condensation that may cause false alarms in leak detection cables and low-point sensors. As discussed in Section C, *Engineering Theory and Design Considerations*, the installation of properly sized vents and drains will assist greatly with this process. It may be necessary to use Vortek blowers and/or clean dry air to remove all moisture completely. The greater the number of vents and drains, the higher the volume of air can be pushed through the system, thereby decreasing the drying time. As it is extremely difficult to remove moisture from the annular space, it may be appropriate to use compressed air (≤10 psi) for testing carrier and containment pipe where pressure requirements are low. Use of compressed air will not contaminate the annular space with moisture.

Locating a Leak

In the event of a leak in the carrier, the pressure should be relieved and the water drained to prevent flooding of the annular space. To determine the location of the leak, Asahi/America has available ultrasonic leak detection guns, as shown in Figure F-99. The gun is capable of hearing disturbances in air flow (vibration) through the containment wall. To locate the leak, put a compressed air charge on the carrier piping (≤10 psi). Using the gun, walk the pipe line placing the gun extension against the containment wall. The compressed air escaping through a leak will be heard through the ear phones of the gun, thus locating the leak. In many situations, the time required to locate a leak on the carrier pipe using this technology is less than one hour.

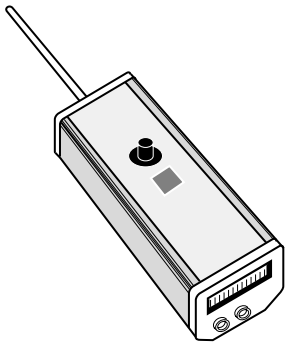

Figure-99. Ultrasonic leak detection gun

Step 12. Repair Procedures

A properly designed, installed, and maintained double-containment piping system will provide years of reliable service. The system, however, should offer the means to perform a repair in the event of a mishap, and this repair should be of such quality that the operating parameters, pressure, temperature, and safety factors are not reduced. The Duo-Pro and Fluid-Lok systems offer this capability for all pressure ratings with minimum disruption to site conditions.

The first step in a repair procedure is to isolate the leak source. The ease of finding a leak is determined by the leak detection method selected at the time of installation. The use of a leak detection cable will pinpoint the location of the leak to plus or minus three feet, and is possibly the most efficient system. The low-point sensors will identify a zone that has been contaminated. Further testing methods will be required to locate the actual leak source. Several methods are available for this, including the use of an ultrasonic test gun (Figure F-99), fiber optic cameras, and dye solutions. These methods, although more time consuming, are viable alternatives to leak detection cable.

The second step in a repair procedure is to flush the carrier and containment pipes to remove any hazardous chemicals that will create safety concerns for the workers doing the repairs. The ability to flush the system is determined by the initial design. The installation of high-point vents and low-point drains in the containment pipe will provide a safe means to perform the flushing. Attempts to install high-point vents and low-point drains during repair are costly and potentially dangerous.

To completely weld a system repair, the pipe must be flexible in movement in the axial direction. If movement is not present, then a double-wall flange repair may prove convenient. Double-wall flanges may have reduced pressure ratings. Consult factory prior to installation.

The third step is to expose the damaged pipe and perform the repair procedure with one of the following methods.

P.O. Box 653 • 35 Green Street, Malden, MA 02148 • Tel: (800) 343-3618, (781) 321-5409
Fax: (800) 426-7058 • Internet: http://www.asahi-america.com • Email: asahi@asahi-america.com

Repairs to Systems without Flexibility

Flanged Repairs (similar materials)

Duo-Pro and Poly-Flo systems offer patented, double-wall flanges that permit the flow of fluids through the annular space, as shown in Figure F-100. (Consult factory for pressure rating.)

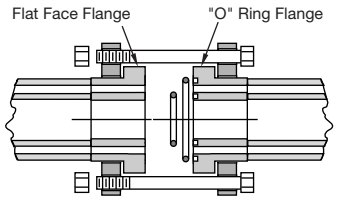

Figure F-100. Double-wall flange

1. The damaged section of pipe is removed first (Figure F-101).

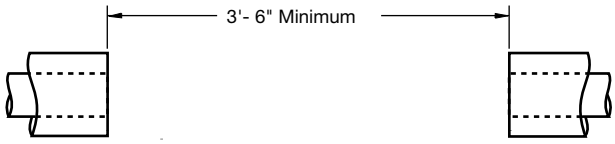

Figure F-101. Remove damaged section of pipe

2. Plane ends and install supports discs. Next, weld two flanges onto the exposed pipe ends.

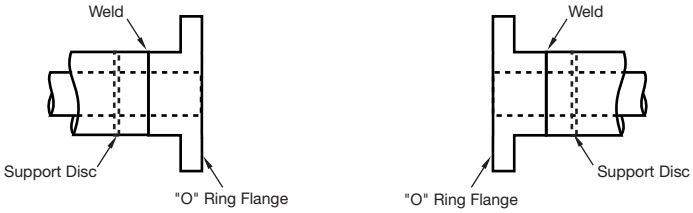

Figure F-102. Install double-wall flanges

3. A flanged spool piece is fabricated and installed.

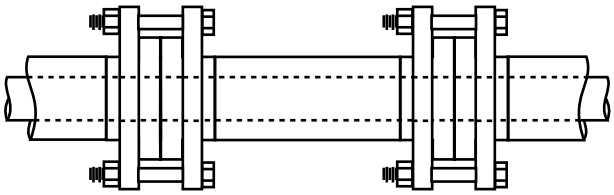

Figure F-103. Install flanged spool

4. The system is then tested and returned to working order.

For all repair methods, a minimum of 3'- 6" is required to facilitate use of welding equipment.

Repairs to Systems with Flexibility

Butt-Fusion Repairs (similar materials)

The second method of repair is performed without the use of flanges but instead, only with thermal butt fusion. The use of butt fusion, as the repair procedure requires a larger excavation due to the requirement that the pipe be able to move at least three inches to perform the weld.

To perform the repair:

1. The damaged section of pipe is removed and the area cleared to allow the pipe to move in the radial direction. Note that only one end of the pipe needs this flexibility (Figure F-104).

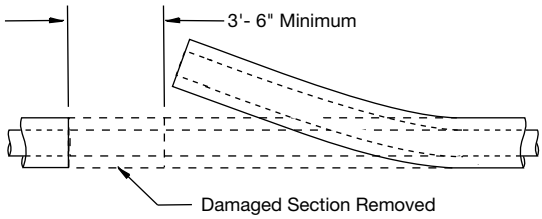

Figure F-104. Remove damaged section of pipe

2. The pipe in the ground is prepared for simultaneous fusion.

3. A spool of pipe is assembled and butt welded to the stationary pipe.

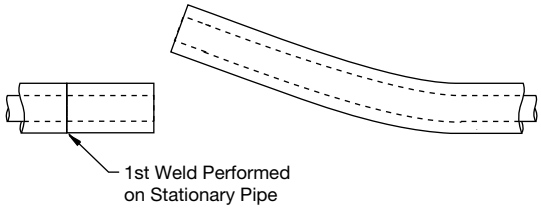

Figure F-105. Install new spool

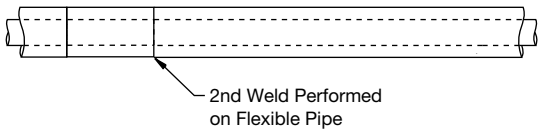

Figure F-106. Butt weld spool to remaining pipe

4. The second weld is then performed on the flexible side.

5. The system is then tested and returned to working order.

F

The repair procedures described above are appropriate for Duo-Pro and Poly-Flo systems when the same material is used for the carrier and containment piping. To perform a repair on a system with a PVDF carrier and a polypropylene containment, the following steps should be followed.

Repairing PVDF Carrier/Polypropylene Containment (Duo-Pro only)

Flanged Repairs (dissimilar materials)

To perform the repair:

1. The damaged section of pipe is removed and prepared.

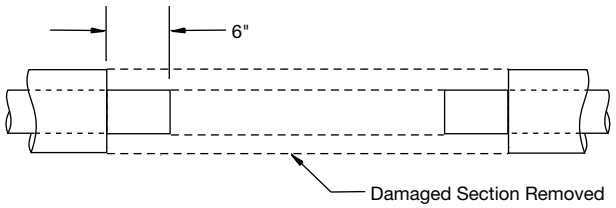

Figure F-107. Remove damaged section of pipe

2. Polypropylene flanges are welded to the containment pipe.

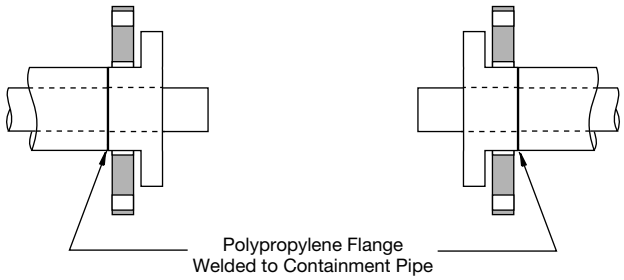

Figure F-108. Weld polypropylene flanges to pipe ends

3. PVDF flanges are bolted to the polypropylene flanges. Now both the inner and outer piping are similar material.

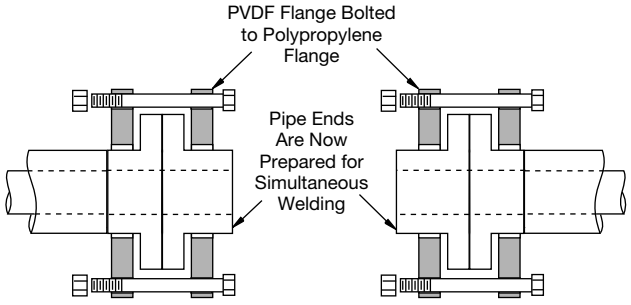

Figure F-109. Bolt polypropylene flanges to PVDF flanges

4. The repair procedure is now the same as for similar materials, as described above.

There are other repair options available that require the use of slip couplings, electro-fusion couplings, and use of hot-gas welding and extrusion welding. These repair options are adequate for drainage systems only and require well-trained technicians to perform the repair. Consult the Asahi/America Engineering Department for assistance.

P.O. Box 653 • 35 Green Street, Malden, MA 02148 • Tel: (800) 343-3618, (781) 321-5409
Fax: (800) 426-7058 • Internet: http://www.asahi-america.com • Email: asahi@asahi-america.com

DEPARTMENT OF THE ARMY
ALBUQUERQUE DISTRICT, CORPS OF ENGINEERS
ALBUQERQUE DISTRICT OFFICE
4101 JEFFERSON PLAZA NE
ALBUQUERQUE, NM 87109

SUBMITTAL REVIEW VERIFICATION SHEET

PROJECT TITLE: Kirtland BFF Mid-Plume Pump and Treat System Expansion
CONTRACT NUMBER: W912DR-12-D-0006 DM01
DATE RECEIVED: 7-26-2017
DATE REVIEWED: 7-28-2017

DESCRIPTION OF ITEMS REVIEWED:

1. Bilco Hatches

NO EXCEPTIONS TAKEN.	**X**
EXCEPTIONS AS NOTED ON DRAWINGS AND/OR ATTACHED SHEETS(S). RESUBMISSION NOT REQUIRED.	
EXCEPTIONS AS NOTED ON DRAWINGS AND/OR ATTACHED SHEETS(S). RESUBMISSION REQUIRED.	
RECEIPT ACKKNOWLEDGED.	

Notes:

NOTE: ITEMS REVIEWED AS TO GENERAL LAYOUT ONLY. DIMENSIONS AND QUANTITIES NOT CHECKED. REVIEW DOES NOT RELIEVE CONTRACTOR OF RESPONSIBILITIES FOR ANY ERRORS WHICH MAY EXIST AS CONTRACTOR SHALL BE RESPONSIBLE FOR DIMENSIONS AND DESIGN OF ADEQUATE CORRECTIONS, DETAILS AND SATISFACTORY CONSTRUCTION OF WORK.

SIGNATURE _____ **DATE** 7/28/2017

EA Engineering, Science, and Technology, Inc., PBC

Submittal Review Sheet 1

Project Name: **Kirtland BFF Mid-Plume Pump and Treat System Expansion**				Date Received: **7/20/17**	
Project Owner: **Kirtland Air Force Base**				Checked By: **Tyler Curley**	
Contractor: **RMCI, Inc.**	Engineer: **EA Engineering, Science and Technology, Inc., PBC.**			Log Page: **NA**	
Address: **6211 Chappell Rd NE, Albuquerque, NM 87113**	Address: **320 Gold Ave. SW, Suite 1300 Albuquerque, NM 87102**			EA No.: 62599DM01	
				Spec. Section: **00 00 00 - Items called out on the plans. No specs**	
				Drawing/Detail No.: **S-101**	
ATTN: Philip Johnson	ATTN: **Devon Jercinovic**			1st Sub	Re-Sub
Date Transmitted: **07/20/2017**	Prev. Transmittal Date:				

Item No.	No. Copies	Description	Manufacturer	Mfg/Vendor Dwg or Detail	Action Taken*
1	1	Bilco Hatches	HD Supply Waterworks, Ltd.		A

The Action Designated Above is in Accordance with the Following Legend:

A – Furnish as Submitted
B – Furnish as Noted
C – Revise and Re-submit
1. Not enough information for review.
2. No reproducible submitted.
3. Copies illegible.
4. Not enough copies submitted.
5. Wrong sequence number.
6. Wrong resubmittal number.
7. Wrong Spec. Section.
8. Wrong form used.
9. See Comments.

D – Rejected
E – Engineer's Review not Required
1. Submittal not required.
2. Supplemental Information. Submittal retained for Information purposes only.
3. Information reviewed and approved on prior submittal.
4. See Comments.

Review is for general compliance with Contract Documents. No responsibility is assumed for correctness of dimensions or detail. Contractor is required to specify deviations from contract requirements. Lack of exceptions noted by Engineer does not waive Contractor's obligation to comply with Drawings and Specifications.

Comments:
Items reviewed and confirmed to meet requirements
(Reviewed Material in Parentheses)
Issues in Bold

- Vault hatches meet specifications and dimensions of pre-cast vault drawings.

By: _____ Date: 7-25-17

EA Engineering, Science, and Technology, Inc., PBC

Distribution: [1] Contractor [1] Engineer [1] Owner

Junction Vaut, Qty 1

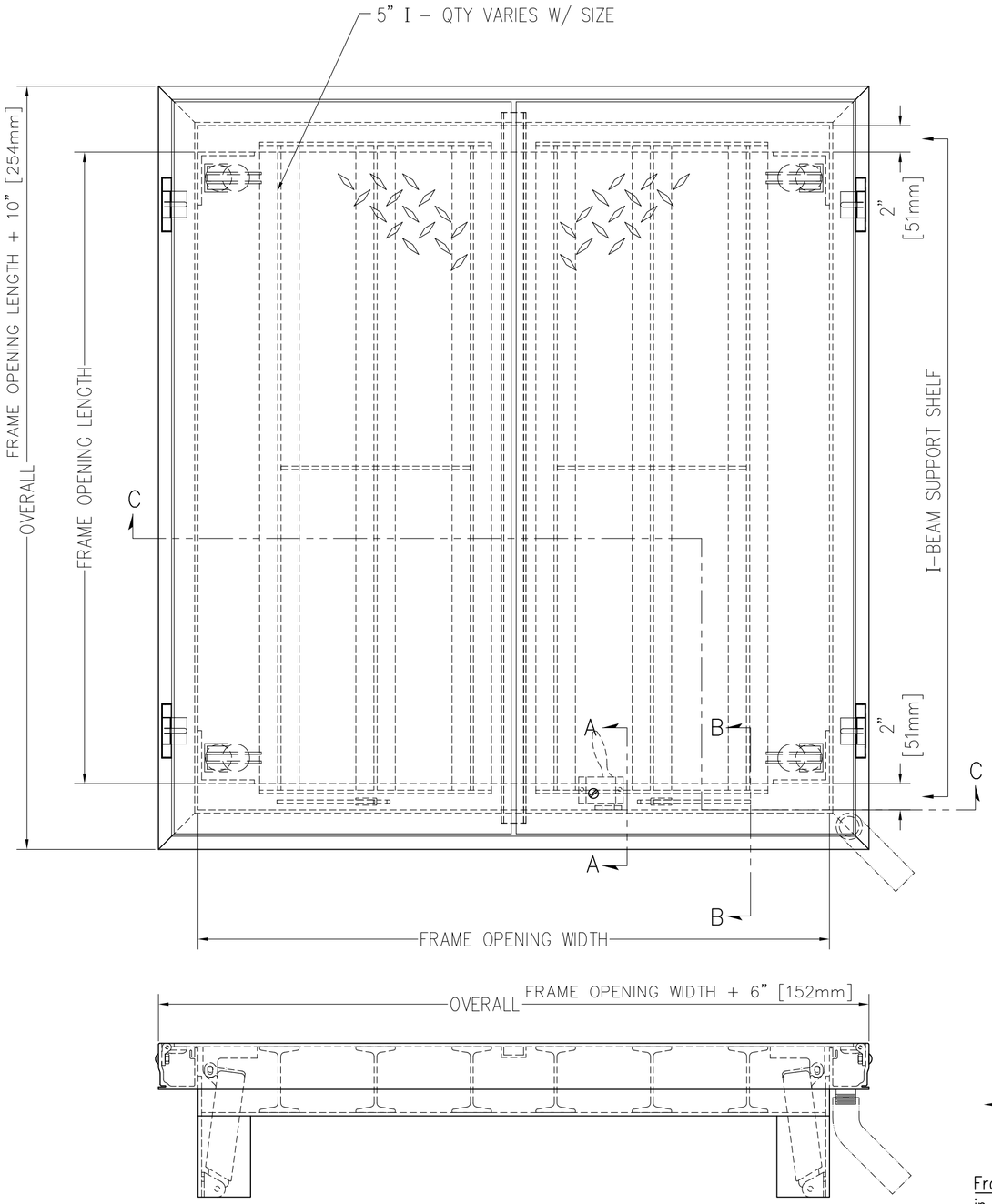

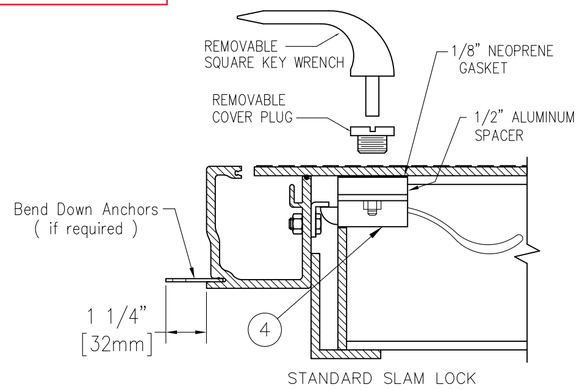

SECTION A–A

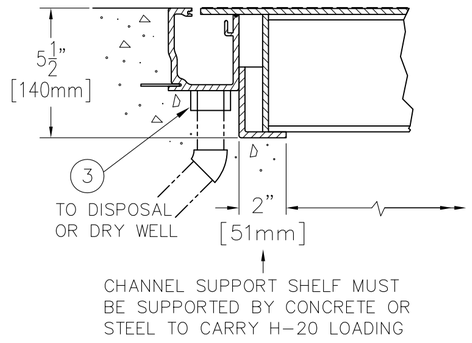

SECTION B–B

NOTE:
DESIGNED TO WITHSTAND H–20 WHEEL LOADINGS SUITABLE FOR USE IN OFF–STREET LOCATIONS WHERE NOT SUBJECTED TO HIGH DENSITY TRAFFIC

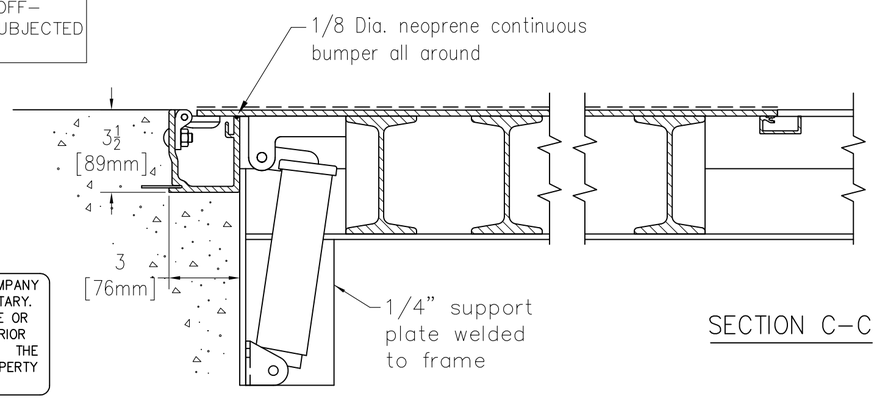

SECTION C–C

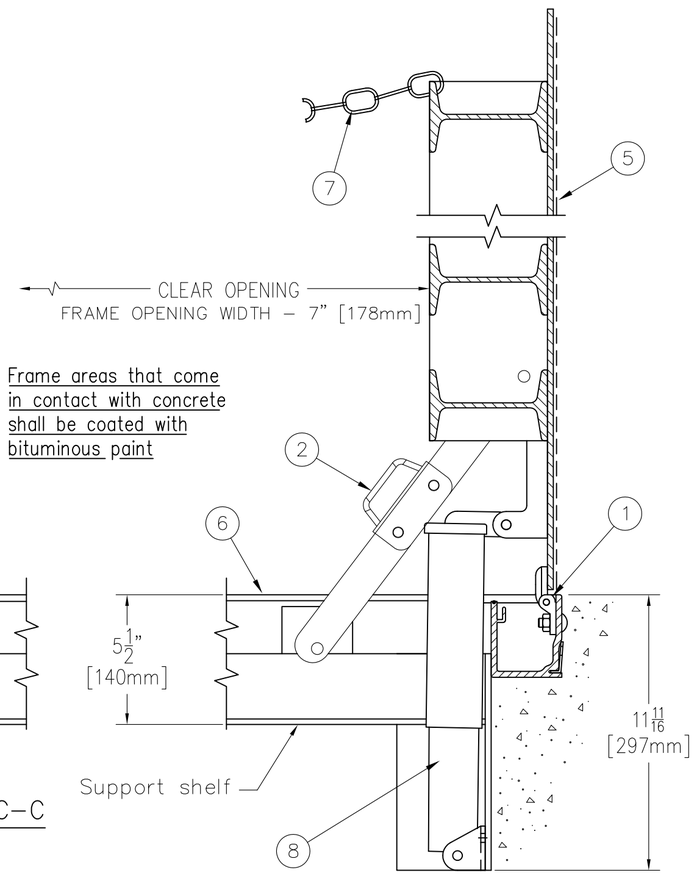

THIS DRAWING IS THE PROPERTY OF THE BILCO COMPANY AND INCORPORATES INFORMATION WHICH IS PROPRIETARY. PUBLICATION AND/OR PUBLIC DISTRIBUTION IN WHOLE OR IN PART IS EXPRESSLY PROHIBITED WITHOUT THE PRIOR WRITTEN CONSENT OF THE BILCO COMPANY. THE INFORMATION CONTAINED HEREIN REMAINS THE PROPERTY OF THE BILCO COMPANY. ALL RIGHTS RESERVED.

SPECIFICATIONS

1. Bilco heavy duty forged stainless steel hinges with stainless steel pins
2. Bilco automatic hold open arm
3. 1–1/2" drain coupling
4. Standard slam lock
5. 1/4" aluminum diamond pattern plate cover
6. Bilco 1/4" aluminum channel frame with recessed anchors
7. Heavy duty check chain
8. Stainless steel lifting mechanism

SHOP FINISH:
ALUMINUM: MILL FINISH
HARDWARE: TYPE 316 STAINLESS STEEL
(unless otherwise specified)

REINFORCED FOR H20 LOADING

INSTALLER NOTES:

A. Use caution. Cover is spring loaded. Do not remove safety shipping bolt until unit is to be installed and in normal horizontal operating position.
B. Be sure unit is set on slight pitch toward drain corner.
C. Before anchoring in place open and close door. Check to see that the door in the closed position rests on the frame all around. If not, shim under the frame at the proper corner.
D. Do not reduce 1 1/2" drain pipe to dry well or disposal system.
E. Bend down anchors if required

Customer:

P.O. N°

Job:

Sales Rep:

Manufacturers of Doors for Special Services
Bilco® THE BILCO COMPANY
New Haven, Connecticut 06505

DOUBLE LEAF ACCESS DOOR
TYPE JD-ALH20 - EXTERIOR

QTY	TYPE	SIZE WIDTH x LENGTH
☐	JD-1ALH20	4'-0" x 2'-6" [1220mm] x [762mm]
☐	JD-2ALH20	4'-0" x 4'-0" [1220mm] x [1220mm]
☐	JD-3ALH20	4'-0" x 6'-0" [1220mm] x [1830mm]
☐	JD-4ALH20	5'-0" x 5'-0" [1525mm] x [1525mm]

© 11-16-09 THE BILCO COMPANY

Well Head Vault, Qty 2

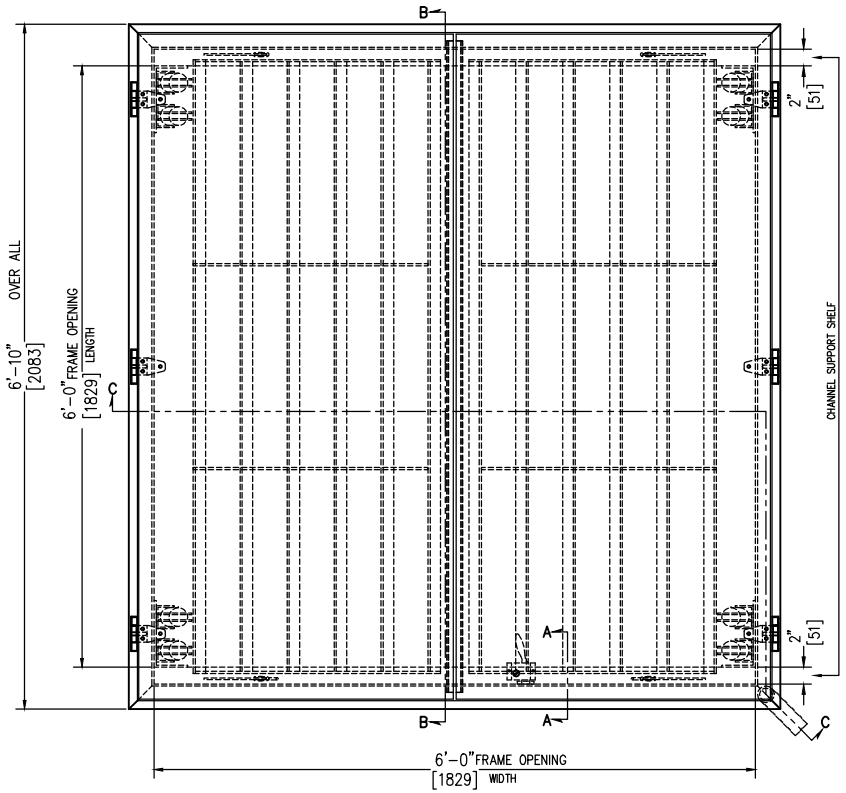

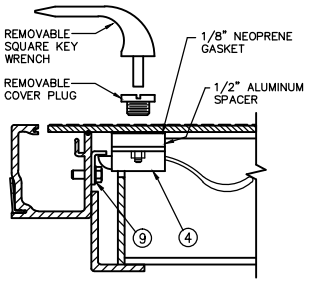

SECTION A-A
STANDARD SLAM LOCK

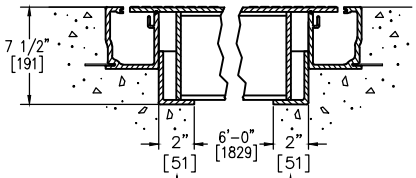

CHANNEL SUPPORT SHELF MUST BE SUPPORTED BY CONCRETE OR STEEL TO CARRY H-20 LOADING

SECTION B-B

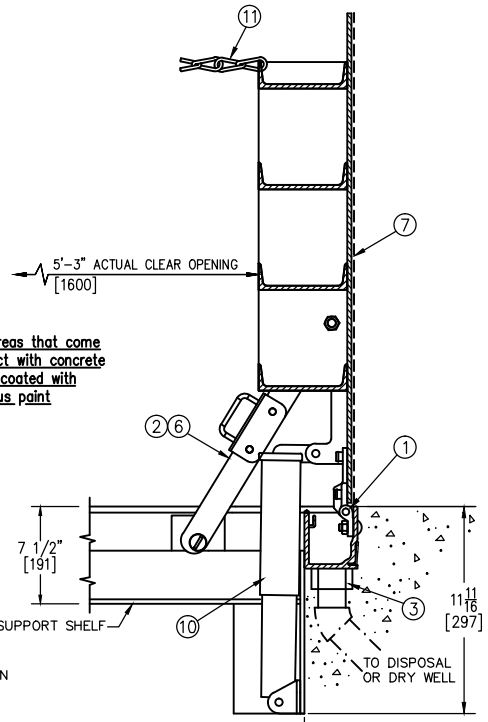

Frame areas that come in contact with concrete shall be coated with bituminous paint

NOTE:
DESIGNED TO WITHSTAND H-20 WHEEL LOADINGS SUITABLE FOR USE IN OFF-STREET LOCATIONS WHERE NOT SUBJECTED TO HIGH DENSITY TRAFFIC

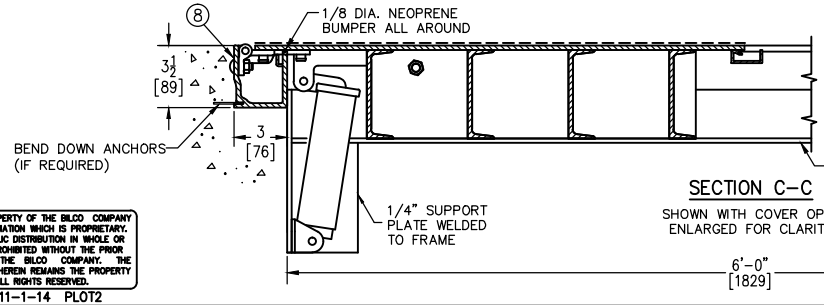

SECTION C-C
SHOWN WITH COVER OPEN
ENLARGED FOR CLARITY

SPRINGS 2 @ 300 & 2 @ 400

THIS DRAWING IS THE PROPERTY OF THE BILCO COMPANY AND INCORPORATES INFORMATION WHICH IS PROPRIETARY. PUBLICATION AND/OR PUBLIC DISTRIBUTION IN WHOLE OR IN PART IS EXPRESSLY PROHIBITED WITHOUT THE PRIOR WRITTEN CONSENT OF THE BILCO COMPANY. THE INFORMATION CONTAINED HEREIN REMAINS THE PROPERTY OF THE BILCO COMPANY. ALL RIGHTS RESERVED.

JD-HN_AL 11-1-14 PLOT2

Sym.	Revision	Date	By
A	New Release	7-14-17	root

SPECIFICATIONS:

1. Bilco heavy duty forged stainless steel hinges with stainless steel pins
2. Guide arm (if req'd)
3. 1-1/2" drain coupling
4. Standard slam lock
5.
6. Bilco automatic lock open arm
7. 1/4" aluminum diamond pattern plate cover
8. Bilco 1/4" aluminum channel frame with recessed anchors
9. Stainless steel lock strike
10. Stainless steel spring lifting mechanism
11. Heavy duty check chain

INSTALLER NOTES:

A. Use caution. Cover is spring loaded. Do not remove safety shipping bolt until unit is to be installed and in normal horizontal operating position.
B. Be sure unit is set on slight pitch toward drain corner.
C. Before anchoring in place open and close door. Check to see that the door in the closed position rests on the frame all around. If not, shim under the frame at the proper corner.
D. Do not reduce 1 1/2" drain pipe to dry well or disposal system.
E. Bend down anchors if required

(1) UNIT(S) REQUIRED AS SHOWN (Aluminum Weldment)
COVER REINF. FOR H-20 LOADING

SHOP FINISH:
COVER: MILL FINISH
FRAME: MILL FINISH
HARDWARE: STAINLESS STEEL TYPE 316 (UNLESS OTHERWISE SPECIFIED)

Customer: HD SUPPLY WATERWORKS ALBUQUERQ
ALBUQUERQUE NM 64TH ST
WACO, TX 76714

P.O. N°

Job:

Builder:

Architect:

Engineer:

Sales Rep: MOUNTAIN WEST SALES INC.
2718 UNIVERSITY BLVD NE
ALBUQUERQUE, NM 87107

Manufacturers of Doors for Special Services
THE BILCO COMPANY
New Haven, Connecticut 06505

TYPE "JD"- (H20) ALUMINUM DOUBLE LEAF ACCESS DOOR - SIZE 6'-0" x 6'-0" [1829mm x 1829mm]

Drawn By	Date	Drawing No.	Rev.
CAD	7-14-17	JD-X10172	A
SHEAR	Scale DO NOT SCALE		

DEPARTMENT OF THE ARMY
ALBUQUERQUE DISTRICT, CORPS OF ENGINEERS
ALBUQERQUE DISTRICT OFFICE
4101 JEFFERSON PLAZA NE
ALBUQUERQUE, NM 87109

SUBMITTAL REVIEW VERIFICATION SHEET

PROJECT TITLE: Kirtland BFF Mid-Plume Pump and Treat System Expansion
CONTRACT NUMBER: W912DR-12-D-0006 DM01
DATE RECEIVED: 8-02-2017
DATE REVIEWED: 8-02-2017

DESCRIPTION OF ITEMS REVIEWED:

1. Directional Drill Conduit

NO EXCEPTIONS TAKEN.	**X**
EXCEPTIONS AS NOTED ON DRAWINGS AND/OR ATTACHED SHEETS(S). RESUBMISSION NOT REQUIRED.	
EXCEPTIONS AS NOTED ON DRAWINGS AND/OR ATTACHED SHEETS(S). RESUBMISSION REQUIRED.	
RECEIPT ACKKNOWLEDGED.	

Notes:

NOTE: ITEMS REVIEWED AS TO GENERAL LAYOUT ONLY. DIMENSIONS AND QUANTITIES NOT CHECKED. REVIEW DOES NOT RELIEVE CONTRACTOR OF RESPONSIBILITIES FOR ANY ERRORS WHICH MAY EXIST AS CONTRACTOR SHALL BE RESPONSIBLE FOR DIMENSIONS AND DESIGN OF ADEQUATE CORRECTIONS, DETAILS AND SATISFACTORY CONSTRUCTION OF WORK.

SIGNATURE _____ DATE 8/2/17

EA Engineering, Science, and Technology, Inc., PBC

Submittal Review Sheet 1

Project Name: **Kirtland BFF Mid-Plume Pump and Treat System Expansion**				Date Received: **8/1/17**	
Project Owner: **Kirtland Air Force Base**				Checked By: **Tyler Curley**	
Contractor: **RMCI, Inc.**	Engineer: **EA Engineering, Science and Technology, Inc., PBC.**			Log Page: **NA**	
Address: **6211 Chappell Rd NE, Albuquerque, NM 87113**	Address: **320 Gold Ave. SW, Suite 1300 Albuquerque, NM 87102**			EA No.: **62599DM01**	
				Spec. Section: **No Specs**	
				Drawing/Detail No.: **No Drawing**	
ATTN: **Phillip Johnson**	ATTN: **Devon Jercinovic**			1st Sub	Re-Sub
Date Transmitted: **08/01/2017**	Prev. Transmittal Date:				

Item No.	No. Copies	Description	Manufacturer	Mfg/Vendor Dwg or Detail	Action Taken*
1	1				

The Action Designated Above is in Accordance with the Following Legend:

A – Furnish as Submitted
B – Furnish as Noted
C – Revise and Re-submit
1. Not enough information for review.
2. No reproducible submitted.
3. Copies illegible.
4. Not enough copies submitted.
5. Wrong sequence number.
6. Wrong resubmittal number.
7. Wrong Spec. Section.
8. Wrong form used.
9. See Comments.

D – Rejected
E – Engineer's Review not Required
1. Submittal not required.
2. Supplemental Information. Submittal retained for Information purposes only.
3. Information reviewed and approved on prior submittal.
4. See Comments.

Review is for general compliance with Contract Documents. No responsibility is assumed for correctness of dimensions or detail. Contractor is required to specify deviations from contract requirements. Lack of exceptions noted by Engineer does not waive Contractor's obligation to comply with Drawings and Specifications.

Comments:
Items reviewed and confirmed to meet requirements
(Reviewed Material in Parentheses)
Issues in Bold

-

By: _____ Date: 8/1/2017

Distribution: [1] Contractor [1] Engineer [1] Owner

UNITED POLY SYSTEMS

C O N D U I T

Applications include:

Telecom, Energy, DOT, Etc.

Installation:

Existing Conduit, Plow, Direct Burial,
HDD (Horizontal Directional Drilling)

- Product may be striped for a number of different indicators
- Product is manufactured in IPS (iron pipe size) and DIPS (ductile iron pipe size 4" and up). Product available in ¾" to 16" diameters
- The material requirements for PE conduit shall be classified in accordance with ASTM Standard D 3350 "Standard Specification for Polyethylene Plastic Pipe and Fittings Materials". ASTM D 3350 defines important physical properties of HDPE materials into ranges, or cell classes, so that each property can be defined within a range that is appropriate for the application.
- For HDPE conduit according to ASTM F 2160, the High Density Polyethylene material is defined as noted below:

Property	Range or Minimum Requirement	Units	Cell Class	Test Method
Density	0.941-0.955	g/cc	3	ASTM D 792 or 1505
Melt Index [a]	<0.25-0.40	g/10 minutes	3or4	ASTM D 1238
Flexural Modulus	110,000-160,000	Psi	4or5	ASTM D 790
Tensile Strength	3000-4000	Psi	4or5	ASTM D 638
Environmental Stress Crack Resistance [b]	F20>192	Hours (condition C)	3or4	ASTM D 1693
HDB	Not Defined		0,1,2,3,or 4	ASTM D2837

*Nominal values are to be used as guidelines only; this is not a product specification and does not indicate minimum or maximum values.

4707 E. Kearney, Springfield, MO 65803 • 417.708.9887 • www.unitedpolysystems.com

Print line

The duct product shall be sequentially marked and identified along its outer length in contrasting color. The print interval shall be every two feet and shall include the following:

MANUFACTURER'S NAME: United Poly Systems

PRODUCT SIZE/SDR

PRODUCTION CODE (Date, Location, Period)

SPECIFICATION

LENGTH OF CONDUIT (in feet) on reel

Optional custom print lines are available and may include customer name, project name, application etc.

Minimum Order Quantities

Minimum order quantities are as follows:

Size (in)	Color	Minimum (ft)
¾”	Any	2500
1”	Any	2500
1 ¼”	Orange or Black	2000
1 ¼”	Other	3000
1 ½”	Orange or Black	1500
1 ½”	Other	2500
2”	Orange or Black	1000
2”	Other	2000
2 ½”	Orange or Black	2500
2 ½”	Other	5000
3”	Orange or Black	1000
3”	Other	2000
4”	Orange or Black	500
4”	Other	750
	Ducts larger than 4”diameter offered in black or w/stripes only	
5”		1000
6”		900
8”		560
10”		560
12”		480
14”		560
16”		480

Reel Dimensions

Standard dimensions for United Poly Systems reels are as follows:

All reels come in a standard 48” width unless otherwise requested by customer. Standard common reel diameters are 48”, 66”, 72”, 83” 96”, 102”, 114” and 120”.

Segmented reels are also available in 2-way, 3-way or 4-way configurations. United Poly Systems does not currently parallel wrap duct.

¾” and 1” size ducts are wrapped to a preferred diameter reel size of 48”, 66” or 72”.

6” duct is offered on 450’ 120” reels or in coils of 500’

United Poly Systems will not coil 4” schedule 40 HDPE pipe due to the potential for compromise of product integrity.

Options

- Straight longitudinal internal ribbing is available for all pipes 2” and below.
  - ***UNIFORM STRAIGHT INTERNAL RIBS SPANNING THE LENGTH OF THE PIPE***
- Optional custom print lines are available and may include customer name, project name, application, lightning bolt etc.
- Pull tape is offered in a number of tensile strengths. United Poly Systems standard pull tape is an 1130# strength, while other options include strengths from 200# to 2500#.
- Segmented reels are available in 2-way, 3-way or 4-way configurations. United Poly Systems does not currently parallel wrap duct.
- A number of colors and stripes are offered to customize the product to the customer’s needs. United Poly Systems offers orange, blue, black, red, gray, white, green, yellow, terracotta, violet, brown, lilac, and custom colors upon customer’s request.

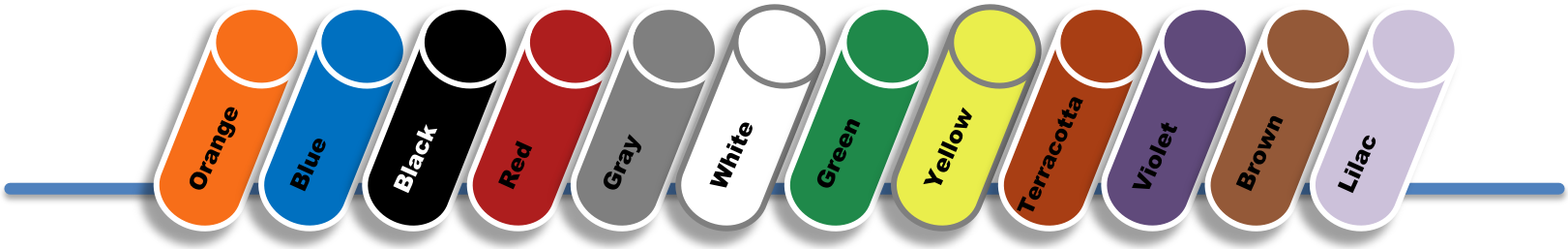

Custom colors available upon request

Coil Sizes

Standard coil lengths are as follows:

Size (in)	Standard Coil Footages (ft)	Quantity per pallet	Coil ID(in)	Coil Width (in)
¾”	500 - 1000	8	30	10 - 20
1”	500 - 1000	7 - 5	30	11 - 20
1 ¼”	500 - 1000	5 - 3	30	16 - 29.5
1 ½”	500 - 1000	8 - 6	51 - 51	13.5 - 16
2”	500 - 1000 - 1500 - 2000	7 - 4 - 3 - 3	51 - 51 - 51 - 51	14 - 22.5 - 28 - 32
3”	500 - 1000	4 - 2	69.5 - 69.5	23.5 - 45
4”	500 - 600 - 800	3 - 2 - 2 - 2	69.5 - 70 - 69.5	31 - 48 - 49
5”	500	2	84	50
6”	450	2	84	50

Internal Ribbing

United Poly Systems is proud to offer HDPE duct with longitudinal internal ribbing for ¾” to 2” diameters. Ribbed duct offers a way to maximize the distance cable may be pulled and jetted into conduit. The internal ribs help to reduce the coefficient of friction within that particular pipe. Air may flow more readily around the cable and contact with the wall of the duct is reduced thereby reducing friction and simplifying instillation. Inside ribbed duct is available up to 6’ diameter conduit. Ribbed conduit is offered on segmented reels with or without any of our pre-installed pull tape options and can be manufactured in any solid color or striping.

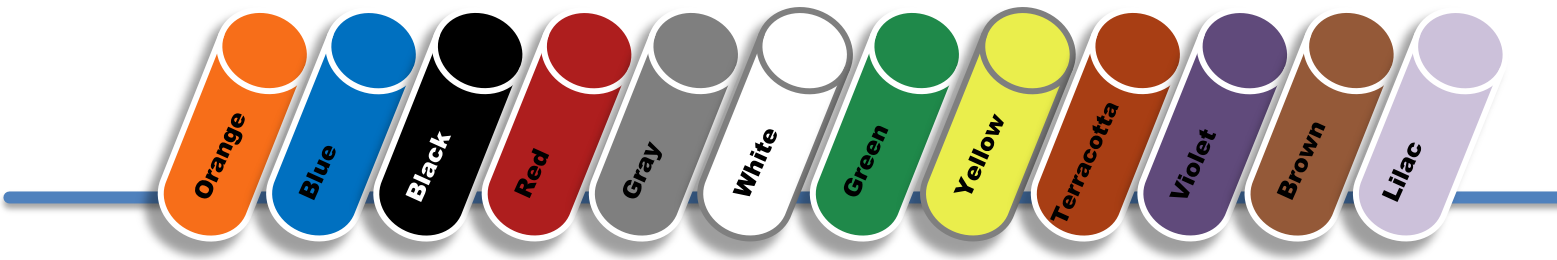

Custom colors available upon request

4707 E. Kearney, Springfield, MO 65803 • 417.708.9887 • www.unitedpolysystems.com

Notes

¬ Ovality of 2 inch and smaller conduit shall not exceed 7% off the coil. Coiled conduit larger than 2 inch through 3 inch IPS shall not exceed 10%. Ovality in coiled 4 inch and greater diameter conduit and casing is largely a packaging condition where greater than 15% ovality shall be corrected in
the field by processing the roundable conduit through re-rounding and straightening equipment during installation. Straight lengths of conduit shall have ovality of 5% or less.
PPI. *HDPE Solid Wall Conduit Model Specification Power and Communications Conduit and Casing*. Tech. no. MS-5. 2008.

¬ HDPE conduit will ovalize when it is coiled, and after a period of time,will set into the coiled state. A residual curve is normal for all coiled HDPE duct products. Since larger duct is coiled into a relatively tighter bending radius, residual curvature and ovality is greater for larger diameters. Some couplers may be affected by ovalized duct, along with installations where cable-fill ratios reach near capacity, or where larger diameter cables are being placed. Residual curvature and ovality may be corrected in the field by running the entire coil through rerounding and straightening equipment during installation.

¬ **Schedule 40 HDPE conduit through 3" has a wall thickness greater than SDR 15.5. Schedule *40 HDPE conduits in diameters above 3" and Schedule 80 in 6" have wall thickness ranges that are less than SDR 15.5. United Poly Systems will not offer these sizes in continuous coils to preserve pipe integrity and limit ovality*.**

¬ "All HDPE pipes produced under ASTM D3035, F714, D2447, D2239 and D2737 specifications are suitable for the transport of liquids, including water, fluid chemicals, effluents, municipal sewage, etc. The user should consult with the HDPE pipe manufacturer to determine whether the composition of the liquid material being transported is compatible with polyethylene pipe so as not to affect the service life below limits acceptable to the user."
PPI. Resistance of Solid Wall Polyethylene Pipe to a Sanitary Sewage Environment. Tech. no. 15. 2009.

¬ **Pressure Rating (psig) Comparison Between PE 4710 and PE 3408 for Water Applications**

	DR 9	DR 11	DR 13.5	DR 17
PE 4710	252	202	161	126
PE 3408	200	160	128	100

¬ **RECOMMENDED COLOR CODE**

This color code is only intended for solid wall pipe used outside of buildings

Color or Stripe Color	Solid Wall Piping Application
Red	Electric power lines, cable, conduit, and lighting cables
Orange	Telecommunication, alarm or signal lines, cables, or conduit
Yellow	Fuel gas (methane or propane), oil, petroleum, steam, or gaseous materials
Green	Sewers and drain lines
Blue	Potable water
Violet(Purple)	Reclaimed water, irrigation, and slurry lines

The recommended color code provided in this document is consistent with the American Public Works Association (APWA) Uniform Color Code.

DEPARTMENT OF THE ARMY
ALBUQUERQUE DISTRICT, CORPS OF ENGINEERS
ALBUQERQUE DISTRICT OFFICE
4101 JEFFERSON PLAZA NE
ALBUQUERQUE, NM 87109

SUBMITTAL REVIEW VERIFICATION SHEET

PROJECT TITLE: Kirtland BFF Mid-Plume Pump and Treat System Expansion
CONTRACT NUMBER: W912DR-12-D-0006 DM01
DATE RECEIVED: 8-02-2017
DATE REVIEWED: 8-02-2017

DESCRIPTION OF ITEMS REVIEWED:

1. Concrete Mix Design

NO EXCEPTIONS TAKEN.	**X**
EXCEPTIONS AS NOTED ON DRAWINGS AND/OR ATTACHED SHEETS(S). RESUBMISSION NOT REQUIRED.	
EXCEPTIONS AS NOTED ON DRAWINGS AND/OR ATTACHED SHEETS(S). RESUBMISSION REQUIRED.	
RECEIPT ACKKNOWLEDGED.	

Notes:

NOTE: ITEMS REVIEWED AS TO GENERAL LAYOUT ONLY. DIMENSIONS AND QUANTITIES NOT CHECKED. REVIEW DOES NOT RELIEVE CONTRACTOR OF RESPONSIBILITIES FOR ANY ERRORS WHICH MAY EXIST AS CONTRACTOR SHALL BE RESPONSIBLE FOR DIMENSIONS AND DESIGN OF ADEQUATE CORRECTIONS, DETAILS AND SATISFACTORY CONSTRUCTION OF WORK.

SIGNATURE _____ **DATE** 8/2/2017

EA Engineering, Science, and Technology, Inc., PBC

Submittal Review Sheet 1

Project Name: **Kirtland BFF Mid-Plume Pump and Treat System Expansion**				Date Received: **8/1/17**	
Project Owner: **Kirtland Air Force Base**				Checked By: **Tyler Curley**	
Contractor: **RMCI, Inc.**	Engineer: **EA Engineering, Science and Technology, Inc., PBC.**			Log Page: **NA**	
Address: **6211 Chappell Rd NE, Albuquerque, NM 87113**	Address: **320 Gold Ave. SW, Suite 1300 Albuquerque, NM 87102**			EA No.: 62599DM01	
				Spec. Section: **No Specs**	
				Drawing/Detail No.: **No Drawing**	
ATTN: Philip Johnson	ATTN: **Devon Jercinovic**			1st Sub	Re-Sub
Date Transmitted: **08/01/2017**	Prev. Transmittal Date:				

Item No.	No. Copies	Description	Manufacturer	Mfg/Vendor Dwg or Detail	Action Taken*
1	1	Concrete Mix Design	Duke City Redi Mix		A

The Action Designated Above is in Accordance with the Following Legend:

A – Furnish as Submitted
B – Furnish as Noted
C – Revise and Re-submit
1. Not enough information for review.
2. No reproducible submitted.
3. Copies illegible.
4. Not enough copies submitted.
5. Wrong sequence number.
6. Wrong resubmittal number.
7. Wrong Spec. Section.
8. Wrong form used.
9. See Comments.

D – Rejected
E – Engineer's Review not Required
1. Submittal not required.
2. Supplemental Information. Submittal retained for Information purposes only.
3. Information reviewed and approved on prior submittal.
4. See Comments.

Review is for general compliance with Contract Documents. No responsibility is assumed for correctness of dimensions or detail. Contractor is required to specify deviations from contract requirements. Lack of exceptions noted by Engineer does not waive Contractor's obligation to comply with Drawings and Specifications.

Comments:
Items reviewed and confirmed to meet requirements
(Reviewed Material in Parentheses)
Issues in Bold

4,000 PSI concrete conforming to COA specifications for exterior structures.

By: _____ Date: 8/1/17

Distribution: [1] Contractor [1] Engineer [1] Owner

CITY OF ALBUQUERQUE

Department of Municipal Development
Melissa R. Lozoya, P.E., Acting Director

February 2, 2017

Duke City Redi Mix
P.O. Box 250
Moriarty, NM 87035

Attention: Mr. Miles Shiver, General Manager

Subject: Review and Evaluation of the Request for Authorization Period for Portland Cement Concrete Submittal, December 21, 2016; CA² Testing, December 21, 2016; and Sampled December 19, 2016.

CODES	APPLICATION(S)	f'c @ 28 days, psi
50.17	Interior Concrete	3,000
51.17	Hydraulic Structures	3,500
→ 52.17	Structures	4,000
54.17	Sanitary Sewer	4,000
55.17	Exterior Concrete	3,000
56.17	Exterior Concrete, Slip Formed	3,000
57.17	High Early Release	4,000 psi @ 7 days
59.17	Lean Fill	N/A

PO Box 1293

Albuquerque

New Mexico 87103

www.cabq.gov

Sir:

The City of Albuquerque Department of Municipal Development Street Maintenance Division has reviewed and evaluated the subject Portland Cement Concrete Submittal for authorization for the period of 2017-2018. The review and evaluation were conducted in order to verify compliance with the requirements of the City of Albuquerque Standard Specifications for Public Works Construction, 1986 Edition, Updates 1-9. The submittal's authorization may be extended for a period of fourteen (14) months from latest date of sampling of the aggregates, assuming, (1) if there are no changes in materials and/or suppliers, (2) the production concrete performance complies with the requirements of the reference submittal design mixes, (3) the design mixes are produced at a ready mix plant and/or transit mix trucks certified to comply with the requirements of SECTION 101-PORTLAND CEMENT CONCRETE. Written plant and transit mix truck certifications shall be made available to for plant(s) and the transit mix trucks for inspection, and submitted to the Engineer upon request.

The design mixes specified in the submittal were proportioned with ASTM C33 aggregates as Orona Pit washed concrete sand, South Valley Pit #89 (3/8" Los Lunas) intermediate and #67 (7/8" Los Lunas) coarse aggregates; Holcim, Florence, Co. Type I-II LA Portland Cement; Salt River Materials 4 Corners, NM, ASTM C 618 Class F fly ash, Sika Plastocrete 161 Water Reducing Admixture and Sika-Air Air-Entraining Admixture.

The fine aggregate failed to meet the grading requirements of ASTM Section 6.1 for the #30 sieve. The intermediate aggregate failed to meet the grading requirements of ASTM C33 Table 3 for the #200 sieve. A variance request for the gradation was included in the submittal.

Based on this review and evaluation, the request for re-authorization for the Portland Cement Concrete Submittal for the 2017-2018 period was determined to comply with the requirements of City of Albuquerque Standard Specifications for Public Works Construction, Updates 1-9, with the included variations. The submittal is authorized for use on City and City related projects for a period of fourteen (14) months from date of sampling, December 19, 2017, to February 19, 2018. *Accelerating, normal range, and high range water reducing admixtures (flowable concrete application(s)), retarding and color admixtures, are not authorized for use in the design mixes included in the submittal and this extension.*

The review and evaluation are only to verify compliance with the design and specification concepts of the City of Albuquerque Standard Specifications for Public Works Construction, 1986 Edition, and **Updates 1-9. It shall not be construed as relieving the Contractor of the full responsibility of providing materials, equipment, and the work required either by a specific contract or contract plans, and/or specification: a) the proper fitting and construction of the work; b) accuracy and completeness of the submittal; c) selecting the fabrication and fabrication techniques of construction; and, d) performing the work in a safe manner.**

This authorization does not relieve the CONTRACTOR of the responsibility to provide the design mixes submittal for use on a specific project for authorization by the ENGINEER. The submittal shall include copies of this authorization, and the authorized design mixes submittal.

submittal may not comply. It is the responsibility of the CONTRACTOR to provide submittals and materials that comply with a CONTRACT.

Authorized by:

S Woodall

Stephen P. Woodall, PE
Pavement & Materials Engineer

Copies: David Harrison, PE, Division Manager, Construction Services
Shahab Biazar, PE, City Engineer, Planning Department
File

Attachments: 1

7705 BROADWAY S.E.
ALBUQUERQUE, NEW MEXICO
P.O. Box 250
Moriarty, NM 87035
PHONE: (505) 877-5777
FAX: (505) 452-0806
DukeCityRediMix@aol.com

December 21, 2016

City of Albuquerque Public Works Dept.
Materials Testing Bureau
Attn: Phillip Romo, P.E.
P.O. Box 1293
Albuquerque, NM 87103

RE: 2017 Portland Cement Concrete Recertification
Submittals for the City of Albuquerque

Attached is certification of Duke City' Redi-Mix's City of Albuquerque mix designs performed by Concrete, Aggregate & Asphalt Testing, LLC for your approval. We trust the submitted items will satisfy the requirements in Section 101-Portland Cement Concrete, City of Albuquerque Standard Specifications for Public Works Construction.

Feel free to contact me at (505) 877-5777 if you need any additional information.

Sincerely,

W M Shiver, III

Miles Shiver
Managing Partner
Duke City Redi-Mix, LLC

CA2 TESTING

PO Box 1228
414 Bibb Industrial Drive
Las Vegas, NM 87701

Phone: 505-718-3030
Fax: 505-425-9159
E-mail: leaann@ca2testing.com

December 21, 2016

Miles Shiver
Duke City Redi Mix
7705 Broadway SE
Albuquerque, NM 87105

RE: 2017 Concrete mix designs recertification as per Section 101 of the City of Albuquerque (CoA) Amendment 1 to Table 101C of Section 101 of the City of Albuquerque Standard Specifications for Public Works Construction Update #8.

Dear Sir,
We have completed the aggregate testing and review analysis has been performed on data obtained and provided on the referenced concrete mixes for recertification for use on projects for 2017 in accordance with the City of Albuquerque Standard Specifications for Public Works Construction – Section 101 and Amendment 1 of Table 101.C – update #8.

The mix performance data for the 3000 and 4000 psi exterior concrete (52.16 & 55.16) mixes were provided by Duke City Redi-Mix and is contained in Appendix A. When current year mix data was not available, data from the original lab design was used. The statistical analysis of the performance data confirms that the original 2009 laboratory trial data is still representative and valid. The strength data for 2016 shows that the mixes performed equal to or better than the original designs and the mixes meet and exceed the necessary overdesign requirements.

The component materials are essentially the same as when the original mixes were established. The coarse and fine aggregates gradation data was reviewed and compared to last years and also to verify that they meet the gradation specification requirements. The fine aggregate failed to meet the grading requirements of ASTM C33 Section 6.1 for the #30 sieve. However, ASTM C33 Section 6.3 states that the fine aggregate shall meet the requirements of Section 6 provided that the supplier can demonstrate to the purchaser or specifier that the class of concrete specified will have relevant properties. Also, the fineness modulus has remained within the 0.20 of the "base fineness modulus". Hence a variation is requested for the fine aggregate grading. The specific gravities of the fly ash and aggregates have changed and the 2017 recommended mix proportions have been adjusted to reflect the changes.

Appendix B contains data and information on the individual constituents: cement, flyash, aggregates and admixtures. A copy of the original mix design submittal is included in Appendix C.

PO Box 1228
414 Bibb Industrial Drive
Las Vegas, NM 87701

Phone: 505-718-3030
Fax: 505-425-9159
E-mail: leaann@ca2testing.com

Based on the items discussed above, including laboratory dry density and compressive strength testing of the lean fill trial batch, certification is hereby given that the Portland cement concrete mixes listed below comply with the City of Albuquerque Standard Specifications for Public Works Construction – Section 101 and Amendment 1 of Table 101.C and Section 207– update #8.

Mix Code	Mix Strength	Mix Use
50.17	3000 psi	Interior concrete (heated areas) foundations and slabs on grade
51.17	3500 psi	Hydraulic structures, storm drain structures & channels and water reservoirs
52.17	4000 psi	Exterior structures, bridges/bridge decks, parking structures
54.17	4000 psi	Sanitary sewer and manhole structures
55.17	3000 psi concrete	Exterior structures, sidewalks, storm drain manholes, Misc exterior
56.17	3000 psi	Exterior concrete – curb & gutter, curb machine (low slump)
57.17	4000 psi	High early release concrete
59.17	N/A	Lean Fill, Section 207

If there should be any questions, please do not hesitate to call.

Sincerely,

LEA ANN MARQUEZ
NEW MEXICO
16029
PROFESSIONAL ENGINEER

Lea Ann Marquez, P.E.

City Of Albuquerque 3000 PSI - Interior

Interior Structure & Slab on Grade, Heated areas, Section 510

Client: Duke City Redimix
Address: 7705 Broadway SE
Albuquerque, NM 87105

Report Date: 12/21/2016

CONCRETE MIX PROPORTIONS

Mix Code: **50.17**

Material Description	Material Source	SSD Batch Weights	Specific Gravity SSD	Absorption	Abs Vol in Ft^3
Cement, type I-II LA>	***Holcim I/II***	425	3.15		2.16
Ash, type F	***SRM 4 Corners Fly Ash***	120	1.95		0.99
	Total Cementitious>	545			
Fine Aggregate/Lb>	***Orona Concrete Sand***	1161	2.564	2.08%	7.26
Coarse Aggregate #1/	***South Valley Pit 7/8"***	1345	2.738	2.20%	7.87
Coarse Aggregate #2/	***South Valley Pit 3/8"***	550	2.768	2.30%	3.19
Coarse Aggregate #3/	***N/A***	0	1	1.00%	
	Total design coarse aggregate at ssd:	1895			
	Total design FA & CA at ssd:	3057		18.30	
Air Content % by volume>	Entrained	5.5			1.49
Water @ SSD aggregates>	Gals/cubic yard:	30.5			4.07
	Lbs per cubic yard:	254			
	Total Weight>	3856		Total Volume>	27.0
Air Entraining Admixture - OZ	***Sika Air***	2.7	oz.	0.50	oz/cwt
MRWR - OZ	***Sika Plastocrete 161***	27.3	oz.	5.0	oz/cwt

Temperature and slump variations may cause adjustments in admixtures dosages.

	Design	Specs	Production
Total Cementitious content in lbs:	545		
Cement content in lbs:	425	> 423	425
Water/cementitious ratio:	0.47	< 0.5	0.47
Water/cement ratio:	0.60		
Ash wt as % of cement wt only:	28.2%		
Ash wt as % of total cementitious:	22.0%	> 20%	22.0%
Orona Concrete Sand	38.0%		
South Valley Pit 7/8"	44.0%		
South Valley Pit 3/8"	18.0%		
N/A	0.0%		

Adjusted Workability Factor	34.1
Coarseness Factor	50.6
Target corrected air content:	4.5-7.5%
Anticipated Air Content:	5.5%
Aggregate Correction Factor:	1.50
Target slump:	< 4"
Anticipated Slump:	4
Anticipated Unit Weight:	142.7
Max Theo. unit weight:	151.0
Calc'd Air:	5.5%

Age in Days	Average compressive strength	Specs
3	2964	
7	3918	
14	4281	f'c = 3000 psi
28	4720	f'cr = 4200 psi

Batch weights and anticipated plastic and hardened properties are based on trial batches Alb. 1, 2, 3, 4 & 5 which were batched 4/1/09. Volumetrics were updated based on December 2017 aggregate testing.

Concrete, Aggregate and Asphalt Testing, LLC
P.O. Box 1228 - 414 Bibb Industrial Drive
Las Vegas, NM 87701
(505)718-3030 phone

City Of Albuquerque 3500 PSI - Exterior

Hydraulic Structures, Storm Drain Structures & Channels, and Water Reservoirs Sectio
510, 512, and 602

CA2 TESTING

Client: Duke City Redimix
Address: 7705 Broadway SE
Albuquerque, NM 87105

Report Date: 12/21/2016

CONCRETE MIX PROPORTIONS

Mix Code: **51.17**

Material Description	Material Source	SSD Batch Weights	Specific Gravity SSD	Absorption	Abs Vol in Ft^3
Cement, type I-II LA>	*Holcim I/II*	519	3.15		2.64
Ash, type F	*SRM 4 Corners Fly Ash*	146	1.95		1.20
	Total Cementitious>	665			
Fine Aggregate/Lb>	*Orona Concrete Sand*	1106	2.564	2.08%	6.91
Coarse Aggregate #1/	*South Valley Pit 7/8"*	1280	2.738	2.20%	7.49
Coarse Aggregate #2/	*South Valley Pit 3/8"*	524	2.768	2.30%	3.03
Coarse Aggregate #3/	*N/A*	0	1	1.00%	
	Total design coarse aggregate at ssd:	1804			
	Total design FA & CA at ssd:	2910		17.42	
Air Content % by volume>	Entrained	5.5			1.49
Water @ SSD aggregates>	Gals/cubic yard:	31.9			4.26
	Lbs per cubic yard:	266			
	Total Weight>	3840		Total Volume>	27.0
Air Entraining Admixture - OZ	*Sika AIr*	3.3	oz.	0.50	oz/cwt
MRWR - OZ	*Sika Plastocrete 161*	33.3	oz.	5.0	oz/cwt

Temperature and slump variations may cause adjustments in admixtures dosages.

	Design	Specs	Production
Total Cementitious content in lbs:	665		
Cement content in lbs:	519	> 517	519
Water/cementitious ratio:	0.40	< 0.4	0.40
Water/cement ratio:	0.51		
Ash wt as % of cement wt only:	28.2%		
Ash wt as % of total cementitious:	22.0%	> 20%	22.0%
Orona Concrete Sand	38.0%		
South Valley Pit 7/8"	44.0%		
South Valley Pit 3/8"	18.0%		
N/A	0.0%		

Adjusted Workability Factor	37.3
Coarseness Factor	50.6
Target corrected air content:	4.5-7.5%
Anticipated Air Content:	5.5%
Aggregate Correction Factor:	1.50
Target slump:	< 4"
Anticipated Slump:	4
Anticipated Unit Weight:	142.1
Max Theo. unit weight:	150.4
Calc'd Air:	5.5%

Age in Days	Average compressive strength	Specs
3	4019	
7	5313	
14	5085	f'c = 3500 psi
28	6400	f'cr = 4700 psi

Batch weights and anticipated plastic and hardened properties are based on trial batches Alb. 1, 2, 3, 4 & 5 which were batched 4/1/09. Volumetrics were updated based on December 2017 aggregate testing.

Concrete, Aggregate and Asphalt Testing, LLC
P.O. Box 1228 - 414 Bibb Industrial Drive
Las Vegas, NM 87701
(505)718-3030 phone

City Of Albuquerque 4000 PSI - Exterior

Structures, Bridges/Bridge decks, and Parking Structures, Section 337 and 510

CA2 TESTING

Client: Duke City Redimix
Address: 7705 Broadway SE
Albuquerque, NM 87105

Report Date: 12/21/2016

CONCRETE MIX PROPORTIONS

Mix Code: **52.17**

Material Description	Material Source	SSD Batch Weights	Specific Gravity SSD	Absorption	Abs Vol in Ft³
Cement, type I-II LA>	*Holcim I/II*	566	3.15		2.88
Ash, type F	*SRM 4 Corners Fly Ash*	160	1.95		1.31
	Total Cementitious>	725			
Fine Aggregate/Lb>	*Orona Concrete Sand*	1079	2.564	2.08%	6.74
Coarse Aggregate #1/	*South Valley Pit 7/8"*	1221	2.738	2.20%	7.14
Coarse Aggregate #2/	*South Valley Pit 3/8"*	539	2.768	2.30%	3.12
Coarse Aggregate #3/	*N/A*	0	1	1.00%	
	Total design coarse aggregate at ssd:	1760			
	Total design FA & CA at ssd:	2839		16.99	
Air Content % by volume>	Entrained	5.5			1.49
Water @ SSD aggregates>	Gals/cubic yard:	32.5			4.34
	Lbs per cubic yard:	271			
	Total Weight>	3834		Total Volume>	27.0
Air Entraining Admixture - OZ	*Sika Air*	3.6	oz.	0.50	oz/cwt
MRWR - OZ	*Sika Plastocrete 161*	36.3	oz.	5.0	oz/cwt

Temperature and slump variations may cause adjustments in admixtures dosages.

	Design	Specs	Production
Total Cementitious content in lbs:	725		
Cement content in lbs:	566	> 564	566
Water/cementitious ratio:	0.37	< 0.4	0.37
Water/cement ratio:	0.48		
Ash wt as % of cement wt only:	28.2%		
Ash wt as % of total cementitious:	22.0%	> 20%	22%
Orona Concrete Sand	38.0%		
South Valley Pit 7/8"	43.0%		
South Valley Pit 3/8"	19.0%		
N/A	0.0%		

Adjusted Workability Factor	39.7
Coarseness Factor	51.3
Target corrected air content:	4.5-7.5%
Anticipated Air Content:	5.5%
Aggregate Correction Factor:	1.50
Target slump:	< 4"
Anticipated Slump:	4
Anticipated Unit Weight:	141.9
Max Theo. unit weight:	150.2
Calc'd Air:	5.5%

Age in Days	Average compressive strength	Specs
3		
7	4119	
14		f'c = 4000 psi
28	5711	f'cr = 5050 psi

Batch weights and anticipated plastic and hardened properties are based on trial batches Alb. 1, 2, 3, 4 & 5 which were batched 4/1/09. Volumetrics were updated based on December 2017 aggregate testing. Compressive strength results from statistical analysis ranging from 1/4/16 thru 6/16/16.
f'cr = 3780 psi
f'cr = 4012 psi

Concrete, Aggregate and Asphalt Testing, LLC
P.O. Box 1228 - 414 Bibb Industrial Drive
Las Vegas, NM 87701
(505)718-3030 phone

City Of Albuquerque 4000 PSI - Exterior

Sanitary Sewer and Manhole Structures Section 900

Client: Duke City Redimix
Address: 7705 Broadway SE
Albuquerque, NM 87105

Report Date: 12/21/2016

CONCRETE MIX PROPORTIONS

Mix Code: **54.17**

Material Description	Material Source	SSD Batch Weights	Specific Gravity SSD	Absorption	Abs Vol in Ft^3
Cement, type I-II LA>	*Holcim I/II*	659	3.15		3.35
Ash, type F	*SRM 4 Corners Fly Ash*	186	1.95		1.53
	Total Cementitious>	845			
Fine Aggregate/Lb>	*Orona Concrete Sand*	985	2.564	2.08%	6.15
Coarse Aggregate #1/	*South Valley Pit 7/8"*	1224	2.738	2.20%	7.17
Coarse Aggregate #2/	*South Valley Pit 3/8"*	452	2.768	2.30%	2.62
Coarse Aggregate #3/	*N/A*	0	1	1.00%	
	Total design coarse aggregate at ssd:	1677			
	Total design FA & CA at ssd:	2661		15.92	
Air Content % by volume>	Entrained	5.5			1.49
Water @ SSD aggregates>	Gals/cubic yard:	35.3			4.71
	Lbs per cubic yard:	294			
	Total Weight>	3800		Total Volume>	27.0
Air Entraining Admixture - OZ	*Sika Air*	4.2	oz.	0.50	oz/cwt
MRWR - OZ	*Sika Plastocrete 161*	42.3	oz.	5.0	oz/cwt

Temperature and slump variations may cause adjustments in admixtures dosages.

	Design	Specs	Production
Total Cementitious content in lbs:	845		
Cement content in lbs:	659	> 658	659
Water/cementitious ratio:	0.35	< 0.4	0.35
Water/cement ratio:	0.45		
Ash wt as % of cement wt only:	28.2%		
Ash wt as % of total cementitious:	22.0%	> 20%	22.0%
Orona Concrete Sand	37.0%		
South Valley Pit 7/8"	46.0%		
South Valley Pit 3/8"	17.0%		
N/A	0.0%		

Adjusted Workability Factor	41.2
Coarseness Factor	52.2
Target corrected air content:	4.5-7.5%
Anticipated Air Content:	5.5%
Aggregate Correction Factor:	1.50
Target slump:	< 4"
Anticipated Slump:	4
Anticipated Unit Weight:	140.7
Max Theo. unit weight:	148.8
Calc'd Air:	5.5%

Age in Days	Average compressive strength	Specs
3		
7	4117	
14		f'c = 4000 psi
28	7560	f'cr = 5200 psi

Batch weights and anticipated plastic and hardened properties are based on trial batches Alb. 1, 2, 3, 4 & 5 which were batched 4/1/09. Volumetrics were updated based on December 2017 aggregate testing. Compressive strenth results shown are based on 2014 statistical data. Not enough data for 2016 to perform an analysis.

Concrete, Aggregate and Asphalt Testing, LLC
P.O. Box 1228 - 414 Bibb Industrial Drive
Las Vegas, NM 87701
(505)718-3030 phone

City Of Albuquerque 3000 PSI - Exterior

Exterior Structures, Sidewalks, Storm Drain Manholes, Misc Concrete
Sections 340, 346, 420, 510, 511, 701 and 1500

Client: Duke City Redimix
Address: 7705 Broadway SE
Albuquerque, NM 87105

Report Date: 12/21/2016

CONCRETE MIX PROPORTIONS

Mix Code: **55.17**

Material Description	Material Source	SSD Batch Weights	Specific Gravity SSD	Absorption	Abs Vol in Ft^3
Cement, type I-II LA>	*Holcim I/II*	471	3.15		2.40
Ash, type F	*SRM 4 Corners Fly Ash*	133	1.95		1.09
	Total Cementitious>	604			
Fine Aggregate/Lb>	*Orona Concrete Sand*	1131	2.564	2.08%	7.07
Coarse Aggregate #1/	*South Valley Pit 7/8"*	1310	2.738	2.20%	7.67
Coarse Aggregate #2/	*South Valley Pit 3/8"*	536	2.768	2.30%	3.10
Coarse Aggregate #3/	*N/A*	0	1	1.00%	
	Total design coarse aggregate at ssd:	1846			
	Total design FA & CA at ssd:	2977		17.82	
Air Content % by volume>	Entrained	5.5			1.49
Water @ SSD aggregates>	Gals/cubic yard:	31.5			4.20
	Lbs per cubic yard:	262			
	Total Weight>	3844	Total Volume>		27.0
Air Entraining Admixture - OZ	*Sika Air*	3.0	oz.	0.50	oz/cwt
MRWR - OZ	*Sika Plastocrete 161*	30.2	oz.	5.0	oz/cwt

Temperature and slump variations may cause adjustments in admixtures dosages.

	Design	Specs	Production
Total Cementitious content in lbs:	604		
Cement content in lbs:	471	> 470	471
Water/cementitious ratio:	0.43	< 0.45	0.43
Water/cement ratio:	0.56		
Ash wt as % of cement wt only:	28.2%		
Ash wt as % of total cementitious:	22.0%	> 20%	22%
Orona Concrete Sand	38.0%		
South Valley Pit 7/8"	44.0%		
South Valley Pit 3/8"	18.0%		
N/A	0.0%		

Adjusted Workability Factor	35.7
Coarseness Factor	50.6
Target corrected air content:	4.5-7.5%
Anticipated Air Content:	5.5%
Aggregate Correction Factor:	1.50
Target slump:	< 4"
Anticipated Slump:	4
Anticipated Unit Weight:	142.2
Max Theo. unit weight:	150.5
Calc'd Air:	5.5%

Age in Days	Average compressive strength	Specs
3		
7	3569	
14		f'c = 3000 psi
28	4914	f'cr = 3540 psi

Batch weights and anticipated plastic and hardened properties are based on trial batches Alb. 1, 2, 3, 4 & 5 which were batched 4/1/09. Volumetrics were updated based on December 2017 aggregate testing. Compressive strength results from statistical analysis ranging from 1/11/16 thru 5/3/16.
f'cr = 3540 psi
f'cr = 3439 psi

Concrete, Aggregate and Asphalt Testing, LLC
P.O. Box 1228 - 414 Bibb Industrial Drive
Las Vegas, NM 87701
(505)718-3030 phone

City Of Albuquerque 3000 PSI - Exterior

Exterior Structures, Curb & Gutter, Curb Machine (Low Slump), Section 340

Client: Duke City Redimix
Address: 7705 Broadway SE
Albuquerque, NM 87105

Report Date: 12/21/2016

CONCRETE MIX PROPORTIONS

Mix Code: **56.17**

Material Description	Material Source	SSD Batch Weights	Specific Gravity SSD	Absorption	Abs Vol in Ft^3
Cement, type I-II LA>	*Holcim I/II*	471	3.15		2.40
Ash, type F	*SRM 4 Corners Fly Ash*	133	1.95		1.09
	Total Cementitious>	604			
Fine Aggregate/Lb>	*Orona Concrete Sand*	1148	2.564	2.08%	7.18
Coarse Aggregate #1/	*South Valley Pit 7/8"*	1330	2.738	2.20%	7.78
Coarse Aggregate #2/	*South Valley Pit 3/8"*	544	2.768	2.30%	3.15
Coarse Aggregate #3/	*N/A*	0	1	1.00%	
	Total design coarse aggregate at ssd:	1874			
	Total design FA & CA at ssd:	3022		18.09	
Air Content % by volume>	Entrained	5.5			1.49
Water @ SSD aggregates>	Gals/cubic yard:	29.5			3.94
	Lbs per cubic yard:	246			
	Total Weight>	3872		Total Volume>	27.0
Air Entraining Admixture - OZ	*Sika Air*	3.0	oz.	0.50	oz/cwt
MRWR - OZ	*Sika Plastocrete 161*	30.2	oz.	5.0	oz/cwt

Temperature and slump variations may cause adjustments in admixtures dosages.

	Design	Specs	Production
Total Cementitious content in lbs:	604		
Cement content in lbs:	471	> 470	471
Water/cementitious ratio:	0.41	< 0.45	0.41
Water/cement ratio:	0.52		
Ash wt as % of cement wt only:	28.2%		
Ash wt as % of total cementitious:	22.0%	> 20%	22%
Orona Concrete Sand	38.0%		
South Valley Pit 7/8"	44.0%		
South Valley Pit 3/8"	18.0%		
N/A	0.0%		

Adjusted Workability Factor	35.7
Coarseness Factor	50.6
Target corrected air content:	4.5-7.5%
Anticipated Air Content:	5.5%
Aggregate Correction Factor:	1.50
Target slump:	< 2.5"
Anticipated Slump:	2 1/2
Anticipated Unit Weight:	143.3
Max Theo. unit weight:	151.6
Calc'd Air:	5.5%

Age in Days	Average compressive strength	Specs
3		
7	4431	
14		f'c = 3000 psi
28	5924	f'cr = 4200 psi

Batch weights and anticipated plastic and hardened properties are based on trial batches Alb. 1, 2, 3, 4 & 5 which were batched 4/1/09. Volumetrics were updated based on December 2017 aggregate testing. Compressive strenth results shown are based on 2014 statistical data. Not enough data for 2016 to perform an analysis.

Concrete, Aggregate and Asphalt Testing, LLC
P.O. Box 1228 - 414 Bibb Industrial Drive
Las Vegas, NM 87701
(505)718-3030 phone

City Of Albuquerque - High Early Release Concrete

Client: Duke City Redimix
Address: 7705 Broadway SE
Albuquerque, NM 87105

Report Date: 12/21/2016

CONCRETE MIX PROPORTIONS

Mix Code: **57.17**

Material Description	Material Source	SSD Batch Weights	Specific Gravity SSD	Absorption	Abs Vol in Ft^3
Cement, type I-II LA>	*Holcim I/II*	542	3.15		2.76
Ash, type F	*SRM 4 Corners Fly Ash*	153	1.95		1.26
	Total Cementitious>	695			
Fine Aggregate/Lb>	*Orona Concrete Sand*	1090	2.564	2.08%	6.81
Coarse Aggregate #1/	*South Valley Pit 7/8"*	1262	2.738	2.20%	7.38
Coarse Aggregate #2/	*South Valley Pit 3/8"*	516	2.768	2.30%	2.99
Coarse Aggregate #3/	*N/A*	0	1	1.00%	
	Total design coarse aggregate at ssd:	1778			
	Total design FA & CA at ssd:	2867		17.16	
Air Content % by volume>	Entrained	5.5			1.49
Water @ SSD aggregates>	Gals/cubic yard:	32.5			4.34
	Lbs per cubic yard:	271			
	Total Weight>	3833	Total Volume>		27.0
Air Entraining Admixture - OZ	*Sika Air*	3.5	oz.	0.50	oz/cwt
MRWR - OZ	*Sika Plastocrete 161*	34.8	oz.	5.0	oz/cwt

Temperature and slump variations may cause adjustments in admixtures dosages.

	Design	Specs	Production
Total Cementitious content in lbs:	695		
Cement content in lbs:	542	N/A	542
Water/cementitious ratio:	0.39	N/A	0.39
Water/cement ratio:	0.50		
Ash wt as % of cement wt only:	28.2%		
Ash wt as % of total cementitious:	22.0%	> 20%	22.0%
Orona Concrete Sand	38.0%		
South Valley Pit 7/8"	44.0%		
South Valley Pit 3/8"	18.0%		
N/A	0.0%		

Adjusted Workability Factor	38.1
Coarseness Factor	50.6
Target corrected air content:	4.5-7.5%
Anticipated Air Content:	5.5%
Aggregate Correction Factor:	1.50
Target slump:	< 4"
Anticipated Slump:	4
Anticipated Unit Weight:	141.9
Max Theo. unit weight:	150.1
Calc'd Air:	5.5%

Age in Days	Average compressive strength	Specs
3	3915	f'c = 4000 psi
7	5325	f'cr = 5200 psi
14	5908	
28	6478	

Batch weights and anticipated plastic and hardened properties are based on trial batches Alb. 1, 2, 3, 4 & 5 which were batched 4/1/09. Volumetrics were updated based on December 2017 aggregate testing.

Concrete, Aggregate and Asphalt Testing, LLC
P.O. Box 1228 - 414 Bibb Industrial Drive
Las Vegas, NM 87701
(505)718-3030 phone

City Of Albuquerque - Lean Fill

Client: Duke City Redimix
Address: 7705 Broadway SE
Albuquerque, NM 87105

Report Date: 12/29/2016

MIX PROPORTIONS

10/29/2013 batch date — Mix Code: **59.17**

Material Description	Material Source	SSD Batch Weights	Specific Gravity SSD	Absorption	Abs Vol in Ft^3
Cement, type I-II LA>	*Holcim I/II*	47	3.15		0.24
Ash, type F	*SRM 4 Corners Fly Ash*	0	1.95		0.00
	Total Cementitious>	47			
Fine Aggregate/Lb>	*Orona Concrete Sand*	2004	2.564	2.08%	12.53
Coarse Aggregate #1/L	*South Valley Pit 7/8"*	0	2.738	2.20%	0.00
Coarse Aggregate #2/L	*South Valley Pit 3/8"*	987	2.768	2.30%	5.71
Coarse Aggregate #3/L	*N/A*	0	1	1.00%	
	Total design coarse aggregate at ssd:	987			
	Total design FA & CA at ssd:	2991		18.22	
Air Content % by volume>	Entrained	5.0			1.35
Water @ SSD aggregates>	Gals/cubic yard:	53.9			7.19
	Lbs per cubic yard:	449			
	Total Weight>	3487		Total Volume>	27.0
Air Entraining Admixture - OZ	*Sika AIr*	0.3	oz.	0.60	oz/cwt
MRWR - OZ	*Sika Plastocrete 161*	0.0	oz.	0.0	oz/cwt

Temperature and slump variations may cause adjustments in admixtures dosages.

	Design	Specs	Production
Total Cementitious content in lbs:	47		
Cement content in lbs:	47	> 47	47
Water/cementitious ratio:	9.55	N/A	9.55
Water/cement ratio:	9.55		
Ash wt as % of cement wt only:	0.0%		
Ash wt as % of total cementitious:	0.0%	N/A	0.0%
Orona Concrete Sand	67.0%		
South Valley Pit 7/8"	0.0%		
South Valley Pit 3/8"	33.0%		
N/A	0.0%		

Adjusted Workability Factor	45.9
Coarseness Factor	2.5
Target corrected air content:	> 2%
Anticipated Air Content:	3.5%
Aggregate Correction Factor:	0.80
Target slump:	5 - 8"
Anticipated Slump:	5 1/2
Anticipated Unit Weight:	131.8
Max Theo. unit weight:	135.8
Calc'd Air:	3.0%

Concrete, Aggregate and Asphalt Testing, LLC
P.O. Box 1228 - 414 Bibb Industrial Drive
Las Vegas, NM 87701
(505)718-3030 phone

City Of Albuquerque - Lean Fill

Client: Duke City Redimix
Address: 7705 Broadway SE
Albuquerque, NM 87105

Report Date: 12/29/2016

	Age in Days	compressive strength (psi)	avg	specs	Moisture Content	Dry Density	% Compaction	specs
10/30/13	1	7						
10/30/13	1	9						
10/30/13	1	6	7		9.3	124	99.7%	> 95%
11/05/13	7	14						
11/05/13	7	12						
11/05/13	7	16	14		9.1	123.5	99.3%	
11/12/13	14	23						
11/12/13	14	25	24		8.8	123.8	99.5%	
11/26/13	28	43						
11/26/13	28	41			9.2	124.1	99.7%	
11/26/13	28	40	41	< 60 psi	9.3	123.8	99.5%	

	Combined grading	SPEC	Individual Sieve retained
1"	100	100	
3/4"	100	95-100	0
1/2"	100		0
3/8"	98	82-100	2
#4	73	70-100	24
#8	61	55-85	12
#16	56	38-60	5
#30	45		11
#50	18	6-30	27
#100	2	2-10	15
#200	1.4		1

Workability Factor: 60.9
Adjusted Workability Factor 47.2
Coarseness Factor: 5.9

Maximum Density 124.4
Optimum Moisture 7.8

Note: Proctor tested Fall 2013

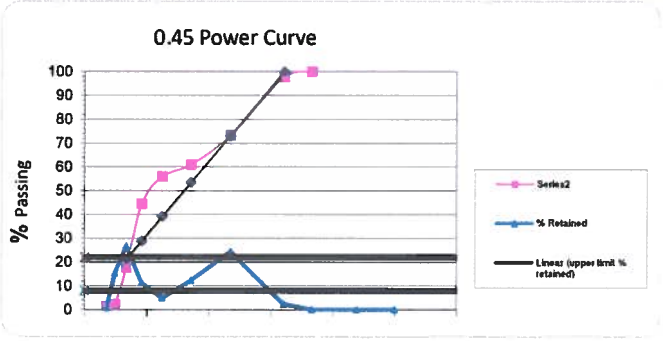

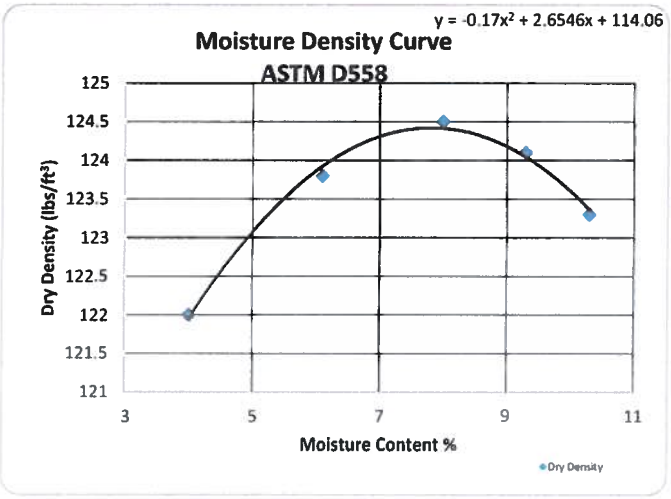

Concrete, Aggregate and Asphalt Testing, LLC
P.O. Box 1228 - 414 Bibb Industrial Drive
Las Vegas, NM 87701
(505)718-3030 phone

FOC0SBMRVWWKSHT3X3.xls

PORTLAND CEMENT CONCRETE SUBMITTAL ANALYSIS

REPORT DATE: 13-Jan-17
SUPPLIER: Duke City Redi Mix

ENGLISH BATCH WEIGHTS		CODE	50.17		51.17		52.17		54.17		55.17		56.17		57.17	
DESCRIPTION		APPLICATION	Interior		Hydraulic Structures		Structures		Sanitary		Exterior		Exterior Low Slump		HER	
BATCH WEIGHTS		UNITS		ft^3		ft^3		ft^3		ft^3		ft^3		ft^3		ft^3
c_d= DESIGN CEMENT	Holcim Type-II LA	pcy	425	2.16	519	2.64	566	2.88	659	3.35	471	2.40	471	2.40	542	2.76
fa_d= DESIGN FLY ASH	SRM- 4 Corners	pcy	120	0.97	146	1.18	160	1.30	186	1.51	133	1.08	133	1.08	153	1.24
fa_d : (c_d+fa_d) ratio	20.0 % minimum		22.00	22.00	22.00	22.00	22.00	22.00	22.00	22.00	22.00	22.00	22.00	22.00	22.00	22.00
W_d = DESIGN WATER		pcy	254.00	4.07	266.00	4.26	271.00	4.34	294.00	4.71	262.00	4.20	246.00	3.94	271.00	4.34
			30.50	30.49	31.90	31.93	32.50	32.53	35.30	35.29	31.50	31.45	29.50	29.53	32.50	32.53
AGG1, FA	Orona	pcy	1,161	7.26	1,106	6.91	1,079	6.74	985	6.16	1,131	7.07	1,148	7.18	1,090	6.81
AGG2, CA1	South Valley Pit	pcy	1,345	7.87	1,280	7.49	1,221	7.15	1,224	7.16	1,310	7.67	1,330	7.78	1,262	7.39
AGG3, CA2	South Valley Pit	pcy	550	3.18	524	3.03	539	3.12	452	2.62	536	3.10	544	3.15	516	2.99
ADMX1, AEA	Sika Air	oz/cy	2.7		3.3		3.6		4.2		3.0		3.0		3.5	
	TARGET Entr Air	%	5.5	1.49	5.5	1.49	5.5	1.49	5.5	1.49	5.5	1.49	5.5	1.49	5.5	1.49
ADMX2, NWRDA	Sika Plastocrete 161	oz/cy	27.3		33.3		36.3		42.3		30.2		30.2		34.8	
ADMX3, MRWRA	0	oz/cy														
ADMX4, HRWRA	0	oz/cy														
ADMX5, ACCEL	0	oz/cy														
ADMX6, RETARDER	0	oz/cy														
ENGLISH ANALYSIS																
TOTAL		pcy	3,856.0	3,855	3,840.0	3,841	3,834.0	3,836	3,800.0	3,800	3,844.0	3,843	3,872.0	3,872	3,860.0	3,834
UNIT WEIGHT		pcf	142.7	142.78	142.1	142.26	141.9	141.97	140.7	140.74	142.2	142.28	143.3	143.30	142.9	141.89
YIELD		ft3	27.00	27.000	27.00	27.000	27.00	27.020	27.00	27.000	27.00	27.010	27.00	27.020	27.00	27.020
WATER TO CEMENTITIOUS RATIO: $[w:(c+fa)]_d$			0.47	0.466	0.40	0.400	0.37	0.373	0.35	0.348	0.43	0.434	0.41	0.407	0.39	0.390
Trial Mix/Specification: $[w:(c+fa)]_{max}$																
COMPLIANCE: $[w:(c+fa)]_d \leq [w:(c+fa)]_{max}$			0.000		0.000		0.000		0.000		0.000		0.000		0.000	
Design Water: w_d		pcy	254	254	266	266	271	271	294	294	262	262	246	246	271	271
Req'd Cementitious: $(c_d'+fa_d')= [w:(c+fa)]_d$ x Wbw_d		pcy	540	545	665	665	732	726	840	845	609	604	600	604	695	695
Req'd Fly Ash: $fa_d'= (c_d' + fa_d') \times fa_d/(c_d+fa_d)$		pcy	119	120	146	146	161	160	185	186	134	133	132	133	153	153
Delta $(fa)_{del}$= fad-fad'		pcy	1		0		-1		1		-1		1		0	
Req'd: $c_d'= (c_d'+fa_d') - fa_d'$		pcy	421	425	519	519	571	566	655	659	475	471	468	471	542	542
Minimum Cement Content Specified, lbs/yd^3		pcy	423		517		564		658		470		470		542	
Delta $(c)_{del}$= cd-cd' If negative, adjust water		pcy	4		0		-5		4		-4		3		0	
FA:(FA+CA1+CA2)		%	18	17	18	17	19	18	17	16	18	17	18	17	18	17
DESIGN STRENGTH, f_d @ 28 DAYS		psi	4,720		6,400		5,711		7,560		4,914		5,924		5,325	@7 dys
REQUIRED, f_{cr} @ 28 DAYS		psi	4,200		4,700		5,050		5,200		3,540		4,200		5,200	@7 dys
SLUMP	NORMAL	in.	4		4		4		4		4		2.5		4	
	W/HRWRDA	in.														
ENTRAINED AIR		%	5.5		5.5		5.5		5.5		5.5		5.5		5.5	

DEPARTMENT OF THE ARMY
ALBUQUERQUE DISTRICT, CORPS OF ENGINEERS
ALBUQERQUE DISTRICT OFFICE
4101 JEFFERSON PLAZA NE
ALBUQUERQUE, NM 87109

SUBMITTAL REVIEW VERIFICATION SHEET

PROJECT TITLE: Kirtland BFF Mid-Plume Pump and Treat System Expansion
CONTRACT NUMBER: W912DR-12-D-0006 DM01
DATE RECEIVED: 8-02-2017
DATE REVIEWED: 8-02-2017

DESCRIPTION OF ITEMS REVIEWED:

1. Detectable Warning Tape

NO EXCEPTIONS TAKEN.	**X**
EXCEPTIONS AS NOTED ON DRAWINGS AND/OR ATTACHED SHEETS(S). RESUBMISSION NOT REQUIRED.	
EXCEPTIONS AS NOTED ON DRAWINGS AND/OR ATTACHED SHEETS(S). RESUBMISSION REQUIRED.	
RECEIPT ACKKNOWLEDGED.	

Notes:

NOTE: ITEMS REVIEWED AS TO GENERAL LAYOUT ONLY. DIMENSIONS AND QUANTITIES NOT CHECKED. REVIEW DOES NOT RELIEVE CONTRACTOR OF RESPONSIBILITIES FOR ANY ERRORS WHICH MAY EXIST AS CONTRACTOR SHALL BE RESPONSIBLE FOR DIMENSIONS AND DESIGN OF ADEQUATE CORRECTIONS, DETAILS AND SATISFACTORY CONSTRUCTION OF WORK.

SIGNATURE _____ **DATE** 8/2/2017

EA Engineering, Science, and Technology, Inc., PBC

Submittal Review Sheet 1

Project Name: **Kirtland BFF Mid-Plume Pump and Treat System Expansion**				Date Received: **8/1/17**		
Project Owner: **Kirtland Air Force Base**				Checked By: **Tyler Curley**		
Contractor: **RMCI, Inc.**	Engineer: **EA Engineering, Science and Technology, Inc., PBC.**			Log Page: **NA**		
Address: **6211 Chappell Rd NE, Albuquerque, NM 87113**	Address: **320 Gold Ave. SW, Suite 1300 Albuquerque, NM 87102**			EA No.: **62599DM01**		
				Spec. Section: **31 00 00 2.2.2**		
				Drawing/Detail No.: **C-301/E-501**		
ATTN: **Phillip Johnson**	ATTN: **Devon Jercinovic**			1st Sub		Re-Sub	
Date Transmitted: **08/01/2017**	Prev. Transmittal Date:					

Item No.	No. Copies	Description	Manufacturer	Mfg/Vendor Dwg or Detail	Action Taken*
1	1	Detectable Warning Tape	Pro-Line Safety Products		C-9

The Action Designated Above is in Accordance with the Following Legend:

A – Furnish as Submitted
B – Furnish as Noted
C – Revise and Re-submit
1. Not enough information for review.
2. No reproducible submitted.
3. Copies illegible.
4. Not enough copies submitted.
5. Wrong sequence number.
6. Wrong resubmittal number.
7. Wrong Spec. Section.
8. Wrong form used.
9. See Comments.

D – Rejected
E – Engineer's Review not Required
1. Submittal not required.
2. Supplemental Information. Submittal retained for Information purposes only.
3. Information reviewed and approved on prior submittal.
4. See Comments.

Review is for general compliance with Contract Documents. No responsibility is assumed for correctness of dimensions or detail. Contractor is required to specify deviations from contract requirements. Lack of exceptions noted by Engineer does not waive Contractor's obligation to comply with Drawings and Specifications.

Comments:
Items reviewed and confirmed to meet requirements
Issues in Bold

Detectable warning (3" green striped) is suitable for the GWTS influent line.

By: _____ Date: 8/1/17

Distribution: [1] Contractor [1] Engineer [1] Owner

DETECTABLE TAPE (5.0 MIL)

Solid Aluminum Foil Core • Virgin Clear Polypropylene Film Laminated Top Structure
Virgin Clear Polyethylene Film Laminated Base Structure • Reverse Printed Polypropylene Structure
Acid, Alkali, Chemical, and Oil Resistant • Direct Burial Rated • Made in the USA

Applications and Information

- **Pro-Line's Detectable Marking Tape** is used for detecting, locating, identifying, and protecting buried utility lines for gas, water, sewer, telecommunication, and electrical markets. The width of tape used, is determined by the size of, and depth at which the underground utility line is buried. The depth at which detectable tape is buried, is determined by the width of the tape used.
- **DETECT:** Aluminum core is detected through means of inductive locating.
- **LOCATE:** Line is located and marked after inductive locating is performed.
- **IDENTIFY:** Utility type is identified by both the APWA color-code and utility legend printed on the marking tape.
- **PROTECT:** Detectable tape works 24 hours a day and year round, even if tape is not inductively located during excavation, the tape provides a "stop-sign" effect that is highly visible.

Standards and References

Pro-Line's Detectable Marking Tape meets or exceeds all applicable ASTM specifications.

- ASTM D2103-08: Standard Specification for Polyethylene Films and Sheeting.
- ASTM D882-09: Standard Test Method for Tensile Properties and Elongation of Thin Plastic Sheeting.
- ASTM D2578-08: Standard Test Method for Wetting Tension of Polyethylene and Polypropylene Films.
- ASTM D792-08: Standard Test Methods for Density of Plastics by Displacement.
- ASTM D671-93: Standard Test Method for Flexural Fatigue of Plastics.

Construction

Pro-Line's Detectable Marking Tape consists of a minimum 5.0 mil overall thickness. Construction is 0.8 mil clear virgin polypropylene film, reverse printed and laminated to a 0.35 solid aluminum foil core and then laminated to a 3.75 mil clear virgin polyethylene film. Tape is printed with our APWA Color-Coded, patented "Diagonally Striped" design with big, bold, black lettering to identify a specific buried utility line.

Specifications

DETECTABLE UNDERGROUND MARKING TAPE
Underground marking tape shall be a (2", 3", 4", 6", or 12" width), detectable marking tape, with a minimum 5.0 mil overall thickness. Tape shall be manufactured using a 0.8 mil clear virgin polypropylene film, reverse printed and laminated to a **0.35 mil solid aluminum foil core**, and then laminated to a 3.75 mil clear virgin polyethylene film. Tape shall be printed using a diagonally striped design for maximum visibility, and meet the APWA Color-Code standard for identification of buried utilities. Detectable marking tape shall be **Pro-Line Safety Products** or approved equal and made in the USA.

DETECTABLE TAPE (5.0 MIL)

TABLE 1: DETECTABLE TAPE CONSTRUCTION (Polypropylene, Aluminum Foil, and Polyethylene)

PROPERTY	2" WIDTH	3" WIDTH	4" WIDTH	6" WIDTH	12" WIDTH
Nominal Overall Thickness	5.0 mil	5.0 mil	5.0 mil	5.0 mil	5.0 mil
Aluminum Foil Core Thickness	0.35 mil	0.35 mil	0.35 mil	0.35 mil	0.35 mil
Polyethylene Film Thickness	3.75 mil	3.75 mil	3.75 mil	3.75 mil	3.75 mil
Polypropylene Film Thickness	0.80 mil	0.80 mil	0.80 mil	0.80 mil	0.80 mil
Polypropylene Print Method	Reverse Printed	Reverse Printed	Reverse Printed	Reverse Printed	Reverse Printed
Print Design #1 (Patented)	**Diagional Striped**	**Diagional Striped**	**Diagional Striped**	**Diagional Striped**	**Diagional Striped**
Print Design #2 (Custom)	Solid Block	Solid Block	Solid Block	Solid Block	Solid Block
Print Design #3 (Custom)	Solid Flood	Solid Flood	Solid Flood	Solid Flood	Solid Flood
Print Design Color-Code	APWA Color-Code	APWA Color-Code	APWA Color-Code	APWA Color-Code	APWA Color-Code

Diagional striped design is a PATENTED design of Pro-Line Safety Products that enhances tape visibility for superior protection.

Please note that there may be a nominal + or - 10% difference throughout the overall thickness.

TABLE 2: TESTING SPECIFICATIONS (Physical and Mechanical Properties)

TEST DESCRIPTION	STANDARD	2" WIDTH	3" WIDTH	4" WIDTH	6" WIDTH	12" WIDTH
Aluminum Foil Core	MFG. SPECS	Virgin Grade	Virgin Grade	Virgin Grade	Virgin Grade	Virgin Grade
Polyethylene Film	MFG. SPECS	Virgin Grade	Virgin Grade	Virgin Grade	Virgin Grade	Virgin Grade
Polypropylene Film	MFG. SPECS	Virgin Grade	Virgin Grade	Virgin Grade	Virgin Grade	Virgin Grade
Adhesive Type	MFG. SPECS	AV1257/CA100	AV1257/CA100	AV1257/CA100	AV1257/CA100	AV1257/CA100
Adhesive Bond Strength	BOILING WATER	5 hrs W/O Peel	5 hrs W/O Peel	5 hrs W/O Peel	5 hrs W/O Peel	5 hrs W/O Peel
Printed Inks	MFG. SPECS	Chromabond	Chromabond	Chromabond	Chromabond	Chromabond
Print Repeat	MFG. SPECS	Varies by Legend	Varies by Legend	Varies by Legend	Varies by Legend	Varies by Legend
Coefficient Friction	ASTM D4521-96	0.247 Static	0.247 Static	0.247 Static	0.247 Static	0.247 Static
Density	ASTM D792-66	1.09 g/cm³	1.09 g/cm³	1.09 g/cm³	1.09 g/cm³	1.09 g/cm³
Elongation (MD)	ASTM D882-80A	139%	139%	139%	139%	139%
Elongation (TD)	ASTM D882-80A	80%	80%	80%	80%	80%
Flexural Fatigue	ASTM D671-93	Pliable Hand	Pliable Hand	Pliable Hand	Pliable Hand	Pliable Hand
Printability	ASTM D2578-08	45 Dynes	45 Dynes	45 Dynes	45 Dynes	45 Dynes
Tensile Strength	ASTM D882-09	15,000 psi	15,000 psi	15,000 psi	15,000 psi	15,000 psi

WEIGHTS, MEASUREMENTS AND PACKAGING

PRODUCT PART NO.	SIZE (WIDTH)	NOMINAL OVERALL THICKNESS	NOMINAL THICKNESS OF STRUCTURAL MATERIALS			RECOMMENDED BURIAL DEPTHS FOR DETECTION	PRODUCT WEIGHT PER ROLL	STANDARD PACKAGING
			ALUMINUM FOIL THICKNESS	POLYETHYLENE THICKNESS	POLYPROPYLENE THCINKESS			
10311**XXX**3	2" x 1000'	5.0 MIL	0.35 MIL	3.75 MIL	0.80 MIL	6-9 inches	4.75 lbs	9 / CARTON
10312**XXX**3	3" x 1000'	5.0 MIL	0.35 MIL	3.75 MIL	0.80 MIL	9-12 inches	7.13 lbs	6 / CARTON
10313**XXX**3	4" x 1000'	5.0 MIL	0.35 MIL	3.75 MIL	0.80 MIL	12-15 inches	9.50 lbs	4 / CARTON
10314**XXX**3	6" x 1000'	5.0 MIL	0.35 MIL	3.75 MIL	0.80 MIL	15-18 inches	14.25 lbs	3 / CARTON
10316**XXX**3	12" x 1000'	5.0 MIL	0.35 MIL	3.75 MIL	0.80 MIL	18-24 inches	28.50 lbs	1 / CARTON

****FOR CUSTOM LEGENDS OR SIZES CALL 800.554.3424****

PRINT LEGEND	PART #
CAUTION BURIED CHILLED WATER LINE BELOW	103
CAUTION BURIED GEOTHERMAL LINE BELOW	128
CAUTION BURIED POTABLE WATER LINE BELOW	115
CAUTION BURIED WAT	
CAUTION BURIED FOR	
CAUTION BURIED FOR	
CAUTION BURIED SAN	
CAUTION BUIRED SEWER LINE BELOW	319
CAUTION BURIED STORM DRAIN LINE BELOW	321
CAUTION BURIED STORM SEWER LINE BELOW	322

PRINT LEGEND	PART #
CAUTION BURIED CATV LINE BELOW	402
CAUTION BURIED COMMUNICATION LINE BELOW	404
CAUTION BURIED FIBER OPTIC CABLE BELOW	406
BELOW	423
TER LINE	512
R LINE BELOW	517
OW	605
CAUTION BURIED HIGH VOLTAGE LINE BELOW	610
CAUTION BURIED GAS LINE BELOW	809
CAUTION BURIED PIPELINE BELOW	814

SPECIAL ORDER TAPE-
3x1000' DETECT GREEN STRIPE TAPE MARKED:
"GWTS INFLUENT PIPELINE BELOW"

DETECTABLE TAPE (5.0 MIL)

PRO-LINE SAFETY PRODUCTS
A DIVISION OF PRO-PAK IND. INC.

PRO-LINE SAFETY PRODUCTS COMPANY
1099 ATLANTIC DRIVE, UNIT 1 • WEST CHICAGO, IL 60185
TOLL FREE: 800.554.3424

MADE IN THE U.S.A. WITH PRIDE

DEPARTMENT OF THE ARMY
ALBUQUERQUE DISTRICT, CORPS OF ENGINEERS
ALBUQERQUE DISTRICT OFFICE
4101 JEFFERSON PLAZA NE
ALBUQUERQUE, NM 87109

SUBMITTAL REVIEW VERIFICATION SHEET

PROJECT TITLE: Kirtland BFF Mid-Plume Pump and Treat System Expansion
CONTRACT NUMBER: W912DR-12-D-0006 DM01
DATE RECEIVED: 9-01-2017
DATE REVIEWED: 9-06-2017

DESCRIPTION OF ITEMS REVIEWED:

1. Nuts, Bolts and Gasket Kits

NO EXCEPTIONS TAKEN.	**X**
EXCEPTIONS AS NOTED ON DRAWINGS AND/OR ATTACHED SHEETS(S). RESUBMISSION NOT REQUIRED.	
EXCEPTIONS AS NOTED ON DRAWINGS AND/OR ATTACHED SHEETS(S). RESUBMISSION REQUIRED.	
RECEIPT ACKKNOWLEDGED.	

Notes:

NOTE: ITEMS REVIEWED AS TO GENERAL LAYOUT ONLY. DIMENSIONS AND QUANTITIES NOT CHECKED. REVIEW DOES NOT RELIEVE CONTRACTOR OF RESPONSIBILITIES FOR ANY ERRORS WHICH MAY EXIST AS CONTRACTOR SHALL BE RESPONSIBLE FOR DIMENSIONS AND DESIGN OF ADEQUATE CORRECTIONS, DETAILS AND SATISFACTORY CONSTRUCTION OF WORK.

SIGNATURE SANCHEZ.AMY.ELIZABETH.1454434338 Digitally signed by SANCHEZ.AMY.ELIZABETH.1454434338 DN: c=US, o=U.S. Government, ou=DoD, ou=PKI, ou=USA, cn=SANCHEZ.AMY.ELIZABETH.1454434338 Date: 2017.09.06 10:08:15 -06'00' **DATE** 9/6/2017

EA Engineering, Science, and Technology, Inc., PBC

Submittal Review Sheet 1

Project Name: **Kirtland BFF Mid-Plume Pump and Treat System Expansion**			Date Received: **8/31/17**
Project Owner: **Kirtland Air Force Base**			Checked By: **Tyler Curley**
Contractor: **RMCI, Inc.**	Engineer: **EA Engineering, Science and Technology, Inc., PBC.**		Log Page: **NA**
Address: **6211 Chappell Rd NE, Albuquerque, NM 87113**	Address: **320 Gold Ave. SW, Suite 1300 Albuquerque, NM 87102**		EA No.: **62599DM01**
			Spec. Section: **40 05 13 2.4.3.1**
			Drawing/Detail No.: **C-301**
ATTN: **Philip Johnson**	ATTN: **Devon Jercinovic**	1st Sub	Re-Sub
Date Transmitted: **09/01/2017**	Prev. Transmittal Date: **08/28/2017**		

Item No.	No. Copies	Description	Manufacturer	Mfg/Vendor Dwg or Detail	Action Taken*
1	1	Nuts, bolts, gasket kits	M&M Bolt and Screw		A

The Action Designated Above is in Accordance with the Following Legend:

A – Furnish as Submitted
B – Furnish as Noted
C – Revise and Re-submit
1. Not enough information for review.
2. No reproducible submitted.
3. Copies illegible.
4. Not enough copies submitted.
5. Wrong sequence number.
6. Wrong resubmittal number.
7. Wrong Spec. Section.
8. Wrong form used.
9. See Comments.

D – Rejected
E – Engineer's Review not Required
1. Submittal not required.
2. Supplemental Information. Submittal retained for Information purposes only.
3. Information reviewed and approved on prior submittal.
4. See Comments.

Review is for general compliance with Contract Documents. No responsibility is assumed for correctness of dimensions or detail. Contractor is required to specify deviations from contract requirements. Lack of exceptions noted by Engineer does not waive Contractor's obligation to comply with Drawings and Specifications.

Comments:
Items reviewed and confirmed to meet requirements
(Reviewed Material in Parentheses)
Issues in Bold

Nuts and bolts meet ASTM A193.
Gasket material meets specifications. Supplier will cut to be in accordance with ASME B16.21

By: _____ Date: 09/01/17

Distribution: [1] Contractor [1] Engineer [1] Owner

M & M Bolt & Screw, Inc

110 SENTRY DRIVE
MANSFIELD, TEXAS 76063-3608

Phone (817) 453-0001 TOLL FREE (888) 676-2658
FAX (817) 453-0038

August 25, 2017 Job Name: KAFB Conveyance Line

HD Supply Waterworks
6135 Second Street NW
Albuquerque, NM 87107

To Whom It May Concern:

This letter is to certify that all materials provided exceed or conform to all ASTM, AWWA, ASME, SAE, ANSI and/or API specifications.

BOLT	SPECIFICATION
Bolts	
Heavy Hex Bolts 304 SS "USA"	ASTM A193 GR. B-8
(Bolts Dimensional)	ASME B18.2.1
Nuts	
Heavy Hex Nuts 304 SS "USA"	ASTM A193 GR. 8
(Nuts Dimensional)	ASME B18.2.2

Respectfully,
Scotty Murphy

SUBMITTAL INFORMATION

"BOLTS, NUTS AND FLAT WASHERS"
"ABSTRACT OF ASTM A193/ASTM A194"
"GRADE B8" T-304

GRADE: UNSTABILIZED 18 CHROMIUM, 8 NICKEL, (AISI TYPE 304)

CHEMICAL REQUIREMENTS:

	RANGE	VARIATION
CARBON MAX	0.08	0.01 OVER
MANGANESE	2.00	0.04 OVER
PHOSPHOROUS, MAX	0.045	0.01 OVER
SULFUR, MAX	0.03	0.005 OVER
SILICON	1.00	0.005 OVER
CHROMIUM	16.00 - 20.00	0.20
NICKEL	8.00 - 10.5	0.15

MECHANICAL REQUIREMENTS:

	MINIMUM
TENSILE STRENGTH (KSI)	75
YIELD STRENGTHS (KSI)	30
ELONGATION (%)	30
REDUCTION OF AREA (%)	50
HARDNESS (BRINELL)	223
HARDNESS (ROCKWELL)	B96

NOTES: MATERIALS ARE CARBIDE SOLUTION TREATED

IDENTIFICATION SYMBOL: B8

OTHER:

ALL BOLTS, NUTS & STUDS, UNLESS OTHERWISE SPECIFIED IN THE PURCHASE ORDER SHALL BE THREADED IN ACCORDANCE WITH ANSI/ASME B1.1, PAGE A-26, CLASS 2a FIT.

BOLT HEADS SHALL BE IN ACCORDANCE WITH THE DIMENSIONS OF ANSI/ASME B18.2.1, PAGE C-1. UNLESS OTHERWISE SPECIFIED IN THE PURCHASE ORDER, THE HEAVY HEX SCREWS SERIES SHOULD BE USED. NUTS SHALL CONFORM TO ASTM 194, UNLESS OTHERWISE SPECIFIED, THE HEAVY HEX SERIES SHALL BE USED.

ADDITIONAL INFORMATION CAN BE FOUND IN ASTM 193/A193M, DTD 1997 (ALLOY STEEL AND STAINLESS STEEL BOLTING MATERIALS FOR HIGH-TEMPERATURE SERVICES) AND IN ASTM A194/A194M, DTD 1997 (CARBON AND ALLOY STEEL NUTS FOR BOLTS FOR HIGH-TEMPERATURE SERVICE).

FLAT WASHERS: ALL WASHERS SHALL BE OF THE SAME MATERIAL AS THE NUTS.

SUBMITTAL USED FOR:
4"X1/8" FF RR GASKET

DuPont™ Teflon® PTFE Specifications

TYPICAL PROPERTIES of TEFLON® PTFE

ASTM or UL test	Property	PTFE (unfilled)	PTFE (25% glass filled)	PTFE (25% carbon filled)
	PHYSICAL			
D792	Density (lb/in³) (g/cm³)	0.078 2.16	0.081 2.25	0.075 2.08
D570	Water Absorption, 24 hrs (%)	< 0.01	0.02	0.05
	MECHANICAL			
D638	Tensile Strength (psi)	3,900	2,100	1,900
D638	Tensile Modulus (psi)	80,000	-	-
D638	Tensile Elongation at Break (%)	300	270	75
D790	Flexural Strength (psi)	No break	1,950	2,300
D790	Flexural Modulus (psi)	72,000	190,000	160,000
D695	Compressive Strength (psi)	3,500	1,000	1,700
D695	Compressive Modulus (psi)	70,000	110,000	87,000
D785	Hardness, Shore D	D50	D60	D62
D256	IZOD Notched Impact (ft-lb/in)	3.5	-	-
	THERMAL			
D696	Coefficient of Linear Thermal Expansion (x 10^{-5} in./in./°F)	7.5	6.4	6.0
D648	Heat Deflection Temp (°F / °C) at 264 psi	132 / 55	150 / 65	150 / 65
D3418	Melting Temp (°F / °C)	635 / 335	635 / 335	635 / 335
-	Max Operating Temp (°F / °C)	500 / 260	500 / 260	500 / 260
C177	Thermal Conductivity (BTU-in/ft²-hr-°F) (x 10^{-4} cal/cm-sec-°C)	1.70 5.86	3.1 10.6	4.5 15.5
UL94	Flammability Rating	V-O	V-O	V-O
	ELECTRICAL			
D149	Dielectric Strength (V/mil) short time, 1/8" thick	285	-	-
D150	Dielectric Constant at 1 MHz	2.1	2.4	-
D150	Dissipation Factor at 1 MHz	< 0.0002	0.05	-
D257	Volume Resistivity (ohm-cm)at 50% RH	> 10^{18}	> 10^{15}	10^{4}

NOTE: The information contained herein are typical values intended for reference and comparison purposes only. They should NOT be used as a basis for design specifications or quality control. Contact us for manufacturers' complete material property datasheets.
All values at 73°F (23°C) unless otherwise noted.

TEFLON ® is a registered trademark of DuPont

The gasket material is ordered in large rolls. The gaskets are then machined/cut by the supplier to meet the requirements of the project.

DEPARTMENT OF THE ARMY
ALBUQUERQUE DISTRICT, CORPS OF ENGINEERS
ALBUQERQUE DISTRICT OFFICE
4101 JEFFERSON PLAZA NE
ALBUQUERQUE, NM 87109

SUBMITTAL REVIEW VERIFICATION SHEET

PROJECT TITLE: Kirtland BFF Mid-Plume Pump and Treat System Expansion
CONTRACT NUMBER: W912DR-12-D-0006 DM01
DATE RECEIVED: 8-16-2017
DATE REVIEWED: 8-16-2017

DESCRIPTION OF ITEMS REVIEWED:

1. Tracer Wire

NO EXCEPTIONS TAKEN.	**X**
EXCEPTIONS AS NOTED ON DRAWINGS AND/OR ATTACHED SHEETS(S). RESUBMISSION NOT REQUIRED.	
EXCEPTIONS AS NOTED ON DRAWINGS AND/OR ATTACHED SHEETS(S). RESUBMISSION REQUIRED.	
RECEIPT ACKKNOWLEDGED.	

Notes:

NOTE: ITEMS REVIEWED AS TO GENERAL LAYOUT ONLY. DIMENSIONS AND QUANTITIES NOT CHECKED. REVIEW DOES NOT RELIEVE CONTRACTOR OF RESPONSIBILITIES FOR ANY ERRORS WHICH MAY EXIST AS CONTRACTOR SHALL BE RESPONSIBLE FOR DIMENSIONS AND DESIGN OF ADEQUATE CORRECTIONS, DETAILS AND SATISFACTORY CONSTRUCTION OF WORK.

SIGNATURE SANCHEZ.AMY.ELIZABETH.1454434338 **DATE** 8/16/2017

EA Engineering, Science, and Technology, Inc., PBC

Submittal Review Sheet 1

Project Name: **Kirtland BFF Mid-Plume Pump and Treat System Expansion**			Date Received: **8/15/17**		
Project Owner: **Kirtland Air Force Base**			Checked By: **Tyler Curley**		
Contractor: **RMCI, Inc.**	Engineer: **EA Engineering, Science and Technology, Inc., PBC.**		Log Page: **NA**		
Address: **6211 Chappell Rd NE, Albuquerque, NM 87113**	Address: **320 Gold Ave. SW, Suite 1300 Albuquerque, NM 87102**		EA No.: 62599DM01		
			Spec. Section: **31 00 00 2.3**		
			Drawing/Detail No.:		
ATTN: Phillip Johnson	ATTN: **Devon Jercinovic**		1st Sub		Re-Sub 1
Date Transmitted: **08/15/2017**	Prev. Transmittal Date: **8/1/15**				

Item No.	No. Copies	Description	Manufacturer	Mfg/Vendor Dwg or Detail	Action Taken*
1	1	Tracer wire	Pro Trace		A

The Action Designated Above is in Accordance with the Following Legend:

A – Furnish as Submitted
B – Furnish as Noted
C – Revise and Re-submit
1. Not enough information for review.
2. No reproducible submitted.
3. Copies illegible.
4. Not enough copies submitted.
5. Wrong sequence number.
6. Wrong resubmittal number.
7. Wrong Spec. Section.
8. Wrong form used.
9. See Comments.

D – Rejected
E – Engineer's Review not Required
1. Submittal not required.
2. Supplemental Information. Submittal retained for Information purposes only.
3. Information reviewed and approved on prior submittal.
4. See Comments.

Review is for general compliance with Contract Documents. No responsibility is assumed for correctness of dimensions or detail. Contractor is required to specify deviations from contract requirements. Lack of exceptions noted by Engineer does not waive Contractor's obligation to comply with Drawings and Specifications.

Comments:
Items reviewed and confirmed to meet requirements
Issues in Bold

Tracer wire has equal permformance rating plus increased tensile strength.

By: _____ Date: 8/15/17

Distribution: [1] Contractor [1] Engineer [1] Owner

RMCI, INC
PO Box 91447
Albuquerque NM 87199

RE: KAFB - Groundwater Conveyance Infrastructure Installation

ITEM	***PRODUCT***
	Proline 10GA Tracer Wire
Resubmittal 40 05 13-003	
NOTES:	
	Copper Clad Tracer Wire has = Signal Strength as solid copper. But is
	43% Stronger then Solid Copper. i.e. Tensile Strength

TRACER WIRE

PRO-TRACE® HF-CCS PE30

HF-CCS PE30 (HIGH-FLEX / OPEN-TRENCH)

Tracer Wire • High-Flex Copper Clad Steel (HF-CCS) • 21% IACS Conductivity • Corrosion Resistant
High-Density, High Molecular Weight Polyethylene (HMWPE-HDPE) Insulation • Moisture, Chemical, and Oil Resistant
Impact, Crush, and Abrasion Resistant • RoHS Compliant • Direct Burial Rated • 30 Volts • Made in the USA

"PRO-TRACE® HF-CCS -- FLEXIBILITY & STRENGTH -- IT'S THE FUTURE OF TRACER WIRE"

Applications and Information

- **PRO-TRACE® HF-CCS PE30** is used for tracer wire applications not exceeding 30 Volts. Tracer wire is used to conductively locate buried utility lines for the gas, water, sewer, telecommunication, and electrical markets.
- **PRO-TRACE® HF-CCS PE30** is designed to embody the flexibility, memory, and feel of copper. It also has a 43% higher break-load, minimizing damage during installation and while in service. Equal to copper in signal tracing performance. It simply outperforms copper tracer wire. Designed for open-trench and plow-in installations using 1 wire.
- Considerably lower in cost and great price stability compared to copper.
- RoHS Compliant, made in the USA, and works with connectors you already use.

Standards and References

PRO-TRACE® HF-CCS PE30 conductors meets or exceeds all applicable ASTM specifications, and requirements of the National Electrical Code.

- ASTM B910 / B190M: Standard Specification for Annealed Copper-Clad Steel Wire
- ASTM B170: Standard Specification for Oxygen-Free Electrolytic Copper
- ASTM D1248: Standard Specification for Polyethylene Plastics Extrusion Materials For Wire and Cable

Construction

PRO-TRACE® HF-CCS PE30 is a flexible, copper-clad steel tracer wire. A low carbon steel core, metallurgically bonded with a copper cladding, that is uniform and continuous, creating a bi-metal conductor that acts as one and is corrosion resistant. Special annealing processes are performed during the cladding process giving HF-CCS the flexibility and feel of copper, but 43% higher in strength which means less breaks then copper tracer wire.

PRO-TRACE® HF-CCS PE30 uses a 30 mil, high-density, high molecular weight polyethylene (HDPE) insulation. HDPE provides an excellent balance of surface smoothness, processing ease and electrical consistency. HDPE provides superior strength against underground elements that help prevent accidental breaks caused buy rocks in shifting soil conditions.

Specification Example

Tracer wire for open-trench installation shall be a 12 AWG solid, PRO-TRACE® HF-CCS PE30. Conductor shall be soft-drawn, 21% IACS, copper clad steel, utilizing a AISI 1006 low carbon steel core (required to meet break load and flexibility), with breakload of 282 lbs (55,000 psi). Conductor shall be extruded with a 30 mil, high density, high molecular weight polyethylene (HMW-HDPE) persuant to ASTM D1248 standard. Tracer wire shall be rated for direct burial use at 30 volts and RoHS compliant. Tracer wire shall be PRO-TRACE® HF-CCS PE30 as manufactured by **Pro-Line Safety Products** and made in the USA.

Specification Updated: 9.26.2011 09:23:00 CST

PRO-TRACE® is a registered trademark of Pro-Line Safety Products Co.

TABLE 1: CONDUCTOR (Physical, Mechanical and Electrical Properties)

PROPERTY	18 AWG	16 AWG	14 AWG	12 AWG	10 AWG	8 AWG
Conductor Type	HF-CCS	HF-CCS	HF-CCS	HF-CCS	HF-CCS	HF-CCS
Conductor Temper	Annealed	Annealed	Annealed	Annealed	Annealed	Annealed
Steel Grade	AISI 1006	AISI 1006	AISI 1006	AISI 1006	AISI 1006	AISI 1006
Copper Grade	UNS C10200	UNS C10200	UNS C10200	UNS C10200	UNS C10200	UNS C10200
Rated Break Load	70 lbs	111 lbs	177 lbs	282 lbs	448 lbs	713 lbs
Rated Tensile Strength	55,000 psi	55,000 psi	55,000 psi	55,000 psi	55,000 psi	55,000 psi
Elongation	20.0%	20.0%	20.0%	21.0%	21.0 %	22.0%
Nominal Copper Thickness (% of Diameter)	3.0%	3.0%	3.0%	3.0%	3.0%	3.0%
Nominal Copper Weight (Per 1,000')	13.0%	13.0%	13.0%	13.0%	13.0%	13.0%
Nominal DC Resistance	30.399 ohms	19.119 ohms	12.024 ohms	7.562 ohms	4.756 ohms	2.991 ohms

TABLE 2: INSULATION (Physical, Mechanical and Electrical Properties)

TEST DESCRIPTION	ASTM STANDARD	TYPICAL VALUES
Density @ 23°C	ASTM D1505	0.945 g/cm^3
Melt Flow Rate	ASTM D1238	0.70 g/10 min
Tensile Strength	ASTM D638	3,400 psi
Tensile Strength Retention	ASTM D638	90% after 48 hours @ 100°C
Tensile Elongation	ASTM D638	500%
Tensile Elongation Retention	ASTM D638	90% after 48 hours @ 100°C
Environmental Stress Cracking	ASTM D1693	0 failures @ 48 hours
Thermal Stress Cracking	ASTM D2951	0 failures @ 96 hours
Brittleness Temperature	ASTM D746	-76°C
Melting Temperature	ASTM D3418	260°C
Oxidative Induction Time	ASTM D3895	170 min @ 200°C
Dielectric Constant	ASTM D1531	2.32 @ 1 MHz
Dissipation Factor	ASTM D1531	0.00006 @ 1 MHz
DC Volume Resistivity @ 23°C	ASTM D257	> 1 x 10^{15} ohm-cm

PRODUCT PART NO.	PRODUCT DESCRIPTION	RATED BREAK LOAD	RATED TENSILE STRENGTH	HDPE INSULATION THICKNESS	NOMINAL O.D.	APPROX. WEIGHT PER 1,000 FT		STANDARD PACKAGES
						CCS WEIGHT	SHIPPING WEIGHT	
WEIGHTS, MEASUREMENTS AND PACKAGING								
74418XXXX	18 SOL HF-CCS PE30	70 lbs	55,000 psi	0.030"	0.101"	4.4191	7.14	500' / 1000' / 2500'
74416XXXX	16 SOL HF-CCS PE30	111 lbs	55,000 psi	0.030"	0.111"	7.0219	10.15	CUSTOM ORDER
74411XXXX	14 SOL HF-CCS PE30	177 lbs	55,000 psi	0.030"	0.124"	11.1800	14.82	500' / 1000' / 2500'
74412XXXX	12 SOL HF-CCS PE30	282 lbs	55,000 psi	0.030"	0.141"	17.7644	22.05	500' / 1000' / 2500'
74413XXXX	10 SOL HF-CCS PE30	448 lbs	55,000 psi	0.030"	0.162"	28.2537	33.35	500' / 1000' / 2500'
74414XXXX	8 SOL HF-CCS PE30	713 lbs	55,000 psi	0.030"	0.189"	44.9297	51.05	CUSTOM ORDER

INSULATION COLOR & REEL LENGTH			
COLOR	500' REEL	1000' REEL	2500' REEL
BLACK	0132	0141	0147
BLUE	0232	0241	0247
GREEN	0532	0541	0547
ORANGE	0632	0641	0647
PURPLE	0832	0841	0847
RED	0932	0941	0947
WHITE	1132	1141	1147
YELLOW	1232	1241	1247
SOME PART NUMBERS MAY BE SUBJECT TO MINS			

REEL & PACKAGING INFORMATION					
SIZE	LENGTH	MATERIAL	REEL DIMENSION	ARBOR HOLE	PALLET QUANTITY
14 AWG	500	PLYWOOD (TREATED)	8" x 4"	1.5"	162,000 FT
	1000	PLYWOOD (TREATED)	8" x 9"	1.5"	180,000 FT
	2500	PLYWOOD (TREATED)	12" x 6"	1.5"	180,000 FT
12 AWG	500	PLYWOOD (TREATED)	8" x 6"	1.5"	126,000 FT
	1000	PLYWOOD (TREATED)	8" x 9"	1.5"	108,000 FT
	2500	PLYWOOD (TREATED)	12" x 9"	1.5"	120,000 FT
10 AWG	500	PLYWOOD (TREATED)	8" x 9"	1.5"	72,000 FT
	1000	PLYWOOD (TREATED)	12" x 6"	1.5"	80,000 FT
	2500	PLYWOOD (TREATED)	12" x 12"	1.5"	80,000 FT
8 AWG	500	PLYWOOD (TREATED)	8" x 9"	1.5"	54,000 FT
	1000	PLYWOOD (TREATED)	12" x 9"	1.5"	48,000 FT
	2500	PLYWOOD (TREATED)	16" x 10"	1.5"	45,000 FT

TRACER WIRE

PRO-TRACE® HF-CCS PE30

Specification Updated: 9.26.2014 09:23:00 CST

PRO-LINE SAFETY PRODUCTS
A DIVISION OF PRO-PAK IND, INC.

PRO-LINE SAFETY PRODUCTS COMPANY
1099 ATLANTIC DRIVE, UNIT 1 • WEST CHICAGO, IL 60185
TOLL FREE: 800.554.3424

MADE IN THE U.S.A. WITH PRIDE

DEPARTMENT OF THE ARMY
ALBUQUERQUE DISTRICT, CORPS OF ENGINEERS
ALBUQERQUE DISTRICT OFFICE
4101 JEFFERSON PLAZA NE
ALBUQUERQUE, NM 87109

SUBMITTAL REVIEW VERIFICATION SHEET

PROJECT TITLE: Kirtland BFF Mid-Plume Pump and Treat System Expansion
CONTRACT NUMBER: W912DR-12-D-0006 DM01
DATE RECEIVED: 8-16-2017
DATE REVIEWED: 8-16-2017

DESCRIPTION OF ITEMS REVIEWED:

1. Junction Vault Steel Piping

NO EXCEPTIONS TAKEN.	**X**
EXCEPTIONS AS NOTED ON DRAWINGS AND/OR ATTACHED SHEETS(S). RESUBMISSION NOT REQUIRED.	
EXCEPTIONS AS NOTED ON DRAWINGS AND/OR ATTACHED SHEETS(S). RESUBMISSION REQUIRED.	
RECEIPT ACKKNOWLEDGED.	

Notes:

NOTE: ITEMS REVIEWED AS TO GENERAL LAYOUT ONLY. DIMENSIONS AND QUANTITIES NOT CHECKED. REVIEW DOES NOT RELIEVE CONTRACTOR OF RESPONSIBILITIES FOR ANY ERRORS WHICH MAY EXIST AS CONTRACTOR SHALL BE RESPONSIBLE FOR DIMENSIONS AND DESIGN OF ADEQUATE CORRECTIONS, DETAILS AND SATISFACTORY CONSTRUCTION OF WORK.

SIGNATURE SANCHEZ.AMY.ELIZABETH.1454434338 Digitally signed by SANCHEZ.AMY.ELIZABETH.1454434338 DN: c=US, o=U.S. Government, ou=DoD, ou=PKI, ou=PKI, cn=SANCHEZ.AMY.ELIZABETH.1454434338 Date: 2017.08.16 15:25:37 -06'00' **DATE** 8/16/2017

EA Engineering, Science, and Technology, Inc., PBC

Submittal Review Sheet 1

Project Name: **Kirtland BFF Mid-Plume Pump and Treat System Expansion**			Date Received: **8/15/17**			
Project Owner: **Kirtland Air Force Base**			Checked By: **Tyler Curley**			
Contractor: **RMCI, Inc.**	Engineer: **EA Engineering, Science and Technology, Inc., PBC.**		Log Page: **NA**			
Address: **6211 Chappell Rd NE, Albuquerque, NM 87113**	Address: **320 Gold Ave. SW, Suite 1300 Albuquerque, NM 87102**		EA No.: 62599DM01			
			Spec. Section: **40 05 13 2.2.3.3**			
			Drawing/Detail No.: **NA**			
ATTN: Phillip Johnson	ATTN: **Devon Jercinovic**		1st Sub		Re-Sub	1
Date Transmitted: **08/15/2017**	Prev. Transmittal Date: **8/1/15**					

Item No.	No. Copies	Description	Manufacturer	Mfg/Vendor Dwg or Detail	Action Taken*
1	1	Junction Vault Steel Piping	Custom Piping Sytems		A

The Action Designated Above is in Accordance with the Following Legend:

A – Furnish as Submitted
B – Furnish as Noted
C – Revise and Re-submit
1. Not enough information for review.
2. No reproducible submitted.
3. Copies illegible.
4. Not enough copies submitted.
5. Wrong sequence number.
6. Wrong resubmittal number.
7. Wrong Spec. Section.
8. Wrong form used.
9. See Comments.

D – Rejected
E – Engineer's Review not Required
1. Submittal not required.
2. Supplemental Information. Submittal retained for Information purposes only.
3. Information reviewed and approved on prior submittal.
4. See Comments.

Review is for general compliance with Contract Documents. No responsibility is assumed for correctness of dimensions or detail. Contractor is required to specify deviations from contract requirements. Lack of exceptions noted by Engineer does not waive Contractor's obligation to comply with Drawings and Specifications.

Comments:
Items reviewed and confirmed to meet requirements
Issues in Bold

A53 Grade B carbon steel conforms to Specs

Flanges conform to the Specs.

By: _____ Date: 8/16/17

Distribution: [1] Contractor [1] Engineer [1] Owner

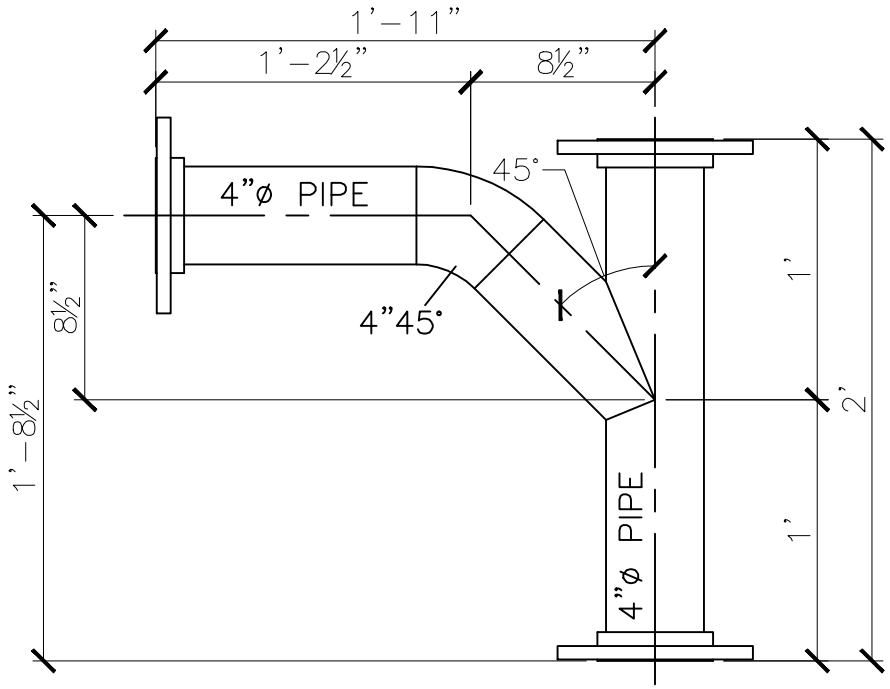

1. Pipe: Std. Wt. A53 Grade B

2. Fittings: ASTM A-234

3. Flanges: Class 150, 1/16" Raised Face, Conforming to ASTM A105/A105M and ASME B16-5.

4. Lining: Bare

5. Coating: Bare

6. All dimensions are theoretical. Contractor must verify depth of existing infrastructure and all dimensions prior to fabrication.

7. All welds to be performed by a certified welder in accordance with ASME Section IX BPVC.

APPROVED:_____

DATE:_____

8/9/17
N.T.S.
Dwg. Number 1.0

KIRTLAND AIR FORCE BASE
4" JUNCTION VAULT PIPING

Custom Piping Systems LLC
4230 Milling Rd
San Antonio, TX. 78219
P-210.867.6356 F-210.558.9975
"Providing Custom Fabrications for the Water & Waste Water Industries"

TEL: 708/594-1700
FAX: 708/458-0106
www.weldbend.com

For Ring Type Joint Facing Dimension information see page 148.

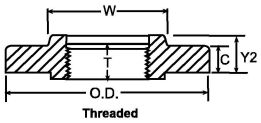

Threaded

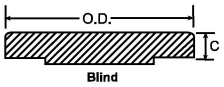

Blind

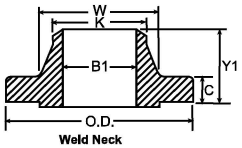

Weld Neck

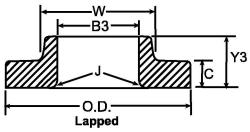

Lapped

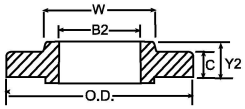

Slip-on

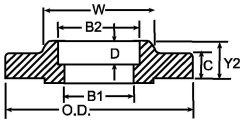

Socket Weld

Pipe Size	Outside Diameter of Flange	Thickness of Flange (Min.)	Thickness of Lap Joint (Min.)	Diameter of Hub *	Diameter of Weld Neck	Length Through Hub			Thread Length (Min.)	Bore			Lap Joint Radius	Depth of Socket
						Threaded, Slip-on & Socket Weld	Lap Joint	Weld Neck		Slip-on & Socket Weld (Min.)	Lap Joint (Min.)	Weld Neck & Socket Weld		
	O.D.	C	C	W	K	Y2	Y3	Y1	T	B2	B3	B1 ▲	J	D
ASME B16.5														
½	3.50	0.38	0.44	1.19	0.84	0.56	0.62	1.81	0.62	0.88	0.90	0.62	0.12	0.38
¾	3.88	0.44	0.50	1.50	1.05	0.56	0.62	2.00	0.62	1.09	1.11	0.82	0.12	0.44
1	4.25	0.50	0.56	1.94	1.32	0.62	0.69	2.12	0.69	1.36	1.38	1.05	0.12	0.50
1 ¼	4.62	0.56	0.62	2.31	1.66	0.75	0.81	2.19	0.81	1.70	1.72	1.38	0.19	0.56
1 ½	5.00	0.62	0.69	2.56	1.90	0.81	0.88	2.38	0.88	1.95	1.97	1.61	0.25	0.62
2	6.00	0.69	0.75	3.06	2.38	0.94	1.00	2.44	1.00	2.44	2.46	2.07	0.31	0.69
2 ½	7.00	0.81	0.88	3.56	2.88	1.06	1.12	2.69	1.12	2.94	2.97	2.47	0.31	0.75
3	7.50	0.88	0.94	4.25	3.50	1.12	1.19	2.69	1.19	3.57	3.60	3.07	0.38	0.81
3 ½	8.50	0.88	0.94	4.81	4.00	1.19	1.25	2.75	1.25	4.07	4.10	3.55	0.38	
4	9.00	0.88	0.94	5.31	4.50	1.25	1.31	2.94	1.31	4.57	4.60	4.03	0.44	
5	10.00	0.88	0.94	6.44	5.56	1.38	1.44	3.44	1.44	5.66	5.69	5.05	0.44	
6	11.00	0.94	1.00	7.56	6.63	1.50	1.56	3.44	1.56	6.72	6.75	6.07	0.50	
8	13.50	1.06	1.12	9.69	8.63	1.69	1.75	3.94	1.75	8.72	8.75	7.98	0.50	
10	16.00	1.12	1.19	12.00	10.75	1.88	1.94	3.94	1.94	10.88	10.92	10.02	0.50	
12	19.00	1.19	1.25	14.38	12.75	2.12	2.19	4.44	2.19	12.88	12.92	12.00	0.50	
14	21.00	1.31	1.38	15.75	14.00	2.19	3.12	4.94	2.25	14.14	14.18	13.25	0.50	
16	23.50	1.38	1.44	18.00	16.00	2.44	3.44	4.94	2.50	16.16	16.19	15.25	0.50	
18	25.00	1.50	1.56	19.88	18.00	2.62	3.81	5.44	2.69	18.18	18.20	17.25	0.50	
20	27.50	1.62	1.69	22.00	20.00	2.81	4.06	5.62	2.88	20.20	20.25	19.25	0.50	
24	32.00	1.81	1.88	26.12	24.00	3.19	4.38	5.94	3.25	24.25	24.25	23.25	0.50	
		WN BLD												
ASME B16.47 Series A														
30	38.75	2.88 2.88		30.75	30.00			5.32						
36	46.00	3.50 3.50		36.75	36.00			6.13						
42	53.00	3.75 3.75		43.00	42.00			6.69						
48	59.50	4.19 4.19		49.12	48.00			7.50						
		WN BLD												
ASME B16.47 Series B														
30	34.94	1.69 1.94		31.00	30.06			3.88						
36	41.62	2.00 2.25		37.19	36.06			4.57						
42	48.25	2.25 2.65		43.38	42.12			5.19						
48	54.81	2.50 3.00		48.50	48.12			5.82						

WELDBEND NOTES

1. Standard flange facings on page 146.
2. All dimensions are in inches.
3. Calculated flange weights on page 99.
4. For dimensional tolerances see page 144.
5. Weld end preparations on page 154.
6. Thread standards on page 156.
7. Blind flanges may be produced with or without hubs.
8. All flanges conform to ASTM A105/ASME SA105.
9. All flanges ½"-24" conform to ASME B16.5.
   All flanges 30" and larger conform to ASME B16.47.

* A taper shall not exceed 7 degrees on threaded, slip-on and lapped flanges.
▲ Dimensions listed for socket weld and weld neck flanges are for Standard bore unless specified by purchaser.

Copyright © 2010 by Weldbend Corporation. All Rights Reserved.

DEPARTMENT OF THE ARMY
ALBUQUERQUE DISTRICT, CORPS OF ENGINEERS
ALBUQERQUE DISTRICT OFFICE
4101 JEFFERSON PLAZA NE
ALBUQUERQUE, NM 87109

SUBMITTAL REVIEW VERIFICATION SHEET

PROJECT TITLE: Kirtland BFF Mid-Plume Pump and Treat System Expansion
CONTRACT NUMBER: W912DR-12-D-0006 DM01
DATE RECEIVED: 09-13-2017
DATE REVIEWED: 09-13-2017

DESCRIPTION OF ITEMS REVIEWED:

1. Junction Vault Check Valve

NO EXCEPTIONS TAKEN.	**X**
EXCEPTIONS AS NOTED ON DRAWINGS AND/OR ATTACHED SHEETS(S). RESUBMISSION NOT REQUIRED.	
EXCEPTIONS AS NOTED ON DRAWINGS AND/OR ATTACHED SHEETS(S). RESUBMISSION REQUIRED.	
RECEIPT ACKKNOWLEDGED.	

Notes:

NOTE: ITEMS REVIEWED AS TO GENERAL LAYOUT ONLY. DIMENSIONS AND QUANTITIES NOT CHECKED. REVIEW DOES NOT RELIEVE CONTRACTOR OF RESPONSIBILITIES FOR ANY ERRORS WHICH MAY EXIST AS CONTRACTOR SHALL BE RESPONSIBLE FOR DIMENSIONS AND DESIGN OF ADEQUATE CORRECTIONS, DETAILS AND SATISFACTORY CONSTRUCTION OF WORK.

SIGNATURE SANCHEZ.AMY.ELIZABETH.1454434338 Digitally signed by SANCHEZ.AMY.ELIZABETH.1454434338 DN: c=US, o=U.S. Government, ou=DoD, ou=PKI, ou=USA, cn=SANCHEZ.AMY.ELIZABETH.1454434338 Date: 2017.09.13 11:27:12 -06'00' **DATE** 9/13/2017

EA Engineering, Science, and Technology, Inc., PBC

Submittal Review Sheet 1

Project Name: **Kirtland BFF Mid-Plume Pump and Treat System Expansion**			Date Received: **9/12/17**	
Project Owner: **Kirtland Air Force Base**			Checked By: **Tyler Curley**	
Contractor: **RMCI, Inc.**	Engineer: **EA Engineering, Science and Technology, Inc., PBC.**		Log Page: **NA**	
Address: **6211 Chappell Rd NE, Albuquerque, NM 87113**	Address: **320 Gold Ave. SW, Suite 1300 Albuquerque, NM 87102**		EA No.: 62599DM01	
			Spec. Section: **40 05 13 2.6.4.1**	
			Drawing/Detail No.:	
ATTN: Phillip Johnson	ATTN: **Devon Jercinovic**		1st Sub	Re-Sub
Date Transmitted: **09/13/2017**	Prev. Transmittal Date:			

Item No.	No. Copies	Description	Manufacturer	Mfg/Vendor Dwg or Detail	Action Taken*
1	1	Junction Vault Check Valve	Mueller Co.		A

The Action Designated Above is in Accordance with the Following Legend:

A – Furnish as Submitted
B – Furnish as Noted
C – Revise and Re-submit
1. Not enough information for review.
2. No reproducible submitted.
3. Copies illegible.
4. Not enough copies submitted.
5. Wrong sequence number.
6. Wrong resubmittal number.
7. Wrong Spec. Section.
8. Wrong form used.
9. See Comments.

D – Rejected
E – Engineer's Review not Required
1. Submittal not required.
2. Supplemental Information. Submittal retained for Information purposes only.
3. Information reviewed and approved on prior submittal.
4. See Comments.

Review is for general compliance with Contract Documents. No responsibility is assumed for correctness of dimensions or detail. Contractor is required to specify deviations from contract requirements. Lack of exceptions noted by Engineer does not waive Contractor's obligation to comply with Drawings and Specifications.

Comments:
Items reviewed and confirmed to meet requirements
Issues in Bold

Check valve conforms to specs (flanges are compatible with ASME B16.5)

By: _____ Date: 9/13/17

Distribution: [1] Contractor [1] Engineer [1] Owner

Mueller Co.
Reliable Connections

September 12, 2017

To Whom It Might Concern,

There is a lot of confusion regarding flange standards. There are three standards that are often referenced when specifying flanges:

- ANSI/ASME B16.1 – Gray Iron Pipe Flanges and Flanged Fittings: Classes 25, 125 and 250
- ANSI/ASME B16.42 – Ductile Iron Pipe Flanges and Flanged Fittings: Classes 150 and 300
- ANSI/ASME B16.5 – Pipe Flanges and Flanged Fittings: NPS 1/2 through NPS 24 Metric/Inch Standard

ANSI/ASME B16.5 Class 150 (aka 150#) is a standard for flanges that are on the end of steel pipe or flanges made for steel pipe. Mueller manufacturers both Gray Iron and Ductile Iron Flat Face (FF); Gray Iron valves comply with ANSI/ASME B16.1 Class 125 and Ductile Iron valves comply with ANSI/ASME B16.42 Class 150.

B16.1 Class 125, B16.42 Class 150 and B16.5 Class 150 are dimensionally the same with the material being the significant difference. Therefore FF valves and fittings manufactured to these standards will mate. FF and Raised Face flanges should not be used together.

For a more complete explanation of these standards please reference the attached white paper found on pages 2 & 3 of this document.

MUELLER CO.

Amanda Owens

9/12/17

Amanda Owens
Date

Application Engineer
Water Products Division
Mueller Company
1401 Mueller Ave.
Chattanooga TN, 37406
aowens@muellercompany.com

What's Up With Flanges?

There's a lot of confusion regarding pressure ratings of flanged valves for water works service. Industry standards, manufacturer's literature and project specifications often contradict or are subject to interpretation which leads to delays, improper equipment and potential system failures.

ASME and ANSI

Most flanged valves for water works service in North America are supplied with flanges conforming to dimensional standards developed by the American Society of Mechanical Engineers (ASME) and accredited by the American National Standards Institute (ANSI). Various "committees" within ASME are charged with developing, issuing and maintaining individual standards. The ASME "B16" committees have this responsibility for valves, flanges and flanged fittings. Standardized dimensions for cast iron flanges and flanged fittings are provided in ANSI/ASME B16.1 standard, steel and stainless steel dimensions in the ANSI/ASME B16.5 standard and ductile iron in the ANSI/ASME B16.42 standard. Compliance with the applicable standardized flange and flanged fitting dimensions is voluntary but ensures uniformity so that flanged valves from one manufacturer will bolt to flanges from another.

Flange Classes

There are four common pressure "classes" within the ANSI/ASME standards listed above. Class 125 and Class 250 are "cast iron" flanges and flanged fittings while Class 150 and Class 300 are ductile iron, steel or stainless steel. Hence, ANSI/ASME B16.1 Class 125 flanges are made from cast iron, ANSI/ASME B16.5 Class 150 can be made from steel or stainless and ANSI/ASME B16.42 Class 150 is made from ductile iron.

However, the bolting pattern is the same for both Class 125 and 150 so, regardless of material, they will bolt together. This is also the case for Class 250 and 300. Cast iron flanges are usually supplied "flat faced" while ductile iron and steel are usually "raised face." When bolting a cast iron flange to a steel or ductile iron flange, the "raised face" of the mating flange should be removed to avoid breaking the cast iron flange when tightening the bolts.

Pressure and Temperature

The ANSI/ASME standards also provide pressure ratings for various "classes" of flanges and flanged fittings. The pressure ratings change based on the material from which it is made and/or the temperature at which it operates. The nominal flange "Class" (e.g., Class 125) generally represents the maximum working pressure at the temperature of saturated steam at that pressure. For example, an ANSI/ASME B16.1 Class 125 flange is rated for 125 PSI at 353º F.

But when used at colder temperatures, such as that of water, the ANSI/ASME maximum working pressure is higher than the nominal class. ANSI/ASME B16.1 rates Class 125 flanges and flanged fittings made from high strength cast iron for 200 PSI at temperatures up to 150º F. ANSI/ASME B16.42 rates Class 150 ductile iron flanges and fittings for 250 PSI at temperatures up to 100º F.

Complete flange and flanged fitting pressure-temperature ratings can be found in tables within the applicable ANSI/ASME B16.x standard.

Are you confused?

It gets worse.

Enter AWWA
The American Water Works Association (AWWA) also has committees charged with addressing the particular needs of the water works industry.

The AWWA C110 committee considered the ANSI/ASME pressure ratings too conservative when used on water. Through burst testing they determined flanges and fittings made from high strength cast iron and with dimensions conforming to ANSI/ASME B16.1 Class 125 could be rated for a working pressure of 250 PSI with at least a 3.0 safety factor. This allows Class 125 cast iron flanges and flanged fittings to have the same pressure rating as Pressure Class 250 ductile iron pipe.

AWWA C110 does not address ANSI/ASME B16.1 Class 250 cast iron flanges or flanged fittings that have a 300 to 500 PSI or higher pressure rating and a totally different bolt pattern than Class 125. Mistakes sometimes occur because cast iron or ductile iron flanged fittings have "250" cast in them (indicating a 250 PSI pressure rating) but the flange dimensions and bolt pattern conform to ANSI/ASME B16.1 Class 125 (or ANSI/ASME B16.42 Class 150). These will not bolt to an ANSI/ASME B16.1 Class 250 flange!

Valve Pressure Ratings
ANSI/ASME B16 and AWWA C110 pressure ratings are based on flanges and flanged fittings conforming to standardized geometry and dimensions, including wall thickness. By comparison, valves are available in countless types, shapes, configurations and geometries that vary from one manufacturer to the other.

While the valve's connecting flanges may conform to ANSI/ASME B16.x dimensions, there are many reasons why its pressure rating may not be the same as a flange or flanged fitting made from identical material as the valve. It is the responsibility of the valve manufacturer to establish the pressure ratings for their products. The design professional should consult the manufacturer's published information and not assume it is the same as the flange or fitting being bolted to it.

However, the pressure ratings of many ANSI/ASME B16.x flanged valves used in waterworks service are defined in AWWA standards applicable to that type of valve. The pressure rating (or Pressure Class) listed in the AWWA valve standard may or may not conform to the ANSI/ASME B16.x or the AWWA C110 pressure rating, leading to even more confusion.

The AWWA "valve" standards which define a Pressure Class or pressure rating are too numerous to detail in this commentary but include C500 gate valves, C504 butterfly valves, C507 ball valves, C508 check valves and C517 eccentric plug valves. The design professional should become familiar with the applicable AWWA valve standard and select the pressure class that is adequate for the working pressure and be aware that the valve's pressure class and connection flange class may not correspond.

One should remember that "a chain is only as strong as its weakest link" so every component of a piping system should be able to withstand the highest pressure that could be realized at the location where it is installed.

2"-12" SWING TYPE LEVER AND WEIGHT CHECK VALVES – FL. X FL.

- Catalog number---
  A-2600-6-01BB flanged ends, with bronze disc facing
  A-2602-6-01B1 flanged ends, with rubber disc facing
- Sizes---2", 2-1/2", 3", 4", 6", 8", 10", 12"
- Meets all applicable parts of ANSI/AWWA C508 Standard
- Epoxy coated interior & exterior for corrosion resistance
- Certified to NSF 61
- Flanged end dimensions and drilling comply with ANSI B16.1, class 125
- Iron body, bronze mounted (IBBM)
- Choice of bronze or rubber disc facing
- For vertical or horizontal installation
- O-ring sealed stuffing box
- Adjustable weight to control opening and closing of clapper, lever can be installed on either side of valve
- 200 psig (1379 kPa) maximum working pressure, 400 psig (2758 kPa) test pressure

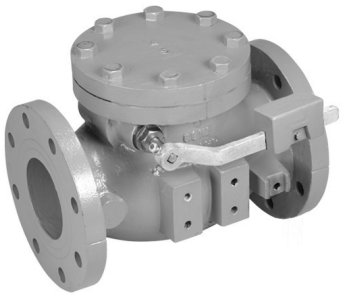

A-2600-6-01BB

Options

- Stainless Steel Nuts & Bolts
- Allen Bradley Limit Switch
- Tapped Bosses
- PN 10/PN 16 Flange Drilling 4"-12"

Check Valve Parts (2011-present)

Catalog Part No.	Description	Material	Material Standard
C-301	Retaining Plug	Brass	ANSI B21
C-306	O-ring C	Rubber	ASTM D2000, BK 707
C-307	O-ring B	Rubber	ASTM D2000, BK 707
C-308	Gasket	Rubber	ASTM D2000, BK 807
C-309	Cover Bolt	Zinc Coated Steel	A307 Grade B
C-310	Washer	Brass	ANSI B21
C-311	Spacer	Brass	ANSI B21
C-312	Disc Nut	Brass	ANSI B21
C-313	Disc Stud	Brass	ANSI B21
C-314	Snap Ring	Stainless Steel	—
C-315	Weight Bolt & Nut	Zinc Coated Steel	A307 Grade B
C-318	Pin	Stainless Steel	ASTM A276 Type 304
C-319	Test Plug	Malleable Iron	A47
C-320	Key	Stainless Steel	ASTM A276 Type 304
C-321	Hinge Pin	Stainless Steel	ASTM A276 Type 304
C-322	Weight Arm	Ductile Iron	A536 Gr. 65-45-12
C-323	Bolt & Nut	Zinc Coated Steel	A307 Grade B
C-325	Seat Nut	Brass	ANSI B21
C-327	Body Seat Ring	Bronze	ANSI B62
C-329	Arm	Ductile Iron	A536 Gr. 65-45-12
C-330	Weight	Cast Iron	ASTM A126 Cl. B
C-331	Cover	Cast Iron	ASTM A126 Cl. B
C-332	Disc	Cast Iron	ASTM A126 Cl. B
C-333	Body	Cast Iron	ASTM A126 Cl. B
Rubber Faced Disc Parts			
C-316	Disc Seat Bolt	Stainless Steel	ASTM A276 Type 304
C-326	Disc Seat Ring	Rubber	ASTM D2000, BK 807
C-328	Seat Holder	Cast Iron*	ASTM A126 Cl. B
Bronze Faced Disc Parts			
C-326	Disc Seat Ring	Bronze	ANSI B62

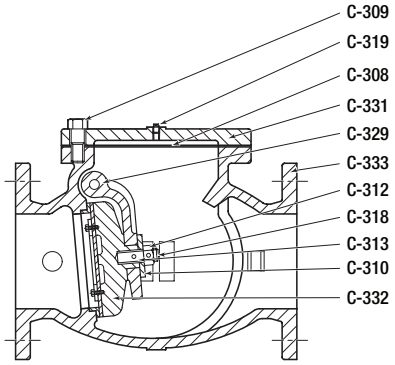

Valve body and clapper
Rubber faced disc shown

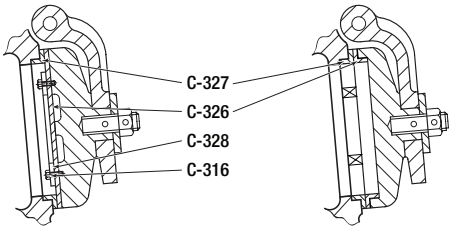

Rubber faced disc clapper

Bronze faced disc clapper

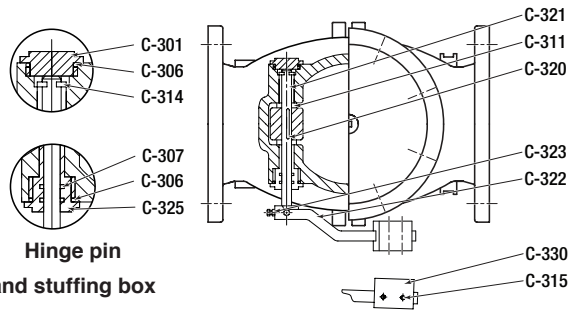

Hinge pin
and stuffing box

Lever assembly and weight

*2"- 6" sizes are cast iron, ASTM A126 Cl. B, 8"- 12" sizes are ductile iron ASTM A536 Gr. 65-45-12.

2"-12" SWING TYPE LEVER AND WEIGHT CHECK VALVE DIMENSIONS-FL.X FL.

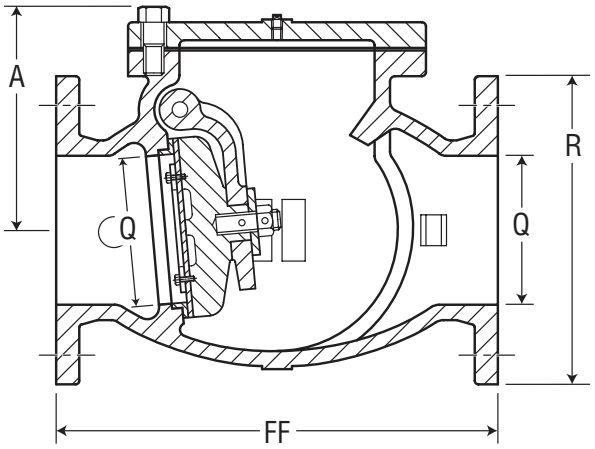

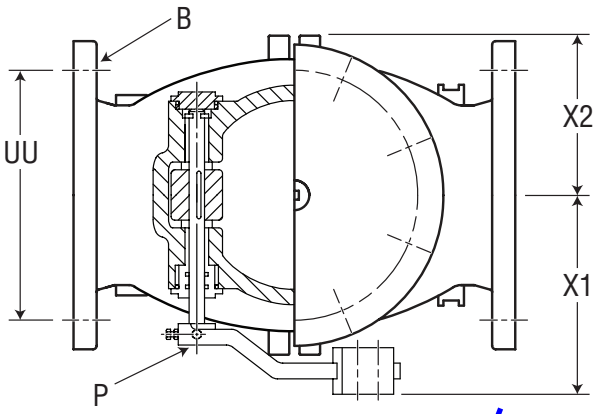

Dimension**	Size*			
	2"	2-1/2"	3"	4"
Q (bore)	2.00	2.50	3.00	4.00
R	6.00	7.00	7.50	9.00
FF	8.00	8.50	9.50	11.50
X1	5.13	5.13	6.31	7.13
X2	2.81	3.56	4.06	4.94
A	4.31	5.69	6.06	6.88
P (hinge pin diameter)	.38	.38	.50	.50
B (number and size of bolts)	4--.75	4--.75	4--.75	8--.75
UU (bolt circle diameter)	4.75	5.50	6.00	7.50
Weight	35	51	67	91

Dimension**	Size*			
	6"	8"	10"	12"
Q (bore)	6.00	8.00	10.00	12.00
R	11.00	13.50	16.00	19.00
FF	14.00	19.50	24.50	27.50
X1	8.69	10.88	12.25	14.38
X2	5.94	8.06	9.19	10.81
A	8.50	9.94	11.19	13.56
P	.75	.88	1.00	1.13
B (number and size of bolts)	8--.88	8--.88	12--1.00	12--1.00
UU (bolt circle diameter)	9.50	11.75	14.25	17.00
Weight	164	282	420	638

*Nominal
**All dimensions are in inches. All weights are in pounds and are approximate.

DEPARTMENT OF THE ARMY
ALBUQUERQUE DISTRICT, CORPS OF ENGINEERS
ALBUQERQUE DISTRICT OFFICE
4101 JEFFERSON PLAZA NE
ALBUQUERQUE, NM 87109

SUBMITTAL REVIEW VERIFICATION SHEET

PROJECT TITLE: Kirtland BFF Mid-Plume Pump and Treat System Expansion
CONTRACT NUMBER: W912DR-12-D-0006 DM01
DATE RECEIVED: 08-03-2017
DATE REVIEWED: 08-03-2017

DESCRIPTION OF ITEMS REVIEWED:

1. 40 05 13-006 Junction Vault Pipe Supports

NO EXCEPTIONS TAKEN.	**X**
EXCEPTIONS AS NOTED ON DRAWINGS AND/OR ATTACHED SHEETS(S). RESUBMISSION NOT REQUIRED.	
EXCEPTIONS AS NOTED ON DRAWINGS AND/OR ATTACHED SHEETS(S). RESUBMISSION REQUIRED.	
RECEIPT ACKKNOWLEDGED.	

Notes:

NOTE: ITEMS REVIEWED AS TO GENERAL LAYOUT ONLY. DIMENSIONS AND QUANTITIES NOT CHECKED. REVIEW DOES NOT RELIEVE CONTRACTOR OF RESPONSIBILITIES FOR ANY ERRORS WHICH MAY EXIST AS CONTRACTOR SHALL BE RESPONSIBLE FOR DIMENSIONS AND DESIGN OF ADEQUATE CORRECTIONS, DETAILS AND SATISFACTORY CONSTRUCTION OF WORK.

SIGNATURE SANCHEZ.AMY.ELIZABETH.1454434338 Digitally signed by SANCHEZ.AMY.ELIZABETH.1454434338 DN: c=US, o=U.S. Government, ou=DoD, ou=PKI, ou=USA, cn=SANCHEZ.AMY.ELIZABETH.1454434338 Date: 2017.08.03 15:29:32 -06'00' **DATE** 8/3/2017

EA Engineering, Science, and Technology, Inc., PBC

Submittal Review Sheet 1

Project Name: **Kirtland BFF Mid-Plume Pump and Treat System Expansion**			Date Received: **8/1/17**		
Project Owner: **Kirtland Air Force Base**			Checked By: **Tyler Curley**		
Contractor: **RMCI, Inc.**	Engineer: **EA Engineering, Science and Technology, Inc., PBC.**		Log Page: **NA**		
Address: **6211 Chappell Rd NE, Albuquerque, NM 87113**	Address: **320 Gold Ave. SW, Suite 1300 Albuquerque, NM 87102**		EA No.: 62599DM01		
			Spec. Section: **40 05 13 2.10**		
			Drawing/Detail No.:		
ATTN: Phillip Johnson	ATTN: **Devon Jercinovic**		1st Sub		Re-Sub
Date Transmitted: **08/01/2017**	Prev. Transmittal Date:				

Item No.	No. Copies	Description	Manufacturer	Mfg/Vendor Dwg or Detail	Action Taken*
1	1	Junction Vault Pipe Supports	Material Resources Inc.		A

The Action Designated Above is in Accordance with the Following Legend:

A – Furnish as Submitted
B – Furnish as Noted
C – Revise and Re-submit
1. Not enough information for review.
2. No reproducible submitted.
3. Copies illegible.
4. Not enough copies submitted.
5. Wrong sequence number.
6. Wrong resubmittal number.
7. Wrong Spec. Section.
8. Wrong form used.
9. See Comments.

D – Rejected
E – Engineer's Review not Required
1. Submittal not required.
2. Supplemental Information. Submittal retained for Information purposes only.
3. Information reviewed and approved on prior submittal.
4. See Comments.

Review is for general compliance with Contract Documents. No responsibility is assumed for correctness of dimensions or detail. Contractor is required to specify deviations from contract requirements. Lack of exceptions noted by Engineer does not waive Contractor's obligation to comply with Drawings and Specifications.

Comments:
Items reviewed and confirmed to meet requirements
Issues in Bold

Pipe supports conform to specs.

By: _____ Date: 8/3/17

Distribution: [1] Contractor [1] Engineer [1] Owner

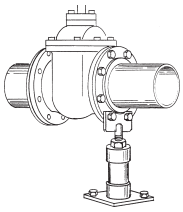

Material Resources, Inc.

STANDON ADJUSTABLE PIPE SUPPORTS

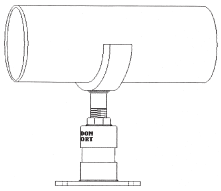

Standon Model S92 Saddle Support

The Standon Model S92 Saddle Support was specifically designed to fit your pipe! A nearly 50% circumferential cradle (170°), and a pipe-to-saddle gap clearance of less than .125" guarantees excellent performance.

The Standon Saddle Support comes with an oversized base and an adjustable collar allowing up to 3" of fine adjustment.

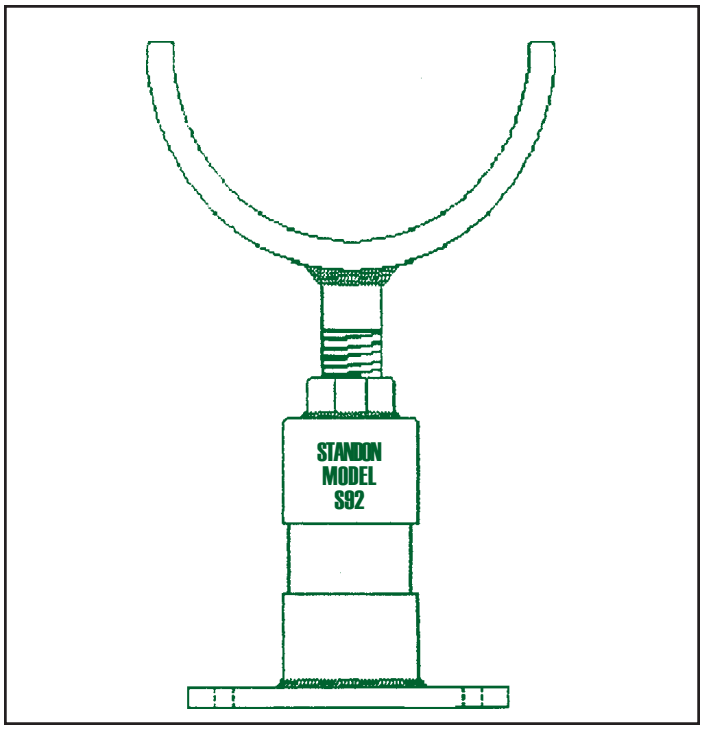

The Standon Saddle Support is offered in a variety of metals and sizes. Because corrosion is a concern, we offer a galvanized finish. Better yet - try our 100% 304 stainless steel version.

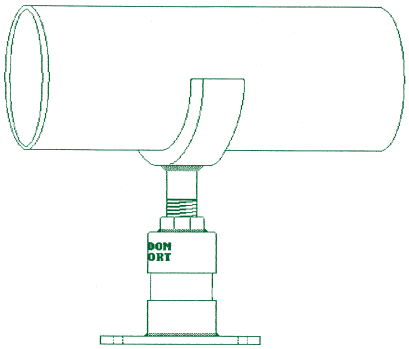

Packaged in an easily inventoried box, the Standon Saddle Support is always ready to do the job. An installation guide is included with each Support. The customer supplies the course extension pipe (size is determined by the size of the support being used). The extension pipe should be field cut to the length required. No threading is needed. The collar and base cups are sized to accept standard sizes of iron pipe. Schedule 40 is the minimum thickness recommended.

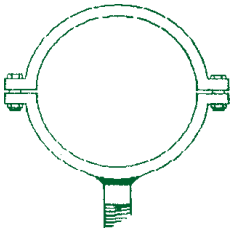

The Standon model C92 is a two piece, full circle saddle clamp. It comes supplied with two bolts and nuts to retain the matching top saddle.

"Quality you can Stand On"

"All Models Tested to 10,000 lbs. Compressive Strength"

For product availability and ordering information on these and other products offered by Material Resources Inc. please call:

(503) 533-5256 or **FAX (503) 533-5501**

or visit our website at

www.standon.net

MATERIAL RESOURCES, INC.

PO Box 247

Forest Grove, Oregon 97116

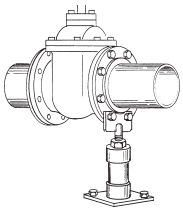

Material Resources, Inc.

STANDON ADJUSTABLE PIPE SUPPORTS

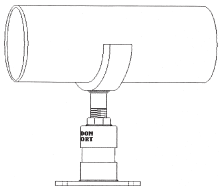

Standon Model S92 Saddle Support Product Specification Sheet

ALL MODELS TESTED TO OVER 10,000 POUNDS - COMPRESSIVE STRENGTH

MATERIAL -

Saddle strap:	ASTM A36
Collar / base cups:	ASTM A53 D.O.M. tubing
Thread stud:	ASTM A36, rolled thread, grade ASTM A307
Base plate:	ASTM A36 sheet steel

Optional Material - 100% 304L or 316L Stainless steel

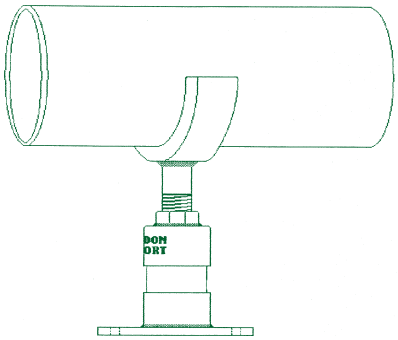

FABRICATION -

All welds:	100% MIG welding, electrode E70XX
Saddle:	Formed to ductile iron pipe radius
	Optional neoprene liner available for IPS pipe

FINISH - All supports have corrosion resistant, electro-galvanized finish.
Hot dip galvanizing available - specify at time of order

OPTION- A neoprene liner is available to isolate pipe from saddle.

DIMENSIONS - (Note: call manufacturer for 30" through 48" support info.)

SUPPORT SIZE	STRAP SIZE	THRD STUD	BASE PLATE	EXTENSION PIPE REQ.	MINIMUM DIST. TO FLOOR
2″	.375" x 2"	1" x 6"	4" x 6" x .25"	2" Sch. 40	7"
2.5″	.375" x 2"	1" x 6"	4" x 6" x .25"	2" Sch. 40	7"
3″	.375" x 2"	1" x 6"	4" x 6" x .25"	2" Sch. 40	7"
4″	.50" x 2"	1" x 6"	8" x 8" x .25"	2" Sch. 40	7"
6″	.50" x 2"	1" x 6"	8" x 8" x .25"	2" Sch. 40	7"
8″	.50" x 2"	1" x 6"	8" x 8" x .25"	2" Sch. 40	7"
10″	.50" x 2"	1" x 6"	8" x 8" x .25"	2" Sch. 40	7"
12″	.50" x 2"	1" x 6"	8" x 8" x .25"	2" Sch. 40	7"
14″	.625" x 3"	1.5" x 6"	8" x 8" x .5"	3" Sch. 40	9.5"
16″	.625" x 3"	1.5" x 6"	8" x 8" x .5"	3" Sch. 40	9.5"
18″	.75" x 4"	2" x 6"	8" x 8" x .5"	4" Sch. 40	10"
20″	.75" x 4"	2" x 6"	8" x 8" x .5"	4" Sch. 40	10"
24″	.75" x 4"	2" x 6"	8" x 8" x .5"	4" Sch. 40	10"

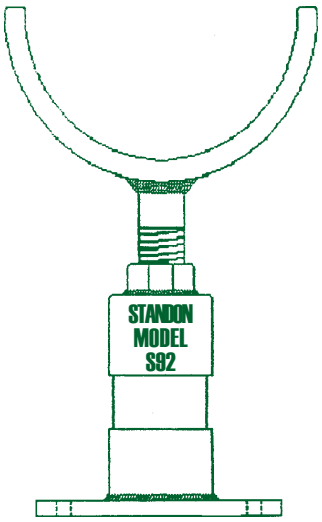

INSTALLATION -

To insure proper Support performance and stability; After final height adjustment is attained, apply tack welds to both support cups and extension pipe. Use E70XX electrode for welds. The base plate should be anchored to the floor with removable anchor bolts. If re-adjustment is required at a later date, remove anchor bolts and rotate entire lower unit using collar nut. Re-anchor base plate.

For product availability and ordering information on these and other products offered by Material Resources Inc please call:

(503) 533-5256 or (877)693-0727

FAX (503) 533-5501

WWW.STANDON.NET

MATERIAL RESOURCES, INC.

2800 Taylor Way Bldg. 2 C

PO Box 247

Forest Grove, OR 97116

DEPARTMENT OF THE ARMY
ALBUQUERQUE DISTRICT, CORPS OF ENGINEERS
ALBUQERQUE DISTRICT OFFICE
4101 JEFFERSON PLAZA NE
ALBUQUERQUE, NM 87109

SUBMITTAL REVIEW VERIFICATION SHEET

PROJECT TITLE: Kirtland BFF Mid-Plume Pump and Treat System Expansion
CONTRACT NUMBER: W912DR-12-D-0006 DM01
DATE RECEIVED: 8-16-2017
DATE REVIEWED: 8-16-2017

DESCRIPTION OF ITEMS REVIEWED:

1. Wall Sleeves and link seal.

NO EXCEPTIONS TAKEN.	**X**
EXCEPTIONS AS NOTED ON DRAWINGS AND/OR ATTACHED SHEETS(S). RESUBMISSION NOT REQUIRED.	
EXCEPTIONS AS NOTED ON DRAWINGS AND/OR ATTACHED SHEETS(S). RESUBMISSION REQUIRED.	
RECEIPT ACKKNOWLEDGED.	

Notes:

NOTE: ITEMS REVIEWED AS TO GENERAL LAYOUT ONLY. DIMENSIONS AND QUANTITIES NOT CHECKED. REVIEW DOES NOT RELIEVE CONTRACTOR OF RESPONSIBILITIES FOR ANY ERRORS WHICH MAY EXIST AS CONTRACTOR SHALL BE RESPONSIBLE FOR DIMENSIONS AND DESIGN OF ADEQUATE CORRECTIONS, DETAILS AND SATISFACTORY CONSTRUCTION OF WORK.

SIGNATURE SANCHEZ.AMY.ELIZABETH.1454434338 Digitally signed by SANCHEZ.AMY.ELIZABETH.1454434338 DN: c=US, o=U.S. Government, ou=DoD, ou=PKI, ou=USA, cn=SANCHEZ.AMY.ELIZABETH.1454434338 Date: 2017.08.16 15:18:10 -06'00' **DATE** 8/16/2017

EA Engineering, Science, and Technology, Inc., PBC

Submittal Review Sheet 1

Project Name: **Kirtland BFF Mid-Plume Pump and Treat System Expansion**			Date Received: **8/15/17**		
Project Owner: **Kirtland Air Force Base**			Checked By: **Tyler Curley**		
Contractor: **RMCI, Inc.**	Engineer: **EA Engineering, Science and Technology, Inc., PBC.**		Log Page: **NA**		
Address: **6211 Chappell Rd NE, Albuquerque, NM 87113**	Address: **320 Gold Ave. SW, Suite 1300 Albuquerque, NM 87102**		EA No.: 62599DM01		
			Spec. Section: **NA**		
			Drawing/Detail No.: **S-101**		
ATTN: Phillip Johnson	ATTN: **Devon Jercinovic**		1st Sub		Re-Sub 1
Date Transmitted: **08/15/2017**	Prev. Transmittal Date: **08/01/2017**				

Item No.	No. Copies	Description	Manufacturer	Mfg/Vendor Dwg or Detail	Action Taken*
1	1	Wall sleeves and link seal.	Link Seal		A

The Action Designated Above is in Accordance with the Following Legend:

A – Furnish as Submitted
B – Furnish as Noted
C – Revise and Re-submit
1. Not enough information for review.
2. No reproducible submitted.
3. Copies illegible.
4. Not enough copies submitted.
5. Wrong sequence number.
6. Wrong resubmittal number.
7. Wrong Spec. Section.
8. Wrong form used.
9. See Comments.

D – Rejected
E – Engineer's Review not Required
1. Submittal not required.
2. Supplemental Information. Submittal retained for Information purposes only.
3. Information reviewed and approved on prior submittal.
4. See Comments.

Review is for general compliance with Contract Documents. No responsibility is assumed for correctness of dimensions or detail. Contractor is required to specify deviations from contract requirements. Lack of exceptions noted by Engineer does not waive Contractor's obligation to comply with Drawings and Specifications.

Comments:
Items reviewed and confirmed to meet requirements
Issues in Bold

Link seal conforms to drawing S-101

By: _____ Date: 8/16/17

Distribution: [1] Contractor [1] Engineer [1] Owner

EXPERIENCE COUNTS

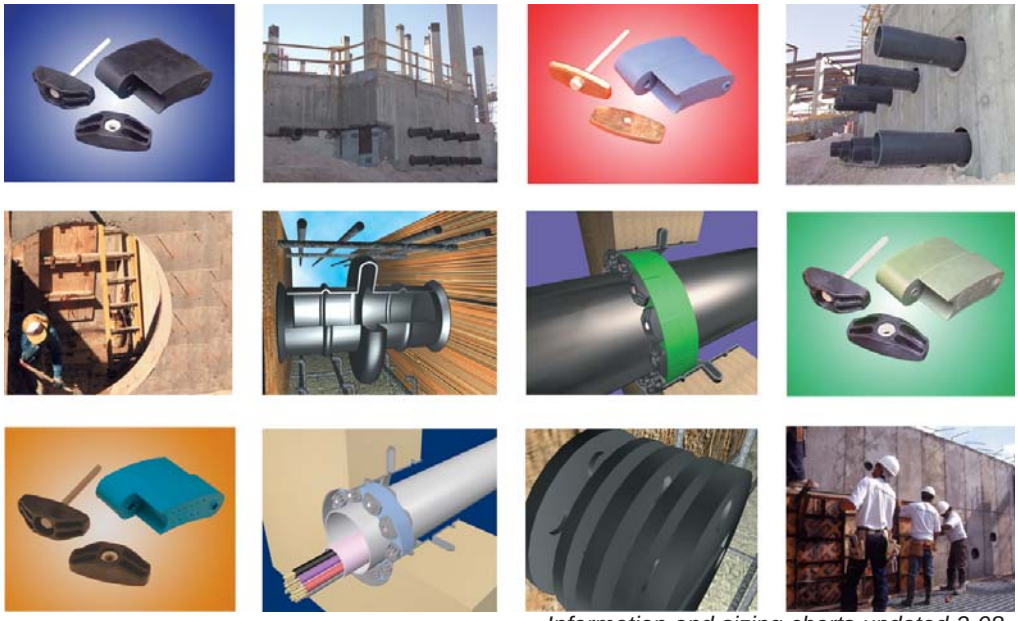

Information and sizing charts updated 2-08.

ENGINEERING MANUAL

Link-Seal® Modular Seals
Century-Line® Sleeves
Cell-Cast® Disks

APPROVED
THE INDUSTRY'S HEAVY DUTY PENETRATION SEAL

Use the original engineered fit...
there are no equals!

Made in U.S.A.

The system is the solution.

LinkSeal® Modular Seals...

The best way to permanently seal any cylindrical object, of any size, passing through any type of concrete barrier is to use Link-Seal® modular seals. From ductle iron to pre-stressed concrete to metal or plastic pipe, conduit or cables - whatever your application - Link-Seal® modular seals will effect a hydrostatic seal capable of holding 20 psig (40 feet of static head) between the pipe and the penetration cylinder through which the pipe passes.

in combination with Century-Line® sleeves...

The best way to guarantee a perfect seal is to use Century-Line® sleeves with Link-Seal® modular seals. They're engineered and sized to provide a stable hole that matches dimensionally with Link-Seal® modular seals. It makes ordering quick and easy and guarantees a perfect fit - and seal - each and every time.

or Cell-Cast® disks.

For larger holes in poured concrete structures, (29.25" to 64.75"Ø) Cell-Cast® disks are used to produce a dimensionally stable hole and smooth concrete surface that is perfect for use with Link-Seal® modular seals.

Tighten Your Specifications!

Approvals - - - - - - - -ISO 9001:2000, Factory Mutual
Elastomers - - - - - - - - - - - - - -EPDM, Nitrile, Silicone
Made in America (U.S.A) - - - - - - - - - - - - - - - - - -YES
Permanent Identification - - - - - - - - - - - - - - - - - -YES
Corrosion Resistant Fasteners
316 Stainless as Standard - - - - - - - - - - - - - -YES
16 Model Sizes -YES
Hi/Low Temp. Seals -YES
FM Approved Fire Seals - - - - - - - - - - - - - - - - - - -YES
Bolts available in USA or Metric Format - - - - - - -YES
Bolts pass 1470 hour salt spray test - - - - - - - - - - -YES
Non-conductive CS Molded
Sleeve Penetration System - - - - - - - - - - - - - - - -YES
Low torque Pressure Plate and Elastomer - - - - -YES
Special "V" Modification - - - - - - - - - - - - - - - - - - -YES
Color Coded elastomers - - - - - - - - - - - - - - - - - - -YES
Cell-Cast® Hole Forms - - - - - - - - - - - - - - - - - - -YES
On Staff Seal Engineering Assistance - - - - - - - - -YES
Worldwide Stocking Distributors - - - - - - - - - - - - -YES
Bolt and nut specifications per ASTM standards---YES

(See Link-Seal® Modular Seal specification,section 2.2, on page 26)

Link-Seal® Modular Seal

The following is a partial listing of the many Federal agencies, associations, code groups, laboratories and organizations which have approved, listed, specified, tested or otherwise indicated acceptance of Link-Seal® modular seals.

General Code Groups, Associations, Laboratories and Approval Authorities

AWWA - American Water Works Association
API - American Petroleum Institute
TUV - Technischer Überwachungs-Verein
Bureau Veritas - Marine Division
ASME - American Society of Mechanical Engineers
DNV - Det Norske Veritas
FM - Factory Mutual Engineering Corporation
LLOYD'S - Lloyd's Register of Shipping
NACE - National Association of Corrosion Engineers

Governmental Agencies

Bureau of Public Roads - Division of Bridges
United States Coast Guard
Corps. of Engineers
GSA - General Services Administration
Military Specifications
TVA - Tennessee Valley Authority

Link-Seal® Modular Seal Features

Saves time and money...
Link-Seal® modular seals install in up to 75% less time when compared to lead-oakum joints, hand fitted flashings, mastics or casing boots.

Positive hydrostatic seal...
Link-Seal® modular seals are rated at 20 psig (40 feet of head), which exceeds the performance requirements of most applications.

Long seal life...
Link-Seal® modular seals are designed for use as a permanent seal. Seal elements are specially compounded to resist aging and attack from ozone, sunlight, water and a wide range of chemicals.

Maximum protection against corrosion...
Standard fasteners employ the use of a proprietary coating process on carbon steel. For extremely corrosive environments, corrosion resistant 316 stainless steel hardware is offered as a standard.

ISO Quality Assurance...
Link-Seal® modular seals are manufactured in an ISO 9001:2000 certified facility. In addition, they are completely manufactured and assembled in the U.S.A.

Certification/Approvals...
Factory Mutual Fire Approvals.
Det Norske Veritas Marine Deak/Bulkhead Penetration Certification.
Also a wide variety of approvals from various Federal agencies, associations, code groups, laboratories and organizations.

Configure a Link-Seal® modular seal to match your application...
Color coded EPDM, Nitrile, & Silicone elastomers may be used with various hardware options to match performance characteristics with service conditions.

Choose a Link-Seal® modular seal to match your pipe size and wall opening...
Link-Seal® modular seals are now available in 16 sizes to provide a solution for varying pipe penetration applications.

Link-Seal® Modular Seal Applications

- Mechanical Contractors - Interior Piping Systems
- Floor Sleeves
- Wall Sleeves
- Manhole Pipe Entry Seals
- Waste Treatment Plants
- Cased Road Crossings
- Elevator Shafts
- Thermal Storage Systems
- Fire Protection Wall Penetrations
- Cased Railroad Crossings
- Electrical Isolation of Pipes
- Precast Concrete Vault Seals
- Insulated Pipe Seals
- Dual Containment Seals
- Marine Applications
- Noise Dampening
- Flexible Sign & Pole Supports
- Electrical Isolation of Pipe Supports
- Mining
- Pulp & Paper
- Decorative Fountains
- Bank Tube Transfer Systems
- Pool Contractors
- Electrical Contractors
- Marine Applications
- Waste & Water Treatment
- Telecommunications
- Valve Pits
- Refrigeration Buildings
- Overhead Signs
- Guard Post Assemblies
- Power Generation Dams
- Offshore Oil Rigs
- High Pressure Tank Guards
- Underground Steel Tanks
- Precast Concrete Manufacturers
- Perimeter Berm Installations Around Tank Farms
- Flow Restrictors in Sewer Maintenance
- Fluid Overflow Devices
- Noise and Sway Dampener
- Through Deck Fire Breaks
- Parking Garage Column Protectors
- Cable TV Installations
- Bridge Construction
- Septic Tank Installations
- Coal Preparation Plants
- Flag Pole Installations
- Tunneling Operations

Link-Seal® Modular Seal Model Properties

with EPDM Seal Elements

EPDM (Black)
EPDM (Blue) Low Durometer

Model "C" or "L" Link-Seal Modular Seal

Suitable for use in water, direct ground burial and atmospheric conditions. Provides electrical isolation where cathodic protection is required.
Type: Standard
Seal Element: EPDM (Black) or EPDM (Blue)
Pressure Plates: Reinforced Nylon Polymer
Bolts & Nuts: Steel with 2-part Zinc Dichromate & proprietary corrosion inhibiting coating.
Temp. Range: -40 to +250ºF (-40 to +121ºC)*

Model "S-316" Link-Seal Modular Seal

For chemical processing & waste water treatment. EPDM rubber is resistant to most inorganic acids and alkalis, some organic chemicals (acetone, alcohol, ketones).
Type: Stainless
Seal Element: EPDM (Black) or EPDM (Blue)
Pressure Plates: Reinforced Nylon Polymer
Bolts & Nuts: 316 Stainless Steel
Temp. Range: -40 to +250ºF (-40 to +121ºC)*

* = Sustained operation near temperature limits may affect life expectancy.

with Nitrile Seal Elements

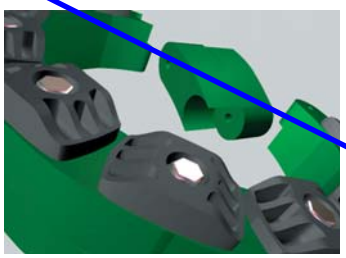

Nitrile (Green)

Model "O" Link-Seal Modular Seal

Nitrile rubber is resistant to oils, fuel and many solvents (gasoline, motor oil, kerosene, methane, jet fuel, hydraulic fluid, water, etc.).
Type: Oil Resistant
Seal Element: Nitrile (Green) Note: Not U.V resistant.
Pressure Plates: Reinforced Nylon Polymer
Bolts & Nuts: Steel with 2-part Zinc Dichromate & proprietary corrosion inhibiting coating.
Temp. Range: -40 to +210ºF (-40 to +99ºC)*

Model "OS-316" Link-Seal Modular Seal

Combination of oil resistant rubber and stainless steel hardware.
Type: Oil Resistant
Seal Element: Nitrile (Green) Note: Not U.V resistant.
Pressure Plates: Reinforced Nylon Polymer
Bolts & Nuts: 316 Stainless Steel
Temp. Range: -40 to +210 ºF (-40 to +99ºC)*

* = Sustained operation near temperature limits may affect life expectancy.

with Silicone Seal Elements

Silicone (Grey)

Model "T" Link-Seal Modular Seal

Silicone rubber is ideal for temperature extremes. The "T" model is one-hour Factory Mutual approved.
Type: High/Low Temperature
Seal Element: Silicone (Grey)
Pressure Plates: Steel Zinc Dichromate
Bolts: Steel with 2-part Zinc Dichromate & proprietary corrosion inhibiting coating.
Temp. Range: -67 to +400ºF (-55 to +204ºC)*

Model "FD/FS" Link-Seal Modular Seal

Double seal for added protection.
Type: Fire Seals
Seal Element: Silicone (Grey)
Pressure Plates: Steel zinc dichromate
Bolts: Steel with 2-part Zinc Dichromate proprietary corrosion inhibiting coating.
Temp. Range: -67 to +400ºF (-55 to +204ºC)*

NOTE: Sustains a constant temp. of 325ºF (163º C.)
* = Sustained operation near temperature limits may affect life expectancy.

Material Properties of Link-Seal Modular Seal Elements

PROPERTY	ASTM METHOD	EPDM (EPDM L)	NITRILE	SILICONE
Hardness (shore A)	D-2240	50 ±5 (40 ±5)	50 ±5	50 ±5
Tensile	D-412	1450 psi	1300 psi	860 psi
Elongation	D-412	400%	300%	250%
Compression Set	S-395	15% 22 hrs. @ 158ºF (70ºC)	45% 22 hrs. @ 212ºF (100ºC)	40% 22 hrs. @ 350ºF (177ºC)
Specific Gravity	D-297	1.10	1.15	1.40

Material Properties of Composite Pressure Plates

PROPERTY	ASTM METHOD	VALUE
Izod Impact - Notched	D-256	2.05 ft-lb/in
Tensile Strength @ Yield	D-638	20,000 psi
Tensile Strength - Break	D-638	20,250 psi
Flexural Strength @ Yield	D-790	30,750 psi
Flexural Modulus	D-790	1,124,000 psi
Elongation, Break	D-638	11.07%
Specific Gravity	D-792	1.38
Moisture Content	--	0.18%

Bolt & Nut Specifications

Standard: Carbon Steel
Carbon steel, zinc dichromated per ASTM B633, with an additional corrosion inhibiting proprietary organic coating. (passes 1470 hour salt spray test)
Tensile Strength = 60,000 psi, minimum.

Option: Stainless Steel
ANSI Type = 316, Per ASTM F593-95
Tensile Strength = 85,000 psi, average.

Dimensional Data

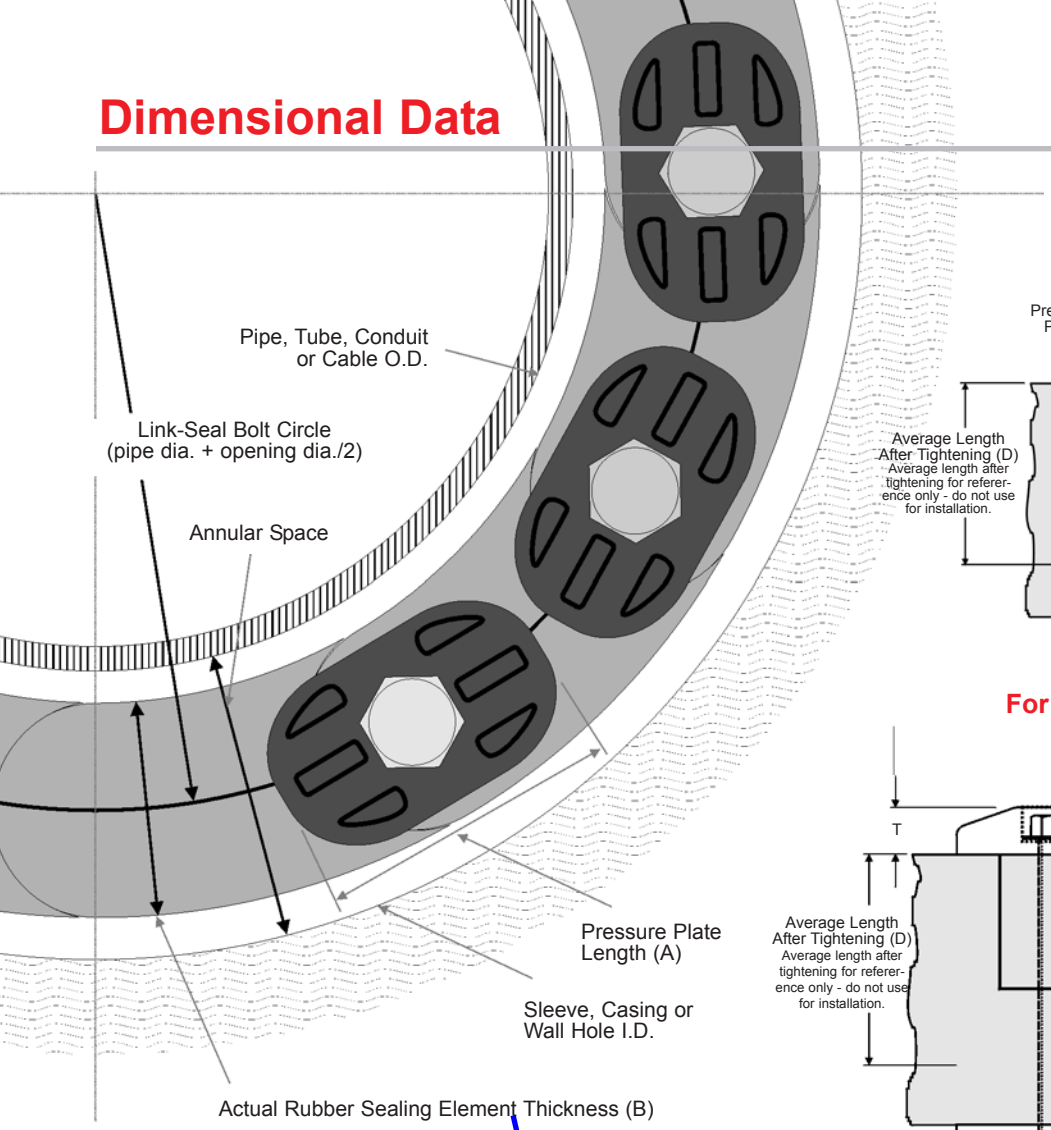

For LS-200 through LS-315

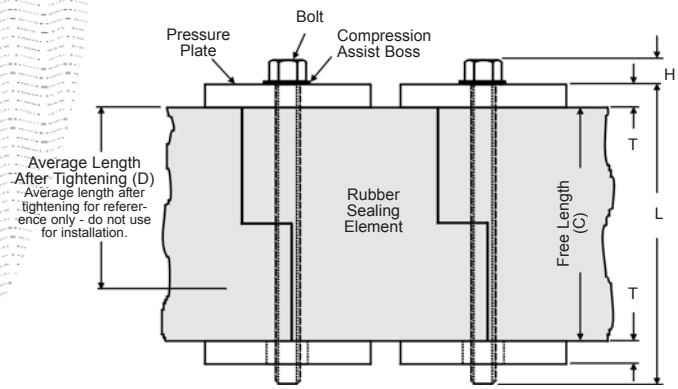

For LS-325 through LS-600

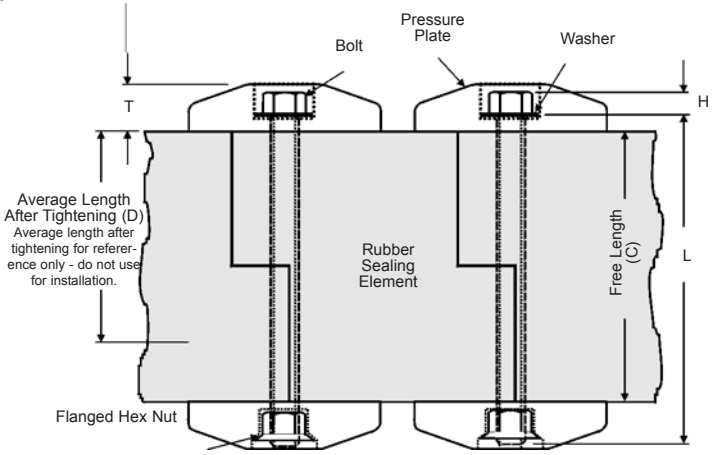

Dimensional Data for Models C, L, O, S-316 and OS-316 (Dimensions in inches except as noted)

	RUBBER SEALING ELEMENT			PRESSURE PLATE		BOLT				WEIGHT FOR 10 LINK SECTION (LBS)	MIN. REQUIRED SEATING WIDTH
LINK-SEAL MODEL NO.	ACTUAL THICKNESS (B)	FREE LENGTH (C)	AVG. LENGTH AFTER TIGHTENING (D)	(A)	(T)	HEX ACROSS FLATS	(H)	THREAD SIZE	(L)		
LS-200-C	0.48	1.75	1.38	1.06	0.31	M5 (slotted hex)	0.18	M5	2.50	0.75	2.25
LS-275-C	0.61	1.75	1.38	0.90	0.31	M5 (slotted hex)	0.18	M5	2.50	0.85	2.25
LS-300-C	0.69	2.37	1.87	1.50	0.44	0.50	0.22	5/16-18	3.50	2.10	3.00
LS-315-C	0.81	2.37	1.87	1.44	0.44	0.50	0.22	5/16-18	3.50	3.00	3.00
LS-325-C	0.88	2.63	2.00	3.13	1.00	0.50	0.22	5/16-18	4.50	5.50	4.00
LS-340-C	1.00	2.70	2.25	1.52	0.67	0.50	0.22	5/16-18	4.50	3.40	4.00
LS-360-C	1.24	2.70	2.25	2.05	0.77	0.50	0.22	5/16-18	4.50	5.00	4.00
LS-400-C	1.38	3.50	2.75	3.50	1.06	0.56	0.25	3/8-16	5.00	12.00	5.00
LS-410-C	1.43	3.37	2.87	2.52	0.88	0.56	0.25	3/8-16	5.00	8.20	5.00
LS-425-C	1.06	3.00	2.25	3.50	1.19	0.56	0.25	3/8-16	5.00	10.00	5.00
LS-475-C	1.56	3.38	2.63	2.63	0.88	0.56	0.25	3/8-16	5.00	10.00	5.00
LS-500-C	2.25	3.75	2.75	3.63	1.06	0.75	0.34	1/2-13	5.50	22.50	5.00
LS-525-C	2.06	3.75	2.87	3.63	1.06	0.75	0.34	1/2-13	5.50	21.00	5.00
LS-575-C	1.81	3.75	3.00	3.00	1.00	0.75	0.34	1/2-13	5.50	15.50	5.00
LS-600-C	3.09	4.00	3.00	6.00	1.90	1.16	.50	M20X2.5	7.10	60.60	6.00
LS-650-C	2.71	3.98	3.00	3.96	1.19	.75	.31	M12X1.75	6.88	26.10	6.00

Installation Techniques - Link-Seal® Modular Seals

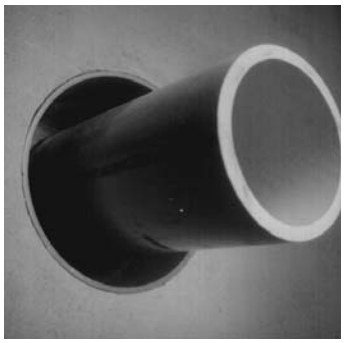

1. Center the pipe, cable or conduit in wall opening or casing. Make sure the pipe will be adequately supported on both ends. Link-Seal® modular seals are not intended to support the weight of the pipe.

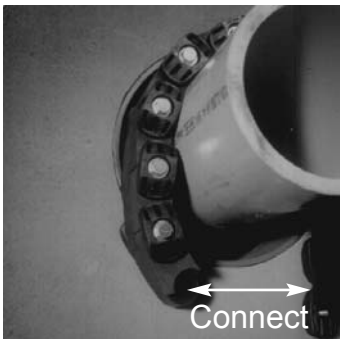

2. Loosen rear pressure plate with nut just enough so links move freely. Connect both ends of belt around the pipe.

3. Check to be sure all bolt heads are facing the installer. Extra slack or sag is normal. Do not remove links if extra slack exists. **Note:** On smaller diameter pipe, links may need to be stretched.

4. Slide belt assembly into annular space. For larger size belts, start inserting Link-Seal modular seal assembly at the 6 O'Clock position and work both sides up toward the 12 O'Clock position in the annular space.

5. Using a hand socket or offset wrench ONLY, start at 12 O' Clock. Do not tighten any bolt more than 4 turns at a time. Continue in a clockwise manner until links have been uniformly compressed. (Approx. 2 or 3 rotations)

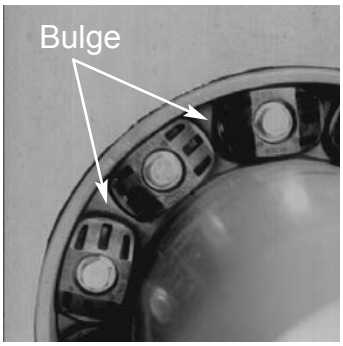

6. Make 2 or 3 more passes at 4 turns per bolt MAXIMUM, tightening all bolts clockwise until all sealing elements **"bulge"** around all pressure plates. On type 316 stainless steel bolts, hand tighten ONLY without power tool.

7. If the seal doesn't appear to be correct using the instructions provided, **Call PSI at 800-423-2410.**

Installation Notes: The Link-Seal® modular seal bolt heads are usually recessed below the wall opening or the edge of casing pipe and therefore a socket or offset wrench must be used.
Hand Tools: Use 5/16" hex or #6 screwdriver for LS-200. 1/2" hex requires 3/8" drive socket wrench. 9/16" and 3/4" hex requires 1/2" drive socket wrench. (Tools not provided.)

Always Wear Safety Equipment When Installing Link-Seal® modular seals!

Always Wear Safety Equipment When Using Link-Seal® Modular Seals!

Link-Seal® Modular Seal - Do's

1. Make sure pipe is centered.
2. Install the belt with the pressure plates evenly spaced.
3. Install the exact number of links indicated in sizing charts.
4. Check to make sure pipe is supported properly during backfill operations. Note: Link-Seal modular seals are not intended to support the weight of the pipe.
5. Make sure seal assembly and pipe surfaces are free from dirt.
6. For tight fits, use non-polluting liquid detergent to assist installation.

Link-Seal® Modular Seal - Don'ts

1. Don't Install the belt with the pressure plates aimed in irregular directions. (Staggered)
2. Don't Install Link-Seal® modular seals where weld-beads or other irregular surfaces exist without consideration of the sealing requirements.
3. Don't torque each bolt completely before moving on to the next.
4. Don't use high speed power tools (450 rpm or more)
5. Do not use power tools on Link-Seal modular seal 316 stainless steel bolts.
6. Don't use grease installing Link-Seal modular seals.

If the seal doesn't appear to be correct using the techniques provided, **Call PSI at 713-747-6948 or 800-423-2410.**

Typical Specification

1.0 General

Under this section there shall be furnished and installed a complete Link-Seal® modular seal assembly, manufactured by PSI-Thunderline/Link-Seal® located at 6525 Goforth Street, Houston, TX 77021, as shown on drawings and specifications. For clarification, complete assembly is defined as a combined:

A. Wall opening (i.e. steel sleeve, Thermoplastic (HDPE) sleeve, cored hole or formed hole). The wall opening size and/or type shall be selected according to information found in the most recent Link-Seal® modular seal catalog.

B. Sufficient quantity and type of Link-Seal® modular seals required to effectively provide a hydrostatic and/or fire-rated seal.

C. Each individual link shall be conspicuously and permanently identified with the name of the manufacturer and model number. Manufacturers other than the above-named company wishing to quote equipment in this section shall submit detail drawings of their proposed equipment and suitable evidence of a minimum of 25 years of experience and results to the engineer to obtain written approval to quote at least ten (10) days prior to bid opening.

2.0 Link-Seal® Modular Seal Rubber Links

Shall be modular, mechanical type, consisting of inter-locking synthetic rubber links shaped to continuously fill the annular space between the pipe and the wall opening. The elastomeric element shall be sized and selected per manufacturer's sizing procedure and have the following properties as designated by ASTM. Coloration shall be throughout elastomer for positive field inspection. Each link shall have a permanent identification of the size and manufacturer's name molded into it.

A. For Standard Service Applications = Model C
-40 to +250ºF (-40 to +121ºC)
EPDM = ATSM D2000 M3 BA510
Color = Black

B. For Thin Walled Pipe Applications = Model L
-40 to +250ºF (-40 to +121ºC)
EPDM = ATSM D2000 M3 BA510
Color = Blue

C. For Hydrocarbon Service Applications = Model O
-40 to +210ºF (-40 to +99ºC)
Nitrile = ASTM D2000 M1BF510
Color = Green

D. For High Temperature or Fire Seal Applications = Model T
-67 to +400ºF (-55 to +204ºC)
Silicone = ASTM D2000 M1GE505
Color = Gray
Reference shall always be made to the latest published Link-Seal® modular seal selection guide for the service intended.

2.1 Link-Seal® Modular Seal Pressure Plates

A. Link-Seal® modular seal pressure plates shall be molded of glass reinforced Nylon Polymer with the following properties:

Izod Impact - Notched =	2.05ft-lb/in. per ASTM D-256
Flexural Strength @ Yield =	30,750 psi per ASTM D-790
Flexural Modulus =	1,124,000 psi per ASTM D-790
Elongation Break =	11.07% per ASTM D-638
Specific Gravity =	1.38 per ASTM D-792

B. Models LS200-275-300-315 shall incorporate the most current Link-Seal® Modular Seal design modifications and shall include an integrally molded compression assist boss on the top (bolt entry side) of the pressure plate, which permits increased compressive loading of the rubber sealing element. Models 315-325-340-360-400-410-425-475-500-525-575-600 shall incorporate an integral recess known as a "Hex Nut Interlock" designed to accommodate commercially available fasteners to insure proper thread engagement for the class and service of metal hardware. All pressure plates shall have a permanent identification of the manufacturer's name molded into it.

C. For fire and Hi-Temp service, pressure plates shall be steel with 2-part Zinc Dichromate Coating.

2.2 Link-Seal® Modular Seal Hardware

All fasteners shall be sized according to latest Link-Seal® modular seal technical data. Bolts, flange hex nuts shall be either:

A. Mild Steel with a 60,000 psi minimum tensile strength and 2-part Zinc Dichromate coating per ASTM B-633 and Organic Coating, tested in accordance with ASTM B-117 to pass a 1,470 hour salt spray test.

B. 316 Stainless Steel per ASTM F593-95, with a 85,000 psi average tensile strength.

3.0 Wall Opening

A. Century-Line® Sleeves - for openings to 24.81" diameter.
Where pipes must pass through walls and floors of new structures, unless otherwise shown or specified, install molded non-metallic high density polyethylene Model CS Century-Line® sleeves as manufactured by PSI-Thunderline/Link-Seal®. Model CS sleeves shall have integrally formed hollow water stop sized having a minimum of four inches larger than the outside diameter of the sleeve itself and allowing 1/2" movement between wall forms to resist pour forces. Each sleeve assembly shall have end caps manufactured of the same material as the sleeve itself and installed at each end of the sleeve so as to prevent deformation during the initial concrete pour, and to facilitate attaching the sleeve to the wall forms. End caps shall remain in place to protect the opening from residual debris and rodent entry prior to pipe insertion.

B. Cell-Cast® Disks - for openings from 29.25" to 64.74" diameter.
The contractor shall install Cell-Cast® disks, providing a round hole in conformance with Link-Seal® modular seal sizing data. Cell-Cast® disks shall consist of 3" and/or 4" lightweight interlocking polyethylene cells stacked to form the thickness of the poured concrete wall. Molded into each cell shall be a cavity to accept a 2" x 4" nailer.

4.0 Quality Assurance

Link-Seal® Modular Seal components and systems shall be domestically manufactured at a plant with a current ISO-9001:2000 registration. Copy of ISO-9001:2000 registrations shall be a submittal item.

NOTE: Link-Seal Modular Seals are specifically designed as hydrostatic and/or fire rated seals and are not considered to be pipe supports. When appropriate, Link-Seal Modular Seals should be used with proper pipe supports on both ends.

Frequently Asked Questions

1) Q - Can Link-Seal® modular seals be used with pipe types not listed in the standard published charts?
A - Yes, The best way to permanently seal any cylindrical object, of any size, passing through any type of concrete barrier is to use Link-Seal® modular seals. From ductle iron to pre-stressed concrete to metal or plastic pipe, conduit or cables - whatever your application - Link-Seal® modular seals will effect a hydrostatic seal capable of holding 20 psig (40 feet of static head) between the pipe and the penetration cylinder through which the pipe passes.

2) Q - How much angular pipe movement will Link-Seal® modular seals allow and still maintain a seal?
A - Link-Seal® modular seals may allow angular pipe movement or misalignment depending on the ratio of annular space of the penetration to the expanded range of the Link-Seal® model sized for the penetration. Please call PSI for more information.

3) Q - When is the recommended time to install Link-Seal® modular seals?
A - Always install Link-Seal® modular seals prior to any final connections. This helps prevent off-center pipe alignment.

4) Q - Is it necessary to use WS or CS sleeves when installing Link-Seal® modular seals?
A - WS model steel and CS model HDPE sleeves are specially designed for use with Link-Seal® modular seals. When installed with Link-Seal® modular seals these sleeves provide the best possible assurance of a quality wall penetration system.

5) Q - What tools are required to install Link-Seal® modular seals?
A - A socket or offset wrench with 5/16", 1/2", 3/8", 9/16", 3/4" & 1-3/16" sockets will handle all installations. A low speed (450 RPM or less) power tool is suggested for multiple installations to increase efficiency.

6) Q - Can I use power tools when installing Link-Seal modular seals with 316 stainless steel bolts?
A - No, please refer to suggested installation techniques.

7) Q - Sometimes when installing a Link-Seal® modular seal belt, it hangs loose on the pipe even though all my sizing calculations are correct. Why does it appear that I have too many links?
A - Link-Seal® modular seals are basically sized to fit the annular space, not the pipe. Use the assemblies suggested by the charts or calculation. It may not look right, but it will fit.

8) Q - Can Link-Seal® modular seals be used for penetrations where the pipe is off-center to the opening?
A - Centering is very important. Contact PSI for more information.

9) Q - How do I install Link-Seal® modular seals over a weld-bead?
A - Weld-beads and all other irregularities on the pipe or opening should be addressed in accordance with the manufacturer's and/or project engineer's suggestions to provide a round, smooth and clean surface for Link-Seal® installation.

10) Q - My wall is 24" thick. Do I need Link-Seal® modular seals on both sides of the wall?
A - In many cases, one single Link-Seal® modular seal assembly is appropriate. Double seals are typically found in critical applications such as fire walls or nuclear power stations. Double seals are also suggested for building foundation wall penetrations where the wall thickness is greater than 12".

11) Q- Can Link-Seal modular seals be used with manhole vault installed thimbles, not sleeves?
A- No, only if the area creates a penetration cylinder, such that the axis of the cylinder is parrallel to the axis of the pipe going through it.

12) Q- Can lubricant be used to install Link-Seal® modular seals?
A- Yes, any non-polluting liquid detergent is preferred over a grease. If you need to use grease or another lubricant, please contact PSI.

13) Should you grout over Link-Seal® modular seals?
A- Link-Seal modular seals do not require any assistance to create a water tight seal, if they are installed per our published installation techniques. Any material placed between the seal and the ID of the penetration is not recommended. However, if grout is needed for appearance purposes only, it's suggested that the links be installed far enough into the penetration to accommodate a layer of "bubble wrap". If the pipe needs future maintenance the grout can be removed and access can be gained to the bolts of the Link-Seal modular seal.

14) What model Link-Seal® modular seals should be used for submerged sea water applications?
A- For submerged sea water applications use Model S-316 Link-Seal modular seals. See page 5 for material property information.

15) Why is it sometimes difficult to seal an insulated pipe with Link-Seal® modular seals?
A- Jacket thickness, or more importantly, its ability to maintain its diameter without deforming is key to success of the Link-Seal modular seal's ability to seal. If the jacket withstands the constricting force of the Link-Seal modular seal without cracking or deforming, Link-Seal modular seals are effective. If the jacket "gives", much like an aluminum can, the jacket will crack enabling water to go directly into the insulation and by pass the Link-Seal modular seal installation.

16) Q - Is it necessary to use riser clamps, pipe saddles and hanger supports with Link-Seal® modular seals?
A - Link-Seal® modular seals are penetration type seals. It is not intended to be a structural support. Standard pipe hanger practice should always be applied.

Updated engineering catalogs, literature, CAD Drawings, submittals and installation techniques are available on-line at: www.linkseal.com

DEPARTMENT OF THE ARMY
ALBUQUERQUE DISTRICT, CORPS OF ENGINEERS
ALBUQERQUE DISTRICT OFFICE
4101 JEFFERSON PLAZA NE
ALBUQUERQUE, NM 87109

SUBMITTAL REVIEW VERIFICATION SHEET

PROJECT TITLE: Kirtland BFF Mid-Plume Pump and Treat System Expansion
CONTRACT NUMBER: W912DR-12-D-0006 DM01
DATE RECEIVED: 08-04-2017
DATE REVIEWED: 08-07-2017

DESCRIPTION OF ITEMS REVIEWED:

1. 40 05 13-008 Leak Detection System

NO EXCEPTIONS TAKEN.	**X**
EXCEPTIONS AS NOTED ON DRAWINGS AND/OR ATTACHED SHEETS(S). RESUBMISSION NOT REQUIRED.	
EXCEPTIONS AS NOTED ON DRAWINGS AND/OR ATTACHED SHEETS(S). RESUBMISSION REQUIRED.	
RECEIPT ACKKNOWLEDGED.	

Notes:

NOTE: ITEMS REVIEWED AS TO GENERAL LAYOUT ONLY. DIMENSIONS AND QUANTITIES NOT CHECKED. REVIEW DOES NOT RELIEVE CONTRACTOR OF RESPONSIBILITIES FOR ANY ERRORS WHICH MAY EXIST AS CONTRACTOR SHALL BE RESPONSIBLE FOR DIMENSIONS AND DESIGN OF ADEQUATE CORRECTIONS, DETAILS AND SATISFACTORY CONSTRUCTION OF WORK.

SIGNATURE SANCHEZ.AMY.ELIZABETH.1454434338 Digitally signed by SANCHEZ.AMY.ELIZABETH.1454434338 DN: c=US, o=U.S. Government, ou=DoD, ou=PKI, ou=USA, cn=SANCHEZ.AMY.ELIZABETH.1454434338 Date: 2017.08.07 10:16:26 -06'00' **DATE** 8/7/2017

EA Engineering, Science, and Technology, Inc., PBC

Submittal Review Sheet 1

Project Name: **Kirtland BFF Mid-Plume Pump and Treat System Expansion**			Date Received: **8/1/17**	
Project Owner: **Kirtland Air Force Base**			Checked By: **Tyler Curley**	
Contractor: **RMCI, Inc.**	Engineer: **EA Engineering, Science and Technology, Inc., PBC.**		Log Page: **NA**	
Address: **6211 Chappell Rd NE, Albuquerque, NM 87113**	Address: **320 Gold Ave. SW, Suite 1300 Albuquerque, NM 87102**		EA No.: 62599DM01	
			Spec. Section: **2.4.4.5**	
			Drawing/Detail No.:	
ATTN: Phillip Johnson	ATTN: **Devon Jercinovic**		1st Sub	Re-Sub
Date Transmitted: **08/01/2017**	Prev. Transmittal Date:			

Item No.	No. Copies	Description	Manufacturer	Mfg/Vendor Dwg or Detail	Action Taken*
1	1	Leak Detection	PermAlert		A

The Action Designated Above is in Accordance with the Following Legend:

A – Furnish as Submitted
B – Furnish as Noted
C – Revise and Re-submit
1. Not enough information for review.
2. No reproducible submitted.
3. Copies illegible.
4. Not enough copies submitted.
5. Wrong sequence number.
6. Wrong resubmittal number.
7. Wrong Spec. Section.
8. Wrong form used.
9. See Comments.

D – Rejected
E – Engineer's Review not Required
1. Submittal not required.
2. Supplemental Information. Submittal retained for Information purposes only.
3. Information reviewed and approved on prior submittal.
4. See Comments.

Review is for general compliance with Contract Documents. No responsibility is assumed for correctness of dimensions or detail. Contractor is required to specify deviations from contract requirements. Lack of exceptions noted by Engineer does not waive Contractor's obligation to comply with Drawings and Specifications.

Comments:
Items reviewed and confirmed to meet requirements
Issues in Bold

Leak detection consists on suitable material and will allow pin-pointing of any leaks should they occur. Consists of a continuous sensing cable instead of individual probes.

By: _____ Date: 8/4/17

Distribution: [1] Contractor [1] Engineer [1] Owner

Yellow highlighted spot indicates approximate location of access tees.

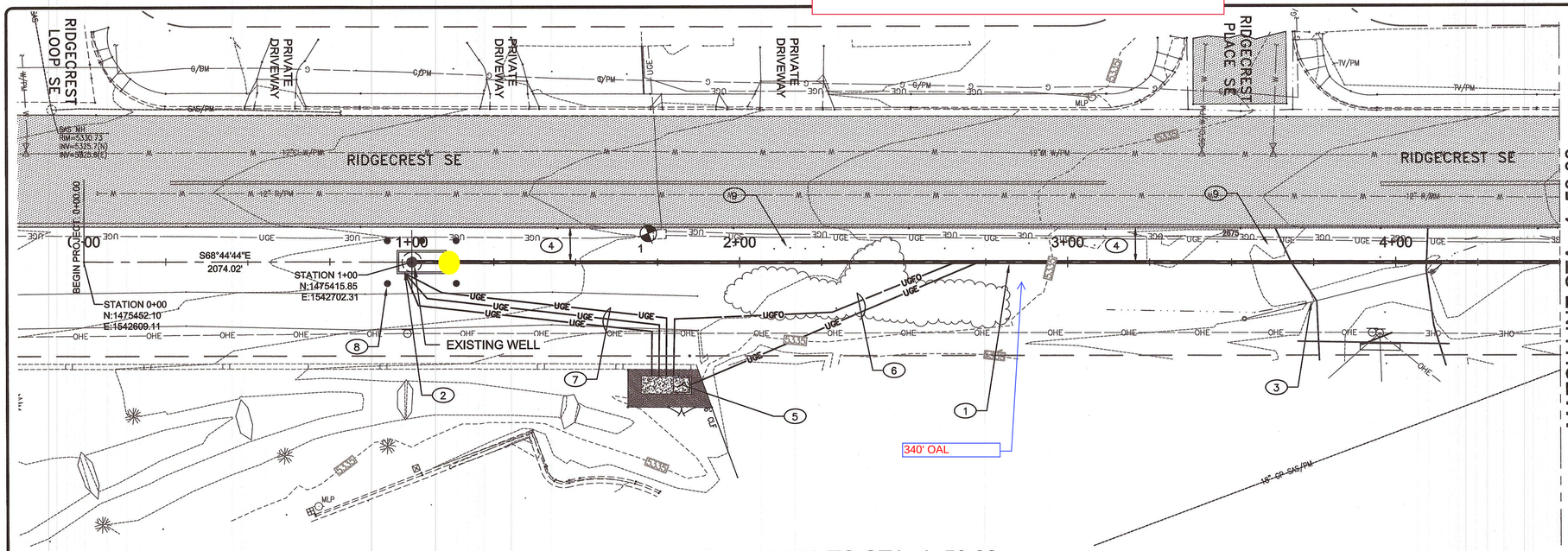

PLAN - STA: 0+00.00 TO STA: 4+50.00

SCALE: 1" = 20'

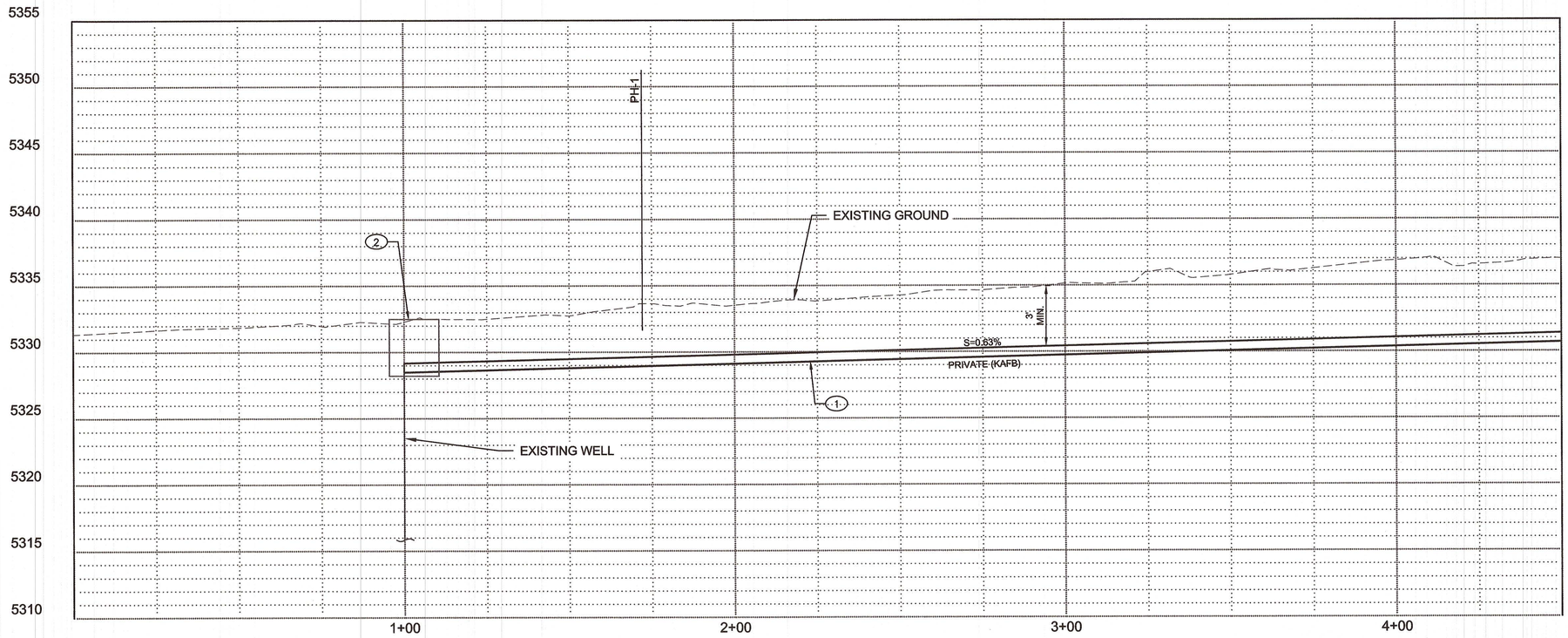

PROFILE - STA: 0+00.00 TO STA: 4+50.00

GENERAL NOTES:

1. MAINTAIN A MINIMUM OF 3 FEET OF SOIL COVER OVER INSTALLED 4"x8" DOUBLE WALL PIPE.
2. PROVIDE A MINIMUM OF 18" OF VERTICAL SEPARATION WHEN CROSSING OVER OR UNDER EXISTING UTILITIES.

KEYED NOTES:

1. NEW PRIVATE 4"x8" HDPE PIPELINE. SEE C-301, DETAIL 2 FOR TYP. TRENCH SECTION
2. NEW REINFORCED PRECAST CONCRETE WELL VAULT W/ - 5 GUARD POSTS. SEE C-302 DETAIL 1 FOR VAULT DETAIL.
3. REMOVE AND SALVAGE EXIST. CULVERT PIPE. RESET TO EXISTING ELEVATION AFTER PIPELINE IS INSTALLED AND BACKFILLED.
4. INSTALL PIPELINE 10' OFF EXISTING EDGE OF PAVEMENT UNLESS OTHERWISE NOTED.
5. ELECTRICAL EQUIPMENT YARD. SEE C-401 FOR ENLARGED PLAN.
6. SEE C-301, DETAIL 5 FOR TRENCH SECTION.
7. SEE E-501, DETAIL 2 FOR TRENCH SECTION.
8. GUARD POST (TYP. OF 5) SEE C-301, DETAIL 4.
9. RESTORE EXISTING SWALE AFTER PIPELINE INSTALLATION IS COMPLETE. SEED SWALE AND ALL GROUND DISTURBED BY CONSTRUCTION WITH COA STANDARD SPEC. (1012) NATIVE GRASS SEED MIX AND PROCEDURES.

HORIZONTAL
SCALE: 1" = 20'
VERTICAL
SCALE: 1" = 5'

20' 0 20' 40' 60' HORIZ.
5' 0 5' 10' 15' VERT.

POTHOLE TABLE

NO.	DESCRIPTION	DEPTH
1	2" DIA. ELEC.	25"

COA PROJECT NO: 586082

Design Review Committee	City Engineer Approval	Last Design Update	No. / Day / Yr.	No. / Day / Yr.

GEORGE NEMETH NEW MEXICO 12284 REGISTERED PROFESSIONAL ENGINEER
5-3-17

NO.	REVISION DESCRIPTION	DATE	BY
5			
4			
3			
2			
1			

Name
Location

KIRTLAND AIR FORCE BASE
BULK FUELS FACILITY
KAFB - 106239 CONVEYANCE LINE
CONVEYANCE LINE INSTALLATION
STA: 0+00 TO STA: 4+50

SMITH ENGINEERING COMPANY
2201 SAN PEDRO NE BLDG 4, SUITE 200
ALBUQUERQUE, NM 87110

JOB NO: 116112
DATE: MAY 3, 2017
SHEET NO: C-201 / 12 OF 27

G:\SEC-----PROJECTS\116112 KAFB Groundwater Reclam Pipeline\ENGINEERING\CADD\PLANSET\C-201- Plan and Profile.dwg May 03, 2017 - 9:22am Saved By: jamiev

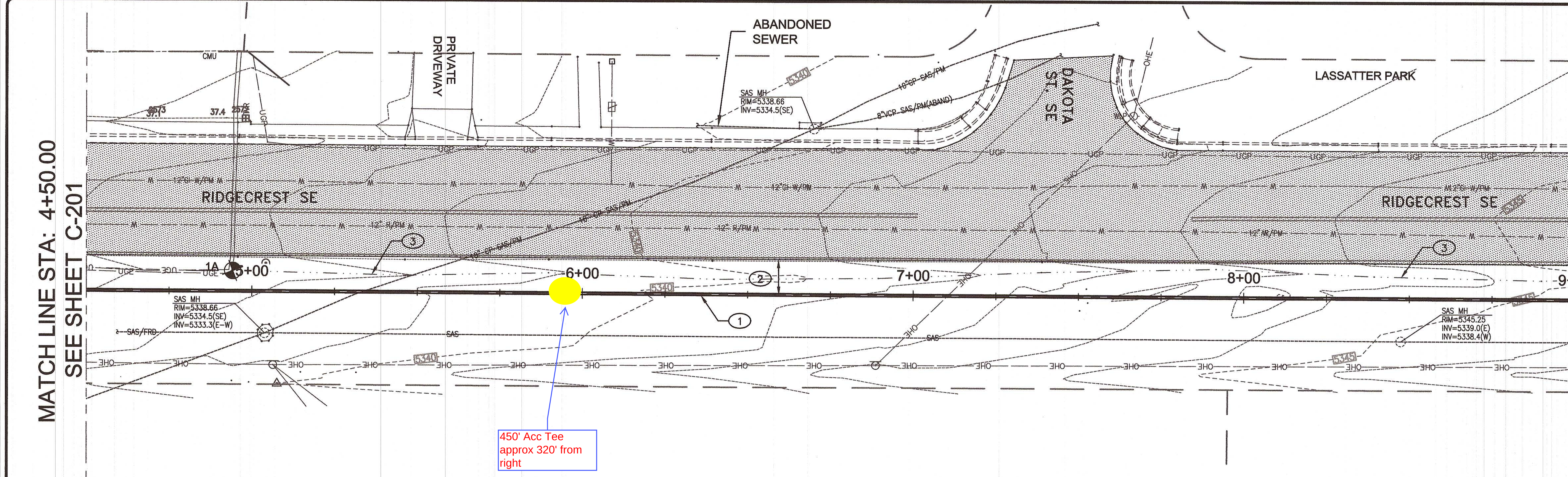

PLAN - STA: 4+50.00 TO STA: 9+00.00

SCALE: 1" = 20'

HORIZONTAL SCALE: 1" = 20'
VERTICAL SCALE: 1" = 5'

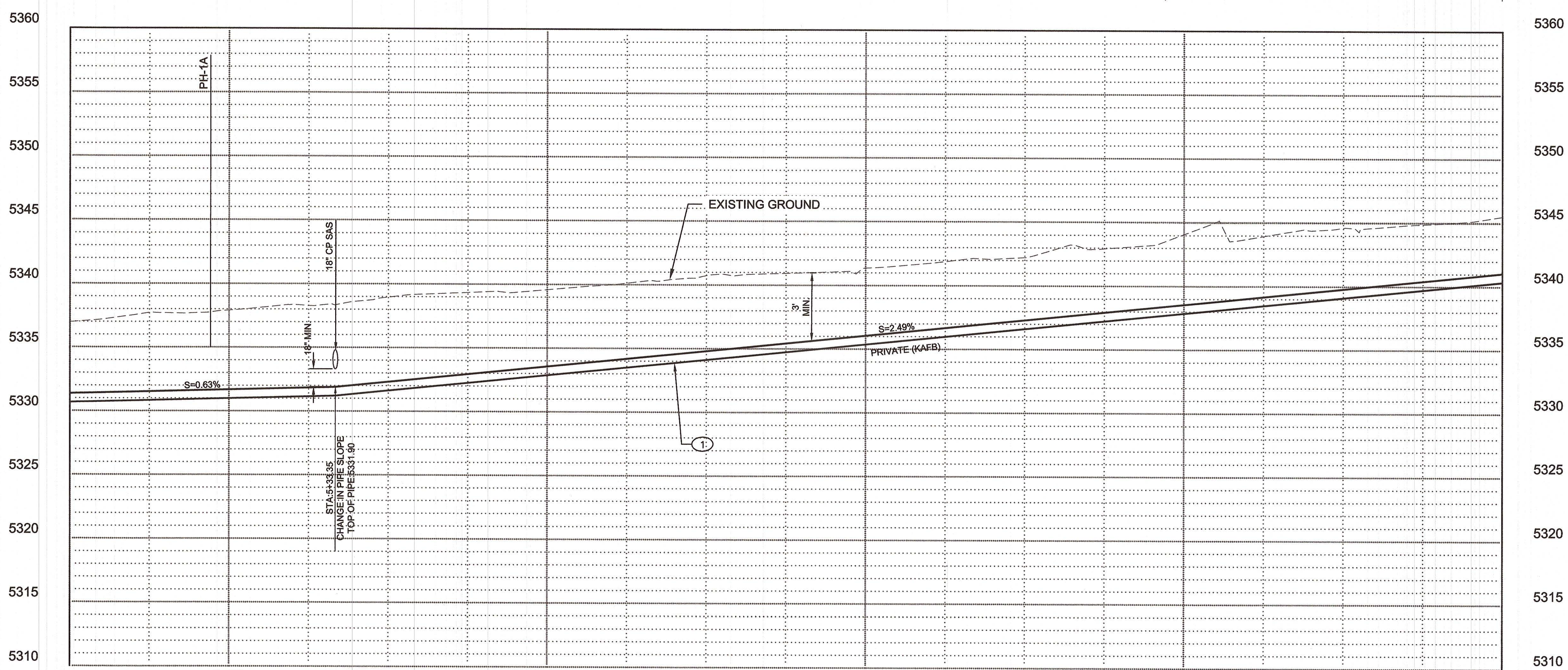

PROFILE - STA: 4+50.00 TO STA: 9+00.00

GENERAL NOTES:

1. MAINTAIN A MINIMUM OF 3 FEET OF SOIL COVER OVER INSTALLED 4"x8" DOUBLE WALL PIPE.
2. PROVIDE A MINIMUM OF 18" OF VERTICAL SEPARATION WHEN CROSSING OVER OR UNDER EXISTING UTILITIES.

KEYED NOTES:

1. NEW PRIVATE 4"x8" HDPE PIPELINE. SEE C-301, DETAIL 2 FOR TYP. TRENCH SECTION.
2. INSTALL PIPELINE 10' OFF EXISTING EDGE OF PAVEMENT. UNLESS OTHERWISE NOTED.
3. RESTORE EXISTING SWALE AFTER PIPELINE INSTALLATION IS COMPLETE. SEED SWALE AND ALL GROUND DISTURBED BY CONSTRUCTION WITH COA STANDARD SPEC. (1012) NATIVE GRASS SEED MIX AND PROCEDURES.

POTHOLE TABLE

NO.	DESCRIPTION	DEPTH
1A	2- 1.5" DIA. ELEC.	33"

COA PROJECT NO: 586082

Design Review Committee	City Engineer Approval	Mo. / Day / Yr.	Mo. / Day / Yr.

Last Design Update

GEORGE NEMETH NEW MEXICO 12284 REGISTERED PROFESSIONAL ENGINEER
5-3-17

NO.	REVISION DESCRIPTION	DATE	BY
5			
4			
3			
2			
1			

Name
Location

KIRTLAND AIR FORCE BASE
BULK FUELS FACILITY
KAFB - 106239 CONVEYANCE LINE

CONVEYANCE LINE INSTALLATION
STA: 4+50 TO STA: 9+00

SMITH ENGINEERING COMPANY
2201 SAN PEDRO NE BLDG 4, SUITE 200
ALBUQUERQUE, NM 87110

JOB NO: 116112
DATE: MAY 3, 2017
SHEET NO: C-202 / 13 OF 27

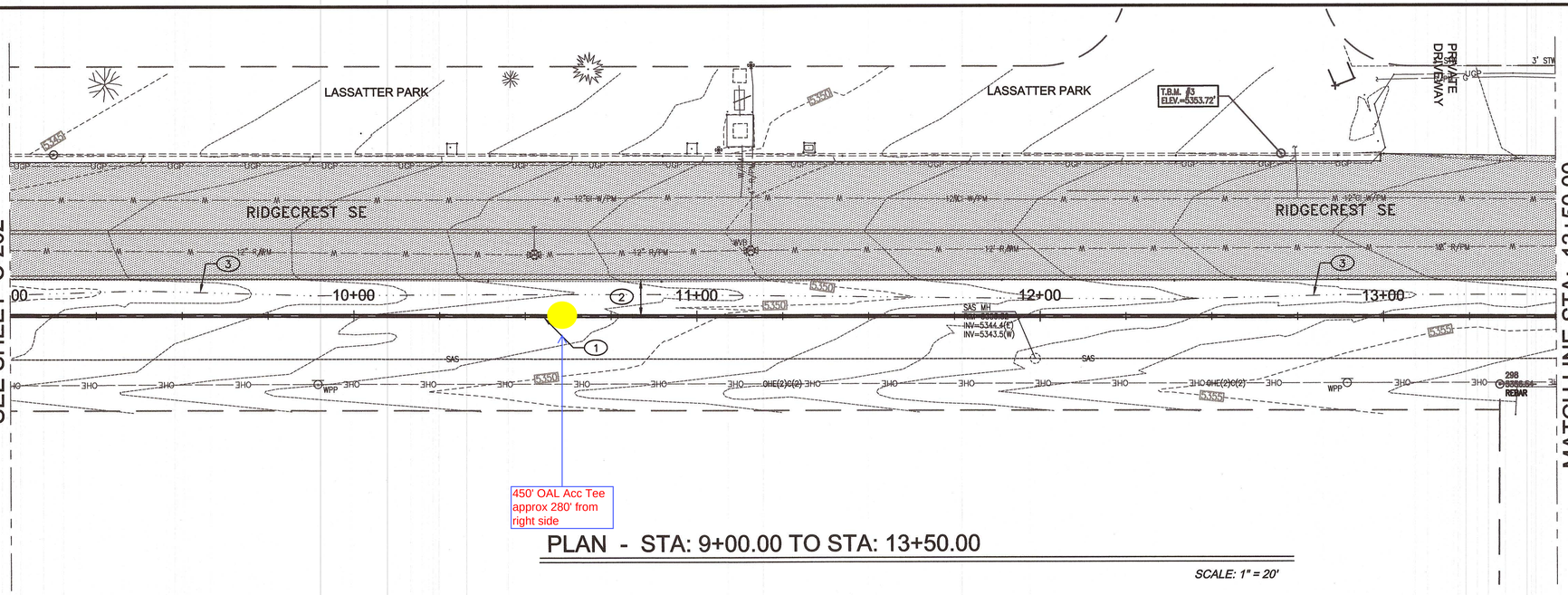

PLAN - STA: 9+00.00 TO STA: 13+50.00

SCALE: 1" = 20'

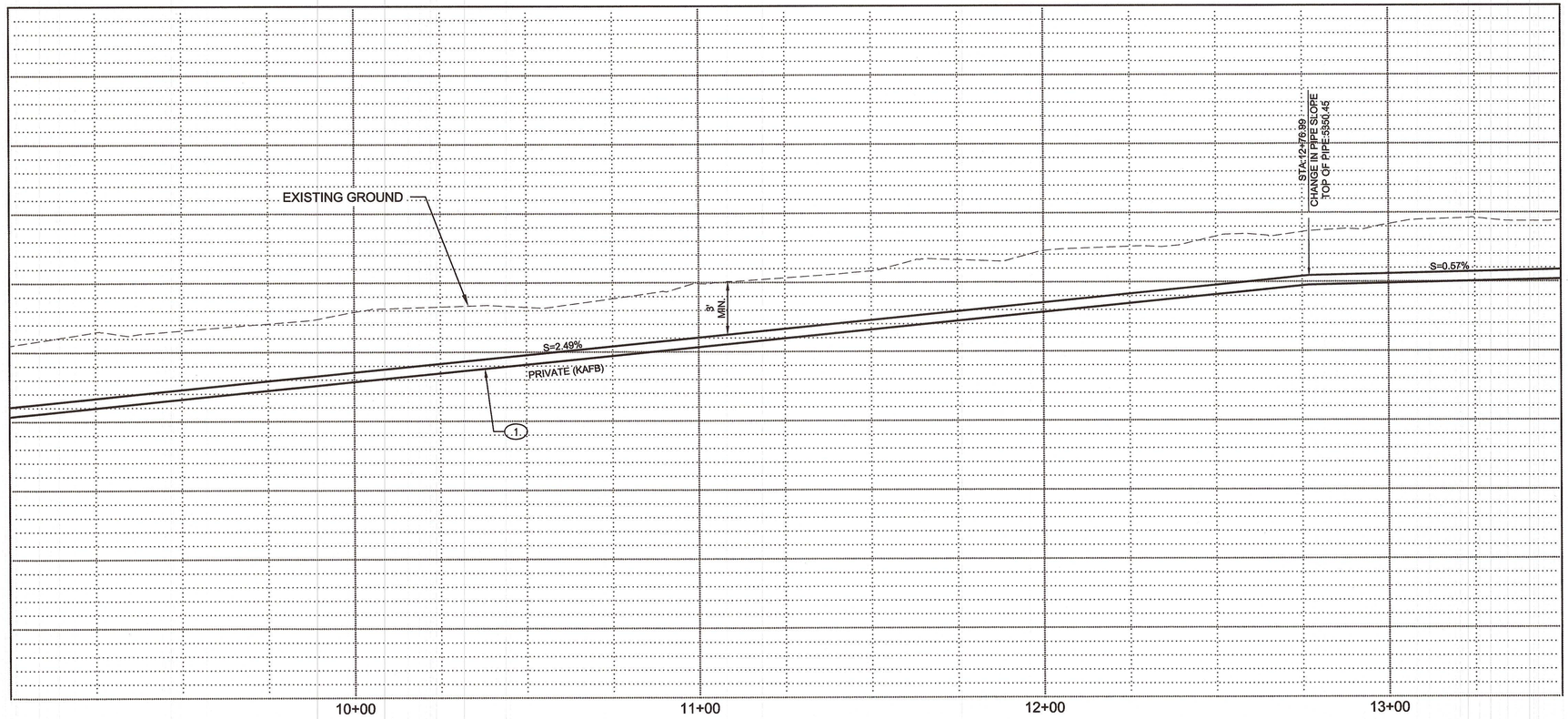

PROFILE - STA: 9+00.00 TO STA: 13+50.00

GENERAL NOTES:

1. MAINTAIN A MINIMUM OF 3 FEET OF SOIL COVER OVER INSTALLED 4"x8" DOUBLE WALL PIPE.
2. PROVIDE A MINIMUM OF 18" OF VERTICAL SEPARATION WHEN CROSSING OVER OR UNDER EXISTING UTILITIES.

KEYED NOTES:

(1) NEW PRIVATE 4"x8" HDPE PIPELINE. SEE C-301, DETAIL 2 FOR TYP. TRENCH SECTION.

(2) INSTALL PIPELINE 10' OFF EXISTING EDGE OF PAVEMENT. UNLESS OTHERWISE NOTED.

(3) RESTORE EXISTING SWALE AFTER PIPELINE INSTALLATION IS COMPLETE. SEED SWALE AND ALL GROUND DISTURBED BY CONSTRUCTION WITH COA STANDARD SPEC. (1012) NATIVE GRASS SEED MIX AND PROCEDURES.

HORIZONTAL
SCALE: 1" = 20'
VERTICAL
SCALE: 1" = 5'

20' 0 20' 40' 60' HORIZ.
5' 0 5' 10' 15' VERT.

GEORGE NEMETH
NEW MEXICO
12284
REGISTERED PROFESSIONAL ENGINEER
5-3-17

NO.	REVISION DESCRIPTION	DATE	BY
1			
2			
3			
4			
5			

Name
Location

KIRTLAND AIR FORCE BASE
BULK FUELS FACILITY
KAFB - 106239 CONVEYANCE LINE

CONVEYANCE LINE INSTALLATION
STA: 9+00 TO STA: 13+50

COA PROJECT NO: 586082

Design Review Committee	City Engineer Approval	Last Design Update	No. / Day / Yr.	No. / Day / Yr.

SMITH ENGINEERING COMPANY
2201 SAN PEDRO NE BLDG 4, SUITE 200
ALBUQUERQUE, NM 87110

JOB NO: 116112
DATE: MAY 3, 2017
SHEET NO: C-203 / 14 OF 27

Q:\SEC----PROJECTS\116112 KAFB Groundwater Reclam Pipeline\ENGINEERING\CADD\PLANSET\C-203--Plan and Profile.dwg May 03, 2017 - 9:31am Saved By: jerrep

MATCH LINE STA: 13+50.00
SEE SHEET C-203

MATCH LINE STA: 18+00.00
SEE SHEET C-205

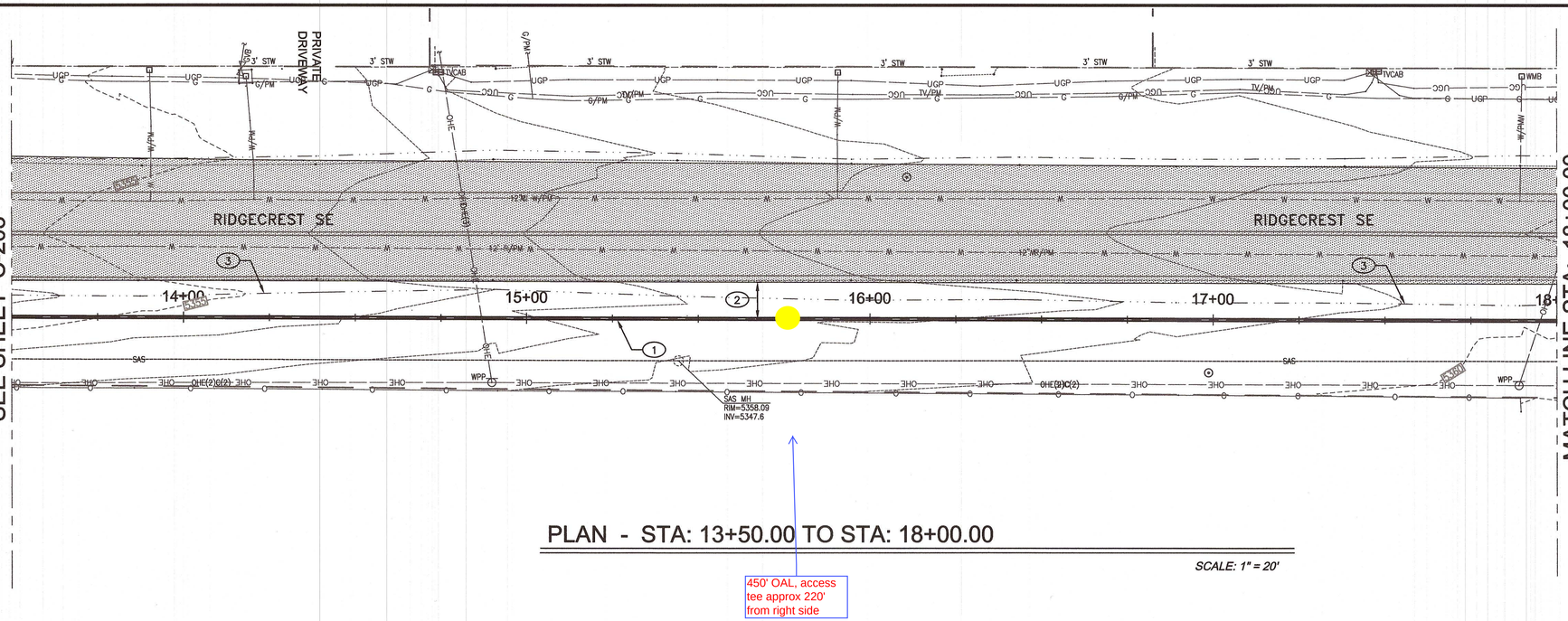

PLAN - STA: 13+50.00 TO STA: 18+00.00

SCALE: 1" = 20'

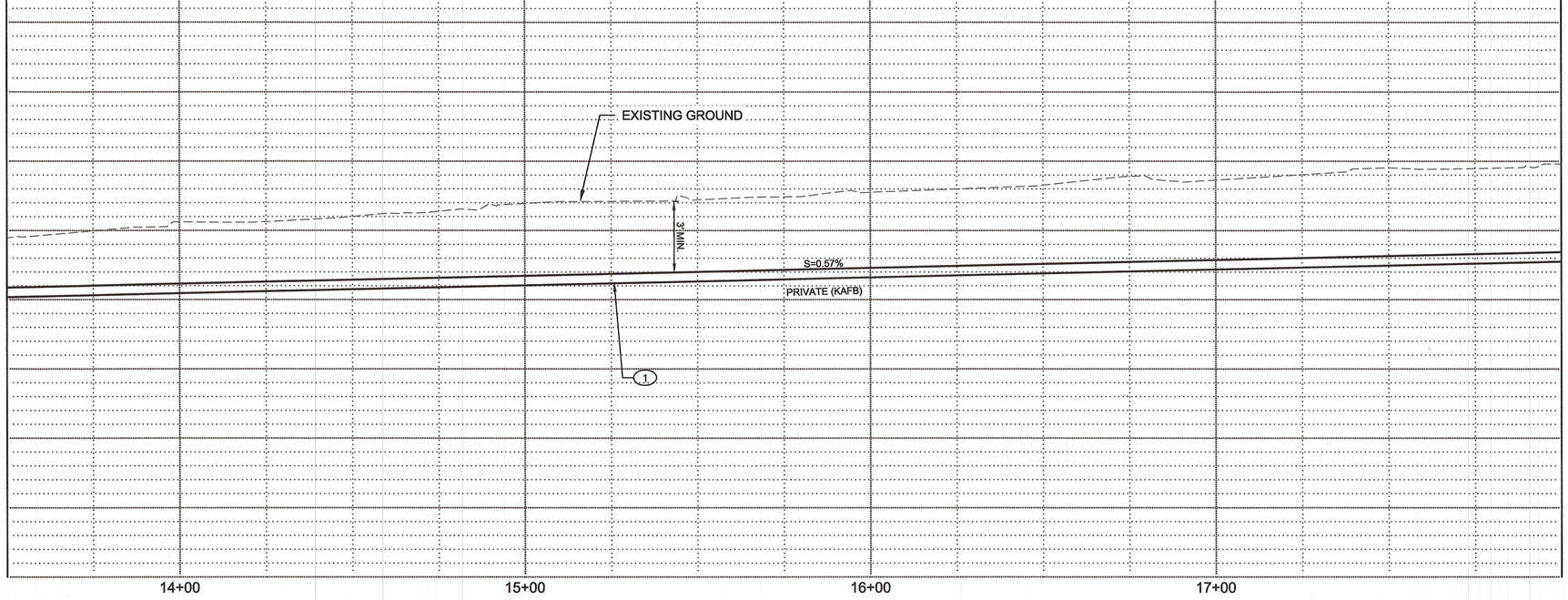

PROFILE - STA: 13+50.00 TO STA: 18+00.00

GENERAL NOTES:

1. MAINTAIN A MINIMUM OF 3 FEET OF SOIL COVER OVER INSTALLED 4"x8" DOUBLE WALL PIPE.
2. PROVIDE A MINIMUM OF 18" OF VERTICAL SEPARATION WHEN CROSSING OVER OR UNDER EXISTING UTILITIES.

KEYED NOTES:

(1) NEW PRIVATE 4"x8" HDPE PIPELINE. SEE C-301, DETAIL 2 FOR TYP. TRENCH SECTION.

(2) INSTALL PIPELINE 10' OFF EXISTING EDGE OF PAVEMENT. UNLESS OTHERWISE NOTED.

(3) RESTORE EXISTING SWALE AFTER PIPELINE INSTALLATION IS COMPLETE. SEED SWALE AND ALL GROUND DISTURBED BY CONSTRUCTION WITH COA STANDARD SPEC. (1012) NATIVE GRASS SEED MIX AND PROCEDURES.

HORIZONTAL
SCALE: 1" = 20'
VERTICAL
SCALE: 1" = 5'

20' 0 20' 40' 60' HORIZ.
5' 0 5' 10' 15' VERT.

COA PROJECT NO: 586082

Design Review Committee	City Engineer Approval	Last Design Update	No. / Day / Yr.	No. / Day / Yr.

GEORGE NEMETH
NEW MEXICO
12284
REGISTERED PROFESSIONAL ENGINEER
5-3-17

NO.	REVISION DESCRIPTION	DATE	BY
5			
4			
3			
2			
1			

Name
Location

KIRTLAND AIR FORCE BASE
BULK FUELS FACILITY
KAFB - 106239 CONVEYANCE LINE

CONVEYANCE LINE INSTALLATION
STA: 13+50 TO STA: 18+00

SMITH ENGINEERING COMPANY
2201 SAN PEDRO NE BLDG 4, SUITE 200
ALBUQUERQUE, NM 87110

JOB NO: 116112
DATE: MAY 3, 2017
SHEET NO: C-204 / 15 OF 27

Q:\SEC-----PROJECTS\116112 KAFB Groundwater Reclam Pipeline\ENGINEERING\CADD\PLANSET\C-204-plan and Profile.dwg May 03, 2017 - 9:35am Saved By: jerrep

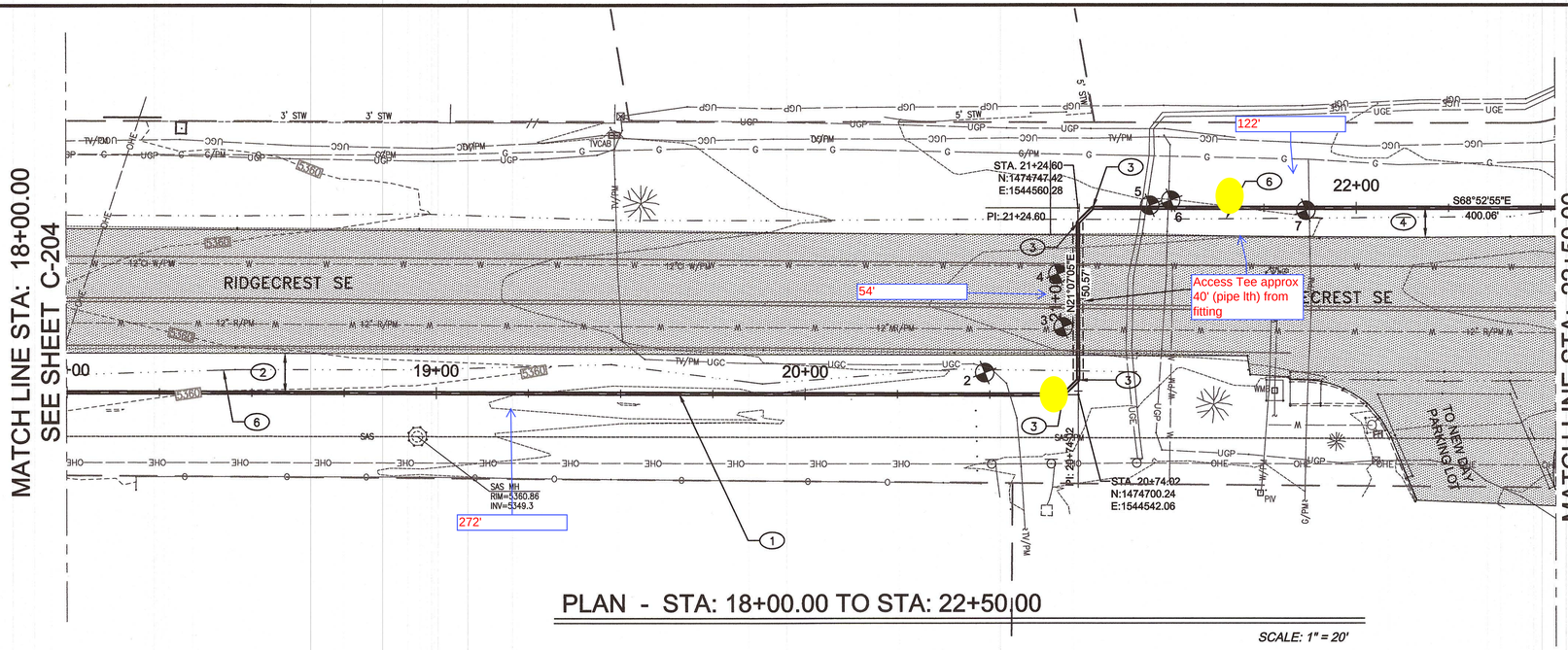

PLAN - STA: 18+00.00 TO STA: 22+50.00

SCALE: 1" = 20'

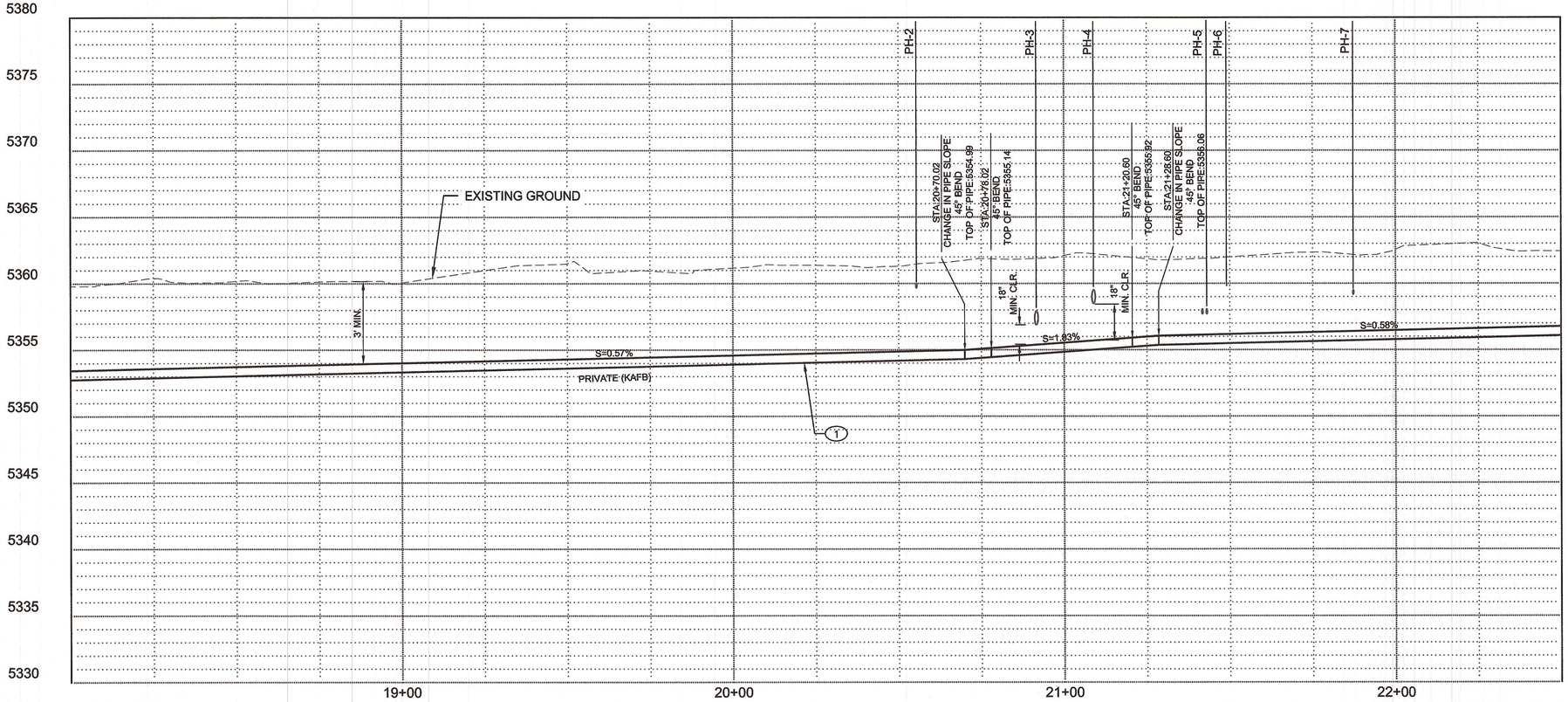

PROFILE - STA: 18+00.00 TO STA: 22+50.00

GENERAL NOTES:

1. MAINTAIN A MINIMUM OF 3 FEET OF SOIL COVER OVER INSTALLED 4"x8" DOUBLE WALL PIPE.
2. PROVIDE A MINIMUM OF 18" OF VERTICAL SEPARATION WHEN CROSSING OVER OR UNDER EXISTING UTILITIES.

KEYED NOTES:

1. NEW PRIVATE 4"x8" HDPE PIPELINE. SEE C-301, DETAIL 2 FOR TYP. TRENCH SECTION.
2. INSTALL PIPELINE 10' OFF EXISTING EDGE OF PAVEMENT. UNLESS OTHERWISE NOTED.
3. 45° BEND
4. INSTALL PIPELINE 8' OFF EXISTING EDGE OF PAVEMENT. UNLESS OTHERWISE NOTED.
5. HORIZONTAL DIRECTIONAL DRILL FROM STA. 20+74.02 TO STA. 21+24.60. EXISTING ASPHALT TO REMAIN UNDISTURBED.
6. RESTORE EXISTING SWALE AFTER PIPELINE INSTALLATION IS COMPLETE. SEED SWALE AND ALL GROUND DISTURBED BY CONSTRUCTION WITH COA STANDARD SPEC. (1012) NATIVE GRASS SEED MIX AND PROCEDURES.

HORIZONTAL
SCALE: 1" = 20'
VERTICAL
SCALE: 1" = 5'

20' 0 20' 40' 60' HORIZ.
5' 0 5' 10' 15' VERT.

POTHOLE TABLE

NO.	DESCRIPTION	DEPTH
2	1.5" DIA. HDPE CATV	17"
3	12" DIA. PVC WATER	50"
4	12" DIA. CI WATER	32"
5	1" DIA. ELEC	48"
6	1" DIA. TEL	28"
7	1.5" DIA. HDPE GAS	31"

COA PROJECT NO: 586082

GEORGE NEMETH NEW MEXICO 12284 REGISTERED PROFESSIONAL ENGINEER
5-3-17

NO.	REVISION DESCRIPTION	DATE	BY
5			
4			
3			
2			
1			

Name
Location

KIRTLAND AIR FORCE BASE
BULK FUELS FACILITY
KAFB - 106239 CONVEYANCE LINE

CONVEYANCE LINE INSTALLATION
STA: 18+00 TO STA: 22+50

Design Review Committee | City Engineer Approval | Last Design Update | No. / Day / Yr. | No. / Day / Yr.

SMITH ENGINEERING COMPANY
2201 SAN PEDRONE BLDG 4, SUITE 200
ALBUQUERQUE, NM 87110

JOB NO: 116112
DATE: MAY 3, 2017
SHEET NO: C-205 / 16 OF 27

Q:\SEC-----PROJECTS\116112 KAFB Groundwater Reclam Pipeline\ENGINEERING\CADD\PLANSET\C-205-Plan and Profile.dwg May 03, 2017 - 9:38am Saved By: jarriep

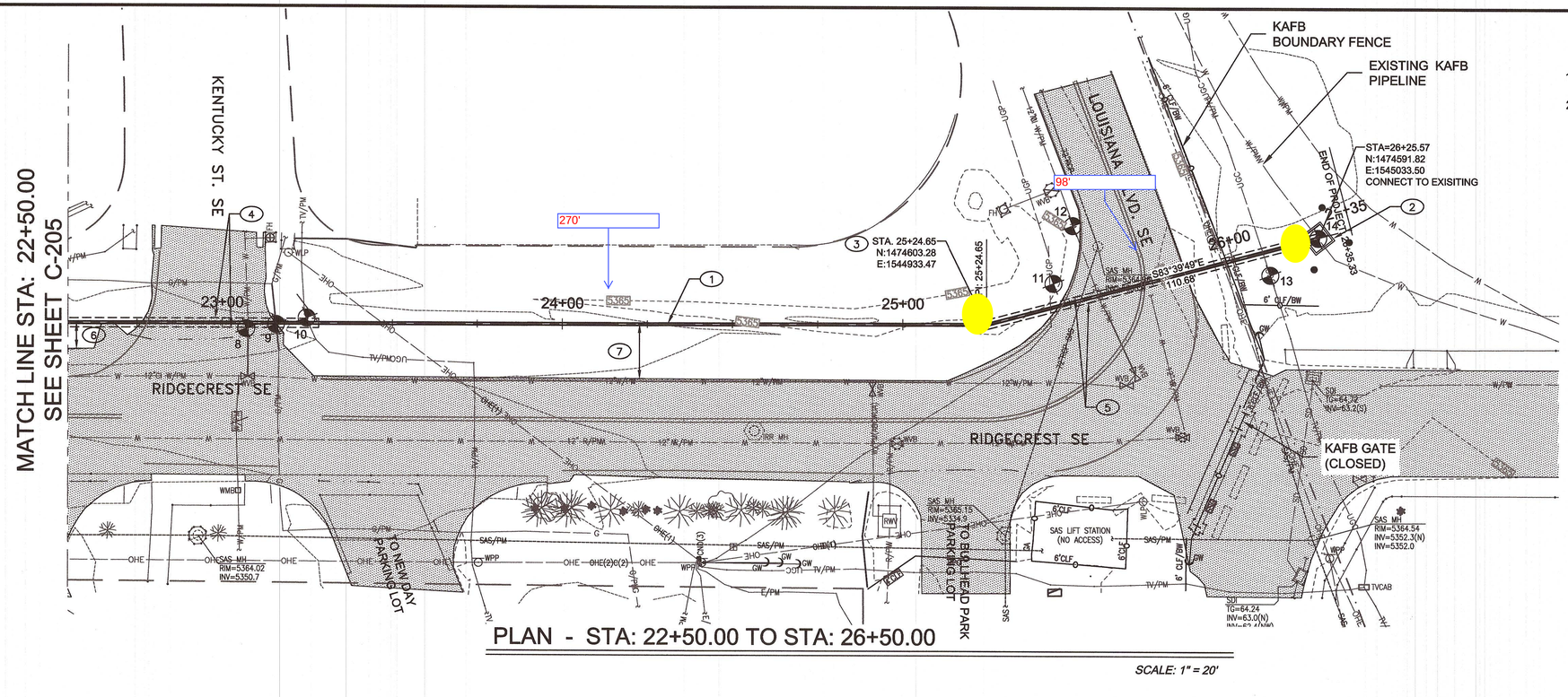

PLAN - STA: 22+50.00 TO STA: 26+50.00

SCALE: 1" = 20'

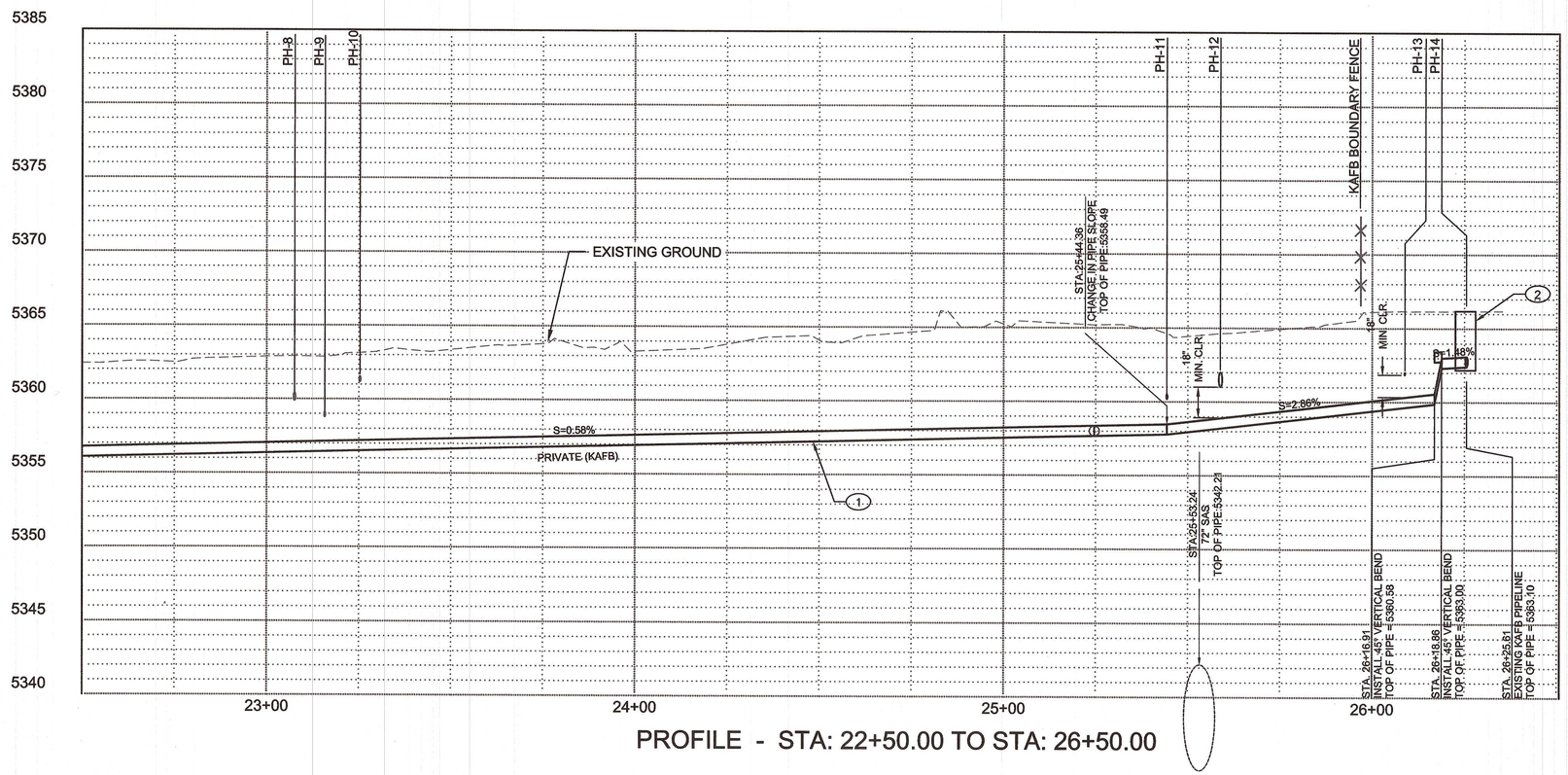

PROFILE - STA: 22+50.00 TO STA: 26+50.00

GENERAL NOTES:

1. MAINTAIN A MINIMUM OF 3 FEET OF SOIL COVER OVER INSTALLED 4"x8" DOUBLE WALL PIPE.
2. PROVIDE A MINIMUM OF 18" OF VERTICAL SEPARATION WHEN CROSSING OVER OR UNDER EXISTING UTILITIES.

KEYED NOTES:

1. NEW PRIVATE 4"x8" HDPE PIPELINE. SEE C-301, DETAIL 2 FOR TYP. TRENCH SECTION
2. NEW REINFORCED PRECAST CONCRETE JUNCTION VAULT W/ - 4 GUARD POSTS. SEE C-301 DETAIL 3.
3. 15° BEND
4. HORIZONTAL DIRECTIONAL DRILL FROM STA. 22+54.19 TO STA. 23+28.32. EXISTING ASPHALT TO REMAIN UNDISTURBED.
5. HORIZONTAL DIRECTIONAL DRILL FROM STA. 25+ 24.65 TO STA. 26+25.57. EXISTING ASPHALT TO REMAIN UNDISTURBED.
6. INSTALL PIPELINE 8' OFF EXISTING EDGE OF PAVEMENT. UNLESS OTHERWISE NOTED.
7. INSTALL PIPELINE 16' OFF EXISTING EDGE OF PAVEMENT. UNLESS OTHERWISE NOTED.

POTHOLE TABLE

NO.	DESCRIPTION	DEPTH
8	6" DIA PVC WL	29"
9	2" DIA. STEEL GAS	44"
10	2.5" CATV	21"
11	4" DIA. HDPE FIBER OPTIC	49"
12	12" DIA. DI WATER	34"
13	2 - 2" COMM.	48" & 50"
14	8" WATER	37"

DEPTH IS TO TOP OF UTILITY.

GEORGE NEMETH NEW MEXICO 12284 REGISTERED PROFESSIONAL ENGINEER
5-3-17

NO.	DESCRIPTION	DATE	BY
1			
2			
3			
4			
5			

Name
Location

KIRTLAND AIR FORCE BASE
BULK FUELS FACILITY
KAFB - 106239 CONVEYANCE LINE

CONVEYANCE LINE INSTALLATION
STA: 22+50 TO STA: 26+50

SMITH ENGINEERING COMPANY
2201 SAN PEDRO NE BLDG 4, SUITE 200
ALBUQUERQUE, NM 87110

COA PROJECT NO: 586082

Design Review Committee	City Engineer Approval	Last Design Update	No. / Day / Yr.	No. / Day / Yr.

JOB NO: 116112
DATE: MAY 3, 2017
SHEET NO: C-206 / 17 OF 27

Q:\SEC----PROJECTS\116112 KAFB Groundwater Reclam Pipeline\ENGINEERING\CADD\PLANSET\C-206-Plan and Profile.dwg May 03, 2017 - 8:41am Saved By: jamier

Access Tee

Access Port with Flange
Part Number + Size Code

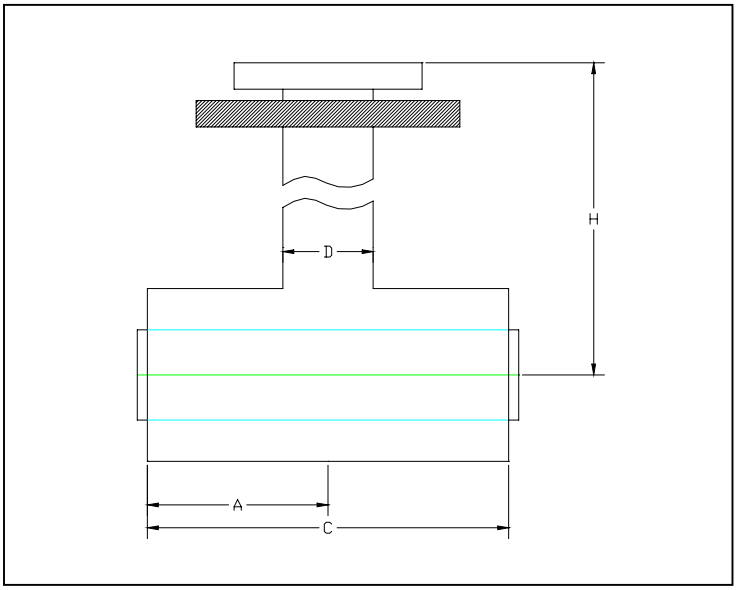

SDR RATING	11 x 11	11 x 17	11 x 26	11 x 32.5	17 x 17	17 x 26	17 x 32.5	26 x 26	26 x 32.5	32 x32
PART # Number	4916	4917			4918					

SIZE	Size code	A	C	D	H
1” x 4”	401	6.0”	12.0”	4.5”	Varies
2” x 6” 3” x 6”	530 531	9.0”	18.0”	4.5”	Varies
3” x 8” 4” x 8”	582 583	9.0”	18.0”	4.5”	Varies
6” x 10”	627	9.0”	18.0”	4.5”	Varies
8” x 12”	660	9.0”	18.0”	4.5”	Varies

Asahi America Inc. 35 Green St Malden Ma 02148 Office 1-781-321-5409 Fax 1-781-321-4421
Email: asahi@asahi-america.com
Internet: www.asahi-america.com

Leak Detection/Location Systems

PAL-AT® • LIQUIDWATCH® • FLUIDWATCH®

PermAlert™

Division of Perma-Pipe, Inc.

PAL-AT detects and locates leaks for

~~Data Centers~~, Jet Fuel Systems, Tank Farms, ~~Clean Rooms and Other Applications~~

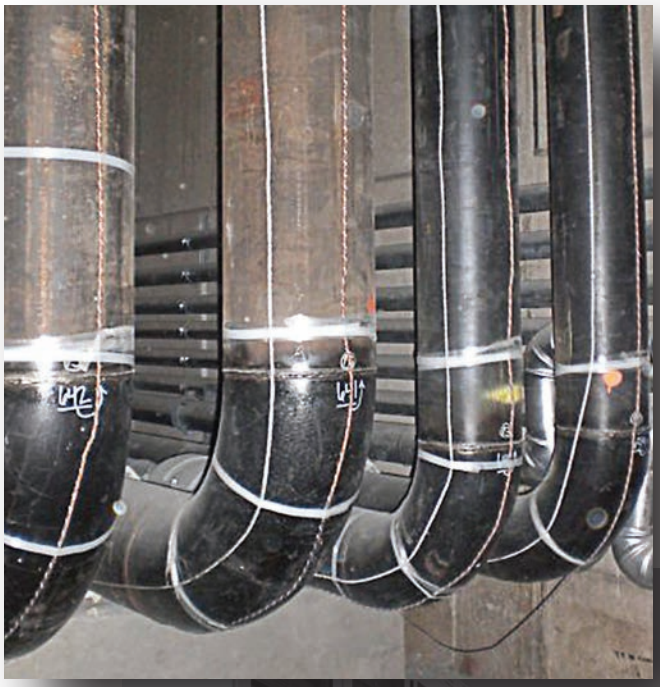

Why PAL-AT®? *Control the damage and you control costs*

In most monitoring situations, just knowing that you have a liquid leak is not good enough. You need to know: Where is it? When did it occur? Where did it start? Is there more than one leak? You need accurate information and you need it now!

The sooner you pinpoint the where and when, the sooner you can begin to control and minimize damage to your facility, personnel, the environment and to your balance sheet.

With PAL-AT® you can have this type of information instantly. PAL-AT is a sophisticated micro-processor system with multi-sensing and remote monitoring capabilities. Its advanced technology provides dependable around the clock surveillance of all monitored areas. And it's the first system to actually help manage your risks and associated costs.

PAL-AT® ADVANTAGES

Wet Cable Start Up and Multiple Leak Location and Multilevel Alarms: Because the PAL-AT system uses data specific to the condition of the installed sensor cable, the system's software can incorporate short lengths of wet cable in a reference map. This allows continous monitoring, even though the cable may be wet due to liquid entering the monitored area during installation, condensation at start up or small leaks in the system. After moisture is detected, a "new" reference map is made automatically to continue to provide leak surveillance. Changes in the cable in relation to the new reference map from additional sections of wet cable (additional or growing leak), will cause PAL-AT to re-alarm. The alarm queue stores the information for retrieval by the BMS, PALCOM® 10 or by the operator at the panel.

Versatility: PAL-AT models can monitor up to four separate sensing zones each having up to 7,500 ft (2300 m) of sensor cable. Each sensor cable can be integrated with liquid probes and float switches for the monitoring of underfloor areas, sumps, trays, single and/or double-wall piping and tanks. The PAL-AT system permits cost effective installation of complex systems, with its ability to integrate different cable types and probes that can monitor for leaks in multiple piping networks, tanks, subfloors and other sensitive work areas. Hydrocarbon sensing cables can be direct buried for monitoring pipelines and aboveground storage tanks.

Low Power Installation: For solar and/or battery applications, 24 VDC connection and reduced power consumption is available to reduce power supply initial costs. A four sensor circuit unit is available to effectively monitor pipelines.

Communications: can be via Ethernet, RS-485, RS-232, or other means, as desired by the user.

System Archives: Date and time ledgers of all significant operating events, including power failure, cable leak/short/break/fault and probe activation are stored in permanent memory. The stored documentation is very helpful to the system's operator to establish if clean-up, repairs and other remedial efforts were promptly performed and in compliance with local codes.

Security System: PAL-AT has a multi-level security password system that requires a security code before accepting commands for advanced system functions. This allows access to control functions, based on the operator's responsibilities.

UL Listed, FM Approved, CE compliance and EPA Third Party Tested: The optional Zener Barrier Panel is UL (US and Canada), FM, ATEX, IECEx listed to provide connections for intrinsically safe sensor circuits for use Class I, Division 1, Groups C and D or Zone 0, Group IIB hazardous locations.

Other Features:

- 2 line X 40 character display, showing status, date and time
- Keypad entry of system data and alarm acknowledgement
- RS232 and RS485 serial ports
- Ethernet connection and Modbus TCP/IP
- Modbus RTU
- Remote trouble shooting and control using PALCOM® 10 software
- Battery back-up of date and time functions
- Programmable Relays: SPDT, 10A, 250 VAC
- Automatic restart when power is restored after power loss
- Available in other languages

FM APPROVED
c UL us LISTED
IEC IECEx

Leak Detection *At Work*

PermAlert leak detection systems provide protection for the following applications:

Wet Benches
Dry Storage
Pharmaceutical Manufacturing
Process Control Rooms
File Storage Areas
Sprinkler System Monitoring
Chemical Storage Areas
Environmental Chambers
Microfilm Storage Rooms
Military Mothballing Facilities
Cable Trays and Tunnels
Microwave Relay Stations
Museum Storage
Radioactive Liquid Storage
Landfill Leachate Piping Systems
Hazardous Chemical Storage
Mining Industry
POP Sites

Double-Wall Piping
Buried Chilled/Hot Water Lines
Buried Steam Lines
Hospital Operating Rooms
Ground Water Monitoring
Manholes, Electrical/Mechanical
Process Drain Lines
Solvent Leak Detection
Acid Leak Detection
Electrical Vaults
Laboratories
Underground Storage Tanks
Data Centers
Airport Hydrant Systems
Semiconductor Facilities
Computer Rooms
Tank Farms, Above/Below Grade
Web Hosting Facilities

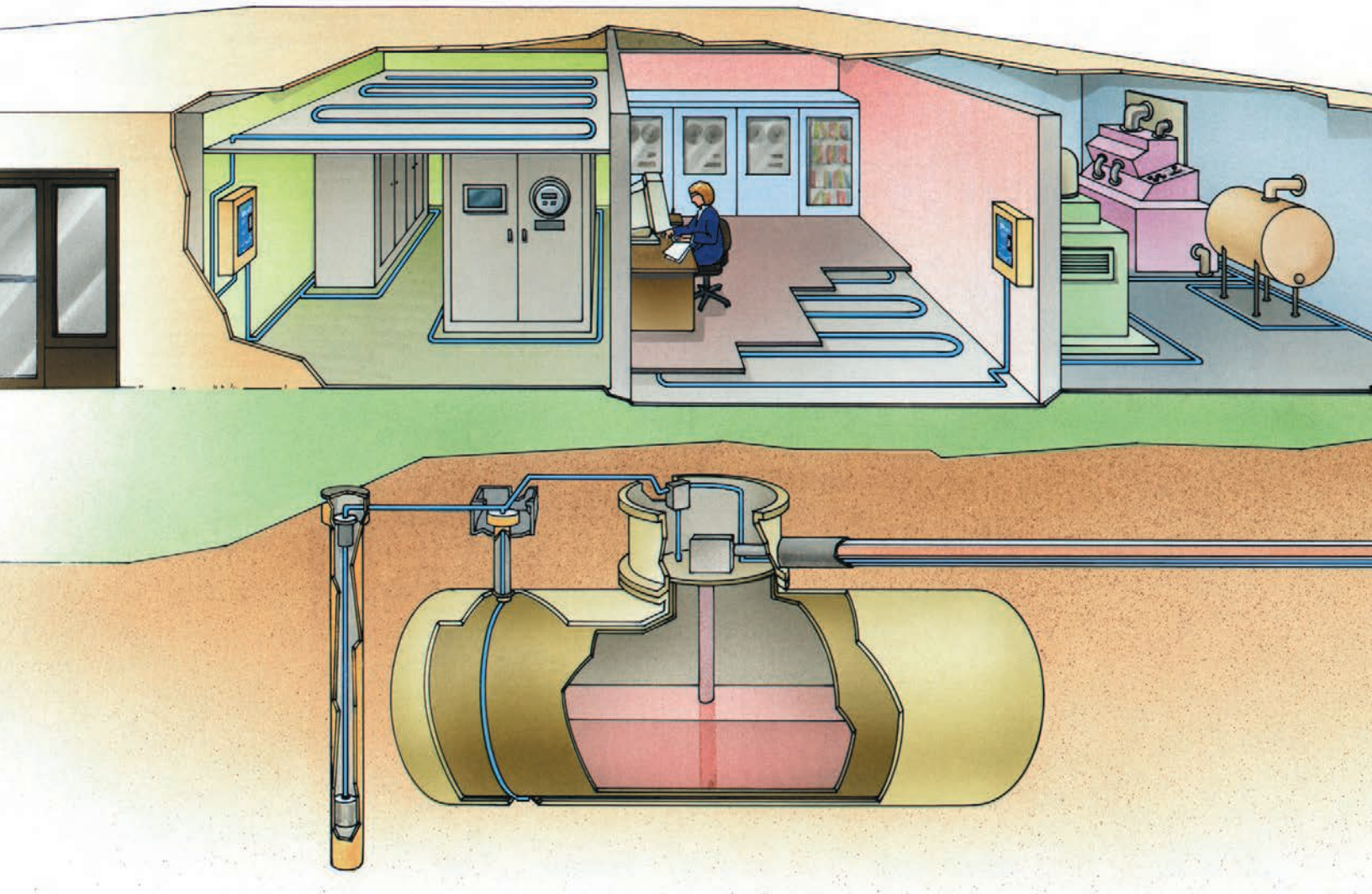

Centralized Operations with *PALCOM® 10 Network Software*

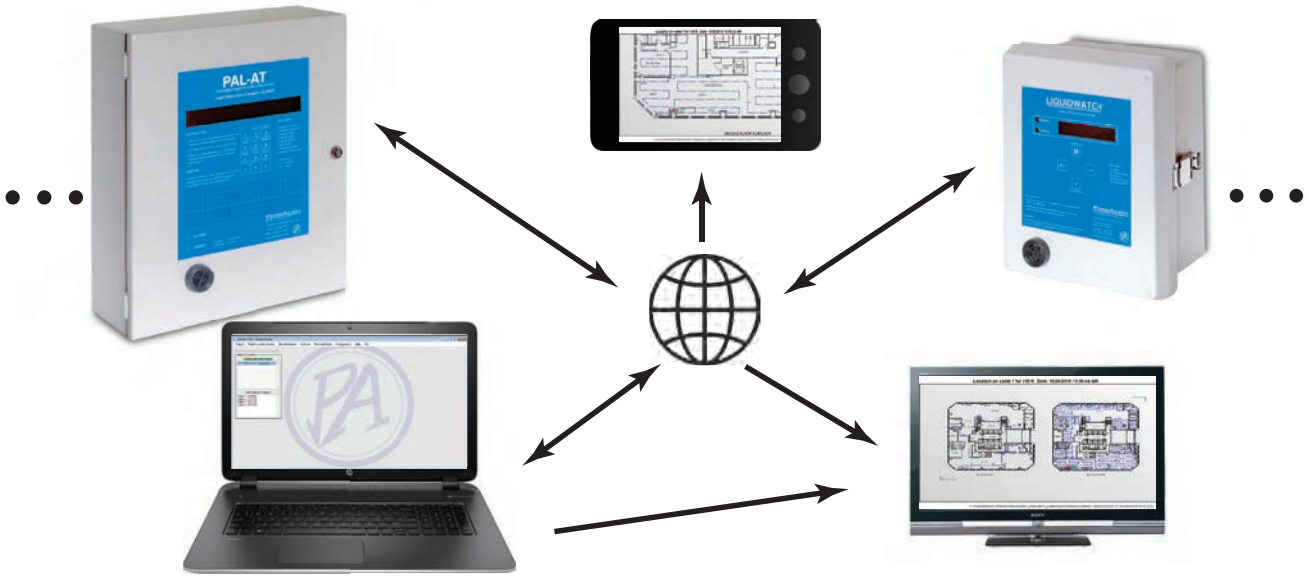

PALCOM® 10 w/GLS is an interactive remote monitoring software package for Windows®. It is designed to remotely monitor up to 254 PAL-AT® cable leak detection systems and LiquidWatch® probe leak detection systems. A computer is connected to the systems via Ethernet, RS-485 or RS-232. The software is supplied with two auxiliary programs, GLSViewer and GraphViewer.

Graphic Locator System (GLS) drawings are displayed with **GLSViewer**. A GLS drawing shows a leak detection installation and a flashing icon identifies the location of a problem on a sensor cable or probe. This enables an operator to locate the problem quickly without having to locate a hardcopy site reference drawing.

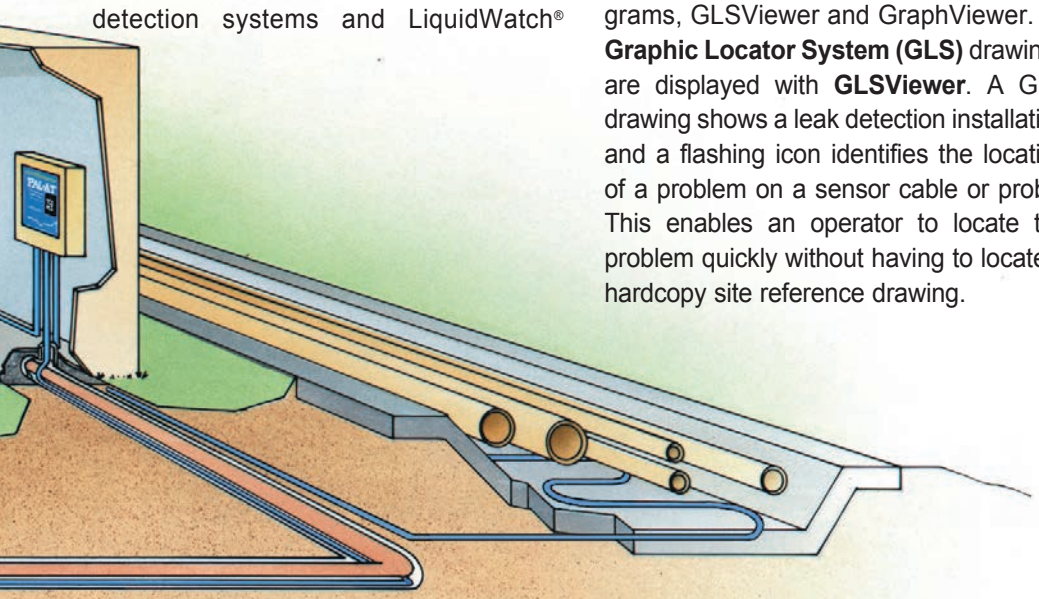

The **Graph** feature is only used with PAL-AT systems. PALCOM captures and plots PAL-AT "map" data. The graphs are opened automatically in **GraphViewer**. The graphs are TDR (time-domain reflectometry) traces and can be interpreted by trained personnel who are familiar with characteristics of the PAL-AT system. This documentation can be used for compliance records and troubleshooting.

The **Automonitor** function continuously checks all leak detection systems and updates the status of the systems 24/7. The status of each system and each cable is displayed. PALCOM automatically keeps a record of all archived events, which can be reviewed or printed.

SMS email and text messages are sent when an event is detected. An email message includes several images of the GLS drawing that zoom in to the event location. This provides 24/7 notification of leak detection events to any location.

Remote Keypad enables an operator to view the LCD display information and operate all functions of a system by using the computer keyboard instead of being at the alarm panel.

PAL-AT® *Sensor Cable*

The PAL-AT sensing string can be made up of any combination of probes and sensor cables. Sensor cables and probes are designed to serve a wide variety of applications.

With PAL-AT's sensor technology, the system is not subject to false alarms caused by dust or other non-liquid conductive materials that may come in contact with the cable or from casually stepping on the cable. Several sensor cables are capable of detecting and locating both water-based and hydrocarbon liquids and others will detect only hydrocarbons, ignoring water. In some applications, the sensor cable can be dried and reused after a leak is repaired and clean up has been completed. The state-of-the-art "Gold cables" have no exposed metal and are designed for corrosive chemical applications. The length of sensor cable that must be "wetted" with a specific liquid, before an alarm condition occurs, is referred to as the cable sensitivity. Sensitivity is a function of sensor string length and PAL-AT monitoring panel settings.

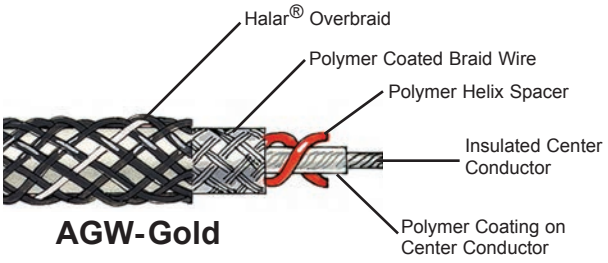

AGW-Gold is a quick drying cable, that is chemically resistant and designed to detect highly corrosive liquid leaks, such as acids, bases and solvents. Typical applications are secondary containment pipes, computer rooms, sub-floors of clean rooms and high temperature applications.

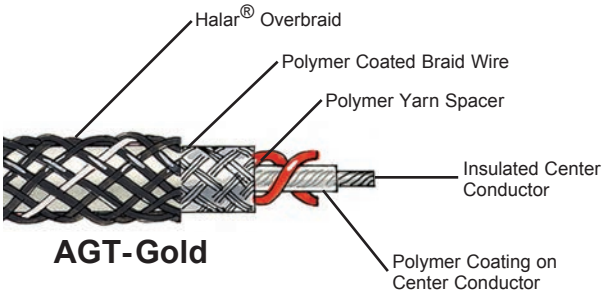

AGT-Gold is a wicking cable specially designed for the detection of accumulations at a shallow depth of 1/16 inch of liquid. The cable is chemically resistant and designed to detect water, highly corrosive acid, base and solvent leaks. Typical applications are in computer rooms (attached to single wall piping), clean room sub-floors, aboveground single wall pipes and equipment applications. AGT-Gold is suitable for stable, humidity-controlled rooms. This cable requires more drying time than AGW-Gold.

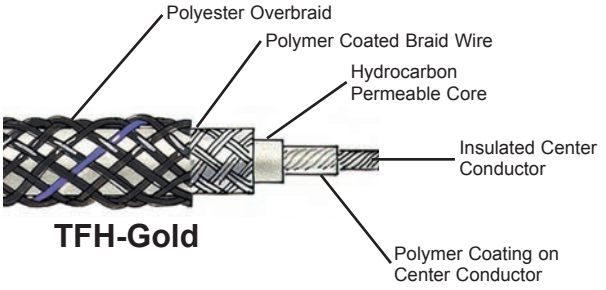

TFH-Gold is a wicking cable specifically designed to detect only hydrocarbons. This cable may be direct buried in slotted PVC screen pipe to a maximum depth of 20 feet (6m) to locate fuel leaks while ignoring the presence of water. This cable is ideal for monitoring single-wall pipes and tanks.

In addition to sensor cable, PermAlert provides jumper cables. Jumper cable is used to connect the monitoring unit and sensing string or link sensing strings between monitored areas.

PERMALERT *Probes*

Probes monitor for leaks at specific locations. PermAlert offers several probes to monitor for water-based liquids, chemicals and/or hydrocarbons. They can be connected in series to the sensing string for PAL-AT or wired to the LiquidWatch System.

PHLR Probe will only detect hydrocarbon liquid and is typically installed in the interstitial space of double-wall tanks, sumps, double contained piping or other low points for detecting hydrocarbon leakage.

PWS Probes will detect water-based liquids.

PSTV and PTHL Probes are float switches, designed for installation in a 2" stand pipe on double-wall tanks. They allow monitoring of the interstitial space of a double-wall tank or high/low level of the product in the tank. Special materials are available for specific liquids for chemical compatability.

PFS Probe is a float switch designed to monitor liquids in manholes, sumps, etc. It will detect water-based or hydrocarbon liquids. Special materials are available for specific liquids for chemical compatability.

Speciality Probes: With the use of the PA10 (LiquidWatch) and the PT10 (PAL-AT) our systems can monitor probes that are specially required for given applications providing for greater flexibility in meeting customers requirements.

PT10 Probe Integrator and the PA10 Adapter monitor any normally-closed or normally-open switch that indicates an alarm condition. The switches can be temperature, pressure or other sensors, as required. Typical examples are reed type float switches in double contained piping and brine monitoring switches in double-wall tanks.

How does PAL-AT work?

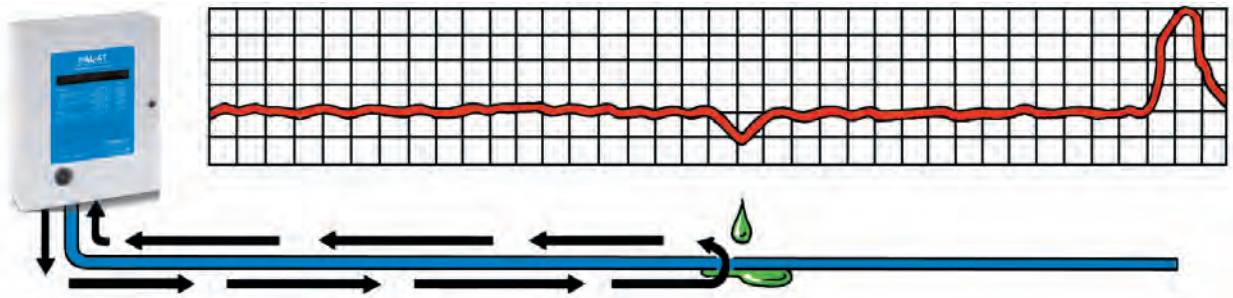

PAL-AT operates similar to radar by sending out safe energy pulses, two thousand times each second on the sensor cable. The reflections (echoes), generated by these energy pulses are specific to the condition of the installed sensor cable. These reflections are stored in memory as a reference map. The alarm unit continuously measures the cable reflections and compares them with the values of the reference map stored in memory. Liquids in sufficient quantities to "wet" the sensor cable will alter the cable's impedance at the leak location. This alteration of impedance will change the energy reflected from the cable at this location. The monitoring unit recognizes the change in energy reflection from the wet portion of cable and enters into alarm. A new reference map with the change is stored automatically allowing monitoring to continue. The alarm queue stores the alarm messages and must be cleared by the operator. The system also detects and locates breaks, shorts and probe activations. This allows for fast response to the location of the alarm for repairs or remedial action.

The PAL-AT locates the point of origin of a leak or cable fault within ± 0.3% of the sensor string length or ± 6 feet, whichever is greater for water based liquids and ± 0.6% of the sensor string or ± 6 feet for hydrocarbon liquids. In the alarm mode, the unit activates output relays to facilitate the control of valves or remote alarms, while providing output to the BMS via Modbus, PALCOM 10, audio and visual alarms, including a digital display of the distance to the leak origin at the panel.

LiquidWatch® *Leak Detection Systems*

PRODUCT FEATURES

- Sensing of organic liquids (hydrocarbons and solvents) or water within seconds of contact
- Vapor and gases are ignored
- Remote monitoring capability with an RS-232 interface and relays
- UL, cUL Listed with Class I, Division 1, Groups C & D sensor circuits optional
- NEMA 4X Enclosure
- Up to 64 probes and 16 programmable alarm relays available
- Optional Modbus RTU Available

Specifications

Part 1 - System

1.1 The Discrete Point Monitoring System (D.P.M.S.) shall consist of a monitoring unit, probe module, relay module and probes. The D.P.M.S. shall be capable of detecting liquids in contact with a sensor probe connected to the monitoring panel. It shall not detect vapors or gases.

1.2 When liquid is detected, an audible alarm shall sound and an LCD readout of the probe activation shall be visible on the front display. The D.P.M.S. system shall alarm within one (1) minute or less after contact with liquid, depending on the liquid.

1.3 The system supplier shall have at least ten (10) years experience in the manufacturing of leak detection systems.

Part 2 - Components

2.1 The standard sensors shall be probes. The PHLR hydrocarbon probe shall be less than 1⅛" in diameter and less than 2" long for use with organic liquids. The hydrocarbon probe shall reset after the elements are cleaned and/or replaced.The PWS conductivity probe shall be of solid state construction and corrosion resistant housing. The conductivity probes shall reset after liquids are removed from the probe. Lead wires shall consist of 24 AWG shielded conductor with color coded insulation.

2.2 The use of other probes such as float switches, ground water monitoring or other devices shall use a dry contact to indicate an alarm condition. Float switch probes shall be resettable after fluids are removed and shall use material of construction suitable for liquids to be sensed for corrosion resistance.

2.3 The monitoring panel shall be modular in design and accept up to sixty-four (64) probes and sixteen (16) programmable alarm relays. The LCD shall provide indication of the system's status. When a probe alarms, the type of alarm (active, short or break) and the probe number shall be indicated. Using the membrane keypad the operator shall be able to program the system and review the history archive. An RS-232 interface port shall be available for use in remote monitoring of the unit using ASCII commands. A Modbus RTU interface shall be available for interface to a BMS system. The enclosure shall be NEMA 4X.

Part 3 - Safety

3.1 The unit must be UL Listed and provide connections for intrinsically safe sensor circuits for use in Class I, Division 1, Groups C & D hazardous locations (where required).

LiquidWatch® Monitoring Units have been engineered to meet a broad range of customer needs. The system can be configured with up to sixty-four (64) probes and sixteen (16) alarm relays. The modular design allows for meeting current needs while allowing for future expansion of the system.

LiquidWatch employs a two (2) line, twenty (20) character backlit LCD with a membrane keypad for operator interface. The probe circuits are supervised and provide alarms for probe active, short and break conditions. Probes can be programmed on a leak alarm to operate one of sixteen (16) optional relays for remote alarm indication or operation of a shut down procedure.

LiquidWatch Monitoring Units are equipped with normally energized 10 A, 240 VAC, DPDT relays: 1 common alarm relay and up to sixteen (16) programmable relays (in modules of four). The alarm console can be located up to 20,000 feet (6000m) from the probes. The probe modules (8 probes per module) can be mounted remotely to reduce wiring costs.

The patented PHLR probe for LiquidWatch is solid-state design and responds in seconds after contact with organic liquids. Hydrocarbon fumes or vapors have no effect, thereby virtually eliminating false alarms.

The LiquidWatch Monitoring Unit can also monitor any switch (float switch, thermostat, high level switch, dry contact, etc.), using the optional probe adapter.

FluidWatch® *Leak Detection Systems*

PRODUCT FEATURES

- Senses water based liquids within seconds of contact
- Sensitivity from several inches to several feet
- Durable sensor cable
- Available in sensor lengths: 10 ft to 100 ft
- Comes in a kit, complete with (if required) jumper cable, sensor cable, cable clips and cable tags
- 120 VAC, 240 VAC or 24 VDC input power

The FluidWatch® Leak Detection Monitoring Unit is engineered to monitor small areas for water leaks. Typical applications include unmanned equipment rooms, small raised floor areas and small tanks. The system continuously monitors the capacitance of the sensor cable and detects changes. Seconds after the coaxial sensor cable contacts water or water-based liquids, the unit enters into alarm. The sensor cable can be quickly dried in place after the leak is cleaned up and the system is back online.

FluidWatch (115/240 volt version) uses an LED "traffic light" display to indicate status: Green - normal, Yellow - break and Red - leak. An audible alarm and two (2) 250 VAC, 10 A, SPDT relays activate when either a leak or break occurs. There are two (2) operator buttons, one to test the system and the other to silence the alarm.

Internal jumpers are used to enable alarm silencing, to select cable sensitivity and to enable automatic silencing upon return of the system to normal conditions.

FluidWatch II System is a low voltage (10-30 V AC/DC) with the status display on the circuit board and three relays (two leak and one fault) for use with CRAC/CRAH units and other applications not requiring an alarm horn.

Specifications

Part 1 - System

1.1 FluidWatch Leak Detection System shall consist of an electronic monitoring unit, coaxial water-sensing cable, interconnecting jumper cable, cable clamps and identification tags. All cable connectors shall be factory installed.

The system supplier shall have at least ten (10) years experience in the manufacture of the leak detection systems.

Part 2 - Components

2.1 The monitoring unit shall be able to monitor a length of sensing cable. Three (3) LED's shall be visible on the door of the unit indicating System Monitoring (Green), Leak Detection (red) or Cable Break (Yellow). The unit shall have an audible alarm and be equipped with two (2) normally energiized SPDT Form 1C relays having contacts rated for 10 A continuous at 250 VAC. The audible alarm and relays shall be activated in the event of a leak or a continuity fault.

The system shall have two (2) external switches for operator input, test and alarm silence. Internal switches shall select cable sensitivity (high, medium and low), enable the silence button, enable automatic silence when the cable dries and select 120/240 VAC operating voltage.

The monitoring unit shall be powered by [120 VAC] [240 VAC] [24 VDC]. It shall be housed in a modified NEMA 4X nonmetallic enclosure with nominal dimensions or 7" x 7" x3".

2.2 The sensor shall be a coaxial cable consisting of an insulated center conductor, water permeable dielectric core and outer braid conductor.

The sensing cable shall have the ability to detect the presence of water at any point along the cable's length. The cable shall be easily field repairable, flexible and carry less than six (6) VAC under normal operating conditions.

The sensing cable shall be available in lengths of 50, 75 and 100 feet or special lengths as required up to 100 feet. All sensing cable shall be supplied with connectors.

2.3 The system shall include one monitoring unit, one length of sensing cable, one jumper cable to connect the sensing cable to the monitoring unit, one cable clamp for every five (5) feet of sensing and jumper cable and five (5) cable tags.

Part 3 - Installation

3.1 All FluidWatch system components shall be installed in accordance with manufacturer's installation instructions.

3.2 The monitoring unit shall be installed and powered in accordance with NEC and local code requirements.

PAL-AT® Specification Guide

The leak detection/location system shall consist of microprocessor based monitoring unit(s) capable of continuous monitoring of a sensor string for leaks/faults. The unit shall have a sensing range of (3,000 ft) [900m], (7,500 ft) [2300m] per cable. The alarm unit(s) shall operate on the principle of pulsed energy reflection and be capable of mapping the entire length of the sensor cable and storing the digitized system map in non-volatile memory. The alarm unit(s) shall provide continuous indications that the sensor cable is being monitored.

After the detection of a minor leak, the leak detection/location system shall reset itself and continue to monitor the entire sensing string for a growing leak or an additional leaks(s) even if they are smaller than the leak(s) previously acknowledged. The system shall be capable of accounting for minor installation irregularities, static moisture and puddles (such as condensation) with no loss in accuracy or sensitivity. The system shall locate the point of origin of the first leak or fault within ± 0.3% of the sensor string length or ± 6 feet, whichever is greater for water-based liquids and ± 0.6% of the sensor string length or ± 6 feet, whichever is greater for hydrocarbon based liquids. The monitoring unit shall report and record, to non-volatile memory, the type of fault, distance, date and time of an alarm. The alarm queue will require clearing by an operator after alarms are detected to reset from the alarm mode.

The system manufacturer shall have at least fifteen (15) years of experience with leak detection/location sensor cable technology and provide a factory trained representative at on-site meetings for pre-construction sensor/electronics installation, commissioning and owner training.

The system shall have multi-level security passwords for access to operating functions with recording of all password entries to non-volatile memory.

The alarm unit(s) shall be enclosed in a NEMA 12 enclosure and have a two line by forty character display providing status and alarm data. The monitoring unit(s) shall have a factory mounted alarm horn. The unit shall be UL listed and CE compliant. The optional Zener Barrier Panel will provide connections for intrinsically safe sensor circuits for use in Class I, Division 1, Groups C and D/Zone 0, Group IIB hazardous locations.

The system shall be tested and found to comply with the limits for a Class A digital device, pursuant to Part 15 of the FCC rules and so labeled.

The system shall be evaluated by an independent third party according to the Third Party Procedures developed according to the U.S. EPA's "Standard Test Procedure for Evaluating Leak Detection Methods: Liquid-Phase Out-of-Tank Product Detectors".

Ability to locate a leak shall not depend on battery backed-up functions. In the event of power failure, system conditions and parameters shall be stored in non-volatile memory allowing the unit(s) to automatically resume monitoring, without resetting, upon restoration of power.

The monitoring unit(s) power requirements shall be 110/240 VAC, 50 VA, 50/60 Hz, single phase. Monitoring units shall be equipped with RS-232, RS-485 and Ethernet communication ports and a minimum of three SPDT output relays, rated for 250 VAC, 10 amps.

The sensor cable, connectors, (probes) and jumpers shall be supplied by the manufacturer of the monitoring unit(s). The cable sensing principle shall provide for continuous monitoring while short lengths of the cable are in contact with liquids, without altering the systems sensitivity and/or accuracy.

Software will be provided that allows remote or on-site interface through communication ports for user interface, troubleshooting and diagnostics. Software shall have the ability to interface with the PAL-AT monitoring units and retrieve each of the stored reference maps and current condition TDR traces. The software shall be able to have a digital map of the layout of the system and indicate on the map the location of alarms. The software shall have SMS capability to send text messages with drawings attached, facilitating the users response to alarms.

PermAlert™
Division of Perma-Pipe, Inc.
6410 West Howard Street
Niles, Illinois 60714
Phone 847-966-2190
Fax 847-470-1204
www.permalert.com

The information contained in this document is subject to change without notice. PermAlert believes the information contained herein to be reliable, but makes no representations as to its accuracy or completeness.

PermAlert, Division of Perma-Pipe, Inc., sole and exclusive warranty is as stated in the Standard Terms and Conditions of Sale for these products. In no event will PermAlert be liable for any indirect, incidental, or consequential damages.

Halar is a Registered Trademark of Ausimont USA, Inc.

Windows is a Trademark of Microsoft Corporation.

PAL-AT, PALCOM, LiquidWatch and FluidWatch are registered trademarks of PERMA-PIPE, Inc.

PAL (01/17 3M PG) Printed in the U.S.A. ©2017 PERMA-PIPE, Inc.

PermAlert™
Division of Perma-Pipe, Inc.

PAL-AT® ~~AT30C~~/AT75C/~~AT30K~~
Leak Detection System
Product Data

PRODUCT FEATURES / BENEFITS

- Locates multiple leaks without loss of accuracy or sensitivity
- Detects growing leaks
- Locates breaks and shorts to reduce downtime
- Displays location of leaks up to location of breaks/shorts
- Ethernet and RS-232/RS-485 serial ports
- Able to commission system with limited initial lengths of wet cable
- Not susceptible to dust/dirt contamination of the sensor string
- Modbus TCP, RTU, and RTU over TCP protocols
- Optional BACnet IP gateway available
- FM Approved for FM 7745 - Diesel Leak Detector
- Zener barrier panel (ZBP) provides intrinsically safe sensor cable output circuits for hazardous locations:
  Class I, Division 1, Groups C & D
  Zone 0, Group IIB

PRINCIPLE OF OPERATION

PAL-AT®'s TDR pulse echo technology operates similar to radar. Thousands of times each minute, safe energy pulses are sent out on the sensor cables. As these energy pulses travel down the cable, reflections are returned to the monitoring unit and a "map" of the reflected energy from the cable is stored in memory. The presence of liquids on the sensor cable, in sufficient quantities to "wet" the cable, will alter its electrical properties. This alteration will cause a change of the reflection at that location. When PAL-AT recognizes a change, it enters into alarm mode and automatically creates a new "map". This becomes the base line for the system, allowing PAL-AT to continue monitoring the cable for growing leaks, new leaks, breaks, shorts and/or faults. The alarms are stored in an alarm queue to be acknowledged by an authorized user.

SECURITY SYSTEM

PAL-AT requires a password entry before alarms can be acknowledged or system information can be changed. This feature limits access to only those employees who have been authorized to perform the advanced functions.

SYSTEM ARCHIVES

Date and time history of significant events including power failure and cable leak/fault/break/short are stored in nonvolatile memory providing a documented record of system alarms.

OUTPUT RELAYS

PAL-AT has several dry contact output relays, rated for 10 A @ 250 VAC. A fault relay monitors for loss of power. A common alarm relay is activated when any fault is detected on any cable. It is reset when the audible alarm is silenced. A cable relay can be programmed to activate when any fault occurs or only when leaks are detected. The relay will stay active until the alarm is acknowledged.

COMMUNICATION

PAL-AT has an Ethernet port and two serial ports, RS-485 and RS-232, to interface with PALCOM® 10 w/GLS software or custom software. Refer to the Communication Options Data Sheet for detailed information.

MODBUS

PAL-AT communicates via Modbus TCP and Modbus RTU to pass system and cable status data to a Modbus host. It also enables the host to acknowledge the alarm queue remotely.

Model No.	Part No.	Cable Capacity	Maximum Cable Range Feet	(Meters)
~~AT30C~~	~~8028300~~	~~1~~	~~3000~~	~~(900)~~
AT75C	8028310	1	7500	(2300)
~~AT30K~~	~~8028320~~	~~4~~	~~7500~~	~~(2300)~~

*Refer to Sensor Cables Product Data for Technical details

CE

FM APPROVED

c UL us LISTED
Leak Detection System
4ER7

PermAlert™
Division of Perma-Pipe, Inc.

PAL-AT® AT30C/AT75C/AT30K
Zener Barrier Panel
Product Data

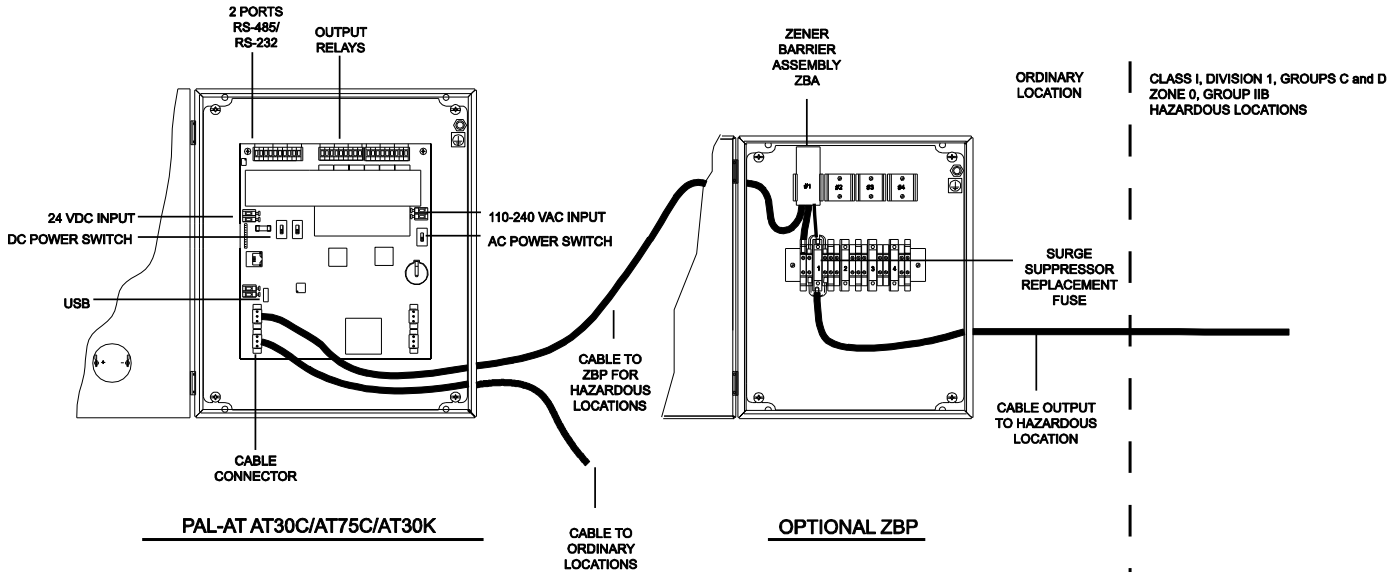

HAZARDOUS AREAS

An optional **Zener Barrier Panel (ZBP)** is available if PAL-AT cables or probes are installed in Class I, Division 1, Groups C & D / Zone 0, Group IIB hazardous locations. The ZBP includes one **Zener Barrier Assembly (ZBA)**. One ZBA is required for each cable sensing string. The ZBP is expandable to hold up to four ZBAs.

FM 7745 Approval

The PAL-AT system has been certified by FM Approvals as a diesel leak detector per FM 7745. **Contact PermAlert for specific FM requirements**.

SURGE SUPPRESSOR

Each ZBA also functions as a surge suppressor to reduce damage to the PAL-AT from external voltage surges. It is used when cable locations are subject to frequent voltage surges or nearby lightning strikes. It has a replaceable fuse to get the system back on-line quickly. Each ZBA protects one cable string.

Model Number	Part Number	Description
ZBP	8028115	Zener Barrier Panel
ZBA	8028110	Zener Barrier Assembly
	8027884	FM Approval Modification

92P1

TECHNICAL DATA:

PAL-AT

- Dimensions: 13.75" x 11.81" x 4.00" (350 mm x 300 mm x 102 mm) Type 12 (IP52)
- Power: 110-240 VAC, 50/60 Hz, 0.3 A/50 VA 24 VDC, 1 A/24 VA
- Weight: 14.6 lb (6.6 kg)
- Operating Range:-4°F to 122°F (-20°C to 50°C)

ALARM OUTPUTS:

- Fault Conditions: Leak, Break, Short or Probe Activation
- Distance to Fault Location
- Date and Time of Fault
- Activation of Output Relays
- Red LED Optical Alarm
- BMS Interface
- Modbus TCP/RTU Output
- BACnet IP gateway available

ZBP:

- Dimensions: 11.81" x 9.84" x 4.00" (300 mm x 250 mm x 102 mm) Type 4, 12 (IP66)
- Weight: 12.0 lb (5.4 kg)
- Operating Range:-4°F to 140°F (-20°C to 60°C)

The information contained in this document is subject to change without notice. PermAlert, a Division of PERMA-PIPE, Inc., believes the information contained herein to be reliable, but makes no representations as to accuracy or completeness. PermAlert offers a sole and exclusive warranty as is stated in the Standard Terms and Conditions of Sale for these products. In no event will PermAlert be liable for any indirect, incidental or consequential damages.

PermAlert • 6410 W. Howard St. • Niles, IL 60714-3302
Ph: 847 966-2190 • Fax 847 470-1204 • www.permalert.com

© 2017 PERMA-PIPE, Inc. • All Rights Reserved • *Printed in the U.S.A.* • (02/17)

PermAlert™
Division of Perma-Pipe, Inc.

Sensor Cables
Product Data

The PAL-AT® family of sensor cables are able to meet the specific requirements of a wide variety of applications and environments including subfloors, containment pipe systems, direct burial and foam insulated pipes. The sensor cables offer the leak detection designer flexibility and choice in selecting the proper cable for the desired system sensitivity.

All **PAL-AT** cables and connectors are easily spliced or repaired in the field to minimize downtime and repair cost.

PAL-AT AGW-Gold and AGT-Gold sensor cables have the ability to detect both water-based and hydrocarbon liquids. This reduces the number of sensor cables required in many applications. Each of these PAL-AT sensor cables can be dried and reused after a water-based or volatile hydrocarbon leak has been cleaned up. These cables have no exposed metal and are designed for corrosive chemical applications. Each individual strand of braid wire is coated with a high-temperature, corrosion-resistant polymer and the length of the cable is covered with a fluoropolymer overbraid. Because there is no exposed metal, the Gold cables eliminate the need for special isolation precautions in cathodic-protected pipe applications.

PAL-AT TFH-Gold hydrocarbon sensor cable uses a hydrocarbon permeable core to detect hydrocarbon liquids while ignoring water-based liquids. In most cases, the sensor cable must be replaced after exposure to hydrocarbons.

ATP

ATP is a cable designed to monitor pre-fabricated polyurethane insulated pipes. The twisted pair type sensor cable will detect water-based liquids. The cable is factory installed in the insulation of each pipe length. The sections of ATP cable are easily spliced together as the pipe is assembled in the field.

Liquids Detected with TFH-Gold < 5 Minutes

Liquid (tested at 70°F)		
Gasoline	Alcohol	Acetone
Diesel Fuel	Naptha	Crude Oil**
Kerosene	MEK	Transformer
Jet Fuel	Xylene	Oil**

**Contact PermAlert for details on these and other liquids.

AGW-Gold

AGW-Gold is a quick drying cable that is chemically resistant and designed to detect highly corrosive liquid leaks such as acids, bases and solvents. Typical applications are secondary contained pipes in chemical installations, subfloors of clean room manufacturing areas, computer rooms and high temperature applications such as steam pipe containment systems. The cable has passed UL 910 for Plenum Rating.

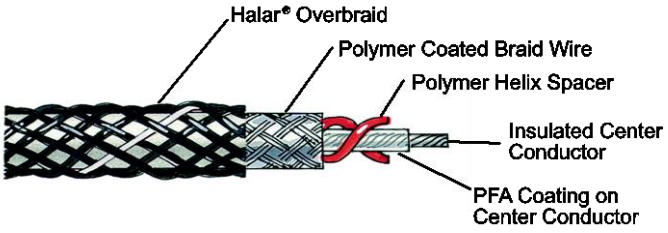

AGT-Gold

AGT-Gold is a wicking cable that is chemically resistant and designed to detect highly corrosive acid, base, and solvent leaks. Typical applications are clean rooms, subfloors, aboveground single-wall pipes and equipment applications. AGT-Gold should be installed in temperature and humidity controlled environments. This cable requires more drying time than AGW-Gold.

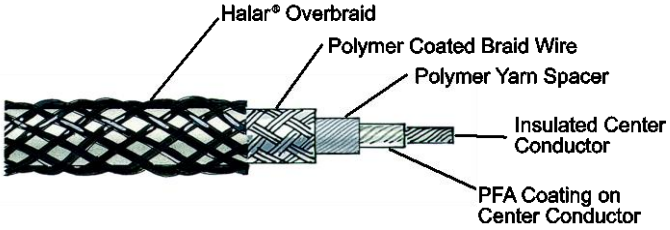

TFH-Gold

TFH-Gold is a wicking cable specifically designed to detect only hydrocarbons. This cable may be direct buried in slotted PVC pipe, or screen pipe, to a maximum depth of 20 ft (6 m) to locate fuel leaks while ignoring the presence of water. This is ideal for monitoring single-wall pipes and tanks. The cable is suitable for applications where hydrogen sulfide or other corrosive gases may be encountered, such as refineries and oil fields.

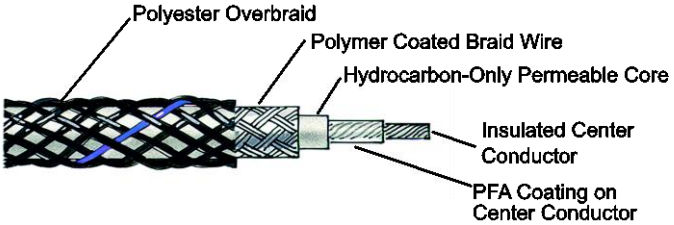

*Halar® is a registered trademark of Ausimont USA, Inc.

Sensitivity is the length of wet cable that is required to activate the PAL-AT under standard sensitivity settings. The length required for quick-drying AGW-Gold refers to the submerged length of the cable. ~~Wicking cables AGT-Gold and TFH-Gold will quickly draw a liquid into the cable through capillary action when it is in contact with a 1/16" (2 mm) film of liquid. The length of wet cable required for wicking cables is the saturated length of cable. For example, if a few inches of AGT-Gold cable contact a film of water at 5,000 ft (1,500 m), in less than two minutes, the cable will be saturated sufficiently and the PAL-AT will go into alarm.~~ The PAL-AT sensitivity can be adjusted.

Sensitivity and Accuracy

Effective Length ft(m)		<2,500 (750)	<5,000 (1500)	<7,500 (2300)
Sensitivity				
AGW-Gold, ~~AGT-Gold~~	Water	3 (1)	3 (1)	3 (1)
AGW-Gold, ~~AGT-Gold~~	Hydrocarbon	6 (2)	15 (4)	23 (7)
~~TFH~~	~~Hydrocarbon~~	~~6 (2)~~	~~18 (5)~~	~~30 (9)~~
~~ATP~~	~~Water~~	~~3 (1)~~	~~6 (2)~~	~~N/A~~
Accuracy ft(m)				
AGW-Gold, ~~AGT-Gold~~	Water	±6 (2)	±12 (4)	±18 (5)
AGW-Gold, ~~AGT-Gold~~	Hydrocarbon	±6 (2)	±26 (8)	±40 (12)
~~TFH-Gold, TFH~~	~~Hydrocarbon~~	~~±6 (2)~~	~~±30 (9)~~	~~±48 (15)~~
~~ATP~~	~~Water~~	~~±10 (3)~~	~~±30 (9)~~	~~N/A~~

Cable Type	**Part No.**	**Temp. (max.) ◦F (◦C)**	**O.D. In (mm)**	**Liquids Detected**
AGW-Gold	8017705	400 (205)	.31 (8.0)	water-based & hydrocarbon
~~AGT-Gold~~	~~8017700~~	~~250 (120)~~	~~.31 (8.0)~~	~~water-based & hydrocarbon~~
~~TFH-Gold~~	~~8017640~~	~~250 (120)~~	~~.31 (8.0)~~	~~hydrocarbon only~~
~~TFH~~	~~8017635~~	~~250 (120)~~	~~.31 (8.0)~~	~~hydrocarbon only~~
~~ATP~~	~~8017732~~	~~250 (120)~~	~~.20 (5.0)~~	~~water-based only~~

NOTES:

- Effective length is the total length of sensor cable, and effective length of jumper cable and probes **(see Jumper Cable Data Sheet)** that are connected together to form the "sensing string". For cables longer than 5,000 ft, an additional effective length of 50 ft is added for each connector exceeding 1 connector per 500 ft of cable.
- The actual length or the effective length of a sensor string cannot exceed the maximum cable range for the selected Leak Detection System.
- Temperatures shown are continuous operating exposures.

SENSOR CABLE SPECIFICATIONS

AGW-Gold

Sensor cable shall be of fluoropolymer and polymer coated wire construction with no exposed metal parts. Cable shall detect water-based, chemical and hydrocarbon liquids. The sensor cable can be flushed and dried in-place and will not require replacement after a leak event of any volatile liquid. The cable shall have a breaking strength of at least 100 lb (45 kg) and shall be resistant to corrosion, abrasion and most chemicals tested in accordance with exposure procedures in ASTM D-543.

~~AGT-Gold~~

~~Sensor cable shall be of fluoropolymer and polymer coated wire construction with no exposed metal parts. Sensor cable shall detect accumulations at a shallow depth of 1/16" (1.5 mm) and be resistant to most acids, bases and solvents and be capable of being flushed and dried in place. The cable will not require replacement after a leak event of any compatible and/or volatile liquid. The cable shall have a breaking strength of at least 100 lb (45 kg) and shall be resistant to corrosion, abrasion and most chemicals tested in accordance with exposure procedures in ASTM D-543.~~

~~TFH-Gold~~

~~Sensor cable shall detect only hydrocarbons while ignoring water and water-based liquids. The cable is designed for direct burial in slotted PVC pipe, or screen pipe, to a maximum depth of 20 ft (6 m) and capable of providing a response time of not more than four minutes after contact with most hydrocarbon liquids. The sensor cable is not reusable after exposure to hydrocarbons.~~

~~ATP~~

~~Sensor cable shall be a twisted-pair construction. The cable insulation shall be irradiated cross-linked PE. The cable shall be designed to detect water-based liquids and be factory installed in polyurethane foam insulation.~~

ATP COMPONENTS

Part No.	**Description**
8017732	ATP Sensor Cable
8027800	ATP Crimp Splice Kit
8068308	ATP Crimp Tool

The information contained in this document is subject to change without notice. PermAlert, a Division of PERMA-PIPE, Inc., believes the information contained herein to be reliable, but makes no representations as to accuracy or completeness. PermAlert offers a sole and exclusive warranty as is stated in the Standard Terms and Conditions of Sale for these products. In no event will PermAlert be liable for any indirect, incidental or consequential damages.

PermAlert • 6410 W. Howard St. • Niles, IL 60714-3302
Ph: 847 966-2190 • Fax 847 470-1204 • www.permalert.com

© 2017 PERMA-PIPE, Inc. • All Rights Reserved • Printed in the U.S.A. • (06/17)

PAL-AT®

INSTALLATION MANUAL

MODELS AT30C, AT75C & AT30K

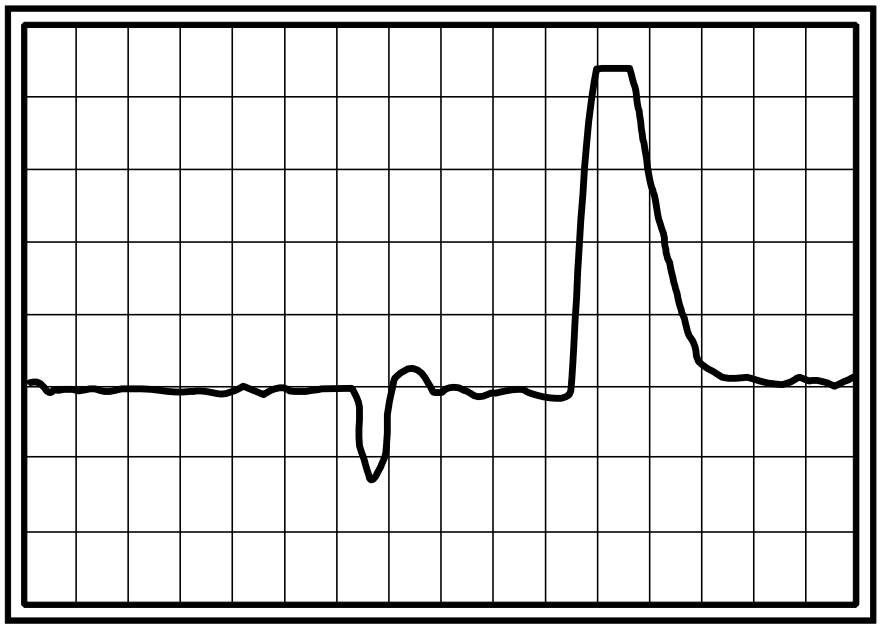

PermAlert™

Division of Perma-Pipe, Inc.

Notice

The information contained in this manual, including but not limited to any product specifications, is subject to change without notice.

PERMALERT (PERMALERT), A DIVISION OF PERMA-PIPE, INC., PROVIDES NO WARRANTY WITH REGARD TO THIS MANUAL OR ANY OTHER INFORMATION CONTAINED HEREIN AND HEREBY EXPRESSLY DISCLAIMS ANY WARRANTIES, INCLUDING IMPLIED WARRANTIES, OF MERCHANTABILITY OR FITNESS FOR ANY PARTICULAR PURPOSE WITH REGARD TO ANY OF THE FOREGOING. PERMALERT ASSUMES NO LIABILITY FOR ANY DAMAGES INCURRED DIRECTLY OR INDIRECTLY FROM ANY TECHNICAL OR TYPOGRAPHICAL ERRORS OR OMISSIONS CONTAINED HEREIN OR FOR DISCREPANCIES BETWEEN THE PRODUCT AND THE MANUAL. IN NO EVENT SHALL PERMALERT BE LIABLE FOR ANY INCIDENTAL, CONSEQUENTIAL, SPECIAL, OR EXEMPLARY DAMAGES, WHETHER BASED ON TORT, CONTACT OR OTHERWISE, ARISING OUT OF OR IN CONNECTION WITH THIS MANUAL OR ANY OTHER INFORMATION CONTAINED HEREIN OR THE USE THEREOF.

Caution --This manual may not be up-to-date.

Please check the PermAlert website, www.permalert.com, for the latest revision of this manual.

The manual is typically revised at least once a year. The revision date is on the back cover.

Contact techsupport@permalert.com for technical assistance with the PAL-AT system.

Table of Contents

Safety Information 4

1 Introduction 5

1.1 General Description 5
1.2 Applications 5
1.3 Receiving and Handling Precautions 5
1.4 Materials and Equipment Normally Supplied by PermAlert 5
1.5 Materials and Equipment Normally Supplied by Installing Contractor 6

2 PAL-AT Alarm/Locator Panel 7

2.1 Alarm/Locator Panel Installation 7
2.2 Terminals 8
2.3 Power Connection 8
2.4 Audible Alarm Wiring 8
2.5 Control Relays 8
2.6 Communications 11
2.6.1 Port 1 - RS-485/RS-232 11
2.6.2 Port 2 - RS-232 11
2.6.3 Ethernet 11
2.7 Replaceable Parts 11
2.7.1 Battery 11
2.7.2 24 VDC Fuse 12
2.8 Contrast Adjustment 12
2.9 Impedance Jumper Setting 12
2.10 UL 12
2.11 FCC and CE Compliance Requirements 12

3 Zener Barrier Panel 13

3.1 Introduction 13
3.2 Panel Installation 13
3.2 Panel Wiring 15
3.3 Zener Barrier Assembly (ZBA) Installation 15
3.4 Fuse Protection 15
3.5 Allowable Cables and Probes 15

4 Jumper Cable and Junction Box Installation 17

4.1 Jumper Cable 17
4.2 Calibration Points 18

4.3 Junction Boxes 18

5 Cable Installation in Secondary Contained Piping 19

5.1 General 19
5.2 Pull Points 20
5.3 Cable Splices 22
5.3.1 Factory Installed Fiber Pull Rope to Continuous Pull Wire Rope Splice 22
5.3.2 Wire Rope to Wire Rope Splice 23
5.3.3 Wire Rope to Wire Rope Splice (alternate) 24
5.3.4 Wire Rope to Leak Detection Cables 25
5.4 Installation of the Continuous Pull Rope 27
5.5 Installing Sensor and Jumper Cables 29
5.6 Air Testing 32

6 Installation of Direct Buried Sensor Cable 33

6.1 General 33
6.2 Installing the Sensor Cable 34
6.3 Above Ground Storage Tanks 37

7 Cable Installation for Raised Floor Areas 39

7.1 General 39
7.2 Install the Sensor Cable 39
7.3 Locator Chart 40

8 Cable Connectors 41

8.1 General 41
8.2 Cable Connector Installation 41
8.2.1 CAGOLD and CATFH Connectors for Sensor Cables AGW-Gold, AGT-Gold, TFH-Gold and TFH 41
8.2.2 CAJMP Connectors for Jumper Cables JMP-U/-UD 44
8.2.3 CAJPP Connectors for Jumper Cables JPP and JMP 46
8.2.4 CAGOLD Connector for ATP Cable 47
8.3 Shrink Tubing 49
8.3.1 Cable Type TFH 49
8.3.2 Cable Types AGW-Gold, AGT-Gold and TFH-Gold 50
8.3.3 Cable Types JMP-U/-UD, JPP and JMP 51
8.4 Cable and Connector Testing Procedures 51
8.4.1 General 51
8.4.2 Continuity Test 51
8.4.3 Alternative System Test 52
8.4.4 Insulation Test 52

8.5 Cable Connections to Panels 52
8.5.1 General 52
8.5.2 Ferrule Installation in PAL-AT Panel 52
8.5.3 Ferrule Installation in Zener Barrier Panel 54
8.5.4 ATP Cable Connection at PAL-AT 56

9 Probes 57

9.1 UL Requirements 57
9.2 Probe Integrator Selection 57
9.3 Probe Installation 57
9.4 PHLR Hydrocarbon Probe 59
9.4.1 Cleaning Sensor Elements Procedure 60
9.4.2 Testing the Probe 61
9.4.3 Troubleshooting 61
9.4.4 Calibrating the Probe 61
9.5 Typical Installations 62
9.6 Probe Tests 67

10 ATP Cable in Polyurethane Foam Insulation 69

10.1 General 69
10.2 Pipe Installation Precautions 69
10.3 System Configuration 69
10.4 Calibration Points 69
10.5 ATP Cable and Connector Testing Procedures 69
10.5.1 Continuity Test 70
10.5.2 Insulation Test 70
10.5.3 Insulation Test with Wet Cloth 71
10.6 Start of Run 71
10.7 ATP Cable Splices 72
10.8 ATP Cable at Tee Connections 74
10.9 End of Run Termination 75
10.10 Requirements for Field Joints with Wind-Down End Seals 76

Appendix A – Special Instructions 77

A.1 Supply Power 77
A.2 Control Drawing 77
A.3 Zener Barrier Panel (ZBP) 77
A.4 Probe Integrator 77
A.5 Probe Integrator Static Precautions 77
A.6 ZBP Enclosure Fittings 78

WARRANTY 79

Safety Information

Please Read This Installation Manual

Please take the time to read this installation manual carefully. It will help you set up and operate your system properly. **Failure to follow these instructions may impair the safety of the equipment**. Please save this installation manual for future reference.

For your safety

Caution: *To reduce the risk of fire or electric shock, do not expose the PAL-AT to rain or moisture.*

CAUTION: TO REDUCE THE RISK OF ELECTRIC SHOCK,
TURN OFF POWER BEFORE OPENING ENCLOSURE DOOR.
REFER ALL SERVICING TO QUALIFIED PERSONNEL

This symbol alerts the user to the presence of uninsulated, dangerous voltage within the system enclosure that may be of sufficient magnitude to constitute a risk of electric shock.

This symbol alerts the user to the presence of important operating and maintenance instructions in this manual.

Approvals and Certifications

Regulatory Compliance Statements

FCC Class A Notice

This device complies with part 15 of the FCC Rules. Operation is subject to the following two conditions.

1. This device may not cause harmful interference, and
2. This device must accept any interference received, including interference that may cause undesired operation

NOTE: This equipment has been tested and found to comply with the limits for a Class A digital device, pursuant to Part 15 of the FCC Rules. These limits are designed to provide reasonable protection against harmful interference when the equipment is operated in a commercial environment. This equipment generates, uses, and can radiate radio frequency energy and, if not installed and used in accordance with this instruction manual, may cause harmful interference to radio communications.

Operation of this equipment in a residential area is likely to cause harmful interference in which case the user will be required to correct the interference at his own expense.

Changes or modifications not expressly approved by the party responsible for compliance could void the user's authority to operate the equipment.

The party responsible for product compliance:

Perma-Pipe, Inc.
6410 W. Howard St.
Niles, IL 60714

1 Introduction

1.1 General Description

This PAL-AT® Installation Manual is intended for use as a general installation guide for PAL-AT alarm/locator panels, sensor cable, cable connectors, and probes. Users (installers) should independently evaluate the suitability of this information and PermAlert's products for their application and specific installation. If you receive a PermAlert product not described in this manual, contact PermAlert for the appropriate instructions. PermAlert is a division of Perma-Pipe, Inc. Refer to the PermAlert website, permalert.com, for the latest revision of manuals and product data sheets.

1.2 Applications

The PAL-AT system consists of an electronic microprocessor-based alarm/locator panel that monitors sensor cables and/or probes. The sensor cable may be installed in many applications including: secondary contained piping; directly in the ground adjacent to fuel pipes or tanks; computer room subfloors; cleanroom subfloors, or any area where liquids need to be detected. There are several PAL-AT models available including:

AT30C: Monitors 1 cable up to 3,000 ft [900 m].

AT75C: Monitors 1 cable up to 7,500 ft [2300 m].

AT30K: Monitors 4 cables each up to 7,500 ft [2300 m].

Applications monitoring cables in hazardous locations must use a Zener Barrier Panel (see section 3).

1.3 Receiving and Handling Precautions

The following general precautions should be observed:

1. **Do not use substitute materials or short cut recommended procedures**. Understanding and following this guide is essential to avoid installation problems.
2. Collect the needed quantities of all materials well in advance of scheduled work.
3. Check the packing list against received items. **Report immediately any shortages or damaged materials to the delivering carrier.**
4. All cable must be tested immediately upon receipt following the cable test procedures contained in this manual. Report immediately to PermAlert any cables that fail the tests. Failure to report within ten workdays of receipt of goods shall waive the purchaser's right to file a warranty claim.
5. **The recommended minimum bend radius for all sensor and jumper cables is 1.5" [38mm].**
6. Care must be taken to store all PAL-AT components in a dry and protected area at all times. Electronic alarm/locator panels and sensor cable should be wrapped and sealed with plastic.
7. System drawings, provided by the designer, should indicate the extent, general location, and arrangement of leak detection equipment, cable, and probes. The contractor (installer) should become familiar with all details of the installation before proceeding.
8. Electrical work should be performed by a qualified electrician.

1.4 Materials and Equipment Normally Supplied by PermAlert

Each system may include the following items as quoted:

1. Leak detection/location alarm panel
2. Leak sensor cable
3. Jumper cable
4. Cable connector assemblies
5. Adhesive backed cable mounts (CMA) furnished for attachment of sensor cable to flat surfaces
6. Probe assembly, including a PT10 Probe Integrator installed in a NEMA 4X [IP66] junction box with 60' of jumper cable and one cable connector assembly

7. Watertight junction boxes conforming to NEMA 4X [IP66].

Maximum No. of Cable Connectors in Enclosure	Enclosure Dimensions
1	6" x 6" x 4" [150 mm x 150 mm x 100 mm]
2	8" x 6" x 4" [200 mm x 150 mm x 100 mm]
4	10" x 8" x 4" [250 mm x 200 mm x 100 mm]

8. Watertight cord grips
9. Shrink tubing for cable connectors
10. Non-corrosive RTV adhesive/sealant for cable connectors

1.5 Materials and Equipment Normally Supplied by Installing Contractor

Each system may require the installing contractor to supply the following items:

1. Pull rope, 1/8" [3 mm] diameter, 7 strands, steel wire rope aircraft cable. For installation of cable in fiberglass or other plastic piping systems, use plastic coated (non-vinyl) wire rope. Provide pull rope in quantities equal to 120% of system length. (Included with Perma-Pipe piping systems)
2. Cable spool rack or stand
3. PVC electrical tape
4. Miscellaneous pipe nipples, unions, and fittings, as required to provide watertight jumper cable connections to sensor cable.
5. 1" rigid or liquid-tight flexible electrical conduit, as required, for installation of jumper cable within manholes, pits, and buildings. Use 1" conduit hub, OZ Gedney CH-100, or equal, connection to junction boxes.
6. Electrical conduit, junction boxes, and wiring, as required.
7. Ohmmeter for testing jumper cables and sensor cables.
8. 1000-volt megger for testing ATP sensor cable.
9. Hole saw or knockout punch.
10. Construction adhesive mastic for attachment of cable mounts to unsealed concrete surfaces
11. Hot air gun for shrink tube application on cable connector assemblies

2 PAL-AT Alarm/Locator Panel

2.1 Alarm/Locator Panel Installation

The PAL-AT panel is designed to be permanently mounted indoors in a dry area. The enclosure is rated Type 12 [IP52]**.** It must not be located in direct sunlight to prevent excessive heat buildup. **In all installations, the ambient temperature surrounding the PAL-AT panel must be within the limits below.** The equipment is designed to be safe in the following range of environmental conditions:

a) Indoor use;
b) Altitude up to 6,560 ft [2000 m];
c) Temperature -4°F [-20°C] to 122°F [50°C];
d) Maximum relative humidity 95%;
e) Pollution degree 2.

Warning: Do not mount the PAL-AT panel in a hazardous location. The panel must be in an ordinary location even though sensor cables may be located in hazardous locations. Refer to the Zener Barrier Panel section of this manual.

Mount the PAL-AT panel securely to a wall, using ¼" [M6] hardware in the 4 holes on the back of the panel (see figure 2-1). If it is mounted to a typical ½" plasterboard wall, use ¼" x 1 ½" [M6 x 40mm] lag screws to secure it to the studs (nominal 2" x 4" [50mm x 100mm]). The panel can also be mounted to steel mounting channel struts using ¼" [M6] machine screws.

The PAL-AT panel is connected to the sensor cable using jumper cable (Type JMP-U, JMP-UD or JPP). An exception to this requirement is ATP cable that uses 50' [15 m] of ATP for jumper (see section 9). **At least 50' [15 m] of jumper cable (65' [20 m] if JPP) must be connected between the panel and the connection to the sensor cable.**

The jumper cable must be run in a separate conduit from the power supply cable. All conduit fittings must be appropriately rated and installed properly to maintain the rating of the enclosure. All electrical connections must comply with local codes. **Remove the system board from the white back panel (six #6-32 screws) before drilling holes in the enclosure for conduit openings to prevent damage and contamination from metal shavings.**

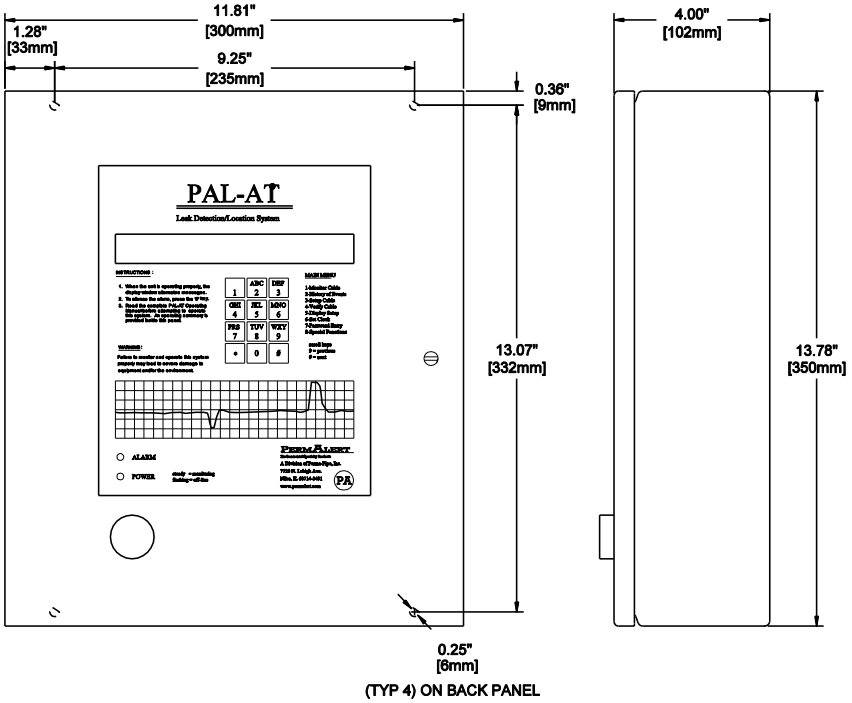

Models AT30C, AT75C and AT30K
Mounting Dimensions

Figure 2-1

2 PAL-AT Alarm Panel

2.2 Terminals

The terminals on the PAL-AT system board use a quick-connect design that provides an easy, fast and robust connection. A flat blade screwdriver, 1/8" [3.5 mm], is used to press down on the terminal lever and open the terminal for easy wire insertion. Release the lever, and the wire is tightly clamped. **The acceptable wire size for connection to any terminal, including the mains, is 28 - 12 AWG [0.08-2.5 mm^2].** The terminals can accommodate solid or stranded wires. **If ferrules are used with stranded wire, the maximum wire size is 14 AWG [1.5 mm^2].** Refer to the detail located at the upper right side of figures 2-2 and 2.3. **Caution: The lever only travels 1/8" [3.5 mm] to open the terminal completely, and only requires 5 - 8 lbs [2-4 kg] force. Do not exceed these limits or the terminal will be damaged.**

2.3 Power Connection

The PAL-AT must be permanently wired to instrument-quality power using appropriate certified conduit, fittings, and wiring. Refer to figures 2-2 and 2-3 wiring diagrams for details. The PAL-AT contains a universal power supply. The power requirement is 110-240 VAC, 50 / 60 Hz, 0.3 A / 50 VA.

A suitable external over-current protection device, such as a fuse or circuit breaker (15 A), and disconnect device is recommended. The over-current protection and disconnect devices shall be installed on all ungrounded conductors, i.e. the terminal marked hot (L) (and neutral (N) terminal if ungrounded for 240 VAC). The disconnect device shall be located near the equipment and marked with appropriate ON (I) OFF (O) markings as specified by local codes. The ground conductor shall have green with a yellow stripe insulation and be connected to the grounding connection on the upper right corner of the back panel as shown. Installation should be performed by qualified personal in accordance with local codes and procedures.

The PAL-AT can also be powered by a 24 VDC, 1 A / 24 VA, over-current protected power source at terminal T5. Fuse F1 on the PAL-AT system board protects the 24 VDC input. It is a 2A, 250 V, time-delay, 5 x 15 mm fuse.

Caution - Before accessing the PAL-AT panel, the panel must be disconnected from the power source and isolated from any hazardous voltage present in the panel, e.g. relay wiring.

Three internal switches on the system board control the power source utilized by the panel. These switches are intended for use by service personnel. Set the AC Power Switch (SW3) and the 24 VDC Power Switch (SW1) in the down, or "OFF" position. Next, set the Input Power Select Switch (SW2) to either VAC or VDC depending on the desired power source. The panel is controlled by SW3 for AC power *or SW1 for DC power.*

2.4 Audible Alarm Wiring

An internal 90-dBA pulse horn is supplied. An optional chime alarm is available. The wiring for the horn is a 2-wire cable connected to terminal strip T6. The red wire must be connected between the "+" terminal on the horn and the "+" T6 terminal. The black wire must be connected between the "-" terminal on the horn and the "-" T6 terminal. The terminal provides 24 VDC @ 10 mA.

2.5 Control Relays

PAL-AT has 3 to 6 SPDT output relays, depending on the model, rated for 250 VAC, 10 A. They are labeled "Fault Alarm", "Common Alarm" and "Cable x", where x=1 to 4 for the appropriate cable number (see figures 2-2 and 2-3). The relay contacts are labeled in their unpowered or "on-the-shelf" condition.

The fault relay is energized whenever the panel is powered. It is used to monitor for power loss.

The common alarm relay will be switched in response to any fault condition. The # key can be pressed to reset the common alarm relay to its normal state and deactivate the internal audible alarm for up to 96 hours. The default reset time is 12 hours.

The cable relay(s) will activate when a fault is detected and will reset when the fault returns to normal or the alarm queue is cleared. The default setting is to activate for all alarms, but it is firmware selectable to activate in response to only leak and probe active alarms.

Control devices or auxiliary equipment should be connected to the cable relay(s) so they will not be reactivated when the alarm is silenced. PAL-AT is shipped with the common alarm and cable

relays configured to operate in a normally de-energized mode, so they energize when the panel is in the alarm state (see the *PAL-AT Operating Manual* for changing relay configuration).

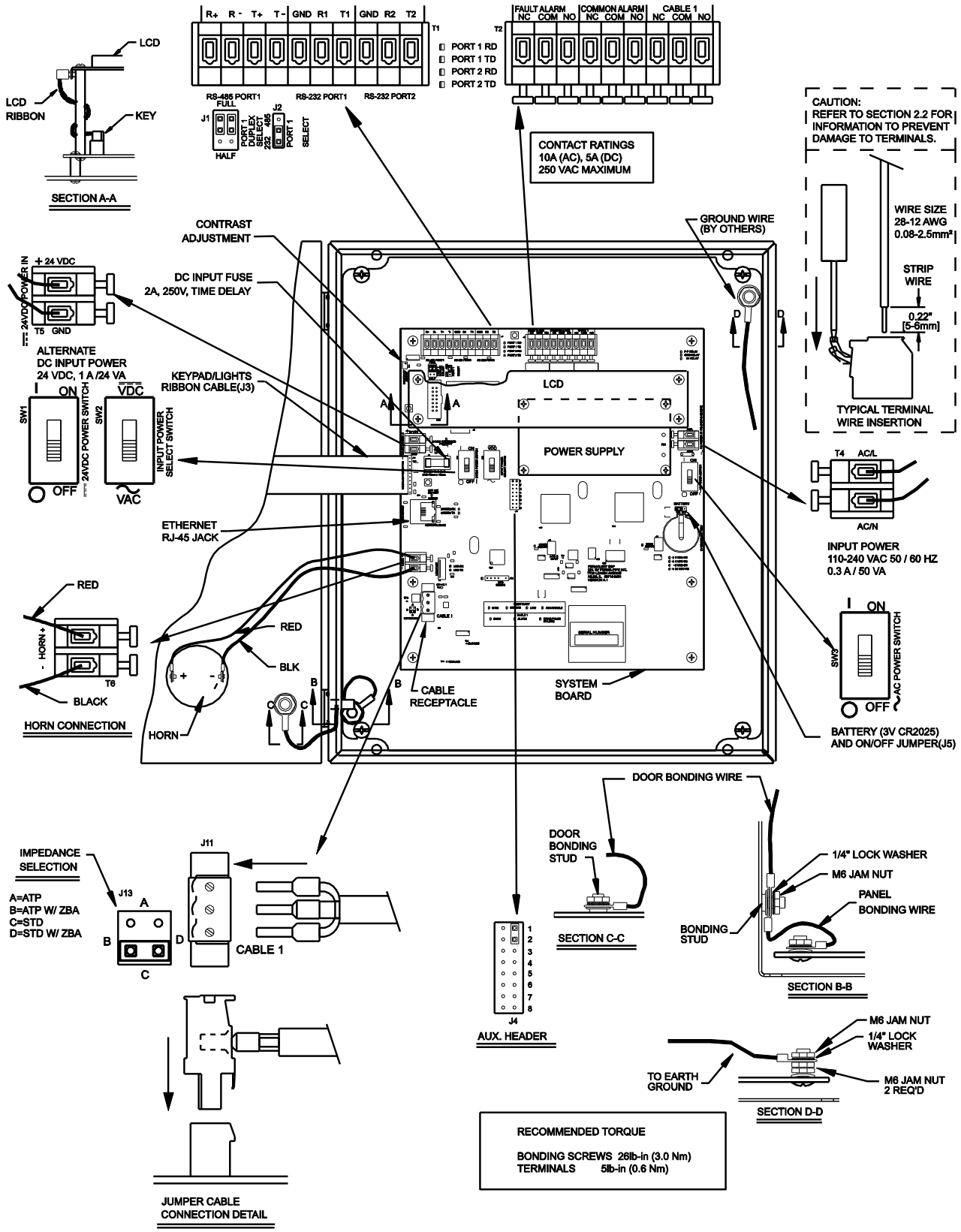

Figure 2-2
Wiring Diagram for PAL-AT Models AT30C & AT75C

2 PAL-AT Alarm Panel

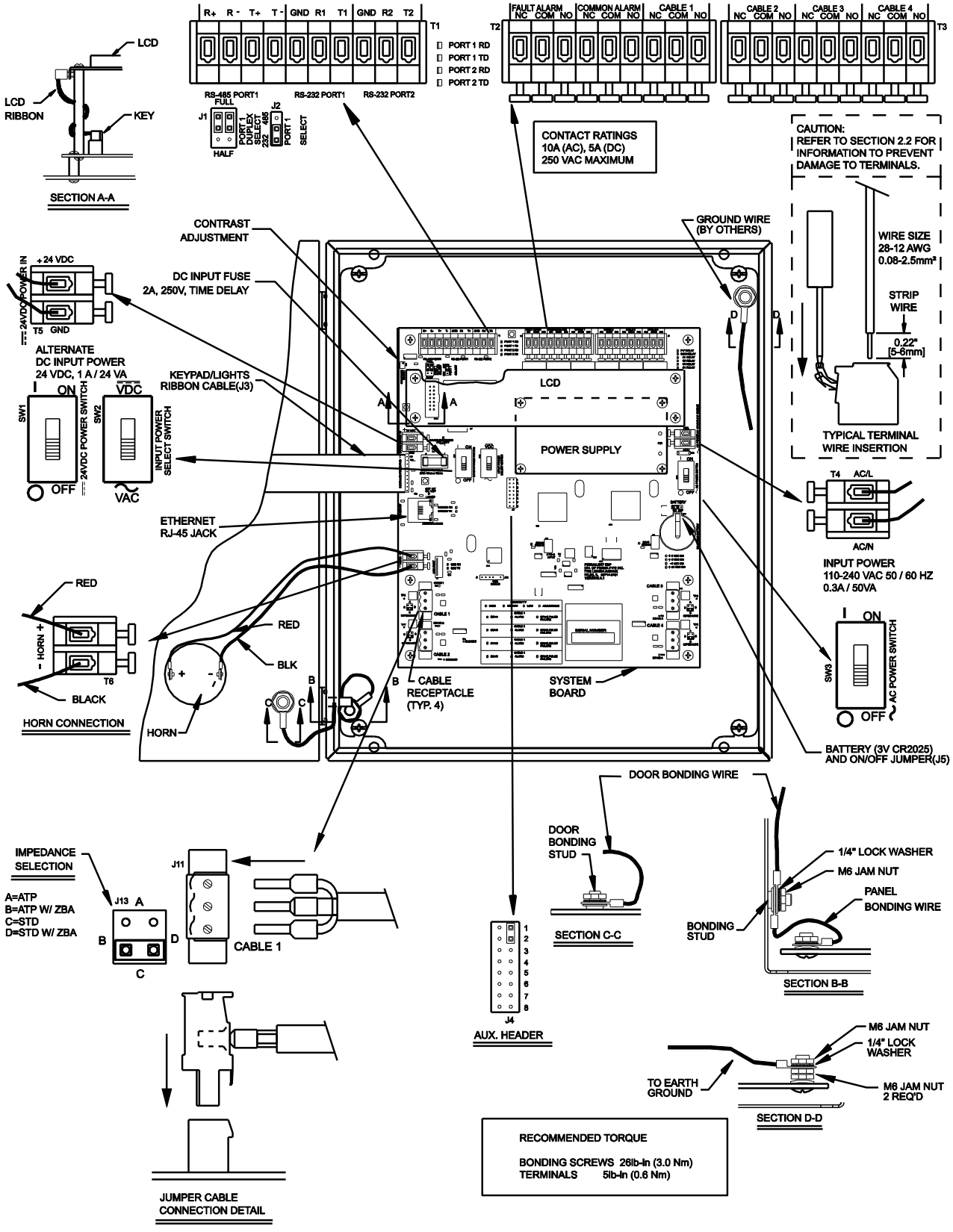

Figure 2-3
Wiring Diagram for PAL-AT Model AT30K

2.6 Communications

PAL-AT is provided with several options for communication. The options include:

Port 1 – RS-485/RS-232
Port 2 – RS-232
Ethernet - RJ-45 connector

Refer to the *PAL-AT Operating Manual* for complete operating details and firmware configuration.

2.6.1 Port 1 - RS-485/RS-232

Port 1 can be configured for RS-485 or RS-232 (refer to figures 2-2 and 2-3). To configure it for RS-485, jumper J2 should be placed in the top position. Then the two jumpers at J1 can be set to select either full (top positions) or half-duplex (bottom positions).

Full duplex is available using two twisted-pairs connected to T1 terminals R+, R-, T+ and T-.

Half duplex, or 2-wire RS-485, requires a jumper wire connecting terminal R+ to T+ and a jumper from R- to T-. Each PAL-AT is a full load for the RS-485 network. A crimp ferrule is recommended to connect each incoming RS-485 lead to the corresponding jumper wire to insure a solid connection of the two wires in the T1 terminals.

All RS-485 cables in the network should be properly terminated as per EIA RS-485 recommendations. Typically the network is a daisy-chain configuration and two 120 ohm termination resistors are installed, one at each end of the network. Shields of the network cables should be connected together and grounded at only one point.

Port 1 can be configured for RS-232 by moving J2 to the bottom position. Then a 3-conductor cable should be connected to T1 terminals GND, R1 (receive) and T1 (transmit). The baud rate is configured via the PAL-AT firmware.

2.6.2 Port 2 - RS-232

RS-232 communications through port 2 requires a 3-conductor cable connected to T1 terminals GND, R2 (receive) and T2 (transmit). The baud rate is configured via the PAL-AT firmware.

2.6.3 Ethernet

An Ethernet RJ-45 jack provides a TCP connection to the PAL-AT. There are three ports available to handle different protocols: port 1024 for ASCII data (PALCOM), port 502 for Modbus TCP, and port 1050 for Modbus RTU over TCP.

An optional BACnet gateway is also available. Refer to Modbus to BACnet Converter Instructions (DOCID: PPPA-PRC-CSV-006) for more information.

Refer to the *PAL-AT Operating Manual* for complete operating details and firmware configuration.

2.7 Replaceable Parts

Caution - Before accessing the PAL-AT panel, the panel must be disconnected from the power source and isolated from any hazardous voltage present in the panel, e.g. relay wiring.

2.7.1 Battery

Battery BT1 on the PAL-AT system board maintains the clock settings when the panel is off. Jumper J5, located above the battery, must be set “On” (left position) to enable the battery. The battery is a 3 V lithium type.

Replace Battery With Energizer CR2025 Only. Use of Another Battery May Present A Risk of Fire or Explosion.

Caution, Battery May Explode if Mistreated. Do Not Recharge, Disassemble or Dispose Of in Fire.

It can be obtained locally or through PermAlert. It is replaceable by gently lifting the retaining clip to remove the old battery and sliding in the new one. Be careful to install the battery correctly. The lettering on the battery (+) should be facing out.

2.7.2 24 VDC Fuse

In addition to a user supplied external overcurrent protection device, fuse F1 on the PAL-AT system board protects the 24 VDC input. It is a 2 A, 250 V, time-delay, 5 x 15 mm fuse. It can be obtained locally or through PermAlert.

2.8 Contrast Adjustment

The contrast of the LCD can be adjusted by turning the contrast adjustment screw on the system board (see figures 2-2 and 2-3). This may be necessary to get the best viewing angle, depending on the mounting height of the PAL-AT panel.

2.9 Impedance Jumper Setting

Refer to figures 2-2 and 2-3 for positioning the impedance jumper. The 2-pin jumper is placed in position A, B, C, or D according to the type of cable and whether a Zener Barrier Assembly (for hazardous locations) is connected to the selected cable. The position should be:

Jumper Position	Cable Type	Zener Barrier Ass'y Installed
A	ATP only	No
B	ATP only	N/A
C	All others	No
D	All others	Yes

2.10 UL

PAL-AT is listed by Underwriters Laboratories, Inc. for installation in ordinary locations. The optional Zener Barrier Panel must be installed if any leak detection circuits are located in hazardous locations.

CAUTION - The maximum operating voltage allowed in the PAL-AT panel is 250 VAC. In addition, the voltage on any wires to the control relays must be limited to 250 VAC.

2.11 FCC and CE Compliance Requirements

Each PAL-AT system is supplied with several "ferrite blocks" (PermAlert part # 8058207) to comply with FCC and CE regulations for a Class A digital device. The sensor cables, jumper cables, and all communications wires must pass through two blocks before exiting the enclosure (see figure 2-4). All relay wires and power wires must pass through one block.

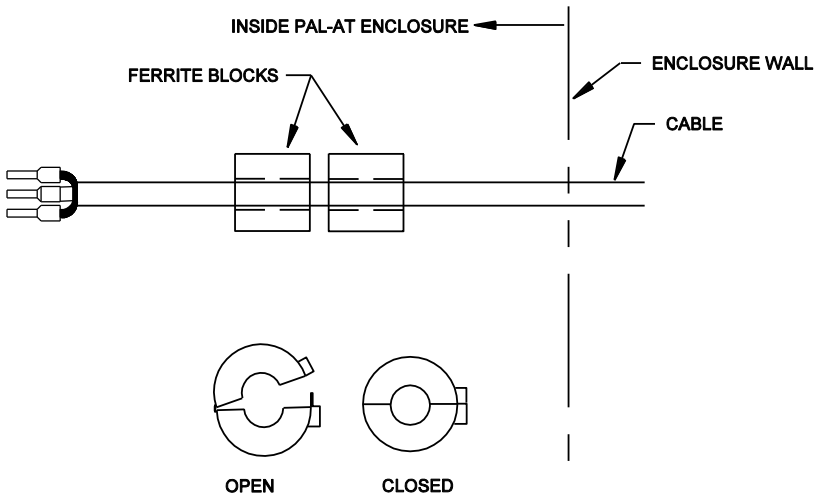

NOTE: JUMPER CABLES AND COMMUNICATION CABLES MUST PASS THROUGH 2 FERRITE BLOCKS.
RELAY WIRES AND POWER WIRES MUST PASS THROUGH 1 FERRITE BLOCK.
A FERRITE BLOCK CAN HAVE MORE THAN 1 WIRE IN IT IF THERE IS SUFFICIENT SPACE.

Figure 2-4
Ferrite Block Assembly

3 Zener Barrier Panel

3.1 Introduction

The optional Zener Barrier Panel (ZBP) is available for connection to PAL-AT when leak detection cables and probes are installed in hazardous locations. It provides intrinsically safe output circuits for use in Class I, Division 1 Groups C and D hazardous locations (Zone 0, Group IIB) when used with PAL-AT sensor cables, jumper cables, and probes, installed in accordance with the instructions in this manual. **Refer to Appendix A, Special Instructions, for intrinsic safety requirements.**

The ZBP also functions as a surge suppressor and reduces the chance of damage to the internal Zener Barrier Assemblies (ZBA) and PAL-AT from external voltage spikes, e.g. nearby lightning strikes.

3.2 Panel Installation

The ZBP is designed to be permanently mounted indoors in a dry, non-hazardous location. The enclosure is rated Type 4, 12 [IP66] (see figures 3-1, 3-2, and 3.3). The enclosure must not be located in direct sunlight to prevent excessive heat buildup. **In all installations, the ambient temperature surrounding the panel must not be less than -4°F [-20°C] and not exceed 140°F [60°C].** Relative humidity must be less than 95% (non-condensing).

The ZBP must be located adjacent to the PAL-AT panel. **Each Zener Barrier Assembly (ZBA) in the panel has a 5 ft [1.5 m] cable connected to the cable plug in the PAL-AT. The cable must be run in conduit between the two panels.**

The jumper cable from the ZBP to the sensing cable in the hazardous location must be routed in conduit. All conduit fittings must be appropriately rated and installed properly to maintain the rating of the enclosures. All electrical connections must comply with local codes. Seal-offs may be required to prevent vapors from traveling into the ZBP.

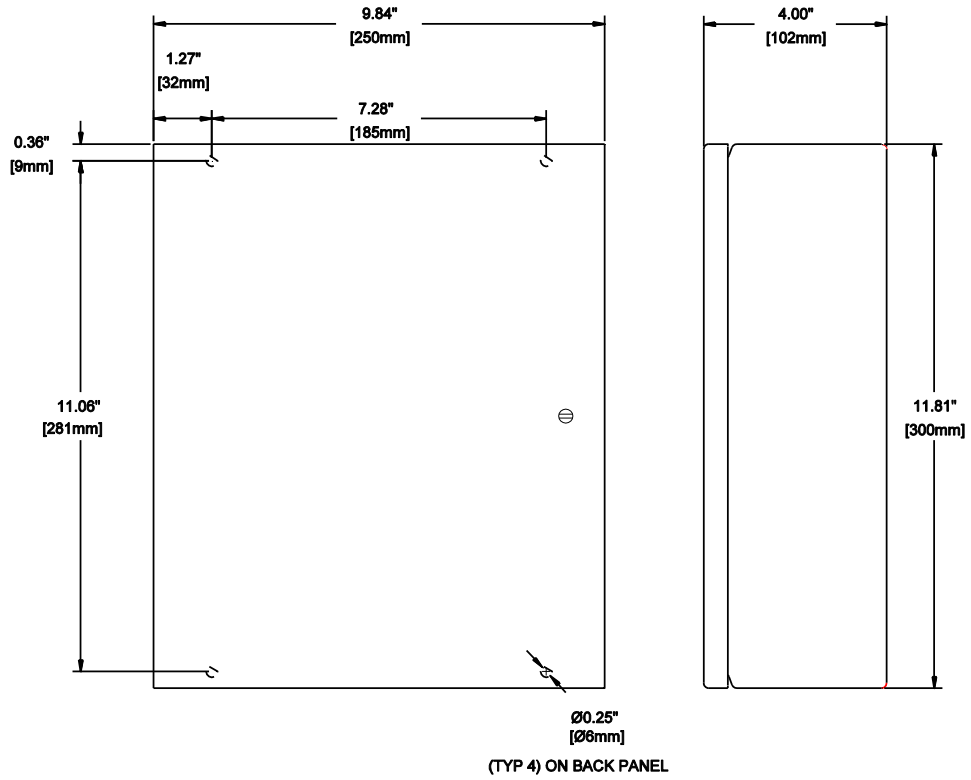

Figure 3-1
Zener Panel Mounting

3 Zener Barrier Panel

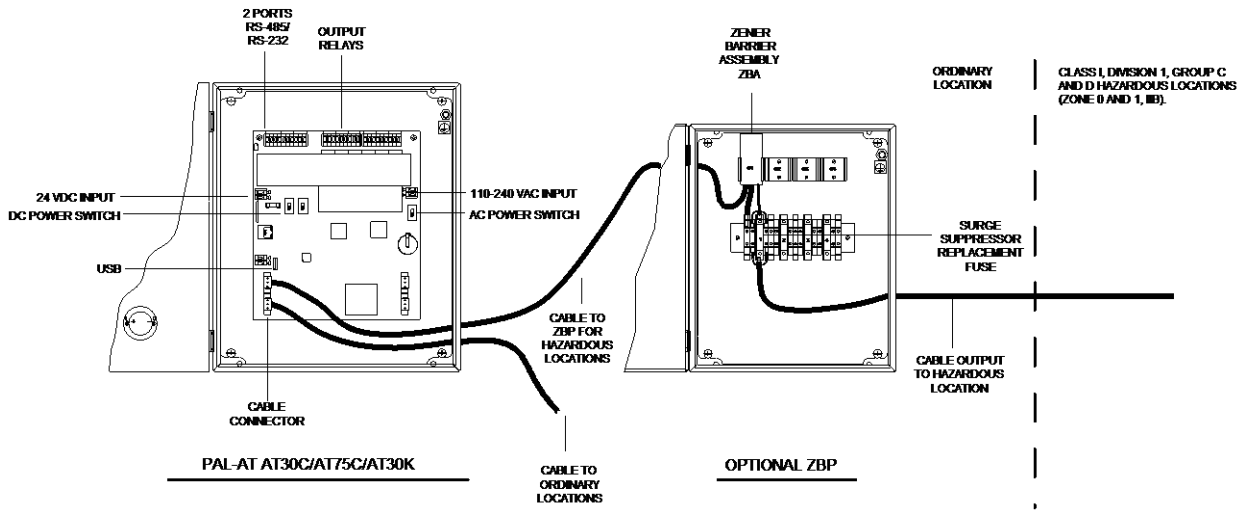

Figure 3-2
PAL-AT and Zener Barrier Panel

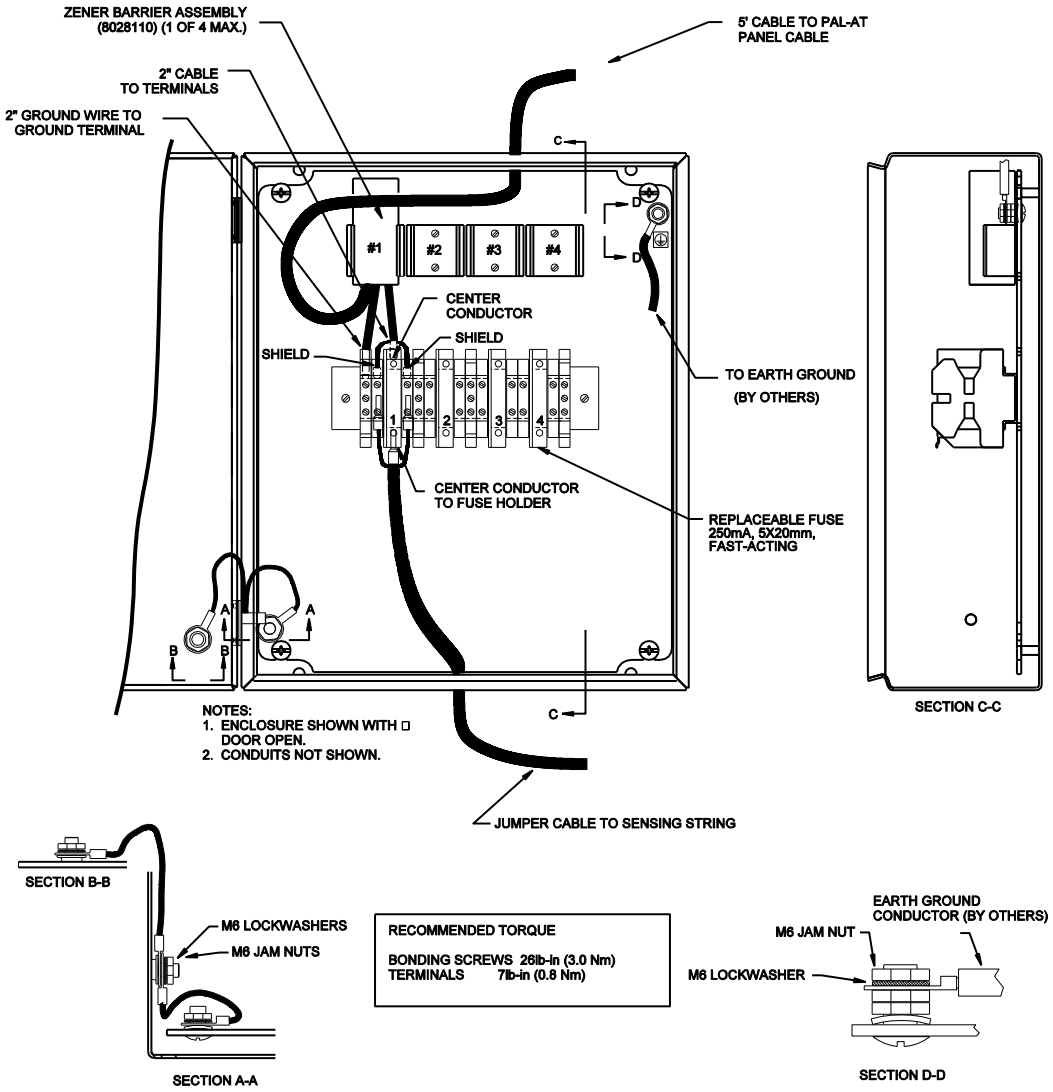

Figure 3-3

Zener Barrier Panel (ZBP) Wiring

3.2 Panel Wiring

The standard Zener Barrier Panel (ZBP) includes one zener barrier assembly (ZBA) and has provisions to install three additional ZBA's. Each ZBA has a 2" [50 mm] coaxial cable lead, a 5' [1.5 m] coaxial lead and a 2" [50 mm] ground wire.

The 5' [2 m] cable should be routed through conduit and connected to the appropriate cable plug in the PAL-AT panel. The jumper cable to the PAL-AT sensing string should be connected to the fuse holder and adjacent terminal blocks for the appropriate cable number. The jumper cable should have a ferrule on the center conductor and two ferrules on the braid. Refer to section 8, Cable Connectors, for details.

A customer supplied earth ground wire, minimum 12 AWG [4 mm^2], must be connected between the ground connection on the upper right corner of the white back plate of the enclosure and the ground bus of the power distribution panel.

3.3 Zener Barrier Assembly (ZBA) Installation

Refer to figure 3-3 to install a ZBA.

1. If an existing ZBA is to be replaced, loosen the four screws on the terminal strip for the ground wire, coaxial cable center conductor, and two coaxial cable braid wire ferrules. Lift the ZBA out of the mounting clip. Remove the end of the 5 ft. long cable from the connector in the PAL-AT panel.
2. Position and rotate the new ZBA so the 2" ground wire aligns with the appropriate ground terminal (green/yellow terminal). Note the ground terminal for barrier #4 is on the opposite side of the fuse holder as the other barriers. Loosely insert the ground wire, the coaxial center conductor ferrule and two braid wire ferrules into the ground terminal, fuse holder and adjacent terminals. The ground wire ferrule is a snug fit in the terminal and may have to be rotated slightly to insert fully.
3. Press and hold the ground wire fully inserted into the ground terminal, while tightening the terminal screw. Next, press and hold in place the coaxial center conductor ferrule into the fuse terminal and tighten the terminal screw. Similarly, press, hold and tighten each of the braid wire ferrules. Snap the zener barrier assembly into the plastic holder. The 5' [1.5 m] cable should be routed through conduit and connected to the appropriate cable plug in the PAL-AT panel.

3.4 Fuse Protection

Each Zener Barrier Assembly is protected from external voltage surges by a replaceable fuse in the terminal strip fuse holder. The 5 x 20 mm fuse is rated 250 mA, 250 V, fast-acting (Littelfuse 0217.250 or equal). A replacement may be purchased from PermAlert (part # 8067989) or obtained locally.

3.5 Allowable Cables and Probes

Refer to Appendix A – Special Instructions for the PAL-AT control drawing and additional intrinsic safety requirements for hazardous areas. The following cables, probes, and probe integrators supplied by PermAlert comply with the allowable electrical characteristics:

Part No.	Cable Type	Part No.	Probe Type	Part No.	Probe Type
8017705	AGW-Gold	8027888	PHLR-S	8027920	PSTV-L
8017700	AGT-Gold	8027889	PHLR-L	8027633	PTHL-S
8017640	TFH-Gold	8027911	PHLR-P-S	8027970	PTHL-L
8017635	TFH	8027912	PHLR-P-L	8027629	PT10-SC
8017715	JMP-U	8027623	PFS-S	8027932	PT10-SO
8017718	JMP-UD	8027910	PFS-L	8027930	PT10-LC
8017685	JPP	8027624	PSTV-S	8027934	PT10-LO

Note: A PWS probe or a probe integrator connected to a customer supplied probe having an exposed conductive surface, may not be connected to a ZBA.

3 Zener Barrier Panel

4 Jumper Cable and Junction Box Installation

4.1 Jumper Cable

1. Jumper cable (types JMP-U, JMP-UD, or JPP) is used to connect sensor cable segments and probes in series to form the sensing circuit (sensing string). Jumper cable is not affected by occasional contact with water and can be installed in building and vaults. In underground locations and areas where damage may occur to the jumper cable, electrical conduit should be used to provide protection. In wet environments or areas subject to flooding, cable connectors on jumper cable should be located in watertight electrical junction boxes (NEMA 4 or 4X) [IP66].
2. At least 50' [15 m] of jumper cable (65' [20 m] for type JPP) must be installed from the PAL-AT panel or Zener Barrier Panel to the first section of sensor cable or probe. An exception is connecting to ATP cable (see section 10).
3. Table 4-1 lists the length of jumper installed at the very end of a sensing string. A cable connector must be installed to terminate the end of the last jumper cable section and a threaded plastic cap is supplied to cover the connector.
4. Refer to section 9, table 9-1 for additional jumper cable required in a probe section.
5. Where possible, jumper cable connections to sensor cable should be made within the monitored area. PermAlert recommends the use of OZ Gedney, or equal, cord grips installed as shown in figure 4-1. Cord grips must clamp only jumper cable or TFH cable. The plastic outer braid on TFH cable must be pulled back so the cord grip is located on the smooth outer jacket.
6. Check the cable/connector assembly with an ohmmeter in accordance with the cable testing procedures contained in this manual.
7. The recommended minimum bend radius for all jumper cables is 1.5” [38mm].

Table 4-1
End of System Jumper Cable Length

System Length ft / [m]	JMP-U/UD End Jumper Length ft / [m]	JPP End Jumper Length ft / [(m]
0–2500 / [0-750]	30 / [9]	40 / [12]
2500-5000 / [750-1500]	50 / [15]	65 / [20]
5000-7500 / [1500-2300]	100 / [30]	125 / [40]

4 Jumper Cable Installation

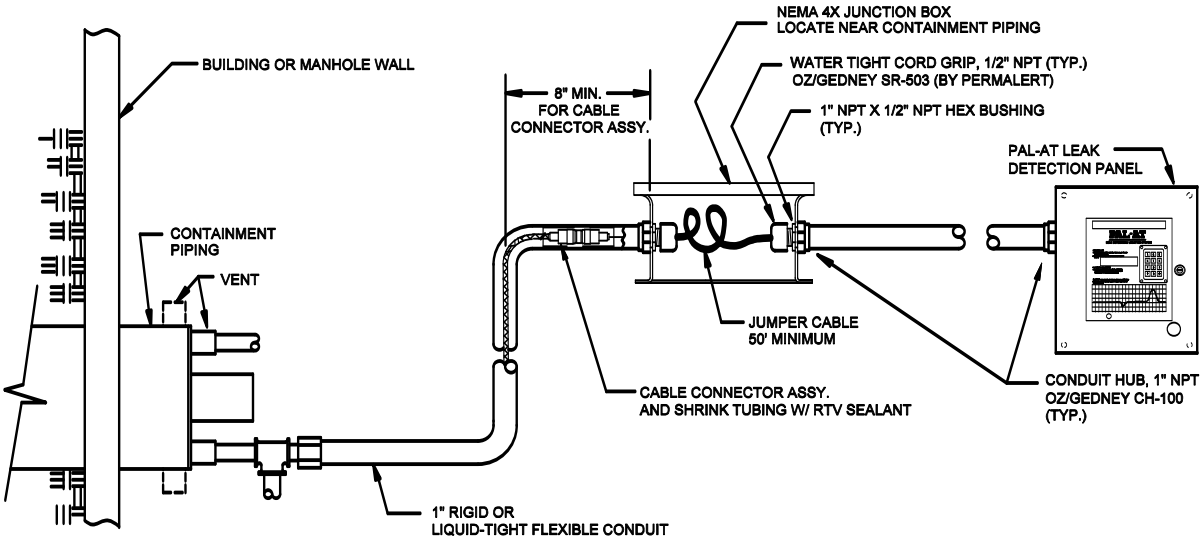

Figure 4-1
Typical Cable Connection in Monitored Areas with Junction Boxes

4.2 Calibration Points

1. During the initial setup and calibration of the PAL-AT system, connectors at selected locations (calibration points) are temporarily disconnected. **Therefore, it is imperative to have accessibility to connectors at calibration points at all times until the system is brought on-line.**
2. Reported fault location accuracy of the first leak is dependent upon the use of and distance between calibration points. Calibration points are required at changes of cable types unless connected to short lengths of jumper cable (15' [5 m] or less). Additional calibration intervals of 500' [150 m] or less will result in location accuracy of within +/- 5' [1.5 m]. Systems installed with calibration intervals exceeding 500' [150 m] will have a location accuracy of less than +/- 1% of the cable length from the previous calibration point.

4.3 Junction Boxes

There are two series of junction boxes supplied by PermAlert. The standard, polyester box has a maximum temperature rating of 150°F [65°C]. A fiberglass box is available for temperatures to 300°F [150°C].

1. Locate and install all junction boxes before installing any cable. Locate junction boxes as indicated on system drawings or as required. These locations include calibration points, the start and end of cable runs, manholes, probes, etc. Care must be taken to prevent water from contaminating these areas.
2. Securely mount the junction boxes to a vertical wall. In manholes or pits that might collect and hold water, mount junction boxes as high as possible. Use NEMA 4X [IP66] junction boxes at all locations.
3. Use a hole saw to cut the junction box as needed for conduit.
4. When jumper cable is installed in electrical conduit, use watertight conduit hubs and cord grips at junction boxes. Discard the male bushing supplied with the hub and use the cord grip supplied in its place. Depending upon the specific products used, a lock nut may be required on the cord grip's threads to pull the hub tight to the wall of the junction box.

   Caution: Always keep junction boxes and electrical conduits capped to prevent water from entering.

5 Cable Installation in Secondary Contained Piping

5.1 General

In secondary contained pipe applications, the sensor cable is installed in the bottom (6 o'clock position) of the air space between the product pipe(s) and secondary containment (outer casing or conduit). The leak detection cable is a sensitive sensor, capable of detecting small amounts of liquid. **Therefore, every effort must be made to keep the cable dry and prevent water from entering the air space. In addition, long-term accumulations of water, corrosive liquids, or hydrocarbon liquids in the containment pipe may degrade the containment or the leak detection system components.** The piping system must remain sealed during installation to prevent moisture entering the system. The installing contractor must install caps on the open ends of pipe installed in a trench to prevent liquids from entering the conduit or containment pipe.

Caution: A heated system using mineral wool or fiberglass insulation should be carefully monitored during startup. If the insulation is wet (even from atmospheric moisture) prior to startup, the water may combine with the ammonium sulfate binders in the insulation and release ammonia when the pipe is heated. The ammonia is detrimental to the leak detection cable and may be detrimental to the piping system if left uncorrected.

If the system becomes wet, it must be completely dried. Drying methods can consist of pulling a vacuum on the interstitial space, using compressors with desiccant dryers, or other methods. Obtain guidance from your piping supplier on proper techniques to be used with your system.

This section is intended to cover installation methods typically employed with any fabricated secondary contained pipe systems. Typically, these manufactured products are custom fabricated with product pipes positioned by specially designed supports within the secondary containment. **All pipe supports and changes in direction must have guides constructed out of stainless steel, minimum ¾" [20 mm] ID tubing, with flared ends. Plastic supports must be avoided when the carrier pipe is metal. Consult with the piping system manufacturer before installation to ensure provisions are being made for the cable installation.** Because the sensor cable installation is dependent upon the design provisions employed by the pipe manufacturer, it is recommended the secondary pipe manufacturer supply the leak detection/location products. This sole source responsibility will greatly facilitate proper installation with lower cost.

The following charts are general references for installing a sensor cable into field-constructed secondary contained pipe system built with piping components. Typically, these systems are constructed using standard lengths of pipe and fittings for the product and secondary containment structures. Components of the piping system should be designed, manufactured, and installed to facilitate sensor cable installation. Because the sensor cable is placed on the bottom of the air space, there must be a continuous unobstructed passage for the cable(s) being pulled into the system. **PermAlert recommends a 1" [25 mm] air space. Pipe support design and alignment is critical. Pipe supports and other surfaces the cable contacts during "pulling" operations must be smooth to prevent snagging or damaging the cable.**

Field joint designs and procedures employed in the installation of the piping system must prevent damage to the pull rope and/or sensor cable.

Pull ropes must be installed as the pipe system is assembled together to facilitate the installation. Special stainless steel ¾" [20 mm] ID guide tubes must be installed in the air space of the containment straight, elbows, tees and wyes (lateral) at the factory. Pull points must be designed and provided at specific locations to facilitate the installation of the pull cable and leak detection cable. **The recommended minimum bend radius for all sensor and jumper cables is 1.5" [38mm].**

5 Cable Installation

Leak Detection Sizing Chart
Polypropylene / Polyethylene Piping SDR Sizes

Pipe Size (in) [mm]	Casing Size (in) [mm]	SDR11/SDR11	SDR11/SDR32.5
1.5 [40]	4 [100]	OK	OK
2 [50]	6 [150]	OK	OK
3 [80]	6 [150]	OK	OK
4 [100]	8 [200]	OK	OK
6 [150]	10 [250]	OK	OK
8 [200]	12 [300]	OK	OK
10 [250]	14 [350]	NO	OK
12 [300]	16 [400]	N/A	OK
14 [350]	18 [450]	N/A	OK
16 [400]	20 [500]	N/A	OK

Leak Detection Sizing Chart
For Standard Weight Steel and Fiberglass Pipe
(w/o insulation, 10 gauge steel or fiberglass containment)

Pipe Size (in) [mm]	Casing Size (in) [mm]
2 [50]	6 [150]
3 [80]	6 [150]
4 [100]	8 [200]
6 [150]	10 [250]
8 [200]	12 [300]
10 [250]	14 [350]
12 [300]	16 [400]

Note:

1. **Not all pipe types or sizes are shown in the above charts. For different systems, contact PermAlert.**
2. **Chart is based on smooth pulling surfaces and installation of guide tubes.**
3. **Multi pipe system will require factory sizing.**

5.2 Pull Points

1. Sensor cable must be “pulled” into the monitored areas using a continuous pull rope free of splices between pull points. Surfaces the cable contacts during “pulling” operations must be smooth to prevent snagging or damaging the cable.
2. Generally, pull points can be located at 500' [150 m] intervals for straight runs. Each 90° fitting on the run reduces the interval by 150' [50 m]. For example, a run of 50' [15 m] with three elbows is allowable (500' - (3 x 150') = 50').
3. Pull point designs should be selected not only based on accessibility during installation, but potential future cable replacement. When future cable replacement is a consideration, it is recommended underground installations have watertight junction boxes or secondary contained access points installed at grade or in vaults (see figure 5-1).

Caution: Pulling points often become calibration locations. When this occurs, accessibility to the cable connectors is necessary during the initial commissioning of the PAL-AT and the system’s setup procedures.

4. **Pull ports may also be used for periodic testing**. If so, a short length of sensor cable (minimum 5' - AGW-Gold, 15' – TFH/TFH-Gold) with connectors should be installed in the pull port during the initial setup. It is used as a test piece and can be replaced if needed after testing without setting up the cable string again.

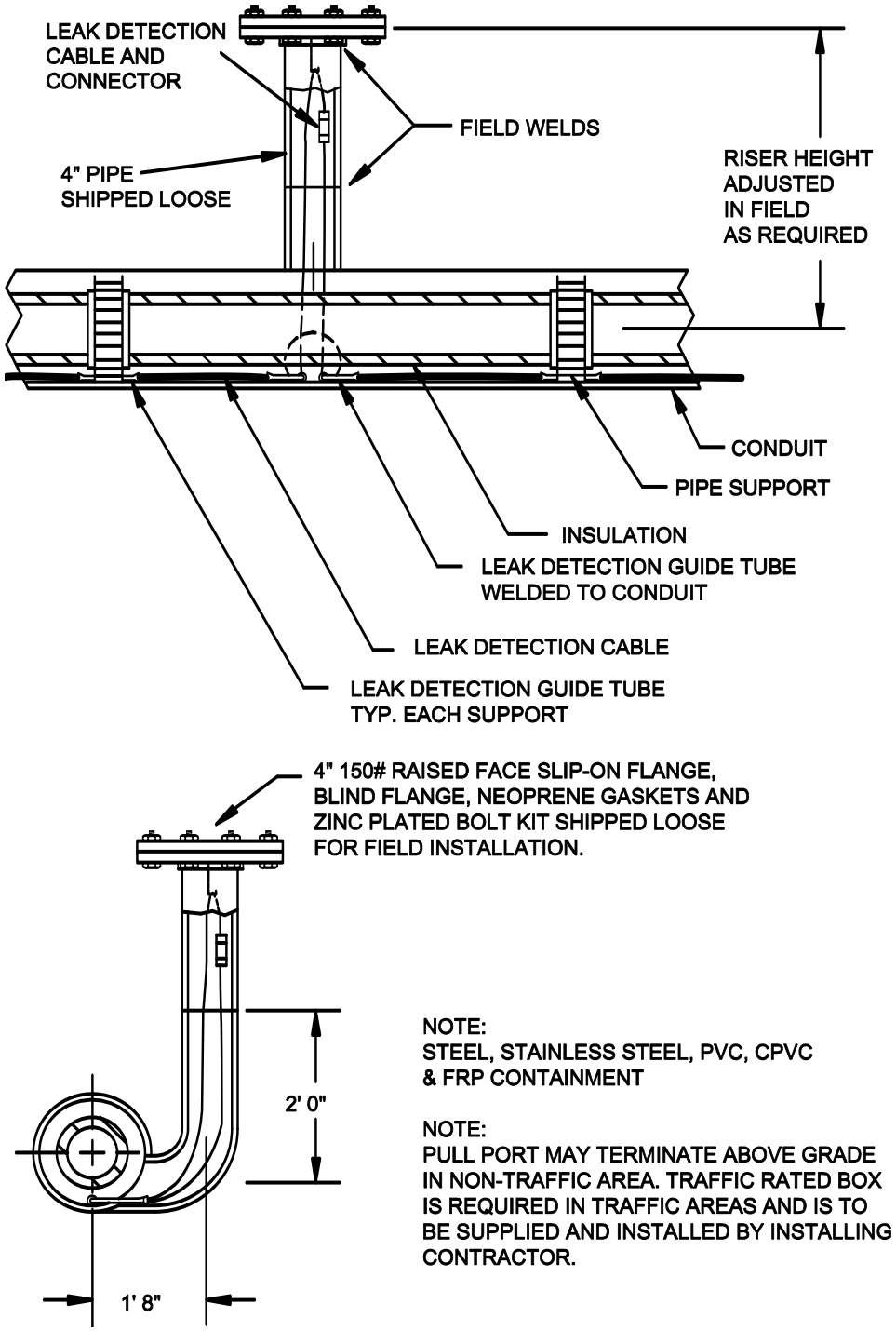

Figure 5-1
Detail of Pulling Point

5 Cable Installation

5.3 Cable Splices

Continuous pull rope and sensor cable are "pulled" into the secondary containment during certain stages of installation. Several splices are used to provide secure attachments to pull ropes and cable during this procedure. The following methods are recommended for splicing.

Note: When using tape to seal the splices, use only PVC electrical tape. PVC tape minimizes drag on the cable and reduces snags.

5.3.1 Factory Installed Fiber Pull Rope to Continuous Pull Wire Rope Splice

Step A Extend 12" to 18" [300 mm to 450 mm] of fiber rope and 14" to 20" [350 mm to 500 mm] of wire rope.

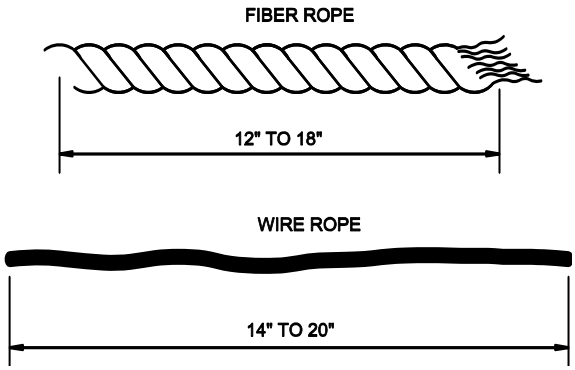

Step B Wrap a small amount of electrical tape around the fiber rope's end to prevent unraveling. Using a small pointed object (such as a nail), slightly separate the fiber rope braid and weave the wire rope into each opening of the braid as you go.

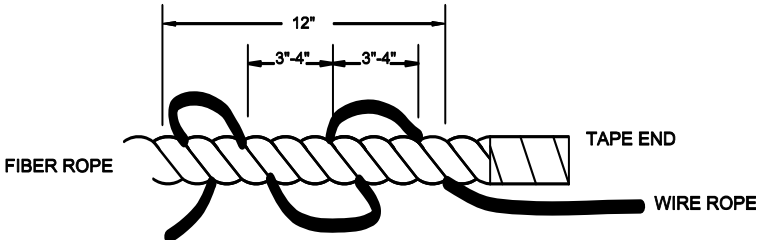

Step C Pull the wire rope tight, as it is woven into the braid.

Step D Using electrical tape, wrap the entire length of the splice area. The tape should extend approximately 2" [50 mm] over each end of the splice.

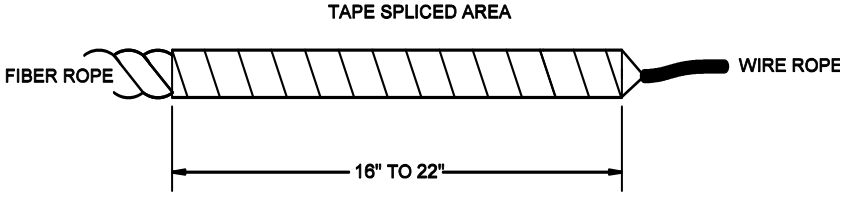

5.3.2 Wire Rope to Wire Rope Splice

Step A Extend 12" to 18" [300 mm to 450 mm] of each wire rope end for the splice.

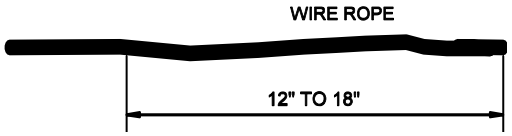

Step B Unravel each of the 12" to 18" ends into a 3-strand and a 4-strand section (approximately 50% in each), keeping the adjacent strands together.

Step C Starting approximately ¼" to ½" [6 mm to 12 mm] from the start of the wire rope's split, intertwine a section from each of the two ropes.

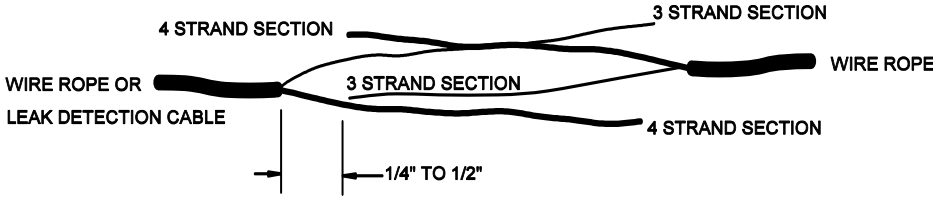

Step D Line up the two remaining sections and intertwine them together in a similar manner. In order to minimize the size of the splice, make sure the starting points for each intertwining operation line up with each other.

Step E Starting at approximately 1" [25 mm] from the beginning of the splice, wrap electrical tape around the splice until the entire splice, plus 1" on each end, is covered. Normally only one wrap is needed. Make sure both ends of the tape wrap are tapered and smooth in case the pull direction must be reversed.

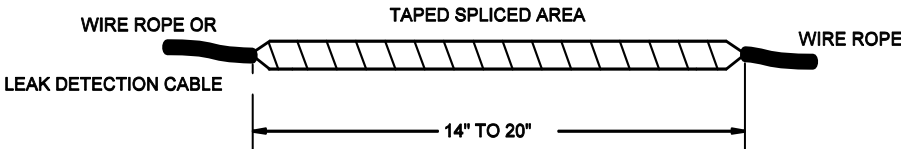

5.3.3 Wire Rope to Wire Rope Splice (alternate)

Note: Use this splice when splicing two different size wire ropes together

Step A Extend 8"-10" [200 mm to 250 mm] of each wire rope to be spliced.

Step B Unravel each of the 8"-10" sections (to approximately the same length) into two sections to form a Y with three adjacent spiral strands on one side, three adjacent spiral strands with center strand on the other.

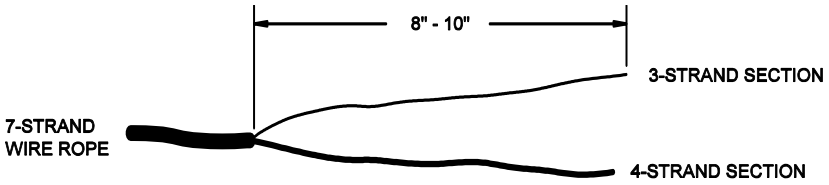

Step C Taking one end of the first cable, fold over the 4-strand section of the Y to form a loop. Join the 3-strand section to the 4-strand section. Wrap the 3-strand section around the 4-strand section so the strands appear as in the original undisturbed cable.

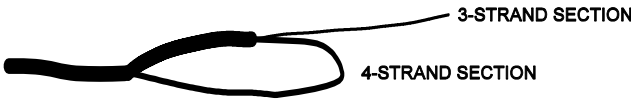

Step D Take the second cable Y end and place the 4-strand end through the eye of the first cable loop.

Step E Repeat steps A through C.

Step F Using a pair of pliers, crimp the ends of the loops.

Step G Spiral wrap the splice tightly, using electrical tape.

5.3.4 Wire Rope to Leak Detection Cables

The following steps apply in general to all sensor and jumper cables. However, there may be slight variations to the steps presented depending on the cable selected. For example, the jumper cables have an outer jacket but no plastic overbraid, while the TFH cable has both a jacket and an overbraid.

Step A Extend the 7-strand 1/8" [3 mm] wire rope for splicing. Cut the end so all strands are even.

Step B Unravel 8" [200 mm] of the wire rope into two sections to form a "Y" with three adjacent spiral strands on one side and four strands on the other side.

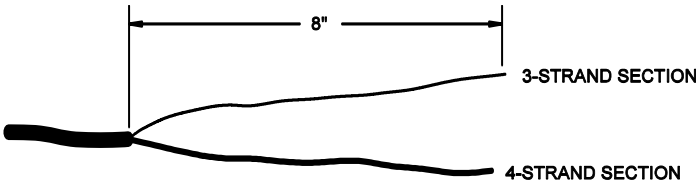

Step C Extend approximately 5' [1.5 m] of cable for the splice. Form a small loop in the shape of a "U" 5' from the end of the cable and tape it in place tightly. Do not kink the cable when forming the "U" (Skip this step with jumper cables.)

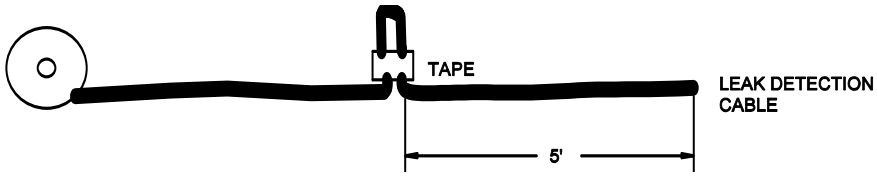

Step D Cut the end of the cable so the plastic overbraid, jacket, metallic braid, center conductor insulation, and center conductor are flush at the end of the cable.

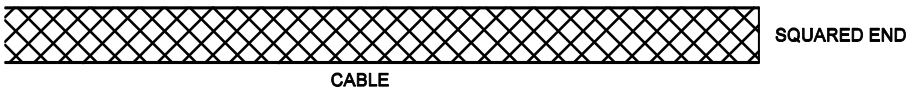

Step E Slide the plastic overbraid back over the sensor cable at least 24” [600 mm] and tape in place tightly.

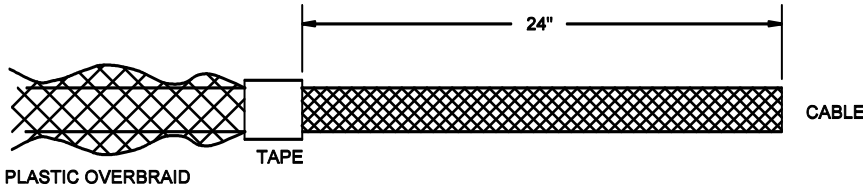

5 Cable Installation

Step F Cut 5" [125 mm] off the exposed end of the sensing cable.

Step G Cut off 15"-18" [380 mm to 450 mm] of the outer jacket and tightly tape the edge of the outer jacket to the metallic braid. (This applies to only TFH and jumper cables.)

Step H Slide 12" [300 mm] of the metal braid back towards the taped jacket. Tape the metallic braid in place.

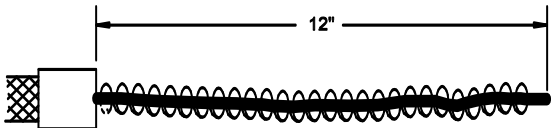

Step I Cut 4" [100 mm] off the end of the center conductor and conductor insulation.

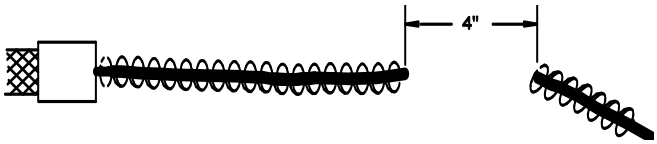

Step J Carefully remove 6"-8" [150 mm to 200 mm] of the dielectric spacer material and conductor insulation from the center conductor. Do not cut the center conductor strands when removing the thin film of insulation. Securely tape the end of the dielectric spacer to the center conductor.

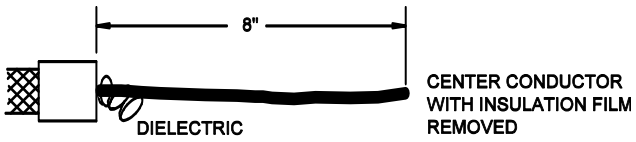

Step K Insert 1" [25 mm] of the cable's center conductor into the throat of the wire rope.

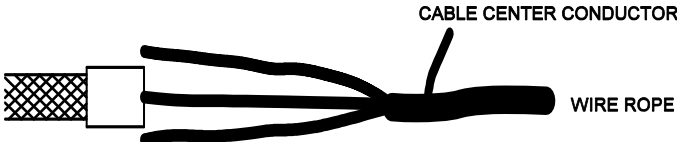

Step L Carefully braid 1" of the 3 and 4-strand sections of the wire rope.

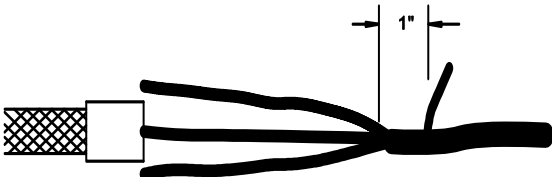

Step M Insert the center conductor of the cable into the next section of the Y throat of the wire rope. Continue to wrap and insert until approximately 5"-7" [125 mm to 175 mm] of the cable center conductor is woven into the wire rope. Tape the end of the wire rope with electrical tape. Cut off excess wire rope at the end of the splice if necessary.

Step N Spirally tape the entire spliced wire rope/center conductor area tightly from front to end.

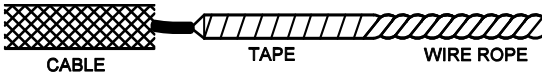

Step O Carefully slide the metallic braid over the woven splice area making sure the braid extends over the splice as much as possible, and is tight.

Step P Tightly tape the metallic braid in place, from the left end. Extend the tape just past the woven splice area. (Include 2”-3" [50 mm to 75 mm] of the white jacket if applicable.)

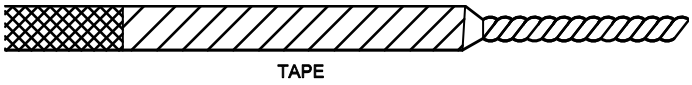

Step Q Carefully slide the plastic overbraid over the cable splice. Extend the plastic overbraid over the splice area as far as possible.

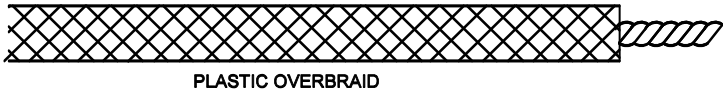

Step R Tightly tape the plastic overbraid in place, spirally, from the front end. Extend the tape just past the spliced area. The finished splice should be tapered in appearance.

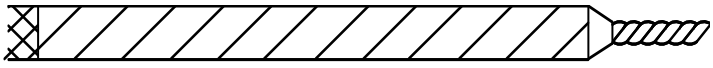

5.4 Installation of the Continuous Pull Rope

1. PermAlert recommends the installation of a continuous pull rope, free of splices between properly located and accessible pull points.
2. All sections of factory-prefabricated piping should be supplied with a factory-installed pull rope. The factory-installed ropes shall be used to pull the continuous pull rope into the air space before the secondary containment field joint closures are completed. Make sure the factory installed pull rope moves freely in each section of conduit when laying the pipe in the trench.

5 Cable Installation

3. Pulling the continuous pull rope into the air space of the secondary containment requires careful planning on the installer's part. Care must be taken during the installation of the pipe system to proceed in a manner to maintain accessibility to the factory installed pull rope.
4. The installation of the continuous pull rope and the pipe system must proceed simultaneously. Working ahead on closing the pipe system joints may prevent the successful installation of the pull rope, necessitating the reopening of a joint(s). **Avoid allowing water, mud or other debris from entering the air space.** This can prevent successful cable pulling and a functional system.
5. **Caution all workers involved in the pipe installation that the factory installed pull rope should never be "temporarily" removed with the expectation it can be replaced later.** Losing the end of the pull rope and allowing it to fall back inside the secondary containment must be avoided. Special care must be taken at risers where the weight of the rope, in the vertical section of the pipe, tends to pull the rope into the secondary containment.

Step A Splice the continuous pull rope to the factory installed pull rope. Follow splicing procedures contained in the "Cable Splices" section.

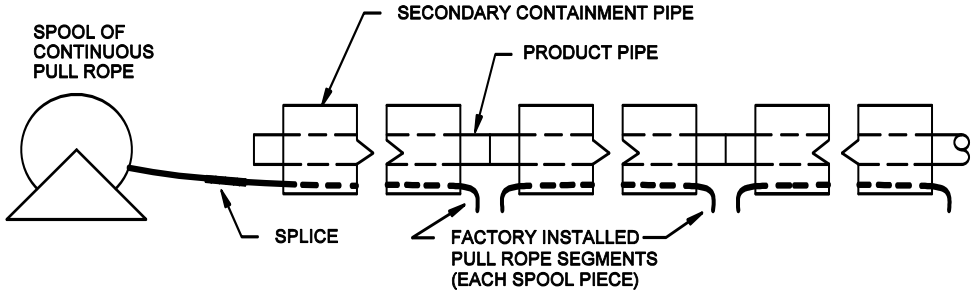

Step B Go to the first uncompleted secondary containment field joint and pull the continuous pull rope into the first section of piping until the splice exits the field joint.

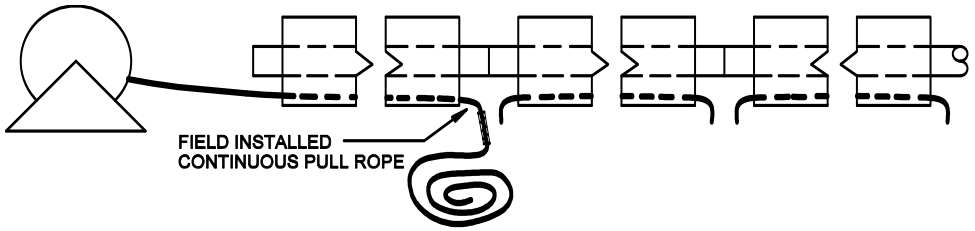

Step C Break the splice on the factory installed pull rope and discard the pull rope. Splice the continuous pull rope to the next section of factory pull rope, and pull the continuous pull rope into the next pipe

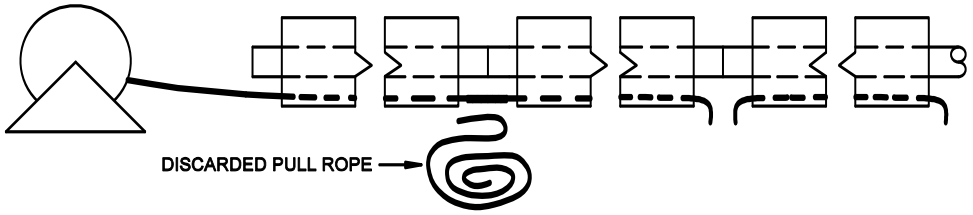

Step D Return to the first field joint. If the product pipes are insulated, apply insulation material. To prevent the continuous pull rope from being damaged during joining of the secondary containment, it must be held off the bottom of the containment. Attach the pull rope temporarily to the carrier pipe (insulation) by looping a piece of 22 gauge steel wire around the carrier pipe (insulation) and twisting the ends together to form a hook around the pull rope.

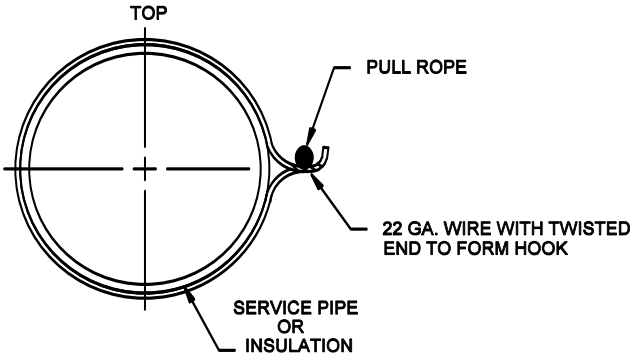

Step E The secondary containment field joint can now be made. After closing the field joint of the secondary containment, restrain the continuous pull rope at the spool end, and pull on the rope at the open field joint in order to pull the rope off the wire hook.

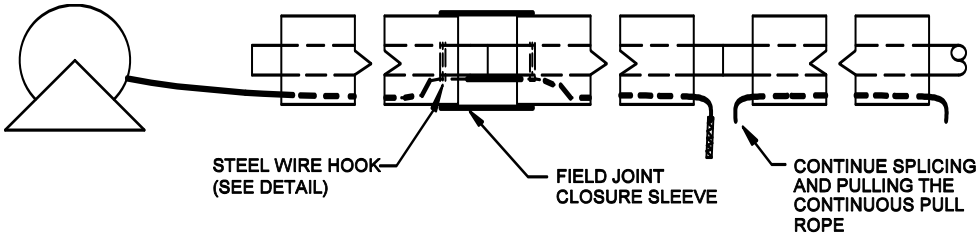

Step F Pull the continuous pull rope from the previously sealed joint to the next open field joint.

Step G Repeat the sequence of splicing, pulling and closing the field joints of the secondary containment until the continuous pull rope has been pulled through the entire piping run. Each time after completing 3 or 4 field closures, move the continuous pull rope back and forth in the containment to insure the pull rope moves freely.

5.5 Installing Sensor and Jumper Cables

1. After all other work is completed and the area is free and clear of all activities that can cause damage, the sensor cable should be installed. **Care must be taken during installation of sensor cable to avoid contact with potential contaminants such as water puddles or oil.**
2. PermAlert recommends installing the sensor cable before backfilling of underground secondary contained pipe systems.
3. **Keep the cable dry and clean.** Tent the spool area and do not install the sensor cable during a rainstorm.
4. Slowly play out the cable by hand rotating the spool. Never attempt pulling loose coils of cable off the end of the spool. When loose coils are pulled taut, kinks may form that could prevent bringing the system on-line.
5. **Always be careful to prevent the cable from falling into the secondary containment.** Be particularly careful at risers, where the weight of the cable in the vertical section of pipe tends to pull back the cable.
6. The bottom of a secondary containment that penetrates into a vault or building should be fitted with a minimum 1" [25 mm] threaded pipe coupling or similar fitting. This fitting will be located where the sensor cable enters (exits) the secondary contained piping system.
7. Check that the air spaces of secondary containment, at termination points of the piping system, are dry. Drain plugs in the containment should be provided for this purpose. If water is found, dry the system completely before attempting installation of the sensor cable.

8. Place the spool of sensor cable at the high end of the run. At this time, do not route the pull rope or cable through the junction box and conduit.
9. Splice the sensor cable to the continuous pull rope using the method described in section 4.3, "Cable Splices".
10. At least two workers are required to pull sensor cable. Work should proceed continuously from pull point to pull point. At the lowest elevation between two pull points, one person should slowly pull on the pull rope. At the higher elevation pull point, the second person should carefully play out the cable while pushing it into the interstitial air space. This push/pull action significantly reduces the pulling force required to install the cable. If a problem does arise, the workers must be able to signal each other quickly. Walkie-talkies are recommended so communication can occur to prevent cable damage.
11. **The pulling force should never exceed 50 lb [23 kg].** If a snag is encountered, carefully work the cable back and forth in an attempt to clear the cable. If the snag cannot be cleared, contact PermAlert's Field Service Department for assistance.
12. Where electrical conduit and junction boxes are required, use watertight NEMA 4X [IP66] boxes and mount per the instructions contained in this guide. Temporarily pull enough sensor cable out of the secondary containment and into the junction box (approximately 2' [600 mm]) to allow installation of cable connectors (see figure 5-2). **Make sure the bushings and cord grips are slipped on the jumper cable before installing the cable connectors.** Attach the cable connectors, test them, and push the assemblies into the electrical conduits. Thread and tighten the cord grips making a watertight seal against the jumper cable. The conduit termination points must be sealed. **Do not leave conduit termination points open, or moisture may enter and wet the sensor cable.**
13. **The ends of all cables should be kept dry during installation. If the cable ends are submerged in water, capillary action will wick water into the center conductor. This could cause corrosion and shorten the life of the cable.**
14. **If TFH cable is installed, the ends of the cable must be immediately sealed with the shrink tube caps supplied by PermAlert to prevent water from entering the cable under the jacket.** Make sure the polyester overbraid is not under the shrink cap to insure a good seal. **If water is allowed to enter the ends of TFH cable, it must be replaced.**

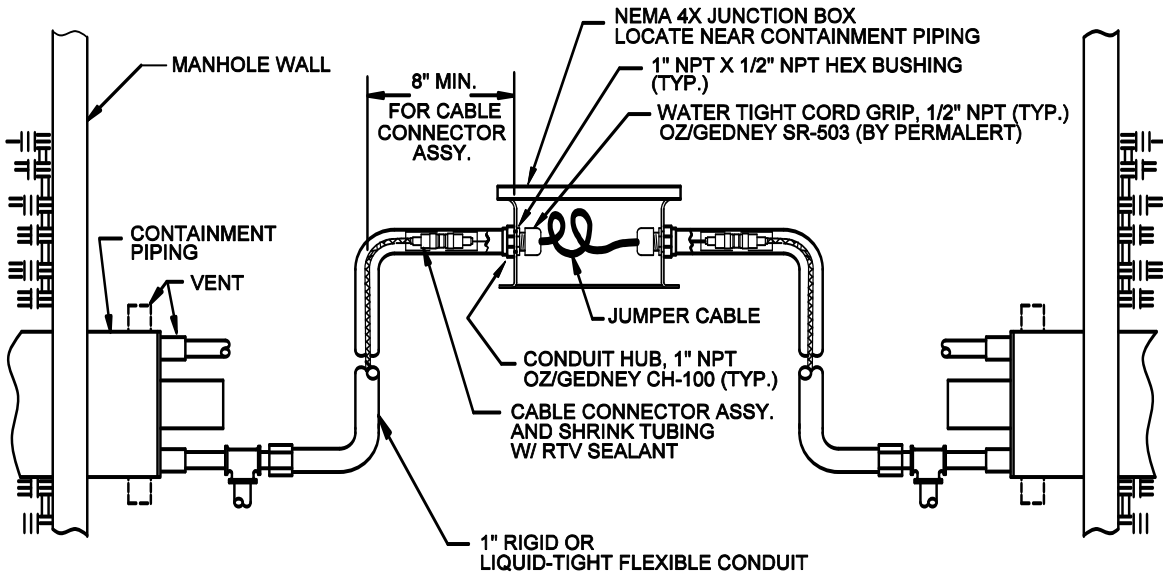

Figure 5-2
Cable Connections with Electrical Conduit and Junction Boxes

15. In contained pipe systems where branch runs and main runs are monitored, jumper cable can be used to return to the main from the branch. For these installations, PermAlert can furnish a cable routing drawing showing locations requiring the installation of sensor cable and jumper. Depending on the design of the secondary contained system and the free unobstructed air space available, both cables (sensor and jumper) may be installed in the secondary containment air space. This will require simultaneously pulling both cables, and most likely will reduce the length of cables that can be pulled at one time. When 2 cables are installed in the same air space, both cables must be pulled out of the secondary containment through the threaded coupling and finally connected together with a cable connector in either: (1) a watertight capped pipe chamber connected to the threaded coupling, as shown in figure 5-3 or (2) a NEMA 4X [IP66] junction box. This type of termination should also be accessible to allow for future maintenance. As an alternative to pulling both cables into the air space of the secondary containment, jumper cable can be routed in electrical conduit. If connectors must be used, it is recommended they be installed in accessible watertight NEMA 4X [IP66] junction boxes located at grade.

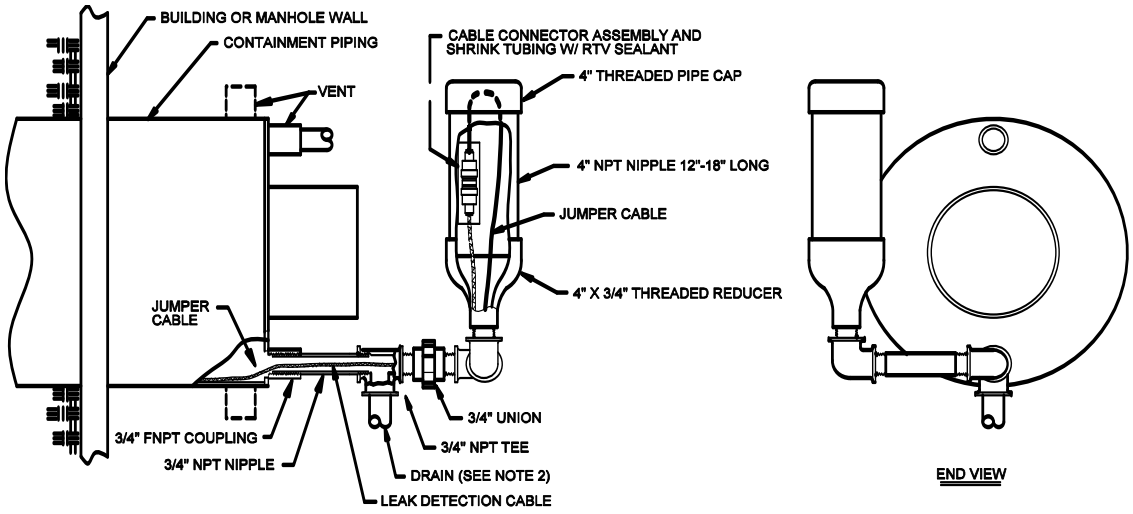

Figure 5-3
Branch Line Routing of Jumper Cable

16. At least 50' [15 m] of jumper cable must be installed from the PAL-AT panel before connection to sensor cable. Refer to table 1 (see section 3) for jumper installed at the very end of a sensing string in an enclosure (see figure 5-4). A cable connector must be attached to terminate the end of the jumper cable. Install the red plastic cap supplied with the PAL-AT, over the connector to keep it clean. The termination of the sensing string should be accessible for future maintenance.

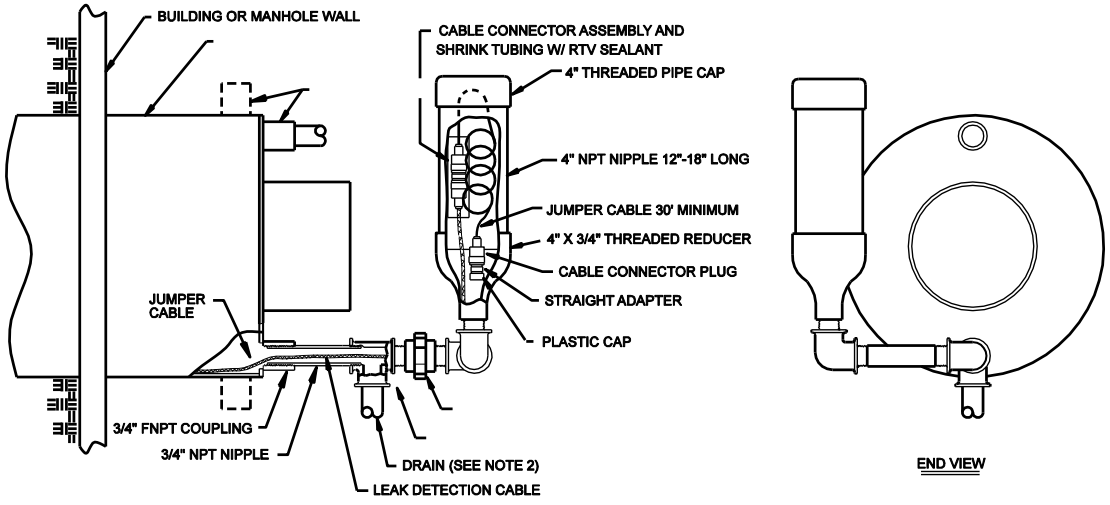

Figure 5-4
Termination of Sensing String

5.6 Air Testing

1. Air testing of the secondary containment must be performed before backfilling.
2. All sensor cable termination chambers (see figures 5-3 and 5-4) must be completely installed before applying the air test. Also, cap any open vents or drains. Be careful to prevent the pull rope or sensor cable from being blown back into the secondary containment.
3. Assemble required piping for air test and follow test procedure provided by the secondary containment piping manufacturer's installation guide.

   CAUTION: THE COMPRESSED AIR SUPPLY MUST BE FREE OF WATER AND OIL.
4. After the air test has been completed, remove test piping and cap test ports on the secondary containment.

6 Installation of Direct Buried Sensor Cable

6.1 General

The following instructions and precautions are very important for the successful installation and operation of the PAL-AT system with direct buried sensor cable. These instructions do not cover every possible situation, but are intended as guidelines for the majority of applications. Remember, the sensor cable is a sensitive electrical cable and should not be crushed, stretched, kinked, cut or damaged. If you have any questions regarding the installation of the direct buried cables, contact PermAlert. Failure to follow these instructions may result in damage to the cables or its jacket and prevent or limit operation of the PAL-AT system.

1. TFH and TFH-Gold cables are constructed of materials that detect hydrocarbon liquids, but ignore the presence of water. TFH cable has an outer jacket to protect the nickel-plated, copper braid wire. TFH-Gold cable does not have an outer jacket, but uses polymer-coated braid wire that is corrosion resistant.
2. These unique sensor cables can be installed in wet soil environments while monitoring for the leakage of hydrocarbon liquids. This feature permits direct burial of TFH/TFH-Gold, in 1½" or 2" "screened" or slotted PVC pipe, for the monitoring of underground single wall piping and tanks. The maximum burial depth of TFH/TFH-Gold cables is 20' [6 m]. This limitation is due to the fact the cable materials repel water to a maximum pressure of 8.7 psi [0.6 bar]. If the cable jacket (TFH) or cable core (TFH-Gold) is damaged, water may enter the cable and prevent or limit the operation of the PAL-AT system.
3. The location of the slotted pipe and hydrocarbon detection cable is determined by several variables. These variables include soil type, backfill material, product in the pipeline, water table, pipeline pressure and leak rate. Another consideration is if the installation is new or a retrofit of an existing pipeline.
4. It is recommended to slide a fabric sleeve or sock liner over the slotted PVC pipe to minimize soil entering and possibly blocking the pipe after an extended time. A 3" sleeve is typically available in home improvement stores and other sizes are available at industrial sources.
5. The sensor cables must be located where the hydrocarbon liquids will collect and allow detection. For some applications, the use of a closed synthetic liner, installed in the pipe trench, may be considered to facilitate the collection of hydrocarbon liquid for detection and reduce soil contamination. Normally one cable located in a slotted pipe adjacent to an underground pipe will provide satisfactory results. The slotted pipe may be located under the service pipe for a new installation. If the system is installed with an existing pipeline, the slotted pipe can be installed a few inches to the side of the pipeline to minimize the excavation cost.

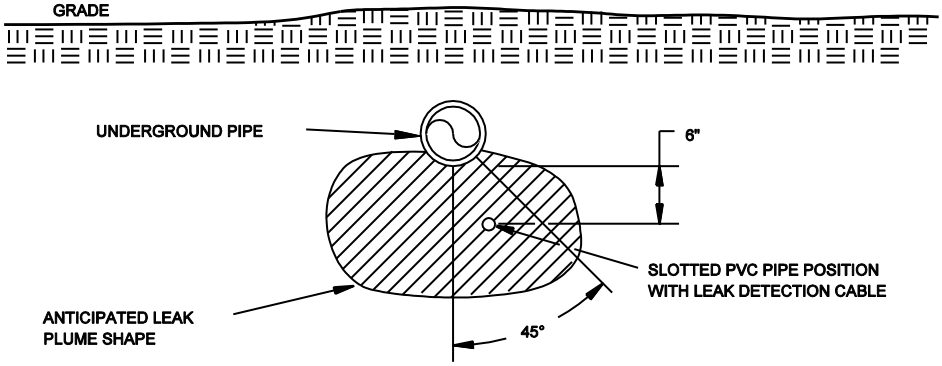

6. If buried TFH/TFH-Gold is submerged in water and the water freezes, the resulting compression of the cable may be detected as a leak and cause an alarm. This effect should be considered when determining the placement of the cable to reduce false alarms. It does not damage the cable.
7. **The recommended minimum bend radius for all sensor and jumper cables is 1.5" [38mm].**

8. If a synthetic liner is not installed under the slotted pipe, a compacted clay/silt base layer should be used under the pipe to minimize the vertical migration of a leak. The slotted pipe should be covered with backfill material of sand or soil.
9. It is recommended to have 12" [300 mm] inches of backfill installed and compacted with hand tampers above the slotted pipe before mechanical compactors are used, to prevent crushing the pipe.
10. During the storage and installation of TFH cable, the ends of the cable must be protected to keep water from entering. The cable is shipped with shrink tube caps on the ends. Additional caps are supplied with TFH connectors to be installed on the cable temporarily until the connectors are installed. The caps should be installed over the jacket, but under the outer plastic overbraid of the cable. The cable ends should not be immersed in water at any time, even with the shrink caps installed. After the connectors are installed, if there is any possibility of water contacting the connectors, they should be sealed with non-corrosive RTV and shrink tubing immediately. If the connector needs to be reopened later for calibration, slit open the outer shrink tubing. Replace it with a new shrink tube immediately after calibration. Shrink tube caps are not required for TFH-Gold.
11. The sensor cable must be protected from damage when it is in the trench before backfilling. The cable must be protected when pipes are being welded or other work is occurring nearby. The cable should not be stepped on.
12. All connectors of sensor cable must be located in junction boxes at or above grade. A vertical riser of PVC conduit or other material suitable for the project must be installed to provide protection to the cable through the backfill and into the junction box (see figure 6-1). Follow the instructions for installing cable connectors using shrink tubing and RTV sealant to insure a watertight assembly.

CAUTION: It is extremely important to prevent damage to the TFH cable jacket. A damaged cable must be replaced.

6.2 Installing the Sensor Cable

1. After all other work is completed and the area is free and clear of all activities that can cause damage, the sensor cable should be installed.

Care must be taken during installation of sensor cable to avoid contact with potential contaminants such as oil, hydrocarbon liquid, soap or other material that may contain surfactants. Contamination by any of these liquids will destroy the water repellency of the cable and it will need to be replaced.

2. When the construction schedule allows, the PAL-AT panel should be permanently mounted and connected with electrical power before installing jumper or sensor cable. This will allow the system's setup and calibration procedures to proceed efficiently. For additional information on calibration points, refer to the *PAL-AT Operating Manual*.
3. Slowly play out the cable by hand rotating the spool. Never pull loose coils of cable off the end of the spool. When loose coils are pulled taut, kinks form in the cable that could prevent bringing the system on-line. Protect open ends of the cable from damage, contaminants and moisture.
4. Starting from the panel, connect a minimum of 50' [15 m] of jumper cable before connecting the sensor cable. Route the sensor cable as shown on the contract drawings. Refer to table 1 (see section 3) for amount of jumper cable to be connected to the end of the sensing string.
5. Make sure all TFH cable ends are sealed with shrink tubing after installation.

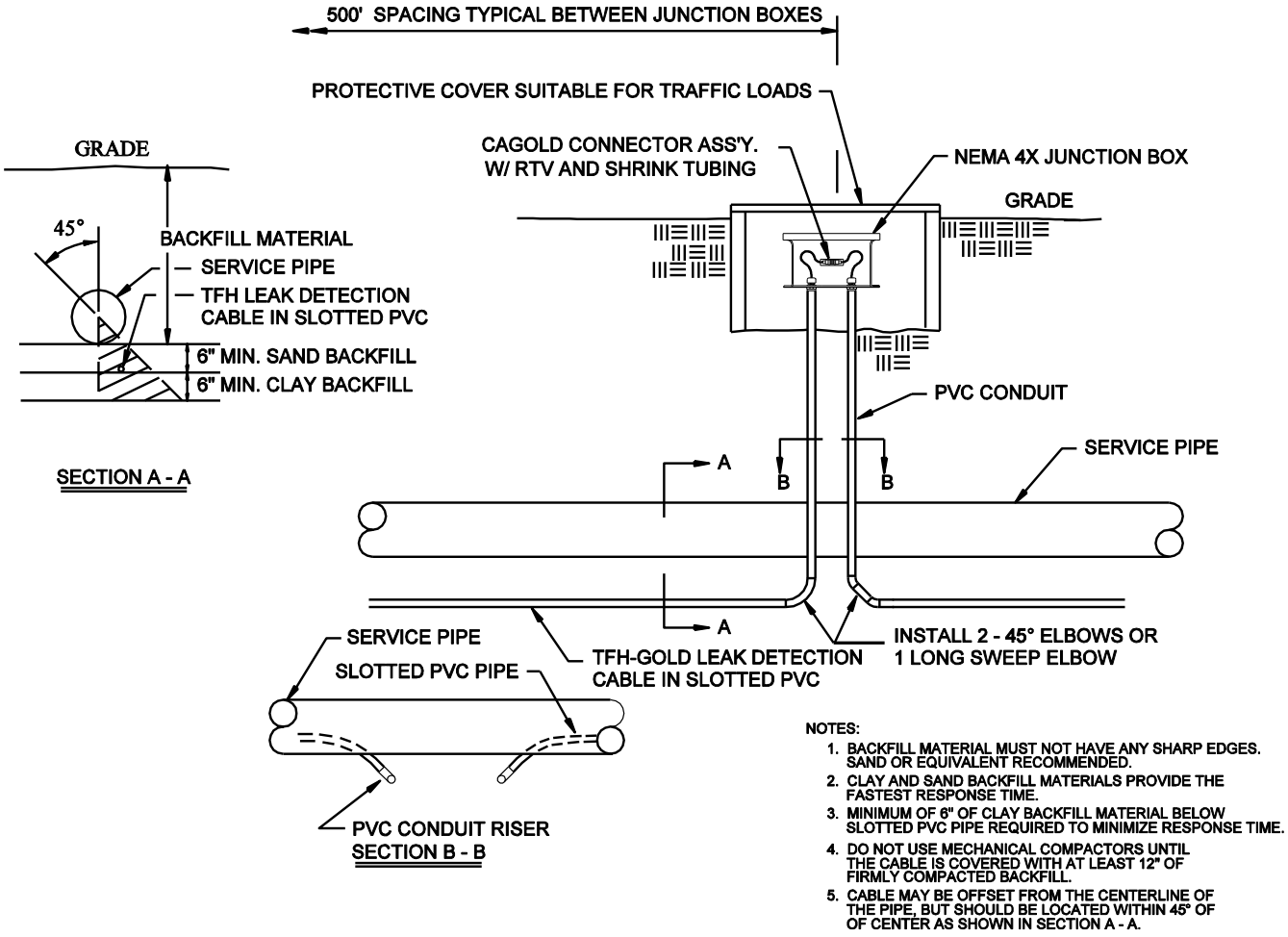

Figure 6-1
Direct Buried TFH/TFH-Gold Hydrocarbon Sensor Cables

6 Direct Buried Sensor Cable

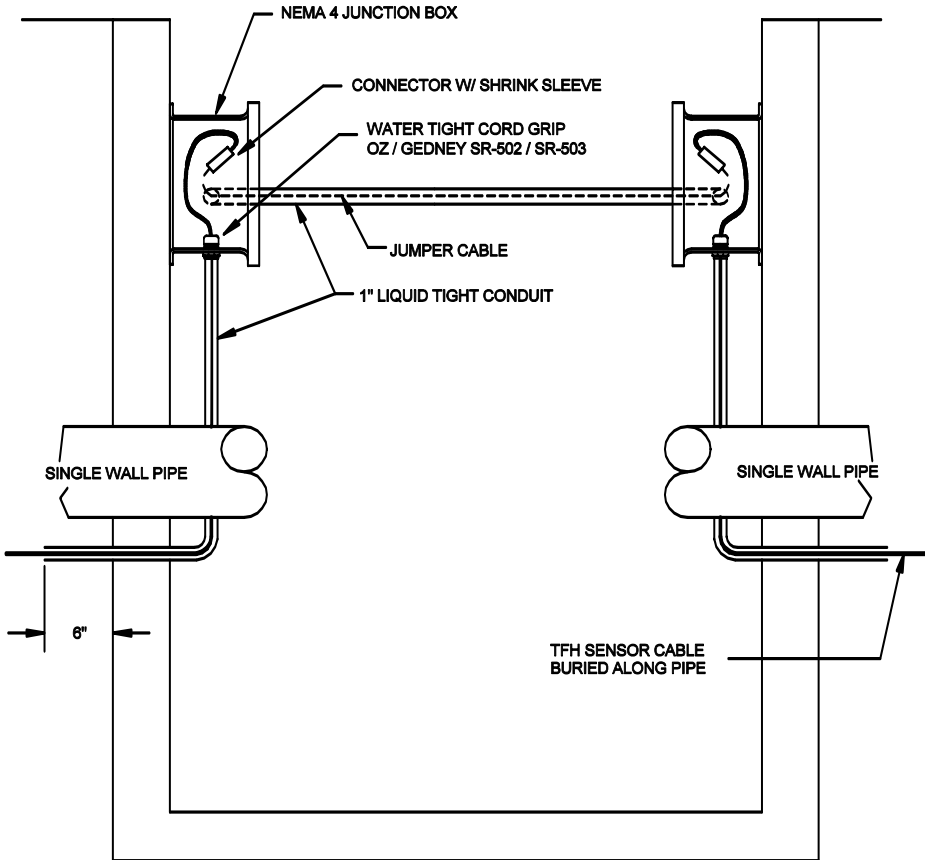

Figure 6-2
Hydrant Valve Pit / Manhole Penetration
Direct Buried Cable

6.3 Above Ground Storage Tanks

Above ground storage tanks can be monitored for leaks by installing TFH/TFH-Gold sensor cable in slotted PVC pipe under the bottom of the tank or around the perimeter. Figures 6-3 and 6-4 show two such applications. For specific applications, contact PermAlert for assistance.

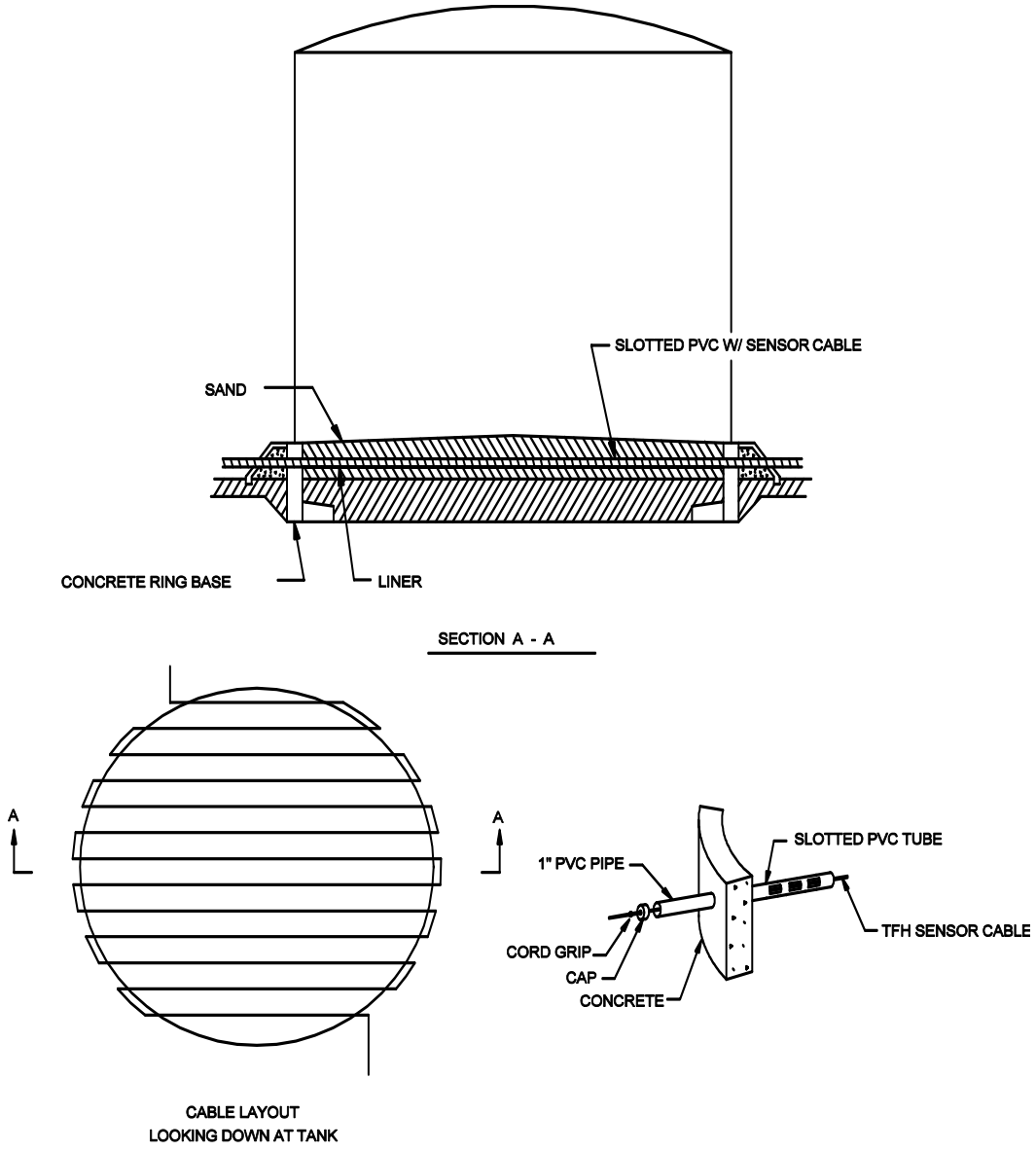

Figure 6-3
Double Bottom Above Ground Storage Tank

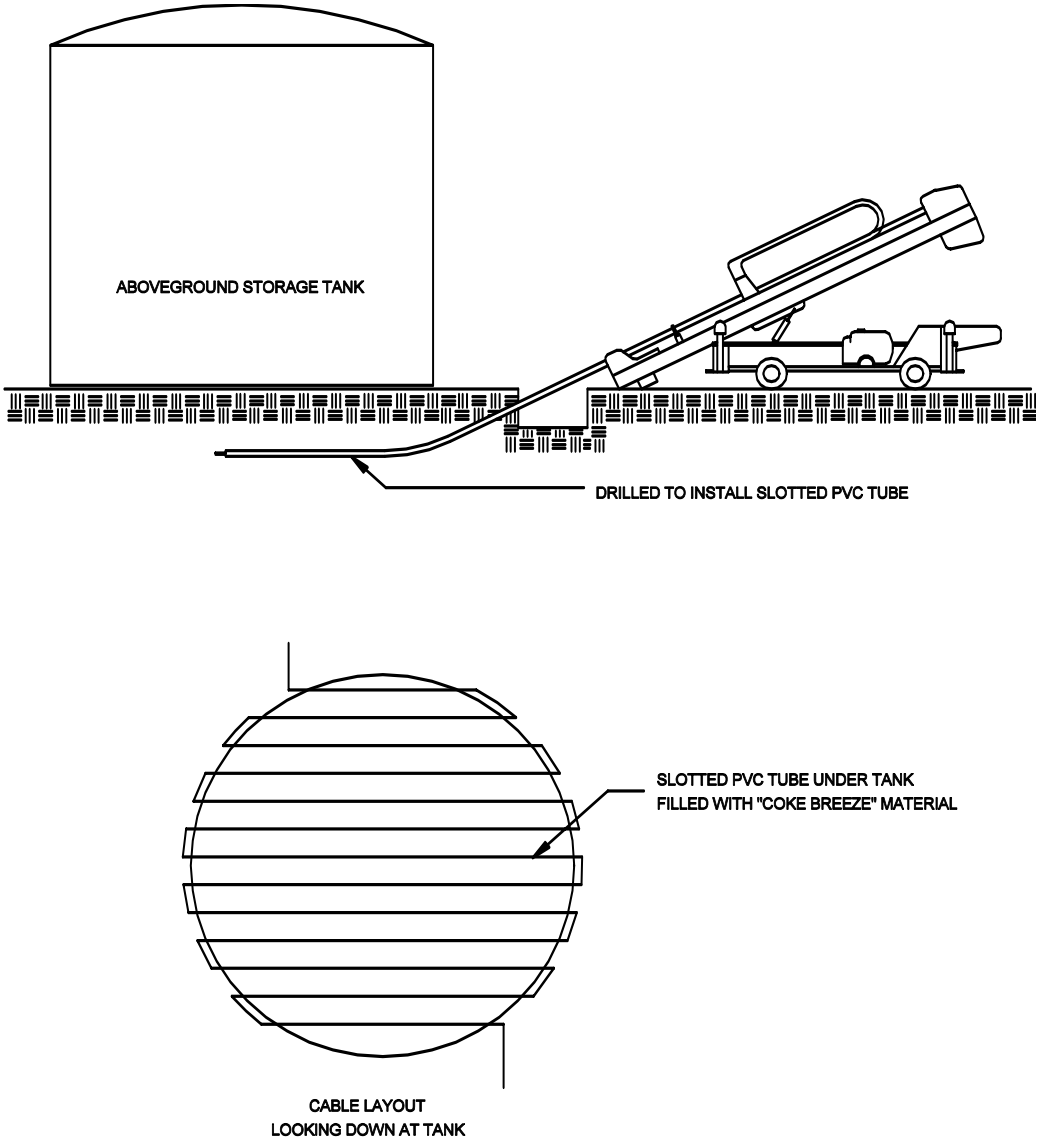

Figure 6-4
Above Ground Storage Tank Horizontal Drilling

7 Cable Installation for Raised Floor Areas

7.1 General

The PAL-AT sensor cables can be installed in ceilings or on subfloors below raised flooring to detect water, hydrocarbons, or chemical liquids. AGT-Gold responds quickly to thin films of liquid. AGW-Gold allows a small accumulation before detecting a leak and dries quickly after removal of the liquid. AGW-Gold was tested and passed UL910 for Plenum applications. AGW-Gold is the preferred selection unless the application requires wicking of the liquid for detection of small liquid leakage.

The AGT-Gold sensor cable has a polypropylene yarn dielectric and is designed to absorb liquids readily and detect leaks quickly. It also absorbs moisture from the air if the air is saturated or near saturation. PermAlert recommends a maximum of 80% relative humidity, keeping in mind the relative humidity will increase if the temperature of the air or a surface in the airflow decreases. In subfloor applications, care must be taken to make sure the cable is not located directly in the airflow where localized higher humidity or saturated air is present.

If the humidity level cannot be controlled and intermittent high humidity conditions exist, then the best option is to use the quick-drying AGW-Gold cable in place of the wicking AGT-Gold cable.

7.2 Install the Sensor Cable

1. After all other work is completed and the area is free and clear of all activities that can cause damage, the sensor cable should be installed. Care must be taken during installation of the sensor cable to avoid contact with potential contaminants, such as water puddles or oil.
2. When the construction schedule allows, the PAL-AT panel should be permanently mounted and connected with electrical power before installing jumper or sensor cable. This will allow the system's setup and calibration procedures to proceed efficiently. For additional information on calibration points, refer to the *PAL-AT Operating Manual*.
3. Slowly play out the cable by hand rotating the spool. Never pull loose coils of cable off the end of the spool. When loose coils are pulled taut, kinks form in the cable that could prevent bringing the system on-line. **Keep the cable dry and clean.**
4. Starting from the PAL-AT panel, connect a minimum of 50' [15 m] of JMP-UD jumper cable (65' [20 m] for type JPP) before connecting the sensor cable. Route the sensor cable as shown on the contract drawings. Most designs require the sensor cable to be installed in a serpentine pattern of 4' [1.2 m] centers. Normally, this method gives satisfactory protection and does not require the cable to be repositioned when equipment is moved later. Typically, centers of 6’ to 12’ [2 m to 4 m] can be used if the facility has low risk (see figure 7-1).
5. If the serpentine pattern cannot be adapted to the installation, an alternative is to isolate the potential leakage areas. Typically, this means running the sensor cable around the perimeter of the room and placing a run of cable under or near any water lines or drains in the room's interior. The sensor cable should be routed around air conditioning units and chillers so an overflow from a plugged condensate tray must pass the sensor cable before it can reach power or data cables.
6. The sensor cable should not be routed directly in the airflow from an air-handling unit, especially if a humidifier is being used. In this case, the unit may send out drops of water that can collect in the cable and give an alarm for a minor puddle.

   This is more critical with AGT-Gold cable. The wicking nature of the cable will absorb the fine spray from the humidifier and cause an alarm. Typically, the cables are 3' to 5' from the perimeter of the air units.
7. Refer to table 1 (see section 3) for amount of jumper cable to be connected to the end of the sensing string.
8. Cables are attached to the subfloors and ceilings with fasteners (cable mounts). Normally, cable mounts are spaced on 8' [2.5 m] intervals along the sensor and jumper cable length. Additional cable mounts are located adjacent to all changes in direction of the sensor cable.

9. Cable mounts (CMA) ordered from PermAlert are adhesive backed. When installations require mounting to unsealed concrete surfaces, it is recommended construction mastic be used. Care must be taken to ensure the mastic does not touch the sensor cable. This material can be purchased from most supply houses. Inspect subfloor (or ceiling) surfaces to be sure it is clean and dry before beginning installation. Cable tags (CTA) are typically installed on 50' [15 m] intervals for location purposes.
10. In high traffic areas, cable shields should be used to protect the cable from damage.
11. Service loops (slack cable) should be positioned at connector locations.

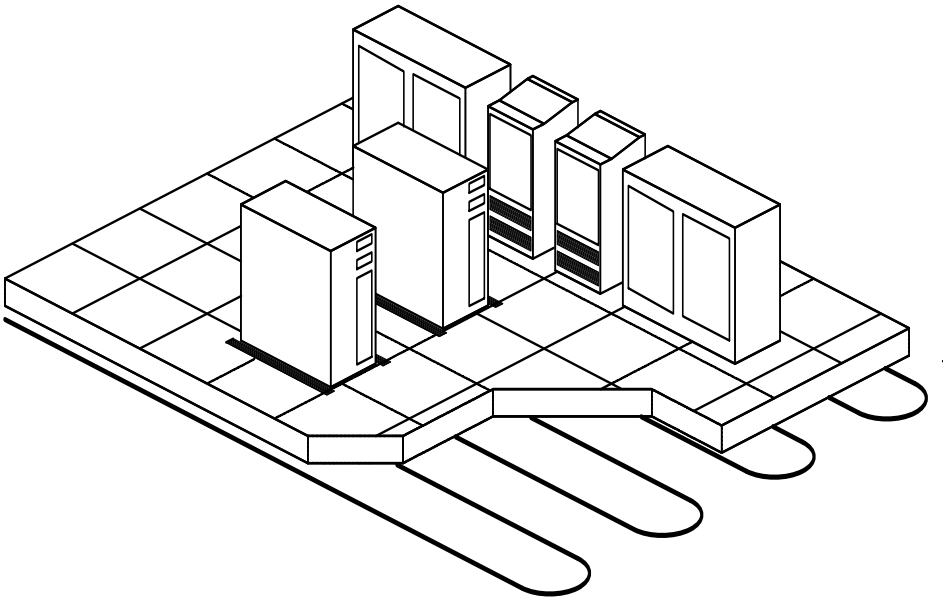

Figure 7-1
Computer Room Floor

7.3 Locator Chart

A graphic display map drawn to scale shall be prepared by the contractor (installer) after completion of installation from "as built" drawings. The map shall indicate, in relation to the raised floor grid, the location of the cable, connectors, and landmarks (such as equipment, walls, and drains). Cable distance readings shall be marked off in 100' [30 m] (or other suitable) increments, beginning at the monitoring panel, to facilitate physically locating a leak detected by the system. The locator chart should be placed in a plastic frame suitable for permanent mounting adjacent to the PAL-AT panel.

8 Cable Connectors

8.1 General

This section outlines: (1) the installation procedures for several types of connectors; (2) the application of shrink tubing; and (3) the electrical testing of connectors and cable. **All connectors are crimp style and soldering is not required**.

Instructional videos for Cable Connector Installations are available at the PermAlert web site, www.permalert.com.

WARNING For Hazardous Locations – Some cable connectors are located in NEMA 4X [IP66] junction boxes that are made of plastic and as such, present a possible electrostatic hazard. They are not intended to be cleaned, but if they are, a damp cloth should be used**.**

8.2 Cable Connector Installation

1. Cable connectors must be installed at changes of cable types, pull points, junction boxes, calibration points, and at the termination of the sensing string.
2. All the PAL-AT cables, except ATP, are coaxial construction consisting of an insulated center conductor and a braid shield. Jumper cables and TFH sensor cable have a polymer jacket over the braid. All coaxial sensor cables also have a polymer overbraid surrounding the cable.
3. **Crimp style connectors are required for all sensor cables and all jumper cables**.
4. **TFH sensor cable ends must be kept dry and encapsulated in shrink tubing until the connectors are installed. Connectors that become calibration points during the commissioning of the system should not be installed prior to commissioning, if they cannot be kept dry. Install the shrink tube caps, included with the connectors, on the end of the cables temporarily.**

8.2.1 CAGOLD and CATFH Connectors for Sensor Cables AGW-Gold, AGT-Gold, TFH-Gold and TFH

The CAGOLD connector assembly for AGW-Gold, AGT-Gold and TFH-Gold consists of two crimp style UHF plugs, two #14 AWG wire ferrules, one UHF straight adapter, and one piece of shrink tubing. The CATFH assembly for TFH includes the same connectors and 3 pieces of shrink tubing. Steps A thru I must be followed to install a connector.

Step A Measure and cut the required length of cable.

Step B Carefully cut and remove 2½" [65 mm] of the plastic overbraid. It may be helpful to slide the remaining overbraid back several inches and use electrical tape to hold it in place out of the way.

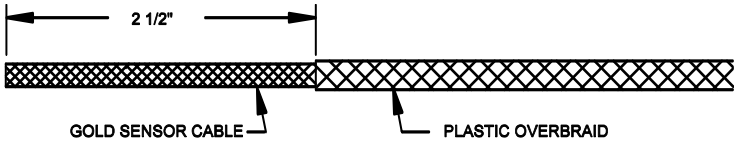

TFH cable has a white outer jacket under the overbraid. Remove 2 ½" [65 mm] of the white jacket.

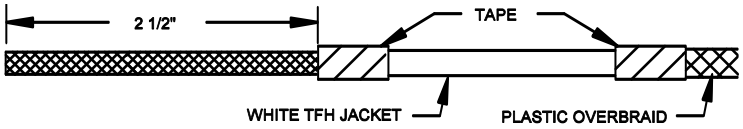

Step C Skip this step for TFH cable. A sanding tool (included with the purchase of a crimp tool) is inserted into the cable. The tool is a 6" [150 mm] length of stainless steel tubing.

For AGW-Gold, insert the center conductor and two plastic spiral spacers into the end of the tool. Then slowly rotate the tool counterclockwise and gently push the tool 3" [75 mm] into the cable underneath the braid wire.

For TFH-Gold, insert the center conductor and the white core into the end of the tool. Then slowly rotate the tool and gently push the tool 3" [75 mm] into the cable underneath the braid wire.

For AGT-Gold, slide the braid wire back 2" [50 mm] and remove 1 7/8" [47 mm] of the yarn spacer. Then insert the sanding tool 3" [75 mm] over the center conductor and slide the braid wire back over the tool.

For all three cables, hold the end of the braid in place against the sanding tool while you sand the 1¼" [32 mm] area as shown below. Rotate the cable slightly and repeat the sanding process until the entire circumference of the 1¼" section has been sanded. The gold-colored plastic coating on the braid strands does not have to be removed completely. However, the outer surface of the braid strands should have bare copper exposed around the entire circumference of the cable.

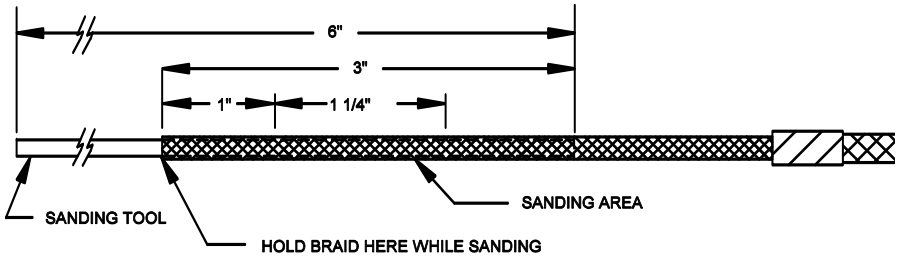

Step D Carefully cut and remove approximately 1¼" [32 mm] of braid (this should remove all the unsanded braid wire). Tap the cable gently on a hard surface to knock off loose strand ends, clippings and any debris.

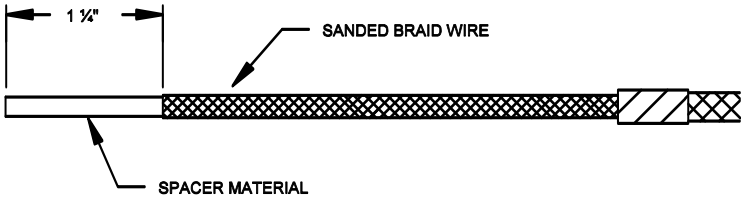

Step E For AGW-Gold and TFH cables, slide the braid back an additional ¾" [19 mm] then remove 1 7/8" [47 mm] of spacer material (plastic spiral on AGW-Gold and white core on TFH).

Or

For TFH-Gold cable, the white core needs to be "thinned" for 1 7/8" [47 mm] to reduce the diameter of the white core slightly so it fits into the connector body. This requires a wire stripper tool set for #10 AWG. First, make sure the center conductor is straight so the thin film of insulation on the conductor is not nicked. Starting ½" from the end, strip the wire using the #10 setting. This does not remove the white core, but stretches it and makes it smaller in diameter. Continue this process, moving in ½" increments from the end. Each time apply the tool and strip to the end of the cable, until the insulation over the last 1 7/8" of the conductor is thinned. Cut off the white material that was stretched past the end of the center conductor. Next, using a #14 AWG wire stripper, strip ¾" of the white core from the center conductor.

For all cables, remove ¾" of the thin film of insulation from the center conductor.

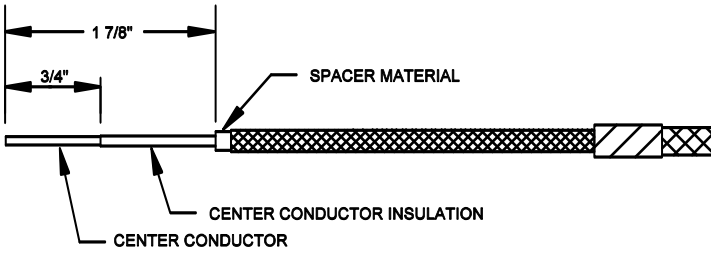

Step F For TFH cable only, slide one 4" [100 mm] piece of heavy wall shrink tubing over the end of the cable, and position it over the overbraid.

For all cables, slide the UHF plug coupling ring onto the cable. Then slide the outer crimp ferrule onto the cable.

A ¾" [19 mm] long, #14 AWG [1.5 mm^2] wire ferrule should be installed on the center conductor. If the wire ferrule is slightly crushed, the conductor will not slide in easily. If this happens, push the ferrule onto a piece of solid #14 AWG copper wire (or standard 3d finish nail) to straighten the ferrule. Slide the ferrule over the conductor until it stops at the center conductor insulation. Make sure all the strands go through the ferrule and extend out of the end.

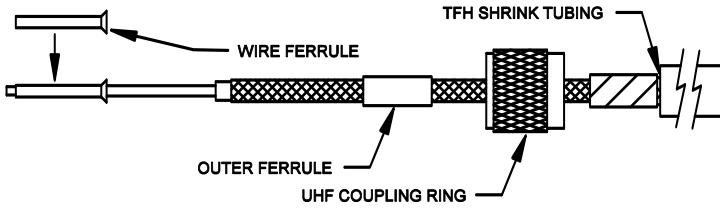

Step G Slide the UHF plug body over the cable center conductor. Be sure all the strands of the center conductor or the wire ferrule slide completely through the center contact of the plug. At the same time, slide the braid over the inner ferrule to the UHF plug body.

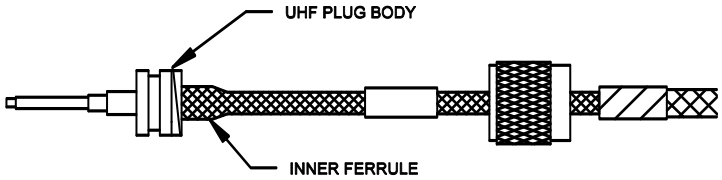

Step H Slide the outer ferrule over the braid and up against the UHF plug body. Make sure the braid extends slightly past the end of the outer ferrule against the UHF plug body. **Caution: Once the crimp tool (PermAlert Part No. 8068301) starts to close, it must be closed completely before it will open again.** Position the crimp tool (0.255" die) carefully around the outer ferrule and crimp it.

Crimp the end of the center contact as shown using a 0.100" die. Leave a 1/8" [3 mm] gap from the end of the plug and trim the excess center conductor and ferrule.

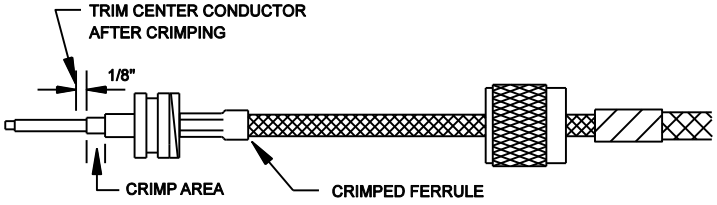

Step I Slide the plastic overbraid as close to the UHF plug body as possible to remove any slack. Trim it so there is approximately a 1" [25 mm] gap between the end of the overbraid and the end of the ferrule.

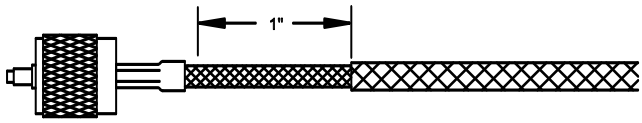

Test all connections as described in the "Cable and Connector Testing Procedures" section. Each end of the cable in the stage shown above will be fastened together by using one UHF straight adapter. All cable connectors should be encapsulated with non-corrosive RTV sealant and shrink tubing.

8.2.2 CAJMP Connectors for Jumper Cables JMP-U/-UD

The CAJMP connector assembly for JMP-U/-UD jumper cables consists of two crimp style UHF plugs and one UHF straight adapter. It also includes 2 pieces of shrink tubing and spiral cable wrap. Steps A thru H must be followed to install a connector.

Step A Measure and cut the required length of cable.

Step B Carefully cut and remove 1 5/8" [41 mm] of the outer jacket, 3/4" [19 mm] of the braid and 3/4" [19 mm] of the plastic dielectric core. JMP-U has a sticky water-blocking material on the braid. To make handling it easier, keep your fingers and tools damp with water.

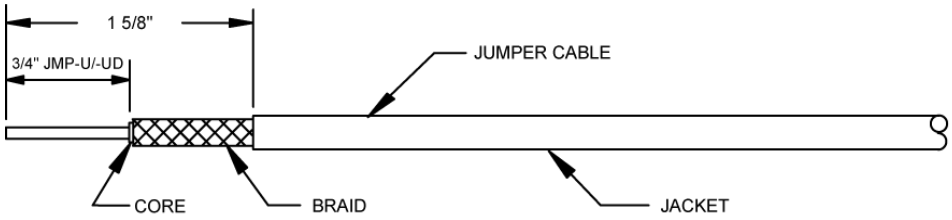

Step C Slide the 3" [75 mm] piece of shrink tubing onto the cable. Next, slide the UHF coupling ring and the outer ferrule onto the cable.

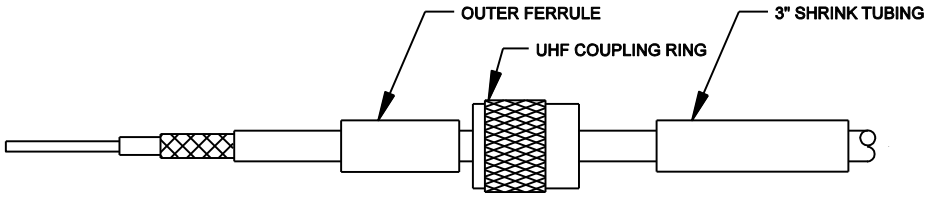

Step D Slide the UHF plug body over the cable center conductor. Be sure all the strands of the center conductor slide completely through the center contact of the plug. At the same time, the plastic core should fit inside the inner ferrule of the plug body and the braid should go over the outside of the inner ferrule. When the cable is inserted properly, 1/8" [3 mm] to 3/8" [9 mm] of the center conductor will extend past the end of the UHF plug body and **the plastic core will be tight against the plug body inside the inner ferrule**.

Note: Before installing JMP-U/-UD, flair the braid wire I.D. slightly with a small 1/8" [3 mm] slotted screwdriver so the braid will slide over the inner ferrule. **Be careful to keep the wire braided, i.e. two strands thick, over the inner ferrule, to have the correct thickness for a good crimp**.

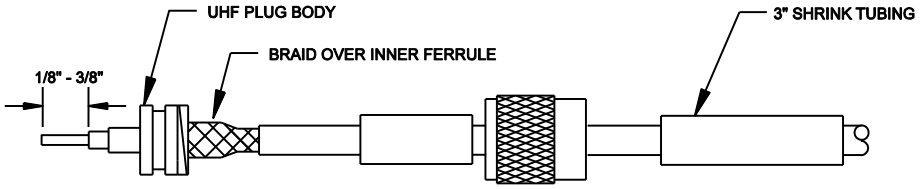

Step E Slide the outer ferrule over the braid and up to the UHF plug body. Make sure the braid extends slightly past the end of the outer ferrule against the UHF plug body. **The center conductor should extend at least 1/8" [3 mm] past the end of the connector**. **Caution: Once the crimp tool (PermAlert Part No. 8068300) starts to close, it must be closed completely before it can be opened again**. Position the crimp tool 0.429" die carefully around the outer ferrule and crimp it.

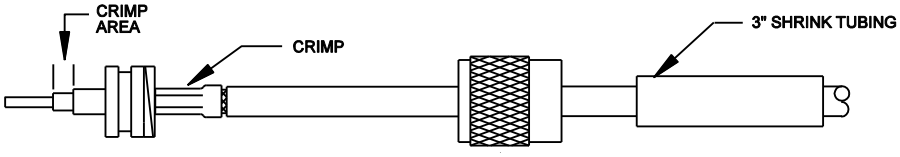

The procedure for crimping the center conductor requires a short length of #14 AWG solid copper wire to fill the center contact of the connector. Strip 3/8" of insulation from the wire. Bend the end of the strands of the center conductor slightly to the side. Next, carefully slide the bare #14 AWG wire all the way into the center contact as shown. The #14 wire should be inserted next to the JMP-U conductor and not into the strands of the conductor. Be careful so the strands of JMP-U do not slide into the connector with the #14 wire. Crimp the center contact as shown using a **0.100" die**.

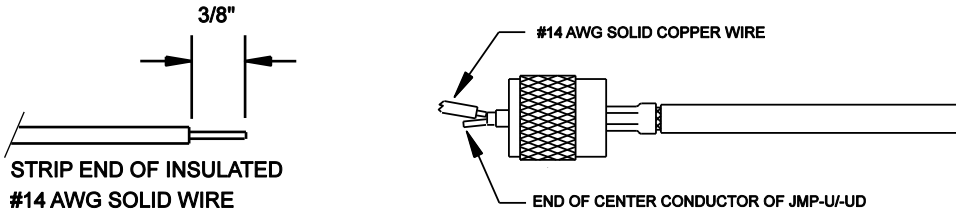

Step F Trim any center conductor (and #14 AWG wire, if applicable) extending out of the center contact of the plug. Thread the UHF coupling ring onto the UHF plug body.

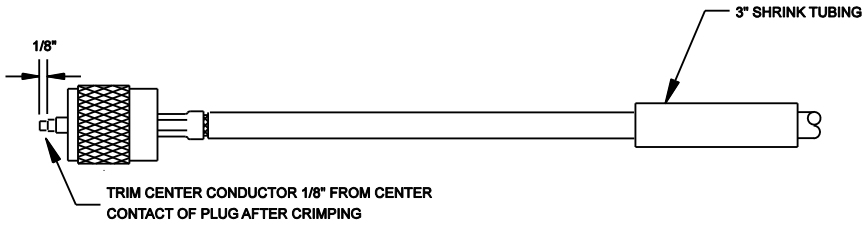

Step G Place a 2" piece of plastic cable wrap around the cable jacket and slide it under the uncrimped end of the outer ferrule as far as possible.

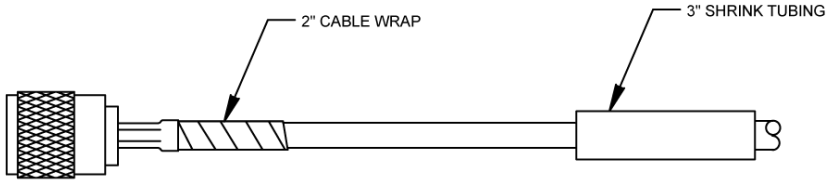

Step H Slide the 3" [75 mm] piece of shrink tubing over the crimped outer ferrule until it completely covers the ferrule. Make sure the shrink tubing does not slide onto the plug body. Heat the shrink tubing with a heat gun until it has fully shrunk and adhesive oozes out the end. Let the assembly cool before handling.

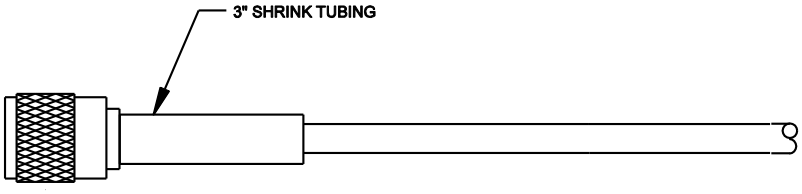

Test all connections as described in the "Cable and Connector Testing Procedures" section. Each end of the cable in the stage shown above will be fastened together by using one UHF straight adapter. All cable connectors should be encapsulated with non-corrosive RTV sealant and shrink tubing.

8.2.3 CAJPP Connectors for Jumper Cables JPP and JMP

The CAJPP connector assembly for JPP and JMP jumper cables consists of two crimp style UHF plugs and one UHF straight adapter. Steps A thru F must be followed to install a connector. It is recommended to use Ideal Stripmaster® Model 45-091 or 45-092 wire strippers, or equal, for stripping the wires. Use the die openings for stranded wire for the wire size specified in the steps below.

Step A Measure and cut the required length of cable. The connector components are shown below.

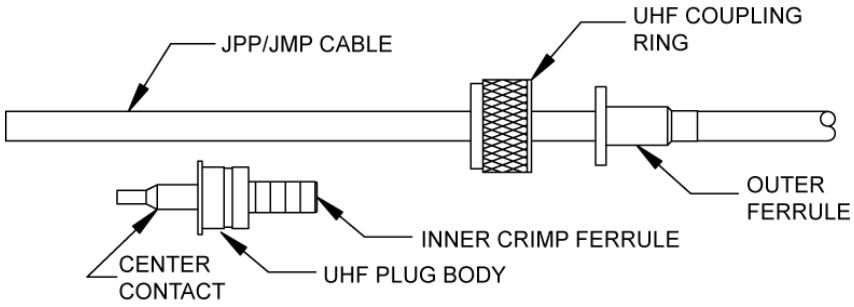

Step B Carefully mark the cable jacket at 3/8", 3/4" and 1 5/8" from the end.
At the 3/8" mark, strip the wire with the 14 AWG stripping hole. You may need to repeat the strip with the 16 AWG stripping hole to remove all the core insulation.
At the 3/4" mark, strip the wire with the 12 AWG stripping hole to remove the braid.
At the 1 5/8" mark, strip the wire with the 10 AWG stripping hole to remove the jacket.

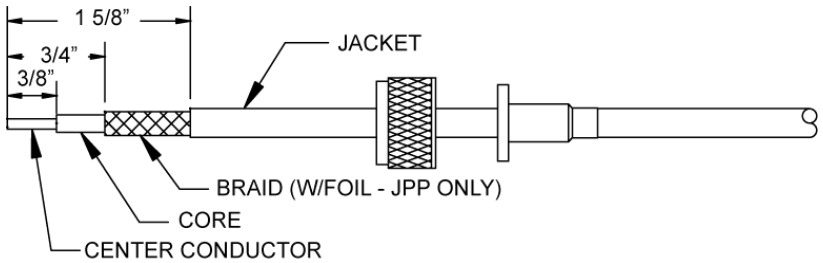

Step C **JPP only -** JPP has foil wrapped under the braid and bonded to the core insulation. Slide the braid back to the jacket to expose the foil. Use long nose pliers with serrated grip surfaces and gently squeeze the foil near the end of the core. Gently rotate the pliers back and forth 10° - 30° several times until the foil breaks free from the core. Unwrap the foil and remove it. This step may need to be repeated to remove all the foil under the exposed braid.

Step D Slide the UHF plug body over the cable center conductor. Be sure all the strands of the center conductor slide completely through the center contact of the plug. At the same time, the plastic core should fit inside the large section of the center contact and the braid should go over the outside of the inner ferrule. When the cable is inserted properly, 1/16" [1.5 mm] to 1/8" [6 mm] of the center conductor will extend past the end of the UHF plug body and the plastic core will be inside the center contact. **Caution: Once the crimp tool (PermAlert Part No. 8068300) starts to close, it must be closed completely before it can be opened again**. Crimp the center contact in the crimp area using a 0.068" die.

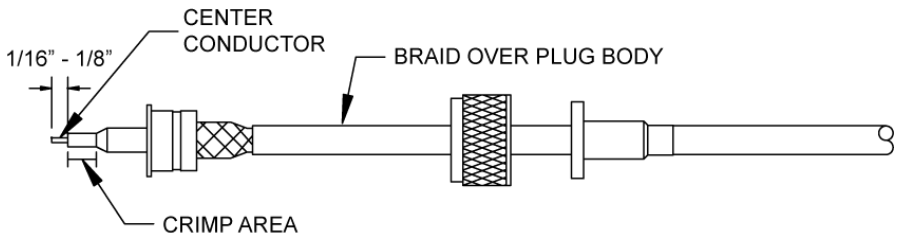

Step E Slide the UHF coupling ring onto the plug. Slide the outer ferrule (and the remaining foil, if any, for JPP cable) over the braid and up to the UHF plug body. Make sure the braid extends slightly past the end of the outer ferrule against the UHF plug body. Position the crimp tool 0.255" die carefully around the outer ferrule. Hold the outer ferrule tight against the plug body and crimp it. The UHF coupling ring is now captive and cannot be removed from the plug body.

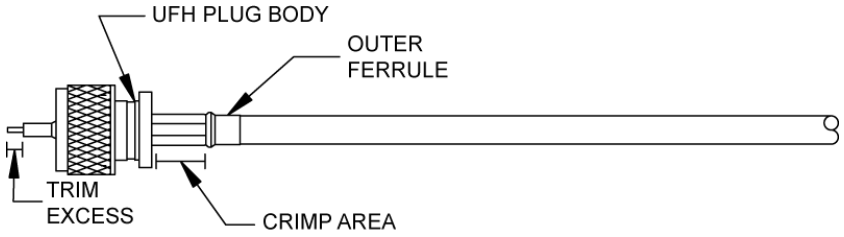

Step F Trim any center conductor extending out of the center contact of the plug.

Test all connections as described in the “Cable and Connector Testing Procedures” section. Each end of the cable in the stage shown above will be fastened together by using one UHF straight adapter. All cable connectors should be encapsulated with non-corrosive RTV sealant and shrink tubing.

8.2.4 CAGOLD Connector for ATP Cable

The CAGOLD cable connector can be used at a calibration point to make it reusable, instead of the standard permanent crimp connector. Steps A thru G must be followed to install a connector.

Step A Make sure the red and white wires are twisted with an approximate 2”–3” [50mm-75mm] pitch and then cut off excess ATP cable. Slide the UHF coupling ring onto the cable, followed by the outer ferrule.

Step B Remove ½” [12 mm] of the insulation on the red wire.

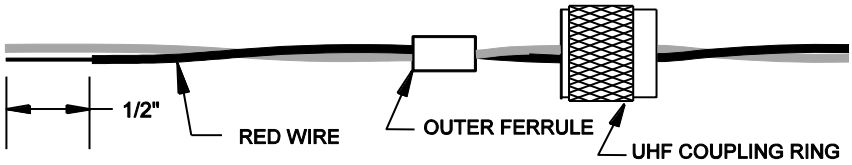

Step C As a measuring guide, slide the plug body onto the red wire until it stops against the wire insulation. The wire should extend out of the center contact. Cut the white wire even with the shoulder of the plug body. Remove the plug body and strip ½” [12 mm] of the insulation from the white wire.

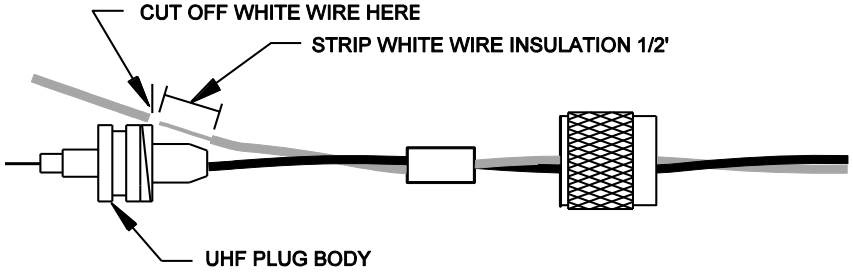

Step D Slide the plug body on the red wire again until the white wire is just past the tapered end of the inner ferrule. Then slide the outer ferrule over the end of the inner ferrule and the white wire until it is a snug fit.

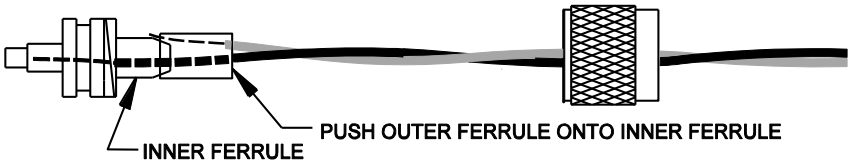

Step E Next, take the crimp tool and clamp the 0.255” die around the twisted wires behind the outer ferrule. Be careful not to pinch the wires. They should slide freely through the die. Then push the plug body toward the crimp tool to force the outer ferrule and white wire to slide over the inner ferrule until they are tight against the plug shoulder as shown in the second view.

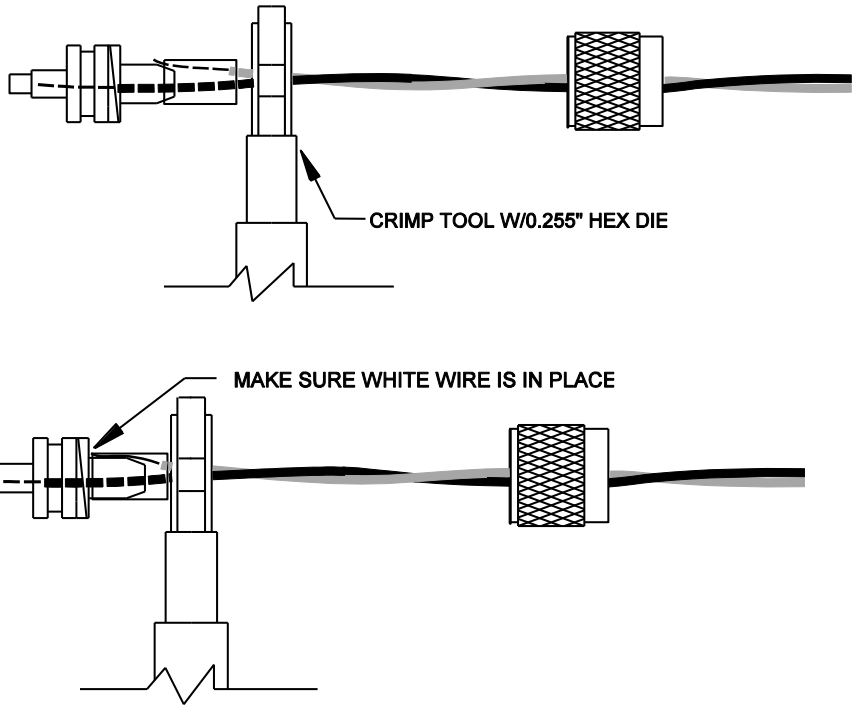

Step F Use the 0.255” hex die and crimp the outer ferrule.

Step G Bend a short length of #18 AWG [0.75 mm^2] solid copper wire to a ¼” [6mm] long right angle and insert it into the center contact next to the ATP conductor. Insert it as far as the bend.

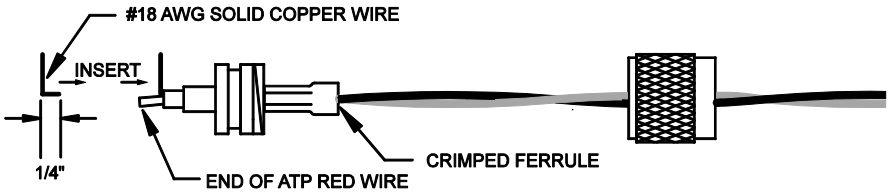

Straighten the copper wire so it does not interfere with the crimp tool closing. Crimp the center contact using the crimp tool 0.100” die. Trim excess wire as shown. Slide the coupling ring to the plug body and thread it onto the body. If there are any gaps between the red and white wires, twist the connector slightly to remove them.

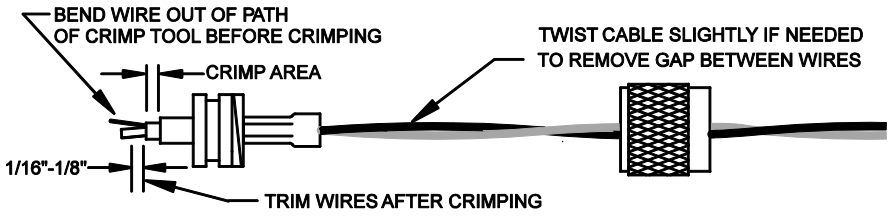

8.3 Shrink Tubing

All cable connectors installed in inaccessible locations or locations subject to frequent leaks or corrosive environments must be encapsulated with shrink tubing. This applies to sensor cables and jumper cables. Connectors used for calibration points should not be sealed until the system has been brought online unless they may be exposed to water before start-up.

8.3.1 Cable Type TFH

1. **The TFH cable connector assemblies must be encapsulated in watertight shrink tubing.** Test connectors according to the "Cable and Connector Testing Procedures" before heating the shrink tubing. **Connectors used for calibration points must be kept dry until the system has been commissioned. After commissioning, the shrink tubing should be installed. If water is allowed to enter the end of the cable and get under the jacket, the cable must be replaced**.
2. Install the shrink tubing in accordance with the following steps:

Step A Slide the overbraid and cable jacket back from the reducing adapter, to expose ½" [12 mm] of braid wire. Smooth the excess cable jacket away from the connector, so there is at least 5" [125 mm] of smooth surface adjacent to the connector. If the sensor cable is being connected to a jumper cable, skip steps A and B for jumper cable.

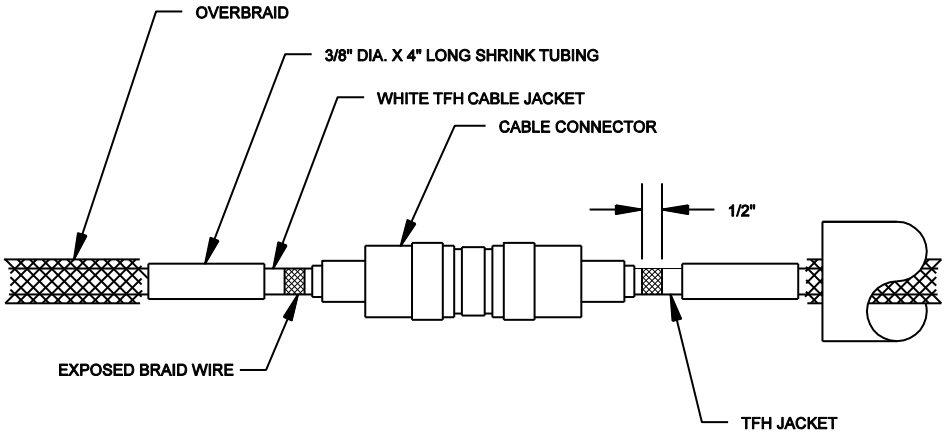

Step B Place a 1/4" [6 mm] bead of non-corrosive RTV sealant around the cable on the exposed braid wire.

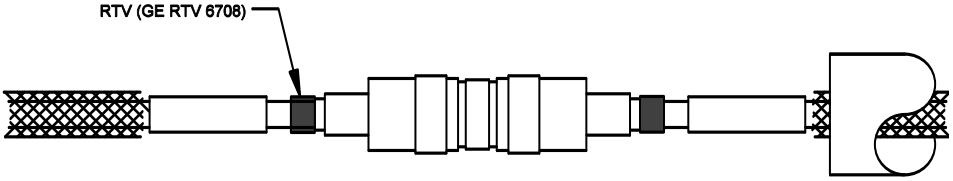

Step C Slide the 4" [100 mm] long shrink tubing to the reducing adapter, if the CASTD connector is used. Make sure there are no wrinkles in the cable jacket. Make sure the shrink tubing does not overlap the reducing adapter. Slide the shrink tubing over the outer crimp ferrule to the back of the connector body if the CAGOLD crimp style connector is used. Heat the shrink tubing with a heat gun until it has fully shrunk and adhesive oozes out the end. Do not disturb the assembly until the shrink tubing has cooled (approximately 5-10 minutes).

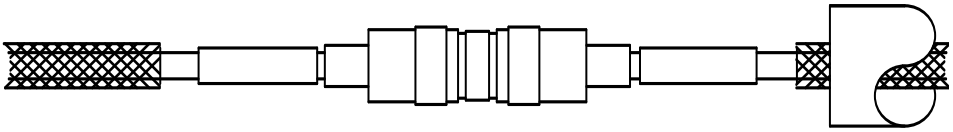

Step D After both cable ends have been sealed with the 4" [100 mm] shrink tubing, recheck that the connectors are tightened securely. Test the connector according to the "Cable and Connector Testing Procedures". Then slide and center the 8" [200 mm] shrink tubing over the connector and heat it until it is fully shrunk and adhesive oozes out the ends.

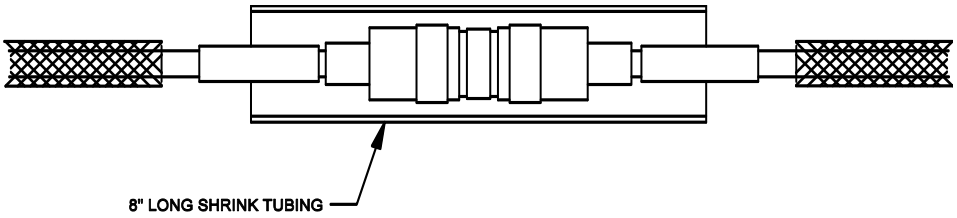

Step E Slide the overbraid to the connector and tape in place with electrical tape.

8.3.2 Cable Types AGW-Gold, AGT-Gold and TFH-Gold

Step A Install connectors and test them following the "Cable and Connector Testing Procedures" in this manual.

Step B Slide a 6" [150 mm] piece of shrink tubing on the cable and tighten the connector assembly securely.

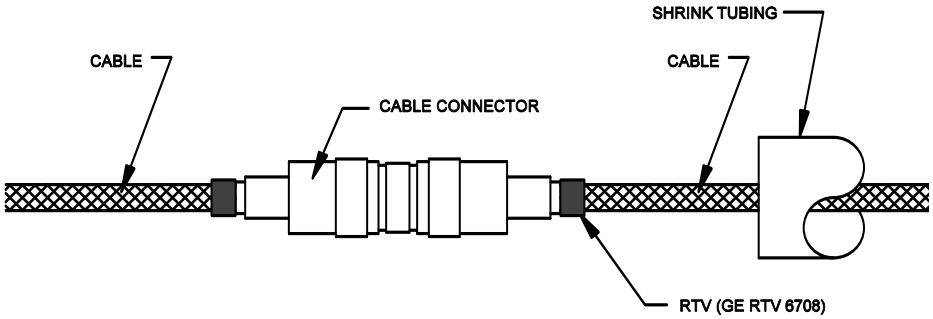

Apply a minimum ¼" [6 mm] bead of **noncorrosive type RTV** completely around the cable next to the end of each of the connectors.

Step C Center the shrink tubing over the connector. Carefully heat the tubing, slightly, over the center of the connector. **Caution: If the shrink tubing is overheated in the center area, it may tear as it tries to shrink to the size of the cable. Next heat the remainder of the tubing. Do not heat the tubing any longer than required to shrink the tubing around the cable.**

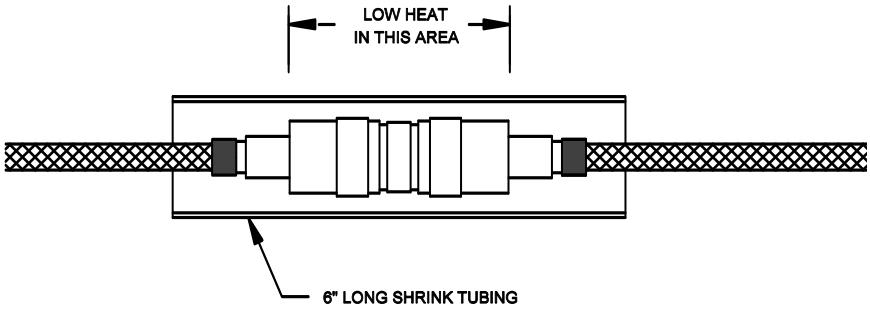

8.3.3 Cable Types JMP-U/-UD, JPP and JMP

Step A Install connectors and test them following the "Cable and Connector Testing Procedures" in this manual.

Step B Slide a 6" [150 mm] piece of shrink tubing on the cable and tighten the connector assembly securely.

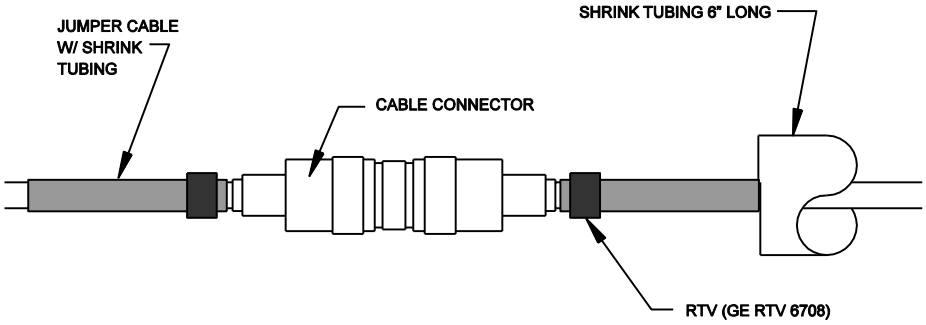

Apply a minimum ¼" [6 mm] bead of **noncorrosive type RTV** completely around the cable on the installed shrink tubing next to the end of each of the connectors.

Step C Center the 6" long shrink tubing over the connector. Carefully heat the tubing, slightly, over the center of the connector. **Caution: If the shrink tubing is overheated in the center area, it may tear as it tries to shrink to the size of the cable. Next heat the remainder of the tubing. Do not heat the tubing any longer than required to shrink the tubing around the cable.**

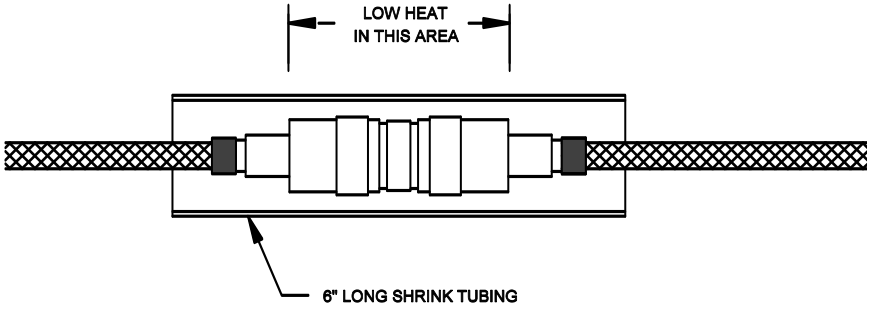

8.4 Cable and Connector Testing Procedures

8.4.1 General

The following tests should be performed on each length of cable after both connectors are installed. Figure 8-1 illustrates the tests. Any overbraid or outer jacket is not shown.

8.4.2 Continuity Test

The continuity test checks for broken cable, open connectors, and poor connections.

1. Connect a short jumper wire with alligator clips between the UHF connector's center contact and the body of the connector at one end of the cable, as shown in figure 8-1. **Note: Do not clip onto the threaded coupling ring because the ring is not tightly secured, resulting in intermittent readings**.
2. Connect the ohmmeter's test leads to the connector's center contact and connector body on the other end of the cable.
3. The ohmmeter reading should be less than 10 ohms/1000' [10 ohms/300 m] of cable. If it is not, check the jumper wire, test lead connections, and repeat the test. If the problem persists, contact the PermAlert Field Service Department for assistance.

8.4.3 Alternative System Test

1. Connect the entire cable string to the PAL-AT panel.
2. Make sure the panel is turned off. Set the impedance jumper for the cable under test – position C (w/o ZBA) or D (w/ZBA). If applicable, make sure the replaceable fuse in the ZBP is good.
3. Measure the resistance at the far end of the cable string. Connect one test lead to the center contact of the last connector and the other lead to the connector body. The resistance should be less than 60 ohms + 10 ohms/1000' [75 ohms/300 m] of cable string.
4. If intermittent connections are suspected, gently flex the connectors while the meter is monitored.

8.4.4 Insulation Test

The insulation test checks for a short between the center conductor and outer braid.

1. Remove the jumper wire used in the continuity test, as shown in figure 8-1 and connect one ohmmeter test lead to the connector's center contact and the other lead to the connector body.
2. A good cable will give a full-scale reading (at least 10 megohms). Test readings below full scale indicate damaged cable or an improperly installed connector. If you cannot resolve the problem, contact PermAlert's Field Service Department for assistance.

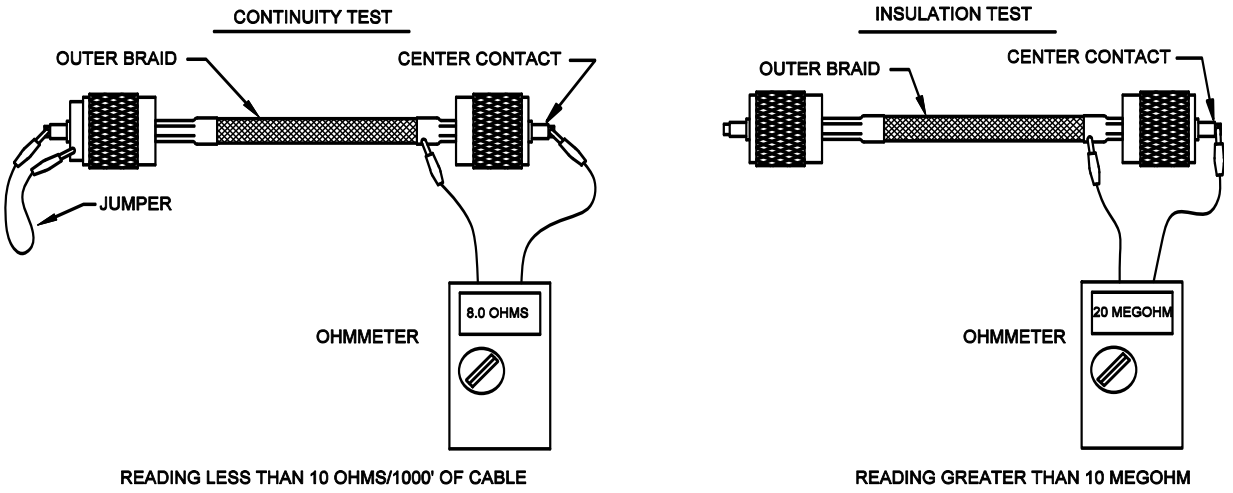

Figure 8-1
Cable Test Procedures

8.5 Cable Connections to Panels

8.5.1 General

The ends of the jumper cables connected to the PAL-AT panel or Zener Barrier Panel need to be terminated with wire ferrules. The ferrules provide a positive connection and prevent stray strands of the wires from shorting to adjacent terminals.

8.5.2 Ferrule Installation in PAL-AT Panel

Step A Remove 1.25” [32 mm] of cable jacket

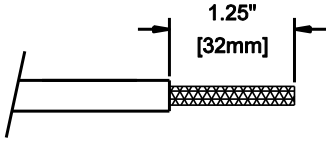

Step B Separate the braid wire into two equal groups. It is easier to unbraid the wire if it is done in ¼” long increments. It is helpful when working with JMP-U cable to keep tools and fingers damp

when touching the sticky, water-blocking material. Twist each group into a small wire. Remove 1.0" [25 mm] of insulation from the center wire.

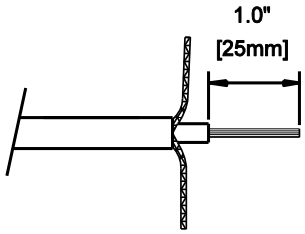

Step C JMP-U/-UD Cable

Slide a 14 AWG [2.5 mm²] uninsulated ferrule onto the center wire until it is tight against the center insulation. Crimp the ferrule using a 2.5 mm² die. Then crimp it again with a 1.5 mm die. Slide a 16 AWG [1.5 mm²] insulated ferrule over each group of braid wire twisted strands. Spread the ferrules apart to fit into the connector as shown. Align the ferrule ends as shown while minimizing slack in the braid wire. Crimp the ferrules using a 1.0 mm crimp die.

JMP (from ZBA) or JPP Cable

Slide an 18 AWG (1.0mm²) insulated ferrule onto the center wire until the ferrule insulation is completely over the wire insulation. Crimp the ferrule using a 0.50 mm crimp die. Slide an 18 AWG (1.0mm²) insulated ferrule over each group of braid wire twisted strands. Spread the ferrules apart to fit into the connector as shown. Align the ferrule ends as shown while minimizing slack in the braid wire. Crimp the ferrules using a 0.50 mm crimp die.

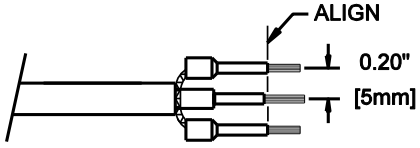

Step D Trim excess wire from the end of the ferrules.

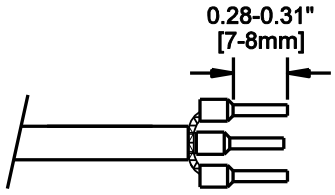

Step E The cable ferrules should be inserted into the cable plug and tightened as shown. **Before connecting the cable, route the excess cable in the enclosure so there will not be excessive strain or twisting at the terminals**. Insert the plug into the appropriate receptacle as shown. The center conductor ferrule should be in the center terminal of the plug and the two braid ferrules in the outer terminals. When removing the cable, grip the plug and pull it straight out of the receptacle. **Note the plug and receptacle are polarized so they can only be connected one way**.

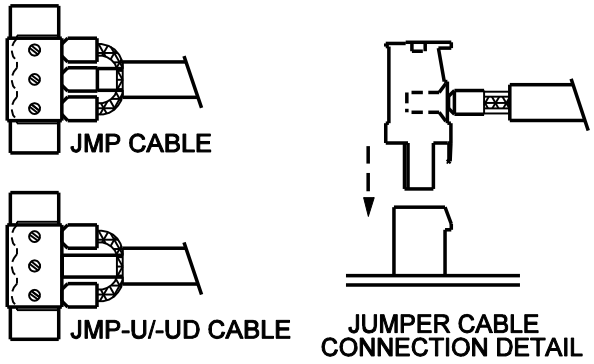

8.5.3 Ferrule Installation in Zener Barrier Panel

Step A Remove 1.5” [38 mm] of cable jacket.

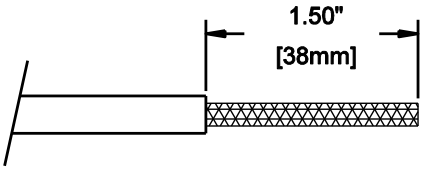

Step B Separate the braid wire into two equal groups. Twist each group into a small wire. Remove 1.25” [32 mm] of insulation from the center wire.

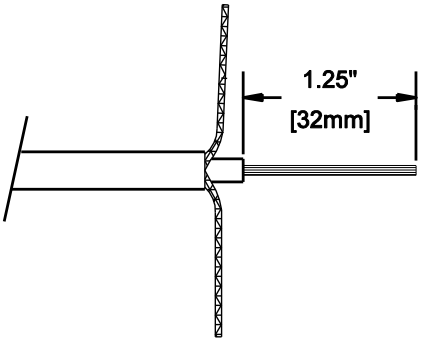

Step C JMP-U/-UD Cable

Slide a 14 AWG [2.5 mm²] uninsulated ferrule onto the center wire until it is tight against the center insulation. Crimp the ferrule using a 2.5 mm² die. Then crimp it again with a 1.5 mm die. Slide a 16 AWG [1.5 mm²] insulated ferrule over each group of braid wire twisted strands. Align the ferrule ends as shown while minimizing slack in the braid wire. Crimp the ferrules using a 1.0 mm crimp die.

JPP Cable

Slide an 18 AWG (1.0mm²) insulated ferrule onto the center wire until the ferrule insulation is completely over the wire insulation. Crimp the ferrule using a 0.50 mm crimp die. Slide an 18 AWG (1.0mm²) insulated ferrule over each group of braid wire twisted strands. Align the ferrule ends as shown while minimizing slack in the braid wire. Crimp the ferrules using a 0.50 mm crimp die.

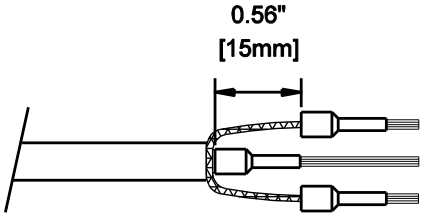

Step D Trim excess wire from the end of the ferrules.

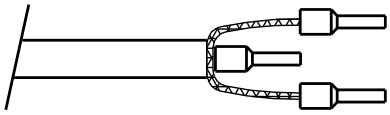

Step E **Before connecting the cable, route the excess cable in the enclosure so there will not be excessive strain or twisting at the terminals**. Insert the center wire into the fuse holder terminal and tighten the screw. Then insert one of the braid ferrules in the adjacent braid terminal and fasten it. Repeat with the remaining braid ferrule. If the ferrules were installed properly, there should be very little slack braid wire.

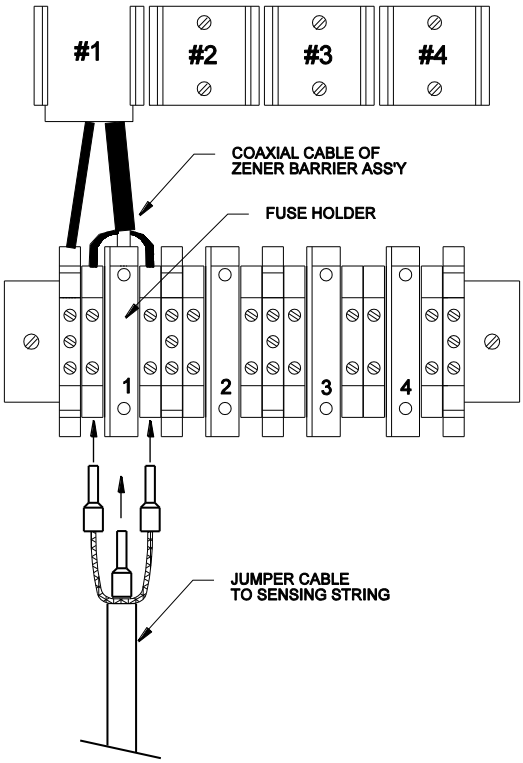

8.5.4 ATP Cable Connection at PAL-AT

The ATP cable uses two of the three cable plug terminals as shown below. Strip 3/8" [10mm] of insulation from the end of the red and white wires. Insert the red wire into the center terminal and the white wire into either of the side terminals of the cable plug and tighten as shown. **Before connecting the plug, route the excess cable in the enclosure so there will not be excessive strain or twisting at the terminals**. Insert the plug into the appropriate receptacle as shown. When removing the cable, grip the plug and pull it straight out of the receptacle. **Note the plug and receptacle are polarized so they can only be connected one way.**

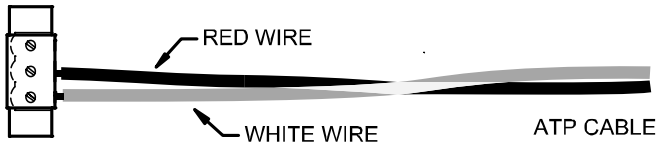

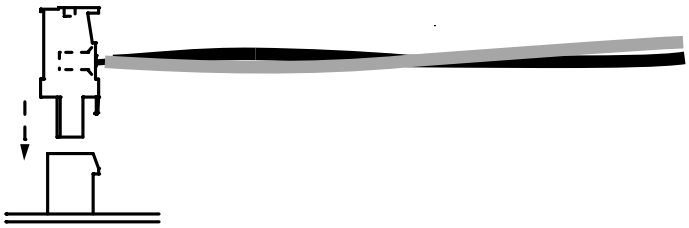

ATP CABLE
CONNECTION DETAIL

9 Probes

9.1 UL Requirements

All PermAlert probes are approved for installation in ordinary, or unclassified, locations. All PermAlert probes, **except the PWS water probe**, are also approved for installation in hazardous locations (see figures 3-2 and 3-3) when the sensing string is connected to a Zener Barrier Panel and Zener Barrier Assembly.

9.2 Probe Integrator Selection

All probe integrators have a red or blue band(s) of shrink tubing on the probe lead cable. A probe integrator with a red band(s) is used with PHLR, PSTV, PFS and PTHL probe or a normally closed switch. A probe integrator with a blue band(s) is used with the PWS probe or a normally open switch.

The number of bands on the probe integrator indicates where it can be used in the sensing string. One band (-S model) indicates the probe integrator must be connected to the system in the first 5,000' [1500 m] of sensing string. Two bands (-L model) indicate the probe integrator must be connected to the sensing string beyond 5,000' [1500 m] (Contact factory for specific requirements).

9.3 Probe Installation

1. All PAL-AT probes are furnished with a probe integrator and 60' [18 m] of JMP-U jumper cable in a NEMA 4X [IP66] junction box. The probe integrator allows the attachment of probes to the PAL-AT monitoring system. The standard 10" x 8" x 4" [250 mm x 200 mm x 100 mm] junction box can house one integrator. A 12" x 10" x 4" [300 mm x 250 mm x 100 mm] junction box is recommended if 2 probe integrators are located in one box.
2. The maximum temperature for a probe integrator is 180°F [80°C] in ordinary locations. **If a probe integrator is connected to a ZBA in a hazardous location, the maximum temperature is 140°F [60°C**].
3. The standard polyester probe junction box is rated for 150°F [65°C]. An optional high- temperature fiberglass box is also available. Make sure the enclosure is appropriate for the ambient temperature.
4. Some probe components (epoxy, shrink tubing, etc.) are resistant to many hydrocarbons and chemicals. However, the probes should be cleaned promptly after a leak event. **If left exposed to hydrocarbon liquids or chemicals for extended periods, the probes may require replacement.**
5. Mount the probe integrator junction box at a location close to the point being monitored. PermAlert supplies probes with 20' [6 m] of twin lead cable. Uncoil the twin lead cable. **Do not splice on additional wire to lengthen the leads.** If the probe integrator is located in a manhole or pit, which may collect and hold water, mount the junction box as high as possible.
6. Figures 9-1 and 9-2 show the recommended installation procedures. Figures 9-3 thru 9-7 show typical probe installations. Install the probe and use electrical conduit and/or watertight cord grips, as necessary, to prevent water entry where the probe twin lead penetrates the monitored area. If the probe lead length is longer than 5' [1.5 m] and the probe is installed in the first 800' [245 m] of a system, plastic conduit should be used instead of metal conduit. The cord grip (part # 8057950) with the oval opening in the bushing is used with the twin lead cable. The cord grip (part # 8057954) with the round hole is for the jumper cable.
7. Once a probe is installed, the twin lead should be routed to the junction box containing the probe integrator. **Trim the excess length of the probe twin lead before splicing it to the probe integrator.** Splice the leads to the integrator by using the crimp connectors supplied with the probe. Heat the splice with a heat gun to seal the adhesive-lined shrink tubing on the connector.
8. Use all 60' [18 m] of jumper cable furnished with the probe integrator. **If the jumper cable leads are too long, do not shorten,** but loosen the watertight cord grips and coil the excess jumper cable within the probe junction box. One jumper cable length is shorter than the other is. Connect the shorter end (10') [2.5 m] to the cable segment closest to the PAL-T panel. The longer end of jumper cable (50') [15 m] should be routed to the connection point for the continuation of the sensing string.
9. Additional jumper cable may be required to be added to the end of a probe installed beyond 3000' [900 m] on the cable string (see table 9-1).

10. If the probe is the end of the sensing string, refer to table 4-1 (section 4) for the required length of jumper cable needed to be added to the end of the probe.
11. Additional jumper cable may be connected on either side of the probe integrator to facilitate connection of remote sensing string components.
12. Refer to the "Cable Connector Installation" section of this manual and install a connector on each length of jumper cable. Test all connectors using the "Cable and Connector Testing Procedures".
13. Cable connections to jumper cable from the probe integrators will become calibration points and must be accessible during system start-up.
14. The maximum number of probes per cable string is 10. A maximum of three probes installed past 5000' [1500 m] is allowed (Contact factory).

Table 9-1
Additional Jumper Cable after Probe

Probe Location on Sensing String ft / [m]	Additional JMP-U/-UD At End of Probe ft / [m]			Additional JPP At End of Probe ft / [m]		
	Twin Lead Length			Twin Lead Length		
	20 / [6]	15 / [4.5]	10 / [3]	20 / [6)	15 / [4.5]	10 / [3]
0-3000 / [0-900]	0 / [0]	0 / [0]	0 / [0]	0 / [0]	0 / [0]	0 / [0]
3001-4000 / [900-1200]	20 / [6]	0 / [0]	0 / [0]	25 / [8]	0 / [0]	0 / [0]
4001-5000 / [1200-1500]	60 / [18]	25 / [8]	20 / [6]	80 / [25]	35 / [11]	25 / [8]
Over 5000 / [over 1500]	Contact Factory					

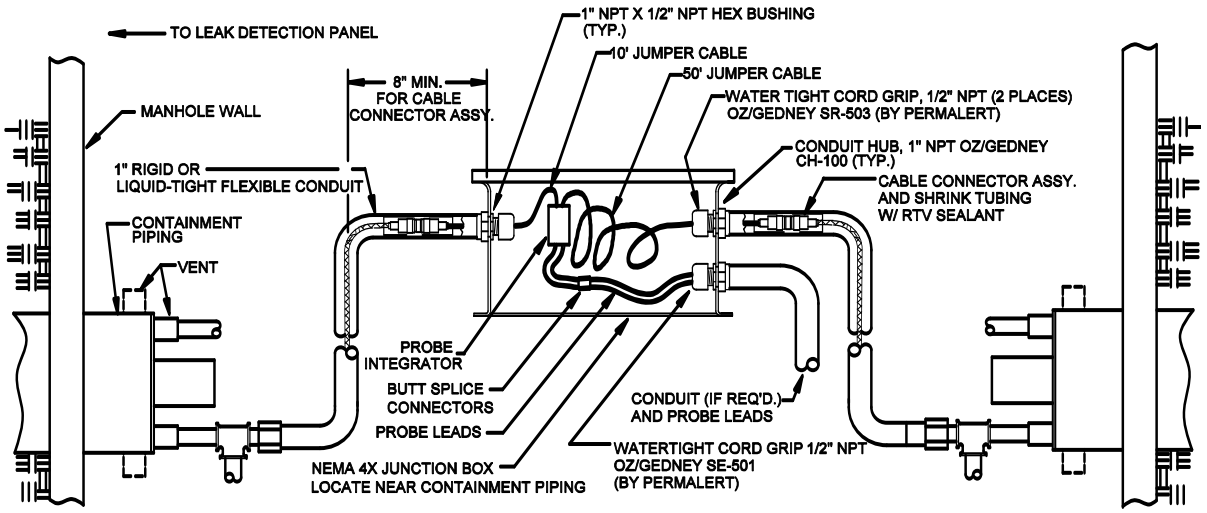

NOTES:

1. WATERTIGHT CORD GRIPS, CONDUIT HUBS AND CONDUIT ARE RECOMMENDED
2. THE 10' AND 50' JUMPER CABLE CONNECTED TO THE PROBE INTEGRATOR MUST NOT BE SHORTENED. COIL EXCESS WITHIN NEMA 4X JUNCTION BOX.
3. 50' LENGTH OF JUMPER CABLE ATTACHED TO THE PROBE INTEGRATOR MUST BE DOWNSTREAM OF THE PROBE INTEGRATOR AWAY FROM THE PAL-AT PANEL
4. CONDUIT SHOULD BE USED TO PROTECT THE PROBE LEADS IN APPLICATIONS WHERE DAMAGE MAY OCCURE
5. MARK UNPROTECTED PROBE LEADS WITH CABLE TAG, PART NUMBER 8057661.
6. ALLOW SLACK ON SENSOR CABLES TO INSTALL CONNECTORS.

Figure 9-1
Typical Probe Connection in Monitored Areas

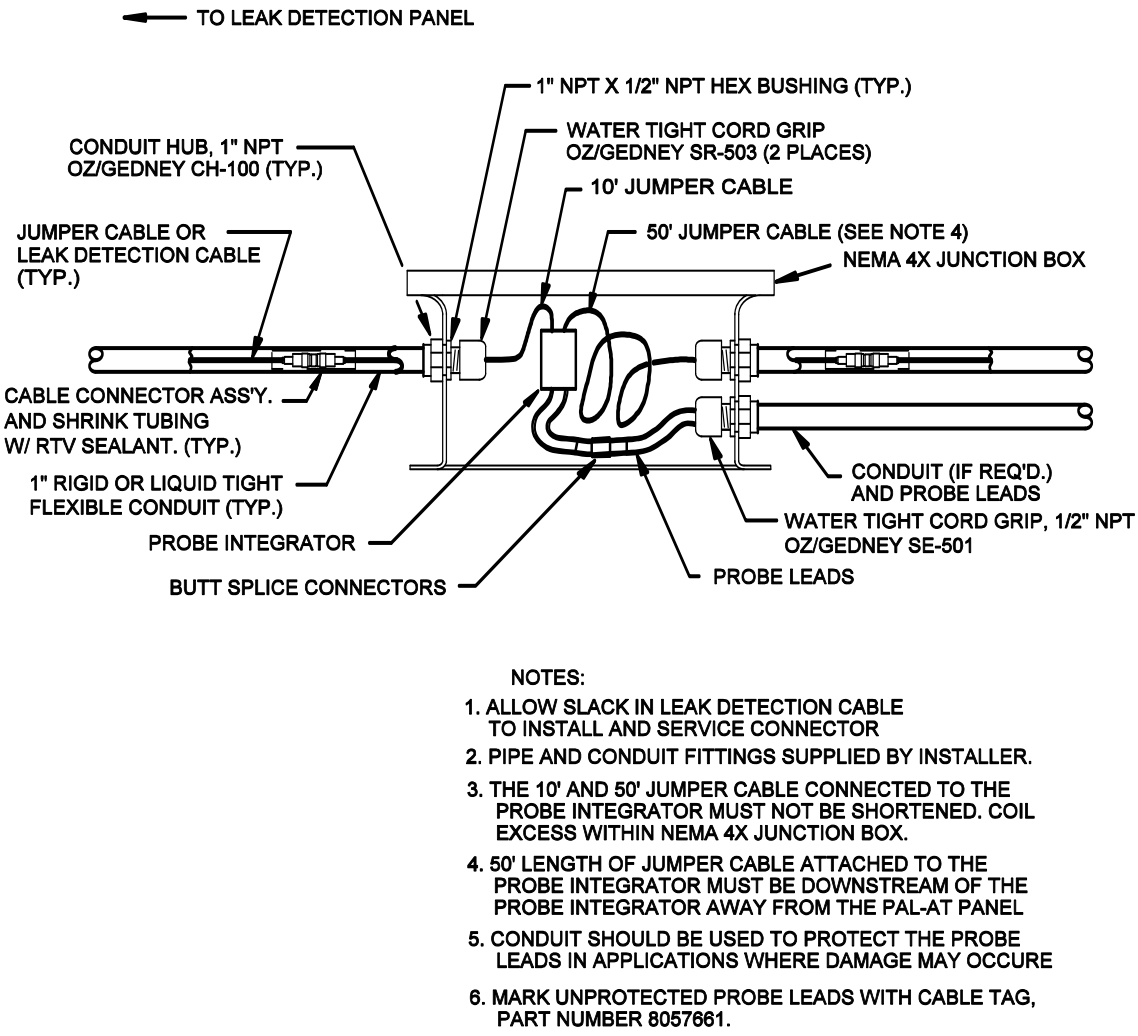

NOTES:

1. ALLOW SLACK IN LEAK DETECTION CABLE TO INSTALL AND SERVICE CONNECTOR
2. PIPE AND CONDUIT FITTINGS SUPPLIED BY INSTALLER.
3. THE 10' AND 50' JUMPER CABLE CONNECTED TO THE PROBE INTEGRATOR MUST NOT BE SHORTENED. COIL EXCESS WITHIN NEMA 4X JUNCTION BOX.
4. 50' LENGTH OF JUMPER CABLE ATTACHED TO THE PROBE INTEGRATOR MUST BE DOWNSTREAM OF THE PROBE INTEGRATOR AWAY FROM THE PAL-AT PANEL
5. CONDUIT SHOULD BE USED TO PROTECT THE PROBE LEADS IN APPLICATIONS WHERE DAMAGE MAY OCCURE
6. MARK UNPROTECTED PROBE LEADS WITH CABLE TAG, PART NUMBER 8057661.

Figure 9-2
Typical Conduit Connection Detail

9.4 PHLR Hydrocarbon Probe

The PHLR series is a reusable hydrocarbon probe that detects hydrocarbon liquids in sumps, interstitial spaces of pipes and any other areas where hydrocarbon liquids can accumulate to a depth of ¼" [6 mm]. The probe is designed to detect fuels (gasoline, diesel fuel, jet fuel, crude oil, etc.) and many hydrocarbon solvents. The probe is reusable by cleaning or replacing the sensor elements. There are two models of the PHLR probe available:

- The standard PHLR is designed for non-pressurized locations such as sumps, manholes, and non-pressurized containments. The PHLR can be installed in any orientation – vertical or horizontal.
- The PHLR-P is designed for pressurized containment applications. This model is ideal for typical sealed, containment piping systems that are maintained under pressure with a nitrogen or air blanket. The PHLR-P should be installed in a vertical orientation. **The PHLR-P has vent holes that must not be submerged in a liquid before the containment is pressurized** (see figure 9-4).

An extension to the probe housing can easily be added with standard ¾" Schedule 40 PVC pipe to accommodate installation requirements.

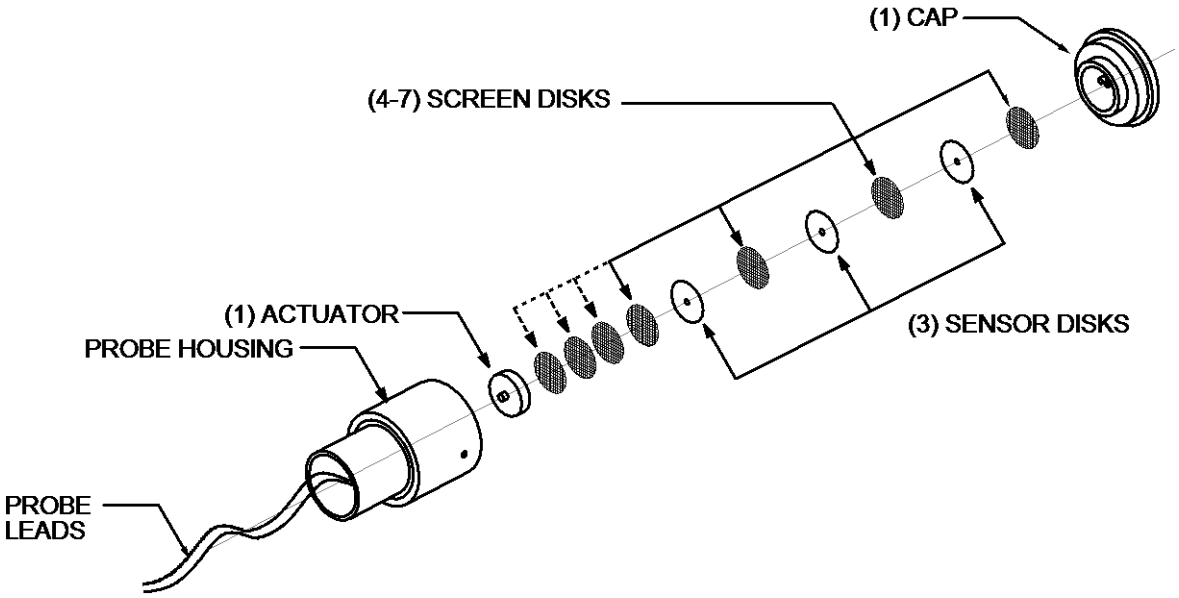

Figure 9-3
PHLR Sensor Package

9.4.1 Cleaning Sensor Elements Procedure

The replacement sensor package consists of 10 disks: seven screen disks and three sensor disks as shown in figure 9-3. The replacement package includes all removable parts: probe cap, sensor elements, and actuator. Replacement sensor elements can also be purchased separately.

The following procedure is a general guideline to follow to clean the probe and sensor elements after exposure to hydrocarbon liquids.

Caution: It is the user's responsibility to determine safety precautions and the suitability of exposing personnel to the hydrocarbon liquid on the probes and various cleaning solvents suggested.

The sensor disks swell after exposure to fuels and solvents. The swelling forces the actuator to move and operate a low-force sealed switch. Volatile hydrocarbon liquids, such as gasoline, will eventually evaporate resulting in the sensor disks returning to their original size. This allows the switch to return to the normal position. A faster resetting process is to disassemble the probe to speed the evaporation of the liquid. Other liquids, such as diesel fuel and jet fuel that do not evaporate, must be flushed with a solvent to remove the contamination. Disassemble and clean the probe as follows:

1. Remove excess hydrocarbon contamination from the exterior of the probe.
2. Hold the switch in a vertical position with the cap downward and unscrew the cap. Do this over a table so the small parts are not lost if they are dropped. **Be very careful not to lose the sensor disks.** They are very similar to contact lenses in size and texture.
3. Place the actuator, screens, cap, and sensor disks into a small container of solvent. Coleman Camp Fuel, which is naphtha, works well and evaporates very quickly. Other solvents that evaporate quickly and completely are also suitable.
4. Soak the components for a minute or two and then remove them.
5. Let the solvent evaporate until the disks return to the original diameter and fit into the cap easily. If the sensor disks do not slip easily into the circular holder in the cap, repeat the cleaning process. The disks should be about 0.5" [12 mm] diameter when dry.

6. Reassemble the switch. Carefully alternate the screens and three sensor disks in the cap as shown in figure 9-3. If there are more than 4 screens, place the extra screens on top. Place the actuator on top of the top screen. The actuator has a small point in the center of one side that must face the probe housing as shown. Hold the probe housing vertically and screw the cap finger-tight into the bottom of the housing.
7. If response time is over 5 minutes for diesel fuel at room temperature, insert the optional fifth screen next to the actuator. Make sure the extra screen does not activate the probe when it is tightened. If so, remove the extra screen. The extra screen accommodates manufacturing tolerances and reduces the amount of swelling of the sensor disks required before the probe activates.

9.4.2 Testing the Probe

The assembled probe can be easily tested with an ohmmeter and a small paperclip.

1. Connect the ohmmeter leads to the probe leads.
2. The reading should be very low, typically under two ohms.
3. Insert the paper clip into one of the five holes in the center of the cap and press gently (1-2 oz of force [25 g to 50 g]) into the switch.
4. The ohmmeter should read an open circuit or 0.L.
5. Remove the paper clip and the meter should return to the original low reading.
6. Disconnect the ohmmeter.

9.4.3 Troubleshooting

If the test results are not as expected, the following checks should help determine the problem.

- If the original reading is greater than 2 ohms or open, or 0.L, then
    - Check the sensor disks and screens are installed correctly. They must be flat, not folded over.
    - Verify the diameter has returned to the original size. Clean again if needed.
    - Recalibrate the probe as described below.
- If the ohmmeter reading is not an open circuit, 0.L, when the paperclip is inserted, then
    - Check the meter leads or probe wires are not shorted together.
    - Disassemble the probe and make sure the actuator point is oriented properly to press into the center of the switch in the probe housing.
    - Recalibrate the probe as described below.

9.4.4 Calibrating the Probe

If the sensor elements are replaced, it is necessary to use the correct number of screen elements for optimum sensitivity (see figure 9-3). The number of screens required varies due to manufacturing tolerances of the probe. A multimeter is required.

1. Set the multimeter to the ohms function, auto-ranging scale, and connect to the probe leads.
2. Assemble the probe with seven screens and three elements as shown. Tighten the cap finger tight.
3. If the meter reading is less than 2 ohms, the probe fails the calibration. Make sure there are no extra screen or sensor disks installed.
4. If the reading is 0.L, remove a screen (shown by the dashed arrows in figure 9-3). If the reading is less than 2 ohms, the calibration is complete.
5. If more than four screens are installed repeat step 4.
6. If the reading is 0.L with four screens, the probe fails the calibration. Make sure there are three sensor disks and at least four screen disks installed.

If the reading in step 4 is not less than 2 ohms, hold the probe in a vertical orientation and gently tap the housing. The switch resistance should be less than 2 ohms in the normal dry state.

9 Probes

9.5 Typical Installations

Contained Pipe

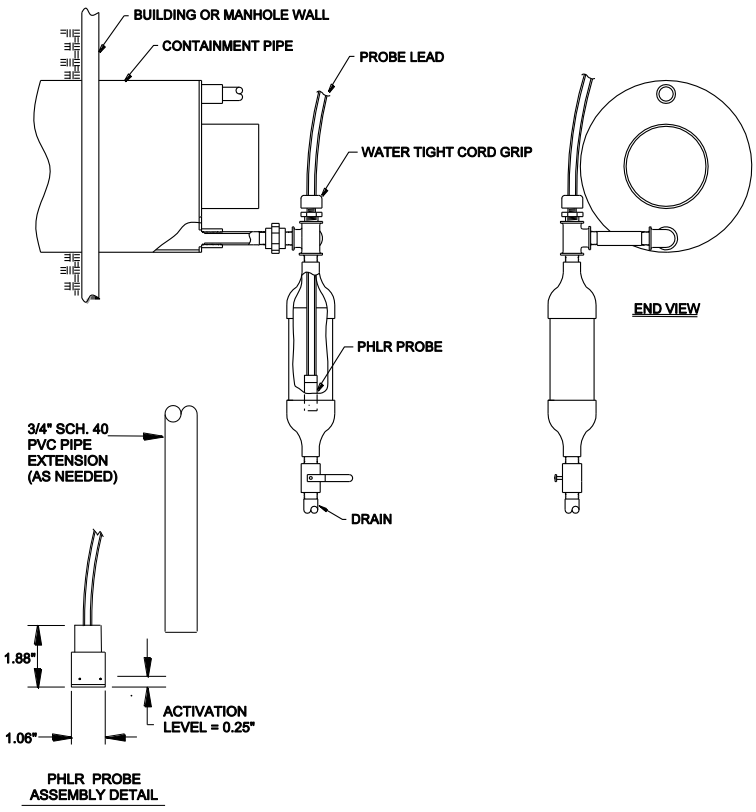

Pressurized Contained Pipe

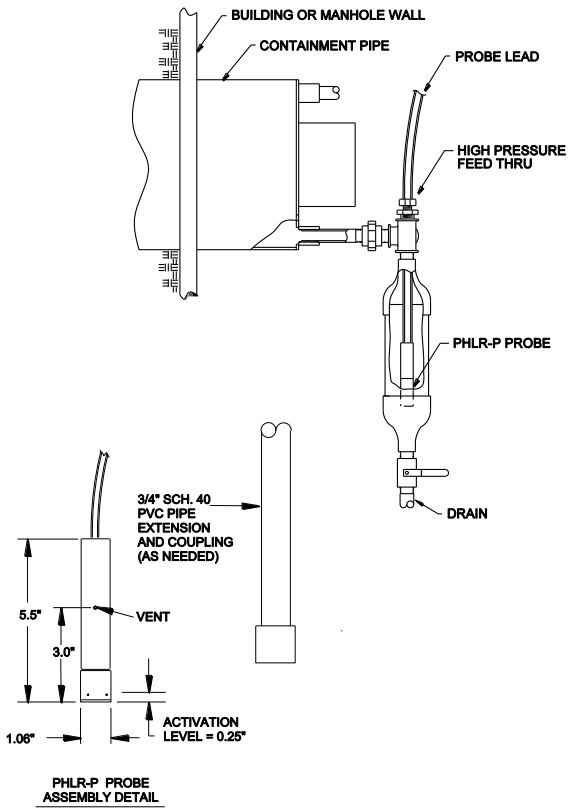

Double-Wall Tanks

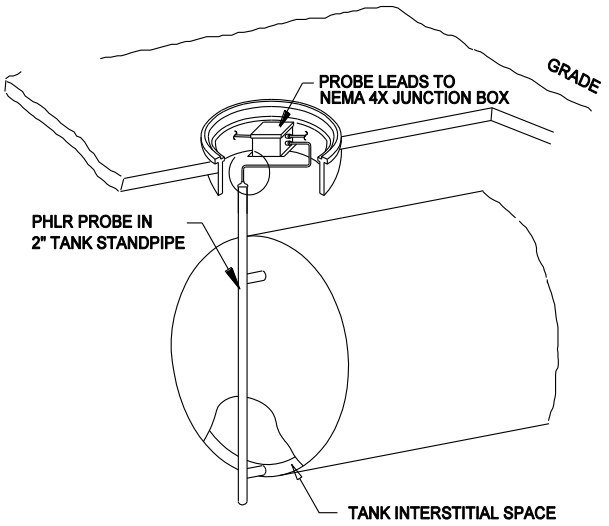

Contained Area

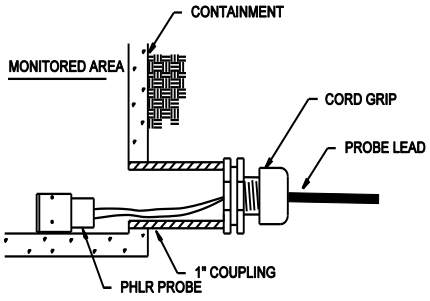

Figure 9-4
Typical PHLR and PHLR-P Probe Installations

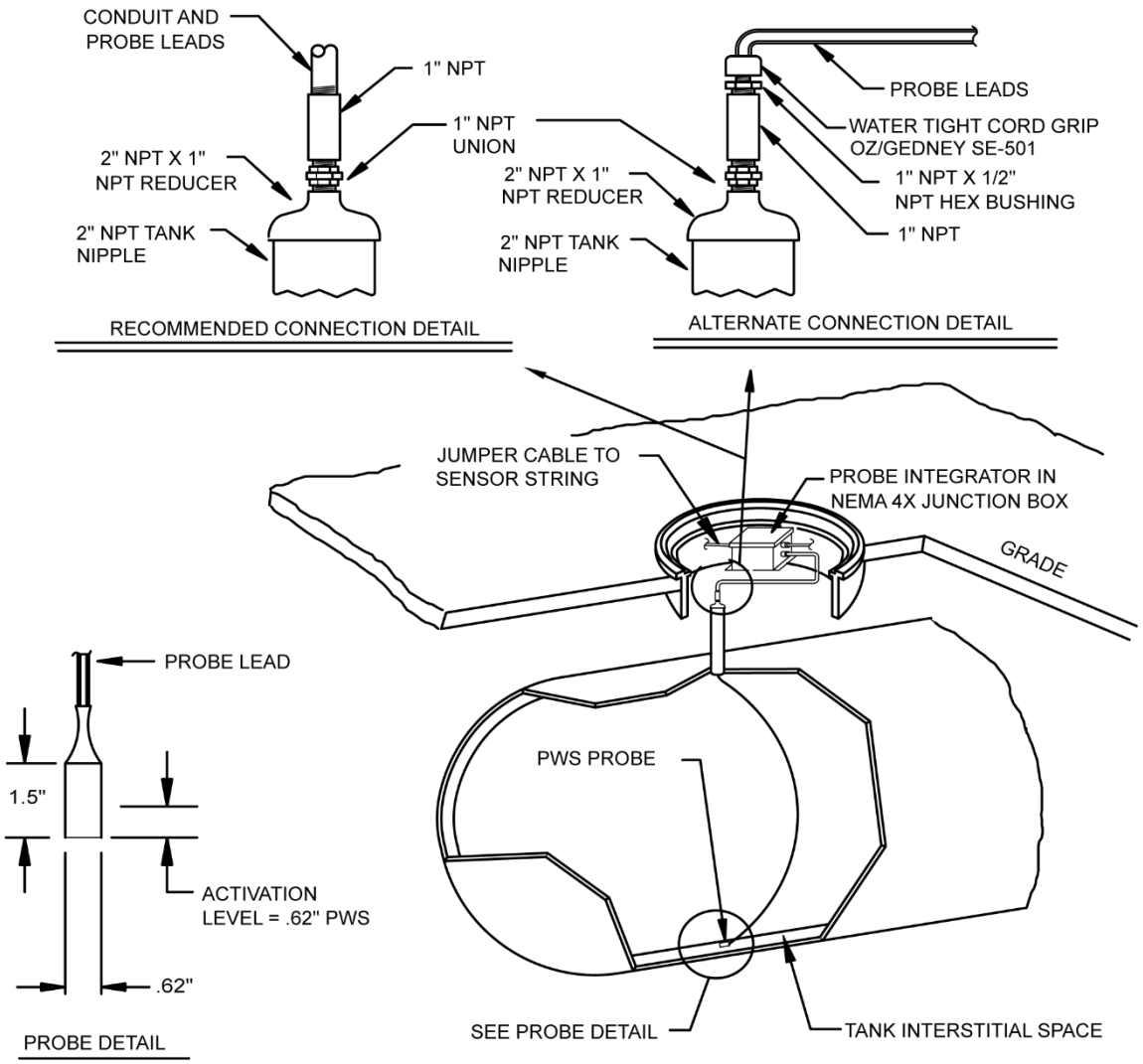

NOTES:

1. LENGTH OF PROBE LEAD IS 20 FEET MAX.

Figure 9-5
Typical PWS Probe Installation

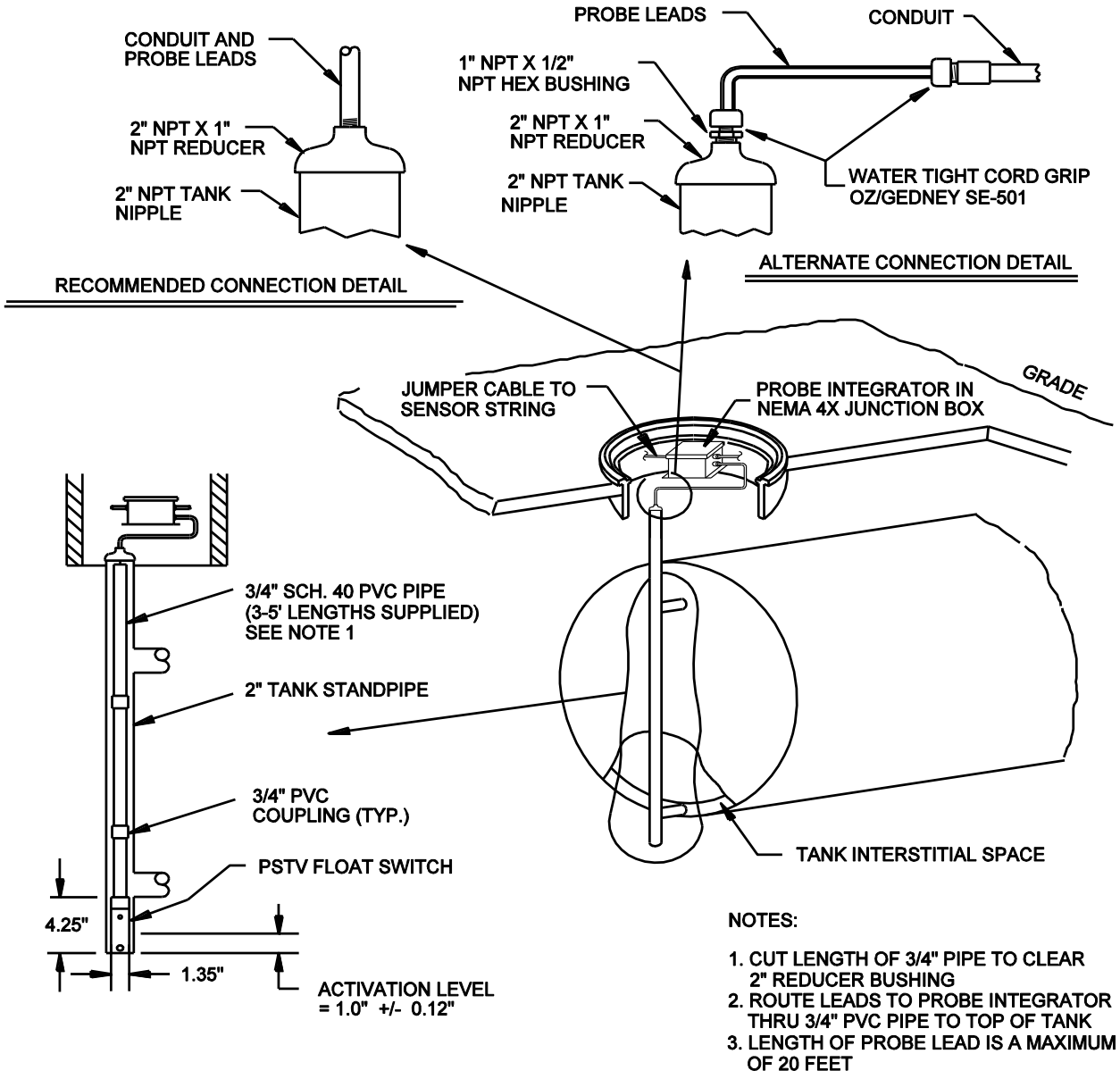

Figure 9-6
Typical PSTV Tank Float Switch Installation

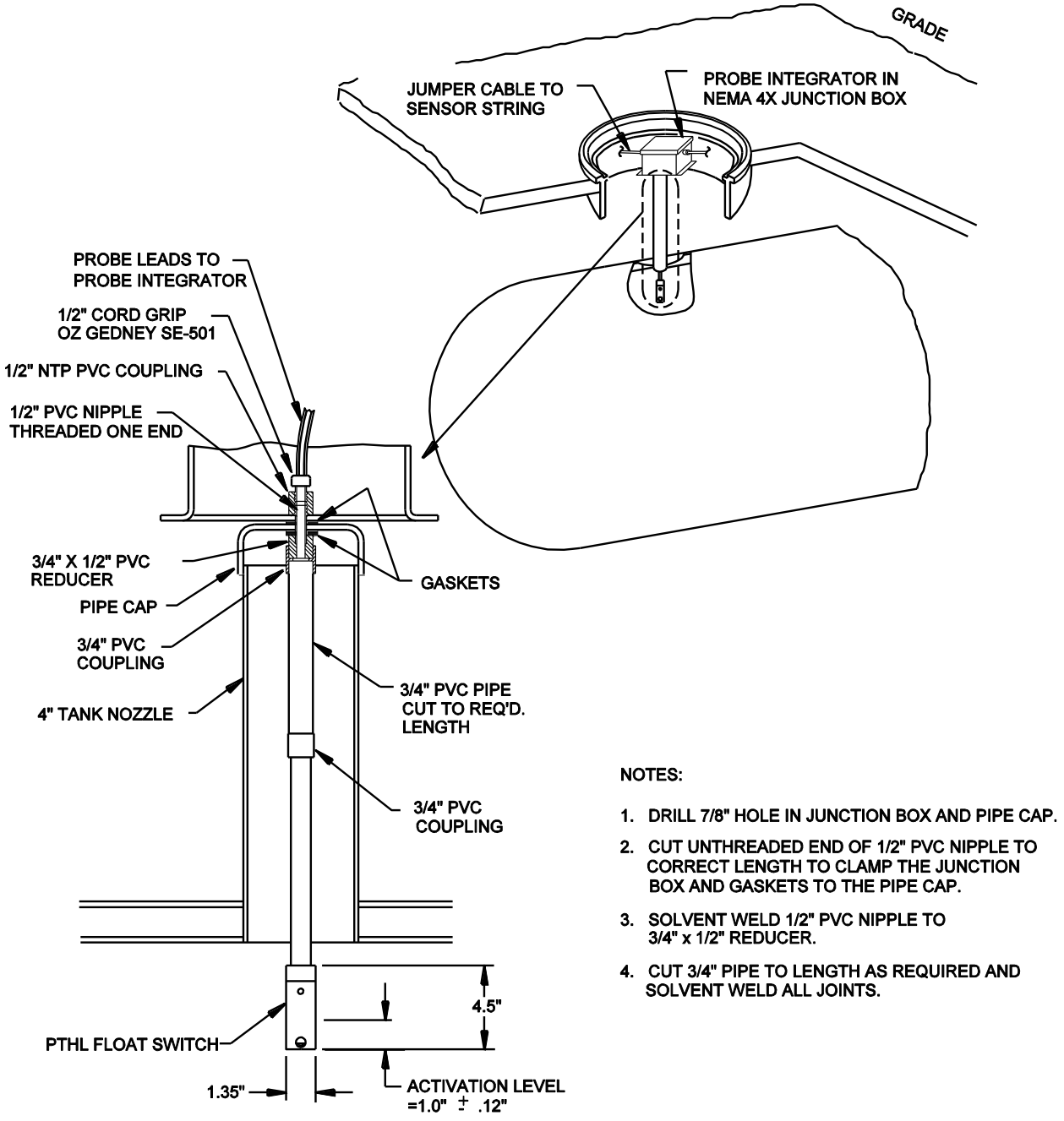

Figure 9-7
Typical PTHL Installation

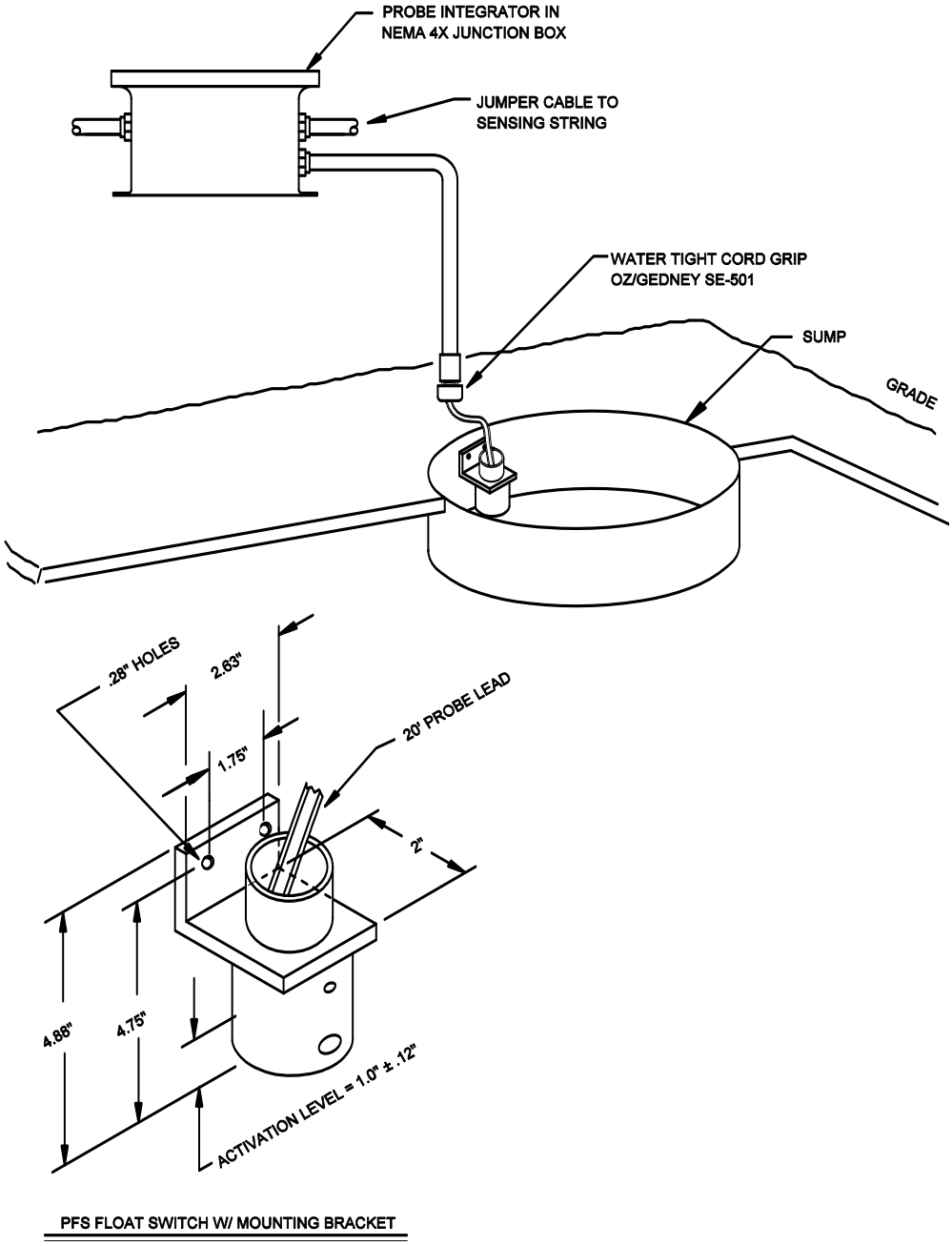

Figure 9-8
Typical PFS Installation

9.6 Probe Tests

Figure 9-9 shows a typical probe integrator test setup. There are four test procedures based on the type of integrator used. The red lead of an ohmmeter should be connected to the center pin of either of the connectors (point A). The black lead should be connected to the connector housing (point B). The ohmmeter should be set to resistance. Follow the test procedure in figure 9-10 to test the probe integrator and probes.

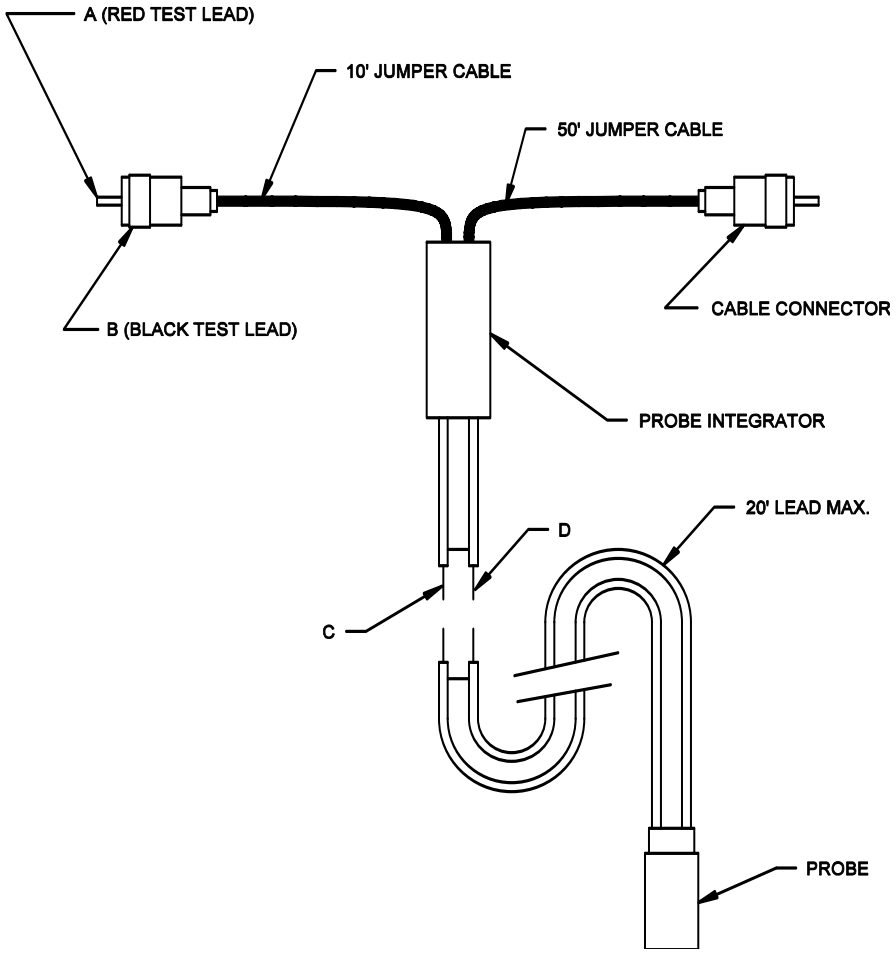

Figure 9-9
Probe Integrator Test Setup

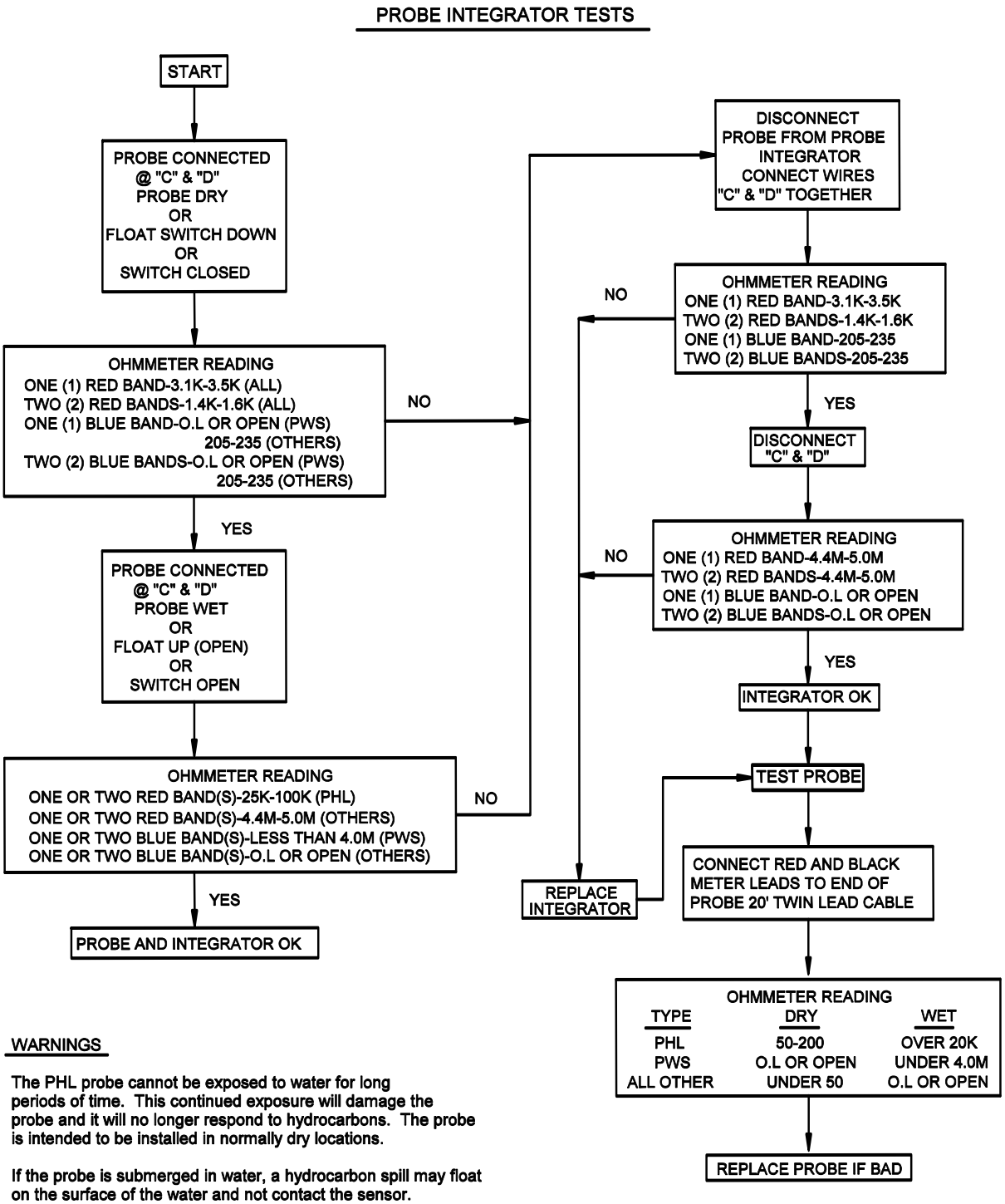

Figure 9-10
Probe Integrator Test

10 ATP Cable in Polyurethane Foam Insulation

10.1 General

This section outlines installation procedures for ATP twisted pair leak detection cable. The cable has two insulated solid copper wires, one red and the other white. It is installed at the factory in polyurethane foam insulation.

The cable is typically installed at the 12 o'clock position in the foam insulation for straight runs. It may be in other orientations for fittings and returns from branch runs, so check the drawing layout for specific job information. **It is very important that the ATP cable be installed straight across each field joint. The pipe should be rotated so the location where the ATP cable exits the polyurethane foam in adjacent pipe sections line up to each other. The exit location is stenciled "ATP" on the pipe jacket.**

10.2 Pipe Installation Precautions

Extra cable extends past each end of the pipe and is coiled around the pipe to protect it during shipping. **The extra cable must be protected from damage and must be moved away from the pipe before welding the pipe. Repeated bending of the cable can also damage it.**

There are several techniques to protect the ATP cable during the pipe welding/brazing process, depending on the pipe dimensions and material. The cable can be exposed to temperatures of 300°F [150°C] for a short time. A wet rag next to the cable can reduce the temperature sufficiently in some cases. **If the ATP cable is within 6" from the weld, additional precautions must be taken.** There are heat block insulator paste products available that can be placed on the pipe between the heat source and the cable. Typically, the process involves applying a thick layer of insulator paste around the pipe and then removing it after the welding operation (per manufacturer's instructions).

10.3 System Configuration

A PAL-AT Leak Detection and Location System can monitor 1 to 4 cables, or sensing strings, depending on the model. **A sensing string used to monitor ATP must only monitor ATP. No jumper cable, probes or other types of sensor cables can be connected to the string.**

An ATP cable string has at least 50' [15 m] of ATP connected to the panel that replaces the standard jumper cable. The ATP "jumper" cable connects directly to the ATP cable in the pipe foam insulation at the start of the pipeline. Watertight electrical conduit should be used to protect the cable and keep it dry. **The watertight requirement for conduit is critical to prevent false alarms.**

10.4 Calibration Points

During the initial setup and calibration of the PAL-AT system, connectors at selected locations, called calibration points, are temporarily disconnected. **Therefore, it is imperative to have accessibility to connectors at calibration points at all times until the system is brought on-line.** The cable at these locations can be prepared for permanent crimp connectors, but the connectors should not be crimped until the calibration process is completed for each section. A reusable connector (CAGOLD) can be installed at these points to allow multiple making/breaking the connection if needed (see section 8.2.4).

10.5 ATP Cable and Connector Testing Procedures

The following "Continuity Test" and "Insulation Test with Wet Cloth" should be performed after each pair of crimp connectors is installed at a field joint, prior to installing the polyurethane foam. In addition, the continuity test and standard insulation test should be performed again, prior to backfilling the pipe. When performing connector tests, if a CAGOLD connector is used, the center pin of the UHF connector is connected to the red wire and the connector housing is connected to the white wire.

A 9-volt digital multimeter, e.g. a Fluke Model 75, **can be used for the continuity test** and a **500-volt megger must be used for the insulation test**.

10.5.1 Continuity Test

The continuity test checks for broken cable, open connectors and poor connections. The test can be performed on the entire ATP sensor string or a partial section.

1. At the start of the pipe (or at the connector in the panel) temporarily connect the red and white wires together. A short jumper wire with alligator clips or wire nut can be used. If a UHF connector is installed, connect the jumper between the UHF connector's center contact and the body of the connector, as shown. **Note: Do not clip onto the threaded coupling ring because it is not tightly secured and will give intermittent readings**

2. Connect the ohmmeter's test leads to the red and white wires on the other end of the cable.

3. The ohmmeter reading should be less than 6 ohms/1000 ft [20 ohms/1000 m] of cable. If it is not, check the jumper wire, test lead connections and repeat the test. If the problem still persists, check the last connector installed and correct the problem.

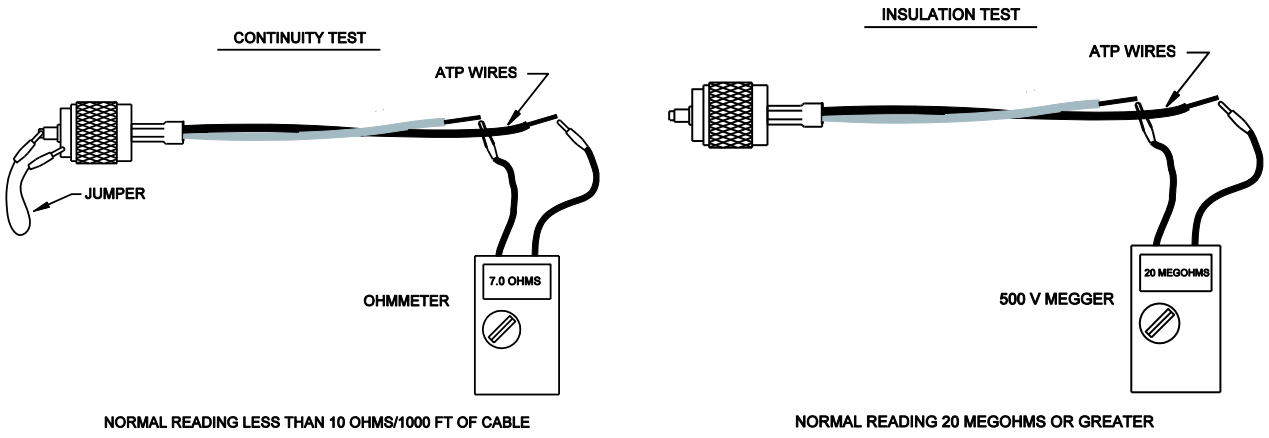

ATP Cable Test Procedures

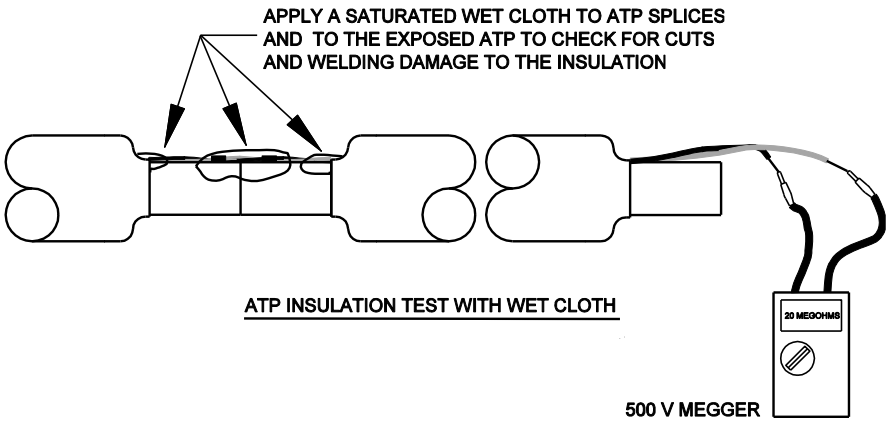

ATP Wet Cloth Test Procedure

10.5.2 Insulation Test

This insulation test checks for a short between the red and white wires or from either wire to the pipe. The test can be performed on the entire ATP sensor string or a partial section.

The ATP cable must be disconnected from the PAL-AT panel when conducting the insulation tests or damage to the equipment will result. A 500-volt megger is used to measure the resistance between the wires and the carrier pipe.

1. If the jumper wire used in the continuity test is still installed, remove it.

2. Perform this test at the unconnected end of the length of ATP.

3. Connect one of the megger test leads to the red wire and the other lead to the pipe. The reading should be “open” or greater than 20 megohms.
4. Check the white wire in a similar manner.
5. Connect one of the megger test leads to the red wire and the other lead to the white wire. The reading should be “open” or greater than 20 megohms.
6. A good cable will have a reading of at least 20 megohms. If any reading is less than 20 megohms, check the last connection for a short and repair the problem. The wire insulation may be damaged or adhesive lined shrink tubing was not installed over a splice and the condition must be corrected.

10.5.3 Insulation Test with Wet Cloth

This insulation test checks for a short between the red and white wires or from either wire to the pipe. This test should be performed when the ATP splice connections are completed at each field joint, before the field joint insulation and jacket are installed.

The ATP cable must be disconnected from the PAL-AT panel when conducting the insulation tests or damage to the equipment will result. A 500-volt megger is used to measure the resistance between the wires and the carrier pipe. Make sure no one is touching the wet cloth when the megger test is conducted.

7. If the jumper wire used in the continuity test is still installed, remove it.
8. Perform this test at the unconnected end of the length of ATP just added to the sensor string.
9. Place a saturated cloth on the splices and exposed ATP cable at the field joint. The water will enter any damaged wire insulation and cause a low megger reading.
10. Connect one of the megger test leads to the red wire and the other lead to the pipe. The reading should be “open” or greater than 20 megohms.
11. Check the white wire in a similar manner.
12. Connect one of the megger test leads to the red wire and the other lead to the white wire. The reading should be “open” or greater than 20 megohms.
13. A good cable will have a reading of at least 20 megohms. If any reading is less than 20 megohms, check the last connection for a short and repair the problem. The wire insulation may be damaged or adhesive lined shrink tubing was not installed over a splice and the condition must be corrected.
14. Remove the wet cloth and dry the pipe before insulating the field joint.

10.6 Start of Run

The initial length of ATP cable from the PAL-AT panel is connected to the ATP cable at the start of the pipe run as shown in figure 10-1.

The ATP cable should be connected to the cable plug in the PAL-AT panel as follows:

Before connecting the cable to the plug, route the excess cable in the enclosure so there will not be excessive strain or twisting at the terminals. Connect the ATP red wire to the center terminal of the cable plug. The white wire should be connected to either of the side terminals of the plug. Insert the plug into the appropriate receptacle as shown. When removing the cable, grip the plug and pull it straight out of the receptacle. **Note the plug and receptacle are polarized so they can only be connected one way**.

10 ATP Cable

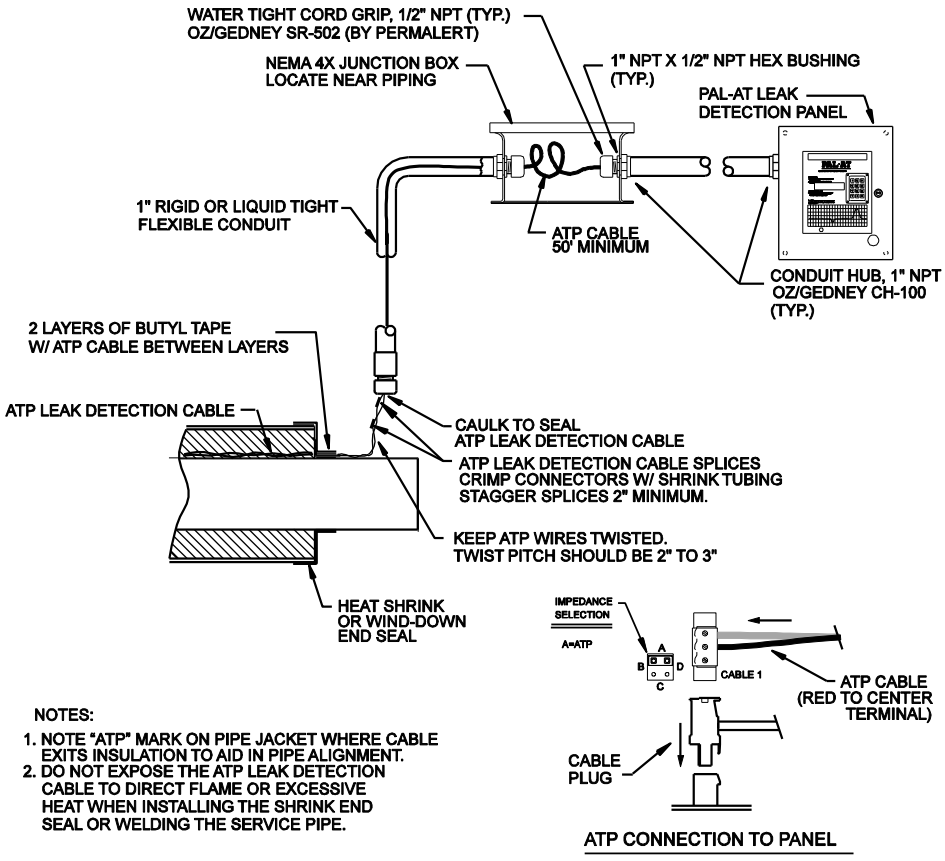

Figure 10-1
ATP Cable Connection - Start of Run

10.7 ATP Cable Splices

The ATP cable is spliced at field joints with crimp connectors using the following steps (see figure 10-2).

1. The red wires should be spliced on one side of the pipe joint and the white wires on the other side, each splice approximately 3"- 4" [75 mm -100 mm] from the end of the pipe.
2. If the ATP cable from the first pipe is not directly in line with the cable from the second pipe, the cable should be routed in as direct a line as possible between the two splice points (refer to Branch Return design in figure 10-2).
3. Cut the red wire from one pipe so the end is centered over the first splice location. Cut the other red wire so the wires meet. Minimize excess slack in the wire.
4. Strip 5/16"-3/8" [7 mm - 9 mm] of insulation from the ends of the red wires. The wire size is 1.5 mm^2 (metric size). If the correct stripping tool, Model T60/124, part number 8068309, is not available, use a tool for #14 AWG. Do not use a smaller die or uncalibrated hand tool, such as wire cutters, that may damage the conductor.
5. **Slide a 1½" [38 mm] long piece of adhesive lined shrink tubing on the wire before crimping the connector**.
6. The crimp tool, Model T60/125, part number 8068308, is ratcheted so the crimp must be completed once it is started. The crimp connector has an indentation (wire stop) in the center. **Two crimps are required, one on each half of the connector. The model T60/125 crimp tool must be used**.
7. Insert one red wire into the connector and place the connector in the T60/125 tool so the die is centered over the half of the connector with the wire. Make sure the wire is fully inserted into the connector until it hits the stop, and then crimp the connector.

8. Repeat step 7 with the other red wire.
9. Try to pull the splice apart with 10-25 lb [4.5-11 kg] force to ensure the wires were correctly seated in the connector.
10. Repeat steps 3-9 for the white wire. The red and white wires must be twisted with a 2" – 3" [50-75 mm] pitch throughout the splice area before crimping the second connector.
11. Slide the 2 pieces of shrink tubing over the splices and shrink the tubing. There should be no copper wire exposed after the tubing shrinks. If so, the connector should be replaced.
12. **There should not be gaps between the red and white twisted wires**. If they are not in contact with each other, twist the wires slightly to eliminate any gap.
13. Test each wire for continuity and insulation as described above.

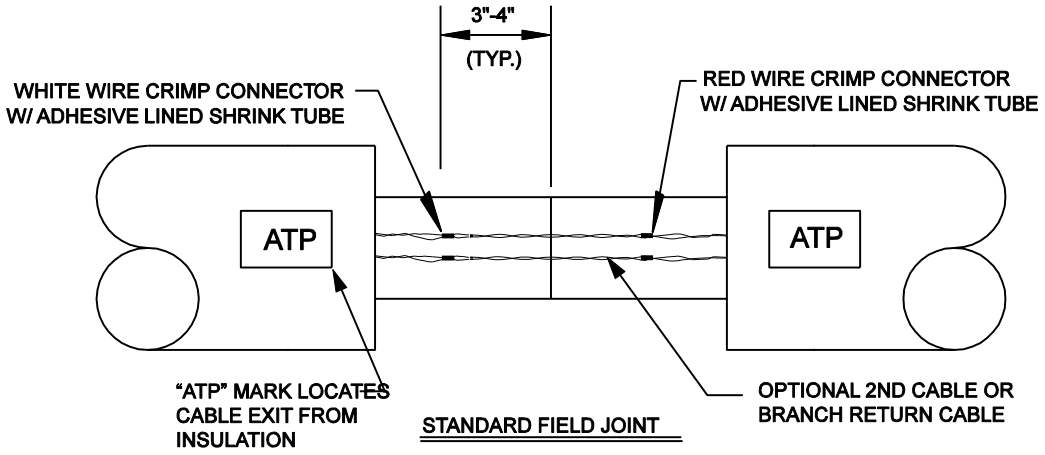

NOTES:

1. NOTE "ATP" MARK ON PIPE JACKET WHERE CABLE EXITS INSULATION TO AID IN PIPE ALIGNMENT.
2. DO NOT EXPOSE THE ATP LEAK DETECTION CABLE TO DIRECT FLAME OR EXCESSIVE HEAT WHEN INSTALLING THE SHRINK END SEAL OR WELDING THE SERVICE PIPE.
3. KEEP ATP LEAK DETECTION CABLE WIRES TWISTED. TWIST PITCH 2" TO 3" IN FIELD JOINT AREA.
4. ONLY USE THE CRIMP CONNECTORS AND CRIMP TOOL SUPPLIED BY PERMALERT.

Figure 10-2
ATP Connection Details

10.8 ATP Cable at Tee Connections

Two lengths of ATP cable are used on branch lines and tees (see figures 10-2 and 10-3). Both cables are typically at the 12 o'clock, position separated 2" - 3" apart. The ATP cable from the preceding section before a tee is connected to the ATP cable using the procedure described above. At the end of the branch, the two cables are spliced together as shown.

The return length of ATP cable from the end of the branch is spliced at the tee to the appropriate ATP cable as shown below using the standard procedure.

An optional second ATP cable may be supplied as a spare or to make all sections available for branch installation.

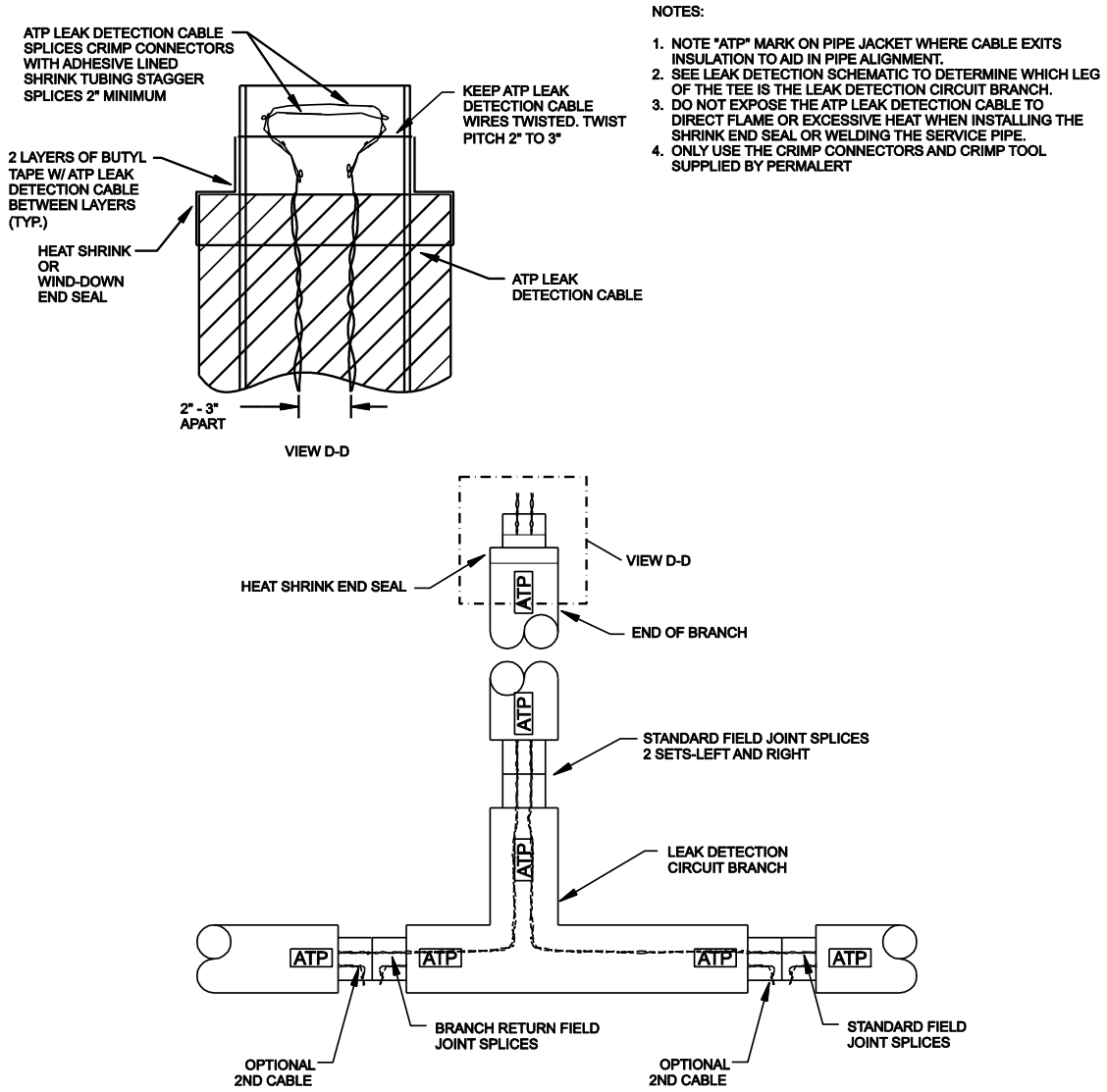

Figure 10-3
ATP Cable at Tee and End of Branch

10.9 End of Run Termination

Install a NEMA 4X [IP66] junction box near the end of the pipe. Electrical conduit should be used to protect the wire if the box is more than a few inches from the pipe end seal. The ATP cable from the pipe should be spliced to 50 ft [15 m] of ATP cable that is coiled in the junction box (100 ft [30 m] is required if the cable length is greater than 3300 ft [1000 m]). Make sure the ATP cable remains twisted. The splices to the red and white wires should be staggered and encapsulated with shrink tubing as described previously.

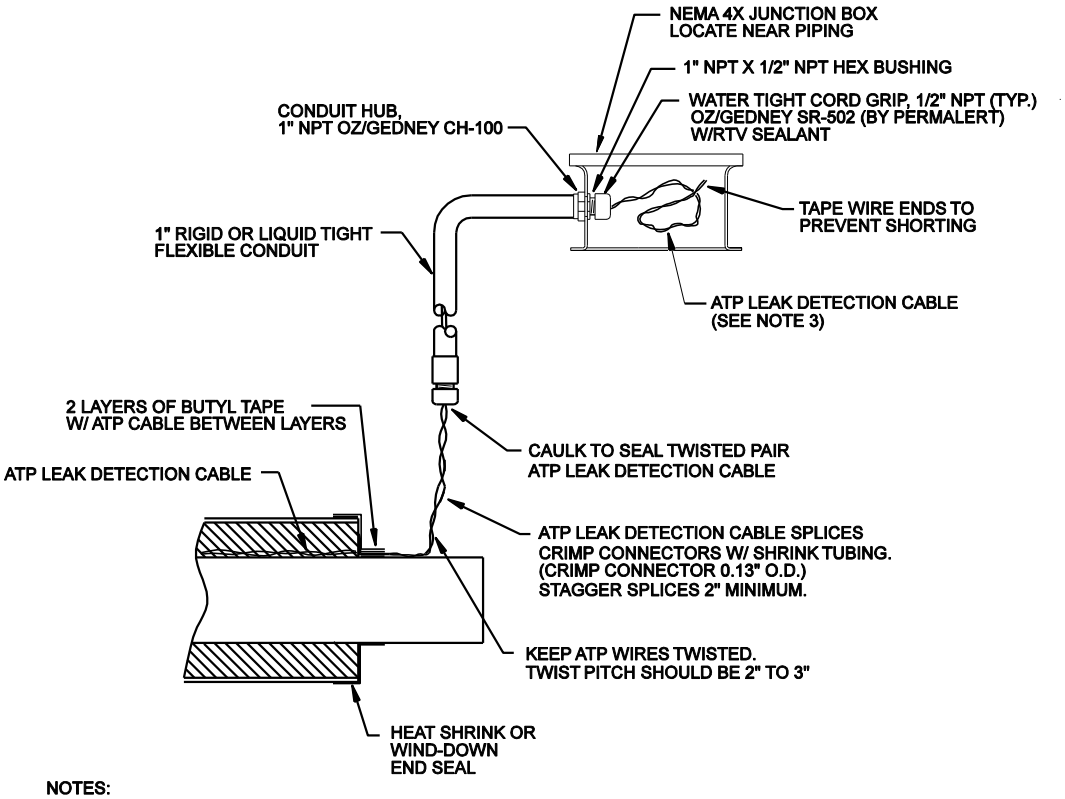

NOTES:

1. DO NOT EXPOSE THE ATP LEAK DETECTION CABLE TO DIRECT FLAME OR EXCESSIVE HEAT WHEN INSTALLING THE SHRINK END SEAL OR WELDING THE SERVICE PIPE.
2. ONLY USE THE CRIMP CONNECTORS AND CRIMP TOOL SUPPLIED BY PERMALERT.
3. ATP LEAK DETECTION CABLE LENGTHS:
   50' MINIMUM FOR LEAK DETECTION CIRCUIT< 3300 FT.
   100 ' MINIMUM FOR LEAK DETECTION CIRCUIT> 3300 FT.
4. NOTE "ATP" MARK ON PIPE JACKET WHERE CABLE EXITS INSULATION TO AID IN PIPE ALIGNMENT.

Figure 10-4

ATP Cable End of Run Detail

10.10 Requirements for Field Joints with Wind-Down End Seals

This procedure only applies to field joints where two pipes with wind-down end seals are joined together. **It should not be performed until immediately before the insulation and shrink sleeve are applied to seal the field joint.**

1. Drill two 1” diameter holes through the jacket **in the wind-down portion of only one** of the end seals. It does not matter which of the two end seals is drilled (see Figure 10-5).
2. **The holes should be spaced at least 2” away from the ATP cable to prevent accidental damage to the cable during drilling**.
3. One hole should be located in the top half on the end seal and the other approximately opposite it in the bottom half.
4. **Be careful not to damage the ATP cable or pipe when drilling the holes.**
5. Test the ATP wires for continuity and insulation as described above after drilling the holes.
6. Proceed with the normal field joint closing procedure.

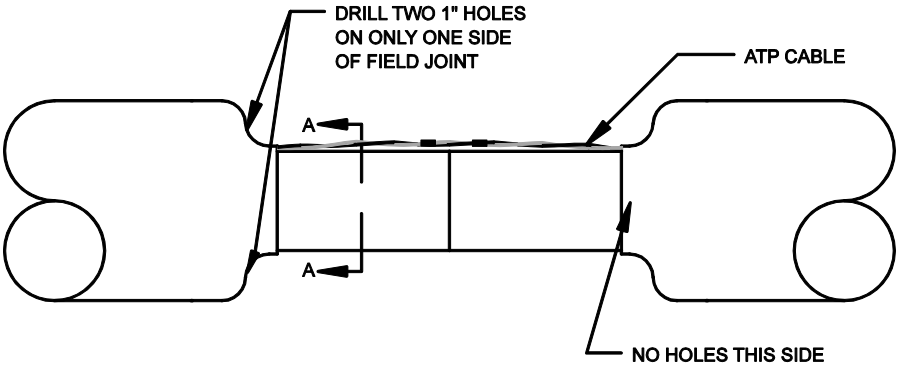

TYPICAL FIELD JOINT W/WIND-DOWN END SEALS

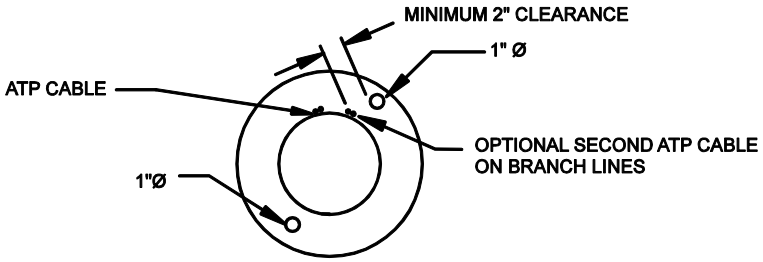

SECTION A-A

Figure 10-5

Wind-Down End Seal Modification

Appendix A – Special Instructions

A.1 Supply Power

Supply Power shall be provided by a UL Recognized Power Supply Cat No PS-35-24, manufactured by Meanwell Enterprises, or a Listed Class 2 Power Supply.

A.2 Control Drawing

Refer to control drawing LD-4901-A0, shown in Figure A-1, for intrinsic safety requirements.

A.3 Zener Barrier Panel (ZBP)

Sensing cable strings that are located in hazardous areas must connect to a Zener Barrier Panel (ZBP), which is located in an unclassified area. Inside the ZBP is one Zener Barrier Assembly (ZBA) for each cable sensing string to connect the PAL-AT panel to the ZBP.

The following information for the ZBP is provided for proper connection and installation:

Model ZBP, Part No. 8028115 1 2 3 4

This Leak Detection Equipment (Associated Apparatus) provides intrinsically safe circuits for use in Class I Division 1 Groups C and D hazardous locations when the unit is installed in accordance with control drawing (Descriptive System Document) LD-4901-A0.

Maximum input voltage: Um = 250 VAC

WARNING - SUBSTITUTION OF COMPONENTS MAY IMPAIR INTRINSIC SAFETY.

Each zener barrier assembly (ZBA) is assigned the following output parameters:

Uo:	16.02 V dc	Co:	1.0 µF
Io:	1.125 A	Lo:	56.5 µH
Po	1.248 W	Lo/Ro:	31.58 µH/Ω

ATEX/IECEx Certificate number: DEMKO 12 ATEX 1014815X
II (1) G [Ex ia] IIB
IECEx UL 11.0028X
[Ex ia Ga] IIB

CE 0539 Ex

Ambient Temperature: -20 °C <= Tamb <= 60 °C

A.4 Probe Integrator

Probe integrators connect probes to the sensing strings. Probes supplied by PermAlert include the probe integrator. The following information for probe integrators is provided for proper connection and installation:

Probe Integrators, part numbers 8027629, 8027930, 8027932, 8027934, for use with ZBP.

ATEX/IECEx Certificate number: DEMKO 12 ATEX 1014815X
II 1G Ex ia IIB T4
IECEx UL 11.0028X
Ex ia Ga IIB T4

CE 0539 Ex

Ambient Temperature: -20 °C <= Tamb <= 60 °C: Temp Code T4

A.5 Probe Integrator Static Precautions

WARNING FOR HAZARDOUS LOCATIONS - Probe integrators are encapsulated in plastic and present a possible electrostatic hazard. They are not intended to be cleaned, but if they are, a damp cloth should be used.

A.6 ZBP Enclosure Fittings

Appropriate fittings, hubs and blanking elements for use on holes on the ZBP enclosure shall contain one of the following type ratings: 4, 6, 6P, 12, 12K or 13, to maintain the type rating of the selected fitting.

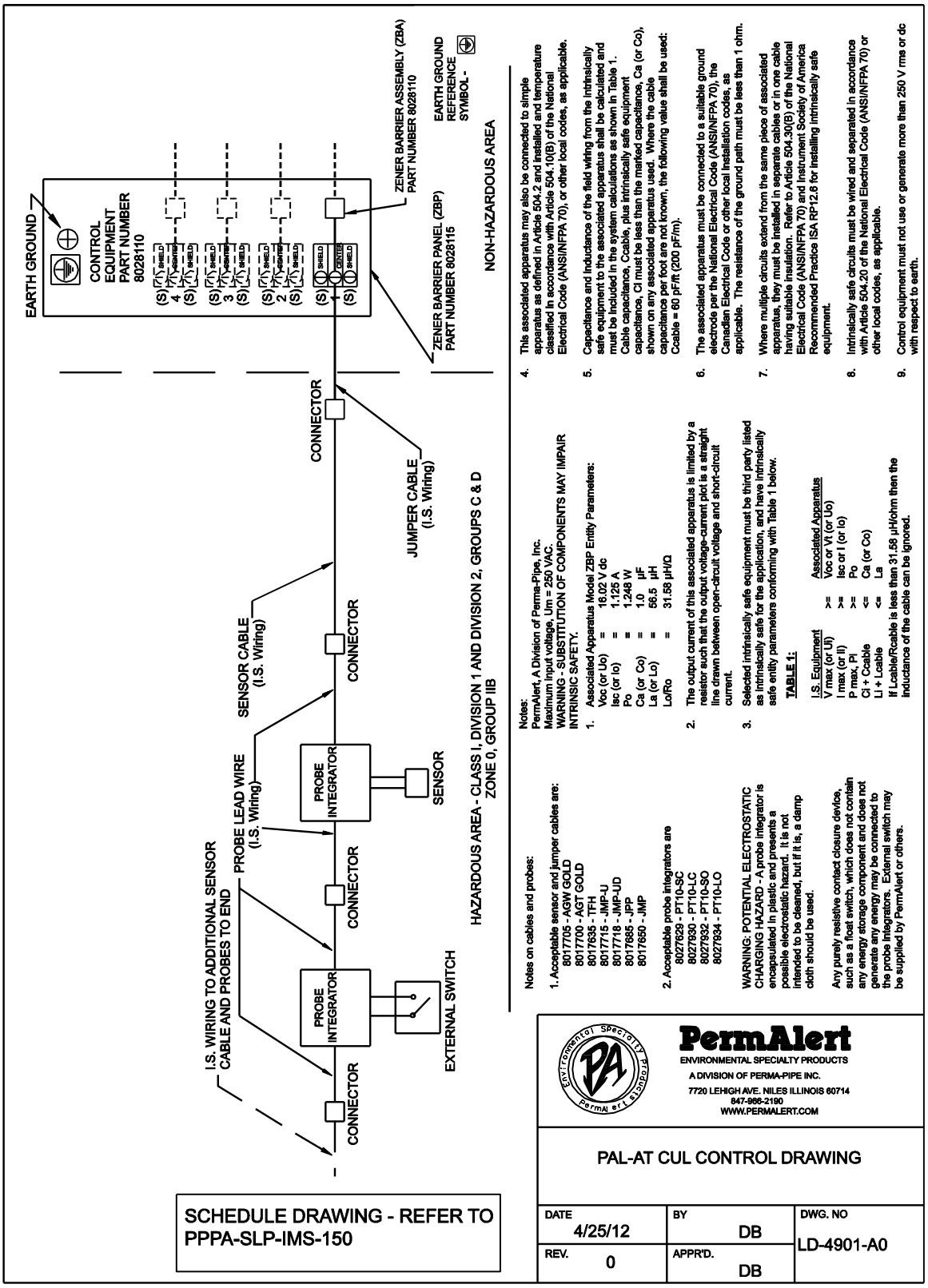

Figure A-1
PAL-AT Control Drawing

WARRANTY

Seller warrants that the PermAlert Leak Detection System (the "System") will be free from defects in materials and workmanship for a period of twelve (12) months from the date of first use of the System or eighteen (18) months from the date of shipment by Seller to Buyer of the System; whichever is earlier. Seller is not responsible for damage to the System occurring in transit or arising from the installation, alteration or repair of the System by persons other than Seller's employees, or from any abnormal or improper use of, negligence with respect to or accident affecting the System. Seller's sole obligation and liability, and Buyer's sole remedy, under this warranty shall be the repair or replacement, at Seller's election, by Seller of any defective materials or workmanship covered by this warranty, without the charge to Buyer. Repaired or replacement materials shall be delivered to Buyer f.o.b. Seller's plant or f.o.b. such other location as Seller shall designate. Seller shall not be responsible for any product returned to Seller without Seller's prior express consent. Buyer shall be responsible for returning the defective or non-conforming product(s) to Seller at Buyer's expense. No claim shall be permitted under the warranty contained herein unless Buyer notifies Seller in writing within ten (10) days after Buyer first hears of facts giving rise to any such claim and unless notice is given within the warranty period as provided above. In order to be valid, any notice sent to Seller in connection with said claim under this warranty must reasonably specify the defect which is the subject of such claim. Buyer shall be responsible for testing and inspecting the System promptly after receipt and thereafter at such intervals as are reasonably prudent so as to inform Seller of any defects which exist in the System. Notwithstanding the filing of a claim hereunder, this warranty shall expire after the warranty period in respect to materials and workmanship which are not then the subject of a proper claim.

To the maximum extent permitted by law, Buyer irrevocably waives all claims against Seller for money damages relating to the condition, use and performance of the goods sold pursuant hereto, including claims based upon tort, strict liability, negligence and product liability. Notwithstanding the provisions of the preceding sentence, if money damages are assessed against Seller, in no event shall Seller's liability for such damages exceed the purchase price of products sold by Seller.

IN NO EVENT, WHETHER BECAUSE OF A BREACH OF WARRANTY OR REPRESENTATION OR ANY OTHER CAUSE, WHETHER BASED UPON CONTRACT, TORT, WARRANTY OR OTHERWISE, ARISING OUT OF THE PERFORMANCE OR NON-PERFORMANCE BY SELLER OF ITS OBLIGATIONS UNDER THIS AGREEMENT OR WITH RESPECT TO THE PRODUCTS SOLD PURSUANT HERETO SHALL SELLER BE LIABLE FOR LOST EARNINGS, INCOME OR PROFITS OR INDIRECT, INCIDENTAL CONSEQUENTIAL DAMAGES.

THE IMPLIED WARRANTIES OF MERCHANTABILITY AND FITNESS FOR A PARTICULAR PURPOSE AND, EXCEPT AS SPECIFICALLY SET FORTH HEREIN, ALL OTHER WARRANTIES AND REPRESENTATIONS, EXPRESS OR IMPLIED, ARE HEREBY DISCLAIMED AND EXCLUDED. NOTHING SHALL BE CONSTRUED AS AN ADDITIONAL WARRANTY UNLESS SPECIFICALLY DESIGNATED AS SUCH IN WRITING AND SIGNED BY THE SELLER, IN WHICH CASE SUCH ADDITIONAL WARRANTY SHALL BE SUBJECT TO THE PROVISIONS OF THE APPROPRIATE PARAGRAPHS HEREIN AS TO DURATION AND LIMITATION OF REMEDY UNLESS SUCH ADDITIONAL WARRANTY EXPRESSLY VARIES SUCH PROVISIONS.

Extended warranty period may be available. Contact PermAlert for more information.

Division of Perma-Pipe, Inc.
6410 West Howard Street
Niles, Illinois 60714-3302
www.permalert.com

©2017, PERMA-PIPE, Inc. All Rights Reserved. (6/17)

DEPARTMENT OF THE ARMY
ALBUQUERQUE DISTRICT, CORPS OF ENGINEERS
ALBUQERQUE DISTRICT OFFICE
4101 JEFFERSON PLAZA NE
ALBUQUERQUE, NM 87109

SUBMITTAL REVIEW VERIFICATION SHEET

PROJECT TITLE: Kirtland BFF Mid-Plume Pump and Treat System Expansion
CONTRACT NUMBER: W912DR-12-D-0006 DM01
DATE RECEIVED: 09-07-2017
DATE REVIEWED: 09-12-2017

DESCRIPTION OF ITEMS REVIEWED:

1. NMDOT Base Course

NO EXCEPTIONS TAKEN.	**X**
EXCEPTIONS AS NOTED ON DRAWINGS AND/OR ATTACHED SHEETS(S). RESUBMISSION NOT REQUIRED.	
EXCEPTIONS AS NOTED ON DRAWINGS AND/OR ATTACHED SHEETS(S). RESUBMISSION REQUIRED.	
RECEIPT ACKKNOWLEDGED.	

Notes:

NOTE: ITEMS REVIEWED AS TO GENERAL LAYOUT ONLY. DIMENSIONS AND QUANTITIES NOT CHECKED. REVIEW DOES NOT RELIEVE CONTRACTOR OF RESPONSIBILITIES FOR ANY ERRORS WHICH MAY EXIST AS CONTRACTOR SHALL BE RESPONSIBLE FOR DIMENSIONS AND DESIGN OF ADEQUATE CORRECTIONS, DETAILS AND SATISFACTORY CONSTRUCTION OF WORK.

SIGNATURE SANCHEZ.AMY.ELIZABETH.1454434338 Digitally signed by SANCHEZ.AMY.ELIZABETH.1454434338 DN: c=US, o=U.S. Government, ou=DoD, ou=PKI, ou=USA, cn=SANCHEZ.AMY.ELIZABETH.1454434338 Date: 2017.09.12 15:14:06 -06'00' **DATE** 9/12/2017

EA Engineering, Science, and Technology, Inc., PBC

Submittal Review Sheet 1

Project Name: **Kirtland BFF Mid-Plume Pump and Treat System Expansion**			Date Received: **9/7/17**	
Project Owner: **Kirtland Air Force Base**			Checked By: **Tyler Curley**	
Contractor: **RMCI, Inc.**	Engineer: **EA Engineering, Science and Technology, Inc., PBC.**		Log Page: **NA**	
Address: **6211 Chappell Rd NE, Albuquerque, NM 87113**	Address: **320 Gold Ave. SW, Suite 1300 Albuquerque, NM 87102**		EA No.: 62599DM01	
			Spec. Section: **NA**	
			Drawing/Detail No.:	
ATTN: Phillip Johnson	ATTN: **Devon Jercinovic**		1st Sub	Re-Sub
Date Transmitted: **09/07/2017**	Prev. Transmittal Date:			

Item No.	No. Copies	Description	Manufacturer	Mfg/Vendor Dwg or Detail	Action Taken*
1	1	Base Course	Duke City Redi Mix		A

The Action Designated Above is in Accordance with the Following Legend:

A – Furnish as Submitted
B – Furnish as Noted
C – Revise and Re-submit
1. Not enough information for review.
2. No reproducible submitted.
3. Copies illegible.
4. Not enough copies submitted.
5. Wrong sequence number.
6. Wrong resubmittal number.
7. Wrong Spec. Section.
8. Wrong form used.
9. See Comments.

D – Rejected
E – Engineer's Review not Required
1. Submittal not required.
2. Supplemental Information. Submittal retained for Information purposes only.
3. Information reviewed and approved on prior submittal.
4. See Comments.

Review is for general compliance with Contract Documents. No responsibility is assumed for correctness of dimensions or detail. Contractor is required to specify deviations from contract requirements. Lack of exceptions noted by Engineer does not waive Contractor's obligation to comply with Drawings and Specifications.

Comments:
Items reviewed and confirmed to meet requirements
Issues in Bold

.Using approved DOT base course.

By: _____ Date: 9/7/17

Distribution: [1] Contractor [1] Engineer [1] Owner

NMDOT Base Course Submittal

Project:	Commercial Submittal (Various)	Report Date:	11/28/16
Client:	Duke City Redi mix	Sample Date:	11/11/16
Address:	7705 Broadway SE	Sampled By:	Client
	Albuquerque, NM 87105	Material Tested:	**Recycled Base Course**
	Attn. Miles Shiver,IV	Date Tested:	11/15/16 - 11/25/16
		Tested By:	Mary P - Annlee
	NMDOT Section 303 (2014)	Visual Description:	Crushed Concrete / Gravel mix
Sample received:	11/11/2016	Sample Location:	Stockpile at Plant
Laboratory #:	ABQ LL262-16	Sample Source:	Various

Sieve Analysis

C-117 & C136/T-11 & T-27

Sieve Size	% Passing	Specs
	NMDOT 2014	
	section 303	
		Type I
1.5" (37.5mm)		
1" (25mm)	100	100
3/4" (19mm)	96	80-100
1/2" (12.5mm)	74	
3/8" (9mm)	62	
#4 (4.75mm)	40	30-60
#8 (2.36mm)		
#10 (2mm)	30	20-45
#16 (1.18mm)		
#30 (0.6mm)		
#40 (0.425mm)	16	
#50 (0.3mm)		
#80 (0.18mm)	8	
#100 (0.15mm)		
#200 (0.75mm)	3.1	3-10

Classification of Soil . A-1-a

Stone fragments,Gravel and Sand

General rating as Excellent to Good

Note : NP = Non Plastic

Type Rammer Mechanical

Rammer ID #:ABQ CA2-4009

Calibration Date: 6/24/2016

Next Calibration Due: 6/24/2017

Test Results

Standard	Physical Properties		Results	Specs
NMDOT Sect 901	Aggregate Index	Aggregate Index	22	35% max
C-88	Soundness	Coarse Soundness Loss, %	1.3	
C-131	L.A.	LA Wear, %	39.4%	
T-96	Abrasion	Grading	B	
D5821	Fractured	1 face	98	50% Min
	Faces	2 faces	97	
D-4318	Atterburg	Liquid Limit	0	25 Max
	Limits	Plastic Limit	0	
T-89/90		Plasticity Index	(NP) 0	6.0 Max
T-180	Proctor	Max Density, (lbs/ft^3)	124.8	
	(Modified)	Optimum Moisture, %	7.8	
	Dry Prep	Method	D	

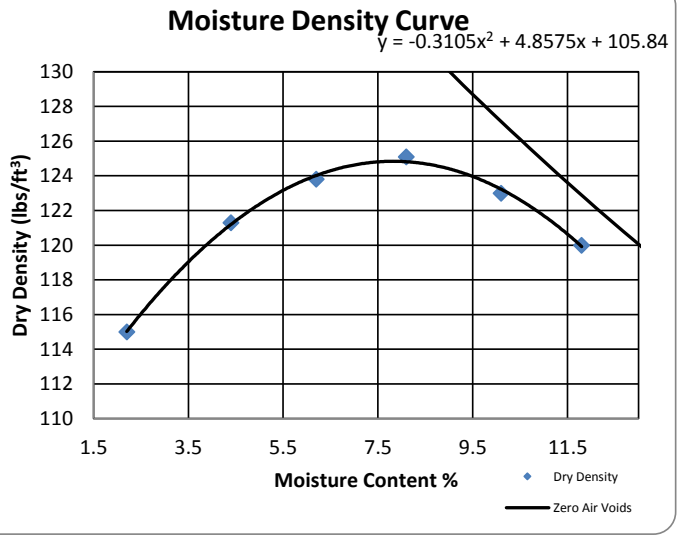

Reports to: fax/email

Miles Shiver, IV mshiver4@dukecityredimix.com

Office 505-877-5777

Respectfully Submitted,

Danny Marquez

Danny Marquez, General Manager

Concrete, Aggregate and Asphalt Testing, LLC
414 Bibb Industrial Dr.
P.O.Box 1228
Las Vegas, NM 87701
505-718-3030

DEPARTMENT OF THE ARMY
ALBUQUERQUE DISTRICT, CORPS OF ENGINEERS
ALBUQERQUE DISTRICT OFFICE
4101 JEFFERSON PLAZA NE
ALBUQUERQUE, NM 87109

SUBMITTAL REVIEW VERIFICATION SHEET

PROJECT TITLE: Kirtland BFF Mid-Plume Pump and Treat System Expansion
CONTRACT NUMBER: W912DR-12-D-0006 DM01
DATE RECEIVED: 09-07-2017
DATE REVIEWED: 09-12-2017

DESCRIPTION OF ITEMS REVIEWED:

1. Crushed Gravel

NO EXCEPTIONS TAKEN.	**X**
EXCEPTIONS AS NOTED ON DRAWINGS AND/OR ATTACHED SHEETS(S). RESUBMISSION NOT REQUIRED.	
EXCEPTIONS AS NOTED ON DRAWINGS AND/OR ATTACHED SHEETS(S). RESUBMISSION REQUIRED.	
RECEIPT ACKKNOWLEDGED.	

Notes:

NOTE: ITEMS REVIEWED AS TO GENERAL LAYOUT ONLY. DIMENSIONS AND QUANTITIES NOT CHECKED. REVIEW DOES NOT RELIEVE CONTRACTOR OF RESPONSIBILITIES FOR ANY ERRORS WHICH MAY EXIST AS CONTRACTOR SHALL BE RESPONSIBLE FOR DIMENSIONS AND DESIGN OF ADEQUATE CORRECTIONS, DETAILS AND SATISFACTORY CONSTRUCTION OF WORK.

SIGNATURE SANCHEZ.AMY.ELIZABETH.1454434338 Digitally signed by SANCHEZ.AMY.ELIZABETH.1454434338 DN: c=US, o=U.S. Government, ou=DoD, ou=PKI, ou=USA, cn=SANCHEZ.AMY.ELIZABETH.1454434338 Date: 2017.09.12 15:27:00 -06'00' **DATE** 9/12/2017

EA Engineering, Science, and Technology, Inc., PBC

Submittal Review Sheet 1

Project Name: **Kirtland BFF Mid-Plume Pump and Treat System Expansion**			Date Received: **9/7/17**	
Project Owner: **Kirtland Air Force Base**			Checked By: **Tyler Curley**	
Contractor: **RMCI, Inc.**	Engineer: **EA Engineering, Science and Technology, Inc., PBC.**		Log Page: **NA**	
Address: **6211 Chappell Rd NE, Albuquerque, NM 87113**	Address: **320 Gold Ave. SW, Suite 1300 Albuquerque, NM 87102**		EA No.: 62599DM01	
			Spec. Section: **NA**	
			Drawing/Detail No.:	
ATTN: Phillip Johnson	ATTN: **Devon Jercinovic**		1st Sub	Re-Sub
Date Transmitted: **09/07/2017**	Prev. Transmittal Date:			

Item No.	No. Copies	Description	Manufacturer	Mfg/Vendor Dwg or Detail	Action Taken*
1	1	Crushed Gravel	Duke City Redi Mix		A

The Action Designated Above is in Accordance with the Following Legend:

A – Furnish as Submitted
B – Furnish as Noted
C – Revise and Re-submit
1. Not enough information for review.
2. No reproducible submitted.
3. Copies illegible.
4. Not enough copies submitted.
5. Wrong sequence number.
6. Wrong resubmittal number.
7. Wrong Spec. Section.
8. Wrong form used.
9. See Comments.

D – Rejected
E – Engineer's Review not Required
1. Submittal not required.
2. Supplemental Information. Submittal retained for Information purposes only.
3. Information reviewed and approved on prior submittal.
4. See Comments.

Review is for general compliance with Contract Documents. No responsibility is assumed for correctness of dimensions or detail. Contractor is required to specify deviations from contract requirements. Lack of exceptions noted by Engineer does not waive Contractor's obligation to comply with Drawings and Specifications.

Comments:
Items reviewed and confirmed to meet requirements
Issues in Bold

.Using approved DOT crushed gravel.

By: _____ Date: 9/7/17

Distribution: [1] Contractor [1] Engineer [1] Owner

Aggregate Test Report

Project:	Supplier Information	Report Date:	12/21/16
Client:	**Duke City Redi Mix**	Sample Date:	12/1/16
Address:	**7705 Broadway SE**	Sampled By:	David
	Albuquerque, NM 87105	Material Tested:	7/8" Concrete Aggregate
		Date Tested:	12/1-12/12/2016
		Tested By:	David & Mary
		Sample Location:	Stockpile
Laboratory #:	ABQ LL281-16	Sample Source:	South Valley Pit, Los Lunas, NM

Sieve Analysis

C-117 & C136/T-11 & T-27

Sieve Size	% Passing	ASTM C33 #67 Specs
6" (150mm)		
3" (75mm)		
2" (50mm)		
1.5" (37.5mm)		
1" (25mm)	100	**100**
3/4" (19mm)	99	**90-100**
1/2" (12.5mm)	64	
3/8" (9mm)	42	**20-55**
#4 (4.75mm)	8	**0-10**
#8 (2.36mm)	4	**0 - 5**
#10 (2mm)	3	
#16 (1.18mm)	3	
#30 (0.6mm)	3	
#40 (0.425mm)		
#50 (0.3mm)	2	
#80 (0.18mm)		
#100 (0.15mm)	2	
#200 (0.75mm)	1.7	**0 - 1.5**
Fineness Modulus		

Test Results

Standard	Physical Properties		Results	ASTM C33 Specs
C-127	Coarse	Bulk Specific Gravity	2.678	
	Specific	Bulk Specific Gravity, SSD	2.738	
T-85	Gravity &	Apparent Specific Gravity	2.849	
	Absorption	Absorption, %	2.2	
C-142	Clay/Friable	Coarse Aggregate, %	0.1	**< 2.0**
T-112	Particles			
C-131	L.A.	LA Wear, %	26.7	**< 50**
T-96	Abrasion	Grading	B	
C-88	Soundness	Coarse Soundness Loss, %	0.6	**< 18**
	5 cycles			
T-104	$MgSO_4$	Fine Soundness Loss, %		
D5821	Fractured	1 face	100	
	Faces	2 faces	100	

Reports to: fax/email
Miles Shiver Dukecityredimix@aol.com

Respectfully Submitted,

L. Marquez

Lea Ann Marquez, PE

Concrete, Aggregate, and Asphalt Testing, LLC
PO Box 1228
Las Vegas, NM 87701
(505)718-3030

Aggregate Test Report

Project:	Supplier Information	Report Date:	12/21/16
Client:	**Duke City Redi Mix**	Sample Date:	12/1/16
Address:	**7705 Broadway SE**	Sampled By:	David
	Albuquerque, NM 87105	Material Tested:	3/8" Coarse Aggregate
		Date Tested:	12/1-12/12/2016
		Tested By:	David & Mary
		Sample Location:	Stockpile
Laboratory #:	ABQ LL281-16	Sample Source:	South Valley Pit

Sieve Analysis

C-117 & C136/T-11 & T-27

Sieve Size	% Passing	ASTM C33 #89 Specs
6" (150mm)		
3" (75mm)		
2" (50mm)		
1.5" (37.5mm)		
1" (25mm)		
3/4" (19mm)		
1/2" (12.5mm)	100	100
3/8" (9mm)	98	90 - 100
#4 (4.75mm)	49	20 - 55
#8 (2.36mm)	12	5 - 30
#10 (2mm)		
#16 (1.18mm)	6	0 - 10
#30 (0.6mm)	5	
#40 (0.425mm)		
#50 (0.3mm)	4	0 - 5
#80 (0.18mm)		
#100 (0.15mm)	3	
#200 (0.75mm)	2.7	
Fineness Modulus		

Test Results

Standard		Physical Properties	Results	ASTM C33 Specs
C-127	Coarse	Bulk Specific Gravity	2.707	
	Specific	Bulk Specific Gravity, SSD	2.768	
T-85	Gravity &	Apparent Specific Gravity	2.883	
	Absorption	Absorption, %	2.3	
C-142	Clay/Friable	Fine Aggregate, %	0.3	**< 2.0**
T-112	Particles			
D5821	Fractured	1 face	100	
	Faces	2 faces	100	

Reports to: fax/email
Miles Shiver Dukecityredimix@aol.com

Respectfully Submitted,

L. Marquez

Lea Ann Marquez, PE

Concrete, Aggregate, and Asphalt Testing, LLC
PO Box 1228
Las Vegas, NM 87701
(505)718-3030

DEPARTMENT OF THE ARMY
ALBUQUERQUE DISTRICT, CORPS OF ENGINEERS
ALBUQERQUE DISTRICT OFFICE
4101 JEFFERSON PLAZA NE
ALBUQUERQUE, NM 87109

SUBMITTAL REVIEW VERIFICATION SHEET

PROJECT TITLE: Kirtland BFF Mid-Plume Pump and Treat System Expansion
CONTRACT NUMBER: W912DR-12-D-0006 DM01
DATE RECEIVED: 09-11-2017
DATE REVIEWED: 09-12-2017

DESCRIPTION OF ITEMS REVIEWED:

1. Chain Link Fence and Gate

NO EXCEPTIONS TAKEN.	X
EXCEPTIONS AS NOTED ON DRAWINGS AND/OR ATTACHED SHEETS(S). RESUBMISSION NOT REQUIRED.	
EXCEPTIONS AS NOTED ON DRAWINGS AND/OR ATTACHED SHEETS(S). RESUBMISSION REQUIRED.	
RECEIPT ACKKNOWLEDGED.	

Notes:

NOTE: ITEMS REVIEWED AS TO GENERAL LAYOUT ONLY. DIMENSIONS AND QUANTITIES NOT CHECKED. REVIEW DOES NOT RELIEVE CONTRACTOR OF RESPONSIBILITIES FOR ANY ERRORS WHICH MAY EXIST AS CONTRACTOR SHALL BE RESPONSIBLE FOR DIMENSIONS AND DESIGN OF ADEQUATE CORRECTIONS, DETAILS AND SATISFACTORY CONSTRUCTION OF WORK.

SIGNATURE SANCHEZ.AMY.ELIZABETH.1454434338 Digitally signed by SANCHEZ.AMY.ELIZABETH.1454434338 DN: c=US, o=U.S. Government, ou=DoD, ou=PKI, ou=USA, cn=SANCHEZ.AMY.ELIZABETH.1454434338 Date: 2017.09.12 15:32:31 -06'00' **DATE** 9/12/2017

EA Engineering, Science, and Technology, Inc., PBC

Submittal Review Sheet 1

Project Name: **Kirtland BFF Mid-Plume Pump and Treat System Expansion**			Date Received: **9/7/17**	
Project Owner: **Kirtland Air Force Base**			Checked By: **Tyler Curley**	
Contractor: **RMCI, Inc.**	Engineer: **EA Engineering, Science and Technology, Inc., PBC.**		Log Page: **NA**	
Address: **6211 Chappell Rd NE, Albuquerque, NM 87113**	Address: **320 Gold Ave. SW, Suite 1300 Albuquerque, NM 87102**		EA No.: 62599DM01	
			Spec. Section: **NA**	
			Drawing/Detail No.:	
ATTN: Phillip Johnson	ATTN: **Devon Jercinovic**		1st Sub	Re-Sub
Date Transmitted: **09/11/2017**	Prev. Transmittal Date:			

Item No.	No. Copies	Description	Manufacturer	Mfg/Vendor Dwg or Detail	Action Taken*
1	1	Fencing	Triwest Fence		A

The Action Designated Above is in Accordance with the Following Legend:

A – Furnish as Submitted
B – Furnish as Noted
C – Revise and Re-submit
1. Not enough information for review.
2. No reproducible submitted.
3. Copies illegible.
4. Not enough copies submitted.
5. Wrong sequence number.
6. Wrong resubmittal number.
7. Wrong Spec. Section.
8. Wrong form used.
9. See Comments.

D – Rejected
E – Engineer's Review not Required
1. Submittal not required.
2. Supplemental Information. Submittal retained for Information purposes only.
3. Information reviewed and approved on prior submittal.
4. See Comments.

Review is for general compliance with Contract Documents. No responsibility is assumed for correctness of dimensions or detail. Contractor is required to specify deviations from contract requirements. Lack of exceptions noted by Engineer does not waive Contractor's obligation to comply with Drawings and Specifications.

Comments:
Items reviewed and confirmed to meet requirements
Issues in Bold

Fencing will match VA chain link fencing.

By: _____ Date: 9/11/17

Distribution: [1] Contractor [1] Engineer [1] Owner

TRIWEST FENCE LLC

110 Denny Road
Bernalillo, NM 87004
Telephone (505) 400-0373
Fax (505) 898-3697

CHAIN LINK FENCE AND GATE WITH PVC SLATS

PROJECT:

GROUNDWATER CONVEYANCE INFASTRUCTURE INSTALLATION KAFB, NM

General Contractor

RMCI, INC.

FENCING CONTRACTOR:

TRIWEST FENCE LLC

Bernalillo, New Mexico

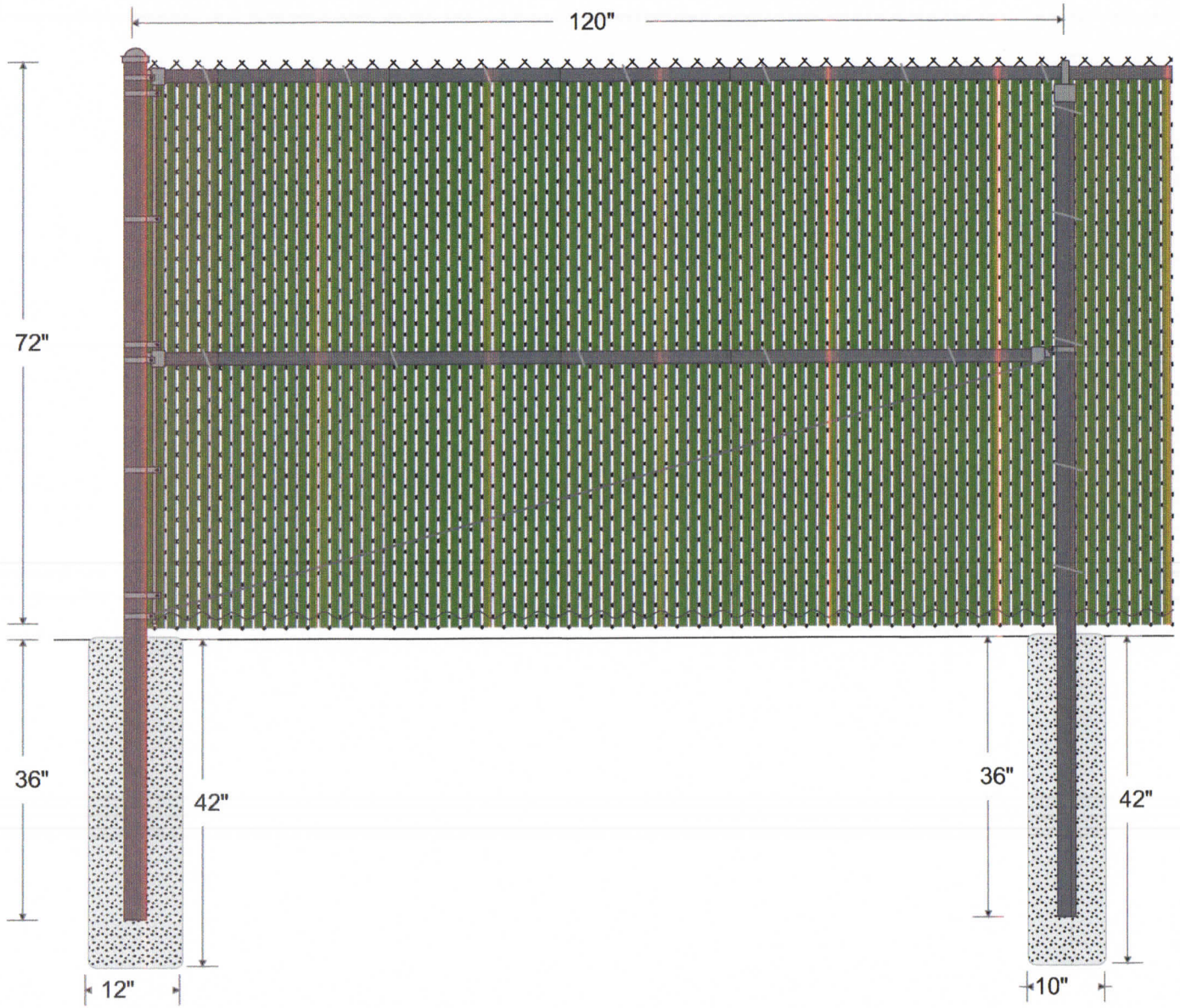

FABRIC: 72" 9 GA. G.A.W. (2" Mesh) BK CHAIN LINK FABRIC.

TOP RAIL: 1 5/8" O.D. DQ-40 PIPE, 1.83 lbs. per foot. Top rail 21' in length, joined with 1 5/8" SLEEVE.

LINE POST: 2 3/8" O.D. DQ-40 PIPE POST, 3.11 lbs. per foot. Line posts set 10' on center maximum spacing. Concrete footing: 10" diameter, 36" depth.

TERMINAL POST: 2 7/8" O.D. DQ-40 PIPE POST, 4.64 lbs. per foot. Concrete footing: 12" diameter, 36" depth.

BRACING: Terminal posts braced and trussed to the nearest line post with 1 5/8" O.D. DQ-40 PIPE and 3/8" TRUSS ROD & IND. TRUSS ROD TIGHTENER.

TENSION WIRE: 7 GA. COIL SPRING GALVANIZED (COIL) TENSION WIRE attached to bottom of fence fabric with 9 GA. STEEL HOG RING spaced 18" on center.

FITTINGS: REGULAR BRACE BAND & CARRIAGE BOLT, PRESSED STEEL RAIL-END, PRESSED STEEL EYE-TOP, PRESSED STEEL CAP, 3/16" X 3/4" TENSION BAR, REGULAR TENSION BAND & CARRIAGE BOLT.

TIE WIRE: 8 1/4" 9 GA. STEEL TIE WIRE & 6 1/2" 12 GA. STEEL TIE WIRE spaced 15" on center for line posts & 18" on center for rails.

PVC SLATS, GREEN, BOTTOM LOCK TUBULAR

POST FOOTING: TRUCK POURED CONCRETE.

TRIWEST FENCE LLC

TriWest Fence LLC
110 Denny Road
Bernalillo, NM 87004
505-898-3678

GROUNDWATER CONVEYANCE INFASTR
KAFB, NM

LINE OF FENCE

Drawn: EA 06/05/2017
File: RMCI BASE WORK

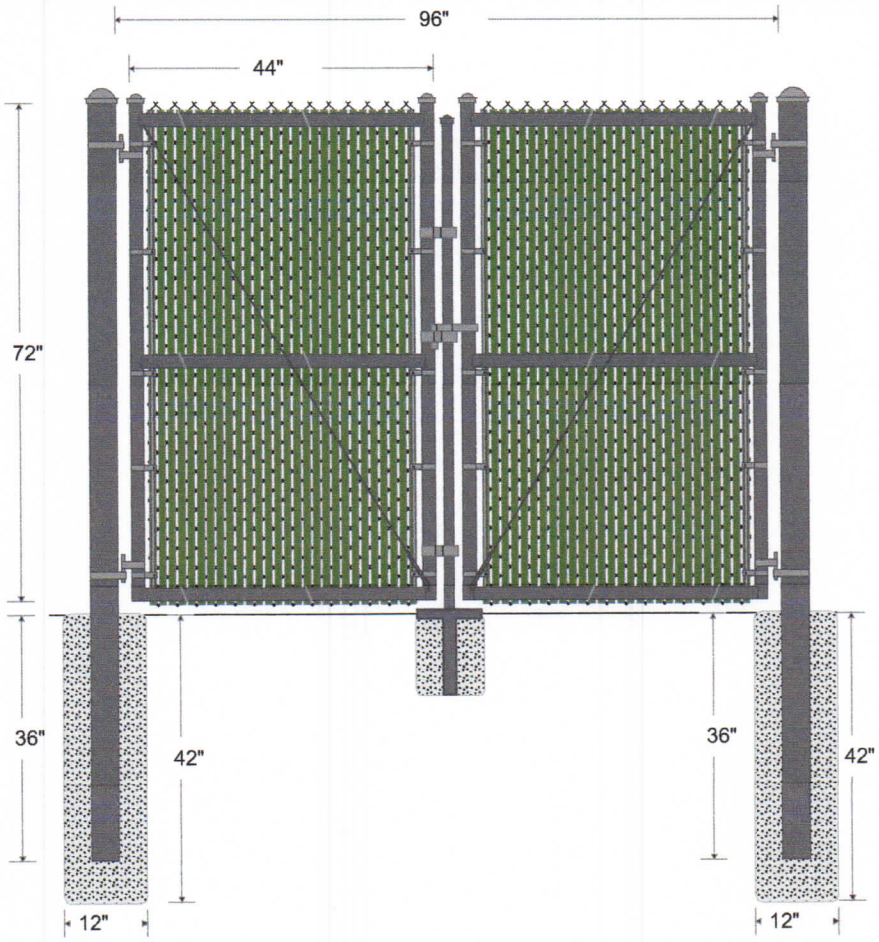

FABRIC: 72" 9 GA. G.A.W. (2" Mesh) BK CHAIN LINK FABRIC.

BRACING: Terminal posts braced and trussed to the nearest line post with 1 5/8" O.D. DQ-40 PIPE and 3/8" TRUSS ROD & IND. TRUSS ROD TIGHTENER.

GATES: Framework of 1 7/8" DQ-40 PIPE, 2.28 lbs. per foot. Gates braced and trussed as necessary. Same fabric as fence.

GATE POST: 4" O.D. DQ-40 PIPE POST, 6.56 lbs. per foot. Concrete footing: 12" diameter, 36" depth.

FITTINGS: REGULAR BRACE BAND & CARRIAGE BOLT, PRESSED STEEL RAIL-END, PRESSED STEEL EYE-TOP, PRESSED STEEL CAP, 3/16" X 3/4" TENSION BAR, REGULAR TENSION BAND & CARRIAGE BOLT.

TIE WIRE: 8 1/4" 9 GA. STEEL TIE WIRE & 6 1/2" 12 GA. STEEL TIE WIRE spaced 15" on center for line posts & 18" on center for rails.

POST FOOTING: TRUCK POURED CONCRETE.

TRIWEST FENCE LLC

TriWest Fence LLC
110 Denny Road
Bernalillo, NM 87004
505-898-3678

GROUNDWATER CONVEYANCE INFASTR
KAFB , NM

8' DOUBLE GATE, 1 7/8" DQ-40 PIPE FRAME

Drawn: EA 06/05/2017
File: RMCI BASE WORK

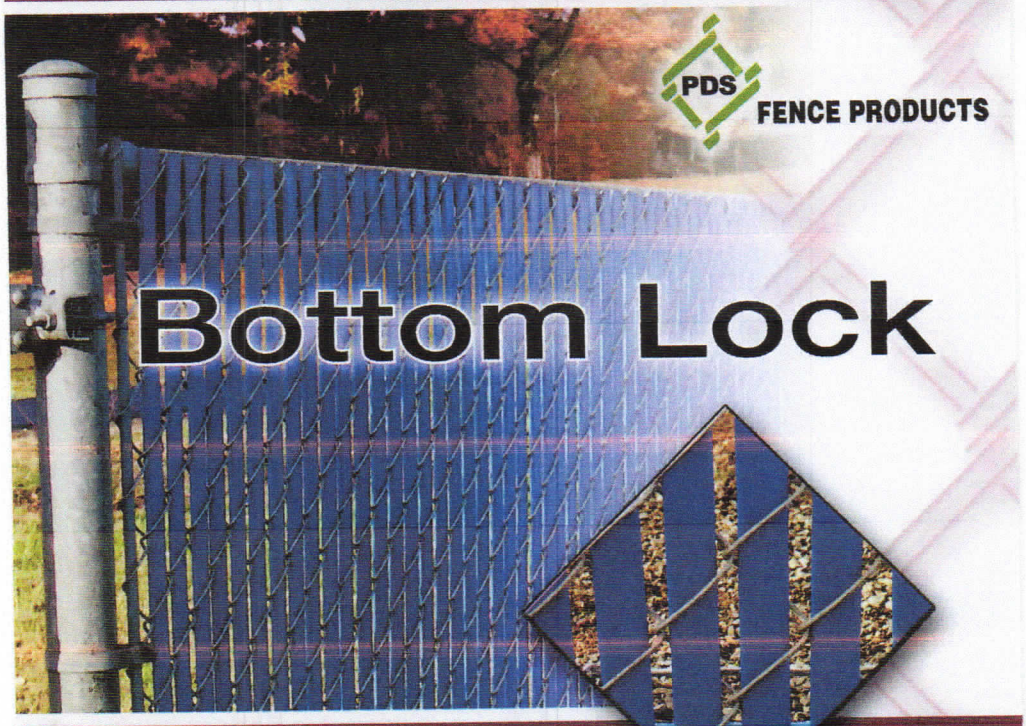

Decorative Inserts for Chain Link Fence

- Easy Installation
- Low Maintenance
- Secure Bottom Rail Makes Installation a "Snap"
- Durable, Long-Lasting Design
- 9 Distinctive Colors
- 25-Year Limited Warranty
- 2" and 2 1/4" Mesh (1 3/4 available)
- Commercial, Residential, Industrial Use

US Patent 6,068,243 / 5,165,664 / 5,234,199

West Coast:
3110 70th Avenue East
Tacoma, WA 98424
1-800-822-7528 (SLAT)

PEXCO

www.pdsfence.com
www.pexco.com

East Coast:
764 S. Athol Rd.
Athol, MA 01331
1-800-755-7528 (SLAT)

PVC Slats are to match what is existing. The attached photo represents what is existing near the site.

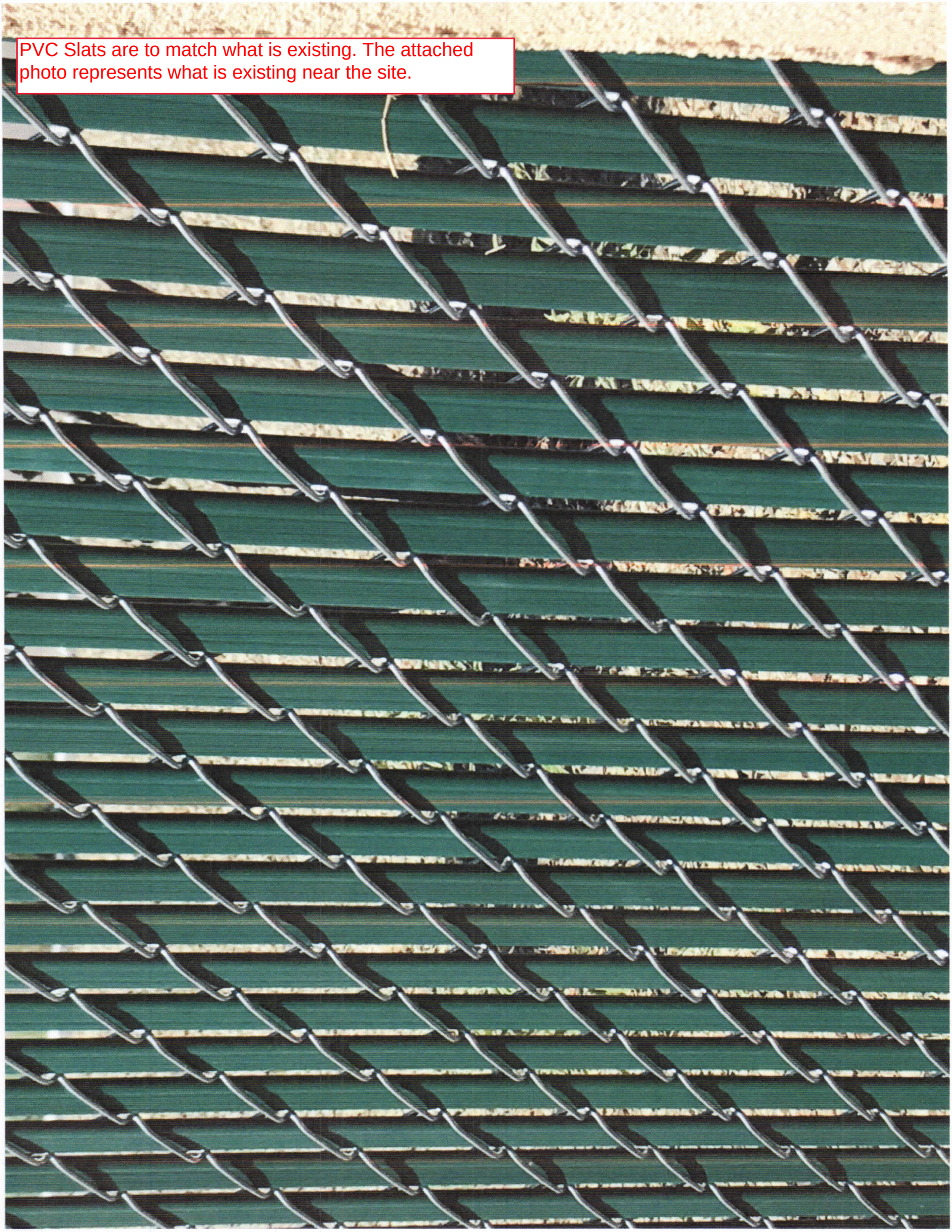

DEPARTMENT OF THE ARMY
ALBUQUERQUE DISTRICT, CORPS OF ENGINEERS
ALBUQERQUE DISTRICT OFFICE
4101 JEFFERSON PLAZA NE
ALBUQUERQUE, NM 87109

SUBMITTAL REVIEW VERIFICATION SHEET

PROJECT TITLE: Kirtland BFF Mid-Plume Pump and Treat System Expansion
CONTRACT NUMBER: W912DR-12-D-0006 DM01
DATE RECEIVED: 09-13-2017
DATE REVIEWED: 09-18-2017

DESCRIPTION OF ITEMS REVIEWED:

1. Precast Vaults

NO EXCEPTIONS TAKEN.	**X**
EXCEPTIONS AS NOTED ON DRAWINGS AND/OR ATTACHED SHEETS(S). RESUBMISSION NOT REQUIRED.	
EXCEPTIONS AS NOTED ON DRAWINGS AND/OR ATTACHED SHEETS(S). RESUBMISSION REQUIRED.	
RECEIPT ACKKNOWLEDGED.	

Notes:

NOTE: ITEMS REVIEWED AS TO GENERAL LAYOUT ONLY. DIMENSIONS AND QUANTITIES NOT CHECKED. REVIEW DOES NOT RELIEVE CONTRACTOR OF RESPONSIBILITIES FOR ANY ERRORS WHICH MAY EXIST AS CONTRACTOR SHALL BE RESPONSIBLE FOR DIMENSIONS AND DESIGN OF ADEQUATE CORRECTIONS, DETAILS AND SATISFACTORY CONSTRUCTION OF WORK.

SIGNATURE SANCHEZ.AMY.ELIZABETH.1454434338 Digitally signed by SANCHEZ.AMY.ELIZABETH.1454434338 DN: c=US, o=U.S. Government, ou=DoD, ou=PKI, ou=USA, cn=SANCHEZ.AMY.ELIZABETH.1454434338 Date: 2017.09.18 12:50:32 -06'00' **DATE** 9/18/2017

EA Engineering, Science, and Technology, Inc., PBC

Submittal Review Sheet 1

Project Name: **Kirtland BFF Mid-Plume Pump and Treat System Expansion**				Date Received: **9/7/17**		
Project Owner: **Kirtland Air Force Base**				Checked By: **Tyler Curley**		
Contractor: **RMCI, Inc.**	Engineer: **EA Engineering, Science and Technology, Inc., PBC.**			Log Page: **NA**		
Address: **6211 Chappell Rd NE, Albuquerque, NM 87113**	Address: **320 Gold Ave. SW, Suite 1300 Albuquerque, NM 87102**			EA No.: 62599DM01		
				Spec. Section: **NA**		
				Drawing/Detail No.:		
ATTN: Phillip Johnson	ATTN: **Devon Jercinovic**			1st Sub		Re-Sub
Date Transmitted: **09/13/2017**	Prev. Transmittal Date:					

Item No.	No. Copies	Description	Manufacturer	Mfg/Vendor Dwg or Detail	Action Taken*
1	1	Precast Vault	All American Precast, INC		A

The Action Designated Above is in Accordance with the Following Legend:

A – Furnish as Submitted
B – Furnish as Noted
C – Revise and Re-submit
1. Not enough information for review.
2. No reproducible submitted.
3. Copies illegible.
4. Not enough copies submitted.
5. Wrong sequence number.
6. Wrong resubmittal number.
7. Wrong Spec. Section.
8. Wrong form used.
9. See Comments.

D – Rejected
E – Engineer's Review not Required
1. Submittal not required.
2. Supplemental Information. Submittal retained for Information purposes only.
3. Information reviewed and approved on prior submittal.
4. See Comments.

Review is for general compliance with Contract Documents. No responsibility is assumed for correctness of dimensions or detail. Contractor is required to specify deviations from contract requirements. Lack of exceptions noted by Engineer does not waive Contractor's obligation to comply with Drawings and Specifications.

Comments:
Items reviewed and confirmed to meet requirements
Issues in Bold

Precast vaults meet specifications

By: _____ Date: 9/13/17

Distribution: [1] Contractor [1] Engineer [1] Owner

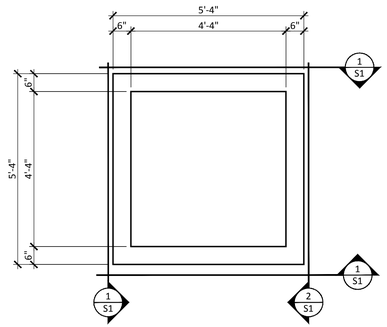

BASE PLAN

SCALE: 1/2"=1'-0"

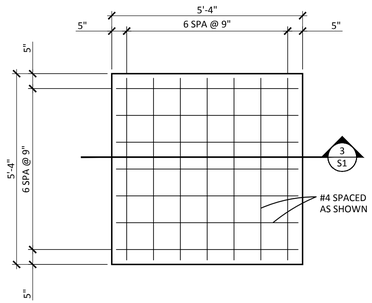

BASE REINFORCING PLAN

SCALE: 1/2"=1'-0"

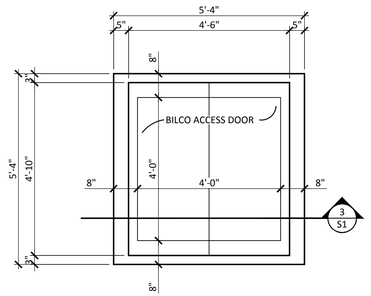

LID PLAN

SCALE: 1/2"=1'-0"

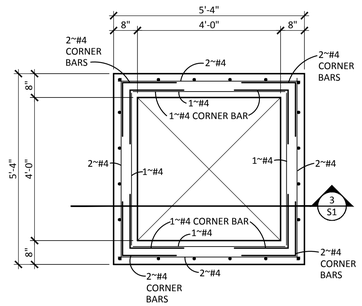

LID REINFORCING PLAN

SCALE: 1/2"=1'-0"

GENERAL STRUCTURAL NOTES

1. CODES AND MANUALS:
   International Building Code, 2009 Edition
   ACI 318-05
2. DESIGN LOADS:
   A. Horizontal:
      1. Live Load: 150 psf on lid
      2. Equivalent Lateral Pressure: 60 pcf
3. GENERAL:
   A. The Contractor shall verify all dimensions in the field.
   B. The Contractor shall be responsible for providing safe and adequate shoring for all parts of the structure during construction.
4. MATERIALS:
   A. Cast-in-place concrete:
      1. Hardrock concrete (unit wt.=150 pcf)
         a. 4,000 psi @ 28 days (air entrained) concrete.
   B. Reinforcing steel:
      1. All reinforcing steel shall conform to ASTM A615 Grade 60, except stirrups and ties shall be Grade 40.
      2. The contractor shall be responsible to see that all rebar is properly aligned and tied in place before placing concrete.

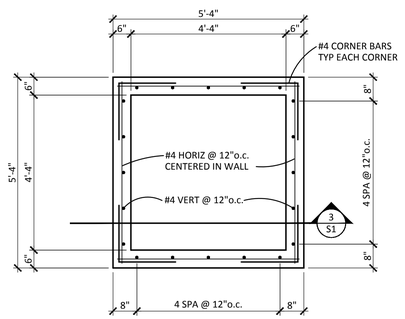

WALL REINFORCING PLAN

1/2"=1'-0"

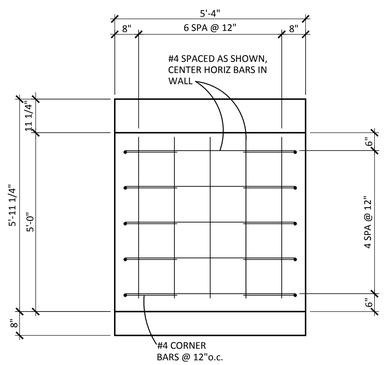

1 S1 NOTE:
REVIEWER PROVIDE SIZE &
LOCATION OF WALL OPENINGS

1/2"=1'-0"

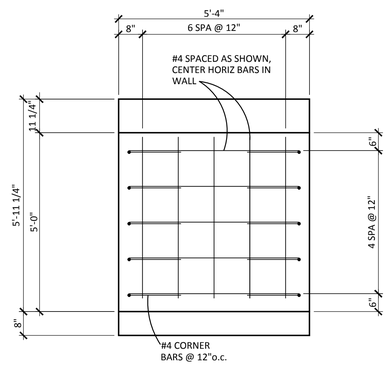

2 S1

1/2"=1'-0"

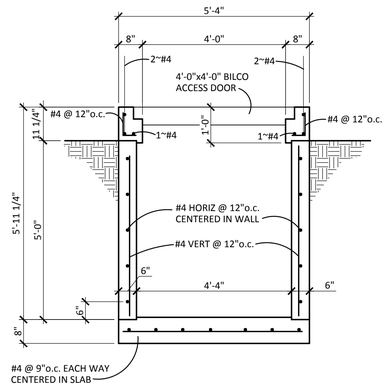

3 S1

1/2"=1'-0"

Side penetrations will be cored/cut in field

MacCORNACK ENGINEERING, LLC
1776 Montaño Rd. NW STE 24
Los Ranchos, New Mexico 87107

CLIENT: **ALL AMERICAN PRECAST, INC.**
3167 San Mateo NE Box 340
Albuquerque, N.M.

PROJECT: **PRECAST CONCRETE VAULTS**
BULK FUELS FACILITY
Kirtland Air Force Base

DRAWING: **VAULT PLANS, SECTIONS and GENERAL STRUCTURAL NOTES**

JOB NO:	DATE:	SHEET NO:
A47-015	08/30/17	**S1**

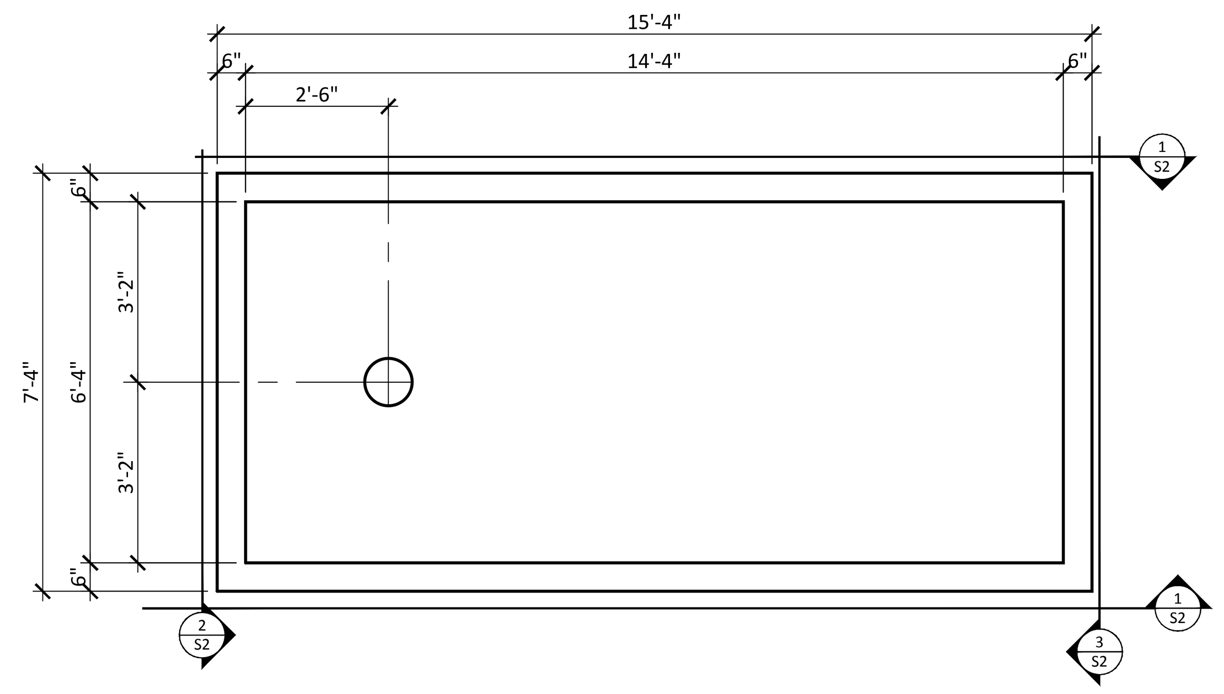

BASE PLAN

3/8"=1'-0"

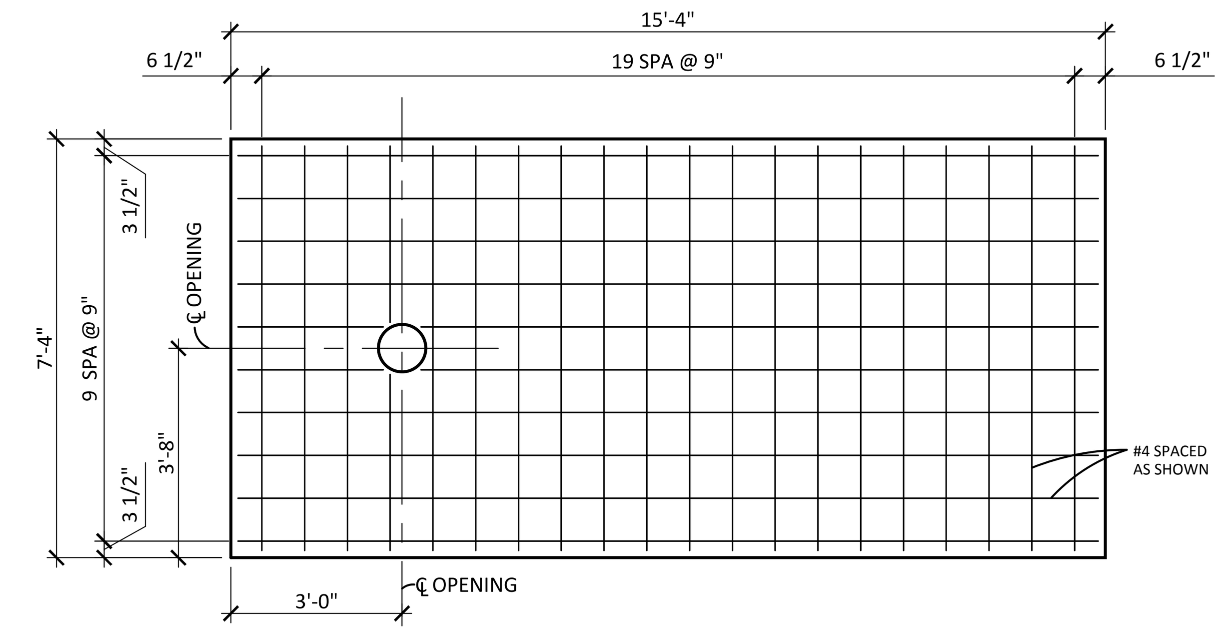

BASE REINFORCING PLAN

3/8"=1'-0"

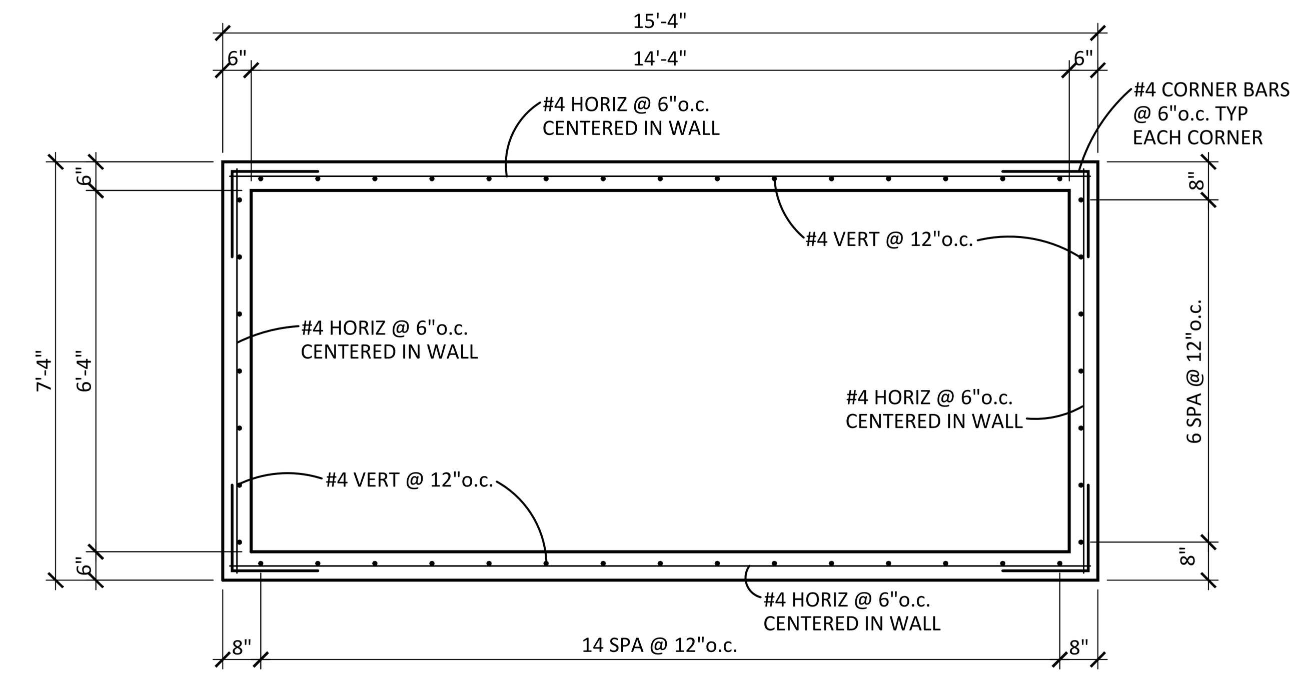

WALL REINFORCING PLAN

3/8"=1'-0"

GENERAL STRUCTURAL NOTES

1. CODES AND MANUALS:
   International Building Code, 2009 Edition
   ACI 318-05
2. DESIGN LOADS:
   A. Horizontal:
      1. Live Load: 150 psf on lid
      2. Equivalent Lateral Pressure: 60 pcf
3. GENERAL:
   A. The Contractor shall verify all dimensions in the field.
   B. The Contractor shall be responsible for providing safe and adequate shoring for all parts of the structure during construction.
4. MATERIALS:
   A. Cast-in-place concrete:
      1. Hardrock concrete (unit wt.=150 pcf)
         a. 4,000 psi @ 28 days (air entrained) concrete.
   B. Reinforcing steel:
      1. All reinforcing steel shall conform to ASTM A615 Grade 60, except stirrups and ties shall be Grade 40.
      2. The contractor shall be responsible to see that all rebar is properly aligned and tied in place before placing concrete.

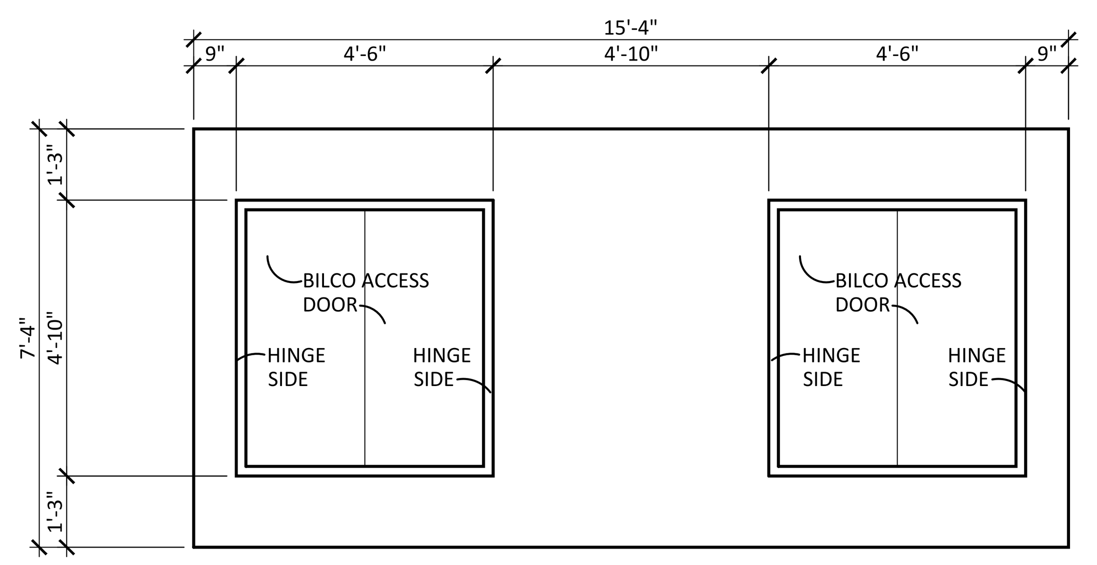

LID PLAN

3/8"=1'-0"

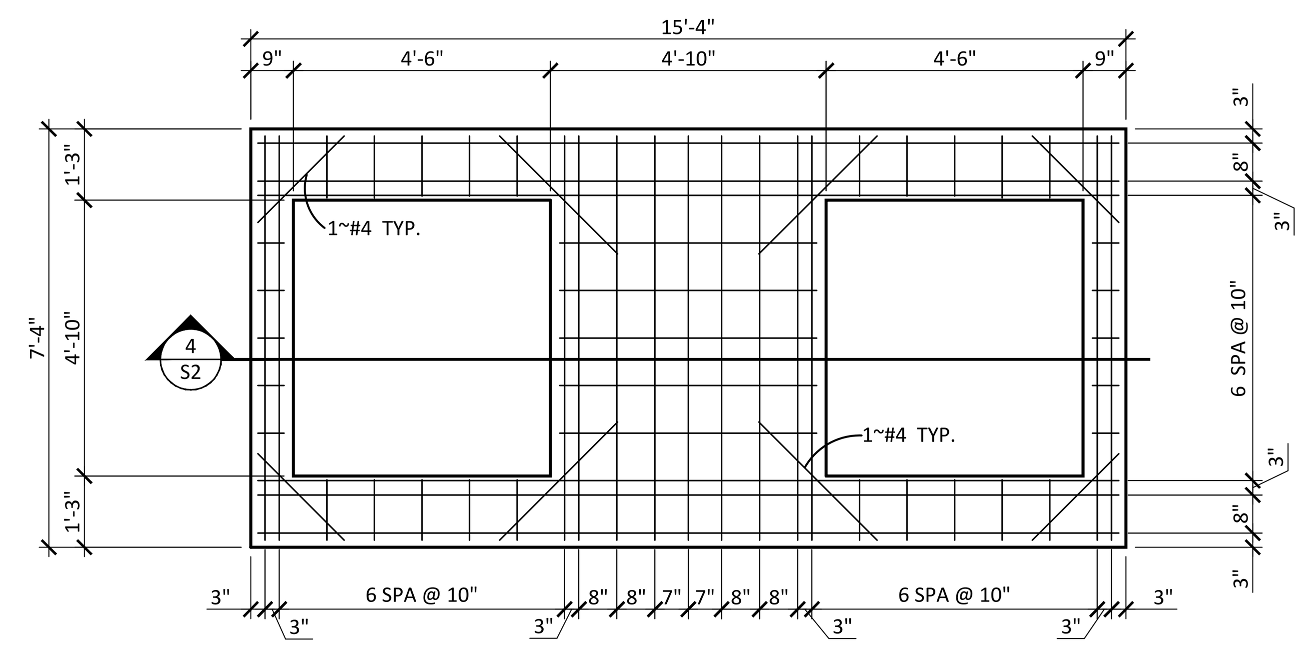

LID REINFORCING PLAN ~ TOP MAT

3/8"=1'-0"

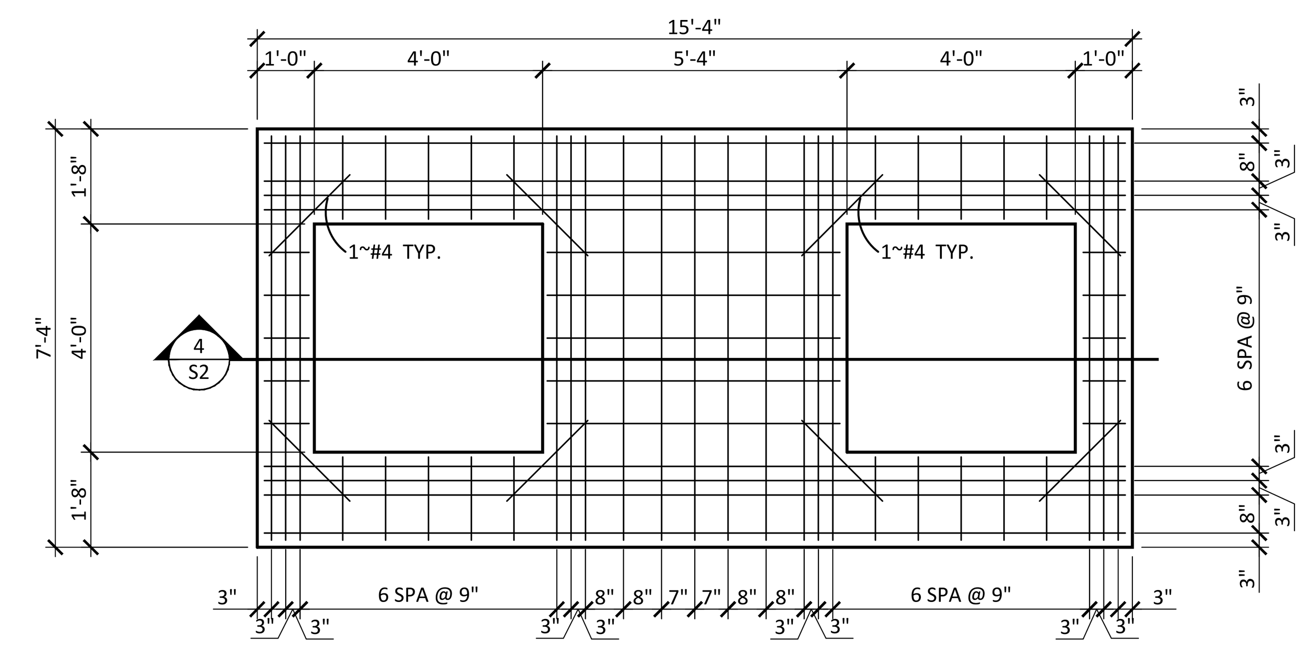

LID REINFORCING PLAN ~ BOTTOM MAT

3/8"=1'-0"

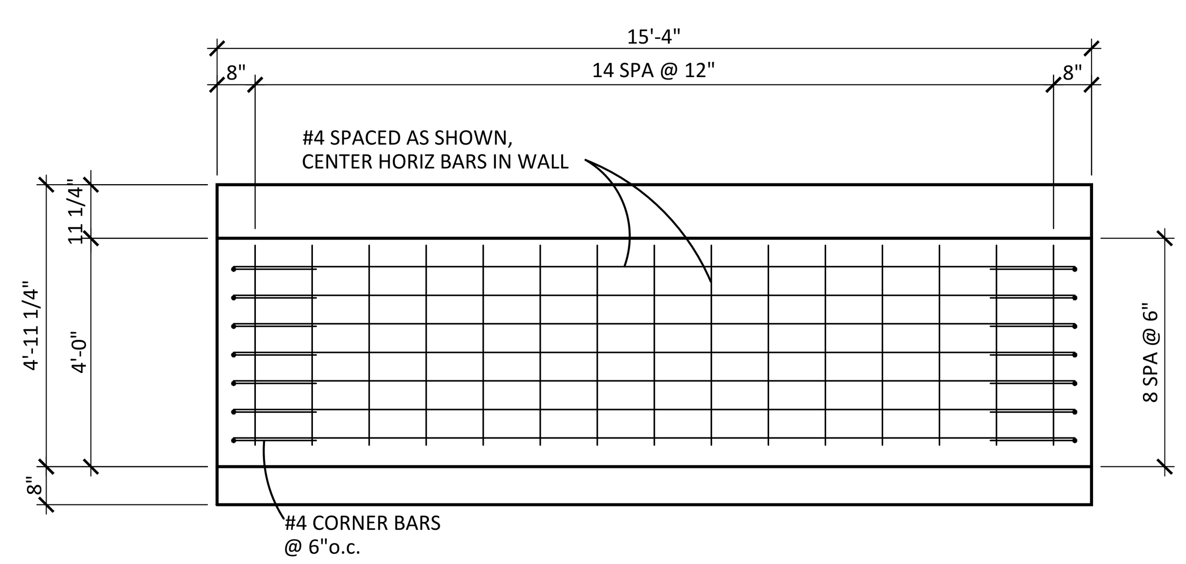

NOTE:
REVIEWER PROVIDE SIZE & LOCATION OF WALL OPENINGS

1 S2

3/8"=1'-0"

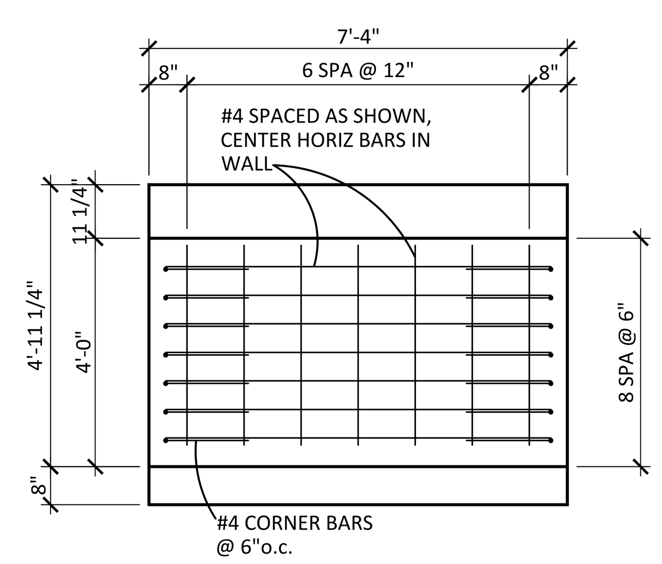

2 S2

3/8"=1'-0"

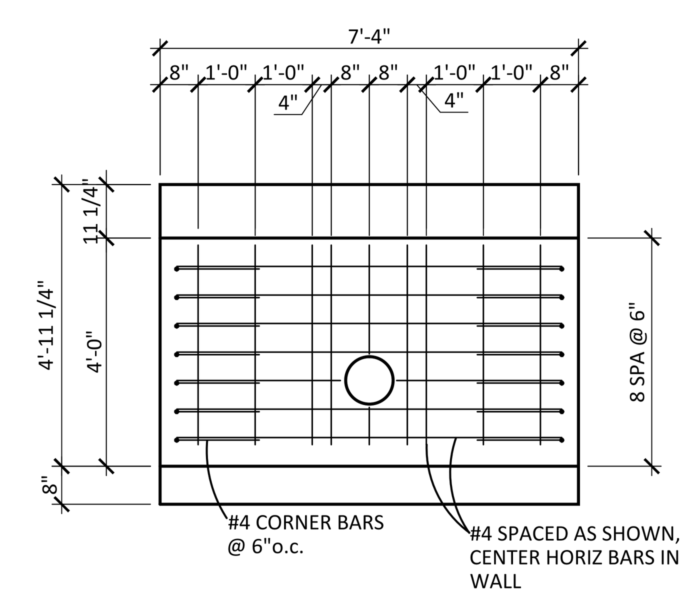

NOTE:
REVIEWER PROVIDE SIZE & LOCATION OF WALL OPENINGS

3 S2

3/8"=1'-0"

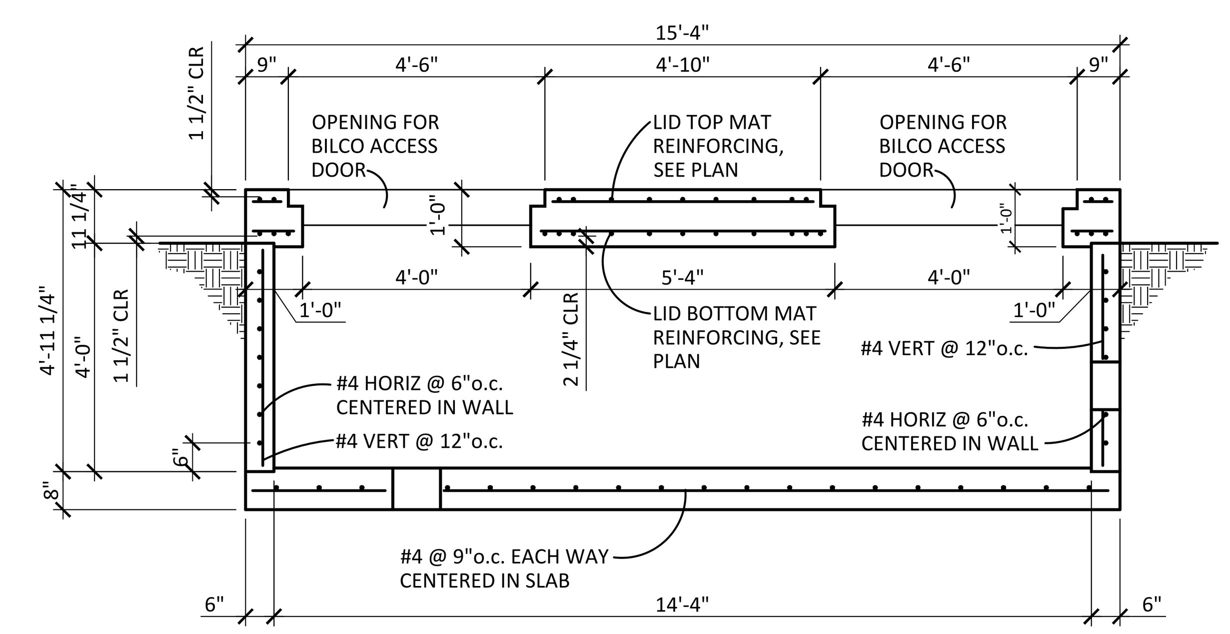

4 S2

3/8"=1'-0"

Penetration will be 12-inch diameter.
Side penetration will be 37-inches below grade form the crest of the pipe.

MacCORNACK ENGINEERING, LLC
1776 Montaño Rd. NW STE 24
Los Ranchos, New Mexico 87107

CLIENT: **ALL AMERICAN PRECAST, INC.**
3167 San Mateo NE Box 340
Albuquerque, N.M.

PROJECT: **PRECAST CONCRETE VAULTS**
BULK FUELS FACILITY
Kirtland Air Force Base

DRAWING: **VAULT PLANS, SECTIONS and GENERAL STRUCTURAL NOTES**

JOB NO:	DATE:	SHEET NO:
A47-015	08/30/17	S2

BIDCO C-56 PREFORMED BUTYL MASTIC SEALANT

ECONOMICAL

RELIABLE

EASY-TO-INSTALL

1" Coils will be used.

NPC Bidco, Inc.
St. Joe Drive & Lewis Street • Park Hills, Missouri 63601
Tel: 800-442-0141 Fax: 573-431-1035

BIDCO C-56 PREFORMED BUTYL MASTIC JOINT SEALANT

AVAILABLE STANDARD SIZES*

COILS				
Width & Length	Cross Section	Pieces Per Carton	Linear Feet Per Carton	Pallet Size # Cartons/lbs.
.5" x 21.0'	oval	10	210	45 ctns./24 lbs.
.75" x 14.5'	.66 x .66	10	145	45 ctns./36 lbs.
1.0" x 14.5'	.88 x .88	8	116	45 ctns./50 lbs.
1.25" x 14.5'	.78 x 1.38	5	72.5	45 ctns./49 lbs.
1.5" x 10.0'	1 1/8 x 1.5	5	50	45 ctns./49 lbs.
2.0" x 10.0'	1.5 x 2 1/16	4	40	45 ctns./68 lbs.

STRIPS				
Width & Length	Cross Section	Pieces Per Carton	Linear Feet Per Carton	Pallet Size # Cartons/lbs.
.75" x 30"	.478 x 1.0	50	125	36 ctns./35 lbs.
1.0 x 30"	.58 x 1.6	35	87	36 ctns./37 lbs.
1.25 x 42"	.5 x 2.5	28	98	36 ctns./71 lbs.
1.5 x 42"	.75 x 2.5	20	70	36 ctns./75 lbs.
1.75 x 42"	.75 x 3.25	13	45	36 ctns./61 lbs.
2.0" x 42"	1.0 x 3.25	10	35	36 ctns./65 lbs.

* Custom sizes also available

NPC Bidco, Inc.
St. Joe Drive & Lewis Street
Park Hills, Missouri 63601
Tel: 800-442-0141 • Fax: 573-431-1035

ESTIMATING GUIDE — VERTICAL

COILS				STRIPS	
Inside Diameter of Pipe	Annular Space – 1/64" to 1/4"	Annular Space – 5/16" to 1/2"	Annular Space – 9/16" to 11/16"	Size of Pipe	Strip Size
42"	.75"	1.0"	1.25"	42"	1.25"
48"	.75"	1.0"	1.25"	48"	1.50"
54"	1.0"	1.0"	1.25"	54"	1.50"
60"	1.0"	1.25"	1.50"	60"	1.75"
66"	1.0"	1.25"	1.50"	66"	1.75"
72"	1.0"	1.25"	1.50"	72"	2.0"
84"	1.0"	1.25"	1.50"	84"	2.0"
96"	1.0"	1.25"	1.50"	96"	2.0"

ESTIMATING GUIDE — HORIZONTAL

COILS				STRIPS	
Inside Diameter of Pipe	Annular Space – 1/64" to 1/4"	Annular Space – 5/16" to 1/2"	Annular Space – 9/16" to 11/16"	Size of Pipe	Strip Size
12"	.50"	.75"	1.0"	12"	1.0"
15"	.50"	.75"	1.0"	15"	1.0"
18"	.50"	.75"	1.0"	18"	1.0"
21"	.50"	.75"	1.0"	21"	1.0"
24"	.75"	1.0"	1¼"	24"	1.25"
30"	.75"	1.0"	1¼"	30"	1.50"
33"	.75"	1.0"	1¼"	33"	1.50"
36"	.75"	1.0"	1¼"	36"	1.50"
39"	1.0"	1.25"	1½"	39"	1.50"
42"	1.0"	1.25"	1½"	42"	1.50"
45"	1.0"	1.25"	1½"	45"	1.50"
48"	1.0"	1.25"	1½"	48"	1.75"
54"	1.25"	1.50"	1½"	54"	1.75"
60"	1.25"	1.50"	2.0"	60"	1.75"
66"	1.25"	1.50"	2.0"	66"	1.75"
72"	1.25"	1.50"	2.0"	72"	2.0"
78"	1.25"	1.50"	2.0"	78"	2.0"
84"	1.50"	1.50"	2.0"	84"	2.0"
96"	1.50"	1.50"	2.0"	96"	2.0"
102"	1.50	1.50"	2.0"	102"	2.0"
108"	1.50"	1.50"	2.0"	108"	2.0"

BIDCO C-56 PREFORMED BUTYL MASTIC SEALANT

General Product Description:

NPC's Bidco C-56 Preformed Butyl Mastic Sealant is custom engineered to meet the most exacting standards of the precast concrete industry.

C-56 remains flexible and forms a permanent bond to a wide variety of substrates including concrete, metals and plastics. Adhesion and cohesion at the time of installation are excellent and actually improve after the joint has been formed and placed into service.

This sealant is designed not to shrink, oxidize or harden and has excellent resistance to temperature extremes, acid and alkaline environments. It is also non-toxic.

Bidco C-56 bonds instantly to joint surfaces and to itself. Always butt ends of preformed sealant together – never overlap. Leave protective release paper on sealant during application and remove only after structure is ready for coupling.

Product Features:

- Available in coil or strip form
- New, crush-proof packaging
- Non-stick, non-tear plastic backing

Primary Applications:

- Concrete Pipe
- Utility Vaults
- Septic Tanks
- Sanitary and Storm Sewer Manoles
- Box Culverts
- Burial Vaults
- Wet Wells
- Concrete Wall Panel Systems

NPC Bidco C-56 Meets or Exceeds:

- Federal Specifications SS-S-210 A "Sealing Compound, Preformed Plastic for Pipe Joints", Type 1, Rope Form
- AASHTO Designation M-198 75 I, Type B, Flexible Plastic Gasket (Bitumin)
- ASTM Designation C-990-91.

TYPICAL APPLICATIONS

Sealing Concrete Pipe & Culverts		Sealing Manholes, Septic Tanks & Vaults	
Single Coil			
Groove / Tongue — Open Joint	Groove / Tongue — Closed Joint	Tongue / Groove — Open Joint	Tongue / Groove — Closed Joint
Double Coil			
Groove / Tongue — Open Joint	Groove / Tongue — Closed Joint	Open Joint	Closed Joint
Single Coil used with O-Ring			
Groove / Tongue — Open Joint	Groove / Tongue — Closed Joint	Tongue / Groove — Open Joint	Tongue / Groove — Closed Joint

TECHNICAL DATA

CHEMICAL COMPOSITION	SPECIFICATION	REQUIREMENT	C-56
Content of Hydrocarbon — % by weight	ASTM D4-86	50 - 70	56.0
Inert Mineral Filler — % by weight	AASHTO T III	30 - 50	44.0
Volitile Matter — % by weight	ASTM D-6	2.0 max.	below 1
PHYSICAL PROPERTIES			
Specific Gravity — 77° F	ASTM D-71	1.2 - 1.35	1.23
Ductility — 77° F	ASTM D-113	5.0 min.	10.0 +
Softening Point — 77° F	ASTM D-36	320 min.	380
Penetration — 77° F	ASTM D-217	50 - 210	102
Accelerated Aging (mechanical oven for 4 hours @ 212° F)			Maintained 99+% of Solids (Flexibility not affected)
Elongation Initial — 77° F			300% min.
Two Weeks — Total Water Immersion			300% min.
Flow Resistance (1" wide overhead joint exposed to 135° F for 7 days)			No Flow
Storage Life			Indefinite
Application Temperature Range			0 to 125° F
Service Temperature Range			-20 to 200° F
CHEMICAL RESISTANCE (TOTAL IMMERSION – 30 DAYS)			
5% Sulfuric Acid			No Visible Deterioration
5% Hydrochloric Acid			No Visible Deterioration
5% Potassium Hydroxide			No Visible Deterioration
Saturated Hydrogen Sulfide Solution			No Visible Deterioration

NPC Bidco, Inc.
St. Joe Drive & Lewis Street • Park Hills, Missouri 63601
Tel: 800-442-0141 Fax: 573-431-1035

DEPARTMENT OF THE ARMY
ALBUQUERQUE DISTRICT, CORPS OF ENGINEERS
ALBUQERQUE DISTRICT OFFICE
4101 JEFFERSON PLAZA NE
ALBUQUERQUE, NM 87109

SUBMITTAL REVIEW VERIFICATION SHEET

PROJECT TITLE: Kirtland BFF Mid-Plume Pump and Treat System Expansion
CONTRACT NUMBER: W912DR-12-D-0006 DM01
DATE RECEIVED: 09-13-2017
DATE REVIEWED: 09-14-2017

DESCRIPTION OF ITEMS REVIEWED:

1. Precast Vault Concrete Mix Design

	X
NO EXCEPTIONS TAKEN.	
EXCEPTIONS AS NOTED ON DRAWINGS AND/OR ATTACHED SHEETS(S). RESUBMISSION NOT REQUIRED.	
EXCEPTIONS AS NOTED ON DRAWINGS AND/OR ATTACHED SHEETS(S). RESUBMISSION REQUIRED.	
RECEIPT ACKKNOWLEDGED.	

Notes:

NOTE: ITEMS REVIEWED AS TO GENERAL LAYOUT ONLY. DIMENSIONS AND QUANTITIES NOT CHECKED. REVIEW DOES NOT RELIEVE CONTRACTOR OF RESPONSIBILITIES FOR ANY ERRORS WHICH MAY EXIST AS CONTRACTOR SHALL BE RESPONSIBLE FOR DIMENSIONS AND DESIGN OF ADEQUATE CORRECTIONS, DETAILS AND SATISFACTORY CONSTRUCTION OF WORK.

SIGNATURE SANCHEZ.AMY.ELIZABETH.1454434338 Digitally signed by SANCHEZ.AMY.ELIZABETH.1454434338 DN: c=US, o=U.S. Government, ou=DoD, ou=PKI, ou=USA, cn=SANCHEZ.AMY.ELIZABETH.1454434338 Date: 2017.09.14 12:22:01 -06'00' **DATE** 9/14/2017

EA Engineering, Science, and Technology, Inc., PBC

Submittal Review Sheet 1

Project Name: **Kirtland BFF Mid-Plume Pump and Treat System Expansion**			Date Received: **9/12/17**		
Project Owner: **Kirtland Air Force Base**			Checked By: **Tyler Curley**		
Contractor: **RMCI, Inc.**	Engineer: **EA Engineering, Science and Technology, Inc., PBC.**		Log Page: **NA**		
Address: **6211 Chappell Rd NE, Albuquerque, NM 87113**	Address: **320 Gold Ave. SW, Suite 1300 Albuquerque, NM 87102**		EA No.: 62599DM01		
			Spec. Section: **NA**		
			Drawing/Detail No.:		
ATTN: Phillip Johnson	ATTN: **Devon Jercinovic**		1st Sub		Re-Sub
Date Transmitted: **09/13/2017**	Prev. Transmittal Date:				

Item No.	No. Copies	Description	Manufacturer	Mfg/Vendor Dwg or Detail	Action Taken*
1	1	Precast Vault Concrete Mix Design	All American Precast, INC		A

The Action Designated Above is in Accordance with the Following Legend:

A – Furnish as Submitted
B – Furnish as Noted
C – Revise and Re-submit
1. Not enough information for review.
2. No reproducible submitted.
3. Copies illegible.
4. Not enough copies submitted.
5. Wrong sequence number.
6. Wrong resubmittal number.
7. Wrong Spec. Section.
8. Wrong form used.
9. See Comments.

D – Rejected
E – Engineer's Review not Required
1. Submittal not required.
2. Supplemental Information. Submittal retained for Information purposes only.
3. Information reviewed and approved on prior submittal.
4. See Comments.

Review is for general compliance with Contract Documents. No responsibility is assumed for correctness of dimensions or detail. Contractor is required to specify deviations from contract requirements. Lack of exceptions noted by Engineer does not waive Contractor's obligation to comply with Drawings and Specifications.

Comments:
Items reviewed and confirmed to meet requirements
Issues in Bold

Concrete mix design conforms to the specs.

By: _____ Date: 9/13/17

Distribution: [1] Contractor [1] Engineer [1] Owner

Precast Vault Concrete Mix Design

DUKE CITY REDI- MIX, LLC.

P.O. BOX 250
MORIARTY, NM 87035
(505) 877-5777
FAX: (505) 452-0806

CONCRETE MIX DESIGN

MIX CODE:	**453423 AEA**	**MIX DESCRIPTION:**	**4500 P.S.I. 3/4" AEA**
DESIGN SLUMP:	**4**	**WATER/CEMENT RATIO:**	**0.37716042**

MATERIAL		WEIGHT(lbs)	SPECIFIC GRAVITY	VOLUME(cuft)
Southway Los Lunas 3/4" Course Aggregate		1470	2.74	8.60
Southway Los Lunas 3/8" Course Aggregate		432	2.74	2.53
Southway Hwy 263 Concrete Sand		1091	2.59	6.75
Holcim Type I-II LA Cement		530	3.15	2.70
Four Corners Class F Flyash		137	2.00	1.10
Water (gals)	30.2	251.566	1.00	4.03
Sika 161 WR		45	-	
Sika Air		8	-	1.35
TOTALS:		**3911.566**		**27.06**

Miles Shiver

DUKE CITY REDI-MIX
Managing Partner

Product Description	**4500 3/4 AEA**
Product code	**453423AEA**
Plant	**Broadway**
Date Range	

Month To Date Statistics	Concrete Temp Deg F	Slump Inches	Ambient Temp Deg F	Unit Weight PCF	Testing Facility Cylinder Breaks 7 day	14 day	28 Avg	28 day	28 day	28 day	56 day		
High	83	7	8	149	5420	5140	6985	7000	6970	6560			
Low	57	3	2	137	3160	4160	4517	4470	4380	4470			
Standard Deviation	4.5	0.8	1.2	2.4	529.7	434.6	604.0	619.5	610.2	480.4			
Average	70	5	5	143	4108	4528	5566	5560	5556	5417			
Specifications													

Detail of test results

Date	Truck Number	Ticket Number	Concrete Temp Deg F	Slump Inches	Ambient Temp Deg F	Unit Weight PCF	Testing Facility Cylinder Breaks 7 day	14 day	28 Avg	28 day	28 day	28 day	56 day	Location	Test Facility
10/6/2014	134	215851	70	5.50	1.5		4350		**5973**	5900	6000	6020		SW Pre K	Amec
10/6/2014	140	153006	83	3.50	3.8	148.5	4250		**6210**	6080	6340			SWRP	Vinyard
10/8/2014	157	216027	76	4.00	5.3	142.1	4360		**5853**	5760	5920	5880		SW Pre K	Amec
10/8/2014	158	153705	71	4.50	3.6	147.4	4640		**6600**	6700	6500			SWRP	Vinyard
10/11/2014	147	153920	65	5.00	3.2	145.8	5020		**6735**	6810	6660			SWRP	Vinyard
10/15/2014	140	216651	70	6.00	2.5	143.8	4030		**5413**	5200	5560	5480		SW Pre K	Amec
10/17/2014	118	216792	71	6.00	6.3	139.7	3580		**4727**	4770	4710	4700		SW Pre K	Amec
10/17/2014	146	216808	70	5.50	4.1	143.3	3750		**5067**	5320	4930	4950		SW Pre K	Amec
10/17/2014	154	216780	74	5.50	3.0	145.0	4060		**5593**	5580	5610	5590		SW Pre K	Amec
10/24/2014	134	217320	70	6.00	4.7	142.3	3500		**4807**	4720	4840	4860		SW Pre K	Amec
10/28/2014	117	217584	68	5.00	4.9	143.5	3740		**5040**	5140	4920	5060		SW Pre K	Amec
10/30/2014	134	217709	70	5.00	5.5	143.1	4380		**5710**	5830	5620	5680		SW Pre K	Amec
11/5/2014	143	218127	69	4.50	4.0	142.3	4180		**5590**	5570	5700	5500		SW Pre K	Amec
11/5/2014	158	218082	68	5.00	5.9	141.0	4270		**5613**	5560	5500	5780		SW Pre K	Amec
11/6/2014	150	218247	78	5.00	5.1	142.8	4380		**5810**	5740	5740	5950		SW Pre K	Amec
11/7/2014	118	218343	78	5.50	4.7	143.5	4300		**5637**	5570	5680	5660		SW Pre K	Amec
11/11/2014	154	218488	73	5.00	6.3	140.3	3320		**4640**	4640	4690	4590		SW Pre K	Amec
11/13/2014	158	218708	66	6.00	4.9	141.7	3160		**4517**	4560	4520	4470		SW Pre K	Amec
11/13/2014	157	218670	64	4.50	4.0	144.8	4490		**6050**	6050	6090	6010		SW Pre K	Amec
11/14/2014	147	155745	72	4.25	5.5	145.3	4380		**5705**	5650	5760			SWRP	Vinyard
11/26/2014	104	156354	72	4.00	5.0	145.7	4710		**6420**	6430	6410			SWRP	Vinyard
12/5/2014	107	156703	73	4.00	4.6	145.6	4760		**6535**	6530	6540			SWRP	Vinyard
12/6/2014	117	156745	67	4.60	4.0	146.0	5090		**6555**	6440	6670			SWRP	Vinyard
12/9/2014	149	156833	69	6.75	4.5	140.6	3340		**4593**	4540	4590	4650		Bargain Square	Geo
12/9/2014	103	156843	65	2.50	4.6	145.9	4500		**6190**	6160	6220			SWRP	Vinyard
12/9/2014	107	156866	69	4.00	5.0	145.2	4650		**6460**	6590	6330			SWRP	Vinyard
12/10/2014	155	220359	69	4.50	3.3	145.0	4340		**6060**	6010	6060	6110		SW Pre K	Amec
12/12/2014	146	157107	70	4.50	3.3	146.3	4770		**6760**	6880	6640			SWRP	Vinyard
12/16/2014	156	220782	70	4.50	5.0	141.9	4070		**5650**	5570	5690	5690		SW Pre K	Amec
12/19/2014	134	157434	70	5.00	5.5	140.4	3350		**4865**	4910	4820			SWRP	Vinyard
12/19/2014	140	221180	72	4.00	3.3	144.8	4100		**5740**	5730	5750	5740		SW Pre K	Amec
12/23/2014	143	157601	64	4.50	5.1	138.9	3380		**6210**	6180	6250	6200		SW Pre K	Amec
12/31/2014	157	221694	57	5.00	4.4	143.3	3850		**5340**	5280	5290	5450		SW Pre K	Amec
1/5/2015	104	221764	66	5.50	6.7	139.7	3650		**5183**	5270	5100	5180		SW Pre K	Amec
1/6/2015	153	221864	69	4.00	4.8	143.5	3940		**5567**	5440	5660	5600		SW Pre K	Amec
1/7/2015	143	221984	70	5.00	5.4	142.0	3580		**5283**	5260	5250	5340		SW Pre K	Amec
1/8/2015	102	158135	71	4.00	5.5	145.6	3380	4160	**5380**	5390	5370			SWRP	Vinyard
1/9/2015	107	222184	70	5.50	5.0	142.6	3440		**5030**	5050	5020	5020		SW Pre K	Amec

1/9/2015	159	158176	68	4.25	4.4	139.5	4360	4520	**5720**	5670	5770			SWRP	Vinyard
1/14/2015	155	158325	66	4.50	6.6	142.3	3360	4290	**5145**	5120	5170			SWRP	Vinyard
1/15/2015	158	222469	67	5.00	4.5	142.4	3760		**5460**	5450	5520	5410		SW Pre K	Amec
1/16/2015	158	158475	68	4.50	6.1	144.7	4210	5140	**6985**	7000	6970			SWRP	Vinyard
1/23/2015	103	223095	67	4.50	6.0	140.9	3700		**5307**	5300	5340	5280		SW Pre K	Amec
1/26/2015	151	223234	69	5.00	6.5	142.4	3600		**4903**	4890	4930	4890		SW Pre K	Amec
1/28/2015	118	223427	77	5.00	6.0	143.1	3470		**5293**	5340	5270	5270		SW Pre K	Amec
2/2/2015	104	223788	70	5.50	6.3	140.5	3500		**4903**	4990	4870	4850		SW Pre K	Amec
2/9/2015	159	224358	68	5.00	7.1	138.4	3350		**4750**	4500	4380	5370		SW Pre K	Amec
2/19/2015	157	225173	70	6.00	5.0	142.1	4000		**5377**	5510	5300	5320		SW Pre K	Amec
3/5/2015	146	226117	70	5.00	4.0	143.9	4380		**5720**	5660	5760	5740		SW Pre K	Amec
3/6/2015	157	226225	75	5.00	4.5	143.8	4150		**5657**	5670	5590	5710		SW Pre K	Amec
3/6/2015	152	226242	73	3.00	4.0	146.5	5070		**6610**	6680	6590	6560		SW Pre K	Amec
3/12/2015	143	226668	70	5.50	4.0	143.9	4050		**5610**	5590	5600	5640		SW Pre K	Amec
3/23/2015	159	509379	68	4.50	7.5	137.1	3250		**4525**	4470	4580		5030	SW Pre K	Amec
3/24/2015	103	227726	70	3.00	5.0	146.7	4090		**5440**	5400	5480			SWRP	Vinyard
4/8/2015	143	228945	69	5.00	6.8	144.3	4410		**5155**	5080	5230			SWRP	Vinyard
4/9/2015	133	229084	65	4.00	5.5	144.9	5060		**6395**	6410	6380			SWRP	Vinyard
4/14/2015	133	229520	67	5.00	3.5	144.7	4620		**6007**	5920	5970	6130		SW Pre K	Amec
4/17/2015	159	229887	65	5.50	5.1	141.6	4160		**5230**	5230	5170	5290		SW Pre K	Amec
4/20/2015	157	230047	75	5.50	3.5	143.2	4400		**5470**	5430	5540	5440		SW Pre K	Amec
4/23/2015	153	230269	72	4.50	6.5	139.2	4010		**4980**	4900	4930	5110		SW Pre K	Amec
4/24/2015	159	230495	70	5.00	6.0	141.0	3690		**4887**	4800	4910	4950		SW Pre K	Amec
4/29/2015	140	230798	70	5.50	4.9	141.4	3650		**4803**	4810	4890	4710		SW Pre K	Amec
5/1/2015	108	231094	82	4.00	4.5	143.9	4200		**5340**	5470	5210			SWRP	Vinyard
12/21/2015	165	16549997	66	5.50	4.7	143.8	4530		**6160**	6240	6080			Santa Ana Pueblo	Western
12/21/2015	165	49987	59	5.00	6.1	145.6	4460		**5765**	5810	5720			Santa Ana Pueblo	Western
1/15/2016	165	50088	66	6.00	3.5	145.2	5420		**5345**	5470	5220			Santa Ana Pueblo	Western
1/15/2016	145	50080	61	7.25	5.5	141.4	4100		**4975**	4840	5110			Santa Ana Pueblo	Western
4/29/2016	149	50962	65	6	4.7	139.6	5040		**5445**	5620	5270			Santa Ana Pueblo	Western
4/14/2016	157	179602	73	5	5.8	142.7	4380		**5563**	5530	5650	5510		KAFB Repair KUN	Amec

Concrete Mix Analysis

Project:	**AAPI-NM Westside Interceptor**	**Project No:**	
Client:	**All American Precast**	**Lab No.:**	
Mix Description:	**4500 AEA 3/4"**		
		Analysis Date:	10/03/16
Mix Code:	**453423 AEA**	**Analysis By:**	Miles

Data Source:	Duke City Database
Test Date Range:	10/06/14 to 04/14/16
Number of Tests:	75

	Slump, in. (1)	Air Content, % (1)	28 Day Compressive Strength, psi
Average Value	**5.00**	**5.00**	**5566**
Standard Deviation	0.80	1.20	604
Upper Specification Limit	8	7.5	
Lower Specification Limit	1	4.5	4500
Upper Conformance Factor	3.75	2.08	(2)
Lower Conformance Factor	(2)	0.42	1.76
Upper (Limit) Probability of Nonconformance			0.00
Lower (Limit) Probability of Nonconformance	0.00		5.82
Probability of Conformance to Specifications, %	**100**	**100**	**94**

Number of Tests Modification Factor (k):	1.02
f'c + 1.34ks	5326
f'c + 2.33ks - 500	5435
Required f'cr	**5435**
Mix Design Average > f'cr:	**Yes**

Notes:

(1) Statistical data for Slump and Air Content are for information only since Out-of-Specification test results are grounds for immediate rejection of the concrete.

(2) It is impossible to exceed the limit. Hence, Noncompliance is 0.

Alkali-Silica Reaction Analysis Report

Client:	**Duke City Redi Mix**	**Date Reported:**	6/30/2016 ☐ Revised
Address:	**7705 Broadway SE**	**Project:**	Various
	Albuquerque, NM 87105	**Project #:**	
		Aggregate Source(s):	Orona Sand 35%/Southvalley Rock 65%
		Cement Source:	GCC Tijeras, I/II
Test requested by:	Miles Shiver	**Admixture Source:**	SRM 4 Corners Cl. F fly ash
Samples Received:	6/13/2016	**Admixture Percentage**	25% *by wt of cement or*
Laboratory #:	443-16		20% *by wt of cementitious*

Standard Test Method for Determining the Potential Alkali Reactivity of Combinations of Cementitious Materials and Aggregate (Accelerated Mortar Bar Method) ASTM C1567-11

								Specs
Batch date:	6/13/2016	Reading	Bar A	Bar B	Bar C	Calibration	Avg Bar	% expansion	
Test Date:	6/14/16	Initial	0.2986	0.3066	0.3164	0.0704	0.3072		
	6/15/16	Zero	0.3039	0.3126	0.3225	0.0710	0.3130		
	6/20/16	5	0.3035	0.3123	0.3227	0.0706	0.3128		
			0.000%	0.001%	0.006%			**0.0023%**	
	6/23/16	8	0.3041	0.3130	0.3230	0.0698	0.3134		
			0.014%	0.016%	0.017%			**0.0157%**	
	6/27/16	12	0.3046	0.3134	0.3235	0.0701	0.3138		
			0.016%	0.017%	0.019%			**0.0173%**	
	6/29/16	14	0.3052	0.3141	0.3242	0.0703	0.3145		
			0.020%	0.022%	0.024%			**0.02%**	**< 0.10%**

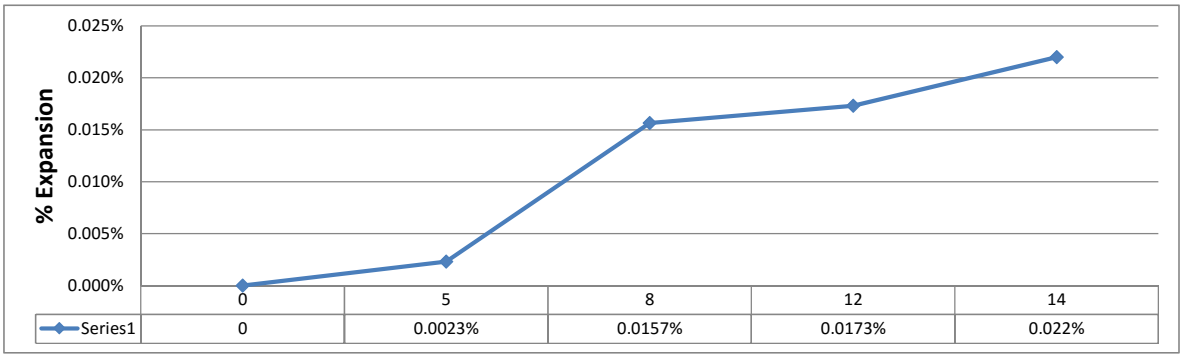

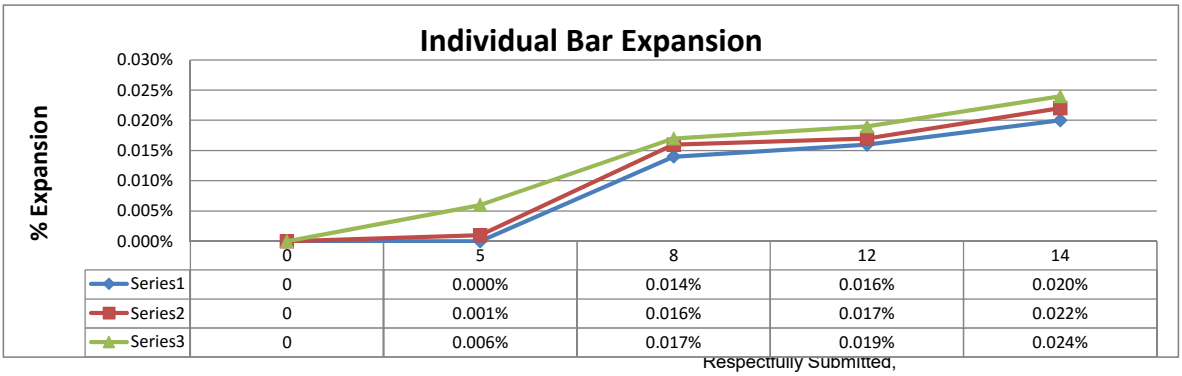

Respectfully Submitted,

L. Marquez

Lea Ann Marquez, PE

Concrete, Aggregate and Asphalt Testing, LLC
414 Bibb Industrial Dr.
P.O.Box 1228
Las Vegas, NM 87701
505-718-3030

Material Certification Report

Material: Portland Cement
Type: I-II Low Alkali
Test Period: 01-August-2016 - 31-August-2016

Certification

This Holcim cement meets the specifications of ASTM C150 for Type I-II and complies with AASHTO M85 specifications for Type I cement.

General Information

Supplier:	Holcim (US) Inc	Source Location:	Portland Plant
Address:	3500 Highway 120 Florence, CO 81226		3500 Highway 120 Florence, CO 81226
Contact:	Kevin Tate / (719)288-1431		
Date Issued:	7-September-2016		

The following information is based on average test data during the test period.
The data is typical of cement shipped by Holcim; individual shipments may vary.

Tests Data on ASTM Standard Requirements

Chemical			Physical		
Item	**Limit [1]**	**Result**	**Item**	**Limit [1]**	**Result**
SiO_2 (%)	-	20.1	Air Content (%)	12 max	8
Al_2O_3 (%)	6 max	4.6	Blaine Fineness (m^2/kg)	260-430	414
Fe_2O_3 (%)	6 max	3.4			
CaO (%)	-	63.3	Autoclave Expansion (%) (C151)	0.80 max	0.01
MgO (%)	6 max	1.4	Compressive Strength Mpa (psi)		
SO_3 [2]	3 max	3.2			
Loss on Ignition (%)	3.5 max	2.7	1 day	-	18.9 (2737)
Insoluble Residue (%)	1.5 max	0.59	3 day	10 (1450.0) min	29.5 (4277)
CO_2 (%)	-	1.5	7 day	17 (2465.0) min	35.9 (5202)
Limestone (%)	5 max	4.0	28 day	28 (4060) min	45.3 (6567)
$CaCO_3$ in Limestone (%)	70 min	82	Initial Vicat minutes	45-375	113
Inorganic Processing Addition (%)	5 max	0.0			
Potential Phase Compositions [3]:			Mortar Bar Expansion (%) (C1038)	-	0.01
C_3S (%) - ADJ	-	55.1			
C_2S (%) - ADJ	-	15.2			
C_3A (%) - ADJ	8 max	6.2			
$C_3S + 4.75C_3A$ (%)	-	84.5			

Test Data on ASTM Optional Requirements

Chemical			Physical		
Item	**Limit [1]**	**Result**	**Item**	**Limit [1]**	**Result**
Equivalent Alkalis (%)	0.60 max	0.57	Heat of Hydration kJ/kg (cal/g) 7 Days [4]	-	360 (86)

Notes (*1-9)

1 - Dashes in the Limit / Result columns mean Not Applicable.

2 - It is permissible to exceed the specification limit provided that ASTM C1038 Mortar Bar Expansion does not exceed 0.020% at 14 days.

3 - Adjusted per Annex A1.6 of ASTM C150 and AASHTO M85.

4 - Test results represent the most recent value and is provided for information only. Analysis of Heat of Hydration tested by CTL Group Skokie, IL.

Salt River Materials Group
100% AMERICAN™

Duke City Redi Mix
Attn: Miles Shiver
PO BOX 250
Moriarity, NM 87035

Clarkdale Cement Plant
601 N. Cement Plant Rd
Clarkdale, AZ 86324

19th Ave. Terminal
1802 W. Lower Buckeye Rd
Phoenix, AZ 85007

Lower Buckeye Terminal
1941 W. Lower Buckeye Rd
Phoenix, AZ 85007

21st Ave. Terminal
1325 N. 21st Ave.
Phoenix, AZ 85009

54th Ave. Terminal
5402 W Buchanan St.
Phoenix, AZ 85043

Dobson Storage
9595 E. McKellips Rd.
Scottsdale, AZ 85250

Cholla Fly Ash Plant
4801 Frontage Rd.
Joseph City, AZ 86032

Four Corners Fly Ash Plant
End of County Road 6675
Fruitland, NM 87416

San Juan Fly Ash Plant
End of County Road 6800
Waterflow, NM 87421

Escalante Fly Ash Plant
County Road 19
Prewitt, NM 87405

Gallup Transfer Terminal
900 N 9th St.
Gallup, NM 87301

San Diego Terminal
920 Bay Marina Dr.
National City, CA 91950

Fontana Budway Terminal
13600 Napa St.
Fontana, Ca 92335

Bakersfield Terminal
32535 7th Standard Rd.
Bakersfield, CA 93314

Stockton Terminal
1300 N. Gertrude Ave.
Stockton, CA 95215

Sacramento Terminal
4520 50th St.
McClellan Park, CA 95652

Panaca Pozzolan Plant
333 Hansen St.
Panaca, NV 89042

Denver Terminal
220 East 54th Avenue
Denver, CO 80216

Product: ASTM C618 Class F, Four Corners Fly Ash
AASHTO M295

POZZOLAN TEST REPORT

8-24-16 Ctl#: 121916

Lot: 6428	**Results**	**Specifications**
Chemical Analysis (C311 / C114 / D4326)		
Silicon Dioxide, SiO_2	62.05 %	---
Aluminum Oxide, Al_2O_3	23.45 %	---
Ferric Oxide, Fe_2O_3	4.36 %	---
$SiO_2+Al_2O_3+Fe_2O_3$	89.86 %	70.00 Min
Calcium Oxide, CaO	2.30 %	---
Magnesium Oxide, MgO	1.21 %	---
Sulfur Trioxide, SO_3	0.33 %	5.00 Max
Moisture Content	0.05 %	3.00 Max
Loss on Ignition	0.33 %	6.00 Max
Sodium Oxide, Na_2O	1.35 %	---
Potassium Oxide, K_2O	1.48 %	---
Total Alkalis (%Na_2O + 0.658% K_2O)	2.32 %	---
Available Alkalis as Na_2O Equivalent	0.71 %	---
Physical Analysis		
Fineness, amount retained on #325 sieve, % (C430)	24.70	34.00 Max
variation, points from average	0.66	5.00 Max
Density, g/cm^3 (C188)	1.94	---
Variation from average, %	0.02	5.00 Max
Strength Activity Index with Portland Cement (C311 / C109)		
at 7 days, % of cement control	79.34	---
at 28 days, % of cement control	82.69	75.00 Min
Water Requirement (C311)		
% of cement control	95.87	105.00 Max
Soundness, autoclave expansion or contraction, % (C311 / C151)	-0.03	0.80 Max

All tests have been made in strict accordance with the current standards of the American Society for Testing and Materials covering the type of material specified.

Lee Gorby, Quality Assurance Manager
30 SEP 2016

AAP® AASHTO R18

PHOENIXCEMENT

Aggregate Test Report

Project:	Supplier Information	Report Date:	11/13/15
Client:	**Duke City Redi Mix**	Sample Date:	11/4/15
Address:	**7705 Broadway SE**	Sampled By:	Jacob
	Albuquerque, NM 87105	Material Tested:	7/8" Concrete Aggregate
	Espanola, NM 87532	Date Tested:	11/5/15-011/13/15
		Tested By:	Mary/Steven
Sample received:	11/4/2015	Sample Location:	Stockpile
Laboratory #:	ABQ LL50-15	Sample Source:	South Valley pit

Sieve Analysis

C-117 & C136/T-11 & T-27 **ASTM C33 #67**

Sieve Size	% Passing	Specs
6" (150mm)	From Supplier QC dated 1-5-15 through 11-9-15	
3" (75mm)		
2" (50mm)		
1.5" (37.5mm)		
1" (25mm)	100	**100**
3/4" (19mm)	97	**90-100**
1/2" (12.5mm)	50	
3/8" (9mm)	26	**20-55**
#4 (4.75mm)	4	**0-10**
#8 (2.36mm)	2	**0-5**
#10 (2mm)		
#16 (1.18mm)	2	
#30 (0.6mm)	2	
#40 (0.425mm)		
#50 (0.3mm)	2	
#80 (0.18mm)		
#100 (0.15mm)	2	
#200 (0.075mm)	1.1	**0-1.5**
Fineness Modulus		

Test Results

Standard		Physical Properties	Results	ASTM Specs
C-127	Coarse	Bulk Specific Gravity	2.719	
	Specific	Bulk Specific Gravity, SSD	2.778	
T-85	Gravity &	Apparent Specific Gravity	2.889	
	Absorption	Absorption, %	2.1	
C-131	L.A.	LA Wear, %	35.5	**< 50**
T-96	Abrasion	Grading	B	
C-142	Clay/Friable	Coarse Aggregate, %	0.1	**< 2.0**
T-112	Particles			
C-88	Soundness	Coarse Soundness Loss, %	0.92	**< 18**
	5 cycles			
T-104	$MgSO_4$	Fine Soundness Loss, %		
D5821	Fractured	1 face	100	
	Faces	2 faces	100	

Reports to: fax/email
Miles Shiver Dukecityredimix@aol.com

Respectfully Submitted,

L. Marquez

Lea Ann Marquez, PE

Concrete, Aggregate and Asphalt Testing, LLC ABQ Lab
9430 San Mateo NE Unit H
Albuquerque, NM 87113
505-362-6422

Aggregate Test Report

Project:	Supplier Information	Report Date:	11/13/15
Client:	**Duke City Redi Mix**	Sample Date:	11/4/15
Address:	**7705 Broadway SE**	Sampled By:	Jacob
	Albuquerque, NM 87105	Material Tested:	3/8" Concrete Aggregate
	Espanola, NM 87532	Date Tested:	11/5/15-011/13/15
		Tested By:	Mary/Steven
Sample received:	11/4/2015	Sample Location:	Stockpile
Laboratory #:	ABQ LL50-15	Sample Source:	South Valley Pit

Sieve Analysis

C-117 & C136/T-11 & T-27 **ASTM C33 #8**

Sieve Size	% Passing	Specs
6" (150mm)	From Supplier QC dated 1-5-15 through 11-9-15	
3" (75mm)		
2" (50mm)		
1.5" (37.5mm)		
1" (25mm)		
3/4" (19mm)		
1/2" (12.5mm)	100	**100**
3/8" (9mm)	93	**85-100**
#4 (4.75mm)	27	**10-30**
#8 (2.36mm)	6	**0-10**
#10 (2mm)		
#16 (1.18mm)	5	**0-5**
#30 (0.6mm)	3	
#40 (0.425mm)		
#50 (0.3mm)	3	
#80 (0.18mm)		
#100 (0.15mm)	3	
#200 (0.075mm)	2.1	**0-2**
Fineness Modulus		

Test Results

ASTM C33

Standard		Physical Properties	Results	Specs
C-127	Coarse	Bulk Specific Gravity	2.724	
	Specific	Bulk Specific Gravity, SSD	2.79	
T-85	Gravity &	Apparent Specific Gravity	2.914	
	Absorption	Absorption, %	2.1	
C-142	Clay/Friable	Coarse Aggregate, %	0.1	**< 2.0**
T-112	Particles			
D5821	Fractured	1 face	100	
	Faces	2 faces	100	

Reports to: fax/email
Miles Shiver Dukecityredimix@aol.com

Respectfully Submitted,

L. Marquez
Lea Ann Marquez, PE

Concrete, Aggregate and Asphalt Testing, LLC ABQ Lab
9430 San Mateo NE Unit H
Albuquerque, NM 87113
505-362-6422

Aggregate Test Report

Project:	Supplier Information	Report Date:	11/13/15
Client:	**Duke City Redi Mix**	Sample Date:	11/4/15
Address:	**7705 Broadway SE**	Sampled By:	Jacopb
	Albuquerque, NM 87105	Material Tested:	Concrete Sand
	Espanola, NM 87532	Date Tested:	11/5/15-011/13/15
		Tested By:	Mary/Steven
Sample received:	11/4/2015	Sample Location:	Stockpile
Laboratory #:	ABQ LL50-15	Sample Source:	Orona Sand

Sieve Analysis

C-117 & C136/T-11 & T-27 **ASTM C33**

Sieve Size	% Passing	Specs
6" (150mm)	From Supplier QC dated 1-5-15 through 11-9-15	
3" (75mm)		
2" (50mm)		
1.5" (37.5mm)		
1" (25mm)		
3/4" (19mm)		
1/2" (12.5mm)		
3/8" (9mm)	100	**100**
#4 (4.75mm)	96	**95-100**
#8 (2.36mm)	88	**80-100**
#10 (2mm)		
#16 (1.18mm)	81	**50-85**
#30 (0.6mm)	65	**25-60**
#40 (0.425mm)		
#50 (0.3mm)	25	**5-30**
#80 (0.18mm)		
#100 (0.15mm)	2	**0-10**
#200 (0.075mm)	1.1	**0-3**
Fineness Modulus	2.44	

Test Results

ASTM C33

Standard		Physical Properties	Results	Specs
C-128	Fine	Bulk Specific Gravity	2.562	
	Specific	Bulk Specific Gravity, SSD	2.592	
T-84	Gravity &	Apparent Specific Gravity	2.641	
	Absorption	Absorption, %	1.1	
D2419	Sand Equiv.	Sand Equivalent, %	80	
T176				
C-142	Clay/Friable	Fine Aggregate, %	0.2	**< 3.0**
T-112	Particles			
C40	Organic	Organic Impurities	N/I	
	Impurities			
C-88	Soundness	Coarse Soundness Loss, %		
	5 cycles			
T-104	$MgSO_4$	Fine Soundness Loss, %	5.6	**< 15**

ASTM C33-13 6.3 Note 3 "Fine aggregate that conforms to the grading requirements of a specification, prepared by another organization such as a state transportation agency, which is in general use in the area, should be considered as having a satisfactory service record with regard to those concrete properties affected by grading."
The concrete sand is currently in use for NMDOT projects under NMDOT Lab #'s 15-00281cg, 00282cg, 00283cg, 00271cg and several others.

Reports to: fax/email
Miles Shiver Dukecityredimix@aol.com

Respectfully Submitted,

L. Marquez
Lea Ann Marquez, PE

Concrete, Aggregate and Asphalt Testing, LLC ABQ Lab
9430 San Mateo NE Unit H
Albuquerque, NM 87113
505-362-6422

Product Data Sheet
Edition 10.2005
Identification no. 161
Plastocrete 161

Construction

Plastocrete® 161

Water Reducing Admixture

Description

Plastocrete 161 is a lignin polymer-type water-reducing admixture.

Plastocrete 161 meets the requirements of ASTM C-494 Types A, B and D.

Applications

Plastocrete 161 is recommended for use in all applications where high quality concrete with superior workability is required.

Advantages

Plastocrete 161 water reducing admixture provides an economical and highly effective means of reducing the amount of mixing water required to produce concrete of a certain slump by acting as a dispersant for the cement particles in the mix.

Through this dispersing action more of the surface area of the cement particles is available for early hydration. The more cement particles hydrated by contact with the mixing water, the greater the compressive strength of the concrete.

Plastocrete 161 is formulated as a Type A water reducer to allow up to 10% water reduction and maximize the benefits of increased hydration in both the hardened and plastic states.

- Reduced water content required to achieve desired slump, increases compressive and flexural strengths and allows the use of more economical mixes.
- Improved paste quality makes concrete easier to pump and finish.
- Consistent normal setting times throughout the recommended dosage.
- Lower water cement ratios provide decreased permeability and increased durability.
- Plastocrete 161 does not contain intentionally added chlorides and will not initiate nor promote the corrosion of steel in the concrete.

How to Use

Dosage

Dosage rates will vary depending on the material used, ambient conditions and the requirements of a specific project.

For general concreting applications, Sika recommends a dosage rate between 2-4 fl.oz./100 lbs. (130-260 ml/100 kg) of cementitious materials for normal setting characteristics. Dosage rates of 4-6 fl.oz./100 lbs. (260-390 ml/100 kg) of cementitious materials are recommended for applications where higher water reduction is needed as well as extended workability and prolonged setting times.

Dosage rates outside the recommended range may be used where specialized materials such as microsilica are specified, extreme ambient conditions are encountered or unusual project conditions require special consideration. In this case please contact your local regional Sika office or Sika technical service department at 1-800-933-7452 for further information.

Construction

Mixing

Plastocrete 161 is added at the concrete plant. Measure required quantity manually or by automated dispenser. Add into the water line at the batch plant or to the mixer at the end of the batching cycle.

Combination with other Admixtures: Plastocrete 161 works effectively as a single admixture or in combination with other admixtures in the Sika System. When air entrained concrete is specified, Sika recommends the use of Sika air entraining admixtures.

When used in combination with other admixtures, care must be taken to dispense each admixture separately into the concrete. Do not mix with dry cement.

Packaging

Plastocrete 161 is supplied in 55 gallon (208 liter) drums and bulk delivery.

Storage and Shelf-life

Plastocrete 161 should be stored at above 40°F (5°C). If frozen, thaw and agitate thoroughly to return to normal state before use.

Shelf life when stored in dry warehouse conditions between 50°F and 80°F (10°C - 27°C) is one year.

Typical Data

Appearance	Dark Brown liquid
Specific Gravity	Approx. 1.2

Caution

Skin and eye irritant; avoid contact. The use of NIOSH approved respirator, safety goggles and rubber gloves is recommended. Avoid breathing product. Use with adequate ventilation. Remove contaminated clothing.

Handling and Storage

Avoid direct contact. Wear personal protective equipment (chemical resistant goggles/gloves/clothing) to prevent direct contact with skin and eyes. Use only in well ventilated areas. Wash thoroughly with soap and water after use. Remove contaminated clothing and launder before reuse.

First Aid

Eyes: Hold eyelids apart and flush thoroughly with water for 15 minutes. **Skin:** Remove contaminated clothing. Wash skin thoroughly for 15 minutes with soap and water. **Inhalation:** Remove person to fresh air. **Ingestion:** Do not induce vomiting. Dilute with water. Contact a physician. **In all cases, contact a physician immediately if symptoms persist.**

Clean Up

Use personal protective equipment (chemical resistant goggles/gloves/clothing). Without direct contact, remove spilled or excess product and place in suitable sealed container. Dispose of excess product and container in accordance with applicable environmental regulations.

KEEP CONTAINER TIGHTLY CLOSED • KEEP OUT OF REACH OF CHILDREN • NOT FOR INTERNAL CONSUMPTION • FOR INDUSTRIAL USE ONLY

All information provided by Sika Corporation ("Sika") concerning Sika products, including but not limited to, any recommendations and advice relating to the application and use of Sika products, is given in good faith based on Sika's current experience and knowledge of its products when properly stored, handled and applied under normal conditions in accordance with Sika's instructions. In practice, the differences in materials, substrates, storage and handling conditions, actual site conditions and other factors outside of Sika's control are such that Sika assumes no liability for the provision of such information, advice, recommendations or instructions related to its products, nor shall any legal relationship be created by or arise from the provision of such information, advice, recommendations or instructions related to its products. The user of the Sika product(s) must test the product(s) for suitability for the intended application and purpose before proceeding with the full application of the product(s).

Sika reserves the right to change the properties of its products without notice. All sales of Sika product(s) are subject to its current terms and conditions of sale which are available at www.sikacorp.com or by calling 800-933-7452.

Prior to each use of any Sika product, the user must always read and follow the warnings and instructions on the product's most current Technical Data Sheet, product label and Material Safety Data Sheet which are available at www.sikaconstruction.com or 800-933-7452. Nothing contained in any Sika materials relieves the user of the obligation to read and follow the warnings and instruction for each Sika product as set forth in the current Technical Data Sheet, product label and Material Safety Data Sheet prior to product use.

SIKA warrants this product for one year from date of installation to be free from manufacturing defects and to meet the technical properties on the current Technical Data Sheet if used as directed within shelf life. User determines suitability of product for intended use and assumes all risks. Buyer's sole remedy shall be limited to the purchase price or replacement of product exclusive of labor or cost of labor. **NO OTHER WARRANTIES EXPRESS OR IMPLIED SHALL APPLY INCLUDING ANY WARRANTY OF MERCHANTIBILITY OR FITNESS FOR A PARTICULAR PURPOSE. SIKA SHALL NOT BE LIABLE UNDER ANY LEGAL THEORY FOR SPECIAL OR CONSEQUENTIAL DAMAGES. SIKA SHALL NOT BE RESPONSIBLE FOR THE USE OF THIS PRODUCT IN A MANNER TO INFRINGE ON ANY PATENT OR ANY OTHER INTELLECTUAL PROPERTY RIGHTS HELD BY OTHERS.**

Sika Corporation
201 Polito Avenue
Lyndhurst, NJ 07071
Phone: (201) 933-8800
Fax: (201) 933-6225
www.sikaconstruction.com

Sika Canada Inc.
601, Delmar Avenue
Pointe-Claire, QC H9R 4A9
Phone: (514) 697-2610
Fax: (514) 697-3087
www.sika.ca

1-800-933-SIKA

Regional Information and Sales Centers. For the location of your nearest Sika representative, contact your regional center.

U.S. : **North East Region:** Fairless Hills, PA, Phone: (215) 295 -6600 **North Central Region:** Marion, OH, Phone: (800) 851-1545
South East Region: Conyers, GA, Phone: (770) 760-1300 **South Central Region:** Mesquite, TX, Phone: (972) 289-6480
Western Region: Santa Fe Springs, CA, Phone: (562) 903-3650

Canada: **Ontario:** Mississauga, ON, Phone: (905) 795-3177, **Alberta:** Edmonton, AB, Phone: (780) 486-6111

Quality Certification Numbers: Lyndhurst: FM 69711 (ISO 9000), FM 70421 (QS 9000), Marion: FM 69715, Kansas City: FM 69107, Santa Fe Springs: FM 69408

Sika and Plastocrete are registered trademarks. Made in USA. Printed in USA.

Product Data Sheet
Edition 09.25.2009
Identification no. 147-540
Sika Air

Construction

Sika® Air

Air Entraining Admixture

Description

Sika Air admixture is an aqueous solution of organic materials.

Sika Air meets the requirements of ASTM C-260 for air entraining admixtures.

Applications

Sika Air is recommended for use whenever air entrained concrete is desired. Ready-mix, precast and block producers can achieve predictable and uniform entrained air contents in concrete, even where harsh lean mixes are used or fly-ash is added to the concrete.

Advantages

Durability:

- Air entrainment is recognized as the most effective prevention against concrete scaling in exposed environments. Air entrained concrete delivers particular benefits in the form of increased concrete durability. This is important in colder climates where frost and freeze-thaw cycles can cause scaling and damage to the concrete surface.
- Air entraining agents help to prevent scaling by creating microscopic air voids that water trapped in the concrete can expand into when the concrete freezes, thus preventing cracks caused by the natural expansion. Entrained air voids in the concrete will also increase durability in harsh environments where concrete is exposed to deicing salts, marine salts and sulfates.

Workability and Placeability:

- Workability and placeability are also improved by the lubricating action of the microscopic bubbles in the concrete. Concrete will flow better, and bleeding and shrinkage will be reduced because less water is needed to obtain the desired workability.

How to Use

Dosage

Dosage rates for Sika Air will typically fall between 0.5 and 3 fl. oz. per 100 lbs. (32 - 195 ml/100 kg) of cementitious to entrain between 4 and 6 percent air. Higher air contents may be obtained by increasing the dosage rate.

Dosage rates will vary depending on the air content required for a particular project. Typically air contents will be specified in the range of 4 to 8 percent by volume.

Other factors that may affect the amount of air entrained into the concrete including total cementitious content, type of pozzolanic materials, sand gradation, salt/clay in aggregates, temperature and water content. The use of fly ash, particularly high LOI fly ash, can result in a higher dosage of air entrainment. Sika recommends that trial mixes be performed whenever material or any other changes are made that may affect the amount of entrained air.

In mixes requiring a lower or higher amount dosage rate, please contact your local regional Sika office or Sika technical service department at 1-800-933-7452 for further information.

Construction

Mixing	Measure the required quantity per batch manually or with automatic dispenser equipment. Add Sika Air to mixing water or sand. Do not mix with dry cement. When Sika Air is used in combination with other admixtures, care must be taken to dispense each admixture separately into the mix. **Combination with Other Admixtures:** Combination with other admixtures, particularly water reducers and retarders, may increase the amount of entrained air in the mix. Air contents should be checked with an air-meter after batching and dosage adjustments made at the concrete plant.
Packaging	Sika Air is available in 55 gallon drum (208 liter), 275 gallon totes (1040 liters) drums and bulk delivery.
Storage and Shelf life	Sika Air should be stored at above 40°F (5°C). If frozen, thaw and agitate thoroughly to return to normal state. Shelf life when stored in dry warehouse conditions between 50°F and 80°F (10°C - 27°C) is one year.

Typical Data

Appearance	Dark Amber liquid.
Specific Gravity	Approx. 1.0
CAUTION: IRRITANT	Contains Aqueous Solution (CAS:Mixture). May cause eye/skin/respiratory irritaton. May be harmful if swallowed.
Handling and Storage	Avoid direct contact. Wear personal protective equipment (chemical resistant goggles/gloves/clothing) to prevent direct contact with skin and eyes. Use only in well ventilated areas. Wash thoroughly with soap and water after use. Remove contaminated clothing and launder before reuse.
First Aid	**Eyes:** Hold eyelids apart and flush thoroughly with water for 15 minutes. **Skin:** Remove contaminated clothing. Wash skin thoroughly for 15 minutes with soap and water. **Inhalation:** Remove person to fresh air. **Ingestion:** Do not induce vomiting. Dilute with water. Contact physician. **In all cases contact a physician immediately if symptoms persist.**
Safety	Tested and Certified by WQA according to NSF/ANSI 61 Section 5 for materials safety.
Clean Up	Use personal protective equipment (chemical resistant goggles/gloves/clothing). Without direct contact, remove spilled or excess product and place in suitable sealed container. Dispose of excess product and container in accordance with applicable environmental regulations.

KEEP CONTAINER TIGHTLY CLOSED • KEEP OUT OF REACH OF CHILDREN • NOT FOR INTERNAL CONSUMPTION • FOR INDUSTRIAL USE ONLY

All information provided by Sika Corporation ("Sika") concerning Sika products, including but not limited to, any recommendations and advice relating to the application and use of Sika products, is given in good faith based on Sika's current experience and knowledge of its products when properly stored, handled and applied under normal conditions in accordance with Sika's instructions. In practice, the differences in materials, substrates, storage and handling conditions, actual site conditions and other factors outside of Sika's control are such that Sika assumes no liability for the provision of such information, advice, recommendations or instructions related to its products, nor shall any legal relationship be created by or arise from the provision of such information, advice, recommendations or instructions related to its products. The user of the Sika product(s) must test the product(s) for suitability for the intended application and purpose before proceeding with the full application of the product(s).

Sika reserves the right to change the properties of its products without notice. All sales of Sika product(s) are subject to its current terms and conditions of sale which are available at www.sikacorp.com or by calling 800-933-7452.

Prior to each use of any Sika product, the user must always read and follow the warnings and instructions on the product's most current Technical Data Sheet, product label and Material Safety Data Sheet which are available at www.sikaconstruction.com or 800-933-7452. Nothing contained in any Sika materials relieves the user of the obligation to read and follow the warnings and instruction for each Sika product as set forth in the current Technical Data Sheet, product label and Material Safety Data Sheet prior to product use.

SIKA warrants this product for one year from date of installation to be free from manufacturing defects and to meet the technical properties on the current Technical Data Sheet if used as directed within shelf life. User determines suitability of product for intended use and assumes all risks. Buyer's sole remedy shall be limited to the purchase price or replacement of product exclusive of labor or cost of labor. **NO OTHER WARRANTIES EXPRESS OR IMPLIED SHALL APPLY INCLUDING ANY WARRANTY OF MERCHANTIBILITY OR FITNESS FOR A PARTICULAR PURPOSE. SIKA SHALL NOT BE LIABLE UNDER ANY LEGAL THEORY FOR SPECIAL OR CONSEQUENTIAL DAMAGES. SIKA SHALL NOT BE RESPONSIBLE FOR THE USE OF THIS PRODUCT IN A MANNER TO INFRINGE ON ANY PATENT OR ANY OTHER INTELLECTUAL PROPERTY RIGHTS HELD BY OTHERS.**

Sika Corporation
201 Polito Avenue
Lyndhurst, NJ 07071
Phone: (201) 933-8800
Fax: (201) 933-6225
www.sikaconstruction.com

Sika Canada Inc.
601, Delmar Avenue
Pointe-Claire, QC H9R 4A9
Phone: (514) 697-2610
Fax: (514) 697-3087
www.sika.ca

1-800-933-SIKA

Regional Information and Sales Centers. For the location of your nearest Sika representative, contact your regional center.

U.S. : **North East Region:** Fairless Hills, PA, Phone: (215) 295 -6600 **North Central Region:** Marion, OH, Phone: (800) 851-1545
South East Region: Conyers, GA, Phone: (770) 760-1300 **South Central Region:** Mesquite, TX, Phone: (972) 289-6480
Western Region: Santa Fe Springs, CA, Phone: (562) 903-3650

Canada: **Ontario:** Mississauga, ON, Phone: (905) 795-3177, **Alberta:** Edmonton, AB, Phone: (780) 486-6111

Quality Certification Numbers: Lyndhurst: FM 69711 (ISO 9000), FM 70421 (QS 9000), Marion: FM 69715, Kansas City: FM 69107, Santa Fe Springs: FM 69408

Sika is a registered trademark. Made in USA. Printed in USA.

DEPARTMENT OF THE ARMY
ALBUQUERQUE DISTRICT, CORPS OF ENGINEERS
ALBUQERQUE DISTRICT OFFICE
4101 JEFFERSON PLAZA NE
ALBUQUERQUE, NM 87109

SUBMITTAL REVIEW VERIFICATION SHEET

PROJECT TITLE: Kirtland BFF Mid-Plume Pump and Treat System Expansion
CONTRACT NUMBER: W912DR-12-D-0006 DM01
DATE RECEIVED: 11-1-2017
DATE REVIEWED: 11-6-2017

DESCRIPTION OF ITEMS REVIEWED:

1. Pipe Coating associated with the KAFB-106239 conveyance line.

NO EXCEPTIONS TAKEN.	**X**
EXCEPTIONS AS NOTED ON DRAWINGS AND/OR ATTACHED SHEETS(S). RESUBMISSION NOT REQUIRED.	
EXCEPTIONS AS NOTED ON DRAWINGS AND/OR ATTACHED SHEETS(S). RESUBMISSION REQUIRED.	
RECEIPT ACKKNOWLEDGED.	

Notes:

NOTE: ITEMS REVIEWED AS TO GENERAL LAYOUT ONLY. DIMENSIONS AND QUANTITIES NOT CHECKED. REVIEW DOES NOT RELIEVE CONTRACTOR OF RESPONSIBILITIES FOR ANY ERRORS WHICH MAY EXIST AS CONTRACTOR SHALL BE RESPONSIBLE FOR DIMENSIONS AND DESIGN OF ADEQUATE CORRECTIONS, DETAILS AND SATISFACTORY CONSTRUCTION OF WORK.

SIGNATURE SALAZAR.CARLOS.F.IV.1232198555 **DATE** 11/6/2017

EA Engineering, Science, and Technology, Inc., PBC

Submittal Review Sheet 1

Project Name: **Kirtland BFF Mid-Plume Pump and Treat System Expansion**			Date Received: **10/26/17**	
Project Owner: **Kirtland Air Force Base**			Checked By: **Tyler Curley**	
Contractor: **RMCI, Inc.**	Engineer: **EA Engineering, Science and Technology, Inc., PBC.**		Log Page: **NA**	
Address: **6211 Chappell Rd NE, Albuquerque, NM 87113**	Address: **320 Gold Ave. SW, Suite 1300 Albuquerque, NM 87102**		EA No.: **62599DM01**	
			Spec. Section: **NA**	
			Drawing/Detail No.: **RFI #1**	
ATTN: **Phillip Johnson**	ATTN: **Devon Jercinovic**		1st Sub	Re-Sub
Date Transmitted: **11/01/2017**	Prev. Transmittal Date:			

Item No.	No. Copies	Description	Manufacturer	Mfg/Vendor Dwg or Detail	Action Taken*
1	1	Pipe Coating	Sherwin Williams		A

The Action Designated Above is in Accordance with the Following Legend:

A – Furnish as Submitted
B – Furnish as Noted
C – Revise and Re-submit
1. Not enough information for review.
2. No reproducible submitted.
3. Copies illegible.
4. Not enough copies submitted.
5. Wrong sequence number.
6. Wrong resubmittal number.
7. Wrong Spec. Section.
8. Wrong form used.
9. See Comments.

D – Rejected
E – Engineer's Review not Required
1. Submittal not required.
2. Supplemental Information. Submittal retained for Information purposes only.
3. Information reviewed and approved on prior submittal.
4. See Comments.

Review is for general compliance with Contract Documents. No responsibility is assumed for correctness of dimensions or detail. Contractor is required to specify deviations from contract requirements. Lack of exceptions noted by Engineer does not waive Contractor's obligation to comply with Drawings and Specifications.

Comments:
Items reviewed and confirmed to meet requirements
Issues in Bold

Coating is of specified alkyd type.

By: _____ Date: 11/01/17

Distribution: [1] Contractor [1] Engineer [1] Owner

SHERWIN-WILLIAMS
816 1ST ST NW
ALBUQUERQUE, NM 87102 2353
(505) 243-6677

10/23/2017

BOGAN BROTHERS PAINTING
3435 VASSAR DR NE
ALBUQUERQUE NM 871072025

Re: Submittal for KAFB Groundwater Conveyance Steel Pipe

Dear Jeff Chynoweth:

Thank you for considering Sherwin-Williams products for the KAFB Groundwater Conveyance Steel Pipe project. Included in this package is the Sherwin-Williams submittal for the above referenced project.

Should you require assistance or have any questions or concerns, please contact me at or e-mail me at john.c.anderson@sherwin.com.

Sincerely,

John Anderson
Sherwin-Williams
Sales Representative

SCHEDULE

Bollards and Steel Pipe in Vault

Steel

Primer: B50WZ0001 - Kem Kromik® Universal Metal Primer Off White

Apply at 6.0-8.0 WFT to achieve 3.3-4.4 DFT

Topcoat: B56W00311 - Steel-Master 9500 30% Silicone Alkyd Enamel Extra White/Tint Base

Apply at 3.5-5.0 WFT to achieve 2.2-3.2 DFT

END OF SECTION

KEM KROMIK®
UNIVERSAL METAL PRIMER

B50NZ0006 BROWN
B50WZ0001 OFF WHITE
B50AZ0006 GRAY

As of 08/25/2017, Complies with:			
OTC	No	LEED® 09 NC,.CI	No
OTC Phase II	No	LEED® 09 CS	No
SCAQMD	No	LEED® 09 S	No
CARB	No	LEED® v4 Emissions	No
CARB SCM 2007	No	LEED® v4 VOC	No
Canada	No	MPI	Yes

CHARACTERISTICS

KEM KROMIK UNIVERSAL METAL PRIMER is a rust inhibiting, modified phenolic alkyd resin primer designed for use over iron and steel substrates. Can be used as a universal primer under high performance topcoats. Suitable as a barrier coat over conventional coatings which would normally be attacked by strong solvents in high performance coatings.

Features:
- High film build to protect sand blasted steel
- Corrosion resistant
- Universal, can be topcoated with epoxies and urethanes
- Exterior/interior metal primer
- Suitable for use in USDA inspected facilities

For use on properly prepared:
- Steel

Recommended for use in:
- Shopcoat primer
- Maintenance primer
- Structural steel
- Machinery
- Structural steel
- Marine vessels
- Barrier coating
- Hand rail
- Storage tanks
- Bar joists
- Steel pipe

Tinting: **DO NOT TINT**
Shelf Life: 36 months, unopened
Finish: Flat

White B50WZ0001
(may vary by base)
VOC(less exempt solvents) 389 g/L - 3.24 lb/gal
(as per 40 CFR 59.406 and SOR/2009-264, s. 12)
Volume Solids: 55 ± 2%
Weight Solids: 75 ± 2%
Weight per Gallon: 12.86 lb/gal ± .2 lb
Flash Point: 80°F TCC

Brown B50NZ0006
(may vary by base)
VOC(less exempt solvents) 409 g/L - 3.24 lb/gal
(as per 40 CFR 59.406 and SOR/2009-264, s. 12)
Volume Solids: 53 ± 2%
Weight Solids: 73 ± 2%
Weight per Gallon: 12.62 lb/gal ± .2 lb
Flash Point: 80°F TCC

SPECIFICATIONS

Color: White, Brown & Gray
Recommended Spread Rate per coat: White B50WZ0001 (varies by base)

wet mils:	6.0 –8.0
dry mils:	3.3 - 4.4
coverage:	267- 200 sq ft/gal approximate

Theoretical coverage: 882 sq ft/gal @ 1 mil dry
Drying Schedule @ 6.0 mils wet, 50% RH:

	@ 40°F/4.5°C	@ 77°F/25°C	@ 110°F/43°C
To touch:	2 hours	30 minutes	15 minutes
Tack handle:	2.5 hours	1 hours	20 minutes
To recoat: with itself & alkyds	2.5 hours	1 hours	45 minutes
To recoat:*	36 hours	16 hours	16 hours
To cure:	7 days	7 days	7 days

* Recoat with hot solvents or high performance coatings. For maximum adhesion, acrylic topcoats require 48 - 72 hours drying of primer. Drying and recoat times are temperature, humidity, and film thickness dependent.

RECOMMENDED SYSTEMS

Steel:
1ct. Kem Kromik Universal Primer
1-2 cts. Topcoat
Acceptable Topcoats:
Acrolon 218 HS Polyurethane
Hi-Solids Polyurethane
Industrial Enamel
Macropoxy HS Epoxy
Metalatex Semi-Gloss Enamel
Pro Industrial Acrylic
Pro Industrial DTM Acrylic
Pro Industrial Waterbased Epoxy
Pro Industrial Waterbased Alkyd-Urethane
Pro Industrial Multi-Surface Acrylic
Pro Industrial Pre-Catalyzed Epoxy & Urethane
Pro Industrial Urethane Alkyd Enamel
Pro Industrial Waterbased Acrolon 100
Sher-Cryl
Silver-Brite Aluminum
Steel Master 9500
Tile-Clad HS Epoxy

The systems listed above are representative of the product's use, other systems may be appropriate. Other topcoats may be appropriate.

System: (unless otherwise indicated)
Substrate: Steel
Surface Preparation: SSPC-SP6/NACE 3
Primer: 1ct. Kem Kromik Universal Metal Primer,@ 3.0 –4.4 mils dft/ct.

Adhesion[1]:
Method: ASTM D3359
Result: 4B
Corrosion Resistance[1]:
Method: ASTM D5894, 1008
Result: Pass
Dry Heat Resistance:
Method: ASTM D2485
Result: 200°F
Flexibility[1]:
Method: ASTM D522, 1/4" mandrel
Result: Pass
Fineness of grind[2]:
Method: Hegman
Result: 4 Hegman minimum
Sag Test[2]:
Method: ASTM D4400
Result: 12 mils minimum
Viscosity[2]: 84-94 KU
Water Resistance[1]:
Result: Pass

[1] 1ct. Kem Kromik Primer 4.5-5 WFT [2] Standard test based on Certificate of Analysis

continued on back

KEM KROMIK® UNIVERSAL METAL PRIMER

SURFACE PREPARATION

WARNING! Removal of old paint by sanding, scraping or other means may generate dust or fumes that contain lead. Exposure to lead dust or fumes may cause brain damage or other adverse health effects, especially in children or pregnant women. Controlling exposure to lead or other hazardous substances requires the use of proper protective equipment, such as a properly fitted respirator (**NIOSH** approved) and proper containment and cleanup. For more information, call the National Lead Information Center at **1-800-424-LEAD** (in US) or contact your local health authority.

Iron & Steel- Minimum surface preparation is Hand Tool Clean per SSPC-SP2. Remove all oil and grease from surface by Solvent Cleaning per SSPC-SP1. For better performance, use Commercial Blast Cleaning per SSPC-SP6/NACE 3, blast clean all surfaces using a sharp, angular abrasive for optimum surface profile (2 mils). Prime any bare steel within 8 hours or before flash rusting occurs.

Previously Painted Surfaces - If in sound condition, clean the surface of all foreign material. Smooth, hard or glossy coatings and surfaces should be dulled by abrading the surface. Apply a test area, allowing paint to dry one week before testing adhesion. If adhesion is poor, additional abrasion of the surface and/or removal of the previous coating may be necessary. Retest surface for adhesion. If paint is peeling or badly weathered, clean surface to sound substrate and treat as a new surface as above. Recognize that any surface preparation short of total removal of the old coating may compromise the service length of the system.
Other substrates may or may not be appropriate. If a specific substrate is not listed above, consult your Sherwin-Williams representative for more information.

As a "Barrier" Coat - If it is necessary to topcoat a previously painted surface with chemically resistant or strong solvent topcoats, Kem Kromik Universal Metal Primer can be used as a barrier coat to help reduce lifting. Apply a coat of Kem Kromik Universal Metal Primer to a small area to test for adhesion or bleeding. If there is evidence of either poor adhesion or bleeding, clean surface to bare steel and apply recommended system.

APPLICATION PROCEDURES

Apply paint at the recommended film thickness and spreading rate as indicated on front page. Application of coating above maximum or below minimum recommended spreading rate may adversely affect coating performance. Spreading rates are calculated on volume solids and do not include an application loss factor due to surface profile, roughness, or porosity of the surface, skill, and technique of the applicator, method of application, various surface irregularities, material lost during mixing, spillage, over thinning, climatic conditions, and excessive film build.

SAFETY PRECAUTIONS

Refer to the SDS sheets before use. **FOR PROFESSIONAL USE ONLY**
Published technical data and instructions are subject to change without notice. Contact your Sherwin-Williams representative for additional technical data and instructions.

PERFORMANCE TIPS

Mix paint thoroughly to a uniform consistency with slow speed power agitation prior to use.
Stripe coat crevices, welds, and sharp angles to prevent early failure in these areas.
When using spray application, use a 50% overlap with each pass of the gun to avoid holidays, bare areas, and pinholes. If necessary, cross spray at a right angle.
Not recommended for immersion service or exposure to acids, alkalis, or strong solvents.
Intimate contact with the steel surface and primer is necessary for adequate rust inhibition and adhesion.
For maximum adhesion, acrylic topcoats require 48 - 72 hours drying of primer.

APPLICATION

Refer to the SDS sheet before use

Temperature:	40°F(4.5°C) minimum
	120°F(49°C) maximum
	(Air, surface, and material)
	At least 5°F above dew point
Relative humidity:	85% maximum

The following is a guide. Changes in pressures and tip sizes may be needed for proper spray characteristics. Always purge spray equipment before use with listed reducer. Any reduction must be compatible with the existing environmental and application conditions.

Reducer	Not recommended
Clean Up	Xylene,R2K4

Airless Spray

Pressure	1800-3000 psi
Hose	1/4" ID
Tip	.015-.019"
Filter	60 mesh

Conventional Spray

Gun	Binks 95
Fluid Nozzle	63C
Air Nozzle	63PB
Atomization Pressure	50 PSI
Fluid Pressure	15-20 PSI

Brush ..... Natural Bristle

Roll.... .3/8" woven with solvent resistant core

If specific application equipment is not listed above, equivalent equipment may be substituted

CLEANUP INFORMATION

Clean spills, spatters & tools with compliant cleanup solvent. After cleaning, flush spray equipment with compliant cleanup solvent to prevent rusting of the equipment. Follow manufacturer's safety recommendations when using solvents.

DANGER: Rags, steel wool, other waste soaked with this product, and sanding residue may spontaneously catch fire if improperly discarded. Immediately place rags, steel wool, other waste soaked with this product, and sanding residue in a sealed, water-filled, metal container. Dispose of in accordance with local fire regulations.

HOTW	08/09/2017	B50NZ0006	37 409
HOTW	08/09/2017	B50WZ0001	38 389
HOTW	08/09/2017	B50AZ0006	19 386

SP

The information and recommendations set forth in this Product Data Sheet are based upon tests conducted by or on behalf of The Sherwin-Williams Company. Such information and recommendations set forth herein are subject to change and pertain to the product offered at the time of publication. Consult your Sherwin-Williams representative or visit www.paintdocs.com to obtain the most current version of the PDS and/or an SDS.

STEEL MASTER™ 9500
30% SILICONE ALKYD

B56W00311 EXTRA WHITE
B56T00304 CLEAR TINT BASE
B56B00300 BLACK
B56Y00300 SAFETY YELLOW

As of 07/26/2017, Complies with:			
OTC	Yes	LEED® 09 NC,.CI	No
OTC Phase II	No	LEED® 09 CS	No
SCAQMD	No	LEED® 09 S	No
CARB	No	LEED® v4 Emissions	No
CARB SCM 2007	No	LEED® v4 VOC	No
Canada	Yes	MPI	

CHARACTERISTICS

STEEL MASTER 9500 is an exterior/interior, 30% silicone alkyd, protective topcoat. Dries to a tough, flexible finish with very good gloss and color retention and long term exterior durability for a single component alkyd product.

Features:
- Excellent color and gloss retention compared to conventional alkyds
- High gloss providing a "wet look"
- Can be applied as low as 45°F (7°C)
- Easy application properties
- Interior / Exterior application
- Suitable for use in USDA inspected facilities

For use on properly prepared:
- Steel
- Galvanized
- Aluminum
- Concrete & Masonry

Recommended for use in:
- Exterior equipment
- Machinery
- Signs
- Logo and identification enamel
- Buildings
- Structural steel
- Piping, tanks

Tinting with Maxitoner:

Base	Strength
Extra White & Clear Tint Base only	100%

Check color before using. Five minutes minimum mixing on a mechanical shaker is required for complete mixing of color.

Shelf Life: 36 months, unopened
Finish: 80°+@60° Gloss

Extra White B56W00311
(may vary by base)

VOC(less exempt solvents) 307 g/L - 2.56 lb/gal
(as per 40 CFR 59.406 and SOR/2009-264, s. 12)
Volume Solids: 64 ± 2%
Weight Solids: 76 ± 2%
Weight per Gallon: 10.82 lb/gal ± .2 lb
Flash Point: 112°F TCC

SPECIFICATIONS

Color: Extra White, Clear Tint Base, Black & Safety Yellow
Recommended Spread Rate per coat: Extra White B56W00311 (varies by base)

wet mils:	3.5 - 5.0
dry mils:	2.2 - 3.2
coverage:	466 - 320 sq ft/gal approximate

Theoretical coverage: 1026 sq ft/gal @ 1 mil dry
Drying Schedule @ 4.0 mils wet, 50% RH:

	@ 50°F/10°C	@ 77°F/25°C	@ 100°F/38°C
To touch:	5 hours	4 hours	1 hour
To handle:	2.5 days	8 hours	8 hours
To recoat:	2.5 days	18 hours	8 hours
To cure:	30 days	14 days	3 days

Drying and recoat times are temperature, humidity, and film thickness dependent.

RECOMMENDED SYSTEMS

Steel & Rusted Galvanized, acrylic primer:
1ct. Pro Industrial Pro-Cryl Primer
1-2cts. Steel Master 9500
Steel alkyd primer:
1ct. Kem Bond HS
Or
1ct. Kem Kromik Universal Metal Primer
1-2cts. Steel Master 9500
Aluminum:
1ct. DTM Wash Primer
1-2cts. Steel Master 9500

Galvanized Metal:
1ct. Galvite HS
1-2cts. Steel Master 9500
Concrete Block:
1ct. Pro Industrial Heavy Duty Block Filler
1-2cts. Steel Master 9500
Concrete Masonry:
1ct. Loxon Concrete and Masonry Primer
1-2cts. Steel Master 9500

The systems listed above are representative of the product's use, other systems may be appropriate. Other primers may be appropriate.

System: (unless otherwise indicated)
Substrate: Steel
Surface Preparation: SSPC-SP10
Primer: 1 ct. Kem Kromik Universal Metal Primer
Finish: 2 cts Steel Master 9500
*unless otherwise noted below

Adhesion:
Method: ASTM D4541
Result: 991 psi
Density[1]:
Result: 10.63-10.93
Dry Heat Resistance:
Method: ASTM D2485
Result: 200°F (discolors)
Fineness of grind[1]:
Method: Hegman
Result: 6 Hegman minimum

Salt Fog Resistance:
Method: ASTM B117, 1000 hours
Result: Rating 10 per ASTM D610 for rusting (field); Rating 10 per ASTM D714 for blistering
Sag Test[1]:
Method: ASTM D4400
Result: 9 mils minimum
Viscosity[1]: 90-100 KU

[1] *Standard test based on Certificate of Analysis*

continued on back

STEEL MASTER™ 9500 30% SILICONE ALKYD

SURFACE PREPARATION

WARNING! Removal of old paint by sanding, scraping or other means may generate dust or fumes that contain lead. Exposure to lead dust or fumes may cause brain damage or other adverse health effects, especially in children or pregnant women. Controlling exposure to lead or other hazardous substances requires the use of proper protective equipment, such as a properly fitted respirator (**NIOSH** approved) and proper containment and cleanup. For more information, call the National Lead Information Center at **1-800-424-LEAD** (in US) or contact your local health authority.

Iron & Steel- Minimum surface preparation is Hand Tool Clean per SSPC-SP2. Remove all oil and grease from surface by Solvent Cleaning per SSPC-SP1. For better performance, use Commercial Blast Cleaning per SSPC-SP6/NACE 3, blast clean all surfaces using a sharp, angular abrasive for optimum surface profile (2 mils). Prime any bare steel within 8 hours or before flash rusting occurs. Primer required.

Aluminum (Untreated) - Remove all oil, grease, dirt, oxide and other foreign material by Solvent Cleaning per SSPC-SP1. Primer required.

Galvanized Steel (Untreated) - Remove all oil, grease, dirt, oxide and other foreign material by Solvent Cleaning per SSPC-SP1. Allow to weather a minimum of six months prior to coating. When weathering is not possible or the surface has been treated with chromate or silicates, first solvent clean per SSPC-SP1 and apply a test patch. Allow paint to dry at least one week before testing adhesion. If adhesion is poor, brush blasting per SSPC-SP16 is necessary to remove these treatments. Rusty galvanizing requires a minimum of Hand Tool Cleaning per SSPC-SP2, prime the area the same day as cleaned. Primer required.

Concrete Block - Surface should be thoroughly clean and dry. Air, material and surface temperatures must be at least 50°F (10°C) before filling. Use Pro Industrial Heavy Duty Block Filler or Loxon Block Surfacer. The filler must be thoroughly dry before topcoating.
Masonry - All masonry must be free of dirt, oil, grease, loose paint, mortar, masonry dust, etc. Clean per SSPC-SP13/Nace 6/ ICRI No. 310.2R, CSP 1-3. Poured, troweled, or tilt-up concrete, plaster, mortar, etc. must be thoroughly cured at least 30 days at 75°F(23.9°C). Form release compounds and curing membranes must be removed by brush blasting. Brick must be allowed to weather for one year prior to surface preparation and painting. Weathered masonry and soft or porous cement board must be brush blasted or power tool cleaned to remove loosely adhering contamination and to get to a hard, firm surface. Apply one coat alkali resistant primer, following label recommendations. Primer required.

Previously Painted Surfaces - If in sound condition, clean the surface of all foreign material. Smooth, hard or glossy coatings and surfaces should be dulled by abrading the surface. Apply a test area, allowing paint to dry one week before testing adhesion. If adhesion is poor, additional abrasion of the surface and/or removal of the previous coating may be necessary. Retest surface for adhesion. If paint is peeling or badly weathered, clean surface to sound substrate and treat as a new surface as above. Recognize that any surface preparation short of total removal of the old coating may compromise the service length of the system.

Other substrates may or may not be appropriate. If a specific substrate is not listed above, consult your Sherwin-Williams representative for more information.

APPLICATION PROCEDURES

Apply paint at the recommended film thickness and spreading rate as indicated on front page. Application of coating above maximum or below minimum recommended spreading rate may adversely affect coating performance. Spreading rates are calculated on volume solids and do not include an application loss factor due to surface profile, roughness, or porosity of the surface, skill, and technique of the applicator, method of application, various surface irregularities, material lost during mixing, spillage, over thinning, climatic conditions, and excessive film build.

SAFETY PRECAUTIONS

Refer to the SDS sheets before use. **FOR PROFESSIONAL USE ONLY**
Published technical data and instructions are subject to change without notice. Contact your Sherwin-Williams representative for additional technical data and instructions.

PERFORMANCE TIPS

Mix paint thoroughly to a uniform consistency with slow speed power agitation prior to use.
Stripe coat crevices, welds, and sharp angles to prevent early failure in these areas.
When using spray application, use a 50% overlap with each pass of the gun to avoid holidays, bare areas, and pinholes. If necessary, cross spray at a right angle.
Do not use colorants formulated for interior use only when applying exterior.
No reduction of material is recommended, as this can affect film build, appearance, and adhesion.

APPLICATION

Refer to the SDS sheet before use
Temperature: 45°F(7°C) minimum
100°F(38°C) maximum
(Air, surface, and material)
At least 5°F above dew point
Relative humidity: 85% maximum

The following is a guide. Changes in pressures and tip sizes may be needed for proper spray characteristics. Always purge spray equipment before use with listed reducer. Any reduction must be compatible with the existing environmental and application conditions.

Reducer .....Not recommended
Clean Up .....Mineral Spirits, R1K4

Airless Spray
Pressure .....2700-3000 psi
Hose .....3/8" ID
Tip ....013-.017"
Filter .....100 mesh

Conventional Spray
Gun.....Binks 95
Fluid Nozzle..... 63B
AirNozzle 63PB
Atomization Pressure .....50-60 psi
Fluid Pressure .....10-20 psi

Brush .....Natural Bristle
Roll.1/4-3/8" woven with solvent resistant core

If specific application equipment is not listed above, equivalent equipment may be substituted.

In order to avoid blockage of spray equipment, clean equipment before use or before periods of extended downtime with compliant solvent.

CLEANUP INFORMATION

Clean spills, spatters & tools with compliant cleanup solvent. After cleaning, flush spray equipment with compliant cleanup solvent to prevent rusting of the equipment. Follow manufacturer's safety recommendations when using solvents.

HOTW	07/26/2017	B56W00311	16 307
HOTW	07/26/2017	B56T00304	12 300

The information and recommendations set forth in this Product Data Sheet are based upon tests conducted by or on behalf of The Sherwin-Williams Company. Such information and recommendations set forth herein are subject to change and pertain to the product offered at the time of publication. Consult your Sherwin-Williams representative or visit www.paintdocs.com to obtain the most current version of the PDS and/or an SDS.

SAFETY DATA SHEET

B50WZ1

Section 1. Identification

Product name : KEM KROMIK® Universal Metal Primer (VOC Comp.)
Off White

Product code : B50WZ1

Other means of identification : Not available.

Product type : Liquid.

Relevant identified uses of the substance or mixture and uses advised against

Not applicable.

Manufacturer : THE SHERWIN-WILLIAMS COMPANY
101 W. Prospect Avenue
Cleveland, OH 44115

Emergency telephone number of the company : US / Canada: (216) 566-2917
Mexico: SETIQ 01-800-00-214-00 / (52) 55-5559-1588 24 hours / 365 days a year

Product Information Telephone Number : US / Canada: (800) 524-5979
Mexico: Not Available

Regulatory Information Telephone Number : US / Canada: (216) 566-2902
Mexico: Not Available

Transportation Emergency Telephone Number : US / Canada: (800) 424-9300
Mexico: SETIQ 01-800-00-214-00 / (52) 55-5559-1588 24 hours / 365 days a year

Section 2. Hazards identification

OSHA/HCS status : This material is considered hazardous by the OSHA Hazard Communication Standard (29 CFR 1910.1200).

Classification of the substance or mixture : FLAMMABLE LIQUIDS - Category 3
SKIN CORROSION/IRRITATION - Category 2
SERIOUS EYE DAMAGE/ EYE IRRITATION - Category 2A
CARCINOGENICITY - Category 1A
TOXIC TO REPRODUCTION (Unborn child) - Category 2
SPECIFIC TARGET ORGAN TOXICITY (SINGLE EXPOSURE) (Respiratory tract irritation) - Category 3
SPECIFIC TARGET ORGAN TOXICITY (REPEATED EXPOSURE) (lungs) - Category 1
ASPIRATION HAZARD - Category 1

Percentage of the mixture consisting of ingredient(s) of unknown oral toxicity: 12.3%
Percentage of the mixture consisting of ingredient(s) of unknown dermal toxicity: 21.6%
Percentage of the mixture consisting of ingredient(s) of unknown inhalation toxicity: 14.7%

GHS label elements

Hazard pictograms :

Signal word : Danger

Section 2. Hazards identification

Hazard statements : Flammable liquid and vapor.
Causes serious eye irritation.
Causes skin irritation.
May cause cancer.
Suspected of damaging the unborn child.
May be fatal if swallowed and enters airways.
May cause respiratory irritation.
Causes damage to organs through prolonged or repeated exposure. (lungs)

Precautionary statements

Prevention : Obtain special instructions before use. Do not handle until all safety precautions have been read and understood. Wear protective gloves. Wear eye or face protection. Wear protective clothing. Keep away from heat, hot surfaces, sparks, open flames and other ignition sources. No smoking. Use explosion-proof electrical, ventilating, lighting and all material-handling equipment. Use only non-sparking tools. Take precautionary measures against static discharge. Keep container tightly closed. Use only outdoors or in a well-ventilated area. Do not breathe vapor. Do not eat, drink or smoke when using this product. Wash hands thoroughly after handling.

Response : Get medical attention if you feel unwell. IF exposed or concerned: Get medical attention. IF INHALED: Remove person to fresh air and keep comfortable for breathing. Call a POISON CENTER or physician if you feel unwell. IF SWALLOWED: Immediately call a POISON CENTER or physician. Do NOT induce vomiting. IF ON SKIN (or hair): Take off immediately all contaminated clothing. Rinse skin with water or shower. IF ON SKIN: Wash with plenty of soap and water. Take off contaminated clothing and wash it before reuse. If skin irritation occurs: Get medical attention. IF IN EYES: Rinse cautiously with water for several minutes. Remove contact lenses, if present and easy to do. Continue rinsing. If eye irritation persists: Get medical attention.

Storage : Store locked up. Store in a well-ventilated place. Keep cool.

Disposal : Dispose of contents and container in accordance with all local, regional, national and international regulations.

Supplemental label elements

DELAYED EFFECTS FROM LONG TERM OVEREXPOSURE. Contains solvents which can cause permanent brain and nervous system damage. Intentional misuse by deliberately concentrating and inhaling the contents can be harmful or fatal. WARNING: This product contains chemicals known to the State of California to cause cancer and birth defects or other reproductive harm. FOR INDUSTRIAL USE ONLY. Adequate ventilation required when sanding or abrading the dried film. If Adequate ventilation cannot be provided wear an approved particulate respirator (NIOSH approved). Follow respirator manufacturer's directions for respirator use. DELAYED EFFECTS FROM LONG TERM OVEREXPOSURE. Abrading or sanding of the dry film may release Crystalline Silica which has been shown to cause lung damage and cancer under long term exposure.

Please refer to the SDS for additional information. Keep out of reach of children. Do not transfer contents to other containers for storage.

Hazards not otherwise classified : DANGER: Rags, steel wool, other waste soaked with this product, and sanding residue may spontaneously catch fire if improperly discarded. Immediately place rags, steel wool, other waste soaked with this product, and sanding residue in a sealed, water-filled, metal container. Dispose of in accordance with local fire regulations.

Section 3. Composition/information on ingredients

Substance/mixture : Mixture

Other means of identification : Not available.

CAS number/other identifiers

Section 3. Composition/information on ingredients

Ingredient name	% by weight	CAS number
Calcium Carbonate	38.13	471-34-1
Xylene	10.41	1330-20-7
Titanium Dioxide	10.01	13463-67-7
Talc	3.91	14807-96-6
1,2,4-Trimethylbenzene	3.7	95-63-6
Toluene	3.15	108-88-3
Light Aromatic Hydrocarbons	2.46	64742-95-6
Ethylbenzene	1.84	100-41-4
Cumene	0.49	98-82-8
Crystalline Silica, respirable powder	0.21	14808-60-7
Methyl Isobutyl Ketone	0.14	108-10-1

Any concentration shown as a range is to protect confidentiality or is due to batch variation.

There are no additional ingredients present which, within the current knowledge of the supplier and in the concentrations applicable, are classified as hazardous to health and hence require reporting in this section.

Occupational exposure limits, if available, are listed in Section 8.

Section 4. First aid measures

Description of necessary first aid measures

Eye contact : Immediately flush eyes with plenty of water, occasionally lifting the upper and lower eyelids. Check for and remove any contact lenses. Continue to rinse for at least 10 minutes. Get medical attention.

Inhalation : Remove victim to fresh air and keep at rest in a position comfortable for breathing. If it is suspected that fumes are still present, the rescuer should wear an appropriate mask or self-contained breathing apparatus. If not breathing, if breathing is irregular or if respiratory arrest occurs, provide artificial respiration or oxygen by trained personnel. It may be dangerous to the person providing aid to give mouth-to-mouth resuscitation. Get medical attention. If necessary, call a poison center or physician. If unconscious, place in recovery position and get medical attention immediately. Maintain an open airway. Loosen tight clothing such as a collar, tie, belt or waistband.

Skin contact : Flush contaminated skin with plenty of water. Remove contaminated clothing and shoes. Wash contaminated clothing thoroughly with water before removing it, or wear gloves. Continue to rinse for at least 10 minutes. Get medical attention. Wash clothing before reuse. Clean shoes thoroughly before reuse.

Ingestion : Get medical attention immediately. Call a poison center or physician. Wash out mouth with water. Remove dentures if any. Remove victim to fresh air and keep at rest in a position comfortable for breathing. If material has been swallowed and the exposed person is conscious, give small quantities of water to drink. Stop if the exposed person feels sick as vomiting may be dangerous. Aspiration hazard if swallowed. Can enter lungs and cause damage. Do not induce vomiting. If vomiting occurs, the head should be kept low so that vomit does not enter the lungs. Never give anything by mouth to an unconscious person. If unconscious, place in recovery position and get medical attention immediately. Maintain an open airway. Loosen tight clothing such as a collar, tie, belt or waistband.

Most important symptoms/effects, acute and delayed

Potential acute health effects

Eye contact : Causes serious eye irritation.

Inhalation : May cause respiratory irritation.

Skin contact : Causes skin irritation.

Ingestion : May be fatal if swallowed and enters airways.

Over-exposure signs/symptoms

Section 4. First aid measures

Eye contact : Adverse symptoms may include the following:
pain or irritation
watering
redness

Inhalation : Adverse symptoms may include the following:
respiratory tract irritation
coughing
reduced fetal weight
increase in fetal deaths
skeletal malformations

Skin contact : Adverse symptoms may include the following:
irritation
redness
reduced fetal weight
increase in fetal deaths
skeletal malformations

Ingestion : Adverse symptoms may include the following:
nausea or vomiting
reduced fetal weight
increase in fetal deaths
skeletal malformations

Indication of immediate medical attention and special treatment needed, if necessary

Notes to physician : Treat symptomatically. Contact poison treatment specialist immediately if large quantities have been ingested or inhaled.

Specific treatments : No specific treatment.

Protection of first-aiders : No action shall be taken involving any personal risk or without suitable training. If it is suspected that fumes are still present, the rescuer should wear an appropriate mask or self-contained breathing apparatus. It may be dangerous to the person providing aid to give mouth-to-mouth resuscitation. Wash contaminated clothing thoroughly with water before removing it, or wear gloves.

See toxicological information (Section 11)

Section 5. Fire-fighting measures

Extinguishing media

Suitable extinguishing media : Use dry chemical, CO_2, water spray (fog) or foam.

Unsuitable extinguishing media : Do not use water jet.

Specific hazards arising from the chemical : Flammable liquid and vapor. Runoff to sewer may create fire or explosion hazard. In a fire or if heated, a pressure increase will occur and the container may burst, with the risk of a subsequent explosion. The vapor/gas is heavier than air and will spread along the ground. Vapors may accumulate in low or confined areas or travel a considerable distance to a source of ignition and flash back.

Hazardous thermal decomposition products : Decomposition products may include the following materials:
carbon dioxide
carbon monoxide
phosphorus oxides
metal oxide/oxides

Section 5. Fire-fighting measures

Special protective actions for fire-fighters : Promptly isolate the scene by removing all persons from the vicinity of the incident if there is a fire. No action shall be taken involving any personal risk or without suitable training. Move containers from fire area if this can be done without risk. Use water spray to keep fire-exposed containers cool.

Special protective equipment for fire-fighters : Fire-fighters should wear appropriate protective equipment and self-contained breathing apparatus (SCBA) with a full face-piece operated in positive pressure mode.

Section 6. Accidental release measures

Personal precautions, protective equipment and emergency procedures

For non-emergency personnel : No action shall be taken involving any personal risk or without suitable training. Evacuate surrounding areas. Keep unnecessary and unprotected personnel from entering. Do not touch or walk through spilled material. Shut off all ignition sources. No flares, smoking or flames in hazard area. Avoid breathing vapor or mist. Provide adequate ventilation. Wear appropriate respirator when ventilation is inadequate. Put on appropriate personal protective equipment.

For emergency responders : If specialized clothing is required to deal with the spillage, take note of any information in Section 8 on suitable and unsuitable materials. See also the information in "For non-emergency personnel".

Environmental precautions : Avoid dispersal of spilled material and runoff and contact with soil, waterways, drains and sewers. Inform the relevant authorities if the product has caused environmental pollution (sewers, waterways, soil or air).

Methods and materials for containment and cleaning up

Small spill : Stop leak if without risk. Move containers from spill area. Use spark-proof tools and explosion-proof equipment. Dilute with water and mop up if water-soluble. Alternatively, or if water-insoluble, absorb with an inert dry material and place in an appropriate waste disposal container. Dispose of via a licensed waste disposal contractor.

Large spill : Stop leak if without risk. Move containers from spill area. Use spark-proof tools and explosion-proof equipment. Approach release from upwind. Prevent entry into sewers, water courses, basements or confined areas. Wash spillages into an effluent treatment plant or proceed as follows. Contain and collect spillage with non-combustible, absorbent material e.g. sand, earth, vermiculite or diatomaceous earth and place in container for disposal according to local regulations (see Section 13). Dispose of via a licensed waste disposal contractor. Contaminated absorbent material may pose the same hazard as the spilled product. Note: see Section 1 for emergency contact information and Section 13 for waste disposal.

Section 7. Handling and storage

Precautions for safe handling

Protective measures : Put on appropriate personal protective equipment (see Section 8). Avoid exposure - obtain special instructions before use. Avoid exposure during pregnancy. Do not handle until all safety precautions have been read and understood. Do not get in eyes or on skin or clothing. Do not breathe vapor or mist. Do not swallow. Use only with adequate ventilation. Wear appropriate respirator when ventilation is inadequate. Do not enter storage areas and confined spaces unless adequately ventilated. Keep in the original container or an approved alternative made from a compatible material, kept tightly closed when not in use. Store and use away from heat, sparks, open flame or any other ignition source. Use explosion-proof electrical (ventilating, lighting and material handling) equipment. Use only non-sparking tools. Take precautionary measures against electrostatic discharges. Empty containers retain product residue and can be hazardous. Do not reuse container.

Section 7. Handling and storage

Advice on general occupational hygiene : Eating, drinking and smoking should be prohibited in areas where this material is handled, stored and processed. Workers should wash hands and face before eating, drinking and smoking. Remove contaminated clothing and protective equipment before entering eating areas. See also Section 8 for additional information on hygiene measures.

Conditions for safe storage, including any incompatibilities : Store in accordance with local regulations. Store in a segregated and approved area. Store in original container protected from direct sunlight in a dry, cool and well-ventilated area, away from incompatible materials (see Section 10) and food and drink. Store locked up. Eliminate all ignition sources. Separate from oxidizing materials. Keep container tightly closed and sealed until ready for use. Containers that have been opened must be carefully resealed and kept upright to prevent leakage. Do not store in unlabeled containers. Use appropriate containment to avoid environmental contamination. See Section 10 for incompatible materials before handling or use.

Section 8. Exposure controls/personal protection

Control parameters

Occupational exposure limits (OSHA United States)

Ingredient name	Exposure limits
Calcium Carbonate	**NIOSH REL (United States, 10/2016).** TWA: 5 mg/m³ 10 hours. Form: Respirable fraction TWA: 10 mg/m³ 10 hours. Form: Total
Xylene	**ACGIH TLV (United States, 3/2016).** TWA: 100 ppm 8 hours. TWA: 434 mg/m³ 8 hours. STEL: 150 ppm 15 minutes. STEL: 651 mg/m³ 15 minutes. **OSHA PEL (United States, 6/2016).** TWA: 100 ppm 8 hours. TWA: 435 mg/m³ 8 hours.
Titanium Dioxide	**ACGIH TLV (United States, 3/2016).** TWA: 10 mg/m³ 8 hours. **OSHA PEL (United States, 6/2016).** TWA: 15 mg/m³ 8 hours. Form: Total dust
Talc	**NIOSH REL (United States, 10/2016).** TWA: 2 mg/m³ 10 hours. Form: Respirable fraction **ACGIH TLV (United States, 3/2016).** TWA: 2 mg/m³ 8 hours. Form: Respirable fraction
1,2,4-Trimethylbenzene	**ACGIH TLV (United States, 3/2016).** TWA: 25 ppm 8 hours. TWA: 123 mg/m³ 8 hours. **NIOSH REL (United States, 10/2016).** TWA: 25 ppm 10 hours. TWA: 125 mg/m³ 10 hours.
Toluene	**OSHA PEL Z2 (United States, 2/2013).** TWA: 200 ppm 8 hours. CEIL: 300 ppm AMP: 500 ppm 10 minutes. **NIOSH REL (United States, 10/2016).** TWA: 100 ppm 10 hours. TWA: 375 mg/m³ 10 hours. STEL: 150 ppm 15 minutes. STEL: 560 mg/m³ 15 minutes. **ACGIH TLV (United States, 3/2016).**

Section 8. Exposure controls/personal protection

	TWA: 20 ppm 8 hours.
Light Aromatic Hydrocarbons	None.
Ethylbenzene	**ACGIH TLV (United States, 3/2016).** TWA: 20 ppm 8 hours. **NIOSH REL (United States, 10/2016).** TWA: 100 ppm 10 hours. TWA: 435 mg/m³ 10 hours. STEL: 125 ppm 15 minutes. STEL: 545 mg/m³ 15 minutes. **OSHA PEL (United States, 6/2016).** TWA: 100 ppm 8 hours. TWA: 435 mg/m³ 8 hours.
Cumene	**ACGIH TLV (United States, 3/2016).** TWA: 50 ppm 8 hours. **NIOSH REL (United States, 10/2016).** **Absorbed through skin.** TWA: 50 ppm 10 hours. TWA: 245 mg/m³ 10 hours. **OSHA PEL (United States, 6/2016).** **Absorbed through skin.** TWA: 50 ppm 8 hours. TWA: 245 mg/m³ 8 hours.
Crystalline Silica, respirable powder	**OSHA PEL Z3 (United States, 6/2016).** TWA: 250 mppcf / (%SiO2+5) 8 hours. Form: Respirable TWA: 10 mg/m³ / (%SiO2+2) 8 hours. Form: Respirable **OSHA PEL (United States, 6/2016).** TWA: 50 µg/m³ 8 hours. Form: Respirable dust **ACGIH TLV (United States, 3/2016).** TWA: 0.025 mg/m³ 8 hours. Form: Respirable fraction **NIOSH REL (United States, 10/2016).** TWA: 0.05 mg/m³ 10 hours. Form: respirable dust
Methyl Isobutyl Ketone	**ACGIH TLV (United States, 3/2016).** TWA: 20 ppm 8 hours. STEL: 75 ppm 15 minutes. **NIOSH REL (United States, 10/2016).** TWA: 50 ppm 10 hours. TWA: 205 mg/m³ 10 hours. STEL: 75 ppm 15 minutes. STEL: 300 mg/m³ 15 minutes. **OSHA PEL (United States, 6/2016).** TWA: 100 ppm 8 hours. TWA: 410 mg/m³ 8 hours.

Occupational exposure limits (Canada)

Ingredient name	Exposure limits
Xylene	**CA Alberta Provincial (Canada, 4/2009).** 8 hrs OEL: 100 ppm 8 hours. 15 min OEL: 651 mg/m³ 15 minutes. 15 min OEL: 150 ppm 15 minutes. 8 hrs OEL: 434 mg/m³ 8 hours. **CA British Columbia Provincial (Canada, 7/2016).**

	TWA: 100 ppm 8 hours. STEL: 150 ppm 15 minutes. **CA Québec Provincial (Canada, 1/2014).** TWAEV: 100 ppm 8 hours. TWAEV: 434 mg/m³ 8 hours. STEV: 150 ppm 15 minutes. STEV: 651 mg/m³ 15 minutes. **CA Ontario Provincial (Canada, 7/2015).** STEL: 150 ppm 15 minutes. TWA: 100 ppm 8 hours. **CA Saskatchewan Provincial (Canada, 7/2013).** STEL: 150 ppm 15 minutes. TWA: 100 ppm 8 hours.
1,2,4-Trimethylbenzene	**CA Alberta Provincial (Canada, 4/2009).** 8 hrs OEL: 123 mg/m³ 8 hours. 8 hrs OEL: 25 ppm 8 hours. **CA British Columbia Provincial (Canada, 7/2016).** TWA: 25 ppm 8 hours. **CA Québec Provincial (Canada, 1/2014).** TWAEV: 25 ppm 8 hours. TWAEV: 123 mg/m³ 8 hours. **CA Ontario Provincial (Canada, 7/2015).** TWA: 25 ppm 8 hours. **CA Saskatchewan Provincial (Canada, 7/2013).** STEL: 30 ppm 15 minutes. TWA: 25 ppm 8 hours.
toluene	**CA Alberta Provincial (Canada, 4/2009). Absorbed through skin.** 8 hrs OEL: 50 ppm 8 hours. 8 hrs OEL: 188 mg/m³ 8 hours. **CA British Columbia Provincial (Canada, 7/2016).** TWA: 20 ppm 8 hours. **CA Ontario Provincial (Canada, 7/2015).** TWA: 20 ppm 8 hours. **CA Québec Provincial (Canada, 1/2014). Absorbed through skin.** TWAEV: 50 ppm 8 hours. TWAEV: 188 mg/m³ 8 hours. **CA Saskatchewan Provincial (Canada, 7/2013). Absorbed through skin.** STEL: 60 ppm 15 minutes. TWA: 50 ppm 8 hours.
Ethylbenzene	**CA Alberta Provincial (Canada, 4/2009).** 8 hrs OEL: 100 ppm 8 hours. 8 hrs OEL: 434 mg/m³ 8 hours. 15 min OEL: 543 mg/m³ 15 minutes. 15 min OEL: 125 ppm 15 minutes. **CA British Columbia Provincial (Canada, 7/2016).** TWA: 20 ppm 8 hours. **CA Ontario Provincial (Canada, 7/2015).** TWA: 20 ppm 8 hours. **CA Québec Provincial (Canada, 1/2014).** TWAEV: 100 ppm 8 hours. TWAEV: 434 mg/m³ 8 hours.

	STEV: 125 ppm 15 minutes. STEV: 543 mg/m³ 15 minutes. **CA Saskatchewan Provincial (Canada, 7/2013).** STEL: 125 ppm 15 minutes. TWA: 100 ppm 8 hours.

Occupational exposure limits (Mexico)

Ingredient name	Exposure limits
Xylene	**NOM-010-STPS-2014 (Mexico, 4/2016).** STEL: 150 ppm 15 minutes. TWA: 100 ppm 8 hours.
1,2,4-Trimethylbenzene	**NOM-010-STPS-2014 (Mexico, 4/2016).** TWA: 25 ppm 8 hours.
toluene	**NOM-010-STPS-2014 (Mexico, 4/2016).** TWA: 20 ppm 8 hours.
Ethylbenzene	**NOM-010-STPS-2014 (Mexico, 4/2016).** TWA: 20 ppm 8 hours.

Appropriate engineering controls : Use only with adequate ventilation. Use process enclosures, local exhaust ventilation or other engineering controls to keep worker exposure to airborne contaminants below any recommended or statutory limits. The engineering controls also need to keep gas, vapor or dust concentrations below any lower explosive limits. Use explosion-proof ventilation equipment.

Environmental exposure controls : Emissions from ventilation or work process equipment should be checked to ensure they comply with the requirements of environmental protection legislation. In some cases, fume scrubbers, filters or engineering modifications to the process equipment will be necessary to reduce emissions to acceptable levels.

Individual protection measures

Hygiene measures : Wash hands, forearms and face thoroughly after handling chemical products, before eating, smoking and using the lavatory and at the end of the working period. Appropriate techniques should be used to remove potentially contaminated clothing. Wash contaminated clothing before reusing. Ensure that eyewash stations and safety showers are close to the workstation location.

Eye/face protection : Safety eyewear complying with an approved standard should be used when a risk assessment indicates this is necessary to avoid exposure to liquid splashes, mists, gases or dusts. If contact is possible, the following protection should be worn, unless the assessment indicates a higher degree of protection: chemical splash goggles.

Skin protection

Hand protection : Chemical-resistant, impervious gloves complying with an approved standard should be worn at all times when handling chemical products if a risk assessment indicates this is necessary. Considering the parameters specified by the glove manufacturer, check during use that the gloves are still retaining their protective properties. It should be noted that the time to breakthrough for any glove material may be different for different glove manufacturers. In the case of mixtures, consisting of several substances, the protection time of the gloves cannot be accurately estimated.

Body protection : Personal protective equipment for the body should be selected based on the task being performed and the risks involved and should be approved by a specialist before handling this product. When there is a risk of ignition from static electricity, wear anti-static protective clothing. For the greatest protection from static discharges, clothing should include anti-static overalls, boots and gloves.

Other skin protection : Appropriate footwear and any additional skin protection measures should be selected based on the task being performed and the risks involved and should be approved by a specialist before handling this product.

Section 8. Exposure controls/personal protection

Respiratory protection : Based on the hazard and potential for exposure, select a respirator that meets the appropriate standard or certification. Respirators must be used according to a respiratory protection program to ensure proper fitting, training, and other important aspects of use.

Section 9. Physical and chemical properties

Appearance

Physical state : Liquid.

Color : Not available.

Odor : Not available.

Odor threshold : Not available.

pH : Not available.

Melting point : Not available.

Boiling point : 105°C (221°F)

Flash point : Closed cup: 27°C (80.6°F) [Pensky-Martens Closed Cup]

Evaporation rate : 2 (butyl acetate = 1)

Flammability (solid, gas) : Not available.

Lower and upper explosive (flammable) limits : Lower: 0.7%
Upper: 7%

Vapor pressure : 2.9 kPa (22 mm Hg) [at 20°C]

Vapor density : 3.1 [Air = 1]

Relative density : 1.54

Solubility : Not available.

Partition coefficient: n-octanol/water : Not available.

Auto-ignition temperature : Not available.

Decomposition temperature : Not available.

Viscosity : Kinematic (40°C (104°F)): <0.205 cm^2/s (<20.5 cSt)

Molecular weight : Not applicable.

Aerosol product

Heat of combustion : 9.344 kJ/g

Section 10. Stability and reactivity

Reactivity : No specific test data related to reactivity available for this product or its ingredients.

Chemical stability : The product is stable.

Possibility of hazardous reactions : Under normal conditions of storage and use, hazardous reactions will not occur.

Conditions to avoid : Avoid all possible sources of ignition (spark or flame). Do not pressurize, cut, weld, braze, solder, drill, grind or expose containers to heat or sources of ignition. Do not allow vapor to accumulate in low or confined areas.

Incompatible materials : Reactive or incompatible with the following materials:
oxidizing materials

Hazardous decomposition products : Under normal conditions of storage and use, hazardous decomposition products should not be produced.

Section 11. Toxicological information

Information on toxicological effects

Acute toxicity

Product/ingredient name	Result	Species	Dose	Exposure
Calcium Carbonate	LD50 Oral	Rat	6450 mg/kg	-
Xylene	LC50 Inhalation Gas.	Rat	5000 ppm	4 hours
	LD50 Oral	Rat	4300 mg/kg	-
1,2,4-Trimethylbenzene	LC50 Inhalation Vapor	Rat	18000 mg/m³	4 hours
	LD50 Oral	Rat	5 g/kg	-
Toluene	LC50 Inhalation Vapor	Rat	49 g/m³	4 hours
	LD50 Oral	Rat	636 mg/kg	-
Light Aromatic Hydrocarbons	LD50 Oral	Rat	8400 mg/kg	-
Ethylbenzene	LD50 Dermal	Rabbit	>5000 mg/kg	-
	LD50 Oral	Rat	3500 mg/kg	-
Cumene	LC50 Inhalation Vapor	Rat	39000 mg/m³	4 hours
	LD50 Oral	Rat	1400 mg/kg	-
Methyl Isobutyl Ketone	LD50 Oral	Rat	2080 mg/kg	-

Irritation/Corrosion

Product/ingredient name	Result	Species	Score	Exposure	Observation
Calcium Carbonate	Eyes - Severe irritant	Rabbit	-	24 hours 750 Micrograms	-
	Skin - Moderate irritant	Rabbit	-	24 hours 500 milligrams	-
Xylene	Eyes - Mild irritant	Rabbit	-	87 milligrams	-
	Eyes - Severe irritant	Rabbit	-	24 hours 5 milligrams	-
	Skin - Mild irritant	Rat	-	8 hours 60 microliters	-
	Skin - Moderate irritant	Rabbit	-	24 hours 500 milligrams	-
	Skin - Moderate irritant	Rabbit	-	100 Percent	-
Titanium Dioxide	Skin - Mild irritant	Human	-	72 hours 300 Micrograms Intermittent	-
Talc	Skin - Mild irritant	Human	-	72 hours 300 Micrograms Intermittent	-
Toluene	Eyes - Mild irritant	Rabbit	-	0.5 minutes 100 milligrams	-
	Eyes - Mild irritant	Rabbit	-	870 Micrograms	-
	Eyes - Severe irritant	Rabbit	-	24 hours 2 milligrams	-
	Skin - Mild irritant	Pig	-	24 hours 250 microliters	-
	Skin - Mild irritant	Rabbit	-	435 milligrams	-
	Skin - Moderate irritant	Rabbit	-	24 hours 20 milligrams	-
	Skin - Moderate irritant	Rabbit	-	500 milligrams	-
Light Aromatic Hydrocarbons	Eyes - Mild irritant	Rabbit	-	24 hours 100 microliters	-
Ethylbenzene	Eyes - Severe irritant	Rabbit	-	500 milligrams	-
	Skin - Mild irritant	Rabbit	-	24 hours 15 milligrams	-

Cumene	Eyes - Mild irritant	Rabbit	-	24 hours 500 milligrams	-
	Eyes - Mild irritant	Rabbit	-	86 milligrams	-
	Skin - Mild irritant	Rabbit	-	24 hours 10 milligrams	-
	Skin - Moderate irritant	Rabbit	-	24 hours 100 milligrams	-
Methyl Isobutyl Ketone	Eyes - Moderate irritant	Rabbit	-	24 hours 100 microliters	-
	Eyes - Severe irritant	Rabbit	-	40 milligrams	-
	Skin - Mild irritant	Rabbit	-	24 hours 500 milligrams	-

Sensitization

Not available.

Mutagenicity

Not available.

Carcinogenicity

Not available.

Classification

Product/ingredient name	OSHA	IARC	NTP
Xylene	-	3	-
Titanium Dioxide	-	2B	-
Talc	-	3	-
Toluene	-	3	-
Ethylbenzene	-	2B	-
Cumene	-	2B	Reasonably anticipated to be a human carcinogen.
Crystalline Silica, respirable powder	-	1	Known to be a human carcinogen.
Methyl Isobutyl Ketone	-	2B	-

Reproductive toxicity

Not available.

Teratogenicity

Not available.

Specific target organ toxicity (single exposure)

Name	Category	Route of exposure	Target organs
Xylene	Category 3	Not applicable.	Respiratory tract irritation
1,2,4-Trimethylbenzene	Category 3	Not applicable.	Respiratory tract irritation
Toluene	Category 3	Not applicable.	Respiratory tract irritation and Narcotic effects
Light Aromatic Hydrocarbons	Category 3	Not applicable.	Respiratory tract irritation and Narcotic effects
Ethylbenzene	Category 3	Not applicable.	Respiratory tract irritation and Narcotic effects
Cumene	Category 3	Not applicable.	Respiratory tract irritation and Narcotic effects

Methyl Isobutyl Ketone	Category 3	Not applicable.	Respiratory tract irritation and Narcotic effects

Specific target organ toxicity (repeated exposure)

Name	Category	Route of exposure	Target organs
Xylene	Category 2	Not determined	Not determined
Talc	Category 1	Inhalation	lungs
Toluene	Category 2	Not determined	Not determined
Light Aromatic Hydrocarbons	Category 2	Not determined	Not determined
Ethylbenzene	Category 2	Not determined	Not determined
Cumene	Category 2	Not determined	Not determined
Crystalline Silica, respirable powder	Category 1	Inhalation	Not determined
Methyl Isobutyl Ketone	Category 2	Not determined	Not determined

Aspiration hazard

Name	Result
Xylene	ASPIRATION HAZARD - Category 1
1,2,4-Trimethylbenzene	ASPIRATION HAZARD - Category 1
Toluene	ASPIRATION HAZARD - Category 1
Light Aromatic Hydrocarbons	ASPIRATION HAZARD - Category 1
Ethylbenzene	ASPIRATION HAZARD - Category 1
Cumene	ASPIRATION HAZARD - Category 1

Information on the likely routes of exposure : Not available.

Potential acute health effects

Eye contact : Causes serious eye irritation.

Inhalation : May cause respiratory irritation.

Skin contact : Causes skin irritation.

Ingestion : May be fatal if swallowed and enters airways.

Symptoms related to the physical, chemical and toxicological characteristics

Eye contact : Adverse symptoms may include the following:
pain or irritation
watering
redness

Inhalation : Adverse symptoms may include the following:
respiratory tract irritation
coughing
reduced fetal weight
increase in fetal deaths
skeletal malformations

Skin contact : Adverse symptoms may include the following:
irritation
redness
reduced fetal weight
increase in fetal deaths
skeletal malformations

Ingestion : Adverse symptoms may include the following:
nausea or vomiting
reduced fetal weight
increase in fetal deaths
skeletal malformations

Delayed and immediate effects and also chronic effects from short and long term exposure

Short term exposure

Potential immediate effects : Not available.

Potential delayed effects : Not available.

Long term exposure

Potential immediate effects : Not available.

Potential delayed effects : Not available.

Potential chronic health effects

Not available.

General : Causes damage to organs through prolonged or repeated exposure.

Carcinogenicity : May cause cancer. Risk of cancer depends on duration and level of exposure.

Mutagenicity : No known significant effects or critical hazards.

Teratogenicity : Suspected of damaging the unborn child.

Developmental effects : No known significant effects or critical hazards.

Fertility effects : No known significant effects or critical hazards.

Numerical measures of toxicity

Acute toxicity estimates

Route	ATE value
Oral	10161.2 mg/kg
Dermal	8291.3 mg/kg
Inhalation (gases)	40976.4 ppm
Inhalation (vapors)	229.2 mg/l

Section 12. Ecological information

Toxicity

Product/ingredient name	Result	Species	Exposure
Calcium Carbonate	Acute LC50 >56000 ppm Fresh water	Fish - Gambusia affinis - Adult	96 hours
	Chronic NOEC 61 mg/g Fresh water	Fish - Oncorhynchus mykiss - Juvenile (Fledgling, Hatchling, Weanling)	28 days
Xylene	Acute LC50 8500 µg/l Marine water	Crustaceans - Palaemonetes pugio	48 hours
	Acute LC50 13400 µg/l Fresh water	Fish - Pimephales promelas	96 hours
Titanium Dioxide	Acute LC50 >1000000 µg/l Marine water	Fish - Fundulus heteroclitus	96 hours
1,2,4-Trimethylbenzene	Acute LC50 4910 µg/l Marine water	Crustaceans - Elasmopus pectenicrus - Adult	48 hours
	Acute LC50 7720 µg/l Fresh water	Fish - Pimephales promelas	96 hours
Toluene	Acute EC50 12500 µg/l Fresh water	Algae - Pseudokirchneriella subcapitata	72 hours
	Acute EC50 11600 µg/l Fresh water	Crustaceans - Gammarus pseudolimnaeus - Adult	48 hours
	Acute EC50 6000 µg/l Fresh water	Daphnia - Daphnia magna - Juvenile (Fledgling, Hatchling, Weanling)	48 hours
	Acute LC50 5500 µg/l Fresh water	Fish - Oncorhynchus kisutch - Fry	96 hours
	Chronic NOEC 1000 µg/l Fresh water	Daphnia - Daphnia magna	21 days
Ethylbenzene	Acute EC50 4600 µg/l Fresh water	Algae - Pseudokirchneriella subcapitata	72 hours

Section 12. Ecological information

	Acute EC50 3600 µg/l Fresh water	Algae - Pseudokirchneriella subcapitata	96 hours
	Acute EC50 6530 µg/l Fresh water	Crustaceans - Artemia sp. - Nauplii	48 hours
	Acute EC50 2930 µg/l Fresh water	Daphnia - Daphnia magna - Neonate	48 hours
	Acute LC50 4200 µg/l Fresh water	Fish - Oncorhynchus mykiss	96 hours
Cumene	Acute EC50 2600 µg/l Fresh water	Algae - Pseudokirchneriella subcapitata	72 hours
	Acute EC50 7400 µg/l Fresh water	Crustaceans - Artemia sp. - Nauplii	48 hours
	Acute EC50 10600 µg/l Fresh water	Daphnia - Daphnia magna - Neonate	48 hours
	Acute LC50 2700 µg/l Fresh water	Fish - Oncorhynchus mykiss	96 hours
Methyl Isobutyl Ketone	Acute LC50 505000 µg/l Fresh water	Fish - Pimephales promelas	96 hours
	Chronic NOEC 78 mg/l Fresh water	Daphnia - Daphnia magna	21 days
	Chronic NOEC 168 mg/l Fresh water	Fish - Pimephales promelas - Embryo	33 days

Persistence and degradability

Product/ingredient name	Aquatic half-life	Photolysis	Biodegradability
Xylene	-	-	Readily
Toluene	-	-	Readily
Light Aromatic Hydrocarbons	-	-	Readily
Ethylbenzene	-	-	Readily
Methyl Isobutyl Ketone	-	-	Readily

Bioaccumulative potential

Product/ingredient name	$LogP_{ow}$	BCF	Potential
Xylene	-	8.1 to 25.9	low
1,2,4-Trimethylbenzene	-	243	low
Toluene	-	90	low
Light Aromatic Hydrocarbons	-	10 to 2500	high
Cumene	-	35.48	low

Mobility in soil

Soil/water partition coefficient (K_{OC}) : Not available.

Other adverse effects : No known significant effects or critical hazards.

Section 13. Disposal considerations

Disposal methods : The generation of waste should be avoided or minimized wherever possible. Disposal of this product, solutions and any by-products should at all times comply with the requirements of environmental protection and waste disposal legislation and any regional local authority requirements. Dispose of surplus and non-recyclable products via a licensed waste disposal contractor. Waste should not be disposed of untreated to the sewer unless fully compliant with the requirements of all authorities with jurisdiction. Waste packaging should be recycled. Incineration or landfill should only be considered when recycling is not feasible. This material and its container must be disposed of in a safe way. Care should be taken when handling emptied containers that have not been cleaned or rinsed out. Empty containers or liners may retain some product residues. Vapor from product residues may create a highly flammable or explosive atmosphere inside the container. Do not cut, weld or grind used containers unless they have been

Section 13. Disposal considerations

cleaned thoroughly internally. Avoid dispersal of spilled material and runoff and contact with soil, waterways, drains and sewers.

Section 14. Transport information

	DOT Classification	TDG Classification	Mexico Classification	IATA	IMDG
UN number	UN1263	UN1263	UN1263	UN1263	UN1263
UN proper shipping name	PAINT	PAINT	PAINT	PAINT	PAINT
Transport hazard class(es)	3	3	3	3	3
Packing group	III	III	III	III	III
Environmental hazards	No.	No.	No.	No.	No.
Additional information	- **ERG No.** 128	Product classified as per the following sections of the Transportation of Dangerous Goods Regulations: 2. 18-2.19 (Class 3). **ERG No.** 128	- **ERG No.** 128	-	**Emergency schedules** F-E, S-E

Special precautions for user : Multi-modal shipping descriptions are provided for informational purposes and do not consider container sizes. The presence of a shipping description for a particular mode of transport (sea, air, etc.), does not indicate that the product is packaged suitably for that mode of transport. All packaging must be reviewed for suitability prior to shipment, and compliance with the applicable regulations is the sole responsibility of the person offering the product for transport. People loading and unloading dangerous goods must be trained on all of the risks deriving from the substances and on all actions in case of emergency situations.

Transport in bulk according to Annex II of MARPOL and the IBC Code : Not available.

Proper shipping name : Not available.

Ship type : Not available.

Pollution category : Not available.

Section 15. Regulatory information

SARA 313

SARA 313 (40 CFR 372.45) supplier notification can be found on the Environmental Data Sheet.

California Prop. 65

WARNING: This product contains chemicals known to the State of California to cause cancer and birth defects or other reproductive harm.

Section 16. Other information

Hazardous Material Information System (U.S.A.)

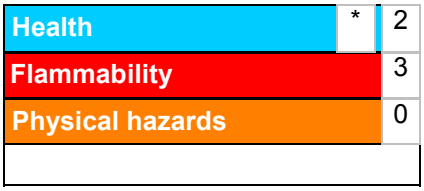

The customer is responsible for determining the PPE code for this material. For more information on HMIS® Personal Protective Equipment (PPE) codes, consult the HMIS® Implementation Manual.

Caution: HMIS® ratings are based on a 0-4 rating scale, with 0 representing minimal hazards or risks, and 4 representing significant hazards or risks. Although HMIS® ratings and the associated label are not required on SDSs or products leaving a facility under 29 CFR 1910.1200, the preparer may choose to provide them. HMIS® ratings are to be used with a fully implemented HMIS® program. HMIS® is a registered trademark and service mark of the American Coatings Association, Inc.

Procedure used to derive the classification

Classification	Justification
FLAMMABLE LIQUIDS - Category 3	On basis of test data
SKIN CORROSION/IRRITATION - Category 2	Calculation method
SERIOUS EYE DAMAGE/ EYE IRRITATION - Category 2A	Calculation method
CARCINOGENICITY - Category 1A	Calculation method
TOXIC TO REPRODUCTION (Unborn child) - Category 2	Calculation method
SPECIFIC TARGET ORGAN TOXICITY (SINGLE EXPOSURE) (Respiratory tract irritation) - Category 3	Calculation method
SPECIFIC TARGET ORGAN TOXICITY (REPEATED EXPOSURE) (lungs) - Category 1	Calculation method
ASPIRATION HAZARD - Category 1	Calculation method

History

Date of printing : 9/5/2017

Date of issue/Date of revision : 9/5/2017

Date of previous issue : 8/28/2017

Version : 8.02

Key to abbreviations : ATE = Acute Toxicity Estimate
BCF = Bioconcentration Factor
GHS = Globally Harmonized System of Classification and Labelling of Chemicals
IATA = International Air Transport Association
IBC = Intermediate Bulk Container
IMDG = International Maritime Dangerous Goods
LogPow = logarithm of the octanol/water partition coefficient
MARPOL = International Convention for the Prevention of Pollution From Ships, 1973 as modified by the Protocol of 1978. ("Marpol" = marine pollution)
UN = United Nations

Notice to reader

It is recommended that each customer or recipient of this Safety Data Sheet (SDS) study it carefully and consult resources, as necessary or appropriate, to become aware of and understand the data contained in this SDS and any hazards associated with the product. This information is provided in good faith and believed to be accurate as of the effective date herein. However, no warranty, express or implied, is given. The information presented here applies only to the product as shipped. The addition of any material can change the composition, hazards and risks of the product. Products shall not be repackaged, modified, or tinted except as specifically instructed by Sherwin-Williams, including but not limited to the incorporation of non Sherwin-Williams products or the use or addition of products in proportions not specified by Sherwin-Williams. Regulatory requirements are subject to change and may differ between various locations and jurisdictions. The customer/buyer/user is responsible to

Section 16. Other information

ensure that his activities comply with all country, federal, state, provincial or local laws. The conditions for use of the product are not under the control of the manufacturer; the customer/buyer/user is responsible to determine the conditions necessary for the safe use of this product. The customer/buyer/user should not use the product for any purpose other than the purpose shown in the applicable section of this SDS without first referring to the supplier and obtaining written handling instructions. Due to the proliferation of sources for information such as manufacturer-specific SDS, the manufacturer cannot be responsible for SDSs obtained from any other source.

SAFETY DATA SHEET

B56W311

Section 1. Identification

Product name : STEEL-MASTER™ 9500 30% Silicone Alkyd Enamel
Extra White

Product code : B56W311

Other means of identification : Not available.

Product type : Liquid.

Relevant identified uses of the substance or mixture and uses advised against

Not applicable.

Manufacturer : THE SHERWIN-WILLIAMS COMPANY
101 W. Prospect Avenue
Cleveland, OH 44115

Emergency telephone number of the company : US / Canada: (216) 566-2917
Mexico: SETIQ 01-800-00-214-00 / (52) 55-5559-1588 24 hours / 365 days a year

Product Information Telephone Number : US / Canada: (800) 524-5979
Mexico: Not Available

Regulatory Information Telephone Number : US / Canada: (216) 566-2902
Mexico: Not Available

Transportation Emergency Telephone Number : US / Canada: (800) 424-9300
Mexico: SETIQ 01-800-00-214-00 / (52) 55-5559-1588 24 hours / 365 days a year

Section 2. Hazards identification

OSHA/HCS status : This material is considered hazardous by the OSHA Hazard Communication Standard (29 CFR 1910.1200).

Classification of the substance or mixture : FLAMMABLE LIQUIDS - Category 3
SKIN CORROSION/IRRITATION - Category 2
SERIOUS EYE DAMAGE/ EYE IRRITATION - Category 2A
SKIN SENSITIZATION - Category 1
CARCINOGENICITY - Category 2
TOXIC TO REPRODUCTION (Fertility) - Category 2
TOXIC TO REPRODUCTION (Unborn child) - Category 2
SPECIFIC TARGET ORGAN TOXICITY (REPEATED EXPOSURE) - Category 2
ASPIRATION HAZARD - Category 1

Percentage of the mixture consisting of ingredient(s) of unknown oral toxicity: 21.3%
Percentage of the mixture consisting of ingredient(s) of unknown dermal toxicity: 38.4%
Percentage of the mixture consisting of ingredient(s) of unknown inhalation toxicity: 25.6%

GHS label elements

Hazard pictograms :

Signal word : Danger

Section 2. Hazards identification

Hazard statements : Flammable liquid and vapor.
Causes serious eye irritation.
Causes skin irritation.
May cause an allergic skin reaction.
Suspected of damaging fertility or the unborn child.
Suspected of causing cancer.
May be fatal if swallowed and enters airways.
May cause damage to organs through prolonged or repeated exposure.

Precautionary statements

Prevention : Obtain special instructions before use. Do not handle until all safety precautions have been read and understood. Wear protective gloves. Wear eye or face protection. Wear protective clothing. Keep away from heat, hot surfaces, sparks, open flames and other ignition sources. No smoking. Use explosion-proof electrical, ventilating, lighting and all material-handling equipment. Use only non-sparking tools. Take precautionary measures against static discharge. Keep container tightly closed. Do not breathe vapor. Wash hands thoroughly after handling. Contaminated work clothing must not be allowed out of the workplace.

Response : Get medical attention if you feel unwell. IF exposed or concerned: Get medical attention. IF SWALLOWED: Immediately call a POISON CENTER or physician. Do NOT induce vomiting. IF ON SKIN (or hair): Take off immediately all contaminated clothing. Rinse skin with water or shower. IF ON SKIN: Wash with plenty of soap and water. Wash contaminated clothing before reuse. If skin irritation or rash occurs: Get medical attention. IF IN EYES: Rinse cautiously with water for several minutes. Remove contact lenses, if present and easy to do. Continue rinsing. If eye irritation persists: Get medical attention.

Storage : Store locked up. Store in a well-ventilated place. Keep cool.

Disposal : Dispose of contents and container in accordance with all local, regional, national and international regulations.

Supplemental label elements

DELAYED EFFECTS FROM LONG TERM OVEREXPOSURE. Contains solvents which can cause permanent brain and nervous system damage. Intentional misuse by deliberately concentrating and inhaling the contents can be harmful or fatal. WARNING: This product contains chemicals known to the State of California to cause cancer and birth defects or other reproductive harm. FOR INDUSTRIAL USE ONLY.

Please refer to the SDS for additional information. Keep out of reach of children. Do not transfer contents to other containers for storage.

Hazards not otherwise classified : None known.

Section 3. Composition/information on ingredients

Substance/mixture : Mixture

Other means of identification : Not available.

CAS number/other identifiers

Ingredient name	% by weight	CAS number
Titanium Dioxide	19.25	13463-67-7
Aluminum Hydroxide	11.89	21645-51-2
1,2,4-Trimethylbenzene	7.86	95-63-6
1,3,5-Trimethylbenzene	4.91	108-67-8
Light Aromatic Hydrocarbons	4.33	64742-95-6
Mineral Spirits	2.04	64742-47-8
Xylene	1.12	1330-20-7
Cumene	0.98	98-82-8
Methyl Ethyl Ketoxime	0.42	96-29-7
Zirconium 2-Ethylhexanoate	0.38	22464-99-9
Ethylbenzene	0.33	100-41-4

Section 3. Composition/information on ingredients

Calcium 2-Ethylhexanoate	0.29	136-51-6

Any concentration shown as a range is to protect confidentiality or is due to batch variation.

There are no additional ingredients present which, within the current knowledge of the supplier and in the concentrations applicable, are classified as hazardous to health and hence require reporting in this section.

Occupational exposure limits, if available, are listed in Section 8.

Section 4. First aid measures

Description of necessary first aid measures

Eye contact : Immediately flush eyes with plenty of water, occasionally lifting the upper and lower eyelids. Check for and remove any contact lenses. Continue to rinse for at least 10 minutes. Get medical attention.

Inhalation : Remove victim to fresh air and keep at rest in a position comfortable for breathing. If not breathing, if breathing is irregular or if respiratory arrest occurs, provide artificial respiration or oxygen by trained personnel. It may be dangerous to the person providing aid to give mouth-to-mouth resuscitation. Get medical attention. If unconscious, place in recovery position and get medical attention immediately. Maintain an open airway. Loosen tight clothing such as a collar, tie, belt or waistband.

Skin contact : Wash with plenty of soap and water. Remove contaminated clothing and shoes. Wash contaminated clothing thoroughly with water before removing it, or wear gloves. Continue to rinse for at least 10 minutes. Get medical attention. In the event of any complaints or symptoms, avoid further exposure. Wash clothing before reuse. Clean shoes thoroughly before reuse.

Ingestion : Get medical attention immediately. Call a poison center or physician. Wash out mouth with water. Remove dentures if any. Remove victim to fresh air and keep at rest in a position comfortable for breathing. If material has been swallowed and the exposed person is conscious, give small quantities of water to drink. Stop if the exposed person feels sick as vomiting may be dangerous. Aspiration hazard if swallowed. Can enter lungs and cause damage. Do not induce vomiting. If vomiting occurs, the head should be kept low so that vomit does not enter the lungs. Never give anything by mouth to an unconscious person. If unconscious, place in recovery position and get medical attention immediately. Maintain an open airway. Loosen tight clothing such as a collar, tie, belt or waistband.

Most important symptoms/effects, acute and delayed

Potential acute health effects

Eye contact : Causes serious eye irritation.

Inhalation : No known significant effects or critical hazards.

Skin contact : Causes skin irritation. May cause an allergic skin reaction.

Ingestion : May be fatal if swallowed and enters airways.

Over-exposure signs/symptoms

Eye contact : Adverse symptoms may include the following:
pain or irritation
watering
redness

Inhalation : Adverse symptoms may include the following:
reduced fetal weight
increase in fetal deaths
skeletal malformations

Skin contact : Adverse symptoms may include the following:
irritation
redness
reduced fetal weight
increase in fetal deaths
skeletal malformations

Section 4. First aid measures

Ingestion : Adverse symptoms may include the following:
nausea or vomiting
reduced fetal weight
increase in fetal deaths
skeletal malformations

Indication of immediate medical attention and special treatment needed, if necessary

Notes to physician : Treat symptomatically. Contact poison treatment specialist immediately if large quantities have been ingested or inhaled.

Specific treatments : No specific treatment.

Protection of first-aiders : No action shall be taken involving any personal risk or without suitable training. It may be dangerous to the person providing aid to give mouth-to-mouth resuscitation. Wash contaminated clothing thoroughly with water before removing it, or wear gloves.

See toxicological information (Section 11)

Section 5. Fire-fighting measures

Extinguishing media

Suitable extinguishing media : Use dry chemical, CO_2, water spray (fog) or foam.

Unsuitable extinguishing media : Do not use water jet.

Specific hazards arising from the chemical : Flammable liquid and vapor. Runoff to sewer may create fire or explosion hazard. In a fire or if heated, a pressure increase will occur and the container may burst, with the risk of a subsequent explosion. The vapor/gas is heavier than air and will spread along the ground. Vapors may accumulate in low or confined areas or travel a considerable distance to a source of ignition and flash back.

Hazardous thermal decomposition products : Decomposition products may include the following materials:
carbon dioxide
carbon monoxide
metal oxide/oxides

Special protective actions for fire-fighters : Promptly isolate the scene by removing all persons from the vicinity of the incident if there is a fire. No action shall be taken involving any personal risk or without suitable training. Move containers from fire area if this can be done without risk. Use water spray to keep fire-exposed containers cool.

Special protective equipment for fire-fighters : Fire-fighters should wear appropriate protective equipment and self-contained breathing apparatus (SCBA) with a full face-piece operated in positive pressure mode.

Section 6. Accidental release measures

Personal precautions, protective equipment and emergency procedures

For non-emergency personnel : No action shall be taken involving any personal risk or without suitable training. Evacuate surrounding areas. Keep unnecessary and unprotected personnel from entering. Do not touch or walk through spilled material. Shut off all ignition sources. No flares, smoking or flames in hazard area. Avoid breathing vapor or mist. Provide adequate ventilation. Wear appropriate respirator when ventilation is inadequate. Put on appropriate personal protective equipment.

For emergency responders : If specialized clothing is required to deal with the spillage, take note of any information in Section 8 on suitable and unsuitable materials. See also the information in "For non-emergency personnel".

Environmental precautions :

Section 6. Accidental release measures

Avoid dispersal of spilled material and runoff and contact with soil, waterways, drains and sewers. Inform the relevant authorities if the product has caused environmental pollution (sewers, waterways, soil or air).

Methods and materials for containment and cleaning up

Small spill : Stop leak if without risk. Move containers from spill area. Use spark-proof tools and explosion-proof equipment. Dilute with water and mop up if water-soluble. Alternatively, or if water-insoluble, absorb with an inert dry material and place in an appropriate waste disposal container. Dispose of via a licensed waste disposal contractor.

Large spill : Stop leak if without risk. Move containers from spill area. Use spark-proof tools and explosion-proof equipment. Approach release from upwind. Prevent entry into sewers, water courses, basements or confined areas. Wash spillages into an effluent treatment plant or proceed as follows. Contain and collect spillage with non-combustible, absorbent material e.g. sand, earth, vermiculite or diatomaceous earth and place in container for disposal according to local regulations (see Section 13). Dispose of via a licensed waste disposal contractor. Contaminated absorbent material may pose the same hazard as the spilled product. Note: see Section 1 for emergency contact information and Section 13 for waste disposal.

Section 7. Handling and storage

Precautions for safe handling

Protective measures : Put on appropriate personal protective equipment (see Section 8). Persons with a history of skin sensitization problems should not be employed in any process in which this product is used. Avoid exposure - obtain special instructions before use. Avoid exposure during pregnancy. Do not handle until all safety precautions have been read and understood. Do not get in eyes or on skin or clothing. Do not breathe vapor or mist. Do not swallow. Use only with adequate ventilation. Wear appropriate respirator when ventilation is inadequate. Do not enter storage areas and confined spaces unless adequately ventilated. Keep in the original container or an approved alternative made from a compatible material, kept tightly closed when not in use. Store and use away from heat, sparks, open flame or any other ignition source. Use explosion-proof electrical (ventilating, lighting and material handling) equipment. Use only non-sparking tools. Take precautionary measures against electrostatic discharges. Empty containers retain product residue and can be hazardous. Do not reuse container.

Advice on general occupational hygiene : Eating, drinking and smoking should be prohibited in areas where this material is handled, stored and processed. Workers should wash hands and face before eating, drinking and smoking. Remove contaminated clothing and protective equipment before entering eating areas. See also Section 8 for additional information on hygiene measures.

Conditions for safe storage, including any incompatibilities : Store in accordance with local regulations. Store in a segregated and approved area. Store in original container protected from direct sunlight in a dry, cool and well-ventilated area, away from incompatible materials (see Section 10) and food and drink. Store locked up. Eliminate all ignition sources. Separate from oxidizing materials. Keep container tightly closed and sealed until ready for use. Containers that have been opened must be carefully resealed and kept upright to prevent leakage. Do not store in unlabeled containers. Use appropriate containment to avoid environmental contamination. See Section 10 for incompatible materials before handling or use.

Section 8. Exposure controls/personal protection

Control parameters

Occupational exposure limits (OSHA United States)

Section 8. Exposure controls/personal protection

Ingredient name	Exposure limits
Titanium Dioxide	**ACGIH TLV (United States, 3/2016).** TWA: 10 mg/m³ 8 hours. **OSHA PEL (United States, 6/2016).** TWA: 15 mg/m³ 8 hours. Form: Total dust
Aluminum Hydroxide	**ACGIH TLV (United States, 3/2016).** TWA: 1 mg/m³ 8 hours. Form: Respirable fraction
1,2,4-Trimethylbenzene	**ACGIH TLV (United States, 3/2016).** TWA: 25 ppm 8 hours. TWA: 123 mg/m³ 8 hours. **NIOSH REL (United States, 10/2016).** TWA: 25 ppm 10 hours. TWA: 125 mg/m³ 10 hours.
1,3,5-Trimethylbenzene	**ACGIH TLV (United States, 3/2016).** TWA: 25 ppm 8 hours. TWA: 123 mg/m³ 8 hours. **NIOSH REL (United States, 10/2016).** TWA: 25 ppm 10 hours. TWA: 125 mg/m³ 10 hours.
Light Aromatic Hydrocarbons	None.
Mineral Spirits	**OSHA PEL (United States, 6/2016).** TWA: 100 ppm 8 hours. TWA: 400 mg/m³ 8 hours.
Xylene	**ACGIH TLV (United States, 3/2016).** TWA: 100 ppm 8 hours. TWA: 434 mg/m³ 8 hours. STEL: 150 ppm 15 minutes. STEL: 651 mg/m³ 15 minutes. **OSHA PEL (United States, 6/2016).** TWA: 100 ppm 8 hours. TWA: 435 mg/m³ 8 hours.
Cumene	**ACGIH TLV (United States, 3/2016).** TWA: 50 ppm 8 hours. **NIOSH REL (United States, 10/2016).** **Absorbed through skin.** TWA: 50 ppm 10 hours. TWA: 245 mg/m³ 10 hours. **OSHA PEL (United States, 6/2016).** **Absorbed through skin.** TWA: 50 ppm 8 hours. TWA: 245 mg/m³ 8 hours.
Methyl Ethyl Ketoxime	**AIHA WEEL (United States, 10/2011). Skin sensitizer.** TWA: 10 ppm 8 hours.
Zirconium 2-Ethylhexanoate	**ACGIH TLV (United States, 3/2016).** TWA: 5 mg/m³, (as Zr) 8 hours. STEL: 10 mg/m³, (as Zr) 15 minutes. **NIOSH REL (United States, 10/2016).** TWA: 5 mg/m³, (as Zr) 10 hours. STEL: 10 mg/m³, (as Zr) 15 minutes. **OSHA PEL (United States, 6/2016).** TWA: 5 mg/m³, (as Zr) 8 hours.
Ethylbenzene	**ACGIH TLV (United States, 3/2016).** TWA: 20 ppm 8 hours. **NIOSH REL (United States, 10/2016).** TWA: 100 ppm 10 hours. TWA: 435 mg/m³ 10 hours.

	STEL: 125 ppm 15 minutes. STEL: 545 mg/m³ 15 minutes. **OSHA PEL (United States, 6/2016).** TWA: 100 ppm 8 hours. TWA: 435 mg/m³ 8 hours.
Calcium 2-Ethylhexanoate	None.

Occupational exposure limits (Canada)

Ingredient name	Exposure limits
1,2,4-Trimethylbenzene	**CA Alberta Provincial (Canada, 4/2009).** 8 hrs OEL: 123 mg/m³ 8 hours. 8 hrs OEL: 25 ppm 8 hours. **CA British Columbia Provincial (Canada, 7/2016).** TWA: 25 ppm 8 hours. **CA Québec Provincial (Canada, 1/2014).** TWAEV: 25 ppm 8 hours. TWAEV: 123 mg/m³ 8 hours. **CA Ontario Provincial (Canada, 7/2015).** TWA: 25 ppm 8 hours. **CA Saskatchewan Provincial (Canada, 7/2013).** STEL: 30 ppm 15 minutes. TWA: 25 ppm 8 hours.
1,3,5-Trimethylbenzene	**CA Alberta Provincial (Canada, 4/2009).** 8 hrs OEL: 123 mg/m³ 8 hours. 8 hrs OEL: 25 ppm 8 hours. **CA British Columbia Provincial (Canada, 7/2016).** TWA: 25 ppm 8 hours. **CA Québec Provincial (Canada, 1/2014).** TWAEV: 25 ppm 8 hours. TWAEV: 123 mg/m³ 8 hours. **CA Ontario Provincial (Canada, 7/2015).** TWA: 25 ppm 8 hours. **CA Saskatchewan Provincial (Canada, 7/2013).** STEL: 30 ppm 15 minutes. TWA: 25 ppm 8 hours.
Solvent naphtha (petroleum), medium aliph.	**CA Québec Provincial (Canada, 1/2014).** TWAEV: 400 ppm 8 hours. TWAEV: 1590 mg/m³ 8 hours. **CA Ontario Provincial (Canada, 7/2015).** TWA: 525 mg/m³ 8 hours.
Xylene	**CA Alberta Provincial (Canada, 4/2009).** 8 hrs OEL: 100 ppm 8 hours. 15 min OEL: 651 mg/m³ 15 minutes. 15 min OEL: 150 ppm 15 minutes. 8 hrs OEL: 434 mg/m³ 8 hours. **CA British Columbia Provincial (Canada, 7/2016).** TWA: 100 ppm 8 hours. STEL: 150 ppm 15 minutes. **CA Québec Provincial (Canada, 1/2014).** TWAEV: 100 ppm 8 hours. TWAEV: 434 mg/m³ 8 hours. STEV: 150 ppm 15 minutes. STEV: 651 mg/m³ 15 minutes.

	CA Ontario Provincial (Canada, 7/2015). STEL: 150 ppm 15 minutes. TWA: 100 ppm 8 hours. **CA Saskatchewan Provincial (Canada, 7/2013).** STEL: 150 ppm 15 minutes. TWA: 100 ppm 8 hours.
Methyl Ethyl Ketoxime	**AIHA WEEL (United States, 10/2011). Skin sensitizer.** TWA: 10 ppm 8 hours.
Zirconium 2-Ethylhexanoate	**CA Alberta Provincial (Canada, 4/2009).** 8 hrs OEL: 5 mg/m³, (as Zr) 8 hours. 15 min OEL: 10 mg/m³, (as Zr) 15 minutes. **CA British Columbia Provincial (Canada, 7/2016).** TWA: 5 mg/m³, (as Zr) 8 hours. STEL: 10 mg/m³, (as Zr) 15 minutes. **CA Québec Provincial (Canada, 1/2014).** TWAEV: 5 mg/m³, (as Zr) 8 hours. STEV: 10 mg/m³, (as Zr) 15 minutes. **CA Ontario Provincial (Canada, 7/2015).** STEL: 10 mg/m³, (as Zr) 15 minutes. TWA: 5 mg/m³, (as Zr) 8 hours.
Ethylbenzene	**CA Alberta Provincial (Canada, 4/2009).** 8 hrs OEL: 100 ppm 8 hours. 8 hrs OEL: 434 mg/m³ 8 hours. 15 min OEL: 543 mg/m³ 15 minutes. 15 min OEL: 125 ppm 15 minutes. **CA British Columbia Provincial (Canada, 7/2016).** TWA: 20 ppm 8 hours. **CA Ontario Provincial (Canada, 7/2015).** TWA: 20 ppm 8 hours. **CA Québec Provincial (Canada, 1/2014).** TWAEV: 100 ppm 8 hours. TWAEV: 434 mg/m³ 8 hours. STEV: 125 ppm 15 minutes. STEV: 543 mg/m³ 15 minutes. **CA Saskatchewan Provincial (Canada, 7/2013).** STEL: 125 ppm 15 minutes. TWA: 100 ppm 8 hours.

Occupational exposure limits (Mexico)

Ingredient name	Exposure limits
1,2,4-Trimethylbenzene	**NOM-010-STPS-2014 (Mexico, 4/2016).** TWA: 25 ppm 8 hours.
1,3,5-Trimethylbenzene	**NOM-010-STPS-2014 (Mexico, 4/2016).** TWA: 25 ppm 8 hours.
Xylene	**NOM-010-STPS-2014 (Mexico, 4/2016).** STEL: 150 ppm 15 minutes. TWA: 100 ppm 8 hours.
Zirconium 2-Ethylhexanoate	**NOM-010-STPS-2014 (Mexico, 4/2016).** TWA: 5 mg/m³, (as Zr) 8 hours. STEL: 10 mg/m³, (as Zr) 15 minutes.
Ethylbenzene	**NOM-010-STPS-2014 (Mexico, 4/2016).** TWA: 20 ppm 8 hours.

Section 8. Exposure controls/personal protection

Appropriate engineering controls : Use only with adequate ventilation. Use process enclosures, local exhaust ventilation or other engineering controls to keep worker exposure to airborne contaminants below any recommended or statutory limits. The engineering controls also need to keep gas, vapor or dust concentrations below any lower explosive limits. Use explosion-proof ventilation equipment.

Environmental exposure controls : Emissions from ventilation or work process equipment should be checked to ensure they comply with the requirements of environmental protection legislation. In some cases, fume scrubbers, filters or engineering modifications to the process equipment will be necessary to reduce emissions to acceptable levels.

Individual protection measures

Hygiene measures : Wash hands, forearms and face thoroughly after handling chemical products, before eating, smoking and using the lavatory and at the end of the working period. Appropriate techniques should be used to remove potentially contaminated clothing. Contaminated work clothing should not be allowed out of the workplace. Wash contaminated clothing before reusing. Ensure that eyewash stations and safety showers are close to the workstation location.

Eye/face protection : Safety eyewear complying with an approved standard should be used when a risk assessment indicates this is necessary to avoid exposure to liquid splashes, mists, gases or dusts. If contact is possible, the following protection should be worn, unless the assessment indicates a higher degree of protection: chemical splash goggles.

Skin protection

Hand protection : Chemical-resistant, impervious gloves complying with an approved standard should be worn at all times when handling chemical products if a risk assessment indicates this is necessary. Considering the parameters specified by the glove manufacturer, check during use that the gloves are still retaining their protective properties. It should be noted that the time to breakthrough for any glove material may be different for different glove manufacturers. In the case of mixtures, consisting of several substances, the protection time of the gloves cannot be accurately estimated.

Body protection : Personal protective equipment for the body should be selected based on the task being performed and the risks involved and should be approved by a specialist before handling this product. When there is a risk of ignition from static electricity, wear anti-static protective clothing. For the greatest protection from static discharges, clothing should include anti-static overalls, boots and gloves.

Other skin protection : Appropriate footwear and any additional skin protection measures should be selected based on the task being performed and the risks involved and should be approved by a specialist before handling this product.

Respiratory protection : Based on the hazard and potential for exposure, select a respirator that meets the appropriate standard or certification. Respirators must be used according to a respiratory protection program to ensure proper fitting, training, and other important aspects of use.

Section 9. Physical and chemical properties

Appearance

Physical state : Liquid.

Color : Not available.

Odor : Not available.

Odor threshold : Not available.

pH : Not available.

Melting point : Not available.

Boiling point : 138°C (280.4°F)

Flash point : Closed cup: 44°C (111.2°F) [Pensky-Martens Closed Cup]

Evaporation rate : 0.53 (butyl acetate = 1)

Section 9. Physical and chemical properties

Flammability (solid, gas) : Not available.

Lower and upper explosive (flammable) limits : Lower: 0.7%
Upper: 7%

Vapor pressure : 0.79 kPa (5.9 mm Hg) [at 20°C]

Vapor density : 3.66 [Air = 1]

Relative density : 1.3

Solubility : Not available.

Partition coefficient: n-octanol/water : Not available.

Auto-ignition temperature : Not available.

Decomposition temperature : Not available.

Viscosity : Kinematic (40°C (104°F)): <0.205 cm^2/s (<20.5 cSt)

Molecular weight : Not applicable.

Aerosol product

Heat of combustion : 9.494 kJ/g

Section 10. Stability and reactivity

Reactivity : No specific test data related to reactivity available for this product or its ingredients.

Chemical stability : The product is stable.

Possibility of hazardous reactions : Under normal conditions of storage and use, hazardous reactions will not occur.

Conditions to avoid : Avoid all possible sources of ignition (spark or flame). Do not pressurize, cut, weld, braze, solder, drill, grind or expose containers to heat or sources of ignition. Do not allow vapor to accumulate in low or confined areas.

Incompatible materials : Reactive or incompatible with the following materials:
oxidizing materials

Hazardous decomposition products : Under normal conditions of storage and use, hazardous decomposition products should not be produced.

Section 11. Toxicological information

Information on toxicological effects

Acute toxicity

Product/ingredient name	Result	Species	Dose	Exposure
1,2,4-Trimethylbenzene	LC50 Inhalation Vapor	Rat	18000 mg/m³	4 hours
	LD50 Oral	Rat	5 g/kg	-
1,3,5-Trimethylbenzene	LC50 Inhalation Vapor	Rat	24000 mg/m³	4 hours
	LD50 Oral	Rat	5000 mg/kg	-
Light Aromatic Hydrocarbons	LD50 Oral	Rat	8400 mg/kg	-
Xylene	LC50 Inhalation Gas.	Rat	5000 ppm	4 hours
	LD50 Oral	Rat	4300 mg/kg	-
Cumene	LC50 Inhalation Vapor	Rat	39000 mg/m³	4 hours
	LD50 Oral	Rat	1400 mg/kg	-
Methyl Ethyl Ketoxime	LD50 Oral	Rat	930 mg/kg	-
Zirconium 2-Ethylhexanoate	LD50 Dermal	Rabbit	>5 g/kg	-
	LD50 Oral	Rat	>5 g/kg	-
Ethylbenzene	LD50 Dermal	Rabbit	>5000 mg/kg	-

Section 11. Toxicological information

	LD50 Oral	Rat	3500 mg/kg	-

Irritation/Corrosion

Product/ingredient name	Result	Species	Score	Exposure	Observation
Titanium Dioxide	Skin - Mild irritant	Human	-	72 hours 300 Micrograms Intermittent	-
1,3,5-Trimethylbenzene	Eyes - Mild irritant	Rabbit	-	24 hours 500 milligrams	-
	Skin - Moderate irritant	Rabbit	-	24 hours 20 milligrams	-
Light Aromatic Hydrocarbons	Eyes - Mild irritant	Rabbit	-	24 hours 100 microliters	-
Xylene	Eyes - Mild irritant	Rabbit	-	87 milligrams	-
	Eyes - Severe irritant	Rabbit	-	24 hours 5 milligrams	-
	Skin - Mild irritant	Rat	-	8 hours 60 microliters	-
	Skin - Moderate irritant	Rabbit	-	24 hours 500 milligrams	-
	Skin - Moderate irritant	Rabbit	-	100 Percent	-
Cumene	Eyes - Mild irritant	Rabbit	-	24 hours 500 milligrams	-
	Eyes - Mild irritant	Rabbit	-	86 milligrams	-
	Skin - Mild irritant	Rabbit	-	24 hours 10 milligrams	-
	Skin - Moderate irritant	Rabbit	-	24 hours 100 milligrams	-
Methyl Ethyl Ketoxime	Eyes - Severe irritant	Rabbit	-	100 microliters	-
Ethylbenzene	Eyes - Severe irritant	Rabbit	-	500 milligrams	-
	Skin - Mild irritant	Rabbit	-	24 hours 15 milligrams	-

Sensitization

Not available.

Mutagenicity

Not available.

Carcinogenicity

Not available.

Classification

Product/ingredient name	OSHA	IARC	NTP
Titanium Dioxide	-	2B	-
Xylene	-	3	-
Cumene	-	2B	Reasonably anticipated to be a human carcinogen.
Ethylbenzene	-	2B	-

Reproductive toxicity

Not available.

Teratogenicity

Not available.

Specific target organ toxicity (single exposure)

Section 11. Toxicological information

Name	Category	Route of exposure	Target organs
1,2,4-Trimethylbenzene	Category 3	Not applicable.	Respiratory tract irritation
1,3,5-Trimethylbenzene	Category 3	Not applicable.	Respiratory tract irritation
Light Aromatic Hydrocarbons	Category 3	Not applicable.	Respiratory tract irritation and Narcotic effects
Mineral Spirits	Category 3	Not applicable.	Respiratory tract irritation and Narcotic effects
Xylene	Category 3	Not applicable.	Respiratory tract irritation
Cumene	Category 3	Not applicable.	Respiratory tract irritation and Narcotic effects
Ethylbenzene	Category 3	Not applicable.	Respiratory tract irritation and Narcotic effects

Specific target organ toxicity (repeated exposure)

Name	Category	Route of exposure	Target organs
Light Aromatic Hydrocarbons	Category 2	Not determined	Not determined
Mineral Spirits	Category 2	Not determined	Not determined
Xylene	Category 2	Not determined	Not determined
Cumene	Category 2	Not determined	Not determined
Ethylbenzene	Category 2	Not determined	Not determined

Aspiration hazard

Name	Result
1,2,4-Trimethylbenzene	ASPIRATION HAZARD - Category 1
1,3,5-Trimethylbenzene	ASPIRATION HAZARD - Category 1
Light Aromatic Hydrocarbons	ASPIRATION HAZARD - Category 1
Mineral Spirits	ASPIRATION HAZARD - Category 1
Xylene	ASPIRATION HAZARD - Category 1
Cumene	ASPIRATION HAZARD - Category 1
Ethylbenzene	ASPIRATION HAZARD - Category 1

Information on the likely routes of exposure : Not available.

Potential acute health effects

Eye contact : Causes serious eye irritation.

Inhalation : No known significant effects or critical hazards.

Skin contact : Causes skin irritation. May cause an allergic skin reaction.

Ingestion : May be fatal if swallowed and enters airways.

Symptoms related to the physical, chemical and toxicological characteristics

Eye contact : Adverse symptoms may include the following:
pain or irritation
watering
redness

Inhalation : Adverse symptoms may include the following:
reduced fetal weight
increase in fetal deaths
skeletal malformations

Skin contact : Adverse symptoms may include the following:
irritation
redness
reduced fetal weight
increase in fetal deaths
skeletal malformations

Ingestion : Adverse symptoms may include the following:
nausea or vomiting
reduced fetal weight
increase in fetal deaths
skeletal malformations

Delayed and immediate effects and also chronic effects from short and long term exposure

Short term exposure

Potential immediate effects : Not available.

Potential delayed effects : Not available.

Long term exposure

Potential immediate effects : Not available.

Potential delayed effects : Not available.

Potential chronic health effects

Not available.

General : May cause damage to organs through prolonged or repeated exposure. Once sensitized, a severe allergic reaction may occur when subsequently exposed to very low levels.

Carcinogenicity : Suspected of causing cancer. Risk of cancer depends on duration and level of exposure.

Mutagenicity : No known significant effects or critical hazards.

Teratogenicity : Suspected of damaging the unborn child.

Developmental effects : No known significant effects or critical hazards.

Fertility effects : Suspected of damaging fertility.

Numerical measures of toxicity

Acute toxicity estimates

Route	ATE value
Oral	27981.6 mg/kg
Dermal	60760.1 mg/kg
Inhalation (gases)	333419.5 ppm
Inhalation (vapors)	170.3 mg/l

Section 12. Ecological information

Toxicity

Product/ingredient name	Result	Species	Exposure
Titanium Dioxide	Acute LC50 >1000000 µg/l Marine water	Fish - Fundulus heteroclitus	96 hours
1,2,4-Trimethylbenzene	Acute LC50 4910 µg/l Marine water	Crustaceans - Elasmopus pectenicrus - Adult	48 hours
	Acute LC50 7720 µg/l Fresh water	Fish - Pimephales promelas	96 hours
1,3,5-Trimethylbenzene	Acute LC50 13000 µg/l Marine water	Crustaceans - Cancer magister - Zoea	48 hours
	Acute LC50 12520 µg/l Fresh water	Fish - Carassius auratus	96 hours
	Chronic NOEC 400 µg/l Fresh water	Daphnia - Daphnia magna	21 days
Xylene	Acute LC50 8500 µg/l Marine water	Crustaceans - Palaemonetes pugio	48 hours
	Acute LC50 13400 µg/l Fresh water	Fish - Pimephales promelas	96 hours
Cumene	Acute EC50 2600 µg/l Fresh water	Algae - Pseudokirchneriella subcapitata	72 hours
	Acute EC50 7400 µg/l Fresh water	Crustaceans - Artemia sp. - Nauplii	48 hours
	Acute EC50 10600 µg/l Fresh water	Daphnia - Daphnia magna - Neonate	48 hours
	Acute LC50 2700 µg/l Fresh water	Fish - Oncorhynchus mykiss	96 hours
Methyl Ethyl Ketoxime	Acute LC50 843000 µg/l Fresh water	Fish - Pimephales promelas	96 hours
Ethylbenzene	Acute EC50 4600 µg/l Fresh water	Algae - Pseudokirchneriella subcapitata	72 hours
	Acute EC50 3600 µg/l Fresh water	Algae - Pseudokirchneriella subcapitata	96 hours
	Acute EC50 6530 µg/l Fresh water	Crustaceans - Artemia sp. - Nauplii	48 hours
	Acute EC50 2930 µg/l Fresh water	Daphnia - Daphnia magna - Neonate	48 hours
	Acute LC50 4200 µg/l Fresh water	Fish - Oncorhynchus mykiss	96 hours

Persistence and degradability

Product/ingredient name	Aquatic half-life	Photolysis	Biodegradability
Light Aromatic Hydrocarbons	-	-	Readily
Xylene	-	-	Readily
Ethylbenzene	-	-	Readily

Bioaccumulative potential

Product/ingredient name	$LogP_{ow}$	BCF	Potential
1,2,4-Trimethylbenzene	-	243	low
1,3,5-Trimethylbenzene	-	161	low
Light Aromatic Hydrocarbons	-	10 to 2500	high
Xylene	-	8.1 to 25.9	low
Cumene	-	35.48	low
Methyl Ethyl Ketoxime	-	2.5 to 5.8	low
Zirconium 2-Ethylhexanoate	-	2.96	low
Calcium 2-Ethylhexanoate	-	2.96	low

Mobility in soil

Soil/water partition coefficient (K_{OC}) : Not available.

Other adverse effects : No known significant effects or critical hazards.

Section 13. Disposal considerations

Disposal methods : The generation of waste should be avoided or minimized wherever possible. Disposal of this product, solutions and any by-products should at all times comply with the requirements of environmental protection and waste disposal legislation and any regional local authority requirements. Dispose of surplus and non-recyclable products via a licensed waste disposal contractor. Waste should not be disposed of untreated to the sewer unless fully compliant with the requirements of all authorities with jurisdiction. Waste packaging should be recycled. Incineration or landfill should only be considered when recycling is not feasible. This material and its container must be disposed of in a safe way. Care should be taken when handling emptied containers that have not been cleaned or rinsed out. Empty containers or liners may retain some product residues. Vapor from product residues may create a highly flammable or explosive atmosphere inside the container. Do not cut, weld or grind used containers unless they have been cleaned thoroughly internally. Avoid dispersal of spilled material and runoff and contact with soil, waterways, drains and sewers.

Section 14. Transport information

	DOT Classification	TDG Classification	Mexico Classification	IATA	IMDG
UN number	UN1263	UN1263	UN1263	UN1263	UN1263
UN proper shipping name	PAINT	PAINT	PAINT	PAINT	PAINT
Transport hazard class(es)	3	3	3	3	3
Packing group	III	III	III	III	III
Environmental hazards	No.	No.	No.	No.	No.
Additional information	This product may be re-classified as "Combustible Liquid," unless transported by vessel or aircraft. Non-bulk packages (less than or equal to 119 gal) of combustible liquids are not regulated as hazardous materials in package sizes less than the product reportable quantity. **ERG No.** 128	Product classified as per the following sections of the Transportation of Dangerous Goods Regulations: 2. 18-2.19 (Class 3). **ERG No.** 128	- **ERG No.** 128	-	**Emergency schedules** F-E, S-E

Section 14. Transport information

Special precautions for user : Multi-modal shipping descriptions are provided for informational purposes and do not consider container sizes. The presence of a shipping description for a particular mode of transport (sea, air, etc.), does not indicate that the product is packaged suitably for that mode of transport. All packaging must be reviewed for suitability prior to shipment, and compliance with the applicable regulations is the sole responsibility of the person offering the product for transport. People loading and unloading dangerous goods must be trained on all of the risks deriving from the substances and on all actions in case of emergency situations.

Transport in bulk according to Annex II of MARPOL and the IBC Code : Not available.

Proper shipping name : Not available.

Ship type : Not available.

Pollution category : Not available.

Section 15. Regulatory information

SARA 313

SARA 313 (40 CFR 372.45) supplier notification can be found on the Environmental Data Sheet.

California Prop. 65

WARNING: This product contains chemicals known to the State of California to cause cancer and birth defects or other reproductive harm.

Section 16. Other information

Hazardous Material Information System (U.S.A.)

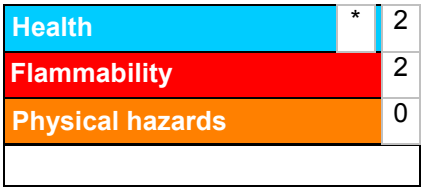

The customer is responsible for determining the PPE code for this material. For more information on HMIS® Personal Protective Equipment (PPE) codes, consult the HMIS® Implementation Manual.

Caution: HMIS® ratings are based on a 0-4 rating scale, with 0 representing minimal hazards or risks, and 4 representing significant hazards or risks. Although HMIS® ratings and the associated label are not required on SDSs or products leaving a facility under 29 CFR 1910.1200, the preparer may choose to provide them. HMIS® ratings are to be used with a fully implemented HMIS® program. HMIS® is a registered trademark and service mark of the American Coatings Association, Inc.

Procedure used to derive the classification

Classification	Justification
FLAMMABLE LIQUIDS - Category 3	On basis of test data
SKIN CORROSION/IRRITATION - Category 2	Calculation method
SERIOUS EYE DAMAGE/ EYE IRRITATION - Category 2A	Calculation method
SKIN SENSITIZATION - Category 1	Calculation method
CARCINOGENICITY - Category 2	Calculation method
TOXIC TO REPRODUCTION (Fertility) - Category 2	Calculation method
TOXIC TO REPRODUCTION (Unborn child) - Category 2	Calculation method
SPECIFIC TARGET ORGAN TOXICITY (REPEATED EXPOSURE) - Category 2	Calculation method
ASPIRATION HAZARD - Category 1	Calculation method

History

Date of printing : 9/9/2017

Date of issue/Date of revision : 9/9/2017

Section 16. Other information

Date of previous issue : 8/28/2017

Version : 10

Key to abbreviations : ATE = Acute Toxicity Estimate
BCF = Bioconcentration Factor
GHS = Globally Harmonized System of Classification and Labelling of Chemicals
IATA = International Air Transport Association
IBC = Intermediate Bulk Container
IMDG = International Maritime Dangerous Goods
LogPow = logarithm of the octanol/water partition coefficient
MARPOL = International Convention for the Prevention of Pollution From Ships, 1973 as modified by the Protocol of 1978. ("Marpol" = marine pollution)
UN = United Nations

Notice to reader

It is recommended that each customer or recipient of this Safety Data Sheet (SDS) study it carefully and consult resources, as necessary or appropriate, to become aware of and understand the data contained in this SDS and any hazards associated with the product. This information is provided in good faith and believed to be accurate as of the effective date herein. However, no warranty, express or implied, is given. The information presented here applies only to the product as shipped. The addition of any material can change the composition, hazards and risks of the product. Products shall not be repackaged, modified, or tinted except as specifically instructed by Sherwin-Williams, including but not limited to the incorporation of non Sherwin-Williams products or the use or addition of products in proportions not specified by Sherwin-Williams. Regulatory requirements are subject to change and may differ between various locations and jurisdictions. The customer/buyer/user is responsible to ensure that his activities comply with all country, federal, state, provincial or local laws. The conditions for use of the product are not under the control of the manufacturer; the customer/buyer/user is responsible to determine the conditions necessary for the safe use of this product. The customer/buyer/user should not use the product for any purpose other than the purpose shown in the applicable section of this SDS without first referring to the supplier and obtaining written handling instructions. Due to the proliferation of sources for information such as manufacturer-specific SDS, the manufacturer cannot be responsible for SDSs obtained from any other source.

DEPARTMENT OF THE ARMY
ALBUQUERQUE DISTRICT, CORPS OF ENGINEERS
ALBUQERQUE DISTRICT OFFICE
4101 JEFFERSON PLAZA NE
ALBUQUERQUE, NM 87109

SUBMITTAL REVIEW VERIFICATION SHEET

PROJECT TITLE: Kirtland BFF Mid-Plume Pump and Treat System Expansion
CONTRACT NUMBER: W912DR-12-D-0006 DM01
DATE RECEIVED: 11-28-2017
DATE REVIEWED: 11-28-2017

DESCRIPTION OF ITEMS REVIEWED:

1. Gravel Mulch Seeding- Revision 1

NO EXCEPTIONS TAKEN.	**X**
EXCEPTIONS AS NOTED ON DRAWINGS AND/OR ATTACHED SHEETS(S). RESUBMISSION NOT REQUIRED.	
EXCEPTIONS AS NOTED ON DRAWINGS AND/OR ATTACHED SHEETS(S). RESUBMISSION REQUIRED.	
RECEIPT ACKKNOWLEDGED.	

Notes:

NOTE: ITEMS REVIEWED AS TO GENERAL LAYOUT ONLY. DIMENSIONS AND QUANTITIES NOT CHECKED. REVIEW DOES NOT RELIEVE CONTRACTOR OF RESPONSIBILITIES FOR ANY ERRORS WHICH MAY EXIST AS CONTRACTOR SHALL BE RESPONSIBLE FOR DIMENSIONS AND DESIGN OF ADEQUATE CORRECTIONS, DETAILS AND SATISFACTORY CONSTRUCTION OF WORK.

SIGNATURE SANCHEZ.AMY.ELIZABETH.1454434338 Digitally signed by SANCHEZ.AMY.ELIZABETH.1454434338 DN: c=US, o=U.S. Government, ou=DoD, ou=PKI, ou=USA, cn=SANCHEZ.AMY.ELIZABETH.1454434338 Date: 2017.11.28 15:12:42 -07'00' **DATE** 11/28/17

EA Engineering, Science, and Technology, Inc., PBC

Submittal Review Sheet 1

Project Name: **Kirtland BFF Mid-Plume Pump and Treat System Expansion**			Date Received: **11/28/17**			
Project Owner: **Kirtland Air Force Base**			Checked By: **Tyler Curley**			
Contractor: **RMCI, Inc.**	Engineer: **EA Engineering, Science and Technology, Inc., PBC.**		Log Page: **NA**			
Address: **6211 Chappell Rd NE, Albuquerque, NM 87113**	Address: **320 Gold Ave. SW, Suite 1300 Albuquerque, NM 87102**		EA No.: **62599DM01**			
			Spec. Section: **32 92 19**			
			Drawing/Detail No.: **NA**			
ATTN: **Phillip Johnson**	ATTN: **Devon Jercinovic**		1st Sub		Re-Sub	
Date Transmitted: **11/28/2017**	Prev. Transmittal Date:					

Item No.	No. Copies	Description	Manufacturer	Mfg/Vendor Dwg or Detail	Action Taken*
1	1	Gravel Mulch Seeding	Caldon Seeding and Reclamation		A

The Action Designated Above is in Accordance with the Following Legend:

A – Furnish as Submitted
B – Furnish as Noted
C – Revise and Re-submit
1. Not enough information for review.
2. No reproducible submitted.
3. Copies illegible.
4. Not enough copies submitted.
5. Wrong sequence number.
6. Wrong resubmittal number.
7. Wrong Spec. Section.
8. Wrong form used.
9. See Comments.

D – Rejected
E – Engineer's Review not Required
1. Submittal not required.
2. Supplemental Information. Submittal retained for Information purposes only.
3. Information reviewed and approved on prior submittal.
4. See Comments.

Review is for general compliance with Contract Documents. No responsibility is assumed for correctness of dimensions or detail. Contractor is required to specify deviations from contract requirements. Lack of exceptions noted by Engineer does not waive Contractor's obligation to comply with Drawings and Specifications.

Comments:
Items reviewed and confirmed to meet requirements
Issues in Bold

Seed mix, application rate, fertilizer, and gravel mulch are to COA specifications.

By: _____ Date: 11/28/17

Distribution: [1] Contractor [1] Engineer [1] Owner

SUBMITTAL

granite SEED and erosion control

Tren Hagman
490 East 76th Ave.
Denver, CO 80229

tren@graniteseed.com
Phone: (720) 496-0600
Fax: (720) 496-0601

Date: November 28, 2017

To: Len Horan

Company: Caldon Seeding and Reclamation

From: Tren Hagman

Re: Seed Submittal for KAFB- Conveyance Line

These are old genus names, new names are the same as listed in COA specifications

This Letter is to serve that your company has contracted Granite Seed Company to provide the seed for the KAFB- Conveyance Line Project. The seed mix for this project can be provided as specified. The table below shows the mix we will provide for this project. A seed certification will accompany your order identifying individual species, lots, varieties, origin, and pure live seed information.

Species	PLS lbs./acre
Indian ricegrass (Achnatherum hymenoides)	5.00
Galleta grass (Pleuraphis jamesii)	1.00
Sideoats grama (Bouteloua curtipendula)	3.00
Blue grama (Bouteloua gracilis)	1.00
Sand dropseed (Sporobolus cryptandrus)	1.00
Fourwing saltbush (Atriplex canescens)	1.00
Total:	**12.00**

All seed supplied will be in compliance with State and Federal Seed noxious weed laws, with proper labeling and documentation. If you or anyone associated with this project has questions or need anything else at this time, please contact me at the number provided in the header of this document.

Tren Hagman

RICHLAWN ORGANIC 100

Richlawn 3-6-3 with Mychorrizae and Humates

Richlawn 3-6-3 is a CDOT Approved Natural, Organic Fertilizer containing a slow release Nitrogen, Organic Phosphorous, Mycorrhizae and a rich amount of Humus. Richlawn 3-6-3 restores depleted soils with essential nutrients to build a sustainable environment in which to establish vegetation quickly.

Manufactured by Richlawn Turf Food, LLC
15121 WCR 32, Platteville, CO 80651
Net Weight 50 Lbs (22.68 Kg.)

Guaranteed Analysis

Total Nitrogen(N) 3.0%
2.90% Water Insoluble Organic Nitrogen*
.010% Water Soluble Organic Nitrogen
Available Phosphate
(P_2O_5) 6.0%
Soluble Potash (K_2O) 3.0%
Calcium (Ca) 10.0%

Plant Nutrient Sources: Dried Poultry Manure, Bone Meal and Sulfate of Potash.

*2.90% Water insoluble nitrogen from dried poultry manure and bone meal.

Non-Plant Food Ingredients
Humates 14.0%
Endo Mychorrhizae 30,000
Propagules
7500 Propagules Glomus mosseae
7500 Propagules Glomus entunicatum
7500 Propagules Glomus intradices
7500 Propagules Glomus aggregatum

DISTRIBUTED BY:
TRITON ENVIRONMENTAL
5433 NEWPORT STREET
COMMERCE CITY, CO 80022
303.945.7588 (O) 303.945.7579 (F)

The Benefits of Richlawn 3-6-3

- Increases the Nutrient and water holding capacity of the exisiting soil.
- Increases Soil Porosity which promotes superior Root Establishment.
- Mychrrhizae transports nutrients from the soils and delivers them to the plants roots, greatly reducing fertilization and water need.
- Humates add organic material to the soil which increases soil microbiology and water holding capacity.

4
25FT
5
6
7
8
9
10

DEPARTMENT OF THE ARMY
ALBUQUERQUE DISTRICT, CORPS OF ENGINEERS
ALBUQERQUE DISTRICT OFFICE
4101 JEFFERSON PLAZA NE
ALBUQUERQUE, NM 87109

SUBMITTAL REVIEW VERIFICATION SHEET

PROJECT TITLE: Kirtland BFF Mid-Plume Pump and Treat System Expansion
CONTRACT NUMBER: W912DR-12-D-0006 DM01
DATE RECEIVED: 11-21-2017
DATE REVIEWED: 11-22-2017

DESCRIPTION OF ITEMS REVIEWED:

1. KAFB-106239 VFD Resubmittal

NO EXCEPTIONS TAKEN.	
EXCEPTIONS AS NOTED ON DRAWINGS AND/OR ATTACHED SHEETS(S). RESUBMISSION NOT REQUIRED.	**X**
EXCEPTIONS AS NOTED ON DRAWINGS AND/OR ATTACHED SHEETS(S). RESUBMISSION REQUIRED.	
RECEIPT ACKKNOWLEDGED.	

Notes:

Cover sheet is incorrectly labeled as "Extraction Well #7"

NOTE: ITEMS REVIEWED AS TO GENERAL LAYOUT ONLY. DIMENSIONS AND QUANTITIES NOT CHECKED. REVIEW DOES NOT RELIEVE CONTRACTOR OF RESPONSIBILITIES FOR ANY ERRORS WHICH MAY EXIST AS CONTRACTOR SHALL BE RESPONSIBLE FOR DIMENSIONS AND DESIGN OF ADEQUATE CORRECTIONS, DETAILS AND SATISFACTORY CONSTRUCTION OF WORK.

SIGNATURE SANCHEZ.AMY.ELIZABETH.1454434338 Digitally signed by SANCHEZ.AMY.ELIZABETH.1454434338 DN: c=US, o=U.S. Government, ou=DoD, ou=PKI, ou=USA, cn=SANCHEZ.AMY.ELIZABETH.1454434338 Date: 2017.11.22 12:46:29 -07'00' **DATE** 11/22/2017

EA Engineering, Science, and Technology, Inc., PBC

Submittal Review Sheet 8

Project Name: **Kirtland BFF Mid-Plume Pump and Treat System Expansion**				Date Received: **11/21/2017**	
Project Owner: **Kirtland Air Force Base**				Checked By: **Tyler Curley**	
Contractor: **Techsas Inc.**	Engineer: **EA Engineering, Science and Technology, Inc., PBC.**			Log Page: **NA**	
Address: **4819 West Bayshore Drive** **Bacliff, TX 77518**	Address: **320 Gold Ave. SW, Suite 1300** **Albuquerque, NM 87102**			EA No.: **62599DM01**	
				Spec. Section: **00 00 00**	
				Drawing/Detail No.:	
ATTN: **Ed Butler**	ATTN: **Devon Jercinovic**			1st Sub	Re-Sub
Date Transmitted: **11/21/2017**	Prev. Transmittal Date:				

Item No.	No. Copies	Description	Manufacturer	Mfg/Vendor Dwg or Detail	Action Taken*
8	1	KAFB-106239 VFD	Rockwell Automation, Inc.		**A**

The Action Designated Above is in Accordance with the Following Legend:

A – Furnish as Submitted
B – Furnish as Noted
C – Revise and Re-submit
1. Not enough information for review.
2. No reproducible submitted.
3. Copies illegible.
4. Not enough copies submitted.
5. Wrong sequence number.
6. Wrong resubmittal number.
7. Wrong Spec. Section.
8. Wrong form used.
9. See Comments.

D – Rejected
E – Engineer's Review not Required
1. Submittal not required.
2. Supplemental Information. Submittal retained for Information purposes only.
3. Information reviewed and approved on prior submittal.
4. See Comments.

Review is for general compliance with Contract Documents. No responsibility is assumed for correctness of dimensions or detail. Contractor is required to specify deviations from contract requirements. Lack of exceptions noted by Engineer does not waive Contractor's obligation to comply with Drawings and Specifications.

Comments:
VFD was preapproved. Please note that revision 1 includes the NEMA 4X enclosure and shop drawings showing the locations of cutouts for the aftermarket AC unit upgrade.

By: _____ Date: 11/21/17

Distribution: [1] Contractor [1] Engineer [1] Owner

Rockwell Automation

BSE / I & C SOLUTIONS

POWERFLEX 753, 25HP ND, 34A, 460VAC

R1USW01163 - 0001

NEMA 4X - WALLMOUNT

EXTRACTION WELL KAFB-106239

DATE	BY	APPROVAL
11/17/17	MW	DESIGN REVIEW
11/20/17	JWB	FOR MANUFACTURING
		AS SHIPPED
		AS COMMISSIONED

REV.	DATE	BY	ECN/CR. NO.

Rockwell Automation

TITLE SHEET FOR
BSE / I & C SOLUTIONS
EXTRACTION WELL #7

Drawn by: JWB | Date: 11/15/17

CONFIDENTIAL AND PROPRIETARY INFORMATION.
THIS DOCUMENT CONTAINS CONFIDENTIAL AND PROPRIETARY INFORMATION OF ROCKWELL AUTOMATION, INC. AND MAY NOT BE USED, COPIED OR DISCLOSED TO OTHERS, EXCEPT WITH THE AUTHORIZED WRITTEN PERMISSION OF ROCKWELL AUTOMATION, INC.

Sheet N1 Of Next Sh N2

Size		Ver
D	R1USW01163 – 0001	0

FILENAME	SH	DRW_DESC1	DRW_DESC2	DRW_DESC3
N0001	N1	TITLE SHEET FOR	BSE / I & C SOLUTIONS	EXTRACTION WELL #7
N0002	N2	INDEX SHEET FOR	BSE / I & C SOLUTIONS	EXTRACTION WELL #7
N0003	N3	GENERAL NOTES FOR	BSE / I & C SOLUTIONS	EXTRACTION WELL #7
N0004	N4	WIRE CLASIFICATION FOR	BSE / I & C SOLUTIONS	EXTRACTION WELL #7
N0005	N5	TORQUE VALUES FOR	BSE / I & C SOLUTIONS	EXTRACTION WELL #7
E0005	5	SCHEMATIC DRAWING FOR	POWER WIRING AND 115VAC CIRCUIT	EXTRACTION WELL #7
E0010	10	SCHEMATIC DRAWING FOR	POWERFLEX 753 POWER WIRING	EXTRACTION WELL #7
E0011	11	SCHEMATIC DRAWING FOR	24VDC I/O WIRING	EXTRACTION WELL #7
L0001	L1	LAYOUT DRAWING FOR	ENCLOSURE SIZE AND DIMENSIONS	EXTRACTION WELL #7
L0002	L2	LAYOUT DRAWING FOR	ENCLOSURE DOOR AND DEVICES	EXTRACTION WELL #7
L0003	L3	LAYOUT DRAWING FOR	PANEL AND COMPONENTS	EXTRACTION WELL #7

DATE	BY	APPROVAL
11/17/17	MW	DESIGN REVIEW
11/20/17	JWB	FOR MANUFACTURING
		AS SHIPPED
		AS COMMISSIONED

REV.	DATE	BY	ECN/CR. NO.

Rockwell Automation

INDEX SHEET FOR
BSE / I & C SOLUTIONS
EXTRACTION WELL #7

Drawn by: JWB | Date: 11/15/17

CONFIDENTIAL AND PROPRIETARY INFORMATION.
THIS DOCUMENT CONTAINS CONFIDENTIAL AND PROPRIETARY INFORMATION OF ROCKWELL AUTOMATION, INC. AND MAY NOT BE USED, COPIED OR DISCLOSED TO OTHERS, EXCEPT WITH THE AUTHORIZED WRITTEN PERMISSION OF ROCKWELL AUTOMATION, INC.

Sheet N2 Of Next Sh N3

Size D | R1USW01163 – 0001 | Ver 0

DRAWING STANDARDS:

SYMBOLS:

- REFERS TO NOTE GIVEN BELOW
- ▲ LOW POWER CONTACT
- ARROW INDICATES FUNCTION INCREASE (ALWAYS CLOCKWISE)

4 **DANGER** – THIS EQUIPMENT MAY BE AT LINE VOLTAGE EVEN WHEN NOT IN OPERATION. TO AVOID ELECTRIC SHOCK, DISCONNECT.

5 **CAUTION** – NEVER REMOVE OR INSERT ANY MODULE OR CARD WHILE THE POWER IS ON.

9 REMOVE JUMPER IF ADDITIONAL INTERLOCK IS ADDED.

13 SEPARATELY MOUNTED, SUPPLIED BY OTHERS

14 SEPARATELY MOUNTED, SUPPLIED BY ROCKWELL AUTOMATION

32 MOTOR STABILIZING FIELD, S1 AND S2, IS NOT REQUIRED FOR NORMAL OPERATION. TAPE S1 AND S2 SEPARATELY AND DO NOT USE.

33 DRIVE MOTOR CONNECTIONS AS SHOWN ARE FOR INDICATED ROTATION FACING COMMUTATOR END. FOR OPPOSITE ROTATION, INTERCHANGE A1 AND A2 CONNECTIONS IN MOTOR CONDUIT BOX.

34 TACHOMETER LEADS MUST BE CONNECTED TO GIVE THE INDICATED POLARITY.

35 IF OPPOSITE ROTATION IS DESIRED, CHANGE POLARITY OF THE COSINE SIGNAL BY INTERCHANGING THE COSINE INPUT LEADS.

36 USE TWISTED TWO - CONDUCTOR CABLE. THIS CABLE MUST BE IN A SEPARATE SIGNAL CONDUIT. IT CANNOT BE RUN WITH OTHER CONDUCTORS OR CABLES. USE RELIANCE PART NUMBER 417900-76EAD OR EQUIVALENT. REFER TO FIELD INSTALLATION AND WIRING TABLE ON NEXT SHEET FOR WIRE SPECIFICATIONS.

38 SIGNAL WIRE CABLES WITH THIS NOTE NUMBER CAN BE IN THE SAME SIGNAL CONDUIT. THEY CANNOT BE RUN WITH NON-SIGNAL WIRES. REFER TO FIELD INSTALLATION AND WIRING TABLE ON NEXT SHEET FOR WIRE SPECIFICATIONS.

38-1 REFER TO NOTE 38. THE NUMBER FOLLOWING THE NOTE 38 IDENTIFIES THE CABLES THAT MAY BE GROUPED TOGETHER IN THE SAME SIGNAL CONDUIT. FOR EXAMPLE, CABLES REFERENCED WITH NOTE 38-1 CANNOT BE RUN IN THE SAME SIGNAL CONDUIT WITH NOTE 38-2 CABLES.

40 COAXIAL CABLES WITH THIS NOTE CAN BE IN THE SAME SEPARATE SIGNAL CONDUIT. THEY CANNOT BE RUN WITH OTHER CONDUCTORS OR CABLES. FOR RECOMMENDED CABLE TYPE, REFER TO PRODUCT'S NETWORK MANUAL.

TYPE	CABLE P/N (BELDEN P/N)	CONNECTOR P/N (AMPHENOL P/N)
RG59	417900-148A (9259)	405504-74A (31-212-1005)
RG11	417900-149A (8238)	612293-B (6775)

TERMINATOR 75 OHM
RELIANCE P/N 707204-20A
AMPHENOL P/N 46650-75

41 **DANGER** – DO NOT OPEN DISCONNECT SWITCH WHILE THE MOTOR IS ENERGIZED.

47 RESOLVER WIRES: LOW LEVEL SIGNAL WIRING. MUST BE RUN IN SEPARATE SIGNAL CONDUIT OR TRAY.

	BELDEN P/N	NO. OF TWISTED PAIRS		AWG #	RECOMMENDED MAXIMUM DIST. FOR EACH RESOLVER TYPE a> X1	a> X2	a> X5
b>	9730	3		24	1000 FT.	1000 FT.	600 FT.

c>

a> DISTANCES BEYOND THOSE RECOMMENDED MAY REQUIRE ADDITIONAL TUNING. USE RELIANCE CUSTOM PANEL 0-58801

b> MAY ONLY BE RUN IN CONDUIT, PER NEC

c> NOTE: CONNECT CABLE SHIELD TO GROUND AT CABINET ONLY

48 FIBER-OPTIC CABLES WITH THIS NOTE MAY BE RUN WITH ANY LEVEL 1 SIGNAL WIRING. IF NECESSARY THESE CABLES MAY BE RUN WITH ANY LEVEL WIRING. SEE INSTALLATION MANUAL FOR RESTRICTIONS.

52 REFER TO TRANSFORMER NAMEPLATE FOR CONNECTIONS OF PRIMARY LEADS.

53 **DANGER** – TRANSFORMER IS CONNECTED TO LINE VOLTAGE EVEN WHEN THE A-C DISCONNECT IS OPEN.

DATE	BY	APPROVAL
11/17/17	MW	DESIGN REVIEW
11/20/17	JWB	FOR MANUFACTURING
		AS SHIPPED
		AS COMMISSIONED

99 USER SUPPLIED PROTECTION MUST INCLUDE A DISCONNECTING DEVICE ON THE PRIMARY SIDE OF THE TRANSFORMER. PRIMARY AND SECONDARY WIRE PROTECTION FOR THE ISOLATION TRANSFORMER MUST BE PROVIDED PER NEC.

D MOUNTED ON DOOR.

H MOUNTED ON CABINET HOOD

R MOUNTED ON CONTROL HOUSE ROOF

T MOUNTED ON CABINET TRIM

E EXISTING EQUIPMENT

USE EXAMP. LOCATION CODES	DESCRIPTION
REM_NS	REMOTE MOUNTED - NOT SUPPLIED BY ROCKWELL AUTOMATION.
REM_S	REMOTE MOUNTED - SUPPLIED BY ROCKWELL AUTOMATION.
REM	REMOTE MOUNTED.
OS_2	MTD. ON OPERATORS STATION No. 2
PB_3	MTD. ON PUSHBUTTON STATION No. 3

GENERAL NOTES:

1. FOR FURTHER DRIVE INFORMATION ON INSTRUCTION MANUALS, SEE RESPECTIVE SCHEMATIC SECTIONS.
2. ⏚ - BUILDING GROUND TO BE GROUNDED BY CUSTOMER.
   TE - SYSTEM ZERO POTENTIAL NODE
   PE - POWER EQUIPMENT GROUND
   ⏚ - PANEL (CHASSIS) GROUND
3. THE INTERNAL WIRING SELECTED MEETS OR EXCEEDS NEC, UL, AND CSA. INTERNAL POWER AND CONTROL WIRE HAS INSULATION RATED AT 105°C OR HIGHER.
4. * -INDICATES COMPONENTS SUPPLIED BY OTHERS.
5. (4) INDICATES FIELD INSTALLED WIRES AS WELL AS THE WIRING LEVEL.
   WHEN ACCOMPANIED WITH THE DESIGNATION (FWC) THE WIRES/CABLE ARE PRE-SUPPLIED AT THE SOURCE CONNECTION BY ROCKWELL FOR CUSTOMER INSTALLATION AT SITE. (FWC) INDICATES FURNISHED WITH CABINET.
6. —○— -INDICATES OUTGOING TERMINAL.
   —□— -INDICATES TERMINAL ON ELECTRONIC ASSEMBLY PRINTED CIRCUIT BOARD (1EA) ETC.
   CR —⊗— -INDICATES RELAY OR CONTACTOR WITH SUPPRESSOR.
7. COIL AND CONTACT CROSS REFERENCING - NUMBERS ADJACENT TO COIL AND UNDER CONTACT INDICATE SHEET AND LINE NUMBERS.

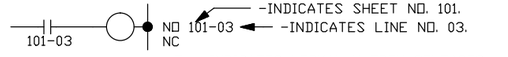

-INDICATES SHEET NO. 101.
-INDICATES LINE NO. 03.
NO - INDICATES NORMALLY OPEN CONTACTS
NC - INDICATES NORMALLY CLOSED CONTACTS

OFF-PAGE CROSS REFERENCING - NUMBERS ADJACENT TO SOURCE AND DESTINATION SYMBOLS INDICATE SHEET AND LINE NUMBERS.

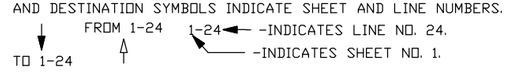

-INDICATES LINE NO. 24.
-INDICATES SHEET NO. 1.

REV DATE: 9-17-2008

8. WIRE # GENERATION
   - INDICATES WIRE NUMBER.
   - INDICATES SEQUENCE (1,2,, 3 . . . etc.).
   - INDICATES LINE NUMBER 24.
   - INDICATES SHEET NUMBER 11.

   11242

   INTERNAL WIRE NUMBERS MAY BE "FIXED" WITH A LINE AND SEQUENCE, BUT MAY SCHEMATICALLY SHOW A PREFIX.
9. TYPICAL DUAL VOLTAGE MOTOR FIELD CONNECTIONS ARE SHOWN BELOW. CONSULT THE MOTOR MANUFACTURER'S INSTRUCTIONS FOR CORRECT CONNECTIONS.

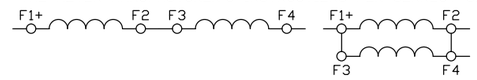

10. DC MOTOR ROTATION - CONSULT THE MOTOR MANUFACTURER'S INSTRUCTIONS FOR CORRECT CONNECTIONS.
    FOR CCW ROTATION FACING COMMUTATOR END:
    A1 IS POSITIVE
    F1 IS POSITIVE
    FOR CW ROTATION FACING COMMUTATOR END:
    A2 IS POSITIVE
    F1 IS POSITIVE
    FOR CCW ROTATION WITH SERIES FIELD:

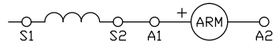

    FOR CW ROTATION WITH SERIES FIELD:

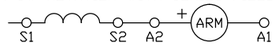

    FOR CCW ROTATION WITHOUT SERIES FIELD:

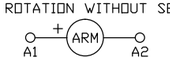

    FOR CW ROTATION WITHOUT SERIES FIELD:

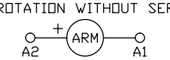

11. AC MOTOR ROTATION - CONSULT THE MOTOR MANUFACTURER'S INSTRUCTIONS FOR CORRECT CONNECTIONS.
    FOR CW ROTATION VIEWED FROM MOTOR SHAFT:
    INVERTER OUTPUT U2 TO T1 (EUROPEAN MARKING U1)
    V2 TO T2 (EUROPEAN MARKING V1)
    W2 TO T3 (EUROPEAN MARKING W1)
    FOR CCW ROTATION VIEWED FROM MOTOR SHAFT:
    INVERTER OUTPUT U2 TO T1 (EUROPEAN MARKING U1)
    V2 TO T3 (EUROPEAN MARKING W1)
    W2 TO T2 (EUROPEAN MARKING V1)

    NOTE: NOT ALL AC MOTOR SUPPLIERS COMPLY WITH THE ABOVE CONVENTIONS.

COMBINATION MOTOR CONTROLLER WITH MOTOR CIRCUIT PROTECTOR

DANGER: To maintain overcurrent, short circuit and ground fault protection, the manufacturer's instructions for selecting current elements and setting the instantaneous-trip circuit breaker must be followed.

AVERTISSEMENTPour assurer une protection continue contre les surintensités, les court-circuits et une mise à la terre accidentelle, il est essentiel de choisir les ?el?ements thermiques et de régler le disjoncteur à déclenchement instantané selon la notice technique du fabricant.

Determine motor full load current and motor design type identifier from motor nameplate.

For Design B, C an D motors adjust motor circuit protector to operate at a current setting between ten (10) and thirteen (13) times the full load current. For Design E and N motors adjust motor circuit protector to operate at a current setting between thirteen (13) and seventeen (17) times the full load current.

NOTE: Motor circuit protector is set at minimum current setting when shipped from factory.

DANGER: Tripping of the instantaneous-trip circuit breaker is an indication that a fault current has been interrupted. Current carrying components of the magnetic motor controller should be examined and replaced if damaged, to provide continued protection against a risk of fire or electric shock. If burnout of the current element of an overload relay occurs, the complete overload relay must be replaced. (Refer to NEMA Standards Publication No. ICS 2.2 titled: 'Maintenance of Motor Controllers After a Fault Condition' ñ also published as NEMA Standard Publication No. ICS 2, Part ICS 2-302.)

AVERTISSEMENTL'ouverture du disjoncteur à déclenchement instantané indique qu'un courant de défaut a été interrompu. Les composants conducteurs de la commande magnétique du moteur doivent être inspectés et remplacés s'ils ont subi des dommages, afin d'assurer une protection continue contre le risque d'incendie et de choc électrique. En cas de défaillance de l'élément thermique d'un relais de surcharge, celui-ci doit être remplacé dans sa totalité.

REV.	DATE	BY	ECN/CR. NO.

Rockwell Automation

CONFIDENTIAL AND PROPRIETARY INFORMATION.
THIS DOCUMENT CONTAINS CONFIDENTIAL AND PROPRIETARY INFORMATION OF ROCKWELL AUTOMATION, INC. AND MAY NOT BE USED, COPIED OR DISCLOSED TO OTHERS, EXCEPT WITH THE AUTHORIZED WRITTEN PERMISSION OF ROCKWELL AUTOMATION, INC.

GENERAL NOTES FOR
BSE / I & C SOLUTIONS
EXTRACTION WELL #7

Drawn by: JWB | Date: 11/15/17

Sheet N3 Of Next Sh N4

Size D | R1USW01163 – 0001 | Ver 0

FIELD INSTALLATION AND WIRING

CATEGORY	WIRING LEVEL	SUB-GROUP	SIGNAL DEFINITION	SIGNAL EXAMPLES	CABLE TYPE	MINIMUM SPACING IN INCHES BETWEEN LEVELS (STEEL CONDUIT/TRAY) 4S	4	3 3S	2 2S	1	SPACING NOTES
POWER (SEE NOTE 2-C FOR SPACING BELOW)	4	S	AC POWER (> 600VAC)	2.3KV 3 PHASE AC LINES	PER NEC AND LOCAL CODES	SEE NOTE: 7	SEE NOTE: 7	SEE NOTE: 7	SEE NOTE: 7	SEE NOTE: 7	1 2 5
			AC POWER (TO 600VAC)	480V 3 PHASE AC LINES	PER NEC AND LOCAL CODES	SEE NOTE: 7	0	3/6	3/12	3/9	
			DC POWER	DC MOTOR ARMATURE	PER NEC AND LOCAL CODES						
			DC POWER	REGULATED DC MOTOR FIELD	PER NEC AND LOCAL CODES						
CONTROL (300V MAX OR 20 AMPS)	3		115VAC/VDC LOGIC	RELAY LOGIC, PLC I/O	PER NEC AND LOCAL CODES	SEE NOTE: 7	3/6	0	3/9	1/3	
			115VAC POWER	POWER SUPPLIES, INSTRUMENTS							
		S	24VAC/VDC LOGIC	PLC I/O	PER NEC AND LOCAL CODES						
MEDIUM LEVEL SIGNAL (PROCESS)	2		ANALOG SIGNALS DC SUPPLIES	REF/FEEDBACK SIGNAL, 5 TO 24VDC SUPPLIES	SHIELDED CABLE BELDEN 8770, 9418	SEE NOTE: 7	3/12	3/9	0	1/1	2 3 4 5 6
			DIGITAL (LOW SPEED)	TTL							
		S	DIGITAL (HIGH SPEED)	RESOLVER, ENCODER/COUNTER I/O, PULSE TACH FEEDBACK	SHIELDED CABLE BELDEN 9730, 9773, 9892 (SEE USER MANUAL)						
		SHLD	ANALOG SIGNALS	REF/FEEDBACK SIGNALS	SHIELDED CABLE, TWISTED CONDUCTORS BELDEN 8760, 9729						
LOW LEVEL SIGNAL (COMM.)	1		SERIAL COMMUNICATION	RS232, 422 TO TERMINALS, PRINTERS	SHIELDED CABLE RS232-BELDEN 8770,8760 RS422-BELDEN 9729,9730	SEE NOTE: 7	3/9	1/3	1/1	0	5
		S	PLC SERIAL COMMUNICATION (> 20K BAUD)	PLC REMOTE I/O, PLC DATA HIGHWAY	TWINAXIAL CABLE BELDEN 9463 R-A 1770-CD						
		C	PLC SERIAL COMMUNICATION (> 5MB)	CONTROL NET	RG-6 QUAD SHIELD, COAX CABLE; A-B 1786-RG6 BELDEN 3092A						
		D	CAN COMMUNICATION	DEVICE - NET DRIVE - DRIVE	R-A 1485C-P1-C						
		E	ETHERNET		DEPENDS ON INSTALLATION						
		F	PLC SERIAL COMMUNICATION (> 5MB)	CONTROL-NET	FIBER OPTIC		N/A	N/A	N/A	N/A	N/A

EXAMPLE: SPACING RELATIONSHIP BETWEEN 480VAC INCOMING LEADS
a. 480VAC LEADS ARE LEVEL 4.
b. 24VDC LEADS ARE LEVEL 3.
c. FOR SEPARATE STEEL CONDUITS, THE CONDUITS ARE TO BE 3 INCHES APART.
d. IN A CABLE TRAY THE TWO GROUPS OF LEADS ARE TO BE 6 INCHES APART.

SHIELDED CABLES RECOMMENDATIONS:

BELDEN	8770	18 AWG - 3 CONDUCTOR SHIELDED
BELDEN	8760	18 AWG - 2 CONDUCTOR SHIELDED
BELDEN	9418	18 AWG - 4 CONDUCTOR SHIELDED
BELDEN	9728	24 AWG - 3 SHIELDED PAIRS (6 COND.)
BELDEN	9729	24 AWG - 2 SHIELDED PAIRS (4 COND.)
BELDEN	9730	24 AWG - 3 SHIELDED PAIRS (6 COND.)
BELDEN	9892	22 AWG - 3 SHIELDED PAIRS (6 COND.)
BELDEN	9773	18 AWG - 3 SHIELDED PAIRS (6 COND.)
BELDEN	9463	75 OHM - TWINAXIAL (2 COND.)

FIELD WIRING INSIDE ROCKWELL ENCLOSURE:

1. CONNECTIONS WILL BE ONLY TO TERMINALS PROVIDED.
2. WIRE LENGTH FROM ENTRY POINT TO TERMINAL BOARD TO BE AS SHORT AS POSSIBLE.
3. SIGNAL WIRE MUST NOT BE LACED OR RUN WITH NON-SIGNAL WIRE AFTER ENTRY INTO THE ENCLOSURE.
4. INCOMING WIRE MUST NOT BE ROUTED IN WIRE CHANNELS OR THROUGH AREAS OF POWER AND CONTROL COMPONENTS AND WIRING.
5. USE LASHING BARS WHEN PROVIDED FOR CUSTOMER CONVENIENCE.

FIELD INSTALLATION GROUNDING GUIDELINES

1. FOR DRIVES INSTALLATION, REFER TO 'WIRING AND 'GROUNDING GUIDELINES', PUBLICATION DRIVES-IN001
2. FOR PLC AND I/O INSTALLATION, REFER TO 'INDUSTRIAL AUTOMATION WIRING AND GROUNDING GUIDELINES', PUBLICATION 1770-4.1
3. NEC ARTICLE 250, GROUNDING AND BONDING
4. LOCAL CODE REQUIREMENTS

REV DATE: 9-18-2008

DATE	BY	APPROVAL
11/17/17	MW	DESIGN REVIEW
11/20/17	JWB	FOR MANUFACTURING
		AS SHIPPED
		AS COMMISSIONED

GENERAL NOTES:

1. STEEL CONDUIT IS RECOMMENDED FOR LEVELS 1 AND 2. FOR AC MOTOR CABLES, SEE NOTE 5.
   ALL CONDUITS CONNECTED TO THE CABINETS SHOULD BE PROPERLY SEALED TO MINIMIZE AIR OR WATER ENTRY INTO THE CABINETS. IF ALUMINUM CONDUIT IS USED.
   A. IT REQUIRES THE SAME MINIMUM SPACING IS USED AS THAT SHOWN FOR CABLE TRAYS.
   OR
   B. INDIVIDUAL STEEL JACKETED (STEEL MESH) CABLES ARE TO BE USED IF THE CONDUIT SPACINGS NEED BE THE SAME AS STEEL CONDUIT.
2. SPACING SHOWN BETWEEN LEVELS IS THE MINIMUM REQUIRED FOR PARALLEL RUNS ≤ 400 FEET. GREATER SPACINGS SHOULD BE USED WHERE POSSIBLE.
3. SHIELDS FOR SHIELDED CABLES MUST BE CONNECTED AT ONE END ONLY. THE OTHER END SHOULD BE CUT BACK AND INSULATED. SHIELDS FOR CABLES FROM A CABINET TO AN EXTERNAL DEVICE MUST BE CONNECTED AT CABINET END. SHIELDS FOR CABLES FROM ONE CABINET TO ANOTHER MUST BE CONNECTED AT THE SOURCE END CABINET. SPLICING OF SHIELDED CABLES, IF ABSOLUTELY NECESSARY, SHOULD BE DONE SUCH THAT SHIELD(S) REMAIN CONTINUOUS AND INSULATED FROM GROUND.
4. NO. 16 AWG WIRE IS THE MINIMUM RECOMMENDED SIZE FOR CONTROL (LEVEL 3). POWER WIRE IS SELECTED BY LOAD, USING 75 DEG C WIRE RATING (LEVELS 4 AND 4S).
5. ARMORED CABLE WITH A PVC OUTER JACKET IS REQUIRED TO PROVIDE THE NECESSARY ELECTRICAL SHIELDING FOR AC MOTOR CABLES CONNECTED TO A PWM INVERTER.
   RECOMMENDATIONS:
   METALLIC ARMOR:
   BEST PERFORMANCE: SHIELDED BELDEN CABLE PER TABLE BELOW, OR CONTINUOUS CORRUGATED ALUMINUM
   ACCEPTABLE PERFORMANCE: INTERLOCKED ALUMINUM, OR INTERLOCKED STEEL
   CONDUCTORS:
   BEST PERFORMANCE: PHASE CONDUCTORS - 3, GROUND CONDUCTORS - 3
   ACCEPTABLE PERFORMANCE: PHASE CONDUCTORS - 3, GROUND CONDUCTORS - 1
   THE CABLE CONNECTOR SELECTED MUST PROVIDE A GOOD ELECTRICAL CONNECTION BETWEEN THE ARMOR AND THE PE GROUND PLANE AT EACH END OF THE CABLE.
   SHIELDED CABLE RECOMMMENDATIONS:

BELDEN	29500	#16 AWG
BELDEN	29501	#14 AWG
BELDEN	29502	#12 AWG
BELDEN	29503	#10 AWG
BELDEN	29504	#8 AWG
BELDEN	29505	#6 AWG
BELDEN	29506	#4 AWG
BELDEN	29507	#2 AWG

   DESCRIPTION - 4 CONDUCTOR TINNED COPPER, XLPE INSULATION, 600VRMS MAX, SPECIFICALLY DESIGNED FOR IGBT DRIVE APPLICATIONS. THE SHIELD SHOULD BE CONNECTED TO THE PE GROUND PLANE
6. SEE A-B PUBLICATION AG2.2 FOR ADDITIONAL CONTROLNET COAX CABLE RECOMMENDATIONS.

SPACING NOTES:

1. BOTH OUTGOING & RETURN CURRENT CARRYING CONDUCTORS ARE TO BE PULLED IN THE SAME CONDUIT OR LAYERED ADJACENT IN CABLE TRAY.
2. ROUTE CABLES OF THE FOLLOWING LEVELS AS INDICATED:
   A. LEVELS MUST BE RUN IN SEPARATE CONDUITS OR TRAYS.
   B. INTERMIXING OF LEVELS IS NOT ALLOWED.
   C. SPECIAL LEVELS 4S AND 3S MAY EXIST THAT REQUIRE SPECIFIC WIRES TO BE GROUPED FOR SPECIAL HANDLING. NOTE: FOR LEVELS 3 AND 4, THE AMPACITY RATINGS OF CONDUCTORS IN A BUNDLE MAY NOT EXCEED THE DERATING GUIDELINES OF NEC 310.15(2), AND TABLE 310.15(B)(2)a.
   D. LEVELS 1 AND 2 MAY HAVE THEIR RESPECTIVE CIRCUITS (WITHIN A GIVEN LEVEL) PULLED IN THE SAME CONDUIT OR LAYERED ADJACENT IN THE SAME CABLE TRAY. NOTE: THE RESPECTIVE CIRCUITS IN A GIVEN BUNDLE MAY EXPERIENCE SOME AMOUNT OF EMI COUPLING. SOME CIRCUIT APPLICATIONS MAY DICTATE SEPARATE SPACING.
3. CONDUCTORS OF LEVELS 1 AND 2 MUST BE SHIELDED WHERE INDICATED PER THE RECOMMENDATIONS OR EQUIVALENT.
4. IN CABLE TRAYS, STEEL SEPARATORS ARE ADVISABLE BETWEEN THE LEVELS.
5. IF CONDUIT IS USED IT IS REQUIRED THAT IT BE CONTINUOUS AND COMPOSED OF MAGNETIC STEEL. (SEE GENERAL NOTE 1 ABOVE)
6. FOR FURTHER INFORMATION ON SPACING OF PLC COMMUNICATION CABLES TO LEVEL 4, SEE R-A PLC INSTALLATION MANUAL.
7. PER NEC ARTICLE 300-3(C)(2) , CONDUCTORS OF CIRCUITS RATED OVER 600V ARE NOT ALLOWED TO OCCUPY THE SAME CABLE, TRAY, OR CONDUIT. IT IS ACCEPTABLE FOR A TRAY TO HAVE A METAL BARRIER FOR SEPARATION.

COIL AND SOLENOID SUPPRESSION:

BEFORE UTILIZING THE CONTROL CIRCUIT POWER AVAILABLE FOR OPERATION OF CUSTOMER SUPPLIED DEVICES, THE COILS OR SOLENOIDS OF SUCH DEVICES MUST BE SUPPRESSED. THE EXTERNAL CONTROL CIRCUIT WIRING MUST BE RUN IN A SEPARATE CONDUIT THAT DOES NOT HAVE VARIABLE SIGNAL VOLTAGES OR POWER CIRCUIT VOLTAGES PRESENT. ELECTRICAL TRANSIENTS MAY CAUSE OCCASIONAL DRIVE MALFUNCTIONING.

REV.	DATE	BY	ECN/CR. NO.

Rockwell Automation

WIRE CLASIFICATION FOR
BSE / I & C SOLUTIONS
EXTRACTION WELL #7

Drawn by: JWB Date: 11/15/17

CONFIDENTIAL AND PROPRIETARY INFORMATION.
THIS DOCUMENT CONTAINS CONFIDENTIAL AND PROPRIETARY INFORMATION OF ROCKWELL AUTOMATION, INC. AND MAY NOT BE USED, COPIED OR DISCLOSED TO OTHERS, EXCEPT WITH THE AUTHORIZED WRITTEN PERMISSION OF ROCKWELL AUTOMATION, INC.

Sheet N4 OF Next Sh N5

Size D | R1USW01163 - 0001 | Ver 0

WIRE TERMINATION TORQUE VALUES

BULLETIN 1492 TERMINAL BLOCKS

PART NUMBER	TORQUE IN-LBS	TORQUE N-m	WIRE RANGE
1492-H4	7.1	0.8	30-12 AWG
1492-H5	7.1	0.8	30-12 AWG
1492-H6	7.1	0.8	30-12 AWG
1492-H7	7.1	0.8	30-12 AWG
1492-J3	4.5-7.1	0.5-0.8	22-12 AWG
1492-JD3	4.5-7.1	0.5-0.8	22-12 AWG
1492-J4	9.0	1.0	22-10 AWG
1492-JD4	4.5	0.5	26-10 AWG
1492-J6	14.2	1.6	22-8 AWG
1492-J10	20.4	2.3	18-6 AWG
1492-J16	35.0	4.0	18-6 AWG
1492-J35	51.0	5.8	12-1/0 AWG
1492-J50	31.5	3.6	10-1/0 AWG
1492-J70	87.0	9.8	6-2/0 AWG
1492-J120	141.6	16.0	4-250MCM AWG
1492-JG3	7.1	0.8	22-12 AWG
1492-JG4	9.0	1.0	22-10 AWG
1492-JG6	14.2	1.6	22-8 AWG
1492-JG10	20.4	2.3	16-6 AWG
1492-JG16	35.0	4.0	24-4 AWG
1492-JG35	51.0	5.8	12-1 AWG
1492-JG50	31.5	3.6	10-1/0 AWG
1492-JG70	87.0	9.8	6-2/0 AWG
1492-JG120	88.5	10	4-3/0 AWG

BULLETIN 1492 FUSE BLOCKS

PART NUMBER	TORQUE IN-LBS	TORQUE N-m	WIRE RANGE
1492-FB1C30 (-L)	22	2.5	18-8 AWG
1492-FB1C30 (-L)	26	2.5	6-4 AWG
1492-FB2C30 (-L)	22	2.5	18-8 AWG
1492-FB2C30 (-L)	26	2.5	6-4 AWG
1492-FB3C30 (-L)	22	2.5	18-8 AWG
1492-FB3C30 (-L)	26	2.5	6-4 AWG
1492-FB1M30 (-L)	22	2.5	18-8 AWG
1492-FB1M30 (-L)	26	2.5	6-4 AWG
1492-FB2M30 (-L)	22	2.5	18-8 AWG
1492-FB2M30 (-L)	26	2.5	6-4 AWG
1492-FB3M30 (-L)	22	2.5	18-8 AWG
1492-FB3M30 (-L)	26	2.5	6-4 AWG
1492-FB1J30 (-L)	35	4	18-1 AWG
1492-FB2J30 (-L)	35	4	18-1 AWG
1492-FB3J30 (-L)	35	4	18-1 AWG
1492-FB1J60 (-L)	35	4	14-1 AWG
1492-FB2J60 (-L)	35	4	14-1 AWG
1492-FB3J60 (-L)	35	4	14-1 AWG

BULLETIN 100 CONTACTORS

PART NUMBER	TORQUE IN-LBS	TORQUE N-m	WIRE RANGE
100-C09	13-22	1.5-2.5	(2) 16-10 AWG
100-C12	13-22	1.5-2.5	(2) 16-10 AWG
100-C16	13-22	1.5-2.5	(2) 16-10 AWG
100-C23	13-22	1.5-2.5	(2) 16-10 AWG
100-C30	22-31	2.5-3.5	14-6 AWG
100-C37	22-31	2.5-3.5	14-6 AWG
100-C43	22-31	2.5-3.5	14-6 AWG
100-C60	40-53	4.5-6.0	14-1 AWG
100-C72	40-53	4.5-6.0	14-1 AWG
100-C85	40-53	4.5-6.0	14-1 AWG
100-C97	40-53	4.5-6.0	14-1 AWG

BULLETIN 140G CIRCUIT BREAKERS

PART NUMBER	TORQUE IN-LBS	TORQUE N-m	WIRE RANGE
140G-G-TLC1_	62	7.0	(1) 14-1/0 AWG
140G-G-MTL6_	62	7.0	(6) 14-2 AWG
140G-H-TLC1_	62	7.0	(1) 14-1/0 AWG
140G-H-MTL6_	62	7.0	(6) 14-2 AWG
140G-I-TLA1_	50	5.6	(1) 14-1/0 AWG
140G-I-TLA1A_	200	22.6	(1) 4-300 MCM AWG
140G-I-TLC1_	124	14.0	(1) 10-250 MCM AWG
140G-I-MTL6_	62	7.0	(6) 12-2 AWG
140G-J-TLA1_	50	5.6	(1) 14-1/0 AWG
140G-J-TLA1A_	200	22.6	(1) 4-300 MCM AWG
140G-J-TLC1_	124	14.0	(1) 10-250 MCM AWG
140G-J-MTL6_	62	7.0	(6) 12-2 AWG
140G-K-TLA1_	380	43	(1) 250-500 MCM AWG
140G-K-TLA2_	380	43	(2) 2/0-250 MCM AWG
140G-K-TLC1_	380	43	(1) 250-500 MCM AWG
140G-K-TLC2_	380	43	(2) 2/0-250 MCM AWG
140G-K-MTL6_	62	7	(6) 6-1/0 AWG
140G-M-TLA2_	274	31	(2) 250-500 MCM AWG
140G-M-TLA3_	380	43	(3) 2/0-400 MCM AWG
140G-M-TLC2_	274	31	(2) 3/0-350 MCM AWG
140G-M-TLC3_	380	43	(3) 2/0-350 MCM AWG
140G-N-TLA4_	380	43	(4) 4/0-500 MCM AWG
140G-N-TLC4_	380	43	(4) 4/0-500 MCM AWG

'_' IS EITHER 3 OR 4 DEPENDING ON HOW MANY POLES THE BREAKER HAS

BULLETIN 194R TERMINAL LUGS

PART NUMBER	TORQUE IN-LBS	TORQUE N-m	WIRE RANGE
194R-30-MTL3	14	1.6	14-8 AWG
194R-60-MTL3	24	2.8	14-4 AWG
194R-TL1	275	31	6-300 MCM AWG
194R-TL2	275	31	6-300 MCM AWG
194R-TL3	550	62	4-600 MCM AWG
194R-TL4	550	62	4-600 MCM AWG
194R-TL5	200	22.6	6-2 AWG
194R-TL6	375	42.4	1-350 MCM AWG
194R-TL7	375	42.4	2-600 MCM AWG
194R-TL8	375	42.4	2-600 MCM AWG
194R-TL9	375	42.4	2-600 MCM AWG
194R-TL10	375	42.4	2-600 MCM AWG

BULLETIN 1489-M CIRCUIT BREAKERS

PART NUMBER	TORQUE IN-LBS	TORQUE N-m	WIRE RANGE
1489-M_	13.3	1.5	18-16 AWG
1489-M_	17.7	2	14-10 AWG
1489-M_	39.8	4.5	8-4 AWG

BULLETIN 1321 OPEN REACTORS

PART NUMBER	TORQUE IN-LBS	TORQUE N-m	WIRE RANGE
1321-3R1-A	4.5	0.51	22-14 AWG
1321-3R1-B	4.5	0.51	22-14 AWG
1321-3R1-C	4.5	0.51	22-14 AWG
1321-3R2-A	4.5	0.51	22-14 AWG
1321-3R2-B	4.5	0.51	22-14 AWG
1321-3R2-C	4.5	0.51	22-14 AWG
1321-3R4-A	4.5	0.51	22-14 AWG
1321-3R4-B	4.5	0.51	22-14 AWG
1321-3R4-C	4.5	0.51	22-14 AWG
1321-3R8-A	4.5	0.51	22-14 AWG
1321-3R8-B	4.5	0.51	22-14 AWG
1321-3R8-C	4.5	0.51	22-14 AWG
1321-3R12-A	16	1.81	22-6 AWG
1321-3R12-B	16	1.81	22-6 AWG
1321-3R12-C	16	1.81	22-6 AWG
1321-3R18-A	16	1.81	22-6 AWG
1321-3R18-B	16	1.81	22-6 AWG
1321-3R18-C	16	1.81	22-6 AWG
1321-3R25-A	16	1.81	22-6 AWG
1321-3R25-B	16	1.81	22-6 AWG
1321-3R25-C	16	1.81	22-6 AWG
1321-3R35-A	16	1.81	22-6 AWG
1321-3R35-B	16	1.81	22-6 AWG
1321-3R35-C	20	2.26	18-4 AWG
1321-3R45-A	20	2.26	18-4 AWG
1321-3R45-B	20	2.26	18-4 AWG
1321-3R45-C	20	2.26	18-4 AWG
1321-3R55-A	45	5.09	6-1/0 AWG
1321-3R55-B	45	5.09	6-1/0 AWG
1321-3R55-C	45	5.09	6-1/0 AWG
1321-3R80-A	45	5.09	6-1/0 AWG
1321-3R80-B	45	5.09	6-1/0 AWG
1321-3R80-C	45	5.09	6-1/0 AWG
1321-3R100-A	150	16.95	2-4/0 AWG
1321-3R100-B	150	16.95	2-4/0 AWG
1321-3R100-C	150	16.95	2-4/0 AWG
1321-3R130-A	150	16.95	2-4/0 AWG
1321-3R130-B	150	16.95	2-4/0 AWG
1321-3R130-C	150	16.95	2-4/0 AWG
1321-3R160-A	150	16.95	2-4/0 AWG
1321-3R160-B	150	16.95	2-4/0 AWG
1321-3R160-C	150	16.95	2-4/0 AWG

POWERFLEX 750 SERIES AC DRIVES POWER TERMINAL BLOCKS

FRAME SIZE	TORQUE IN-LBS	TORQUE N-m	WIRE RANGE
1,2	5	0.57	24-10 AWG
3	10.6	1.2	20-6 AWG
4	24	2.7	14-3 AWG
5	35	4.0	8-1 AWG
6	100	11.3	M8 x 1.25STUD
7	100	11.3	M8 x 1.25STUD

BULLETIN 1494R TERMINAL LUGS

PART NUMBER	TORQUE IN-LBS	TORQUE N-m	WIRE RANGE
1494R-N1	45	5.09	14-4 AWG
1494R-N2	150	16.95	8-1/0 AWG
1494R-N3	275	31	6-4/0 AWG
1494R-N10	325	36.72	(2) 1/0-350 AWG
1494R-N11	325	36.72	(2) 1/0-350 AWG
1494R-N12	375	42.37	1/0-500 AWG
1494R-N14	303	34.23	(2) 1/0-250 AWG
1494R-N15	415	46.89	4-500 AWG

BULLETIN 199 TERMINAL LUGS

PART NUMBER	TORQUE IN-LBS	TORQUE N-m	WIRE RANGE
199-LE1	150	16.9	8-1/0 AWG
199-LF1	275	31	6-250MCM AWG
199-LG1	375	42	4-500MCM AWG
199-LH1	275	31	1/0-350MCM AWG
199-LJ1	275	31	1/0-500MCM AWG

BULLETIN 100 TERMINAL LUGS

PART NUMBER	TORQUE IN-LBS	TORQUE N-m	WIRE RANGE
100-DL110	70-90	8.0-10	14-2/0 AWG
100-DLE110	70-90	8.0-10	8-2/0 AWG
100-DL180	90-110	10-12	6-300MCM AWG
100-DL420	375	42	4-350MCM AWG
100-DL630	400	45	2/0-500MCM AWG
100-DL860	400	45	2/0-500MCM AWG

HOFFMAN GROUND BAR

PART NUMBER	TORQUE IN-LBS	TORQUE N-m	WIRE RANGE
P-GS2K	40	4.5	- AWG
P-GS4K	40	4.5	- AWG
P-GS6K	40	4.5	- AWG

BURNDY GROUND LUGS

PART NUMBER	TORQUE IN-LBS	TORQUE N-m	WIRE RANGE
KPA8CTP	12	1.36	14-6 AWG
KA26U	120	13.6	6-2/0 AWG
KA31U	375	42.4	6-350MCM AWG
KA34U	500	56.5	4-500MCM AWG

USE COPPER, 60°C WIRE IF RATED LESS THAN 100 AMPS
OR 75°C WIRE IF RATED 100 AMPS OR MORE

DATE	BY	APPROVAL
11/17/17	MW	DESIGN REVIEW
11/20/17	JWB	FOR MANUFACTURING
		AS SHIPPED
		AS COMMISSIONED

REV.	DATE	BY	ECN/CR. NO.

Rockwell Automation

TORQUE VALUES FOR
BSE / I & C SOLUTIONS
EXTRACTION WELL #7

Drawn by: JWB | Date: 11/15/17

CONFIDENTIAL AND PROPRIETARY INFORMATION.
THIS DOCUMENT CONTAINS CONFIDENTIAL AND PROPRIETARY INFORMATION OF ROCKWELL AUTOMATION, INC. AND MAY NOT BE USED, COPIED OR DISCLOSED TO OTHERS, EXCEPT WITH THE AUTHORIZED WRITTEN PERMISSION OF ROCKWELL AUTOMATION, INC.

Sheet N5 Of Next Sh 5

Size D | R1USW01163 - 0001 | Ver 0

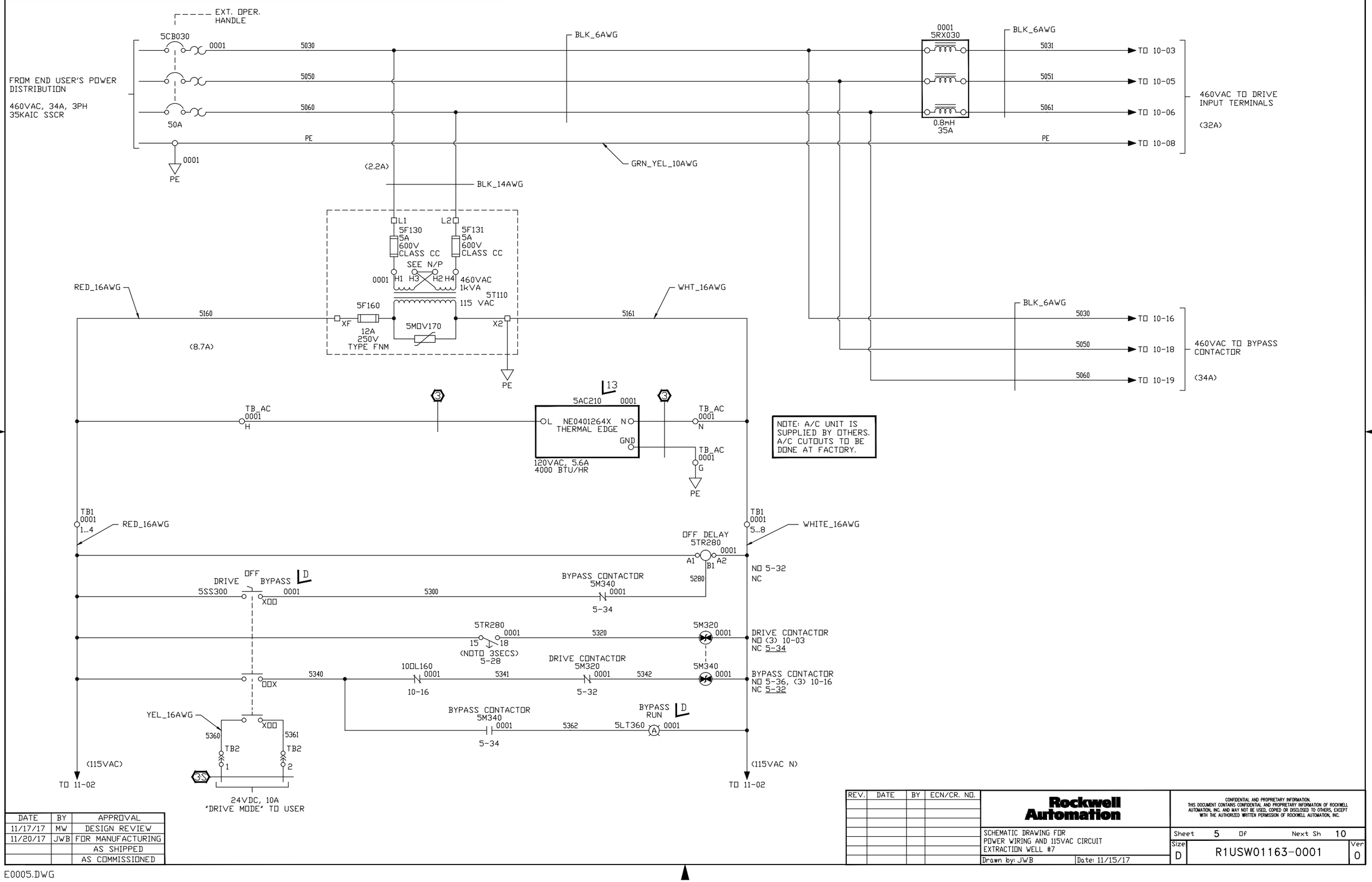

DATE	BY	APPROVAL
11/17/17	MW	DESIGN REVIEW
11/20/17	JWB	FOR MANUFACTURING
		AS SHIPPED
		AS COMMISSIONED

REV.	DATE	BY	ECN/CR. NO.

Rockwell Automation

SCHEMATIC DRAWING FOR
POWER WIRING AND 115VAC CIRCUIT
EXTRACTION WELL #7

Drawn by: JWB | Date: 11/15/17

CONFIDENTIAL AND PROPRIETARY INFORMATION.
THIS DOCUMENT CONTAINS CONFIDENTIAL AND PROPRIETARY INFORMATION OF ROCKWELL AUTOMATION, INC. AND MAY NOT BE USED, COPIED OR DISCLOSED TO OTHERS, EXCEPT WITH THE AUTHORIZED WRITTEN PERMISSION OF ROCKWELL AUTOMATION, INC.

Sheet 5 Of Next Sh 10

Size D | R1USW01163-0001 | Ver 0

E0005.DWG

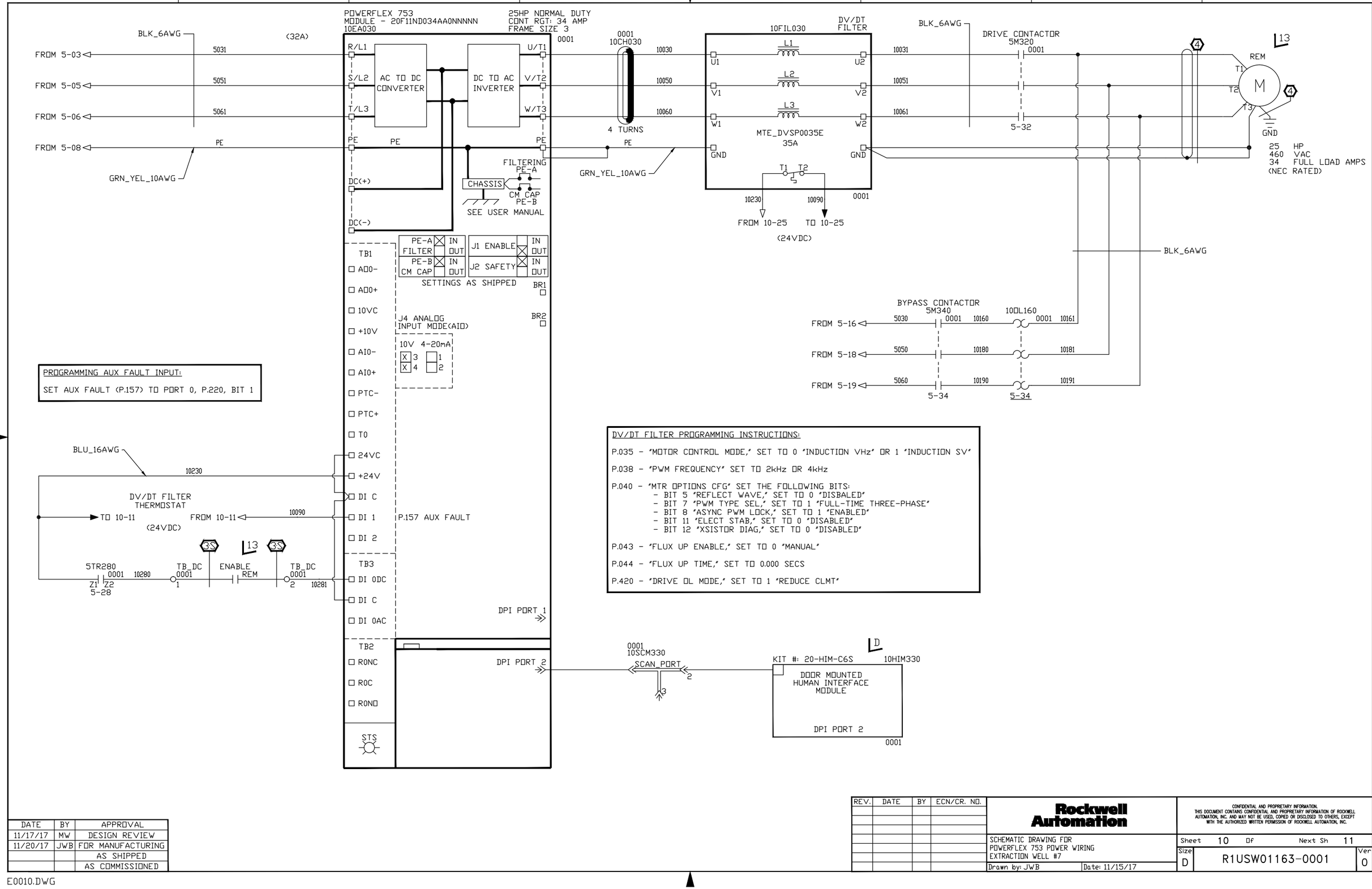

DATE	BY	APPROVAL
11/17/17	MW	DESIGN REVIEW
11/20/17	JWB	FOR MANUFACTURING
		AS SHIPPED
		AS COMMISSIONED

REV.	DATE	BY	ECN/CR. NO.

Rockwell Automation

CONFIDENTIAL AND PROPRIETARY INFORMATION.
THIS DOCUMENT CONTAINS CONFIDENTIAL AND PROPRIETARY INFORMATION OF ROCKWELL AUTOMATION, INC. AND MAY NOT BE USED, COPIED OR DISCLOSED TO OTHERS, EXCEPT WITH THE AUTHORIZED WRITTEN PERMISSION OF ROCKWELL AUTOMATION, INC.

SCHEMATIC DRAWING FOR
POWERFLEX 753 POWER WIRING
EXTRACTION WELL #7

Drawn by: JWB | Date: 11/15/17

Sheet 10 Of Next Sh 11

Size D | R1USW01163-0001 | Ver 0

E0010.DWG

H-O-A SWITCH OPERATION:
HAND MODE: DRIVE WILL START AND RECEIVE SPEED REFERENCE FROM DOOR MOUNTED HIM (PORT 2)

AUTO MODE: DRIVE WILL START ONCE REMOTE CONTACT IS CLOSED AND WILL RECEIVE SPEED REFERENCE FROM PLC THROUGH ANALOG INPUT 0 ON PORT 4

PROGRAMMING H-O-A OPERATION:
SET SPD REF A (P.545) TO PORT 2, DOOR MOUNTED HIM
SET SPD REF B (P.550) TO PORT 4, P.50 "ANLG IN0 VALUE"
SET STOP (P.158) TO PORT 4, P.1 BIT 0
SET HOA START (P.176) TO PORT 4, P.1 BIT 1
SET SPD SEL 1 (P.174) TO PORT 4, P.1 BIT 3

PROGRAMMING DIGITAL OUTPUT FUNCTIONS:
DRIVE FAULT: SET RO0 SEL (PORT 4, P.10) TO DRIVE STS 1, PORT 0, P.935 BIT 7

DRIVE RUNNING: SET RO1 SEL (PORT 4, P.20) TO DRIVE STS 1, PORT 0, P.935 BIT 16

BLU_16AWG
11050
HAND OFF AUTO
11SS070
0001
XOX
11070
FAULT 11CR090
0001
11-09
11071
11PB070
STOP
0001
11072
START
11090
11PB090
0001
11091
XOO
TB_DC 0001 3
START
REM
TB_DC 0001 4
11110
OOX
YEL_16AWG
OOX
11150
TB2 3
11151
TB2 4
3S
24VDC, 10A
"AUTO MODE" TO USER

10EA030 - PORT 4 0001
24VDC
20-750-2262C-2R
TB1 +24V
24VDC INPUTS
TB1 DI 0
P.158 STOP
TB1 DI 1
P.176 HOA START
TB1 DI 2
TB1 DI 3
P.174 SPD SEL 1
TB1 DI 4
TB1 DI 5
TB1 DI C
TB1 24VC
TB1 +10V
TB1 10VC
TB1 -10V
TB1 AI0+ ANALOG INPUT 0
TB1 AI0-
TB1 AI1+ ANALOG INPUT 1
TB1 AI1-
AI0-JMPR
CURRENT
VOLTAGE
AI1-JMPR
CURRENT
VOLTAGE
SEE PUBLICATION POWERFLEX 750 USER MANUAL
TB1 SHD
TB1 SHD

SHLD
2
SHLD
SPEED REFERENCE 4-20mA FROM PLC
TB_SIG 1
11240
TB_SIG 2
11250
TB_SIG SH1
BELDEN 8760

TB2 R0C
TB2 R0NC
TB2 R0NO
P.935 FAULTED
TB2 R1C
TB2 R1NC
TB2 R1NO
P.935 RUNNING
TB1 PTC+
TB1 PTC-
TB1 AO0+
ANALOG OUTPUT 0
TB1 AO0-
TB1 AO1+
ANALOG OUTPUT 1
TB1 AO1-

FROM 5-38 (115VAC)
5160
RED_16AWG
11060
FROM 5-38 (115VAC N)
5161
WHT_16AWG
11123

FAULT
11LT060 R 0001
11CR090 0001
FAULT NO 11-06 NC 11-06,11-07

RUNNING
11LT120 G 0001
11CR150 0001
RUNNING NO 11-12 NC 11-12

FAULT 11CR090 0001
FAULT 11CR090 0001
11-09
11-09
11061
11062
11063
YEL_16AWG
TB2 5
TB2 6
TB2 7
3S
DRIVE FAULT, 10A, 24VDC

RUNNING 11CR150 0001
RUNNING 11CR150 0001
11-15
11-15
11120
11121
11122
YEL_16AWG
TB2 8
TB2 9
TB2 10
3S
DRIVE RUNNING, 10A, 24VDC

DATE	BY	APPROVAL
11/17/17	MW	DESIGN REVIEW
11/20/17	JWB	FOR MANUFACTURING
		AS SHIPPED
		AS COMMISSIONED

REV.	DATE	BY	ECN/CR. NO.

Rockwell Automation

SCHEMATIC DRAWING FOR
24VDC I/O WIRING
EXTRACTION WELL #7
Drawn by: JWB Date: 11/15/17

CONFIDENTIAL AND PROPRIETARY INFORMATION.
THIS DOCUMENT CONTAINS CONFIDENTIAL AND PROPRIETARY INFORMATION OF ROCKWELL AUTOMATION, INC. AND MAY NOT BE USED, COPIED OR DISCLOSED TO OTHERS, EXCEPT WITH THE AUTHORIZED WRITTEN PERMISSION OF ROCKWELL AUTOMATION, INC.

Sheet 11 Of Next Sh L1
Size D
R1USW01163-0001
Ver 0

E0011.DWG

TOP VIEW

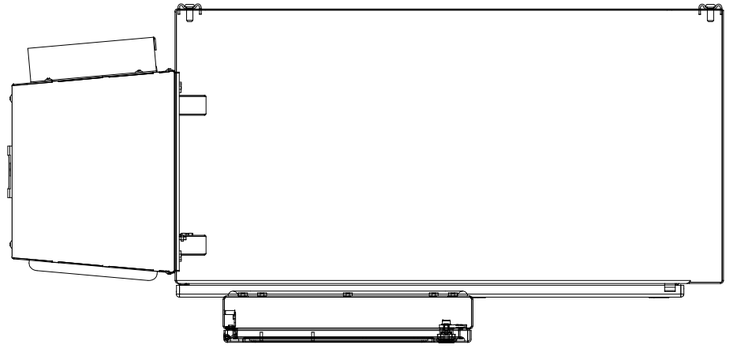

STAINLESS STEEL ENCLOSURE
HOFFMAN N4X WALLMOUNT
42"(H) X 32"(W) X 16"(D)
- NEMA STYLE DISCONNECT
- STAINLESS STEEL A/C COOLING (PROVIDED BY OTHERS)
- STAINLESS STEEL WINDOW KIT
- UV FILM PROTECTION FOR HMI
- MOUNTING BRACKETS INCLUDED

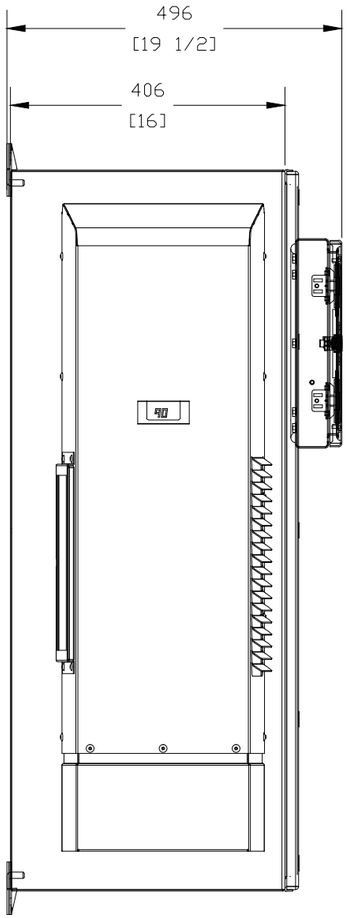

LEFT SIDE

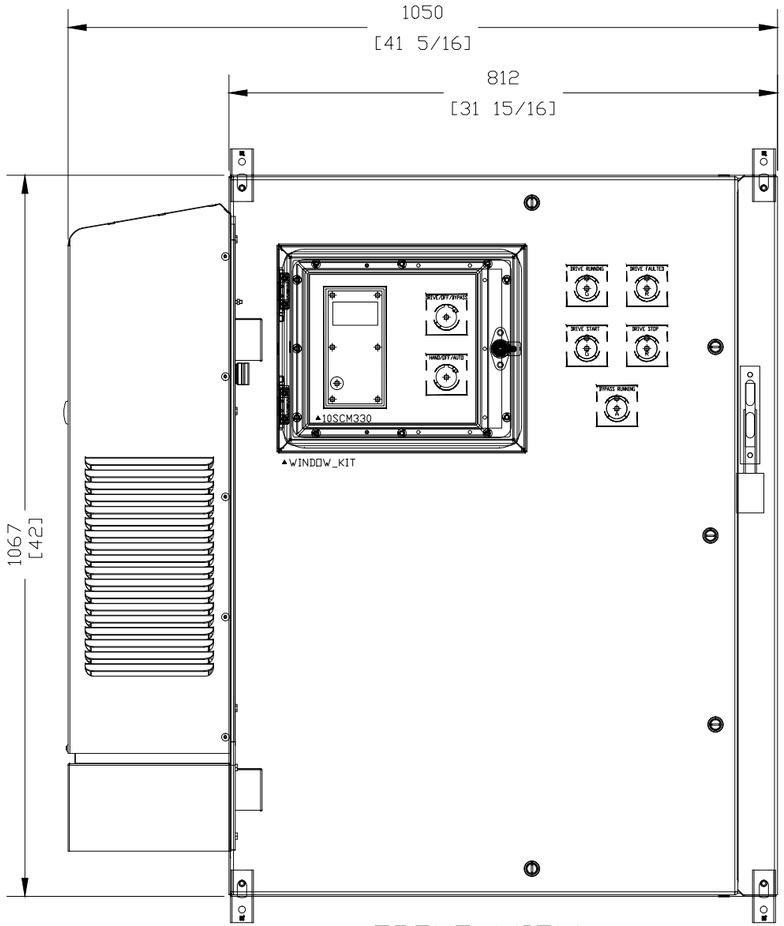

FRONT VIEW

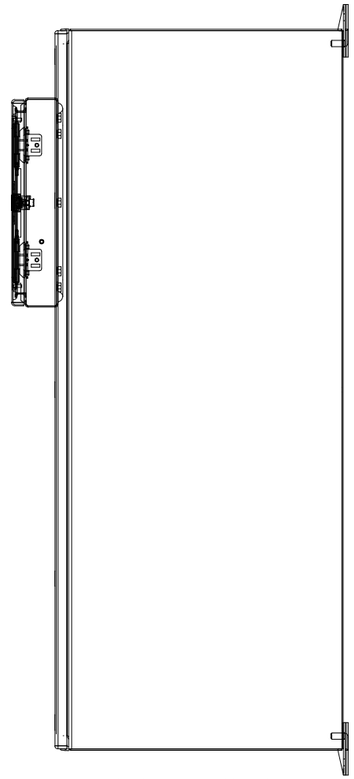

RIGHT SIDE

DATE	BY	APPROVAL
11/17/17	MW	DESIGN REVIEW
11/20/17	JWB	FOR MANUFACTURING
		AS SHIPPED
		AS COMMISSIONED

REV.	DATE	BY	ECN/CR. NO.

Rockwell Automation

LAYOUT DRAWING FOR
ENCLOSURE SIZE AND DIMENSIONS
EXTRACTION WELL #7

Drawn by: JWB | Date: 11/15/17

CONFIDENTIAL AND PROPRIETARY INFORMATION.
THIS DOCUMENT CONTAINS CONFIDENTIAL AND PROPRIETARY INFORMATION OF ROCKWELL AUTOMATION, INC. AND MAY NOT BE USED, COPIED OR DISCLOSED TO OTHERS, EXCEPT WITH THE AUTHORIZED WRITTEN PERMISSION OF ROCKWELL AUTOMATION, INC.

Sheet L1 Of Next Sh L2

Size D | R1USW01163-0001 | Ver 0

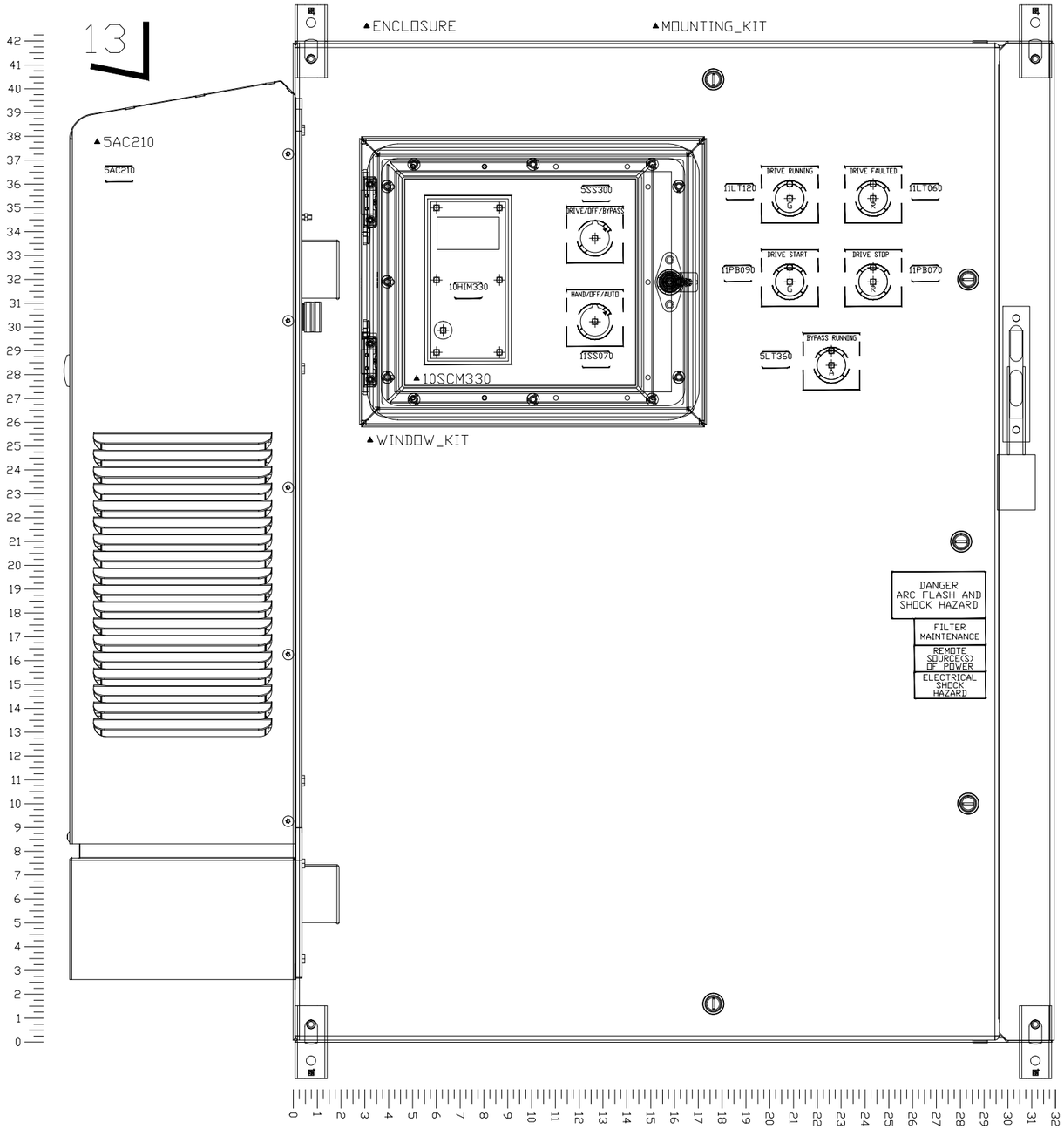

NOTES FOR MFG:
- APPLY UV FILM TO WINDOW KIT

- CUTOUTS FOR A/C UNIT

NAMEPLATE

Rockwell Automation

PROJECT#: R1USW01163 - 0001

DIAGRAM: R1USW01163-0001
INPUT 480VAC 34 AMPS 3PH 60Hz
OUTPUT 480VAC 34 AMPS
LARGEST MOTOR: 25HP, 34 AMPS
SHORT CIRCUIT CURRENT RATING:
100 KA RMS. SYMMETRICAL, 480 VOLTS MAXIMUM
ENCLOSURE RATING: TYPE 4X

Drive Systems, Golden, CO 80403 USA

VFD AC is an after-market upgrade.
Please see cutouts for location of AC unit.

DATE	BY	APPROVAL
11/17/17	MW	DESIGN REVIEW
11/20/17	JWB	FOR MANUFACTURING
		AS SHIPPED
		AS COMMISSIONED

REV.	DATE	BY	ECN/CR. NO.

Rockwell Automation

LAYOUT DRAWING FOR
ENCLOSURE DOOR AND DEVICES
EXTRACTION WELL #7

Drawn by: JWB | Date: 11/15/17

CONFIDENTIAL AND PROPRIETARY INFORMATION.
THIS DOCUMENT CONTAINS CONFIDENTIAL AND PROPRIETARY INFORMATION OF ROCKWELL AUTOMATION, INC. AND MAY NOT BE USED, COPIED OR DISCLOSED TO OTHERS, EXCEPT WITH THE AUTHORIZED WRITTEN PERMISSION OF ROCKWELL AUTOMATION, INC.

Size D | R1USW01163-0001 | Ver 0

▲PANEL

10EA030

FRAME SIZE 3

TORQUE: 10.6 LB-IN (1.2 N-M)
WIRE RANGE:6-20AWG(16-0.5MM)

PE PE- PE- R L1 S L2 T L3 BR1 BR2 + DC - DC U T1 V T2 W T3

POWER I/O

PE PE

PNL_CHAN_1.5
PNL_CHAN_1.5_CVR

ST110

5F130 5A,600V CLASS CC

N/A H1 H2 H3 H4 N/A

▲5F130
▲5F131
▲5F160

▲5M□V170

N/A X4 X2 X3 X1 N/A

5F131 5A,600V CLASS CC

5F160 12A,250V TYPE FNM

691-XG

PE

5CB030

PNL_CHAN_1.0
PNL_CHAN_1.0_CVR

TB_AC TB1 5TR280 1CR090 1CR150

691-XG

▲TB_AC ▲TB1

PNL_CHAN_1.0
PNL_CHAN_1.0_CVR

TB2 TB_DC TB_SIG

▲TB2 ▲TB_DC ▲TB_SIG

5LR030

LABEL

10CH030

5M320 5M340

▲5M320 ▲5M340

10FIL030

PRODUCT

REACTOR

10DL160

DETAIL FOR
DRIVE_CONTROL_POD

20-750-2262C-2R

I/O OPTION

6 5 4

DATE	BY	APPROVAL
11/17/17	MW	DESIGN REVIEW
11/20/17	JWB	FOR MANUFACTURING
		AS SHIPPED
		AS COMMISSIONED

REV.	DATE	BY	ECN/CR. NO.

Rockwell Automation

LAYOUT DRAWING FOR
PANEL AND COMPONENTS
EXTRACTION WELL #7

Drawn by: JWB Date: 11/15/17

CONFIDENTIAL AND PROPRIETARY INFORMATION.
THIS DOCUMENT CONTAINS CONFIDENTIAL AND PROPRIETARY INFORMATION OF ROCKWELL AUTOMATION, INC. AND MAY NOT BE USED, COPIED OR DISCLOSED TO OTHERS, EXCEPT WITH THE AUTHORIZED WRITTEN PERMISSION OF ROCKWELL AUTOMATION, INC.

Sheet L3 Of Next Sh END

Size D | R1USW01163-0001 | Ver 0

PF753 25HP ND N3R

One NEMA 3R Hoffman WeatherFlo Enclosure, approximately 47"H X 24"W X 14"D, with the following features:

☐ Qty. 1- PowerFlex 753 Drive w/ Embedded I/O, 480 VAC, 3 Phase, 34 Amps, 25 HP Normal Duty, 6 Pulse, w/DC Terminals, With Filtering/Jumper Removed, With Internal Transistor, w/o Internal Resistor

☐ Qty. 1- PF750 24V DC I/O Option Module

☐ Qty. 1- Input Circuit Breaker Disconnect (Input Thermal Magnetic breaker, 35KAIC, note does not necessarily reflect panel SCCR rating)

☐ Qty. 1- Input Line Reactor, 3%

☐ Qty. 1- dv/dt Output Filter

☐ Qty. 1- 2 Contactor Bypass (IEC style)

☐ Qty. 1- Control Power Transformer, Fused Primary/Secondary

☐ Qty. 1- Door-Mounted HIM w/ Cover

☐ Qty. 1- Door-Mounted Start Push Button (800H style, wired to drive input)

☐ Qty. 1- Door-Mounted Stop Push Button (800H style, wired to drive input)

☐ Qty. 1- Door-Mounted Run Pilot Light (Green 800H LED style.

☐ Qty. 1- Door-Mounted Fault Pilot Light (Red 800H LED style.)

☐ Qty. 1- Door-Mounted Bypass Run Pilot Light (Amber 800H LED style.)

☐ Qty. 1- Door-Mounted Hand/Off/Auto Selector Switch (800H style.)

☐ Qty. 1- Door-Mounted Drive/Off/Bypass Selector Switch (800H style.)

TRANSMITTAL DOCUMENT

Date:	**10/2/2017**	**From:**	**Ed Butler**
To:	**EA Engineering, Science, and Technology, Inc., 320 Gold Ave. SW, Suite 1300 Albuquerque, NM 87102 Devon Jercinovic**	**Job Name:**	**Kirtland AFB, NM Bulk Fuels Facility**
		Reference:	
		Transmittal Method:	**E-mail**
		Sent By:	**Ed Butler**

Submittal	Dwg. Number	Item Description
8	E-701	Well 106239 VFD

Ed Butler
TECHSAS, Inc.
4819 West Bayshore Drive
Bacliff, TX 77518

"I hereby certify that the (equipment) (material) (article) shown and marked in this submittal is that proposed to be incorporated with the Contract, is in compliance with the contract drawings and specification, can be installed in the allocated spaces, and is submitted for Contractor approval.

Certified by _____.
(Signature when applicable) Date: _____.

PowerFlex® 750-Series AC Drives

Allen-Bradley

Designed for Ease of Use, Integration and Application Flexibility

LISTEN.
THINK.
SOLVE.®

Allen-Bradley • Rockwell Software

Rockwell Automation

Technical Data

Allen-Bradley

PowerFlex 753 and PowerFlex 755 Pre-Engineered FasTrac Packaged Drives

Catalog Numbers 24F, 24G

24F1AHD248AA6NNNNN-ND-B1-C1-F0-IN-L1-L2-MN-P4 Shown

LISTEN. THINK. SOLVE.®

Table of Contents

Topic	Page
Additional Resources	4
Product Overview	4
Catalog Number Explanation	5
PowerFlex 750-Series Drives Pre-engineered FasTrac	5
Additional Catalog Number Notes	8
Specifications	9
Short Circuit Current Rating	9
Duty Cycle	10
Ambient Temperature Rating	10
Options	11
Sample Power Distribution Schemes	11
Power Disconnect	12
Control Power	12
Output Devices	12
Bypass	12
Operator Devices	13
Power Conditioning	14
Agency Certification - Codes and Standards	15
Drawings	15
Enclosure Information	15
Guidelines	15
Approximate Dimensions	15

Additional Resources

These documents contain additional information concerning related products from Rockwell Automation.

Resource	Description
PowerFlex® 750-Series AC Drives Technical Data, publication 750-TD001	Provides detailed information on: • Drive specifications • Option specifications • Fuse and circuit breaker ratings
PowerFlex 750-Series AC Drives Installation Instructions, publication 750-IN001	Provides steps for mechanical installation and for connecting incoming power, the motor, and basic I/O to the PowerFlex 750-Series Adjustable Frequency AC drive.
PowerFlex 750-Series AC Drives Programming Manual, publication 750-PM001	Provides detailed information on: • I/O, control, and feedback options • Parameters and programming • Faults, alarms, and troubleshooting
Wiring and Grounding Guidelines for Pulse Width Modulated (PWM) AC Drives, publication DRIVES-IN001	Provides basic information needed to properly wire and ground PWM AC drives.
Preventive Maintenance of Industrial Control and Drive System Equipment, publication DRIVES-TD001	Provides a guide to performing preventive maintenance.
Safety Guidelines for the Application, Installation and Maintenance of Solid State Control, publication SGI-1.1	Provides general guidelines for the application, installation, and maintenance of solid-state control.
Product Certifications website, http://www.ab.com	Provides declarations of conformity, certificates, and other certification details.

You can view or download publications at http://www.rockwellautomation.com/literature/. To order paper copies of technical documentation, contact your local Allen-Bradley distributor or Rockwell Automation sales representative.

Product Overview

Rockwell Automation PowerFlex® 753 and 755 drives are now available in a Pre-Engineered FasTrac Packaged Drive program. The Pre-engineered FasTrac Packaged Drives program provides PowerFlex 750-Series drives packaged with a much larger offering of factory mounted options than what is normally available with a standard drive product. The Pre-engineered FasTrac program lets you receive packaged PowerFlex 753 and 755 drives in as little as 20 business days.

The Pre-engineered FasTrac program is a separate, centrally managed program. It combines the capabilities of Rockwell Automation Low Voltage Drives with the Local Solution Centers. As orders are received, they are immediately released to a manufacturing location based on capacity.

Benefits:

- Proven, tested design
- Quality drives
- Quick turnaround
- Pre-engineered packages to ensure sizing, wiring, and calculations
- Meets CSA requirements
- Available in an assortment of environmental protection enclosures - NEMA 1, 12, or 3R

This document contains information related to the Rockwell Automation PowerFlex 750-Series Pre-Engineered FasTrac Packaged Drives program and is intended to provide drive catalog numbers, specifications, options and accessories, enclosures, and dimension information.

IMPORTANT While this information may be useful in specifying an application of a Pre-Engineered FasTrac Packaged PowerFlex 750-Series AC drive, be advised that this information is for Reference Only and subject to change at any time.

Catalog Number Explanation

PowerFlex 750-Series Drives Pre-engineered FasTrac

Contact your Rockwell Automation representative for product option rules.

Position

1…3	*4*	*5*	*6*	*7*	*8…10*	*11*	*12*	*13*	*14*	*15*	*16*	*17*	*18…19*
24G	**1**	**1**	**R**	**D**	**096**	**A**	**A**	**0**	**N**	**N**	**N**	**N**	**- ND**
a		*b*	*c*	*d*	*e*	*f*	*g*		*h*	*i*	*j*	*k*	*l*

a

Drive

Code	Type
24F	PF753
24G	PF755

b

Input Type

Code	Type
1	AC & DC Input with Precharge
A	AC Input w/ Precharge, no DC Terminals

c

Enclosure Type and Conformal Coating

Code	Encl. Rating	Encl. Style	Conf. Coating
R	Type 3R	Single Drive	Yes
A	Type 1	Single Drive	Yes
H	Type 12 (F&F)	Single Drive	Yes
S	Frame 1 Type 3R	Single Drive	Yes
I	Frame 1 Type 1	Single Drive	Yes
J	Frame 1 Type 12 (F&F)	Single Drive	Yes

d

Version and Voltage Rating

Code	Input Voltage	Source Type	DC Precharge
D	480 VAC	3 Phase	No
E	600 VAC	3 Phase	No

e

Output Amps, Hp Ratings @ 480V AC Input

Code	Amps	ND Hp	HD Hp	Frame Size
2P1	2.1	1	0.75	1 or 2
3P4	3.4	2	1.5	1 or 2
5P0	5	3	3	1 or 2
8P0	8	5	5	1 or 2
11	11	7.5	5	1 or 2
14	14	10	7.5	1 or 2
22	22	15	10	2
27	27	20	15	3
34	34	25	20	3
40	40	30	25	3
52	52	40	30	4
65	65	50	40	4
77	77	60	50	5
96	96	75	60	5
125	125	100	75	6
156	156	125	100	6
186	186	150	125	6
248	248	200	150	6
302	302	250	200	7
361	361	300	250	7
415	415	350	300	7

Catalog Number Explanation, Continued

e (cont'd)

Output Amps, Hp Ratings @ 600V AC Input

Code	Amps	ND Hp	HD Hp	Frame Size
1P7	1.7	1		3
2P7	2.7	2	1	3
3P9	3.9	3	2	3
6P1	6.1	5	3	3
009	9	7.5	5	3
011	11	10	7.5	3
017	17	15	10	3
022	22	20	15	3
027	27	25	20	4
032	32	30	25	4
041	41	40	30	5
052	52	50	40	5
063	63	60	50	6
077	77	75	60	6
099	99	100	75	6
125	125	125	100	6
144	144	150	125	6
192	192	200	150	7
242	242	250	200	7
289	289	300	250	7

f

Filtering and Common Mode Capacitor Configuration

Code	Filtering	Default CM Cap Connection
A	Yes	Jumper Removed
J	Yes	Jumper Installed

g

Dynamic Braking

Code	Internal Resistor	Internal Transistor
A	No	Yes
N	No	No

h

Feedback

Code	Type	Installation Location
0	None	N/A
1	Standard Encoder	I/O Card

i

I/O

Code	Type	Voltage
N	None	N/A
A	Standard	24V DC/AC
B	Standard	115V AC

j

Communication

Code	Version
N	None
D	DeviceNet
R	RIO
C	ControlNet (Coax)
F	ControlNet (Fiber)
S	RS485 DF-1
H	RS485 HVAC
P	Profibus DPV1
I	Interbus
E	Ethernet

k

HIM

Code	Version
0	No HIM - Blank Plastic Inserted (Drive Mount)
3	Full Numeric LCD HIM (Drive Mounted)
5	Programmer Only LCD HIM (Drive Mounted)
6	Door Mounted Full Numeric LCD HIM
7	Door Mounted Programmer Only LCD HIM

Catalog Number Explanation, Continued

I

Options	
Code	**Option**
-ND	Normal Duty
-HD	Heavy Duty
Input Devices	
-P3	Circuit Breaker
-P4	Drive/Bypass Mode Circuit Breaker
-P6	Fused Disconnect
-P7	Drive/Bypass Mode Fused Disconnect
Reactors	
-L1	Input Reactor, 3%
-L2	Output Reactor, 3%
-L3	Input Reactor, 5%
-L4	Output Reactor, 5%
Enclosure Options	
-H1	Lexan HIM Cover
-H2	Metallic HIM Cover (Solid Door)
-E5	Enclosure Space Heater

I (cont'd)

Options	
Code	**Option**
Bypass	
-B0	No Bypass
-B1	Manual Bypass
Control Power	
-C1	Drive Only Control Power
Power Filtering	
-F5	Transient Voltage Surge Suppressor
Operator Devices	
-S51	H/O/A Selector Switch (Start/Stop/Spd. Ref.)
-S59W	Run Pilot Light (White)
-S59G	Run Pilot Light (Green)
-S59R	Run Pilot Light (Red)
-S60R	Drive Fault Pilot Light (Red)
-S60A	Drive Fault Pilot Light (Amber)
-S68	Speed Potentiometer (1-Turn)
-S53	Control Power On Pilot Light (White)
-S54	Drive & Bypass Mode Pilot Lights (Amber)
-S66	Drive/Bypass (B1, if present) Disable Mushroom Push button

Additional Catalog Number Notes

Enclosure Types (Position 6/c)

Pre-Engineered FasTrac Packaged Drives are assembled in NEMA/UL Type 1, 3R, or 12 enclosures. Each enclosure type lends itself to a particular type of protection and environment. The enclosures detailed below do not normally protect electrical equipment from condensation, corrosion or contamination which may occur within the enclosure or enter via the conduit or unsealed openings. Users must make adequate provisions to safeguard against such conditions, and satisfy themselves that the equipment is properly protected.

NEMA/UL Type 1 enclosures are intended for indoor use primarily to provide a degree of protection against contact with the enclosed equipment in locations where unusual service conditions do not exist. The enclosures are designed to meet the rod entry and rust resistance design tests. Openings in the enclosure door or sides and/or fans on the door(s) or sides allow for free exchange of inside and outside air. Design is based upon 0...40 °C ambient temperature during operation. Refer to PowerFlex 750-Series drive specifications for storage requirements.

- A = NEMA/UL Type 1 - with fans if needed (Frames 2...7 drives)
- I = NEMA/UL Type 1 - with fans if needed (Frame 1 drive)

NEMA/UL Type 12 enclosures are intended for indoor use primarily to provide a degree of protection against dust, falling dirt and dripping non-corrosive liquids. They are designed to meet drip, dust and rust resistance tests. There may be ventilation openings on the enclosure to allow free exchange of inside and outside air. Closed loop auxiliary cooling may be required for higher horsepower ratings. Specifications calling for NEMA/UL Type 12 ventilated enclosures should be reviewed with the factory. Design is based upon 0...40 °C ambient temperature during operation. Refer to PowerFlex 750-Series drive specifications for storage requirements.

- H = NEMA/UL Type 12 Ventilated - with fans if needed (Frames 2...7 drives)
- J = NEMA/UL Type 12 Ventilated - with fans if needed (Frame 1 drive)

NEMA/UL Type 3R enclosures are intended for outdoor use primarily to provide a degree of protection against falling rain, and to reduce potential damage from the formation of ice on the enclosure(1). They are designed to meet rod entry, rain(2), external icing(3) and rust-resistance design tests. They are not intended to provide protection against conditions such as dust, internal condensation, or internal icing. Design is based upon -30...40 °C ambient temperature range with power applied and disconnect on. A cabinet space heater is supplied as standard.

- R = NEMA/UL Type 3R - with shrouded fan if required (Frames 2...7 drives)
- S = NEMA/UL Type 3R - with shrouded fan if required (Frame 1 drive)

(1) Evaluation criteria: No water has entered the enclosure during the specified test.
(2) Evaluation criteria: No water shall have reached live parts, insulation, or mechanisms.
(3) Evaluation criteria: The enclosure is undamaged after ice, which accumulates during the specified test, has melted. (Note: The drive is not required to be operable while ice-laden).

Specifications

In most cases the general specifications of a packaged drive package will match those of a standalone drive. See Additional Resources on page 4 for further information. Also, see Agency Certification - Codes and Standards on page 15.

Short Circuit Current Rating

Short Circuit Current Rating (SCCR) of the Package - the short circuit current capability of any drive package will be based upon the specific combination of the options chosen as shown in this table.

Rating		No Bypass		With Bypass	
Hp	Duty	CB ISC	Fuse D/S ISC	CB ISC	Fuse D/S ISC
1	ND	35,000	100,000	35,000	100,000
1	HD				
2	ND				
2	HD				
3	ND				
3	HD				
5	ND				
5	HD				
7.5	ND				
7.5	HD				
10	ND				
10	HD				
15	ND				
15	HD				
20	ND				
20	HD				
25	ND				
25	HD				
30	ND				
30	HD				
40	ND				

Rating		No Bypass		With Bypass	
Hp	Duty	CB ISC	Fuse D/S ISC	CB ISC	Fuse D/S ISC
40	HD	35,000	100,000	35,000	100,000
50	ND				
50	HD				
60	ND				
60	HD				
75	ND				
75	HD				
100	ND				
100	HD				
125	ND				
125	HD				
150	ND				
150	HD				
200	ND				
200	HD				
250	ND			50,000	
250	HD	50,000			
300	ND				
300	HD				
350	ND				

Duty Cycle

- ND = Normal Duty Rated.

  100% continuous current

  110% current for 1 minute

  150% for 3 seconds
- HD = Heavy Duty Rated.

  100% continuous current

  150% current for 1 minute

  180% for 3 seconds

IMPORTANT The Packaged Drive duty cycle rating is located on the drive "System" data nameplate. The standard drive is used as a component in the enclosure and may indicate ratings on its nameplate that differ from the "System" data nameplate. The packaged drive system rating may be limited by other components sized for NEC/typical motor ratings. In all cases the system nameplate data supersedes any component nameplate information. Unless otherwise stated, Normal Duty Rated packaged drives cannot be used on Heavy Duty applications.

Ambient Temperature Rating

- NEMA/UL Type 1, 12: 0...40 °C
- NEMA/UL Type 3R: -30°C...40 °C ambient temperature range with power applied and disconnect on

Maintenance

Variable speed drive equipment should be inspected periodically. Inspection intervals should be based on environmental and operating conditions and adjusted as indicated by experience. An initial inspection within three to four months after installation is suggested. See National Electrical Manufacturers Association (NEMA) Standard No. ICS 1.3, Preventive Maintenance of Industrial Control and Systems Equipment, for general guidelines for setting up a periodic maintenance program.

Inspect blowers and fans used for forced air cooling. Replace any that have bent, chipped, or missing blades, or if the shaft does not turn freely. Apply power momentarily to check operation. If unit does not operate, check and replace wiring, fuse, blower or fan motor as appropriate. Clean or change air filters as annually or more often if atmospheric conditions cause an air flow reduction of greater than 10%.

Options

Sample Power Distribution Schemes

The power distribution schemes shown below are for typical configurations. Actual specified configurations may vary with accepted design practices or code restrictions.

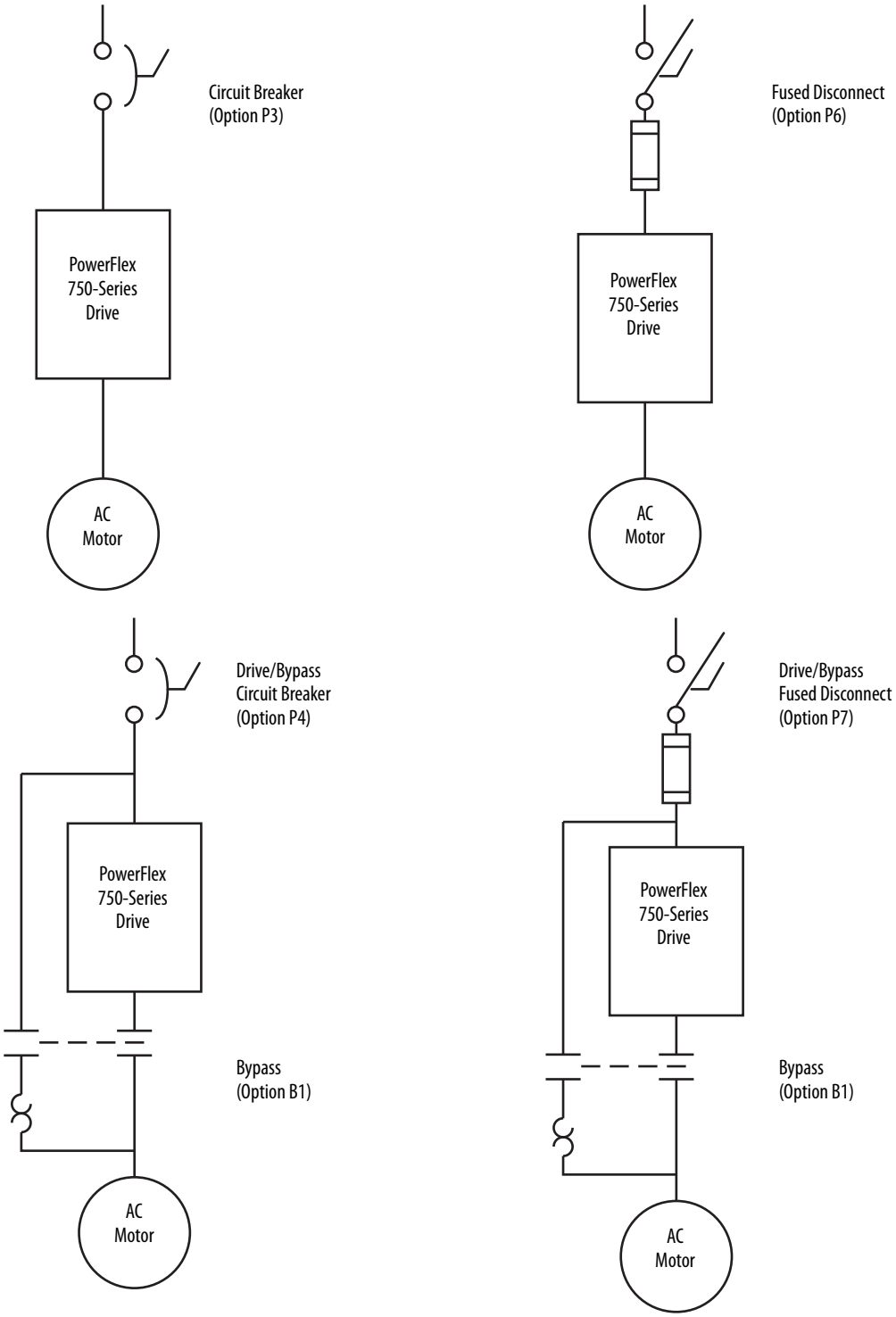

Power Disconnect

Option		Description
P3	Drive Circuit Breaker	This option is for disconnecting drive power only. All ratings use a thermal magnetic type breaker. All mechanisms are through the door and include handle operators, door interlocking and are pad-lockable.
P4	Drive/Bypass Mode Circuit Breaker	This option is for disconnecting all input power to the cabinet. Most ratings will use a thermal magnetic type breaker. All mechanisms are through the door and include handle operators, door interlocking and are pad-lockable.
P6	Drive Disconnect Switch and Fuses	This option is for disconnecting drive power only. A through the door pad lockable disconnect switch with fuses is provided.
P7	Drive/Bypass Mode Fused Disconnect Switch	This option is for disconnecting all input power to the cabinet. A through the door pad lockable disconnect switch with fuses is provided.

Control Power

Option		Description
C1	Drive Only Control Power	This option provides a fused (two primary and one secondary) control power transformer mounted and wired inside the drive enclosure. The transformer is rated for drive and options power only. There is no additional capacity for customer use.

Output Devices

Common mode output cores are provided as standard on all ratings.

Bypass

Option		Description
B0	No Bypass	–
B1	Manual Bypass(1) (2)	This option provides a means to manually switch a single motor from drive control to bypass (across the line) operation. Separate contactors are provided for drive output and bypass operation. An electronic or bimetallic motor overload is provided for motor protection while operating in the bypass mode. A door-mounted “Drive/Off/Bypass” selector switch is included.

(1) The Bypass Operation capability provided by this option is not intended for maintenance of the drive or entry into the enclosure with power applied while operating in the bypass mode.

(2) Bypass Option includes the required 120V AC control power.

Operator Devices

Code	Option	Also Requires	Description
S51	Hand/Off/Auto Selector Switch	IB	This switch will be door mounted. For NEMA 3R enclosures with optional HIM cover, it will be located under the cover to the left of the HIM. The drive will run when the switch is in the "Hand" position, and will be stopped when the switch is in "Off" position. In the "Auto" position, the drive will run/stop based upon the closure of a remote dry contact. In order for the drive to run, enable or auxiliary stop/fault reset inputs (if used) must be present. If a drive connected HIM is present, the HIM "stop" will stop the drive regardless of the selector switch position (the HIM "start" button will be non-functional). The Hand/Off/Auto selector switch also determines the origin of the speed reference. Factory default is "Hand" = HIM (unless door mounted pot option is provided) and "Auto" = remote analog reference. (this can be changed to communication option by customer)
S59W	Run Pilot Light	IB	This white pilot light will be door mounted. For NEMA 3R enclosures with optional HIM cover, it will be located outside of the cover. It will be illuminated when the drive option board relay 0 indicates drive is in run mode.
S59G	Run Pilot Light	IB	This green pilot light will be door mounted. For NEMA 3R enclosures with optional HIM cover, it will be located outside of the cover. It will be illuminated when the drive option board relay 0 indicates drive is in run mode.
S59R	Run Pilot Light	IB	This red pilot light will be door mounted. For NEMA 3R enclosures with optional HIM cover, it will be located outside of the cover. It will be illuminated when the drive option board relay 0 indicates drive is in run mode.
S60R	Fault Pilot Light	IB	This red pilot light will be door mounted. For NEMA 3R enclosures with optional HIM cover, it will be located outside of the cover. It will be illuminated when the drive option board relay r1 indicates drive is faulted.
S60A	Fault Pilot Light	IB	This amber pilot light will be door mounted. For NEMA 3R enclosures with optional HIM cover, it will be located outside of the cover. It will be illuminated when the drive option board relay r1 indicates drive is faulted.
S68	Speed Potentiometer (1 Turn)	IB, S51	This potentiometer will be door mounted. For NEMA 3R enclosures with optional HIM cover, it will be located outside of the cover. When the HOA selector switch is in the "Hand" position, this pot will provide the speed reference. (unipolar only)
S53	Control Power On Pilot Light	–	This white pilot light will be door mounted. For NEMA 3R enclosures with optional HIM cover, it will be located outside of the cover. It will be illuminated whenever control power is present.
S54	Drive & Bypass Mode Pilot Lights	B1	These amber pilot lights will be door mounted. For NEMA 3R enclosures with optional HIM cover, it will be located outside of the cover. When the Drive/Off/Bypass switch is in the "Drive" position, the "Drive" light will illuminate. When the Drive/Off/Bypass switch is in the "Bypass" position, the "Bypass" light will illuminate.
S66	Drive/Bypass Disable Mushroom Push Button	S66	This push-pull button will be door mounted. For NEMA 3R enclosures with optional HIM cover, it will be located outside of the cover. When in the depressed position, the drive enable input, drive output contactor, and bypass contactor will be disabled/opened.

Notes:

- Pilot lights are incandescent transformer type
- All devices operate at 120 VAC unless otherwise specified

Drive Parameter Settings for Operator Devices

If certain operator devices are selected, the associated drive parameters must be configured as directed in this table to be sure the drive operates correctly.

Option Code	Port	Parameter	Value	Description
S51	0 (Drive)	P163	5000100	Digital Input Run = Port 5 DIO
		P174	5000102	Digital Input Speed Sel 1 = Port 5 DIO
		P550	500050	Speed Ref B Sel = Analog 0 For Auto
		P545	872	Speed Ref A Sel = Door HIM
S68		P545	500060	Speed Ref A Sel = Potentiometer
S51, Not 3, 5, 6 or 7		P545	500050	Speed Ref A Sel = Analog 0 for Hand-held HIM
S59	5	P10	93501	Drive Active
S60		P20	93507	Drive Fault

Power Conditioning

In general, PowerFlex 750-Series drives are suitable for direct connection to a correct voltage AC line that has a minimum impedance of 0.5% relative to the rated drive input kVA. If the line has lower impedance, a line reactor or isolation transformer must be added in front of the drive to increase line impedance. If the line impedance is too low, transient voltage spikes or interruptions can create excessive current spikes that may cause nuisance input fuse blowing or damage to the drive power structure, or both.

The basic rules for determining if a line reactor or isolation type transformer is required are as follows:

- If the AC input power system is not solidly grounded (i.e. high resistive ground or ungrounded) an isolation transformer with the neutral of the secondary grounded is highly recommended. If the line-to-ground voltages on any phase can exceed 125% of the nominal line-to-line voltage, an isolation transformer with the neutral of the secondary grounded, is always required.
- If the AC line supplying the drive has power factor correction capacitors that are switched in and out, an isolation transformer is recommended between the capacitors and drive. If the capacitors are permanently connected and not switched, the general rules for impedance mismatch above apply.
- An isolation transformer or input line reactor is recommended. Line reactors can be ordered installed in the drive enclosure. Isolation transformer are typically installed external to the enclosure.

Option		Description
L1	3% Input Line Reactor	This option provides an open core drive input line reactor that mounts inside the drive enclosure. Typical impedance is 3%.
L2	3% Output Load Reactor	This option provides an open core drive output load reactor, which mounts inside the drive enclosure. Typical impedance is 3%.
L3	5% Input Reactor	This option provides an open core drive input line reactor that mounts inside the drive enclosure. Typical impedance is 5%.
L4	5% Output Reactor	This option provides an open core drive output load reactor, which mounts inside the drive enclosure. Typical impedance is 5%.

Agency Certification - Codes and Standards

Agency	Description
CSA	CSA Standards

Drawings

One set of schematics [279 x 432 mm (11 x 17 in.)] is shipped in the cabinet. PDF and AutoCAD versions are available upon request.

Enclosure Information

Guidelines

The information in this document may be useful in making some pre-installation decisions. Consideration should be given to enclosure type (environment), enclosure size (mounting area available and mounting convention), panel layouts (customer wiring connection locations and extra customer mounting area), terminal block descriptions and catalog number definition.

Approximate Dimensions

NEMA/UL Type 3R, 1 Hp Normal Duty. . . 15 Hp Normal Duty (Families 1 and 2)

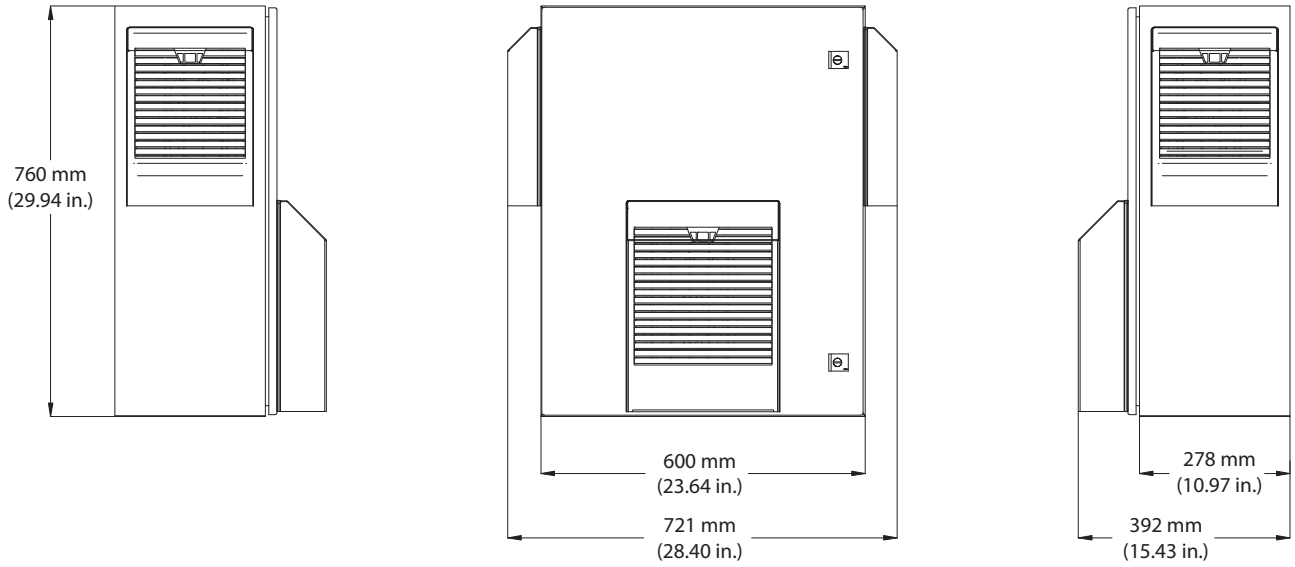

NEMA/UL Type 3R, 15 Hp Heavy Duty. . . 30 Hp Normal Duty (Family 3)

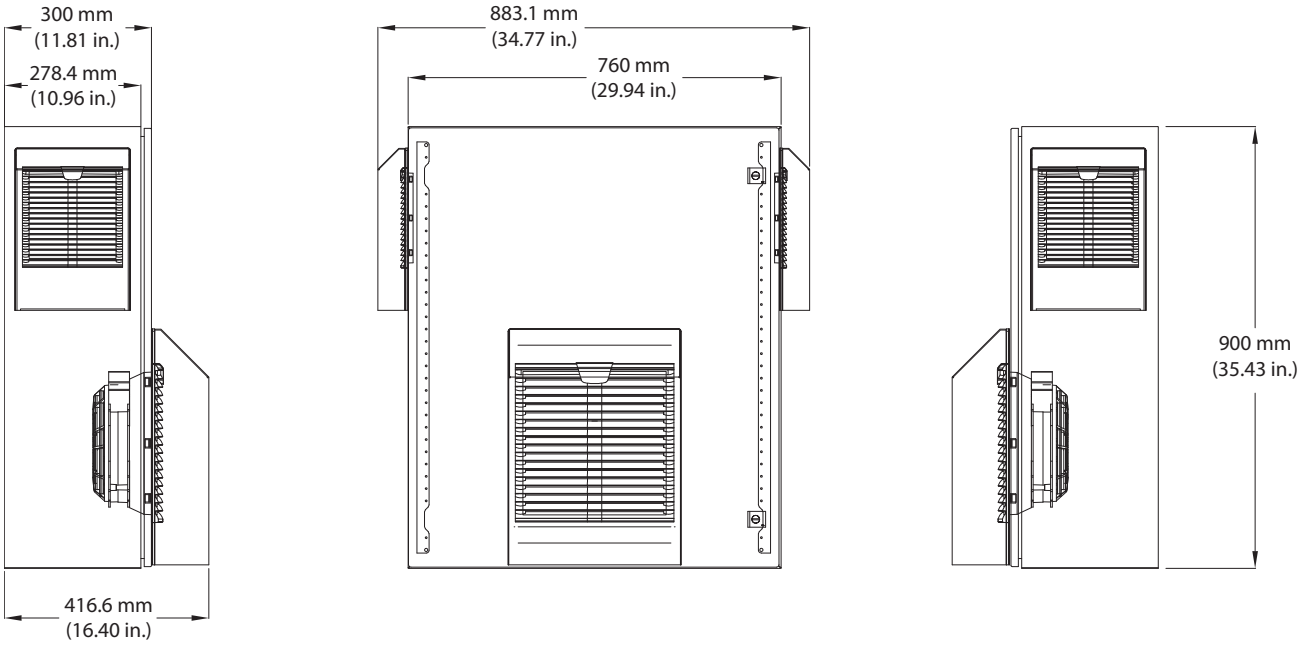

NEMA/UL Type 3R, 30 Hp Heavy Duty. . . 50 Hp Normal Duty (Family 4)

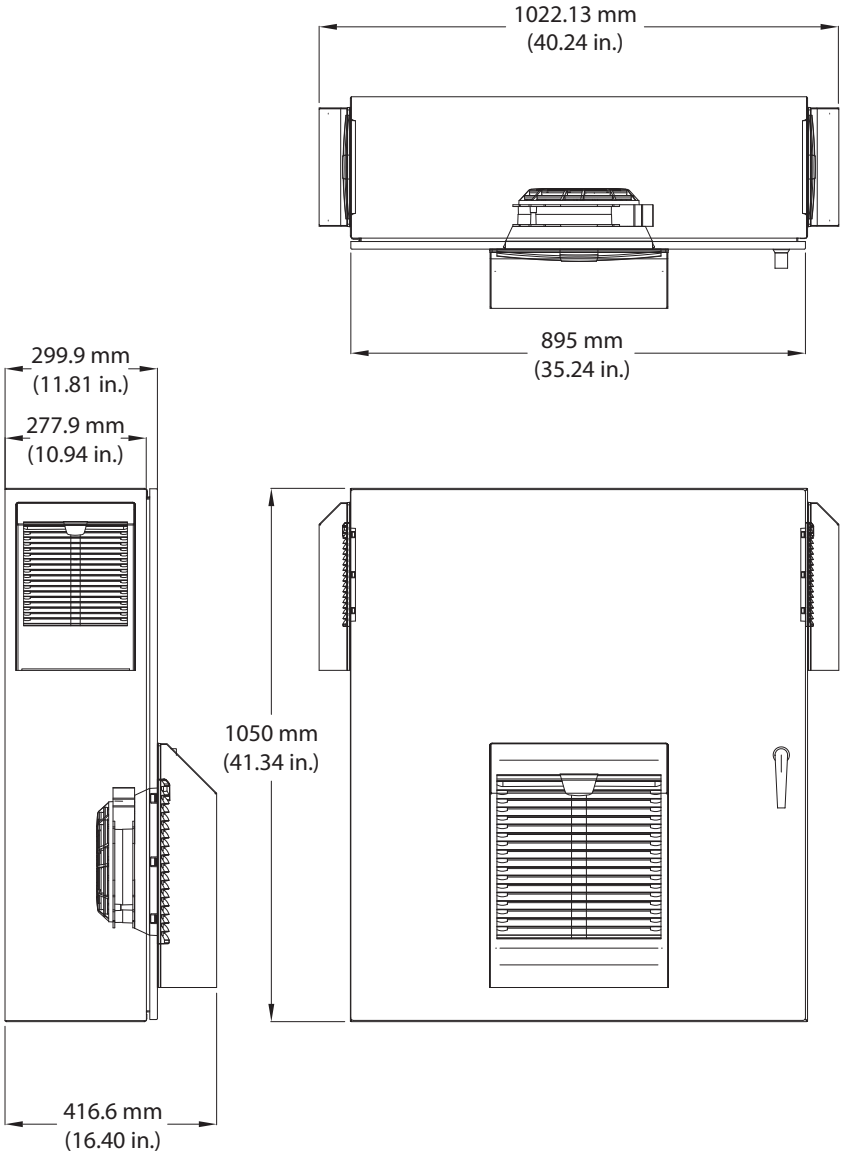

NEMA/UL Type 3R, 50 Hp Normal Duty. . .75 Hp Heavy Duty (Family 5)

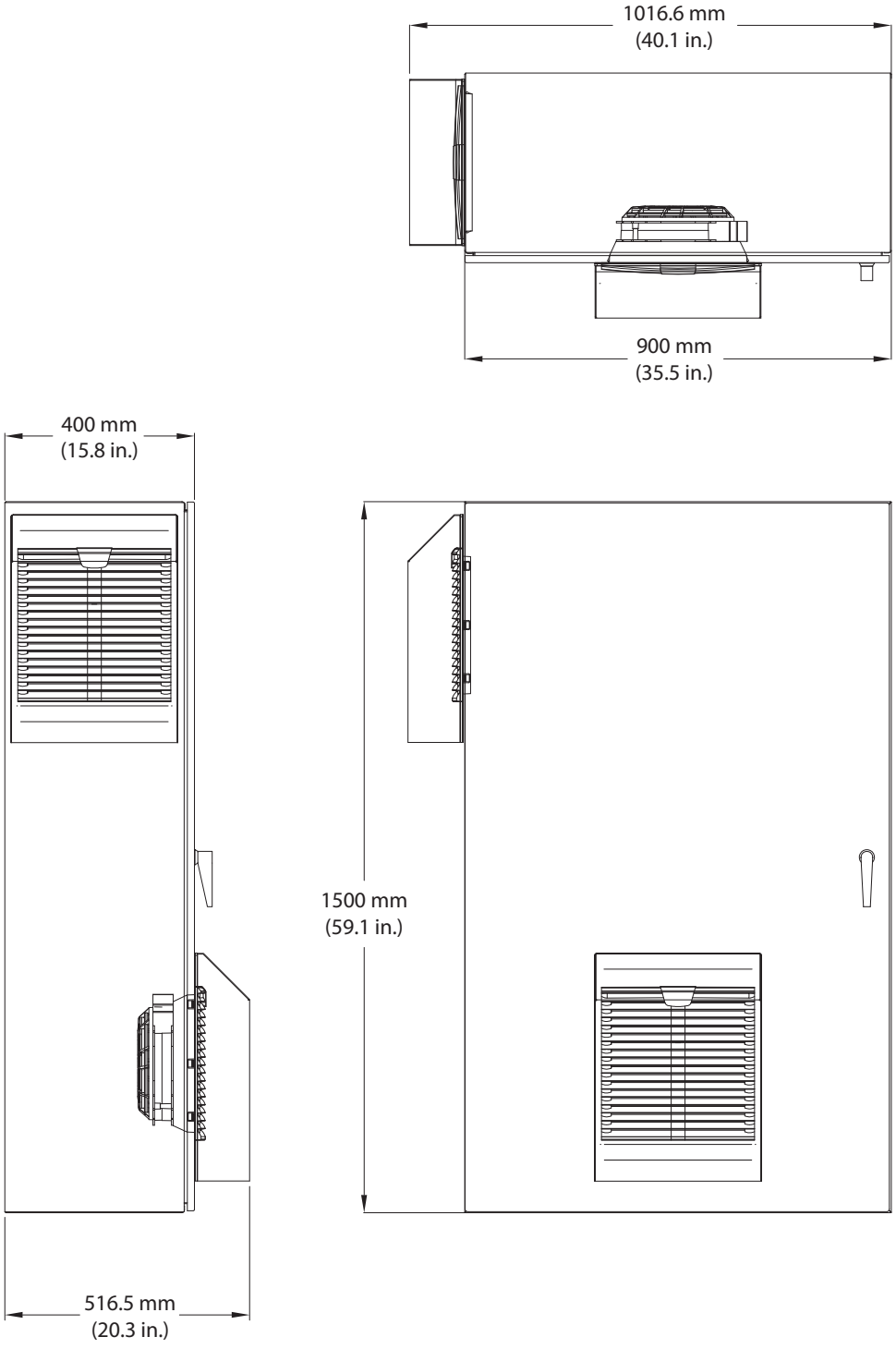

NEMA/UL Type 3R, 100 Hp Normal Duty. . . 200 Hp Normal Duty (Family 6)

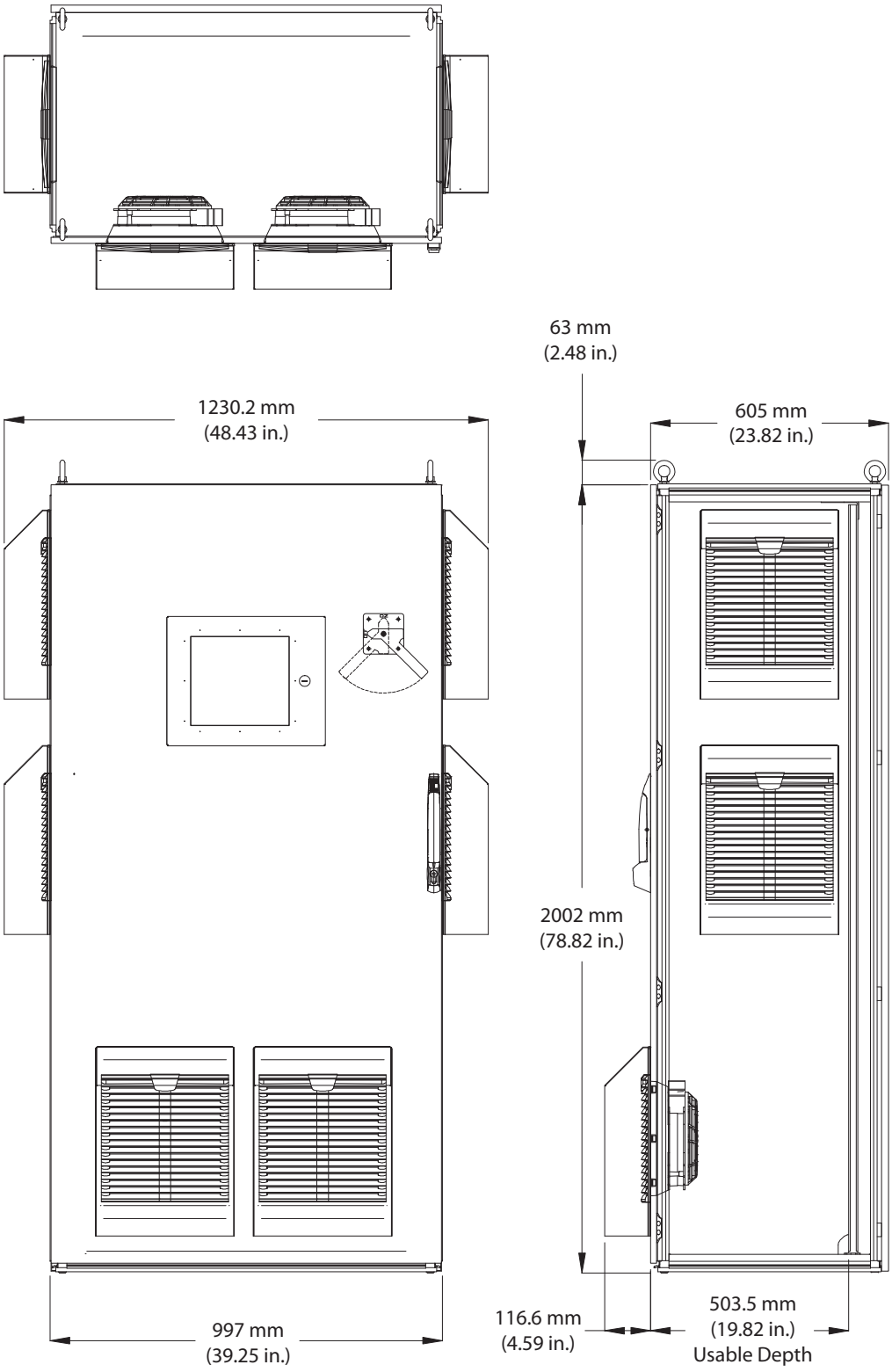

NEMA/UL Type 3R, 250 Hp Heavy Duty. . . 350 Hp Normal Duty (Family 7)

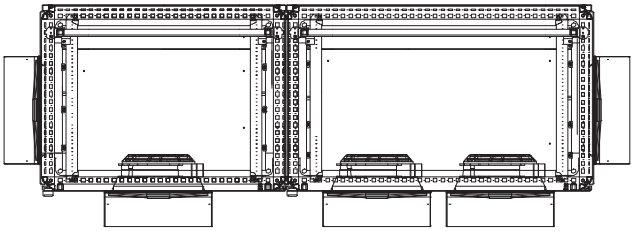

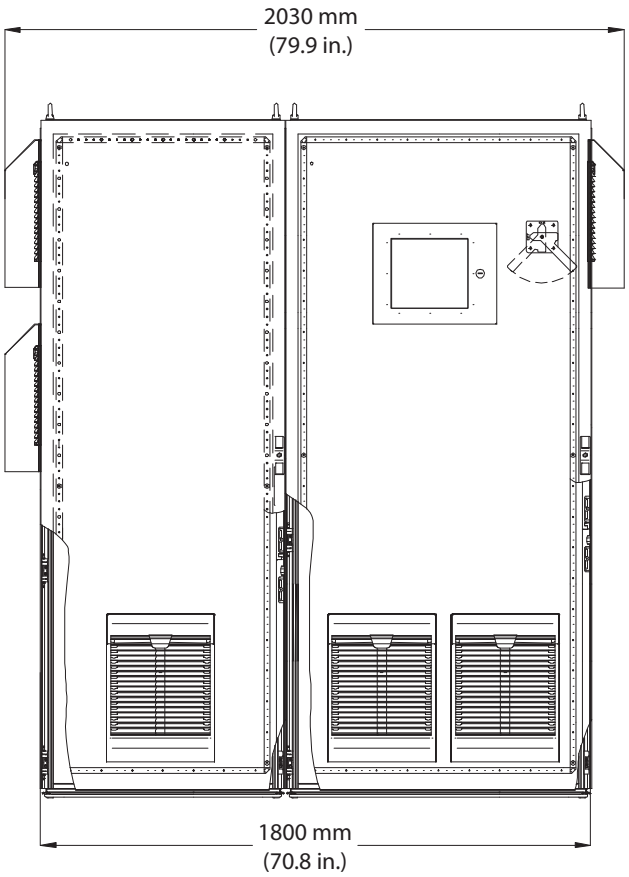

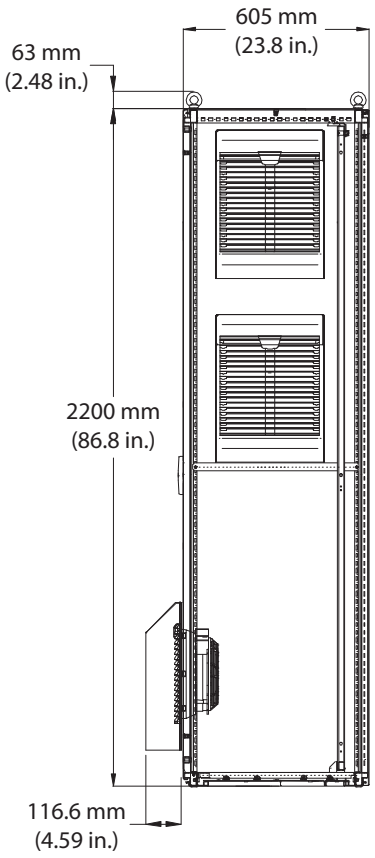

NEMA/UL Type 1 and 12, 1 Hp Normal Duty. . . 15 Hp Normal Duty (Families 1 and 2)

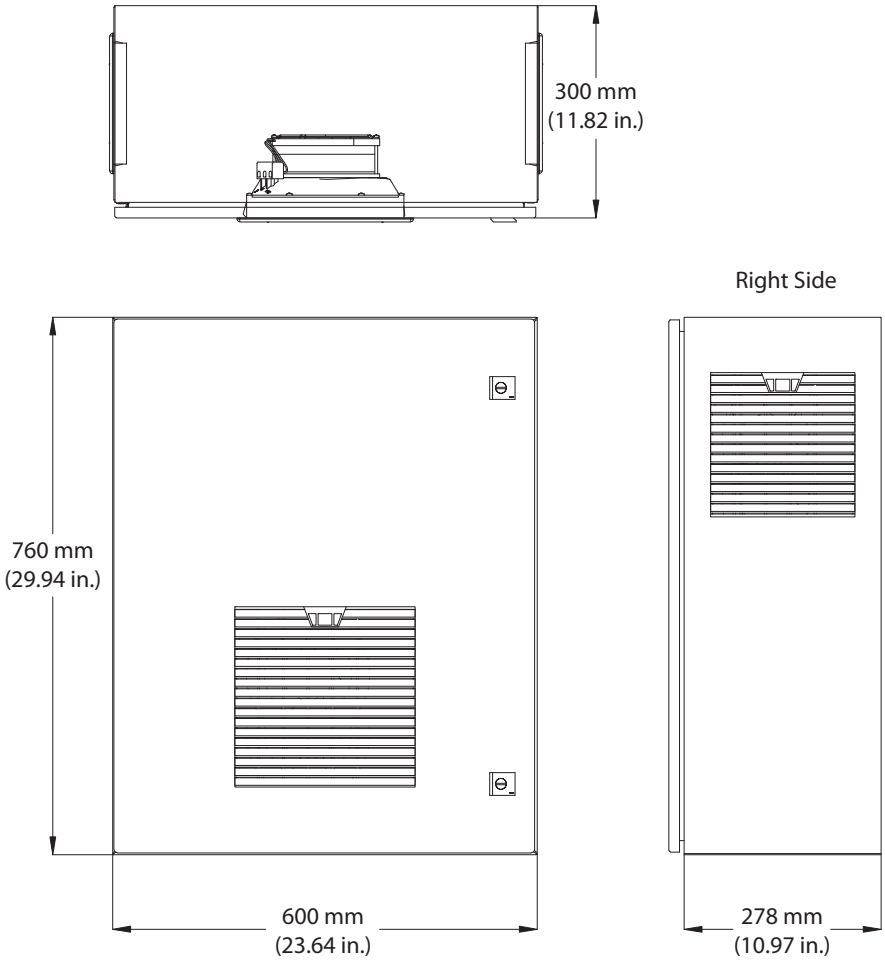

NEMA/UL Type 1 and 12, 15 Hp Heavy Duty. . .30 Hp Normal Duty (Family 3)

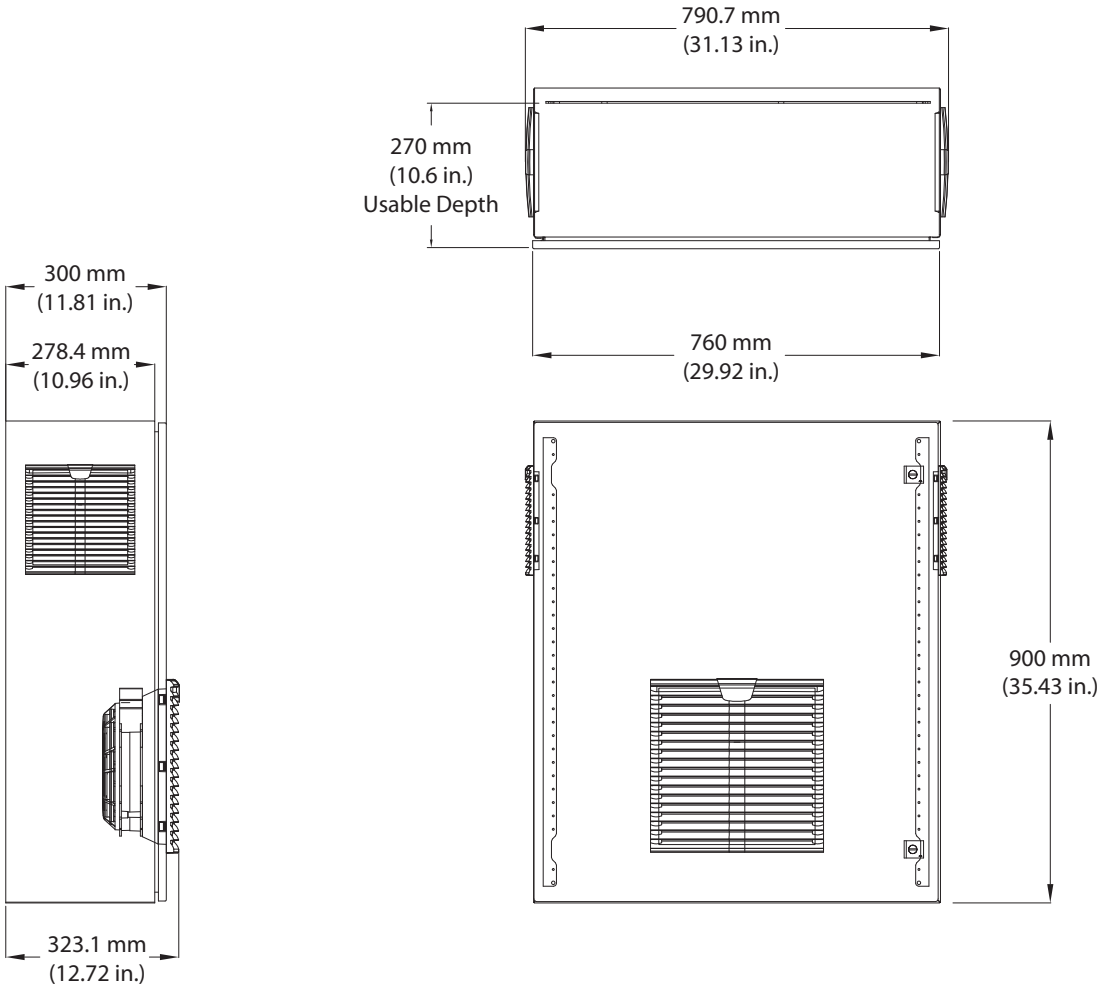

NEMA/UL Type 1 and 12, 30 Hp Heavy Duty. . . 50 Hp Normal Duty (Family 4)

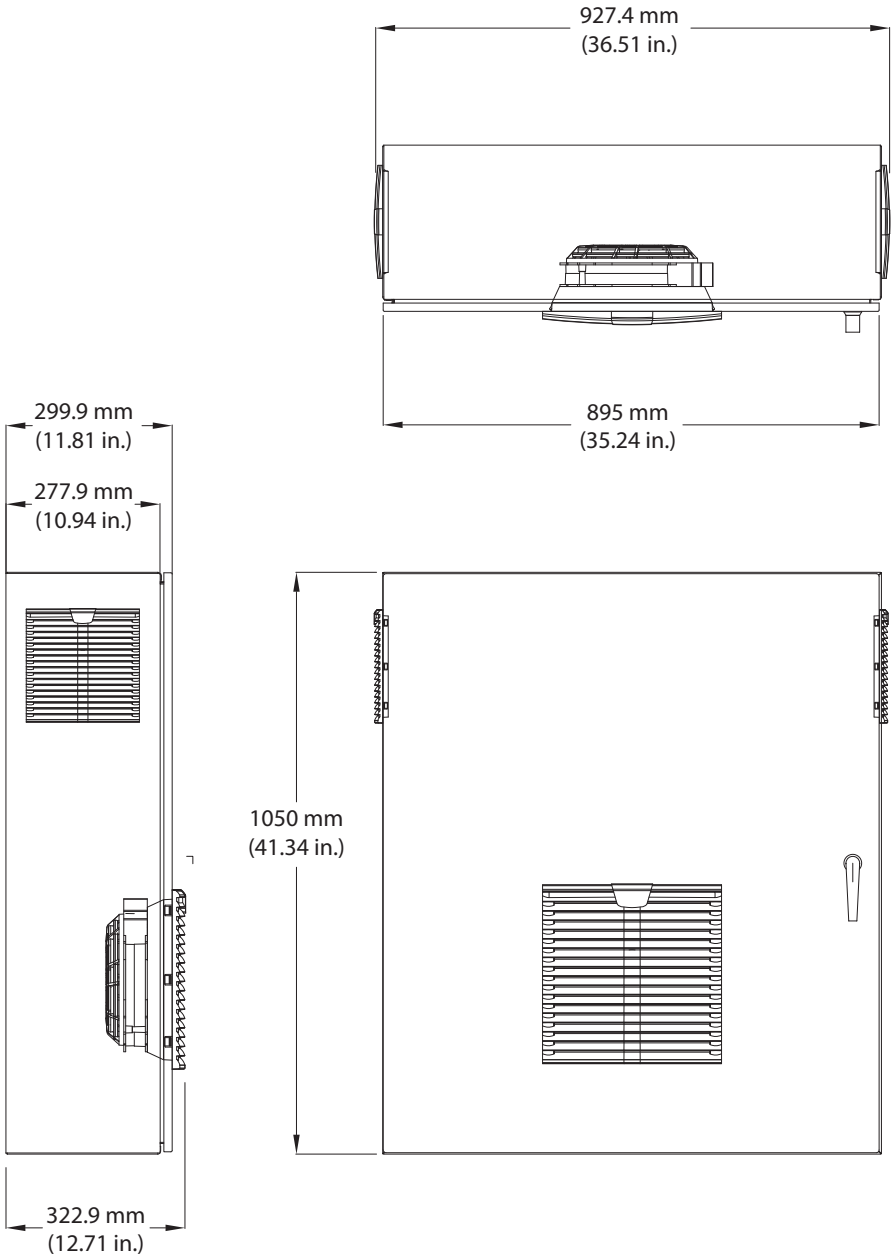

NEMA/UL Type 1 and 12, 50 Hp Normal Duty. . . 75 Hp Heavy Duty (Family 5)

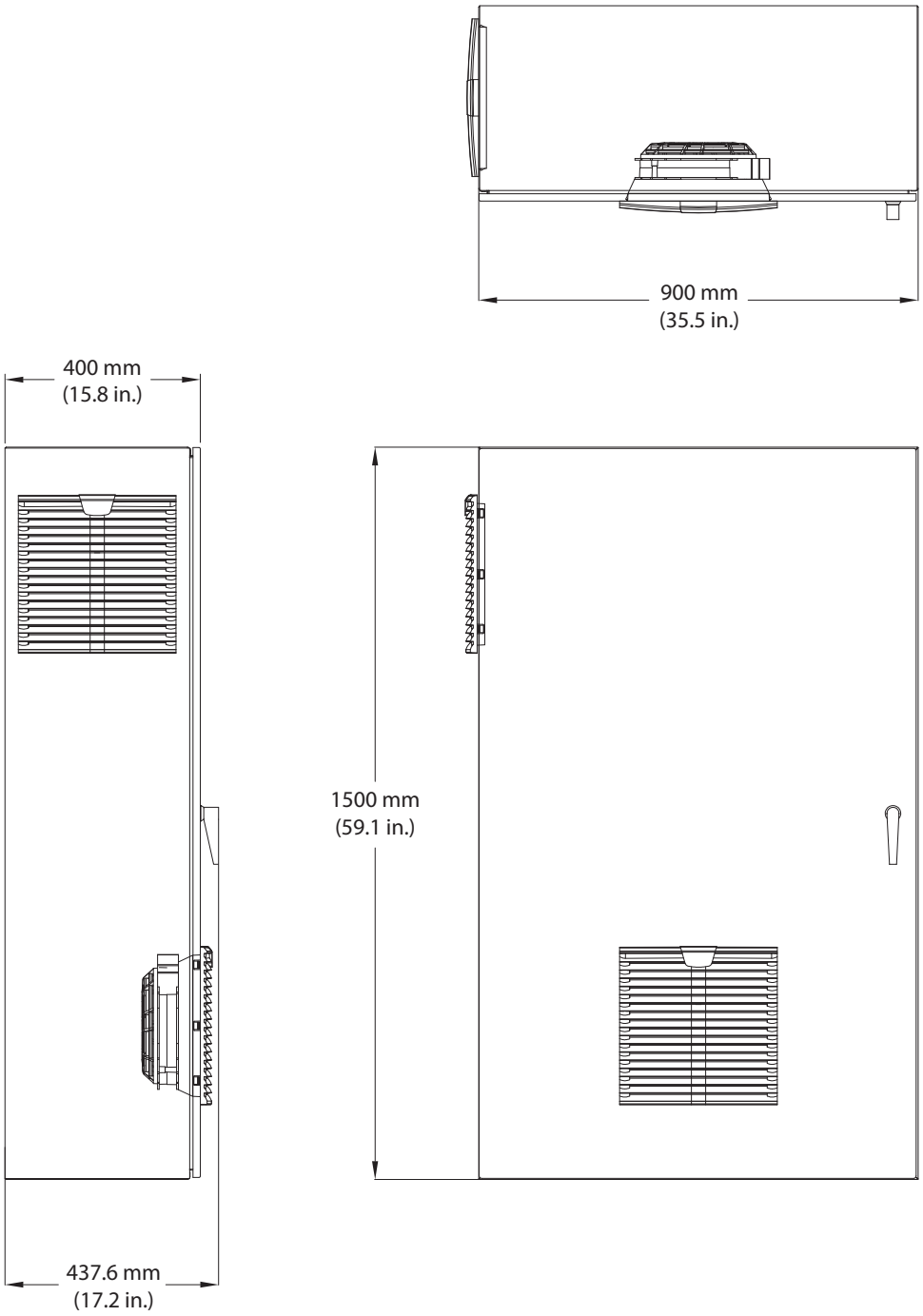

NEMA/UL Type 1 and 12, 100 Hp Normal. . .200 Hp Normal Duty (Family 6)

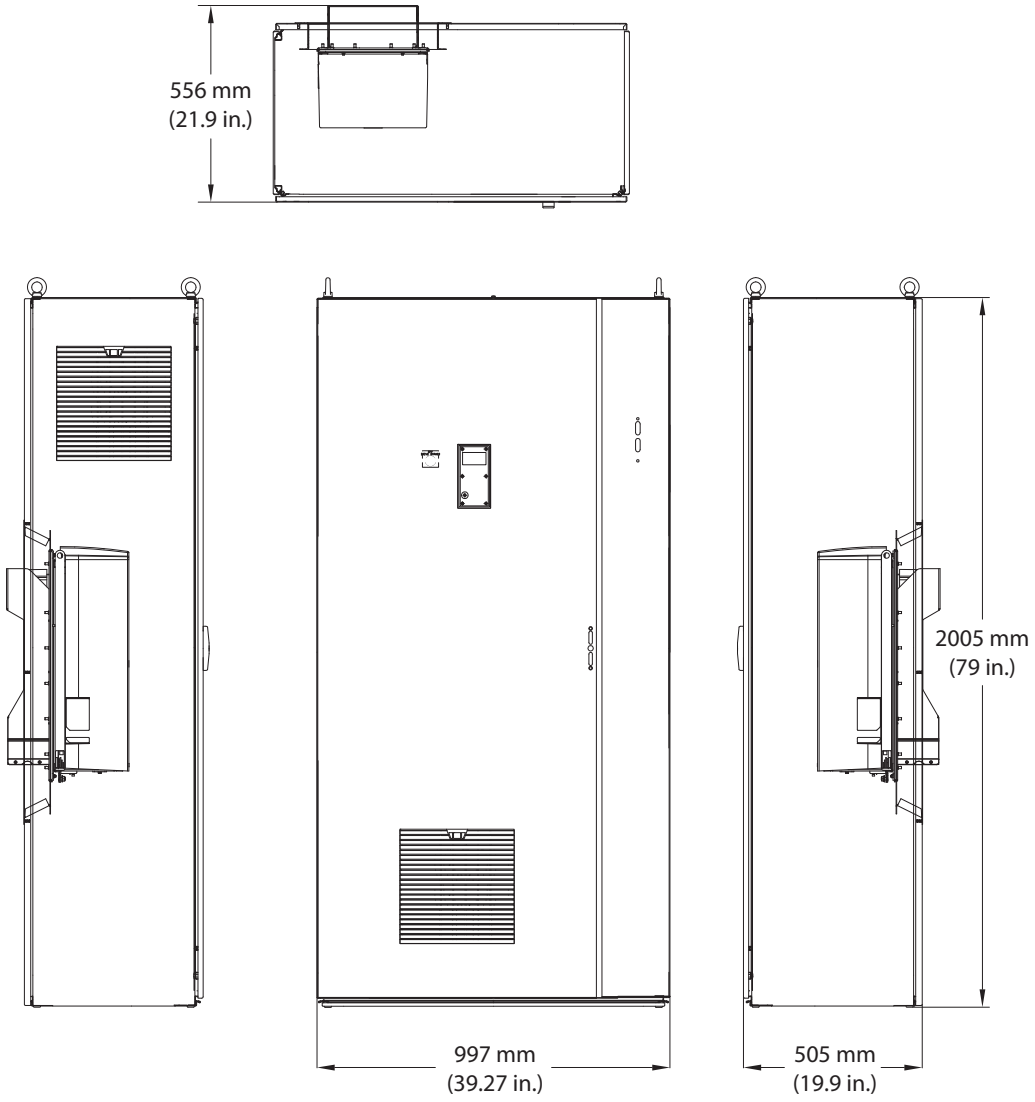

NEMA/UL Type 1 and 12, 250 Hp Heavy Duty. . . 350 Hp Normal Duty (Family 7)

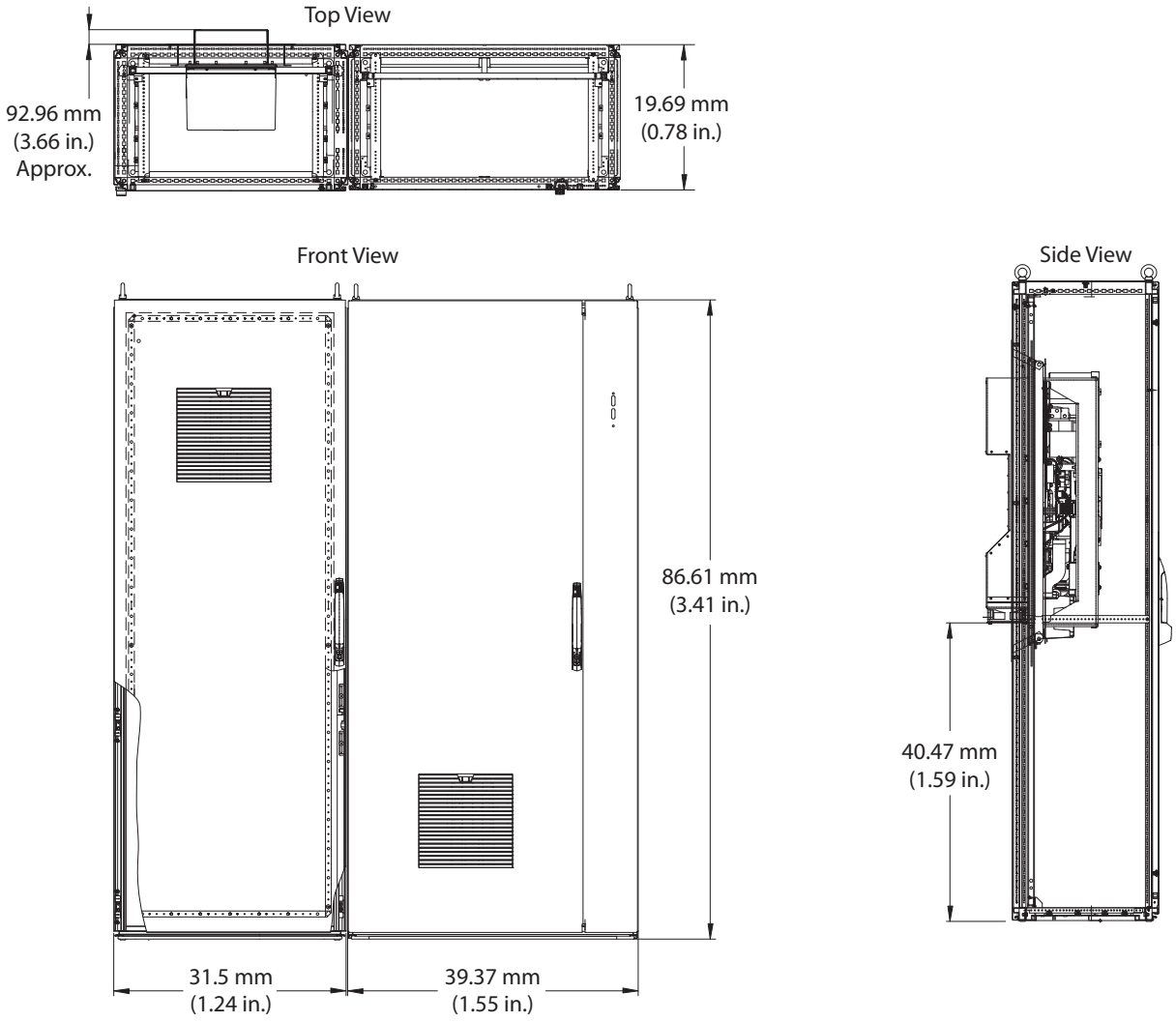

Rockwell Automation Support

Rockwell Automation provides technical information on the Web to assist you in using its products. At http://www.rockwellautomation.com/support, you can find technical manuals, technical and application notes, sample code and links to software service packs, and a MySupport feature that you can customize to make the best use of these tools. You can also visit our Knowledgebase at http://www.rockwellautomation.com/knowledgebase for FAQs, technical information, support chat and forums, software updates, and to sign up for product notification updates.

For an additional level of technical phone support for installation, configuration, and troubleshooting, we offer TechConnect^{SM} support programs. For more information, contact your local distributor or Rockwell Automation representative, or visit http://www.rockwellautomation.com/support/.

Installation Assistance

If you experience a problem within the first 24 hours of installation, review the information that is contained in this manual. You can contact Customer Support for initial help in getting your product up and running.

United States or Canada	1.440.646.3434
Outside United States or Canada	Use the Worldwide Locator at http://www.rockwellautomation.com/rockwellautomation/support/overview.page, or contact your local Rockwell Automation representative.

New Product Satisfaction Return

Rockwell Automation tests all of its products to help ensure that they are fully operational when shipped from the manufacturing facility. However, if your product is not functioning and needs to be returned, follow these procedures.

United States	Contact your distributor. You must provide a Customer Support case number (call the phone number above to obtain one) to your distributor to complete the return process.
Outside United States	Please contact your local Rockwell Automation representative for the return procedure.

Documentation Feedback

Your comments will help us serve your documentation needs better. If you have any suggestions on how to improve this document, complete this form, publication RA-DU002, available at http://www.rockwellautomation.com/literature/.

Medium Voltage Products, 135 Dundas Street, Cambridge, ON, N1R 5X1 Canada, Tel: (1) 519.740.4100, Fax: (1) 519.623.8930
Online: www.ab.com/mvb

Allen-Bradley, Rockwell Software, Rockwell Automation, and TechConnect are trademarks of Rockwell Automation, Inc.
Trademarks not belonging to Rockwell Automation are property of their respective companies.

www.rockwellautomation.com

Power, Control and Information Solutions Headquarters
Americas: Rockwell Automation, 1201 South Second Street, Milwaukee, WI 53204-2496 USA, Tel: (1) 414.382.2000, Fax: (1) 414.382.4444
Europe/Middle East/Africa: Rockwell Automation NV, Pegasus Park, De Kleetlaan 12a, 1831 Diegem, Belgium, Tel: (32) 2 663 0600, Fax: (32) 2 663 0640
Asia Pacific: Rockwell Automation, Level 14, Core F, Cyberport 3, 100 Cyberport Road, Hong Kong, Tel: (852) 2887 4788, Fax: (852) 2508 1846

Publication 750-TD002B-EN-P - February 2013
Supersedes Publication 750-TD002A-EN-P - October 2012

Copyright © 2013 Rockwell Automation, Inc. All rights reserved. Printed in Canada.

PowerFlex® 750-Series AC Drives
The Power and Control You Need

With a complete power range of 0.75 to 1500 kW (1 to 2000 Hp) and 400/480 and 600/690 volt availability, the PowerFlex 750-Series is a comprehensive drive family providing productivity-enhancing benefits to a wide range of global applications.

The PowerFlex 753 and 755 AC drives offer more selection for control, communications, safety and supporting hardware options than any other drives in their class.

The PowerFlex 750-Series of AC drives was designed with your needs in mind. Your need for flexibility, productivity and ease of use has been considered in every detail of these drives. The result is a family of AC drives that provides an exceptional user experience, from initial programming through operation.

This robust family of AC drives offers high performance for a wide variety of industrial applications. The PowerFlex 753 provides general purpose control for applications ranging up to 350 Hp/250 kW while the PowerFlex 755 provides maximum flexibility and performance up to 2000 Hp/1500 kW.

Consider these key features of the PowerFlex 750-Series drives and how they can help you maximize your productivity:

Simplified Integration with Logix – The PowerFlex 753 and 755 offer seamless integration into the Logix environment for simplified and enhanced configuration, programming, commissioning, diagnostics and maintenance. Using either Add-on Profiles or embedded instructions*, you'll be able to reduce engineering time – and related costs – while improving the configuration, control and collection of data.

Communications – The PowerFlex 750-Series supports a comprehensive range of network protocols to ease integration into your architecture. The PowerFlex 755 features an embedded EtherNet/IP™ port, allowing you to easily manage drive data over EtherNet/IP networks. In addition, a dual-port EtherNet/IP option module for the PowerFlex 750-Series provides flexible and cost-effective ways to apply EtherNet/IP, including Device Level Ring functionality.

Safe Torque-off and Safe Speed Monitor – Help protect personnel and equipment while reducing machine downtime with safety solutions up to and including PLe/SIL, Cat 3 and Cat 4. These safety options provide a choice for safety levels depending on your application requirements.

DeviceLogix™ – Controls outputs and manages status information locally within the drive, allowing you to operate the drive independently or complementary to supervisory control.

Configure for Your Application – Each drive has a slot-based hardware architecture that reduces unnecessary add-ons and gives you the flexibility to select option cards to suit your application and expand your drive for future needs. Supported hardware control options are common for the series to help reduce your inventory and spare parts requirements.

Predictive Diagnostics – Prevent unplanned downtime with predictive diagnostics and built-in protection features to help guard your investment. These settings allow the PowerFlex 750-Series to keep track of information that affects the life of the drive components. PowerFlex 755 drives 250 kW/350 Hp and larger have additional diagnostic features including built-in protection devices.

Application-matched Packaging – Gain additional flexibility with packaging options that address a range of application and environmental protection requirements.

Feedback – Options include Universal, Encoder and Dual Encoder feedback options. The Universal Feedback option includes multiple feedback interfaces to support a wide range of applications. Interfaces supported are Incremental, EnDat and Hiperface for Stegmann and Heidenhain high resolution feedback, SSI and BiSS for rotary and linear applications. The drives also provide automatic feedback loss switchover.

* PowerFlex 755 uses embedded instructions

PowerFlex 753 AC Drive

The PowerFlex 753 is ideal for general purpose applications requiring speed or torque control up to 250 kW/350 Hp. Embedded I/O along with three option slots for safety, feedback, communications, 24V power or additional I/O make the drive a flexible, cost-effective solution.

PowerFlex 755 AC Drive

PowerFlex 755 is ideal for applications requiring positioning, speed or torque control up to 1500 kW/2000 Hp. The PowerFlex 755 is easily integrated with the embedded Ethernet port and has five option slots to support additional options for feedback, I/O, safety, communications, and auxiliary 24V DC control power.

The PowerFlex 755 AC drive can be integrated with a ControlLogix® or CompactLogix™ Programmable Automation Controller (PAC) via drive instructions that are actually embedded in the PAC. This level of integration is specific to PowerFlex 755 drives on EtherNet/IP.

	PowerFlex 753	PowerFlex 755
400/480V 600V 690V	0.75 to 250 kW/1.0 to 350 Hp 1.0 to 300 Hp 7.5 to 250 kW	0.75 to 1400 kW/1.0 to 2000 Hp 1.0 to 1500 Hp 7.5 to 1500 kW
Logix Integration	• Automatic Device Configuration (with 20-750-ENETR and Studio 5000**) • Add-on Profiles	• Embedded instructions in Studio 5000** • Automatic Device Configuration (with embedded port or 20-750-ENETR, and Studio 5000**) • Add-on Profiles
DeviceLogix Control Technology	✓	✓
Safety Options: Safe Torque-Off, Safe Speed Monitor	✓	✓
Predictive Diagnostics	✓	✓
Option Slots	3	5 (3 for frame 1)
Communications	Option modules available for: • EtherNet/IP™ • Dual-port EtherNet/IP • ControlNet™ • DeviceNet™ • And a variety of industrial networks	Embedded Ethernet port standard Option modules available for: • Dual-port EtherNet/IP • ControlNet • DeviceNet • And a variety of industrial networks
I/O	Embedded I/O standard • 3 Digital Inputs, 1 Relay Output, 1 Transistor Output, 1 Analog Input, 1 Analog Output, 1 PTC Input • Option cards for additional I/O	1 Digital Input standard • Option cards for additional I/O
Motor Types	• Induction Motors • Permanent Magnet Motors (Interior)	• Induction Motors • Permanent Magnet Motors (Surface and Interior)
Positioning	• Indexing	• Indexing • PCamming • Electronic Gearing • Position/Speed Profiling
Feedback	• Incremental	• Incremental • EnDat, Hiperface, SSI and BiSS • Absolute
Application Sets	Oil Well • Pump Jack & Pump Off Fibers • PJump & Traverse	Lifting • Torqprove* Oil Well • Pump Jack & Pump Off Fibers • PJump & Traverse
Conformal Coating	✓	✓

* See publication PFLEX-BR009 for more information on crane/hoist applications.

** Also previous versions of RSLogix 5000 software.

PowerFlex 750-Series AC Drive

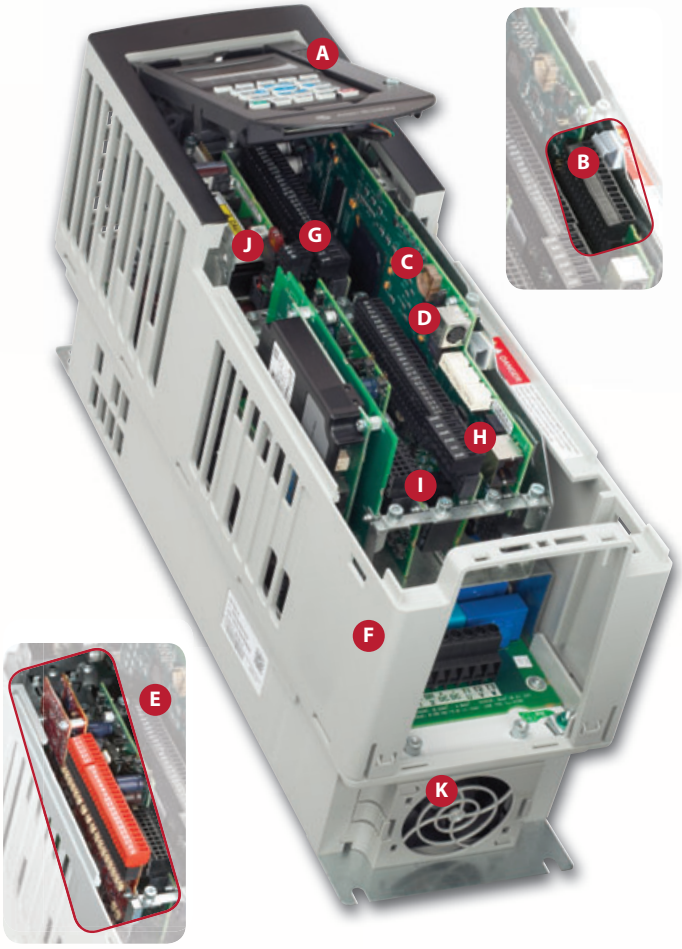

- **A** High-definition LCD display allows for six lines of text for more meaningful explanations of parameters and events.
- **B** Standard I/O on the PowerFlex 753 provides a cost-effective solution.
- **C** Real-time clock provides time-stamped events vs. run-time data.
- **D** Additional DPI for expanded programming capability.
- **E** Increase safety performance levels with the Safe Speed Monitor option card which includes an embedded safety relay.
- **F** Packaging options to meet application requirements.
- **G** DeviceLogix embedded control technology provides function block programming for stand-alone control of basic applications.
- **H** Easily configure, control and collect drive data with standard embedded Ethernet port on the PowerFlex 755.
- **I** Slot-based mechanical architecture to support additional options for I/O, feedback, safety, communications and auxiliary power supply.
- **J** Optional Auxiliary Power Supply maintains control and communications in event that main power is not present.
- **K** Easily assessable heat sink and internal fans.

e-Tools Simplify and Enhance Use of PowerFlex 750-Series Drives

Add-on Profiles

For simplified AC drive start-up and reduced development time, we've integrated Allen-Bradley® PowerFlex drive configuration with Studio 5000™ Logix Designer software (formerly RSLogix™ 5000). This single-software approach simplifies parameter and tag programming while still allowing stand-alone drive software tool use on the factory floor.

Embedded Instructions

The PowerFlex 755 AC drive can be configured with drive instructions embedded in Allen-Bradley ControlLogix and CompactLogix Programmable Automation Controllers (PAC). These are the same configuration parameters and programming instructions used by Allen-Bradley Kinetix® servo drives, providing a common, enhanced user experience.

DriveTools™ SP Software Suite

A powerful PC-based software suite, for programming, configuring and troubleshooting.

- DriveExecutive™ – for online/offline configuration and management of drives and drive peripherals
- DriveObserver™ – for real-time trending of drive information

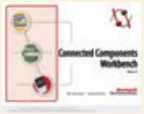

Connected Components Workbench™

Programming and configuration software supports all PowerFlex drives, Micro800™ controllers and PanelView™ component graphic terminals. This software leverages proven Rockwell Automation and Microsoft® Visual Studio® technologies for fast and easy controller programming, drive configuration and integration with the HMI editor.

PowerFlex 755 Floor Mount AC Drives

In addition to all the options and benefits available in the PowerFlex 750-Series, the PowerFlex 755 drives 250 kW/350 Hp and larger offer added benefits for maintenance and installation flexibility.

1. Control pod is common with smaller ratings providing embedded Ethernet port and 5 slots for option modules, and can be remote mounted (up to 23 m) for hassle-free access to low voltage control.
2. Roll in/out design makes the drive easy to install and service by allowing complete removal from cabinet, providing generous room for wiring behind the drive. Power wiring can stay connected while unit is rolled out.
3. Adjustable terminals provide flexibility for wiring preferences such as top or bottom entry.
4. Integrated fusing eliminates need for separately mounted drive short circuit protection. Status is reported from the drive to ease troubleshooting.
5. Replaceable surge protector reduces downtime after incoming transient voltage events. Status is reported from the drive to ease troubleshooting.
6. Integrated DC link inductor enhances protection from power system events, and reduces input harmonics.
7. Sealed cooling channel uses external air for main cooling, reducing contamination exposure for electronics.
8. Modular construction allows fast and easy replacement of parts (e.g., main blower, capacitor assembly, circuit boards), minimizing production downtime.

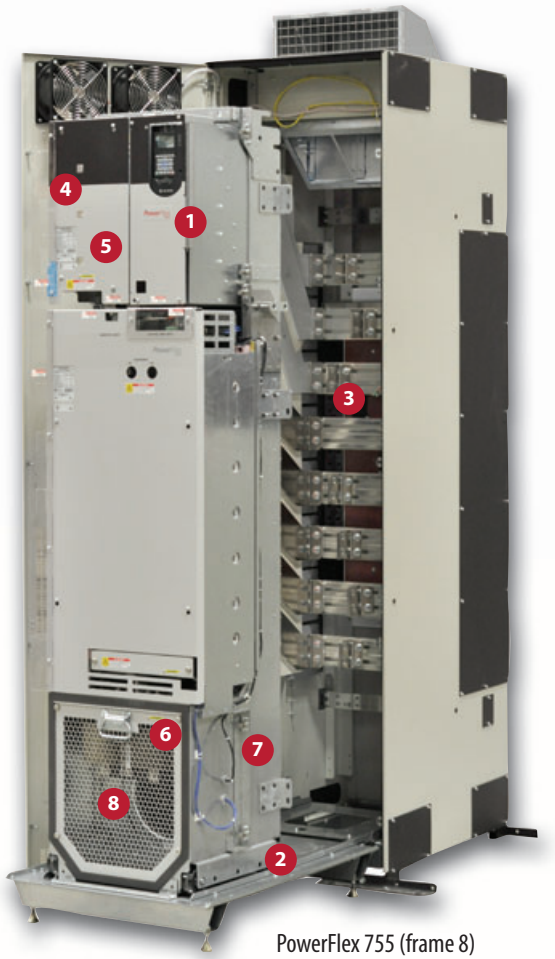

PowerFlex 755 (frame 8)
250 to 500 kW/350 to 600 Hp

PowerFlex 755 Drives with Option Bays

All PowerFlex 755 floor mount drives are available with a power option bay which provides a cost-effective solution for power disconnect and other popular power options. Based on customer specifications, components are correctly sized and optimized for the appropriate overload duty rating. By eliminating the need for accessory sizing and the possibility of installation errors, the option bay helps to reduce engineering and installation time and costs. Option Bays are available with both IP20 and IP54 environmental ratings.

View a video on the benefits of the PowerFlex 755 at:
http://ab.rockwellautomation.com/Drives/PowerFlex-755

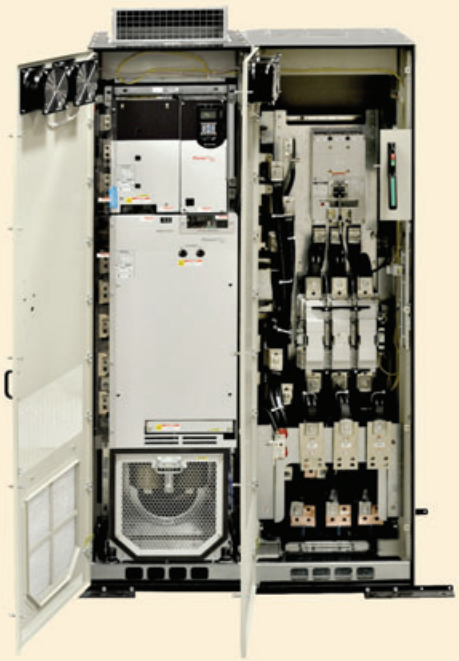

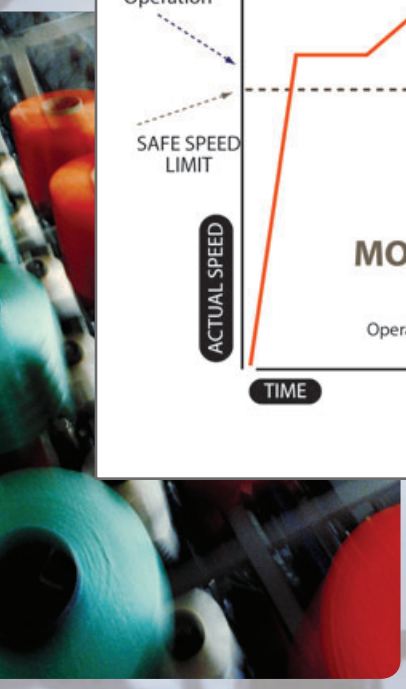

Safety

To help you protect personnel and assets while improving machine uptime, the PowerFlex 750-Series is available with two safety options:

1. Safe Torque-Off option or
2. Safe Speed Monitor option.

Safe Torque-Off is ideal for safety-related applications requiring removal of rotational power to the motor without removing power from the drive. Safe Torque-Off functionality offers the benefit of quick start-up after a demand on the safety system, helps reduce wear from repetitive start-up, and provides safety ratings up to and including SIL, PLe, and CAT 3.

The Safe Speed Monitor option provides a solution for applications that can benefit from access to a safety zone while there is limited motion. It helps you safely monitor and control the speed of your application, which allows operators to perform process or maintenance work without stopping the machine.

In addition, Safe Speed Monitor has an integrated monitoring relay to save additional panel-space installation labor. This option carries a safety rating up to and including SIL, PLe and Cat 4.

The Safe Speed Monitor option provides the following functionality:

- Safe Torque-Off
- Stop Categories 0, 1 and 2
- Safe Stop
- Safe Limited Speed
- Safe Maximum Speed
- Safe Maximum Acceleration
- Safe Direction
- Zero-Speed Monitoring
- Door Control and Monitoring
- Enabling switch input

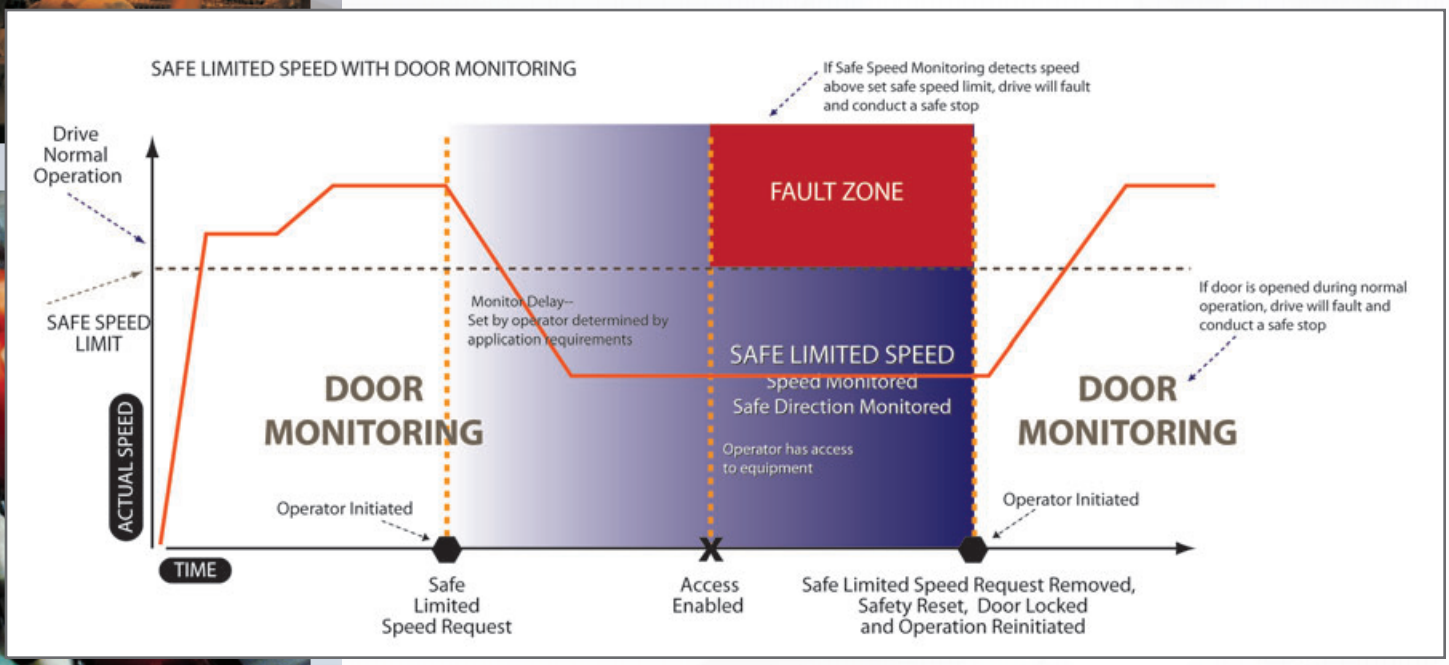

The Right Packaging for Your Application

Because application conditions and environments vary, PowerFlex 750-Series drives are available with a choice of packaging options. From highly flexible IP00 open styles to MCC-style cabinets and other features that help provide additional protection, there's a PowerFlex 750-Series drive with the right packaging to help you meet productivity goals.

PowerFlex 755 Floor Mount Drives with IP00, NEMA/UL Open Type Ratings

The PowerFlex 755 IP00, NEMA/UL Open Type drives are designed to provide packaging flexibility, including the option for either vertical or horizontal mounting orientations. This option is available in PowerFlex 755 floor mount drives with ratings up to 1500 kW/2000 Hp.

PowerFlex 750-Series Drives with IP54/UL Type 12 Ratings

For applications requiring additional protection from harsh environments, PowerFlex 753 and 755 drives are available with IP54/UL Type 12 enclosures. These enclosures help protect the drive from dust and splashing water and are appropriate for moderately harsh indoor environments.

PowerFlex 750-Series drives are available with a variety of enclosure options and ratings including IP00, IP20, IP54 (above left) and an extra protection flange mount (above right).

Enclosure	Rating	Temperature Range	PowerFlex 753	PowerFlex 755
Wall Mount	IP00, IP20, NEMA/UL Open Type	0 – 50 ˚C 32 – 122 ˚F	X	X
Extra Protection Flanged Mount	Front: IP00, IP20 & NEMA/UL Open Type Back: IP66 & NEMA/UL Type 4X	Front: 0 – 50 ˚C 32 – 122 ˚F Back: 0 – 40 ˚C 32 – 104 ˚F	X	X
Extra Protection Wall Mount	IP54 & NEMA/UL Type 12	0 – 40 ˚C 32 – 104 ˚F	X	X
NEMA 1 Kit	Converts Open Type to NEMA/UL Type	0 – 40 ˚C 32 – 104 ˚F	X	X
Floor Mount	IP20, IP54, IP00	0 – 40 ˚C 32 – 104 ˚F		X*

* Floor mount drives are available for PowerFlex 755 higher power ratings (above 250 kW/350 Hp) only.
PowerFlex 755 higher power drives (ratings above 250 kW/350 Hp) are available in IP00, IP20 and IP54 enclosure ratings.

Premier Integration Simplifies Development, Use and Maintenance

By combining the advanced capabilities of the Rockwell Automation Integrated Architecture™ and the communication capabilities of PowerFlex drives, you can achieve an exceptional level of integration between drives and controllers. The benefits of this integration range from reduced development time to simplified maintenance.

To achieve this integration, PowerFlex drives use add-on profiles in Studio 5000™ Logix Designer software (formerly RSLogix™ 5000) to streamline drive installation. Add-on profiles minimize the need to individually program the required parameters and tags. The result is simplified programming, which puts an end to the need to frequently refer back to user manuals for specific parameter and tag information. And all PowerFlex drives on EtherNet/IP are able to take advantage of these add-on profiles.

In addition, Automatic Device Configuration (ADC) support for the PowerFlex 750-Series drives – shown below – helps reduce downtime.

Easy-to-use tools help reduce development time and require no specialized knowledge – Wizards with advanced graphical interfaces walk you through drive parameter configuration.

Eliminate errors associated with using multiple software tools – Single development environment to configure and program your entire Logix drive system.

Access, edit and save drive information to the control system project with ease – Drive configuration is saved as part of the RSLogix project file (*.acd) and is also stored in the Logix controller, so there's no need to store and maintain multiple files – you only need one file.

Easily download global objects and faceplates – You can use the same tag names generated by the drive add-on profiles to utilize global objects and faceplates for a FactoryTalk® View HMI display

Easy to Maintain – Diagnostic, fault, alarm, and event information are integral to Studio 5000.

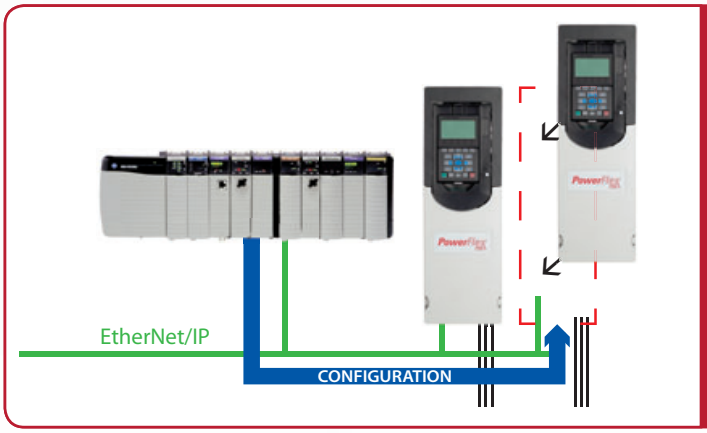

With Automatic Device Configuration (ADC), the Logix controller can automatically detect a replaced PowerFlex 753 or 755 drive and download all configuration parameters, eliminating the need for manual reconfiguration. (PowerFlex 753 AC drives require a dual-port EtherNet/IP communication card for ADC.)

DeviceLogix™ Control Technology

DeviceLogix control technology provides you with the flexibility to customize a drive to more closely match your application needs. DeviceLogix controls outputs and manages status information locally within the drive, allowing you to operate the drive independently or complementary to supervisory control, helping to improve system performance and productivity.

You can use the PowerFlex 750-Series DeviceLogix to:

- Speed reaction time by processing in the drive, which reduces dependency on network throughput
- Provide scaling, selector switches, or other data manipulations not already built into the drive
- Read inputs/write outputs and exclusively control the drive
- Provide an option for decision-making if communication is lost with main controller
- Control other PowerFlex drives via a Peer-to-Peer EtherNet/IP network

DeviceLogix is easily programmed via: RSLogix 5000 and DriveTools SP v 5.01.

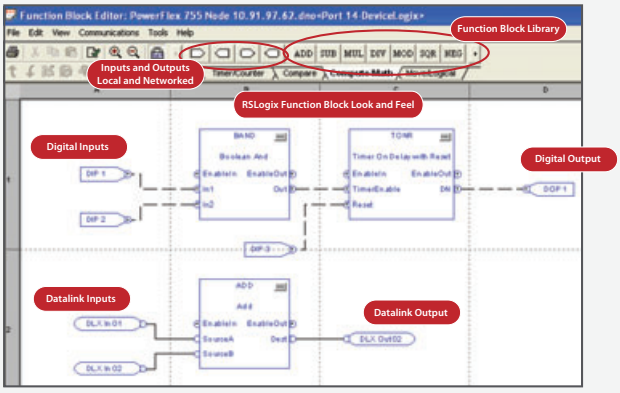

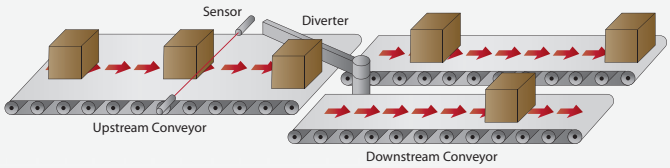

EtherNet/IP – A Single Network for Complete Machine Control

Connect Your Entire Enterprise

Benefit from the EtherNet/IP network for complete machine control that simplifies and enhances machine design.

- Low cost, high performance and easy to use as compared to a multi-network architecture
- Easily integrate any PowerFlex drive, I/O, smart actuators and any other EtherNet/IP connected device
- EtherNet/IP is an established, broadly-adopted network
- The PowerFlex 755 AC drive and Kinetix 6500 servo drive can reside on the same EtherNet/IP network and be programmed with a common set of motor control instructions available in ControlLogix and CompactLogix Programmable Automation Controllers

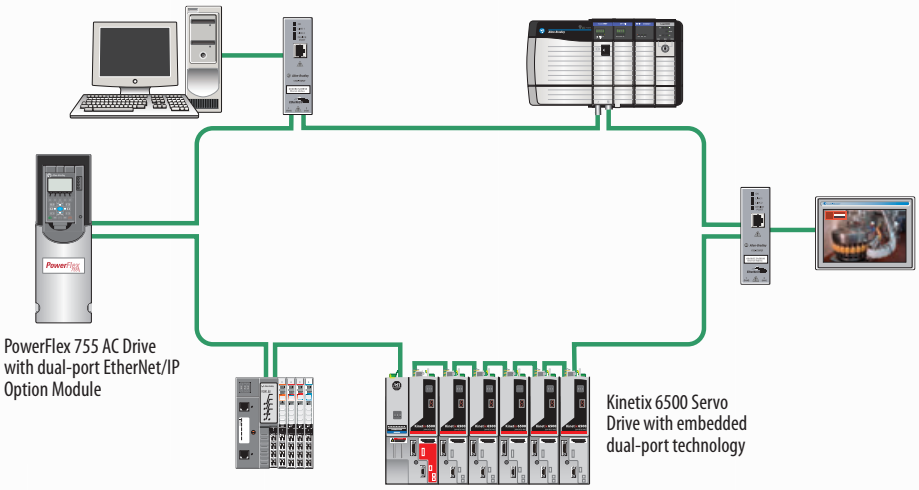

Device Level Ring (DLR) is an ODVA standard and provides fault tolerant connectivity for high drive availability. If one device on the EtherNet/IP network fails, the other devices are able to continue operation.

Dual-port EtherNet/IP Option Module for PowerFlex 750-Series AC Drives

The PowerFlex 750-Series Dual-port EtherNet/IP option module provides flexible and cost-effective ways to apply EtherNet/IP, and supports Ring, Linear and Star topologies as well as DLR functionality. DLR-based networks reduce configuration time and costs by minimizing the number of managed switches and reducing cabling needs. Users can create a single fault-tolerant DLR network that connects all components at the device level locally.

Information can be seamlessly communicated in real time to various levels of an organization, without requiring additional complexity. Getting real-time information at the right time and at the right levels of the manufacturing environment helps you enhance the agility of your business.

This solution supports optimal integration on a DLR level for the PowerFlex 755 via instructions embedded in the Logix controller, further enhancing integration into the Rockwell Automation Integrated Architecture. Only Allen-Bradley drives are able to offer optimal integration into the Integrated Architecture, providing simplified configuration, programming, commissioning, diagnostics and maintenance.

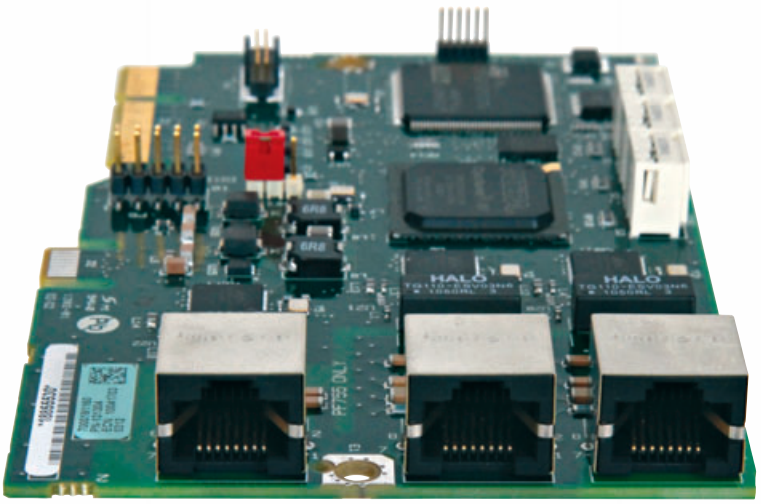

All PowerFlex 755 AC drives have a single embedded Ethernet port. This 750-Series option module provides the benefits of dual-port EtherNet/IP functionality for both the PowerFlex 753 and 755.

PowerFlex 753 and PowerFlex 755 AC Drive Specifications

Frame/Rating Cross-Reference						
	400V AC (540V DC) Input			480V AC (650V DC) Input		
Frame[1]	Amps	Normal Duty kW	Heavy Duty kW	Amps	Normal Duty Hp	Heavy Duty Hp
1	2.1	0.75	0.37	2.1	1	0.5
	3.5	1.5	0.75	3.4	2	1.5
	5	2.2	1.5	5	3	2
	8.7	4	2.2	8	5	3
	11.5	5.5	4	11	7.5	5
	15.4	7.5	5.5	14	10	7.5
2	2.1	0.75	0.75	2.1	1	1
	3.5	1.5	1.5	3.4	2	2
	5	2.2	2.2	5	3	3
	8.7	4	4	8	5	5
	11.5	5.5	5.5	11	7.5	7.5
	15.4	7.5	5.5	14	10	7.5
	22	11	7.5	22	15	10
3	30	15	11	27	20	15
	37	18.5	15	34	25	20
	43	22	18.5	40	30	25
4	60	30	22	52	40	30
	72	37	30	65	50	40
5	85	45	37	77	60	50
	104	55	45	96	75	60
6	140	75	55	125	100	75
	170	90	75	156	125	100
	205	110	90	186	150	125
	260	132	110	248	200	150
7	302	160	132	302	250	200
	367	200	160	361	300	250
	456	250	200	415	350	300

	600V AC, Three-Phase Drives				
	Output Amps[2]				
Frame	Cont.	1 Min.	3 Sec.	Normal Duty Hp	Heavy Duty Hp
3	1.7 (0.9)	1.9 (1.4)	2.6 (2.6)	1	0.5
	2.7 (1.7)	3.0 (2.6)	4.1 (4.6)	2	1
	3.9 (2.7)	4.3 (4.1)	5.9 (7.3)	3	2
	6.1 (3.9)	6.7 (5.9)	9.2 (10.5)	5	3
	9 (6.1)	9.9 (9.2)	12.1 (13.5)	7.5	5
	11 (9)	12.1 (13.5)	16.5 (24.3)	10	7.5
	17 (11)	18.7 (16.5)	25.5 (29.7)	15	10
	22 (17)	24 (26)	33 (46)	20	15
4	27 (22)	30 (33)	41 (59)	25	20
	32 (27)	35 (41)	48 (73)	30	25
5	41 (32)	45 (48)	62 (86)	40	30
	52 (41)	57 (62)	78 (111)	50	40

	600V AC Input					690V AC Input				
	Output Amps[2]			Normal Duty	Heavy Duty	Output Amps[2]			Normal Duty	Heavy Duty
Frame[1]	Cont.	1 Min.	3 Sec.	Hp	Hp	Cont.	1 Min.	3 Sec.	kW	kW
6	12 (9.1)	13.2 (13.7)	18 (18)	10	7.5	12 (9)	13.2 (13.5)	18 (18)	7.5	5.5
	18 (11.1)	19.8 (16.7)	27 (27)	15	10	15 (11.5)	16.5 (17.3)	22.5 (22.5)	11	7.5
	23 (18)	25.3 (27)	34.5 (34.5)	20	15	20 (15)	22 (22.5)	30 (30)	15	11
	24 (22)	26.4 (33)	36 (39.6)	20	20	23 (20)	25.3 (30)	34.5 (36)	18.5	15
	28 (23)	30.8 (34.5)	42 (42)	25	20	30 (23)	33 (34.5)	45 (45)	22	18.5
	33 (28)	36.3 (42)	49.5 (50.4)	30	25	34 (30)	37.4 (45)	51 (54)	30	22
	42 (33)	46.2 (49.5)	63 (63)	40	30	46 (34)	50.6 (51)	69 (69)	37	30
	53 (42)	58.3 (63)	79.5 (79.5)	50	40	50 (46)	55 (69)	75 (82.8)	45	37
	63 (52)	69.3 (78)	94.5 (94.5)	60	50	61 (50)	67.1 (75)	91.5 (91.5)	55	45
	77 (63)	84.7 (94.5)	116 (116)	75	60	82 (61)	90.2 (91.5)	123 (123)	75	55
	99 (77)	109 (116)	149 (149)	100	75	98 (82)	108 (123)	147 (148)	90	75
	125 (99)	138 (149)	188 (188)	125	100	119 (98)	131 (147)	179 (179)	110	90
	144 (125)	158 (188)	216 (225)	150	125	142 (119)	156 (179)	213 (214)	132	110
7	192 (144)	211 (216)	288 (288)	200	150	171 (142)	188 (213)	257 (257)	160	132
	242 (192)	266 (288)	363 (363)	250	200	212 (171)	233 (257)	318 (318)	200	160
	289 (242)	318 (318)	434 (436)	300	250	263 (212)	289 (289)	395 (395)	250	200

1 Frame ratings based on open type cabinet mount enclosures.
2 These drives have dual current ratings; one for normal duty applications, and one for heavy duty applications (in parenthesis). The drive may be operated at either rating.

PowerFlex 755 Floor Mount Drives*

380…400V AC, Three-phase and 540V DC Input Drives

Frame Size	Light Duty				Normal Duty				Heavy Duty			
	Output Amps				Output Amps				Output Amps			
	Cont.	1 Min.	3 Sec.	kW	Cont.	1 Min.	3 Sec.	kW	Cont.	1 Min.	3 Sec.	kW
8	540	594	NA	315	460	506	693	250	385	578	693	200
	585	644		315	540	594	821	315	456	684	821	250
	612	673		355	567	624	851	315	472	708	851	250
	750	825		400	650	715	975	355	540	810	975	315
	796	876		450	750	825	1125	400	585	878	1125	315
	832	915		450	770	847	1155	400	642	963	1155	355
9	1040	1144		560	910	1001	1365	500	750	1125	1365	400
	1090	1199		630	1040	1144	1584	560	880	1320	1584	500
	1175	1293		710	1090	1199	1638	630	910	1365	1638	500
	1465	1612		800	1175	1293	1872	710	1040	1560	1872	560
	1480	1628		850	1465	1612	2198	800	1090	1635	2198	630
	1600	1760		900	1480	1628	2220	850	1175	1763	2220	710
10	1715	1887		1000	1590	1749	2385	900	1325	1988	2385	710
	2330	2563		1400	2150	2365	3225	1250	1800	2700	3225	1000

480V AC, Three-phase and 650V DC Input Drives

Frame Size	Light Duty				Normal Duty				Heavy Duty			
	Output Amps				Output Amps				Output Amps			
	Cont.	1 Min.	3 Sec.	Hp	Cont.	1 Min.	3 Sec.	Hp	Cont.	1 Min.	3 Sec.	Hp
8	485	534	NA	400	430	473	666	350	370	555	666	300
	545	600		450	485	534	745	400	414	621	745	350
	590	649		500	545	600	818	450	454	681	818	350
	710	781		600	617	679	926	500	485	728	926	400
	765	842		650	710	781	1065	600	545	818	1065	450
	800	880		700	740	817	1110	650	617	926	1110	500
9	960	1056		800	800	880	1278	700	710	1065	1278	600
	1045	1150		900	960	1056	1440	800	795	1193	1440	700
	1135	1249		1000	1045	1150	1568	900	800	1200	1568	750
	1365	1502		1100	1135	1249	1728	1000	960	1440	1728	800
	1420	1562		1250	1365	1502	2048	1100	1045	1568	2048	900
	1540	1694		1350	1420	1562	2130	1250	1135	1703	2130	1000
10	1655	1821		1500	1525	1678	2288	1350	1270	1905	2288	1100
	2240	2464		2000	2070	2277	3105	1750	1730	2595	3105	1650

600V AC, Three-phase and 725V DC Input Drives

Frame Size	Light Duty				Normal Duty				Heavy Duty			
	Output Amps				Output Amps				Output Amps			
	Cont.	1 Min.	3 Sec.	Hp	Cont.	1 Min.	3 Sec.	Hp	Cont.	1 Min.	3 Sec.	Hp
8	355	391	NA	350	295	325	490	300	272	408	490	250
	395	435		400	355	391	533	350	295	443	533	300
	435	479		450	395	435	593	400	329	494	593	350
	460	506		500	435	479	639	450	355	533	639	350
	510	561		500	460	506	711	500	395	593	711	400
	545	600		550	510	561	765	500	425	638	765	450
9	690	759		700	595	655	918	600	510	765	918	500
	760	836		800	630	693	1071	700	595	893	1071	600
	835	919		900	760	836	1140	800	630	945	1140	700
	900	990		950	825	908	1260	900	700	1050	1260	750
	980	1078		1000	900	990	1368	950	760	1140	1368	800
	1045	1150		1100	980	1078	1470	1000	815	1223	1470	900
10	1220	1342		1200	1110	1221	1665	1100	920	1380	1665	1000
	1530	1683		1500	1430	1573	2145	1400	1190	1785	2145	1250

* A Roll-out Cart is required with Frame 8…10 drives to assist with power wiring and cabinet mounting.

PowerFlex 755 Floor Mount Drives*

690V AC, Three-phase and 932V DC Input Drives

Frame Size	Light Duty				Normal Duty				Heavy Duty			
	Output Amps				Output Amps				Output Amps			
	Cont.	1 Min.	3 Sec.	kW	Cont.	1 Min.	3 Sec.	kW	Cont.	1 Min.	3 Sec.	kW
8	330	363	NA	315	265	292	375	250	215	323	375	200
	370	407		355	330	363	473	315	265	398	473	250
	410	451		400	370	407	555	355	308	462	555	300
	460	506		450	415	457	639	400	370	555	639	355
	500	550		500	460	506	675	450	375	563	675	375
	530	583		530	500	550	750	500	413	620	750	400
9	650	715		630	590	649	885	560	460	690	885	450
	710	781		710	650	715	975	630	500	750	975	500
	790	869		800	710	781	1065	710	590	885	1065	560
	860	946		850	765	842	1170	750	650	975	1170	630
	960	1056		900	795	875	1350	800	750	1125	1350	710
	1020	1122		1000	960	1056	1440	900	795	1193	1440	800
10	1150	1265		1100	1040	1144	1560	1000	865	1298	1560	900
	1485	1634		1500	1400	1540	2100	1400	1160	1740	2100	1120

* A Roll-out Cart is required with Frame 8…10 drives to assist with power wiring and cabinet mounting.

Dimensions for PowerFlex 755 with IP00/IP20 Ratings***

Approximate Dimensions Millimeters (Inches)			
Frame	Height	Width	Depth
1	400.50 (15.77)	110 (4.33)	211 (8.31)
2	424.20 (16.7)	134.50 (5.30)	212 (8.35)
3	454 (17.87)	190 (7.48)	212 (8.35)
4	474 (18.66)	222 (8.74)	212 (8.35)
5	550 (21.65)	270 (10.63)	212 (8.35)
6	665.50 (26.20)	308 (12.13)	346.40 (13.64)
7	881.50 (34.70)	430 (16.93)	350 (13.78)
8	2453 (88.36)	600 (23.6)	600 (23.6)**
8	2453 (96.60)	600 (23.6)	800 (31.50)**
9	2453 (96.60)	1200 (47.20)	600 (23.6)**
9	2453 (96.60)	1200 (47.20)	800 (31.50)**
10	2453 (96.60)	1800 (70.90)	600 (23.60)**
10	2453 (96.60)	1800 (70.90)	800 (31.50)**

** Available in 600 mm and 800 mm depths to provide options based on cable entry and exit requirements. See publication PFLEX-SG002 or 750-TD001 for selection information.

***IP00 for frames 6 and 7

Energy Savings Calculators

See how installing a PowerFlex drive for your fan or pump applications can reduce energy costs when compared with a traditional flow control method.

Download the tools at:
http://www.rockwellenergycalc.com

Rockwell Automation, Inc. (NYSE:ROK), the world's largest company dedicated to industrial automation, makes its customers more productive and the world more sustainable. Throughout the world, our flagship Allen-Bradley® and Rockwell Software® product brands are recognized for innovation and excellence.

Follow ROKAutomation on Twitter. Connect with us on Facebook and LinkedIn.

Allen-Bradley, ControlLogix, CompactLogix, Connected Components Workbench, DeviceLogix, DriveExecutive, DriveObserver, DriveTools, FactoryTalk, Integrated Architecture, Kinetix, LISTEN. THINK. SOLVE., Micro800, PanelView, PowerFlex, Rockwell Software, RSLogix and Studio 5000 are trademarks of Rockwell Automation, Inc. Trademarks not belonging to Rockwell Automation are property of their respective companies. ControlNet, DeviceNet and EtherNet/IP are trademarks of the Open DeviceNet Vendor Association.

www.rockwellautomation.com

Power, Control and Information Solutions Headquarters

Americas: Rockwell Automation, 1201 South Second Street, Milwaukee, WI 53204-2496 USA, Tel: (1) 414.382.2000, Fax: (1) 414.382.4444
Europe/Middle East/Africa: Rockwell Automation NV, Pegasus Park, De Kleetlaan 12a, 1831 Diegem, Belgium, Tel: (32) 2 663 0600, Fax: (32) 2 663 0640
Asia Pacific: Rockwell Automation, Level 14, Core F, Cyberport 3, 100 Cyberport Road, Hong Kong, Tel: (852) 2887 4788, Fax: (852) 2508 1846

Publication 750-BR001A-EN-P – January 2013

Copyright © 2013 Rockwell Automation, Inc. All Rights Reserved. Printed in USA.

Thermal Edge Inc.™

TEMPERATURE CONTROL SOLUTIONS FOR ELECTRICAL ENCLOSURES

UL Listed Enclosure Air Conditioners

Fully Integrated Condensate Evaporation Package
Programmable Digital Controller
Thermal Expansion Valve
Narrow Design to fit onto a 12” Enclosure
Energy Efficiency - Low Running Amps

Get the Edge... Get Thermal Edge

Temperature Control Solutions for Electrical Enclosures

(972) 580-0200 or (888) 580-0202 • www.thermal-edge.com • thermalinfo@thermal-edge.com

MADE IN THE USA

Thermal Edge Inc.™

Get the Edge... Get Thermal Edge

Temperature Control Solutions for Electrical Enclosures

What Makes an Air Conditioner a Thermal Edge Air Conditioner?

There are three critical features that make a Thermal Edge Enclosure Air Conditioner different from any other line of air conditioners. **Standard on Every Unit:**

Drip-free Condensate Removal is Not Optional

Water is the by-product of every air conditioner. At Thermal Edge we understand that a puddle next to your sensitive electronic enclosure may be a problem. We eliminate this messy problem by changing the troublesome water back into a vapor and venting it out of your way. That means no puddles, stains or mess near your electrical enclosure, control system or production line. In addition, our condensate evaporation system precools the refrigerant which lowers the running amps and thus lowers your energy usage.

Condensate Evaporation Is Standard On Every Unit... **No Drain Tube is Needed**

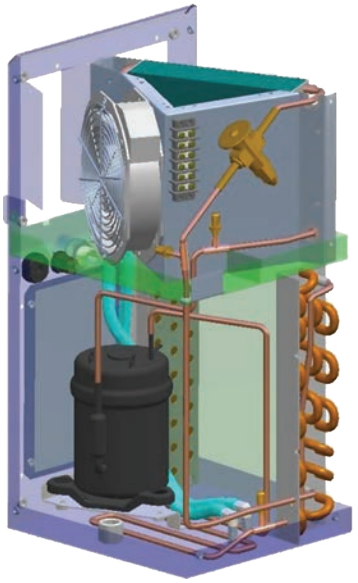

Thermal Expansion Valve Controls the Flow

Thermal Expansion Valves balance and modulate the refrigerant flow to the heat load by sensing the temperature of the refrigerant leaving the evaporator.

With Thermal Edge, You Have a Smarter Enclosure Air Conditioner

Digital, Programmable Controller:

- Fully programmable
- Built in alarms and alerts
- Will operate heating & cooling
- Standard on every air conditioner
- Ethernet, Modbus RTU and Ethernet/IP communication options
- Remote controller option places controller inside cabinet

CS Series Air Conditioners

- Smallest 2000 BTUH available
- Active Condensate Evaporation is standard
- Fits on a 7" or 10" deep enclosure
- Available in NEMA Types 12, 4, 4X
- Fully programmable digital controller with temperature and pressure monitors for a **smarter** air conditioner
- 120V, 230V

- 1000 BTUH
- 2000 BTUH

NE Series Air Conditioners

- Active Condensate Evaporation is standard
- Fits on a 12" deep enclosure
- Available in NEMA Types 12, 4, 4X and Hazardous Environment applications
- Fully programmable digital controller with temperature and pressure monitors for a **smarter** air conditioner
- 120V, 230V, 480V

- 1000 BTUH
- 1500 BTUH
- 2000 BTUH
- 3000 BTUH
- 4000 BTUH
- 5000 BTUH
- 6000 BTUH
- 8000 BTUH

TM Series Air Conditioners

- Top Mounted Enclosure Air Conditioners
- Active Condensate Evaporation is standard
- Available in NEMA Types 12, 4, 4X
- Fully programmable digital controller with temperature and pressure monitors for a **smarter** air conditioner
- 120V, 230V, 480V

- 6000 BTUH
- 8000 BTUH

HC Series Air Conditioners

- Active Condensate Evaporation is standard
- Available in NEMA Types 12, 4, 4X and Hazardous Environment applications
- Fully programmable digital controller with temperature and pressure monitors for a **smarter** air conditioner
- 120V, 230V, 480V

- 10,000 BTUH
- 12,000 BTUH
- 15,000 BTUH
- 20,000 BTUH

MADE IN THE USA

(972) 580-0200 or (888) 580-0202 • www.thermal-edge.com • thermalinfo@thermal-edge.com

Air Conditioner Product Line

Model	BTU / Hour	Voltage / Phase / Hz	Running Amps	Maximum Ambient Temp	Maximum Integrated Heat (Watts)	H x W x D	Ship Weight
NE010126	1,000	120/1/60	2.69	125°F	NA	22" x 11.8" x 8.5"	65
NE010236	1,000	230/1/60	1.99	125°F	NA	22" x 11.8" x 8.5"	67
CS011D48	1,000	48 VDC	3.7	125°F	NA	17" x 7" x 7"	43
CS011126	1,000	120/1/60	2.7	131°F	350	17" x 7" x 7"	45
NE015126	1,500	120/1/60	3.44	125°F	NA	22" x 11.8" x 8.5"	65
NE015236	1,500	230/1/60	2.67	125°F	NA	22" x 11.8" x 8.5"	67
NE020126	2,000	120/1/60	3.76	125°F	1000	32" x 11.8" x 9.5"	79
NE020236	2,000	230/1/60	3.07	125°F	1000	32" x 11.8" x 9.5"	86
NE020486	2,000	480/1/60	0.93	125°F	1000	38" x 11.8" x 9.5"	113
CS020126	2,000	120/1/60	3.36	131°F	500	20" x 10" x 10"	58
CS020236	2,000	230/1/60	2.0	131°F	500	20" x 10" x 10"	63
NE030126	3,000	120/1/60	5.15	125°F	1000	32" x 11.8" x 9.5"	80
NE030236	3,000	230/1/60	3.07	125°F	1000	32" x 11.8" x 9.5"	86
NE030486	3,000	480/1/60	1.51	125°F	1000	38" x 11.8" x 9.5"	113
NE040D48	4,000	48 VDC	22.3	131°F	NA	35.27" x 11.8" x 9.5"	120
NE040126	4,000	120/1/60	5.53	125°F	1000	32" x 11.8" x 9.5"	80
NE040236	4,000	230/1/60	3.07	125°F	1000	32" x 11.8" x 9.5"	86
NE040486	4,000	480/1/60	1.51	125°F	1000	38" x 11.8" x 9.5"	113
NE050126	5,000	120/1/60	7.26	125°F	1000	36" x 11.8" x 15.1"	111
NE050236	5,000	230/1/60	3.76	125°F	1000	36" x 11.8" x 15.1"	106
NE050486	5,000	480/1/60	1.44	125°F	1000	44.63" x 11.8" x 15.1"	150
NE060126	6,000	120/1/60	7.83	125°F	1000	36" x 11.8" x 15.1"	111
NE060236	6,000	230/1/60	4.8	125°F	1000	36" x 11.8" x 15.1"	112
NE060486	6,000	480/1/60	1.8	125°F	1000	44.63" x 11.8" x 15.1"	156
TM061126	6,000	120/1/60	10.6	131°F	1000	15.6" x 26.3" x 20.2"	163
TM061236	6,000	230/1/60	6.0	131°F	1000	15.6" x 26.3" x 20.2"	163
TM061486	6,000	480/1/60	3.0	131°F	1000	15.6" x 26.3" x 20.2"	206
NE080126	8,000	120/1/60	7.83	125°F	1000	36" x 11.8" x 15.1"	117
NE080236	8,000	230/1/60	4.8	125°F	1000	36" x 11.8" x 15.1"	118
NE080486	8,000	480/1/60	1.8	125°F	1000	44.63" x 11.8" x 15.1"	156
TM081126	8,000	120/1/60	11.2	131°F	1000	15.6" x 26.3" x 20.2"	163
TM081236	8,000	230/1/60	7.0	131°F	1000	15.6" x 26.3" x 20.2"	163
TM081486	8,000	480/1/60	3.5	131°F	1000	15.6" x 26.3" x 20.2"	206
HC101126	10,000	120/1/60	19.4	131°F	1500	48" x 15.9" x 15.1"	182
HC101236	10,000	230/1/60	8.2	131°F	1500	48" x 15.9" x 15.1"	186
HC101486	10,000	480/1/60	3.93	131°F	1500	57.6" x 15.9" x 15.1"	275
HC121126	12,000	120/1/60	19.4	131°F	1500	48" x 15.9" x 15.1"	185
HC121236	12,000	230/1/60	8.2	131°F	1500	48" x 15.9" x 15.1"	183
HC121486	12,000	480/1/60	3.93	131°F	1500	57.6" x 15.9" x 15.1"	280
HC151236	15,000	230/1/60	11.3	131°F	1500	48" x 15.9" x 15.1"	190
HC151486	15,000	480/1/60	5.41	131°F	1500	57.6" x 15.9" x 15.1"	290
HC201236	20,000	230/1/60	15.3	131°F	1500	56.1" x 23" x 15"	225
HC201486	20,000	480/1/60	7.7	131°F	1500	65.7" x 23" x 15"	380

Advantages

- Systems engineered to maintain lower running amps for higher efficiency
- Options and Accessories designed to solve critical applications such as Corrosive or Hazardous Environments
- Customer Service Reps answering your calls
- A website that is easy to navigate AND solutions that are easy to find
- Equipment tested to perform and built to last
- Units designed with our customers' applications and environments in mind

NO WATER DRIPS FROM THERMAL EDGE ENCLOSURE AIR CONDITIONERS

Thermal Edge Inc.™

Get the Edge... Get Thermal Edge

Temperature Control Solutions for Electrical Enclosures

Air Conditioner Options

- Electrostatic Coil Coating to protect from corrosion caused by a salt or chemical environment
- Integrated Heat Packages to provide total temperature control for your enclosure, not just from the heat of summer but from the cold of winter
- Dry Contact Options to allow the use of alarms, lights and notifications
- External Heat Control to support use of an externally mounted heater in the enclosure
- 316 Stainless Steel for applications where 304 is not suitable
- Hazardous Location for Class 1, Division 2 Groups B, C & D applications
- Vibration Package allows for enclosure cooling on cranes, moving vehicles or other difficult locations
- 2" Deep Extended Filter Media for applications like flour, cement or coal when a standard filter will load too quickly
- Remote Controller Option to place our digital controller inside the electrical enclosure when the environment requires more security
- Redundant System Package for critical applications, when enclosure cooler failure is not an option. This system operates two air conditioners with specially programmed controllers that toggle the two units to operate them alternately to guarantee that your enclosure always stays at its required temperature and provide automatic backup
- The Universal Mounting Plate allows mounting the Thermal Edge Enclosure Air Conditioner onto an enclosure that formerly held a different air conditioner model

At Thermal Edge, we understand your environment and the issues that your environment creates for your electrical enclosures and systems. Everything we build has been designed and tested to meet your strict requirements for quality and durability.
Food & Beverage, Paper & Pulp, Chemical, Gas, Cement or Telecom, Thermal Edge has a system to handle the problem of controlling the environment of your sensitive and important operating systems.

Thermal Edge air conditioners can be built to operate on the voltage and frequency available wherever you need them.

Use the ETM Calculator and Product Recommender to Find the Right Cooling Capacity and Products for Your Application
http://thermal-edge.com/enclosure-temperature-management-calculator

Contact us today for Temperature Control Solutions for Your Electrical Enclosures

888-580-0202
Email: ThermalInfo@Thermal-Edge.com

All information subject to change without notice.

Certified ISO 9001:2008 Company

Brochure #1
2017-06-05

Made in the USA

NE015

1500 BTUH
Indoor/Outdoor, NEMA Types 12, 4 & 4X Available

Engineered & manufactured to endure the most difficult of environments and applications. Thermal Edge air conditioners will exceed environmental requirements in applications like *Steel, Food Processing, Petro-Chemical, Cement, Paper & Pulp and Plastics.*

11.8" wide

No water drips from Thermal Edge enclosure air conditioners

Digital Temperature Controller
- *Programmable set point and temperature controls*
- *Visible Error and/or alarm messaging*
- *System status indication & keypad lockout function*

Active Condensate Evaporation System
- *Constant elimination of condensate*
- *Increases unit efficiency by pre-cooling refrigerant*

Key Design Features
- *Sloped top to allow for water runoff*
- *Designed with rigid chassis and seam welded shroud*
- *Thoughtful interior design for easy maintenance*
- *Narrow body style fits on 12" enclosure*

Unit Efficiency
- *Temperature operated blower control reduces power inrush and saves energy*
- *Highly efficient rotary compressor*
- *Fully insulated & sealed cabinet*
- *Thermal Expansion Valve to maintain cooling capacity over a broad ambient temperature range*

Compressor Protection System
- *High & Low refrigerant cutouts with fault indication*
- *Compressor anti short cycle protection*
- *Compressor run capacitors reduce power inrush, save energy and increase compressor life*

Options:
- Dry Contact Alarm Capabilities
- Open Door Kill Switch
- Corrosive Environment Package
- Low Ambient Packages
- Remote Monitoring Options

Model	BTU/ Hour	Material	Voltage/ Hz.	Running Amps	Max. Ambient Temperature	H x W x D	Weight (lbs.) Unit / Ship
NE01512612	1500	Powder coated steel	120/1/60	3.44	125°F	22" x 11.8" x 8.5"	51 / 65
NE01512604	1500	Powder coated steel	120/1/60	3.44	125°F	22" x 11.8" x 8.5"	51 / 65
NE0151264X	1500	Stainless steel	120/1/60	3.44	125°F	22" x 11.8" x 8.5"	51 / 65
NE01523612	1500	Powder coated steel	230/1/60	2.67	125°F	22" x 11.8" x 8.5"	53 / 67
NE01523604	1500	Powder coated steel	230/1/60	2.67	125°F	22" x 11.8" x 8.5"	53 / 67
NE0152364X	1500	Stainless steel	230/1/60	2.67	125°F	22" x 11.8" x 8.5"	53 / 67

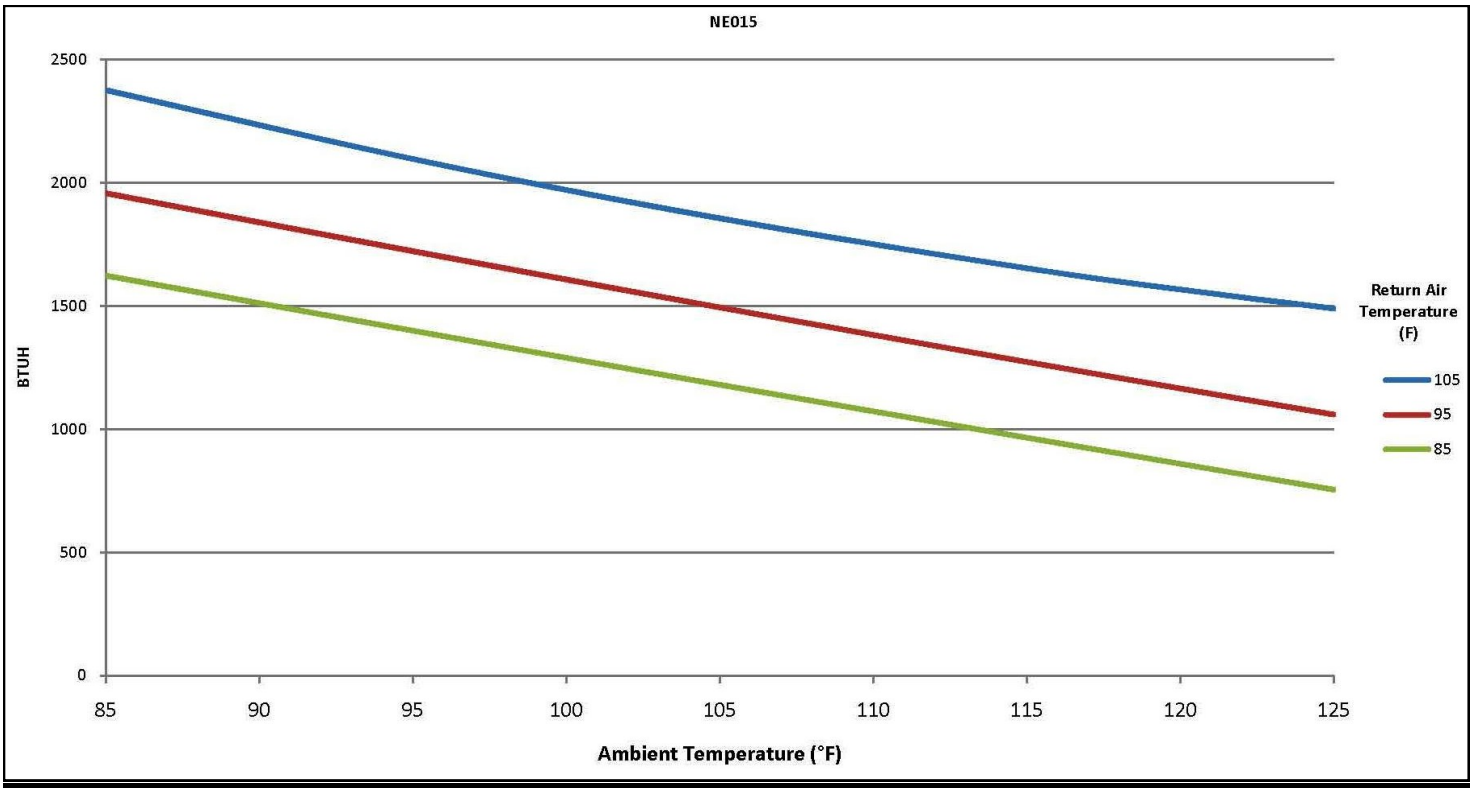

Testing done under controlled conditions. Actual performance may vary

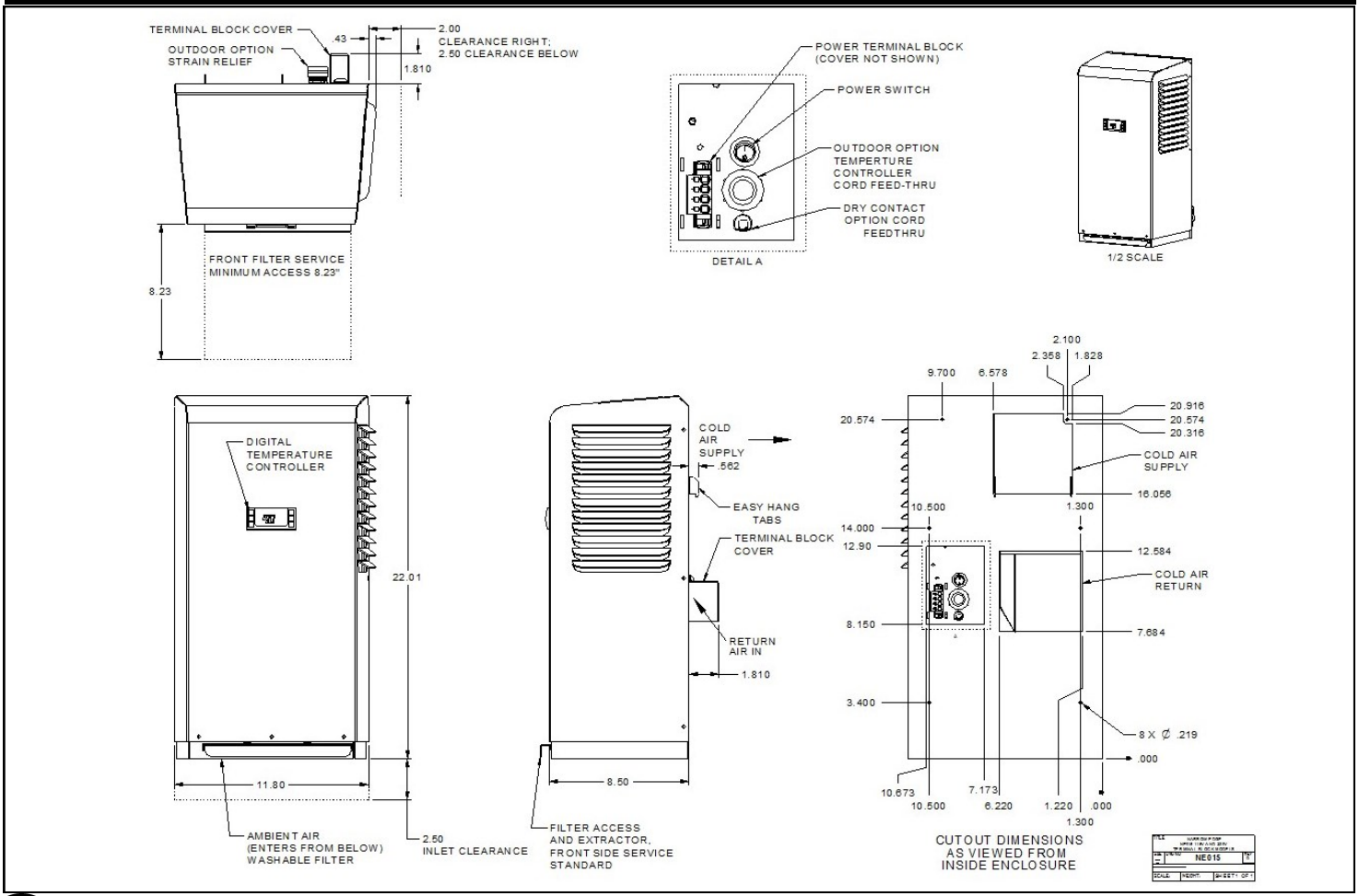

2017-05-22

ATTENTION: *If ordering a replacement for a Thermal Edge air conditioner, please include the part number and serial number of the unit being replaced in your order. This will assure that we ship a replacement that is compatible with the cutout dimensions and power connection features of the older model.*

c UL us LISTED

UL File # SA32252

All information subject to change without notice

DEPARTMENT OF THE ARMY
ALBUQUERQUE DISTRICT, CORPS OF ENGINEERS
ALBUQERQUE DISTRICT OFFICE
4101 JEFFERSON PLAZA NE
ALBUQUERQUE, NM 87109

SUBMITTAL REVIEW VERIFICATION SHEET

PROJECT TITLE: Kirtland BFF Mid-Plume Pump and Treat System Expansion
CONTRACT NUMBER: W912DR-12-D-0006 DM01
DATE RECEIVED: 10-13-2017
DATE REVIEWED: 10-17-2017

DESCRIPTION OF ITEMS REVIEWED:

1. Well #106239 PLC/ Instrumentation

NO EXCEPTIONS TAKEN.	
EXCEPTIONS AS NOTED ON DRAWINGS AND/OR ATTACHED SHEETS(S). RESUBMISSION NOT REQUIRED.	**X**
EXCEPTIONS AS NOTED ON DRAWINGS AND/OR ATTACHED SHEETS(S). RESUBMISSION REQUIRED.	
RECEIPT ACKKNOWLEDGED.	

Notes:

24VAC Actuator was selected (on page 25) Model Number: 70-24-0201H. The drawings and the other pages of submittal calls out a 120 VAC Actuator, Model Number: 70-0201H. Actuator should be 120 VAC.

Is there Instrumentation Diagram (P&ID) to show how all system components will be installed?

NOTE: ITEMS REVIEWED AS TO GENERAL LAYOUT ONLY. DIMENSIONS AND QUANTITIES NOT CHECKED. REVIEW DOES NOT RELIEVE CONTRACTOR OF RESPONSIBILITIES FOR ANY ERRORS WHICH MAY EXIST AS CONTRACTOR SHALL BE RESPONSIBLE FOR DIMENSIONS AND DESIGN OF ADEQUATE CORRECTIONS, DETAILS AND SATISFACTORY CONSTRUCTION OF WORK.

SIGNATURE SANCHEZ.AMY.ELIZABETH.1454434338 Digitally signed by SANCHEZ.AMY.ELIZABETH.1454434338 DN: c=US, o=U.S. Government, ou=DoD, ou=PKI, ou=USA, cn=SANCHEZ.AMY.ELIZABETH.1454434338 Date: 2017.10.17 15:22:11 -06'00' **DATE** 10/17/2017

EA Engineering, Science, and Technology, Inc., PBC

Submittal Review Sheet 8

Project Name: **Kirtland BFF Mid-Plume Pump and Treat System Expansion**				Date Received: **10/12/2017**	
Project Owner: **Kirtland Air Force Base**				Checked By: **Tyler Curley**	
Contractor: **Techsas Inc.**	Engineer: **EA Engineering, Science and Technology, Inc., PBC.**			Log Page: **NA**	
Address: **4819 West Bayshore Drive** **Bacliff, TX 77518**	Address: **320 Gold Ave. SW, Suite 1300** **Albuquerque, NM 87102**			EA No.: 62599DM01	
				Spec. Section: **00 00 00**	
				Drawing/Detail No.:	
ATTN: Ed Butler	ATTN: **Devon Jercinovic**			1st Sub	Re-Sub
Date Transmitted: **10/13/2017**	Prev. Transmittal Date:				

Item No.	No. Copies	Description	Manufacturer	Mfg/Vendor Dwg or Detail	Action Taken*
9	1	PLC and Instrumentation	Various	Various	**A**

The Action Designated Above is in Accordance with the Following Legend:

A – Furnish as Submitted
B – Furnish as Noted
C – Revise and Re-submit
1. Not enough information for review.
2. No reproducible submitted.
3. Copies illegible.
4. Not enough copies submitted.
5. Wrong sequence number.
6. Wrong resubmittal number.
7. Wrong Spec. Section.
8. Wrong form used.
9. See Comments.

D – Rejected
E – Engineer's Review not Required
1. Submittal not required.
2. Supplemental Information. Submittal retained for Information purposes only.
3. Information reviewed and approved on prior submittal.
4. See Comments.

Review is for general compliance with Contract Documents. No responsibility is assumed for correctness of dimensions or detail. Contractor is required to specify deviations from contract requirements. Lack of exceptions noted by Engineer does not waive Contractor's obligation to comply with Drawings and Specifications.

Comments:
The components of this submittal are consistent with the components used throughout the existing system.

By: _____ Date: 10/13/17

Distribution: [1] Contractor [1] Engineer [1] Owner

TRANSMITTAL DOCUMENT

Date:	**10/11/2017**	**From:**	**Ed Butler**
To:	**EA Engineering, Science, and Technology, Inc., 320 Gold Ave. SW, Suite 1300 Albuquerque, NM 87102 Devon Jercinovic**	**Job Name:**	**Kirtland AFB, NM Bulk Fuels Facility**
		Reference:	
		Transmittal Method:	**E-mail**
		Sent By:	**Ed Butler**

Submittal	Dwg. Number	Item Description
9	E-502	Well #106239 PLC/ Instrumentation Submittal

Submittal includes the following:
Pressure transmitter
Level Transmitter
Control Valve
Leak Switches/Relays
Magnetic Flow Meter
CP-105 Control Panel Materials

Ed Butler
TECHSAS, Inc.
4819 West Bayshore Drive
Bacliff, TX 77518

"I hereby certify that the (equipment) (material) (article) shown and marked in this submittal is that proposed to be incorporated with the Contract, is in compliance with the contract drawings and specification, can be installed in the allocated spaces, and is submitted for Contractor approval.

Certifiedby _____.
(Signature when applicable) Date: _____.

Kirtland Air Force Base
Bulk Fuels Facility
Mid Plum Pump & Treat System
Well 106239

I&C Controls Submittal

Sub Contractor: I&C Solutions
4485 Irving Blvd NW
Albuquerque, NM 87114
(505) 821-8960

Submittal includes the following

Pressure transmitter
Level Transmitter
Control Valve
Leak Switches/Relays
Magnetic Flow Meter
CP-105 Control Panel Materials

Submitted 9/30/17

© Siemens AG 2011

Tags PIT- 0

SITRANS P DS III
Technical description

Overview

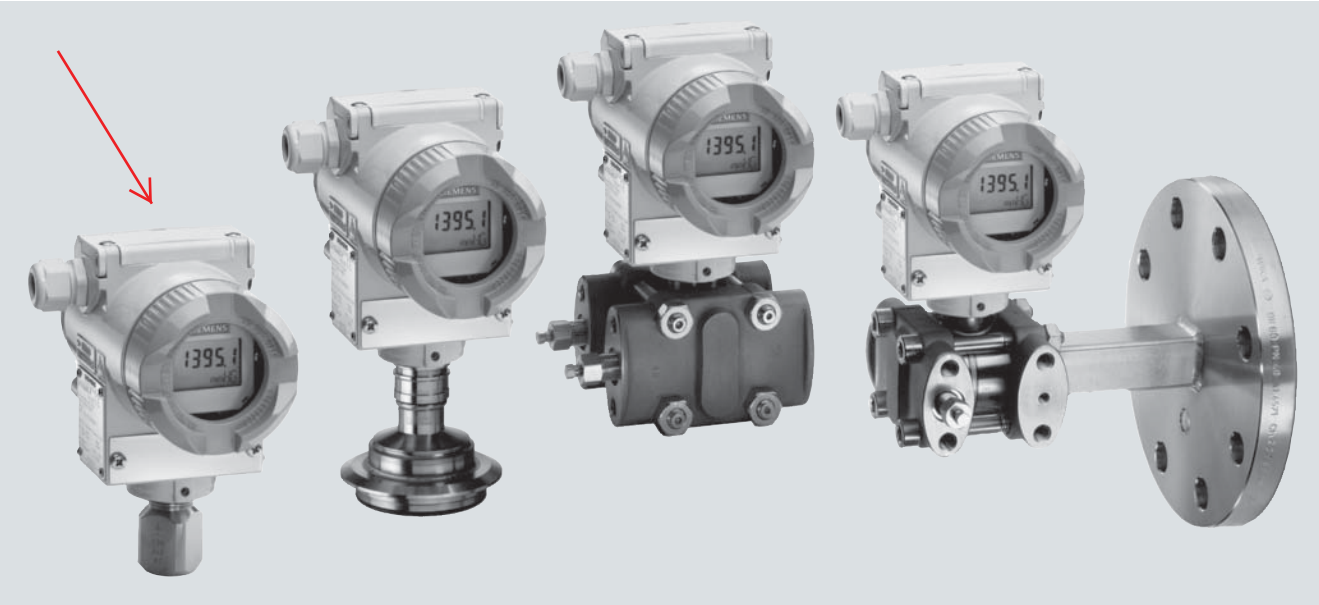

SITRANS P DS III pressure transmitters are digital pressure transmitters featuring extensive user-friendliness and high accuracy. The parameterization is performed using control keys or via HART communication, PROFIBUS-PA or FOUNDATION Fieldbus interface.

Extensive functionality enables the pressure transmitter to be precisely adapted to the plant's requirements. Operation is very simple in spite of the numerous setting options.

Transmitters with type of protection "Intrinsic safety" and "Explosion-proof" may be installed within potentially explosive atmospheres (zone 1) or in zone 0. The transmitters are provided with an EC type examination certificate and comply with the corresponding harmonized European standards (ATEX).

The transmitters can be equipped with various designs of remote seals for special applications such as the measurement of highly viscous substances.

Various versions of the DS III pressure transmitters are available for measuring:

- Gauge pressure
- Absolute pressure
- Differential pressure
- Level
- Volume level
- Mass level
- volume flow
- Mass flow

Benefits

- High quality and service life
- High reliability even under extreme chemical and mechanical loads
- For aggressive and non-aggressive gases, vapors and liquids
- Extensive diagnosis and simulation functions
- Separate replacement of measuring cell and electronics without recalibration
- Minimum conformity error
- Small long-term drift
- Wetted parts made of high-grade materials (e.g. stainless steel, Hastelloy, gold, Monel, tantalum)
- Infinitely adjustable span from 0.15 psi to 10153 psi (0.01 bar to 700 bar) for DS III with HART communication
- Nominal measuring range from 14.5 psi to 10153 psi (1 bar to 700 bar) for DS III PA (PROFIBUS PA) and FF (FOUNDATION Fieldbus)
- High measuring accuracy
- Parameterization over control keys and HART communication, PROFIBUS PA communication or FOUNDATION Fieldbus interface.

Application

The pressure transmitters of the DS III series, can be used in industrial areas with extreme chemical and mechanical loads. Electromagnetic compatibility in the range 10 kHz to 1 GHz makes the DS III pressure transmitters suitable for locations with high electromagnetic emissions.

Pressure transmitters with type of protection "Intrinsic safety" and "Explosion-proof" may be installed within potentially explosive atmospheres (zone 1) or in zone 0. The pressure transmitters are provided with an EC type examination certificate and comply with the corresponding harmonized European standards (ATEX).

Pressure transmitters with the type of protection "Intrinsic safety" for use in zone 0 may be operated with power supply units of category "ia" and "ib".

The transmitters can be equipped with various designs of remote seals for special applications such as the measurement of highly viscous substances.

The pressure transmitter can be operated locally over 3 control buttons or programmed externally over HART communication or over PROFIBUS PA or FOUNDATION Fieldbus interface.

© Siemens AG 2011

Pressure transmitter for gauge pressure

Measured variable: Gauge pressure of aggressive and non-aggressive gases, vapors and liquids.

Span (infinitely adjustable)
for DS III HART: 0.15 psi to 10153 psi (0.01 bar to 700 bar)

Nominal measuring range
for DS III PA and FF: 14.5 psi to 10153 psi (1 bar to 700 bar)

Pressure transmitters for absolute pressure

Measured variable: Absolute pressure of aggressive and non-aggressive gases, vapors and liquids.

Span (infinitely adjustable)
for DS III HART: 0.12 ... 1450 psi a (8.3 mbar a ... 100 bar a)

Nominal measuring range
for DS III PA and FF: 3.63...1450 psi a (250 mbar a...100 bar a)

There are two series:

- Gauge pressure series
- Differential pressure series

Pressure transmitters for differential pressure and flow

Measured variables:

- Differential pressure
- Small positive or negative pressure
- Flow q ~ √Δp (together with a primary differential pressure device (see Chap.ter "Flow Meters"))

Span (infinitely adjustable)
for DS III HART: 0.0145 ... 435 psi (1 mbar ... 30 bar)

Nominal measuring range
for DS III PA and FF: 0.29 ... 435 psi (20 mbar ... 30 bar)

Pressure transmitters for level

Measured variable: Level of aggressive and non-aggressive liquids in open and closed vessels.

Span (infinitely adjustable)
for DS III HART: 0.363 ... 72.5 psi (25 mbar ... 5 bar)

Nominal measuring range
for DS III PA and FF: 3.63 ... 72.5 psi (250 mbar ... 5 bar)

Nominal diameter of the mounting flange

- DN 80 or DN 100
- 3 inch or 4 inch

In the case of level measurements in open containers, the low-pressure connection of the measuring cell remains open (measurement "compared to atmospheric").

In the case of measurements in closed containers, the lower-pressure connection has to be connected to the container in order to compensate the static pressure.

The wetted parts are made from a variety of materials, depending on the degree of corrosion resistance required.

Design

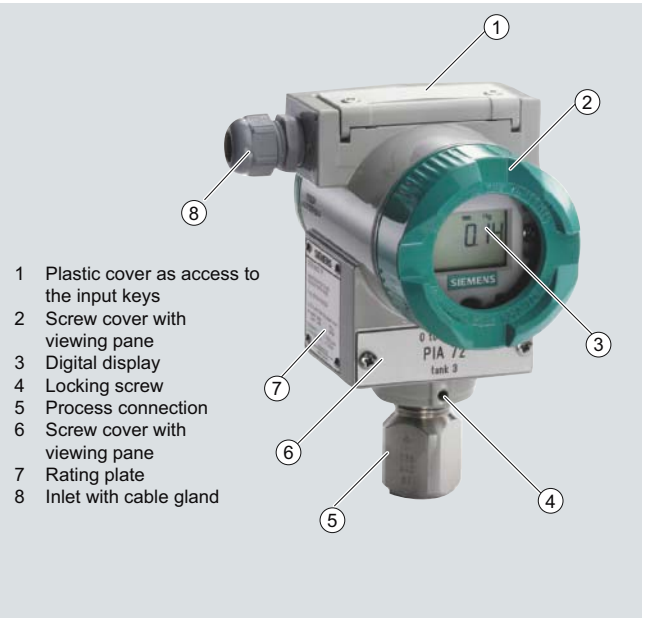

1 Plastic cover as access to the input keys
2 Screw cover with viewing pane
3 Digital display
4 Locking screw
5 Process connection
6 Screw cover with viewing pane
7 Rating plate
8 Inlet with cable gland

Front view

The transmitter consists of various components depending on the order. The possible versions are listed in the ordering information. The components described below are the same for all transmitters.

The rating plate (7, Figure "Front view") with the Order No. is located on the side of the housing. The specified number together with the ordering information provide details on the optional design details and on the possible measuring range (physical properties of built-in sensor element).

The approval label is located on the opposite side.

The housing is made of die-cast aluminium or stainless steel precision casting. A round cover (6) is screwed on at the front and rear of the housing. The front cover can be fitted with a viewing pane so that the measured values can be read directly on the digital display. The inlet (8) for the electrical connection is located either on the left or right side. The unused opening on the opposite side is sealed by a blanking plug. The protective earth connection is located on the rear of the housing.

The electrical connections for the power supply and screen are accessible by unscrewing the rear cover. The bottom part of the housing contains the measuring cell with process connection (5). The measuring cell is prevented from rotating by a locking screw (4). As the result of this modular design, the measuring cell and the electronics can be replaced separately from each other. The set parameter data are retained.

At the top of the housing is a plastic cover (1), which hides the input keys.

Example for an attached measuring point label

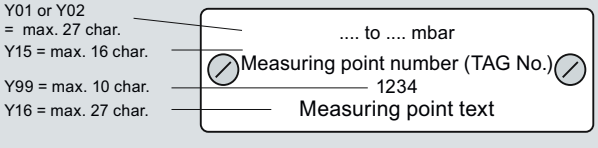

© Siemens AG 2011

2

Function

Operation of electronics with HART communication

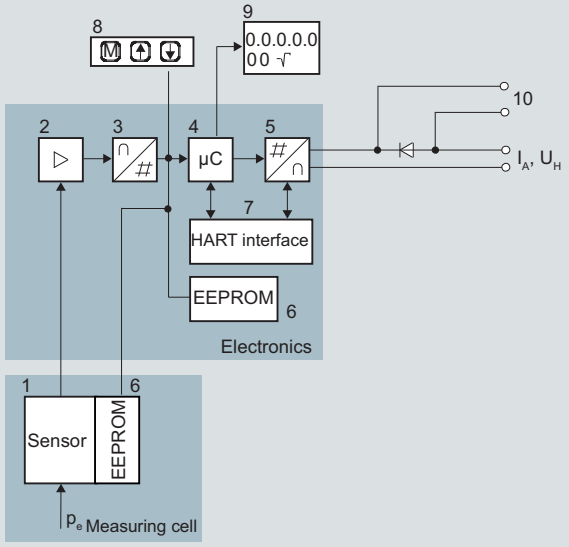

1 Measuring cell sensor
2 Instrument amplifier
3 Analog-to-digital converter
4 Microcontroller
5 Digital-to-analog converter
6 One non-volatile memory each in the measuring cell and electronics
7 HART interface
8 Three input keys (local operation)
9 Digital display
10 Diode circuit and connection for external ammeter
I_A Output current
U_H Power supply
P_e Input variable

Function diagram of electronics

The bridge output voltage created by the sensor (1, Figure "Function diagram of the electronics") is amplified by the measuring amplifier (2) and digitized in the analog-to-digital converter (3). The digital information is evaluated in a microcontroller, its linearity and temperature response corrected, and converted in a digital-to-analog converter (5) into an output current of 4 to 20 mA.

The diode circuit (10) protects against incorrect polarity.

The data specific to the measuring cell, the electronics data, and the parameter data are stored in the two non-volatile memories (6). The one memory is coupled to the measuring cell, the other to the electronics. As the result of this modular design, the electronics and the measuring cell can be replaced separately from each other.

Using the 3 input keys (8) you can parameterize the pressure transmitter directly at the measuring point. The input buttons can also be used to control the view of the results, the error messages and the operating modes on the digital display (9).

The HART modem (7) permits parameterization using a protocol according to the HART specification.

The pressure transmitters with spans ≤ 63 bar measure the input pressure compared to atmosphere, transmitters with spans ≥ 160 bar compared to vacuum.

Operation of electronics with PROFIBUS PA communication

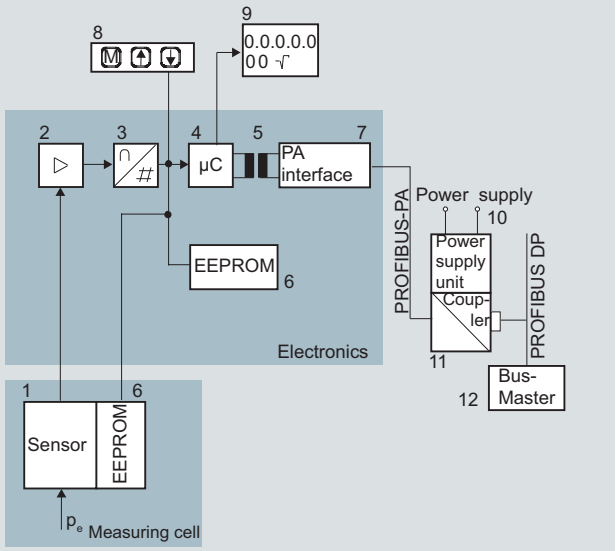

1 Measuring cell sensor
2 Instrument amplifier
3 Analog-to-digital converter
4 Microcontroller
5 Electrical isolation
6 One non-volatile memory each in the measuring cell and electronics
7 PROFIBUS-PA interface
8 Three input keys (local operation)
9 Digital display
10 Power supply
11 DP/PA coupler or link
12 Bus master
p_e Input variable

Function diagram of electronics

The bridge output voltage created by the sensor (1, Figure "Function diagram of the electronics") is amplified by the measuring amplifier (2) and digitized in the analog-to-digital converter (3). The digital information is evaluated in the microcontroller, its linearity and temperature response corrected, and provided on the PROFIBUS PA through an electrically isolated PA interface (7).

The data specific to the measuring cell, the electronics data, and the parameter data are stored in the two non-volatile memories (6). The one memory is coupled to the measuring cell, the other to the electronics. As the result of this modular design, the electronics and the measuring cell can be replaced separately from each other.

Using the three input buttons (8) you can parameterize the pressure transmitter directly at the measuring point. The input buttons can also be used to control the view of the results, the error messages and the operating modes on the digital display (9).

The results with status values and diagnostic values are transferred by cyclic data transmission on the PROFIBUS PA. Parameterization data and error messages are transferred by acyclic data transmission. Special software such as SIMATIC PDM is required for this.

© Siemens AG 2011

Operation of electronics with FOUNDATION Fieldbus communication

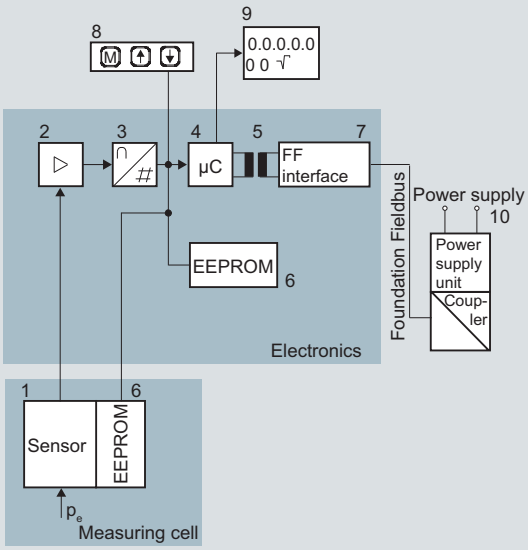

1	Measuring cell sensor	8	Three input keys (local operation)
2	Instrument amplifier	9	Digital display
3	Analog-to-digital converter	10	Power supply
4	Microcontroller		
5	Electrical isolation	p_e	Input variable
6	One non-volatile memory each in the measuring cell and electronics		
7	FF interface		

Function diagram of electronics

The bridge output voltage created by the sensor (1, Figure "Function diagram of electronics") is amplified by the measuring amplifier (2) and digitized in the analog-to-digital converter (3). The digital information is evaluated in the microcontroller, its linearity and temperature response corrected, and provided on the FOUNDATION Fieldbus through an electrically isolated FOUNDATION Fieldbus interface (7).

The data specific to the measuring cell, the electronics data, and the parameter data are stored in the two non-volatile memories (6). The one memory is coupled to the measuring cell, the other to the electronics. As a result of this modular design, the electronics and the measuring cell can be replaced separately from each other.

Using the three input buttons (8) you can parameterize the pressure transmitter directly at the measuring point. The input buttons can also be used to control the view of the results, the error messages and the operating modes on the digital display (9).

The results with status values and diagnostic values are transferred by cyclic data transmission on the FOUNDATION Fieldbus. Parameterization data and error messages are transferred by acyclic data transmission. Special software such as National Instruments Configurator is required for this.

Mode of operation of the measuring cells

Measuring cell for gauge pressure

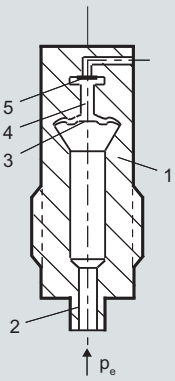

1	Measuring cell
2	Process connection
3	Seal diaphragm
4	Filling liquid
5	Silicon pressure sensor
p_e	Pressure as input variable

Measuring cell for gauge pressure, function diagram

The pressure p_e is applied through the process connection (2, Figure "Measuring cell for gauge pressure, function diagram) to the measuring cell (1). This pressure is subsequently transmitted further through the seal diaphragm (3) and the filling liquid (4) to the silicon pressure sensor (5) whose measuring diaphragm is then flexed. This changes the resistance of the four piezo-resistors fitted in the diaphragm in a bridge circuit. This change in resistance results in a bridge output voltage proportional to the absolute pressure.

Measuring cell for gauge pressure with front-flush diaphragm

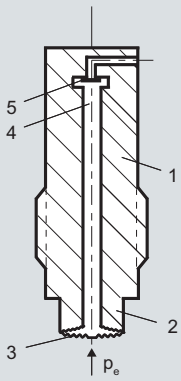

1	Measuring cell
2	Process connection
3	Seal diaphragm
4	Filling liquid
5	Silicon pressure sensor
p_e	Pressure as input variable

Measuring cell for gauge pressure, with front-flush diaphragm for paper industry, function diagram

The pressure $_p$e is applied through the process connection (2, Figure "Measuring cell for gauge pressure, with front-flush diaphragm for paper industry, function diagram") to the measuring cell (1). This pressure is subsequently transmitted further through the seal diaphragm (3) and the filling liquid (4) to the silicon pressure sensor (5) whose measuring diaphragm is then flexed. This changes the resistance of the four piezo-resistors fitted in the diaphragm in a bridge circuit. This change in resistance results in a bridge output voltage proportional to the absolute pressure.

© Siemens AG 2011

Measuring cell for absolute pressure from gauge pressure series

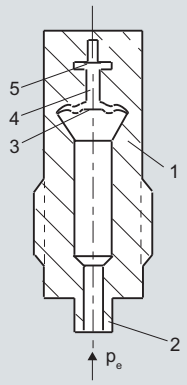

1 Measuring cell
2 Process connection
3 Seal diaphragm
4 Filling liquid
5 Silicon absolute pressure sensor
p_e Absolute pressure as input variable

Measuring cell for absolute pressure from the pressure series, function diagram

The absolute pressure $_p$e is transmitted through the seal diaphragm (3, Figure "Measuring cell for absolute pressure from pressure series, gauge pressure, function diagram ") and the filling liquid (4) to the silicon absolute pressure sensor (5) whose measuring diaphragm is then flexed. This changes the resistance of the four piezo-resistors fitted in the diaphragm in a bridge circuit. This change in resistance results in a bridge output voltage proportional to the absolute pressure.

Measuring cell for absolute pressure from differential pressure series

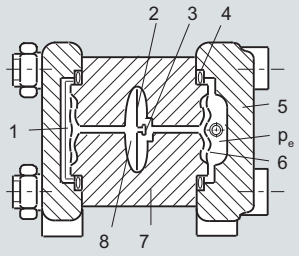

1 Reference vacuum
2 Overload diaphragm
3 Silicon pressure sensor
4 O-ring
5 Process flange
6 Seal diaphragm
7 Body of measuring cell
8 Filling liquid
p_e Absolute pressure as input variable

Measuring cell for absolute pressure from differential pressure series, function diagram

The input pressure p_e is transmitted through the seal diaphragm (6, Figure "Measuring cell for absolute pressure from differential pressure series, function diagram") and the filling liquid (8) to the silicon pressure sensor (3).

The difference in pressure between the input pressure p_e and the reference vacuum (1) on the low-pressure side of the measuring cell flexes the measuring diaphragm. This changes the resistance of the four piezo-resistors fitted in the diaphragm in a bridge circuit. This change in resistance results in a bridge output voltage proportional to the absolute pressure.

An overload diaphragm is installed to provide protection from overloads. If the measuring limits are exceeded, the overload diaphragm (2) is flexed until the seal diaphragm rests on the body of the measuring cell (7), thus protecting the silicon pressure sensor from overloads.

Measuring cell for differential pressure and flow

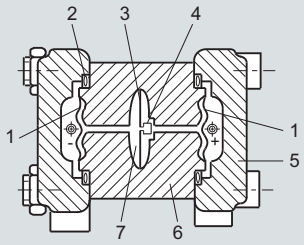

1 Seal diaphragm
2 O-ring
3 Overload diaphragm
4 Silicon pressure sensor
5 Process flange
6 Body of measuring cell
7 Filling liquid

Measuring cell for differential pressure and flow, function diagram

The differential pressure is transmitted through the seal diaphragms (1, Figure "Measuring cell for differential pressure and flow, function diagram") and the filling liquid (7) to the silicon pressure sensor (4).

The measuring diaphragm is flexed by the applied differential pressure. This changes the resistance of the four piezo-resistors fitted in the diaphragm in a bridge circuit. This change in resistance results in a bridge output voltage proportional to the absolute pressure.

An overload diaphragm is installed to provide protection from overloads. If the measuring limits are exceeded, the overload diaphragm (2) is flexed until the seal diaphragm rests on the body of the measuring cell (7), thus protecting the silicon pressure sensor from overloads.

Measuring cell for level

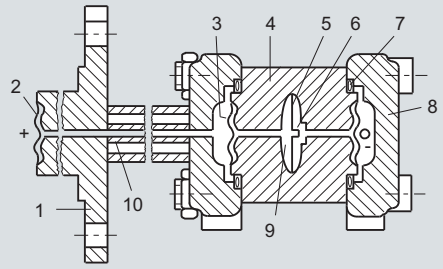

1 Flange with tube
2 Seal diaphragm on mounting flange
3 Seal diaphragm
4 Body of measuring cell
5 Overload diaphragm
6 Silicon pressure sensor
7 O-ring
8 Process flange
9 Filling liquid
10 Capillary with filling liquid of mounting flange

Measuring cell for level, function diagram

The input pressure (hydrostatic pressure) acts hydraulically on the measuring cell through the seal diaphragm on the mounting flange (2, Figure "Measuring cell for level, function diagram"). This differential pressure is subsequently transmitted further through the measuring cell (3) and the filling liquid (9) to the silicon pressure sensor (6) whose measuring diaphragm is then flexed.

This changes the resistance of the four piezo-resistors fitted in the diaphragm in a bridge circuit.

This change in resistance results in a bridge output voltage proportional to the differential pressure.

An overload diaphragm is installed to provide protection from overloads. If the measuring limits are exceeded, the overload diaphragm (2) is flexed until the seal diaphragm rests on the body of the measuring cell (7), thus protecting the silicon pressure sensor from overloads.

© Siemens AG 2011

Parameterization DS III

Depending on the version, there are a range of options for parameterizing the pressure transmitter and for setting or scanning the parameters.

Parameterization using the pushbuttons (local operation)

With the input buttons you can easily set the most important parameters without any additional equipment.

Parameterization using HART communication

Parameterization using HART communication is performed with a HART communicator or a PC.

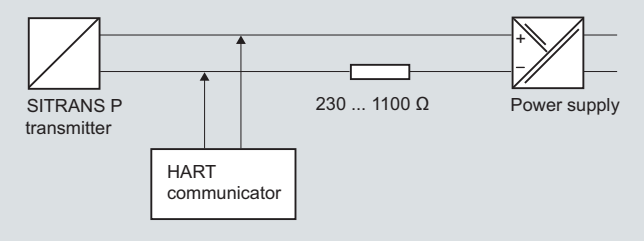

Communication between a HART communicator and a pressure transmitter

When parameterizing with the HART communicator, the connection is made directly to the 2-wire cable.

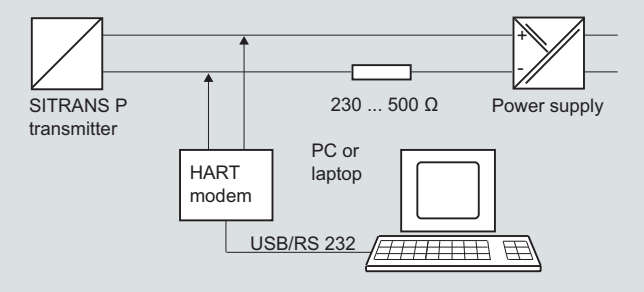

HART communication between a PC communicator and a pressure transmitter

When parameterizing with a PC, the connection is made through a HART modem.

The signals needed for communication in conformity with the HART 5.x or 6.x protocols are superimposed on the output current using the Frequency Shift Keying (FSK) method.

Adjustable parameters, DS III HART

Parameters	Pushbuttons (DS III HART)	HART communication
Start of scale	x	x
Full-scale value	x	x
Electrical damping	x	x
Start-of-scale value without application of a pressure ("Blind setting")	x	x
Full-scale value without application of a pressure ("Blind setting")	x	x
Zero adjustment	x	x
current transmitter	x	x
Fault current	x	x
Disabling of buttons, write protection	x	x[1)]
Type of dimension and actual dimension	x	x
Linear or square root output	x[2)]	x[2)]
Characterizer setup		x
Freely-programmable LCD		x
Diagnostic functions		x

[1)] Cancel apart from write protection
[2)] Only differential pressure

Diagnostic functions for DS III HART

- Zero correction for position
- Event counter
- Transmitter alarms
- Saturation alarm
- Min/Max registers
- Simulation functions
- Maintenance timer

Available physical units of display for DS III HART

Table style: Technical specifications 2

Physical variable	Physical dimensions
Pressure (setting can also be made in the factory)	Pa, MPa, kPa, bar, mbar, torr, atm, psi, g/cm^2, kg/cm^2, inH_2O, inH_2O (4 °C), mmH_2O, ftH_2O (20 °C), inHg, mmHg
Level (height data)	m, cm, mm, ft, in
Volume	m^3, dm^3, hl, yd^3, ft^3, in^3, US gallon, Imp. gallon, bushel, barrel, barrel liquid
Mass	g, kg, t, lb, Ston, Lton, oz
volume flow	m^3/d, m^3/h, m^3/s, l/min, l/s, ft^3/d, ft^3/min, ft^3/s, US gallon/min, US gallon/s
Mass flow	t/d, t/h, t/min, kg/d, kg/h, kg/min, kg/s, g/d, g/h, g/min, g/s, lb/d, lb/h, lb/min, lb/s, LTon/d, LTon/h, STon/d, STon/h, STon/min
Temperature	K, °C, °F, °R
Miscellaneous	%, mA

Parameterization through PROFIBUS PA interface

Fully digital communication through PROFIBUS PA, profile 3.0, is particularly user-friendly. The PROFIBUS puts the DS III PA is in connection with a process control system, e.g. SIMATIC PSC 7. Communication is possible even in a potentially explosive environment.

For parameterization through PROFIBUS you need suitable software, e.g. SIMATIC PDM (Process Device Manager).

Parameterization through FOUNDATION Fieldbus interface

Fully digital communication through FOUNDATION Fieldbus is particularly user-friendly. Through the FOUNDATION Fieldbus the DS III FF is connected to a process control system. Communication is possible even in a potentially explosive environment.

For parameterization through the FOUNDATION Fieldbus you need suitable software, e.g. National Instruments Configurator.

Adjustable parameters for DS III PA and FF

Parameters	Push-buttons	PROFIBUS PA and FOUNDATION Fieldbus interface
Electrical damping	x	x
Zero adjustment (correction of position)	x	x
Buttons and/or function disabling	x	x
Source of measured-value display	x	x
Physical dimension of display	x	x
Position of decimal point	x	x
Bus address	x	x
Linear or square root output	x	x
Characterizer setup		x
Freely-programmable LCD		x
Diagnostics functions		x

© Siemens AG 2011

SITRANS P DS III
Technical description

Diagnostic functions for DS III PA and FF

- Event counter
- Min/Max registers
- Maintenance timer
- Simulation functions
- Zero correction for position
- Transmitter alarms
- Saturation alarm

Physical dimensions available for the display

Physical variable	Physical dimensions
Pressure (setting can also be made in the factory)	MPa, kPa, Pa, bar, mbar, torr, atm, psi, g/cm^2, kg/cm^2, mmH_2O, mmH_2O (4 °C), inH_2O, in$H_2$0 (4 °C), ftH_2O (20 °C), mmHg, inHg
Level (height data)	m, cm, mm, ft, in, yd
Volume	m^3, dm^3, hl, yd^3, ft^3, in^3, US gallon, Imp. gallon, bushel, barrel, barrel liquid
volume flow	m^3/s, m^3/min, m^3/h, m^3/d, l/s, l/min, l/h, l/d, Ml/d, ft^3/s, ft^3/min, ft^3/h, ft^3/d, US gallon/s, US gallon/min, US gallon/h, US gallon/d, bbl/s, bbl/min, bbl/h, bbl/d
Mass flow	g/s, g/min, g/h, g/d, kg/s, kg/min, kg/h, kg/d, t/s, t/min, t/h, /t/d, lb/s, lb/min, lb/h, lb/d, STon/s, STon/min, STon/h, STon/d, LTon/s, LTon/min, LTon/h, LTon/d
Total mass flow	t, kg, g, lb, oz, LTon, STon
Temperature	K, °C, °F, °R
Miscellaneous	%

© Siemens AG 2015

Selection and Ordering data		Article No.
Pressure transmitter for gauge pressure, SITRANS P DS III with HART	↗	7MF4033 -
↗ Click on the Article No. for the online configuration in the PIA Life Cycle Portal.		
Measuring cell filling	**Measuring cell cleaning**	
Silicone oil	normal	1
Inert liquid[1]	grease-free to cleanliness level 2	3
Measuring span (min. ... max.)		
0.01 ... 1 bar	(0.15 ... 14.5 psi)	B
0.04 ... 4 bar	(0.58 ... 58 psi)	C
0.16 ... 16 bar	(2.32 ... 232 psi)	D
0.63 ... 63 bar	(9.14 ... 914 psi)	E
1.6 ... 160 bar	(23.2 ... 2320 psi)	F
4.0 ... 400 bar	(58.0 ... 5802 psi)	G
7.0 ... 700 bar	(102.0 ...10153 psi)	J
Wetted parts materials		
Seal diaphragm	Process connection	
Stainless steel	Stainless steel	A
Hastelloy	Stainless steel	B
Hastelloy	Hastelloy	C
Version as diaphragm seal [2) 3) 4) 5)]		Y
Process connection		
• Connection shank G½B to EN 837-1		0
• Female thread ½-14 NPT		1
• Stainless steel oval flange with process connection (Oval flange has no female thread)		
- Mounting thread $^{7}/_{16}$-20 UNF to IEC 61518		2
- Mounting thread M10 to DIN 19213		3
- Mounting thread M12 to DIN 19213		4
• Male thread M20 x 1.5		5
• Male thread ½ -14 NPT		6
Non-wetted parts materials		
• Housing made of die-cast aluminium		0
• Housing stainless steel precision casting[6)]		3
Version		
• Standard versions		1
• International version, English label inscriptions, documentation in 5 languages on CD (no Order code selectable)		2
Explosion protection		
• None		A
• With ATEX, Type of protection:		
- "Intrinsic safety (Ex ia)"		B
- "Explosion-proof (Ex d)"[7)]		D
- "Intrinsic safety and flameproof enclosure" (Ex ia + Ex d)"[8)]		P
- "Ex nA/ic (Zone 2)"[9)]		E
- "Intrinsic safety, explosion-proof enclosure and dust explosion protection (Ex ia + Ex d + Zone 1D/2D)"[8)10)]		R
• FM + CSA intrinsic safe (is)		F
• FM + CSA (is + ep) + Ex ia + Ex d (ATEX)[10)]		S
• With FM + CSA, Type of protection:		
- "Intrinsic Safe und Explosion Proof (is + xp)"[7)]		NC
Electrical connection / cable entry		
• Screwed gland Pg 13.5 (adapter)[11)]		A
• Screwed gland M20 x1 .5		B
• Screwed gland ½-14 NPT		C
• Han 7D plug (plastic housing) incl. mating connector[11)]		D
• M12 connectors (stainless steel)[11)12)]		F

Selection and Ordering data	Article No.
Pressure transmitter for gauge pressure, SITRANS P DS III with HART	7MF4033 -
Display	
• Without display	0
• Without visible display (display concealed, setting: mA)	1
• With visible display (setting: mA)	6
• with customer-specific display (setting as specified, Order code "Y21" or "Y22" required)	7

Power supply units see Chap. 7 "Supplementary Components".

Included in delivery of the device:
- Brief instructions (Leporello)
- CD-ROM with detailed documentation

1) For oxygen application, add Order code E10.

2) When the manufacture's certificate (calibration certificate) has to be ordered for transmitters with diaphragm seals according to IEC 60770-2, it is recommended only to order this certificate exclusively with the diaphragm seals. The measuring accuracy of the total combination is certified here.

3) If the acceptance test certificate 3.1.is ordered for the transmitter with mounted diaphragm seals this certificate must also be ordered with the respective remote seals.

4) The diaphragm seal is to be specified with a separate order number and must be included with the transmitter order number, for example 7MF403.-..Y..-.... and 7MF4900-1...-.B

5) The standard measuring cell filling of configurations with remote seals (Y) is silicone oil.

6) Not in conjunction with Electrical connection "Screwed gland Pg 13.5" and "Han7D plug".

7) Without cable gland, with blanking plug

8) With enclosed cable gland Ex ia and blanking plug

9) Configurations with HAN and M12 connectors are only available in Ex ic.

10) Only in connection with IP65.

11) Only in connection with Ex approval A, B or E.

12) M12 delivered without cable socket

Tags LT- 010

In-Situ

Innovations in Water Monitoring

Spec Sheet

Level TROLL® 400, 500 & 700 Data Loggers

Get water level data the way you want it, when you want it with industry-leading water level/pressure and temperature data loggers. By partnering with In-Situ, you receive durable Level TROLL® Data Loggers that provide years of service, accurate results, intuitive software, and real-time functionality.

Be Effective

- **Increase productivity:** Reduce training and installation time with In-Situ intuitive software platform and integrated components. Patented twist-lock connectors, included on Level TROLL Loggers and RuggedCable® Systems, ensure error-free deployments.
- **Streamline analysis and reporting:** Automate water level corrections and post-processing, graph data, and accelerate report generation with Win-Situ® Software. Easily export data to Excel,® a web-based management service, or data analysis software.
- **Set up real-time networks:** Access data 24/7 and receive event notifications when you connect data loggers to Tube and Cube systems, radios, or other third-party data collection platforms. Get decision quality data when, where, and how you need it with HydroVu Data Services. Control gates, pumps, alarms, and other equipment by using built-in Modbus/RS485, SDI-12, or 4-20 mA communication protocols.

Be Reliable

- **Deploy in all environments:** Install loggers in fresh water, saltwater, and contaminated waters. Solid titanium and sealed construction outperforms and outlasts coated data loggers.
- **Log accurate data:** Get optimal accuracy under all operating conditions. Sensors undergo NIST®-traceable factory calibration across the full pressure and temperature range. For applications requiring the highest levels of accuracy, use a vented (gauged) system.
- **Get long-lasting operation:** Reduce trips to the field with low-power loggers that typically operate for 10 years.

Be In-Situ

- Receive **free**, 24/7 technical support and online resources.
- Order data loggers and accessories from the In-Situ website.
- Get guaranteed 7-day service for maintenance (U.S.A. only).

Applications

- **Aquifer characterization: slug tests & pumping tests**
- **Coastal: tide/harbor levels & wetland/estuary research**
- **Hydrologic events: crest stage gages, storm surge monitoring, & flood control systems**
- **Long-term, real-time groundwater & surface water monitoring**
- **Mining & remediation**

CALL OR CLICK TO PURCHASE OR RENT

1-800-446-7488 (toll-free in U.S.A. and Canada)
1-970-498-1500 (U.S.A. and international)

WWW.IN-SITU.COM

Level TROLL® 400, 500 & 700 Data Loggers

Spec Sheet

General	Level TROLL 400	Level TROLL 500	Level TROLL 700	Level BaroTROLL
Temperature ranges[1]	Operational: -20-80° C (-4-176° F) Storage: -40-80° C (-40-176° F) Calibrated: -5-50° C (23-122° F)	Operational: -20-80° C (-4-176° F) Storage: -40-80° C (-40-176° F) Calibrated: -5-50° C (23-122° F)	Operational: -20-80° C (-4-176° F) Storage: -40-80° C (-40-176° F) Calibrated: -5-50° C (23-122° F)	Operational: -20-80° C (-4-176° F) Storage: -40-80° C (-40-176° F) Calibrated: -5-50° C (23-122° F)
Diameter	1.83 cm (0.72 in.)	1.83 cm (0.72 in.)	1.83 cm (0.72 in.)	1.83 cm (0.72 in.)
Length	21.6 cm (8.5 in.)	21.6 cm (8.5 in.)	21.6 cm (8.5 in.)	21.6 cm (8.5 in.)
Weight	197 g (0.43 lb)	197 g (0.43 lb)	197 g (0.43 lb)	197 g (0.43 lb)
Materials	Titanium body; Delrin® nose cone	Titanium body; Delrin nose cone	Titanium body; Delrin nose cone	Titanium body; Delrin nose cone
Output options	Modbus/RS485, SDI-12, 4-20 mA	Modbus/RS485, SDI-12, 4-20 mA	Modbus/RS485, SDI-12, 4-20 mA	Modbus/RS485, SDI-12, 4-20 mA
Battery type & life[2]	3.6V lithium; 10 years or 2M readings	3.6V lithium; 10 years or 2M readings	3.6V lithium; 10 years or 2M readings	3.6V lithium; 10 years or 2M readings
External power	8-36 VDC	8-36 VDC	8-36 VDC	8-36 VDC
Memory *Data records*[3] *Data logs*	2.0 MB 130,000 50 logs	2.0 MB 130,000 50 logs	4.0 MB 260,000 50 logs	1.0 MB 65,000 2 logs
Fastest logging rate	2 per second	2 per second	4 per second	1 per minute
Fastest output rate	Modbus: 2 per second SDI-12 & 4-20 mA: 1 per second	Modbus: 2 per second SDI-12 & 4-20 mA: 1 per second	Modbus: 2 per second SDI-12 & 4-20 mA: 1 per second	Modbus: 2 per second SDI-12 & 4-20 mA: 1 per second
Log types	Linear, Fast Linear, and Event	Linear, Fast Linear, and Event	Linear, Fast Linear, Linear Average, Event, Step Linear, True Logarithmic	Linear
Sensor Type/Material	**Piezoresistive; titanium**	**Piezoresistive; titanium**	**Piezoresistive; titanium**	**Piezoresistive; titanium**
Range	Absolute (non-vented) 30 psia: 11 m (35 ft) 100 psia: 60 m (197 ft) 300 psia: 200 m (658 ft) 500 psia: 341 m (1120 ft)	Gauged (vented) 5 psig: 3.5 m (11.5 ft) 15 psig: 11 m (35 ft) 30 psig: 21 m (69 ft) 100 psig: 70 m (231 ft) 300 psig: 210 m (692 ft) 500 psig: 351 m (1153 ft)	Absolute (non-vented) 30 psia: 11 m (35 ft) 100 psia: 60 m (197 ft) 300 psia: 200 m (658 ft) 500 psia: 341 m (1120 ft) 1000 psia: 693 m (2273 ft) Gauged (vented) 5 psig: 3.5 m (11.5 ft) 15 psig: 11 m (35 ft) 30 psig: 21 m (69 ft) 100 psig: 70 m (231 ft) 300 psig: 210 m (692 ft) 500 psig: 351 m (1153 ft)	30 psia (usable up to 16.5 psi; 1.14 bar)
Accuracy[4]	±0.05% full scale (FS) ±0.1% FS	±0.05% FS ±0.1% FS	±0.05% FS ±0.1% FS	±0.05% FS ±0.1% FS
Resolution	±0.005% FS or better	±0.005% FS or better	±0.005% FS or better	±0.005% FS or better
Units of measure	Pressure: psi, kPa, bar, mbar, mmHg, inHg, cmH20, inH20 Level: in., ft, mm, cm, m	Pressure: psi, kPa, bar, mbar, mmHg, inHg, cmH20, inH20 Level: in., ft, mm, cm, m	Pressure: psi, kPa, bar, mbar, mmHg, inHg, cmH20, inH20 Level: in., ft, mm, cm, m	Pressure: psi, kPa, bar, mbar, mmHg, inHg, cmH20, inH20
Temperature Sensor	**Silicon**	**Silicon**	**Silicon**	**Silicon**
Accuracy	±0.1° C	±0.1° C	±0.1° C	±0.1° C
Resolution	0.01° C or better	0.01° C or better	0.01° C or better	0.01° C or better
Units of measure	Celsius or Fahrenheit	Celsius or Fahrenheit	Celsius or Fahrenheit	Celsius or Fahrenheit
Warranty	**3 years**	**3 years**	**3 years**	**3 years**
Notes	[1] Temperature range for non-freezing liquids. [2] Typical battery life when used within the factory-calibrated temperature range. [3] 1 data record = date/time plus 2 parameters logged (no wrapping) from device within the factory-calibrated temperature range. [4] Across factory-calibrated pressure range. [5] Across factory-calibrated pressure and temperature ranges. [6] Up to 5-year (total) extended warranties are available for all sensors—call for details. Delrin is a registered trademark of E.I. du Pont de Nemours and Company. Specifications are subject to change without notice.			

Every Application & Budget

Use maintenance-free, non-vented systems for long-term monitoring and at flood-prone or high-humidity sites. Pair with Tube and Cube Telemtry System and HydroVu for automtatic barometric compensation.

Use high-accuracy, vented systems to conduct aquifer tests and to view barometrically compensated water level data in real time.

Forgot to set a level reference at the beginning of a deployment? Automate level corrections by using Win-Situ Software's post-level correction Wizard.

BaroTROLL® Data Logger

When using a non-vented system, collect barometric pressure and temperature data with a titanium BaroTROLL Data Logger in order to post correct data for barometric pressure fluctuations.

Calculating barometric efficiency? Use the BaroTROLL Logger with vented systems.

CE FC

CALL OR CLICK TO PURCHASE
1-800-446-7488 (toll-free in U.S.A. and Canada)
1-970-498-1500 (U.S.A. and international)
WWW.IN-SITU.COM
221 East Lincoln Avenue, Fort Collins, CO 80524 USA
Copyright © 2013 In-Situ Inc. All rights reserved. Nov. 2015 (T3; 2K)

Tags LT-9010

In-Situ Inc.

Innovations in Water Monitoring

In-Situ® RuggedCable® Systems

Durable, Direct-Read Cable

RuggedCable Systems are custom-built to endure harsh environments and to last for years. RuggedCable Systems include:

- Titanium twist-lock connectors for quick, reliable connections to instrument body, TROLL® Com Communication Device, desiccant, and other accessories (2-year warranty)
- Metal shield beneath the cable jacket to prevent electrical interferences
- Kellems® grip for secure instrument deployment
- Small desiccant for vented systems (only for storage)

Use RuggedCable Systems with:

- Aqua TROLL® 100, 200, and 400 Instruments
- BaroTROLL® Instruments
- Con TROLL® PRO System
- Level TROLL® 300, 500, and 700 Instruments
- RDO® PRO Probe (twist-lock models)
- TROLL® 9500 Water Quality Instruments
- TROLL® Link Telemetry Systems, MultiHop Radios, and TROLL® Net Hub

Customizable Cable

When ordering, consider the following options:

- **Vented or non-vented cable:** Vented cable is used with vented pressure/level sensors for gauged measurements. The cable vent tube ensures that atmospheric pressure is the reference pressure applied to the sensor diaphragm. Non-vented cable may be used with non-vented instruments for absolute measurements. Compensate absolute measurements with barometric pressure data by using a BaroTROLL® Instrument and Win-Situ® Baro Merge™ Software.
- **Jacket options:** Tefzel® (vented) or thermoplastic polyurethane (TPU; vented or non-vented)
- **Customized lengths:** Up to 1,219 m (4,000 ft) 600Ft Cable
- **Cable termination:** Twist-lock termination (female connector) on one or both cable ends. Other custom configurations are available—call for details.
- ~~**Cable reels:** Plastic or steel reel~~

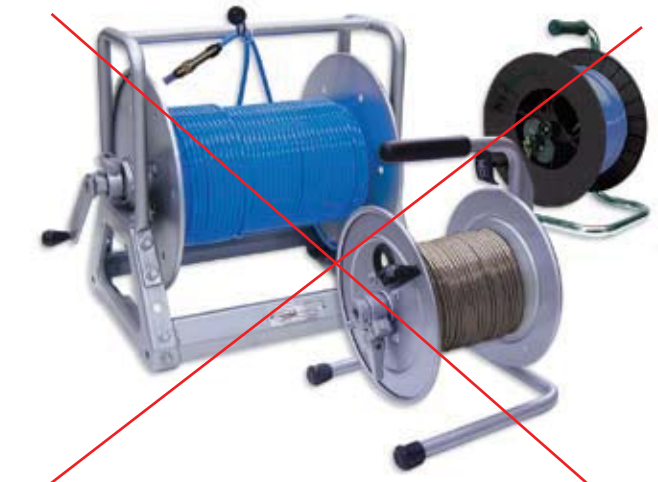

Steel and plastic reels available

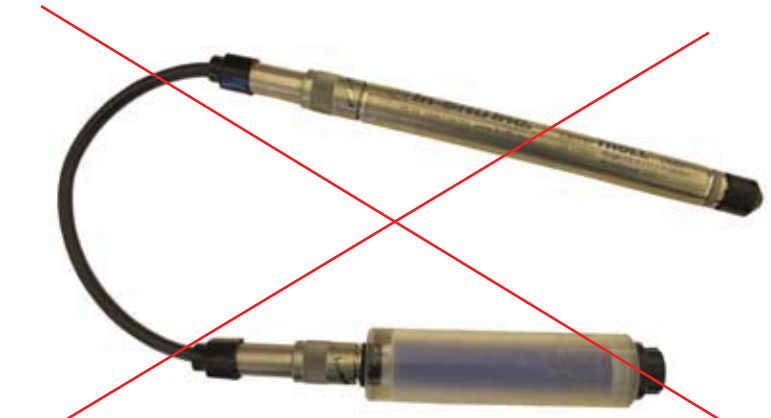

Extra large desiccant connected to RuggedCable System and Level TROLL Instrument

Titanium twist-lock connectors

In-Situ® RuggedCable® Systems

Specifications

Specifications	RuggedCable Systems
Operating temp. range	-25° to 80° C (-13° to 176° F)
Jacket options	• TPU (thermoplastic polyurethane) • Tefzel® (ETFE fluoropolymer; generic equivalent to Teflon®)
Vent options	• Non-vented (absolute) • Vented (gauged) with desiccant (used to mitigate moisture/humidity)
Conductors	6 conductors, 24 AWG, polypropylene insulation
Cable diameter	• TPU: 6.7 mm (0.265 in) • Tefzel: 6.35 mm (0.25 in)
Connector diameter	18. 5 mm (0.73 in)
Weight	• Non-vented, TPU: 16 kg/300 m (35.6 lbs/1,000 ft) • Non-vented, Tefzel: 14 kg/300 m (32 lbs/1,000 ft) • Vented, TPU: 14 kg/300 m (32 lbs/1,000 ft) • Vented, Tefzel: 14 kg/300 m (32 lbs/1,000 ft)
Minimum bend radius	2X cable diameter (13.5 mm; 0.54 in)
Break strength	127 kg (280 lbs)
Maximum cable length	1,219 m (4,000 ft) for RS485
Desiccant pack (required for vented systems)	Large and extra large desiccant packs available with titanium, ABS, or stripped-and-tinned termination.
Warranty	2 years

RuggedCable Selection Guide

Application	Jacket Type	Cable Type
Aquifer characterization	TPU or Tefzel	Vented
Crest stage gaging	TPU	Non-vented
Dewatering	TPU	Vented or non-vented
Flood and storm surge monitoring	TPU	Non-vented
Landfill monitoring	Tefzel	Non-vented
Municipal and industrial monitoring (SCADA)	TPU	Non-vented
Remediation projects	Tefzel	Vented
River, lake, and reservoir monitoring	TPU	Vented or non-vented
Saltwater/brackish water	TPU or Tefzel	Vented or non-vented
Stormwater monitoring	TPU	Vented or non-vented
Tide/harbor monitoring	TPU or Tefzel	Vented
Wetland and estuary monitoring	TPU or Tefzel	Vented or non-vented

Specifications are subject to change without notice.

Accessories

- Large desiccant for low-humidity environments or for deployments where maintenance occurs frequently.
- Extra large desiccant for high-humidity environments or for depolyments where maintenance occurs infrequently. Desiccates six times more saturated air than the large desiccant.
- Titanium cable extenders are used to join two lengths of cable without signal loss. The cable extender seals the cables, provides a weight-bearing connection, and maintains venting.
- Plastic and steel reels

Large desiccant with titanium twist-lock connector for standard deployments

Economical large plastic desiccant

Extra large desiccant with titanium twist-lock connector for high-humidity sites, remote sites, or applications that require fast sampling rates.

Outboard desiccant for use with stripped-and-tinned RuggedCable Systems

Titanium cable extender

Kellems is a registered trademark of Hubbell Incorporated.
Teflon and Tefzel are registered trademarks of E.I. Du Pont de Nemours and Co.

In-Situ Inc.

Call to purchase or rent—www.in-situ.com
221 East Lincoln Avenue, Fort Collins, Colorado, U.S.A. 80524
1-800-446-7488 (toll-free in U.S.A. and Canada)
1-970-498-1500 (U.S.A. and international)
Copyright © 2012 In-Situ Inc. All rights reserved. Sept. 2012 (web)

In-Situ Inc.

Information Sheet

Catalog No. 0053310

SHORT STRIPPED & TINNED CABLE with Male Twist-Lock Connector for Level TROLL®

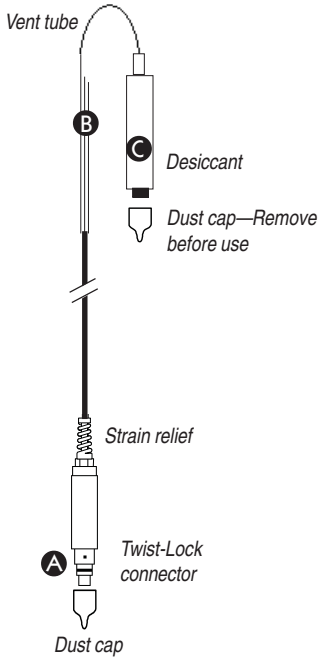

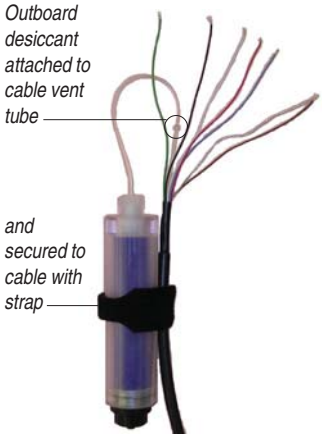

TIP: *The desiccant may be removed from the vent tube, if needed, for better access to the conductor wires. Pull the vent tube extender off the cable vent tube to remove. After connecting and trimming wires, attach desiccant vent tube to cable vent tube and secure desiccant to cable with hook-and-loop strap, as shown here.*

Connects a Level TROLL's RuggedCable™ to a controller or logger for communication via:

- Analog (4-20 mA)
- SDI-12
- RS485 Modbus
- RS232 Modbus (with a customer-supplied converter)

A Male Twist-Lock connector mates with female Twist-Lock connector on the RuggedCable

B Stripped & tinned wires on opposite end for wiring to PLC or logger

C Removable, refillable outboard desiccant protects cable vent tube from condensation in high-humidity environments

SPECIFICATIONS

Materials	PVC, titanium, nylon, Viton®
Dimensions	13.33 cm (5.25 in) long, 19 mm (0.75 in) O.D.
Environmental Rating	IP67 when connected, not designed for submersion
Cable	0.9 m (3 ft) vented TPU (Thermoplastic Polyurethane)
Conductors	6 conductors, 24 AWG, polypropylene insulation
Desiccant pack	Clear acrylic, nylon, HDPE membrane
Desiccant	approx. 22 g silica gel, type 4
Max. recommended cable lengths	SDI-12 61 m (200 ft) Modbus 1259 m (4000 ft) 4-20 mA 1259 m (4000 ft)

CONNECTIONS

Refer to wiring diagrams on back of sheet. Trim back and insulate unused wires. The shield should be wired to a chassis ground or earth ground.

Power Connections. The Red wire provides power for Modbus and SDI-12 modes. The Brown wire provides power for the 4-20 mA mode. If power is present on the Brown wire and not on the Red wire, the device enters the 4-20 mA mode automatically and stays in the 4-20 mode until power is removed from the Brown wire or is applied to the Red wire. The Red wire has priority — if power is applied to both wires at the same time, the device will operate in Modbus or SDI-12 modes but not in 4-20.

Communications. The device automatically switches between Modbus and SDI-12 modes depending on which of the two interfaces has activity. Modbus and SDI-12 cannot be used at the same time — whichever one is currently in use will block communication on the other.

To communicate with the device using Win-Situ® 5 software through a serial COM port: Disconnect the RuggedCable from the short stripped and tinned cable connector. Attach a TROLL Com to the RuggedCable. Connect the TROLL Com's DB9-pin connector to a serial port on a PC running Win-Situ 5.

(over)

SHORT STRIPPED & TINNED CABLE

Level TROLL Connections

ANALOG (4-20 mA) 2 WIRE

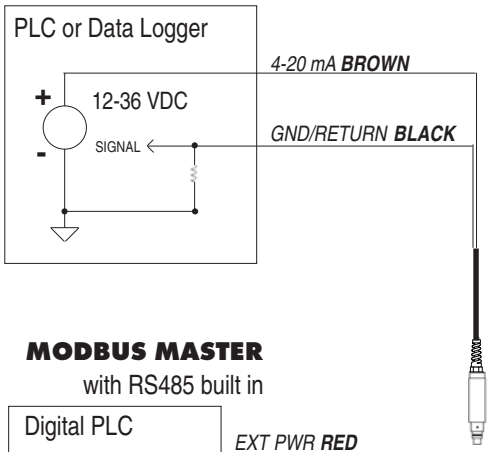

SDI-12 3 WIRE

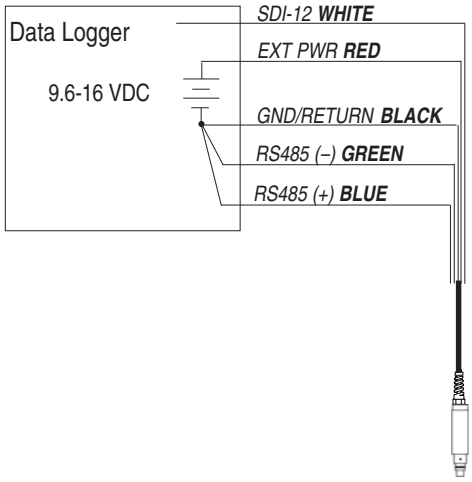

MODBUS MASTER

with RS485 built in

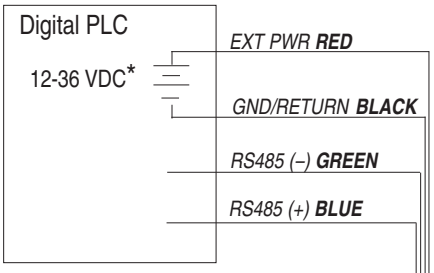

* Optional but highly recommended

MODBUS MASTER

with RS232 built in (converter required)

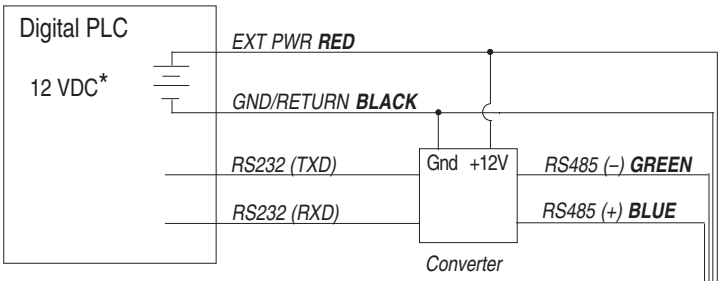

* Voltage limited by converter

Signal	Color
Gnd/Return	BLACK
Ext Power	RED
4-20 mA	BROWN
RS485(–)	GREEN
RS485(+)	BLUE
SDI-12	WHITE

CONVERTER

Port-Powered RS485 converter, such as B&B Electronics Model 485SD9TB

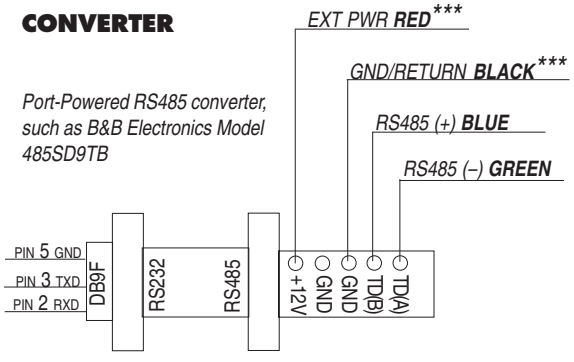

*** Required if port power is not available

1 800 446 7488
(toll-free, US and Canada) or 970 498 1500 **www.in-situ.com**

In-Situ Inc.

Due to continuing product development this information is subject to change without notice. In-Situ and the In-Situ logo, Win-Situ, TROLL, BaroTROLL, RuggedReader, RuggedCable and RDO are trademarks or registered trademarks of In-Situ Inc. Viton is a registered trademark of DuPont Dow Elastomers.
Copyright © 2005-2007 by In-Situ Inc. All rights reserved.

0053312 rev. 004 09/07

Bray COMMERCIAL

BV Series

Threaded Industrial Control Ball Valves

2 Way • 1/2"- 4"

06/30/15

The BV Series Threaded Industrial Ball Valve product line is ideally suited to high temperature and high pressure water or steam as well as a wide range of heavy commercial HVAC control applications. These valves provide exceptional characterized control, high rangeability, flow capacity and pressure drops; all with bi-directional bubble tight shut off.

Valves in this range feature investment cast 3 piece construction, Carbon Steel housings and Stainless Steel balls and stems with NPT threaded connections. Characterized V-Balls and full port versions provide multiple Cv values in each size.

Features and Benefits

- High Cycle Packing Design
  Years of trouble free service
- Bubble Tight Shut-Off with Zero Leakage
  Energy efficient
- 3-Piece Body Design
  Allows in-line servicing
- Phosphate Coated Carbon Steel Bodies
  For cost effective applications up to 1,000 psi at 225˚F
- Available Commercial Grade & NEMA 4 Actuators
  Reliable, cost effective control

Increased Linear Response

Due to the in-line design inherent with characterized control ball valves, line media flows linearly through the piping system. The direct pattern provides increased media control and rapid response times to controller commands.

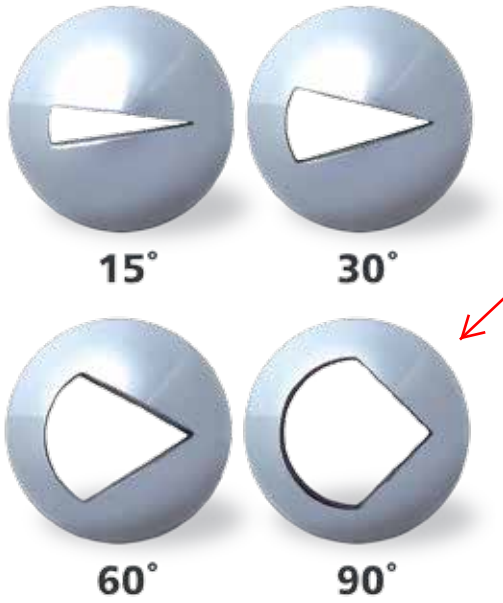

Flow Curve Chart

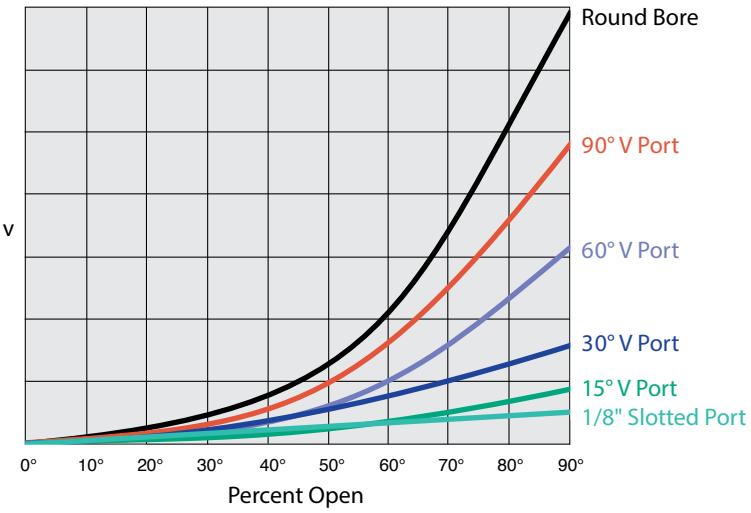

These curves of standard ports are general guidelines and are not specific to any particular valve size.

BV - Specifications

Technical Specifications - BV Threaded Industrial Ball Valve , 1/2" - 4"– 2-Way			
Carbon Steel Body		**V-Port**	**Full-Port**
Service		Chilled/Hot Water, 50/50 Glycol Solutions and Saturated Steam	
Size		1/2" to 4" Threaded Valves, 2-Way	
Maximum Fluid Temperature	Water	-20˚ to 225˚F at 1000 PSI (-28˚ to 107˚C at 6,895 kPa)	
	Steam	150 PSI (1034 kPa)	
Valve Body Pressure Rating		1000 PSI (6895 kPa)	
Maximum Close-Off Pressure		300 PSI (2,068 kPa)* For higher close-offs contact Bray.	
Maximum Recommended Pressure Drop	Water	80 PSI (551 kPa)	
	Steam	50 PSI (344 kPa)	
Flow Characteristic	V15 Port	Linear	NA
	V30 Port	Modified Equal Percentage	NA
	V60 & 90 Port	Equal Percentage	NA
Rangeability		200:1	
Leakage		Bubble Tight per API 598	
End Connections		Threaded NPT	
Ambient Operating Temperature Range		See Actuator Rating (Optional high temperature mounting kit may be required)	
Materials	Body	WCB Carbon Steel	
	Ball & Stem	316 Stainless Steel	
	Seat	Tek-Fil	RPTFE
	Stem Seal/Packing	RPTFE	
	Body Seal	TFM	
	Body Bolts	SS304	

Disclaimer - *The performance specifications are nominal and conform to acceptable industry standards. For application at conditions beyond these specifications, consult the local Bray office. Bray, Inc. shall not be liable for damages resulting from misapplication or misuse of its products.*

BV - Piping Diagram

- "V-Port valves- Note the arrow engraved on the ends which shows the flow going from the bolt head to the nut so that the V-ball is downstream.
- "Full Port valves are bi-directional.

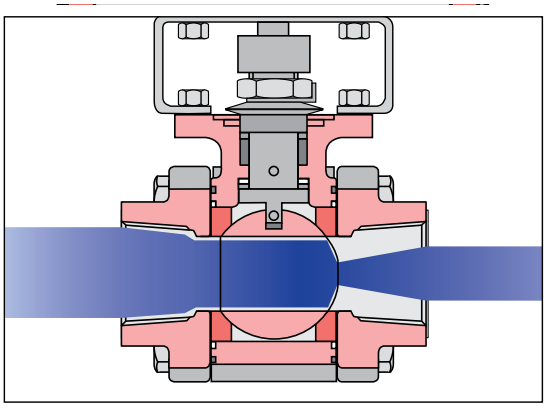

Media Flow entering valve from left. Installing the V downstream is preferred.

BV - Mode of Actuation

Typical Two-Way Ball Valve Application

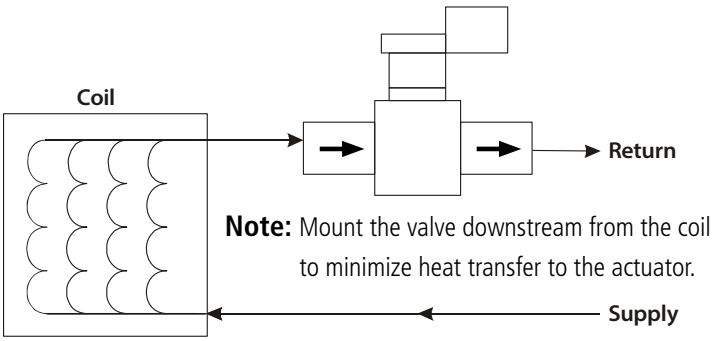

Note: Mount the valve downstream from the coil to minimize heat transfer to the actuator.

BV - For Steam Applications

Install valve with stem at 45˚ to 90˚ from vertical.

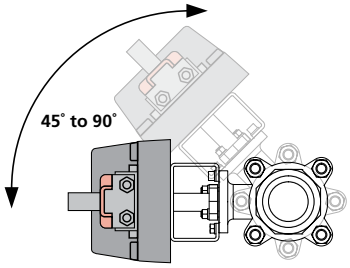

BV - Cut Away View

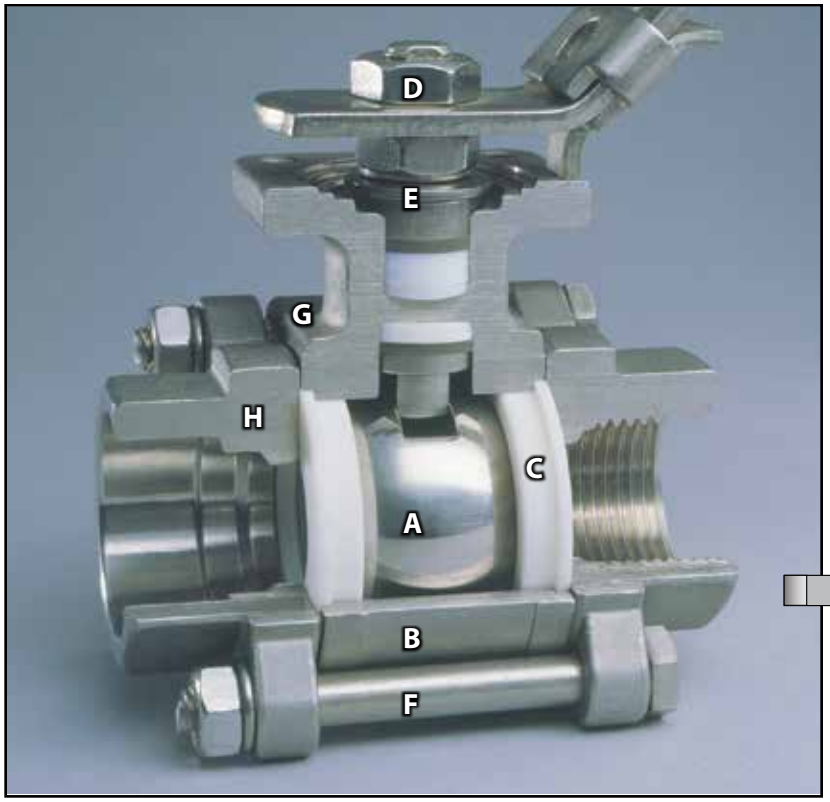

Ball (A) Is a precision machined and mirror finished for bubble-tight shut off with less operating torque. Ball edges have machined curvatures to reduce seat wear and provide a high cycle life.

Body (B) Valve bodies are investment cast and solution annealed/normalized for the highest quality and added strength. Body castings are marked with a foundry heat number for full traceability. Carbon steel bodies are phosphate coated for increased corrosion resistance.

Seat (C) The seat design ensures bi-directional, bubble-tight sealing while providing the lowest possible torque. This seat design reduces friction, minimizes seat wear and reduces operating torque.

Double Lock Nut Design (D) These double lock nuts allow handles to be easily and safely removed while the valve is under full line pressure.

Live-Loaded Stem Seals (E) The live-loaded seals considerably increase the number of cycles between maintenance adjustments.

Body Bolts (F) Standard material is 304 Stainless Steel.

Body Hinges (G) Heavy duty hinges, throughout the entire size range, provide positive alignment of body to end connection during swing-out, in-line servicing.

End Connections (H) Full range of interchangeable connections. Anti-Static Protection BV Series valves feature anti-static grounding devices as standard. These devices ensure electrical continuity between valve ball, stem and body, thus eliminating the possibility of static electrical charges creating sparks within the valve.

Smart Stem

Valve Sizes 1/2" through 2-1/2"

These Interchangeable series of valves feature strong, large diameter stems with live-loaded, self-adjusting sealing utilizing belleville washers which automatically adjust to compensate for changes in temperature and wear. Manual adjustments which can cause damage to the seal and seat are not required. The assembly is secured by a saddle-type lock washer which prevents stem nuts from un-threading in high cycle automation applications.

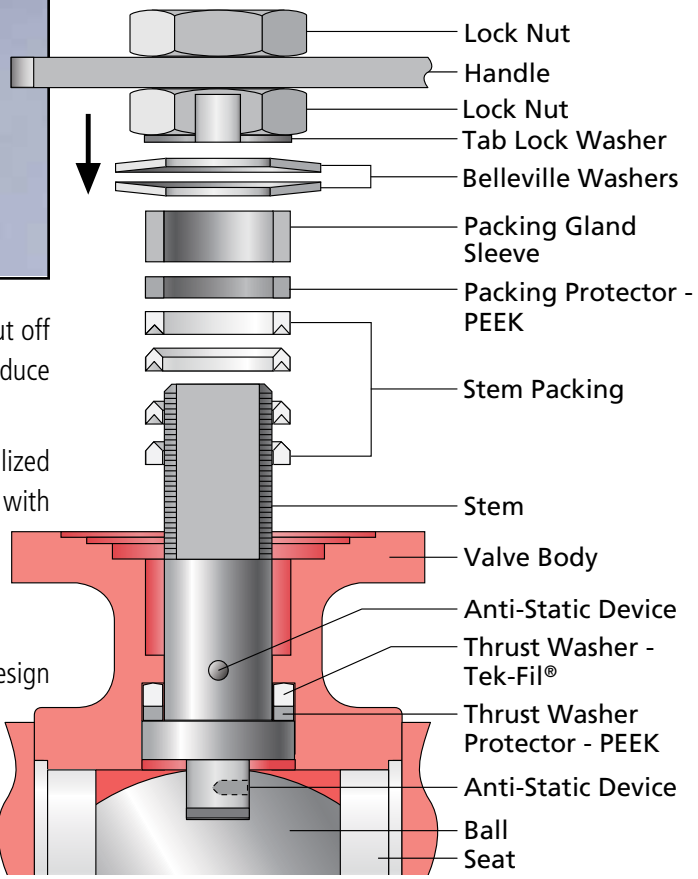

Stem Packing

An adjustable V-ring design creates a multiple seal between the stem and body. Each stem assembly is composed of three or four (dependent on valve size) rings providing a very high cycle life by resisting creep and cold flow. The Thrust Washer and the Thrust Washer Protector combine to provide a primary seal, reduce torque and prevent galling. This arrangement is a BV Series exclusive.

BV -2-Way - Threaded Ball Valve/Industrial Actuator Dimensions

2-Way Setup - Industrial Actuator

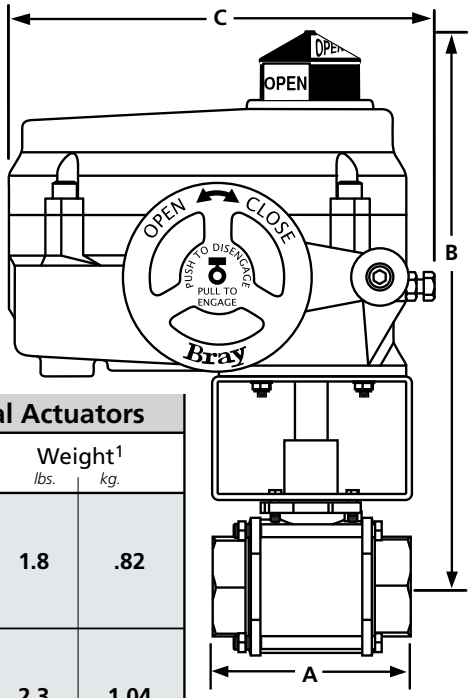

2-Way BV Dimensions, 1/2" - 4" - Threaded BV Series - with Industrial Actuators

Valve Models	Size in.	Size mm	Flow Coefficient Cv	Flow Coefficient Kv	A	B	C	Weight[1] lbs.	Weight[1] kg.
BV05-CS3-04	1/2	15	3.6	3.1	2.8 (71)	9.8 (249)	7.5 (191)	1.8	.82
BV05-CS3-05			4.7	4.0					
BV05-CS3-09			9.4	8.1					
BV05-CS3-12			11.6	10.0					
BV05-CS3-32			32.0*	27.6					
BV75-CS3-05	3/4	20	4.8	4.1	3.4 (86)	9.9 (252)	7.5 (191)	2.3	1.04
BV75-CS3-06			6.1	5.3					
BV75-CS3-12			12.4	10.7					
BV75-CS3-15			15.3	13.2					
BV75-CS3-54			54.0*	46.5					
BV1-CS3-09	1	25	8.5	7.3	3.6 (91)	10.3 (262)	7.5 (191)	3.4	1.5
BV1-CS3-13			12.8	11.1					
BV1-CS3-23			23.2	20.0					
BV1-CS3-31			31.4	27.1					
BV1-CS3-105			105.0*	90.5					
BV125-CS3-11	1.25	32	10.8	9.3	4.3 (109)	10.5 (267)	7.5 (191)	4.9	2.2
BV125-CS3-15			14.9	12.8					
BV125-CS3-33			33.4	28.8					
BV125-CS3-52			51.8	44.6					
BV125-CS3-200			200.0*	172.4					
BV150-CS3-15	1.50	40	14.9	12.8	4.8 (122)	11.2 (285)	7.5 (191)	7.6	3.4
BV150-CS3-20			20.4	17.6					
BV150-CS3-46			45.9	39.5					
BV150-CS3-71			71.2	61.3					
BV150-CS3-275			275.0*	237.1					
BV2-CS3-29	2	50	28.8	24.8	5.6 (142)	11.5 (292)	7.5 (191)	11.4	5.2
BV2-CS3-48			48.1	41.5					
BV2-CS3-104			104.2	89.8					
BV2-CS3-130			129.8	111.8					
BV2-CS3-500			500.0*	431.0					
BV250-CS3-27	2.50	65	27.2	23.5	7.3 (231)	13.4 (340)	10.1 (257)	21.8	9.9
BV250-CS3-56			56.3	48.5					
BV250-CS3-114			113.7	98.0					
BV250-CS3-177			177.3	152.8					
BV250-CS3-780			780.0*	672.4					
BV3-CS3-32	3	80	31.8	27.4	8.0 (257)	15.8 (401)	10.1 (257)	34.6	15.7
BV3-CS3-70			69.8	60.1					
BV3-CS3-150			149.9	129.2					
BV3-CS3-237			237.3	204.6					
BV3-CS3-1150			1,150.0*	991.3					
BV4-CS3-76	4	100	75.5	65.1	9.1 (353)	17.2 (437)	12.1 (307)	54.7	24.8
BV4-CS3-159			158.5	136.7					
BV4-CS3-330			329.5	284.0					
BV4-CS3-547			546.6	471.2					
BV4-CS3-2100			2,100.0*	1,810.2					

[1]- *Weights are for valve bodies only.*
- Largest Actuator dimension shown.
** Full Port Valves*
For steam applications, install valve with stem at 45° to 90° from vertical.

BV - 2-Way Industrial Actuator Selection and Close-Off Chart

2-Way BV Actuator Selection/Close-Off (PSI) - 100 PSI Steam and 300 PSI Water

On/Off & Floating					70-24-0061H	70-24-0201H	70-24-0501H	70-0061H	70-0121H	70-0201H	70-0301H
					On-Off Tri-State 24VAC	On-Off Tri-State 24VAC	On-Off Tri-State 24VAC	On-Off Tri-State 120VAC	On-Off Tri-State 120VAC	On-Off Tri-State 120VAC	On-Off Tri-State 120VAC
Modulating					70-24-0061SVH	70-24-0201SVH	70-24-0501SVH	70-0061SVH	70-0121SVH	70-0201SVH	70-0301SVH
					0-10VDC 4-20mA 24VAC	0-10VDC 4-20mA 24VAC	0-10VDC 4-20mA 24VAC	0-10VDC 4-20mA 120VAC	0-10VDC 4-20mA 120VAC	0-10VDC 4-20mA 120VAC	0-10VDC 4-20mA 120VAC
Valve Models	Size in.	Size mm	Flow Coefficient Cv	Flow Coefficient Kv	**Series 70 - 24VAC**			**Series 70 - 120VAC**			
BV05-CS3-04	1/2	15	3.6	3.1	100 PSI Steam 300 PSI Water			100 PSI Steam 300 PSI Water			
BV05-CS3-05			4.7	4.0							
BV05-CS3-09			9.4	8.1							
BV05-CS3-12			11.6	10.0							
BV05-CS3-32			32.0*	27.6							
BV75-CS3-05	3/4	20	4.8	4.1	100 PSI Steam 300 PSI Water			100 PSI Steam 300 PSI Water			
BV75-CS3-06			6.1	5.3							
BV75-CS3-12			12.4	10.7							
BV75-CS3-15			15.3	13.2							
BV75-CS3-54			54.0*	46.5							
BV1-CS3-09	1	25	8.5	7.3	100 PSI Steam 300 PSI Water			100 PSI Steam 300 PSI Water			
BV1-CS3-13			12.8	11.1							
BV1-CS3-23			23.2	20.0							
BV1-CS3-31			31.4	27.1							
BV1-CS3-105			105.0*	90.5							
BV125-CS3-11	1.25	32	10.8	9.3	100 PSI Steam 300 PSI Water			100 PSI Steam 300 PSI Water			
BV125-CS3-15			14.9	12.8							
BV125-CS3-33			33.4	28.8							
BV125-CS3-52			51.8	44.6							
BV125-CS3-200			200.0*	172.4							
BV150-CS3-15	1.50	40	14.9	12.8	100 PSI Steam 300 PSI Water			100 PSI Steam 300 PSI Water			
BV150-CS3-20			20.4	17.6							
BV150-CS3-46			45.9	39.5							
BV150-CS3-71			71.2	61.3							
BV150-CS3-275			275.0*	237.1							
BV2-CS3-29	2	50	28.8	24.8		100 PSI Steam 300 PSI Water			100 PSI Steam 300 PSI Water		
BV2-CS3-48			48.1	41.5							
BV2-CS3-104			104.2	89.8							
BV2-CS3-130			129.8	111.8							
BV2-CS3-500			500.0*	431.0							
BV250-CS3-27	2.50	65	27.2	23.5		100 PSI Steam 300 PSI Water			100 PSI Steam 300 PSI Water		
BV250-CS3-56			56.3	48.5							
BV250-CS3-114			113.7	98.0							
BV250-CS3-177			177.3	152.8							
BV250-CS3-780			780.0*	672.4							
BV3-CS3-32	3	80	31.8	27.4		100 PSI Steam 300 PSI Water			100 PSI Steam 300 PSI Water		
BV3-CS3-70			69.8	60.1							
BV3-CS3-150			149.9	129.2							
BV3-CS3-237			237.3	204.6							
BV3-CS3-1150			1,150.0*	991.3							
BV4-CS3-76	4	100	75.5	65.1			100 PSI Steam 300 PSI Water				100 PSI Steam 300 PSI Water
BV4-CS3-159			158.5	136.7							
BV4-CS3-330			329.5	284.0							
BV4-CS3-547			546.6	471.2							
BV4-CS3-2100			2,100.0*	1,810.2							

V-port ball valves are controllable between 20% and 80% of full open.
** Full Port Valves*
For steam applications, install valve with stem at 45˚ to 90˚ from vertical.

Key BV1-CS3-10 =
- BV = Industrial Ball Valve Series
- 1 = Size (in.)
- CS3 = Material, CS3 = Carbon Steel
- 10 = Cv

Series 70
Industrial Electric Actuators

The Bray Series 70 Electric Actuator provides a rugged, compact industrial actuator solution to a wide range of quarter turn applications including butterfly valves, ball valves, and dampers. Available in torque outputs from 600 to 18,000 lb. in. (68 to 2033 Nm), these actuators mount directly to Bray and other industry standard butterfly valves without the need for brackets and linkages. The manual declutchable override handwheel is standard on all Bray Series 70 actuators, providing end user convenience in installation, commissioning and service.

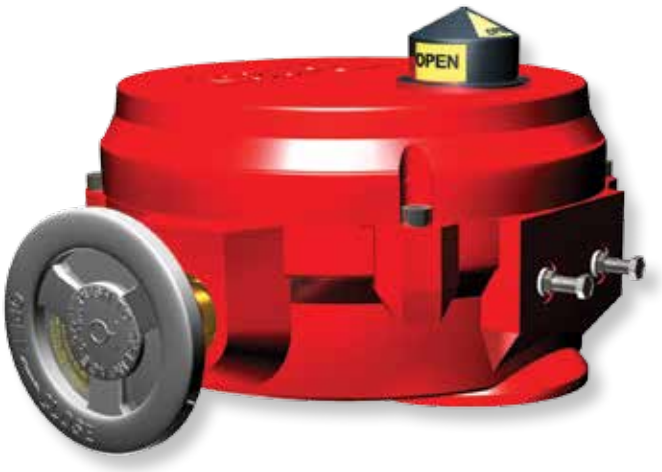

On/Off and modulating models are available in 24, 110 and 220 VAC. The standard enclosure is NEMA 4x and IP65 rated with an industrial polyester finish, making the Series 70 the ideal choice for cooling tower valves and other outdoor applications. The advanced Servo Pro modulating control card assures compatibility with virtually any analog control signal used in today's building automation and temperature control systems.

FEATURES	BENEFITS
Compact design and direct mounting	Fits in tight spaces, installs easily
UL, CSA and CE approved (most models)	Assures universal application acceptability
High visibility beacon position indicator	Assists in field operation
Internal isolation relays	Allows parallel wiring of multiple actuators from a single control output
Manual declutchable override handwheel	Allows manual positioning without disconnecting power
Advanced Servo Pro modulating option	Provides on-board diagnostics and user adjustable options including control signal type, speed controls and other features.
Optional battery backup on 24 VAC models	Assures return to a predetermined position upon loss of power supply

MODEL SELECTION

Model Number	Torque Output in/lbs.	24 VAC	120 VAC	On/Off	Modulating	Heater	Aux. Switches
70-24-0061	600	•		•			•
70-24-0061H	600	•		•		•	•
70-24-0061SV	600	•			•		•
70-24-0061SVH	600	•			•	•	•
70-0061	600		•	•			•
70-0061H	600		•	•		•	•
70-0061SV	600		•		•		•
70-0061SVH	600		•		•	•	•
70-0121	1200		•	•			•
70-0121H	1200		•	•		•	•
70-0121SV	1200		•		•		•
70-0121SVH	1200		•		•	•	•
70-24-0201	2000	•		•			•
70-24-0201H	2000	•		•		•	•
70-24-0201SV	2000	•			•		•
70-24-0201SVH	2000	•			•	•	•
70-0201	2000		•	•			•
70-0201H	2000		•	•		•	•
70-0201SV	2000		•		•		•
70-0201SVH	2000		•		•	•	•

Model Number	Torque Output in/lbs.	24 VAC	120 VAC	On/Off	Modulating	Heater	Aux. Switches
70-0301	3000		•	•			•
70-0301H	3000		•	•		•	•
70-0301SV	3000		•		•		•
70-0301SVH	3000		•		•	•	•
70-24-0501	5000	•		•			•
70-24-0501H	5000	•		•		•	•
70-24-0501SV	5000	•			•		•
70-24-0501SVH	5000	•			•	•	•
70-0501	5000		•	•			•
70-0501H	5000		•	•		•	•
70-0501SV	5000		•		•		•
70-0501SVH	5000		•		•	•	•
70-0651	6500		•	•			•
70-0651H	6500		•	•		•	•
70-0651SV	6500		•		•		•
70-0651SVH	6500		•		•	•	•
70-1300	13,000		•	•			•
70-1300H	13,000		•	•		•	•
70-1300SV	13,000		•		•		•
70-1300SVH	13,000		•		•	•	•
70-1800	18,000		•	•			•
70-1800H	18,000		•	•		•	•
70-1800SV	18,000		•		•		•
70-1800SVH	18,000		•		•	•	•

Application Note:
Use Series 70 actuators only to control equipment under normal operating conditions. Where failure or malfunction of the electric actuator could lead to personal injury or property damage to the controlled equipment or other property, additional precautions must be designed into the control system. Incorporate and maintain other devices, such as supervisory or alarm systems or safety or limit controls, intended to warn of or protect against failure or malfunction of the electric actuator.

SPECIFICATIONS

Industrial electric actuators shall include manual declutchable override handwheel and high visibility position indication. Motors shall be continuous duty. Enclosure shall be NEMA 4X, IP 65 rated. Actuator shall conform to ISO 5211 standards for direct mounting onto quarter turn valves. On/Off actuators shall be equipped with internal isolation relays to allow parallel wiring of multiple units. Modulating actuators shall be equipped with a microprocessor-based servo control with on-board diagnostics. Actuator shall be UL, CSA and CE approved. Actuators shall be Bray Series 70 or approved equal.

Model	Voltage	Torque (lb. in.)	Stroke Time	Current Draw (Amps) Full Load	Current Draw (Amps) Locked Rotor
70-24-0061	24 VAC	600	45 sec.	1.8	-
70-24-0201	24 VAC	2000	60 sec.	2.0	-
70-24-0501	24 VAC	5000	60 sec.	3.0	-
70-0061	120 VAC	600	30 sec.	1	1.4
70-0121	120 VAC	1200	30 sec.	0.78	2.1
70-0201	120 VAC	2000	30 sec.	1	2.1
70-0301	120 VAC	3000	30 sec.	1.2	3.0
70-0501	120 VAC	5000	30 sec.	1.6	3.0
70-0651	120 VAC	6500	30 sec.	2.3	3.1
70-1300	120 VAC	13000	110 sec.	2.3	3.1
70-1800	120 VAC	18000	110 sec.	2.5	3.1

Motor Duty Cycle		Continuous Duty
Aux Switches (Two SPDT)		10A (1/3 HP) @ 120 VAC 10A (1/2 HP) @ 220 VAC
Heater (Optional)	24V Models 120 V Models	5 Watt, PTC style, self regulating 5 Watt, PTC style, self regulating
Servo (Modulating Models)	Control Input Input Impedance	0 to 10 VDC, 2 to 10 VDC, 0 to 5 VDC, 4 to 20 mA Voltage: 1000K Ohms; Current: 250 Ohms
Housing		Die Cast Aluminum, Polyester Finish NEMA 4X, IP 65
Conduit Entries (2)		70-0061, 1/2" NPT All Other Models, 3/4" NPT
Terminal Strip		On/off Models, 12 to 22 AWG Modulating Models, 14 to 24 AWG
Ambient Temperature		-20 to 150F (-29 to 65C)
Agency Listings (120V)		UL, CE, CSA

The performance specifications are nominal and conform to acceptable industry standards. For application at conditions beyond these specifications, consult the nearest Bray office. Bray controls shall not be liable for damages resulting from misapplication or misuse of its products.

WIRING

Note: Use this Series 70 Electric Actuator only to control equipment under normal operating conditions. Where failure or malfunction of the electric actuator could lead to personal injury or property damage to the controlled equipment or other property, additional precautions must be designed into the control system. Incorporate and maintain other devices such as supervisory or alarm systems or safety or limit controls intended to warn of, or protect against, failure or malfunction of the electric actuator.

Note: Do not install or use the Series 70 Electric Actuator in or near environments where corrosive substances or vapors could be present. Exposure of the electric actuator to corrosive environments may damage the internal components of the device, and will void the warranty.

120 VAC ON/OFF WIRING

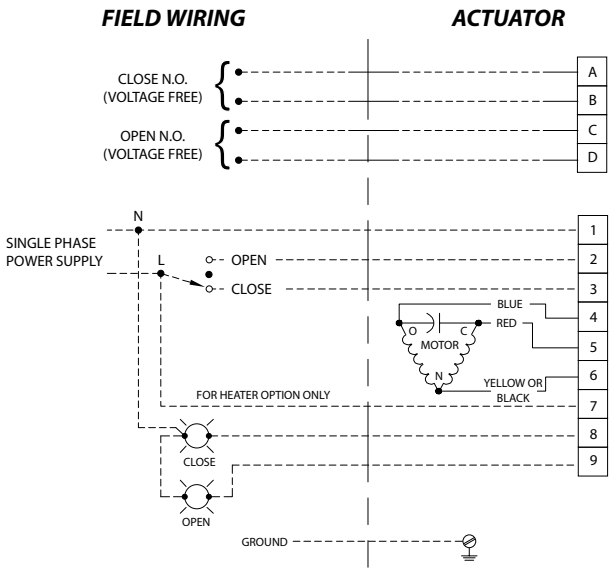

24 VAC ON/OFF WIRING

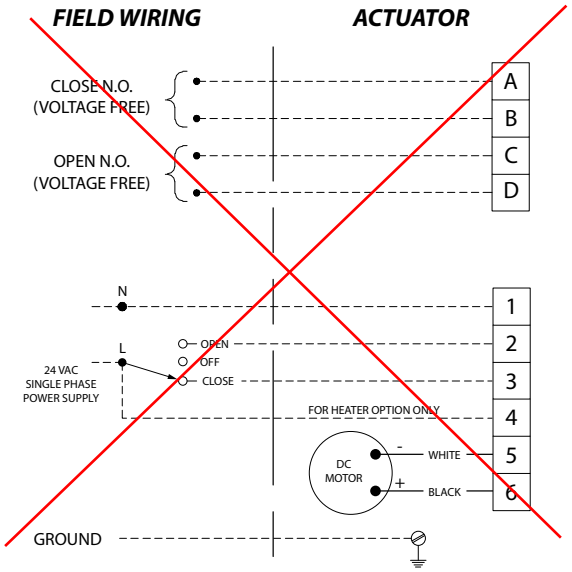

Notes:

1. Command signal and feedback wires ***MUST*** be shielded and grounded for proper servo operation.

2. The command signal input (-) terminal is internally connected to the servo neutral terminal. ***DO NOT*** connect the live to the neutral terminal on the servo.

3. Command signal and feedback signal must be isolated from each other and any other circuits. When usig 0-10VDC, 0-5VDC & 2-10VDC, The common of the command signal should NOT be ground/earth referenced.

4. Feedback loop is powered by the servo, do not supply external power.

5. Command signal & feedback signal wires should be shielded properly & shield should be grounded/earthed on one end only, preferably the controller end.

The 24 V Servo Pros (Revision J) can be wired 3 or 4 wire configured

120 VAC MODULATING WIRING

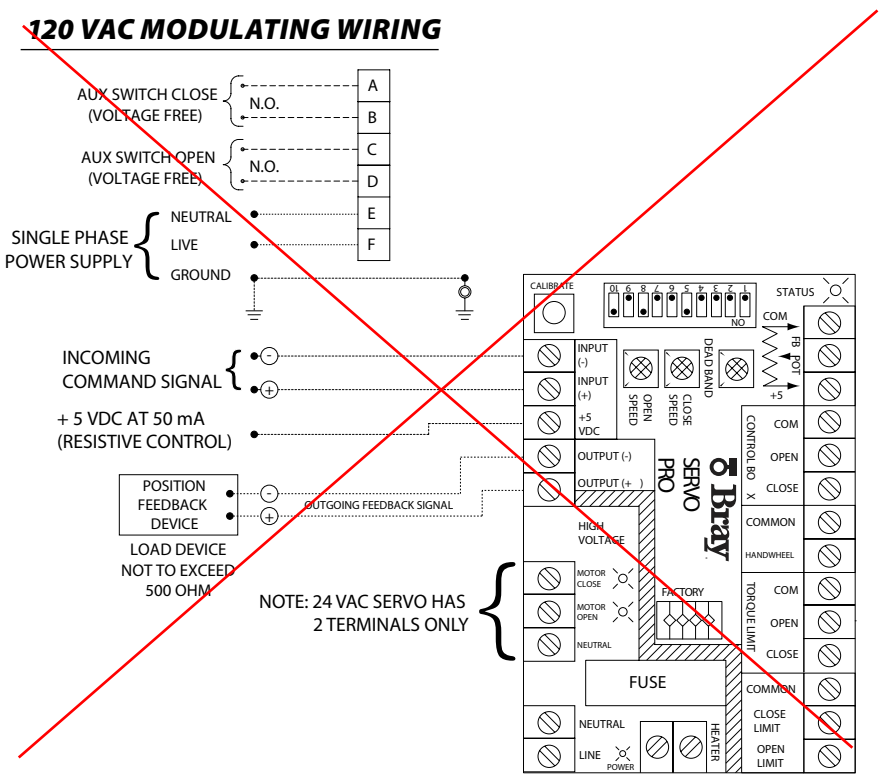

DIMENSIONS

SERIES 70 ACTUATOR DIMENSIONS

ACTUATOR MODEL NUMBER	Please reference illustration below																	
	A	B	C	D	E	F	G	H	J	K (UNC) x B.C.	M (UNC) x B.C.	N	P	Q	øR	S	T	U	Wt. lbs [kgs]
S70-0061	7.5 [191]	5.6 [142]	3.0 [76]	5.1 [130]	1.9 [48]	1.94 [49.3]	.19 [4.8]	1/2 ‡	2.0 [51]	5/16-18 x ø2.76 F07	—	.75 [19]	.51 [13]	1.75 [44]	3.5 [89]	–	–	–	12 [6]
S70-0121 S70-0201	10.1 [257]	7.8 [198]	3.7 [94]	6.5 [165]	2.5 [64]	2.69 [68.3]	.56 [14.2]	3/4 ‡	2.6 [66]	5/16-18 x ø2.76 F07	1/2-13 x ø4.92 F12	1.18 [30]	.87 [22]	2.20 [56]	8 [203]	–	–	–	28 [13]
S70-0301 S70-0501 S70-0651	12.1 [307]	9.5 [241]	5.6 [142]	7.2 [183]	2.9 [74]	3.19 [81]	.56 [14.2]	3/4 ‡	3.1 [79]	1/2-13 x ø4.92 F12	3/4-10 x ø6.50 F16	See Detail A1			12 [305]	–	–	–	48 [22]
S70-1300 S70-1800	12.1 [307]	9.5 [241]	6.0 [152]	12.5 [317]	8.1 [206]	9.2 [234]	.56 [14.2]	3/4 ‡	8.3 [211]	1/2-13 x ø4.92 F12	3/4-10 x ø6.50 F16	See Detail A2			12 [305]	6.1 [155]	12.7 [323]	8 [203]	118 [54]

Dimensions are in Inches [Millimeters in brackets]

70-0061 to 70-0651

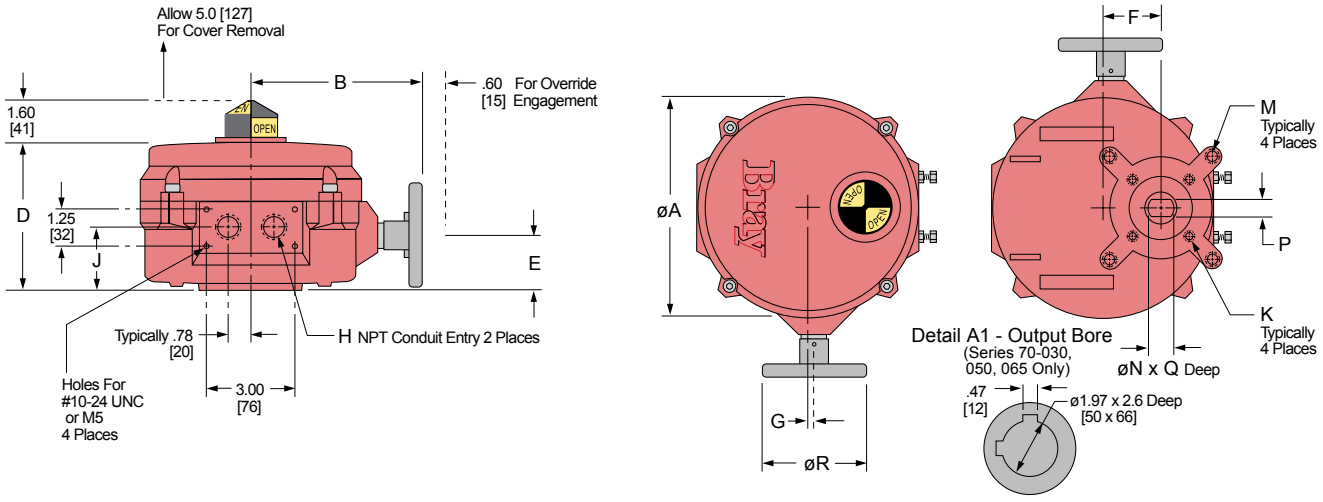

70-1300 to 70-1800

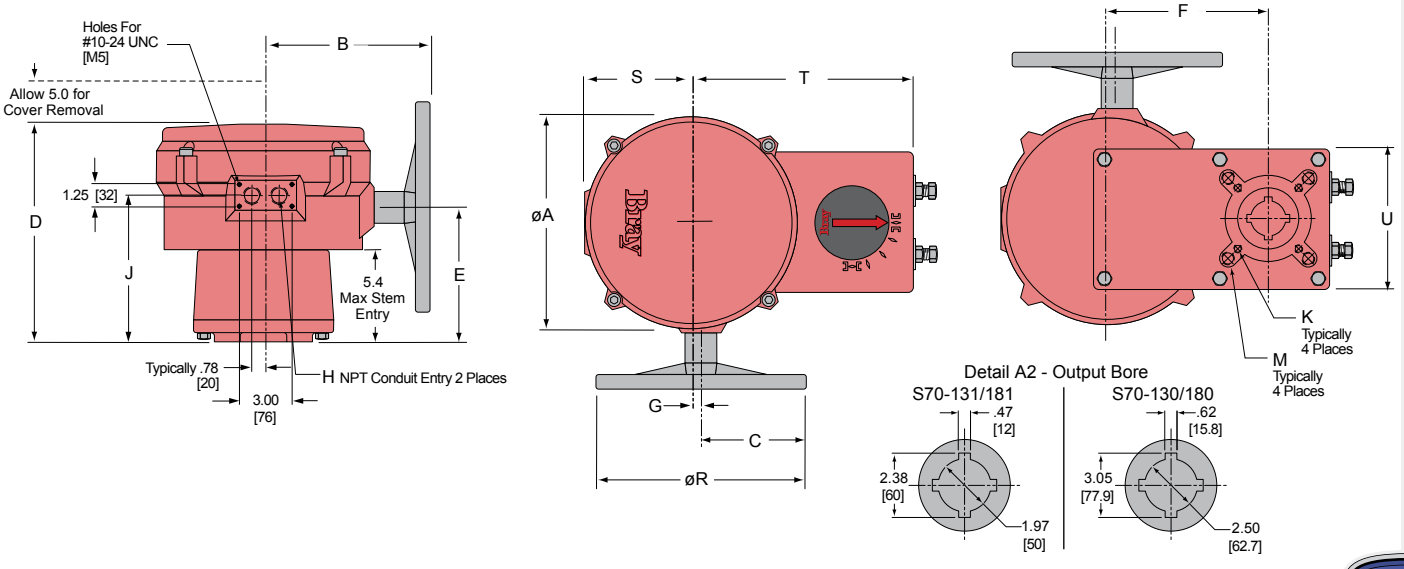

TAG: LSH-5050
LSH-5051
LSH-5060
Vault Leak/Dual Contain

Warrick

Series 16DM

Series 16DM DPDT Load Contact, Solid State Plug-In Module

Part No. 16DMB1B0
Unit Price $267
Lead Time (Days) 5

Image is of actual product

Model	16DM
Mode of Operation	Direct
Sensitivity	10 K
Control Style	Plug-In Module
Socket Style	DIN Mount
Standoff Style	N/A
Enclosure	None
Contact Design	2 Normally Open & 2 Normally Closed (non-powered)
Contact Rating	5 Amp Resistive 1/10 horse power
Secondary Voltage	12 VAC
Terminal Style	Screw Connector
Number of Channels	1
Minimum Temperature (°F)	-40
Maximum Temperature (°F)	150
Protection	Non-Intrinsically Safe
Approvals	UL 508 General Purpose
Minimum Qty (per Release)	1
Weight (Lbs)	1.1

Options

Form 164
Sheet P/N 100226-1
Rev. D

Warrick® Series 16DM Controls

Installation and Operation Bulletin

This bulletin should be used by experienced personnel as a guide to the installation of series 16DM controls. Selection or installation of equipment should always be accompanied by competent technical assistance. We encourage you to contact Gems Sensors Inc. or its representative if further information is required.

	Specifications
Control Design:	Solid-State components enclosed in clear Lexan plug-in style housing. Housing carries no NEMA rating
Contact Design:	2 SPDT (2 form C): Two Normally Open (N.O.) and two Normally Closed (N.C.), non-powered contacts
Contact Ratings:	5 A @ 120, 240 VAC resistive, 1/8 H.P. @ 120 or 240 VAC
Contact Life:	Mechanical: 5 million operations - Electrical: 100,000 operations minimum at rated load
Supply Voltage	24, 120, or 240 VAC Models - Factory Set. Plus 10%, minus 15%, 50/60 Hz
Supply Current:	120, 240, 24 VAC, Relay energized 4.4 VA
Secondary	12 VAC RMS Voltage on probes. 1.5 milli-amp Current
Circuit: **Sensitivity:**	Models operate from 0 to 1,000,000 OHM maximum specific resistance - Factory set
	-40° To 150°F Ambient
Temperature:	All connections #6-32 screw type with pressure clamps
Terminals:	Standard, 0.5 seconds on rising level.
Time Delays:	Additional time delays on rising and/or falling level available as option.
Listings:	U.L. Listing, Industrial Motor Control (508). 240 and 208 volt units are not U.L. limit control recognized.

Installation

1. Install octal socket in appropriate enclosure using two #6 or #8 metal screws.
   a) Install rail mount socket on appropriate rail (DIN mount) in appropriate enclosure, if applicable.
2. Wire control per wiring diagram, following N.E.C. and local codes.
3. Install control module in socket.

Sensitivities vs Maximum Probe Wire Distance*

Sensitivity Character	Sensitivity (K Ohms)	Distance (Ft.)
A or K	4.7	10,000
B or L	10	5,700
C or M	26	2,200
D or N	50	1,075
E or P	100	570
F or R	470	270
G or S	1,000	38

* Based on type MTW or THHN wire, #14 or #16 Awg

Dimensions

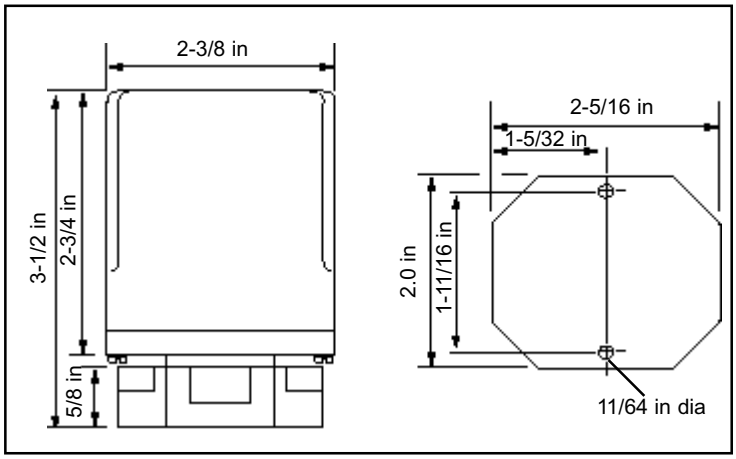

Use copper (60/70° C) wire only. Torque to 20 inch pounds.

Wiring Diagram

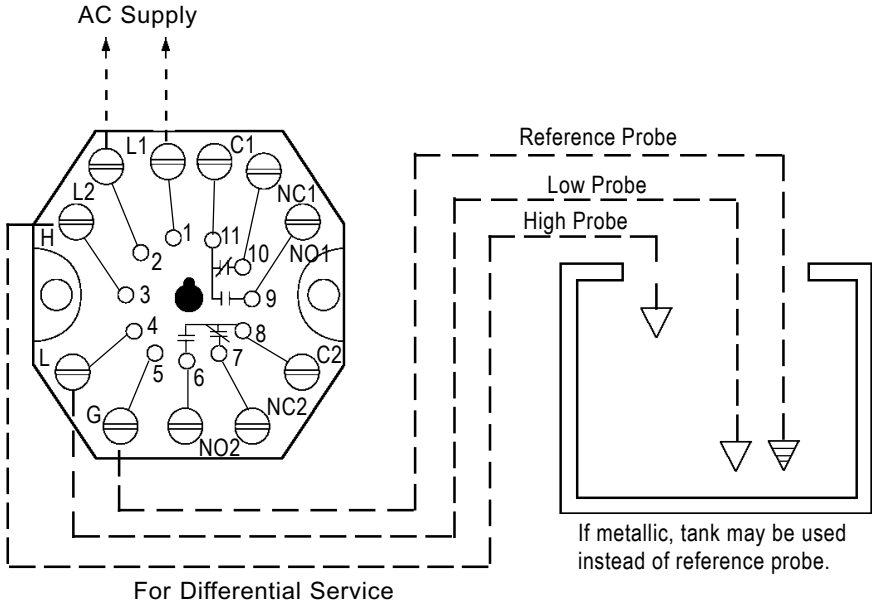

Note: For Single Level Service, use "H" and "G" Connections

Operation

Direct Mode - Single Level Service:
When the liquid rises to the electrode on terminal 3, the control energizes, changing state of the load contacts. **(LED will be lit)** The control remains energized until the liquid level recedes below electrode on terminal 3. The control then de-energizes, **(LED will not be lit)** returning load to original state.

Inverse Mode - Single Level Service:
Control energizes with power, changing state of the load contacts. **(LED will be lit)** When the liquid rises to the electrode on terminal 3, the control de-energizes, returning the load contacts to shelf state. **(LED will not be lit)** The control remains de-energized until liquid level recedes below the electrode connected to terminal 3. The control then energizes.

Direct Mode - Differential Service:
When the liquid rises to the electrode on terminal 3, the control energizes, changing state of the load contacts. **(LED will be lit)** The control remains energized until the liquid level recedes below electrode on terminal 4. The control then de-energizes, **(LED will not be lit)** returning the load contacts to original state.

Inverse Mode - Differential Service:
Control energizes with power, **(LED will be lit)** changing state of the load contacts. When the liquid rises to the electrode on terminal 3, the control de-energizes, returning load contacts to shelf state. **(LED will not be lit)** The control remains de-energized until the liquid level recedes below the electrode on terminal 4. The control then energizes.

Optional

Time Delays: With time delay on increasing level, the liquid must be in contact with the short electrode for the full duration of the time delay before control will operate. With delay on decreasing level, the liquid must be below long electrode for the full duration of the time delay before control will operate. In single level service, terminals 3 and 4 must be jumpered together to achieve time delays on both increasing and decreasing levels or just decreasing level.

16DM F 1 A 1 -*-*

- **Time Delay:** (decreasing level) 1-20 sec.
- **Time Delay:** (increasing level) 1-20 sec.
- **Enclosure:** 0-none, 1-NEMA 1, 4-NEMA 4, 7-NEMA 7, 12-NEMA 12
- **Socket Style:** A - 11 Pin Octal, B - 11 Pin DIN Mount, M - None, Module Only
- **Supply Voltage:** 1- 120 VAC, 2- 240 VAC, 3- 24 VAC, 8- 208/240 VAC*
- **Mode/Sensitivity:**
  - **Direct** A- 4.7K, B- 10K, C- 26K, D- 50K, E- 100K, F- 470K, G- 1M
  - **Inverse** K- 4.7K, L- 10K, M- 26K, N- 50K, P- 100K, R- 470K, S- 1M

*187 Vmin to 255 Vmax VAC

Gems Sensors Inc.
One Cowles Road
Plainville, CT 06062-1198
Tel: 860-793-4579
Fax: 860-793-4580

TAG: LSH-5050
LSH-5051
Vault Leak

3E	3N	3B
1" to 3" NPT	#10 Machine Screws from Underside	3/8" - 18NPT, 5/8" - 18UNF, 5/8" - 24UNEF
1 thru 7	1 thru 3	1
Series 3E fittings are cast metal, pressure-tight assemblies capable of handling 1-7 probes. Attachment to vessels is accomplished with external pipe threading. 3E Fittings require the use of 3R rigid or 3W wire suspended electrodes.	Series 3N fittings accommodate 1-3 probes operating at atmospheric pressure. The assembly mounts on a flat surface atop open tanks or closed vessels. 3N Fittings require the use of 3R rigid or 3W wire suspended electrodes.	Series 3B fittings are compact pressure tight assemblies that hold a single electrode probe for use in water and chemicals. These fittings incorporate a 1/4-20 female thread that must be combined with a Series 3R (rigid rod electrode) or Series 3W/3Y (wire suspended electrode) to make a complete assembly.
Die-cast aluminum, epoxy coated	Die-cast aluminum, epoxy coated	—
Cast iron, red brass, 316 stainless steel	PVC, red brass, 316 stainless steel	316 stainless steel
Teflon®	Teflon®	Teflon®
125 psig @ 353°F (cast iron) 250 psig @ 406°F (brass, 316 S.S.)	0 psig @ 150°F (PVC) 0 psig @ 500°F (brass, 316 S.S.)	250 psig @ 406°F 500 psig @ 75°F
U.L. File #MP2489, Vol. 1 Sec. 1; CSA	CSA File #LR11644	U.L. File #MP2489, Vol. 1 Sec. 1; CSA

	No. of Probes	Attachment to Vessel	Conduit Boss Thread Size	Terminal Housing Size (W" x D" x H")
3E	1	1" NPT	1/2" NPT	2-1/4 x 2-1/4 x 2-1/4
	2-3	2" NPT	1/2" NPT	3-1/4 x 3-1/4 x 2-3/8
	4	2-1/2" NPT	1/2" NPT	3-1/4 x 3-1/4 x 2-3/8
	5-7	3" NPT	3/4" NPT	4 x 4 x 2-1/2
3N	1-3	2-1/4" square flat pad, 1-1/2" dia. hole in top of vessel secured with #10 machine screws at the corners of a 1-1/2" square	1/2" NPT	2-1/4 x 2-1/4 x 2-1/4

3E 2 A

Series
3E

Number of Probes
1 thru **7**

Body Material
A – Cast Iron
B – Red Brass
C – 316 Stainless Steel

3N X X

Series
3N

Number of Probes
1 thru **3**

Body Material
A – PVC
B – Red Brass
C – 316 Stainless Steel

3B X B

Series
3B

Thread
1 – 3/8" - 18 NPT
2 – 5/8" - 18 UNF
3 – 5/8" - 24 UNEF

Metal Parts
B – 316 Stainless Steel

3R, 3W[1]	3R, 3W[1]	3R solid rod (up to 4') 3W[1] or 3Y[2] (greater than 4')

Custom options available. Consult factory.

TAG: LSH-5050
LSH-5051
Vault Leak

Series 3R/3T
General Purpose Probes

- Metallic Rods
- Available in Many Materials for Various Requirements
- Adaptable for Various Fittings

For general purpose use, Series 3R probes are metallic rods with threaded ends that screw into a fitting that extends vertically down into the liquid. Available in a variety of materials for different applications. 3T tapered rods are also available.

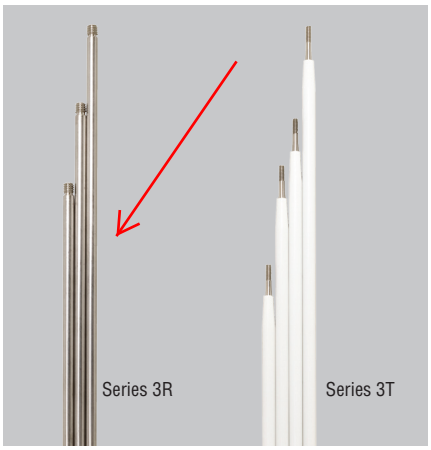

Specifications

Style	
Series 3R	1/4˝ (.64 cm) threaded rod
Series 3T	1/4˝ (.64 cm) tapered rod
Material	Brass, Hastelloy C, Monel, 316 stainless steel, titanium, Carp. 20
Sheathing (optional)	PVC heat shrink 200°F (93°C), Teflon® heat shrink 350°F (177°C)

Applications

3R: For use with Series 3E, 3F, 3G, 3B fittings

3T: For use with Series 3G and other custom configurations

How to Order

Use the **Bold** characters from the chart below to construct a product code.

3R **2** **C** **4**

Series
3R **3T**

Length (Feet)
1 – One
2 – Two
3 – Three
4 – Four
5 – Five
6 – Six
7 – Seven
8 – Eight
9 – Nine
10 – Ten

Probe Material
A – Brass
C – 316 Stainless Steel
D – Carp. 20
E – Hastelloy B
F – Hastelloy C
G – Monel
H – Titanium

Sheathing Heat Shrink
0 – None
4 – PVC
5 – Teflon®

Contact your representative for custom lengths.

Note: Long lengths can be coupled to facilitate shipping and installation. Consult factory.

Dimensions

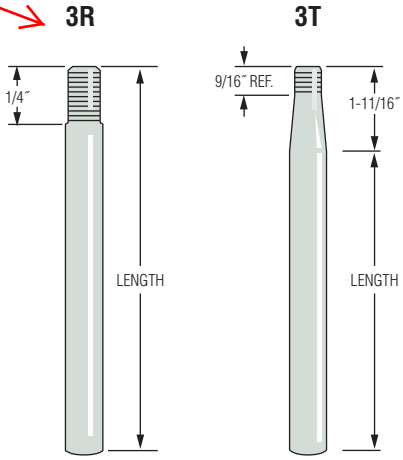

TAG: LSH-5060
Dual Containment

Series 3W – Wire Suspended Probes

- Metallic Bars
- Plastic Shield Protected
- Adaptable to Many Fittings
- Field Assembled

Series 3W probes, consisting of metallic bars within a protective plastic shield, are designed to be suspended in liquid with PVC-insulated wires. They are ideal for applications where rigid electrode rods are impractical or cumbersome, such as:

- Deep Wells
- Pump Control
- Waste Water
- Deep Tanks

7/8″ (2.22 cm) diameter x 3-3/4″ (9.52 cm) length. 3Z1A wire and 3Z1B adaptor kit required for use with 3E, 3F and 3N fittings.

Series 3W

How to Order

Select a 3W electrode, a 3Z1B adaptor and a length of 3Z1A suspension wire to form a complete suspended probe.

1. 3W Electrodes

Probe Material	Part Number
Brass	3W1
316 Stainless Steel	3W2

2. 3Z1B Adaptor Kit
For use with 3E, 3F and 3N fittings.
Part Number: 3Z1B

3. 3Z1A Suspension Wire
Order in standard or custom length.

Length (Feet)	Part Number
500	100325-500
1000	100325-1000
5000	100325-5000
Custom	3Z1A-20

Specify in one foot increments up to 5000 ft.

Components Detail

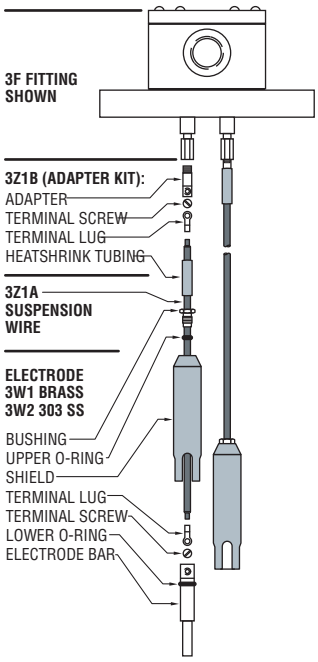

Series 3Y – Corrosion Resistant Probes

- Metallic Bars
- Corrosion Resistant
- Available in Many Materials for Various Requirements
- Adaptable for Various Fittings

Series 3Y wire suspended probes consist of metallic bars within a protective plastic shield, designed to be suspended in liquid. Series 3Y suspension wires are PVC or Teflon® insulated for use in corrosive liquid applications. 7/8″ (2.22 cm) diameter x 3-1/2″ (8.90 cm) length.

Series 3Y

Specifications

Style	Wire suspended
Tip Material	Carp. 20, Hastelloy C, 316 stainless steel
Shield Material	PVC 150°F (66°C), Teflon®

How to Order

Use the **Bold** characters from the chart below to construct a product code.

3Y X X X

Series
3Y

Shield Material
1 – PVC
3 – Teflon®

Probe Tip Material
C – 316 Stainless Steel
D – Carp. 20
F – Hastelloy C

Length of Wire
1 – 10 feet
2 – 20 feet
3 – 30 feet
etc.

Note: 3Z1B Connector is used to connect suspension wire with 3B, 3E, 3F, 3G or 3N fitting.

Applications

- General Purpose
- Wire Suspended Probes
- Corrosive Liquids, Chemicals

this sheet required for remote mount transmitters

TAG: FIT-5001

Overview

Transmitter MAG 5000/6000 compact version (left) and 19“ insert version (right)

The MAG 5000 and 6000 are transmitters engineered for high performance, easy installation, commissioning and maintenance. The transmitters evaluate the signals from the SITRANS F M sensors type MAG 1100, MAG 1100 F, MAG 3100, MAG 3100 P and MAG 5100 W.

Transmitter types:

- MAG 5000: Max. measuring error ± 0.4 % ± 1 mm/s (incl. sensor)
- MAG 6000: Max. measuring error ± 0.2 % ± 1 mm/s (incl. sensor, see also sensor specifications) and with additional features such as: "plug & play" add-on bus modules; integrated batch functions.

Benefits

- Superior signal resolution for optimum turn down ratio
- Digital signal processing with many possibilities
- Automatic reading of SENSORPROM data for easy commissioning
- User configurable operation menu with password protection.
- 3 lines, 20 characters display in 11 languages.
- Flow rate in various units
- Totalizer for forward, reverse and net flow as well as additional information available
- Multiple functional outputs for process control, minimum configuration with analogue, pulse/frequency and relay output (status, flow direction, limits)
- Comprehensive self-diagnostic for error indication and error logging (see under SITRANS F M diagnostics)
- Batch control (MAG 6000 only)
- Custody transfer approval: PTB, OIML R 117, OIML R 49, MI-001, PTB K 7.2 and OE12/C 040 for chilled water
- MAG 6000 with add-on bus modules for HART, FOUNDATION Fieldbus H1, DeviceNet, Modbus RTU/RS 485, PROFIBUS PA and DP

Application

The SITRANS F M flowmeters are suitable for measuring the flow of almost all electrically conductive liquids, pastes and slurries. The main applications can be found in:

- Water and waste water
- Chemical and pharmaceutical industries
- Food and beverage industries
- Power generation and utility

Design

The transmitter is designed as either IP67 NEMA 4X/6 enclosure for compact or wall mounting or 19" version as a 19” insert as a base to be used in:

- 19" rack systems
- Panel mounting IP20/NEMA 1 (prepared for IP65/NEMA 2 display side)
- Back of panel mounting IP20/NEMA 1
- Wall mounting IP66/NEMA 4X

Several options on 19” versions are available such as:

- Transmitters mounted in safe area for Ex ATEX approved flow sensors (incl. barriers)
- Transmitters with electrode cleaning unit on request

Function

The MAG 5000/6000 are transmitters with a build-in alphanumeric display in several languages. The transmitters evaluate the signals from the associated electromagnetic sensors and also fulfil the task of a power supply unit which provides the magnet coils with a constant current.

Further information on connection, mode of operation and installation can be found in the data sheets for the sensors.

Displays and controls

Operation of the transmitter can be carried out using:

- Control and display unit
- HART communicator
- PC/laptop and SIMATIC PDM software via HART communication
- PC/laptop and SIMATIC PDM software using PROFIBUS or Modbus communication

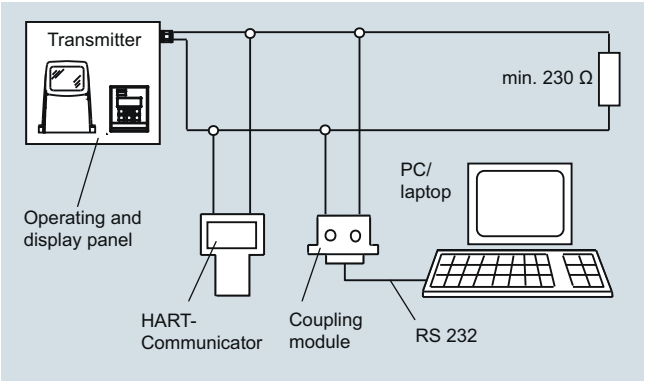

HART communication

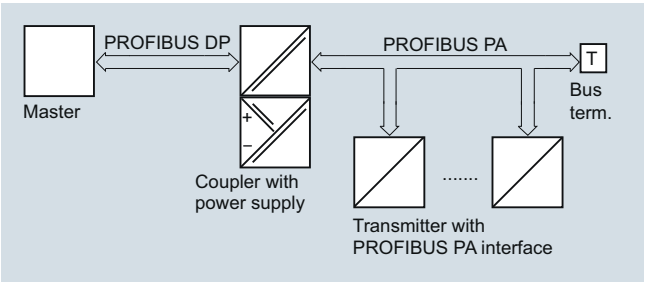

PROFIBUS PA communication

© Siemens AG 2014

3

Technical specifications

Mode of operation and design	
Measuring principle	Electromagnetic with pulsed constant field
Empty pipe	Detection of empty pipe (special cable required in remote mounted installation)
Excitation frequency	Depend on sensor size
Electrode input impedance	> 1 x 10^{14} Ω
Input	
Digital input	11 ... 30 V DC, R_i = 4.4 KΩ
• Activation time	50 ms
• Current	$I_{11\ V\ DC}$ = 2.5 mA, $I_{30\ V\ DC}$ = 7 mA
Output	
Current output	
• Signal range	0 ... 20 mA or 4 ... 20 mA
• Load	< 800 Ω
• Time constant	0.1 … 30 s, adjustable
Digital output	
• Frequency	0 ... 10 kHz, 50 % duty cycle (uni/bidirectional)
• Pulse (active)	24 V DC, 30 mA, 1 KΩ ≤ R_i ≤ 10 KΩ, short-circuit-protected (power supplied from flowmeter)
• Pulse (passive)	3 … 30 V DC, max. 110 mA, 200 Ω ≤ R_i ≤ 10 KΩ (powered from connected equipment)
• Time constant	0.1 … 30 s, adjustable
Relay output	
• Time constant	Changeover relay, same as current output
• Load	42 V AC/2 A, 24 V DC/1 A
Low flow cut off	0 ... 9.9 % of maximum flow
Galvanic isolation	All inputs and outputs are galvanically isolated.
Max. measuring error (incl. sensor and zero point)	
• MAG 5000	0.4 % ±1 mm/s
• MAG 6000	0.2 % ±1 mm/s
Rated operation conditions	
Ambient temperature	
• Operation	• Display version: -20 ... +60 °C (-4 ... +140 °F) • Blind version: -20 ... +60 °C (-4 ... +140 °F) • MI-001 version -25 ... +55 °C (-13 ... +131 °F) • Custody Transfer (CT) version -20 ... +50 °C (-4 ... +122 °F)
• Storage	-40 ... +70 °C (-40 ... +158 °F)
Mechanical load (vibration)	
Compact version	18 ... 1000 Hz, 3.17 g RMS, sinusoidal in all directions to IEC 68-2-36
19" insert	1 ... 800 Hz, 1 g, sinusoidal in all directions to IEC 68-2-36
Degree of protection	
Compact version	IP67/NEMA 4X/6 to IEC 529 and DIN 40050 (1 mH_2O 30 min.)
19" insert	IP20/NEMA 1 to IEC 529 and DIN 40050
EMC performance	IEC/EN 61326-1 (all environments) IEC/EN 61326-2-5

Display and keypad	
Totalizer	Two eight-digit counters for forward, net or reverse flow
Display	Background illumination with alphanumeric text, 3 x 20 characters to indicate flow rate, totalized values, settings and faults; Reverse flow indicated by negative sign
Time constant	Time constant as current output time constant
Design	
Enclosure material	
• Compact version	Fiber glass reinforced polyamide; stainless steel AISI 316/1.4436 (IP65)
• 19" insert	Standard 19" insert of aluminum/steel (DIN 41494), width: 21 TE, height: 3 HE
• Back of panel	IP20/NEMA 1; Aluminum
• Panel mounting	IP20/NEMA 1 (prepared for IP65/NEMA 2 display side); ABS plastic
• Wall mounting	IP66/NEMA 4X; ABS plastic
Dimensions	
Compact version	See dimensional drawings
19" insert	See dimensional drawings
Weight	
Compact version	0.75 kg (2 lb)
19" insert	See dimensional drawings
Power supply	• 115 ... 230 V AC +10 % -15 %, 50 ... 60 Hz • 11 ... 30 V DC or 11 ... 24 V AC
Power consumption	• 230 V AC: 17 VA • 24 V AC: 9 VA, I_N = 380 mA, I_{ST} = 8 A (30 ms) • 12 V DC: 11 W, I_N = 920 mA, I_{ST} = 4 A (250 ms) • 24 V DC: 8.4 VA, I_N = 350 mA, I_{ST} = 4 A (10 ms) I_{ST}= 4 A (250 ms): For solar panel please secure stable current supply
Certificates and approvals	CE, C-UL general purpose, C-tick; FM Class I, Div 2, CSA Class I, Div 2
Custody transfer approval (MAG 5000/6000 CT)	• Cold water: MI-001, PTB/OIML R 49 (pattern approval DE/DK) • Hot water: PTB and DANAK (MAG 6000 CT) • Chilled water: PTB K 7.2; OE12/C 040 • Other media than water (milk, beer etc.): PTB and DANAK OIML R 117 (pattern approval DE/DK) (MAG 6000 CT)
Communication	
Standard	
• MAG 5000	Without serial communication or HART as option
• MAG 6000	Prepared for client-mounted add-on modules
Optional (MAG 6000 only)	HART, Modbus RTU/RS 485, FOUNDATION Fieldbus H1, DeviceNet, PROFIBUS PA, PROFIBUS DP as add-on modules
• MAG 5000/6000 CT	No communication moduls approved

© Siemens AG 2014

Safety barrier (e/ia)

Application	**For use with MAG 5000/6000 19" and MAG 1100 Ex ATEX/MAG 3100 Ex ATEX**		
Ex approval	MAG 1100 Ex [EEx e ia] IIB ATEX		
	MAG 3100 Ex [EEx e ia] IIC ATEX		
Cable parameter	Group	Capacity in µF	Inductance in mH
Electrode	IIC	≤ 4.1	≤ 80
	IIB	≤ 45	≤ 87
	IIA	≤ 45	≤ 87
Ambient temperature			
• During operation	-20 ... +50 °C (-4 ... +122 °F)		
• During storage	-20 ... +70 °C (-4 ... +158 °F)		
Enclosure			
• Material	Standard 19" insert in aluminum/steel (DIN 41494)		
• Width	21 TE (4.75")		
• Height	3 HE (5.25")		
• Rating	IP20 / NEMA 1 to EN 60529		
• Mechanical load	1 g, 1 … 800 Hz sinusoidal in all directions to EN 60068-2-36		

© Siemens AG 2014

3

Selection and Ordering data

Transmitter MAG 5000

Description	Article No.	
Transmitter MAG 5000 Blind for compact and wall mounting; IP67/NEMA 4X/6, fibre glass reinforced polyamide		
• 11 ... 30 V DC/ 11 ... 24 V AC	**7ME6910-1AA30-0AA0**	
• 115 ... 230 V AC, 50/60 Hz	**7ME6910-1AA10-0AA0**	
Transmitter MAG 5000 Display for compact and wall mounting; IP67/NEMA 4X/6, fibre glass reinforced polyamide		
• 11 ... 30 V DC/ 11 ... 24 V AC	**7ME6910-1AA30-1AA0**	
• 115 ... 230 V AC, 50/60 Hz	**7ME6910-1AA10-1AA0**	
• 115 ... 230 V AC, 50/60 Hz, with HART	**7ME6910-1AA10-1BA0**	
Transmitter MAG 5000 CT for compact and wall mounting, approved for custody transfer (only with approval marks, no verification – only a complete flowmeter can be verified, i.e. sensor together with the transmitter); IP67/NEMA 4X/6, fibre glass reinforced polyamide		
• 11 ... 30 V DC/ 11 ... 24 V AC	**7ME6910-1AA30-1AB0**	
• 115 ... 230 V AC, 50/60 Hz	**7ME6910-1AA10-1AB0**	
Transmitter MAG 5000 for 19" rack and wall mounting		
• 11 ... 30 V DC/ 11 ... 24 V AC	**7ME6910-2CA30-1AA0**	
• 115 ... 230 V AC, 50/60 Hz	**7ME6910-2CA10-1AA0**	

We can offer shorter delivery times for configurations designated with the Quick Ship Symbol. For details see page 9/5 in the appendix.

Transmitter MAG 6000

Description	Article No.	
Transmitter MAG 6000 Blind for compact and wall mounting; IP67/NEMA 4X/6, fibre glass reinforced polyamide		
• 11 ... 30 V DC/ 11 ... 24 V AC	**7ME6920-1AA30-0AA0**	
• 115 ... 230 V AC, 50/60 Hz	**7ME6920-1AA10-0AA0**	
Transmitter MAG 6000 for compact and wall mounting; IP67/NEMA 4X/6, fibre glass reinforced polyamide		
• 11 ... 30 V DC/ 11 ... 24 V AC	**7ME6920-1AA30-1AA0**	
• 115 ... 230 V AC, 50/60 Hz	**7ME6920-1AA10-1AA0**	
Transmitter MAG 6000 for compact and wall mounting; IP65/NEMA 4, stainless steel AISI 316/1.4436 (only for sensor with SS terminal box) (for remote installation order SS terminal box separately)		
• 11 ... 30 V DC/ 11 ... 24 V AC	**7ME6920-1QA30-1AA0**	
• 115 ... 230 V AC, 50/60 Hz	**7ME6920-1QA10-1AA0**	
Transmitter MAG 6000 CT for compact and wall mounting, approved for custody transfer (no communication modules possible; only with approval marks, no verification – only a complete flowmeter can be verified, i.e. sensor together with the transmitter); IP67/NEMA 4X/6, fibre glass reinforced polyamide		
• 11 ... 30 V DC/ 11 ... 24 V AC	**7ME6920-1AA30-1AB0**	
• 115 ... 230 V AC, 50/60 Hz	**7ME6920-1AA10-1AB0**	
Transmitter MAG 6000 SV for compact and wall mounting; special excitation 44 Hz settings for Batch application DN ≤ 25/1" IP67/NEMA 4X/6, fibre glass reinforced polyamide		
11 ... 30 V DC/ 11 ... 24 V AC	**7ME6920-1AB30-1AA0**	
115 ... 230 V AC, 50/60 Hz	**7ME6920-1AB10-1AA0**	
Transmitter MAG 6000 for 19" rack and wall mounting		
• 11 ... 30 V DC/ 11 ... 24 V AC	**7ME6920-2CA30-1AA0**	
• 115 ... 230 V AC, 50/60 Hz	**7ME6920-2CA10-1AA0**	

© Siemens AG 2014

Description	Article No.	
Transmitter MAG 6000 SV for 19“ rack and wall mounting; special excitation 44 Hz settings for Batch application DN ≤ 25/1“		
• 11 ... 30 V DC/ 11 ... 24 V AC	**7ME6920-2CB30-1AA0**	
• 115 ... 230 V AC, 50/60 Hz	**7ME6920-2CB10-1AA0**	
MAG 6000 with IP66/NEMA 4X enclosure; 115 ... 230 V AC, 50/60 Hz; cable gland PG13.5	**7ME6920-2EA10-1AA0**	
MAG 6000 with safety barrier for Ex-approved sensors, complete mounted with IP66/NEMA 4X wall mounting enclosure, ATEX, 115 ... 230 V AC, 50/60 Hz; cable gland PG13.5		
• For ATEX 2G D sensors	**7ME6920-2MA11-1AA0**	
MAG 6000 SV, 19” insert, in IP66/NEMA 4X , ABS plastic enclosure, excitation frequency 44 Hz for Batch application DN ≤ 25/1“; cable gland PG13.5		
• 11 … 30 V DC, 11 … 24 V AC, 50/60 Hz	**7ME6920-2EB30-1AA0**	
• 115 … 230 V AC, 50/60 Hz	**7ME6920-2EB10-1AA0**	

⬟ We can offer shorter delivery times for configurations designated with the Quick Ship Symbol ⬟. For details see page 9/5 in the appendix.

Operating instructions for SITRANS F M MAG 5000/6000

Description	Article No.
For SITRANS F M MAG 5000/6000 IP67	
• English	**A5E02338368**
• German	**A5E02944982**
• Spanish	**A5E02944995**
• French	**A5E02944990**
For SITRANS F M MAG 5000/6000 19"	
• English	**A5E02082880**

This device is shipped with a Quick Start guide and a CD containing further SITRANS F literature.

All literature is also available for free at:
http://www.siemens.com/flowdocumentation

Communication modules for MAG 6000

Description	Article No.	
HART (not for MAG 6000 I) ⬟	**FDK:085U0226**	
Modbus RTU/RS 485 ⬟	**FDK:085U0234**	
PROFIBUS PA Profile 3 ⬟	**FDK:085U0236**	
PROFIBUS DP Profile 3 ⬟	**FDK:085U0237**	
DeviceNet ⬟	**FDK:085U0229**	
FOUNDATION Fieldbus H1	**A5E02054250**	

Operating instructions for SITRANS F add-on modules

Description	Article No.
HART	
• English	**A5E03089708**
PROFIBUS PA/DP	
• English	**A5E00726137**
• German	**A5E01026429**
Modbus	
• English	**A5E00753974**
• German	**A5E03089262**
• Spanish	**A5E03089278**
• French	**A5E03089265**
FOUNDATION Fieldbus	
• English	**A5E02318728**
• German	**A5E02488856**
• Spanish	**A5E02512177**
• French	**A5E02512169**
DeviceNet	
• English	**A5E03089720**

This device is shipped with a Quick Start guide and a CD containing further SITRANS F literature.

Accessories for MAG 5000 and MAG 6000

required for remote mount

Description	Article No.	
Wall mounting unit for IP67/ NEMA 4X/6 version, wall bracket, terminal box in polyamide[1]		
• 4 x M20 cable glands ⬟	**FDK:085U1018**	
• 4 x ½“ NPT cable glands ⬟	**FDK:085U1053**	
Sun lid for MAG 5000/6000 transmitter (Frame and lid)	**A5E02328485**	
Cable for standard electrode or coil, 3 x 1.5 mm² / 18 gage with shield PVC; Temperature range: -30 ... +70 °C (-22 ... +158 °F)		
• 10 m (33 ft) ⬟	**FDK:083F0121**	
• 20 m (65 ft) ⬟	**FDK:083F0210**	
• 40 m (130 ft) ⬟	**FDK:083F0211**	
• 60 m (200 ft) ⬟	**FDK:083F0212**	
• 100 m (330 ft)	**FDK:083F0213**	
• 150 m (500 ft)	**FDK:083F3052**	
• 200 m (650 ft)	**FDK:083F3053**	
• 500 m (1650 ft)	**FDK:083F3054**	

⬟ We can offer shorter delivery times for configurations designated with the Quick Ship Symbol ⬟. For details see page 9/5 in the appendix.

[1] For stainless steel wall mounting kit, order:
- M20: FDK:085U1018 and A5E00836867
- ½ NPT: FDK:085U1053 and A5E00836868

© Siemens AG 2014

Transmitter MAG 5000/6000

Description	Article No.	
Electrode cable for empty pipe or low conductivity[1], double shielded, 3 x 0.25 mm². Temperature range : -30 ... +70 °C (-22 ... +158 °F)		
• 10 m (33 ft)	**FDK:083F3020**	
• 20 m (65 ft)	**FDK:083F3095**	
• 40 m (130 ft)	**FDK:083F3094**	
• 60 m (200 ft)	**FDK:083F3093**	
• 100 m (330 ft)	**FDK:083F3092**	
• 150 m (500 ft)	**FDK:083F3056**	
• 200 m (650 ft)	**FDK:083F3057**	
• 500 m (1650 ft)	**FDK:083F3058**	
Low-noise electrode coax cable for low conductivity and high vibration levels of cables, 3 x 0.13 mm²		
	A5E02272692	
	A5E02272723	
• 10 m (33 ft)	**A5E02272730**	
Cable kit with standard coil cable[1], 3 x 1.5 mm²/18 gage with shield PVC and electrode cable double shielded, 3 x 0.25 mm² Temperature range: -30 ... +70 °C (-22 ... +158 °F)		
• 5 m (16.5 ft)	**A5E02296329**	
• 10 m (33 ft)	**A5E01181647**	
• 15 m (49 ft)	**A5E02296464**	
• 20 m (65 ft)	**A5E01181656**	
• 25 m (82 ft)	**A5E02296490**	
• 30 m (98 ft)	**A5E02296494**	
• 40 m (130 ft)	**A5E01181686**	
• 50 m (164 ft)	**A5E02296498**	
• 60 m (200 ft)	**A5E01181689**	
• 100 m (330 ft)	**A5E01181691**	
• 150 m (500 ft)	**A5E01181699**	
• 200 m (650 ft)	**A5E01181703**	
• 500 m (1650 ft)	**A5E01181705**	
Potting kit for terminal box of flow sensors for IP68/NEMA 6P	**FDK:085U0220**	
19" safety barrier (21 TE)[1] [EEx e ia] IIC for MAG 1100 Ex sensors and MAG 3100 Ex sensors 12 ... 24 V, 115 ... 230 V, incl. back plate (A5E02559810)	**FDK:083F5034**	
Panel mounting enclosure for 19" insert (21 TE); IP65/NEMA 2 enclosure in ABS plastic for front panel mounting	**FDK:083F5030**	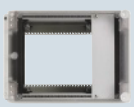
Panel mounting enclosure for 19" insert (42 TE); IP65/NEMA 2 enclosure in ABS plastic for front panel mounting	**FDK:083F5031**	

required for remote mount

Description	Article No.	
Back of panel mounting enclosure for 19" insert (21 TE); IP20/NEMA 1 enclosure in aluminum	**FDK:083F5032**	
Back of panel mounting enclosure for 19" insert (42 TE); IP20/NEMA 1 enclosure in aluminum	**FDK:083F5033**	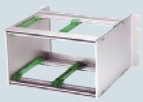
IP66/NEMA 4X, wall mounting enclosure for 19" inserts (without back plates). Use with PCB A5E02559813 or A5E02559814. Cable glands (FDK:083G0288) not included		
• 21 TE	**FDK:083F5037**	
• 42 TE	**FDK:083F5038**	
Front cover (7TE) for panel mounting enclosure	**FDK:083F4525**	
Sun shield for remote MAG 5000/6000 transmitters	**A5E01209496**	
Sun Shield for compact MAG 5000/6000 transmitters on MAG 3100 (DN 15 ... 2000 (½" ... 78") or MAG 5100 W (DN 150 ... 1200 (6" ... 48")	**A5E01209500**	

We can offer shorter delivery times for configurations designated with the Quick Ship Symbol. For details see page 9/5 in the appendix.

[1] Special cables cannot be used with 19" safety barrier

© Siemens AG 2014

Spare parts

Description	Article No.	
Connection board (for polyamide terminalbox)		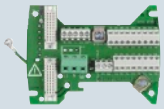
• 12 ... 24 V	**A5E02559817**	
• 115 ... 230 V	**A5E02559816**	
Connection board (for stainless steel terminal-box)		
• 12 ... 24 V	**A5E02604280**	
• 115 ... 230 V	**A5E02604272**	
19" enclosure, 12 ... 24 V, 115 ... 230 V		
• Connection board for standard 19" transmitter	**A5E02559809**	
• Connection board for transmitter ia and safety barrier	**A5E02559810**	
• Connection board for transmitter ia/ib and safety barrier (only for sensors produced before October 2007)	**A5E02559811**	
• Connection board for transmitter and cleaning unit	**FDK:083F4123**	
SENSORPROM memory unit (Sensor code and serial numbers must be specified on order)		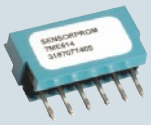
• 2 kB (for MAG 5000/6000/ MAG 6000 I)		
- 1 pc.	**FDK:085U1005**	
- 10 pcs.	**FDK:083F5052**	
• 250 B (for MAG 2500/3000)	**FDK:085U1008**	
Display unit for MAG 5000/6000		
• Black neutral front	**FDK:085U1038**	
• Siemens front	**FDK:085U1039**	
HW key	**On request**	

Description	Article No.	
Cable glands, for above cable, 4 pcs.		½" NPT M20
• M20 ⬟	**A5E00822490**	
• ½" NPT ⬟	**A5E00822501**	
• PG 13.5, 2 pcs.	**FDK:083G0228**	
Sealing screws for sensor/ transmitter, 2 pcs	**FDK:085U0221**	
Terminal box, in polyamide, inclusive lid, terminal blocks, gasket and screws		
• M20	**FDK:085U1050**	
• ½" NPT	**FDK:085U1052**	
Terminal box lid, in polyamide	**FDK:085U1003**	
Terminal box, in stainless steel, inclusive lid, terminal blocks, gasket and screws, for MAG 6000 in stainless steel and for all Ex sensors,		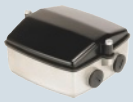
• M20	**A5E00836867**	
• ½" NPT	**A5E00836868**	
Terminal box (3A) for MAG 1100 F in polyamide, inclusive lid, terminal blocks, gasket and screws		
• M20	**A5E00822478**	
• ½" NPT	**A5E00822479**	
Wall unit enclosure IP66, 12 ... 24 V, 115 ... 230 V		
• PCB for standard transmitter	**A5E02559813**	
• PCB for transmitter ia/e and safety barrier	**A5E02559814**	
• PCB for transmitter ia/ib and safety barrier (7ME6130, 7ME6150 and 7ME6330)	**A5E02559812**	
• PCB for transmitter and cleaning unit	**A5E02559815**	

⬟ We can offer shorter delivery times for configurations designated with the Quick Ship Symbol ⬟. For details see page 9/5 in the appendix.

© Siemens AG 2014

3

Dimensional drawings

Transmitter IP67/NEMA 4X/6 compact polyamide

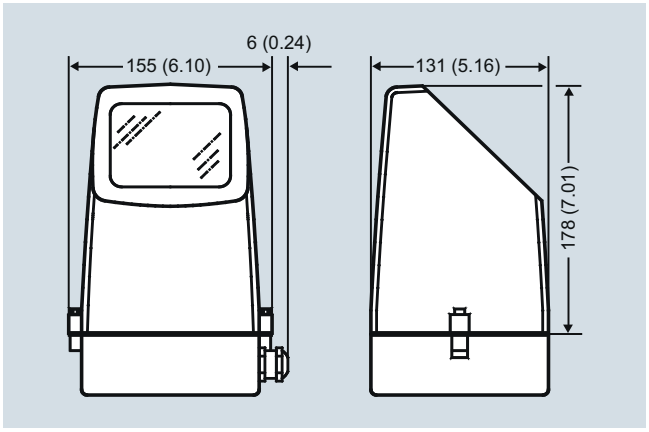

Transmitter compact mounted, dimensions in mm (inch)

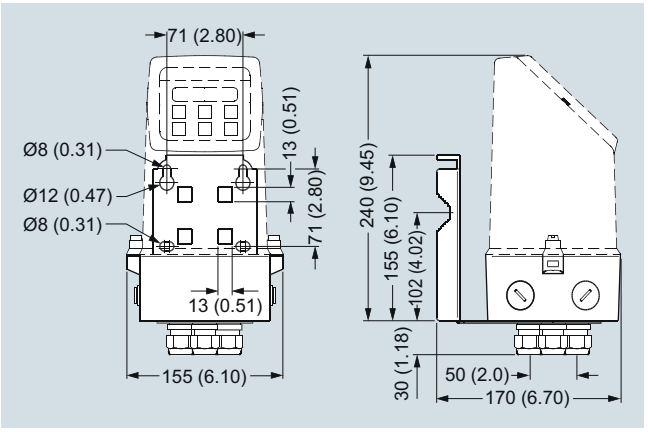

Transmitter wall mounted, dimensions in mm (inch)

Transmitter, 19" IP20/NEMA 1 standard unit

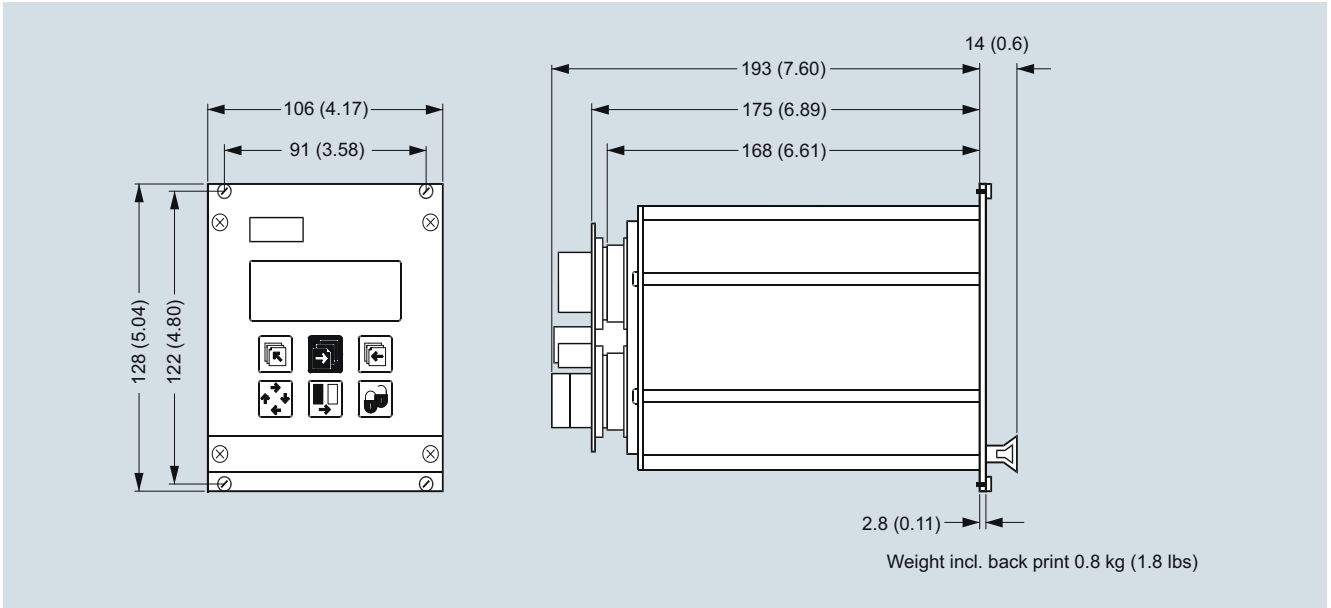

Dimensions in mm (inch)

© Siemens AG 2014

3

Schematics

Electrical connection

Grounding

PE must be connected due to safety class 1 power supply.

Mechanical counters

When mounting a mechanical counter to terminals 57 and 58 (active output), a 1000 µF capacitor must be connected to the terminals 56 and 58. Capacitor + is connected to terminal 56 and capacitor - to terminal 58.

Output cables

If the output cable length is long in noisy environment, we recommend to use shielded cable.

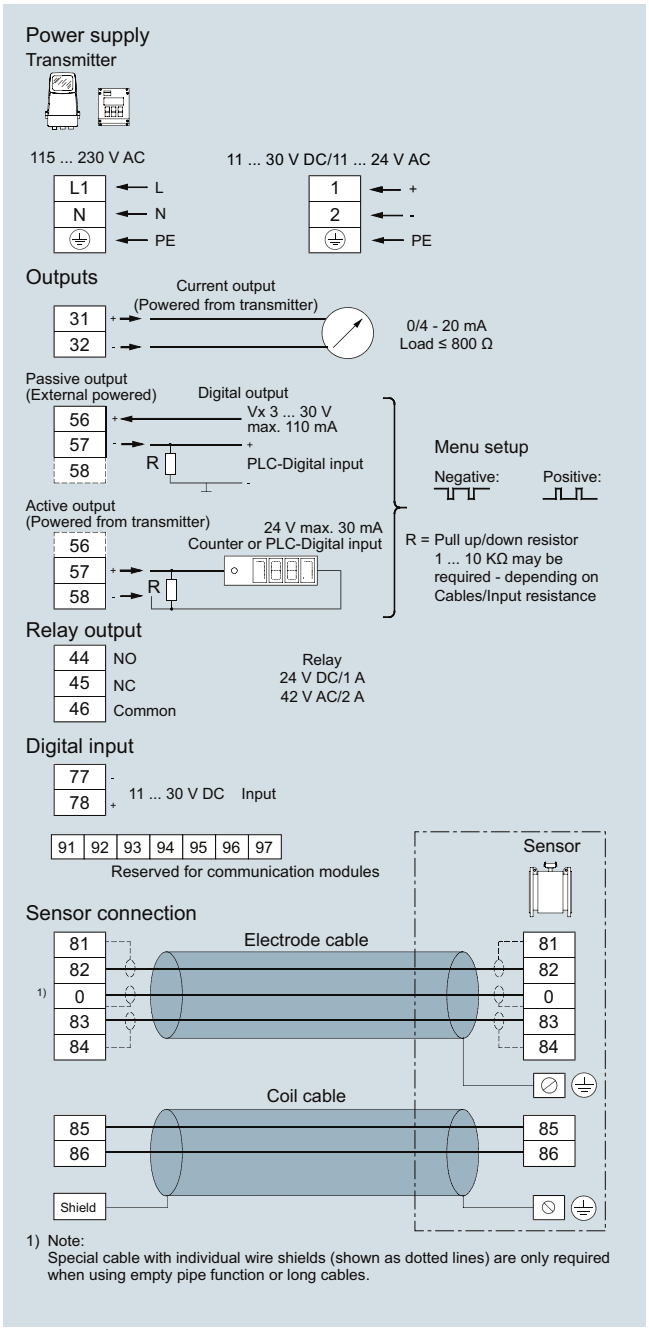

© Siemens AG 2014

Flow sensor MAG 5100 W

Overview

The SITRANS F M MAG 5100 W is an electromagnetic flow sensor designed to meet ground water, drinking water, waste water, sewage or sludge applications.

Benefits

- DN 15 to DN 1200 / 2000 (½" to 48"/78")
- Stock program of MAG 5100 W secures short delivery time
- Connection flanges EN 1092-1 (DIN 2501), ANSI, AWWA, AS and JIS.
- NBR Hard Rubber and Ebonite Hard Rubber liner for all water applications
- EPDM liner with drinking water approvals
- Hastelloy integrated grounding and measuring electrodes
- Increased low flow accuracy for water leak detection, due to coned liner design (Article No. 7ME6520, DN 15 to 300 mm (½" to 12")).
- Drinking water approvals
- Suitable for direct burial and constant flooding
- Custody transfer approvals
- Build-in length according to ISO 13359; the standard includes sizes up to DN 400.
- Easy commissioning, SENSORPROM unit automatically uploads calibration values and settings.
- Designed so patented in-situ verification can be conducted. Using SENSORPROM fingerprint.
- Custody Transfer option for water billing, with type approval after OIML R 49 and verified according to MI-001 - 0D inlet/ 0D outlet installation
  - pattern approval OIML R 49 (Denmark, Germany)
  - conforms to ISO 4064 and EN 14154 for mechanical flowmeters
  - PTB K7.2
- FM Fire Service Meter (Class Number 1044) for automatic fire protection systems
- Meets EEC directives: PED, 97/23/EC pressure directive for EN1092-1 flanges
- Simple onsite or factory upgrade to IP68/NEMA 6P of a standard sensor
- MCERTS approval for UK environmental market

Application

The main applications of the SITRANS F M electromagnetic flow sensors can be found in the following fields:

- Water abstraction
- Water treatment
- Water distribution network (leak detection management)
- Custody transfer water meters
- Irrigation
- Waste water treatment
- Filtration plant (e.g. reverse osmosis and ultra filtration)
- Industrial water applications

Mode of operation

The flow measuring principle is based on Faradays law of electromagnetic induction according to which the sensor converts the flow into an electrical voltage proportional to the velocity of the flow.

Integration

The complete flowmeter consists of a flow sensor and an associated transmitter SITRANS F M MAG 5000, MAG 6000 or MAG 6000 I.

The flexible communication concept USM II simplifies integration and update to a variety of fieldbus systems, e.g. HART, DeviceNet, PROFIBUS DP and PA, FOUNDATION Fieldbus H1 or Modbus RTU/RS 485.

© Siemens AG 2014

Technical specifications

Product characteristic	**MAG 5100 W (7ME6520)** **Mainly for the European market** **EPDM or NBR lining**	**MAG 5100 W (7ME6580)** **Mainly for the non-European market** **Ebonite lining**
Design and nominal size	Coned sensor (octagon liner): DN 15 ... 40 (½" ... 1½") Coned sensor: DN 50 ... 300 (2" ... 12") Full bore sensor: DN 350 ... 1200 (14" ... 48")	Full bore sensor: DN 25 ... 2000 (1" ... 78")
Measuring principle	Electromagnetic induction	Electromagnetic induction
Excitation frequency (Mains supply: 50/60 Hz)	DN 15 ... 65 (½" ... 2½"): 12.5 Hz/15 Hz DN 80 ... 150 (3" ... 6"): 6.25 Hz/7.5 Hz DN 200 ... 300 (8" ... 12"): 3.125 Hz/3.75 Hz DN 350 ... 1200 (14" ... 48"): 1.5625 Hz/1.875 Hz	DN 25 ... 65 (1" ... 2½"): 12.5 Hz/15 Hz DN 80 ... 150 (3" ... 6"): 6.25 Hz/7.5 Hz DN 200 ... 1200 (8" ... 48"): 3.125 Hz/3.75 Hz DN 1400 ... 2000 (54" ... 78"): 1.5625 Hz/1.875 Hz
Process connection		
Flanges[1]		
• EN 1092-1	PN 10 (145 psi) : DN 200 ... 300 (8" ... 12") Flat face PN 10 (145 psi): DN 350 ... 1200 (14" ... 48") Raised face[2] PN 16 (232 psi): DN 50 ... 300 (2" ... 12") Flat face[3] PN 16 (232 psi): DN 350 ... 1200 (14" ... 48") Raised face PN 40 (580 psi): DN 15 ... 40 (½" ... 1½") Flat face	Raised face[3] (EN 1092-1, DIN 2501 and BS 4504 have the same mating dimensions) PN 6 (87 psi): DN 1400 ... 2000 (54" ... 78") PN 10 (145 psi): DN 200 ... 2000 (8" ... 78") PN 16 (232 psi): DN 65 ... 600 (2½" ... 24") PN 40 (580 psi): DN 25 ... 50 (1" ... 2")
• ANSI B16.5	Class 150: ½" ... 12" flat face; 14" ... 24" raised face	Class 150: 1" ... 24"; raised face
• AWWA C-207	Class D: 28" ... 48", flat face	Class D: 28" ... 78", flat face
• AS4087	PN 16 (DN 50 ... 1200), (2" ... 48") 16 bar (232 psi)	PN 16 (DN 50 ... 1200), (2" ... 48") 16 bar (232 psi)
• JIS B 2220:2004	-	K10 (1" ... 24")
Rated Operation conditions		
Ambient temperature		
• Sensor	-40 ... +70 °C (-40 ... +158 °F)	-20 ... +70 °C (-4 ... +158 °F)
• With compact transmitter MAG 5000/6000[4]	-20 ... +60 °C (-4 ... +140 °F)	-20 ... +60 °C (-4 ... +140 °F)
Operating pressure (Abs) [abs. bar] (Maximum operating pressure depending on flange standard, decreases with increasing operating temperature)	DN 15 ... 40 (½" ... 1½"): 0.01 ... 40 bar (0.15 ... 580 psi) DN 50 ... 300 (2" ... 12"): 0.03 ... 20 bar (0.44 ... 290 psi) DN 350 ... 1200 (14" ... 48"): 0.01 ... 16 bar (0.15 ... 232 psi)	DN 25 ... 50 (1" ... 2"): 0.01 ... 40 bar (0.15 ... 580 psi) DN 65 ... 1200 (2½" ... 48"): 0.01 ... 16 bar (0.15 ... 232 psi) DN 1400 ... 2000 (54" ... 78"): 0.01 ... 10 bar (0.15 ... 145 psi)
Enclosure rating		
• Standard	IP67 to EN 60529/NEMA 4X/6 (1 mH_2O for 30 min)	IP67 to EN 60529/NEMA 4X/6 (1 mH_2O for 30 min)
• Option	IP68 to EN 60529/NEMA 6P (10 mH_2O continuously)	IP68 to EN 60529/NEMA 6P (10 mH_2O continuously)
Pressure drop	DN 15 and 25 (½" and 1"): Max. 20 mbar (0.29 psi) at 1 m/s (3 ft/s). DN 40 ... 300 (1½" ... 12"): Max 25 mbar (0.36 psi) at 3 m/s (10 ft/s) DN 350 ... 1200 (14" ... 48"): Insignificant	Insignificant
Test pressure	1.5 x PN (where applicable) FM Fire Service: 2 x PN	1.5 x PN (where applicable)
Mechanical load (vibration)	18 ... 1000 Hz random in x, y, z, directions for 2 hours according to EN 60068-2-36 Sensor: 3.17 g RMS Sensor with compact MAG 5000/6000 mounted transmitter: 3.17 g RMS Sensor with compact MAG 6000 I mounted transmitter: 1.14 g RMS	18 ... 1000 Hz random in x, y, z, directions for 2 hours according to EN 60068-2-36 Sensor: 3.17 g RMS Sensor with compact MAG 5000/6000 mounted transmitter: 3.17 g RMS Sensor with compact MAG 6000 I mounted transmitter: 1.14 g RMS

© Siemens AG 2014

Flow sensor MAG 5100 W

Product characteristic	Mainly for the European market (7ME6520)	Mainly for the non-European market (7ME6580)
	EPDM or NBR lining	**Ebonite lining**
Medium conditions		
Temperature of medium		
• NBR	-10 ... +70 °C (14 ... 158 °F)	-
• EPDM	-10 ... +70 °C (14 ... 158 °F)	-
• EPDM/NBR (MI-001)	0.1 ... 30 °C (32 ... 76 °F)	-
• Ebonite	-	-10 ... +70 °C (14 ... 158 °F)
EMC	2004/108/EC	2004/108/EC
Design		
Material		
• Housing and flanges	Carbon steel ASTM A 105, with corrosion-resistant two-component epoxy coating (150 µm/300 µm) Corrosivity category C4, according to ISO 12944-2	Carbon steel ASTM A 105, with corrosion-resistant two-component epoxy coating (150 µm/300 µm) Corrosivity category C4, according to ISO 12944-2
• Measuring pipe	Stainless steel AISI 304/1.4301	Stainless steel AISI 304/1.4301
• Electrode	Hastelloy C	Hastelloy C
• Grounding electrode	Hastelloy C	Hastelloy C
• Terminal box	Fibre glass reinforced polyamide	Fibre glass reinforced polyamide
Certificates and approvals		
Calibration		
• Standard production calibration (default), calibration report shipped with sensor	Zero-point, 2 x 25 % and 2 x 90 %	Zero-point, 2 x 25 % and 2 x 90 %
• Special calibration	5-point calibration: 20 %, 40 %, 60 %, 80 %, 100 % of factory Q_{max}	5-point calibration: 20 %, 40 %, 60 %, 80 %, 100 % of factory Q_{max}
	10-point calibration: ascending and descending at 20 %, 40 %, 60 %, 80 %, 100 % of factory Q_{max}	10-point calibration: ascending and descending at 20 %, 40 %, 60 %, 80 %, 100 % of factory Q_{max}
	Matched-pair calibration: default, 5-point or 10-point	Matched-pair calibration: default, 5-point or 10-point
Material certificate EN 10204 3.1	Available when ordering together with meter[5)]	Available when ordering together with meter[5)]
Custody Transfer (only together with MAG 6000 CT)	OIML R 49 pattern approval cold water (Denmark and Germany): DN 50 ... 300 (2“ ... 12")	
	MI-001 cold water (EU): DN 50 ... 300 (2“ ... 12")	
	PTB K7.2: Chilled water energy metering DN 50-300 (order as special) Certificate number: 22 76.10 02	
Drinking water approvals	EPDM liner: NSF/ANSI Standard 61[6)] (Cold water, US) WRAS (WRc, BS6920 cold water, GB) ACS (F), DVGW W270 (D) Belgaqua (B)	NSF/ANSI Standard 61[6)] (Cold water, US) WRAS (WRc, BS6920 cold water, GB)
Other approvals	MCERTS	
	PED conforming: All EN1092-1 flanges and ANSI Class 150 (< DN 300 (<12")) – 97/23/EC[7)]	PED conforming: All EN1092-1 flanges (≤ DN 600 (≤ 24") – 97/23/EC[7)]
	CRN (DN 50 - DN 1200 (2" ... 48"))	CRN
	CSA Class I, Div 2[8)]	CSA Class I, Div 2[8)]
	FM Class I, Div 2[8)]	FM Class I, Div 2[8)]
	FM Fire Service Approval according to class 1044[8)9)]	
	VdS: Extinguishing systems DN 50 ... 300	

1) DN 750, DN 1050 and DN 1100 (30", 42" and 44") not available with EN 1092-1 (PN 10 and PN 16) and AS4087 flanges
2) Type 01 (SORF)
3) DN ≤ 600 type 01 (SORF); DN > 600 type 11
4) With compact transmitter MAG 5000 CT/6000 CT -20 ... +50 °C (-4 ... +122 °F); with compact MI-001 approved transmitter -25 ... +55 °C (-13 ... +131 °F)
5) Has to be ordered with the meter. It is not possible to order the certificate afterwards.
6) Including Annex G
7) For sizes larger than 600 mm (24”) in PN 16 PED conformity is available as a cost-added option. The basic unit will carry the LVD (Low Voltage Directive) and EMC approval. All products sold outside of EU and EFTA are excluded from the directive, also products sold into certain market sectors are excluded. These include:
a) Meters used in networks for the supply, distribution and discharge of water.
b) Meters used in pipelines for the conveyance of any fluid from offshore to onshore.
c) Meters used in the extraction of petroleum or gas, including Christmas tree and manifold equipment.
d) Any meter mounted on a ship or mobile offshore platform. For further information on the PED standard and requirements see page 9/6.
8) Not for sensors with 300 µm coating.
9) DN 50, DN 80, DN 100, DN 150, DN 200, DN 250, and DN 300 (2", 3", 4", 6", 8", 10", and 12") with ANSI B16.5 Class 150 flanges

© Siemens AG 2014

MAG 5100 W (7ME6520) with MAG 6000 CT (Revenue program) MI-001

MAG 5100 W CT program is type approved according to international water meter standard OIML R 49. Since the first November 2006 the MI-001 water meter directive is in force, which means that all water meters can be sold across the EU borders if the water meters contain a MI-001 label.

The MAG 5100 W MI-001 verified and labeled products are a Class II approval according to Directive 2004/22/EC of the European Parliament and Council of March 31, 2004 on measuring instruments (MID), Annex MI-001 in the sizes from DN 50 to DN 300 (Article No. 7ME6520).

The MID certification is obtained as a modul B + D module approval according to the above mentioned directive.

Module B : Type approval according to OIML R 49

Module D : Quality insurance approval of production

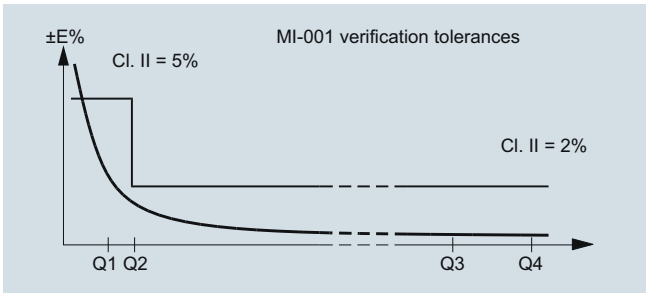

MAG 5100 W (7ME6520) with MAG 5000/MAG 6000 or MAG 6000 CT for Fire Service applications

MAG 5100 W (7ME6520) is FM Fire Service approved for automatic fire protection systems. The approval is applicable for the sizes DN 50, DN 80, DN 100, DN 150, DN 200, DN 250 and DN 300 (2", 3", 4", 6", 8", 10" and 12") with ANSI B16.5 Class 150 flanges. The FM Fire Service approved product can be ordered via the Z-options P20, P21 and P22.

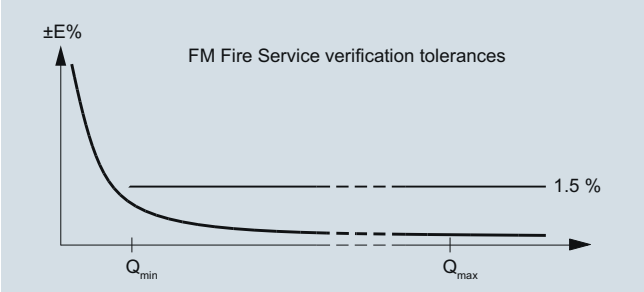

© Siemens AG 2014

Flow sensor MAG 5100 W

MAG 5100 W (7ME6520) MI-001 verified and labeled products at a given Q3 and Q3/Q4 = 1.25 and Q2/Q1 = 1.6 measuring ranges see table below:

Order code: P11	**DN 50 (2“)**	**DN 65 (2½“)**	**DN 80 (3“)**	**DN 100 (4“)**	**DN 125 (5“)**	**DN 150 (6“)**	**DN 200 (8“)**	**DN 250 (10“)**	**DN 300 (12“)**
„R“ Q3/Q1	25	25	25	25	25	25	25	25	25
Q4 [m^3/h]	20	31.25	50	78.75	125	200	312.5	500	787.5
Q3 [m^3/h]	**16**	**25**	**40**	**63**	**100**	**160**	**250**	**400**	**630**
Q2 [m^3/h]	1.02	1.6	2.6	4.03	6.4	10.24	16	25.6	40.32
Q1 [m^3/h]	0.64	1.00	1.60	2.52	4.0	6.4	10.0	16.0	25.2

Order code: P12	**DN 50 (2“)**	**DN 65 (2½“)**	**DN 80 (3“)**	**DN 100 (4“)**	**DN 125 (5“)**	**DN 150 (6“)**	**DN 200 (8“)**	**DN 250 (10“)**	**DN 300 (12“)**
„R“ Q3/Q1	63	63	63	63	63	63	63	63	63
Q4 [m^3/h]	20	31.25	50	78.75	125	200	312.5	500	787.5
Q3 [m^3/h]	**16**	**25**	**40**	**63**	**100**	**160**	**250**	**400**	**630**
Q2 [m^3/h]	0.41	0.63	1.02	1.6	2.54	4.06	6.35	10.2	16.0
Q1 [m^3/h]	0.25	0.40	0.63	1.00	1.59	2.54	3.97	6.35	10.0

Order code: P13	**DN 50 (2“)**	**DN 65 (2½“)**	**DN 80 (3“)**	**DN 100 (4“)**	**DN 125 (5“)**	**DN 150 (6“)**	**DN 200 (8“)**	**DN 250 (10“)**	**DN 300 (12“)**
„R“ Q3/Q1	80	80	80	80	80	80	80	80	80
Q4 [m^3/h]	20	31.25	50	78.75	125	200	312.5	500	787.5
Q3 [m^3/h]	**16**	**25**	**40**	**63**	**100**	**160**	**250**	**400**	**630**
Q2 [m^3/h]	0.32	0.50	0.80	1.20	2.00	3.20	5.0	8.0	12.6
Q1 [m^3/h]	0.20	0.31	0.50	0.75	1.25	2.00	3.13	5.0	7.90

Order code: P16	**DN 50 (2“)**	**DN 65 (2½“)**	**DN 80 (3“)**	**DN 100 (4“)**	**DN 125 (5“)**	**DN 150 (6“)**	**DN 200 (8“)**	**DN 250 (10“)**	**DN 300 (12“)**
„R“ Q3/Q1	160	160	160	160	160	160	160	160	160
Q4 [m^3/h]	50	78.75	125	200	312.5	500	787.5	1250	2000
Q3 [m^3/h]	**40**	**63**	**100**	**160**	**250**	**400**	**630**	**1000**	**1600**
Q2 [m^3/h]	0.40	0.63	1.00	1.60	2.50	4.00	6.3	10.0	16.0
Q1 [m^3/h]	0.25	0.39	0.63	1.00	1.56	2.50	3.94	6.3	10.0

Order code: P17	**DN 50 (2“)**	**DN 65 (2½“)**	**DN 80 (3“)**	**DN 100 (4“)**	**DN 125 (5“)**	**DN 150 (6“)**	**DN 200 (8“)**	**DN 250 (10“)**	**DN 300 (12“)**
„R“ Q3/Q1	200	200	200	200	200	200	200	200	200
Q4 [m^3/h]	50	78.75	125	200	312.5	500	787.5	1250	2000
Q3 [m^3/h]	**40**	**63**	**100**	**160**	**250**	**400**	**630**	**1000**	**1600**
Q2 [m^3/h]	0.32	0.50	0.80	1.28	2.00	3.20	5.0	8.0	12.8
Q1 [m^3/h]	0.20	0.32	0.50	0.80	1.25	2.00	3.15	5.0	8.0

Order code: P18	**DN 50 (2“)**	**DN 65 (2½“)**	**DN 80 (3“)**	**DN 100 (4“)**	**DN 125 (5“)**	**DN 150 (6“)**	**DN 200 (8“)**	**DN 250 (10“)**	**DN 300 (12“)**
„R“ Q3/Q1	250	250	250	250	250	250	250	250	250
Q4 [m^3/h]	50	78.75	125	200	312.5	500	787.5	1250	2000
Q3 [m^3/h]	**40**	**63**	**100**	**160**	**250**	**400**	**630**	**1000**	**1600**
Q2 [m^3/h]	0.26	0.40	0.64	1.02	1.60	2.56	4.0	6.4	10.24
Q1 [m^3/h]	0.16	0.25	0.40	0.64	1.00	1.60	2.52	4.0	6.4

The Label is placed on the side of the encapsulation. An example of the product label is shown below:

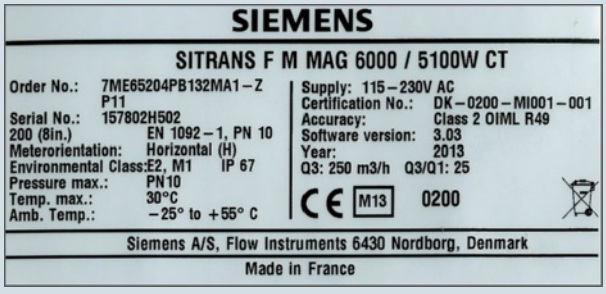

OIML R 49/MI-001 approvals valid for:

- DN 50 to 300 mm (2" to 12")
- Horizontal installation
- Compact or remote with max. 3 m cable
- Power supply 115/230 V AC

Other restrictions may apply (see certificate).

Special OIML / MI-001 settings:

- Unit: m^3
- Qmax: Q3
- Digital output: Frequency

For other factory settings, see Operating Instructions.

© Siemens AG 2014

Selection and Ordering data		Article No.
Sensor SITRANS F M MAG 5100 W	↗	7ME6520-
Hastelloy electrodes, carbon steel flanges, EU water markets and low flow applications		-2
↗ Click on the Article No. for the online configuration in the PIA Life Cycle Portal.		
Diameter		
DN 15 (½")	⬟	1V
DN 25 (1")	⬟	2D
DN 40 (1½")	⬟	2R
DN 50 (2")	⬟	2Y
DN 65 (2½")	⬟	3F
DN 80 (3")	⬟	3M
DN 100 (4")	⬟	3T
DN 125 (5")	⬟	4B
DN 150 (6")	⬟	4H
DN 200 (8")	⬟	4P
DN 250 (10")	⬟	4V
DN 300 (12")	⬟	5D
DN 350 (14")		5K
DN 400 (16")		5R
DN 450 (18")		5Y
DN 500 (20")		6F
DN 600 (24")		6P
DN 700 (28")		6Y
DN 750 (30")		7D
DN 800 (32")		7H
DN 900 (36")		7M
DN 1000 (40")		7R
(42")		7U
(44")		7V
DN 1200 (48")		8B
Flange norm and pressure rating		
to EN 1092-1		
PN 10 (DN 200 ... 1200/8" ... 48")	⬟	B
PN 16 (DN 50 ... 1200/2" ... 48")	⬟	C
PN 16, non PED (DN 700 ... 1200/28" ... 48")		D
PN 40 (DN 15 ... 40/½" ... 1½")	⬟	F
to ANSI B16.5		
class 150 (½" ... 24")	⬟	J
to AWWA C-207		
Class D (28" ... 48")		L
to AS 4087		
PN 16 (DN 50 ... 1200/2" ... 48")		N
Flange material and coating		
Carbon steel flanges ASTM A 105, 150 µm coating	⬟	1
Carbon steel flanges ASTM A 105, 300 µm coating		4
Liner material		
EPDM	⬟	2
NBR Hard Rubber	⬟	3
Transmitter		
Sensor for remote transmitter (Order transmitter separately)	⬟	A
MAG 6000 I, Aluminum, 18 ... 90 V DC, 115 ... 230 V AC	⬟	C
MAG 6000, Polyamid, 11 ... 30 V DC/11 ... 24 V AC	⬟	H
MAG 6000, Polyamid, 115 ... 230 V AC	⬟	J
MAG 5000, Polyamid, 11 ... 30 V DC/11 ... 24 V AC	⬟	K
MAG 5000, Polyamid, 115 ... 230 V AC	⬟	L
MAG 6000 CT, Polyamid, 115 ... 230 V AC		M

Selection and Ordering data		Article No.
Sensor SITRANS F M MAG 5100 W		7ME6520-
Hastelloy electrodes, carbon steel flanges, EU water markets and low flow applications		-2
Communication		
None	⬟	A
HART	⬟	B
PROFIBUS PA Profile 3 (only MAG 6000/MAG 6000 I)	⬟	F
PROFIBUS DP Profile 3 (only MAG 6000/MAG 6000 I)	⬟	G
Modbus RTU/RS 485 (only MAG 6000/MAG 6000 I)	⬟	E
FOUNDATION Fieldbus H1 (only MAG 6000/ MAG 6000 I)	⬟	J
Cable glands/terminal box		
Metric/Polyamid terminal box or 6000 I compact	⬟	1
½" NPT/Polyamid terminal box or 6000 I compact	⬟	2

⬟ We can offer shorter delivery times for configurations designated with the Quick Ship Symbol ⬟. For details see page 9/5 in the appendix.

© Siemens AG 2014

3

Selection and Ordering data	Order code
Additional information	
Please add **"-Z"** to Article No. and specify Order code(s) and plain text.	
Material certificate according to EN 10204-3.1	**C12**
Factory certificate according to EN 10204-2.2	**C14**
Factory certificate according to EN 10204-2.1	**C15**
FP2E marking (only France)	**C17**
Special calibration	
• 5-point calibration for DN 15 ... DN 200[1)]	**D01**
• 5-point calibration for DN 250 ... DN 600[1)]	**D02**
• 5-point calibration for DN 700 ... DN 1200[1)]	**D03**
• 10-point calibration for DN 15 ... DN 200[2)]	**D06**
• 10-point calibration for DN 250 ... DN 600[2)]	**D07**
• 10-point calibration for DN 700 ... DN 1200[2)]	**D08**
• Default (2 x 25 % and 2 x 90 %) match-pair calibration for DN 15 ... DN 200	**D11**
• Default (2 x 25 % and 2 x 90 %) match-pair calibration for DN 250 ... DN 600	**D12**
• Default (2 x 25 % and 2 x 90 %) match-pair calibration for DN 700 ... DN 1200	**D13**
• 5-point, matched-pair calibration for DN 15 ... DN 200[1)]	**D15**
• 5-point, matched-pair calibration for DN 250 ... DN 600[1)]	**D16**
• 5-point, matched-pair calibration for DN 700 ... DN 1200[1)]	**D17**
• 10-point, matched-pair calibration for DN 15 ... DN 200[2)]	**D18**
• 10-point, matched-pair calibration for DN 250 ... DN 600[2)]	**D19**
• 10-point, matched-pair calibration for DN 700 ... DN 1200[2)]	**D20**
Approval/Verification[3)] (MI-001 : DN 50 ... 300 (compact only), EN 1092-1 PN10 and PN16 flanges with MAG 6000 CT)[4)]	
• Without verification according to OIML R 49	**P10**
• MI-001 Q3/Q1 = 25	**P11**
• MI-001 Q3/Q1 = 63	**P12**
• MI-001 Q3/Q1 = 80	**P13**
• MI-001 Q3/Q1 = 160	**P16**
• MI-001 Q3/Q1 = 200	**P17**
• MI-001 Q3/Q1 = 250	**P18**
FM Fire Service Approval (with ANSI B16.5 Class 150 flanges)	
• DN 50, DN 80 and DN 100 (2", 3" and 4")	**P20**
• DN 150 and DN 200 (6" and 8")	**P21**
• DN 250 and DN 300 (10" and 12")	**P22**
Tag name plate, stainless steel fixed with SS wire (add plain text)	**Y17**
Tag name plate, plastic (self-adhesive)	**Y18**
Customer-specific converter setup	**Y20**
Sensor cables wired (specify cable Article No.)	**Y40**
Sensor for remote transmitter's junction box potted to IP68 with wired cable (specify cable Article No.)	**Y41**
Other postproduction requirements (add desired text)	**Y99**

Selection and Ordering data	Order code
Additional Calibrations	
Accredited Siemens Flow Instruments matched pair Calibration acc. to ISO/IEC 17025:2005	**On request[5)]**
Customer-witnessed calibration Any of above calibration	**On request[5)]**

1) 20 %, 40 %, 60 %, 80 %, 100 % of factory Q_{max}

2) Ascending and descending at 20 %, 40 %, 60 %, 80 %, 100 % of factory Q_{max}

3) For more details and references of the ranges please see the tables on page 3/96.

4) For remote version submit Product Variation Request.

5) Ordering On request as dedicated information from the customer on the individual sensors is required. Please fill in the calibration form found on http://pi.khe.siemens.de/index.aspx?Nr=17460 and send together with the order. (Size dependent restriction on maximum flow rates may apply)

Operating instructions for SITRANS F M MAG 5100 W

Description	Article No.
• English	**A5E03063678**
• German	**A5E03376527**
• Spanish	**A5E00376529**
• French	**A5E03376521**
• Chinese	**A5E03376501**

This device is shipped with a Quick Start guide and a CD containing further SITRANS F literature.

All literature is also available for free at:
http://www.siemens.com/flowdocumentation

Accessories

Description	Article No.	
Potting kit for terminal box of flow sensors for IP68/NEMA 6P ⬟	**FDK:085U0220**	

⬟ We can offer shorter delivery times for configurations designated with the Quick Ship Symbol ⬟. For details see page 9/5 in the appendix.

MAG 5000/6000 transmitters and sensors are packed in separate boxes, the final assembly takes place during installation at the customer's place. MAG 6000 I transmitters and sensors are delivered compact mounted from factory.
Communication module will be pre-mounted in the transmitter.

Please use online Product selector to get latest updates.

Product selector link:
www.pia-selector.automation.siemens.com

© Siemens AG 2014

Flow sensor MAG 5100 W

Selection and Ordering data	Order code
Additional information	
Please add **"-Z"** to Article No. and specify Order code(s) and plain text.	
Material certificate according to EN 10204-3.1	**C12**[1]
Factory certificate according to EN 10204-2.2	**C14**
Factory certificate according to EN 10204-2.1	**C15**
Special calibration	
• 5-point calibration for DN 15 ... DN 200[2]	**D01**
• 5-point calibration for DN 250 ... DN 600[2]	**D02**
• 5-point calibration for DN 700 ... DN 1200[2]	**D03**
• 10-point calibration for DN 15 ... DN 200[3]	**D06**
• 10-point calibration for DN 250 ... DN 600[3]	**D07**
• 10-point calibration for DN 700 ... DN 1200[3]	**D08**
• Default (2 x 25 % and 2 x 90 %) match-pair calibration for DN 15 ... DN 200	**D11**
• Default (2 x 25 % and 2 x 90 %) match-pair calibration for DN 250 ... DN 600	**D12**
• Default (2 x 25 % and 2 x 90 %) match-pair calibration for DN 700 ... DN 1200	**D13**
• 5-point, matched-pair calibration for DN 15 ... DN 200[2]	**D15**
• 5-point, matched-pair calibration for DN 250 ... DN 600[2]	**D16**
• 5-point, matched-pair calibration for DN 700 ... DN 1200[2]	**D17**
• 10-point, matched-pair calibration for DN 15 ... DN 200[3]	**D18**
• 10-point, matched-pair calibration for DN 250 ... DN 600[3]	**D19**
• 10-point, matched-pair calibration for DN 700 ... DN 1200[3]	**D20**
Tag name plate, stainless steel fixed with SS wire	**Y17**
Tag name plate, plastic (self-adhesive)	**Y18**
Customer-specific converter setup	**Y20**
Sensor cables wired (specify cable Article No.)	**Y40**
Sensor for remote transmitter's junction box potted to IP68 with wired cable (specify cable Article No.)	**Y41**
Other postproduction requirements (add desired text)	**Y99**

[1] Under preparation

[2] 20 %, 40 %, 60 %, 80 %, 100 % of factory Q_{max}

[3] Ascending and descending at 20 %, 40 %, 60 %, 80 %, 100 % of factory Q_{max}

⬟ We can offer shorter delivery times for configurations designated with the Quick Ship Symbol ⬟. For details see page 9/5 in the appendix.

Operating instructions for SITRANS F M MAG 5100 W

Description	Article No.
• German	**A5E03376527**
• English	**A5E03063678**
• French	**A5E03376521**
• Spanish	**A5E03376529**
• Chinese	**A5E03376501**

This device is shipped with a Quick Start guide and a CD containing further SITRANS F literature.

All literature is also available for free at:
http://www.siemens.com/flowdocumentation

Accessories

Description	Article No.	
Potting kit for terminal box of flow sensors for IP68/NEMA 6P ⬟	**FDK:085U0220**	

⬟ We can offer shorter delivery times for configurations designated with the Quick Ship Symbol ⬟. For details see page 9/5 in the appendix.

MAG 5000/6000 transmitters and sensors are packed in separate boxes, the final assembly takes place during installation at the customer's place.
Communication module will be pre-mounted in the transmitter.
Please use online Product selector to get latest updates.
Product selector link: www.pia-selector.automation.siemens.com

© Siemens AG 2014

Dimensional drawings

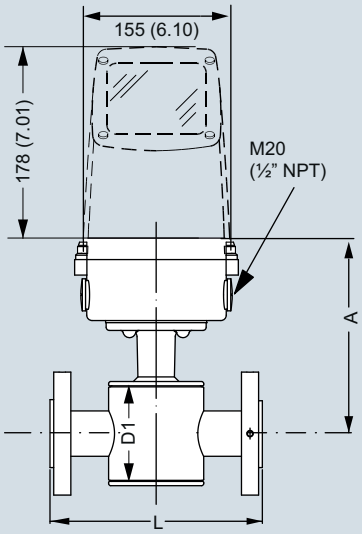

7ME6520: DN 15 ... 40 (½" ... 1½")

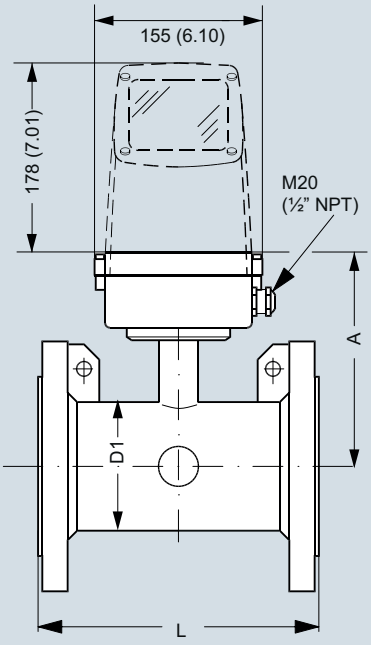

7ME6520: DN 50 ... 300 (2" ... 12")

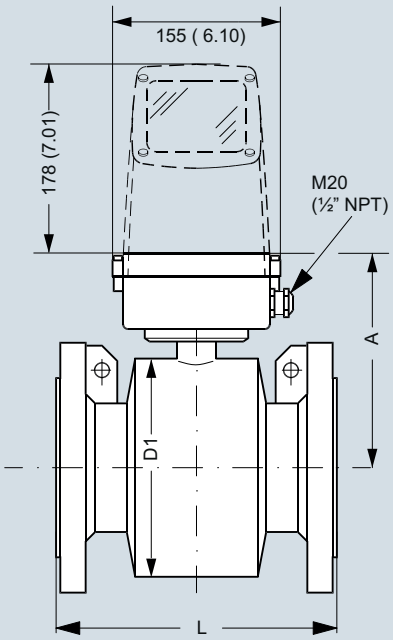

7ME6520: DN 350 ... 1200 (14" ... 48")
7ME6580: DN 25 ... 2000 (1" ... 78")

7ME6520 NBR or EPDM liner						7ME6580 Ebonite liner					
Nominal size		A		D1		A		D1		L	
[mm]	[inch]	[mm]	[inch]	[mm]	[inch]	[mm]	[inch]	[mm]	[inch]	[mm]	[inch]
15	½	177	7.0	77	3.0	-	-	-	-	200	7.9
25	1	187	7.4	96	3.8	187	7.4	104	4.09	200	7.9
40	1½	202	8.0	127	5.0	197	7.8	124	4.88	200	7.9
50	2	188	7.4	76	3.0	205	8.1	139	5.47	200	7.9
65	2½	194	7.6	89	3.5	212	8.3	154	6.06	200	7.9
80	3	200	7.9	102	4.0	222	8.7	174	6.85	200	7.9
100	4	207	8.1	114	4.5	242	9.5	214	8.43	250	9.8
125	5	217	8.5	140	5.5	255	10.0	239	9.41	250	9.8
150	6	232	9.1	168	6.6	276	10.9	282	11.1	300	11.8
200	8	257	10.1	219	8.6	304	12.0	338	13.31	350	13.8
250	10	284	11.2	273	10.8	332	13.1	393	15.47	450	17.7
300	12	310	12.2	324	12.8	357	14.1	444	17.48	500	19.7
350	14	382	15.0	451	17.8	362	14.3	451	17.76	550	21.7
400	16	407	16.0	502	19.8	387	15.2	502	19.76	600	23.6
450	18	438	17.2	563	22.2	418	16.5	563	22.16	600	23.6
500	20	463	18.2	614	24.2	443	17.4	614	24.17	600	23.6
600	24	514	20.2	715	28.2	494	19.4	715	28.15	600	23.6
700	28	564	22.2	816	32.1	544	21.4	816	32.13	700	27.6
750	30	591	23.3	869	34.2	571	22.5	869	34.21	750	29.5
800	32	616	24.3	927	36.5	606	23.9	927	36.5	800	31.5
900	36	663	26.1	1032	40.6	653	25.7	1032	40.63	900	35.4
1000	40	714	28.1	1136	44.7	704	27.7	1136	44.72	1000	39.4
	42	714	28.1	1136	44.7	704	27.7	1136	44.72	1000	39.4
	44	765	30.1	1238	48.7	755	29.7	1238	48.74	1100	43.3
1200	48	820	32.3	1348	53.1	810	31.9	1348	53.07	1200	47.2
1400	54	-	-	-	-	925	36.4	1574	65.94	1400	55.1
1500	60	-	-	-	-	972	38.2	1672	65.83	1500	59.1
1600	66	-	-	-	-	1025	40.4	1774	75.39	1600	63
1800	72	-	-	-	-	1123	44.2	1974	77.72	1800	70.9
2000	78	-	-	-	-	1223	48.1	2174	85.59	2000	78.7

- not available

© Siemens AG 2014

Flow sensor MAG 5100 W

MAG 5100 W/6000 I Compact

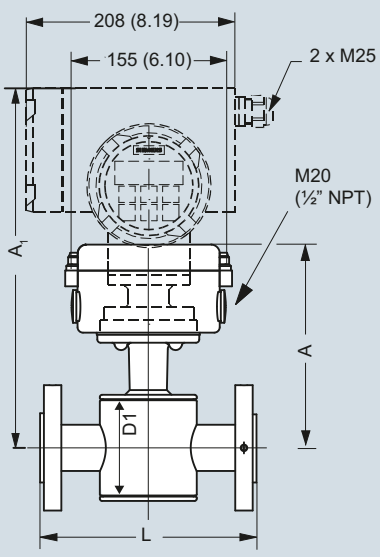

7ME6520: DN 15 ... 40 (½" ... 1½")

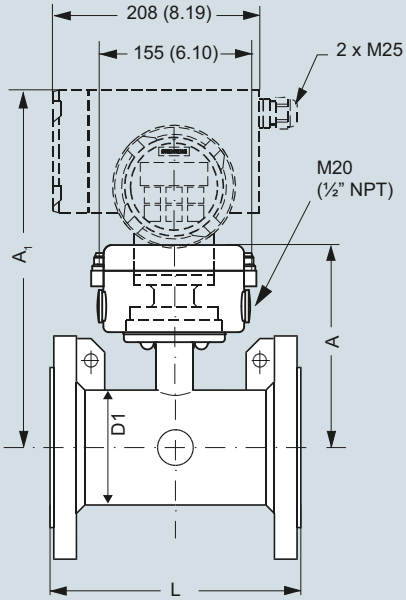

7ME6520: DN 50 ... 300 (2" ... 12")

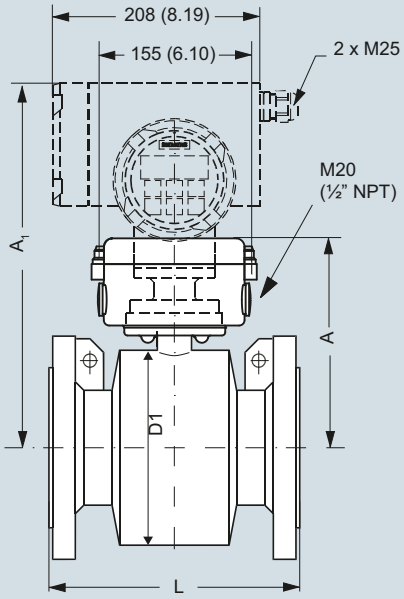

7ME6520: DN 350 ... 2000 (14" ... 78")
7ME6580: DN 25 ... 2000 (1" ... 78")

		7ME6520 NBR or EPDM liner						7ME6580 Ebonite liner							
Nominal size		A		A1		D1		A		A1		D1		L	
[mm]	[inch]	[mm]	[inch]	[mm]	[inch]	[mm]	[inch]	[mm]	[inch]	[mm]	[inch]	[mm]	[inch]	[mm]	[inch]
15	½	177	7.0	331	13.0	77	3.0	187	7.4	-	-	-	-	200	7.9
25	1	187	7.4	341	13.4	96	3.8	187	7.4	341	13.4	104	4.09	200	7.9
40	1½	202	8.0	356	14.0	127	5.0	197	7.8	351	13.8	124	4.88	200	7.9
50	2	188	7.4	342	13.5	76	3.0	205	8.1	359	14.1	139	5.47	200	7.9
65	2½	194	7.6	348	13.7	89	3.5	212	8.3	366	14.4	154	6.06	200	7.9
80	3	200	7.9	354	14.0	102	4.0	222	8.7	376	14.8	174	6.85	200	7.9
100	4	207	8.1	361	14.2	114	4.5	242	9.5	396	15.6	214	8.43	250	9.8
125	5	217	8.5	371	14.6	140	5.5	255	10.0	409	16.1	239	9.41	250	9.8
150	6	232	9.1	386	15.2	168	6.6	276	10.9	430	16.9	282	11.1	300	11.8
200	8	257	10.1	411	16.2	219	8.6	304	12.0	458	18.0	338	13.31	350	13.8
250	10	284	11.2	438	17.2	273	10.8	332	13.1	486	19.1	393	15.47	450	17.7
300	12	310	12.2	464	18.3	324	12.8	357	14.1	511	20.1	444	17.48	500	19.7
350	14	382	15.0	536	21.1	451	17.8	362	14.3	516	20.3	451	17.76	550	21.7
400	16	407	16.0	561	22.1	502	19.8	387	15.2	541	21.3	502	19.76	600	23.6
450	18	438	17.2	592	23.3	563	22.2	418	16.5	572	22.5	563	22.16	600	23.6
500	20	463	18.2	617	24.3	614	24.2	443	17.4	597	23.5	614	24.17	600	23.6
600	24	514	20.2	668	26.3	715	28.2	494	19.4	648	25.5	715	28.15	600	23.6
700	28	564	22.2	718	28.3	816	32.1	544	21.4	698	27.5	816	32.13	700	27.6
750	30	591	23.3	745	29.3	869	34.2	571	22.5	725	28.5	869	34.21	750	29.5
800	32	616	24.3	770	30.3	927	36.5	606	23.9	760	29.9	927	36.5	800	31.5
900	36	663	26.1	817	32.2	1032	40.6	653	25.7	807	31.8	1032	40.63	900	35.4
1000	40	714	28.1	868	34.2	1136	44.7	704	27.7	858	33.8	1136	44.72	1000	39.4
	42	714	28.1	868	34.2	1136	44.7	704	27.7	858	33.8	1136	44.72	1000	39.4
	44	765	30.1	919	36.2	1238	48.7	755	29.7	904	35.6	1238	48.74	1100	43.3
1200	48	820	32.3	974	38.3	1348	53.1	810	31.9	964	38.0	1348	53.07	1200	47.2
1400	54	-	-	-	-	-	-	925	36.4	1079	42.5	1574	61.97	1400	55.1
1500	60	-	-	-	-	-	-	972	38.2	1126	44.3	1672	65.83	1500	59.1
1600	66	-	-	-	-	-	-	1025	40.4	1179	46.4	1774	69.84	1600	63.0
1800	72	-	-	-	-	-	-	1123	44.2	1277	50.3	1974	77.72	1800	70.9
2000	78	-	-	-	-	-	-	1223	48.1	1377	54.2	2174	85.59	2000	78.7

- not available

© Siemens AG 2014

Weight

		7ME6520 NBR or EPDM liner										7ME6580 Ebonite liner	
Nominal size		**PN 10**		**PN 16**		**PN 40**		**Class 150/AWWA**		**AS**		**PN 16**	
[mm]	**[inch]**	**[kg]**	**[lb]**	**[kg]**	**[lb]**	**[kg]**	**[lb]**	**[kg]**	**[lb]**	**[kg]**	**[lb]**	**[kg]**	**[lb]**
15	½	-	-	-	-	4	9	4	9	4	9	5	11
25	1	-	-	-	-	6	12	5	11	4	9	5	11
40	1½	-	-	-	-	8	18	7	15	7	15	8	17
50	2	-	-	9	20	-	-	8	20	9	20	9	20
65	2½	-	-	10.7	24	-	-	11	24	10.7	24	11	24
80	3	-	-	11.6	26	-	-	13	28	11.6	26	12	26
100	4	-	-	15.2	33	-	-	19	41	15.2	33	16	35
125	5	-	-	20.4	45	-	-	24	52	-	-	19	42
150	6	-	-	26	57	-	-	29	64	26	57	27	60
200	8	48	106	48	106	-	-	56	124	48	106	40	88
250	10	64	141	69	152	-	-	79	174	69	152	60	132
300	12	76	167	86	189	-	-	110	243	86	189	80	176
350	14	104	229	125	274	-	-	139	307	115	254	110	242
400	16	119	263	143	314	-	-	159	351	125	277	125	275
450	18	136	299	173	381	-	-	182	400	141	311	175	385
500	20	163	359	223	491	-	-	225	495	189	418	200	440
600	24	236	519	338	744	-	-	320	704	301	664	287	633
700	28	270	595	314	692	-	-	273	602	320	704	330	728
750	30	-	-	-	-	-	-	329	725	-	-	360	794
800	32	346	763	396	873	-	-	365	804	428	944	450	992
900	36	432	951	474	1043	-	-	495	1089	619	1362	530	1168
1000	40	513	1130	600	1321	-	-	583	1282	636	1399	660	1455
	42	-	-	-	-	-	-	687	1512	-	-	-	-
	44	-	-	-	-	-	-	763	1680	-	-	1140	2513
1200	48	643	1415	885	1948	-	-	861	1896	813	1789	1180	2601
1400	54	1592	3510	-	-	-	-	-	-	-	-	1600	3528
1500	60	-	-	-	-	-	-	-	-	-	-	2460	5423
1600	66	2110	4652	-	-	-	-	-	-	-	-	2525	5566
1800	72	2560	5644	-	-	-	-	-	-	-	-	2930	6460
2000	78	3640	8025	-	-	-	-	-	-	-	-	3665	8080

- not available

With transmitter MAG 5000 and MAG 6000 compact, weight is increased by approximately 0.8 kg (1.8 lb), with MAG 6000 I, weight is increased by 5.5 kg (12.1 lb).

Panel Materials for CP-p00

CONTINUOUS HINGE WITH CLAMPS, TYPE 12

INDUSTRY STANDARDS

UL 508A Listed; Type 12, 13; File No. E61997
cUL Listed per CSA C22.2 No. 94; Type 12, 13; File No. E61997

NEMA/EEMAC Type 12 and 13
CSA, File No. 42186: Type 12
IEC 60529, IP65

APPLICATION

For applications requiring a bright white interior to increase control visibility, this enclosure includes a padlocking hasp and staple for security and screw-down clamps for secure closure.

SPECIFICATIONS

- Enclosure bodies are 14 or 16 gauge steel. Doors are 14 gauge steel.
- Seams continuously welded and ground smooth
- External wall-mounting brackets
- Formed external return flanges around all sides of enclosure opening
- Screw-down door clamps
- Removable heavy-gauge continuous hinge pin
- Hasp and staple for padlocking
- Data pocket is high-impact thermoplastic
- Collar studs provided for mounting optional panels
- Bonding provision on door

FINISH

White inside with ANSI 61 gray finish outside.

ACCESSORIES

See also Accessories.
Drip Shield Kit for Type 12 Enclosures
Electric Heater
Fast-Operating Clamp Assembly
Compact Cooling Fans
Steel and Stainless Steel Window Kits

MODIFICATION AND CUSTOMIZATION

Hoffman excels at modifying and customizing products to your specifications. Contact your local Hoffman sales office or distributor for complete information.

BULLETIN: A12

Standard Product

Catalog Number	AxBxC in./mm	Body Gauge	Panel	Conductive Panel	Panel Size D x E in./mm	F in./mm	Number of Clamps	Data Pocket
A122406LP	12.00 x 24.00 x 6.00 305 x 610 x 152	16	A12P24	A12P24G	9.00 x 21.00 229 x 533	3.00 76	2	Small
A161206LP	16.00 x 12.00 x 6.00 406 x 305 x 152	16	A16P12	A16P12G	13.00 x 9.00 330 x 229	1.25 32	2	Small
A161606LP	16.00 x 16.00 x 6.00 406 x 406 x 152	16	A16P16	A16P16G	13.00 x 13.00 330 x 330	3.00 76	2	Small
A162006LP	16.00 x 20.00 x 6.00 406 x 508 x 152	16	A20P16	A20P16G	17.00 x 13.00 432 x 330	3.00 76	2	Small
A201206LP	20.00 x 12.00 x 6.00 508 x 305 x 152	16	A20P12	A20P12G	17.00 x 9.00 432 x 229	1.25 32	2	Small
A201606LP	20.00 x 16.00 x 6.00 508 x 406 x 152	16	A20P16	A20P16G	17.00 x 13.00 432 x 330	3.00 76	2	Small
A202006LP	20.00 x 20.00 x 6.00 508 x 508 x 152	16	A20P20	A20P20G	17.00 x 17.00 432 x 432	3.00 76	2	Small
A202406LP	20.00 x 24.00 x 6.00 508 x 610 x 152	16	A24P20	A24P20G	21.00 x 17.00 533 x 432	3.00 76	2	Small
A241206LP	24.00 x 12.00 x 6.00 610 x 305 x 152	16	A12P24	A12P24G	9.00 x 21.00 229 x 533	1.25 32	2	Small
A241606LP	24.00 x 16.00 x 6.00 610 x 406 x 152	16	A24P16	A24P16G	21.00 x 13.00 533 x 330	3.00 76	2	Small
A242006LP	24.00 x 20.00 x 6.00 610 x 508 x 152	16	A24P20	A24P20G	21.00 x 17.00 533 x 432	3.00 76	2	Small
A242406LP	24.00 x 24.00 x 6.00 610 x 610 x 152	16	A24P24	A24P24G	21.00 x 21.00 533 x 533	3.00 76	2	Small
A301606LP	30.00 x 16.00 x 6.00 762 x 406 x 152	14	A30P16	A30P16G	27.00 x 13.00 686 x 330	3.00 76	2	Small
A302006LP	30.00 x 20.00 x 6.00 762 x 508 x 152	14	A30P20	A30P20G	27.00 x 17.00 686 x 432	3.00 76	2	Small
A302406LP	30.00 x 24.00 x 6.00 762 x 610 x 152	14	A30P24	A30P24G	27.00 x 21.00 686 x 533	3.00 76	2	Large
A362406LP	36.00 x 24.00 x 6.00 914 x 610 x 152	14	A36P24	A36P24G	33.00 x 21.00 838 x 533	3.00 76	2	Large
A363006LP	36.00 x 30.00 x 6.00 914 x 762 x 152	14	A36P30	A36P30G	33.00 x 27.00 838 x 686	3.00 76	2	Large
A122408LP	12.00 x 24.00 x 8.00 305 x 610 x 203	16	A12P24	A12P24G	9.00 x 21.00 229 x 533	3.00 76	2	Small
A161208LP	16.00 x 12.00 x 8.00 406 x 305 x 203	16	A16P12	A16P12G	13.00 x 9.00 330 x 229	1.25 32	2	Small
A161608LP	16.00 x 16.00 x 8.00 406 x 406 x 203	16	A16P16	A16P16G	13.00 x 13.00 330 x 330	3.00 76	2	Small

Catalog Number	AxBxC in./mm	Body Gauge	Panel	Conductive Panel	Panel Size D x E in./mm	F in./mm	Number of Clamps	Data Pocket
A201612LP	20.00 x 16.00 x 12.00 508 x 406 x 305	14	A20P16	A20P16G	17.00 x 13.00 432 x 330	3.00 76	2	Small
A242012LP	24.00 x 20.00 x 12.00 610 x 508 x 305	14	A24P20	A24P20G	21.00 x 17.00 533 x 432	3.00 76	2	Small
A242412LP	24.00 x 24.00 x 12.00 610 x 610 x 305	14	A24P24	A24P24G	21.00 x 21.00 533 x 533	3.00 76	2	Small
A302412LP	30.00 x 24.00 x 12.00 762 x 610 x 305	14	A30P24	A30P24G	27.00 x 21.00 686 x 533	3.00 76	2	Large
A303012LP	30.00 x 30.00 x 12.00 762 x 762 x 305	14	A30P30	A30P30G	27.00 x 27.00 686 x 686	3.00 76	2	Large
A362412LP	36.00 x 24.00 x 12.00 914 x 610 x 305	14	A36P24	A36P24G	33.00 x 21.00 838 x 533	3.00 76	2	Large
A363012LP	36.00 x 30.00 x 12.00 914 x 762 x 305	14	A36P30	A36P30G	33.00 x 27.00 838 x 686	3.00 76	2	Large
A363612LP	36.00 x 36.00 x 12.00 914 x 914 x 305	14	A36P36	A36P36G	33.00 x 33.00 838 x 838	3.00 76	2	Large
A423012LP	42.00 x 30.00 x 12.00 1067 x 762 x 305	14	A42P30	A42P30G	39.00 x 27.00 991 x 686	3.00 76	2	Small
A423612LP	42.00 x 36.00 x 12.00 1067 x 914 x 305	14	A42P36	A42P36G	39.00 x 33.00 991 x 838	3.00 76	2	Large
A483612LP	48.00 x 36.00 x 12.00 1219 x 914 x 305	14	A48P36	A48P36G	45.00 x 33.00 1143 x 838	3.00 76	3	Large
A603612LP	60.00 x 36.00 x 12.00 1524 x 914 x 305	14	A60P36	A60P36G	57.00 x 33.00 1448 x 838	3.00 76	3	Large
A723612LP	72.00 x 36.00 x 12.00 1829 x 914 x 305	14	A72P36	A72P36G	69.00 x 33.00 1753 x 838	3.00 76	3	Large
A242016LP	24.00 x 20.00 x 16.00 610 x 508 x 406	14	A24P20	A24P20G	21.00 x 17.00 533 x 432	3.00 76	2	Small
A242416LP	24.00 x 24.00 x 16.00 610 x 610 x 406	14	A24P24	A24P24G	21.00 x 21.00 533 x 533	3.00 76	2	Small
A302416LP	30.00 x 24.00 x 16.00 762 x 610 x 406	14	A30P24	A30P24G	27.00 x 21.00 686 x 533	3.00 76	2	Large
A363016LP	36.00 x 30.00 x 16.00 914 x 762 x 406	14	A36P30	A36P30G	33.00 x 27.00 838 x 686	3.00 76	2	Large
A423616LP	42.00 x 36.00 x 16.00 1067 x 914 x 406	14	A42P36	A42P36G	39.00 x 33.00 991 x 838	3.00 76	2	Large
A483616LP	48.00 x 36.00 x 16.00 1219 x 914 x 406	14	A48P36	A48P36G	45.00 x 33.00 1143 x 838	3.00 76	3	Large
A603616LP	60.00 x 36.00 x 16.00 1524 x 914 x 406	14	A60P36	A60P36G	57.00 x 33.00 1448 x 838	3.00 76	3	Large
A302420LP	30.00 x 24.00 x 20.00 762 x 610 x 508	14	A30P24	A30P24G	27.00 x 21.00 686 x 533	3.00 76	2	Large
A363020LP	36.00 x 30.00 x 20.00 914 x 762 x 508	14	A36P30	A36P30G	33.00 x 27.00 838 x 686	3.00 76	2	Large
A483620LP	48.00 x 36.00 x 20.00 1219 x 914 x 508	14	A48P36	A48P36G	45.00 x 33.00 1143 x 838	3.00 76	3	Large
A603620LP	60.00 x 36.00 x 20.00 1524 x 914 x 508	14	A60P36	A60P36G	57.00 x 33.00 1448 x 838	3.00 76	3	Large
A302424LP	30.00 x 24.00 x 24.00 762 x 610 x 610	14	A30P24	A30P24G	27.00 x 21.00 686 x 533	3.00 76	2	Large

Purchase panels separately. Optional stainless steel, conductive, composite and aluminum panels are available for most sizes.

Small Data Pocket is 6.00 in. x 6.00 in. Large Data Pocket is 12.00 in. x 12.00 in.

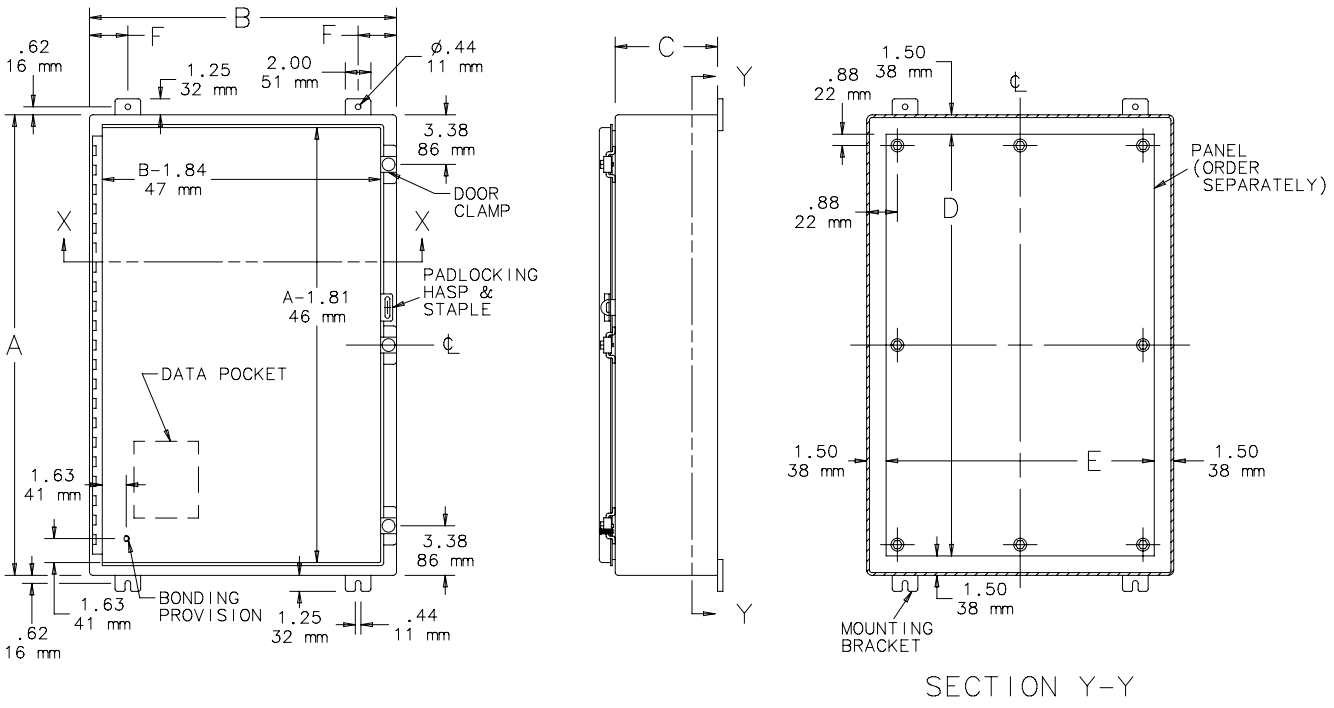
B
F
F
.62
16 mm
1.25
32 mm
2.00
51 mm
ø.44
11 mm
3.38
86 mm
B-1.84
47 mm
DOOR
CLAMP
X
X
PADLOCKING
HASP &
STAPLE
A-1.81
46 mm
A
DATA POCKET
1.63
41 mm
3.38
86 mm
1.63
41 mm
BONDING
PROVISION
1.25
32 mm
.44
11 mm
.62
16 mm
C
Y
Y
1.50
38 mm
.88
22 mm
PANEL
(ORDER
SEPARATELY)
.88
22 mm
D
1.50
38 mm
E
1.50
38 mm
1.50
38 mm
MOUNTING
BRACKET
SECTION Y-Y

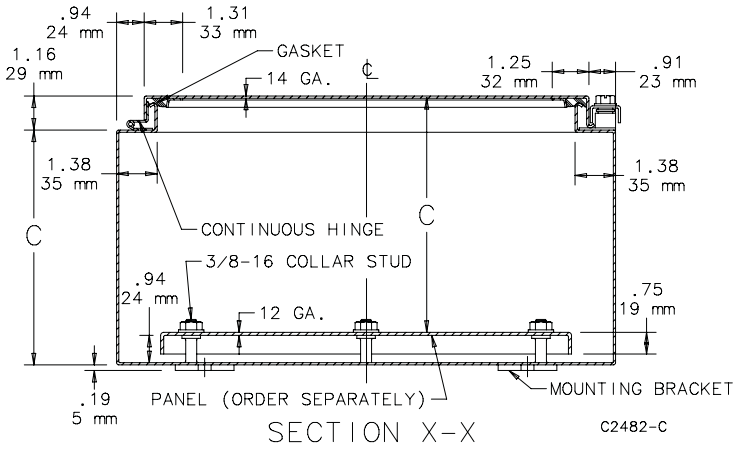
.94
24 mm
1.31
33 mm
1.16
29 mm
GASKET
14 GA.
1.25
32 mm
.91
23 mm
1.38
35 mm
1.38
35 mm
C
CONTINUOUS HINGE
C
3/8-16 COLLAR STUD
.94
24 mm
12 GA.
.75
19 mm
.19
5 mm
PANEL (ORDER SEPARATELY)
MOUNTING BRACKET
SECTION X-X
C2482-C

BOM #3

800T/H 30.5 mm Trigger Action E-Stops

Allen-Bradley

Product Summary

800T Type 4/13 Metal

Non-Illuminated
- 45 mm plastic head
- 60 mm plastic head
- 63 mm metal head

Illuminated
- 45 mm plastic head
- 60 mm plastic head

Key Release
- 45 mm plastic head

800H Type 4/4X/13 Plastic

Non-Illuminated
- 45 mm plastic head
- 60 mm plastic head

Illuminated
- 45 mm plastic head
- 60 mm plastic head

30.5 mm E-Stops in a state-of-the-art, tamper-resistant design

Time-Tested, Industry Proven

The Allen-Bradley® 800T/H push button product lines are designed and constructed to perform consistently in the most demanding industrial environments. This legacy of leadership continues with the introduction of the innovative 800T/H Trigger Action E-Stop devices.

Global Acceptance

Trigger action functionality provided in a 30.5 mm form factor delivers E-Stop operators that meet global requirements and are more than up to the task for installation in heavy duty applications. The twist release design conforms to functional safety guidelines where intentional action is required to reset the E-Stop device.

Tamper Resistance

Tamper resistance is provided by front-of-panel mounting. The mounting nut installs from back of panel, and is inaccessible when the control cabinet door is closed during normal machine operation. Additionally, the 800T/H Trigger Action E-Stop mushroom caps are factory installed and non-removable, further increasing tamper resistance.

State-of-the-Art Illumination

LED illumination is standard for illuminated devices, using state-of-the-art super bright LED technology. Full voltage or transformer type input is available. Full voltage devices employ the new Universal LED technology, accepting a wide range of 12...130V AC/DC input supply voltage.

LISTEN. THINK. SOLVE.®

Trigger Action E-Stop Units, Non-Illuminated

Trigger Action E-Stop Units, Illuminated

Trigger Action E-Stop Units, Key Release

Features and Benefits

Trigger Action Function

- Contacts can't be teased without latching of operator
- Complies with EN ISO 13850 and EN 60947-5-5
- Positive opening with direct drive contact blocks
- Allows use of standard contact blocks such as 800T-XA (1-NO, 1-NC)

Fixed Mushroom Cap

- Safety red color
- 45 mm, 60 mm and 63 mm (metal) options
- Non-removable for tamper resistance
- Integral "E-STOP" legend available as an option

Twist Release Function

- Conforms to functional safety guidelines
- Intentional action required for E-Stop resetting

Front-of-Panel Mounting

- Operator installs from front of panel and is secured with back-of-panel mounting nut
- E-Stop operator cannot be tampered with during normal machine operation with control cabinet closed

Yellow Bushing

- 800H bushing molded from yellow plastic material further enhances compliance for yellow background of installations

Reliable Contact Block Latching

- Tool-less installation of latch mechanism – snaps onto operator
- Contact block mounting screws secure latch mechanism to operator – latch cannot be removed while contact blocks are installed

Trigger Action E-Stop Units, Non-Illuminated

- 2-position
- Twist Release
- Red mushroom head

Add Required 5/5 NO/NC contacts

Head Type	Contact Configuration	Type 4/13 Metal Catalog Number ⌗	Type 4/4X/13 Plastic Catalog Number ⌗
45 mm Plastic	No Contacts	800T-TFXT6	800H-TFRXT6
	1-NO, 1-NC	800T-TFXT6A	800H-TFRXT6A
	1-SMCB ↗	800TC-TFXT6D4S	800HC-TFRXT6D4S
60 mm Plastic ✪	No Contacts	800T-TFXJT6	800H-TFRXJT6
	1-NO, 1-NC	800T-TFXJT6A	800H-TFRXJT6A
	1-SMCB ↗	800TC-TFXJT6D4S	800HC-TFRXJT6D4S
63 mm Anodized Aluminum ✧	No Contacts	800T-TFXLT6	–
	1-NO, 1-NC	800T-TFXLT6A	–
	1-SMCB ↗	800TC-TFXLT6D4S	–

Trigger Action E-Stop Units, Illuminated

- 2-position
- Twist Release
- Red mushroom head
- LED illumination

Head Type	Contact Configuration	Type	Voltage	Type 4/13 Metal Catalog Number ⌗	Type 4/4X/13 Plastic Catalog Number ⌗
45 mm Plastic	No Contacts	Operator Only		800T-TFXTS00R	800H-TFRXTS00R
	1-NO, 1-NC	Universal	12...130V AC/DC	800T-TFXTQH2RA	800H-TFRXTQH2RA
	1-SMCB ↗			800TC-TFXTQH2RD4S	800HC-TFRXTQH2RD4S
	1-NO, 1-NC	Transformer	120V AC	800T-TFXTPH16RA	800H-TFRXTPH16RA
	1-SMCB ↗			800TC-TFXTPH16RD4S	800HC-TFRXTPH16RD4S
60 mm Plastic ✪	No Contacts	Operator Only		800T-TFXJTS00R	800H-TFRXJTS00R
	1-NO, 1-NC	Universal	12...130V AC/DC	800T-TFXJTQH2RA	800H-TFRXJTQH2RA
	1-SMCB ↗			800TC-TFXJTQH2RD4S	800HC-TFRXJTQH2RD4S
	1-NO, 1-NC	Transformer	120V AC	800T-TFXJTPH16RA	800H-TFRXJTPH16RA
	1-SMCB ↗			800TC-TFXJTPH16RD4S	800HC-TFRXJTPH16RD4S

Trigger Action E-Stop Units, Key Release

- 2-position
- Familiar DO18 key
- Red mushroom head

Head Type	Contact Configuration	Type 4/13 Metal Catalog Number ⌗
45 mm Plastic	No Contacts	800T-TFXK6
	1-NO, 1-NC	800T-TFXK6A
	1-SMCB ↗	800TC-TFXK6D4S

⌗ For finger-safe contact block terminals, order 800TC or 800HC
✪ To order a device with "E-STOP" printed on the cap add the letter "E" after "J"; for example: 800T-TFXJET6
✧ To order a device with "E-STOP" engraved on the cap add the letter "E" after "L"; for example: 800T-TFXLET6
↗ Self-Monitoring Contact Block

BOM #6

Product: 1492-REC15G

Description: 1492 DIN Rail Receptacle

Representative Photo Only
(actual product may vary based on configuration selections)

DIN Rail Receptacle	
Current Rating	15A
Options	Ground Fault Current Interrupt

CERTIFICATIONS AND APPROVALS	
cULus	UL 508A (file# E54866)
For UL Certifications Directory:	http://database.ul.com/cgi-bin/XYV/template/LISEXT/1FRAME/index.htm

SDN-P DIN Rail Series

The SDN DIN Rail power supplies provide industry leading performance. Sag Immunity, transient suppression and noise tolerant, the SDN series ensures compatibility in demanding applications. Power factor correction to meet European directives, hazardous location approvals and optional redundant accessories allow the SDN series to be used in a wide variety of applications. Wide operation temperature range, high tolerance to shock and vibration and reliable design make the SDN series the preferred choice of users.

E61379 E137632 E234790

Applications

- Industrial/Machine Control
- Process Control
- Conveying Equipment
- Material Handling
- Vending Machines
- Packaging Equipment
- DeviceNet™
- Amusement Park Equipment
- Semiconductor Fabrication Equipment

Features

- Power Factor Correction (per EN61000-3-2)
- Auto Select 115/230 Vac, 50/60 Hz Input
- Improved metal mounting clip
- DC OK Signal
- Adjustable Voltage
- Parallel Capability standard on all units
- Industrial grade design
  - -10°C to 60°C operation without derating. Indefinite short circuit, overvoltage and overtemperature protection.
  - Powers high inrush loads without shutdown or foldback
  - Rugged metal case and DIN connector
- Narrow width on rail for space critical applications
- User-friendly front panel
  - Large, rugged, accessible, multiple connection screw terminations
  - Easy installation
- 12 Vdc and 48 Vdc single phase models available
- Highly efficient >90% switching technology
- High MTBF and reliability

Accessories

- Chassis Mount Bracket (SDN-PMBRK2)

Certifications and Compliances *

All Models

- c UL us Listed, Ind. Control Equipment, E61379
  - UL 508, CSA C22.2 No. 107.1
- c UL us UL Recognized Component, ITE, E137632
  - UL 60950-1/CSA C22.2 No. 60950-1, 2nd Edition
- c UL us UL Recognized Component, Haz. Loc., E234790
  - ISA 12.12.01, CSA C22.2 No. 213
  - Class I, Division 2, Groups A, B, C, D
- CE - Low Voltage Directive
  - IEC/EN60950-1, 2nd Edition
- Sag Immunity: SEMI F47
- RoHS Compliant

Models SDN 2.5-24-100P, SDN 4-24-100LP

- Class 2 per UL 1310, CSA C22.2 No. 223

Models SDN 2.5-24-100P, SDN 4-24-100LP, SDN 5-24-100P, SDN 10-24-100P

- Ex ATEX Directive
  - EN50021, Ex II 3 G, Ex nC IIC Gc

Related Products

- SDP™ Series
- SCP Series
- SCL Series
- SDU UPS

* Refer to user manual for installation requirements when used in hazardous locations.

SDN-P Specifications (Single Phase), 24 Vdc Output

Description	Catalog Number			
	SDN 2.5–24–100P	SDN 4–24–100LP	SDN 5–24–100P	SDN 10–24–100P
Input				
Nominal Voltage	115/230 Vac, Auto select			
–AC Range	85-264 Vac	85-132/176-264 Vac		
–DC Range [1]	90 - 375 Vdc	210 - 375 Vdc		
–Frequency	47 - 63 Hz			
Nominal Current [2]	1.3 / 0.7 A	2.1 / 1.0 A	2.2 / 1.0 A	5 / 2 A typ.
–Inrush current max.	typ. < 25 A	typ. < 20 A		typ. < 40 A
Efficiency (Losses [3])	> 87.5% typ. (8.6 W)	> 88% typ. (13.1 W)	> 88% typ. (16.4 W)	> 88% typ. (32.7 W)
Power Factor Correction	Units Fulfill EN61000-3-2			
Output				
Nominal Voltage	24 Vdc (22.5 - 28.5 Vdc adj.)	24 Vdc (22.5 - 28.5 Vdc adj.)	24 Vdc (22.5 - 28.5 Vdc adj.)	
–Tolerance	< ±2% overall (combination Line, load, time and temperature related changes)			
–Ripple [4]	< 50 mVpp			
Overvoltage Protection	< 33 Vdc	< 27 Vdc	< 33 Vdc	
Nominal Current	2.5 A (60 W)	3.8 A (92 W)	5 A (120 W)	10 A (240 W)
–Current Limit	Fold Forward (Current rises, voltage drops to maintain constant power during overload up to max peak current)			
Holdup Time [5]	> 20 ms @ full load			
Parallel Operation	Single or Parallel use is selectable via Front Panel Switch (SDN 2.5, 4 should not be used in parallel as Class 2 rating would be violated.)			
General				
EMC: –Emissions	EN61000-6-3, -4; Class B EN55011, EN55022 Radiated and Conducted including Annex A. EN61000-3-2			
–Immunity	EN61000-6-1, -2; EN61000-4-2 Level 4, EN61000-4-3 Level 3; EN61000-4-6 Level 3; EN61000-4-4 Level 4 input and Level 3 output; EN61000-4-5 Isolation Class 4, EN61000-4-11;			
Temperature	Storage: -25°C...+85°C Operation. -10°-60°C full power with operation to 70°C possible with a linear derating to half power from 60°C to 70°C (Convection cooling, no forced air required). Operation up to 50% load permissible with sideways or front side up mounting orientation.			
Humidity	The relative humidity is < 90% RH, noncondensing; IEC 68-2-2, 68-2-3.			
MTBF:	> 820,000 hours	> 640,000 hours		> 600,000 hours
– Standard	Bellcore Issue 6 Method 1 Case 3 @ 40°C			
Warranty	5 year limited warranty			
General Protection/Safety	Protected against continuous short-circuit, overload, open-circuit. Protection Class 1 (IEC536), degree of protection IP20 (IEC 529) Safe low voltage: SELV (acc. EN60950)			
Status Indicators	Green LED and DC OK signal (N.O. Solid State Contact rated 200 mA / 60 Vdc)			
Installation				
Fusing –Input	Internally fused. External 10 A slow acting fusing for the input is recommended to protect input wiring.			
–Output	Outputs are capable of providing high currents for short periods of time for inductive load startup or switching. Fusing may be required for wire/loads if 2x Nominal O/P current rating cannot be tolerated. Continuous current overload allows for reliable fuse tripping.			
Mounting	Simple snap-on system for DIN Rail TS35/7.5 or TS35/15 or chassis-mounted (optional screw mounting set SDN-PMBRK2 required).			
Connections	Input: IP20-rated screw terminals, connector size range: 16-10 AWG (1.5-6 mm²) for solid conductors. 16-12 AWG (0.5-4 mm²) for flexible conductors. Output: Two connectors per output, connector size range: 16-10 AWG (1.5 - 6 mm²) for solid conductors.			
Case	Fully enclosed metal housing with fine ventilation grid to keep out small parts.			
–Free Space	25 mm above and below, 25 mm left and right, 10 mm in front		25 mm above and below, 25 mm left and right, 15 mm in front	70 mm above and below, 25 mm left and right, 15 mm in front
H x W x D inches (mm)	4.88. x 1.97 x 4.55 (124.0 x 50.0 x 116.0)	4.88 x 2.56 x 4.55 (124.0 x 65.0 x 116.0)		4.88 x 3.26 x 4.55 (124.0 x 83.0 x 116.0)
Weight lbs (kg)	1.6 (.73)	2.4 (1.10)		3.3 (1.50)

1. Not UL listed for DC input.
2. Input current ratings are conservatively specified with low input, worst case efficiency and power factor.
3. Losses are heat dissipation in watts at full load, nominal input line.
4. Ripple/noise is stated as typical values when measured with a 20 MHz, bandwidth scope and 50 Ohm resistor.
5. Full load, 100 Vac Input @ T_{amb} = +25°C

Contact **Technical Services** at **(800) 377-4384** with any questions.
Visit our website at www.solahd.com.

SDN-P Series Dimensions

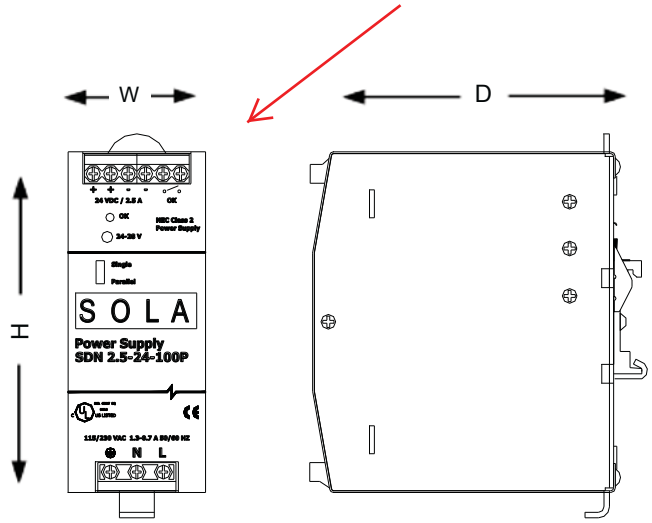

Catalog Number	Dimensions – inches (mm)		
	H	W	D
12 Vdc			
SDN 9–12–100P	4.88 (124.0)	2.56 (65.0)	4.55 (116.0)
SDN 16–12–100P	4.88 (124.0)	3.23 (83.0)	4.55 (116.0)
24 Vdc			
SDN 2.5–24–100P	4.88 (124.0)	1.97 (50.0)	4.55 (116.0)
SDN 4–24–100LP	4.88 (124.0)	2.56 (65.0)	4.55 (116.0)
SDN 5–24–100P	4.88 (124.0)	2.56 (65.0)	4.55 (116.0)
SDN 10–24–100P	4.88 (124.0)	3.26 (83.0)	4.55 (116.0)
48 Vdc			
SDN 5–48–100P	4.88 (124.0)	3.23 (83.0)	4.55 (116.0)

Contact **Technical Services** at **(800) 377-4384** with any questions.
Visit our website at www.solahd.com.

SDN-P Series Mounting

DIN Rail Mounting

Snap on the DIN Rail:

1. Tilt unit slightly backwards
2. Put it onto the DIN Rail
3. Push downwards until stopped
4. Push at the lower front edge to lock
5. Shake the unit slightly to ensure that the retainer has locked

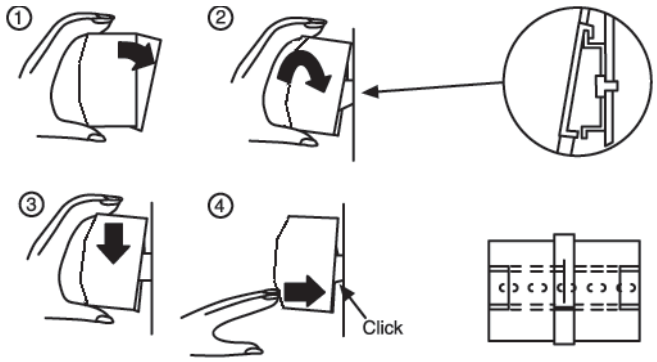

Alternative Panel Mount: Using the optional SDN-PMBRK2 accessory, the unit can be screw mounted to a panel.

Detachment from DIN Rail:

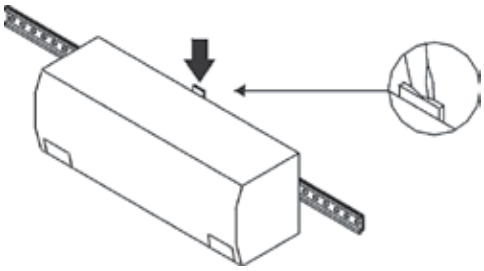

Chassis Mounting

Instead of snapping a SolaHD SDN™ unit on the DIN Rail, you can also attach it using the screw mounting set SDN-PMBRK2.

This set consists of two metal brackets, which replace the existing two aluminum profiles.

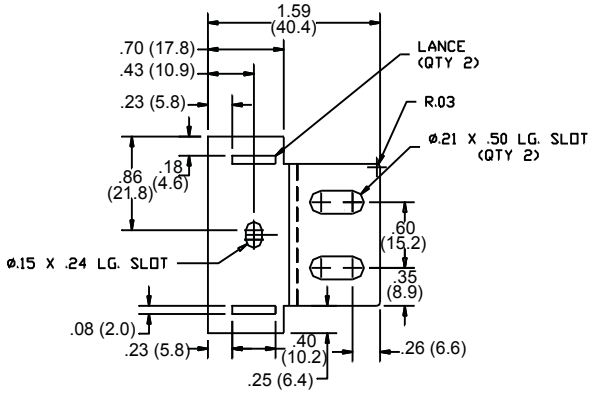

Dimensions - in. (mm)

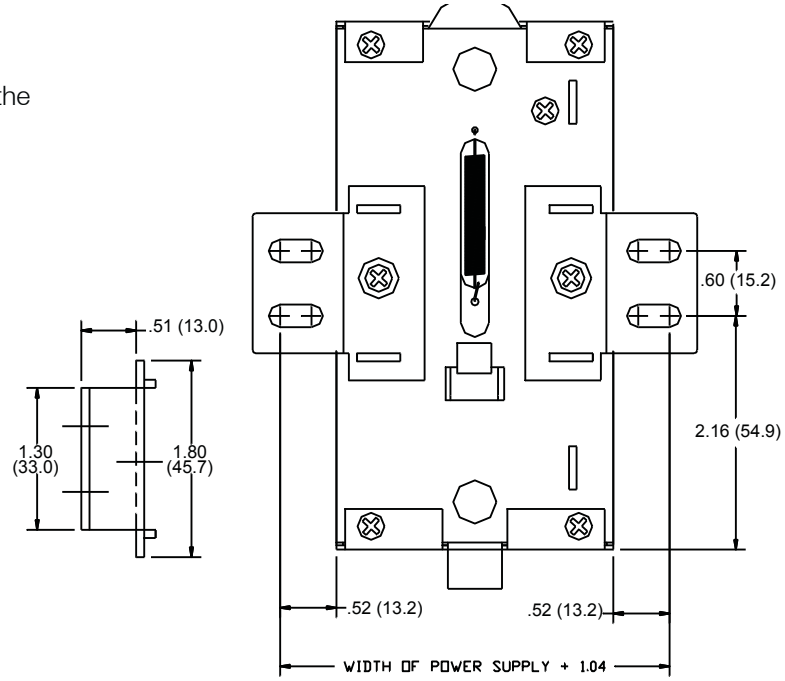

BOM #8

Product: 1492-H5

Description: 1492-H Finger-Safe Terminal Blocks

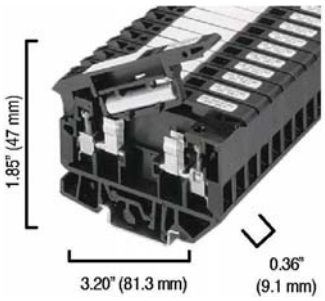

Representative Photo Only (actual product may vary based on configuration selections)

BASE DATA

Electrical Standards	UL
Type of Device	Finger-Safe Terminal Block
Base Block Type	Single Circuit Fuse Block

DETAIL DATA

Features	LED Blown Fuse Indicator
Wire Range	#30 - #12 AWG
Color	Black (Standard)
Bulk Pack	No Bulk Pack (Single Block)

CERTIFICATIONS AND APPROVALS

UR	UL 486E, UL 1059; Reference File: E40735
CSA	CSA C22.2 No. 65, No. 158; On Website, Name: Rockwell, Keyword Search: 1492
IEC	EN 60947-1, EN 60947-7-1(Feed-Through), -2(Ground), -3(Fuse)
Short Circuit Current Rating	This terminal block carries a minimum of 10kA SCCR rating for all protection methods. Please see the table for other possible elevated ratings.
For CSA Certifications:	http://directories.csa-international.org/directorymain.asp
For UL Certifications Directory:	http://database.ul.com/cgi-bin/XYV/template/LISEXT/1FRAME/index.htm

BOM #9

Product: 1492-J3

Description: 1492 IEC Screw Terminal Blocks

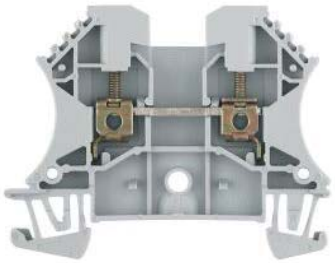

Representative Photo Only (actual product may vary based on configuration selections)

BLOCK STYLE	
Base Block Style	Standard Feed-Through Blocks
BASE DATA	
Base Block Type	One-Circuit Feed-Through Block
DETAIL DATA	
Features	Standard Feedthrough
Maximum Wire Size & Rating	UL: 30-12 AWG (25A @600V AC/DC)\nCSA: 26-12 AWG (20A @600V AC/DC)\nIEC: 2.5mm² (24A @800V AC/DC)\nEEx e II: 2.5mm²/20-14 AWG (21A @ 550V AC/DC)
Color	Gray (Standard)
CERTIFICATIONS AND APPROVALS	
UR	UL 486E, UL 1059; Reference File: E40735, E187022
CSA	CSA C22.2 No. 65, No. 158; On Website, Name: Rockwell, Keyword Search: 1492
IEC	EN 60947-1, EN 60947-7-1(Feed-Through), -2(Ground), -3(Fuse)
ATEX	http://www.rockwellautomation.com/products/certification/ex/excert.html
Short Circuit Current Rating	This terminal block carries a minimum of 10kA SCCR rating for all protection methods. Please see the table for other possible elevated ratings.
For CSA Certifications:	http://directories.csa-international.org/directorymain.asp
For UL Certifications Directory:	http://database.ul.com/cgi-bin/XYV/template/LISEXT/1FRAME/index.htm

BOM #11

Selection Guide

Allen-Bradley

CompactLogix System

Catalog Numbers 1769-L16ER-BB1B, 1769-L18ER-BB1B, 1769-L18ERM-BB1B, 1769-L24ER-QB1B, 1769-L24ER-QBFC1B, 1769-L27ERM-QBFC1B, 1769-L30ER, 1769-L30ER-NSE, 1769-L30ERM, 1769-L33ER, 1769-L33ERM, 1769-L36ERM, 1769-AENTR, 1768-L43, 1768-L43S, 1768-L45, 1768-L45S

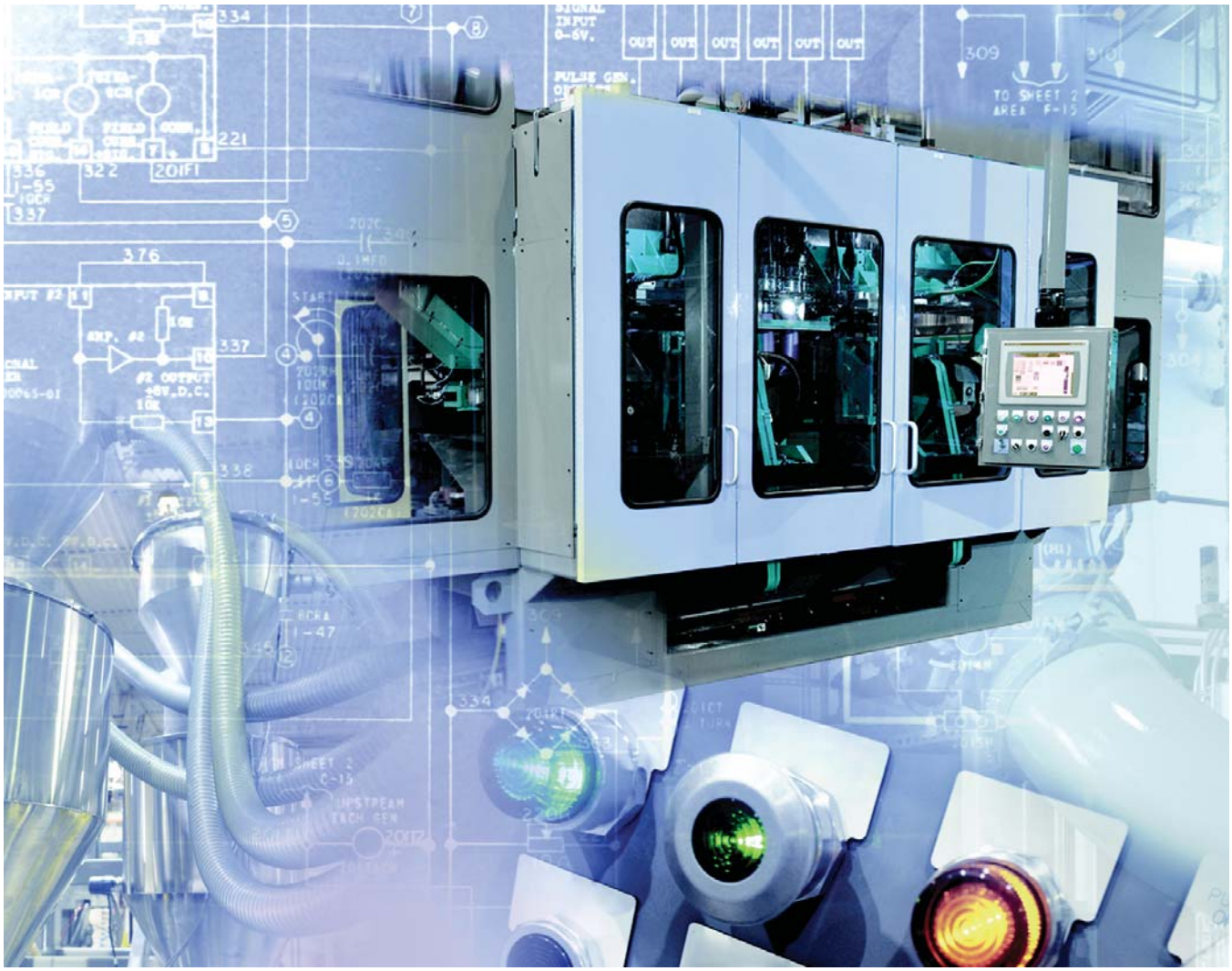

1734 POINT I/O Modules
1769 Compact I/O Modules
1768 Integrated Motion Modules
1768 and 1769 Communication Modules
1768 and 1769 CompactLogix Controllers
1768 and 1769 Compact Power Supplies

LISTEN. THINK. SOLVE.®

Logix Controllers Comparison

Characteristic	**ControlLogix** 1756-71, 1756-L72, 1756-L73, 1756-L73XT, 1756-L74, 1756-L75 **GuardLogix** 1756-L72S, 1756-L73S, 1756-L73SXT	**CompactLogix** 1769-L30ER, 1769-L30ER-NSE, 1769-L30ERM, 1769-L33ER, 1769-L33ERM, 1769-L36ERM	**CompactLogix** 1769-L24ER-BB1B, 1769-L24ER-QBFC1B, 1769-L27ERM-QBFC1B	**CompactLogix** 1769-L16ER-BB1B, 1769-L18ER-BB1B, 1769-L18ERM-BB1B	**CompactLogix** 1768-L43, 1768-L45 **Compact GuardLogix** 1768-L43S, 1768-L45S	**SoftLogix 5800™** 1789-L10, 1789-L30, 1789-L60
Controller tasks: • Continuous • Periodic • Event	32; 100 programs/task	32; 100 programs/task	32; 100 programs/task	32; 100 programs/task	• 1768-L43: 16; 32 programs/task • 1768-L45: 30; 32 programs/task	32; 100 programs/task
Event tasks	All event triggers	All event triggers	All event triggers	All event triggers, plus embedded inputs	All event triggers	All event triggers, plus outbound and Windows events
User memory	• 1756-L71: 2 MB • 1756-L72: 4 MB • 1756-L72S: 4 MB + 2 MB safety • 1756-L73, 1756-L73SXT, 1756-L73XT: 8 MB • 1756-L73S: 8 MB + 4 MB safety • 1756-L74: 16 MB • 1756-L75: 32 MB	• 1769-L30ER, 1769-L30ER-NSE, 1769-L30ERM: 1MB • 1769-L33ER, 1769-L33ERM: 2 MB • 1769-L36ERM: 3 MB	• 1769-L24ER: 750 KB • 1769-L27ERM: 1 MB	• 1769-L16ER: 384 KB • 1769-L18ER, 1769-L18ERM: 512 KB	• 1768-L43: 2 MB • 1768-L43S: 2 MB + 0.5 MB safety • 1768-L45: 3 MB • 1768-L45S: 3 MB + 1 MB safety	• 1789-L10: 2 MB; 1 controller; no motion • 1789-L30: 64 MB; 3 controllers • 1789-L60: 64 MB; 6 controllers
Memory card	Secure Digital	Secure Digital	Secure Digital	Secure Digital	CompactFlash	None
Built-in ports	1 USB	2 EtherNet/IP 1 USB	2 EtherNet/IP 1 USB	2 EtherNet/IP 1 USB	1 RS-232	Depends on personal computer
Communication options	• EtherNet/IP (standard and safety) • ControlNet (standard and safety) • DeviceNet (standard and safety) • DH+ • Remote I/O • SynchLink	• Dual-port EtherNet/IP(1) • DeviceNet	• Dual-port EtherNet/IP(1) • DeviceNet	• Dual-port EtherNet/IP(1)	• EtherNet/IP (standard and safety) • ControlNet (standard and safety) • DeviceNet (standard)	• EtherNet/IP • ControlNet • DeviceNet
Controller connections	500	256	256	256	250	250
Network connections	Per module: • 128 ControlNet (CN2/B) • 40 ControlNet (CNB) • 256 EtherNet/IP; 128 TCP (EN2*x*) • 128 EtherNet/IP; 64 TCP (ENBT)	• 1769-L30ER, 1769-L30ER-NSE, 1769-L30ERM: 256 EtherNet/IP; 120 TCP • 1769-L33ER, 1769-L33ERM: 256 EtherNet/IP; 120 TCP • 1769-L36ERM: 256 EtherNet/IP; 120 TCP	• 1769-L24ER: 256 EtherNet/IP; 120 TCP • 1769-L27ERM: 256 EtherNet/IP; 120 TCP	• 1769-L16ER: 256 EtherNet/IP; 120 TCP • 1769-L18ER, 1769-L18ERM: 256 EtherNet/IP; 120 TCP	Per module: • 48 ControlNet • 128 EtherNet/IP; 64 TCP	Per module: • 48 ControlNet • 128 EtherNet/IP; 64 TCP
EtherNet/IP nodes in a single Logix Designer application, max	N/A	• 1769-L30ER, 1769-L30ER-NSE, 1769-L30ERM: 16 • 1769-L33ER, 1769-L33ERM: 32 • 1769-L36ERM: 48	• 1769-L24ER: 8 • 1769-L27ERM: 16	• 1769-L16ER: 4 • 1769-L18ER, 1769-L18ERM: 8	N/A	N/A
Controller redundancy	Full support	Backup via DeviceNet	Backup via DeviceNet	—	Backup via DeviceNet	—
Integrated motion	• Integrated motion on an EtherNet/IP network • SERCOS interface • Analog options	Integrated motion on an EtherNet/IP network	Integrated motion on an EtherNet/IP network	Integrated motion on an EtherNet/IP network	SERCOS interface	• SERCOS interface • Analog encoder input
Programming languages	• Standard task: all languages • Safety task: relay ladder, safety application instructions	• Relay ladder • Structured text • Function block • SFC	• Relay ladder • Structured text • Function block • SFC	• Relay ladder • Structured text • Function block • SFC	• Standard task: all languages • Safety task: relay ladder, safety application instructions	• Relay ladder • Structured text • Function block • SFC • External routines (C/C++)

(1) CompactLogix™ 5370 controllers have two EtherNet/IP ports to connect to an EtherNet/IP network. The ports carry the same network traffic as part of the controller's embedded switch. The controller uses only one IP address.

Select a CompactLogix System

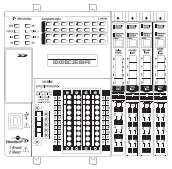

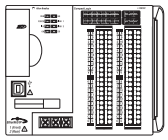

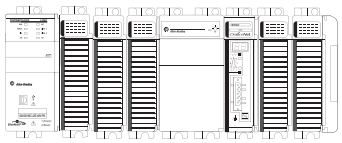

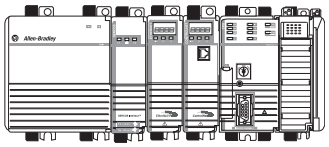

1 CompactLogix Controllers — Page 7

Select:
- A controller with sufficient memory
- A memory card

2 CompactLogix Communication Options — Page 13

Select:
- Networks
- Communication interfaces
- Associated cables and network equipment

3 CompactLogix Integrated Motion — Page 16

Select:
- A CompactLogix 5370 controller for integrated motion on an EtherNet/IP network
- A 1768 CompactLogix controller for SERCOS motion
- Drives, motors, and accessories (use the Motion Analyzer tool)

4 Compact GuardLogix Integrated Safety — Page 20

Select:
- A 1768 Compact GuardLogix® controller for integrated safety

5 Additional Local I/O Modules — Page 24

Select:
- 1734 POINT I/O™ or 1769 Compact I/O™ modules
- Associated cables and accessories

6 CompactLogix Power Supplies — Page 30

Select:
- One 1769 power supply for each CompactLogix 5370 L3 controller
- One 1768 power supply for each 1768 CompactLogix controller
- Additional 1769 power supplies as needed

Optional

Programming Software — Page 31

CompactLogix Controllers Overview

The CompactLogix system is designed to provide a Logix solution for small and mid-size applications. Typically, these applications are machine-level control applications. A simple system can consist of a standalone controller with a single bank of I/O modules and DeviceNet communication. In a more complex system, add other networks, motion control, and safety control. As part of the Integrated Architecture™ system, the CompactLogix controllers use the same programming software, network protocol, and information capabilities as all Logix controllers, providing a common development environment for all control disciplines.

- The CompactLogix 5370 L3 controllers deliver scalable, affordable control ideal for applications from small standalone equipment to high-performance indexing tables, process skids, case packers and erectors, and packaging. The CompactLogix 5370 L3 controllers also provide a truly integrated motion solution.
- The CompactLogix 5370 L2 controllers combine the power of the Logix architecture with the flexibility of Compact I/O modules. From small standalone equipment to higher performance applications, these controllers are ideal for assembly machines, hoisting systems, process skids, indexing tables, and packaging.
- The CompactLogix 5370 L1 controllers combine the power of the Logix architecture with the flexibility of POINT I/O. Ideal for small to mid-size machines, these controllers offer value to customers looking for the benefits of Integrated Architecture in a lower cost system.

CompactLogix 5370 System on an EtherNet/IP Network

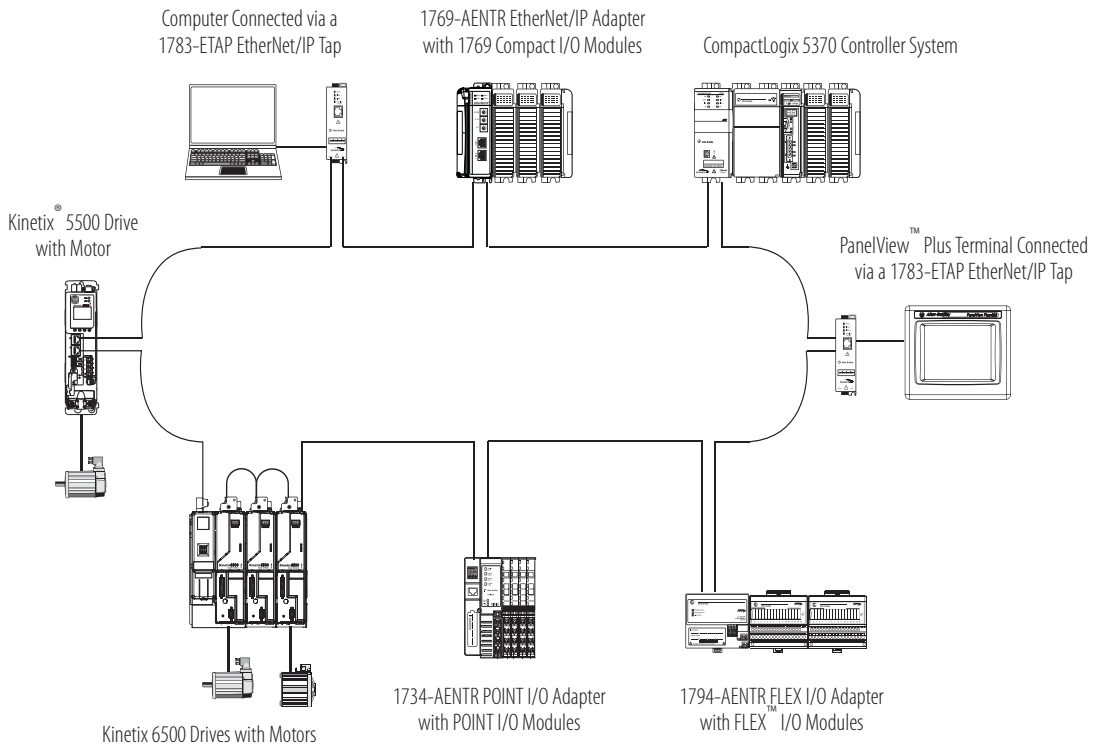

The CompactLogix 5370 L2 and L3 controllers support DeviceNet connectivity.

CompactLogix 5370 System on an DeviceNet Network

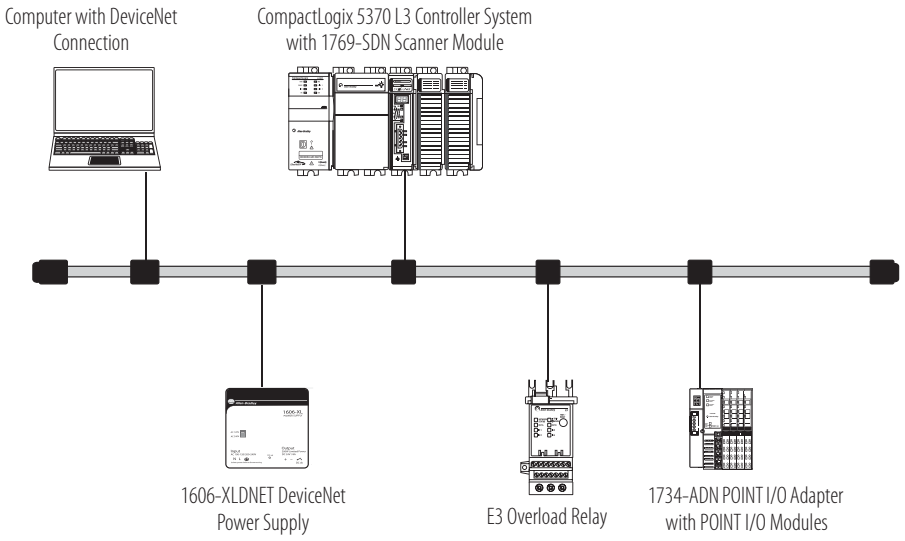

1768 CompactLogix System

The 1768 CompactLogix system combines a 1768 backplane for communication and motion support and a 1769 backplane for I/O support. The 1768 controller is designed for integrated motion, integrated safety, and more complex communication requirements than the other CompactLogix controllers. The 1768 controller has one serial port. Add 1768 modules for motion control, EtherNet/IP communication, and ControlNet communication.

1768 CompactLogix System on an EtherNet/IP Network

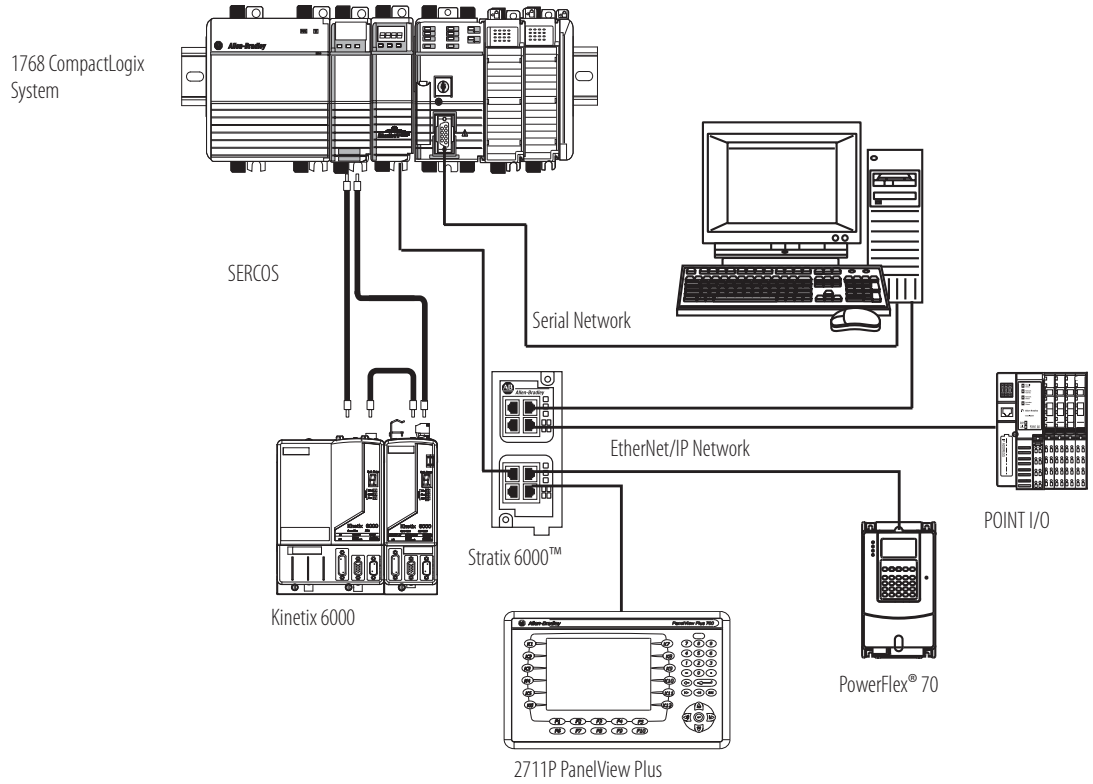

1768 Compact GuardLogix Safety System

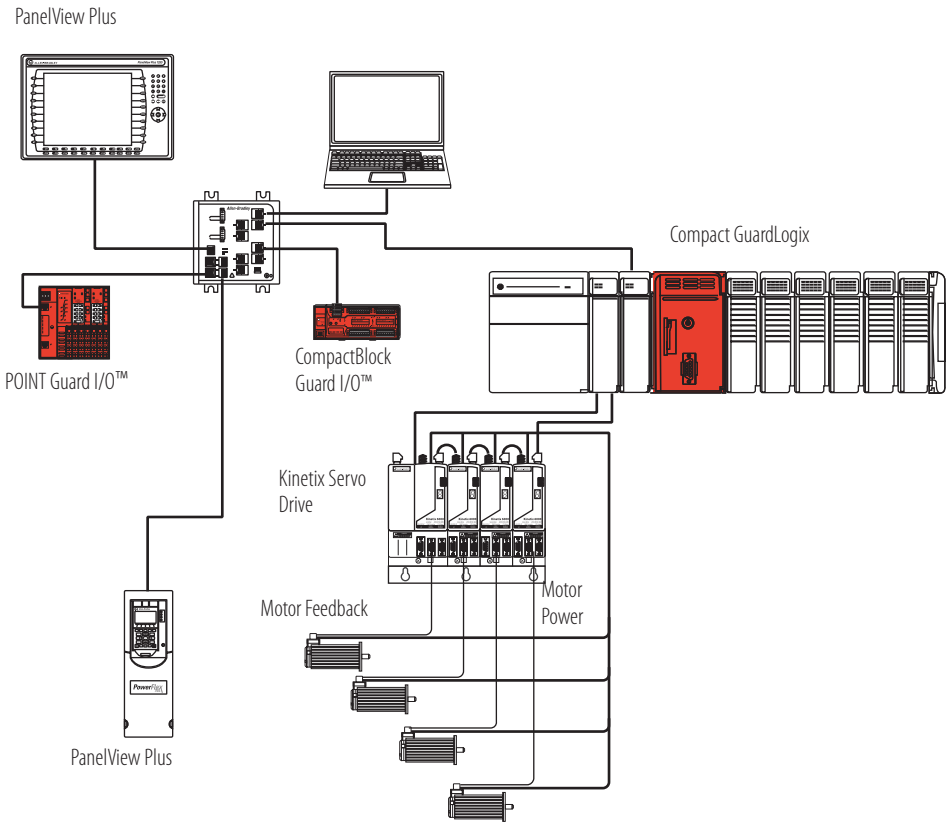

CompactLogix Controllers

The CompactLogix platform brings together the benefits of the Logix platform— common programming environment, common networks, common control engine—in a small footprint with high performance. Combined with Compact I/O modules, the CompactLogix platform is perfect for tackling smaller, machine-level control applications, with or without simple motion, with unprecedented power and scalability. A CompactLogix platform is ideal for systems that require standalone and system-connected control over EtherNet/IP, ControlNet, or DeviceNet networks.

For detailed specifications, see CompactLogix Controllers Specifications Technical Data, publication 1769-TD005.

Characteristic	CompactLogix 5370 L1 Controllers	CompactLogix 5370 L2 Controllers	CompactLogix 5370 L3 Controllers	1768 Controllers
Controller application	Small applications Embedded 1734 I/O modules	Small applications Embedded 1769 I/O modules	General purpose	Integrated safety Integrated SERCOS motion
Controller tasks	32; 100 programs/task	32; 100 programs/task	32; 100 programs/task	• 1768-L43: 16; 32 programs/task • 1768-L45: 30; 32 programs/task
Event tasks	Consumed tag, EVENT instruction, embedded inputs, remote I/O, axis, and motion event triggers	Consumed tag, EVENT instruction, remote I/O, axis, and motion event triggers	Consumed tag, EVENT instruction, remote I/O, axis, and motion event triggers	Consumed tag, EVENT instruction, remote I/O, axis, and motion event triggers
User memory	• 1769-L16ER-BB1B: 384 KB • 1769-L18ER-BB1B, 1769-L18ERM-BB1B: 512 KB	• 1769-L24ER-QB1B, 1769-L24ER-QBFC1B: 750 KB • 1769-L27ERM-QBFC1B: 1 MB	• 1769-L30ER, 1769-L30ERM, 1769-L30ER-NSE: 1MB • 1769-L33ER, 1769-L33ERM: 2 MB • 1769-L36ERM: 3 MB	• 1768-L43: 2 MB • 1768-L43S: 2 MB + 0.5 MB safety • 1768-L45: 3 MB • 1768-L45S: 3 MB + 1 MB safety
Built-in ports	• 2 EtherNet/IP(1) • 1 USB	• 2 EtherNet/IP(1) • 1 USB	• 2 EtherNet/IP(1) • 1 USB	• 1 port RS- 232 serial (DF1 or ASCII)
Communication options	• Dual-port EtherNet/IP	• Dual-port EtherNet/IP • DeviceNet	• Dual-port EtherNet/IP • DeviceNet	• EtherNet/IP (standard and safety) • ControlNet (standard and safety) • DeviceNet (standard)

(1) CompactLogix 5370 controllers have two EtherNet/IP ports to connect to an EtherNet/IP network. The ports carry the same network traffic as part of the controller's embedded switch. The controller uses only one IP address.

For information on estimating memory requirements for you application, see Logix5000 Controllers Execution Time and Memory Use Reference Manual, publication 1756-RM087.

CompactLogix 5370 L3 Controllers

In a CompactLogix 5370 L3 controller system, the 1769 I/O modules can be placed to the left and the right of the power supply. As many as eight modules can be placed on each side of the power supply. The CompactLogix 5370 L3 controller comes with:

- dual EtherNet/IP ports for ring topologies.
- USB port for firmware download and programming.

Characteristic	1769-L30ER	1769-L30ERM	1769-L30ER-NSE	1769-L33ER	1769-L33ERM	1769-L36ERM
Available user memory	1 MB	1 MB	1 MB No capacitor	2 MB	2 MB	3 MB
Memory card	1784-SD1 (1 GB), shipped with controller 1784-SD2 (2 GB)					
Communication ports	• 2 EtherNet/IP • 1 USB					
EtherNet/IP connections	• 256 EtherNet/IP • 120 TCP	• 256 EtherNet/IP • 120 TCP	• 256 EtherNet/IP • 120 TCP	• 256 EtherNet/IP • 120 TCP	• 256 EtherNet/IP • 120 TCP	• 256 EtherNet/IP • 120 TCP
EtherNet/IP nodes in a single Logix Designer application, max	16			32		48
Integrated motion on an EtherNet/IP network	—	Supports up to 4 axes	—	—	Supports up to 8 axes	Supports up to 16 axes
Module expansion capacity	8 1769 modules 1 bank of modules			16 1769 modules 2 banks of modules		30 1769 modules 3 banks of modules
Battery	None					
Power supply distance rating	4 modules			4 modules		4 modules
Programming software support	• RSLogix 5000 software, version 20 - For controllers that use firmware revision 20.*xxx*. • Logix Designer application, version 21 or later - For controllers that use firmware revision 21.*xxx* or later.					

These controllers replace previous catalog numbers.

New Controller[1]	Replaces Previous Controller[2]	Differences
1769-L30ER 1769-L30ERM 1769-L30ER-NSE	1769-L31 1769-L32C[3] 1769-L32E	• Additional memory • Integrated motion on EtherNet/IP support (1769-L30ERM, 1769-L33ERM, 1769-L36ERM) • USB port instead of RS-232 port • Dual-port EtherNet/IP support • SD card instead of CompactFlash card
1769-L33ER 1769-L33ERM	1769-L35CR[3] 1769-L35E	
1769-L36ERM	Any previous 1769-L3*x* controller	

(1) IMPORTANT: Typically, you can use any of the new controllers listed in each row as replacements for any of the previous controllers listed in the corresponding cell to the right. For example, you can replace a 1769-L32E with a 1769-L30ER, 1769-L30ERM, or 1769-L30ER-NSE controller.
In some rare cases, system configuration prevents controller replacement as shown above. For example, if your system uses a 1769-L32E controller with 12 expansion modules, you cannot replace that controller with a 1769-L30ER, 1769-L30ERM, or 1769-L30ER-NSE controller. Those controllers support no more than 8 expansion modules. You must replace the 1769-L32E controller with a 1769-L33ER, 1769-L33ERM, or 1769-L36ERM controller.
We recommend that before you upgrade your controllers, consider your application requirements to verify that the replacements listed above apply.

(2) These catalog numbers are still available for sale, see page 12 for details. Please contact your local Rockwell Automation sales office for ordering information.

(3) Requires converting from ControlNet connections to EtherNet/IP connections.

CompactLogix Communication Options

You can configure your system for information exchange between a range of devices and computing platforms and operating systems. Select a CompactLogix controller with integrated communication or the appropriate communication module.

For detailed specifications, see:

- CompactLogix Controllers Specifications Technical Data, publication 1769-TD005.
- CompactLogix Communication Modules Specifications Technical Data, publication 1769-TD007.

EtherNet/IP Communication Options

The Ethernet Industrial network protocol (EtherNet/IP) is an open industrial-networking standard that supports both real-time I/O messaging and message exchange. The EtherNet/IP network uses off-the-shelf Ethernet communication chips and physical media.

Dual-port EtherNet/IP support embeds switch technology directly in the controller to so the controller can operate on star, linear, or ring EtherNet/IP topologies.

Cat. No.	Description	Communication Rate	Logix Resources[1]	TCP/IP Connections
1769-L16ER-BB1B,	CompactLogix 5370 L1 controller with integrated EtherNet/IP dual-port, POINT I/O form factor	10/100 Mbps	4 nodes 256 EtherNet/IP connections	120
1769-L18ER-BB1B, 1769-L18ERM-BB1B			8 nodes 256 EtherNet/IP connections	
1769-L24ER-BB1B, 1769-L24ER-QBFC1B	CompactLogix 5370 L2 controller with integrated EtherNet/IP dual-port, Compact I/O form factor	10/100 Mbps	8 nodes 256 EtherNet/IP connections	120
1769-L27ERM-QBFC1B		10/100 Mbps	16 nodes 256 EtherNet/IP connections	
1769-L30ER, 1769-L30ERM	CompactLogix 5370 L3 controller with integrated EtherNet/IP dual-port	10/100 Mbps	16 nodes 256 EtherNet/IP connections	120
1769-L33ER, 1769-L33ERM			32 nodes 256 EtherNet/IP connections	
1769-L36ERM			48 nodes 256 EtherNet/IP connections	
1769-AENTR	1769 EtherNet/IP adapter	10/100 Mbps	128 EtherNet/IP connections	96
1768-ENBT	1768 EtherNet/IP communication bridge module	10/100 Mbps	128 EtherNet/IP connections	64
1768-EWEB	1768 Ethernet web server module	10/100 Mbps	128 EtherNet/IP connections	64

(1) The number of nodes listed for CompactLogix 5370 controllers represents the maximum number of EtherNet/IP nodes you can include in a Logix Designer application project for those controller. For example, in a Logix Designer application project that uses a 1769-L18ERM-BB1B controller, you can add as many as 8 EtherNet/IP nodes to the project.

Serial Communication Options

These CompactLogix controllers support serial communication.

Cat. No.	Serial Options
1769-L16ER-BB1B, 1769-L18ER-BB1B, 1769-L18ERM-BB1B	1734-232ASC module for an RS-232 serial interface 1734-485 ASC module for an RS-422 and RS-485 serial device
1769-L24ER-BB1B, 1769-L24ER-QBFC1B	1769-ASCII module for an ASCII interface to RS-232, RS-422, and RS-485 devices 1769-SM2 module for a Modbus RTU interface
1769-L27ERM-QBFC1B	
1769-L30ER, 1769-L30ERM	
1769-L33ER, 1769-L33ERM	
1769-L36ERM	
1768-L43, 1768-L43S, 1768-L45, 1768-L45S	Built-in serial port 1769-ASCII module for an ASCII interface to RS-232, RS-422, and RS-485 devices 1769-SM2 module for a Modbus RTU interface

Modbus Support

To access a Modbus TCP network, connect through the embedded Ethernet port of the CompactLogix 5370 controllers and execute a specific ladder-logic routine. For more information, see Knowledgebase document 470365 at http://www.rockwellautomation.com/knowledgebase/.

To access a Modbus RTU network, connect through the serial port (if available) and execute a specific ladder-logic routine. For more information, see Using Logix5000 Controllers as Masters or Slaves on Modbus Application Solution, publication CIG-AP129.

1734 Specialty I/O Modules

Cat. No.	Description	Wiring Base	POINTBus Current
1734-232ASC 1734-485ASC	The 1734-232ASC and 1734-485ASC serial interface modules offer a serial-link communication interface solution for peripheral products with RS-232 (only 1734-232ASC), RS-485, and RS-422 ports (only 1734-485ASC.)	1734-TB, 1734-TBS	75 mA
1734-ARM	The 1734-ARM address reserve module reserves address and slot numbers to maintain a numbering scheme of an existing system. The 1734-ARM has no module configuration and does not communicate I/O data.	1734-TB, 1734-TBS	75 mA
1734-CTM 1734-VTM	The common terminal module (1734-CTM) and voltage term66inal module (1734-VTM) expand the termination capabilities of POINT I/O modules. Install the modules to provide support for higher density (8 channel) POINT I/O modules.	1734-TB, 1734-TBS, 1734-TOP, 1734-TOPS	75 mA
1734-SSI	The 1734-SSI module collects serial data from absolute-position, encoding sensors that use standard Synchronous Serial Interface (SSI) protocol.	1734-TB, 1734-TBS	110 mA

1769 Compact I/O Modules

The 1769 Compact I/O modules can be installed on the CompactLogix 5370 L2 and L3 controllers and 1768 CompactLogix controllers. The modules mechanically lock together by means of a tongue-and-groove design and have an integrated communication bus that is connected from module to module by a moveable bus connector.

Each I/O module includes a built-in removable terminal block with finger-safe cover for connections to I/O sensors and actuators. The terminal block is behind a door at the front of the module. I/O wiring can be routed from beneath the module to the I/O terminals.

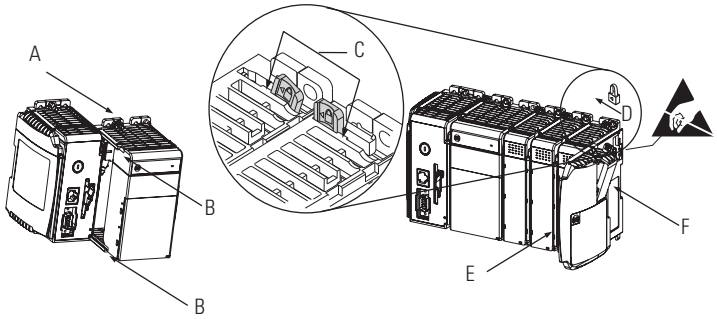

For detailed specifications, see 1769 Compact I/O Modules Specifications Technical Data, publication 1769-TD006.

Power Supply Distance Ratings

Check each module's specification table for the power supply distance rating. This indicates how many slot positions the module can be from the power supply.

1769 AC Digital Modules

Cat. No.	Inputs/Outputs	Voltage Category	Operating Voltage Range	Backplane Current	Power Supply Distance Rating
1769-IA8I	8 inputs, individually isolated	100/120V AC	79…132V AC, 47…63 Hz	90 mA @ 5.1V(1)	8
1769-IA16	16 inputs	100/120V AC	79…132V AC, 47…63 Hz	115 mA @ 5.1V	8
1769-IM12	12 inputs	200/240V AC	159…265V AC, 47…63 Hz	100 mA @ 5.1V	8
1769-OA8	8 outputs	100/240V AC	85…265V AC 47…63 Hz	145 mA @ 5.1V	8
1769-OA16	16 outputs	100/240V AC	85…265V AC 47…63 Hz	225 mA @ 5.1V	8

(1) Maximum is 190 mA.

1769 DC Digital Modules

Cat. No.	Inputs/Outputs	Voltage Category	Operating Voltage Range	Backplane Current	Power Supply Distance Rating
1769-IG16	16 inputs	5V DC TTL	4.5…5.5V DC	120 mA @ 5.1V	8
1769-IQ16	16 inputs	24V DC sink/source	10…30V DC @ 30 °C (86 °F) 10…26.4V DC @ 60 °C (140 °F)	115 mA @ 5.1V	8
1769-IQ16F	16 inputs, high-speed	24V DC sink/source	10…30V DC @ 30 °C (86 °F) 10…26.4V DC @ 60 °C (140 °F)	100 mA @ 5.1V	8
1769-IQ32	32 inputs	24V DC sink/source	10…30V DC @ 30 °C (86 °F) 10…26.4V DC @ 60 °C (140 °F)	170 mA @ 5.1V	8
1769-IQ32T	32 inputs	24V DC sink/source	20.4…26.4V DC @ 60 °C (140 °F)	170 mA @ 5.1V	8
1769-IQ6XOW4	6 inputs 4 outputs	24V DC sink/source input AC/DC normally open relay contact outputs	10…30V DC @ 30 °C (86 °F) 10…26.4V DC @ 60 °C (140 °F)	105 mA @ 5.1V 50 mA @ 24V	8
1769-OB8	8 outputs	24V DC source	20.4…26.4V DC	145 mA @ 5.1V	8
1769-OB16	16 outputs	24V DC source	20.4…26.4V DC	200 mA @ 5.1V	8
1769-OB16P	16 outputs, protected	24V DC source	20.4…26.4V DC	160 mA @ 5.1V	8
1769-OB32	32 outputs	24V DC source	20.4…26.4V DC	300 mA @ 5.1V	6
1769-OB32T	32 outputs	24V DC source	10.2…26.4V DC	220 mA @ 5.1V	8
1769-OG16	16 outputs	5V DC TTL	4.5…5.5V DC	200 mA @ 5.1V	8
1769-OV16	16 outputs	24V DC sink	20.4…26.4V DC	200 mA @ 5.1V	8
1769-OV32T	32 outputs	24V DC sink	10.2…26.4V DC	300 mA @ 5.1V	8

1769 Contact Output Modules

Cat. No.	Inputs/Outputs	Operating Voltage Range	Backplane Current	Power Supply Distance Rating
1769-OW8	8 outputs	5…265V AC 5…125V DC	125 mA @ 5.1V 100 mA @ 24V	8
1769-OW8I	8 outputs, individually isolated	5…265V AC 5…125V DC	125 mA @ 5.1V 100 mA @ 24V	8
1769-OW16	16 outputs	5…265V AC 5…125V DC	205 mA @ 5.1V 180 mA @ 24V	8

1769 Analog Modules

Cat. No.	Inputs/Outputs	Range	Resolution	Backplane Current	Power Supply Distance Rating
1769-IF4	4 inputs, differential or single-ended	±10V, 0…10V, 0…5V, 1…5V 0…20 mA, 4…20 mA	14 bits (unipolar) 14 bits plus sign (bipolar)	120 mA @ 5.1V 60 mA @ 24V	8
1769-IF4I	4 inputs, differential or single-ended, individually isolated	±10V, 0…10V, 0…5V, 1…5V 0…20 mA, 4…20 mA	16 bits (unipolar) 15 bits plus sign (bipolar)	145 mA @ 5.1V 125 mA @ 24V	8
1769-IF8	8 inputs, differential or single-ended	±10V, 0…10V, 0…5V, 1…5V 0…20 mA, 4…20 mA	16 bits (unipolar) 15 bits plus sign (bipolar)	120 mA @ 5.1V 70 mA @ 24V	8
1769-IF16C	16 inputs, single-ended	0…20 mA, 4…20 mA	16 bits (unipolar) 15 bits plus sign (bipolar)	190 mA @ 5.1V 70 mA @ 24V	8
1769-IF16V	16 inputs, differential	±10V, 0…10V, 0…5V, 1…5V	16 bits (unipolar) 15 bits plus sign (bipolar)	190 mA @ 5.1V 70 mA @ 24V	8
1769-IF4XOF2	4 differential or single-ended inputs 2 single-ended outputs	0…10V 0…20 mA	Input: 8 bits plus sign Output: 8 bits plus sign	120 mA @ 5.1V 160 mA @ 24V	8
1769-IF4FXOF2F	4 fast differential or single-ended inputs 2 fast single-ended outputs	±10V, 0…10V, 0…5V, 1…5V 0…20 mA, 4…20 mA	Input: 14 bits (unipolar) 14 bits plus sign (bipolar) Output: 13 bits (unipolar) 13 bits plus sign (bipolar)	220 mA @ 5.1V 120 mA @ 24V	8
1769-OF2	2 outputs, single-ended	±10V, 0…10V, 0…5V, 1…5V 0…20 mA, 4…20 mA	14 bits (unipolar) 14 bits plus sign (bipolar)	120 mA @ 5.1V 120 mA @ 24V	8
1769-OF4	4 outputs, single-ended	±10V, 0…10V, 0…5V, 1…5V 0…20 mA, 4…20 mA	15 bits plus sign unipolar and bipolar	120 mA @ 5.1V 170 mA @ 24V	8
1769-OF4CI	4 outputs, differential, individually isolated	0…20 mA 4…20 mA	16 bits (unipolar)	140 mA @ 5.1V 145 mA @ 24V	8
1769-OF4VI	4 outputs, differential, individually isolated	±10V 0…10V 0…5V 1…5V	15 bits plus sign (bipolar)	145 mA @ 5.1V 75 mA @ 24V	8
1769-OF8C	8 outputs, single-ended	0…20 mA 4…20 mA	16 bits (unipolar)	140 mA @ 5.1V 145 mA @ 24V	8
1769-OF8V	8 outputs, single-ended	±10V 0…10V 0…5V 1…5V	16 bits plus sign (bipolar)	145 mA @ 5.1V 125 mA @ 24V	8

1769 Expansion Cables

If you divide 1769 modules into multiple banks, make sure:

- each bank needs its own power supply.
- use expansion cables to connect the banks.
- the last I/O bank requires an end cap.

Vertical

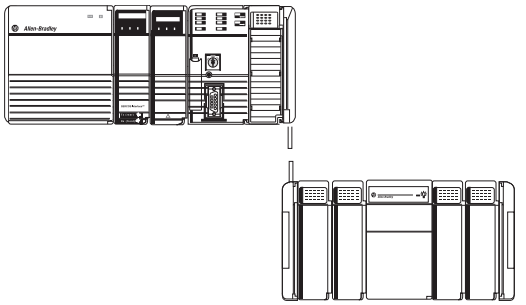

Horizontal

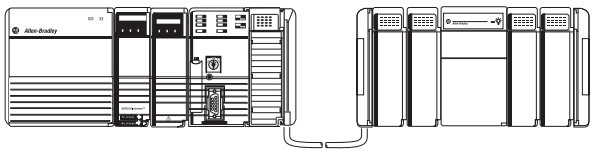

How you orient I/O banks determines the expansion cables you need to connect the I/O banks.

If you add a	And connect the chassis	Use this cable[1]
Second bank	Right to left	1769-CRL*x*
	Right to right	1769-CRR*x*
Third bank	Right to left	1769-CRL*x*
	Right to right	1769-CRR*x*
	Left to left	1769-CLL*x*

(1) Where *x* = 1 for 1 ft (305 mm) or 3 for 3.28 ft (1 m).

1769 End Caps

The final 1769 Compact I/O bank requires an end cap on the end without the expansion cable. The CompactLogix 5370 L2 controller comes with a right-end cap, so you do not need to order one separately.

- Right end cap, catalog number 1769-ECR
- Left end cap, catalog number 1769-ECL

1769 Wiring Systems

As an alternative to buying removable terminal blocks (RTBs) and connecting the wires yourself, you can buy a wiring system of:

- interface modules (IFMs) that provide the output terminal blocks for digital I/O modules. Use the pre-wired cables that match the I/O module to the IFM.
- analog interface modules (AIFMs) that provide the output terminal blocks for analog I/O modules. Use the pre-wired cables that match the I/O module to the AIFM.
- I/O module-ready cables. One end of the cable assembly is an RTB that plugs into the front of the I/O module. The other end has individually color-coded conductors that connect to a standard terminal block.

Removable Terminal Kits

You can order removable terminal kits with the CompactLogix 5370 L1 and L2 controllers separately. The kits are used to connect wiring to the controllers. describes the kits.

Cat. Nos.	Controllers Supported	Description
1769-RTB45	CompactLogix 5370 L1	• Four 10-pin connectors used to connect wiring to the controllers' embedded digital I/O module. • One 5-pin connector used to connect an external 24V DC power source to the controller.
1769-RTB40DIO	CompactLogix 5370 L2	Four 10-pin connectors used to connect wiring to the controllers' embedded digital I/O module.
1769-RTB40AIO	1769-L24ER-QBFC1B and 1769-L27ERM-QBFC1B	Four 10-pin connectors used to connect wiring to the controllers' embedded analog I/O module.

CompactLogix Power Supplies

Select power supplies based on the controller and the number of additional I/O banks.

For a	Select
CompactLogix 5370 L3 controller	• One 1769 power supply for the controller and local I/O modules • One 1769 power supply for each additional bank of I/O modules
CompactLogix 5370 L2 controller	No power supply as it is integral to the controller package
CompactLogix 5370 L1 controller	No power supply as it is integral to the controller package
1768 CompactLogix controller	• One 1768 power supply for the controller and 1768 modules • One 1769 power supply for each additional bank of I/O modules

Power Supplies

Cat. No.	Description	Voltage Category	Operating Voltage Range
1769-PA2	1769 Compact I/O expansion power supply	120V/220V AC	85...265V AC
1769-PB2		24V DC	19.2...31.2V DC
1769-PA4		120V/220V AC	85...265V AC or 170...265V AC (switch selectable) 47...63 Hz
1769-PB4		24V DC	19.2...31.2V DC
1768-PA3	1768 CompactLogix power supply	120V/220V AC	85...265V AC or 108...132V DC
1768-PB3		24V DC	16.8...31.2V DC

For detailed specifications, see Compact Power Supplies Specifications Technical Data, publication 1769-TD008.

Allen-Bradley, Compact GuardLogix, Compact I/O, CompactBlock Guard I/O, CompactLogix, ControlLogix, FactoryTalk, GuardLogix, Integrated Architecture, Kinetix, Logix5000, PanelView, POINT Guard I/O, POINT I/O, POINTBus, PowerFlex, Rockwell Software, Rockwell Automation, RSLinx, RSLogix, RSNetWorx, SCANport, SoftLogix, Stratix 6000, Stratix 8000, Studio 5000, Studio 5000 Logix Designer, and Ultra are trademarks of Rockwell Automation, Inc.

Trademarks not belonging to Rockwell Automation are property of their respective companies.

www.rockwellautomation.com

Power, Control and Information Solutions Headquarters

Americas: Rockwell Automation, 1201 South Second Street, Milwaukee, WI 53204-2496 USA, Tel: (1) 414.382.2000, Fax: (1) 414.382.4444
Europe/Middle East/Africa: Rockwell Automation NV, Pegasus Park, De Kleetlaan 12a, 1831 Diegem, Belgium, Tel: (32) 2 663 0600, Fax: (32) 2 663 0640
Asia Pacific: Rockwell Automation, Level 14, Core F, Cyberport 3, 100 Cyberport Road, Hong Kong, Tel: (852) 2887 4788, Fax: (852) 2508 1846

Publication 1769-SG001P-EN-P - January 2014
Supersedes Publication 1769-SG001O-EN-P - January 2013

Copyright © 2014 Rockwell Automation, Inc. All rights reserved. Printed in the U.S.A.

CompactLogix Power Supplies Specifications

1768 CompactLogix Power Supplies Catalog Numbers 1768-PA3, 1768-PB3

1769 Compact I/O Power Supplies Catalog Numbers 1769-PA2, 1769-PB2, 1769-PA4, 1769-PB4

Topic	Page
1768 CompactLogix Power Supplies	3
1769 Compact I/O Power Supplies	7

Environmental Specifications - 1768 and 1769 Power Supplies

Attribute	1768-PA3, 1769-PB3 1769-PA2, 1769-PB2, 1769-PA4, 1769-PB4
Temperature, operating IEC 60068-2-1 (Test Ad, Operating Cold), IEC 60068-2-2 (Test Bd, Operating Dry Heat), IEC 60068-2-14 (Test Nb, Operating Thermal Shock)	0…60 °C (32…140 °F)
Temperature, storage IEC 60068-2-1 (Test Ab, Unpackaged Nonoperating Cold), IEC 60068-2-2 (Test Bb, Unpackaged Nonoperating Dry Heat), IEC 60068-2-14 (Test Na, Unpackaged Nonoperating Thermal Shock)	-40…85 °C (-40…185 °F)
Relative humidity IEC 60068-2-30 (Test Db, Unpackaged Nonoperating Damp Heat)	5…95% noncondensing
Vibration IEC 60068-2-6 (Test Fc, Operating)	5 g @ 10…500 Hz
Shock, operating IEC 60068-2-27 (Test Ea, Unpackaged Shock)	30 g
Shock, nonoperating IEC 60068-2-27 (Test Ea, Unpackaged Shock)	50 g

Important User Information

Solid state equipment has operational characteristics differing from those of electromechanical equipment. Safety Guidelines for the Application, Installation and Maintenance of Solid State Controls (publication SGI-1.1 available from your local Rockwell Automation sales office or online at http://www.rockwellautomation.com/literature/) describes some important differences between solid state equipment and hard-wired electromechanical devices. Because of this difference, and also because of the wide variety of uses for solid state equipment, all persons responsible for applying this equipment must satisfy themselves that each intended application of this equipment is acceptable.

In no event will Rockwell Automation, Inc. be responsible or liable for indirect or consequential damages resulting from the use or application of this equipment.

The examples and diagrams in this manual are included solely for illustrative purposes. Because of the many variables and requirements associated with any particular installation, Rockwell Automation, Inc. cannot assume responsibility or liability for actual use based on the examples and diagrams.

No patent liability is assumed by Rockwell Automation, Inc. with respect to use of information, circuits, equipment, or software described in this manual.

Reproduction of the contents of this manual, in whole or in part, without written permission of Rockwell Automation, Inc., is prohibited.

Throughout this manual, when necessary, we use notes to make you aware of safety considerations.

WARNING	Identifies information about practices or circumstances that can cause an explosion in a hazardous environment, which may lead to personal injury or death, property damage, or economic loss.
IMPORTANT	Identifies information that is critical for successful application and understanding of the product.
ATTENTION	Identifies information about practices or circumstances that can lead to personal injury or death, property damage, or economic loss. Attentions help you identify a hazard, avoid a hazard, and recognize the consequence
SHOCK HAZARD	Labels may be on or inside the equipment, for example, a drive or motor, to alert people that dangerous voltage may be present.
BURN HAZARD	Labels may be on or inside the equipment, for example, a drive or motor, to alert people that surfaces may reach dangerous temperatures.

Rockwell Automation, Rockwell Software, Allen-Bradley, TechConnect, Compact I/O, and CompactLogix are trademarks of Rockwell Automation, Inc.

Trademarks not belonging to Rockwell Automation are property of their respective companies.

1768 CompactLogix Power Supplies

The 1768 backplane requires one 1768 power supply. The power supply is a dual input supply that operates in multiple ranges. The power supply also offers a 24V dc external power source. The power supply sends 24V dc to the controller in slot 0.

- The controller converts the 24V dc to 5V dc and 24V dc and distributes it as needed.
  - 5V and 24V power to 1769 I/O modules on the right side of the controller
  - 24V power to 1768 modules on the left side of the controller

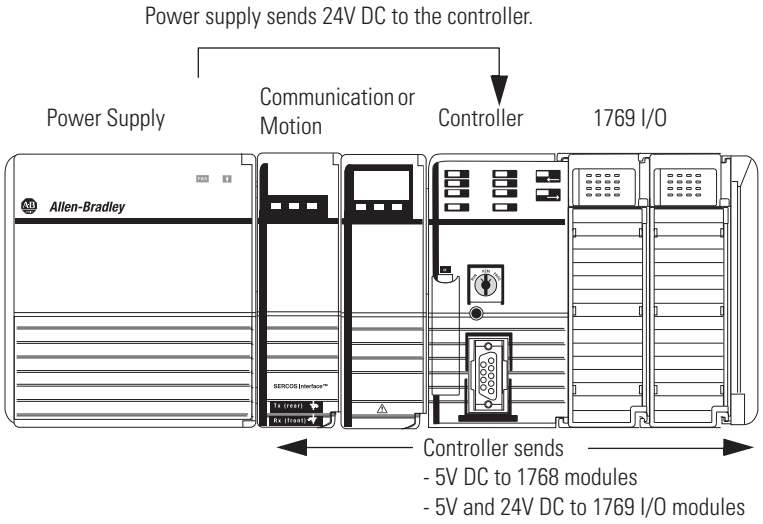

The 1768 modules do not have a distance rating to the 1768 power supply. For the 1769 I/O modules in the 1768 system, the distance rating is from the controller and not the 1768 power supply.

Technical Specifications - 1768 CompactLogix Power Supplies

Attribute	1768-PA3	1768-PB3
Input voltage range	85…265V AC 108…132V DC	16.8...31.2V DC
Input voltage, nom	120V/220V AC	24V DC
Input frequency range	47…63 Hz	DC
Input power, max	120VA/120 W	112 W
Output power, max	90 W 24V DC to backplane: 3.5 24V DC to user-accessible terminal block: 0.25 A	
Output power, min	6 W 24V DC to backplane: 0.25 A 24V DC to user-accessible terminal block: 0.0 A	
Power dissipation	30 W	22 W
Inrush current, max	50 A @ 85…132V AC 80 A @ 195…265V AC	50 A @ 16.8...31.2V DC(1)

Technical Specifications - 1768 CompactLogix Power Supplies

Attribute	1768-PA3	1768-PB3
Isolation voltage	250V, reinforced insulation type, input to system and 24V DC AUX Tested at 4250V DC for 60 s 150V, basic insulation type, 24V DC AUX to system Tested at 2200V dc for 60 s	
Internal overcurrent protection	Non-replaceable fuse is soldered in place	
Recommended external overcurrent protection	4…6 A @ 28.5…36.7 A^2S	8...12 A @ 166...250 A^2S
Overcurrent protection	15 A, user supplied	
Weight, approx.	0.98 kg (2.15 lb)	1.01 kg (2.22 lb)
Dimensions (HxWxD), approx.	131.25 x 132.75 x 105.50 mm (5.17 x 5.23 x 4.15 in.)	
Module location	DIN rail or panel mount	
Mounting screw torque	1.16 N•m (10 lb•in) - use M4 or #8 screws	
Wire category	1 - on power ports[2]	
Wire size, input power terminal	14 AWG (2.5 mm^2) solid or stranded copper wire rated at 75 °C (167 °F) or greater, 1.2 mm (3/64 in.) insulation maximum	
Wire size, output power terminal	14 AWG (2.5 mm^2)…22 AWG (0.25 mm^2) solid or stranded copper wire rated at 75 °C (167 °C) or greater, 1.2 mm (3/64 in.) insulation max	
Conductor screw torque	0.6 N•m (5 lb•in)	
North American temperature code	T4	
Output #1: 24V DC to backplane		
Ride-through interval time, min	25 ms @ 90 W	5 ms @ 90 W
Full power hold-up interval	5 ms @ 90 W	
Extended hold-up interval	8...12 s @ 1.25 W	
Output #2: 24V DC to front panel terminal block		
Voltage	18...27.60V @ front panel	
Output disable	Disable output during hold-up periods	
Enclosure type rating	None (open-style)	

(1) Does not include X-capacitor charging current.

(2) Use this conductor category information for planning conductor routing as described in the system level installation manual. See the Industrial Automation Wiring and Grounding Guidelines, publication 1770-4.1.

Certifications - 1768 CompactLogix Power Supplies

Certification[1]	1768-PA3, 1768-PB3
c-UL-us	UL Listed Industrial Control Equipment, certified for US and Canada. See UL File E65584. UL Listed for Class I, Division 2 Group A,B,C,D Hazardous Locations, certified for U.S. and Canada. See UL File E194810.
CE	European Union 89/336 EEC EMC Directive, compliant with: • EN 50082-2; Industrial Immunity • EN 61326-1; Meas./Control/Lab., Industrial Requirements • EN 61000-6-2; Industrial Immunity • EN 61000-6-4; Industrial Emissions • EN 61131-2; Programmable Controllers (Clause 8, Zone A & B) European Union 73/23/EEC LVD Directive, compliant with: • EN 1010-1; Meas./Control/Lab
C-Tick	Australian Radiocommunications Act, compliant with: AS/NZS CISPR 11; Industrial Emissions

(1) When marked. See the Product Certification link at http://www.ab.com for Declarations of Conformity, Certificates, and other certification details.

Power Requirements and Transformer Sizing - 1768 CompactLogix Power Supplies

1768-PA3 Power Dissipation

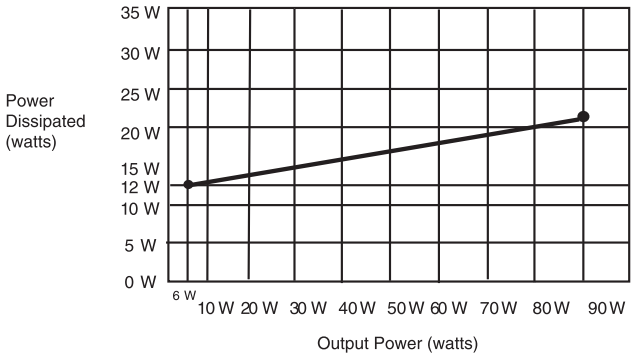

1768-PA3 Input Power Requirements

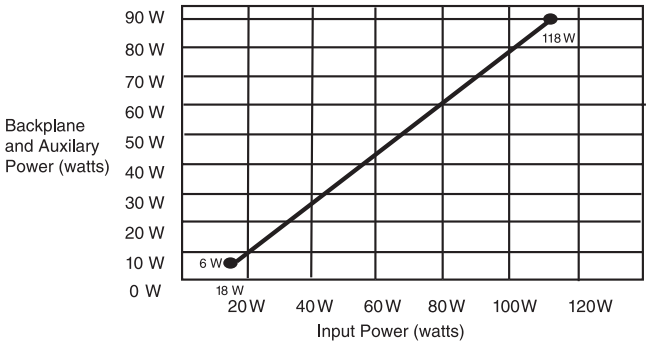

1768-PB3 Power Dissipation

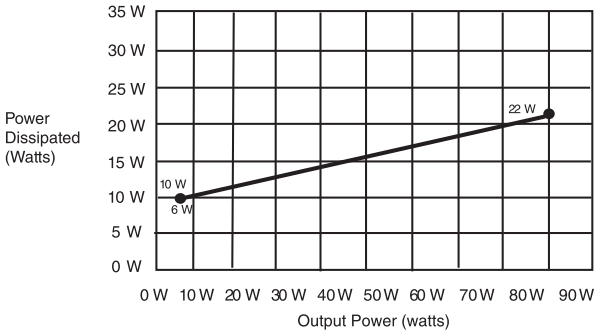

1768-PB3 Input Power Requirements

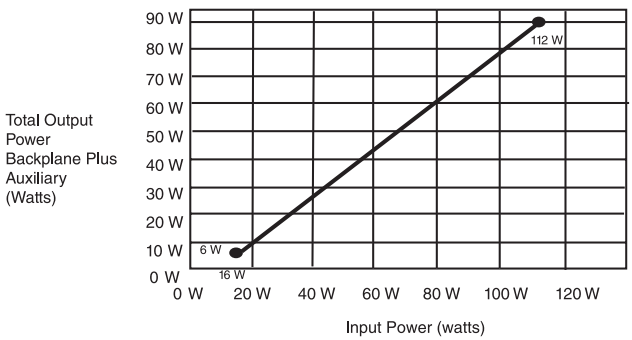

Mounting Dimensions - 1768 CompactLogix Power Supplies

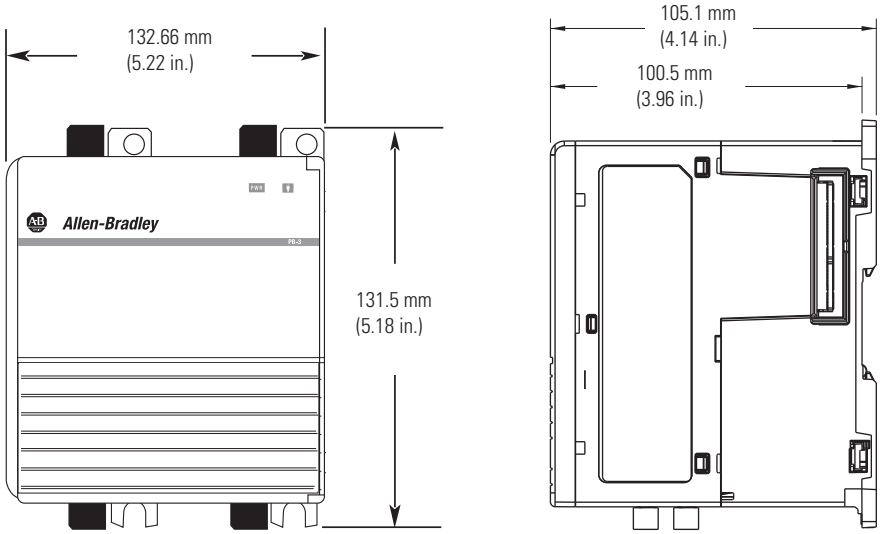

1769 Compact I/O Power Supplies

Each 1769-L3*x* controller and additional bank of I/O modules requires a 1769 power supply. Place 1769 I/O modules to the left or right of the 1769 power supply. As many as eight I/O modules can be placed on each side of the power supply.

Each 1769 module also has a power supply distance rating (the number of modules from the power supply). Each module must be located within its distance rating. See the specifications for the module to determine its distance rating.

Technical Specifications - 1769 Compact I/O Power Supplies

Attribute	1769-PA2	1769-PB2	1769-PA4	1769-PB4
Input voltage range	85…265V AC	19.2...31.2V DC	85…265V AC or 170...265V AC, switch selectable	19.2...31.2V DC
Input voltage, nom	120V/220V AC	24V DC	120V/220V AC	24V DC
Power consumption	100 VA @ 120V AC 130 VA @ 240V AC	50 VA @ 24V DC	200 VA @ 120V AC 240 VA @ 240V AC	100 VA @ 24V DC
Power dissipation	8 W @ 60° C (140° F)	7.5 W @ 60° C (140° F)	18 W @ 60° C (140° F)	14.5 W @ 60° C (140° F)
Current capacity @ 5V	2.0 A	2.0 A	4.0 A	4.0 A
Current capacity @ 24V	0.8 A	0.8 A	2.0 A	2.0 A
Inrush current, max	25 A @ 132V AC	30 A @ 31.2V DC	25 A @ 132V AC	30 A @ 31.2V DC
Isolation voltage	265V (continuous), reinforced insulation type (IEC Class 1 grounding required) Routine tested @ 2596V DC for 1 s, AC power input to system and AC power input to 24V DC user power	75V (continuous), reinforced insulation type (IEC Class 1 grounding required) Routine tested at 1697V DC for 1 s, DC power input to system	265V (continuous), reinforced insulation type (IEC Class 1 grounding required) Routine tested at 2596V DC for 1 s, AC power input to system	75V (continuous), reinforced insulation type (IEC Class 1 grounding required) Routine tested at 1697V DC for 1 s, DC power input to system
Fuse type	Wickmann 19195-3.15A Littelfuse 02183.15MXP	Wickmann 19193-6.3A Littelfuse 021706.3MXP	Wickmann 19195-3.15A Littelfuse 02183.15MXP	Wickmann 19193-6.3A Littelfuse 021706.3MXP
Weight, approx.	525 g (1.16 lb)		630 g (1.39 lb)	
Dimensions (HxWxD), approx.	118 x 70 x 87 mm (4.65 x 2.76 x 3.43 in.)			
Module location	DIN rail or panel mount			
Mounting screw torque	1.16 N•m (10 lb•in) - use M4 or #8 screws			
Power supply distance rating	8 8 I/O modules can be connected on either side of the power supply for a maximum of 16 modules			
Wire category[1]	1 - on power ports	2 - on power ports	1 - on power ports	2 - on power ports
Wire size	14 AWG (2.5 mm^2) solid copper wire rated at 90 °C (194 °F) or greater, 1.2 mm (3/64 in.) insulation max			
North American temperature code	T3C			
IEC temperature code	—	T4	—	T4
Enclosure type rating	None (open-style)			

[1] Use this conductor category information for planning conductor routing as described in the system level installation manual. See the Industrial Automation Wiring and Grounding Guidelines, publication 1770-4.1.

Certifications - 1769 Compact Power Supplies

Certification[1]	1769-PA2, 1769-PA4	1769-PB2, 1769-PB4
c-UL-us	UL Listed for Class 1, Division 2 Group A,B,C,D Hazardous Locations, certified for U.S. and Canada. See UL File E10314	
CE	European Union 2004/108/EC EMC Directive, compliant with: • EN 61000-6-2; Industrial Immunity • EN 61000-6-4; Industrial Emissions	
C-Tick	Australian Radiocommunications Act, compliant with: AS/NZS CISPR 11; Industrial Emissions	
	—	European Union 94/9/EC ATEX Directive, compliant with: • EN 60079-15; Potentially Explosive Atmospheres, Protection "n" (Zone 2) • EN 60079-0; General Requirements (Zone 2)

(1) When marked. See the Product Certification link at http://www.ab.com for Declarations of Conformity, Certificates, and other certification details.

Power Requirements and Transformer Sizing - 1769 CompactLogix Power Supplies

1769-PA2 Output Derating

User +24V Current Draw at 0 A

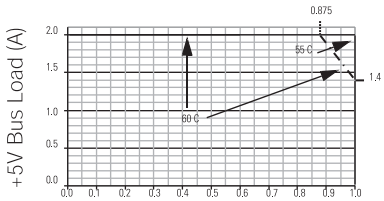

User +24V Current Draw at 0.2 A

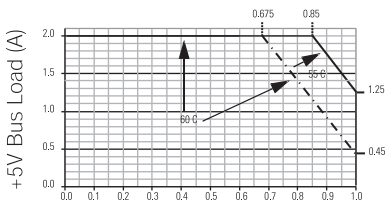

User +24V Current Draw at 0.25 A

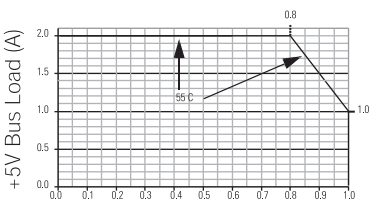

1769-PA2 Power Disspation

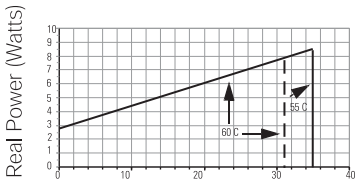

Bus +5V, +24V, and User Load (Watts)

1769-PB2 Output Derating

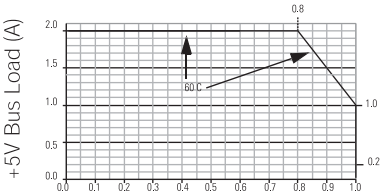

1769-PB2 Power Dissipation

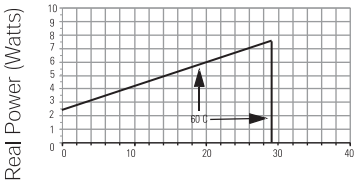

Bus +5V, +24V, and User Load (Watts)

1769-PA4 Output Derating

Total Output: 68 W @ 55 °C (131 °F) or below
61 W @ 60 °C (140 °F) or below

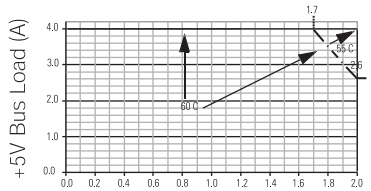

1769-PB4 Output Derating

Total Output: 68 W @ 55 °C (131 °F) or below
61 W @ 60 °C (140 °F) or below

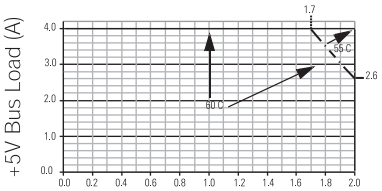

1769-PA4 Power Disspation

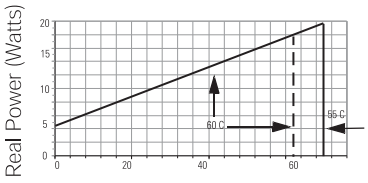

Bus +5V, +24V, and User Load (Watts)

1769-PB4 Power Disspation

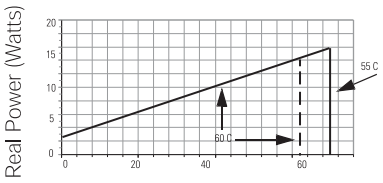

Bus +5V, +24V, and User Load (Watts)

Mounting Dimensions - 1769 CompactLogix Power Supplies

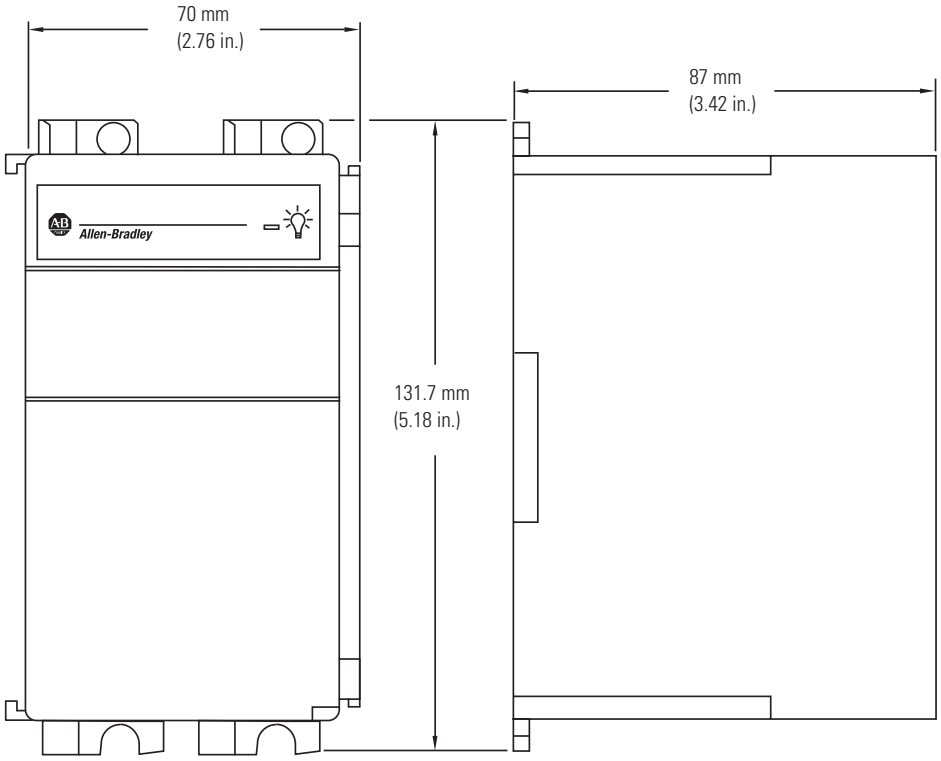

Notes:

Rockwell Automation Support

Rockwell Automation provides technical information on the Web to assist you in using its products. At http://www.rockwellautomation.com/support/, you can find technical manuals, a knowledge base of FAQs, technical and application notes, sample code and links to software service packs, and a MySupport feature that you can customize to make the best use of these tools.

For an additional level of technical phone support for installation, configuration, and troubleshooting, we offer TechConnect support programs. For more information, contact your local distributor or Rockwell Automation representative, or visit http://www.rockwellautomation.com/support/.

Installation Assistance

If you experience an anomoly within the first 24 hours of installation, review the information that is contained in this manual. You can contact Customer Support for initial help in getting your product up and running.

United States or Canada	1.440.646.3434
Outside United States or Canada	Use the Worldwide Locator at http://www.rockwellautomation.com/support/americas/phone_en.html, or contact your local Rockwell Automation representative.

New Product Satisfaction Return

Rockwell Automation tests all of its products to ensure that they are fully operational when shipped from the manufacturing facility. However, if your product is not functioning and needs to be returned, follow these procedures.

United States	Contact your distributor. You must provide a Customer Support case number (call the phone number above to obtain one) to your distributor to complete the return process.
Outside United States	Please contact your local Rockwell Automation representative for the return procedure.

Documentation Feedback

Your comments will help us serve your documentation needs better. If you have any suggestions on how to improve this document, complete this form, publication RA-DU002, available at http://www.rockwellautomation.com/literature/.

www.rockwellautomation.com

Power, Control and Information Solutions Headquarters

Americas: Rockwell Automation, 1201 South Second Street, Milwaukee, WI 53204 USA, Tel: (1) 414.382.2000, Fax: (1) 414.382.4444
Europe/Middle East/Africa: Rockwell Automation, Vorstlaan/Boulevard du Souverain 36, 1170 Brussels, Belgium, Tel: (32) 2 663 0600, Fax: (32) 2 663 0640
Asia Pacific: Rockwell Automation, Level 14, Core F, Cyberport 3, 100 Cyberport Road, Hong Kong, Tel: (852) 2887 4788, Fax: (852) 2508 1846

Publication 1769-TD008A-EN-P - January 2010

Copyright © 2010 Rockwell Automation, Inc. All rights reserved. Printed in the U.S.A.

BOM #12

Product: 1492-GS1G200

Description: 1492-GS High Density Mini Circuit Breakers (Toggle Style)

Representative Photo Only (actual product may vary based on configuration selections)

MINIATURE CIRCUIT BREAKER DATA	
Electrical Standards	UL
Number of Poles	1 pole
Magnetic Trip Range	G-Trip Characteristics - Inductive Loads (AC)
Amp Rating	20.0 A
Optional Auxiliary Contact	No Contact

CERTIFICATIONS AND APPROVALS	
UL	1077, Guide No. QVNU2, File No. E65138
CSA	22.2 NO. 235
EN	60934
CE	Marked
For UL Certifications Directory:	http://database.ul.com/cgi-bin/XYV/template/LISEXT/1FRAME/index.htm

Specifications ❶

Cat. No.	1492-GS																	
Description	High-density circuit breaker (supplementary protector) with universal mounting foot for Allen-Bradley and DIN rail mounting																	
Maximum Voltage Ratings	277/480V AC 50/60 Hz 65V DC																	
Standard Current Ratings Internal Resistance per Pole	**A** **Ω**	0.2 26	0.5 4.2	0.8 1.6	1.0 1.1	1.5 0.47	2.0 0.25	2.5 0.20	3.0 0.13	4.0 0.08	5.0 0.06	6.0 0.05	8.0 0.01	10.0 0.01	12.0 0.01	15.0 0.01	16.0 0.01	20.0 0.005	25.0 0.004
Dielectric Strength	1960V AC																	
Shock and Vibration Specifications	Shock: 25 G, 11 ms duration Vibration: 5 G (10…500 Hz)																	
Insulation Resistance	Greater than 100 MΩ @ 500V DC																	
Current Capacity of Auxiliary Contacts (N.O., N.C.)	1.0 A AC or DC (resistive load)																	
Voltage Rating of Auxiliary Contacts	277V AC 65V DC																	
Operating Life	6000 cycles @ rated current (UL 1077)																	
Temperature Range	–40…+149°F (–40…+65°C)																	
Wire Size	#22…#10 AWG (0.5…6 mm^2)																	
Recommended Wire Strip Length	0.51" (13.0 mm) for Mail Terminals 0.41" (10.4 mm) for Auxiliary Terminals																	
Recommended Tightening Torque	5 lb-in. (0.565 Nm)																	

❶ Performance Data — See page Important-2.

Approvals

- UL 1077
- CSA 22.2 NO. 235
- VDE 0631 (IEC 60934)

In North America, the Cat. No. 1492-GS circuit breaker is rated as a Supplementary Protector with a short-circuit current rating. Internationally, it is rated by IEC as a Circuit Breaker for Equipment with an interrupt rating

Electrical Characteristics

Poles	Rated Current (A)	Voltage Rating		Short-Circuit Current Rating ❶ Interrupt Rating *I*cn (IEC only)
		AC	DC	
UL 1077 Supplementary Protector Rating				
1	0.2…5	277	—	0.4 kA, U2
1	6…25	277	—	0.7 kA, U2
2, 3	0.2…5	277/480	—	0.4 kA, U2
2, 3	6…25	277/480	—	0.5 kA, U2
1, 2, 3	0.2…5	—	65	0.4 kA, U2
1, 2, 3	6…25	—	65	0.8 kA, U2
1	0.2…16	277	—	5 kA, C1
1	18…25	277	—	2 kA, C1
2, 3	0.2…16	277/480	—	5 kA, C1
2, 3	18…25	277/480	—	2 kA, C1
1	0.2…25	—	65	2 kA, C1
CSA 22.2 #235 Supplementary Protector Ratings				
1	0.2…16	277	—	5 kA, C1
1	18…25	277	—	2 kA, C1
2, 3	0.2…16	277/480	—	5 kA, C1
2, 3	18…25	277/480	—	2 kA, C1
1	0.2…25	—	65	2 kA, C1
IEC 60934 Circuit Breaker for Equipment Ratings				
1	0.2…5	250	—	0.4 kA
1	6…25	250	—	0.8 kA
2, 3	0.2…5	240/415	—	0.4 kA
2, 3	6…25	240/415	—	0.8 kA
1	0.2…5	—	65	0.4 kA
1	6…25	—	65	0.8 kA

❶ The short-circuit current rating is followed by a letter and number designating the test conditions and any calibrations and dielectric tests following the short-circuit test. These designations are defined as follows (see ❷ also):
C — Indicates that the short-circuit test was conducted with series overcurrent protection
U — Indicates that the short-circuit test was conducted without series overcurrent protection
1 — Indicates that a recalibration and dielectric test was not conducted as part of the short-circuit test
2 — Indicates that a recalibration and dielectric test was conducted as part of the short-circuit test

❷ These alphanumeric designations were established by UL. CSA has not yet adopted them; however, the test conditions are equivalent to UL and the coding is appropriate.

http://raise.rockwellautomation.com/raconfig/rtcache/jpg/1492gs.jpg[10/7/2015 4:09:21 PM]

BOM #13

Compact Modular Fuse Holders

COOPER Bussmann

DIN-Rail Mount Fuse Holders Protect Your Electrical System and Simplify Installation

- Colour coded for simple visual identification: yellow for **PV (1000Vdc)**, red for **IEC (690Vac)** and **black** for **UL (600Vac/dc)** applications.
- CHPV Models, with 1000Vdc rating for use with solar gPV fuse links, are suitable for photovoltaic applications of any size.
- Tested to a wide range of standards: IEC, cULus, CCC, CSA and UR, allowing for use across global applications.
- World class space-saving footprint - smaller than any other Modular Fuse Holder, reducing required installation space.
- Toolless DIN-Rail mounting improves ease of use and reduces installation time and costs.
- Rated for use with 75ºC or 90ºC wire, fine stranded wire, spade terminals and with comb-bus bars. Use any higher temperature rated wire with appropriate derating.

PV IEC UL

For more information visit www.cooperbussmann.com/ModularFuseHolders

Modular Fuse Holder Selection Table (10 x 38, Photovoltaic and Class CC)

Series & Size	Catalogue Number		Rated Voltage & Rated Current	Agency Markings	Number of Poles	Terminal Rating	Rated Breaking Capactiy	Cooper Bussmann Fuse Links
	With Indicator	Without Indicator						
CHM 10x38 and Midget	CHM1DIU	CHM1DU	IEC 690Vac/32A UL 600Vac/30A;	IEC 60269-2 UR; CSA; CCC	1	IEC: 1 to 25mm² 70°C PVC/Copper Cable Solid, Stranded, Fine Stranded, Spade Lug, Comb Bus Bar; Single and Dual	IEC 120kA rms sym UL 200kA rms sym CCC 100kA rms sym	IEC: C10 Series UL: FNQ, KLM, FNM, KTK, BAF, FWA, PVM, AGU, BAN, FWC.
	CHM2DIU	CHM2DU			2			
	CHM3DIU	CHM3DU			3			
	CHM4DIU	CHM4DU			4			
	CHM1DNIU	CHM1DNU		IEC 60269-2	1-pole + 1 neutral			
	CHM3DNIU	CHM3DNU			3-pole + 1 neutral			
	CHM1DI-48U	N/A	IEC 48Vdc/32A UL 48Vdc/30A;	IEC 60269-2; UR; CSA; CCC	1			
	N/A	CHM1DNXU	IEC 690Vac/32A	IEC 60269-2	1 neutral		N/A	N/A
CHPV Photovoltaic	CHPV1IU	CHPV1U	IEC 1000Vdc/32A UL 1000Vdc/30A;	IEC 60269-1 UR; CSA; CCC UL4248-18	1		33kA	Solar PV series, PVM, PV-xxA10F
	CHPV2IU	CHPV2U			2			
CHCC Class CC	CHCC1DIU	CHCC1DU	UL 600Vac/dc 30A	UL; CSA; CCC	1	Cable 75°C and 90°C Cu cable	200kA rms sym	LP-CC, FNQ-R, KTK-R
	CHCC2DIU	CHCC2DU			2			
	CHCC3DIU	CHCC3DU			3			
	N/A	CHCC1DI-48U	UL 48Vdc/30A		1			

Features

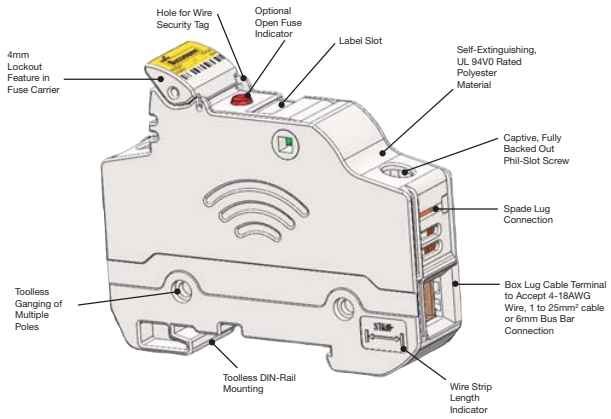

Specifications

Temperature Operating Range:
-20°C to +120°C (non-indicating)
-20°C to +90°C (indicating)
Flammability: Self-extinguishable UL 94V0 rated

Comb Bus Bar & Power Feed Accessories Make Installation Easier

- Distributes power in single- or three-phase configurations
- Cut-to-length solution does not compromise finger-safe protection
- Single-phase bus bars rated to 1000Vdc and 100A in end-fed configuration (200A for center-fed configuration)
- Three-phase bus bars rated to 600Vac/dc and 100A in end-fed configuration (200A for center-fed configuration)
- Power feed terminals for single-phase and three-phase service

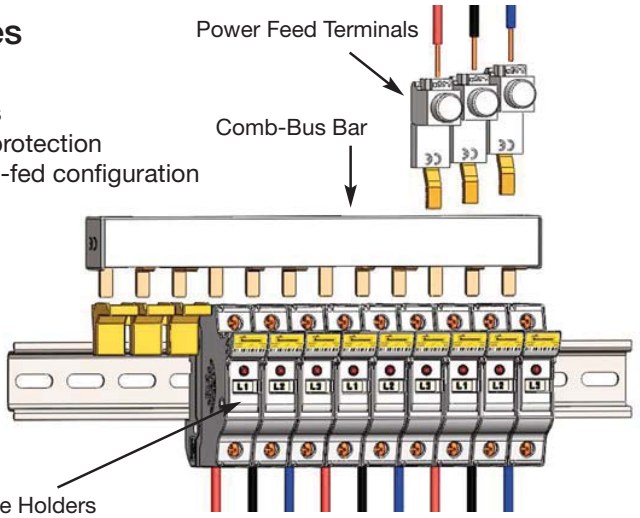

© 2012 Cooper Bussmann
www.cooperbussmann.com

COOPER Bussmann

Time-Current Characteristic Curves–Average Melt

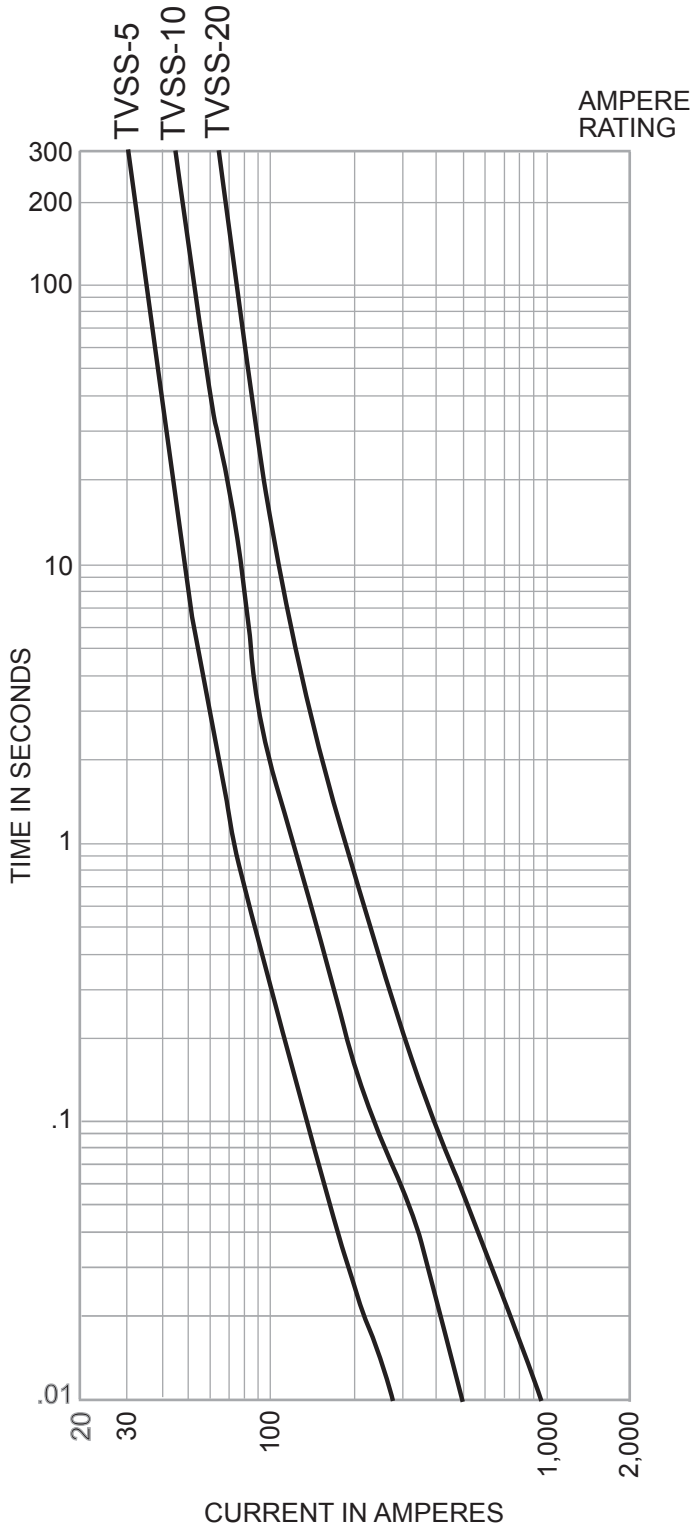

Time-Current Characteristic Curves–Peak Let-Through

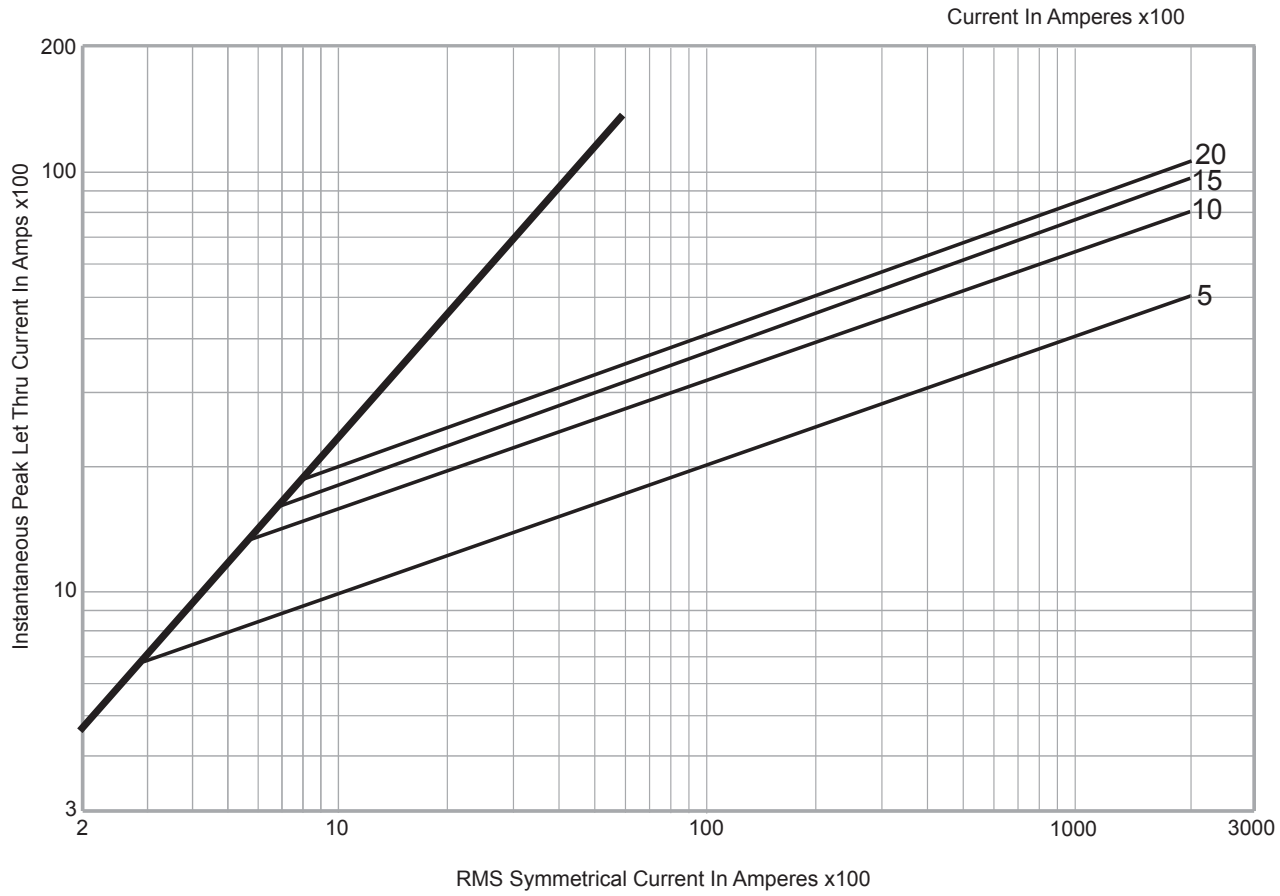

The only controlled copy of this Data Sheet is the electronic read-only version located on the Bussmann Network Drive. All other copies of this document are by definition uncontrolled. This bulletin is intended to clearly present comprehensive product data and provide technical information that will help the end user with design applications. Bussmann reserves the right, without notice, to change design or construction of any products and to discontinue or limit distribution of any products. Bussmann also reserves the right to change or update, without notice, any technical information contained in this bulletin. Once a product has been selected, it should be tested by the user in all possible applications.

DIN-Rail TVS Series

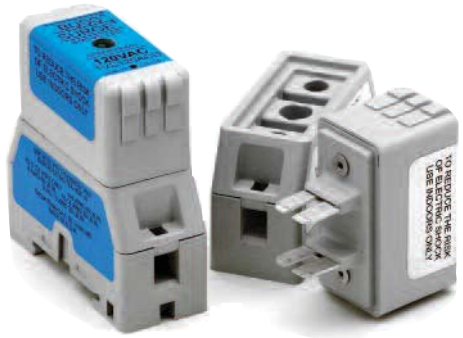

Status LED

OFF - Suppressor Non-Operational (power may be on)
GREEN - Suppressor Operational (power on)

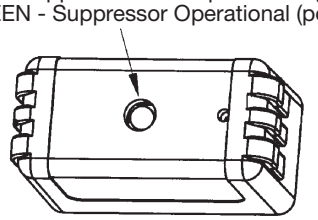

Specifications

Description: DIN-Rail mount voltage surge protection system for AC or DC voltage using diode or MOV technology.

Construction:

Suppressor: Case: 20% glass filled PES (Polyethersulfone)
Terminals: 110 Copper
Terminal Plating: Electroless tin

Holder: Case: 15% glass filled PBT (Polybutylene Terephthalate)
Interface Clips: CDA 7025
Interface Clip Plating: Electroless tin
Contact Lubricant: Fluoroether grease
Box Lug: Copper
DIN-Rail Springs: Stainless steel

Ratings*:

Volts: — 12Vdc (2kA surge current)
— 24Vdc (2kA surge current)
— 48Vdc (2kA surge current)
— 120Vac (7kA-18kA surge current)
— 240Vac (7kA-18kA surge current)

* See Catalog Numbers table for all specifications pertaining to specific voltage ratings.

Agency Information: UL Recognized (UL 1449) for AC products, (UL 497B) for DC products, CSA Approved.

Dimensions -in

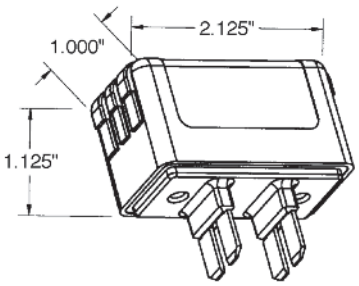

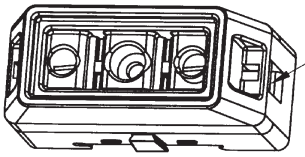

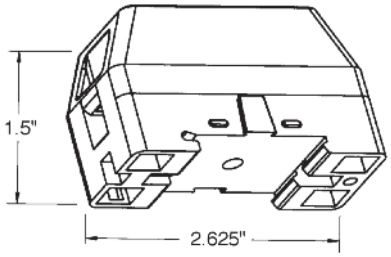

Product Specifications:

1. All TVS devices have non-polarized electrical connections as shown.
2. Suppressor voltage characteristics per chart.
3. Suppressor to provide non-interrupted service.
4. Enclosure material is 94V0 flame and explosion resistant.
5. Product markings show manufacturer, part number and safety warnings as required.
6. Mechanical dimensions as noted.
7. Suppressor Status LED as shown.
8. AC units operate on either 50 or 60Hz.

Catalog Numbers

Catalog Numbers	Voltage Application	MCOV	Technology	SVR 500A, 8x20μs	Surge Current Rating	Agency Information	Label Color
TVS12DCD	12Vdc	14Vdc	SASD	36Vdc	2kA	UL 497B	Red
TVS24DCD	24Vdc	28Vdc	SASD	58Vdc	2kA	UL 497B	White
TVS48DCD	48Vdc	57Vdc	SASD	90Vdc	2kA	UL 497B	Black
TVS120ACD	120Vac	140Vac	SASD	330Vac	7kA	UL 1449	Blue
TVS120ACM	120Vac	140Vac	MOV	500Vac	18kA	UL 1449	Grey
TVS240ACD	240Vac	280Vac	SASD	600Vac	7kA	UL 1449	Blue
TVS240ACM	240Vac	280Vac	MOV	800Vac	18kA	UL 1449	Grey

Data Sheet: 9006

BOM #15

Product: 1492-GH100

Description: 1492-GH High Density Mini Circuit Breakers (Push to Set)

Representative Photo Only (actual product may vary based on configuration selections)

MINIATURE CIRCUIT BREAKER DATA	
Electrical Standards	UL
Amp Rating	10.0 A

CERTIFICATIONS AND APPROVALS	
UL	1077, Guide No. QVNU2, File No. E65138
CSA	22.2 NO. 235
VDE	0631 (EN 60934)
CE	Marked
For UL Certifications Directory:	http://database.ul.com/cgi-bin/XYV/template/LISEXT/1FRAME/index.htm

BOM #16

SOLAHD

Dry Contact Relay Kit

RELAYCARD-SDU

Instruction Manual

While every precaution has been taken to ensure accuracy and completeness in this manual, SolaHD assumes no responsibility, and disclaims all liability for damages resulting from use of this information or for any errors or omissions.

©2009 SolaHD. All rights reserved throughout the world. Specifications are subject to change without notice.

®SolaHD name and logo are registered trademarks of EGS Electrical Group, LLC. All names referred to are trademarks or registered trademarks of their respective owners.

Table of Contents

What's Included 4

Installation 4

Product Description 5–6

Notes 7

What's Included

- One dry contact relay box
- One interface cable (DB-9 connector)
- One 12 V dc power interconnection cable
- Four M3 mounting screws

Installation

⚠ DANGER **Only qualified personnel should install or service this system. Electrical safety precautions must be followed when installing or servicing this equipment. To prevent risk of electrical shock, turn off and lock out all power sources to the unit before making electrical connections.**

1. Using the four M3 screws provided, mount the dry relay box on the right side of the SDU UPS. If mounting on a separate chassis, the hole diameter for the relay box is 0.378 in. (3.5 mm).

2. Plug the 12 V dc power interconnection cable into the 12 V dc input of the relay box. Plug the other end of the power interconnection cable into the aux dc output (or Vout) of the SDU UPS.

3. Plug the DB-9 connector cable into the RS232 communication port of the SDU UPS. Plug the other end of the connector into the remote port of the dry contact relay.

Product Description

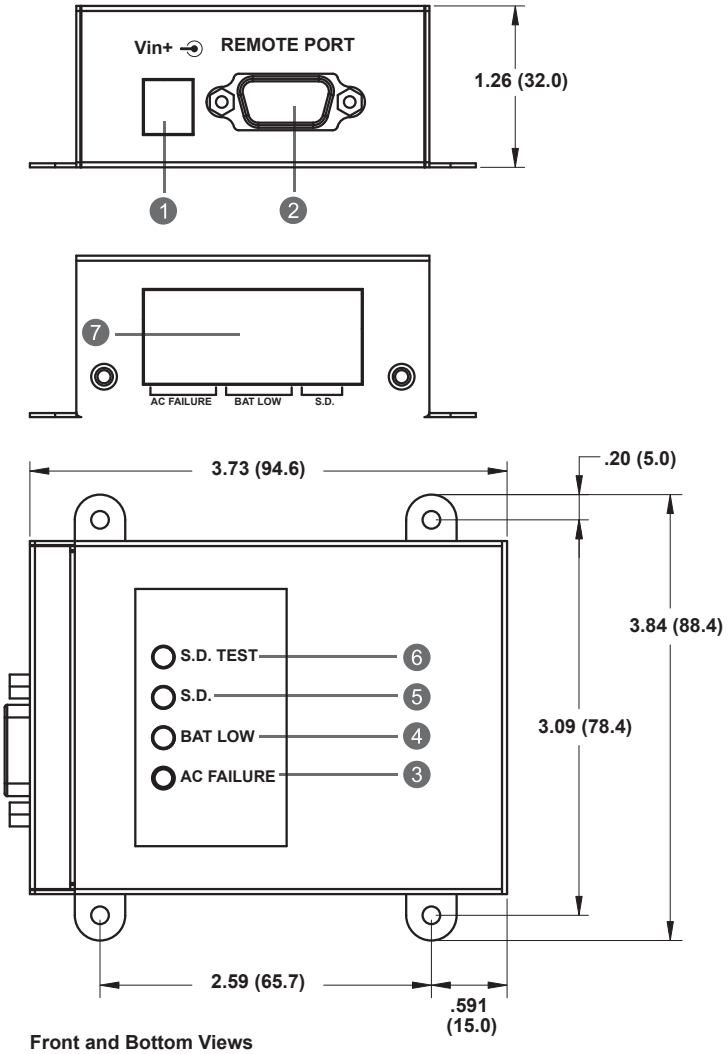

Front and Bottom Views
All dimensions are in inches (mm)

1. **Vin:** Input connector used to provide the dry contact relay with 12 V dc input power.
2. **Remote Port:** This communication port is used for linking to the SDU UPS.

   NOTE: The provided connection cable is used only for this dry contact relay.
3. **Ac Failure Indicator:** This yellow LED is illuminated when ac voltage is abnormal.
4. **Battery Low Indicator:** This green LED is illuminated when battery capacity is low.
5. **Shut Down Indicator (S.D.):** When the dry contact relay receives the shut down signal for 1 second, the red LED is illuminated and the SDU UPS goes into shut down mode.

Product Description continued from page 5

6. Shut Down Test Button (S.D. Test): Provides the dry contact relay a shut down signal to test the shut down function when the UPS is operating in the battery mode. Push this button for 1 second and the red LED is illuminated. The SDU UPS goes into shut down mode after 3 minutes.

7. 8 Pole Terminal Blocks

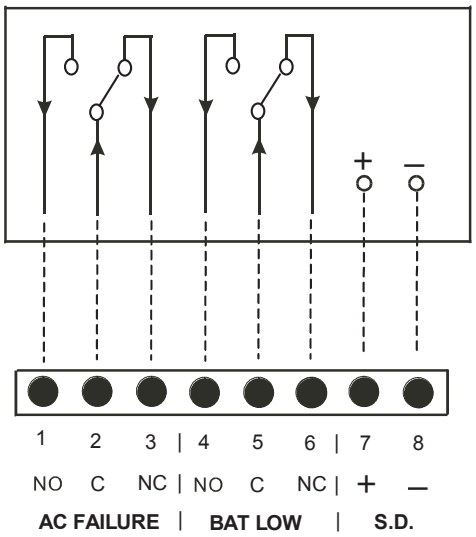

Table 1: Terminal Blocks—Layout and Operation

+UPS State		External Input	DCB LED Display			Terminal Blocks			
O = Occur X = Does not occur		O = Enable X = Disable	O = LED On X = LED Off			O = Close X = Open			
Ac Failure	BAT Low	S.D.	Yellow	Green	Red	Pin 1–2	Pin 2–3	Pin 4–5	Pin 5–6
X	X	X	X	X	X	X	O	X	O
O	X	X	O	X	X	O	X	X	O
O	O	X	X	O	X	O	X	O	X
O	X	O	X	X	O	X	O	X	O

Notes

1. Suitable electric wire = AWG 22–12 (IEC 2.5 mm).

2. Contact maximum current = 1.0 A @ 250 V ac.

3. Shut down input signal (range = +5 V to +12 V) can be provided by enabling terminals 7 and 8 for remote shut down control, assured by an external remote device.

SOLAHD

Technical Support
U.S.: (800) 377-4384
International: (847) 268-6000
E-mail: www.tech@solahd.com
Web site: www.solahd.com

EMERSON™
Industrial Automation

Part Number: A272-081 Rev 7
May 20, 2009

SDU Series, DIN Rail AC UPS

The SDU DIN Rail UPS combines an industry leading compact design with a wide operation temperature range and unique installation options. The SDU series provides economical protection from damaging impulses and power interruptions. These units include easy to wire screw terminations for critical devices needing battery back up such as computer based control systems.

E179213

Applications

- Programmable Logic Controllers
- Factory Automation
- Robotics
- Conveying Equipment
- Computer-based Control Systems

Features

- Lightweight, compact industrial design
- Wide operation temperature range (0ºC to 50ºC)
- Cold start capability
- Phone/dataline surge protection
- Software and cable included for easy installation
- Simulated sinewave output
- RS232 communication port
- USB communication port (optional)
- Form C dry contact relay (optional)
- Panel/wall mounting brackets (optional)
- Remote turn-on and shut-off capabilities
- Two year limited warranty

Certifications and Compliances

120V Models

- c UL us UL Recognized Component, UPS Equipment
  - UL 60950-1/CSA C22.2 No. 60950-1
  - Suitable for UL 508, CSA C22.2 No. 107.1 Ind. Control Equipment Applications with no derating
    - Overvoltage Cat III, Pollution Degree III

230V Models

- CE
  - EN62040-1-1

Related Products

- Portable MCR Power Conditioners
- STV Surge Protective Devices
- SDN DIN Rail Power Supplies
- STFV Plus Active Tracking® Filters

Selection Table

Capacity (VA/W)	Catalog Number	Volts, Frequency In/Out	Typical Back–up Time (minutes) *	Input/Output Connections	Approx. Ship Weight – lbs (kg)
500/300	**SDU 500**	120 Vac, 50/60 Hz	4	IP20 touch proof, screw terminals. Wire range: 10 ~ 24 AWG.	10.7 (4.70)
850/510	**SDU 850**		2		11.4 (5.00)
500/300	**SDU 500–5**	230 Vac, 50/60 Hz	4		11.5 (5.20)
850/510	**SDU 850–5**		2		11.9 (5.40)

* At full load.

SDU Accessories

Catalog Number	Description	Approx. Ship Weight – lbs (kg)
RELAYCARD–SDU	Dry contact I/O relay box, IP20 touch proof screw terminals, wire size range 12~22 AWG (IEC 2.5mm); N.O./N.C. form "C" contact. Relay contact signal for "On Battery", "Low Battery" and "UPS Shutdown".	1.0 (0.45)
UPSMON–USB	RS232 to USB adapter cable	1.0 (0.45)
SDU–PMBRK	Mounting brackets to secure UPS to wall, back of panel or enclosure.	1.0 (0.45)

Specifications

Catalog Number	SDU 500	SDU 850	SDU 500–5	SDU 850–5
Capacity (VA/Watts)	500/300	850/510	500/300	850/510
Load Power Factor	0.6			
Dimensions – inches (mm)				
Unit (H x W x D) – in. (mm)	4.88 x 11.1 x 4.55 (124.0 x 281.0 x 116.0)			
Weight – lbs (kg)	10.7 (4.70)	11.4 (5.00)	11.5 (5.20)	11.9 (5.40)
Input Parameters				
Voltage	120 V (+10%, -20%)		230 V (+/- 20%)	
Frequency	50 +/- 5 Hz or 60 Hz +/- 6 Hz (auto sensing)			
Output AC Parameters				
Voltage (Battery Mode)	Step sinewave			
	+/- 5%			
Frequency (On Battery)	50 or 60 Hz			
	+/- 0.3 Hz			
Overload Protection	UPS automatic shutdown if overload exceeds 105% of nominal at 20 seconds, 120% at 10 seconds, 130% at 3 seconds			
Short Circuit	UPS output cut off immediately			
Battery Parameters				
Battery Type	Sealed, non-spillable, maintenance-free lead acid batteries			
Transfer Time	4 - 6 ms typical			
Back–up Time * (minutes)	4.5/18	2.5/10	4.5/18	2.5/10
Recharge Time	8 hours to 90% capacity after full discharge			
Environmental				
Operating Temperature	0°C to 50°C			
Storage Temperature	-15°C to 60°C			
Relative Humidity	1% to 95%, non-condensing			
Ambient Operation	1-95% humidity non-condensing, 0-50°C up to 5,000 ft. (1500m)			
Audible Noise	< 40dBA (1 meter from surface)			
Standards				
EMC	FCC Part 15, Subpart B, Class A; EMC: EN50091-2, EN61000-3-2, EN61000-3-3, IEC60801-2, IEC60801-3, IEC60801-4, IEC61000-2-2			
Elevation	5000 ft. without derating			
Shock & Vibration	According to the International Safe Transit Association standard ISTA 2A.			
Mounting	To be mounted on DIN TS35/7.5 or TS35/15 rail system. Chassis mounting permissible via optional brackets. Unit handles normal shock and vibration of industrial use and transportation without coming off rail.			

* At full load/half load.

BOM #19
TAGS: LSHY-4001
LSHY-4002
LSHY-5001
LSHY-5002
LSHY-6001
LSHY-7001
LSHY-7002

Warrick

Series 16DM

Series 16DM DPDT Load Contact, Solid State Plug-In Module

Part No. 16DMB1B0
Unit Price $267
Lead Time (Days) 5

Image is of actual product

Model	16DM
Mode of Operation	Direct
Sensitivity	10 K
Control Style	Plug-In Module
Socket Style	DIN Mount
Standoff Style	N/A
Enclosure	None
Contact Design	2 Normally Open & 2 Normally Closed (non-powered)
Contact Rating	5 Amp Resistive 1/10 horse power
Secondary Voltage	12 VAC
Terminal Style	Screw Connector
Number of Channels	1
Minimum Temperature (°F)	-40
Maximum Temperature (°F)	150
Protection	Non-Intrinsically Safe
Approvals	UL 508 General Purpose
Minimum Qty (per Release)	1
Weight (Lbs)	1.1

Options

Warrick® Series 16DM Controls

Installation and Operation Bulletin

This bulletin should be used by experienced personnel as a guide to the installation of series 16DM controls. Selection or installation of equipment should always be accompanied by competent technical assistance. We encourage you to contact Gems Sensors Inc. or its representative if further information is required.

	Specifications
Control Design:	Solid-State components enclosed in clear Lexan plug-in style housing. Housing carries no NEMA rating
Contact Design:	2 SPDT (2 form C): Two Normally Open (N.O.) and two Normally Closed (N.C.), non-powered contacts
Contact Ratings:	5 A @ 120, 240 VAC resistive, 1/8 H.P. @ 120 or 240 VAC
Contact Life:	Mechanical: 5 million operations - Electrical: 100,000 operations minimum at rated load
Supply Voltage	24, 120, or 240 VAC Models - Factory Set. Plus 10%, minus 15%, 50/60 Hz
Supply Current:	120, 240, 24 VAC, Relay energized 4.4 VA
Secondary	12 VAC RMS Voltage on probes. 1.5 milli-amp Current
Circuit:	Models operate from 0 to 1,000,000 OHM maximum
Sensitivity:	specific resistance - Factory set
	-40° To 150°F Ambient
Temperature:	All connections #6-32 screw type with pressure clamps
Terminals:	Standard, 0.5 seconds on rising level.
Time Delays:	Additional time delays on rising and/or falling level available as option.
Listings:	U.L. Listing, Industrial Motor Control (508). 240 and 208 volt units are not U.L. limit control recognized.

Installation

1. Install octal socket in appropriate enclosure using two #6 or #8 metal screws.
   a) Install rail mount socket on appropriate rail (DIN mount) in appropriate enclosure, if applicable.
2. Wire control per wiring diagram, following N.E.C. and local codes.
3. Install control module in socket.

Sensitivities vs Maximum Probe Wire Distance*

Sensitivity Character	Sensitivity (K Ohms)	Distance (Ft.)
A or K	4.7	10,000
B or L	10	5,700
C or M	26	2,200
D or N	50	1,075
E or P	100	570
F or R	470	270
G or S	1,000	38

* Based on type MTW or THHN wire, #14 or #16 Awg

Dimensions

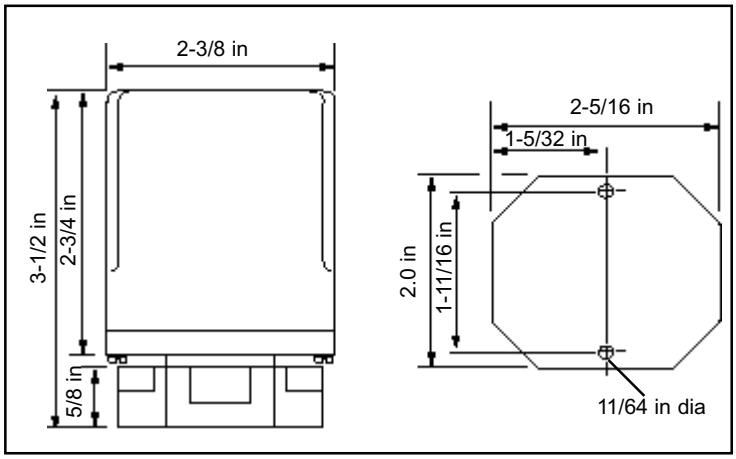

Use copper (60/70° C) wire only. Torque to 20 inch pounds.

Wiring Diagram

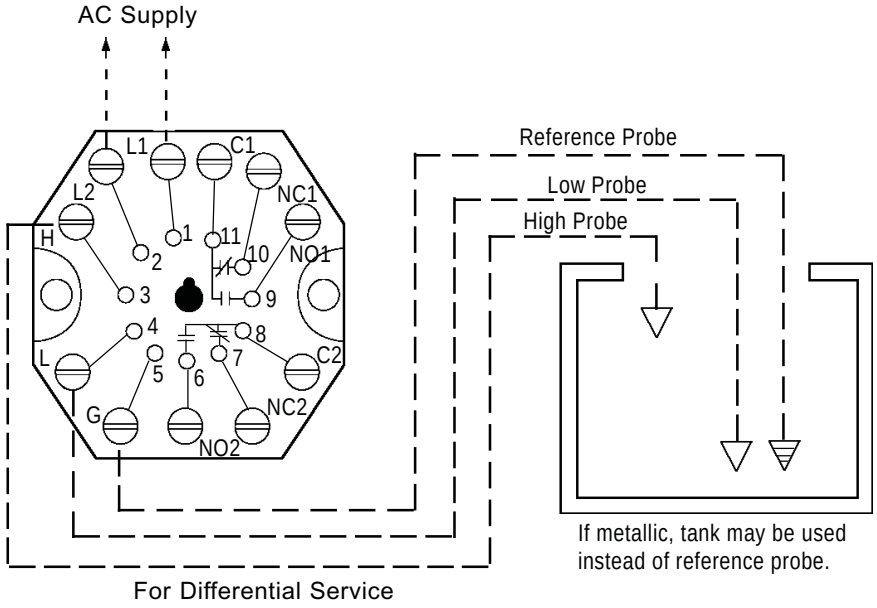

Note: For Single Level Service, use "H" and "G" Connections

Operation

Direct Mode - Single Level Service:
When the liquid rises to the electrode on terminal 3, the control energizes, changing state of the load contacts. **(LED will be lit)** The control remains energized until the liquid level recedes below electrode on terminal 3. The control then de-energizes, **(LED will not be lit)** returning load to original state.

Inverse Mode - Single Level Service:
Control energizes with power, changing state of the load contacts. **(LED will be lit)** When the liquid rises to the electrode on terminal 3, the control de-energizes, returning the load contacts to shelf state. **(LED will not be lit)** The control remains de-energized until liquid level recedes below the electrode connected to terminal 3. The control then energizes.

Direct Mode - Differential Service:
When the liquid rises to the electrode on terminal 3, the control energizes, changing state of the load contacts. **(LED will be lit)** The control remains energized until the liquid level recedes below electrode on terminal 4. The control then de-energizes, **(LED will not be lit)** returning the load contacts to original state.

Inverse Mode - Differential Service:
Control energizes with power, **(LED will be lit)** changing state of the load contacts. When the liquid rises to the electrode on terminal 3, the control de-energizes, returning load contacts to shelf state. **(LED will not be lit)** The control remains de-energized until the liquid level recedes below the electrode on terminal 4. The control then energizes.

Optional

Time Delays: With time delay on increasing level, the liquid must be in contact with the short electrode for the full duration of the time delay before control will operate. With delay on decreasing level, the liquid must be below long electrode for the full duration of the time delay before control will operate. In single level service, terminals 3 and 4 must be jumpered together to achieve time delays on both increasing and decreasing levels or just decreasing level.

16DM B 1 B -XX-XX

Time Delay: (decreasing level) 1-20 sec.
Time Delay: (increasing level) 1-20 sec.
Enclosure: 0-none, 1-NEMA 1, 4-NEMA 4, 7-NEMA 7, 12-NEMA 12
Socket Style: A - 11 Pin Octal, B - 11 Pin DIN Mount, M - None, Module Only
Supply Voltage: 1- 120 VAC, 2- 240 VAC, 3- 24 VAC, 8- 208/240 VAC*
Mode/Sensitivity:
Direct A- 4.7K, B- 10K, C- 26K, D- 50K, E- 100K, F- 470K, G- 1M
Inverse K- 4.7K, L- 10K, M- 26K, N- 50K, P- 100K, R- 470K, S- 1M

*187 Vmin to 255 Vmax VAC

Gems Sensors Inc.
One Cowles Road
Plainville, CT 06062-1198
Tel: 860-793-4579
Fax: 860-793-4580

Product: 700-HK32A1

BOM #21

Description: 700-HK General Purpose Slim Line Relay

Representative Photo Only
(actual product may vary based on configuration selections)

CONTROL RELAY DATA

Contact Rating	8 Amp Contact (Slim Line Relay)
Contact Configuration	DPDT Contact Arrangement
Coil Voltage	120V 50/60Hz
Relay Option	No Additional Options

CERTIFICATIONS AND APPROVALS

CE	Marked
UL	Listed with socket, Guide No. NLDX, File No. E3125
UR	Recognized, Guide No. NLDX2, File No. E3125
CSA	
For UL Certifications Directory:	http://database.ul.com/cgi-bin/XYV/template/LISEXT/1FRAME/index.htm

		Cat. No. 700-HK...			
Electrical Ratings					
Rated Thermal Current (I^{th})		1-Pole, 1 CO, SPDT — 16 A		2-Pole, 2 CO, DPDT — 8 A	
Rated Insulation Voltage (U_i)		250V IEC, 300V UL/CSA			
Contacts	Inductive V AC	120V AC	AC-15, 6.2 A B300 Pilot Duty, 3 A A300 (700-HKM_) 1/3 Hp (0.24 kW) 1-phase	120V AC	AC-15, 2.9 A B300 Pilot Duty, 3.0 A 1/4 Hp (0.18 kW), 1-phase
		240V AC	AC-15, 3.1 A B300 Pilot Duty, 1.5 A A300 (700-HKM_) 3/4 Hp (0.55 kW), 1-phase	240V AC	AC-15, 1.4 A B300 Pilot Duty, 1.5 A 1/2 Hp (0.37 kW), 1-phase
		230V AC	0.55 kW, 1-phase	230V AC	0.37 kW, 1-phase
	Inductive V DC	24V DC	DC-13, 5.0 A	24V DC	DC-13, 3.0 A
		125V DC	DC-13, 0.2 A R300 Pilot Duty, 0.22 A	125V DC	DC-13, 0.2 A R300 Pilot Duty, 0.22 A
		250V DC	DC-13, 0.1 A R300 Pilot Duty, 0.11 A	5 A, 250V AC	DC-13, 0.1 A R300 Pilot Duty, 0.11 A
	Resisitive	230V AC	AC-1, 16 A	230V AC	AC-1, 8 A
		277V AC	16 A, General Use	277V AC	8 A, General Use
	Make, Break & Continuous	30V DC	DC-1, 12 A 10 A, Resistive	30V DC	DC-1, 6 A 6 A, Resistive
Min. Permissible Contact Ratings		300 mW (5V/60 mA or 60V/5 mA) for AgNi Contacts (700-HK3_) 50 mW (5V/10 mA or 25V/2 mA) for AgNi + Gold Contacts (700-HKX_) 500 mW (100V/5 mA or 5V/100 mA) for $AgSnO_2$ Contacts (700-HKM_)			
Permissible Coil Voltage Variation	Pickup: holding Voltage: Must Dropout Voltage:	80...110% of Nominal Voltage at 50/60 Hz, 73...110% of Nominal Voltage at DC 80% of Nominal V AC at 50/60 Hz, 40% of Nominal V DC 20% of Nominal V AC at 50/60 Hz, 10% Nominal V DC			
Power Consumption		1.2V A (V AC Coils), 0.5 W (V DC Coils)			
Coil Voltages		See Overview/Product Selection			
Design Specification/Test Requirements					
Dielectric Withstand Voltage	Between Open Contacts (VRMS)	1000V AC			
	Contact to Coil (VRMS)	1600V AC			
Mechanical					
Degree of Protection		IP 20 (guarded terminal sockets), RT II — Flux-proof (Relay)			
Mechanical Life Operations		10 x 10^6			
Electrical Life Cycles		230V AC, 16 A Resistive: 100 000 min. 277V AC, 16 A Resistive: 30 000 min. 30V DC, 10 A Resisitive: 30 000 min. B300, R300, Hp (kW): 6000 min. A300 (700-HKM_): 100,000 min.		230V AC, 8 A Resistive: 100 000 min. 277V AC, 8 A Resistive: 30 000 min. 30V DC, 6 A Resistive: 30 000 min. B300, R300, Hp (kW): 6000 min.	
Switching Frequency		Mechanical: 18,000 cycles/hr. Electrical: 900 cycles/hr.			
Operating Time at Nominal Voltage at 20 °C (ms)	Pickup	15 ms max.			
	Dropout	5 ms max.			
Vibration	Operational	10...2000 Hz, 0.76 mm (0.03 in.) 2.5 G			
	Non-Operational	10...2000 Hz, 0.76 mm (0.03 in.) 5.0 G			
Shock	Operational	15 G			
	Non-Operational	50 G			
Environmental					
Temperature	Operating	–40...+70 °C (–40...+158 °F)			
	Storage	–40...+85 °C (–40...+185 °F)			
Altitude		2000 m (6560 ft)			
Construction					
Insulating Material		Molded High Dielectric Material			
Enclosure		Transparent Dust Cover			
Contact Material		700-HK3_: Silver nickel (AgNi); 700-HKX_: Silver Nickel + Gold Plating (AgNi + Au); 700-HKM_: Silver Tin Oxide ($AgSnO_2$)			
Terminal Markings on Socket		In accordance with EN 50005			
Sockets		**1-Pole**		**2-Pole**	
	Screw Terminal	700-HN121 (10 A @ 70 °C) 700-HN221 (16 A @ 50 °C, 12 A @ 70 °C)		700-HN122 (2 x 5 A @ 70 °C) 700-HN222 (2 x 8 A @ 70 °C)	
	Spring Clamp (Available September 2006)	700-HN223 (15 A @ 40 °C with 2 conductors per terminal) (10 A @ 70 °C with 1 conductor per terminal)		700-HN224 (2 x 8 A@ 70 °C)	
Approvals					
Certifications		CSA Certified, File 75088, UL Recognized, File E3125 Guide NLDX2/NLCX8, cULus Listed with Allen-Bradley sockets (File No. 3125 Guide NLDX/NLDX7), CE Marked			
Standards		EN61810-1, CSA 22.2 No. 14, UL 508			

http://raise.rockwellautomation.com/raconfig/rtcache/jpg/700-hk%20specs.jpg[10/7/2015 4:14:36 PM]

BOM #22 and 23

Spring-Clamp Connection Terminal Blocks

Plug-in Style Blocks (Cat. Nos. 1492-L3P, -LDG3P) and Analog Loop Control Block (Cat. No. 1492-LDAG3)

	1492-L3P			1492-LDG3P			1492-LDAG3		
Dimensions are not intended to be used for manufacturing purposes. **Note:** Height dimension is measured from top of rail to top of terminal block.	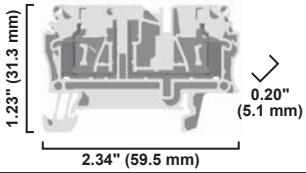			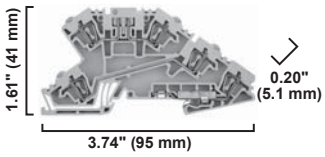			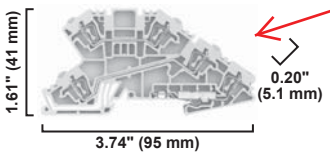		
Specifications	*Single Circuit Plug-In Component Block for a Variety of Components*			*Terminal Block with slot for Plug-In Component, Feed-Through Circuit and 1 Ground Connection*			*Analog Loop Control Terminal Block with 2 Feed-Through Circuits and 1 Ground Connection*		
Certifications	cULus	CSA	IEC	cULus	CSA	IEC	cULus	CSA	IEC
Voltage Rating	600V AC/DC		500V AC/DC	300V AC/DC		250V AC/DC	300V AC/DC		250V AC/DC
Maximum Current	20 A		24 A	10 A		20 A	10 A		24 A
Wire Range (Rated Cross Section)	#30…12 AWG		4 mm²	#26…12 AWG		2.5 mm²	#26…12 AWG		2.5 mm²
Wire Strip Length	0.39 in. (10 mm)			0.31 in. (8 mm)			0.31 in. (8 mm)		
Density	59 pcs/f (/196 pcs/m)			59 pcs/ft (196 pcs/m)			59 pcs/ft (196 pcs/m)		
Housing Temperature Range	–58…+248 °F (–50…+120 °C)			–58…+248 °F (–50…+120 °C)			–58…+248 °F (–50…+120 °C)		
Terminal Blocks	**Cat. No.**		**Pkg Qty.**	**Cat. No.**		**Pkg Qty.**	**Cat. No.**		**Pkg Qty.**
Color Grey	**1492-L3P**		25	**1492-LDG3P**		25	**1492-LDAG3**		25
Accessories	**Cat. No.**		**Pkg Qty.**	**Cat. No.**		**Pkg Qty.**	**Cat. No.**		**Pkg Qty.**
Mounting Rails 1 m Symmetrical DIN (Steel)	**199-DR1**		10	**199-DR1**		10	**199-DR1**		10
1 m Symmetrical DIN (Aluminum)	**1492-DR5**		10	**1492-DR5**		10	**1492-DR5**		10
1 m Hi-Rise Symmetrical DIN (Aluminum)	**1492-DR6**		2	**1492-DR6**		2	**1492-DR6**		2
1 m Angled Hi-Rise Sym. DIN (Steel)	**1492-DR7**		2	**1492-DR7**		2	**1492-DR7**		2
End Barrier	**1492-EBL3**		50	**1492-EBLDAG3**		20	**1492-EBLDAG3**		20
End Anchors and Retainers Screwless End Retainer	**1492-ERL35**		20	**1492-ERL35**		20	**1492-ERL35**		20
DIN Rail — Normal Duty	**1492-EAJ35**		100	**1492-EAJ35**		100	**1492-EAJ35**		100
DIN Rail — Heavy Duty	**1492-EAHJ35**		50	**1492-EAHJ35**		50	**1492-EAHJ35**		50
Jumpers Plug-In Center Jumper — 50-pole	**1492-CJK5-50**		10	**1492-CJLJ5-50**		10	**1492-CJLJ5-50**		10
Plug-In Center Jumper — 10-pole	**1492-CJK5-10**		20	**1492-CJLJ5-10**		20	**1492-CJLJ5-10**		20
Plug-In Center Jumper — 9-pole	**1492-CJK5-9**		20	**1492-CJLJ5-9**		20	**1492-CJLJ5-9**		20
Plug-In Center Jumper — 8-pole	**1492-CJK5-8**		20	**1492-CJLJ5-8**		20	**1492-CJLJ5-8**		20
Plug-In Center Jumper — 7-pole	**1492-CJK5-7**		20	**1492-CJLJ5-7**		20	**1492-CJLJ5-7**		20
Plug-In Center Jumper — 6-pole	**1492-CJK5-6**		20	**1492-CJLJ5-6**		20	**1492-CJLJ5-6**		20
Plug-In Center Jumper — 5-pole	**1492-CJK5-5**		20	**1492-CJLJ5-5**		20	**1492-CJLJ5-5**		20
Plug-In Center Jumper — 4-pole	**1492-CJK5-4**		60	**1492-CJLJ5-4**		60	**1492-CJLJ5-4**		60
Plug-In Center Jumper — 3-pole	**1492-CJK5-3**		60	**1492-CJLJ5-3**		60	**1492-CJLJ5-3**		60
Plug-In Center Jumper — 2-pole	**1492-CJK5-2**		60	**1492-CJLJ5-2**		60	**1492-CJLJ5-2**		60
Other Accessories Disconnect Plug	**1492-DPL**		50	**1492-DPL**		50	—		—
Component Plug	**1492-CPL**		50	**1492-CPL**		50	—		—
Fuse Plug Without Blown Fuse Indicator	**1492-FPK2**		20	**1492-FPK2**		20	—		—
10…36V Blown Fuse Indicator	**1492-FPK224**		20	**1492-FPK224**		20	—		—
35…70V Blown Fuse Indicator	**1492-FPK248**		20	**1492-FPK248**		20	—		—
60…150V Blown Fuse Indicator	**1492-FPK2120**		20	**1492-FPK2120**		20	—		—
140…250V Blown Fuse Indicator	**1492-FPK2250**		20	**1492-FPK2250**		20	—		—
Reducing Sleeves 28…24 AWG (0.13…0.2 mm²) White	1492-PSL3-2		100	—		—	—		—
Reducing Sleeves 22…20 AWG (0.25…0.5 mm²) Grey	**1492-PSL3-5**		100	—		—	—		—
Reducing Sleeves 18 AWG (0.75…1.0 mm²) Dark Grey	**1492-PSL3-10**		100	—		—	—		—
Test Plug	**1492-TPL5**		25	**1492-TP23**		20	—		—
Electrical Warning Plate	**1492-EWPL5**		20	—		—	—		—
Group Marking Carrier	**1492-GM35**		25	**1492-GM35**		25	**1492-GM35**		25
Marking Systems Snap-In Marker Cards	**1492-M5X10** (144/card)		5	**1492-M5X10** (144/card)		5	**1492-M5X10** (144/card)		5
Snap-In Marker Cards	**1492-M5X5** (200/card)		5	**1492-M5X5** (200/card)		5	**1492-M5X5** (200/card)		5

Panduct® Type F Narrow Slot Wiring Duct

- Narrow slot/finger design provides more slots to fit the spacing of high-density terminal blocks and other hardware
- Material: Lead-free PVC
- UL recognized continuous use temperature: 122°F (50°C)
- UL 94 flammability rating of V-0
- Conforms with NFPA 79-2007 section 13.3.1 requirement for flame retardant material
- Provided with mounting holes
- Base and cover length is 6 feet

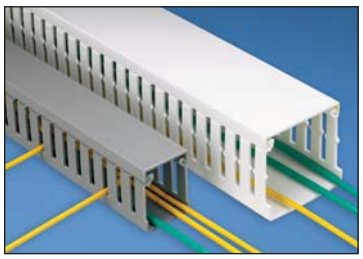

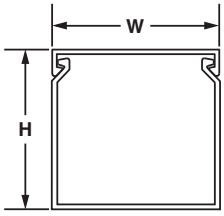

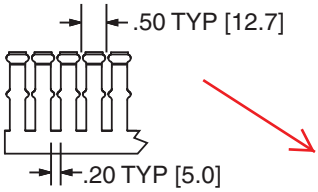

Multiple slot restrictors present with 2" and greater duct wall height.

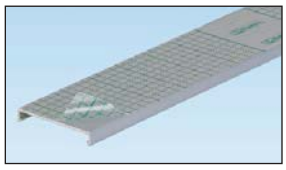

To order cover with protective film add "-F" to part number. 6" cover not available with film.

NEW!

Base Part Number	Duct Size (W x H)* In.	Duct Size (W x H)* mm	Slot Width In.	Slot Width mm	Cover Part Number	Std. Pkg. Qty.	Base Ctn. Qty.	Cover Ctn. Qty.
F.5X.5LG6	0.69 x 0.60	17.5 x 15.2	0.20	5.0	C.5LG6	6	120	120
F.5X1LG6	0.69 x 1.06	17.5 x 26.9	0.20	5.0	C.5LG6	6	120	120
F.75X.75LG6	0.93 x 0.82	23.6 x 20.9	0.20	5.0	C.75LG6	6	120	120
F.75X1.5LG6	0.93 x 1.57	23.6 x 39.9	0.20	5.0	C.75LG6	6	120	120
F1X1LG6	1.26 x 1.13	32.0 x 28.7	0.20	5.0	C1LG6	6	120	120
F1X1.5LG6	1.26 x 1.62	32.0 x 41.1	0.20	5.0	C1LG6	6	120	120
F1X2LG6	1.26 x 2.12	32.0 x 53.8	0.20	5.0	C1LG6	6	120	120
F1X3LG6	1.26 x 3.12	32.0 x 79.2	0.20	5.0	C1LG6	6	120	120
F1X4LG6	1.26 x 4.10	32.0 x 104.1	0.20	5.0	C1LG6	6	60	120
F1.5X1LG6	1.75 x 1.12	44.5 x 28.4	0.20	5.0	C1.5LG6	6	120	120
F1.5X1.5LG6	1.75 x 1.62	44.5 x 41.1	0.20	5.0	C1.5LG6	6	120	120
F1.5X2LG6	1.75 x 2.12	44.5 x 53.8	0.20	5.0	C1.5LG6	6	120	120
F1.5X3LG6	1.75 x 3.12	44.5 x 79.2	0.20	5.0	C1.5LG6	6	120	120
F1.5X4LG6	1.75 x 4.10	44.5 x 104.1	0.20	5.0	C1.5LG6	6	60	120
F2X1LG6	2.25 x 1.12	57.2 x 28.4	0.20	5.0	C2LG6	6	120	120
F2X1.5LG6	2.25 x 1.62	57.2 x 41.1	0.20	5.0	C2LG6	6	120	120
F2X2LG6	2.25 x 2.12	57.2 x 53.8	0.20	5.0	C2LG6	6	120	120
F2X3LG6	2.25 x 3.12	57.2 x 79.2	0.20	5.0	C2LG6	6	60	120
F2X4LG6	2.25 x 4.10	57.2 x 104.1	0.20	5.0	C2LG6	6	60	120
F2X5LG6	2.25 x 5.10	57.2 x 129.5	0.20	5.0	C2LG6	6	60	120
F2.5X3LG6	2.75 x 3.12	69.9 x 79.2	0.20	5.0	C2.5LG6	6	120	120
F3X1LG6	3.25 x 1.12	82.6 x 28.4	0.20	5.0	C3LG6	6	120	120
F3X2LG6	3.25 x 2.12	82.6 x 53.8	0.20	5.0	C3LG6	6	120	120
F3X3LG6	3.25 x 3.12	82.6 x 79.2	0.20	5.0	C3LG6	6	60	120
F3X4LG6	3.25 x 4.10	82.6 x 104.1	0.20	5.0	C3LG6	6	60	120
F3X5LG6	3.25 x 5.10	82.6 x 129.5	0.20	5.0	C3LG6	6	60	120
F4X2LG6	4.25 x 2.12	108.0 x 53.8	0.20	5.0	C4LG6	6	60	120
F4X3LG6	4.25 x 3.12	108.0 x 79.2	0.20	5.0	C4LG6	6	60	120
F4X4LG6	4.25 x 4.10	108.0 x 104.1	0.20	5.0	C4LG6	6	60	120
F4X5LG6	4.25 x 5.10	108.0 x 129.5	0.20	5.0	C4LG6	6	60	120
F6X4LG6	6.25 x 4.15	158.8 x 105.4	0.20	5.0	C6LG6	6	60	120

Part number shown for LG (Light Gray). For other color availability see color selection guide, page C1.48.
Base and cover sold separately.
*"H" dimension includes duct and cover.

THIS COPY IS PROVIDED ON A RESTRICTED BASIS AND IS NOT TO BE USED IN ANY WAY DETRIMENTAL TO THE INTERESTS OF PANDUIT CORP.

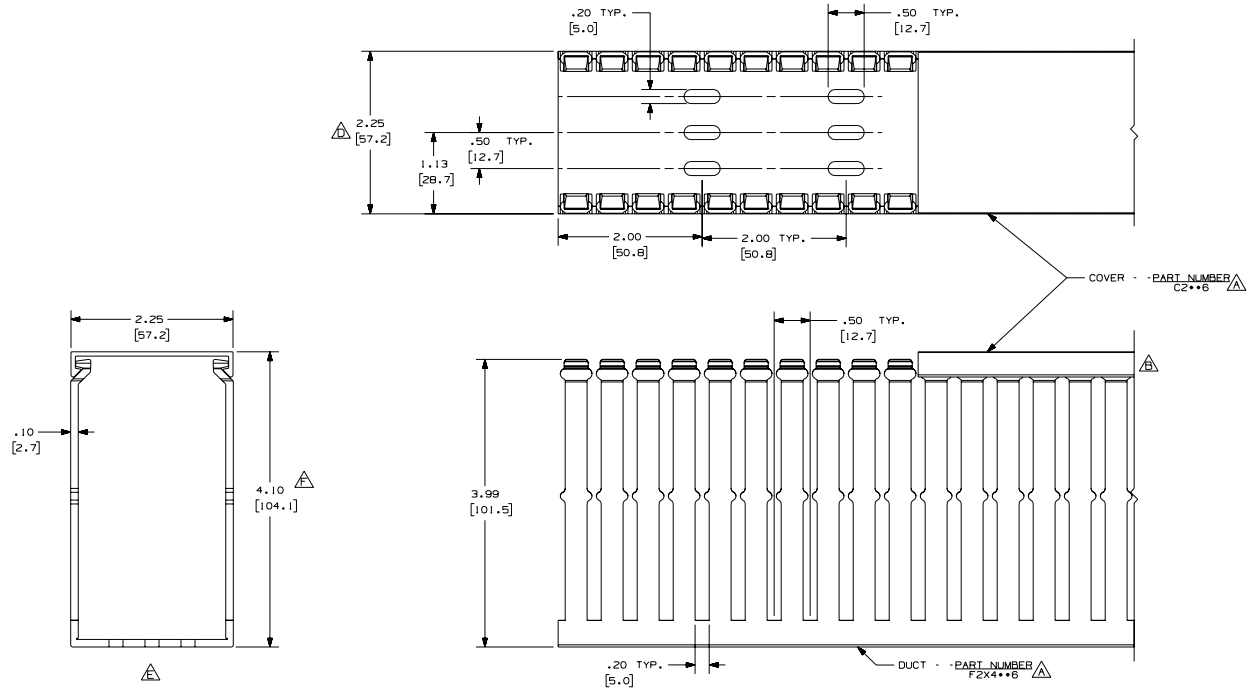

NOTES:

1. ALL DIMENSIONS ARE REFERENCE ONLY.
2. DIMENSIONS IN PARENTHESIS ARE METRIC.
3. THE ** DENOTE COLOR.
4. DUCT AND COVER AREA AVAILABLE IN 6 FT [1828.8] LENGTHS

REV	DATE	BY	CHK	DESCRIPTION
--	.....	...	...	G. ADDED LENGTH NOTE F. CORRECTED DIMENSION
2	7-23-07	JCST	MKBE	E. DELETED DIMENSION D. ADDED DIMENSION
--	.....	...	...	C. CHANGED DRAWING SIZE
1	9-24-04	JCST	MKBE	B. CHANGED VIEW A. ADDED TOP VIEW, NOTES, AND LABELS
R	3-20-03	JCST	JGG	DRAWING RELEASED

CAD FILENAME/LAYERS: D11000CL_DC/00C

PANDUIT CORP. TINLEY PARK, ILLINOIS

WIRING DUCT - TYPE F DUCT WITH COVER
2 X 4
MARKETING DRAWING

DRAWN BY	MAT'L:	SCALE
JCST	PVC	FULL
DATE: 3-20-03		DRAWING NO. 36897-774
CHECKED BY: JGG		SIZE C

BOM #25

Mounting rails allow many blocks to be fastened in a panel with only a few screws to anchor the rail to the panel. Mounting rails allow easy installation and removal of a block in a row.

Cat. No.	Description	Pkg Qty.	Dimensions*
199-DR1	Symmetrical Rail 35 mm x 7.5 mm 3.28 ft (1 m) long Zinc-Plated Clear Chromated Steel EN60715 **DIN #3**	10	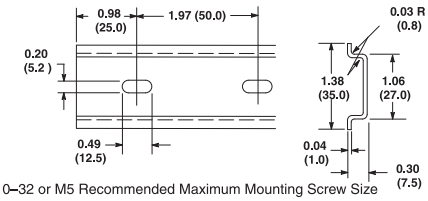 #10–32 or M5 Recommended Maximum Mounting Screw Size
199-DR2	Same as Cat. No. 199-DR1, but length = 2 m	20	
199-DR4	Heavy Duty Symmetrical Rail 35 mm x 15 mm 3.28 ft (1 m) long Zinc-Plated Clear Chromated Steel EN60715 **DIN #3**	5	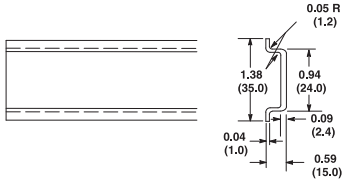
1492-DR3	Mini 15 mm x 5.5 mm Rail 3.28 ft (1 m) long Zinc-Plated Clear Chromated Steel EN60715 **DIN #2**	5	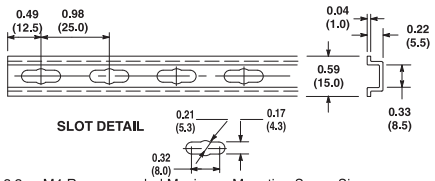 #8-3 2 or M4 Recommended Maximum Mounting Screw Size
1492-DR5	Symmetrical Rail 35 mm x 7.5 mm 3.28 ft (1 m) long Copper-Free Aluminum EN60715 For Bul. 1492 Terminal Blocks Only **DIN #3**	10	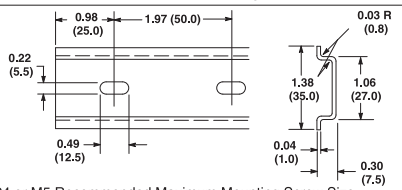 #12–24 or M5 Recommended Maximum Mounting Screw Size
❄ **1492-DR6**	Symmetrical Rail 35 mm x 7.5 mm 2.26 in. (57.4 mm) high 3.28 ft (1 m) long Copper-Free Aluminum For Bul. 1492 Terminal Blocks Only **DIN #3**	2	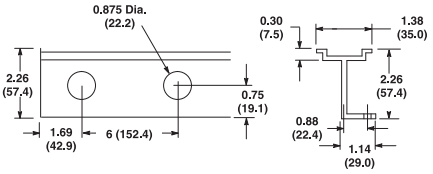 Wire insulator plug for wire access through rail — use Heyco UB875
❄ **1492-DR7**	Symmetrical Rail 35 mm x 7.5 mm 2.80 in. (71.0 mm) high 3.28 ft (1 m) long Angled 30° Zinc-Plated, Chromated Steel **DIN #3**	2	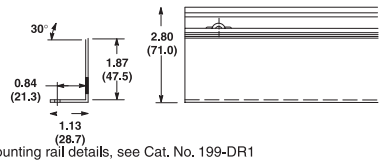 For mounting rail details, see Cat. No. 199-DR1
1492-DR8	Symmetrical Rail 35 mm x 15 mm 3.28 ft (1 m) long Copper EN60715 **DIN #3**	5	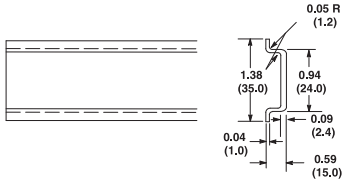
‡ **1492-DR9**	Symmetrical Rail 35 mm x 15 mm 3.28 ft (1 m) long Zinc-Plated Clear Chromated Steel EN60715 **DIN #3**	5	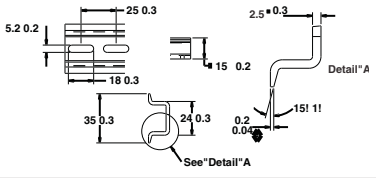

* Dimensions shown in inches (millimeters). Dimensions are not intended to be used for manufacturing purposes.
❄ 0.218 x 0.50 in. (5.5 x 12.7 mm) slotted mounting holes every 3 in. (76.2 mm) starting 1.69 in. (42.9 mm) from end.
‡ Dimensions in millimeters.

12

BOM #26

ELECTRIC HEATERS

115/230 Volt
100/200 Watt

115/230 Volt
400/800 Watt

115/230 Volt
1300 Watt

INDUSTRY STANDARDS

UL 508A Component Recognized; File No. E61997

CSA Certified, CSA File No. LR42186
CE

APPLICATION

Protect mechanical, electrical and electronic equipment from low temperatures, condensation and corrosion with this thermostatically controlled, fan-driven heater that maintains a stable enclosure temperature.
Fan draws cool air from the bottom of the enclosure and passes this air across the thermostat and heating element before being released into enclosure cavity. Heated air is discharged through the top of the heater unit.

SPECIFICATIONS

- Aluminum housing
- Thermostat range adjustable from 0 F to 100 F (-18 C to 38 C)
- Four 10-32 x self-tapping screws are included with each heater
- Ball bearing fan
- Terminal strip with clamp connector that accepts both solid and stranded wire

FINISH

- Brushed aluminum

⚠ CAUTION

These electric heaters are not designed for use in dusty, dirty, corrosive, or hazardous locations. Portions of the heater can get hot. Adequate protection must be taken to protect people from potential burns, and to protect other components from this heat. Pentair Technical Products recommends this heater only be installed in a totally-enclosed metal enclosure.

DO NOT INSTALL HEATERS ON WOOD PANELS. Heat sensitive components should not be placed near the heater discharge area since this air can be quite warm. The clearance range defines the space that must be kept free of these components for proper and safe operation of the heater.

Performance Data **100 and 200 Watt Heaters**

CATALOG NUMBERS	DAH1001A	DAH1002A	DAH2001A	DAH2002A
ELECTRICAL DATA				
Rated Voltage	**115**	**230**	**115**	**230**
Frequency (Hz)	50/60	50/60	50/60	50/60
Power Consumption (Watts)	100	100	200	200
Nominal Current (Amps)	0.98	0.49	1.89	0.95
HEATING PERFORMANCE				
Watts	**100**	**100**	**200**	**200**
UNIT CONSTRUCTION				
Weight (lb./kg)	1.6/0.73	1.6/0.73	1.6/0.73	1.6/0.73
X (in./mm)	4.00/102	4.00/102	6.00/152	6.00/152

Performance Data **400 and 800 Watt Heaters**

CATALOG NUMBERS	DAH4001B	DAH4002B	DAH8001B	DAH8002B
ELECTRICAL DATA				
Rated Voltage	**115**	**230**	**115**	**230**
Frequency (Hz)	50/60	50/60	50/60	50/60
Power Consumption (Watts)	400	400	800	800
Nominal Current (Amps)	3.72	1.86	7.37	3.69
HEATING PERFORMANCE				
Watts	**400**	**400**	**800**	**800**
UNIT CONSTRUCTION				
Weight (lb./kg)	2.2/1.00	2.2/1.00	2.2/1.00	2.2/1.00
X (in./mm)	6.00/152	6.00/152	8.00/203	8.00/203

Performance Data **1300 Watt Heaters**

CATALOG NUMBERS	DAH13001C	DAH13002C
ELECTRICAL DATA		
Rated Voltage	**115**	**230**
Frequency (Hz)	50/60	50/60
Power Consumption (Watts)	1300	1300
Nominal Current (Amps)	11.5	5.7
HEATING PERFORMANCE		
Watts	**1300**	**1300**
UNIT CONSTRUCTION		
Weight (lb./kg)	3.4/1.54	3.4/1.54
X (in./mm)	8.00/203	8.00/203

Dimensions and Clearance Range Drawing for DAH1001A, -2A and DAH2001A, -2A

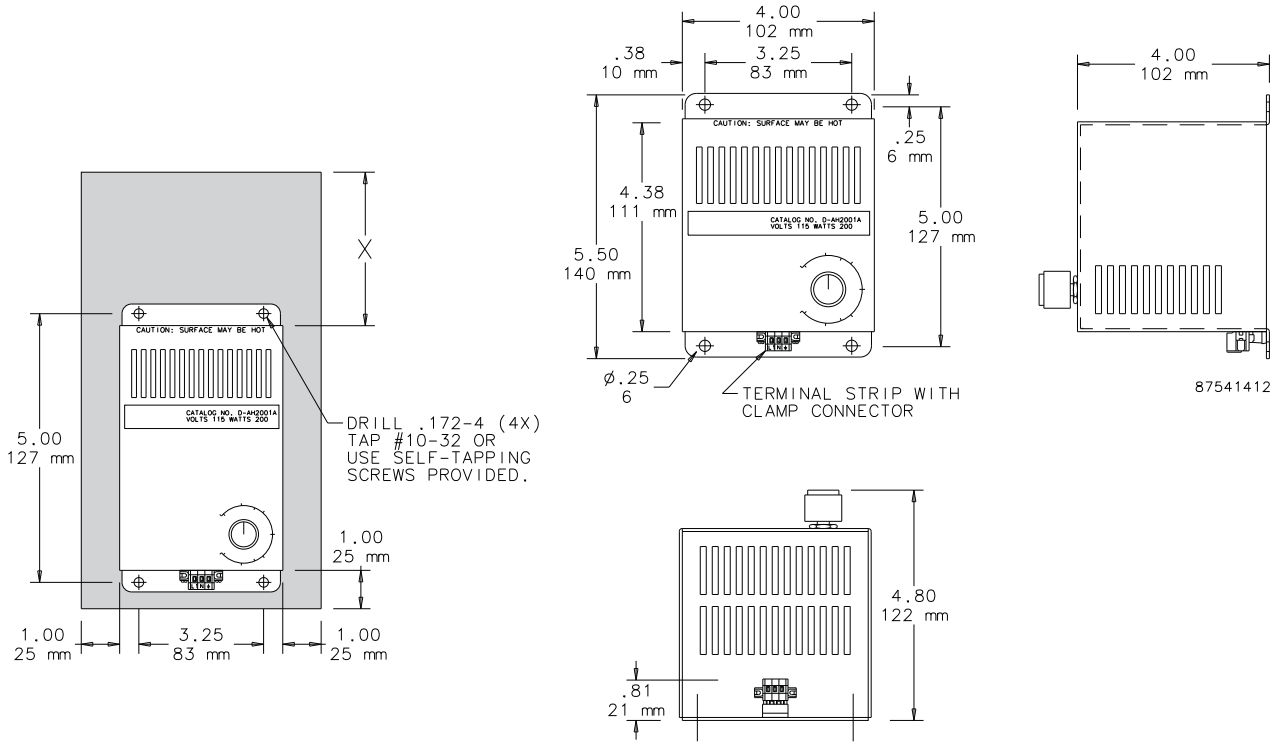

Dimensions and Clearance Range Drawing for DAH4001B, -2B and DAH8001B, -2B

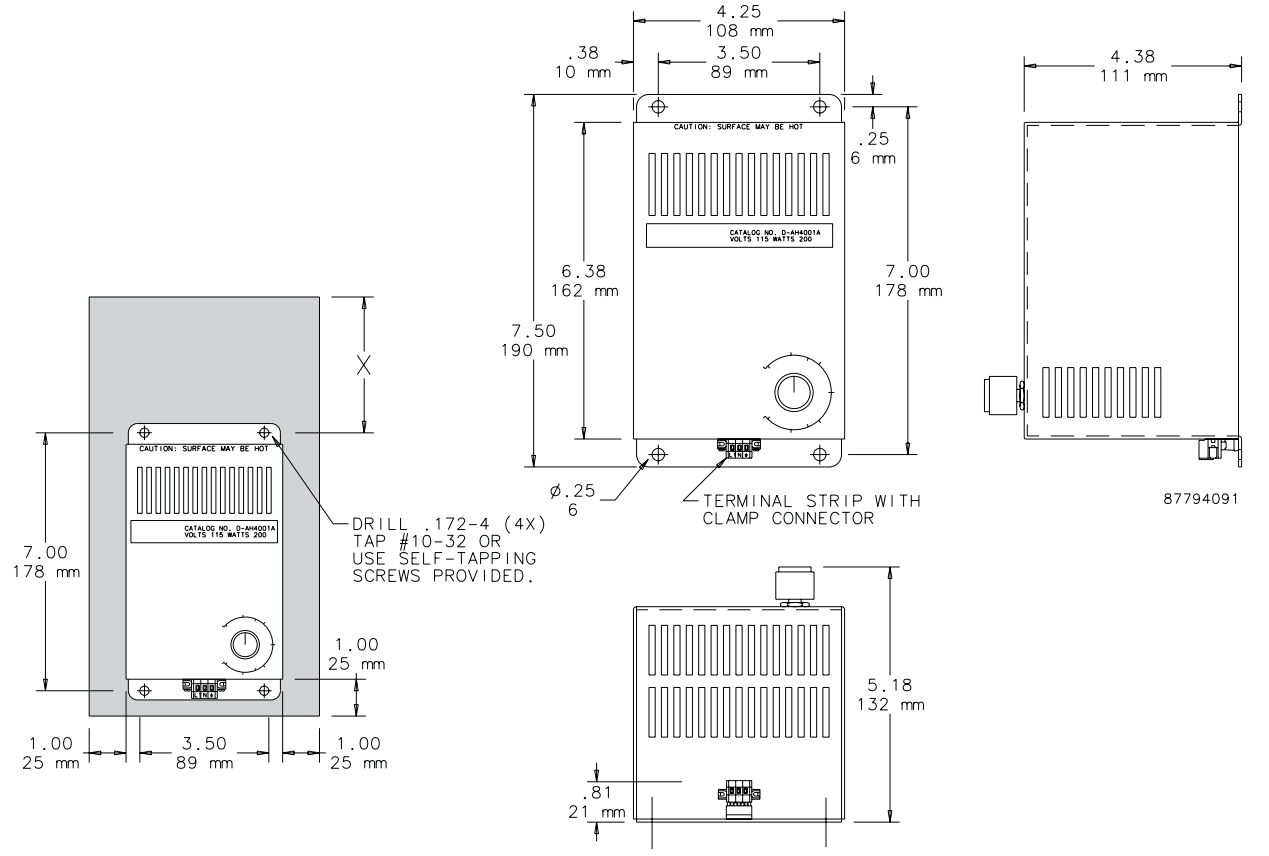

Dimensions and Clearance Range Drawing for DAH13001C and DAH13002C

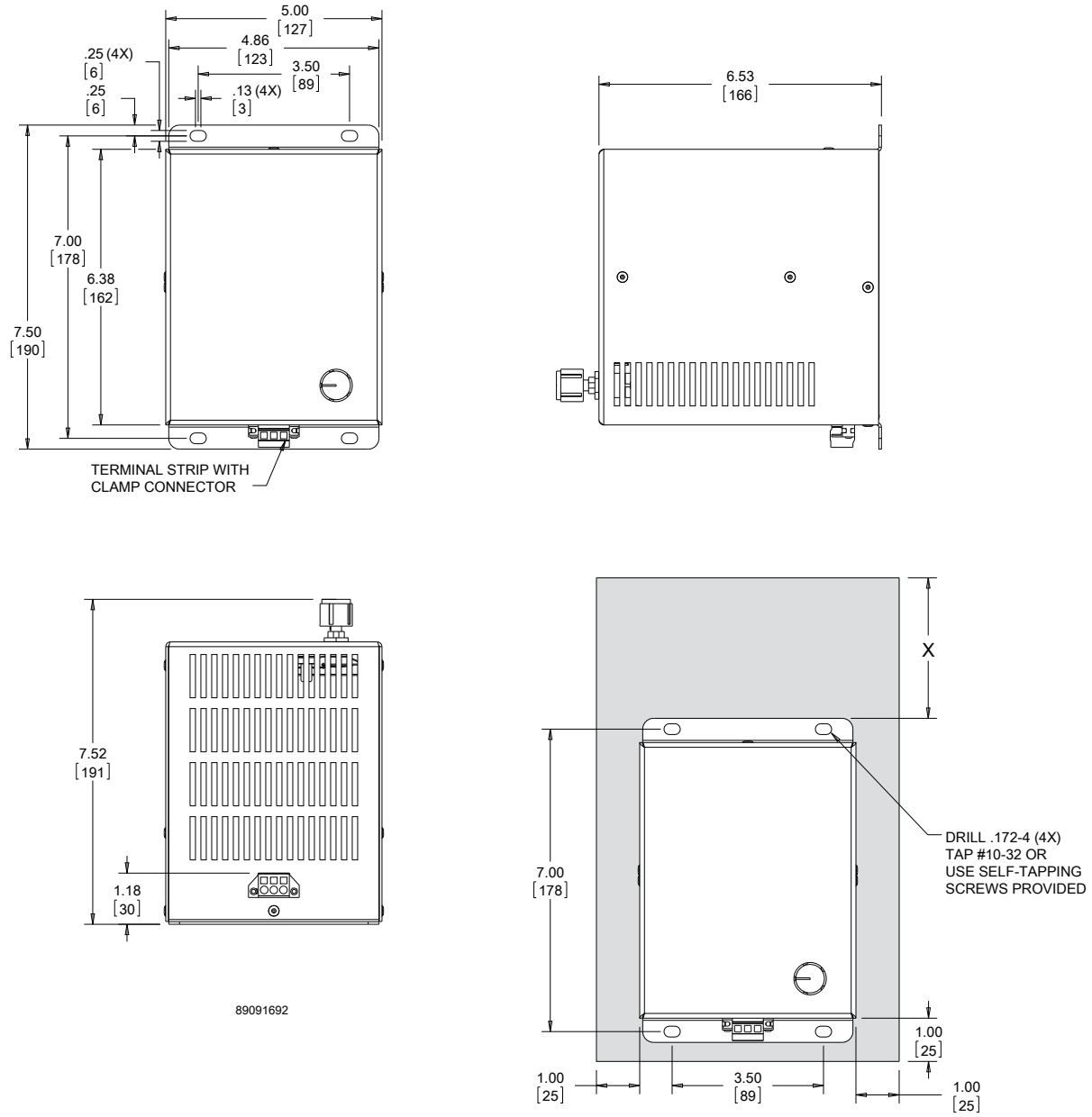

DEPARTMENT OF THE ARMY
ALBUQUERQUE DISTRICT, CORPS OF ENGINEERS
ALBUQERQUE DISTRICT OFFICE
4101 JEFFERSON PLAZA NE
ALBUQUERQUE, NM 87109

SUBMITTAL REVIEW VERIFICATION SHEET

PROJECT TITLE: Kirtland BFF Mid-Plume Pump and Treat System Expansion
CONTRACT NUMBER: W912DR-12-D-0006 DM01
DATE RECEIVED: 11-29-2017
DATE REVIEWED: 11-29-2017

DESCRIPTION OF ITEMS REVIEWED:

1. Submittal 10 Rev. #2 Well Pump and Components associated with KAFB-106239.

NO EXCEPTIONS TAKEN.	**X**
EXCEPTIONS AS NOTED ON DRAWINGS AND/OR ATTACHED SHEETS(S). RESUBMISSION NOT REQUIRED.	
EXCEPTIONS AS NOTED ON DRAWINGS AND/OR ATTACHED SHEETS(S). RESUBMISSION REQUIRED.	
RECEIPT ACKKNOWLEDGED.	

Notes: This revision is for the stainless steel pump end and motor that will be installed in place of those originally submitted.

NOTE: ITEMS REVIEWED AS TO GENERAL LAYOUT ONLY. DIMENSIONS AND QUANTITIES NOT CHECKED. REVIEW DOES NOT RELIEVE CONTRACTOR OF RESPONSIBILITIES FOR ANY ERRORS WHICH MAY EXIST AS CONTRACTOR SHALL BE RESPONSIBLE FOR DIMENSIONS AND DESIGN OF ADEQUATE CORRECTIONS, DETAILS AND SATISFACTORY CONSTRUCTION OF WORK.

SIGNATURE SALAZAR.CARLOS.F.IV.1232198555 Digitally signed by SALAZAR.CARLOS.F.IV.1232198555 DN: c=US, o=U.S. Government, ou=DoD, ou=PKI, ou=USA, cn=SALAZAR.CARLOS.F.IV.1232198555 Date: 2017.11.29 12:51:55 -07'00' **DATE** 11/29/2017

EA Engineering, Science, and Technology, Inc., PBC

Submittal Review Sheet 8

Project Name: **Kirtland BFF Mid-Plume Pump and Treat System Expansion**				Date Received: **11/29/2017**			
Project Owner: **Kirtland Air Force Base**				Checked By: **Tyler Curley**			
Contractor: **Techsas Inc.**	Engineer: **EA Engineering, Science and Technology, Inc., PBC.**			Log Page: **NA**			
Address: **4819 West Bayshore Drive** **Bacliff, TX 77518**	Address: **320 Gold Ave. SW, Suite 1300** **Albuquerque, NM 87102**			EA No.: **62599DM01**			
				Spec. Section: **00 00 00**			
				Drawing/Detail No.:			
ATTN: **Ed Butler**	ATTN: **Devon Jercinovic**			1st Sub		Re-Sub	
Date Transmitted: **11/29/2017**	Prev. Transmittal Date:						

Item No.	No. Copies	Description	Manufacturer	Mfg/Vendor Dwg or Detail	Action Taken*
10	1	Well Pump and Components	Various		**A**

The Action Designated Above is in Accordance with the Following Legend:

A – Furnish as Submitted
B – Furnish as Noted
C – Revise and Re-submit
1. Not enough information for review.
2. No reproducible submitted.
3. Copies illegible.
4. Not enough copies submitted.
5. Wrong sequence number.
6. Wrong resubmittal number.
7. Wrong Spec. Section.
8. Wrong form used.
9. See Comments.

D – Rejected
E – Engineer's Review not Required
1. Submittal not required.
2. Supplemental Information. Submittal retained for Information purposes only.
3. Information reviewed and approved on prior submittal.
4. See Comments.

Review is for general compliance with Contract Documents. No responsibility is assumed for correctness of dimensions or detail. Contractor is required to specify deviations from contract requirements. Lack of exceptions noted by Engineer does not waive Contractor's obligation to comply with Drawings and Specifications.

Comments:
Revision 2 – Updated submittal with 304 stainless steel pump end and pump motor.

By: _____ Date: 11/29/17

Distribution: [1] Contractor [1] Engineer [1] Owner

TRANSMITTAL DOCUMENT

Date:	**10/13/2017**	**From:**	**Ed Butler**
To:	**EA Engineering, Science, and Technology, Inc., 320 Gold Ave. SW, Suite 1300 Albuquerque, NM 87102 Devon Jercinovic**	**Job Name:**	**Kirtland AFB, NM Bulk Fuels Facility**
		Reference:	
		Transmittal Method:	**E-mail**
		Sent By:	**Ed Butler**

Submittal	Dwg. Number	Item Description
10 Rev #1	KAFB-106239 Extraction Well	Well Pump and Components
	Figure	

Revised by EA on 29NOV17

Ed Butler
TECHSAS, Inc.
4819 West Bayshore Drive
Bacliff, TX 77518

"I hereby certify that the (equipment) (material) (article) shown and marked in this submittal is that proposed to be incorporated with the Contract, is in compliance with the contract drawings and specification, can be installed in the allocated spaces, and is submitted for Contractor approval.

Certified by _____.
(Signature when applicable) Date: _____.

3-inch Galvanized Pipe

Standard Pipe

Wheatland Tube
A DIVISION OF ZEKELMAN INDUSTRIES

Standard Pipe: SureThread™ and ERW

Setting the standard in the standard pipe industry

With a tradition of service and quality that's 80-plus years strong, Wheatland Tube is the only domestic, full-line producer of continuous weld (CW) and electric resistance weld (ERW) ¼–18 NPS pipe today. Wheatland is also a worldwide leader in hot-dip galvanization technology.

¼–18 nominal sizes produced and stocked in a variety of ASTM standards

Standard hot-dip galvanization to ASTM A53 requirements

350 combinations of finish, end treatments and lengths

All Wheatland black and galvanized pipe (½–6 NPS) is approved for drinking water usage

A Full Line of Pipe Products for Any Application

Wheatland produces and stocks pipe of ¼–18 nominal sizes in a variety of ASTM standards. SureThread (ASTM A53) and ERW are used for mechanical and pressure applications, and for ordinary uses in steam, water, gas and air lines.

More than 350 different combinations of finish, end treatments and lengths are available on standard pipe. Our standard process is hot-dip galvanization to ASTM A53 requirements.

Surface finishes include black, passivate, galvanized, uncoated, pickled, pickled and oiled, bare and soluble oil. End finishes include plain end, roll groove, cut groove, threaded and coupled, and threads only (one or both ends).

Documented Quality Assurance

Wheatland facilities have quality systems in place and are ISO certified for Quality Management Systems. Strategically located in the U.S., we carry a large inventory and can ship quickly to meet your tight delivery schedules.

MADE IN THE USA

A53 Electric Resistance Weld Pipe, Type E, Grade B

Suitable for welding, threading and grooving

Finish options:
Black and hot-dip galvanized

Sizes:
Schedule 40, 2–18 NPS

Produced to ASTM A53/A53M, federal specification WW-P404 and ASME B36.10M

ASTM A53, TYPE E, WEIGHTS AND DIMENSIONS

TRADE SIZE	OD	NOMINAL WALL THICKNESS	WEIGHT
	in.	in.	lbs./ft.
2	2.375	0.154	3.66
2½	2.875	0.203	5.80
3	3.500	0.216	7.58
4	4.500	0.237	10.80
5	5.563	0.258	14.63
6	6.625	0.280	18.99
8	8.625	0.322	28.58
10	10.750	0.365	40.52
12	12.750	0.375	49.61
14	14.000	0.375	54.62
16	16.000	0.375	62.64
18	18.000	0.375	70.65

HYDROSTATIC AND NON-DESTRUCTIVE ELECTRIC TESTING

Hydrostatic inspection test pressures for plain-end pipe are listed in Table X 2.2 of the A53/A53M industry specification. Test pressures are maintained for a minimum of five seconds. Non-destructive electric testing of the weld seam is required on each length of ERW pipe NPS 2 and larger.

TENSILE REQUIREMENTS

TENSILE STRENGTH, MIN.	YIELD STRENGTH, MIN.
60,000 psi	35,000 psi

BENDING TEST (COLD)

DEGREE OF BEND	DIAMETER OF MANDREL
90°	12x pipe OD

A53 Continuous Weld Pipe, Type F, Grade A

The continuous weld process creates a uniform grain structure to make bending, cutting and threading easier

Ideal for applications with frequent threading, grooving and bending requirements

Finish options:
Black, passivate, bare, pickled and oiled, and hot-dip galvanized

Sizes:
¼–4 NPS

Standard and extra heavy

Produced to ASTM A53/A53M, federal specification WW-P404 and ASME B36.10M

TEST PRESSURES (GRADE A)

NOMINAL SIZE	TEST PRESSURE (psi)
¼	700
½	700
¾	700
1	700
1¼	1,200
1½	1,200
2	2,300
2½	2,500
3	2,220
3½	2,030
4	1,900

ASTM A53, TYPE F, WEIGHTS AND DIMENSIONS

TRADE SIZE	OD	SCHEDULE 40		SCHEDULE 80	
	in.	Wall (in.)	Weight (lbs./ft.)	Wall (in.)	Weight (lbs./ft.)
¼	0.54	0.088	0.43	0.119	0.54
⅜	0.675	0.091	0.57	0.126	0.74
½	0.84	0.109	0.85	0.147	1.09
¾	1.05	0.113	1.13	0.154	1.48
1	1.315	0.133	1.68	0.179	2.17
1¼	1.66	0.14	2.27	0.191	3
1½	1.900	0.145	2.72	0.2	3.63
2	2.375	0.154	3.66	0.218	5.03
2½	2.875	0.203	5.8	0.276	7.67
3	3.5	0.216	7.58	0.3	10.26
3½	4	0.226	9.12	0.318	12.52
4	4.5	0.237	10.8	0.337	15

TENSILE REQUIREMENTS

TENSILE STRENGTH, MIN.	YIELD STRENGTH, MIN.	ELONGATION IN 2
48,000 psi	30,000 psi	Refer to A53 table X 4.1, latest revisions—ASTM A53/A53M

BENDING TEST (LESS THAN NPS 2)

	DEGREE OF BEND	DIAMETER OF MANDREL
Standard	90°	12x pipe OD
Close Coiling	90°	8x pipe OD

FLATTENING TEST (NPS 2 AND GREATER)

To test the quality of the weld, we position the weld at 90° from the direction of force and flatten until the OD is ¾ of the original outside diameter. No cracks should occur along the inside or outside surface of the weld.

STANDARD PIPE SCHEDULE 40 — ASTM A53 GRADES A AND B

TRADE SIZE	DN DESIGNATOR	OD		ID		WALL THICKNESS		NOMINAL WEIGHT (MASS) PER UNIT LENGTH			
		in.	mm	in.	mm	in.	mm	Plain End (lbs./ft.)	Plain End (kg/m)	Threads & Couplings (lbs./ft.)	Threads & Couplings (kg/m)
¼	8	0.540	13.7	0.364	9.2	0.088	2.24	0.43	0.63	0.43	0.63
⅜	10	0.675	17.1	0.493	12.5	0.091	2.31	0.57	0.84	0.57	0.84
½	15	0.840	21.3	0.622	15.8	0.109	2.77	0.85	1.27	0.86	1.27
¾	20	1.050	26.7	0.824	20.9	0.113	2.87	1.13	1.69	1.14	1.69
1	25	1.315	33.4	1.049	26.6	0.133	3.38	1.68	2.50	1.69	2.50
1¼	32	1.660	42.2	1.380	35.1	0.140	3.56	2.27	3.39	2.28	3.40
1½	40	1.900	48.3	1.610	40.9	0.145	3.68	2.72	4.05	2.74	4.04
2	50	2.375	60.3	2.067	52.5	0.154	3.91	3.66	5.44	3.68	5.46
2½	65	2.875	73.0	2.469	62.7	0.203	5.16	5.80	8.63	5.85	8.67
3	80	3.500	88.9	3.068	77.9	0.216	5.49	7.58	11.29	7.68	11.35
3½	90	4.000	101.6	3.548	90.1	0.226	5.74	9.12	13.57	9.27	13.71
4	100	4.500	114.3	4.026	102.3	0.237	6.02	10.80	16.07	10.92	16.23
5	125	5.563	141.3	5.047	158.2	0.258	6.55	14.63	21.77	14.90	22.07
6	150	6.625	168.3	6.065	154.1	0.280	7.11	18.99	28.26	19.34	28.58
8	200	8.625	219.1	7.981	202.7	0.322	8.18	28.58	42.55	29.35	43.73
10	250	10.750	273.0	10.020	254.5	0.365	9.27	40.52	60.29	41.49	63.36
12	300	12.750	323.0	12.000	304.8	0.375	9.52	49.61	73.78	51.28	76.21
14	350	14.000	355.6	13.250	336.5	0.375	9.52	54.62	81.25	–	–
16	400	16.000	406.4	15.250	387.5	0.375	9.52	62.64	93.17	–	–
18	450	18.000	457.0	17.250	438.1	0.375	9.52	70.65	105.10	–	–

Black and galvanized Schedule 40 A53 ERW Grade B trade sizes ¼–8 are FM Approved.

FM APPROVED

EXTRA-HEAVY PIPE SCHEDULE 80 — ASTM A53, TYPE F, GRADE A

TRADE SIZE	DN DESIGNATOR	OD		ID		WALL THICKNESS		NOMINAL WEIGHT (MASS) PER UNIT LENGTH			
		in.	mm	in.	mm	in.	mm	Plain End (lbs./ft.)	Plain End (kg/m)	Threads & Couplings (lbs./ft.)	Threads & Couplings (kg/m)
¼	8	0.540	13.7	0.302	7.7	0.119	3.02	0.54	0.80	0.54	0.80
⅜	10	0.675	17.1	0.423	10.7	0.126	3.20	0.74	1.10	0.74	1.10
½	15	0.840	21.3	0.549	13.9	0.147	3.73	1.09	1.62	1.09	1.62
¾	20	1.050	26.7	0.742	18.8	0.154	3.91	1.48	2.20	1.48	2.21
1	25	1.315	33.4	0.957	24.3	0.179	4.55	2.17	3.24	2.19	3.25
1¼	32	1.660	42.2	1.278	32.5	0.191	4.85	3.00	4.47	3.03	4.49
1½	40	1.900	48.3	1.500	38.1	0.200	5.08	3.63	5.41	3.65	5.39
2	50	2.375	60.3	1.939	49.3	0.218	5.54	5.03	7.48	5.08	7.55
2½	65	2.875	73.0	2.323	59.0	0.276	7.01	7.67	11.41	7.75	11.52
3	80	3.500	88.9	2.900	73.7	0.300	7.62	10.26	15.27	10.35	15.39
3½	90	4.000	101.6	3.364	85.4	0.318	8.08	12.52	18.63	12.67	18.82
4	100	4.500	114.3	3.826	97.2	0.337	8.56	15.00	22.32	15.20	22.60

PERMISSIBLE VARIATIONS — ASTM A53 GRADES A AND B PIPE

	OD	OVER	UNDER
Outside Diameter	NPS ⅛ to 1½; DN 6 to 40	1/64 (0.4 mm)	1/64 (0.4 mm)
	NPS 2 and up; DN 50 and up	1%	1%
Wall Thickness at Any Point	—	—	12.5%
Weight	—	10%	10%

Mechanical Properties:
Grade A: Yield — 30,000 psi [205 MPa] minimum; Tensile — 48,000 psi [330 MPa] minimum.
Grade B: Yield — 35,000 psi [240 MPa] minimum; Tensile — 60,000 psi [415 MPa] minimum.

Wheatland Tube
A DIVISION OF ZEKELMAN INDUSTRIES

700 South Dock Street
Sharon, PA 16146

800.257.8182
info@wheatland.com
wheatland.com

Zekelman Industries

Corporate Office
227 West Monroe Street
Suite 2600
Chicago, IL 60606

312.275.1600
info@zekelman.com
zekelman.com

About Wheatland Tube Standard Pipe

Wheatland produces a full line of standard pipe—SureThread™ and ERW pipe—in a broad range of sizes. We're the industry leader in hot-dip galvanized pipe, and we offer more than 350 different combinations of finish, end treatments and lengths on our standard pipe.

All Wheatland manufacturing locations' quality management systems are certified to ISO requirements.

For more information, contact Wheatland Tube at:
800.257.8182 or **info@wheatland.com**
Or, visit our website at wheatland.com

Follow us on:

twitter.com/WheatlandTube
linkedin.com/company/zekelman-industries
youtube.com/ZekelmanIndustries
wheatland.com/blog

SPECIFICATIONS FOR STEEL PIPE

3-inch Glavanized Drop Pipe

Published pipe standards serve three functions.

1. They dictate manufacturing and testing requirements and prescribed methods of measuring the required mechanical and physical properties.

2. Without specifications, it would be difficult for the pipe buyer to establish a common ground of understanding with the producer as to product requirements.

3. When the pipe producer marks a specification on this product they warrant that the pipe is made from prime quality steel and meets all the requirements of the specification.

Standard pipe is manufactured and tested as prescribed by ASTM (formerly American Society for Testing Materials), an international, non-profit technical and Scientific organization formed for "the consensus development of standards on characteristics and performance of materials, products, systems and services." The society operates through more than 127 main technical committees. These committees function under regulations that ensure balanced representation among producers, users and general interest groups. The published standards, therefore, represent the consensus viewpoint of all involved. Line pipe and Oil Country products are manufactured and tested as prescribed by the American Petroleum Institute (API). The API operates similarly to the ASTM except that producers, consumers, and associations with primary interests in oil or gas are involved.

GRADE

Grade refers to divisions within different types of seamless and ERW pipe and designates mechanical properties such as minimum yield and tensile strengths. Grade B has higher tensile and yield strength than Grade A. It is manufactured to higher carbon content steel. Grade A, being a softer steel, is easier to bend and is recommended for use in close coiling and cold bending. Grade B has higher stress values and is better suited for machining operations. Grade C, which is available in ASTM-106, has higher tensile and yield strength than Grades A & B.

DIMENSIONS

Many changes have been made to ASTM specifications over the years. One of the more recent has been to make the specifications fit with metric, and more correctly, with the measurements of pipe and the related fittings.

To change the pipe outside diameter (OD) and wall thickness, simply multiply the SI dimensions by the appropriate factor to convert to metric. However, an inch is not a real inch. Nowhere on pipe 12" and smaller is there a corresponding measurement because this size has no real numerical value.

To solve this problem and still retain the intent of the size designation, the inch mark was removed from the column showing the size, and the term NPS was added as were the following words: The dimensionless designator NPS (nominal pipe size) has been substituted in this standard for such traditional terms as “nominal diameter,” “size,” and “nominal size.” They are now stated as NPS 1, NPS 2, NPS 6, NPS 12, NPS 14, etc.

WARNING

Most pipe specifications are restricted by tolerances for outside diameter, wall thickness, and weight. Pipe must meet all three criteria or material could be rejected. Please refer to the applicable specifications.

DIGEST OF COMMON - PIPE SPECIFICATIONS

Specification and Size Range Where Indicated	Scope	Type	Grades	Chemistry
A-120 (has been withdrawn) NPS 1/8 - 16	Blk & Galv Welded & SMLS pipe for ordinary use - not Intended for close coiling bending or high temperature service	CW ERW SMLS	None Specified	None Specified
A-53 NPS 1/8 - 26	Blk & Galv Welded & SMLS pipe suitable for welding and forming operations CW not intended for flanging. Grade B not intended for close coiling or severe cold forming. Pipe required for close coiling should be specified on order.	CW - Type F ERW - Type E SMLS - Type S	CW - Type F ERW & SMLS Grade A & B	**Composition, max %** **C Mg P S** **Type S (seamless pipe)** Open-health, electric-furnace or basic-oxygen: Grade A 0.25 .095 0.05 0.045 Grade B 0.30 1.20 0.05 0.045 **Type E (electric resistance welded)** Open-health, electric-furnace or basic-oxygen: Grade A 0.25 .095 0.05 0.045 Grade B 0.30 1.20 0.05 0.045 **Type F (furnace welded pipe)** Open-health, electric-furnace or basic-oxygen: 0.30 1.20 0.05 0.045 Ladle and Check Limits
A-106 NPS 1/8 - 26	SMLS for high temperature service. Suitable for bending, flanging, and similar forming operations.	SMLS Only	Grades A, B & C	**Composition, max %** **Element* Grade A Grade B Grade C** Chrome 0.40 0.40 0.40 Copper 0.40 0.40 0.40 Molybdenum 0.15 0.15 0.15 Nickel 0.40 0.40 0.40 Vanadium 0.08 0.08 0.08 *These five elements combined shall not exceed 1%.
A-135 NPS 2-30	Electric resistance welded for conveying fluid, gas or vapor.	ERW Only	Grades A & B	**% max** **Element Grade A Grade B** Carbon 0.25 0.30 Manganese 0.95 1.20 Phosphorus 0.035 0.035 Sulfur 0.035 0.035 Ladle and check limits
A-252 NPS 6 - 24	ERW or SMLS for Pipe Piles	ERW SMLS DSAW	Grades 1, 2, 3	All grades .05 Max. % Phos. Ladle & check limits
A-333	SMLS & Welded Carbon & Alloy Steel pipe for low temperature service	SMLS ERW	1, 3, 4, 6, 7, 8, 9	**% max** **GR C MN P S Si Ni CR CU** 1 .30 .40 - 1.05 .025 3 .19 .31 - .64 .025 .025 .18 - .37 3.18 -3.82 4 .12 .50 - 1.05 .025 .025 .08 - .37 .47 - .96 .44 - 1.01 .40 - .75 .04 - .30 6 .30 .29 - 1.06 .025 .025 .10min 7 .10 .90 max. .025 .025 .13 - .32 2.03 -2.57 8 .13 .90 max. .025 .025 .13 - .32 8.40 - 9.60 9 .20 .40 - 1.05 .025 .025 1.80 -2.24 .75 - 1.25 10 .20 1.15 -1.50 .035 .018 .10 - .36 .25 max. .15 max. .15 max. .06 max. 11 .10 0.90 max. .025 .025 0.36 max. 35.0 -37.0 .50 max.
A-335 NPS 1/8 - 26	SMLS Alloy Steel Pipe for high temperature service	SMLS Only	P1, P2, P5, P5b, P5c, P9, P11, P12, P15, P21, P22, P91	**Grade UNS Des. C Mg P max S max Si Cr Mo** P1 K11522 .10-20 .30-80 .025 .025 .10-50 .44-65 P2 K11547 .10-20 .30-61 .025 .025 .10-30 .5-.81 .44-65 P5 K41545 .15max .30-80 .025 .025 .50max 4-6 .45-65 P5b K51545 .15max .30-80 .025 .025 1.00-2.00 4-6 .45-65 P5c K41246 .12max .30-80 .025 .025 .50max 4-6 .45-65 P9 S50400 .15max .30-80 .025 .025 .25-1.00 8-10 .80-1.10 P11 K11507 .05-.15 .30-80 .025 .025 .50-1.00 1-1.5 .44-65 P12 K11582 .05-.15 .30-80 .025 .025 .50max .80-1.25 .44-65 P15 K11578 .05-.15 .30-80 .025 .025 1.15-1.65 .44-65 P21 K31545 .05-.15 .30-80 .025 .025 .50max 2.65-3.35 .80-1.06 P22 K21590 .05-.15 .30-80 .025 .025 .50max 1.9-2.5. .87-1.13 P91 K91580 .08-.12 .30-80 .020 .010 .20-.50 8-9.5 .85-1.05 a. New designation established in accordance with Practice E-527 and SAE J1086. Practice for Numbering Metals and Alloys (UNS). b. Grade P5c shall have a titanium content of not less than 4 times the carbon content and not more than 0.70% or a columbium content of 8 to 10 times the carbon content.
A-501 Square & Rectangular 1" - 10" Round 1" - 24"	Hot Formed Welded & SMLS Round, Square & Rectangular Tubing	SMLS Welded	None Specified	**Composition %** **Element Heat Analysis Product Analysis** Carbon, max. 0.26 0.30 Phosphorus, max. 0.035 0.045 Sulfur, max. 0.035 0.045 Copper, min.* 0.20 0.18 *When copper steel is specified
A-587 NPS 1/2" - 10"	EW Pipe for process lines suitable for severe forming involving flanging and close bending	ERW Only	None Specified	**% MAX. % MIN.** **C MN P S AL** .15 .27-.63 .035 .035 .02-.11
A-589 Type 1 NPS 6-16	SMLS & Welded Water Pipe Type 1 Drive Pipe	Type 1 SMLS or Welded	Type 1 A or B	**% MAX.** **P S** .050 .060

CONTINUED

DIGEST OF COMMON - PIPE SPECIFICATIONS

CONTINUED

Specification and Size Range Where Indicated	Tensiles	Hydrostatic	Tests Bend	Flattening	Wall Tolerance	OD Tolerance
A-120 (has been withdrawn) NPS 1/8 - 16	None Specified	yes	None Specified	None Specified	Min. wall shall not be more than 12.5% under nominal wall	1/2" - 1-1/2" + 1/64" -1/32" 2" & over- +/- 1% of OD
A-53 NPS 1/8 - 26	MIN. P.S.I. Grade / Yield / Tensile CW 25,000 45,000 GR-A 30,000 48,000 GR-B 35,000 60,000	yes	yes - 2" & under Std. & XHY 90° to 12 times nom. diameter. Close coiling 180° to 8 times nom. dia.	yes - over 2" nom. XHY & lighter. CW 90° to 75% ODv	Min. wall shall not be more than 12.5% under nominal wall	1/2" - 1-1/2" + 1/64" -1/32" 2" & over- +/- 1% of OD
A-106 NPS 1/8 - 26	MIN. P.S.I. Grade / Yield / Tensile A 30,000 48,000 B 35,000 60,000 C 40,000 70,000	yes	Not req'd over 2" diameter. 90° to 12 times dia. Close coiling 180° to 8 times diameter	yes - over 2" dia.	Min. wall shall not be more than 12.5% under nominal wall	1/8" - 1-1/2" + 1/64" -1/32" 2" - 4" +/- 1/32" 5" - 8" + 1/16" -1/32" 10" - 18" + 3/32" -1/32" 18" & over- 1/8" -1/32"
A-135 NPS 2-30	MIN. P.S.I. Grade / Yield / Tensile A 30,000 48,000 B 35,000 60,000	yes	None Specified	yes - for all sizes to 2/3 OD	Min. wall shall not be more than 12.5% under nominal wall	For all sizes +/- 1% of OD
A-252 NPS 6 - 24	MIN. P.S.I. Grade / Yield / Tensile 1 30,000 50,000 2 35,000 60,000 3 40,000 66,000	None Specified	None Specified	None Specified	Min. wall shall not be more than 12.5% under nominal wall. Surface defects no more than 25% deep	+/- 1% of OD
A-333	MIN. P.S.I. Grade / Yield / Tensile 1 30,000 50,000 2 35,000 65,000 3 35,000 60,000 6 35,000 60,000 7 35,000 65,000 8 75,000 100,000 9 46,000 63,000 10 65,000 80,000 11 35,000 65,000	yes	None Specified	yes - for all sizes	Min. wall shall not be more than 12.5% under nominal wall	2" - 4" +/- 1/32" 5" - 8" + 1/16" - 1/32" 10" - 18" + 3/32" - 1/32" 18" & + 1/8" Over - 1/32"
A-335 NPS 1/8 - 26	MIN. P.S.I. Grade / Yield / Tensile P1 30,000 55,000 P2 30,000 55,000 P-91 60,000 85,000 All Others 30,000 60,000	yes	yes	yes	Min. wall shall not be more than 12.5% under nominal wall	1/8" - 1-1/2" + 1/64" -1/32" 2" - 4" +/- 1/32" 4" - 8" + 1/16" - 1/32" 10" - 18" + 3/32" - 1/32" 20" - 26" + 1/8" -1/32"
A-501 Square & Rectangular 1" - 10" Round 1" - 24"	MIN. P.S.I. Yield / Tensile 36,000 58,000	None Specified	Round None Shapes Yes	None Specified	None Specified Weight shall not be less than specified by more than 3.5%. Surface defect no more than 15%	Round: 1-1/2" & under + 1/65" - 1/32" 2" & over +/- 1% of OD Shapes: 2-1/2" & under +/- .020 2-1/2" - 3-1/2" +/- .025 3-1/2" - 5-1/2" +/- .030 5-1/2" & over +/- 1%
A-587 NPS 1/2" - 10"	MIN. P.S.I. Yield / Tensile 30,000 48,000	None Specified Nondestructive test shall be made	None Specified A flange test shall be made	yes - for all sizes	Refer to table 4 ASTM Standards for A-587	Refer to table 4 ASTM Standards for A-587
A-589 Type 1 NPS 6-16	MIN. P.S.I. Grade / Yield / Tensile CW 25,000 45,000 A 30,000 48,000 B 35,000 60,000	yes	None Specified	None Specified	Min. wall shall not be more than 12.5% nominal wall	1-1/2" & under + 1/64" - 1/32" 2" & over +/- 1% of OD

DIGEST OF COMMON - PIPE SPECIFICATIONS (cont.)

Specification and Size Range Where Indicated	Scope	Type	Grades	Chemistry
Type II NPS 1-12	Type II Water well reamed and drifted	Type II SMLS, ERW or CW	Type II A or CW	% MAX. P .050 S .060
Type III NPS 1-2	Type III Driven well pipe	Type III SMLS, ERW or CW	Type III A or CW	
Type IV NPS 3-8	Type IV Water well casing	Type IV SMLS, ERW or CW	Type IV A or CW	
API 5L	Welded and SMLS Line pipe	CW, ERW, SMLS DSAW	CW Grade 25 DSAW ERW & SMLS Grades A & B	Ladle % Max GR C MN P S A-25 .21 .60 .08 .06 SMLS A .22 .90 .04 .05 B .27 1.15 .04 .05 ERW A .21 .90 .04 .05 B .26 1.15 .04 .05
API 5LX	Welded and SMLS High test line pipe	ERW & SMLS DSAW	X-42 X-46 X-52 X-60 X-65 X-70 X-80	Ladle % Max % Min GR C MN P S CB V SMLS X-42 .29 1.25 .04 .05 X-46 .31 1.35 .04 .05 X-52 .31 1.35 .04 .05 X-60 .26 1.35 .04 .05 .02 ERW X-42 .28 1.25 .04 .05 X-46 .30 1.35 .04 .05 X-52 .30 1.35 .04 .05 X-60 .26 1.35 .04 .05 .005
Federal WWP-406	Comparable to A-120 (has been withdrawn)			
Federal WWP-404	Comparable to A-53			

CONTINUED

ASTM & API SPECIFICATIONS WITH COMPARABLE ANSI DESIGNATIONS

ASTM OR API DESIGNATIONS	ANSI DESIGNATIONS		TITLE
	CURRENT	REPLACED	
ASTM A-53	B-125.1	B-36.1	Welded & Seamless pipe
ASTM A-106	B-125.30	B-36.3	Seamless carbon steel pipe for high temperature service
ASTM A-120*	B-125-2	B-36.20	Black & galvanized and seamless steel pipe for ordinary uses
ASTM A-134	B-125.55	B-36.4	Electric-fusion (Arc) welded steel plate pipe (sizes 16" & over)
ASTM A-135	B-125.3	B-36.5	Electric resistance welded pipe
ASTM A-139	B-125.31	B-36.9	Electric-fusion (Arc) welded steel plate pipe (sizes 4" & over)
ASTM A-155	B-125.4	B-36.11	Electric fusion welded steel pipe for high temperature service
ASTM A-211	B-125.56	B-36.16	"Insert discontinued 1994"
ASTM A-312	B-125.16	B-36.26	Seamless and welded austenitic stainless steel pipe
ASTM A-333	B-125.17	B-36.40	Seamless and welded steel pipe for low temperature service
ASTM A-335	B-124.24	B-36.42	Seamless ferritic alloy steel pipe for high temperature service

* has been withdrawn

DIGEST OF COMMON - PIPE SPECIFICATIONS

CONTINUED

Specification and Size Range Where Indicated	Tensiles	Hydrostatic	Tests Bend	Flattening	Wall Tolerance	OD Tolerance
Type II NPS 1-12	MIN. P.S.I. Grade / Yield / Tensile CW / 25,000 / 45,000 A / 30,000 / 48,000 B / 35,000 / 60,000	yes	None Specified	None Specified	Min. wall shall not be more than 12.5% under nominal wall	1-1/2" & under + 1/64" - 1/32" 2" & over- +/- 1% of OD
Type III NPS 1-2 Type IV NPS 3-8 API 5L	MIN. P.S.I. Grade / Yield / Tensile A-25 / 25,000 / 45,000 A / 30,000 / 48,000 B / 35,000 / 60,000	yes	yes-for A-25 pipe 2-3/8 & smaller	yes	2-7/8" & smaller + 20% - 12.5% 3-1/2" OD + 18% - 12.5% 4" - 18" + 15% - 12.5% 20" & larger + 17.5% - 10%	 1.900 & under + .016" - .031" 2-38" - 4" OD +/- 1% 4-1/2" & over +/- .75%
API 5LX	MIN. P.S.I. Grade / Yield / Tensile X-42 / 42,000 / 60,000 X-46 / 46,000 / 63,000 X-52 / 52,000 / 66,000 X-60 / 60,000 / 75,000	yes	None Specified	yes - for ERW	+ 15% - 12.5%	+/- .75%
Federal WWP-406	Comparable to A-120					
Federal WWP-404	Comparable to A-53					

ASTM & API SPECIFICATIONS WITH COMPARABLE ANSI DESIGNATIONS

ASTM A-358	B-125.57	B-36.47	Electric fusion welded austenitic chromium-nickel alloy steel pipe for high temperature service
ASTM A-369	B-125.77	B-36.48	Carbon & ferritic alloy steel forged and bored pipe for high temperature service
ASTM A-376	B-125-25	B-36.43	Seamless austenitic steel pipe for high temperature temperature central station service
ASTM A-381	B-125.25	B-36.49	Metal arc welded steel pipe for high pressure transmission systems
ASTM A-405	B-125.26	B-36.44	Seamless ferritic alloy steel pipe specially heat treated for high temperature service
ASTM A-523	G-62.5		Plain end seamless & ERW steel pipe for high pressure pipe type cable circuits
ASTM A-524	B-125.37	B-36.56	Seamless C.S. pipe for process piping
ASTM A-530	B-125.20	B-36.57	General requirements for specialized carbon and alloy steel pipe
API 5L			Line pipe
API 5LX			High test line pipe
API 5LS			Spiral weld line pipe

FEDERAL

WWP-404c is similar to ASTM A-53 except that Government inspection and continuous identification marking of electric weld and seamless is mandatory. It covers black and galvanized welded and seamless pipe for flanging, bending, and coiling and for use with fresh water, oil, steam, air, and gas on shore plus a limited number of shipboard uses. Sizes 1/8 inch through 24 inch. WWP-406c is a federal specification comparable to ASTM A-120 (withdrawn 1988). Mills can certify that A-120 pipe in a distributor's stock meets all the requirements of WWP-406c.

A.W.W.A.

C-200 covers black welded and seamless pipe intended for the conveyance of water in sizes 6 inch and larger. Specification prescribes hydrostatic test pressures for sizes of pipe covered. Tensile, flattening, and bending tests are required.

ASME

B31.1 Code for pressure piping. Prescribes minimum requirements for design, manufacture, test, and installations of power piping systems for steam generating plants, central heating plants, and industrial plants.

B31.2 Fuel Gas Piping.

B31.3 Petroleum Refinery Piping.

B31.4 Liquid Petroleum Transportation Piping Systems.

B31.5 Refrigeration Piping.

B31.7 Nuclear Power Piping

B31.8 Gas Transmission and Distributing Piping Systems. Covers design, fabrication, installation, inspection, testing, and the safety aspects of operation and maintenance of gas transmission and distribution systems.

ANSI (ASME)

B36.10 American Standard for Wrought-Steel and Wrought-Iron pipe. Designates dimensions, weights, and schedule numbers for welded and seamless pipe. Schedules 10 through Schedules Double Extra Heavy (DXH/XXH).

B36.19 American Standard for Stainless Steel Pipe. Designates dimensions, weights, and schedule numbers for welded and seamless Stainless Steel Pipe, Schedules 5 through Schedules 80.

A.A.R.

M-111 covers black and galvanized welded and seamless pipe intended for coiling, bending, flanging, and other special purposes; and is suitable for welding. Purpose for which pipe is intended should be stated on orders. M-111 is comparable in most requirements to ASTM A-53.

M-130 covers black and galvanized welded and seamless pipe for ordinary uses in steam, water, gas, and air lines. Sizes 1/8 inch through 12 inch. Pipe to this specification is not intended for close coiling, bending, or high temperature service. M-130 is comparable in most requirements to ASTM A-120.

Wheatland Tube
A DIVISION OF ZEKELMAN INDUSTRIES

Zekelman Industries
Wheatland Tube Division, USA
700 Dock St. Sharon, PA 16146 USA

MTR By Run
Requested by KELLY PIPE COMPANY-AD

CERTIFIED MATERIAL TEST REPORT

Type 3.1/3.1.B in accordance with EN 10204/ISO 10204/EN 10474/ISO 10474/DIN50049

Heat Analysis

Run/Sample	Date	Item Description	C	Mn	P	S	CU	Ni	Cr	Mo	V	Si	Al	T/S	Y/S	El
6246/5	11/14/2011	3 STD GALV A53 PIPE PE W/2.0 ZINC	0.12	0.45	.011	.014	0.02	.010	.030	.004	.003	.008	.048	54729	33280	43

COMMENTS

This is to certify the product described herein was Made in the USA by the Wheatland Tube Division, USA* and sampled, tested and/or inspected in accordance with the latest revision, at the time of manufacture, of the specification listed above and fulfills the requirements in such respects. All the required mechanical, physical, hydrostatic, non-destructive, flattening, and bend tests have been successfully completed. The product(s) described above meet(s) one of the following specifications:

- Continuous Butt Weld (CW) Steel Pipe SureThread™ meeting the requirements of ASTM A53/A53M 2012/ASME SA53 2013 Type F, Grade A.
- Electric Resistance Welded (ERW) Steel Pipe meeting the requirements of ASTM A53/A53M 2012/ASME SA53 2013, Type E, Grade B.
- Electric Resistance Welded (ERW) Steel Pipe meeting the requirements of ASTM A135/A135M 2014, Type E, Grade A.
- Electric Resistance Welded (ERW) Steel Pipe meeting the requirements of ASTM A795/A795M 2013, Type E, Grade A.
- Steel Fence Pipe meeting the requirements of ASTM F1083 2013.
- Steel Coupling Stock meeting the requirements of ASTM A865/A865M 2012.
- API Line pipe meeting the requirements of ANSI/API Specification 5L 45th Edition or ANSI/API Specification 5CT 9th Edition.

*Note: 8 inch Schedule 10 ASTM A135 Black and Galvanized pipe is made in Canada (JMC Steel Group) and finished in the USA.
*Note: 8 inch through 16 inch ASTM A53 ERW Grade B pipe can be made in Canada (JMC Steel Group) and finished in the USA.
*Note: 18 inch ASTM A53 ERW Grade B pipe is made in the USA.

Michael S Ryan
Manager Technical Services

304 Threaded Stainless Drop Pipe

outokumpu Pipe Program

high performance stainless steel

Outokumpu Stainless Pipe
Tel: 800 731 7473
Fax: 800 416 7473
pipesales@outokumpu.com
outokumpu.com/pipe

Made in USA

Items shown are produced regularly for quick delivery from stock or within competitive industry lead-times. Please call an Outokumpu representative for availability.
Our Wildwood facility is ISO 9001 approved.

Stainless Steel Pipe Sizes and Weights

		SCH 5S		SCH 10S		SCH 40S		SCH 80S		SCH 10		SCH 20		SCH 30		SCH 40		SCH 60		SCH 80		SCH 100		SCH 120		SCH 140		SCH 160		Up to	
Nominal Pipe Size In.	Outside Dia. In.	Wall In.	Wt/Ft lbs	Wall In.	Wt/Ft lbs	Wall In.	Wt/Ft lbs	Wall In.	Wt/Ft lbs	Wall In.	Wt/Ft lbs	Wall In.	Wt/Ft lbs	Wall In.	Wt/Ft lbs	Wall In.	Wt/Ft lbs	Wall In.	Wt/Ft lbs	Wall In.	Wt/Ft lbs	Wall In.	Wt/Ft lbs	Wall In.	Wt/Ft lbs	Wall In.	Wt/Ft lbs	Wall In.	Wt/Ft lbs	Wall In.	Wt/Ft lbs
1/2	.840	.065	.5431	.083	.6773	.109	.8590	.147	1.098	—	—	—	—	—	—	.109	.8590	—	—	0.147	1.098	—	—	—	—	—	—	0.188	1.321	—	—
3/4	1.050	.065	.6902	.083	.8652	.113	1.141	.154	1.487	—	—	—	—	—	—	.113	1.141	—	—	0.154	1.487	—	—	—	—	—	—	0.219	1.962	—	—
1	1.315	.065	.8759	.109	1.417	.133	1.695	.179	2.192	—	—	—	—	—	—	.133	1.695	—	—	0.179	2.192	—	—	—	—	—	—	0.250	2.870	—	—
1 1/4	1.660	.065	1.118	.109	1.822	.140	2.294	.191	3.025	—	—	—	—	—	—	.140	2.294	—	—	0.191	3.025	—	—	—	—	—	—	0.250	3.800	—	—
1 1/2	1.900	.065	1.286	.109	2.104	.145	2.743	.200	3.665	—	—	—	—	—	—	.145	2.743	—	—	0.200	3.665	—	—	—	—	—	—	0.281	4.904	—	—
2	2.375	.065	1.619	.109	2.663	.154	3.687	.218	5.069	—	—	—	—	—	—	.154	3.687	—	—	0.218	5.069	—	—	—	—	—	—	0.344	7.532	—	—
2 1/2	2.875	.083	2.498	.120	3.564	.203	5.847	.276	7.733	—	—	—	—	—	—	.203	5.847	—	—	0.276	7.733	—	—	—	—	—	—	0.375	10.106	—	—
3	3.500	.083	3.057	.120	4.372	.216	7.647	.300	10.348	—	—	—	—	—	—	.216	7.647	—	—	0.300	10.348	—	—	—	—	—	—	0.438	14.458	—	—
3 1/2	4.000	.083	3.505	.120	5.019	.226	9.194	.318	12.622	—	—	—	—	—	—	.226	9.194	—	—	0.318	12.622	—	—	—	—	—	—	—	—	—	—
4	4.500	.083	3.952	.120	5.666	.237	10.891	.337	15.124	—	—	—	—	—	—	.237	10.891	—	—	0.337	15.124	—	—	0.438	19.179	—	—	0.531	22.719	—	—
5	5.563	.109	6.409	.134	7.842	.258	14.754	.375	20.972	—	—	—	—	—	—	.258	14.754	—	—	0.375	20.972	—	—	0.500	27.290	—	—	0.625	33.27	—	—
6	6.625	.109	7.656	.134	9.376	.280	19.152	.432	28.841	—	—	—	—	—	—	.280	19.152	—	—	0.432	28.841	—	—	0.562	36.73	—	—	0.719	45.78	—	—
8	8.625	.109	10.01	.148	13.52	.322	28.82	.500	43.79	—	—	.250	22.57	.277	24.93	.322	28.82	0.406	35.97	0.500	43.790	0.594	51.43	0.719	61.28	0.812	68.39	0.906	75.39	—	—
10	10.750	.134	15.33	.165	18.83	.365	40.86	.500	55.25	—	—	.250	28.30	.307	34.56	.365	40.86	0.500	55.25	0.594	65.030	0.719	77.75	0.844	90.13	1.000	105.11	1.125	116.73	—	—
12	12.750	.156	21.18	.180	24.39	.375	50.03	.500	66.03	—	—	.250	33.69	.330	44.18	.406	54.03	0.562	73.84	0.688	89.460	0.844	108.32	1.000	126.67	1.125	140.98	1.312	161.77	—	—
14	14.000	.156	23.28	.188	27.99	.375	55.08	.500	72.77	.250	37.06	.312	46.04	.375	55.08	.438	64.03	0.594	85.84	0.750	107.130	0.938	132.08	1.094	152.20	1.250	171.81	1.406	190.88	—	—
16	16.000	.165	28.17	.188	32.05	.375	63.16	.500	83.55	.250	42.45	.312	52.76	.375	63.16	.500	83.55	0.656	108.51	0.844	137.890	1.031	166.37	1.219	194.23	1.438	225.73	1.594	247.54	—	—
18	18.000	.165	31.72	.188	36.10	.375	71.25	.500	94.33	.250	47.84	.312	59.49	.438	82.92	.562	105.65	0.750	139.47	0.938	172.520	1.156	209.90	1.375	246.42	1.562	276.79	1.781	311.39	—	—
20	20.000	.188	40.15	.218	46.49	.375	79.33	.500	105.11	.250	53.23	.375	79.33	.500	105.11	.594	124.26	0.812	167.96	1.031	210.820	1.281	258.49	1.500	299.15	1.750	344.29	1.969	382.72	—	—
22	22.000	.188	44.21	.218	51.19	.375	87.42	.500	115.89	.250	58.62	.375	87.42	.500	115.89	—	—	0.875	199.26	1.125	253.160	1.375	305.71	1.625	356.92	1.875	406.78	2.125	455.29	—	—
24	24.000	.218	55.98	.250	64.01	.375	95.50	.500	126.67	.250	64.01	.375	95.50	.562	142.00	.688	172.90	0.969	240.58	1.219	299.360	1.531	370.83	1.812	433.41	2.062	487.65	2.344	547.21	3.000	679.14
26	26.000	—	—	—	—	—	—	—	—	.312	86.40	.500	137.45	—	—	—	—	—	—	—	—	—	—	—	—	—	—	—	—	3.000	743.82
28	28.000	—	—	—	—	—	—	—	—	.312	93.12	.500	148.23	.625	184.44	—	—	—	—	—	—	—	—	—	—	—	—	—	—	3.000	808.50
30	30.000	.250	80.18	.312	99.85	—	—	—	—	.312	99.85	.500	159.01	.625	197.91	—	—	—	—	—	—	—	—	—	—	—	—	—	—	3.000	873.18
32	32.000	.250	85.57	—	—	—	—	—	—	—	—	—	—	—	—	—	—	—	—	—	—	—	—	—	—	—	—	—	—	3.000	937.86

Items shown in gray are not part of our standard manufacturing capabilities. For most 300 series stainless steels computed weights based on: wt/ft = 10.78 (OD-Wall) Wall.

In addition to standard specification requirements Outokumpu can offer the following VALUE ADDED SERVICES:

Eddy Current
Hydrostatic Testing
Radiographic Testing - Film and Real Time Radiography
Penetrant Testing
Positive Material Identification - X-ray fluorescence, and optical emission (Carbon)
Mechanical Test Laboratory: • Mechanical Testing - Tensile, bend testing, etc. • Corrosion testing
Beveling, end caps, girth welding, special line marking
Export packing
Fast track program for one week lead time on small orders
Up to 60 foot lengths

Grades

Core range for corrosive environments	304/4301, 304L/4307, 321/4541, 347/4550
Supra range for highly corrosive environments	316/4401, 316L/4404
Forta range for duplex and other high strength	DX 2205 Code Plus Two®, LDX 2101, Zeron 100, SDX 2507
Ultra range for extremely corrosive environments	904L, 254 SMO, 317, 317L, 317LM, 317LMN
Therma range for high service temperatures	253 MA, 310S/4845, 304H/4948, 321H/4878, 347H/4550, 153 MA, 316H, 309S/4833, 309H
Nickel alloys	C276, 600, 601, 622, 625, 800, 800H, 800HT, 825, Alloy 20
Hastelloy®	B-2, B-3, G-30, C-4, C-22, C-276, C-2000
ASTM	A312, A358, A778, A790, A928
*Applicable ASTM A & B and ASME SA & SB specifications	

Additional grades available upon request.

				SCH 10 through 36.00" OD				SCH 20 through 36.00" OD				SCH 40 for 36.00" OD																	
Nominal Pipe	Outside	Wall	Wt/Ft	Wall	Wt/Ft	Wall	Wt/Ft	Wall	Wt/Ft	Wall	Wt/Ft	Wall	Wt/Ft	Wall	Wt/Ft	Wall	Wt/Ft	Wall	Wt/Ft	Wall	Wt/Ft	Wall	Wt/Ft	Wall	Wt/Ft	Wall	Wt/Ft	Cont.	Wall	Wt/Ft
Size	Dia. in.	in.	lbs	in.	lbs	in.	lbs	in.	lbs	in.	lbs	in.	lbs	in.	lbs	in.	lbs	in.	lbs	in.	lbs	in.	lbs	in.	lbs	in.	lbs		in.	lbs
32	32.000	.250	85.57	.312	106.58	.375	127.84	.500	169.79	.650	219.67	.750	252.66	.825	277.25	1.000	334.18	1.125	374.44	1.375	453.94	1.500	493.19	1.750	570.67	→	3.000	937.86
34	34.000	.250	90.96	.312	113.30	.375	135.93	.500	180.57	.650	233.68	.750	268.83	.825	295.04	1.000	355.74	1.125	398.69	1.375	483.58	1.500	525.53	1.750	608.40	→	3.000	1002.54
36	36.000	.250	96.35	.312	120.03	.375	144.01	.500	191.35	.650	247.70	.750	285.00	.825	312.83	1.000	377.30	1.125	422.95	1.375	513.23	1.500	557.87	1.750	646.13	→	3.000	1067.22
38	38.000	.250	101.74	.312	126.76	.375	152.10	.500	202.13	.650	261.71	.750	301.17	.825	330.62	1.000	398.86	1.125	447.20	1.375	542.87	1.500	590.21	1.750	683.86	→	3.000	1131.90
40	40.000	.250	107.13	.312	133.49	.375	160.18	.500	212.91	.650	275.73	.750	317.34	.825	348.40	1.000	420.42	1.125	471.46	1.375	572.52	1.500	622.55	1.750	721.59	→	3.000	1196.58
42	42.000	.250	112.52	.312	140.21	.375	168.27	.500	223.69	.650	289.74	.750	333.51	.825	366.19	1.000	441.98	1.125	495.71	1.375	602.16	1.500	654.89	1.750	759.32	→	3.000	1261.26
44	44.000	.250	117.91	.312	146.94	.375	176.35	.500	234.47	.650	303.75	.750	349.68	.825	383.98	1.000	463.54	1.125	519.97	1.375	631.81	1.500	687.23	1.750	797.05	→	3.000	1325.94
46	46.000	.250	123.30	.312	153.67	.375	184.44	.500	245.25	.650	317.77	.750	365.85	.825	401.76	1.000	485.10	1.125	544.22	1.375	661.45	1.500	719.57	1.750	834.78	→	3.000	1390.62
48	48.000	.250	128.69	.312	160.39	.375	192.52	.500	256.03	.650	331.78	.750	382.02	.825	419.55	1.000	506.66	1.125	568.48	1.375	691.10	1.500	751.91	1.750	872.51	→	3.000	1455.30
50	50.000	.250	134.08	.312	167.12	.375	200.61	.500	266.81	.650	345.80	.750	398.19	.825	437.34	1.000	528.22	1.125	592.73	1.375	720.74	1.500	784.25	1.750	910.24	→	3.000	1519.98
52	52.000	.250	139.47	.312	173.85	.375	208.69	.500	277.59	.650	359.81	.750	414.36	.825	455.12	1.000	549.78	1.125	616.99	1.375	750.39	1.500	816.59	1.750	947.97	→	3.000	1584.66
54	54.000	.250	144.86	.312	180.57	.375	216.78	.500	288.37	.650	373.82	.750	430.53	.825	472.91	1.000	571.34	1.125	641.24	1.375	780.03	1.500	848.93	1.750	985.70	→	3.000	1649.34
56	56.000	.250	150.25	.312	187.30	.375	224.86	.500	299.15	.650	387.84	.750	446.70	.825	490.70	1.000	592.90	1.125	665.50	1.375	809.68	1.500	881.27	1.750	1023.43	→	3.000	1714.02
58	58.000	.250	155.64	.312	194.03	.375	232.95	.500	309.93	.650	401.85	.750	462.87	.825	508.49	1.000	614.46	1.125	689.75	1.375	839.32	1.500	913.61	1.750	1061.16	→	3.000	1778.70
60	60.000	.250	161.03	.312	200.75	.375	241.03	.500	320.71	.650	415.87	.750	479.04	.825	526.27	1.000	636.02	1.125	714.01	1.375	868.97	1.500	945.95	1.750	1098.89	→	3.000	1843.38
62	62.000	.250	166.42	.312	207.48	.375	249.12	.500	331.49	.650	429.88	.750	495.21	.825	544.06	1.000	657.58	1.125	738.26	1.375	898.61	1.500	978.29	1.750	1136.62	→	3.000	1908.06
64	64.000	.250	171.81	.312	214.21	.375	257.20	.500	342.27	.650	443.89	.750	511.38	.825	561.85	1.000	679.14	1.125	762.52	1.375	928.26	1.500	1010.63	1.750	1174.35	→	3.000	1972.74
66	66.000	.250	177.20	.312	220.93	.375	265.29	.500	353.05	.650	457.91	.750	527.55	.825	579.63	1.000	700.70	1.125	786.77	1.375	957.90	1.500	1042.97	1.750	1212.08	→	3.000	2037.42
68	68.000	.250	182.59	.312	227.66	.375	273.37	.500	363.83	.650	471.92	.750	543.72	.825	597.42	1.000	722.26	1.125	811.03	1.375	987.55	1.500	1075.31	1.750	1249.81	→	3.000	2102.10
↓	↓	↓	↓	↓	↓	↓	↓	↓	↓	↓	↓	↓	↓	↓	↓	↓	↓	↓	↓	↓	↓	↓	↓	↓	↓		↓	↓
120	120.000	.250	322.73	.312	402.55	.375	483.58	.500	644.11	.650	836.29	.750	964.14	.825	1059.88	1.000	1282.82	1.125	1441.66	1.375	1758.32	1.500	1916.15	1.750	2230.79	→	3.000	3783.78

outokumpu
high performance stainless steel

Outokumpu Stainless Pipe
Tel: 800 731 7473
Fax: 800 416 7473
pipesales@outokumpu.com
outokumpu.com/pipe

Information given in this brochure may be subject to alterations without notice. Care has been taken to ensure that the contents of this publication are accurate but Outokumpu and its affiliated companies do not accept responsibility for errors or for information which is found to be misleading. Suggestions for or descriptions of the end use or application of products or methods of working are for information only and Outokumpu and its affiliated companies accept no liability in respect thereof. Before using products supplied or manufactured by the company the customer should satisfy himself of their suitability.
LDX 2101® is a trademark of Outokumpu Stainless.
254 SMO® is a trademark of Outokumpu Stainless.
2205 Code Plus Two® is a trademark of Outokumpu Stainless, Inc.

Ductile Iron Check Valve — Model 80DI-VFD

FLOMATIC®
Flomatic Corporation

Sizes 3" thru 8" / 75mm thru 200mm

NSF/ANSI 61 IAPMO R&T ™ | LOW-LEAD IAPMO R&T ™ NSF/ANSI 372 | #1 Pb Lead-Free

Materials

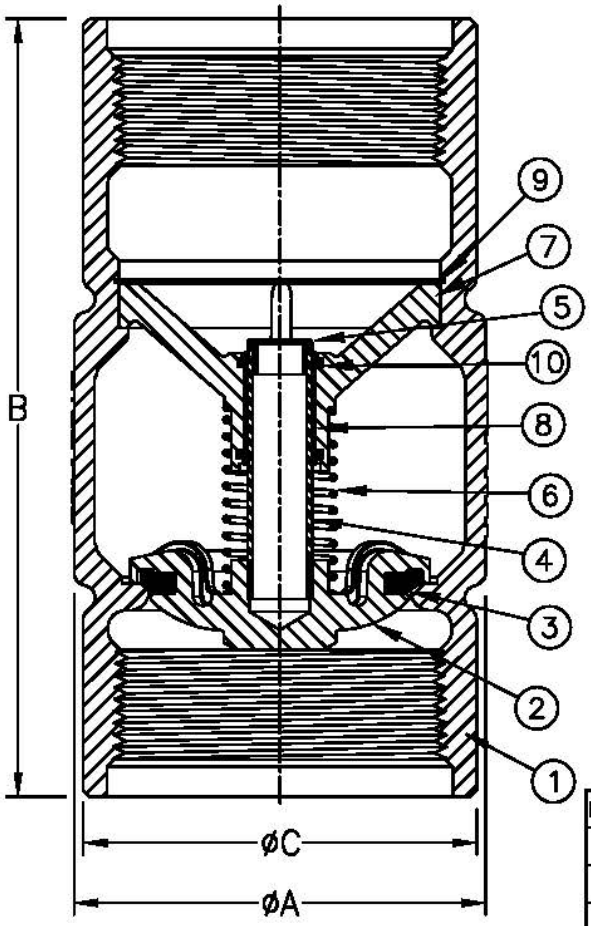

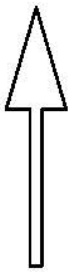

Max Temp 180°F (82°C)
Max Pressure 600psi (42bar)
Optional Female 8 round Threads

Item #	Qty	Description	Material	ASTM
1	1	Body (Epoxy Coated)	Ductile Iron	65-45-12
2	1	Poppet (Epoxy Coated)	Ductile Iron	65-45-12
3	1	Seat Disc	Buna-N	N-5007*
4	1	Stem	Stainless Steel	316
5	1	Stem Cap	Engineered Composite	Polyethelyne
6	1	Spring	Stainless Steel	302
7	1	Stem Guide (Epoxy Coated)	Ductile Iron	65-45-12
8	1	Bushing	Engineered Composite	----
9	1	Retaining Ring	Stainless Steel	302
10	2	Wiper	Engineered Composite	Molythane

*8" uses N-6010

Dimensions (FNPT x FNPT)

Size		Part #	A		B		C		Weight	
Inch	mm		Inch	mm	Inch	mm	Inch	mm	lbs	kg
3	75	7938VFD	4-3/8	111	8-37/64	218	4-13/64	107	12	5.5
4	100	7939VFD	5-3/4	146	11-1/4	286	5-1/2	140	27	12
5	125	4088VFD	6-29/32	175	13-5/8	346	6-19/32	167	40	18
6	150	4089VFD	8	203	15-9/64	385	7-21/32	194	63	29
8	200	4090VFD	9-11/16	246	15-27/32	402	9-11/16	246	87	40

Flomatic Corporation can accept no responsibility for possible errors in catalogues, brochures and other printed material. Flomatic Corporation reserves the right to alter its products without notices. This also applies to product already agreed. All trademarks in this material are property of the respective companies. All right reserved. ©2016 Flomatic Corporation. The drawings & information on this drawing sheet are the sole & exclusive property of Flomatic Corporation. Any reproduction, distribution, display or use of these drawings or information in whole or in part without written authorization of Flomatic Corporation is strictly prohibited.

FLOMATIC® VALVES

November 21, 2011
Dwg No: S7939DI-VFD Rev: F (8/16)

FLOMATIC CORPORATION
GLENS FALLS, N.Y. 12801
PHONE (518) 761-9797
FAX (518) 761-9798

WELD ON PITLESS ADAPTERS

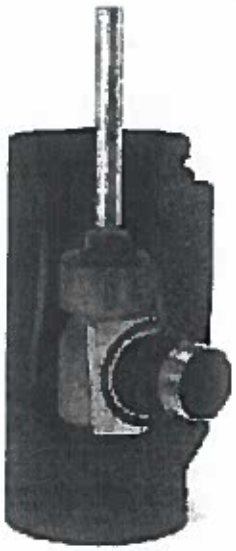

WELD ON PITLESS ADAPTER FOR 8", 10" & 12" WELLS

FEATURES

- Durable fabricated steel housing - brass elbow, stainless steel discharge, large drain hole in the pull pipe port, 3" FIP pull pipe, 3" FIP drop pipe, 3" stainless steel MIP discharge and large o-ring seal.
- Designed to be welded onto 8", 10" and 12" I.D. steel casing.
- Designed for shallow or deep settings and high working pressures up to 300 PSI.
- Durable steel housing with tear drop design for EZ bottom welding.
- Water contacts only 304 stainless steel and brass elbow for long term corrosion protection.
- No obstruction in the casing I.D. when the brass elbow is removed.
- Stainless steel 10° tapered slip fitting design on the elbow for easy installation and removal at time of servicing.
- Large O-Ring neoprene seal.
- Large drain hole in the 3" FIP pull pipe port.
- Designed for 10,000 lbs. load.
- Also available factory welded to casing.

WELD ON PITLESS ADAPTER

Order No.	Well Size	Drop Pipe Size	Discharge Size	Weight (lbs)
8123BEZ	8", 10" & 12" I.D.	3" Female NPT	3" Male NPT	27
83BEZ	Kit for 8" x 18" L.	3" Female NPT	3" Male NPT	75
83BEZ6	Kit for 6"	3" Female NPT	3" Male NPT	90
103BEZ	Kit for 10" x 18" L.	3" Female NPT	3" Male NPT	95
123BEZ	Kit for 12" x 18" L	3" Female NPT	3" Male NPT	115
8123BEZ6	8"-12" w/nipple 6" L.	3" Female NPT	3" Male NPT	30

MS6000C

6” Submersible Motors

be
think
innovate

GRUNDFOS

A closer look at the MS6000C

THRUST BEARING
High capacity thrust bearings provide long life durability even on the toughest conditions.

HP	Pound-Force (lbf)
7.5	1,686
10	1,686
15	6,070
20	6,070
25	6,070
30	6,070
40	6,070

ROBUST STAINLESS STEEL
Engineered design with robust and proven corrosion resistant 304 Stainless Steel motor exterior as standard, 904L Stainless Steel is optional for highly aggressive water applications.

EN Rating	AISI Rating
1.4301	304
1.4539	904L

INCREASED TEMPERATURE RATING
T40 rating indicates the increased ambient water temperature rating to 104°F (40°C) that withstands higher temp rating which provides durability and longer life of the motor in lower flow, closed loop, and warmer water applications. Use of FDA food grade approved SML-3 motor fluid provides frost and corrosion protection. T40 is standard, T60 is optional.

Temp Rating	Max. Temp	Min. Temp
T40	104°F (40°C)	-4°F (-20°C)
T60	140°F (60°C)	-4°F (-20°C)

CAST STAINLESS STEEL ENDBELL
Cast 304 Stainless Steel endbell with NEMA Standard for a solid frame mount of the flange.

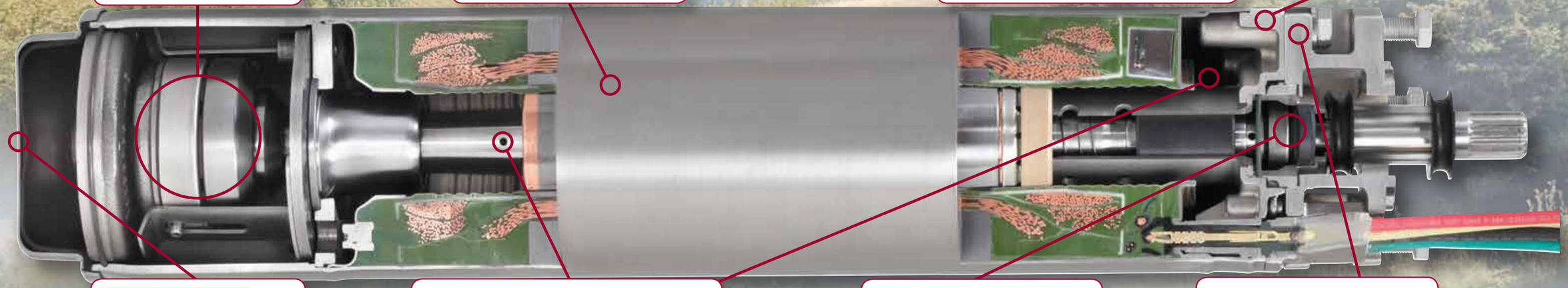

RUGGED SLIM DIAMETER
Stainless Steel endbell gives rugged protection going down the well while smaller diameter motor is easier to install.

COOLING AND CIRCULATION
Excellent cooling and circulation characteristics include hollow shaft, flow friendly internal design, and large internal capacity allows better cooling and longer motor life.

SHAFT SEAL
Shaft seals are with a durable Silicon / Silicon seal faces and use NBR rubber to standup to abrasive materials making for a long seal life.

FLANGE
Robust cast 304 Stainless Steel NEMA Standard flange added to top of motor to assure motor replacements in the field will mount onto any pump in the industry pulled from the well.

MS6000C

The MS6000C series cover a range of water supply applications that require power from 7.5 to 40 HP, 3-phase.

All external surfaces of Grundfos MS motors in contact with water are made of stainless steel DIN W. Nr. 1.4301 (AISI 304) unless otherwise specified R-versions made from DIN W. Nr. 1.4539 (AISI 904 L) are also available for aggressive water. MS motors are fitted with a built-in Tempcon sensor to prevent overheaing – a solution which together with a Grundfos MP 204 eliminates the need for external temperature sensors.

CABLE CONNECTION SEAL

1. Two bolt stainless steel connection frame for absolute solid mounting and protection
2. Primary compression lip seals the lead and motor from external fluids
3. Pliable secondary seal contains 3-Wire connections to motor for reliable, long lasting seal
4. Ground Tab bolts to flange on motor for premium grounding
5. 3-Wire plus ground wire all fully potted in connection body for a complete and reliable seal

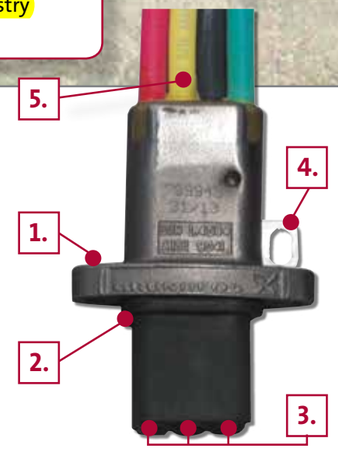

MS6

MS6000C

Phase	Voltage	HP	SS #	Seal	Rubber	MS6 Material #	MS6000C Material #
3	208-230	7.5	304	Sic/Sic	NBR	96168783	96166181
3	208-230	10	304	Sic/Sic	NBR	96168784	96166182
3	208-230	15	304	Sic/Sic	NBR	96168786	96166184
3	208-230	20	304	Sic/Sic	NBR	96168788	96166186
3	208-230	25	304	Sic/Sic	NBR	96168789	96166187
3	208-230	30	304	Sic/Sic	NBR	96168790	96166188
3	440-460	7.5	304	Sic/Sic	NBR	96168763	96166161
3	440-460	10	304	Sic/Sic	NBR	96168764	96166162
3	440-460	15	304	Sic/Sic	NBR	96168766	96166164
3	440-460	20	304	Sic/Sic	NBR	96168768	96166166
3	440-460	25	304	Sic/Sic	NBR	96168769	96166167
3	440-460	30	304	Sic/Sic	NBR	96168770	96166168
3	440-460	40	304	Sic/Sic	NBR	96168772	96166170

Comparison from MS6 to MS6000C	
MS6	MS6000C
Temperature	
T30	T40
86° F / 30° C	104° F / 40° C
Shaft Seal	
SiC / SiC	SiC / SiC
NBR	NBR
Embedding Material	
Sand added to Epoxy	Aluminum Oxide added to Epoxy
Thrust Bearing	
7.5 and 10 HP	
7.5 kN / 1,686 ft. lbs.	7.5 kN / 1,686 ft. lbs.
15, 20, 25, 30 and 40 HP	
27.5 kN / 6182 ft. lbs.	27 kN / 6,070 ft. lbs.
Pump Mount	
NEMA	NEMA with Flange
Stainless Steel	
304 Standard	304 Standard
904L Optional	904L Optional
Cable Connection	
3-Wire Plus Ground	3-Wire Plus Ground
Premium Quality	Premium Quality
Included with Motor	Included with Motor
Available Separately	Available Separately
Diameter	
5.63 in. / 143 mm	5.49 in. / 139.5 mm
Agency Approval	
cCSAus	cCSAus
Pricing	
Feb. 1st 2014 List Price	Feb. 1st 2014 List Price

L-MS-SL-002 Rev.7/14 (US)

GRUNDFOS Kansas City
17100 West 118th Terrace
Olathe, Kansas 66061
Phone: (913) 227-3400
Fax: (913) 227-3500

www.grundfos.us

GRUNDFOS Canada
2941 Brighton Road
Oakville, Ontario
L6H 6C9
Phone: (905) 829-9533
Fax: (905) 829-9512

www.grundfos.ca

GRUNDFOS Mexico
Boulevard TLC No. 15
Parque Industrial Stiva Aeropuerto
C.P. 66600 Apodaca, N.L. Mexico
Phone: 011-52-81-8144 4000
Fax: 011-52-81-8144 4010

www.grundfos.mx

The name Grundfos, the Grundfos logo, and be think innovate are registered trademarks owned by Grundfos Holding A/S or Grundfos A/S, Denmark. All rights reserved worldwide.

GRUNDFOS

WELL SEALS

PACIFIC HYDRO™ STEEL SANITARY WELL SEALS

MADE in the USA

Features:

- Made from high strength steel
- Steel plates powder coated for durable finish
- Utilizes soft poly-vinyl packers
- Unique packer design allows for wide range of casing sizes
- Bolts and washers zinc plated
- 1" threaded wire drop hole standard on most well seals
- 1-1/4" threaded wire drop holes standard on 10" and larger seals
- Vent opening 1/2" on 4" to 7" well seals
- Vent opening 3/4" on 8" well seals and larger

An additional 1.25-inch access hole will be installed into the selected well seal. The seal will have 2-1.25-inch port, 1-1-inch electrical port, and one .75-inch vent hole.

Part Number	Model Number	Size Casing I.D. I.D. X Drop Pipe	Top Plate Thickness	Working Load (Lbs.)	Weight (Lbs.)	List Price Each
954010	WS41	4" to 4 -/4" x 1"	3/16"	2,141	1.80	
954011	WS41.25	4" to 4-1/4" x 1-1/4"	3/16"	2,141	1.76	
954012	WS41.5	4" to 4-1/4" x 1-1/2"	3/16"	2,141	1.65	
954013	WS42	4" to 4-1/4" x 2"	3/16"	2,141	1.55	
954004	WS5OD1	4-1/2" to 4-3/4" x 1"	3/16"	1,520	2.65	
954005	WS5OD1.25	4-1/2" to 4-3/4" x 1-1/4"	3/16"	1,520	2.35	
954006	WS6OD1	5-3/16" to 5-7/16" x 1"	3/16"	1,520	2.90	
954007	WS6OD1.25	5-3/16" to 5-7/16" x 1-1/4"	3/16"	1,520	2.90	
954015	WS51	5" to 5-1/4" x 1"	3/16"	1,450	2.70	
954016	WS51.25	5" to 5-1/4" x 1-1/4"	3/16"	1,450	2.40	
954017	WS51.5	5" to 5-1/4" x 1-1/2"	3/16"	1,450	2.55	
954018	WS52	5" to 5-1/4" x 2"	3/16"	1,450	2.85	
954020	WS61	5-3/4" to 6-1/4" x 1"	3/16"	1,100	3.60	
954021	WS61.25	5-3/4" to 6-1/4" x 1-1/4"	3/16"	1,100	3.60	
954022	WS61.5	5-3/4" to 6-1/4" x 1-1/2"	3/16"	1,100	3.35	
954023	WS62	5-3/4" to 6-1/4" x 2"	3/16"	1,100	3.35	
954024	WS62.5	5-3/4" to 6-1/4" x 2-1/2"	3/8"	9,170	4.70	
954025	WS63	5-3/4" to 6-1/4" x 3"	3/8"	9,170	5.00	
954026	WS6 1/4 x 1	5-3/4" to 6-1/4" x 1"	3/16"	1,150	3.60	
954027	WS6 1/4 x 1.25	5 -/4" to 6-1/4" x 1-1/4"	3/16"	1,150	3.60	
954029	WS6 1/4 x 2	5-3/4" to 6-1/4" x 2"	3/16"	1,150	3.35	
954030	WS71	6-5/8" to 7-1/4" x 1"	1/4"	2,000	5.45	
954031	WS71.25	6-5/8" to 7-1/4" x 1-1/4"	1/4"	2,000	5.65	
954032	WS71.5	6-5/8" to 7-1/4" x 1-1/2"	1/4"	2,000	5.40	
954033	WS72	6-5/8" to 7-1/4" x 2"	1/4"	2,000	5.30	
954036	WS81	7-3/4" to 8-1/4" x 1"	1/4"	1,650	7.45	
954037	WS81.25	7-3/4" to 8-1/4" x 1-1/4"	1/4"	1,650	7.30	
954038	WS81.5	7-3/4" to 8-1/4" x 1-1/2"	1/4"	1,650	6.75	
954039	WS82	7-3/4" to 8-1/4" x 2"	1/4"	1,650	6.90	
954040	WS8.25	7-3/4" to 8-1/4" x 2-1/2"	3/8"	6,900	8.35	
954041	WS83	7-3/4" to 8-1/4" x 3"	1/2"	9,000	7.50	
954042	WS84	7-3/4" to 8-1/4" x 4"	5/8"	22,500	9.60	
954045	WS101	9-3/4" to 10-1/4" x 1"	3/8"	3,700	11.75	
954046	WS101.25	9-3/4" to 10-1/4" x 1-1/4"	3/8"	3,700	11.95	
954047	WS101.5	9-3/4" to 10-1/4" x 1-1/2"	3/8"	3,700	15.05	
954048	WS102	9-3/4" to 10-1/4" x 2"	3/8"	3,700	14.70	
954049	WS102.5	9-3/4" to 10-1/4" x 2-1/2"	1/2"	8,600	17.15	
954050	WS103	9-3/4" to 10-1/4" x 3"	5/8"	16,200	19.55	
954051	WS104	9-3/4" to 10-1/4" x 4"	5/8"	16,200	17.65	
954052	WS105	9-3/4" to 10-1/4" x 5"	3/4"	30,000	17.50	
954053	WS106	9-3/4" to 10-1/4" x 6"	3/4"	30,000	15.10	
954054	WS121	11-3/4" to 12-1/4" x 1"	1/4"	885	26.00	
954055	WS121.25	11-3/4" to 12-1/4" x 1-1/4"	3/8"	2,870	26.00	
954056	WS121.5	11-3/4" to 12-1/4" x 1-1/2"	3/8"	2,870	26.00	
954057	WS122	11-3/4" to 12-1/4" x 2"	1/2"	6,600	26.00	
954058	WS122.5	11-3/4" to 12-1/4" x 2-1/2"	1/2"	6,600	26.00	
954059	WS123	11-3/4" to 12-1/4" x 3"	5/8"	12,000	26.00	
954060	WS124	11-3/4" to 12-1/4" x 4"	5/8"	12,000	26.00	
954061	WS125	11-3/4" to 12-1/4" x 5"	3/4"	20,500	26.00	
954062	WS126	11-3/4" to 12-1/4" x 6"	3/4"	21,000	26.00	
954070	WS141.25	13 1/4" to 14" x 1 1/4"	3/8"	2,280	40	
954071	WS141.5	13 1/4" to 14" x 1 1/2"	1/2"	4,850	49	
954072	WS142	13 1/4" to 14" x 2"	1/2"	4,850	48	
954073	WS142.5	13 1/4" to 14" x 2 1/2"	1/2"	4,850	47	
954074	WS143	13 1/4" to 14" x 3"	5/8"	9,450	54	
954075	WS144	13 1/4" to 14" x 4"	3/4"	16,000	59	
954076	WS145	13 1/4" to 14" x 5"	3/4"	16,000	67	
954077	WS146	13 1/4" to 14" x 6"	1"	38,000	67	
954080	WS164	15 1/4" to 16" x 4"	3/4"	12,500	80	
954081	WS166	15 1/4" to 16" x 6"	1"	30,000	91	

See separate price list

- **NOTE:**
- **Custom sizes available. Contact factory for quotation.**
- **Also available manufactured from stainless steel.**

PUMP CABLE

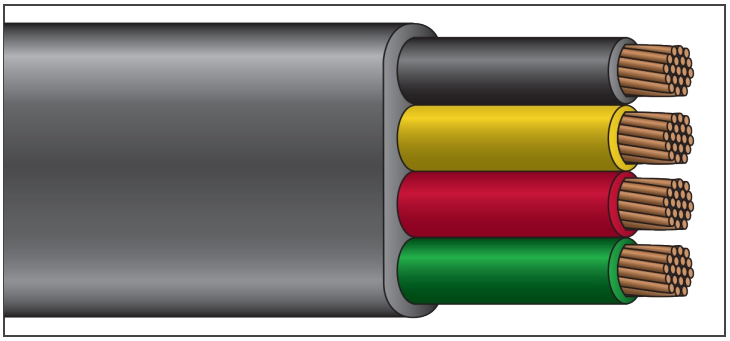

THW or RHW-2/FLAT BLACK

Submersible Pump Cable

600 Volt Copper, Heavy Duty Flat

Description:

Stranded copper conductors are insulated with color coded PVC *(type THW or RHW-2)* and configured flat and parallel with green insulated ground and overall PVC jacket applied directly over the conductors with a non-penetrating web.

Application:

Suitable for use within the well casing to supply power to the submersible pump and where extra mechanical protection and flexibility during installation and operation are required.

Standards:

UL Standard 83 *(UL 44/854 on 250 Kcmil and larger)*
Temperature Rated at 75°C Wet/Dry *(90°C Wet/Dry on 250 Kcmil and larger)*
Color Code: Black, Red, Yellow, Green *(ground),*
Printed Number and Color *(1/0 AWG and larger)*
Acid, Alkali, Oil, Grease, Abrasion and Crush Resistant
Direct Burial[1] *(250 Kcmil and larger)*
Weather, Ozone and Sunlight Resistant Jacket
RoHS Compliant

[1] *#12 AWG through 4/0 AWG Direct Burial available upon request.*

Part Number	Conductor Size *Power* (AWG or Kcmil)	Conductor Size *Ground* (AWG or Kcmil)	Dimensions Insulation (in.)	Dimensions Jacket (in.)	Dimensions O.D. (in.)	Standard Packaging (500')	Standard Packaging (1,000')	Standard Packaging (bulk)	Ampacity NEC§	Weight (lb./1000')
PFB14/2GG	14/2 (7 str)	14 (7 str)	0.045	0.045	0.25 x 0.58			X	15	114
PFB12/2GG	12/2 (19 str)	12 (19 str)	0.045	0.045	0.27 x 0.64	X	X		20	154
PFB10/2GG	10/2 (19 str)	10 (19 str)	0.045	0.045	0.30 x 0.71	X	X		30	212
PFB8/2GG	8/2 (19 str)	10 (19 str)	0.060	0.045	0.35 x 0.82	X	X		50	278
PFB14/3GG	14/3 (7 str)	14 (7 str)	0.045	0.045	0.25 x 0.74	X	X		15	147
PFB12/3GG	12/3 (19 str)	12 (19 str)	0.045	0.045	0.27 x 0.82	X	X		20	192
PFB10/3GG	10/3 (19 str)	10 (19 str)	0.045	0.045	0.30 x 0.91	X	X		30	258
PFB8/3GG	8/3 (19 str)	10 (19 str)	0.060	0.045	0.35 x 1.08	X	X		50	376
PFB6/3GG	6/3 (19 str)	8 (19 str)	0.060	0.045	0.39 x 1.26	X	X		65	528
PFB4/3GG	4/3 (19 str)	8 (19 str)	0.060	0.045	0.44 x 1.40	X	X		85	726
PFB2/3GG	2/3 (19 str)	6 (19 str)	0.060	0.045	0.49 x 1.60	X	X		115	1,049
PFB1/03GG	1/03 (19 str)	6 (7 str)	0.080	0.060	0.64 x 1.97			X	150	1,632
PFB2/03GG	2/03 (19 str)	6 (7 str)	0.080	0.060	0.68 x 2.11			X	175	1,958
PFB3/03GG	3/03 (19 str)	4 (7 str)	0.080	0.060	0.73 x 2.30			X	200	2,410
PFB4/03GG	4/03 (19 str)	4 (7 str)	0.080	0.060	0.79 x 2.48			X	230	2,917
PFB250/3GG	250/3 (37 str)	4 (7 str)	0.095	0.080	0.92 x 2.80			X	255	3,529
PFB350/3GG	350/3 (37 str)	3 (7 str)	0.095	0.080	1.03 x 3.13			X	310	4,701
PFB500/3GG	500/3 (37 str)	2 (7 str)	0.095	0.080	1.15 x 3.52			X	380	6,394

§Per NEC Table 310.15 (B)(16). NOTE: The data shown is approximate and subject to standard industry tolerances.

SUBMERSIBLE PUMPS

6" STAINLESS STEEL SR SERIES

FPS

FEATURES

- Stainless steel impellers and diffusers to resist corrosion
- Heavy-duty stainless steel shell assures permanent alignment of all components to increase longevity and enables higher pressures than strap designs
- PTFE floating wear ring, ceramic bearing journal, and Nitrile rubber fluted bearing ensure durability against wear for long-lasting performance and reliability
- Suited to operate in horizontal position
- Built-in check valve to protect the pump against water hammer
- Energy-efficient hydraulic design for cost effective operation

SPECIFICATIONS

- Capacities of 70–150 gpm
- Maximum operating temperature of 140 °F/60 °C for 304 stainless steel and 194 °F/90 °C for 316 stainless steel

APPLICATIONS

- Industrial
- Agricultural
- Irrigation
- Commercial

Franklin Electric

SUBMERSIBLE PUMPS

6" STAINLESS STEEL SR SERIES

PERFORMANCE

100 GPM

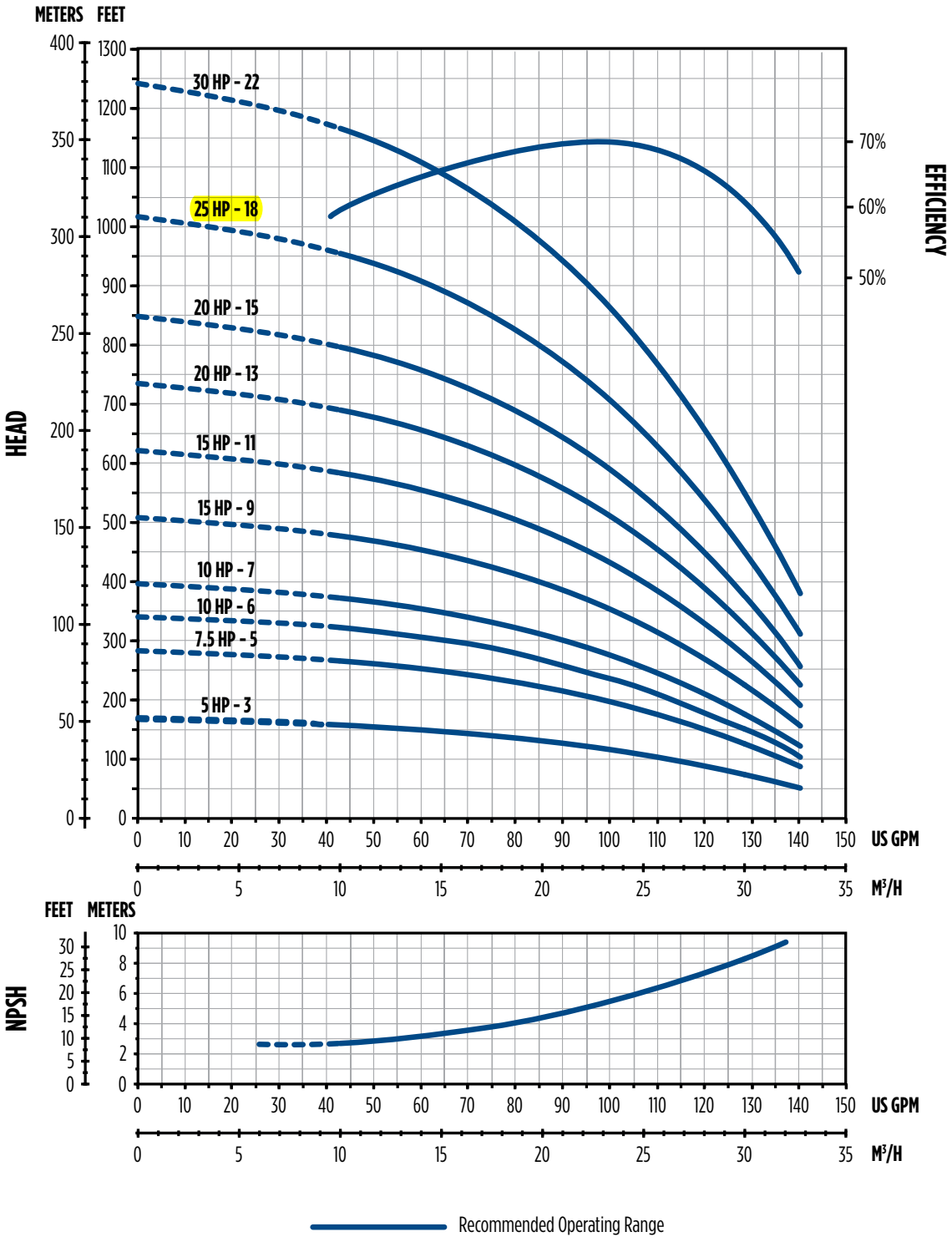

SUBMERSIBLE PUMPS

6" STAINLESS STEEL SR SERIES

DIMENSIONS — 70 GPM

HP	Stages	D [in]	Motor Size [in]	Diameter w/Cable Guard [in]	L [in]	Weight [lbs]
5	5	3 NPT	6	5.63	15.00	23.4
7.5	8				18.54	30.9
10	11				22.09	35.3
15	13				24.45	38.6
15	15				26.73	42.1
15	17				29.17	45.2
20	19				31.54	48.5
20	22				35.08	52.9
25	24				37.44	56.2
25	28				42.17	64.4
30	32				46.79	70.8
40	37			* 5.71	52.70	78.5
40	42				58.60	86.2

NOTE: D = Discharge, L = Pump Length

** Denotes larger diameter with cable guard due to high pressure model.*

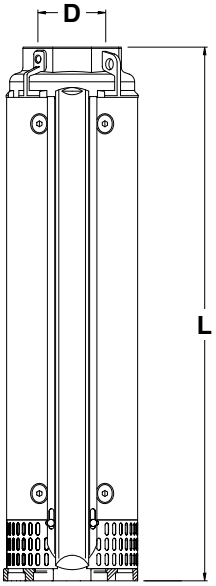

DIMENSIONS — 100 GPM

HP	Stages	D [in]	Motor Size [in]	Diameter w/Cable Guard [in]	L [in]	Weight [lbs]
5	3	3 NPT	6	5.63	16.79	22.1
7.5	5				19.74	26.5
10	6				21.22	27.6
10	7				22.69	29.8
15	9				25.64	33.1
15	11				28.60	37.5
20	13				31.55	40.8
20	15				34.50	44.1
25	18				38.92	49.6
30	22				44.82	57.3
40	26				50.72	63.9
40	28				53.67	68.3
50	32			* 5.71	59.58	75.0
50	36				65.48	81.6
60	39				69.90	88.2
60	42				74.33	94.8

NOTE: D = Discharge, L = Pump Length

** Denotes larger diameter with cable guard due to high pressure model.*

DIMENSIONS — 150 GPM

HP	Stages	D [in]	Motor Size [in]	Diameter w/Cable Guard [in]	L [in]	Weight [lbs]
7.5	3	3 NPT	6	5.63	17.01	25.4
10	4				18.84	27.6
15	5				20.67	29.8
15	7				24.33	34.2
20	9				27.99	38.6
25	11				31.65	43.0
30	14				37.15	49.6
40	19				46.30	59.5
50	23				53.62	68.3
60	26				59.09	75.0
60	28				62.76	79.4

NOTE: D = Discharge, L = Pump Length

SUBMERSIBLE PUMPS

6" STAINLESS STEEL SR SERIES

ORDER INFORMATION — 100 GPM

GPM	Stages	HP	Motor Size [in]	304 SS		316 SS	
				Order No.	Description	Order No.	Description
100	3	5	6	97160100003	100SR5F66-0363	97161100003	100SR5S66-0363
	5	7.5		97160100005	100SR7F66-0563	97161100005	100SR7S66-0563
	6	10		97160100006	100SR10F66-0663	97161100006	100SR10S66-0663
	7	10		97160100007	100SR10F66-0763	97161100007	100SR10S66-0763
	9	15		97160100009	100SR15F66-0963	97161100009	100SR15S66-0963
	11	15		97160100011	100SR15F66-1163	97161100011	100SR15S66-1163
	13	20		97160100013	100SR20F66-1363	97161100013	100SR20S66-1363
	15	20		97160100015	100SR20F66-1563	97161100015	100SR20S66-1563
	18	25		97160100018	100SR25F66-1863	97161100018	100SR25S66-1863
	22	30		97160100022	100SR30F66-2263	97161100022	100SR30S66-2263
	26	40		97160100026	100SR40F66-2663	97161100026	100SR40S66-2663
	28	40		97160100028	100SR40F66-2863	97161100028	100SR40S66-2863
	32	50		97160100032	100SR50F66-3263	97161100032	100SR50S66-3263
	36	50		97160100036	100SR50F66-3663	97161100036	100SR50S66-3663
	39	60		97160100039	100SR60F66-3963	97161100039	100SR60S66-3963
	42	60		97160100042	100SR60F66-4263	97161100042	100SR60S66-4263

NOTE: 4" Motor Adapter Kit (Order No. 305473001) available for 10 hp models and below.

ORDER INFORMATION — 150 GPM

GPM	Stages	HP	Motor Size [in]	304 SS		316 SS	
				Order No.	Description	Order No.	Description
150	3	7.5	6	97160150003	150SR7F66-0363	97161150003	150SR7S66-0363
	4	10		97160150004	150SR10F66-0463	97161150004	150SR10S66-0463
	5	15		97160150005	150SR15F66-0563	97161150005	150SR15S66-0563
	7	15		97160150007	150SR15F66-0763	97161150007	150SR15S66-0763
	9	20		97160150009	150SR20F66-0963	97161150009	150SR20S66-0963
	11	25		97160150011	150SR25F66-1163	97161150011	150SR25S66-1163
	14	30		97160150014	150SR30F66-1463	97161150014	150SR30S66-1463
	19	40		97160150019	150SR40F66-1963	97161150019	150SR40S66-1963
	23	50		97160150023	150SR50F66-2363	97161150023	150SR50S66-2363
	26	60		97160150026	150SR60F66-2663	97161150026	150SR60S66-2663
	28	60		97160150028	150SR60F66-2863	97161150028	150SR60S66-2863

NOTE: 4" Motor Adapter Kit (Order No. 305473001) available for 10 hp models and below.

SUBMERSIBLE PUMPS

6" STAINLESS STEEL SR SERIES

MATERIALS

Parts Description	Type	304 SS		316 SS	
		AISI	DIN / EN	AISI	DIN / EN
Discharge Head	Stainless steel	304	1.430	316	1.440
Valve	Stainless steel	316	1.440	316	1.440
Sealing O-ring	Nitrile rubber (NBR)	-	-	-	-
Outer Case Locking Nuts	Stainless steel	316	1.440	316	1.440
Outer Case	Stainless steel	304	1.430	316	1.440
Suction Strainer	Stainless steel	316	1.440	316	1.440
Cable Guard	Stainless steel	316	1.440	316	1.440
Initial Spacer	Stainless steel	304	1.430	316	1.440
Flange and Screws	Stainless steel	304	1.430	316	1.440
Motor Adapter	Stainless steel	304	1.430	316	1.440
Pump Shaft	Stainless steel	431	1.406	316/329	1.4401 / 1.4460
Coupling	Stainless steel	431 / 329	1.4057 / 1.4460	316/329	1.4401 / 1.4460
Upper / Lower Upthrust Washer	Stainless steel	316	1.440	316	1.440
Upper Journal Sleeve	Stainless steel w/ tungsten carbide (WIDIA)	316	1.440	316	1.440
Screw and Washer	Stainless steel	316	1.440	316	1.440
Upthrust Ring	PTFE	-	-	-	-
Lower Spacer	Stainless steel	316	1.440	316	1.440
Diffuser	Stainless steel	304	1.430	316	1.440
Secondary Bearing Bushing	Nitrile rubber (NBR)	-	-	-	-
Floating Neck Ring	PTFE	-	-	-	-
Flange Clamping Neck Ring	Stainless steel	304	1.430	316	1.440
Bearing Bushing	Nitrile rubber (NBR)	-	-	-	-
Last / Intermediate Diffuser	Stainless steel	316	1.440	316	1.440
First Stage	Stainless steel	316	1.440	316	1.440
Impeller / Wear Ring	Stainless steel	304	1.430	316	1.440
Split Cone / Secondary Journal Sleeve	Stainless steel	316	1.440	316	1.440
Split Cone Nut / Intermediate Cone Nut	Stainless steel	316	1.440	316	1.440
Upthrust Split Cone Nut	Stainless steel	316	1.440	316	1.440

DEPARTMENT OF THE ARMY
ALBUQUERQUE DISTRICT, CORPS OF ENGINEERS
ALBUQERQUE DISTRICT OFFICE
4101 JEFFERSON PLAZA NE
ALBUQUERQUE, NM 87109

SUBMITTAL REVIEW VERIFICATION SHEET

PROJECT TITLE: Kirtland BFF Mid-Plume Pump and Treat System Expansion
CONTRACT NUMBER: W912DR-12-D-0006 DM01
DATE RECEIVED: 12-05-2017
DATE REVIEWED: 12-07-2017

DESCRIPTION OF ITEMS REVIEWED:

1. Butterfly Valve

NO EXCEPTIONS TAKEN.	**X**
EXCEPTIONS AS NOTED ON DRAWINGS AND/OR ATTACHED SHEETS(S). RESUBMISSION NOT REQUIRED.	
EXCEPTIONS AS NOTED ON DRAWINGS AND/OR ATTACHED SHEETS(S). RESUBMISSION REQUIRED.	
RECEIPT ACKKNOWLEDGED.	

Notes:

NOTE: ITEMS REVIEWED AS TO GENERAL LAYOUT ONLY. DIMENSIONS AND QUANTITIES NOT CHECKED. REVIEW DOES NOT RELIEVE CONTRACTOR OF RESPONSIBILITIES FOR ANY ERRORS WHICH MAY EXIST AS CONTRACTOR SHALL BE RESPONSIBLE FOR DIMENSIONS AND DESIGN OF ADEQUATE CORRECTIONS, DETAILS AND SATISFACTORY CONSTRUCTION OF WORK.

SIGNATURE SANCHEZ.AMY.ELIZABETH.1454434338 Digitally signed by SANCHEZ.AMY.ELIZABETH.1454434338 DN: c=US, o=U.S. Government, ou=DoD, ou=PKI, ou=USA, cn=SANCHEZ.AMY.ELIZABETH.1454434338 Date: 2017.12.07 09:11:09 -07'00' **DATE** 12/7/2017

EA Engineering, Science, and Technology, Inc., PBC

Submittal Review Sheet 8

Project Name: **Kirtland BFF Mid-Plume Pump and Treat System Expansion**				Date Received: **12/5/2017**	
Project Owner: **Kirtland Air Force Base**				Checked By: **Tyler Curley**	
Contractor: **Techsas Inc.**	Engineer: **EA Engineering, Science and Technology, Inc., PBC.**			Log Page: **NA**	
Address: **4819 West Bayshore Drive** **Bacliff, TX 77518**	Address: **320 Gold Ave. SW, Suite 1300** **Albuquerque, NM 87102**			EA No.: 62599DM01	
				Spec. Section: **00 00 00**	
				Drawing/Detail No.:	
ATTN: Ed Butler	ATTN: **Devon Jercinovic**			1st Sub	Re-Sub
Date Transmitted: **12/5/2017**	Prev. Transmittal Date: **10/13/17**				

Item No.	No. Copies	Description	Manufacturer	Mfg/Vendor Dwg or Detail	Action Taken*
11	1	Butterfly Valve	Various	Various	**A**

The Action Designated Above is in Accordance with the Following Legend:

A – Furnish as Submitted
B – Furnish as Noted
C – Revise and Re-submit
1. Not enough information for review.
2. No reproducible submitted.
3. Copies illegible.
4. Not enough copies submitted.
5. Wrong sequence number.
6. Wrong resubmittal number.
7. Wrong Spec. Section.
8. Wrong form used.
9. See Comments.

D – Rejected
E – Engineer's Review not Required
1. Submittal not required.
2. Supplemental Information. Submittal retained for Information purposes only.
3. Information reviewed and approved on prior submittal.
4. See Comments.

Review is for general compliance with Contract Documents. No responsibility is assumed for correctness of dimensions or detail. Contractor is required to specify deviations from contract requirements. Lack of exceptions noted by Engineer does not waive Contractor's obligation to comply with Drawings and Specifications.

Comments:
ARV is consistent with existing ARVs. The butterfly valves are rated at an appropriate pressure (200 psi) and will utilize BUNA-N (nitrile) hydrocarbon compatible materials. The double strap service saddles are consistent with existing saddles.

By: _____ Date: 12/5/17

Distribution: [1] Contractor [1] Engineer [1] Owner

200 PSI Butterfly Valves

Ductile Iron Body • Extended Neck • Geometric Drive
Molded-in Seat Liner • Lug and Wafer Style

Sizes 2" through 12"

Install between Std. ASME Class 125/150 Flanges
Lug Style 200 PSI bi-directional dead end service rating without a downstream flange required.

DESIGNED TO MEET MSS SP-67 STANDARD
U.S. COAST GUARD "CATEGORY A"

WD 2100
Wafer Style
Buna-N Liner
and Aluminum
Bronze Disc

LD 2100
Lug Style
Buna-N Liner
and Aluminum
Bronze Disc

MATERIAL LIST

	PART	SPECIFICATION
1.	Stem	Stainless Steel ASTM A582 Type 416
2.	Collar Bushing	Brass ASTM B16
3.	Stem Seal	Buna-N Rubber Nitrile
4.	Body Seal	Buna-N Rubber Nitrile
5.	Nameplate	Aluminum
6.	Upper Bushing	Copper CDA 122
7.	Liner	Buna-N Rubber Nitrile
8.	Disc	Alum. Brz. ASTM B148 Alloy 954/955
9.	Lower Bushing	Copper CDA 122
10.	Body Wafer	Ductile Iron ASTM A536
11.	Body Lug	Ductile Iron ASTM A536

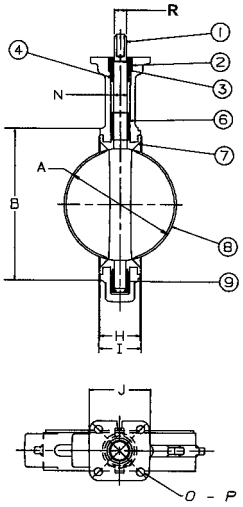

DIMENSIONS — WEIGHTS

Size In.	Size mm.	A	B	C	D	E	F	G Flat	Metal H	Rubber I	J Square	N Dia.
2	50	2.53	4.00	1.25	5.38	2.88	.38	.312	1.688	1.812	3.25	.500
2½	65	2.90	4.69	1.25	5.88	3.27	.38	.370	1.812	1.938	3.25	.562
3	80	3.15	5.12	1.25	6.12	3.40	.38	.370	1.812	1.938	3.25	.562
4	100	4.09	6.12	1.25	6.88	4.00	.38	.403	2.062	2.188	3.25	.625
5	125	5.13	7.25	1.25	7.38	4.75	.38	.496	2.188	2.312	3.25	.750
6	150	6.13	8.25	1.25	8.00	5.29	.38	.496	2.188	2.312	3.25	.750
8	200	8.13	10.41	1.25	9.25	6.50	.50	.560	2.375	2.500	3.25	.875
10	250	10.13	12.52	1.25	10.50	8.00	.50	.686	2.688	2.812	4.75	1.125
12	300	12.13	15.00	1.25	12.00	9.25	.50	.748	3.000	3.125	4.75	1.250

Size In.	Size mm.	O B.C.	P Dia.	R Dia.	Capscrew/Stud Data K No.	L Dia.	Wafer Length	Lug Length	M B.C.	Lug Weight Lbs.	Lug Weight Kg.	Wafer Weight Lbs.	Wafer Weight Kg.
2	50	3.25	.437	.437	4	⅝-11unc	Refer to butterfly valve technical information for bolt lengths		4¾	7	3.2	5.5	2.5
2½	65	3.25	.437	.500	4	⅝-11unc			5½	9	4.1	7.5	3.4
3	80	3.25	.437	.500	4	⅝-11unc			6	9.5	4.3	8	3.6
4	100	3.25	.437	.562	8	⅝-11unc			7½	15	6.8	11	5.0
5	125	3.25	.437	.656	8	¾-10unc			8½	21	9.5	15	6.8
6	150	3.25	.437	.656	8	¾-10unc			9½	24	10.9	18	8.2
8	200	3.25	.437	.781	8	¾-10unc			11¾	34	15.4	28	12.7
10	250	5.00	.562	1.000	12	⅞-9unc			14¼	62	28.1	45.5	20.7
12	300	5.00	.562	1.062	12	⅞-9unc			17	90	40.9	70	31.8

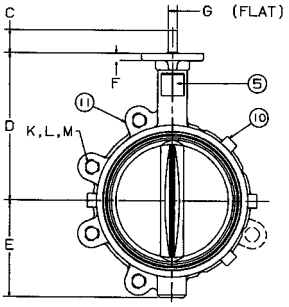

For actuated service where a lower torque is required use NIBCO Fig. No. WDLXXX-0 or LDLXXX-0 series, sizes 2" thru 12" only. Maximum pressure rating of 100 PSI for wet application and 50 PSI for dry application

NOT RECOMMENDED
FOR STEAM SERVICE

NIBCO INC. WORLD HEADQUARTERS • 1516 MIDDLEBURY ST. • ELKHART, IN 46516-4740 • USA • PH: 1.800.234.0227
TECH SERVICES PH: 1.888.446.4226 • FAX: 1.888.234.0557 • INTERNATIONAL OFFICE PH: +1.574.295.3327 • FAX: +1.574.295.3455
www.nibco.com

DEPARTMENT OF THE ARMY
ALBUQUERQUE DISTRICT, CORPS OF ENGINEERS
ALBUQERQUE DISTRICT OFFICE
4101 JEFFERSON PLAZA NE
ALBUQUERQUE, NM 87109

SUBMITTAL REVIEW VERIFICATION SHEET

PROJECT TITLE: Kirtland BFF Mid-Plume Pump and Treat System Expansion
CONTRACT NUMBER: W912DR-12-D-0006 DM01
DATE RECEIVED: 10-13-2017
DATE REVIEWED: 10-17-2017

DESCRIPTION OF ITEMS REVIEWED:

1. Recovery Well Vault Components

NO EXCEPTIONS TAKEN.	**X**
EXCEPTIONS AS NOTED ON DRAWINGS AND/OR ATTACHED SHEETS(S). RESUBMISSION NOT REQUIRED.	
EXCEPTIONS AS NOTED ON DRAWINGS AND/OR ATTACHED SHEETS(S). RESUBMISSION REQUIRED.	
RECEIPT ACKKNOWLEDGED.	

Notes:

NOTE: ITEMS REVIEWED AS TO GENERAL LAYOUT ONLY. DIMENSIONS AND QUANTITIES NOT CHECKED. REVIEW DOES NOT RELIEVE CONTRACTOR OF RESPONSIBILITIES FOR ANY ERRORS WHICH MAY EXIST AS CONTRACTOR SHALL BE RESPONSIBLE FOR DIMENSIONS AND DESIGN OF ADEQUATE CORRECTIONS, DETAILS AND SATISFACTORY CONSTRUCTION OF WORK.

SIGNATURE SANCHEZ.AMY.ELIZABETH.1454434338 Digitally signed by SANCHEZ.AMY.ELIZABETH.1454434338 DN: c=US, o=U.S. Government, ou=DoD, ou=PKI, ou=USA, cn=SANCHEZ.AMY.ELIZABETH.1454434338 Date: 2017.10.17 14:26:22 -06'00' **DATE** 10/17/2017

EA Engineering, Science, and Technology, Inc., PBC

Submittal Review Sheet 8

Project Name: **Kirtland BFF Mid-Plume Pump and Treat System Expansion**				Date Received: **10/12/2017**	
Project Owner: **Kirtland Air Force Base**				Checked By: **Tyler Curley**	
Contractor: **Techsas Inc.**	Engineer: **EA Engineering, Science and Technology, Inc., PBC.**			Log Page: **NA**	
Address: **4819 West Bayshore Drive** **Bacliff, TX 77518**	Address: **320 Gold Ave. SW, Suite 1300** **Albuquerque, NM 87102**			EA No.: 62599DM01	
				Spec. Section: **00 00 00**	
				Drawing/Detail No.:	
ATTN: Ed Butler	ATTN: **Devon Jercinovic**			1st Sub	Re-Sub
Date Transmitted: **10/13/2017**	Prev. Transmittal Date:				

Item No.	No. Copies	Description	Manufacturer	Mfg/Vendor Dwg or Detail	Action Taken*
11	1	Recovery Well Components	Various	Various	**A**

The Action Designated Above is in Accordance with the Following Legend:

A – Furnish as Submitted
B – Furnish as Noted
C – Revise and Re-submit
1. Not enough information for review.
2. No reproducible submitted.
3. Copies illegible.
4. Not enough copies submitted.
5. Wrong sequence number.
6. Wrong resubmittal number.
7. Wrong Spec. Section.
8. Wrong form used.
9. See Comments.

D – Rejected
E – Engineer's Review not Required
1. Submittal not required.
2. Supplemental Information. Submittal retained for Information purposes only.
3. Information reviewed and approved on prior submittal.
4. See Comments.

Review is for general compliance with Contract Documents. No responsibility is assumed for correctness of dimensions or detail. Contractor is required to specify deviations from contract requirements. Lack of exceptions noted by Engineer does not waive Contractor's obligation to comply with Drawings and Specifications.

Comments:
ARV is consistent with existing ARVs. The butterfly valves are rated at an appropriate pressure (200 psi) and will utilize BUNA-N (nitrile) hydrocarbon compatible materials. The double strap service saddles are consistent with existing saddles.

By: _____ Date: 10/13/17

Distribution: [1] Contractor [1] Engineer [1] Owner

TRANSMITTAL DOCUMENT

Date:	**10/11/2017**	**From:**	**Ed Butler**
To:	**EA Engineering, Science, and Technology, Inc., 320 Gold Ave. SW, Suite 1300 Albuquerque, NM 87102 Devon Jercinovic**	**Job Name:**	**Kirtland AFB, NM Bulk Fuels Facility**
		Reference:	
		Transmittal Method:	**E-mail**
		Sent By:	**Ed Butler**

Submittal	Dwg. Number	Item Description
11	C-302	Recovery Well Vault Components

Ed Butler
TECHSAS, Inc.
4819 West Bayshore Drive
Bacliff, TX 77518

"I hereby certify that the (equipment) (material) (article) shown and marked in this submittal is that proposed to be incorporated with the Contract, is in compliance with the contract drawings and specification, can be installed in the allocated spaces, and is submitted for Contractor approval.

Certified by _____.
(Signature when applicable) Date: _____.

VAL-MATIC®

Protection
airValve
Efficiency

Bulletin 1500

AIR VALVES

PROVIDING SYSTEM EFFICIENCY AND PROTECTION

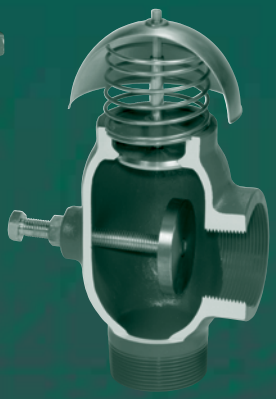

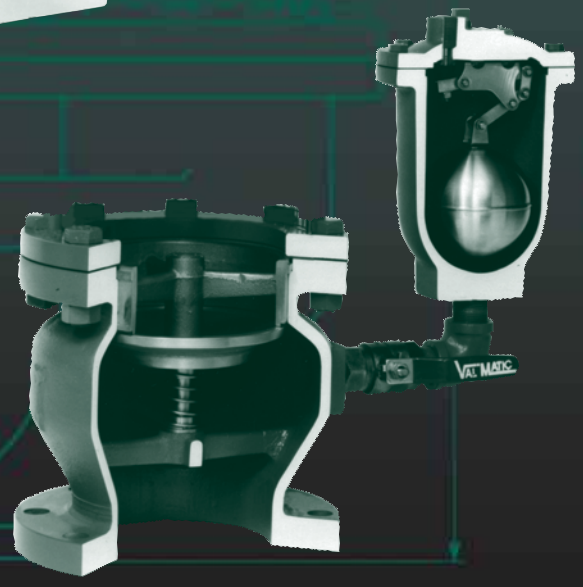

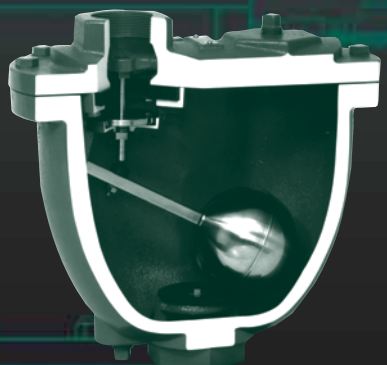

CLASSIFIED UL® WATER QUALITY

NSF/ANSI 61 Certified

Combination Air Valves
Installation Dimensions

WATER COMBINATION AIR VALVES (SINGLE BODY)						
Inlet Size	Outlet Size	Model Number	CWP PSI	Orifice Size	Dimensions	
					A	B
1" NPT	1" NPT	201C.2	300	5/64"	11 3/8"	10 1/2"
2" NPT	2" NPT	202C.2	300	3/32"	14"	13"
3" NPT	3" NPT	203C.2	300	3/32"	16"	15"
3" 125lb Flg	3" NPT	203C.14	150	3/32"	16"	16 3/4"
3" 250lb Flg	3" NPT	203C.15	300	3/32"	16"	17 1/4"
4" NPT	4" NPT	204C.2	300	3/32"	18 1/2"	17"
4" 125lb Flg	4" NPT	204C.14	150	3/32"	18 1/2"	19 3/4"
4" 250lb Flg	4" NPT	204C.15	300	3/32"	18 1/2"	20 1/4"
6" 125lb Flg	6" NPT	206C	150	3/8"	21"	20 1/4"
6" 250lb Flg	6" NPT	256C	300	7/32"	21"	20 1/4"
8" 125lb Flg	8" NPT	208C	150	3/8"	25"	23 1/2"
8" 250lb Flg	8" NPT	258C	300	7/32"	25"	23 1/2"

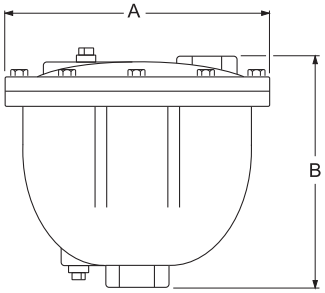

201C.2 - 204C.15
Single Body Combination
Air Valves

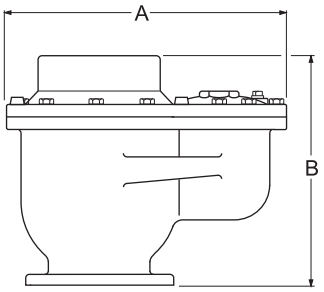

206C - 258C
Single Body
Combination Air Valves

WASTEWATER COMBINATION AIR VALVES (SINGLE BODY)						
Inlet Size	Outlet Size	Model Number	CWP PSI	Orifice Size	Dimensions	
					A	B
2" NPT	1" NPT	801A	150	1/8"	7"	14 15/16"
2" NPT	2" NPT	802A	150	9/64"	9 1/2"	18 1/16"
3" NPT	3" NPT	803A	150	11/64"	11"	23 1/2"
4" NPT	4" NPT	804	150	11/64"	11"	23 1/2"

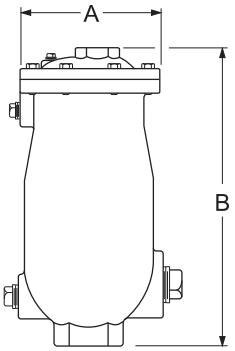

801A - 804
Wastewater
Single Body Combination
Air Valves

Surge-Suppression Air Valves and Isolation Valves in a pump discharge application.

200 PSI Flanged End Butterfly Valves

Polyamide Coated Cast Iron Body • Extended Neck • Cold Form Stem Drive • Elastomer Encapsulated Disc • Flanged Ends • Max. Temp. 200°F with EPDM only • ASME B16.10 Face-to-face dimensions

Patent Pending

Sizes 2" through 12"

DESIGNED TO MEET MSS SP-67 STANDARD

FC-27*5-0

*Optional disc
EPDM (6)
or BUNA (7)

MATERIAL LIST

	PART	SPECIFICATION
1.	Upper Stem	Stainless Steel, ASTM A582 Type 416
2.	Upper Bushing	PTFE over Porous Bronze, Steel Backed
3.	O-Ring	EPDM or BUNA-N
4.	Body	Cast Iron ASTM A126 Class B with Polyamide Coating
5.	Disc	Ductile Iron ASTM A395 with EPDM or BUNA-N Encapsulation
6.	Lower Bushing	PTFE over Porous Bronze, Steel Backed
7.	Lower Stem	Stainless Steel, ASTM A582 Type 416
8.	Dust Plug	PVC
9.	Nameplate	Aluminum

Class 125 flange ends

Polyamide coating has NSF certification

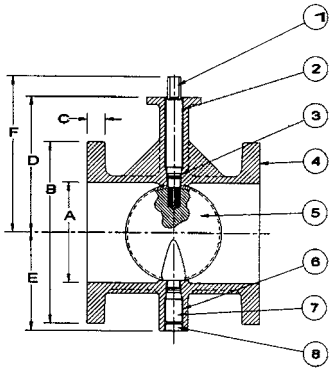

DIMENSIONS — WEIGHTS

Size In.	Size mm.	A	B	C	D	E	F	G	J
2	50	2.11	6.0	0.62	5.69	3.16	6.94	7.00	0.437
2½	6	2.59	7.0	0.69	5.78	3.25	7.03	7.50	0.437
3	80	3.07	7.5	0.75	5.99	3.54	7.24	8.00	0.437
4	100	4.03	9.0	0.94	6.99	4.35	8.24	9.00	0.437
5	125	5.05	10.0	0.94	7.47	4.85	8.72	10.00	0.437
6	150	6.07	11.0	1.00	8.28	5.94	9.53	10.50	0.437
8	200	7.98	13.5	1.12	9.25	6.87	10.50	11.50	0.437
10	250	10.02	16.0	1.19	11.03	9.18	12.28	13.00	0.562
12	300	12.00	19.0	1.25	12.01	10.16	13.26	14.00	0.562

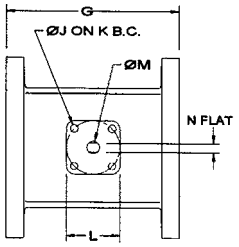

Size In.	Size mm.	K	L	M	N	P	Q	R	Weight Lbs.	Weight Kg.
2	50	3.25	3.25	0.50	0.37	0.75	4.75	4	16.5	7.5
2½	65	3.25	3.25	0.50	0.37	0.75	5.50	4	24	10.9
3	80	3.25	3.25	0.50	0.37	0.75	6.00	4	28	12.7
4	100	3.25	3.25	0.66	0.50	0.75	7.50	8	44	20.0
5	125	3.25	3.25	0.66	0.50	0.88	8.50	8	53	24.1
6	150	3.25	3.25	0.78	0.56	0.88	9.50	8	65	30.0
8	200	3.25	3.25	0.78	0.56	0.88	11.75	8	94	42.7
10	250	5.00	4.75	1.06	0.75	1.00	14.25	12	155	70.4
12	300	5.00	4.75	1.06	0.75	1.00	17.00	12	214	97.6

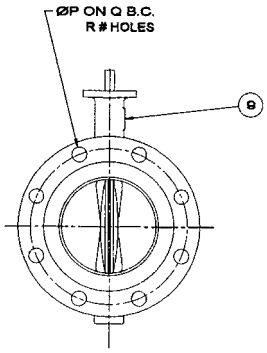

NOT RECOMMENDED
FOR STEAM SERVICE

NIBCO INC. WORLD HEADQUARTERS • 1516 MIDDLEBURY ST. • ELKHART, IN 46516-4740 • USA • PH: 1.800.234.0227
TECH SERVICES PH: 1.888.446.4226 • FAX: 1.888.234.0557 • INTERNATIONAL OFFICE PH: +1.574.295.3327 • FAX: +1.574.295.3455
www.nibco.com

JCM Service Saddles

JCM Service Saddles provide a quick, dependable means of tapping pipe for branch connections of 1/2" through 2-1/2". Use of economical JCM Service Saddles eliminate problems common to direct taps, such as leaking threads or split pipe, and reinforces the critical connection.

JCM Service Saddles are designed for maximum safety and performance. The wrap around design, wide skirt and wide straps support and reinforce the pipe while providing excellent stability to the saddle. The heavy duty design of these saddles provides strength and mass for long term service.

High pressure performance is assured by the broad, pressure activated gasket. Permanently set in a retaining cavity, the contoured gasket produces a positive initial seal which increases with increase in line pressure.

The JCM 402, 404, 406, 408 saddles, with their wide bodies and large sealed outlet areas, provide an excellent means of repairing holes, pin holes and leaking 3/4" and 1" direct taps.

DESIGNED FOR SAFETY AND PERFORMANCE

HEAVY THREADED OUTLET - with IPS or CC threads reinforces the critical connection.

BROAD PRESSURE ACTIVATED GASKET - for low and high pressure performance.

CORROSION RESISTANT COATING - for long-term service.

WIDE STRAPS - increase the load bearing area of the straps.

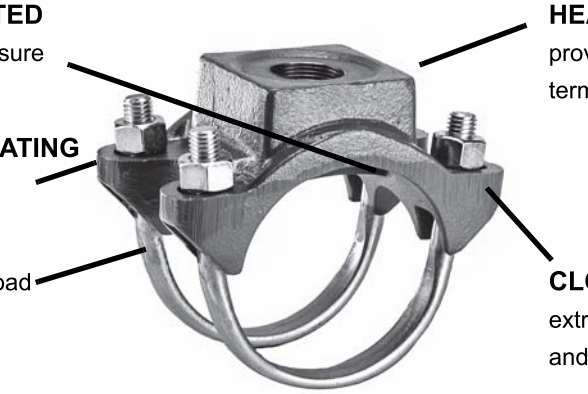

HEAVY DUTY DESIGN - provides strength and mass for long term service.

CLOSED CANTED EARS - for extra protection against electrolysis and maximum strap bearing.

WIDE BODY WRAP AROUND DESIGN - support and reinforce the pipe and provide excellent stability.

MATERIAL SPECIFICATIONS - JCM SERVICE SADDLES

Body:	Ductile Iron ASTM A536
Straps:	**Models 401, 402, 407, 408** - Electro Galvanized Steel **Models 403, 404, 405, 406** - Bands, Bolts, Nuts and Washers are 18-8 Type 304 Stainless Steel.
Gasket:	Nitrile Butadiene Rubber (NBR, Buna-N) per ASTM D2000. Molded virgin rubber with a pressure activated hydromechanical design. Gasket is bonded into a cavity for internal and external retention. Gasket temperature range -40°F to 212°F (-40°C - 100°C) Gasket suitable for water, salt solutions, mild acids, bases, and sewage. Optional EPDM gasket available.
Finish:	**Models 401, 402, 403, 404** - Standard Shop Coat Primer: Heavy coat of corrosion resistant metal primer. **Models 405, 406, 407, 408** - Fusion Plastic Coating: fusion bonded, high density blue plastic coating, 12 mils minimum thickness with a dielectric strength of over 12,000 volts.

JCM Service Saddles - Double Strap
JCM 402 Double Strap Service Saddle
JCM 404 Service Saddle with Double Stainless Steel Straps

The JCM 402 and 404 utilize the heavy duty double strap saddle body with corrosion resistant shop coat primer. The 402 is furnished with two electro galvanized straps sizes 2" -12", on sizes 15.20 and larger, the 402 incorporates two fabricated, wide electro galvanized steel straps. The 404 is furnished with two wide stainless steel straps.

NSF Certified to NSF/ANSI 61

NOM. PIPE SIZE (IN.)	PIPE O.D. RANGE (IN.)	WT. EA. LBS.	CTN. QTY.	JCM 402 SERVICE SADDLE BASE CATALOG NUMBE402-R X ADD TAP CODE	JCM 404 SERVICE SADDLE BASE CATALOG NUMBER X ADD TAP CODE
2	2.35 - 2.63	4	6	*402-0238 X --	*404-0238 X --
2-1/2	2.70 - 3.13	5	6	*402-0288 X --	*404-0288 X --
3	3.25 - 3.50	7	6	**402-0350 X --	**404-0350 X --
3 - 4	3.80 - 4.13	7	6	**402-0413 X --	**404-0413 X --
4	4.25 - 4.50	10	4	402-0450 X --	404-0450 X --
4	4.50 - 4.80	10	4	402-0480 X --	404-0480 X --
4	4.74 - 5.45	10	4	402-0545 X --	404-0545 X --
5	5.50 - 5.56	10	4	402-0556 X --	404-0556 X --
6	6.50 - 6.63	10	4	402-0663 X --	404-0663 X --
6	6.63 - 6.90	10	4	402-0690 X --	404-0690 X --
6	6.84 - 7.60	10	4	402-0745 X --	404-0745 X --
8	8.50 - 8.63	12	4	402-0863 X --	404-0863 X --
8	8.63 - 9.05	13	4	402-0905 X --	404-0905 X --
8	8.99 - 9.79	13	4	402-0963 X --	404-0963 X --
10	10.60 - 10.75	14	3	402-1075 X --	404-1075 X --
10	10.75 - 11.10	14	3	402-1110 X --	404-1110 X --
10	11.10 - 11.40	14	3	402-1140 X --	404-1140 X --
10	11.00 - 12.25	14	3	402-1225 X --	404-1225 X --
12	12.75 - 13.20	16	3	402-1320 X --	404-1320 X --
12	12.75 - 13.50	16	3	402-1350 X --	404-1350 X --
12	13.10 - 14.38	16	2	402-1426 X --	404-1426 X --
12 - 14	14.00 - 15.20	15	1	402-1520 X --	404-1520 X --
14	C-905 15.30	15	1	402-1530 X --	404-1530 X --
14 - 16	15.20 - 16.60	15	1	402-1660 X --	404-1660 X --
16	C-905 17.40	16	1	402-1740 X --	404-1740 X --
16 - 18	17.30 - 18.88	16	1	402-1888 X --	404-1888 X --
18	C-905 19.50	18	1	402-1950 X --	404-1950 X --
18 - 20	19.00 - 20.50	18	1	402-2050 X --	404-2050 X --
18 - 20	20.50 - 21.50	18	1	402-2125 X --	404-2125 X --
20	C-905 21.60	20	1	402-2160 X --	404-2160 X --
20	21.35 - 22.60	20	1	402-2260 X --	404-2260 X --
20	22.50 - 23.70	20	1	402-2370 X --	404-2370 X --
24	23.75 - 25.25	20	1	402-2525 X --	404-2525 X --
24	C-905 25.80	20	1	402-2580 X --	404-2580 X --
24	25.50 - 26.50	20	1	402-2650 X --	404-2650 X --

OUTLET SIZES	TAP CODES IP	TAP CODES CC
1/2"	04	--
3/4"	06	07
1"	08	09
1-1/4"	10	11
1-1/2"	12	13
2"	14	15
2-1/2"	16	--

*Outlets Not available in 1-1/4", 1-1/2", 2" or 2-1/2"
**Outlets Not available in 2" CC or 2-1/2" IP

HOW TO ORDER

1. Determine O.D. of pipe, outlet size and thread type.
2. Select desired saddle type and tap order code.
3. Look under saddle listing to determine order number. Add tap code after base catalog number.
   Example: For 6" C.I. Pipe with O.D. of 6.90 with 1" IP thread, order: 402-0745 x 08IP.
   For stainless steel straps, order: 404-0745 x08IP

DEPARTMENT OF THE ARMY
ALBUQUERQUE DISTRICT, CORPS OF ENGINEERS
ALBUQERQUE DISTRICT OFFICE
4101 JEFFERSON PLAZA NE
ALBUQUERQUE, NM 87109

SUBMITTAL REVIEW VERIFICATION SHEET

PROJECT TITLE: Kirtland BFF Mid-Plume Pump and Treat System Expansion
CONTRACT NUMBER: W912DR-12-D-0006 DM01
DATE RECEIVED: 8-14-2017
DATE REVIEWED: 8-14-2017

DESCRIPTION OF ITEMS REVIEWED:

1. Electrical Metering

NO EXCEPTIONS TAKEN.	**X**
EXCEPTIONS AS NOTED ON DRAWINGS AND/OR ATTACHED SHEETS(S). RESUBMISSION NOT REQUIRED.	
EXCEPTIONS AS NOTED ON DRAWINGS AND/OR ATTACHED SHEETS(S). RESUBMISSION REQUIRED.	
RECEIPT ACKKNOWLEDGED.	

Notes:

NOTE: ITEMS REVIEWED AS TO GENERAL LAYOUT ONLY. DIMENSIONS AND QUANTITIES NOT CHECKED. REVIEW DOES NOT RELIEVE CONTRACTOR OF RESPONSIBILITIES FOR ANY ERRORS WHICH MAY EXIST AS CONTRACTOR SHALL BE RESPONSIBLE FOR DIMENSIONS AND DESIGN OF ADEQUATE CORRECTIONS, DETAILS AND SATISFACTORY CONSTRUCTION OF WORK.

SIGNATURE SANCHEZ.AMY.ELIZABETH.1454434338 Digitally signed by SANCHEZ.AMY.ELIZABETH.1454434338 DN: c=US, o=U.S. Government, ou=DoD, ou=PKI, ou=USA, cn=SANCHEZ.AMY.ELIZABETH.1454434338 Date: 2017.08.14 11:53:25 -06'00' **DATE** 8/14/2017

EA Engineering, Science, and Technology, Inc., PBC

Submittal Review Sheet 1

Project Name: **Kirtland BFF Mid-Plume Pump and Treat System Expansion**				Date Received: **8/7/2017**	
Project Owner: **Kirtland Air Force Base**				Checked By: **Tyler Curley**	
Contractor: **Wilson Electric**	Engineer: **EA Engineering, Science and Technology, Inc., PBC.**			Log Page: **NA**	
Address: **501 General Somervell SE # B** **Albuquerque, NM 87123**	Address: **320 Gold Ave. SW, Suite 1300** **Albuquerque, NM 87102**			EA No.: 62599DM01	
				Spec. Section: **NA**	
				Drawing/Detail No.: **E-000/E-001**	
ATTN: Matthew Walstrom	ATTN: **Devon Jercinovic**			1st Sub	Re-Sub
Date Transmitted: **8/7/2017**	Prev. Transmittal Date:				

Item No.	No. Copies	Description	Manufacturer	Mfg/Vendor Dwg or Detail	Action Taken*
1	1	Electrical Metering	Elester		**A**

The Action Designated Above is in Accordance with the Following Legend:

A – Furnish as Submitted
B – Furnish as Noted
C – Revise and Re-submit
1. Not enough information for review.
2. No reproducible submitted.
3. Copies illegible.
4. Not enough copies submitted.
5. Wrong sequence number.
6. Wrong resubmittal number.
7. Wrong Spec. Section.
8. Wrong form used.
9. See Comments.

D – Rejected
E – Engineer's Review not Required
1. Submittal not required.
2. Supplemental Information. Submittal retained for Information purposes only.
3. Information reviewed and approved on prior submittal.
4. See Comments.

Review is for general compliance with Contract Documents. No responsibility is assumed for correctness of dimensions or detail. Contractor is required to specify deviations from contract requirements. Lack of exceptions noted by Engineer does not waive Contractor's obligation to comply with Drawings and Specifications.

Comments:
Items reviewed and confirmed to meet requirements
(Reviewed Material in Parentheses)
Issues in Bold

Material Conforms to electrical drawings.

By: _____ Date: 8/8//17

Distribution: [1] Contractor [1] Engineer [1] Owner

A3 ALPHA® Meter with EA_NIC

Available in single phase and polyphase meter forms, the A3 ALPHA meter with EA_NIC is an ideal solution for commercial, industrial, and high-end residential AMI metering.

Advanced electricity metering

As a component of the EnergyAxis System, the A3 ALPHA meter with the internal EnergyAxis® network interface card (EA_NIC) brings advanced metering infrastructure capabilities to commercial and industrial metering applications and high end residential applications where real and reactive energy measurements are desired. Customers can obtain interval data, real and reactive energy metering, critical tier, and time-of-use (TOU) data through the EnergyAxis network.

To function as an EnergyAxis System component, the A3 ALPHA meter is supplied with an internal network interface card with two-way 900 MHz communications capability. The EA_NIC mounts under the cover of the A3 ALPHA meter, allowing network deployment to be as simple as installing a meter. No special equipment is necessary because the EA_NIC automatically establishes two qualified communication paths to the gatekeeper. If network conditions change, the EA_NIC automatically and immediately uses the secondary qualified communication pathway to the gatekeeper.

www.byramlabs.com

The data you need

The A3 ALPHA meter is a highly accurate revenue meter with an ANSI C12.20 accuracy Class of 0.2. Current ALPHA meter users will find the basic A3 ALPHA meter types familiar. The A3D delivers basic real energy and demand, and the A3T provides real energy and demand where TOU rates are implemented. The A3R, A3K, and A3Q are used where real and reactive or bidirectional metering are required. Each measured quantity is stored in nonvolatile memory and includes energy, demand, TOU data, and interval recording.

As an element in the EnergyAxis network, the A3 ALPHA meter's EA_NIC reports meter readings, statuses, warning messages, and interval data to the gatekeeper that is then read by the EnergyAxis Management System (EA_MS).

Depending on the meter type and programming, the electricity meter readings reported through the network can include:

- Total and 4-tier energy for two energy quantities, real or reactive

BYRAM LABS
AN ENERGY TECHNOLOGY COMPANY

elster

Built on the strengths of the patented ALPHA meter design, the A3 ALPHA meter with EA_NIC provides highly accurate bidirectional real and reactive AMI metering functionality.

- 4-tier demand for two demand quantities, real or reactive. Each demand reading has an associated date and timestamp to indicate the time of the maximum demand.
- 4-tier coincident demand for two coincident demand quantities, real or reactive
- Per phase voltage
- 2 channels of interval data for any metered quantity in 5-, 15-, 30-, or 60-minute interval lengths

Additionally the A3 ALPHA meter can be configured to report whenever a programmable demand threshold has been exceeded.

Network functionality

The electricity meter data is communicated through the EnergyAxis local area network (EA_LAN) to the local area gatekeeper, where it is stored for retrieval by EA_MS.

In addition, all electricity meter data is available to the utility on request directly from the endpoint, allowing the highest level of customer support and billing accuracy.

All A3 ALPHA meters equipped with an EA_NIC in the EnergyAxis System are uniquely identified by a factory programmed ID. This ID links the meter data to a specific consumer account for accurate billing and enhanced customer support.

Outage and restoration functionality

The A3 ALPHA meter with EA_NIC provides support for utility outage and restoration management. This enables the utility to more quickly identify the scope of outages and to receive positive restoration messages to validate that power has been restored to every endpoint.

Technical specifications

- FHSS RF technology in the unlicensed 902 MHz to 928 MHz band
- Compliant with FCC Rules, Part 15 and Industry Canada RSS-210
- Temperature range of -40 °C to +85 °C
- Humidity range of 0 % to 100 %
- Operating voltage range 96 V to 528 V
- ANSI C12.20 accuracy Class 0.2
- ANSI standards compliance C12.1, C12.10, C12.18, C12.19, C12.20, C12.21

The A3 ALPHA Meter Technical Manual and the A3 ALPHA Meter Data Sheet list additional meter specifications for the A3 ALPHA meter.

The EnergyAxis Network Interface Card is available on all A3 ALPHA meter types and meter forms for both single phase and polyphase services.

About Byram Laboratories

Byram, a global leader in smart metering and smart grid solutions, has delivered smart metering devices worldwide for over 100 years. Byram smart metering system solutions provide energy conservation capabilities via demand response programs, smart grid applications, and operational efficiencies resulting in significant value creation across the customer enterprise.

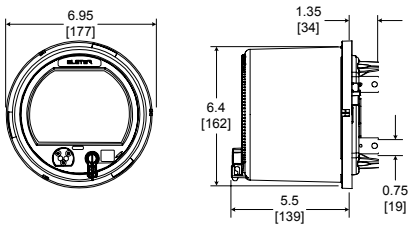

Dimensions in inches [millimeters]. For reference only. Do not use for construction.

Byram Laboratories Inc.
1 Columbia Road
Branchburg, NJ 08876

United States

T +1.800.766.1212 (US toll free)
F +1.908.252.0822

www.byramlabs.com

© 2011 by Elster and Byram Labs. All rights reserved.

Information contained herein is subject to change without notice. Product specifications may change. Contact your Byram representative for the most current product information. Printed in the United States.

ALPHA and EnergyAxis are registered trademarks of Elster. Used by permission.

DS42-1007A

METER SOCKETS
TRANSFORMER RATED • RINGLESS & RING • 5, 6, 8, & 13 TERMINAL

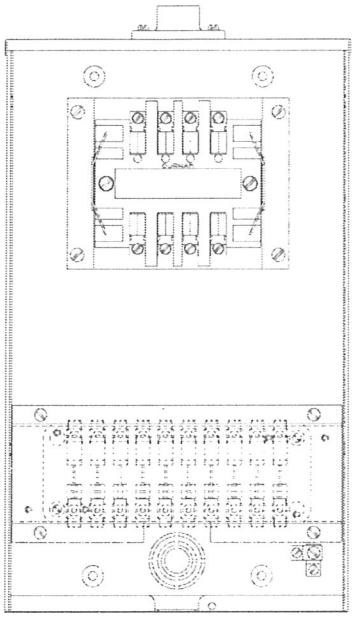

STL8-1K

Note:
Provision for
Test Switch

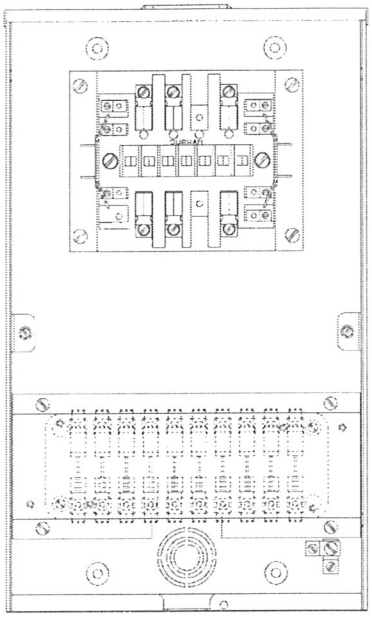

STL13-2B

CATALOG NUMBER		# OF	CABINET DIMENSIONS			KNOCKOUT	1-PIECE	2-PIECE
RINGLESS	RING	JAWS	HEIGHT	WIDTH	DEPTH	CONFIGURATION	COVER	COVER
ST(**)5-1(*)		5	20	12	4 23/64	Fig. 21	X	
ST(**)6-1(*)		6	20	12	4 23/64	Fig. 21	X	
ST(**)8-1(*)		8	20	12	4 23/64	Fig. 21	X	
ST(**)13-1(*)		13	20	12	4 23/64	Fig. 21	X	
ST(**)5-2(*)	RST(**)5-2(*)	5	20	12	4 23/64	Fig. 21		X
ST(**)6-2(*)	RST(**)6-2(*)	6	20	12	4 23/64	Fig. 21		X
ST(**)8-2(*)	RST(**)8-2(*)	8	20	12	4 23/64	Fig. 21		X
ST(**)13-2(*)	RST(**)13-2(*)	13	20	12	4 23/64	Fig. 21		X

(*) Select desired bolt-on hub or top configuration from HUB SELECTION CHART and add the appropriate suffix to the catalog number.

Voltage rating of all units is 600 Volts AC RMS.

Ground wire connector supplied (#14-#2 CU/AL).

A universal test switch mounting plate is supplied without a test switch.

Ring style units are supplied with snap-type sealing rings.

UL (Underwriters Laboratories) label available.

(**) Units are supplied with either a low test switch bridge or standard test switch bridge. Please use the appropriate prefix, L or S, to designate. (Example: for low test switch bridge, ST(L)13-2(*), for standard test switch bridge, ST(S)13-2(*).

Contact factory or your local manufacturer's agent to specify test switches, diagrams, and other special features or prewired options.

HUB SELECTION CHART	
HUB OR TOP CONFIGURATION	CATALOG SUFFIX
SOLID	A
FOR HUB	B
HCP	C
1"	K
1 1/4"	L
1 1/2"	M

Instrument transformers

Type CMV
Indoor or outdoor current transformers

Product features
– 600 volt indoor or outdoor, 10 kV BIL, 25 through 60 hertz
– Primary amperes: CMV 100-4000
– 3.5" x 4.5" (88.9 mm x 114.3 mm) oval window
– Designed for pad-mounted distribution transformer metering

Application
The CMV transformer is designed for pad-mounted distribution
transformer metering. It is available in tapered bottom with removable bus bar adapters, for adaptability to a variety of
mounting arrangements. The CMV transformer can be mounted directly over the LV terminals of pad mounted distribution transformers.

Core and coils
The CMV transformer has an oval shaped ring-type core and
fully distributed winding assembled around a glass-filled polypropylene window liner.

Insulation
Thermoplastic rubber insulating material is permanently molded to the core and coil assembly on both designs, resulting in a compact unit with excellent mechanical, thermal, and dielectric characteristics.

Secondary terminals and cover
The CMV transformers are supplied with large compression-type secondary terminals, a short circuit device, and a clear, rectangular snap-on cover suitable for locking with a meter seal. This clear plastic cover allows a visual check of connections and is keyed to a short circuit device to ensure proper installation. Terminals can also serve as a post-type
connector by looping wire under the screw head.

Primary
The CMV has an oval primary opening suited to fit over the secondary spade in pad-mounted transformers.

Primary
The CMV has an oval primary opening suited to fit over the secondary spade in pad-mounted transformers.

Bus bar adapters
Bus bar adapters for attachment to the terminal spade are shipped with tapered bottom transformers. The CMV transformer may be secured to a wall panel or bracket by inserting bolts through the pair of mounting holes in the transformer body.

Tapered bottom
The tapered bottom CMV adds clearance to locate three
transformers (one unit upside down) over close, triangularly
spaced, pad-mounted transformer terminals.

Test reports
IEEE test reports are stored electronically in various formats and can be e-mailed at time of shipment.

Standards
This unit meets all applicable IEEE and NEMA standards.

Power and productivity
for a better world™

Unit dimensions

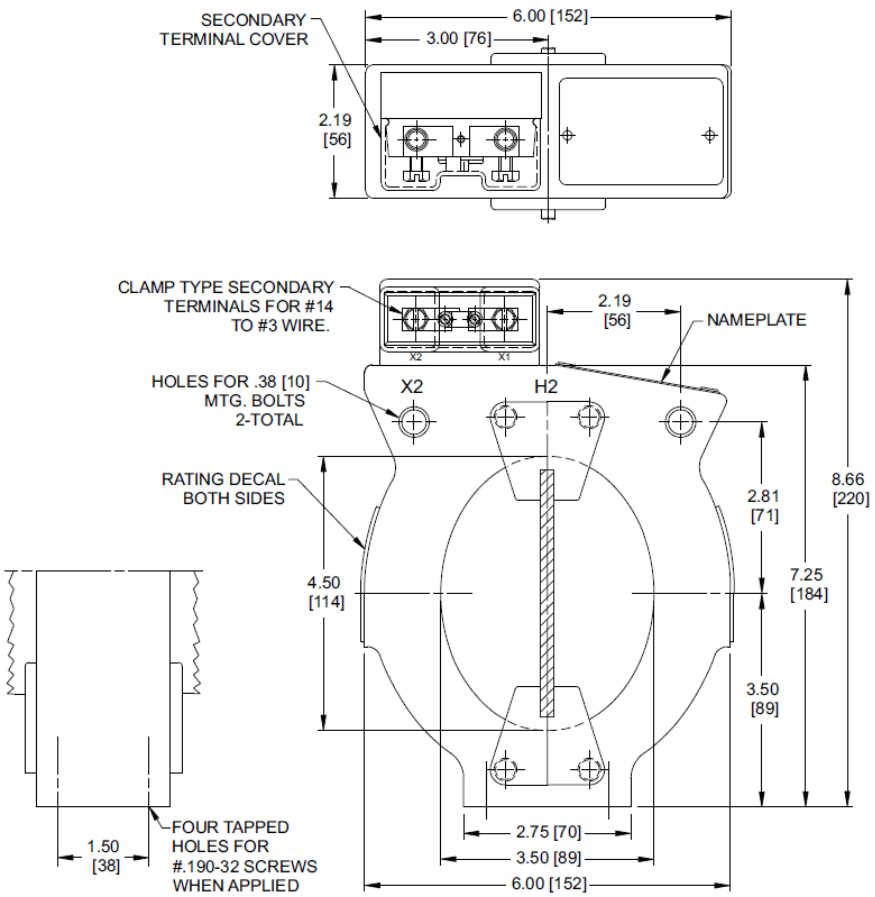

Tapered bottom

Approximate weight is 6 lbs.

Primary Ampere Rating	Rating Factor 30°C	Rating Factor 55°C	IEEE Metering Accu-	IEEE Relaying Accuracy	Part Number
100	4.0	3.0	1.2B-0.1	-	1C3746
200	4.0	3.0	0.3B-0.1	C20	1B6958
300	4.0	3.0	0.3B-0.2	C20	1B6959
400	4.0	3.0	0.3B-0.2	C20	1B6960
500	3.0	2.2	0.3B-0.5	C20	1B6969
600	3.0	2.2	0.3B-0.5	C20	1B6961
800	3.0	2.2	0.3B-0.5	C20	1B6962
1000	2.0	1.5	0.3B-0.5	C30	1B6963
1200	2.0	1.5	0.3B-0.9	C40	1B6964
1500	2.0	1.5	0.3B-0.9	C50	1B6965
2000	1.5	1.2	0.3B-1.8	C50	1B6966
3000	1.3	1.0	0.3B-1.8	C30	1B6967
4000	1.0	0.75	0.3B-1.8	C20	1B6968

tikatmp™
Transformer Metering Package

submittaldocs
Submittal Documentation & Cut-Sheets

Tika's Transformer Metering Package, or TMP™ is the most efficient and economical way to provide metering for single and three phase padmount transformer metering applications.

Our out-of-the-box, bundled package ships equipped with all the necessary components required to provide a professional and accurate installation as quickly and easily as possible.

Documentation for:

TMP HARDWARE KIT

Transformer Metering Package (TMP) Hardware Kit, consisting of:

(Qty. 5) 49 feet (5ft per color: White, black, blue, purple, yellow, orange & red) of #12 Insulated copper wire.
(Qty. 1) Littelfuse ACS 600V, 30A, 3 pole Midget Fuse block (Item# L60030M-3SQDIN).
(Qty. 3) Littelfuse 250 VAC fuses to protect potentials (Item# BLN1).
(Qty. 3) Littelfuse Deadfront Fuse Cover Puller (Item# SPL001)
(Qty. 1) Full-color wiring diagram.
(Qty. 1) Mounting template.
(Qty. 4) Mounting bolts, nuts, washers & zip ties.
(Qty. 1) Closed nipple connector with sealing rings.

tika energy management
tika EnergyManagement

1472 South 600 West
Bountiful, Utah 84010
800-972-8452 toll free
801-294-0066 local
801-294-0077 fax

sales@tikaenergy.com
www.tikaenergy.com

BLN Series Fibre Body Fast-acting Midget / 5AG Size Fuse

Description

Fibertube, 250 V BLN Fuses provide low-cost protection for military applications and control circuits.

Electrical Characteristics for Series

% of Ampere Rating	Ampere Rating	Opening Time
100%	0-30	Until temp stabilizes
135%	0–30	1 hours, Maximum
200%	0-30	2 minutes, Maximum

Agency Approvals

Agency	Agency File Number	Ampere Range
UL	E10480	1.0 - 30A
CSA	LR2 9862	1.0 - 30A
PSE	NBK170305-E10480A-D	1.0 - 30A

Electrical Specifications by Item

Ordering Number	Amp Rating (A)	Max Voltage Rating (V)	Interrupting Rating	Nominal Cold Resistance (Ohms)	Agency Approvals		
					UL	CSA	PSE
BLN 001	1	250	10,000 amperes at 250 VAC.	.395	x	x	x
BLN 01.5	1.5			.222	x	x	x
BLN 002	2			.125	x	x	x
BLN 003	3			.0645	x	x	x
BLN 004	4			.0432	x	x	x
BLN 005	5			.0413	x	x	x
BLN 006.	6			.0284	x	x	x
BLN 008	8			.0166	x	x	x
BLN 010	10			.011	x	x	x
BLN 012	12			.00920	x	x	x
BLN 015	15			.00684	x	x	x
BLN 020	20			.0036	x	x	x
BLN 025	25			.00360	x	x	x
BLN 030	30			.00270	x	x	x

©2009 Littelfuse, Inc.
Specifications are subject to change without notice.
Please refer to www.littelfuse.com/series/BLN.html for current information.

Temperature Rerating Curve

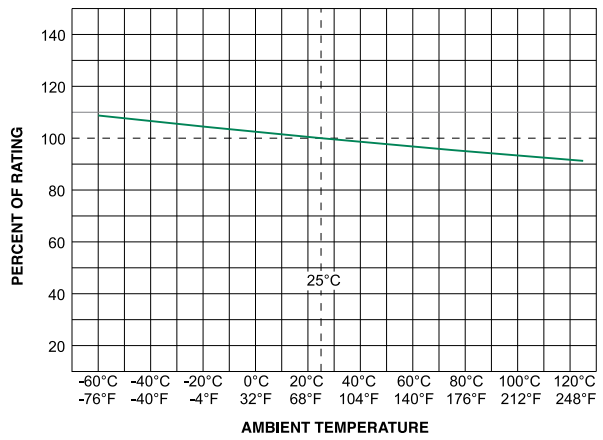

Dimensions

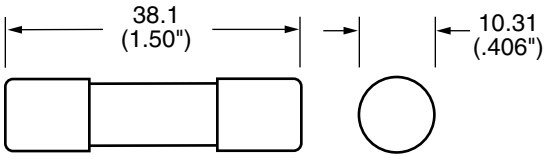

Average Time Current Curves

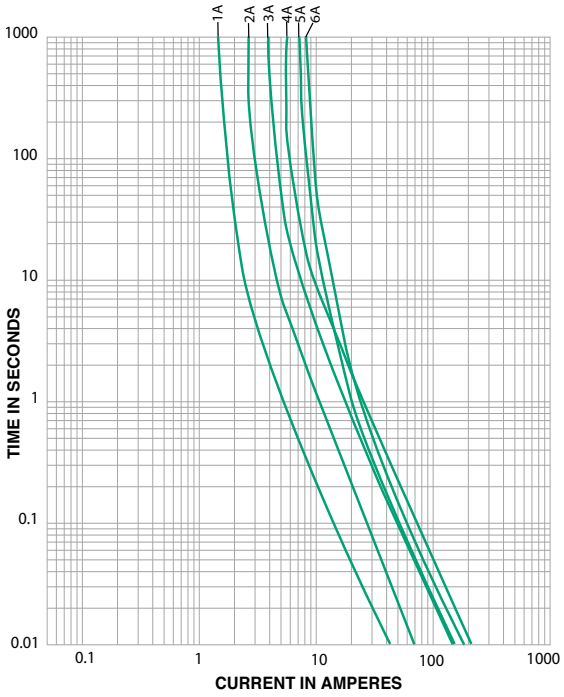

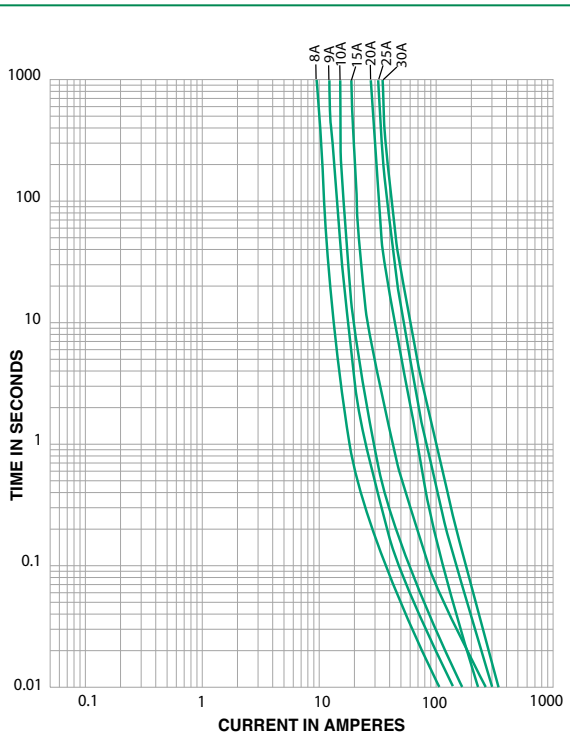

©2009 Littelfuse, Inc.
Specifications are subject to change without notice.
Please refer to www.littelfuse.com/series/BLN.html for current information.

DIN Releasable Class CC, G and Midget Fuse Block

Littelfuse Class CC, G and Midget fuse blocks have integral DIN rail mounting capabilities that allow secure mounting to 35mm "hat" type DIN rails. New releasable mechanism allows installation and removal of block without removing adjacent components on DIN rail. Electrical panel builders and machine builders no longer need to use mounting adapters, saving assembly time and related costs.

Standard Features

- Spring-free mechanism allows for easy installation and removal.
- Integral DIN rail mounting reduces assembly time.
- Quick-Connect terminals accommodate side or top connection.
- Class CC and G versions ensure branch circuit protection compliance.
- Finger safe cover (Class CC and Midget) available – SPL001.

Specifications

Voltage Rating:	Class CC, Midget:	600V AC/DC
	Class G:	480V AC
Ampere Rating:	Class CC, Midget:	30 Amperes Max.
	Class G:	25-30 Amperes
SCCR Rating:	Class CC:	200,000 amperes
	Class G:	100,000 amperes
	Midget:	10,000 amperes
Terminals:	SQ - Screw & Quick Connect (Q.C.) PQ - Pressure Plate & Screw / Q.C. C - Box Lug	
Clip/Terminals:	Tin-plated copper alloy	
Screw Terminals:	Zinc-plated steel	
Box Lug:	Tin-plated copper	
Molded Base:	Black thermoplastic	
Molded Latch:	Red thermoplastic	
Flammability Rating:	UL 94V0	
Approvals:	Class CC, Class G:	UL Listed (File E14721)
	Midget:	UL Recognized (File E14721)
	All:	CSA Certified (File LR7316)

Ordering Information*

Class	Number of Poles	Catalog Number	Connector Type	Maximum Wire Size
Midget	3	L60030M-3CDINR	Box Lug	#6 CU
		L60030M-3PQDINR	Pressure plate with Q.C. Terminal	#10 CU
		L60030M-3SQDINR	Screw/Q.C. Terminal	#10 CU
CC	3	L60030C-3CDINR	Box Lug	#6 CU
		L60030C-3PQDINR	Pressure plate with Q.C. Terminal	#10 CU
		L60030C-3SQDINR	Screw/Q.C. Terminal	#10 CU
G	3	L60030G-3CDINR	Box Lug	#6 CU
		L60030G-3PQDINR	Pressure plate with Q.C. Terminal	#10 CU
		L60030G-3SQDINR	Screw/Q.C. Terminal	#10 CU

1-pole and 2-pole configurations will be available soon. Please consult factory.

© 2008 Littelfuse • POWR-GARD™ Products

Dimensions of Class CC, Class G, and Midget Fuse Block

Dimensions: mm [in]

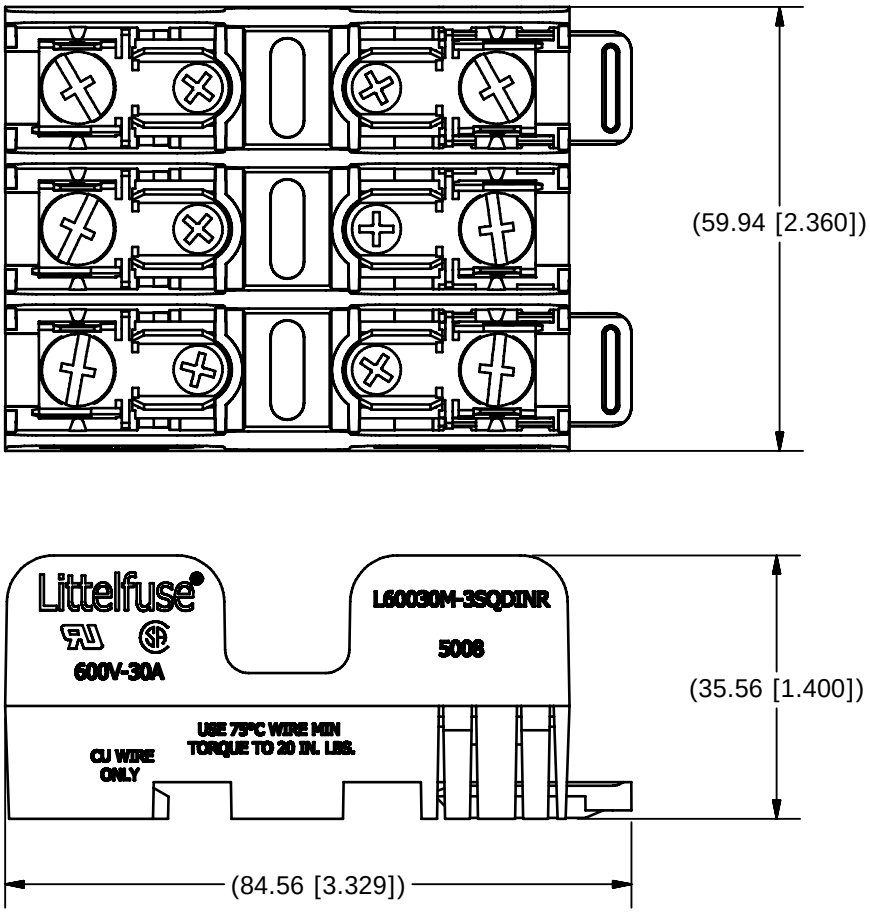

Recommended Fuses

Class CC: CCMR, KLDR, KLKR
Midget: BLF, BLN, BLS, FLA, FLM, FLQ, FLU, KLK, KLKD, KLQ, LA600-2
Class G: SLC 25, SLC 30

© 2008 Littelfuse • POWR-GARD™ Products

CLASS CC AND MIDGET FUSEBLOCK ACCESSORIES

FBDIN1 Rail Adapter

Features/Benefits

- DIN Rail adaptor for 30 A Midget, Class CC and Class G fuseblocks
- Patented design with no tools necessary for installation
- Permits snap-mounting of Class CC, Class G and Midget 30 A fuseblocks to standard and low profile 35 mm symmetrical DIN rails and 32 mm asymmetrical DIN rails
- Easy removal via disconnect tab

Web Resources

For additional technical information visit:
www.littelfuse.com/fbdin1

Dimensions in inches

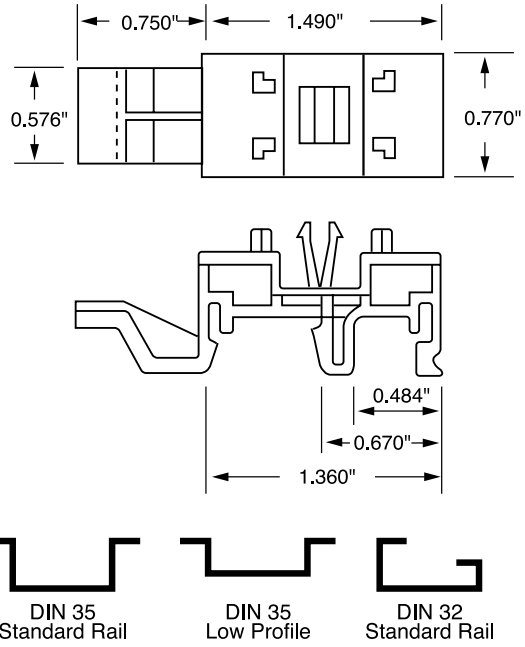

Recommended Fuseblocks

Midget-Style and Class CC
Class G

SPL001 Cover Puller

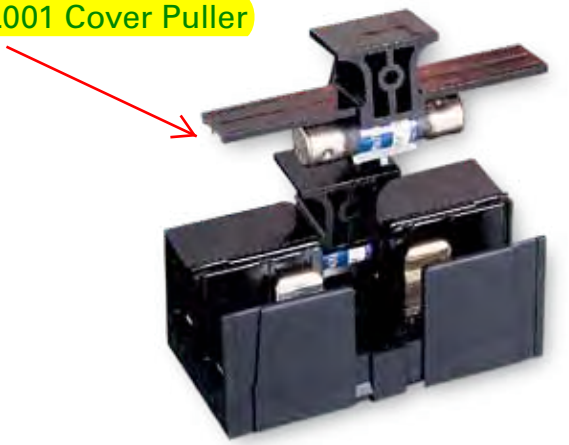

Features/Benefits

- 600 V ⅒-30 A Class CC and Midget fuse cover puller that offers increased protection when removing fuses
- Simple removal without the need for a separate puller
- Meets Dead Front requirements
- Easily gangable with 5⁄16" diameter wire
- For use with all 600 V Class CC and Midget ⅒-30 A fuses
- Label provided for easy fuse identification

Dimensions in inches

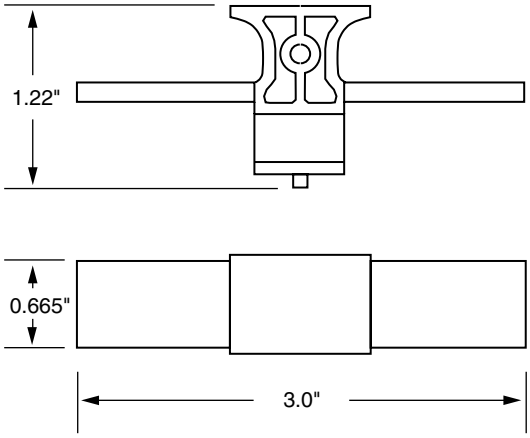

Recommended Fuseblocks

L60030C
L60030M

Web Resources

For additional technical information visit:
www.littelfuse.com/spl001

© JUNE 2011 Littelfuse POWR-GARD Products

Rigid Threaded Nipples

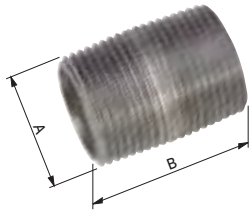

Use:
Threaded nipples are used to extend a length of threaded Rigid or IMC Conduit according to the pipe size and length desired. May also be used to connect two steel outlet boxes or metal enclosures together.

RIGID CONDUIT

Catalog Number	UPC No 0-31857	Trade Size	Nominal Dimensions A	B	C	Pcs/ Unit	Ctn/Case Qty/Qty	Case Wt.
44360	44360-3	1/2"xCL	1/2"	CL-1 1/8"		2	10	2.7
44370	44370-2	1/2"x2"	1/2"	2"		2	20	4.9
54251	54251-1	1/2"x1 1/2"	1/2"	1 1/2"		1	25	2.4
44361	44361-0	3/4"xCL	3/4"	CL-1 3/8"		2	20	3.9
44371	44371-9	3/4"x2"	3/4"	2"		2	20	6.3

Certification / Certificación :
LR57925

Conduit Locknuts

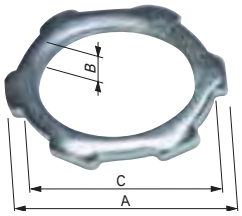

Use:
Conduit locknuts are used for securing Rigid and IMC Conduits and other threaded connectors to a steel outlet box or metal enclosure.

Materials / Materiales :
- Steel / Acero

Finish / Final :
- Zinc Plated / Cinc Plateado

RIGID CONDUIT

Catalog Number	UPC No 0-31857	Trade Size	Nominal Dimensions A	B	C	Pcs/ Unit	Ctn/Case Qty/Qty	Case Wt.
45101	45101-1	1/2"	1.12	0.09	1.00	20	20	4.3
47101	47101-9	1/2"	1.12	0.09	1.00	3	50	1.9
49101	49101-7	1/2"	1.12	0.09	1.00	2	100	2.5
45102	45102-8	3/4"	1.37	0.10	1.25	20	20	6.3
48102	48102-5	3/4"	1.37	0.10	1.25	2	50	1.8
49102	49102-4	3/4"	1.37	0.10	1.25	2	100	3.5

Certification / Certificación :
E155411 LR57925

Standards / Estándares :
UL 514B CSA C22.2 NEMA FB-1 NEC Article 345 & 346

tika ENERGY MANAGEMENT
This Documentation is Provided as a Courtesy for our Customers

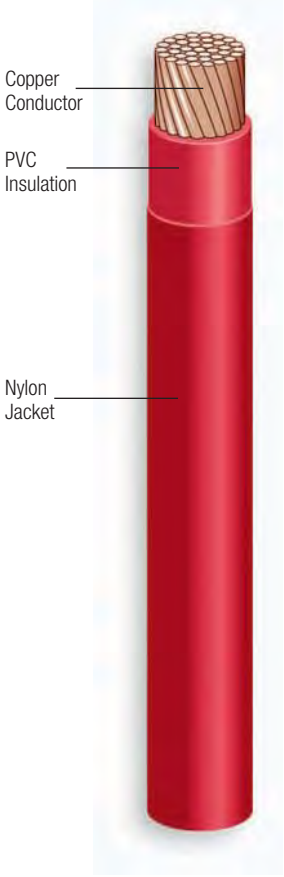

ENGINEERING SPECIFICATIONS:

Listed Solid E-123774
Stranded E-156879

Standards:

Underwriters Laboratories Standards UL-83, UL-1063, UL-758
AWM Spec 1316, 1317, 1318, 1319, 1320, 1321
ASTM Stranding Class B3, B8, B787
Federal Specification A-A-59544
Canadian Standards Association C22.2 No. 75
NEMA WC70/ICEA S-95-658
Institute of Electrical and Electronics Engineers
ARRA 2009; Section 1605 "Buy American" Compliant

CONSTRUCTION:

Conductors:

Solid, uncoated copper conductors per ASTM-B3
Stranded, uncoated copper conductors per ASTM-B3, ASTM-B787 and ASTM-B8

Insulation:

Color-coded Polyvinyl Chloride (PVC), heat and moisture-resistant, flame-retardant compound per UL-1063 and UL-83

Applications:

Type THHN/THWN-2 building wire is intended for general purpose applications as defined by the National Electrical Code (NEC). Type THHN/THWN-2 is permitted for new construction or rewiring for 600-volt applications. Applications requiring Type THHN or THWN-2: the conductor is appropriate for use in wet or dry locations at temperatures not to exceed 90°C or not to exceed 75°C in oil or coolants. Applications requiring Type MTW: the conductor is appropriate for use in dry locations at 90°C, or not to exceed 60°C in wet locations or where exposed to oils or coolants. Applications requiring Type AWM: the conductor is appropriate for use at temperatures to not exceed 105°C in dry locations.

Features:

Slick, Nylon outer jacket for easy pulling. VW-1 rated 14 AWG - 8 AWG. All sizes are rated gasoline and oil-resistant II.

Jacket:

A tough, polyamide, Nylon outer covering per UL-1063 and UL-83.

THHN/MTW/THWN-2/T90 Copper Conductor 600V

Size (AWG or KCMIL)	Number of Strands	Cross Sect. Area (mm²)	PVC Insulation Thickness (Conductor)		Nylon Jacket Thickness		Outside Diameter		Approximate Net Weight		Allowable Ampacity (Amps)*			Standard Packaging (ft)
			(mm)	(in)	(mm)	(in)	(mm)	(in)	(kg/km)	(lbs/1000 ft)	60°C	75°C	90°C	
14	Solid	2.08	0.380	0.015	0.100	0.004	2.57	0.101	22	15	15	15	15	2000 carton (4x500), 2500' reels
12	Solid	3.31	0.380	0.015	0.100	0.004	3.05	0.120	34	23	20	20	20	2000 carton (4x500), 2500' reels
10	Solid	5.26	0.510	0.020	0.100	0.004	3.78	0.149	55	37	30	30	30	1000 carton (2x500), 2500' reels
14	19	2.08	0.380	0.015	0.100	0.004	2.77	0.109	25	16	15	15	15	2000 carton (4x500), 2500' reels
12	19	3.31	0.380	0.015	0.100	0.004	3.23	0.127	36	23	20	20	20	2000 carton (4x500), 2500' reels
10	19	5.26	0.510	0.020	0.100	0.004	4.07	0.160	57	38	30	30	30	1000 carton (2x500), 2500' reels
8	19	8.37	0.760	0.030	0.130	0.005	5.39	0.212	94	62	40	50	55	500' 1000' 2500' 5000' reels

*Allowable ampacity shown above is per the National Electrical Code. The above data is approximate and subject to normal manufacturing tolerances.

PRINT LEGEND:

SOLID CONDUCTOR SIZES 14 AWG THROUGH 10 AWG: ENCORE WIRE CORPORATION (SIZE) AWG TYPE THHN OR THWN-2 GR II VW-1 600 VOLTS (UL) OR AWM OR C-(UL) TYPE T90 NYLON OR TWN 75 FT1. DATE/TIME/OPER/QC

STRANDED CONDUCTOR SIZES 14 AWG THROUGH 8 AWG: ENCORE WIRE CORPORATION (SIZE) AWG TYPE MTW OR THHN OR THWN-2 GR II VW-1 600 VOLTS (UL) OR AWM OR C-(UL) TYPE T90 NYLON OR TWN 75 FT1 DATE/TIME/OPER/QC

5 feet of each of the following colors:
- Black
- Red
- Blue
- White
- Yellow
- Orange
- Purple

DEPARTMENT OF THE ARMY
ALBUQUERQUE DISTRICT, CORPS OF ENGINEERS
ALBUQERQUE DISTRICT OFFICE
4101 JEFFERSON PLAZA NE
ALBUQUERQUE, NM 87109

SUBMITTAL REVIEW VERIFICATION SHEET

PROJECT TITLE: Kirtland BFF Mid-Plume Pump and Treat System Expansion
CONTRACT NUMBER: W912DR-12-D-0006 DM01
DATE RECEIVED: 12-07-2017
DATE REVIEWED: 12-07-2017

DESCRIPTION OF ITEMS REVIEWED:

1. MV Cable

NO EXCEPTIONS TAKEN.	**X**
EXCEPTIONS AS NOTED ON DRAWINGS AND/OR ATTACHED SHEETS(S). RESUBMISSION NOT REQUIRED.	
EXCEPTIONS AS NOTED ON DRAWINGS AND/OR ATTACHED SHEETS(S). RESUBMISSION REQUIRED.	
RECEIPT ACKKNOWLEDGED.	

Notes:

NOTE: ITEMS REVIEWED AS TO GENERAL LAYOUT ONLY. DIMENSIONS AND QUANTITIES NOT CHECKED. REVIEW DOES NOT RELIEVE CONTRACTOR OF RESPONSIBILITIES FOR ANY ERRORS WHICH MAY EXIST AS CONTRACTOR SHALL BE RESPONSIBLE FOR DIMENSIONS AND DESIGN OF ADEQUATE CORRECTIONS, DETAILS AND SATISFACTORY CONSTRUCTION OF WORK.

SIGNATURE SANCHEZ.AMY.ELIZABETH.1454434338 Digitally signed by SANCHEZ.AMY.ELIZABETH.1454434338 DN: c=US, o=U.S. Government, ou=DoD, ou=PKI, ou=USA, cn=SANCHEZ.AMY.ELIZABETH.1454434338 Date: 2017.12.07 13:43:13 -07'00' **DATE** 12/7/2017

EA Engineering, Science, and Technology, Inc., PBC

Submittal Review Sheet 1

Project Name: **Kirtland BFF Mid-Plume Pump and Treat System Expansion**			Date Received: **12/7/2017**
Project Owner: **Kirtland Air Force Base**			Checked By: **Tyler Curley**
Contractor: **Wilson Electric**	Engineer: **EA Engineering, Science and Technology, Inc., PBC.**		Log Page: **NA**
Address: **501 General Somervell SE # B** **Albuquerque, NM 87123**	Address: **320 Gold Ave. SW, Suite 1300** **Albuquerque, NM 87102**		EA No.: **62599DM01**
			Spec. Section: **NA**
			Drawing/Detail No.: **E-000/E-001/E-501**
ATTN: **Matthew Walstrom**	ATTN: **Devon Jercinovic**	1st Sub	Re-Sub
Date Transmitted: **12/7/2017**	Prev. Transmittal Date:		

Item No.	No. Copies	Description	Manufacturer	Mfg/Vendor Dwg or Detail	Action Taken*
1	1	MV Cable	The Okonite Co.		**A**

The Action Designated Above is in Accordance with the Following Legend:

A – Furnish as Submitted
B – Furnish as Noted
C – Revise and Re-submit
1. Not enough information for review.
2. No reproducible submitted.
3. Copies illegible.
4. Not enough copies submitted.
5. Wrong sequence number.
6. Wrong resubmittal number.
7. Wrong Spec. Section.
8. Wrong form used.
9. See Comments.

D – Rejected
E – Engineer's Review not Required
1. Submittal not required.
2. Supplemental Information. Submittal retained for Information purposes only.
3. Information reviewed and approved on prior submittal.
4. See Comments.

Review is for general compliance with Contract Documents. No responsibility is assumed for correctness of dimensions or detail. Contractor is required to specify deviations from contract requirements. Lack of exceptions noted by Engineer does not waive Contractor's obligation to comply with Drawings and Specifications.

Comments:
Items reviewed and confirmed to meet requirements
(Reviewed Material in Parentheses)
Issues in Bold

Material conforms to electrical drawings and are equivalent with the previous submittal. Revision to this submittal was performed as schedule and availability issues would ensue with the previous submitted material.

By: _____ Date: 12/7//17

Distribution: [1] Contractor [1] Engineer [1] Owner

Okoguard® URO-J

15kV Underground Primary Distribution Cable-Jacketed

Red Identification Stripes

Filled Strand Aluminum Conductor/105°C Rating
100% and 133% Insulation Levels

A Conductor - Stranded Aluminum with Filled Strand - Water Swellable Power
B Strand Screen - Extruded Semi-conducting EPR
C Insulation - Okoguard EPR
D Insulation Screen - Extruded Semi-conducting EPR
E Concentric Conductor-Bare Copper Wires
F Encapsulating Jacket-Okolene with Extruded ID Stripes & NESC lightning bolt

Insulation

Okoguard is Okonite's registered trade name for its exclusive ethylene-propylene rubber (EPR) based, thermosetting compound, whose optimum balance of electrical and physical properties is unequaled in other solid dielectrics. Okoguard insulation, with the distinctive red color and a totally integrated EPR system, provides the optimum balance of electrical and physical properties for long, problem free service.

The triple tandem extrusion of the screens with the insulation provides optimum electrical characteristics.

The compressed conductors are filled with a water swellable agent. This construction slows the migration of water through the strands in the event of a mechanical dig-in followed by external exposure to water.

An insulation screen of ethylene-propylene rubber is extruded over the insulation. The copper concentric wires are uniformly spaced around the insulation screen. The overall polyethylene jacket provides protection against mechanical damage and corrosion.

Product identification is provided through the use of three red stripes placed 120° apart in the black jacket, with an NESC lightning bolt.

Applications

Okoguard URO-J cables provide maximum circuit longevity in underground residential distribution systems. They can be buried directly or installed in underground ducts or conduits.

Specifications

Central Conductor: Aluminum per ASTM B-609, Class B stranded per B-231.

Filled Strand: Water swellable powder meets or exceeds ICEA T-31-610 water penetration resistance and ANSI/NEMA class A connectorability requirements.

Conductor Screen: Extruded semiconucting ethylene-propylene rubber meets or exceeds the requirements of ICEA S-94-649 and AEIC CS8.

Insulation: Extruded Okoguard meets or exceeds the requirements of ICEA S-94-649 and AEIC CS8.

Insulation Screen: Extruded semiconducting ethylene-propylene rubber meets or exceeds the requirements of ICEA S-94-649 and AEIC CS8.

Concentric Conductor: Bare copper wires.

Jacket: Black Okolene with red extruded stripes meets or exceeds the requirements of ICEA S-94-649 for polyethylene jackets.

Product Features

- Triple tandem extruded, all EPR system.
- Okoguard cables meet or exceed ICEA standards.
- Meets RUS 1728.204 for cables with filled strand or solid conductor and 133% insulation level.
- 105°C continuous operating temperature.
- 140°C emergency rating.
- 250°C short circuit rating.
- Excellent corona resistance.
- Low dielectric constant and power factor.
- Screens are clean stripping.
- Exceptional resistance to “treeing”.
- Filled strand conductor.
- Moisture resistant.
- Overall jacket provides extended life.
- Excellent resistance to most chemicals.
- Can be listed by UL as Type MV-90 on Special Orders.
- Cable listed by CSA to C68.5 on special orders.
- Design Options:
  Additional conductor sizes
  Copper central conductor
  Copper flat strap concentric neutral
  Product identification via colored jackets.
  Semiconducting jackets.
- Improved Temperature Rating.
Okoguard insulation system has been tested and qualified for operation at 105°C continuous and 140°C emergency operating temperature.
- Minimum installation temperature of -40°C.

Okoguard URO-J

15kV Underground Primary Distribution Cable-Jacketed
Red Identification Stripes
Filled Strand Aluminum Conductor/105°C Rating
100% Insulation Level

Okoguard Insulation: 175 mils 100% Insulation Level

Catalog Number	Conductor Size AWG|kcmil	Nominal Dia. over Insulation (in.)	Nominal Dia. over Insulation Screen (in.)	Copper Neutral, No. x AWG (1)	Nominal O.D. (in.)	Aprox. Net Weight lbs./1000'	Aprox. Ship Weight lbs./1000'	90°C Ampacity Direct Burial (2)	90°C Ampacity Duct (2)	105°C Ampacity Direct Burial (2)	105°C Ampacity Duct (2)
FULL NEUTRAL											
163-23-2060	2(7x)	0.68	0.76	10 x 14	1.00	536	626	170	125	185	135
163-23-2066	1(19x)	0.72	0.80	13 x 14	1.03	608	698	195	145	210	155
**163-23-2072	1/0(19x)	0.76	0.84	16 x 14	1.07	688	778	220	160	235	175
163-23-2075	2/0(19x)	0.81	0.88	13 x 12	1.15	820	910	250	185	270	205
163-23-2078	3/0(19x)	0.86	0.93	16 x 12	1.20	939	1029	285	210	310	230
163-23-2081	4/0(19x)	0.91	0.99	13 x 10	1.30	1138	1238	320	240	350	260
163-23-2084	250(37x)	0.97	1.04	16 x 10	1.36	1302	1418	350	270	380	295
163-23-2090	350(37x)	1.07	1.17	20 x 10	1.49	1615	1793	425	310	460	340
1/3 NEUTRAL											
162-23-2060	2(7x)	0.68	0.76	6 x 14	1.00	489	579	150	120	165	135
162-23-2066	1(19x)	0.72	0.80	6 x 14	1.03	527	617	175	140	185	150
162-23-2072	1/0(19x)	0.76	0.84	6 x 14	1.07	572	662	195	155	215	170
162-23-2075	2/0(19x)	0.81	0.88	7 x 14	1.12	636	726	225	180	240	195
162-23-2078	3/0(19x)	0.86	0.93	9 x 14	1.17	722	889	255	200	275	220
162-23-2081	4/0(19x)	0.91	0.99	11 x 14	1.23	822	922	285	235	310	255
162-23-2084	250(37x)	0.97	1.04	13 x 14	1.28	918	1018	305	250	330	275
162-23-2090	350(37x)	1.07	1.17	18 x 14	1.41	1166	1315	375	310	405	335
162-23-2093	500(37x)	1.20	1.30	16 x 12	1.57	1513	1691	450	370	490	405
162-23-2096	750(61x)	1.39	1.49	15 x 10	1.87	2152	2402	545	460	595	505
162-23-2099	1000(61x)	1.54	1.68	18 x *(A)	2.06	2711	3059	620	520	675	570

* - Special Conductor Size (A) Wire O.D. =0.1052"
** Stocked as unfilled strand as 161-23-2072, see Sec 2, Sheet 35.
(1) Individual wire size and count may vary. The resulting combination meets the 1/3 or full neutral, size requirement.

Okonite's web site, www.okonite.com contains the most up to date information.

Ampacities

(2) Full neutral, single phase ampacities are based on ICEA P-117-734 for 90°C or 105°C conductor temperature, 25°C ambient temperature, 100% load factor, and earth thermal resistivity of RHO 90.
One third neutral ampacities are based on triplexed or triangular configuration for the same conditions stated above.

Okoguard URO-J

15kV Underground Primary Distribution Cable-Jacketed
Red Identification Stripes
Filled Strand Aluminum Conductor/105°C Rating
133% Insulation Level

Okoguard Insulation: 220 mils 133% Insulation Level

Catalog Number	Conductor Size AWG|kcmil	Nominal Dia. over Insulation (in.)	Nominal Dia. over Insulation Screen (in.)	Copper Neutral, No. x AWG (1)	Nominal O.D. (in.)	Aprox. Net Weight lbs./1000'	Aprox. Ship Weight lbs./1000'	90°C Ampacity Direct Burial (2)	90°C Ampacity Duct (2)	105°C Ampacity Direct Burial (2)	105°C Ampacity Duct (2)
FULL NEUTRAL											
▲ 163-23-3060	2(7x)	0.77	0.85	10 x 14	1.08	602	669	170	125	185	135
163-23-3066	1(19x)	0.82	0.90	13 x 14	1.14	694	766	195	145	210	155
▲ 163-23-3072	1/0(19x)	0.84	0.92	16 x 14	1.15	753	820	220	160	235	175
163-23-3075	2/0(19x)	0.91	0.98	13 x 12	1.25	916	996	250	185	270	205
163-23-3078	3/0(19x)	0.96	1.04	16 x 12	1.31	1045	1125	285	210	310	230
163-23-3081	4/0(19x)	1.02	1.09	13 x 10	1.41	1252	1347	320	240	350	260
163-23-3084	250(37x)	1.07	1.17	16 x 10	1.48	1456	1606	350	270	380	295
163-23-3090	350(37x)	1.18	1.28	20 x 10	1.59	1762	1912	425	310	460	340
1/3 NEUTRAL											
162-23-3060	2(7x)	0.78	0.85	6 x 14	1.09	562	627	150	120	165	135
162-23-3066	1(19x)	0.82	0.90	6 x 14	1.14	612	684	175	140	185	150
162-23-3072	1/0(19x)	0.86	0.94	6 x 14	1.18	661	733	195	155	215	170
162-23-3075	2/0(19x)	0.91	0.98	7 x 14	1.22	730	810	225	180	240	195
162-23-3078	3/0(19x)	0.96	1.04	9 x 14	1.27	825	905	255	200	275	220
▲ 162-23-3081	4/0(19x)	0.99	1.06	11 x 14	1.30	891	1005	285	235	310	255
162-23-3084	250(37x)	1.07	1.17	13 x 14	1.41	1069	1164	305	250	330	275
▲ 162-23-3090	350(37x)	1.16	1.26	18 x 14	1.50	1254	1425	375	310	405	335
▲ 162-23-3093	500(37x)	1.29	1.39	16 x 12	1.72	1666	1853	450	370	490	405
▲ 162-23-3096	750(61x)	1.48	1.58	15 x 10	1.95	2244	2468	545	460	595	505
▲ 162-23-3099	1000(61x)	1.63	1.77	18 x *(A)	2.15	2808	3093	620	520	675	570

* - Special Conductor Size (A) Wire O.D. =0.1052"

(1) Individual wire size and count may vary. The resulting combination meets the 1/3 or full neutral, size requirement.

Okonite's web site, www.okonite.com contains the most up to date information.

▲ **Authorized Stock Item** - Available from Customer Service centers.

Ampacities

(2) Full neutral, single phase ampacities are based on ICEA P-117-734 for 90°C or 105°C conductor temperature, 25°C ambient temperature, 100% load factor, and earth thermal resistivity of RHO 90.
One third neutral ampacities are based on triplexed or triangular configuration for the same conditions stated above.

THE OKONITE COMPANY
Ramsey, New Jersey 07446

DEPARTMENT OF THE ARMY
ALBUQUERQUE DISTRICT, CORPS OF ENGINEERS
ALBUQERQUE DISTRICT OFFICE
4101 JEFFERSON PLAZA NE
ALBUQUERQUE, NM 87109

SUBMITTAL REVIEW VERIFICATION SHEET

PROJECT TITLE: Kirtland BFF Mid-Plume Pump and Treat System Expansion
CONTRACT NUMBER: W912DR-12-D-0006 DM01
DATE RECEIVED: 8-14-2017
DATE REVIEWED: 8-14-2017

DESCRIPTION OF ITEMS REVIEWED:

1. MV Terminations

NO EXCEPTIONS TAKEN.	**X**
EXCEPTIONS AS NOTED ON DRAWINGS AND/OR ATTACHED SHEETS(S). RESUBMISSION NOT REQUIRED.	
EXCEPTIONS AS NOTED ON DRAWINGS AND/OR ATTACHED SHEETS(S). RESUBMISSION REQUIRED.	
RECEIPT ACKKNOWLEDGED.	

Notes:

NOTE: ITEMS REVIEWED AS TO GENERAL LAYOUT ONLY. DIMENSIONS AND QUANTITIES NOT CHECKED. REVIEW DOES NOT RELIEVE CONTRACTOR OF RESPONSIBILITIES FOR ANY ERRORS WHICH MAY EXIST AS CONTRACTOR SHALL BE RESPONSIBLE FOR DIMENSIONS AND DESIGN OF ADEQUATE CORRECTIONS, DETAILS AND SATISFACTORY CONSTRUCTION OF WORK.

SIGNATURE SANCHEZ.AMY.ELIZABETH.1454434338 Digitally signed by SANCHEZ.AMY.ELIZABETH.1454434338 DN: c=US, o=U.S. Government, ou=DoD, ou=PKI, ou=USA, cn=SANCHEZ.AMY.ELIZABETH.1454434338 Date: 2017.08.14 11:38:12 -06'00' **DATE** 8/14/2017

EA Engineering, Science, and Technology, Inc., PBC

Submittal Review Sheet 1

Project Name: **Kirtland BFF Mid-Plume Pump and Treat System Expansion**				Date Received: **8/7/2017**		
Project Owner: **Kirtland Air Force Base**				Checked By: **Tyler Curley**		
Contractor: **Wilson Electric**	Engineer: **EA Engineering, Science and Technology, Inc., PBC.**			Log Page: **NA**		
Address: **501 General Somervell SE # B** **Albuquerque, NM 87123**	Address: **320 Gold Ave. SW, Suite 1300** **Albuquerque, NM 87102**			EA No.: 62599DM01		
				Spec. Section: **NA**		
				Drawing/Detail No.: **E-000/E-001**		
ATTN: Matthew Walstrom	ATTN: **Devon Jercinovic**			1st Sub		Re-Sub
Date Transmitted: **8/7/2017**	Prev. Transmittal Date:					

Item No.	No. Copies	Description	Manufacturer	Mfg/Vendor Dwg or Detail	Action Taken*
1	1	MV Terminations	Cooper Power Systems		**A**

The Action Designated Above is in Accordance with the Following Legend:

A – Furnish as Submitted
B – Furnish as Noted
C – Revise and Re-submit
1. Not enough information for review.
2. No reproducible submitted.
3. Copies illegible.
4. Not enough copies submitted.
5. Wrong sequence number.
6. Wrong resubmittal number.
7. Wrong Spec. Section.
8. Wrong form used.
9. See Comments.

D – Rejected
E – Engineer's Review not Required
1. Submittal not required.
2. Supplemental Information. Submittal retained for Information purposes only.
3. Information reviewed and approved on prior submittal.
4. See Comments.

Review is for general compliance with Contract Documents. No responsibility is assumed for correctness of dimensions or detail. Contractor is required to specify deviations from contract requirements. Lack of exceptions noted by Engineer does not waive Contractor's obligation to comply with Drawings and Specifications.

Comments:
Items reviewed and confirmed to meet requirements
(Reviewed Material in Parentheses)
Issues in Bold

Material Conforms to electrical drawings.

By: Date: 8/8//17

Distribution: [1] Contractor [1] Engineer [1] Owner

Catalog Data
CA650003EN

Effective January 2015
Supersedes 600-30 July 2014,
600-10 February 2010

COOPER POWER SERIES

600 A 15/25 kV class BOL-T™ deadbreak connector

COOPER Power Systems - 600A 15kV 500mcm Deadbreak T-Body Kit with Test Point & Shield Adapter Kit (Complete Kit for Shielded Cable)

COOPER Power Systems - 600A 15kV #2 Deadbreak T-Body Kit with Test Point & Shield Adapter Kit (Complete Kit for Shielded Cable)

General

Eaton's Cooper Power™ series 600 A, 15/25 kV Class BOL-T™ deadbreak connector is used to terminate high-voltage underground cable on deadfront apparatus such as transformers, switches and switchgear. It is fully shielded, submersible and meets the requirements of IEEE Std 386™-2006 standard – "Separable Insulated Connector Systems".

The capacitive test point on the insulating plug provides a means of testing the circuit without disturbing the bolted connection.

In addition to the capacitive test point feature on the insulating plug, Eaton's Cooper Power series offers an optional capacitive test point similar to the test points on Eaton's Cooper Power series 200 A Elbows. This allows the use of the Type "TPR" series fault indicators, and provides a hotstick operable means of determining circuit condition when used with high impedance voltage sensing devices designed for test points.

BOL-T connectors are designed for use on solid dielectric cable (XLPE or EPR) with extruded semi-conductive shields and concentric neutral, with or without a jacket.

Installation on jacketed concentric neutral cable may require additional sealing material. Cold shrinkable adapters are available for tape shield, linear corrugated and drain wire cable adaptation for use with deadbreak connectors.

900 AMP rating

The BOL-T connector is rated for 900 A continuous when used with a coppertop compression connector, copper insulating plug, copper stud and copper bushing or junction. If a 900 A rating is desired, specify a "C" as the 9th digit when determining your part number. See Step 3, page 5.

Interchangeability

All Eaton's Cooper Power series 600 A deadbreak connectors conform to the electrical, mechanical and dimensional requirements of IEEE Std 386™-2006 standard. The connectors can be used on any comparably rated bushing interface that also meets the requirements of this standard. In addition all cable adapters, insulating plugs, compression connectors and other component parts are designed to be interchangeable with those currently available from other major manufacturers that also comply with IEEE Std 386™-2006 standard.

Installation

A torque wrench and one-inch socket are used to tighten the insulating plug through the compression or shear bolt connector within the T-body onto a de-energized 600 A bushing interface. Refer to *Service Information S600-10-2 600 A 15/25 kV Class BOL-T and Separable Splice Connector Assembly Installation Instructions* for details.

Production tests

Tests conducted in accordance with IEEE Std 386™-2006 standard:

- ac 60 Hz 1 Minute Withstand
  - 40 kV
- Minimum Partial Discharge Extinction Voltage
  - 19 kV

Tests conducted in accordance with Eaton's Cooper Power series requirements:

- Physical Inspection
- Periodic Dissection
- Periodic X-ray Analysis

Table 1. Voltage Ratings and Characteristics

Description	kV
Standard Voltage Class	25
Maximum Rating Phase-to-Ground	15.2
ac 60 Hz 1 Minute Withstand	40
dc 15 Minute Withstand	78
BIL and Full Wave Crest	125
Minimum Partial Discharge Extinction Voltage	19

Voltage ratings and characteristics are in accordance with IEEE Std 386™-2006 standard.

Table 2. Current Ratings and Characteristics

Description	Amperes
Continuous	600 A rms
4 Hour Overload	900 A rms
Short Time	40,000 A rms symmetrical for 0.17 s 27,000 A rms symmetrical for 4.0 s

Current ratings and characteristics are in accordance with IEEE Std 386™-2006 standard.

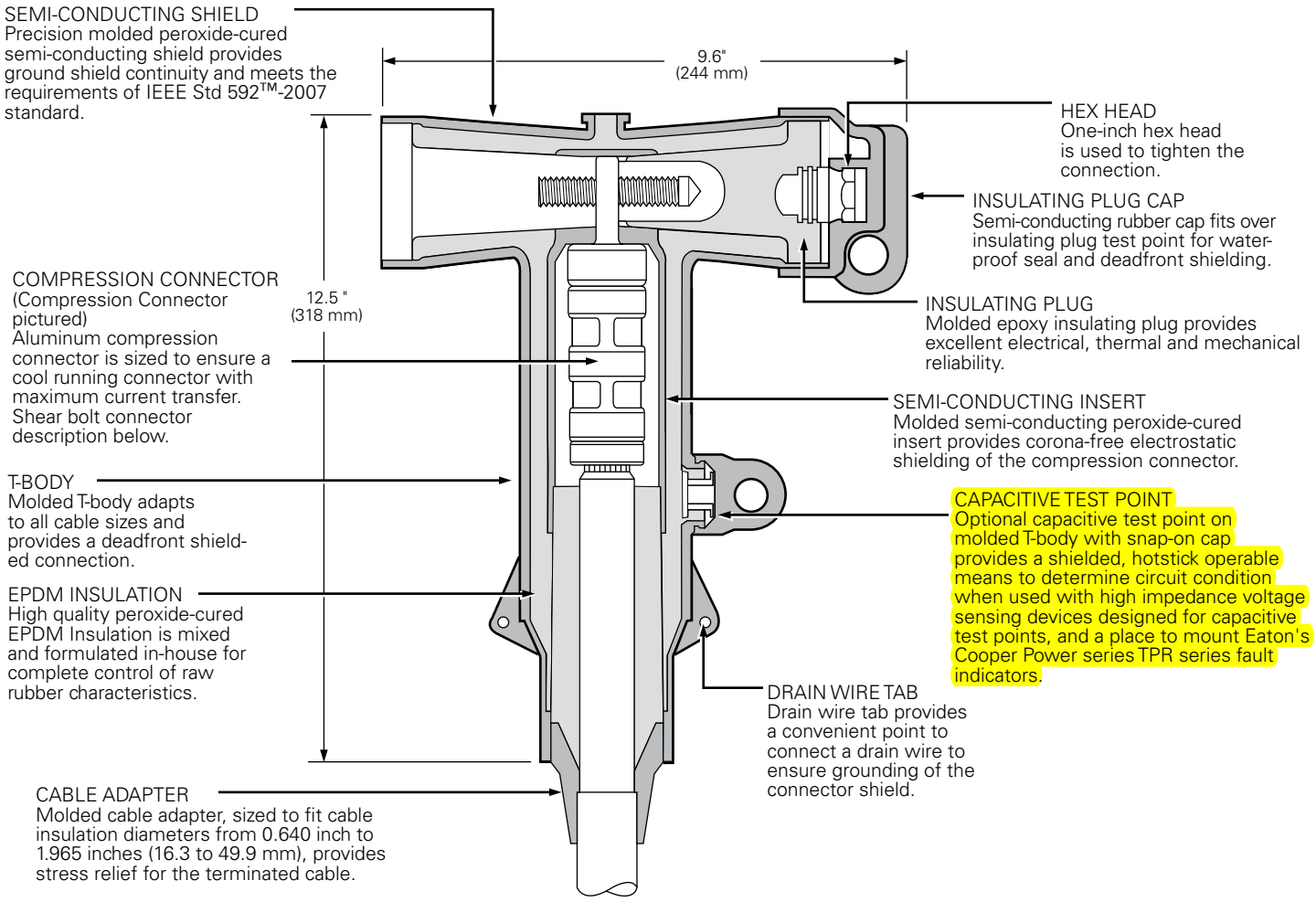

Figure 1. BOL-T Cutaway illustrates design features.

Note: Dimensions given are for reference only.

Optional features

Coppertop compression connectors

Coppertop compression connectors (aluminum sleeve welded to a copper spade) provide a high conductivity material in a bolted connection and are compatible with aluminum or copper conductors.

All copper current path

Full copper current carrying path and 900 A rating can be obtained by specifying a coppertop compression connector, copper stud and copper insulating plug.

Shear bolt connector (optional)

Bolted cable lug is fitted with stepless bolts, which shear off when optimum contact force has been reached. Provides electrical continuity for copper and aluminum conductors while eliminating need for dies and compression tools.

Figure 2. Shear bolt connector.

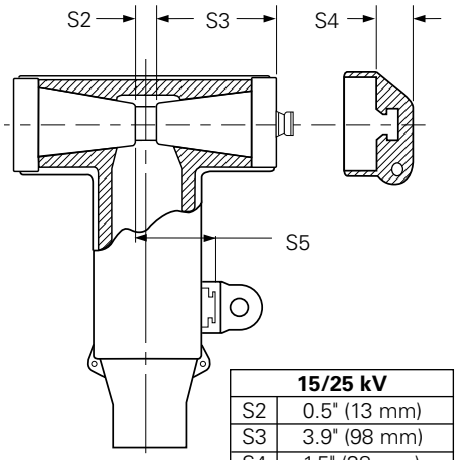

15/25 kV	
S2	0.5" (13 mm)
S3	3.9" (98 mm)
S4	1.5" (38 mm)
S5	2.4" (61 mm)

Figure 3. BOL-T stacking dimensions.

Ordering information

Each BOL-T Connector Kit contains:

- Molded Rubber T-body
- Insulating Plug
- Insulating Plug Cap
- Compression or Shear Bolt Connector
- Cable Adapter
- Silicone Lubricant
- Installation Instruction Sheet

To order a 15/25 kV Class BOL-T Connector Kit, see following Steps 1-5 to build the catalog number.

BOL-T connector kit – catalog numbering system

Build the 12 digit catalog number for a BOL-T Kit by following the steps given below. The first 5 digits are "BT625", so only digits 6 through 12 need to be selected.

1	2	3	4	5	6	7	8	9	10	11	12
B	T	6	2	5							

Catalog number digits:

1 & 2 = "BT", BOL-T Connector System

3 = "6", 600 A System

4 & 5 = "25", 25 kV Class Bushing Interface

Step 1 – Select digits 6 and 7 cable adapter range code

Determine the cable's diameter over the electrical insulation as shown in Figure 4 (including tolerances).

Then identify a cable range from Table 3 that covers the minimum and maximum insulation diameters.

Select the correct CABLE RANGE CODE from Table 3.

Table 3. Cable Diameter Range

Cable Diameter Range

Inches	mm	Code
0.610-0.970	15.5-24.6	**AB**
0.750-1.080	19.1-27.4	**CC**
0.970-1.310	24.6-33.3	**DD**
1.090-1.470	27.7-37.3	**EE**
1.260-1.640	32.0-41.7	**FF**
1.360-1.710	34.5-43.4	**GG**
1.510-1.850	38.4-47.0	**HH**
1.700-1.970	43.2-50.0	**JJ**

Step 2 – Select digits 8 and 9 conductor code

Identify the conductor size and type in Table 4 and select the CONDUCTOR CODE from the appropriate (compression or shear bolt) column.

Step 3 – Select digit 10

Determine whether Aluminum or Copper is required for the compression connector, stud, and deadbreak insulating plug. Shear bolt connector is only available as a 600 A aluminum connector.

"A" = Aluminum (Shear Bolt or Compression Connector)

"C" = Copper (Coppertop for the connector) **Required to achieve 900 A rating, compression connector only.**

Step 4 – Select digit 11

Determine if a stud should be included in the kit.

"1" = Stud Included

"2" = Stud Not Included

Step 5 – Select digit 12

Determine if the T-body should have a test point.

T = Test Point on T-body

If no test point is required, do not include an 12th digit.

EXAMPLE: Select a BOL-T Kit for 250 kcmil compressed cable with a nominal insulation diameter of 1.160" ± 0.030". The kit should have aluminum current-carrying parts and should have a stud included. The T- Body should have a test point.

Step 1 – Select digits 6 and 7

Nominal diameter over insulation is 1.160" ± 0.030".

Minimum diameter = 1.160" - 0.030" = 1.130".

Maximum diameter = 1.160" + 0.030" = 1.190".

From Table 3, identify the cable range that covers 1.130" - 1.190" and select the "EE" cable range code.

Step 2 – Select digits 8 and 9

The conductor size is 250 kcmil compressed. From Table 4, under the column "Concentric or Compressed," identify 250 kcmil and select the "17" conductor code.

Step 3 – Select digit 10

The kit should have aluminum current-carrying parts. Select an "A" for digit 10.

Step 4 – Select digit 11

The kit should include a stud, so select 1 for digit 11.

Step 5 – Select digit 12

A test point is needed, so use a "T" for digit 12.

The complete catalog number is:

BT625EE17A1T

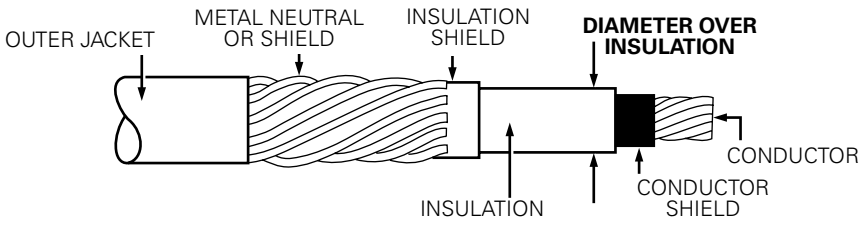

Figure 4. Illustration showing typical construction of medium voltage underground cable.

Table 4. Conductor Size and Type

Compression Connector					Shear Bolt Connector						
Concentric or Compressed		Compact or Solid			AWG or Kcmil			mm^2 Stranded & Compressed			
AWG or kcmil	mm^2	AWG or kcmil	mm^2	Compression Conductor Code	Concentric	Compressed	Compact	min	max	Shear Bolt Conductor Code	Catalog Number
No Connector				**0**	3/0	3/0	3/0	95	150	**S1**	CDT630SB150
#2	35	1	-	**11**	4/0	4/0	4/0				
#1	-	1/0	50	**12**	250	250	250				
1/0	50	2/0	70	**13**	-	-	350				
2/0	70	3/0	-	**14**	350	350	-	185	300	**S3**	CDT630SB300
3/0	-	4/0	95	**15**	500	500	500				
4/0	95	250	120	**16**	600	600	600				
250	120	300	-	**17**	-	-	700				
300	-	350	-	**18**	700	700	-	400		**S4**	CDT630SB400
350	-	400	185	**19**	750	750	750				
400	185	450	-	**20**	-	800	800				
450	-	500	240	**21**	-	-	900				
500	240	600	300	**22**							
600	300	700	-	**23**							
650	-	750	-	**24**							
750	-	900	-	**25**							
900	-	1000	500	**26**							
1000	500	-	-	**27**							
1250	630	-	-	**28**							

Accessories

Cable adapters, compression connectors, and other accessories that can be used with BOL-T connectors are described in Section 600-46, "Deadbreak Accessories, Tools, and Replacement Parts."

Table 5. Replacement Parts

Description	Catalog Number
T-body without Test Point	DT625
T-body with Test Point	DT625T
T-body without Test Point With Aluminum Stud	DT625SA
T-body without Test Point With Copper Stud	DT625SC
T-body with Test Point With Aluminum Stud	DT625TSA
T-body with Test Point With Copper Stud	DT625TSC
Insulating Plug Cap	DIPCAP
Aluminum Insulating Plug with Cap (No Stud)	DIP625A
Copper Insulating Plug with Cap (No Stud)	DIP625C
Aluminum Insulating Plug with Cap and Aluminum Stud	DIP625AS
Copper Insulating Plug with Cap and Copper Stud	DIP625CS
5/8" – 11 UNC 2A Aluminum Threaded Stud	STUD-A
5/8" – 11 UNC 2A Copper Threaded Stud	STUD-C

Shield Adapter Kit

SA Series Cold Shrinkable Metallic Shield Adapter Kit

The SA Series Cold Shrinkable Metallic Shield Adapter Kits make it simple and easy to seal and ground metallic shielded cable when terminating 200 A loadbreak and deadbreak elbows, 600 A deadbreak T-connectors, and splices. The SA Series Shield Adapters can be installed on tape shield, drain wire or UniShield® cables.

Sealing and grounding metallic shielded cable is simple and easy

Features:

Wide Range Taking. The cold shrinkable metallic shield adapter allows the customer to cover a wide cable range, using only four shield adapter part numbers.

Easy Installation. The cold shrinkable metallic shield adapters offer a number of installation benefits:

- Minimal installation force required
- No special tools, soldering or open flame required
- No additional cable stripping (uses standard stripbacks)
- No handling sharp copper leaves or crimping operations
- No cumbersome coiled spring to break or misplace
- No messy grease
- Elbow drain wire built into the flexible ground strap

Stocking flexibility. The cold shrinkable metallic shield adapter allows distributors and customers to reduce the number of stocking kits. The same kit can ground and seal tape shield, drain wire or UniShield® cable.

Shield Adapter Kit Catalog Number	Cable Jacket OD (Inches)
SA1	0.590 - 1.050
SA2	0.830 - 1.640
SA3	1.270 - 2.170
SA4	1.600 - 2.600

How to Order:

The SA Series Cold Shrinkable Metallic Shield Adapter Kits are sized using the cable jacket outside diameter (OD). Refer to Table below.

Note: To include the SA series Cold Shrinkable metallic Shield Adapters with any Cooper Power Systems termination kit, (Elbow, T-body or Splice): Add appropriate Suffix “SA1”, “SA2”, “SA3” or “SA4” to the end of the termination catalog number.

Each kit contains:

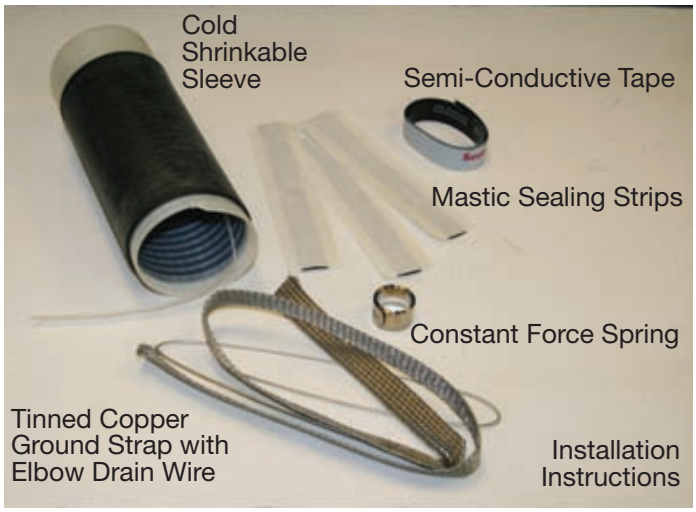

Cooper Power Systems
2300 Badger Drive
Waukesha, WI 53188
P: 877.CPS.INFO

COOPER Power Systems

www.cooperpower.com

B500-00095 • December 2009 Supersedes 00095 12/00

Cooper Power Systems is a valuable trademark of Cooper Industries in the U.S. and other countries.
You are not permitted to use the Cooper Trademarks without the prior written consent of Cooper Industries.
UniShield® is a registered trademark of Unitech, LLC.
©2009 Cooper Industries. All Rights Reserved

Cold Shrink

QT-III Indoor and Outdoor Terminations

3M™ Cold Shrink Silicone Rubber QT-III terminations are designed for faster installation and higher reliability.

Cold Shrink QT-III Indoor Termination 1

Cold Shrink QT-III Outdoor Termination 2

3M Cold Shrink QT-III terminations offer easy installation and reliable performance when terminating indoor and outdoor medium voltage cable. The built-in Hi-K stress controlling compound along with the built in sealing compound means simpler installation on all types of cables. These factory applied compounds make field installation easier and reduce installation errors. Plus its high-K stress design delivers excellent BIL performance and lower surface stress resulting in a more compact termination. Through superior engineering, 3M Cold Shrink QT-III terminations deliver maximum performance.

QT-III Inverted applications

Terminations that are inverted inside of equipment (switchgear, transformers, etc.) can be made using the QT-III indoor tubular design. However, for outdoor applications skirted terminations are recommended. The standard skirts of most terminations are oriented to shed water when installed in the upright direction. The skirts could collect moisture and contamination when inverted. This could lead to tracking problems. 3M has designed the 7600-S-INV series inverted kits to eliminate this problem. These inverted kits are recommended for all outdoor inverted applications.

Cold Shrink technology; over 30 years of field-proven reliability

Over thirty years ago, 3M pioneered Cold Shrink technology. Since then, field use and laboratory analysis have repeatedly proven its merits and reliability. Through constant innovation, we have refined Cold Shrink products making them better than ever. They're easier to apply and built to withstand even the most punishing environmental conditions. Enhanced performance at a lower installed cost continue to make 3M the preferred choice for Cold Shrink solutions.

QT-III Termination Features

Improved long term reliability
- Hydrophobic silicone body
- Superior track and erosion resistance
- Optimum high-K stress control
- Built-in sealing and stress controlling compounds
- Outstanding UV stability
- Designed to meet IEEE 48, CENELEC 0278 and IEC 502 standards
- Easier installation
- Installation requires no silicone tape or grease
- Shorter installed length

Cold Shrink Benefits

Lower Installed Cost
- Minimal training required
- All materials included in the kit
- Easy cable preparation
- Compact to fit into smaller equipment

High Reliability
- No heat, flames or special tools needed
- Simple, straight forward installation
- Built-in stress relief
- 30 years of proven field experience

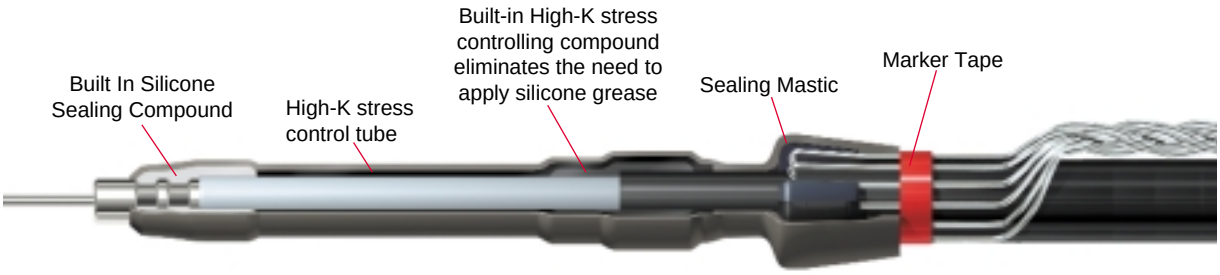

Cold Shrink QT-III Indoor Termination

Kit number	Bil	Cable insulation O.D. range in. (mm)	Conductor size range AWG and kcmil (mm²) 5kV	8.7kV	15kV	25/28kV	★35kV
Shielded Cable Kits (Each Shielded Cable Kit makes three terminations.)							
7620-T-95	95kV	0.32-0.59 (8,2-15,0)	8-4	8-6	—	—	
7621-T-95	95kV	0.44-0.89 (11,2-22,7)	2-3/0	4-2/0	—	—	
7622-T-110	110kV	0.64-1,08 (16,3-27,4)	4/0-400	3/0-300	2-4/0 (35-120)	—	
7624-T-110	110kV	0.83-1.53 (21,1-38,9)	500-750	350-700	4/0-500 (120-240)	—	
7625-T-110	110kV	1.05-1.80 (26,7-45,7)	700-1500	600-1250	500-1000 (240-500)	—	
7626-T-110	110kV	1.53-2.32 (38,9-58,9)	1750-2000	1500-2000	1250-2000 (500-1000)	—	
7693-T-150	150kV	0.72-1.29 (18,3-32,8)	300-500	250-500	2/0-300 (70-150)	2-4/0 (35-120)	2-2/0 (35-70)
7695-T-150	150kV	1.05-1.80 (26,7-45,7)	700-1500	600-1250	500-1000 (240-500)	250-800 (150-400)	3/0-600 (95-325)
7696-T-150	150kV	1.53-2.32 (38,9-58,9)	1750-2000	1500-2000	1250-2000 (500-1000)	900-1750 (500-800)	700-1500 (400-725)
Concentric and Jacketed Concentric Cable Kits (Each Concentric and Jacketed Concentric Cable Kit makes one termination.)							
7642-T-110	110kV	0.64-1.08 (16,3-27,4)	4/0-400	3/0-300	2-4/0 (35-120)	—	
7644-T-110	110kV	0.83-1.53 (21,1-38,9)	500-750	350-700	4/0-500 (120-240)	—	
7645-T-110	110kV	1.05-1.80 (26,7-45,7)	700-1500	600-1250	500-1000 (240-500)	—	
7646-T-110	110kV	1.53-2.32 (38,9-58,9)	1750-2000	1500-2000	1250-2000 (500-1000)	—	
7653-T-150	150kV	0.72-1.29 (18,3-32,8)	300 -500	250 - 500	2/0-300 (70-150)	2-4/0 (35-120)	2-2/0 (35-70)
7655-T-150	150kV	1.05-1.80 (26,7-45,7)	700-1500	600-1250	500-1000 (240-500)	250-800 (150-400)	3/0-600 (95-325)
7656-T-150	150kV	1.53-2.32 (38,9-58,9)	1750-2000	1500-2000	1250-2000 (500-1000)	900-1750 (500-800)	700-1500 (400-725)
High Fault Current Cable Kits (Each High Fault Current Cable Kit makes one termination.)							
7642-T-HSG-110	110kV	0.64-1.08 (16,3-27,4)	4/0-400	3/0-300	2-4/0 (35-120)	—	
7644-T-HSG-110	110kV	0.83-1.53 (21,1-38,9)	500-750	350-700	4/0-500 (120-240)	—	
7645-T-HSG-110	110kV	1.05-1.80 (26,7-45,7)	700-1500	600-1250	500-1000 (240-500)	—	
7646-T-HSG-110	110kV	1.53-2.32 (38,9-58,9)	1750-2000	1500-2000	1250-2000 (500-1000)	—	
7653-T-HSG-150	150kV	0.72-1.29 (18,3-32,8)	300 -500	250 - 500	2/0-300 (70-150)	2-4/0 (35-120)	2-2/0 (35-70)
7655-T-HSG-150	150kV	1.05-1.80 (26,7-45,7)	700-1500	600-1250	500-1000 (240-500)	250-800 (150-400)	3/0-600 (95-325)
7656-T-HSG-150	150kV	1.53-2.32 (38,9-58,9)	1750-2000	1500-2000	1250-2000 (500-1000)	900-1750 (500-800)	700-1500 (400-725)

★ 150kV impulse level meets the impulse requirements for 35.0kV class equipment where indoor terminations are used.

Please contact your local 3M representative for more information.

Continued from page Recent Additions 7

NEW FEATURE!
NOW LISTED FOR GROUNDING, BONDING & DIRECT BURIAL APPLICATIONS

2 HOLE NEMA SPACING

Catalog Number	Copper Cond. Range†	Wire Dia. (in) ‡	Stud Size	Approximate Dimensions (in inches) E	W	D	L	Die Color Code	Crimping Tool Reference+++ Penn-Union PUC Dies	Pressure Setting TDY-1	Pressure Setting TDY-U	Alt. Tooling Burndy Index No.	Alt. Tooling T&B Die
BBLU-6DN	6 Str.	.184	1/2	1 3/4	13/16	3	4 11/32	Blue	T-7*/374*			B-7	24
BBLU-4D1	4 Str.	.232	1/2	1 3/4	15/16	2 7/8	4 15/64	Gray	T-8*/346*			B-8	29
BBLU-2D6	2 Str.	.292	1/2	1 3/4	13/16	3	4 33/64	Brown	T-10			B-10	33
BBLU-1D2	1 Str.	.332	1/2	1 3/4	25/32	3	4 5/8	Green	T-11/375	2		B-11	37
BBLU-1/0D-2NTC38 BBLU-1/0D3	1/0 Str.	.375	3/8 1/2	1 3/4 1 3/4	3/4 13/16	2 5/8 2 7/8	4 5/16 4 9/16	Pink	T-12/348			B-12	42
BBLU-2/0D	2/0 Str.	.419	1/2	1 3/4	13/16	3	4 13/16	Black	T-13			B-13	45
BBLU-3/0D	3/0 Str.	.470	1/2	1 3/4	29/32	3	4 7/8	Orange	T-14			B-14	50
BBLU-4/0D	4/0 Str.	.528	1/2	1 3/4	1	3	5 1/16	Purple	T-15	5	5	B-15	54
BBLU-025D	250 MCM	.575	1/2	1 3/4	1 1/8	3	5 1/8	Yellow	T-16			B-16	62
BBLU-030D	300 MCM	.634	1/2	1 3/4	3/16	3	5 9/16	White	T-17*			B-17	66H/66
BBLU-035D	350 MCM	.682	1/2	1 3/4	5/16	3	5 5/8	Red	T-18/ T-324	7	7	B-18	71H/71
BBLU-040D	400 MCM	.728	1/2	1 3/4	1 13/32	3	5 13/16	Blue	T-19*/470*			B-19	76H/76
BBLU-050D	500 MCM	.815	1/2	1 3/4	1 17/32	3	6	Brown	T-20/T-299			B-20	87
BBLU-060D	600 MCM	.893	1/2	1 3/4	1 23/32	3	6 9/16	Green	T-22/472	9	9	B-22	94H/94
BBLU-065D	650 MCM	.930	1/2	1 3/4	1 25/32	3	6 11/16	Pink	–			B-300	99
BBLU-075D	750 MCM	.999	1/2	1 3/4	1 29/32	3	6 13/16	Black	T-24*/473			B-24	106H/106
BBLU-080D	800 MCM	1.031	1/2	1 3/4	1 31/32	3	7	Orange	–			B-25	107H/107
BBLU-100D1	1000 MCM	1.153	1/2	1 3/4	2 3/16	3	7 1/8	White	–	9***	9***	B-27	125
BBLU-150D1	1500 MCM	1.412	1/2	1 3/4	2 11/16	3	7 7/16	Green	–			B-31	–
BBLU-200D1	2000 MCM	1.632	1/2	1 3/4	3 5/64	3	7 3/4	Brown	–			B-34	–

2 HOLE ASSORTED LUGS

BBLU-6D-2TC14	6 Str.	.184	1/4	5/8	13/32	1 9/32	2 21/32	Blue	T-7*/374*			B-7	24
BBLU-4D-2TC14	4 Str	.232	1/4	5/8	1/2	1 9/32	2 11/16	Gray	T-8*/346*			B-8	29
BBLU-3D	3 Str.	.260	5/16	7/8	17/32	1 5/8	3 1/32	White	T-9*			B-9	–
BBLU-2D	2 Str.	.292	5/16	3/4	5/8	1 15/32	3 7/32	Brown	T-10	2		B-10	33
BBLU-1D	1 Str	.332	5/16	7/8	11/16	1 5/8	3 3/8	Green	T-11/375			B-11	37
BBLU-1/0D	1/0 Str.	.375	5/16	7/8	3/4	1 19/32	3 5/16	Pink	T-12/348			B-12	42
BBLU-100D	1000 MCM	1.153	1/2	1 1/4	2 3/16	2 3/8	6 1/2	White	–	9***	9***	B-27	125
BBLU-150D	1500 MCM	1.412	1/2	1 3/8	2 11/16	2 1/2	6 15/16	Green	–			B-31	–
BBLU-200D	2000 MCM	1.632	1/2	1 1/2	3 5/64	3	7 3/8	Brown	–			B-34	–

+ Concentric, compressed and compact stranding.
++ For conversion to metric range see Master Catalog
+++ For additional tool references see Master Catalog
* Consult factory for availability of dies not available at this time.
*** CUAD-1000

Loadbreak Apparatus Connectors

COOPER Power Systems

COOPER Power Systems - 200A 15kV #2 Loadbreak Elbow Kit with Test Point & Shield Adapter Kit (Complete Kit for Shielded Cable)

200 A 15 kV Class Loadbreak Elbow Connector with Optional Integral Jacket Seal

500-10-7

GENERAL

The Cooper Power Systems Loadbreak Elbow Connector is a fully-shielded and insulated plug-in termination for connecting underground cable to transformers, switching cabinets and junctions equipped with loadbreak bushings. The elbow connector and bushing insert comprise the essential components of all loadbreak connections. The Cooper Elbow Connector is a fully rated 200 A switching device, designed in accordance to IEEE Std 386™ standard - latest revision.

Cooper Loadbreak Elbows are molded using high quality peroxide-cured insulating and semi-conducting EPDM rubber. Standard features include a coppertop connector, tin-plated copper loadbreak probe with an ablative arc-follower tip and stainless steel reinforced pulling-eye. An optional capacitive test point, made of corrosion resistant plastic, is available for use with fault indicators (see Catalog Section 320-40 and 320-42).

Cable ranges are designed to accept a wide range of cable conductor and insulation sizes with just three elbows and accommodate cable manufactured to either **AEIC** or **ICEA** standards.

The coppertop compression connector is a standard item to transition from the cable to the loadbreak probe. An aluminum crimp barrel is inertia-welded to a copper lug. The aluminum barrel makes the connector easy to crimp and the copper lug ensures a reliable, tight, cool operating connection with the loadbreak probe.

OPTIONAL INTEGRAL JACKET SEAL

The optional integral jacket seal provides a quick and easy means to sealing the cable jacket to prevent moisture ingress. Our jacket seal is molded to the loadbreak elbow eliminating the need for separate cable sealing products. It's available with braided ground strap/ bleeder wire for terminating Tape shielded cable. (See Figure 5.)

Figure 1

Figure 1A

Figure 1.
Loadbreak Elbow Connector with optional integral jacket seal and without test point shown.
Figure 1A (right)
Loadbreak Elbow without jacket seal and with test point.

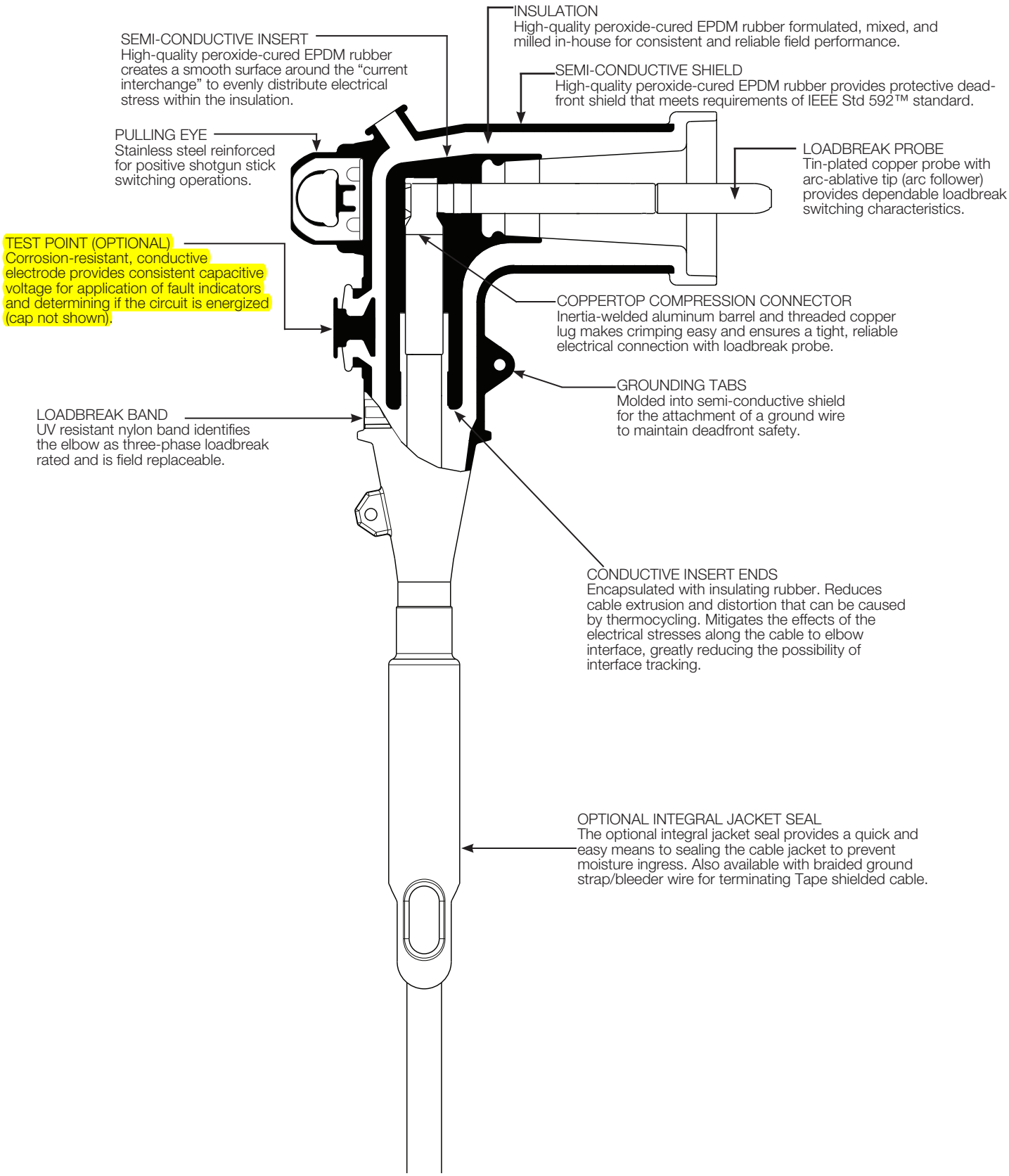

Figure 2.
Cutaway drawing shows design detail.

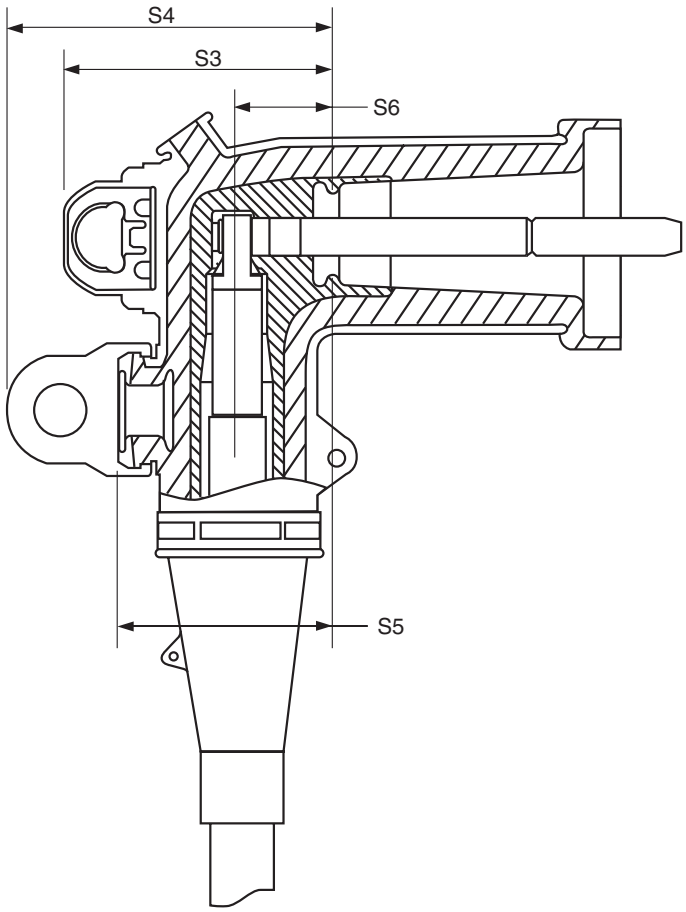

S Dim.	15 kV
S3	3.4” (86 mm)
S4	4.2” (106 mm)
S5	2.7” (68 mm)
S6	1.2” (30 mm)

NOTE: Dimensions given are for reference only.

Figure 3.
Elbow profile and stacking dimensions as referenced in IEEE Std 386™ standard.

INSTALLATION

Cable stripping and scoring tools, available from various tool manufacturers, are recommended for use when installing loadbreak elbows. After preparing the cable, the elbow housing is pushed onto the cable. The loadbreak probe is threaded into the coppertop connector using the supplied installation tool or an approved equivalent. Use a shotgun stick to perform loadmake and loadbreak operations. Refer to Installation Sheet S500-10-7 for details.

PRODUCTION TESTS

Tests conducted in accordance with IEEE Std 386™ standard:
- AC 60 Hz 1 Minute Withstand — 34 kV
- Minimum Corona Voltage Level — 11 kV
- Test Point Voltage Test

Tests conducted in accordance with Cooper Power Systems requirements:
- Physical Inspection
- Periodic Dissection
- Periodic X-ray Analysis

TABLE 1
Voltage Ratings and Characteristics

Description	kV
Standard Voltage Class	15
Maximum Rating Phase-to-Phase	14.4
Maximum Rating Phase-to-Ground	8.3
AC 60 Hz 1 Minute Withstand	34
DC 15 Minute Withstand	53
BIL and Full Wave Crest	95
Minimum Corona Voltage Level	11

Voltage ratings and characteristics are in accordance with IEEE Std 386™ standard.

TABLE 2
Current Ratings and Characteristics

Description	Amperes
Continuous	200 A rms
Switching	10 operations at 200 A rms at 14.4 kV
Fault Closure	10,000 A rms symmetrical at 14.4 kV for 0.17 s after 10 switching operations
Short Time	10,000 A rms symmetrical for 0.17 s
	3,500 A rms symmetrical for 3.0 s

Current ratings and characteristics are in accordance with IEEE Std 386™ standard.

ORDERING INFORMATION

The Elbow kits are packaged in a heavy duty polyethylene bag. There are 20 bagged kits to a carton. Individual boxed kits are also available by special part number. To order a 15 kV Class Loadbreak Elbow Kit follow the easy steps below.

Each kit contains:

- Standard Elbow Body or Elbow Body with Jacket Seal
- Coppertop Compression Connector
- Loadbreak Probe
- Probe Installation Tool
- Silicone Lubricant
- Mastic Strips (**Jacket Seal Elbow Only**)
- Installation Instruction Sheet

STEP 1: Determine the cable's diameter over the electrical insulation as shown in Figure 4 (including tolerances) from cable manufacturer. Then identify a cable range from Table 3 that brackets the minimum and maximum insulation diameters. Select the CABLE RANGE CODE from the far right column.

STEP 2: Identify the conductor size and type in Table 4 and select the CONDUCTOR CODE from the far right column.

STEP 3: For an elbow kit with a capacitive test point order:

LE215	CABLE RANGE CODE	CONDUCTOR CODE	T

For an integral jacket seal elbow kit with a capacitive test point order:

LEJ215	CABLE RANGE CODE	CONDUCTOR CODE	T

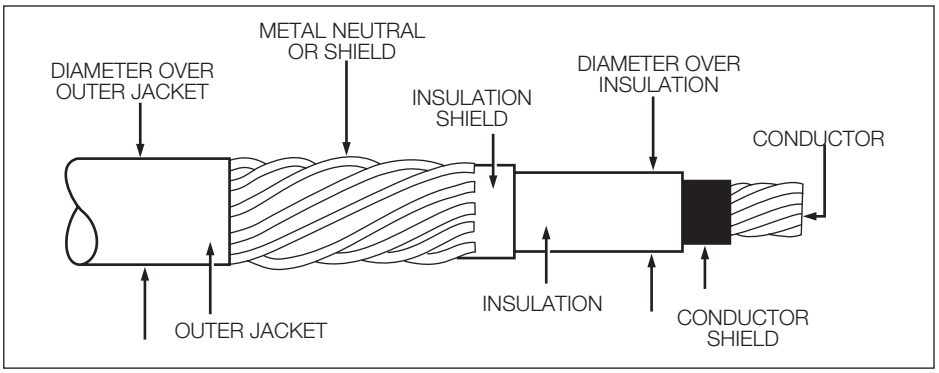

Figure 4.
Illustration showing typical construction of high voltage underground cable.

For an elbow kit without a capacitive test point order:

LE215	CABLE RANGE CODE	CONDUCTOR CODE

For an integral jacket seal elbow kit without a capacitive test point order:

LEJ215	CABLE RANGE CODE	CONDUCTOR CODE

For an elbow kit without a compression connector, use "**00**" for the conductor code.

For an elbow kit with a hold down bail assembly included, insert a "**B**" after the test point option code.

STEP 4: For optional braided ground strap/bleeder wire for terminating tape shielded cable, insert "**GS**" after test point and/or bail option code. (**Integral Jacket Seal Elbow Only**)

STEP 5: (Optional) For an elbow kit individually packaged in a corrugated cardboard box, insert an "**X**" as the last character in the part number.

Table 3
Cable Range for Loadbreak Elbow

Inches	Millimeters	Cable Range Code
0.495" - 0.585"	12.6 - 14.9	CCA*
0.575" - 0.685"	14.6 - 17.4	CCB*
0.610" - 0.970"	15.5 - 24.6	AB
0.750" - 1.080"	19.1 - 27.4	CC
0.890" - 1.220"	22.6 - 30.0	DD

* Uses 5 kV cable adapter.
(For use with "CC" range elbow only.)

TABLE 4
Conductor Size and Type

Class B Stranded or Compressed		Compact or Solid		CONDUCTOR CODE
AWG	mm^2	AWG	mm^2	
No Connector				**00**
#6	16	#4	—	**01**
#4	—	#3	25	**02**
#3	25	#2	35	**03**
#2	35	#1	—	**04**
#1	—	1/0	50	**05**
1/0	50	2/0	70	**06**
2/0	70	3/0	—	**07**
3/0	—	4/0	95	**08**
4/0	95	250	120	**09**
250*	120	300	—	**10**

*Compressed stranding only.

EXAMPLE: Select an integral jacket seal elbow kit with a capacitive test point for use on a #1 compact cable with a minimum insulation diameter of 0.770" and a maximum diameter of 0.830".

STEP 1: From Table 3, identify the cable range 0.610"—0.970" and select the "**AB**" CABLE RANGE CODE.

STEP 2: The conductor size is a #1 and the type is compact.

From Table 4, under the column "Compact or Solid" identify #1 and select the "**04**" conductor code.

STEP 3: Order catalog number.

LEJ215AB04T

TABLE 5
Replacement 2.88" Long Coppertop Connectors

Conductor Size				Catalog Number
Concentric or Compressed		Compact or Solid		
AWG	mm^2	AWG	mm^2	
#6	16	#4	—	CC2C01T
#4	—	#3	25	CC2C02T
#3	25	#2	35	CC2C03T
#2	35	#1	—	CC2C04T
#1	—	1/0	50	CC2C05T
1/0	50	2/0	70	CC2C06T
2/0	70	3/0	—	CC2C07T
3/0	—	4/0	95	CC2C08T
4/0	96	250	120	CC2C09T
250*	120	300	—	CC2C10T

* Compressed stranding only.
Note: Coppertop compression connector may be used on both aluminum and copper cable conductors.

TABLE 6
Replacement Parts

Description	Catalog Number
Hold Down Bail Assembly	2638351C01B
5 kV Cable Adapter (for use with "C" Elbow size only), .495" — .585" .575" — .685"	 CA225A CA225B
Loadbreak Band (package of 25)	2639139B01B
Probe Kit (includes Probe, Installation Tool, Silicone Lubricant, Installation Instruction Sheet)	PK215
Loadbreak Probe Installation Tool	2602733A01
Loadbreak Probe Only	2637552C03
Silicone Grease 0.175 oz tube (5 grams) 5.3 oz tube (150 grams)	 2603393A03 2605670A02M
Includes Ground Braid, Constant Force Spring and Mastic	GRDBRAIDKIT

ACCESSORIES

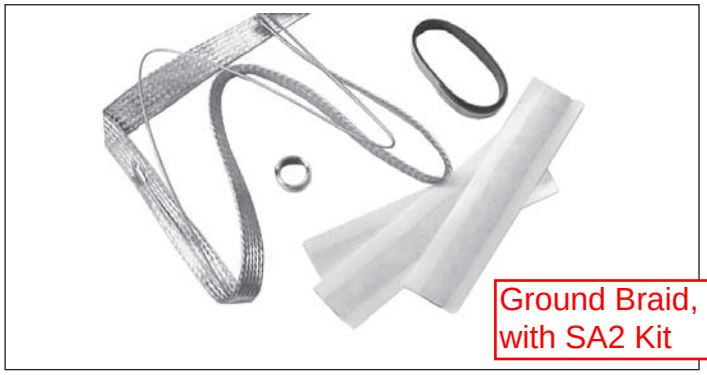

Figure 5.
Braided Ground Strap Accessories (see Table 6).

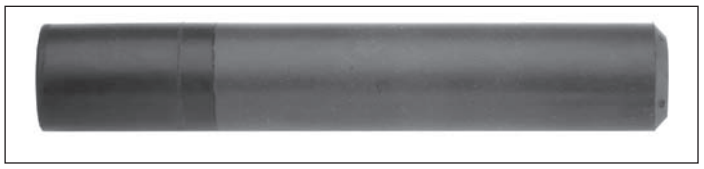

Figure 6.
5 kV Cable Adapter (see Table 6).

Figure 7.
Optional Bail Assembly (see Table 6).

Shield Adapter Kit

SA Series Cold Shrinkable Metallic Shield Adapter Kit

The SA Series Cold Shrinkable Metallic Shield Adapter Kits make it simple and easy to seal and ground metallic shielded cable when terminating 200 A loadbreak and deadbreak elbows, 600 A deadbreak T-connectors, and splices. The SA Series Shield Adapters can be installed on tape shield, drain wire or UniShield® cables.

Sealing and grounding metallic shielded cable is simple and easy

Features:

Wide Range Taking. The cold shrinkable metallic shield adapter allows the customer to cover a wide cable range, using only four shield adapter part numbers.

Easy Installation. The cold shrinkable metallic shield adapters offer a number of installation benefits:

- Minimal installation force required
- No special tools, soldering or open flame required
- No additional cable stripping (uses standard stripbacks)
- No handling sharp copper leaves or crimping operations
- No cumbersome coiled spring to break or misplace
- No messy grease
- Elbow drain wire built into the flexible ground strap

Stocking flexibility. The cold shrinkable metallic shield adapter allows distributors and customers to reduce the number of stocking kits. The same kit can ground and seal tape shield, drain wire or UniShield® cable.

Shield Adapter Kit Catalog Number	Cable Jacket OD (Inches)
SA1	0.590 - 1.050
SA2	0.830 - 1.640
SA3	1.270 - 2.170
SA4	1.600 - 2.600

How to Order:

The SA Series Cold Shrinkable Metallic Shield Adapter Kits are sized using the cable jacket outside diameter (OD). Refer to Table below.

Note: To include the SA series Cold Shrinkable metallic Shield Adapters with any Cooper Power Systems termination kit, (Elbow, T-body or Splice): Add appropriate Suffix “SA1”, “SA2”, “SA3” or “SA4” to the end of the termination catalog number.

Each kit contains:

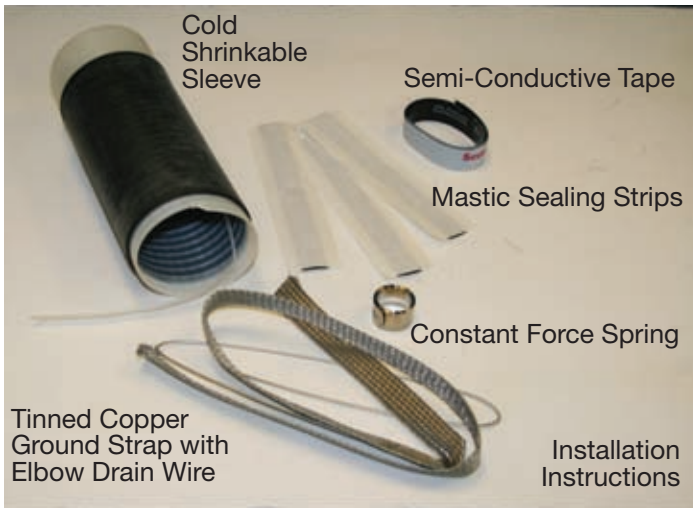

Cooper Power Systems
2300 Badger Drive
Waukesha, WI 53188
P: 877.CPS.INFO

COOPER Power Systems

www.cooperpower.com

B500-00095 • December 2009 Supersedes 00095 12/00

Cooper Power Systems is a valuable trademark of Cooper Industries in the U.S. and other countries.
You are not permitted to use the Cooper Trademarks without the prior written consent of Cooper Industries.
UniShield® is a registered trademark of Unitech, LLC.
©2009 Cooper Industries. All Rights Reserved

DEPARTMENT OF THE ARMY
ALBUQUERQUE DISTRICT, CORPS OF ENGINEERS
ALBUQERQUE DISTRICT OFFICE
4101 JEFFERSON PLAZA NE
ALBUQUERQUE, NM 87109

SUBMITTAL REVIEW VERIFICATION SHEET

PROJECT TITLE: Kirtland BFF Mid-Plume Pump and Treat System Expansion
CONTRACT NUMBER: W912DR-12-D-0006 DM01
DATE RECEIVED: 8-16-2017
DATE REVIEWED: 8-21-2017

DESCRIPTION OF ITEMS REVIEWED:

1. Breaker and Junction Boxes

NO EXCEPTIONS TAKEN.	
EXCEPTIONS AS NOTED ON DRAWINGS AND/OR ATTACHED SHEETS(S). RESUBMISSION NOT REQUIRED.	**X**
EXCEPTIONS AS NOTED ON DRAWINGS AND/OR ATTACHED SHEETS(S). RESUBMISSION REQUIRED.	
RECEIPT ACKKNOWLEDGED.	

Notes:

See attached comments.

NOTE: ITEMS REVIEWED AS TO GENERAL LAYOUT ONLY. DIMENSIONS AND QUANTITIES NOT CHECKED. REVIEW DOES NOT RELIEVE CONTRACTOR OF RESPONSIBILITIES FOR ANY ERRORS WHICH MAY EXIST AS CONTRACTOR SHALL BE RESPONSIBLE FOR DIMENSIONS AND DESIGN OF ADEQUATE CORRECTIONS, DETAILS AND SATISFACTORY CONSTRUCTION OF WORK.

SIGNATURE SANCHEZ.AMY.ELIZABETH.1454434338 Digitally signed by SANCHEZ.AMY.ELIZABETH.1454434338 DN: c=US, o=U.S. Government, ou=DoD, ou=PKI, ou=USA, cn=SANCHEZ.AMY.ELIZABETH.1454434338 Date: 2017.08.21 13:33:38 -06'00' **DATE** 8/21/2017

EA Engineering, Science, and Technology, Inc., PBC

Submittal Review Sheet 1

Project Name: **Kirtland BFF Mid-Plume Pump and Treat System Expansion**			Date Received: **8/15/2017**	
Project Owner: **Kirtland Air Force Base**			Checked By: **Tyler Curley**	
Contractor: **Wilson Electric**	Engineer: **EA Engineering, Science and Technology, Inc., PBC.**		Log Page: **NA**	
Address: **501 General Somervell SE # B** **Albuquerque, NM 87123**	Address: **320 Gold Ave. SW, Suite 1300** **Albuquerque, NM 87102**		EA No.: 62599DM01	
			Spec. Section: **NA**	
			Drawing/Detail No.: **E-000/E-001**	
ATTN: Matthew Walstrom	ATTN: **Devon Jercinovic**		1st Sub	Re-Sub
Date Transmitted: **8/15/2017**	Prev. Transmittal Date:			

Item No.	No. Copies	Description	Manufacturer	Mfg/Vendor Dwg or Detail	Action Taken*
1	1	Breaker and Junction Boxes	Siemens		**A**

The Action Designated Above is in Accordance with the Following Legend:

A – Furnish as Submitted
B – Furnish as Noted
C – Revise and Re-submit
1. Not enough information for review.
2. No reproducible submitted.
3. Copies illegible.
4. Not enough copies submitted.
5. Wrong sequence number.
6. Wrong resubmittal number.
7. Wrong Spec. Section.
8. Wrong form used.
9. See Comments.

D – Rejected
E – Engineer's Review not Required
1. Submittal not required.
2. Supplemental Information. Submittal retained for Information purposes only.
3. Information reviewed and approved on prior submittal.
4. See Comments.

Review is for general compliance with Contract Documents. No responsibility is assumed for correctness of dimensions or detail. Contractor is required to specify deviations from contract requirements. Lack of exceptions noted by Engineer does not waive Contractor's obligation to comply with Drawings and Specifications.

Comments:
Items reviewed and confirmed to meet requirements
(Reviewed Material in Parentheses)
Issues in Bold

Electric components conform to drawings.

By: _____ Date: 8/16//17

Distribution: [1] Contractor [1] Engineer [1] Owner

Submittal

BULK FUELS FACILITY

Type:	**Gear**
Electrical Contractor:	**Wilson Electric**
Distributor:	**CED** **701A Comanche N.E.** **Albuquerque, NM 87107**
Date:	**8/15/2017**

SIEMENS Bill of Material

Date: 8/15/2017

To: CONSOLIDATED ELECTRICAL DISTRIBUTORS INC
701 COMANCHE RD NE
ALBUQUERQUE, NM 87107
USA

From:
USA

Job Name:	BULK FUELS FACILITY
Quote Name:	BULK FUELS FACILITY
Quote Number:	clinwx00c_08101701_00_00_M00
Distributor:	CONSOLIDATED ELECTRICAL DISTRIBUTORS INC

Line No.	Quantity	Description
20000	1	TYZ:SAFETY_SWITCH--HF364NR Heavy Duty (600 V max), Fusible, Number of Poles:3, Voltage AC Max:600V, Voltage DC Max:250, Max Ampere Rating:200A, With Neutral, Type 3R, Fuse Class- Standard Mounting:CLASS H, K, Fuse Class - Move Load Base:CLASS J, Fuse Class- Need Mounting Kit:CLASS R, T. 1 - HF364NR 1 - HDSS FUS 3P 4W 600V 200A TYPE3R
1000	1	PP-301--SENTRON PWR CTR 1P 10KVA BOLT-ON RP1 Sentron Power Centers, 1 Phase, 10 KVA, 480 Primary Voltage, 240/120 Secondary Voltage, Transformer Core: Aluminum-Wound, 2-5% FCBN Taps, 115C, Encapsulated, Bolt-in Brk. for Pwr. Ctr.(JA), Primary Cir Breaker provided: ED42B035L, Sec Main Cir Breaker Provided: B250H (50A), Max Rating - Sec Branch MCCB: 40 A, Max Sec Ckts 120V 1 IN Wide: (16) 1 POLE, Max Sec Ckts 240v 2 IN Wide: (8) 2 POLE. Catalog No.: US2:1LPC010JA
10	6	Standard Product--BREAKER 20A 1P 120V 10K BL Catalog No.: B120
11	3	Standard Product--BREAKER 15A 1P 120V 10K BL Catalog No.: B115
12	1	Standard Product--SPD2 12 EXT 277/480V 300KA 4XSS SC Catalog No.: US2:TPS3E1230SX02
Non-Siemens Products:		
13	1	20" X 16" X 6" JUNCTION BOX-20166RHC

SIEMENS

Project Name: BULK FUELS FACILITY
Quote #: clinwx00c_08101701_00_00_M00

CONTENTS: HF364NR HDSS FUS 3P 4W 600V 200A TYPE3R

Drawings are for: Approval ☑ Record ☐

Engineer:
Contractor:
Distributor: CONSOLIDATED ELECTRICAL DISTRIBUTORS INC
Date:

Submitted By:
Tel. No.:
Fax No.:

SIEMENS

HF364NR

HDSS FUS 3P 4W 600V 200A TYPE3R

Documents

1.Cut Sheet ,Installation and MTC guide

General Specification

Brand Name	SIEMENS
Type	ENCLOSED/SAFETY SWITCH
Standard	UL
Voltage Rating	600V
Amperage Rating	200A
Wattage	4W

Technical Specification

Number Of Poles	3P
Frequency Rating	60Hz
Action	SINGLE THROW
Material	304SS
Enclosure	TYPE 3R
Mounting	2 OR 3 POINT MOUNTING HOLES
Insulation	NO
Operating Cycles	8000
Operating Temperature	(-20F-120F) AMBIENT TEMPERATURE
Environmental Conditions	OUTDOOR

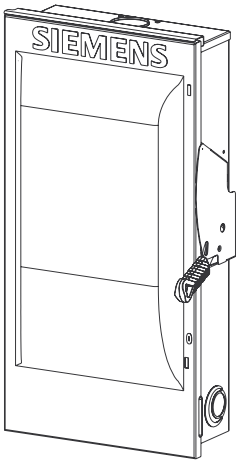

Heavy Duty Safety Switch

Type VBII, 200 Amp, Type 3R (Outdoor)

Standards and Ratings
- UL Listed under file #E4776
- Meets UL98 for switches and UL 50 for enclosures
- Meets NEMA Standard KS-1 for enclosed switches
- Meets NEC wire bending space requirements
- Rated 10,000 AIC with Class H fuses or 200,000 AIC with Class R, T and J fuses
- Rated 100,000 AIC at 600Vdc with Class R or J fuses
- I^2t rated (Amps^2 x Seconds = 2,000,000)
- 12X overload current rating exceeds 10X industry standard
- Suitable for use as service entrance equipment

Features
- Quick-make and break switching action
- Double break visible blade design
- Highly visible ON/OFF indication
- Rugged installer friendly enclosure design
- Modular design allows quick and easy replacement of parts
- Front removable lugs which can easily be converted to copper body or compression type lugs
- Defeatable dual cover interlock

General Information

Catalog Number	Volts	Description	Shipping Weight (lbs.)
HF224NR [1]	240	2 Pole, 3 Wire, Fusible	48
HF324NR	240	3 Pole, 4 Wire, Fusible	50
HF364R	600	3 Pole, 3 Wire, Fusible	49
HF364NR	600	3 Pole, 4 Wire, Fusible	50
HNF364R	600	3 Pole, 3 Wire, Non-Fusible	47

Horsepower Ratings [2 3] - 240 Volts

Catalog Number	1 Phase, 240V AC		3 Phase, 240V AC		250V DC
	Std	Max	Std	Max	
HF224NR	15	—	25	60	40
HF324NR	15	—	25	60	40

Horsepower Ratings [2 3] - 600 Volts

Catalog Number	3 Phase, 480V AC		3 Phase, 600V AC		600V DC
	Std	Max	Std	Max	
HF364R	50	125	60	150	50
HF364NR	50	125	60	150	50
HNF364NR [4]	—	125	—	150	50

Mechanical Lug Wire Ranges (75°C, Cu/Al)

Description	Wire Range
Line, Load, Neutral	#6 AWG - 300 Kcmil
200% and Standard Neutral Ground	#14-1/0AWG
Ground Lug Kit	#14-4 AWG
200% Neutral	(2) #6 AWG - 300 Kcmil

1 These switches are UL Listed for application on grounded B phase systems.
2 Dual horsepower ratings:
Std - applies when non-time delay fuses are installed.
Max - applies when time-delay fuses are installed.
3 Horsepower ratings listed also apply to Design E motors with no derating.
4 Also rated 60 HP on 3phase, 240V AC systems.

Product Specification Sheet HD200.3

Answers for industry.

SIEMENS

Product Specification Sheet #HD200.3 (page 2 of 3)

Accessories

Catalog Number	Description
HA161234	One Normally Open and Closed Auxiliary Switches
HA261234	Two Normally Open and Closed Auxiliary Switches
HA361234	Low Voltage Auxiliary Switch
HG61234	Equipment Ground Lug Kit
HG261234	Isolated Equipment Ground Lug Kit
HN64	Neutral Kit
HN264	200% Neutral Kit
HT24	240 Volt Class T Fuse Clip Kit (1-Pole per kit) (HF224NR, HF324NR)
HT64	600 Volt Class T Fuse Clip Kit (1-Pole per kit) (HF364R, HF364NR)
HR64	Class R Fuse Clip Kit (3 fuse clips per kit) (HF224NR, HF324NR HF364R, HF364NR)
HLC64	Copper Lug Kit (9 lugs per kit)
ECHS200	2.00" Type "HS" Outdoor Hub
ECHS250	2.50" Type "HS" Outdoor Hub

Replacement Parts

Catalog Number	Description
HFB64	Fusible Line Side Replacement Base (HF224NR, HF324NR, HF364R, HF364NR)
HBB64	Fusible Load Side Replacement Base (HF224NR, HF324NR, HF364R, HF364NR)
HNB64	Non-Fusible Replacement Base (HNF364R)
HH64	Replacement Handle/Handle Guard
HL64	Replacement Lugs (3 lugs per kit)
HM64	Replacement Mechanism
[1]	Replacement Door

Compression Lugs

Wire Size	Burndy		Thomas-Betts		Ilsco	
	CU ONLY	CU/AL	CU ONLY	CU/AL	CU ONLY	CU/AL
#2	YA2C-L Box YA2C	YA2CA1	54142-TB	60117	CRB-2 CRB-2L	IACL-2 ACN-2
#1	YA1C-L Box YA1C	YA1CA1	54147 54947BE	60123	CRA-1-38 CRA-1L	ACN-1
1/0	YA25-L Box YA25	YA25A1	54153-TB 54949BE	60129 61130	CRA-0 CRA-1/0L	IACL-1/0 ACN-1/0
2/0	YA26-L3 YA26	YA26A6	54158 256-30695-1229 54910BE	60135 61136	CRA-2/0 CRA-2/0L	ACL-2/0 IACL-2/0
3/0	YA27-L3 YA27	YA27A1	54163-TB	60141 61142	CRC-3/0 CRB-3/0L	IACL-3/0 ACL-3/0
4/0	YA28-L3 YA28-TC38	YA28A1	54168 256-30695-1253	61148 60147	CRC-4/0 CRB-4/0L	IACL-4/0 ACL-4/0
250 Kcmil	YA29-L7		54173 54913BE	61156	CRA-250 CRA-250L	IACL-250
300 Kcmil				61162		

[1] Place "Door" at the end of the switch catalog number.

Product Specification Sheet #HD200.3 (page 3 of 3)

Dimension Drawing

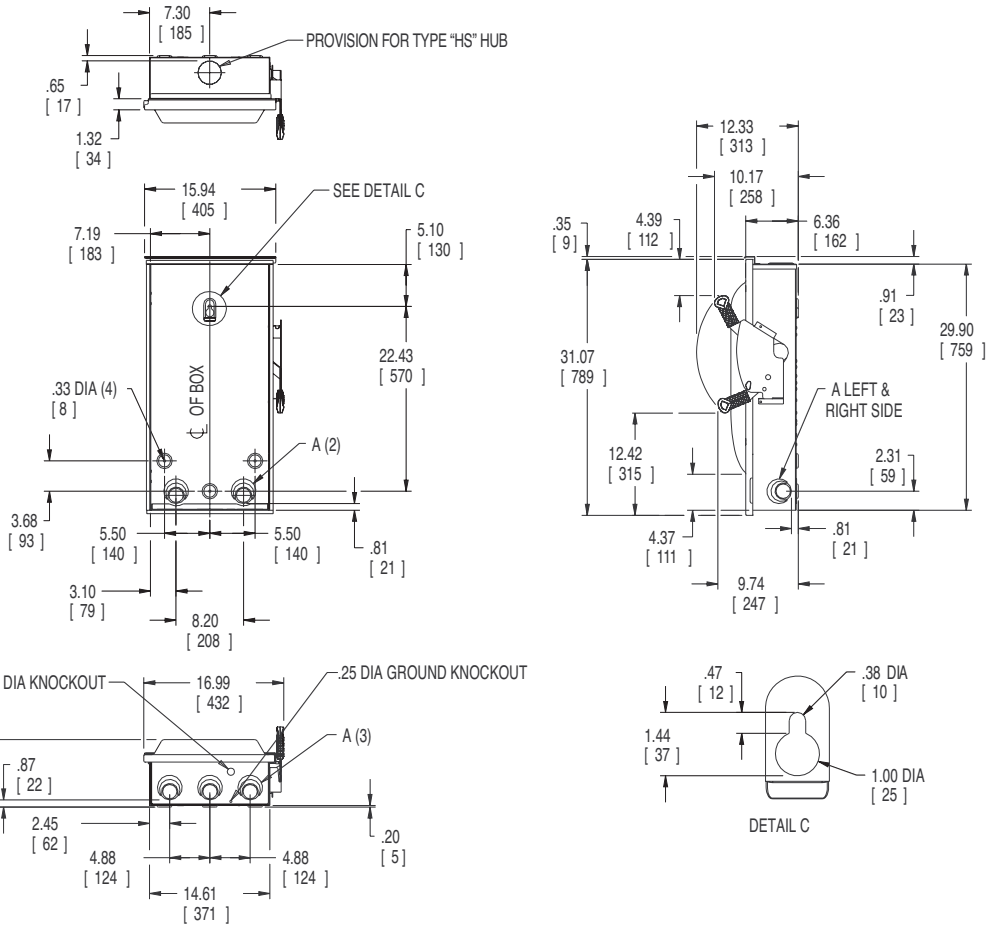

Dimensions shown in inches and millimeters ( ).
Dimension shown accurate to ± ⅛ inch.

KNOCKOUT CODE	CONDUIT SIZE			
A (Tangential)	1.25	1.50	2.00	2.50

	LINE SIDE WIRE BEND	LOAD SIDE WIRE BEND
240V Fused	7.87 (200)	10.34 (263)
600V Fused	7.87 (200)	7.84 (199)
Non-Fused	7.87 (200)	15.84 (402)

Enclosure: Galvanized Steel
.054 (17 Gauge)
Finish: ANSI Grey #61 Paint

Siemens Industry, Inc.
Building Technologies Division
5400 Triangle Parkway
Norcross, GA 30092
1-800-964-4114

Subject to change without prior notice
All rights reserved
Printed in USA
© 2009 Siemens Industry, Inc.

Siemens is a registered trademark of Siemens AG. Product names mentioned may be trademarks or registered trademarks of their respective copanies. Specifications subject to change without notice.

www.usa.siemens.com/switches

SIEMENS

Project Name: BULK FUELS FACILITY
Quote #: clinwx00c_08101701_00_00_M00

CONTENTS: US2:1LPC010JA SENTRON PWR CTR 1P 10KVA BOLT-ON RP1

Drawings are for: Approval ☑ Record ☐

Engineer:
Contractor:
Distributor: CONSOLIDATED ELECTRICAL DISTRIBUTORS INC
Date:

Submitted By:
Tel. No.:
Fax No.:

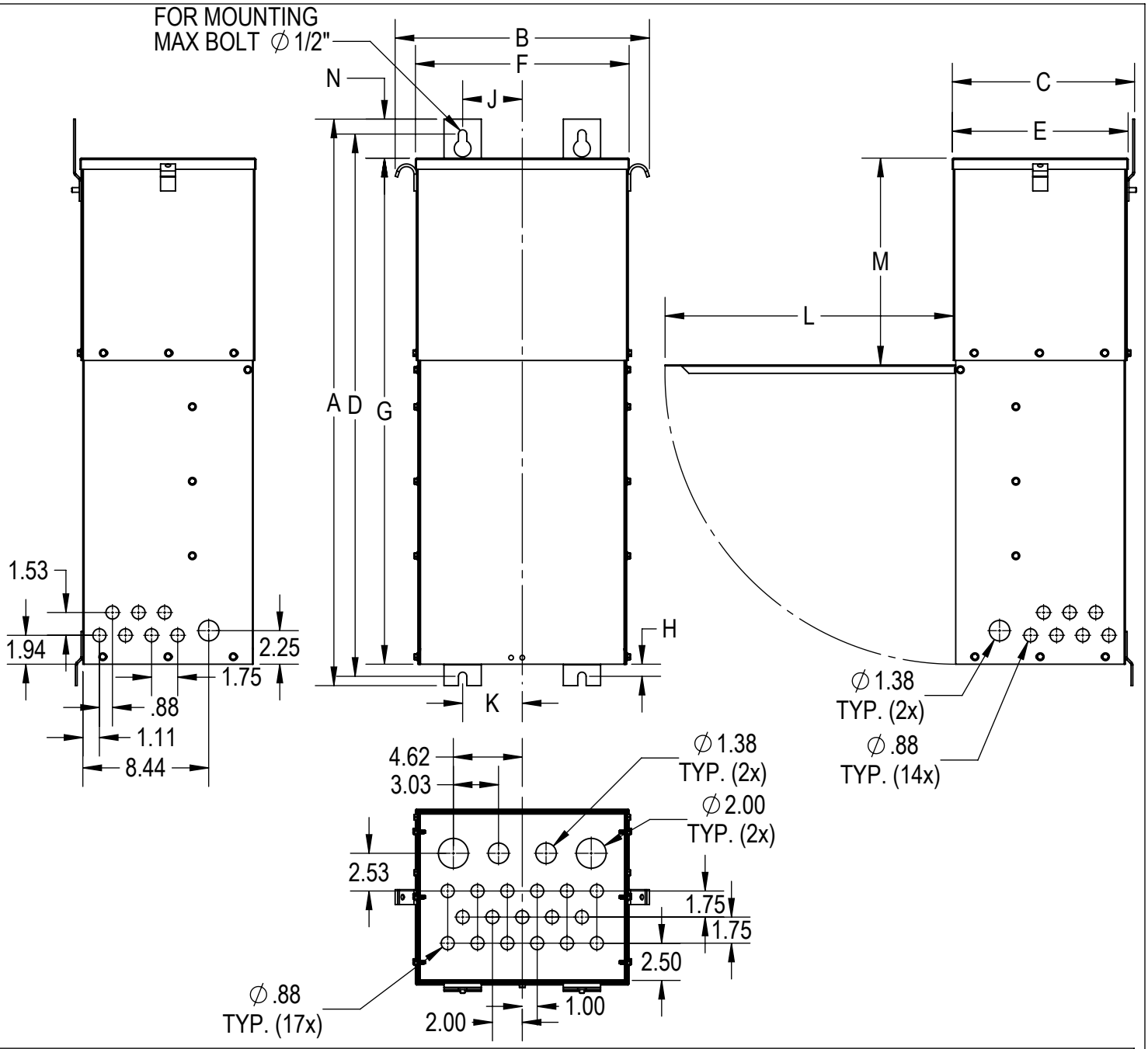

DIMENSION IN INCHES														
KVA	**A MAX**	**B MAX**	**C MAX**	**D**	**E**	**F**	**G**	**H**	**J**	**K**	**L MIN**	**M**	**N**	**WT.**
10	38.00	17.13	12.38	36.38	10.68	14.18	34.00	1.50	4.00	4.00	19.32	13.69	2.63	240

KVA	**PRIMARY MAIN BREAKER**	**SECONDARY MAIN BREAKER**	**VOLTAGE**		**TAPS**
			PRIMARY	**SECONDARY**	
10	35 AMP	50 AMP	480V	240/120	2 x 5% BNFC

	NAME	DATE
DRAWN	AJP	5-9-16
CHECKED	AJP	5-9-16
ENG APPR.	AJP	5-9-16

Confidential - Property of
Siemens Industry, Inc.

A	N/A	5-9-16
REV	**C.N.**	**DATE**

UNLESS OTHERWISE SPECIFIED:
TOLERANCES:
IN
X.XXX ± .005
X.XX ± .02
ANGULAR: ± 2°
DO NOT SCALE DRAWING

SCALE: 1:12

SHEET 1 OF 1

TITLE: SIEMENS
Sentron Power Center
Single Phase 10kVA

SIZE	DWG. NO.	REV
A	1LPC010JA	A

SIEMENS

Project Name: BULK FUELS FACILITY
Quote #: clinwx00c_08101701_00_00_M00

CONTENTS: B120 BREAKER 20A 1P 120V 10K BL

Drawings are for: Approval ☑ Record ☐

Engineer:
Contractor:
Distributor: CONSOLIDATED ELECTRICAL DISTRIBUTORS INC
Date:

Submitted By:
Tel. No.:
Fax No.:

SIEMENS

B120

BREAKER 20A 1P 120V 10K BL

General Specification

Brand Name	SIEMENS
Type	BL
Application	Electrical Distribution
Standard	UL 489

Technical Specification

Voltage Rating	120V
Amperage Rating	20A
Trip Range	Thermal Magnetic
Interrupt Rating	10K AIC
Number Of Poles	1P
Connection	BOLT-ON
Length	3
Width	3
Height	1

SIEMENS

Project Name: BULK FUELS FACILITY
Quote #: clinwx00c_08101701_00_00_M00

CONTENTS: B115 BREAKER 15A 1P 120V 10K BL

Drawings are for: Approval ☑ Record ☐

Engineer:
Contractor:
Distributor: CONSOLIDATED ELECTRICAL DISTRIBUTORS INC
Date:

Submitted By:
Tel. No.:
Fax No.:

SIEMENS

B115

BREAKER 15A 1P 120V 10K BL

General Specification

Brand Name	SIEMENS
Type	BL
Application	Electrical Distribution
Standard	UL 489

Technical Specification

Voltage Rating	120V
Amperage Rating	15A
Trip Range	Thermal Magnetic
Interrupt Rating	10K AIC
Number Of Poles	1P
Connection	BOLT-ON
Length	3
Width	3
Height	1

SIEMENS

Project Name: BULK FUELS FACILITY
Quote #: clinwx00c_08101701_00_00_M00

CONTENTS: US2:TPS3E1230SX02 SPD2 12 EXT 277/480V 300KA 4XSS SC

Drawings are for: Approval ☑ Record ☐

Engineer:
Contractor:
Distributor: CONSOLIDATED ELECTRICAL DISTRIBUTORS INC
Date:

Submitted By:
Tel. No.:
Fax No.:

TPS3 12 and TPS3 L12 (True or Discrete 10-Mode)

TPS3 12 and TPS3 L12 are UL 1449-4 Type 2 and Optional UL 1449 4th Edition surge protective device with a per phase surge current capacity that can be increased to 500 kA (TPS3 L12 up to 450 kA). For mission critical or high profile applications, the TPS3 L12 is our "True" or "Discrete" 10-mode style SPD providing the "Just in Case" assurance of directly connected L-L MOVs.

Both TPS3 12 and TPS3 L12 are UL 1283 Listed incorporating EMI/RFI or Sine Wave tracking filtering designed to condition low energy L-N coupled noise. When installed at the electrical service entrance, it can be used for UL 96A compliance (@ 20 kA In).

Standard monitoring includes protection status indication LEDs, audible alarm, and dry contacts. Complete protection is intact when the status indicators are illuminated. When protection is lost, the status indicator will extinguish, the red service light will illuminate, and the dry contacts will change state. An optional surge counter is available.

A new diagnostic feature integrated within the TPS3 12 and TPS3 L12 is Ground Integrity Monitoring or (GIM) diagnostic indication circuit. Ground Integrity Monitoring or (GIM) diagnostics monitors the health of the electrical system's neutral to ground bond. If voltage is seen across neutral and ground, the phase indicators will remain illuminated, while the red service light begins to flash alerting the end user that the electrical system grounding needs to be checked and serviced. This feature can be remotely monitored via the dry contact outputs. Siemens TPS3s are one of the first in the industry to offer this power quality safety and performance indication.

TPS3 12 and TPS3 L12 Key Features

- UL 1449-4 Type 2 SPD and UL 1283 Listed
  - Optional UL 1449 4th Edition Listed Type 1
- Type 1 / Type 2 SPD
- TPS3 12: 100 – 500 kA Per Phase Surge Current
- TPS3 L12: 150, 300, 450 kA Phase Surge Current
- 20 kA I_n (Most models)
- 200 kA SCCR (Most models)
- UL 96A Lightning Protection Master Labeling compliant (@ 20 kA)
- Every MOV is monitored, including N-G
- Mounts external to electrical distribution equipment
  - Recommended for line side or load side applications
- Standard NEMA 1/12/3R/04 ANSI 61 steel enclosure
- TPS3 12 Modes of Protection – L-N, L-G, N-G, and L-L
- TPS3 L12 Modes of Protection – L-N, L-G, N-G, and L-L (directly connected L-L elements)
- Standard Monitoring:
  - LED Indicators
  - Ground Integrity Monitoring diagnostics
  - Dry Contacts
  - Audible alarm with silence switch and test button
- Wire size: #8 AWG to 1/0
- Dimensions: 12" x 12" x 7" (305 mm x 305 mm x 178 mm)③
- Weight: 20 lb. (9.07 kg)③
- 10 Year Product Warranty

Available Options:

- Internal rotary disconnect
- Thru-door disconnect

TPS3 12

Ordering Information

Catalog # TPS3 ☐ 12 ☐☐ ☐ ☐☐☐

Voltage Code

A = 120/240 V, 1Ø, 3W
B = 120/240 V, 3Ø, 4W
C = 120/208 V, 3Ø, 4W
D = 240 V, 3Ø, 3W①
E = 277/480 V, 3Ø, 4W
F = 480 V, 3Ø, 3W①
G = 600 V, 3Ø, 3W②
K = 380/220 V, 3Ø, 4W
L = 600/347 V, 3Ø, 4W
S = 400/230 V, 3Ø, 4W

Surge Current (kA)

10 = 100 kA per phase
15 = 150 kA per phase
20 = 200 kA per phase
25 = 250 kA per phase
30 = 300 kA per phase
40 = 400 kA per phase
50 = 500 kA per phase

Enclosure

0 = Standard NEMA 1/12/3R/4 Steel
V = NEMA 4X non-metallic
S = NEMA 4X stainless steel
F = NEMA 1 flush mount
P = NEMA 1 screwcover pullbox with extended display on 6ft cable for line side mounting in SWBD/SWGR

Options

2 = Type 2 SPD (Default) Includes UL 1283 EMI/RFI Filters
0 = Type 1 SD (Consult Factory Prior to Ordering)
D = Internal rotary disconnect
T = Thru-door disconnect
X = Surge Counter (Standard)

Example: **TPS3C12100XD2** = Type 2 SPD (Default) for a 208/120V application with a surge current capacity of 100kA per phase, in a standard NEMA 1/12/3R/4 enclosure with a surge counter and internal rotary disconnect option.

When option **X**, **T**, or **D** are NOT selected, include a **zero** (**0**) in the field.

Available Accessories: Ordered Separately

RMSIE = Remote monitor
① Not available in 500 kA
② Available in 100 kA, 150 kA, 200 kA & 250 kA only

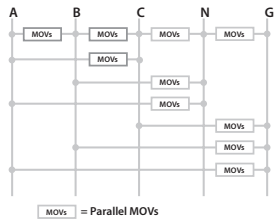

"True" or "Discrete" 10-Mode SPD

TPS3 L12

Ordering Information

Catalog # TPS3 ☐ L12 ☐☐ ☐ ☐☐☐

Voltage Code

A = 120/240 V, 1Ø, 3W
B = 120/240 V, 3Ø, 4W
C = 120/208 V, 3Ø, 4W
E = 277/480 V, 3Ø, 4W
K = 380/220 V, 3Ø, 4W
S = 400/230 V, 3Ø, 4W

Surge Current (kA)

15 = 150 kA per phase
30 = 300 kA per phase
45 = 450 kA per phase

Enclosure

0 = Standard NEMA 1/12/3R/4 Steel
V = NEMA 4X non-metallic
S = NEMA 4X stainless steel
F = NEMA 1 flush mount
P = NEMA 1 screwcover pullbox with extended display on 6ft cable for line side mounting in SWBD/SWGR

Options

2 = Type 2 SPD (Default) Includes UL 1283 EMI/RFI Filters
0 = Type 1 SD (Consult Factory Prior to Ordering)
D = Internal rotary disconnect
T = Thru-door disconnect
X = Surge Counter (Standard)

Example: **TPS3CL12150XD2** = 10 Mode, Type 2 SPD (Default) for a 208/120V application with a surge current capacity of 150kA per phase, in a standard NEMA 1/12/3R/4 enclosure with a surge counter and internal rotary disconnect option.

When an option is NOT selected, include a **zero** (**0**) in the field.

Available Accessories: Ordered Separately

RMSIE = Remote monitor

③ Internal disconnect options and other NEMA ratings may increase enclosure size and weight

JUNCTION BOX

Panel Enclosures
Type 3R Large Continuous Hinge Cover
Data Sheet and Catalog Number

Application
- Used as wiring boxes, junction and pull boxes
- Protects against falling rain, sleet and external ice formation

Standards
- UL 50 listed, Type 3R
- CSA C22.2 No. 40 certified, Type 3R
- Conforms to NEMA standard for Type 3R

Construction
- Enclosure and door are fabricated from code gauge galvaneal steel, (see below)
- Enclosure standard without knockouts
- Door is secured to the body with a continuous hinge and stainless steel pin on one side and captive screws on the opposite side
- Door has padlock hasp with sealing hole provision
- .375-16 collar studs are furnished for mounting optional panel
- External mounting feet are provided for secure wall mounting
- Ground stud provided on door

Finish
- Wash and phosphate undercoat
- ANSI 61 gray polyester powder finish

Accessories
- Panels
- Touch-up paint
- See Accessories section

Discount Schedule: A2

Subclass: AU0

Enclosure	Enclosure Size Height x Width x Depth A x B x C		D			Panel	Panel Size	
Catalog Number	in.	mm	in.	mm	Gauge	Catalog Number	Height x Width in.	mm
16126RHC	16.00 x 12.00 x 6.00	406 x 305 x 152	5.00	127	16	N1612P	13.00 x 9.00	330 x 229
16166RHC	16.00 x 16.00 x 6.00	406 x 406 x 152	9.00	229	16	N1616P	13.00 x 13.00	330 x 330
18186RHC	18.00 x 18.00 x 6.00	457 x 457 x 152	13.00	330	16	N1818P	15.00 x 15.00	381 x 381
181810RHC	18.00 x 18.00 x 10.00	457 x 457 x 254	13.00	330	16	N1818P	15.00 x 15.00	381 x 381
20166RHC	20.00 x 16.00 x 6.00	508 x 406 x 152	9.00	229	16	N2016P	17.00 x 13.00	432 x 330
20208RHC	20.00 x 20.00 x 8.00	508 x 508 x 203	13.00	330	16	N2020P	17.00 x 17.00	432 x 432
24208RHC	24.00 x 20.00 x 8.00	610 x 508 x 203	13.00	330	16	N2420P	20.87 x 16.87	530 x 428
24248RHC	24.00 x 24.00 x 8.00	610 x 610 x 203	17.00	432	14	N2424P	20.87 x 20.87	530 x 530
242410RHC	24.00 x 24.00 x 10.00	610 x 610 x 254	17.00	432	14	N2424P	20.87 x 20.87	530 x 530
30248RHC	30.00 x 24.00 x 8.00	762 x 610 x 203	17.00	432	14	N3024P	26.87 x 20.87	682 x 530
302410RHC	30.00 x 24.00 x 10.00	762 x 610 x 254	17.00	432	14	N3024P	26.87 x 20.87	682 x 530
30308RHC	30.00 x 30.00 x 8.00	762 x 762 x 203	17.00	432	14	N3030P	26.87 x 26.87	682 x 682
303012RHC	30.00 x 30.00 x 12.00	762 x 762 x 305	27.00	432	14	N3030P	26.87 x 26.87	682 x 682
303016RHC	30.00 x 30.00 x 16.00	762 x 762 x 406	27.00	432	14	N3030P	26.87 x 26.87	682 x 682
362412RHC	36.00 x 24.00 x 12.00	914 x 610 x 305	17.00	432	14	N3624P	32.87 x 20.87	835 x 530
363012RHC	36.00 x 30.00 x 12.00	914 x 762 x 305	27.00	432	14	N3630P	32.87 x 26.87	835 x 682
363610RHC	36.00 x 36.00 x 10.00	914 x 914 x 254	27.00	432	14	N3636P	32.87 x 32.87	835 x 835
363612RHC	36.00 x 36.00 x 12.00	914 x 914 x 305	27.00	432	14	N3636P	32.87 x 32.87	835 x 835
423012RHC	42.00 x 30.00 x 12.00	1067 x 762 x 305	27.00	432	14	N4230P	38.87 x 26.87	987 x 682
423612RHC	42.00 x 36.00 x 12.00	1067 x 914 x 305	27.00	432	14	N4236P	38.87 x 32.87	987 x 835
483612RHC	48.00 x 36.00 x 12.00	1219 x 914 x 305	27.00	432	14	N4836P	44.87 x 32.87	1140 x 835
483616RHC	48.00 x 36.00 x 16.00	1219 x 914 x 406	27.00	432	14	N4836P	44.87 x 32.87	1140 x 835
603612RHC	60.00 x 36.00 x 12.00	1524 x 914 x 305	27.00	432	14	N6036P	56.87 x 32.87	1444 x 835

Notes: We can provide special sizes, finishes and other modifications. Consult the factory for your special requirements. Dimensions are in inches. Millimeters shown are for reference only. Data subject to change without notice.

Panel Enclosures
Type 3R Large Continuous Hinge Cover
Illustration Sheet

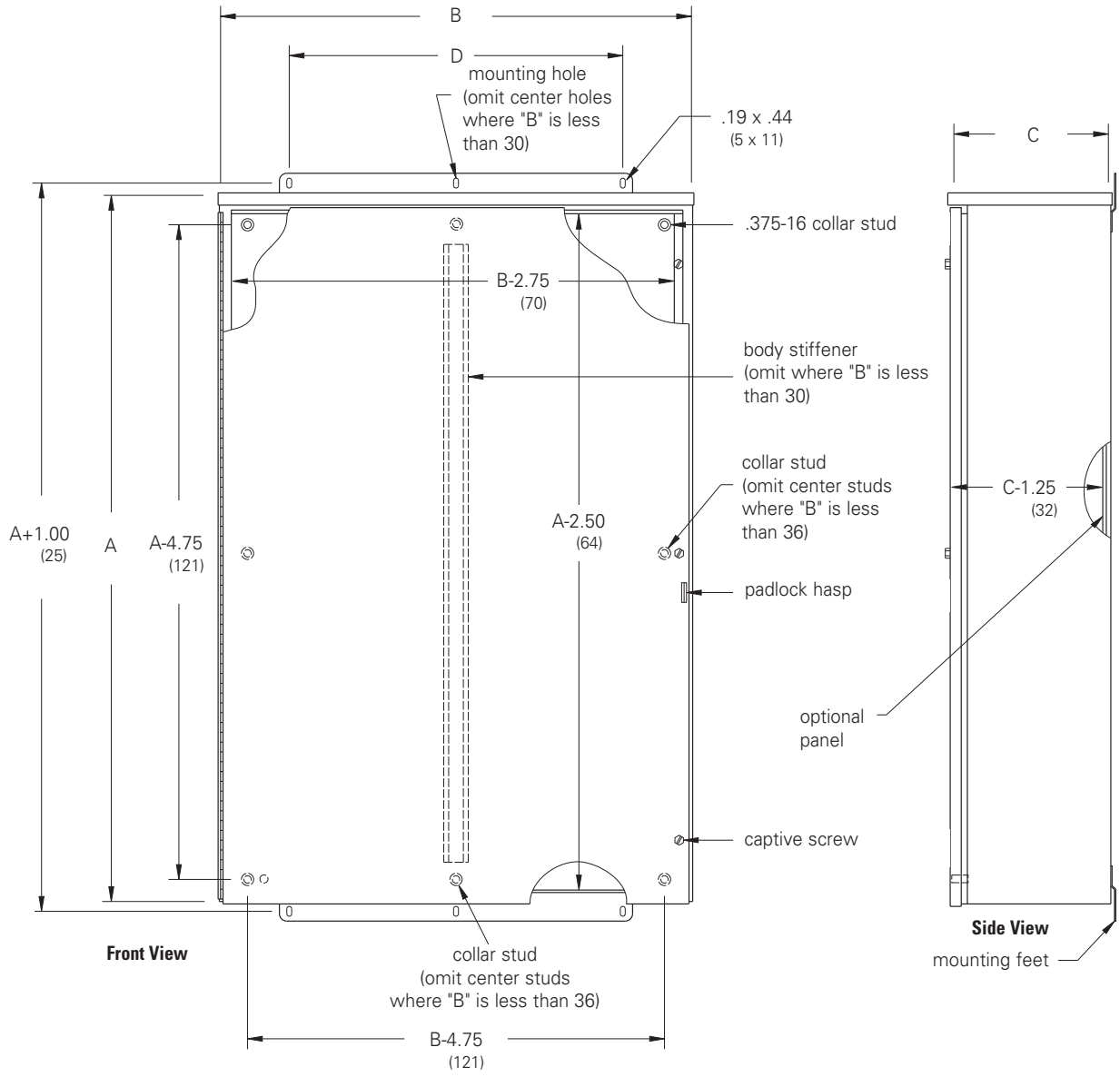

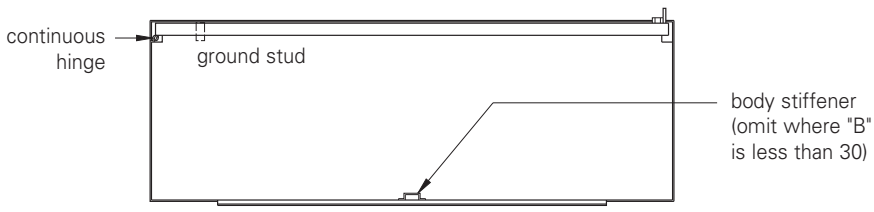

Bottom View

Notes: Dimensions are in inches. Millimeters shown are for reference only. Data subject to change without notice.

DEPARTMENT OF THE ARMY
ALBUQUERQUE DISTRICT, CORPS OF ENGINEERS
ALBUQERQUE DISTRICT OFFICE
4101 JEFFERSON PLAZA NE
ALBUQUERQUE, NM 87109

SUBMITTAL REVIEW VERIFICATION SHEET

PROJECT TITLE: Kirtland BFF Mid-Plume Pump and Treat System Expansion
CONTRACT NUMBER: W912DR-12-D-0006 DM01
DATE RECEIVED: 10-09-2017
DATE REVIEWED: 10-10-2017

DESCRIPTION OF ITEMS REVIEWED:

1. EATON Cooper Transformer

NO EXCEPTIONS TAKEN.	**X**
EXCEPTIONS AS NOTED ON DRAWINGS AND/OR ATTACHED SHEETS(S). RESUBMISSION NOT REQUIRED.	
EXCEPTIONS AS NOTED ON DRAWINGS AND/OR ATTACHED SHEETS(S). RESUBMISSION REQUIRED.	
RECEIPT ACKKNOWLEDGED.	

Notes:

(EA submittal review sheet lists transformer manufacturer as Siemens)

NOTE: ITEMS REVIEWED AS TO GENERAL LAYOUT ONLY. DIMENSIONS AND QUANTITIES NOT CHECKED. REVIEW DOES NOT RELIEVE CONTRACTOR OF RESPONSIBILITIES FOR ANY ERRORS WHICH MAY EXIST AS CONTRACTOR SHALL BE RESPONSIBLE FOR DIMENSIONS AND DESIGN OF ADEQUATE CORRECTIONS, DETAILS AND SATISFACTORY CONSTRUCTION OF WORK.

SIGNATURE SANCHEZ.AMY.ELIZABETH.1454434338 Digitally signed by SANCHEZ.AMY.ELIZABETH.1454434338 DN: c=US, o=U.S. Government, ou=DoD, ou=PKI, ou=USA, cn=SANCHEZ.AMY.ELIZABETH.1454434338 Date: 2017.10.10 14:41:15 -06'00' **DATE** 10/10/2017

EA Engineering, Science, and Technology, Inc., PBC

Submittal Review Sheet 1

Project Name: **Kirtland BFF Mid-Plume Pump and Treat System Expansion**			Date Received: **10/9/2017**
Project Owner: **Kirtland Air Force Base**			Checked By: **Tyler Curley**
Contractor: **Wilson Electric**	Engineer: **EA Engineering, Science and Technology, Inc., PBC.**		Log Page: **NA**
Address: **501 General Somervell SE # B** **Albuquerque, NM 87123**	Address: **320 Gold Ave. SW, Suite 1300** **Albuquerque, NM 87102**		EA No.: 62599DM01
			Spec. Section: **NA**
			Drawing/Detail No.: **E-000/E-001**
ATTN: Matthew Walstrom	ATTN: **Devon Jercinovic**	1st Sub	Re-Sub
Date Transmitted: **10/9/2017**	Prev. Transmittal Date: **08/15/17**		

Item No.	No. Copies	Description	Manufacturer	Mfg/Vendor Dwg or Detail	Action Taken*
1	1	Transformer	Siemens		**A**

The Action Designated Above is in Accordance with the Following Legend:

A – Furnish as Submitted
B – Furnish as Noted
C – Revise and Re-submit
1. Not enough information for review.
2. No reproducible submitted.
3. Copies illegible.
4. Not enough copies submitted.
5. Wrong sequence number.
6. Wrong resubmittal number.
7. Wrong Spec. Section.
8. Wrong form used.
9. See Comments.

D – Rejected
E – Engineer's Review not Required
1. Submittal not required.
2. Supplemental Information. Submittal retained for Information purposes only.
3. Information reviewed and approved on prior submittal.
4. See Comments.

Review is for general compliance with Contract Documents. No responsibility is assumed for correctness of dimensions or detail. Contractor is required to specify deviations from contract requirements. Lack of exceptions noted by Engineer does not waive Contractor's obligation to comply with Drawings and Specifications.

Comments:
Items reviewed and confirmed to meet requirements
(Reviewed Material in Parentheses)
Issues in Bold

Please see transformer specifications.

By: _____ Date: 10/9//17

Distribution: [1] Contractor [1] Engineer [1] Owner

ITE	DESCRIPTION
1	Bolted Cover w/ Handhole w/ Nutguard
2	Cooper Bayonet Fusing w/ Dripshield
3	Current Limiting Backup Fuses (Internal)
4	Drain Valve with Sampler
5	Ground Nut .50-13 Tap
6	Ground Strap and Nut
7	9.0kV (7.65kV MCOV) Elbow Arrester (boxed)
8	High Security Cabinet w/ Pentahead Door Bolts
9	35kV 200 Amp HV Bushing Well w/ 15kV Insert
10	Lifting Lug
11	Liquid Temperature Gauge
12	1.2kV LV Bushing w/4 Hole Spade
13	Magnetic Oil Level Gauge
14	Nameplate
15	One Inch Upper Press. Conn. and Fill Plug
16	Two Position Loadbreak Switch
17	Parking Stand
18	Pressure Relief Valve
19	Pressure Vacuum Gauge
20	Schrader Valve
21	Tank Base w/ Jacking and Rolling Facilities
22	5-Position Tap Changer
23	X0 Bushing

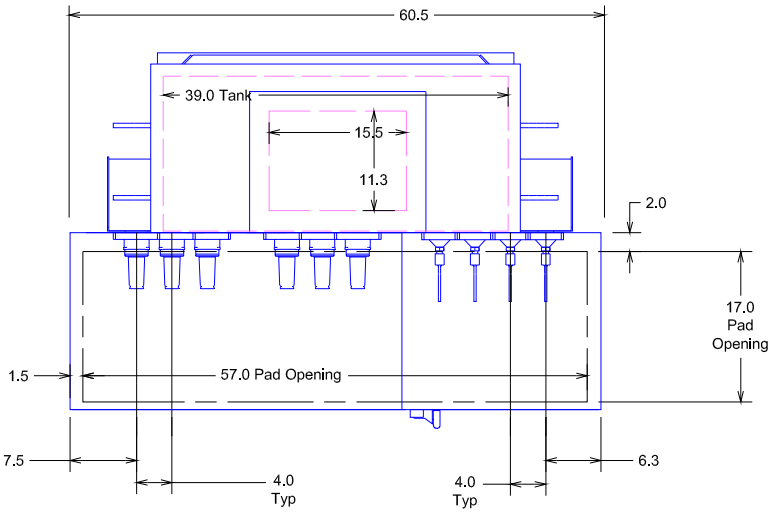

Cabinet Removed

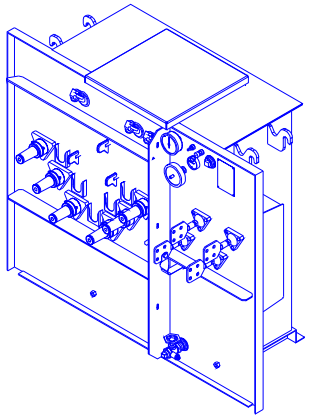

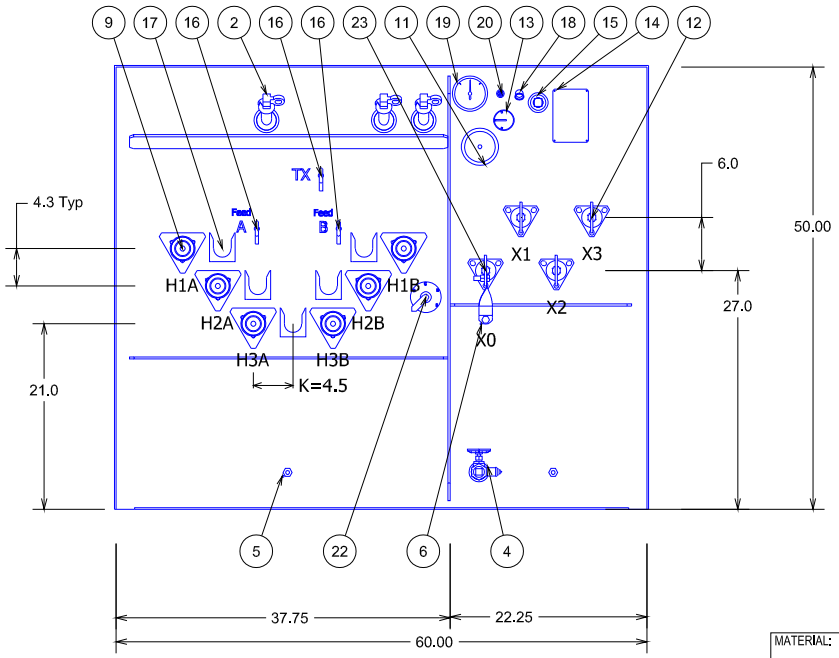

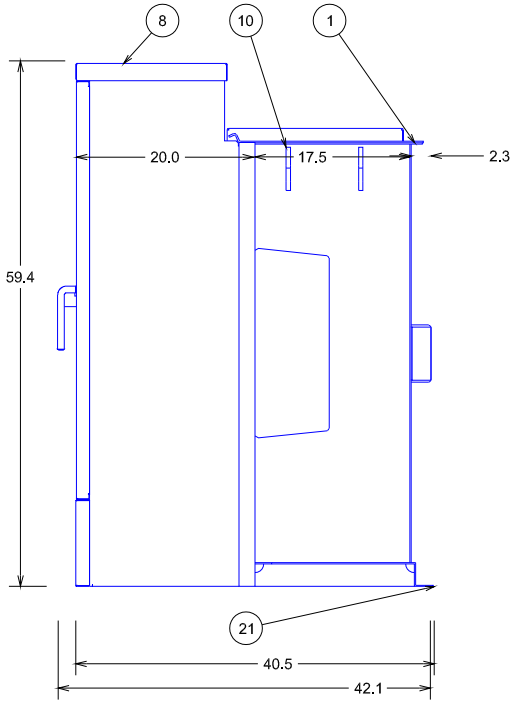

3PH Padmount Transformer 60Hz
75.0 kVA KNAN 65 AWR FR3
HV 12470D 95 kV BIL
LV 480Y/277 30 kV BIL
3.89 %IZ
Special Topcoat Sherwin Williams Sand Dollar #6099
Mild Steel Construction
UL Listed

2ND NamePlate Outside LV Door

SO	212171077
PO	5501547574
Customer Name	BORDER STATES ELECTRIC SUPPLY ALB
Project Name	KAFB

MATERIAL:

ALL DIMENSIONS ARE IN INCHES [MM]

THE INFORMATION ON THIS DOCUMENT WAS CREATED BY EATON. IT WAS DISCLOSED IN CONFIDENCE AND IS ONLY TO BE USED FOR THE PURPOSE IN WHICH IT WAS SUPPLIED.

THIS DRAWING HAS BEEN GENERATED FROM A 3D MODEL.

EATON
Powering Business Worldwide

TITLE: Distribution Transformer Outline Drawing

DESC: **COOPER POWER SERIES** THREE-PHASE PAD-MOUNTED COMPARTMENTAL TYPE

DWG:	DATE:	REF:	SHEET #:	SCALE:	REV:
PTP	10/4/2017	P3D V03R08M06	1 OF 1		00

00028P06XRXA

00028P06XRXA
REVISIONS

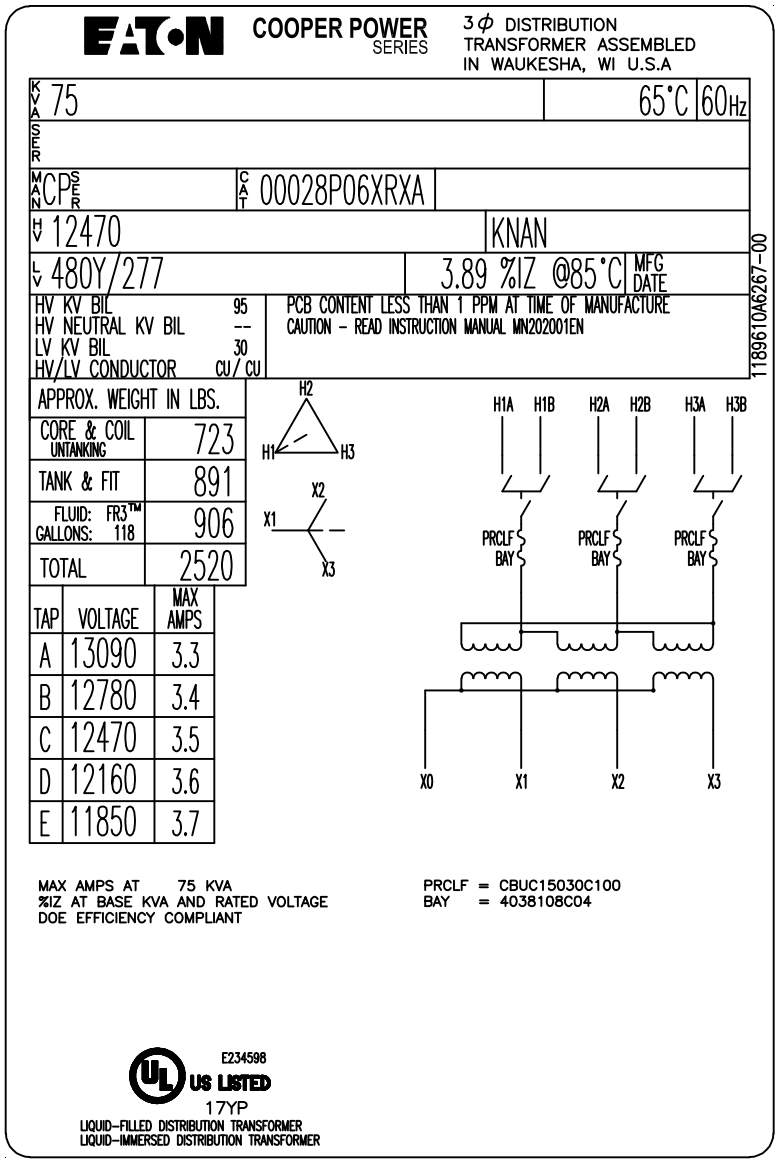

NOTES: **1) ACTUAL PLATE IS A NEGATIVE OF THE ABOVE DRAWING.**
2) ACTUAL %IZ TO BE STAMPED IN AFTER TESTING.

NAMEPLATE MATERIAL: ALUMINUM

212171077,11

1189610A6267 REVISIONS

MATERIAL:

ALL DIMENSIONS ARE IN INCHES [MM]

THE INFORMATION ON THIS DOCUMENT WAS CREATED BY EATON. IT WAS DISCLOSED IN CONFIDENCE AND IS ONLY TO BE USED FOR THE PURPOSE IN WHICH IT WAS SUPPLIED.

Powering Business Worldwide

TITLE: LASER NAMEPLATE

DESC: **COOPER POWER SERIES** 00028P06XRXA

DWG:	DATE:	REF:	SHEET #:	SCALE:	REV:
PTP	10/6/2017		1 of 1	1=1	00

1189610A6267

Three-phase pad-mounted compartmental type transformer

General

At Eaton, we are constantly striving to introduce new innovations to the transformer industry, bringing you the highest quality, most reliable transformers. Eaton's Cooper Power series Transformer Products are ISO 9001 compliant, emphasizing process improvement in all phases of design, manufacture, and testing. In order to drive this innovation, we have invested both time and money in the Thomas A. Edison Technical Center, our premier research facility in Franksville, Wisconsin. Such revolutionary products as distribution-class UltraSIL™ Polymer-Housed Evolution™ surge arresters and Envirotemp™ FR3™ fluid have been developed at our Franksville lab.

With transformer sizes ranging from 45 kVA to 12 MVA and high voltages ranging from 2400 V to 46 kV, Eaton has you covered. From fabrication of the tanks and cabinets to winding of the cores and coils, to production of arresters, switches, tap changers, expulsion fuses, current limit fuses, bushings (live and dead) and molded rubber goods, Eaton does it all. Eaton's Cooper Power series transformers are available with electrical grade mineral oil or Envirotemp™ FR3™ fluid, a less-flammable and bio-degradable fluid. Electrical codes recognize the advantages of using Envirotemp™ FR3™ fluid both indoors and outdoors for fire sensitive applications. The bio-based fluid meets Occupational Safety and Health Administration (OSHA) and Section 450.23 NEC Requirements.

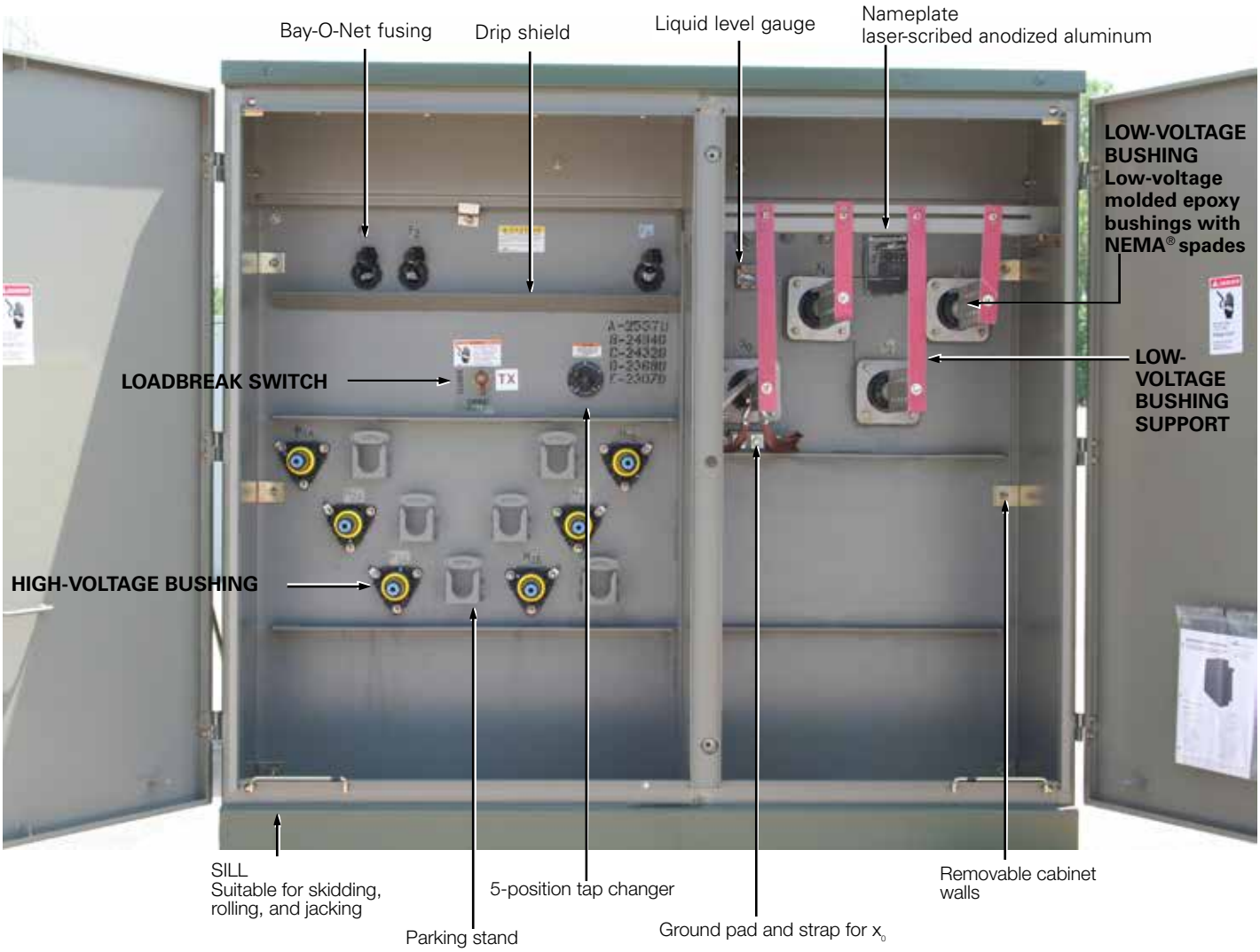

Figure 1. Three-phase pad-mounted compartmental type transformer.

Table 1. Product Scope

Type	Three Phase, 50 or 60 Hz, 65 °C Rise (55 °C, 55/65 °C), 65/75 °C, 75 °C
Fluid Type	Mineral oil or Envirotemp™ FR3™ fluid
Coil Configuration	2-winding or 4-winding or 3-winding (Low-High-Low), 3-winding (Low-Low-High)
Size	45 – 10,000 kVA
Primary Voltage	2,400 – 46,000 V
Secondary Voltage	208Y/120 V to 14,400 V
Specialty Designs	Inverter/Rectifier Bridge
	K-Factor (up to K-19)
	Vacuum Fault Interrupter (VFI)
	UL® Listed & Labeled and Classified
	Factory Mutual (FM) Approved®
	Solar/Wind Designs
	Differential Protection
	Seismic Applications (including OSHPD)
	Hardened Data Center

Table 2. Three-Phase Ratings

Three-Phase 50 or 60 Hz
kVA Available[1]:
45, 75, 112.5, 150, 225, 300, 500, 750, 1000, 1500, 2000, 2500, 3000, 3750, 5000, 7500, 10000

[1]Transformers are available in the standard ratings and configurations shown or can be customized to meet specific needs.

Table 3. Impedance Voltage

	Low-voltage rating		
Rating (kVA)	**≤ 600 V**	**2400 Δ through 4800 Δ**	**6900 Δ through 13800GY/7970 or 13800 Δ**
45-75	2.70-5.75	2.70-5.75	2.70-5.75
112.5-300	3.10-5.75	3.10-5.75	3.10-5.75
500	4.35-5.75	4.35-5.75	4.35-5.75
750-2500	5.75	5.75	5.75
3750	5.75	5.75	6.00
5000		6.00	6.50

Note: The standard tolerance is ± 7.5%

Table 4. Audible Sound Levels

	NEMA® TR-1 Average
Self-Cooled, Two Winding kVA Rating	**Decibels (dB)**
45-500	56
501-700	57
701-1000	58
1001-1500	60
1501-2000	61
2001-2500	62
2501-3000	63
3001-4000	64
4001-5000	65
5001-6000	66
6001-7500	67
7501-10000	68

Table 5. Insulation Test Levels

KV Class	Induced Test 180 or 400 Hz 7200 Cycle	kV BIL Distribution	Applied Test 60 Hz (kV)
1.2	Twice Rated Voltage	30	10
2.5		45	15
5		60	19
8.7		75	26
15		95	34
25		125	40
34.5		150	50

Table 6. Temperature Rise Ratings 0-3300 Feet (0-1000 meters)

	Standard	Optional
Unit Rating (Temperature Rise Winding)	65 °C	55 °C, 55/65 °C, 75 °C
Ambient Temperature Max	40 °C	50 °C
Ambient Temperature 24 Hour Average	30 °C	40 °C
Temperature Rise Hotspot	80 °C	65 °C

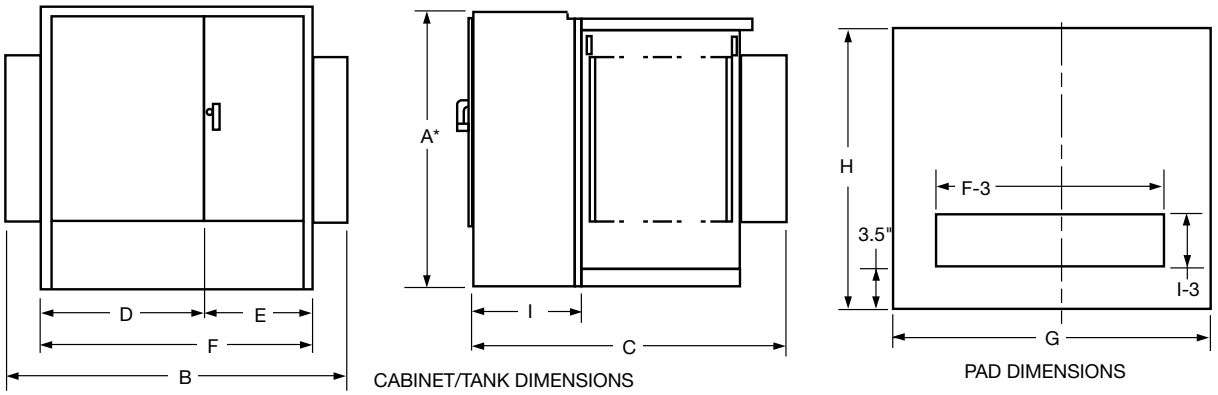

Figure 2. Transformer and pad dimensions.

* Add 9" for Bay-O-Net fusing.

Table 7. Fluid-filled—aluminum windings 55/65 °C Rise[1]

65° Rise	DEAD-FRONT—LOOP OR RADIAL FEED—BAY-O-NET FUSING OIL FILLED—ALUMINUM WINDINGS										
	OUTLINE DIMENSIONS (in.)									Gallons of Fluid	Approx. Total Weight (lbs.)
kVA Rating	A*	B	C	D	E	F	G	H	I		
45	50	68	39	42	26	68	72	43	20	110	2,100
75	50	68	39	42	26	68	72	43	20	115	2,250
112.5	50	68	49	42	26	68	72	53	20	120	2,350
150	50	68	49	42	26	68	72	53	20	125	2,700
225	50	72	51	42	30	72	76	55	20	140	3,150
300	50	72	51	42	30	72	76	55	20	160	3,650
500	50	89	53	42	30	72	93	57	20	190	4,650
750	64	89	57	42	30	72	93	61	20	270	6,500
1000	64	89	59	42	30	72	93	63	20	350	8,200
1500	73	89	86	42	30	72	93	90	24	410	10,300
2000	73	72	87	42	30	72	76	91	24	490	12,500
2500	73	72	99	42	30	72	76	103	24	530	14,500
3000	73	84	99	46	37	84	88	103	24	620	16,700
3750	84	85	108	47	38	85	88	112	24	660	19,300
5000	84	96	108	48	48	96	100	112	24	930	25,000
7500	94	102	122	54	48	102	100	126	24	1,580	41,900

1 Weights, gallons of fluid, and dimensions are for reference only and not for construction. Please contact Eaton for exact dimensions.

* Add 9" for Bay-O-Net fusing.

Table 8. Fluid-Filled—Copper Windings 55/65 °C Rise[1]

65° Rise	DEAD-FRONT—LOOP OR RADIAL FEED—BAY-O-NET FUSING OIL FILLED—COPPER WINDINGS										
	OUTLINE DIMENSIONS (in.)									Gallons of Fluid	Approx. Total Weight (lbs.)
kVA Rating	A*	B	C	D	E	F	G	H	I		
45	50	64	39	34	30	64	69	43	20	110	2,100
75	50	64	39	34	30	64	69	43	20	115	2,350
112.5	50	64	49	34	30	64	69	53	20	115	2,500
150	50	64	49	34	30	64	69	53	20	120	2,700
225	50	64	51	34	30	64	73	55	20	140	3,250
300	50	64	51	34	30	64	75	55	20	160	3,800
500	50	81	53	34	30	64	85	57	20	200	4,800
750	64	89	57	42	30	72	93	61	20	255	6,500
1000	64	89	59	42	30	72	93	63	20	300	7,800
1500	73	89	86	42	30	72	93	90	24	410	10,300
2000	73	72	87	42	30	72	76	91	24	420	11,600
2500	73	72	99	42	30	72	76	103	24	500	14,000
3000	73	84	99	46	37	84	88	103	24	720	18,700
3750	84	85	108	47	38	85	88	112	24	800	20,500
5000	84	96	108	48	48	96	100	112	24	850	25,000
7500	94	102	122	54	48	102	100	126	24	1,620	46,900

[1] Weights, gallons of fluid, and dimensions are for reference only and not for construction. Please contact Eaton for exact dimensions.

* Add 9" for Bay-O-Net fusing.

Standard features

Connections and neutral configurations

- Delta - Wye: Low voltage neutral shall be a fully insulated X0 bushing with removable ground strap.
- Grounded Wye-Wye: High voltage neutral shall be internally tied to the low voltage neutral and brought out as the H0X0 bushing in the secondary compartment with a removable ground strap.
- Delta-Delta: Transformer shall be provided without a neutral bushing.
- Wye-Wye: High voltage neutral shall be brought out as the H0 bushing in the primary compartment and the low voltage neutral shall be brought as the X0- bushing in the secondary compartment.
- Wye-Delta: High voltage neutral shall be brought out as the H0 bushing in the primary compartment. No ground strap shall be provided (line to line rated fusing is required).

High and low voltage bushings

- 200 A bushing wells (15, 25, and 35 kV)
- 200 A, 35 kV Large Interface
- 600 A (15, 25, and 35 kV) Integral bushings (dead-front)
- Electrical-grade wet-process porcelain bushings (live-front)

Tank/cabinet features

- Bolted cover for tank access (45-2500 kVA)
- Welded cover with hand hole (>2500 kVA)
- Three-point latching door for security
- Removable sill for easy installation
- Lifting lugs (4)
- Stainless steel cabinet hinges and mounting studs
- Steel divider between HV and LV compartment
- 20" Deep cabinet (45-1000 kVA)
- 24" Deep cabinet (1500-7500 kVA)
- 30" Deep cabinet (34.5/19.92 kV)
- Pentahead captive bolt
- Stainless steel 1-hole ground pads (45-500 kVA)
- Stainless steel 2-hole ground pads (750-10,000 kVA)
- Parking Stands (dead-front)

Valves/plugs

- One-inch upper filling plug
- One-inch drain plug (45-500 kVA)
- One-inch combination drain valve with sampling device in low voltage compartment (750-10,000 kVA)
- Automatic pressure relief valve

Nameplate

- Laser-scribed anodized aluminum nameplate

Figure 3. Drain valve with sampler.

Figure 4. Automatic Pressure relief valve.

Figure 5. Liquid level gauge.

Figure 6. External Gauges.

Figure 7. External visible break with gauges.

Optional features

High and low voltage bushings

- 200 A (15, 25 kV) bushing inserts
- 200 A (15, 25 kV) feed thru inserts
- 200 A (15, 25 kV) (HTN) bushing wells with removable studs
- High-voltage 600 A (15, 25, 35 kV) deadbreak one-piece bushings
- Low voltage 6-, 8-holes spade
- Low voltage 12-, 16-, 20-holes spade (750-2500 kVA)
- Low voltage bushing supports

Tank/cabinet features

- Stainless steel tank base and cabinet
- Stainless steel tank base, cabinet sides and sill
- 100% stainless steel unit
- Service entrance (2 inch) in sill or cabinet side
- Touch-up paint (domestic)
- Copper ground bus bar
- Kirk-Key provisions
- Nitrogen blanket
- Bus duct cutout

Special designs

- Factory Mutual (FM)
- UL® Classified
- Triplex
- High altitude
- K-Factors
- Step-up
- Critical application
- Modulation transformers
- Seismic applications (including OSHPD)

Switches

- One, two, or three On/Off loadbreak switches
- 4-position loadbreak V-blade switch or T-blade switch
- Delta-wye switch
- 3-position V-Blade selector switch
- 100 A, 150 A, 300 A tap changers
- Dual voltage switch
- Visible break with VFI interrupter interlock
- External visible break (15, 25, and 35 kV, up to 3 MVA)
- External visible break with gauges (15, 25, and 35 kV, up to 3 MVA)

Gauges and devices

- Liquid level gauge (optional contacts)
- Pressure vacuum gauge (optional contacts and bleeder)
- Dial-type thermometer (optional alarm contacts)
- Cover mounted pressure relief device (optional alarm contacts)
- Ground connectors
- Hexhead captive bolt
- Molded case circuit breaker mounting provisions
- External gauges in padlockable box

Overcurrent protection

- Bay-O-Net fusing (Current sensing, dual sensing, dual element, high amperage overload)
- Bay-O-Net expulsion fuse in series with a partial range under-oil ELSP current limiting fuse (below 23 kV)
- Cartridge fusing in series with a partial range under-oil ELSP current limiting fuse (above 23 kV)
- MagneX™ interrupter with ELSP current-limiting fuse
- Vacuum Fault Interrupter (VFI)
- Visible break window
- Fuse/switch interlock

Valves/plugs

- Drain/sampling valve in high-voltage compartment
- Globe type upper fill valve

Overvoltage protection

- Distribution-, intermediate-, or station-class surge arresters
- Elbow arresters (for dead-front connections)

Metering/fan/control

- Full metering package
- Current Transformers (CTs)
- Metering Socket
- NEMA® 4 control box (optional stainless steel)
- NEMA® 7 control box (explosion proof)
- Fan Packages

Testing

- Customer test witness
- Customer final inspection
- Zero Sequence Impedance Test
- Heat Run Test
- ANSI® Impulse Test
- Audible Sound Level Test
- RIV (Corona) Test
- Dissolved Gas Analysis (DGA) Test
- 8- or 24-Hour Leak Test

Coatings (paint)

- ANSI® Bell Green
- ANSI® #61 Light Gray
- ANSI® #70 Sky Gray
- Special paint available per request

Nameplate

- Stainless steel nameplate

Decals and labels

- High voltage warning signs
- Mr. Ouch
- Bi-lingual warning
- DOE compliant
- Customer stock code
- Customer stenciling
- Shock and arc flash warning decal
- Non-PCB decal

Construction

Core

The three-legged, step-lap mitered core construction is manufactured using a high-quality cutting machine. For maximum efficiency, cores are precisely stacked, virtually eliminating gaps in the corner joints.

Five-legged wound core or shell-type triplex designs are used for wye-wye connected transformers, and other special transformer designs.

Cores are manufactured with precision cut, burr-free, grain-oriented silicon steel. Many grades of core steel are available for optimizing core loss efficiency.

Coils

Pad-mounted transformers feature a rectangular coil configuration with wire-wound, high-voltage primaries and sheet-wound secondaries. The design minimizes axial stress developed by short circuits and provides for magnetic balancing of tap connections.

Coils are wound using the highest quality winding machines providing exacting tension control and conductor placement for superior short-circuit strength and maximum efficiency.

Extra mechanical strength is provided by diamond pattern, epoxy-coated paper insulation, used throughout the coil, with additional epoxy at heavy stress points. The diamond pattern distribution of the epoxy and carefully arranged ducts, provide a network of passages through which cooling fluid can freely circulate.

Coil assemblies are heat-cured under calculated hydraulic pressure to ensure performance against short-circuit forces.

Core and coil assemblies

Pad-mounted transformer core and coil assemblies are braced with heavy steel ends to prevent the rectangular coil from distorting under short-circuit conditions. Plates are clamped in place using presses, and welded or bolted to form a solid core and coil assembly. Core and coil assemblies exceed ANSI® and IEEE® requirements for short-circuit performance. Due to the rigidity of the design, impedance shift after short-circuit is comparable to that of circular wound assemblies.

Tanks

Transformer tanks are designed for high strength and ease of handling, installation, and maintenance. Tanks are welded using precision-cut, hot rolled, pickled and oiled steel. They are sealed to protect the insulating fluid and other internal components.

Transformer tanks are pressure-tested to withstand 7 psig without permanent distortion and 15 psig without rupture.

Tank finish

An advanced multi-stage finishing process exceeds IEEE Std C57.12.28™-2014 standards. The eight-stage pre-treatment process assures coating adhesion and retards corrosion. It converts tank surfaces to a nonmetallic, water insoluble iron phosphate coating.

The paint method consists of two distinct layers of paint. The first is an epoxy primer (E-coat) layer which provides a barrier against moisture, salt and corrosives. The two-component urethane final coat seals and adds ultraviolet protection.

Vacuum processing

Transformers are dried and filled with filtered insulating fluid under vacuum, while secondary windings are energized. Coils are heated to drive out moisture, ensuring maximum penetration of fluid into the coil insulation system.

Insulating fluid

Eaton's Cooper Power series transformers are available with electrical-grade mineral insulating oil or Envirotemp™ FR3™ fluid. The highly refined fluids are tested and degassed to assure a chemically inert product with minimal acid ions. Special additives minimize oxygen absorption and inhibit oxidation. To ensure high dielectric strength, the fluid is re-tested for dryness and dielectric strength, refiltered, heated, dried, and stored under vacuum before being added to the completed transformer.

Eaton's Cooper Power series transformers filled with Envirotemp™ FR3™ fluid enjoy unique fire safety, environmental, electrical, and chemical advantages, including insulation life extending properties.

A bio-based, sustainable, natural ester dielectric coolant, Envirotemp™ FR3™ fluid quickly and thoroughly biodegrades in the environment and is non-toxic per acute aquatic and oral toxicity tests.

Building for Environmental and Economic Sustainability (BEES) total life cycle assessment software, utilized by the US Dept. of Commerce, reports its overall environmental performance impact score at 1/4th that reported for mineral oil. Envirotemp™ FR3™ fluid has also earned the EPA Environmental Technology Verification of transformer materials.

With a fire point of 360 °C, Envirotemp™ FR3™ fluid is FM Approved® and Underwriters Laboratories (UL®) Classified "Less-Flammable" per NEC® Article 450-23, fitting the definition of a Listed Product per NEC®.

Figure 8. VFI transformer with visible break.

Pad-mounted VFI transformer

Eaton's Cooper Power series VFI transformer combines a conventional distribution transformer with the proven Vacuum Fault Interrupter (VFI). This combination provides both voltage transformation and transformer over current protection in one space saving and money saving package. The pad-mounted VFI transformer protects the transformer and provides proper coordination with upstream protective devices. When a transformer fault or overload condition occurs, the VFI breaker trips and isolates the transformer.

The three-phase VFI breaker has independent single-phase initiation, but is three-phase mechanically gang-tripped. A trip signal on any phase will open all three phases. This feature eliminates single-phasing of three phase loads. It also enables the VFI breaker to be used as a three-phase load break switch.

Due to the resettable characteristics of the VFI breaker, restoring three-phase service is faster and easier.

The sealed visible break window and switch is an option that can be installed to provide visible break contact. This feature provides enhanced safety and allows an operator to see if the loadbreak switch contacts are in an open or closed position before performing maintenance.

Envirotran™ FM Approved special protection transformer

Eaton's Cooper Power series Envirotran™ transformer is FM Approved and suitable for indoor locations. Factory Mutual Research Corporation's (FMRC) approval of the Envirotran transformer line makes it easy to comply with and verify compliance with Section 450.23, 2008 NEC, Less-Flammable Liquid-Filled Transformer Requirements for both indoor and outdoor locations.

Envirotran FM Approved transformers offer the user the benefit of a transformer that can be easily specified to comply with NEC, and makes FM Safety Data Sheet compliance simpler, while also providing maximum safety and flexibility for both indoor and outdoor installations.

Because the "FM Approved" logo is readily visible on the transformer and its nameplate, NEC compliance is now easily verifiable by the inspector.

Envirotran FM Approved transformers are manufactured under strict compliance with FMRC Standard 3990 and are filled with FM Approved Envirotemp™ FR3™ fluid, a fire-resistant dielectric coolant.

FM
APPROVED

Special application transformers

Data Center transformer

With focus rapidly shifting from simply maximizing uptime and supporting demand to improving energy utilization, the data center industry is continually looking for methods to increase its energy efficiency and reliability. Utilizing cutting edge technology, Eaton's Cooper Power series Hardened Data Center (HDC) transformers are the solution. Designed with special attention given to surge protection, HDC liquid-filled transformers provide superior performance under the harshest electrical environments. Contrary to traditional dry-type units, HDC transformers provide unsurpassed reliability, overloadability, operational life, efficiency, thermal loading and installed footprint. These units have reliably served more than 100 MW of critical data center capacity for a total of more than 6,000,000 hours without any reported downtime caused by a thermal or short-circuit coil failure.

The top priority in data center operations is uninterrupted service. Envirotran HDC transformers from Eaton, having substantially higher levels of insulation, are less susceptible to voltage surges. Eaton has experienced zero failures due to switching transients. The ANSI® and IEEE® standard impulse withstand ratings are higher for liquid-filled transformers, making them less susceptible to insulation failure. The Envirotran HDC transformer provides ultimate protection by increasing the BIL rating one level higher than standard liquid-filled transformer ratings. The cooling system of liquid-filled transformers provides better protection from severe overloads—overloads that can lead to significant loss of life or failure.

Data center design typically includes multiple layers of redundancy, ensuring maximum uptime for the critical IT load. When best in class transformer manufacturing lead times are typically weeks, not days, an unexpected transformer failure will adversely affect the facility's reliability and profitability. Therefore, the ability to determine the electrical and mechanical health of a transformer can reduce the probability of costly, unplanned downtime. Routine diagnostic tests, including key fluid properties and dissolved gas analysis (DGA), can help determine the health of a liquid-filled transformer. Although sampling is not required for safe operation, it will provide the user with valuable information, leading to scheduled repair or replacement, and minimizing the duration and expense of an outage. With a dry-type transformer, there is no reliable way to measure the health or likelihood of an impending failure.

Solar transformer

As a result of the increasing number of states that are adopting aggressive Renewable & Alternative Energy Portfolio Standards, the solar energy market is growing—nearly doubling year over year. Eaton, a key innovator and supplier in this expanding market, is proud to offer its Cooper Power series Envirotran transformers specifically designed for Solar Photovoltaic medium-voltage applications. Eaton is working with top solar photovoltaic developers, integrators and inverter manufacturers to evolve the industry and change the way we distribute power.

In accordance with this progressive stance, every Envirotran Solar transformer is filled with non-toxic, biodegradable Envirotemp™ FR3™ dielectric fluid, made from renewable seed oils. On top of its biodegradability, Envirotemp™ FR3™ fluid substantially extends the life of the transformer insulation, saving valuable resources. What better way to distribute green power than to use a green transformer. In fact, delaying conversion to Envirotran transformers places the burden of today's environmental issues onto tomorrow's generations. Eaton can help you create a customized transformer, based on site specific characteristics including: temperature profile, site altitude, solar profile and required system life. Some of the benefits gained from this custom rating include:

- Reduction in core losses
- Improved payback on investment
- Reduction in footprint
- Improved fire safety
- Reduced environmental impact

For the solar photovoltaic industry, Eaton is offering standard step up transformers and dual secondary designs, including 4-winding, 3-winding (Low-High-Low) and 3-winding (Low-Low-High) designs.

Wind transformer

Eaton is offering custom designs for renewable energy power generation. Eaton manufactures its Cooper Power series Generator Step-Up (GSU) transformers for installation at the base of every wind turbine. Additionally, grounding transformers are available for wind power generation.

DOE efficiency

The United States Department of Energy (DOE) has mandated efficiency values for most liquid type, medium voltage transformers. As a result, all applicable Eaton's Cooper Power series transformers 2500 kVA and below conform to efficiency levels as specified in the DOE ruling "10 CFR Part 431 Energy Conservation Program".

Underwriters Laboratories® (UL®) Listed and Labeled/ Classified

The Envirotran transformer from Eaton can be specified as UL® Listed & Labeled, and/or UL® Classified. Underwriters Laboratories (UL®) listing is a verification of the design and construction of the transformer to the ANSI® and IEEE® standards. UL® listing generally is the most efficient, cost-effective solution for complying with relevant state and local electrical codes. UL® Combination Classification/Listing is another way in which to comply with Section 450.23, 2008 NEC® requirements. This combines the UL® listed transformer with a UL® Classified Less-Flammable Liquid and complies with the use restrictions found within the liquid Classification.

c UL US
LISTED

K-Factor transformer

With a drastic increase in the use of ferromagnetic devices, arcing devices, and electric power converters, higher frequency loads have increased significantly. This harmonic loading has the potential to generate higher heat levels within a transformer's windings and leads by as much as 300%. Harmonic loading has the potential to induce premature failure in standard-design distribution transformers.

In addition to standard UL® "K-Factor" ratings, transformers can be designed to customer-provided specifications detailing precise loading scenarios. Onsite measurements of magnitude and frequency, alongside harmonic analysis of the connected load can be performed by Eaton engineers or a third party consultant. These field measurements are used to determine exact customer needs and outline the transformer specifications.

Eaton will design harmonic-resistant transformers that will be subjected to the unique harmonic loads. These units are designed to maintain normal temperature rise under harmonic, full-load conditions. Standard UL® "K-Factor" designs can result in unnecessary costs when the "next-highest" K-Factor must be selected for a calculated design factor. To save the customer these unnecessary costs, Eaton can design the transformer to the specific harmonic spectrum used in the application. Eaton's Cooper Power series K-factor transformers are filled with mineral oil or Envirotemp™ FR3™ fluid and enjoy the added benefits of dielectric cooling such as higher efficiencies than dry-type transformers.

Modulation transformer

Bundled with an Outboard Modulation Unit (OMU) and a Control and Receiving Unit (CRU), a Modulation Transformer Unit (MTU) is designed to remotely achieve two way communication.

The use of an MTU reduces travel time and expense versus traditional meter reading performed by high voltage electricians. Additionally, with MTU it is possible to manage and evaluate energy consumption data, providing reduced metering costs and fewer tenant complaints.

An MTU utilizes existing utility infrastructure, therefore eliminating the need to engineer and construct a dedicated communication network.

Figure 9. Modular transformer.

Inverter/rectifier bridge

Eaton complements its range of applications for transformers by offering dual winding designs. These designs are intended for connection to 12-pulse rectifier bridges.

Product attributes

To set us apart from other transformer manufactures, Eaton includes the following guarantees with every three-phase pad-mounted transformer.

Engineered to order (ETO)

Providing the customer with a well developed, cost-effective solution is the number one priority at Eaton. Using customer specifications, Eaton will work with the customer from the beginning to the end to develop a solution to fit their needs. Whether it is application specific, site specific, or a uniquely specified unit, Eaton will provide transformers with the best in class value and performance, saving the customer time and money.

Made in the U.S.A.

Eaton's three-phase pad-mounted transformers are produced right here in the United States of America. Our manufacturing facilities are positioned strategically for rapid shipment of products. Furthermore, should the need arise, Eaton has a broad network of authorized service repair shops throughout the United States.

Superior paint performance

Protecting transformers from nature's elements worldwide, Eaton's E-coat system provides unrivaled transformer paint life, and exceeds IEEE Std C57.12.28™-2014 and IEEE Std C57.12.29™-2005 standards. In addition to the outside of the unit, each transformer receives a gray E-coat covering in the interior of the tank and cabinet, providing superior rust resistance and greater visibility during service.

If the wide range of standard paint selections does not suit the customer's needs, Eaton will customize the paint color to meet their requirements.

Rectangular coil design

Eaton utilizes a rectangular coil design. This winding technique results in a smaller overall unit footprint as well as reducing the transformer weight. The smaller unit size does not hinder the transformer performance in the least. Units have proven short circuit withstand capabilities up to 10 MVA.

Testing

Eaton performs routing testing on each transformer manufactured including the following tests:

- Insulation Power Factor: This test verifies that vacuum processing has thoroughly dried the insulation system to required limits.
- Ratio, Polarity, and Phase Relation: Assures correct winding ratios and tap voltages; checks insulation of HV and LV circuits. Checks entire insulation system to verify all live-to-ground clearances.
- Resistance: This test verifies the integrity of internal high-voltage and low-voltage connections; provides data for loss upgrade calculations.
- Routine Impulse Tests: The most severe test, simulating a lightning surge. Applies one reduced wave and one full wave to verify the BIL rating.
- Applied Potential: Applied to both high-voltage and low-voltage windings, this test stresses the entire insulation system to verify all live-to-ground clearances.
- Induced Potential: 3.46 times normal plus 1000 volts for reduced neutral designs.
- Loss Test: These design verification tests are conducted to assure that guaranteed loss values are met and that test values are

within design tolerances. Tests include no-load loss and excitation current along with impedance voltage and load loss.

- Leak Test: Pressurizing the tank to 7 psig assures a complete seal, with no weld or gasket leaks, to eliminate the possibility of moisture infiltration or fluid oxidation.

Design performance tests

The design performance tests include the following:

- Temperature Rise: Our automated heat run facility ensures that any design changes meet ANSI® and IEEE® temperature rise criteria.
- Audible Sound Level: Ensures compliance with NEMA® requirements.
- Lightning Impulse: To assure superior dielectric performance, this test consists of one reduced wave, two chopped waves and one full wave in sequence, precisely simulating the harshest conditions.

Thomas A Edison Research and Test Facility

We are constantly striving to introduce new innovations to the transformer industry, bringing you the highest quality transformer for the lowest cost. Eaton's Cooper Power series Transformer Products are ISO 9001 compliant, emphasizing process improvement in all phases of design, manufacture, and testing. We have invested millions of dollars in the Thomas A. Edison Technical Center, our premier research facility in Franksville, Wisconsin affirming our dedication to introducing new innovations and technologies to the transformer industry. This research facility is fully available for use by our customers to utilize our advanced electrical and chemical testing labs.

Three-phase pad-mounted compartmental type transformer

Eaton
1000 Eaton Boulevard
Cleveland, OH 44122
United States
Eaton.com

Eaton's Cooper Power Systems Division
2300 Badger Drive
Waukesha, WI 53188
United States
Eaton.com/cooperpowerseries

© 2015 Eaton
All Rights Reserved
Printed in USA
Publication No. CA202003EN

Eaton, Cooper Power, MagneX, UltraSIL, Evolution, and Envirotran are valuable trademarks of Eaton in the U.S. and other countries. You are not permitted to use these trademarks without the prior written consent of Eaton.
IEEE Std C57.12.28™-2005 and Std C57.12.29™-2005 standards are trademarks of the Institute of Electrical and Electronics Engineers, Inc., (IEEE). This publication is not endorsed or approved by the IEEE.
IEEE® is a registered trademark of the Institute of Electrical and Electronics Engineers, Inc.
ANSI® is a registered trademark of American National Standards Institute.
National Electrical Code® and NEC® are registered trademarks of the National Fire Protection Association, Inc., Quincy, MA.
Underwriters Laboratories® and UL® are registered trademarks of UL LLC.
FM Approved®, FMRC, and Factory Mutual Research Corporation are trademarks of FM Global.
Envirotemp™ and FR3™ are licensed trademarks of Cargill, Incorporated.

For Eaton's Cooper Power series three-phase transformer product information call 1-877-277-4636 or visit: www.eaton.com/cooperpowerseries.

Powering Business Worldwide

DEPARTMENT OF THE ARMY
ALBUQUERQUE DISTRICT, CORPS OF ENGINEERS
ALBUQERQUE DISTRICT OFFICE
4101 JEFFERSON PLAZA NE
ALBUQUERQUE, NM 87109

SUBMITTAL REVIEW VERIFICATION SHEET

PROJECT TITLE: Kirtland BFF Mid-Plume Pump and Treat System Expansion
CONTRACT NUMBER: W912DR-12-D-0006 DM01
DATE RECEIVED: 8-17-2017
DATE REVIEWED: 8-24-2017

DESCRIPTION OF ITEMS REVIEWED:

1. Pull Box and Cover (PG4848BA48 and PG4848HA0017)

NO EXCEPTIONS TAKEN.	**X**
EXCEPTIONS AS NOTED ON DRAWINGS AND/OR ATTACHED SHEETS(S). RESUBMISSION NOT REQUIRED.	
EXCEPTIONS AS NOTED ON DRAWINGS AND/OR ATTACHED SHEETS(S). RESUBMISSION REQUIRED.	
RECEIPT ACKKNOWLEDGED.	

Notes:

NOTE: ITEMS REVIEWED AS TO GENERAL LAYOUT ONLY. DIMENSIONS AND QUANTITIES NOT CHECKED. REVIEW DOES NOT RELIEVE CONTRACTOR OF RESPONSIBILITIES FOR ANY ERRORS WHICH MAY EXIST AS CONTRACTOR SHALL BE RESPONSIBLE FOR DIMENSIONS AND DESIGN OF ADEQUATE CORRECTIONS, DETAILS AND SATISFACTORY CONSTRUCTION OF WORK.

SIGNATURE SANCHEZ.AMY.ELIZABETH.1454434338 Digitally signed by SANCHEZ.AMY.ELIZABETH.1454434338 DN: c=US, o=U.S. Government, ou=DoD, ou=PKI, ou=USA, cn=SANCHEZ.AMY.ELIZABETH.1454434338 Date: 2017.08.24 12:02:43 -06'00' **DATE** 8/24/2017

EA Engineering, Science, and Technology, Inc., PBC

Submittal Review Sheet 1

Project Name: **Kirtland BFF Mid-Plume Pump and Treat System Expansion**			Date Received: **8/16/2017**
Project Owner: **Kirtland Air Force Base**			Checked By: **Tyler Curley**
Contractor: **Wilson Electric**	Engineer: **EA Engineering, Science and Technology, Inc., PBC.**		Log Page: **NA**
Address: **501 General Somervell SE # B** **Albuquerque, NM 87123**	Address: **320 Gold Ave. SW, Suite 1300** **Albuquerque, NM 87102**		EA No.: 62599DM01
			Spec. Section: **NA**
			Drawing/Detail No.: **E-000/E-001**
ATTN: Matthew Walstrom	ATTN: **Devon Jercinovic**	1st Sub	Re-Sub
Date Transmitted: **8/17/2017**	Prev. Transmittal Date:		

Item No.	No. Copies	Description	Manufacturer	Mfg/Vendor Dwg or Detail	Action Taken*
1	1	Pull Boxes	Quazite		**A**

The Action Designated Above is in Accordance with the Following Legend:

A – Furnish as Submitted
B – Furnish as Noted
C – Revise and Re-submit
1. Not enough information for review.
2. No reproducible submitted.
3. Copies illegible.
4. Not enough copies submitted.
5. Wrong sequence number.
6. Wrong resubmittal number.
7. Wrong Spec. Section.
8. Wrong form used.
9. See Comments.

D – Rejected
E – Engineer's Review not Required
1. Submittal not required.
2. Supplemental Information. Submittal retained for Information purposes only.
3. Information reviewed and approved on prior submittal.
4. See Comments.

Review is for general compliance with Contract Documents. No responsibility is assumed for correctness of dimensions or detail. Contractor is required to specify deviations from contract requirements. Lack of exceptions noted by Engineer does not waive Contractor's obligation to comply with Drawings and Specifications.

Comments:
Items reviewed and confirmed to meet requirements
(Reviewed Material in Parentheses)
Issues in Bold

Pull boxes conform to the electrical drawings.

By: _____ Date: 8/17//17

Distribution: [1] Contractor [1] Engineer [1] Owner

Quazite®

SPECIFICATIONS/DATA

48" x 48" PG Style (Stackable) Assembly

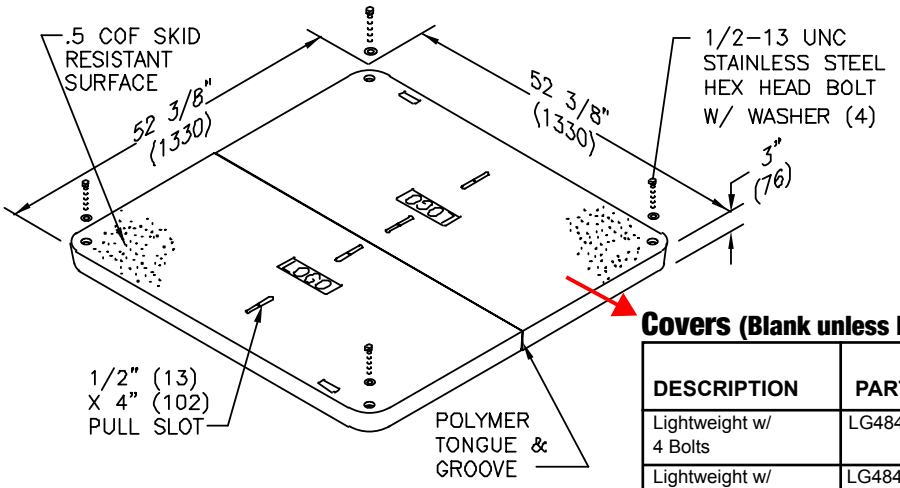

COVER

Lid to say "Electric"

Covers (Blank unless logo is specified)

DESCRIPTION	PART NO.	WEIGHT #	DESIGN/TEST LOAD #	ANSI TIER*
Lightweight w/ 4 Bolts	LG4848CA00	286 (130.0 kg)	5,000 / 7,500	5
Lightweight w/ No Bolts	LG4848WA00	286 (130.0 kg)	5,000 / 7,500	5
Heavy Duty w/W6 x 12 Wide Flange Beam w/4 Bolts*	PG4848HA00	364 (165.1 kg)	15,000 / 22,500	15
Extra Heavy Duty w/ 6 x 4 Tubing w/ 4 Bolts*	PG4848HH00	596 (270.0 kg)	22,500 / 33,750	22
Round 39" Opening	PG4848C500	377 (171 kg)	5,000 / 7,500	5

• Covers with meter lids available upon request. See page 12 or page 56 for meter lid cover load rating explanation.
* Total weight for 48" x 48" HA beam is 51 lbs (23 kg). Total weight for 48" x 48" HH tubing is 95 lbs (43 kg).

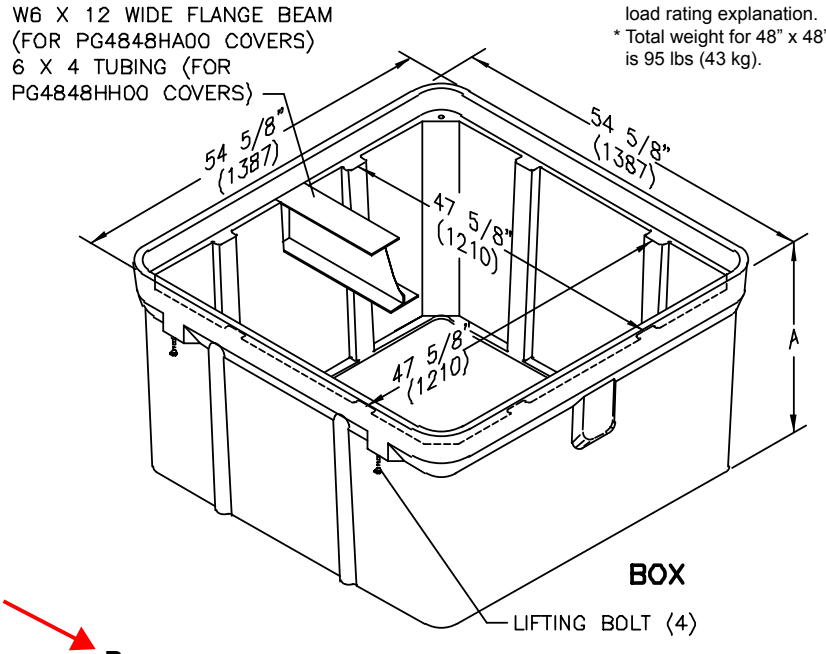

BOX

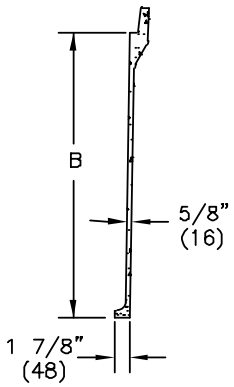

Boxes (Stackable with self-aligning, replaceable EZ-Nut)

DESCRIPTION	PART NO.	WEIGHT #	DIMENSION A	DIMENSION B	DESIGN/TEST LOAD #	ANSI TIER*
Open bottom	PG4848BA36	629 (285.0 kg)	36" (914 mm)	33" (838 mm)	22,500 / 33,750	22
	PG4848BA48	866 (393.0 kg)	48" (1219 mm)	45" (1143 mm)	22,500 / 33,750	22
Solid Bottom	PG4848DA36	663 (301.0 kg)	36 1/2" (927 mm)	33" (838 mm)	22,500 / 33,750	22
	PG4848DA48	940 (426.0 kg)	48 1/2" (1232 mm)	45" (1143 mm)	22,500 / 33,750	22

Dimensions & weights in parentheses are metric equivalent.
* Loadings comply with ANSI/SCTE 77 (see page 9).

ENCLOSURE DRAWINGS

DEPARTMENT OF THE ARMY
ALBUQUERQUE DISTRICT, CORPS OF ENGINEERS
ALBUQERQUE DISTRICT OFFICE
4101 JEFFERSON PLAZA NE
ALBUQUERQUE, NM 87109

SUBMITTAL REVIEW VERIFICATION SHEET

PROJECT TITLE: Kirtland BFF Mid-Plume Pump and Treat System Expansion
CONTRACT NUMBER: W912DR-12-D-0006 DM01
DATE RECEIVED: 09-06-2017
DATE REVIEWED: 09-12-2017

DESCRIPTION OF ITEMS REVIEWED:

1. Fiber Optic Data Transmittal System- Resubmittal

NO EXCEPTIONS TAKEN.	**X**
EXCEPTIONS AS NOTED ON DRAWINGS AND/OR ATTACHED SHEETS(S). RESUBMISSION NOT REQUIRED.	
EXCEPTIONS AS NOTED ON DRAWINGS AND/OR ATTACHED SHEETS(S). RESUBMISSION REQUIRED.	
RECEIPT ACKKNOWLEDGED.	

Notes:

NOTE: ITEMS REVIEWED AS TO GENERAL LAYOUT ONLY. DIMENSIONS AND QUANTITIES NOT CHECKED. REVIEW DOES NOT RELIEVE CONTRACTOR OF RESPONSIBILITIES FOR ANY ERRORS WHICH MAY EXIST AS CONTRACTOR SHALL BE RESPONSIBLE FOR DIMENSIONS AND DESIGN OF ADEQUATE CORRECTIONS, DETAILS AND SATISFACTORY CONSTRUCTION OF WORK.

SIGNATURE SANCHEZ.AMY.ELIZABETH.1454434338 Digitally signed by SANCHEZ.AMY.ELIZABETH.1454434338 DN: c=US, o=U.S. Government, ou=DoD, ou=PKI, ou=USA, cn=SANCHEZ.AMY.ELIZABETH.1454434338 Date: 2017.09.12 06:54:24 -06'00' **DATE** 9/12/2017

EA Engineering, Science, and Technology, Inc., PBC

Submittal Review Sheet 1

Project Name: **Kirtland BFF Mid-Plume Pump and Treat System Expansion**				Date Received: **9/5/2017**		
Project Owner: **Kirtland Air Force Base**				Checked By: **Tyler Curley**		
Contractor: **Wilson Electric**	Engineer: **EA Engineering, Science and Technology, Inc., PBC.**			Log Page: **NA**		
Address: **501 General Somervell SE # B** **Albuquerque, NM 87123**	Address: **320 Gold Ave. SW, Suite 1300** **Albuquerque, NM 87102**			EA No.: 62599DM01		
				Spec. Section: **NA**		
				Drawing/Detail No.: **NA**		
ATTN: Matthew Walstrom	ATTN: **Devon Jercinovic**			1st Sub		Re-Sub
Date Transmitted: **9/6/2017**	Prev. Transmittal Date: **8/25/2017**					

Item No.	No. Copies	Description	Manufacturer	Mfg/Vendor Dwg or Detail	Action Taken*
1	1	Fiber Optic Data Transmittal System	AFL/Corning/Hitachi		**A**

The Action Designated Above is in Accordance with the Following Legend:

A – Furnish as Submitted
B – Furnish as Noted
C – Revise and Re-submit
1. Not enough information for review.
2. No reproducible submitted.
3. Copies illegible.
4. Not enough copies submitted.
5. Wrong sequence number.
6. Wrong resubmittal number.
7. Wrong Spec. Section.
8. Wrong form used.
9. See Comments.

D – Rejected
E – Engineer's Review not Required
1. Submittal not required.
2. Supplemental Information. Submittal retained for Information purposes only.
3. Information reviewed and approved on prior submittal.
4. See Comments.

Review is for general compliance with Contract Documents. No responsibility is assumed for correctness of dimensions or detail. Contractor is required to specify deviations from contract requirements. Lack of exceptions noted by Engineer does not waive Contractor's obligation to comply with Drawings and Specifications.

Comments:
Items reviewed and confirmed to meet requirements
(Reviewed Material in Parentheses)
Issues in Bold

Meets specification, issues have been resolved.

By: _____ Date: 9/6//17

Distribution: [1] Contractor [1] Engineer [1] Owner

DEPARTMENT OF THE ARMY
ALBUQUERQUE DISTRICT, CORPS OF ENGINEERS
ALBUQERQUE DISTRICT OFFICE
4101 JEFFERSON PLAZA NE
ALBUQUERQUE, NM 87109

SUBMITTAL REVIEW VERIFICATION SHEET

PROJECT TITLE: Kirtland BFF Mid-Plume Pump and Treat System Expansion
CONTRACT NUMBER: W912DR-12-D-0006 DM01
DATE RECEIVED: 08-25-2017
DATE REVIEWED: 08-29-2017

DESCRIPTION OF ITEMS REVIEWED:

1. Fiber Optic Data Transmittal System

NO EXCEPTIONS TAKEN.	
EXCEPTIONS AS NOTED ON DRAWINGS AND/OR ATTACHED SHEETS(S). RESUBMISSION NOT REQUIRED.	
EXCEPTIONS AS NOTED ON DRAWINGS AND/OR ATTACHED SHEETS(S). RESUBMISSION REQUIRED.	**X**
RECEIPT ACKKNOWLEDGED.	

Notes:

Page 3- NETSIAN Part I: Product Data: The part number listed (61646-12) for the Indoor/Outdoor Tight Buffered OM2 12 Fiber is not listed in the table on page 84. Should the part number be 61464-12? Yes, please see REV. A submittal with the correct part number.

The Buffer Tube Fan-Out Kits on Page 2 of the CORNING the Design table lists the cable type to be cable with 250UM. Will this be compatible with the 50UM fiber? Yes, this fan out kit is compatible with the fiber specified. The 250UM is the coating around the fiber core and cladding, the 50UM is the core size of the fiber.

See attached

NOTE: ITEMS REVIEWED AS TO GENERAL LAYOUT ONLY. DIMENSIONS AND QUANTITIES NOT CHECKED. REVIEW DOES NOT RELIEVE CONTRACTOR OF RESPONSIBILITIES FOR ANY ERRORS WHICH MAY EXIST AS CONTRACTOR SHALL BE RESPONSIBLE FOR DIMENSIONS AND DESIGN OF ADEQUATE CORRECTIONS, DETAILS AND SATISFACTORY CONSTRUCTION OF WORK.

SIGNATURE _____ **DATE** 8/30/2017

Kirtland Air Force Base
BFF Conveyance Line

Kirtland Air Force Base
Albuquerque, New Mexico

Product Data Submittals
Fiber Optic Data Transmission System REV. A

Provided By:
NETSIAN TECHNOLOGIES GROUP
501 General Somervell St. SE, Suite B,
Albuquerque, NM 87123-3222
(505) 237-3205
(505) 271-0246
http://www.netsian.net
September 5, 2017

PROJECT MANAGER:
Joe Martinez, RCDD

COA Project #586082

NETSIAN TECHNOLOGIES GROUP

JOB NAME: Kirtland Air Force Base BFF Conveyance Line
COA JOB NO: 586082
PROJECT MANAGER: Joe Martinez, RCDD

Special System: Fiber Optic Data Transmission System

Table of Contents

Part I: Product Data

Part II: Test Reports - **Will be submitted at closeout**

Part III: Certificates

Part IV: Operation and Maintenance Data - **Will be submitted at closeout**

501 General Somervell St. SE Suite B ▪ Albuquerque, New Mexico 87123 ▪ Phone: 505.237.3201 ▪ Fax: 505.271.0246
EE98 #88792
www.netsian.net

JOB NAME: Kirtland Air Force Base BFF Conveyance Line
COA JOB NO: 586082
PROJECT MANAGER: Joe Martinez, RCDD

Special System: Fiber Optic Data Transmission System

Part I: Product Data

Manufacture	Part #	Description
Hitachi	61464-12	Indoor/Outdoor Tight Buffered OM2 12 Fiber
AFL	WME02E	Wall Mount Interconnect Enclosure
AFL	FM003072	Black Blank Fiber Adapter Panel
AFL	FM003112	Lightlink Adapter Plate LC Duplex 12 Fiber
AFL	CS000321	LC Anaerobic Connectors, Multimode
Corning	FAN-BT25-12	Buffer Tube Fan-Out Kits, Indoor

Tight Buffered

2 through 144 fibers

HITACHI
Inspire the Next

Product Highlights

- REACH & RoHS 2 compliant.
- Made in USA.
- All multimode, and singlemode cables (except OM1) utilize bend-insensitive optical fibers.
- UV and fungus resistent jacket.
- Tight buffered construction.
- Easy to strip and terminate.
- Each fiber is color coded for easy identification.
- Dry, super absorbent polymers (SAPs) eliminate water migration in cable interstices.
- Suitable for lashed aerial, duct, underground conduit and indoor plenum applications.
- 900 um buffered design recommended for easy termination.
- Cables with more than 24 fibers have fibers segregated into 12-fiber sub-units.

Options

- OM4 optical fibers with extended 10 gigabit Ethernet distances are available.
- OS2 optical fibers with enhanced bend-insensitive performance are available.
- Wideband multimode fiber is available.

Applications

- Applications include 10, 40 & 100 gigabit Ethernet, Fibre Channel, Video, Security, Automation.

Standards

- TIA/EIA-568-C.3
- ISO/IEC 11801, 2nd edition
- Telcordia GR-409-CORE

Indoor/Outdoor Tight Buffered (Plenum)

(UL) OFNP c(UL) OFNP FT6

PART NUMBERS BY FIBER COUNT

FIBERS	FIBERS/ TUBE	62.5 UM OM1	50 UM OM2	50 UM OM3	50 UM OM4	50 UM OM5	8.3 UM OS2
2	2	61460-2	61464-2	61468-2	61894-2	62769-2	61459-2
4	4	61460-4	61464-4	61468-4	61894-4	62769-4	61459-4
6	6	61460-6	61464-6	61468-6	61894-6	62769-6	61459-6
8	8	61460-8	61464-8	61468-8	61894-8	62769-8	61459-8
10	10	61460-10	61464-10	61468-10	61894-10	62769-10	61459-10
12	12	61460-12	61464-12	61468-12	61894-12	62769-12	61459-12
24	24	61460-24	61464-24	61468-24	61894-24	62769-24	61459-24
36	6	62178-36	62179-36	62180-36	62181-36	62770-36	62066-36
48	12	61979-48	61956-48	61959-48	61980-48	62771-48	61480-48
72	12	61979-72	61956-72	61959-72	61980-72	62771-72	61480-72
96	12	61979-96	61956-96	61959-96	61980-96	62771-96	61480-96
144	12	61979-144	61956-144	61959-144	61980-144	62771-144	61480-144

SPECIFICATIONS BY FIBER COUNT

					RECOMMENDED MAXIMUM LOADS					
FIBERS	FIBERS/ TUBE	TUBE LAYOUT	CABLE O.D.		INSTALL		OPERATION		CABLE WEIGHT	
			in.	mm	lbs-f	N	lbs-f	N	lbs/1000 ft	kg/1000m
2	2	x	.190	4.83	128	570	38	171	12.6	18.8
4	4	x	.190	4.83	128	570	38	171	13.9	20.7
6	6	x	.190	4.83	128	570	38	171	15.1	22.5
8	8	x	.230	5.84	160	712	48	214	20.0	29.8
10	10	x	.230	5.84	160	712	48	214	21.3	31.7
12	12	x	.230	5.84	160	712	48	214	22.5	33.5
24	24	x	.330	8.38	288	1282	86	385	50.2	74.8
36	6	6xCSM	.639	16.2	600	2670	200	890	159.2	236.9
48	12	4xCSM	.627	15.9	640	2849	192	855	135.1	201.1
72	12	6xCSM	.756	19.2	960	4273	288	1282	226.6	337.2
96	12	8xCSM	.941	23.9	1280	5696	384	1709	367.9	547.6
144	12	9x3xCSM	1.072	27.2	1920	8546	576	2564	396.8	590.5

Cable Characteristics

Note: Part number rows in upper table directly correspond to cable characteristic rows in the same location of the lower table.

Multimode and Singlemode

Tight Buffered

Indoor/Outdoor Tight Buffered (Plenum)

(UL) OFNP c(UL) OFNP FT6

Optical Specifications

TIA/EIA-568-C.3 | ISO/IEC 11801, 2nd edition | Telcordia GR-409-CORE

Fiber type	Max. Attenuation		Min OFL Bandwidth		Min EMBc Bandwidth		Gb Ethernet distance		10 Gb Ethernet distance	
	(dB/km)		(MHz-km)		(MHz-km)		(m)		(m)	
	850nm (MM)	1300nm (MM)	850nm (MM)	1300nm (MM)	850nm (MM)	1300nm (MM)	850nm (MM)	1300nm (MM)	850nm (MM)	1300nm (MM)
OM1	3.5	1.0	200	500	220	N/A	300	550	33	N/A
OM2	3.0	1.0	700	500	950	N/A	750	550	150	N/A
OM3	3.0	1.0	1500	500	2000	N/A	1000	550	300	N/A
OM4	3.0	1.0	3500	500	4700	N/A	1100	550	550	N/A
OM5*	3.0	1.0	3500	500	4700	N/A	1100	550	550	N/A
	1310nm (SM)	1550nm (SM)	1310nm (SM)	1550nm (SM)	1310nm (SM)	1550nm (SM)	1310nm (SM)	1550nm (SM)	1310nm (SM)	1550nm (SM)
OS2	0.5	0.5	N/A	N/A	N/A	N/A	> 25,000	> 40,000	10,000 - 25,000	40,000

Hitachi Cable America reserves the right to revise any specifications.

*OM5 optical fiber tested by glass manufacturer and exceeds the requirements of all applicable industry standards.

Cable Temperature Ranges

Storage: -40° to 70°C (-40° to 158°F)
Installation: 0°C to 60°C (32° to 140°F)
Operating: -40° to 70°C (-40° to 158°F)

Features

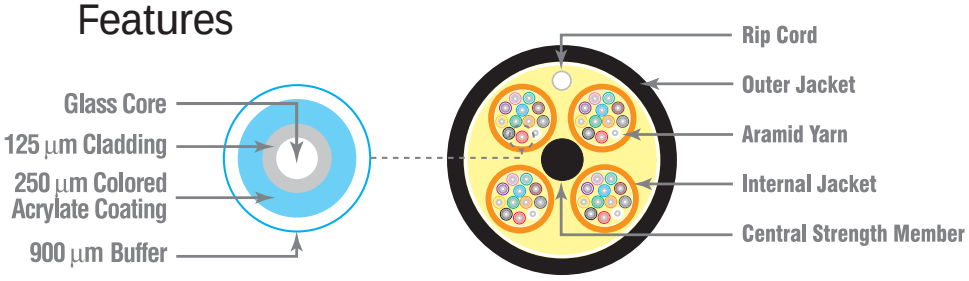

DIELECTRIC MATERIALS

Overall Jacket — PLENUM — Flame-retardant thermoplastic

Diagram scale approx. 3:1

Mechanical Specifications

- Bend radius, no load = 10x cable overall diameter
- Bend radius, load = 20x cable overall diameter

plus CORNING® ClearCurve® Optical Fiber

Photo is for representation purposes only.

WME-02

WME-02 shown empty

WME-02 shown fully loaded

Wall Mount Interconnect Enclosure (WME) with Two LGX® Mounting Positions

AFL's wall mount interconnect enclosure (WME02) provides a convenient convergence point for interconnecting and/or splicing in wall mount applications. Provisioned for up to two LGX compatible adapter plates or optical modules, the enclosure features a well-engineered solution for fiber and cable management on both the ingress and egress openings of the enclosure. Robust steel construction ensures the highest level of protection for sensitive components while integrated roll-formed hinges eliminate possible fiber pinch points while deploying or servicing components within. The WME02 features discrete access doors for provider and customer access which are independently lockable with a common pad-lock or tube-style keyed lock.

Features

- Fits comfortably into new and existing interconnect, cross-connect and co-location environments
- U-shaped cable entry eliminates the need to feed preconnectorized cables through an inconvenient access port
- Modular design fully compatible with Poli-MOD® products and XFM optical cassettes
- Dual doors with separate locking options for flexibility and security
- Available empty, with adapters, or with adapters, splice trays and pigtails pre-installed
- LGX 118 compatible
- Optional splice tray and holder (ordered separately)
- All major connector types are supported

Applications

- Co-Location sites
- Customer premise
- Hub/OTN sites
- Telecommunication closets
- Campus/enterprise environments

Specifications

- Solid steel construction
- Powder coat black textured finish
- Top or bottom cable entry with dust resistant grommets
- Dual-hasp locking/security system
- 12 to 24 fiber patch and splice density
- Two LGX mounting positions
- Physical dimensions: 12.0"H x 14.0"W x 2.5"D
- Empty version weight: 10.65 lbs.

LGX is a registered trademark of Furukawa Electric North America, Inc.

© 2010, AFL, all rights reserved. PP-2-00107, Revision 3, 1.11.16
Specifications are subject to change without notice.

Wall Mount Interconnect Enclosure (WME) with Two LGX® Mounting Positions

Ordering Information

EMPTY	
DESCRIPTION	AFL NO.
WME02 Empty	WME02E

HALF LOADED: WME WITH ADAPTER PLATES AND ADAPTERS ONLY				
CONNECTOR TYPE	FIBER COUNT	AFL NO.		
		UPC SM (BLUE)	APC SM (GREEN)	PC MM (BEIGE)
SC	6	WME02AS-USCSM-006000	WME02AS-ASCSM-006000	WME02AS-PSCM6-006000
	12	WME02AS-USCSM-012000	WME02AS-ASCSM-012000	WME02AS-PSCM6-012000
	24	WME02AH-USFSM-024000	WME02AH-ASFSM-024000	WME02AH-PSFM6-024000
LC	6	WME02AS-UDLSM-006000	WME02AS-ADLSM-006000	WME02AS-PDLM6-006000
	12	WME02AS-UDLSM-012000	WME02AS-ADLSM-012000	WME02AS-PDLM6-012000
	24	WME02AH-UDLSM-024000	WME02AH-ADLSM-024000	WME02AH-PDLM6-024000
ST	6	WME02AS-USTSM-006000	—	WME02AS-PSTM6-006000
	12	WME02AS-USTSM-012000	—	WME02AS-PSTM6-012000
	24	WME02AH-USTSM-024000	—	WME02AH-PSTM6-024000
FC	6	WME02AS-UFCSM-006000	WME02AS-AFCSM-006000	WME02AS-PFCM5-006000
	12	WME02AS-UFCSM-012000	WME02AS-AFCSM-012000	WME02AS-PFCM5-012000
	24	WME02AH-UFCSM-024000	WME02AH-AFCSM-024000	WME02AH-PFCM5-024000

Connector/Adapter Key

TYPE	DESCRIPTION
ASC	Angle Polish SC (ZR) sleeve-SM
ASF	Angle Polish SC Duplex (ZR) sleeve-SM
PSC	Physical Polish SC (PB) sleeve-MM
PSF	Physical Polish SC Duplex (PB) sleeve-MM
USC	Ultra Polish SC with (ZR) sleeve-SM
USF	Ultra Polish SC Duplex (ZR) sleeve-SM
PST	Physical Polish ST (PB) sleeve-MM
UST	Ultra Polish ST (ZR) sleeve-SM
AFC	Angle Polish FC (ZR) sleeve-SM
PFC	Physical Polish FC (PB) sleeve-MM
UFC	Ultra Polish FC (ZR) sleeve-SM
ADL	Angle Polish LC Duplex (ZR) sleeve-SM
PDL	Physical Polish LC Duplex (PB) sleeve-MM
PLC	Physical Polish LC (PB) sleeve-MM
UDL	Ultra Polish LC Duplex (ZR) sleeve-SM
ULC	Ultra Polish LC (ZR) sleeve-SM

LOADED: WME WITH ADAPTER PLATES/ADAPTERS/SPLICE TRAYS/PIGTAIL (900 µm TIGHT BUFFERED FIBERS 3 METERS IN LENGTH)					
CONNECTOR TYPE	FIBER COUNT	AFL NO.			
		UPC SM (BLUE)	APC SM (GREEN)	PC MM 62.5 µm (BEIGE)	PC MM 50 µm (BLACK)
SC	6	WME02FS-USCSM-006110	WME02FS-ASCSM-006110	WME02FS-PSCM6-006110	WME02FS-PSCM5-006110
	12	WME02FS-USCSM-012110	WME02FS-ASCSM-012110	WME02FS-PSCM6-012110	WME02FS-PSCM5-012110
	24	WME02FH-USFSM-024120	WME02FH-ASFSM-024120	WME02FH-PSFM6-024120	WME02FH-PSFM5-024120
LC	6	WME02FS-UDLSM-006110	WME02FS-ADLSM-006110	WME02FS-PDLM6-006110	WME02FS-PDLM5-006110
	12	WME02FS-UDLSM-012110	WME02FS-ADLSM-012110	WME02FS-PDLM6-012110	WME02FS-PDLM5-012110
	24	WME02FH-UDLSM-024120	WME02FH-ADLSM-024120	WME02FH-PDLM6-024120	WME02FH-PDLM5-024120
ST	6	WME02FS-USTSM-006110	—	WME02FS-PSTM6-006110	WME02FS-PSTM5-006110
	12	WME02FS-USTSM-012110	—	WME02FS-PSTM6-012110	WME02FS-PSTM5-012110
	24	WME02FH-USTSM-024120	—	WME02FH-PSTM6-024120	WME02FH-PSTM5-024120
FC	6	WME02FS-UFCSM-006110	WME02FS-AFCSM-006110	WME02FS-PFCM6-006110	WME02FS-PFCM5-006110
	12	WME02FS-UFCSM-012110	WME02FS-AFCSM-012110	WME02FS-PFCM6-012110	WME02FS-PFCM5-012110
	24	WME02FH-UFCSM-024120	WME02FH-AFCSM-024120	WME02FH-PFCM6-024120	WME02FH-PFCM5-024120

ACCESSORIES	
DESCRIPTION	AFL NO.
Splice Tray Kit: Single Fusion 12F, 2RU, WME02, WME04, 1 Splice Tray	FM002827-1
Splice Tray Kit: Single Fusion 12F, 2RU, WME02, WME04, 2 Splice Trays	FM002827-2

LGX is a registered trademark of Furukawa Electric North America, Inc.

© 2010, AFL, all rights reserved. PP-2-00107, Revision 3, 1.11.16
Specifications are subject to change without notice.

LightLink Adapter Plates

LightLink Adapter Plates add versatility to AFL's panel product line. Adapter plates are compatible with industry standard platforms allowing for easy upgrades to existing panels. Adapter Plates come preloaded with adapters and are available in 6, 8, 12 and 24 pack versions for single-fiber adapters. Higher fiber counts are achievable with multi-fiber adapters. Blank plates are also available for unused space in panels.

Features

- Metal Plate with Nylatches
- Polyurethane powder coated (white or black)
- LGX® compatible

Specifications

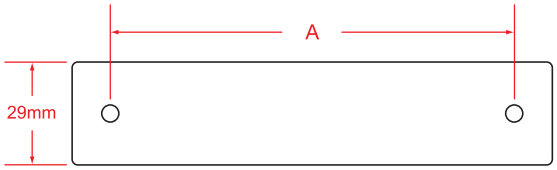

DIMENSION A
118 mm LGX®
170 mm LGX®

Ordering Information

AFL NO.	ADAPTER TYPE	SIMPLEX/DUPLEX/ QUAD	ADAPTER COLOR	FIBER COUNT	PLATE HEIGHT	PLATE COLOR
BLANK						
FM003072	BLANK	BLANK	NA	0	LGX (118)	BLACK
FM003462	BLANK	BLANK	NA	0	LGX (118)	WHITE
FM000343	BLANK	BLANK	NA	0	LGX (118)	SMOOTH BLACK
FM003434	BLANK	BLANK	NA	0	LGX (170)	BLACK
FM003433	BLANK	BLANK	NA	0	LGX (170)	WHITE
SC						
FM003295	SC	DUPLEX	AQUA	12F	LGX (118)	BLACK
FM002272	SC	DUPLEX	AQUA	12F	LGX (118)	WHITE
FM003293	SC	DUPLEX	BEIGE	12F	LGX (118)	BLACK
FM002273	SC	DUPLEX	BEIGE	12F	LGX (118)	WHITE
FM003301	SC	DUPLEX	BLACK	12F	LGX (118)	BLACK
FM003297	SC	DUPLEX	BLUE	12F	LGX (118)	BLACK
FM002271	SC	DUPLEX	BLUE	12F	LGX (118)	WHITE
FM002633	SC	DUPLEX	GREEN	12F	LGX (118)	BLACK
FM002634	SC	DUPLEX	GREEN	12F	LGX (118)	WHITE
FM000149	SC	DUPLEX	BEIGE	12F	LGX (170)	WHITE
FM000148	SC	DUPLEX	BEIGE	12F	LGX (170)	BLACK
FM000144	SC	DUPLEX	BLUE	12F	LGX (170)	BLACK
FM000145	SC	DUPLEX	BLUE	12F	LGX (170)	WHITE
FM000152	SC	DUPLEX	GREEN	12F	LGX (170)	BLACK
FM000153	SC	DUPLEX	GREEN	12F	LGX (170)	WHITE
FM003287	SC	DUPLEX	AQUA	6F	LGX (118)	BLACK
FM003285	SC	DUPLEX	BEIGE	6F	LGX (118)	BLACK
FM003398	SC	DUPLEX	BEIGE	6F	LGX (118)	WHITE
FM003299	SC	DUPLEX	BLACK	6F	LGX (118)	BLACK
FM003289	SC	DUPLEX	BLUE	6F	LGX (118)	BLACK
FM003458	SC	DUPLEX	BLUE	6F	LGX (118)	WHITE
FM003283	SC	DUPLEX	GREEN	6F	LGX (118)	BLACK
FM000115	SC	DUPLEX	GREEN	6F	LGX (118)	WHITE

LGX is a registered trademark of Furukawa Electric North America, Inc.

© 2010, AFL, all rights reserved. PP-2-00169, Revision 7, 2.22.17
Specifications are subject to change without notice.

LightLink Adapter Plates

Ordering Information (cont.)

AFL NO.	ADAPTER TYPE	SIMPLEX/DUPLEX/ QUAD	ADAPTER COLOR	FIBER COUNT	PLATE HEIGHT	PLATE COLOR
SC						
FM003120	SC	SIMPLEX	AQUA	12F	LGX (118)	BLACK
FM003118	SC	SIMPLEX	BEIGE	12F	LGX (118)	BLACK
FM003242	SC	SIMPLEX	BLACK	12F	LGX (118)	BLACK
FM003122	SC	SIMPLEX	BLUE	12F	LGX (118)	BLACK
FM002842-TW	SC	SIMPLEX	BLUE	12F	LGX (118)	WHITE
FM003116	SC	SIMPLEX	GREEN	12F	LGX (118)	BLACK
FM000800-TW	SC	SIMPLEX	GREEN	12F	LGX (118)	WHITE
FM003411	SC	SIMPLEX	BEIGE	12F	LGX (170)	WHITE
FM003409	SC	SIMPLEX	BLUE	12F	LGX (170)	BLACK
FM003407	SC	SIMPLEX	BLUE	12F	LGX (170)	WHITE
FM003414	SC	SIMPLEX	GREEN	12F	LGX (170)	BLACK
FM003455	SC	SIMPLEX	GREEN	12F	LGX (170)	WHITE
FM003098	SC	SIMPLEX	AQUA	6F	LGX (118)	BLACK
FM003096	SC	SIMPLEX	BEIGE	6F	LGX (118)	BLACK
FM003403	SC	SIMPLEX	BEIGE	6F	LGX (118)	WHITE
FM003238	SC	SIMPLEX	BLACK	6F	LGX (118)	BLACK
FM003100	SC	SIMPLEX	BLUE	6F	LGX (118)	BLACK
FM003467	SC	SIMPLEX	BLUE	6F	LGX (118)	WHITE
FM003094	SC	SIMPLEX	GREEN	6F	LGX (118)	BLACK
FM000480	SC	SIMPLEX	GREEN	6F	LGX (118)	WHITE
FM000156	SC	SIMPLEX	BLUE	8F	LGX (118)	BLACK
FM003435	SC	SIMPLEX	BLUE	8F	LGX (118)	WHITE
FM002841	SC	SIMPLEX	GREEN	8F	LGX (118)	BLACK
FM000158	SC	SIMPLEX	GREEN	8F	LGX (118)	WHITE
LC						
FM001004	LC	DUPLEX	GREEN	12F	LGX (118)	WHITE
FM001303	LC	DUPLEX	AQUA	12F	LGX (118)	WHITE
FM003108	LC	DUPLEX	GREEN	12F	LGX (118)	BLACK
FM003110	LC	DUPLEX	BEIGE	12F	LGX (118)	BLACK
FM003112	LC	DUPLEX	AQUA	12F	LGX (118)	BLACK
FM001185	LC	QUAD	AQUA	12F	LGX (118)	BLACK
FM000297	LC	DUPLEX	BLUE	12F	LGX (170)	WHITE
FM000298	LC	DUPLEX	BLUE	12F	LGX (170)	BLACK
FM000301	LC	DUPLEX	GREEN	12F	LGX (170)	WHITE
FM000302	LC	DUPLEX	GREEN	12F	LGX (170)	BLACK
FM000838	LC	DUPLEX	BLUE	24F	LGX (118)	WHITE
FM000851	LC	DUPLEX	BEIGE	24F	LGX (118)	WHITE
FM000853	LC	DUPLEX	AQUA	24F	LGX (118)	WHITE
FM003069	LC	DUPLEX	GREEN	24F	LGX (118)	WHITE
FM001184	LC	QUAD	AQUA	24F	LGX (118)	BLACK
FM000129	LC	DUPLEX	BLUE	24F	LGX (170)	WHITE
FM000130	LC	DUPLEX	BLUE	24F	LGX (170)	BLACK
FM000338	LC	DUPLEX	GREEN	24F	LGX (170)	WHITE
FM000339	LC	DUPLEX	GREEN	24F	LGX (170)	BLACK
FM000348	LC	DUPLEX	BEIGE	24F	LGX (170)	WHITE
FM000349	LC	DUPLEX	BEIGE	24F	LGX (170)	BLACK
FM000289	LC	DUPLEX	BLUE	6F	LGX (118)	WHITE
FM000293	LC	DUPLEX	GREEN	6F	LGX (118)	WHITE
FM000294	LC	DUPLEX	GREEN	6F	LGX (118)	BLACK
FM003092	LC	DUPLEX	BLUE	6F	LGX (118)	BLACK

© 2010, AFL, all rights reserved. PP-2-00169, Revision 7, 2.22.17
Specifications are subject to change without notice.

LightLink Adapter Plates

Ordering Information (cont.)

AFL NO.	ADAPTER TYPE	SIMPLEX/DUPLEX/ QUAD	ADAPTER COLOR	FIBER COUNT	PLATE HEIGHT	PLATE COLOR
LC						
FM003240	LC	DUPLEX	BLACK	12F	LGX (118)	BLACK
FM003425	LC	DUPLEX	BLUE	12F	LGX (118)	WHITE
FM003465	LC	DUPLEX	BLUE	12F	LGX (118)	BLACK
FM003202	LC	DUPLEX	GREEN	24F	LGX (118)	BLACK
FM003204	LC	DUPLEX	BEIGE	24F	LGX (118)	BLACK
FM003206	LC	DUPLEX	AQUA	24F	LGX (118)	BLACK
FM003208	LC	DUPLEX	BLUE	24F	LGX (118)	BLACK
FM003244	LC	DUPLEX	BLACK	24F	LGX (118)	BLACK
FM003429	LC	DUPLEX	BEIGE	6F	LGX (118)	WHITE
ST						
FM003126	ST	SIMPLEX	METAL SM/MM	12F	LGX (118)	BLACK
FM003456	ST	SIMPLEX	METAL SM/MM	12F	LGX (118)	WHITE
FM000286	ST	SIMPLEX	METAL SM/MM	12F	LGX (170)	BLACK
FM000285	ST	SIMPLEX	METAL SM/MM	12F	LGX (170)	WHITE
FM003104	ST	SIMPLEX	METAL SM/MM	6F	LGX (118)	BLACK
FM003422	ST	SIMPLEX	METAL SM/MM	6F	LGX (118)	WHITE
FM003102	ST	SIMPLEX	METAL SM/MM	6F	LGX (118)	BLACK
FM003441	ST	SIMPLEX	METAL SM/MM	8F	LGX (118)	BLACK
FM003439	ST	SIMPLEX	METAL SM/MM	8F	LGX (118)	WHITE
FC						
FM000284	FC	SIMPLEX	METAL	12F	LGX (118)	BLACK
FM000283	FC	SIMPLEX	METAL	12F	LGX (118)	WHITE
FM003447	FC	SIMPLEX	METAL	12F	LGX (170)	BLACK
FM003446	FC	SIMPLEX	METAL	12F	LGX (170)	WHITE
FM003420	FC	SIMPLEX	METAL, GREEN DUST CAP	6F	LGX (118)	BLACK
FM003419	FC	SIMPLEX	METAL, GREEN DUST CAP	6F	LGX (118)	WHITE
FM003443	FC	SIMPLEX	METAL	8F	LGX (118)	BLACK
FM003442	FC	SIMPLEX	METAL	8F	LGX (118)	WHITE
MISC						
FM003210	HEYCO	SIMPLEX	BLACK	12F	LGX (118)	BLACK
FM003430	MTP	SIMPLEX	BLACK	36F	LGX (118)	BLACK
FM003212	HEYCO	SIMPLEX	BLACK	6F	LGX (118)	BLACK
FM003437	SC-ST HYBRID	SIMPLEX	BLUE-METAL	6F	LGX (118)	WHITE
FM001606	MTP	SIMPLEX	BLACK	72F	LGX (118)	BLACK
FM003005	MTP	SIMPLEX	BLACK	96F	LGX (118)	BLACK

© 2010, AFL, all rights reserved. PP-2-00169, Revision 7, 2.22.17
Specifications are subject to change without notice.

Field Master® Field-Installable Connectors

Field Master Connectors, for field-termination of fiber optics, feature high-precision, high-reliability and low-applied connector cost. Durable metal components, industry-standard connector designs, and proven crimp technology give the customer peace-of-mind that their installed network is steady and reliable. Field Master Tool Kits come complete with all necessary tools and consumables for the professional installation of Field Master Connectors.

Features

- High-precision ceramic ferrules ensure fiber alignment and repeatable performance
- Rugged metal connector bodies provide sturdy cable terminations
- Industry standard interfaces allow interoperability with media equipment
- Meets EIA/TIA 568B performance requirements
- Field proven crimp technology improves connector/cable tensile performance

Applications

- Premise environments
- Desk for LAN environments
- Patch panels
- Direct equipment termination
- Fiber to the Subscriber (FTTx) applications
- Repair / replacement requirements

Ordering Information

CONNECTOR	FIBER TYPE	BOOT COLOR	AFL NO.*
SC Field Master Connector (900 µm boot)	Multimode	Black	CS000308
SC Field Master Connector (3.0 mm boot)	Multimode	Beige	CS000309
SC Field Master Connector (900 µm & 3.0 mm boot)	Multimode	Black /Beige	CS005144
SC Field Master Connector (900 µm boot)	Single-mode	Blue	CS000310
SC Field Master Connector (3.0 mm boot)	Single-mode	Blue	CS000311
SC Field Master Connector (900 µm & 3.0 mm boot)	Single-mode	Blue	CS005145
ST Field Master Connector (900 µm boot)	Multimode	Black	CS000316
ST Field Master Connector (3.0 mm boot)	Multimode	Black	CS000317
ST Field Master Connector (900 µm & 3.0 mm boot)	Multimode	Black	CS005147
ST Field Master Connector (900 µm boot)	Single-mode	Blue	CS000318
ST Field Master Connector (3.0 mm boot)	Single-mode	Blue	CS000319
ST Field Master Connector (900 µm & 3.0 mm boot)	Single-mode	Blue	CS005148
LC Field Master Connector (900 µm boot)	Multimode	White	CS000320
LC Field Master Connector (2.0 mm boot)	Multimode	White	CS000321
LC Field Master Connector (900 µm boot)	Single-mode	Blue	CS000322
LC Field Master Connector (2.0 mm boot)	Single-mode	Blue	CS000323
LC Duplex Field Master Connector (2.0 mm boot)	Multimode	White	CS000467
LC Duplex Field Master Connector (2.0 mm boot)	Single-mode	Blue	CS000466

* Packaged 100 pieces per bag.

© 2002, AFL, all rights reserved. PP-2-00054, Revision 2.1, 5.17.11
Specifications are subject to change without notice.

Buffer Tube Fan-Out Kits, Indoor

12 F, 25-in legs

CORNING

Corning Cable Systems Indoor Buffer Tube Fan-Out Kits are specifically designed for the termination of 6- and 12-fiber buffer tubes. These buffer tube fan-out kits provide the ultimate solution for those users who want to field-install connectors on 250 µm coated fibers. The kits provide the most compact, easy-to-install fan-out solution requiring no additional hardware or space than that required for terminating tight-buffered cables. Indoor Kits feature a 900 µm Fan-Out Assembly that is color-coded to match the fiber color scheme. The Fan-Out Assembly is available with 6- or 12-fiber units in lengths of 0.6 m (25-in) or 1.2 m (47-in). These different lengths provide the installer the flexibility needed for a variety of hardware options.

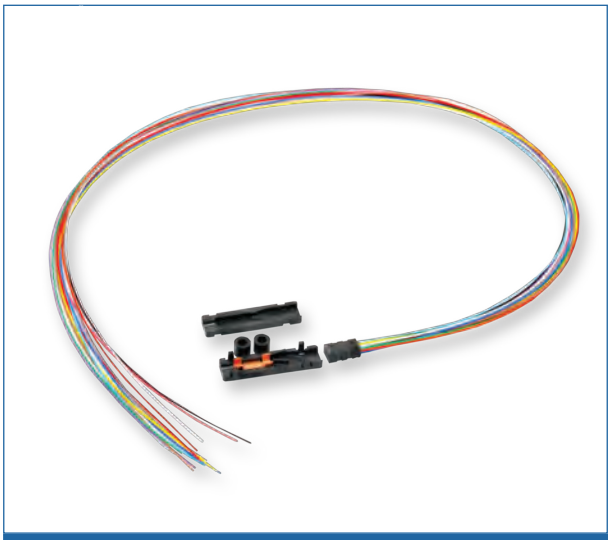

Part Number: FAN-BT25-12

Features and Benefits

Snap-together furcation
Eliminates epoxy for indoor kits

Fiber routing capabilities
Better fiber management

Compensation for wide temperature fluctuation
Outdoor use

Specifications

General Specifications	
Environment	Indoor
Fanout Type	Buffer Tube
Product Type	Fan-Out Kits

Temperature Range	
Operation	0 °C to 70 °C (32 °F to 158 °F)

CORNING

Buffer Tube Fan-Out Kits, Indoor

12 F, 25-in legs

CORNING

Design	
Cable Type	Cable with 250 µm fiber
Fiber Count	12
Fan-Out Tubing Color	Blue, Orange, Green, Brown, Slate, White, Red, Black, Yellow, Violet, Rose, Aqua

Mechanical Specifications - Fan-Out Kit	
Furcation Length	44.5 mm (1.75 in)
Tubing Length	635 mm (25 in)
Tubing Outer Diameter	0.9 mm

Chemical Characteristics	
RoHS	Free of hazardous substances according to RoHS 2002/95/EG

Ordering Information

Part Number	FAN-BT25-12
Product Description	Buffer Tube Fan-Out Kit, indoor, 12 F, 25-in legs

Shipping Information

Units per Delivery	1/1
Package Contents	Fan-out top, fan-out bottom, insert with fan-out tubing

RoHS COMPLIANT

Corning Cable Systems LLC • PO Box 489 • Hickory, NC 28603-0489 USA
800-743-2675 • FAX: 828-325-5060 • International: +1-828-901-5000 • www.corning.com/cablesystems
A complete listing of the trademarks of Corning Cable Systems is available at www.corning.com/cablesystems/trademarks.
Corning Cable Systems is ISO 9001 certified. © 2012 Corning Cable Systems. All rights reserved.

JOB NAME: Kirtland Air Force Base BFF Conveyance Line
COA JOB NO: 586082
PROJECT MANAGER: Joe Martinez, RCDD

Special System: Fiber Optic Data Transmission System

Part III: Certificates

1. Telecom Contractor
2. Key Personnel

STATE OF NEW MEXICO

CONSTRUCTION INDUSTRIES DIVISION

WILSON ELECTRIC SERVICES CORP

LICENSE NUMBER

88792

Qualifying Party(S)

MC CLURE WES

EXPIRES

06/30/2018

CLASSIFICATION(S)

EE98

DIRECTOR

This card is the property of the CID and shall be surrendered upon demand

Building Industry Consulting Service International

THE PROFESSIONAL DESIGNATION OF

REGISTERED COMMUNICATIONS DISTRIBUTION DESIGNER®

IS AWARDED TO

Joe M Martinez

by BICSI in recognition of having successfully completed BICSI's registration and examination requirements.

Designation Number: 183097R

Registration Start Date: 12/31/2015

Registration End Date: 12/31/2018

Bicsi RCDD

Since

8/5/2006

Chair, Registrations & Credentials Supervision Committee

Director of Credentialing

Building Industry Consulting Service International

THE PROFESSIONAL DESIGNATION OF

BICSI TECHNICIAN

IS AWARDED TO

Christopher W Davis

by BICSI in recognition of having successfully completed BICSI's registration and examination requirements.

Designation Number: 181398T

Registration Start Date: 8/1/2015

Registration End Date: 8/1/2018

Bicsi TECHNICIAN

Since
8/1/2015

Chair, Registrations & Credentials Supervision Committee

Director of Credentialing

Curley, Tyler

From: Jercinovic, Devon
Sent: Wednesday, September 27, 2017 3:22 PM
To: Simpler, Trent SPA (Trent.Simpler@usace.army.mil); Amy Sanchez; carlos.f.salazar@usace.army.mil; Linda Dreeland; mark.j.phaneuf@usace.army.mil
Cc: Curley, Tyler; McKeage, Kevin
Subject: FW: KAFB 106239 Conveyance Line (COA Proj. No. 586082)

USACE TEAM,

Just catching you up on the email trail between George Nemeth (EOR with Smith Engineering our sub) and COA DRC.

Good news is as-builts will cover field change, not formal change needed with COA DRC approval.

RMCI (EA sub) is evaluating the options. I will hopefully have answer tomorrow and assume they will chose HDD….but we will see.

Devon E. Jercinovic, PG, PMP
EA Engineering, Science, and Technology, Inc., PBC
Program Manager II
320 Gold Ave. SW, Suite 1300
Albuquerque, NM 87102
Cell: 505.401.1181
Office: 505.715.4248
Email: djercinovic@eaest.com
www.eaest.com

From: Wolfenbarger, Jeanne [mailto:jwolfenbarger@cabq.gov]
Sent: Wednesday, September 27, 2017 3:16 PM
To: 'George Nemeth' <georgen@smithengineering.pro>; Cynova Tim <TCynova@abcwua.org>
Cc: Jercinovic, Devon <djercinovic@eaest.com>; Ortega J. Reuben <rjortega@abcwua.org>
Subject: RE: KAFB 106239 Conveyance Line (COA Proj. No. 586082)

Let us know what your plan is based on Tim's comments. Mark it on the drawing. Thanks!

Jeanne Wolfenbarger, P.E.
Manager for Design Review & Construction
City of Albuquerque
(505)924-3993

From: George Nemeth [mailto:georgen@smithengineering.pro]
Sent: Wednesday, September 27, 2017 3:13 PM
To: Cynova Tim; Wolfenbarger, Jeanne
Cc: Jercinovic, Devon; Ortega J. Reuben
Subject: RE: KAFB 106239 Conveyance Line (COA Proj. No. 586082)

Thanks for the feedback Tim. We'll keep you posted on the actual installation and it will certainly be as-built.

George Nemeth, P.E.

Vice President / Project Manager
georgen@smithengineering.pro
Smith Engineering Company
Solutions for Today... Vision for Tomorrow
www.smithengineering.pro
Office: 505.884.0700 Direct: 505.314.5593
2201 San Pedro Drive NE, Bldg 4 Suite 200, Albuquerque, NM 87110

From: Cynova, Tim F. [mailto:tcynova@abcwua.org]
Sent: Wednesday, September 27, 2017 3:06 PM
To: Wolfenbarger, Jeanne <jwolfenbarger@cabq.gov>; 'George Nemeth' <georgen@smithengineering.pro>
Cc: Jercinovic, Devon <djercinovic@eaest.com>; Ortega, Reuben J. <rjortega@abcwua.org>
Subject: RE: KAFB 106239 Conveyance Line (COA Proj. No. 586082)

George, good to see you are busy.

For going over the SAS with a flexible pipe material flow fill will need to be used see Drw. 2381 The flow fill would distribute the point load across the SAS line.
For going under and excavating around the SAS line usually an encasement works to keep any sag from poor backfill, (Drw 2140), But if sometimes if the trench is narrow flow fill will
work as long as it is under the line filling the void supporting against natural ground.
For directional drilling under, as long as the void is filled with mud.

Let me know if you have questions.

Tim Cynova, PE
Senior Engineer
Utility Development Section
Albuquerque Bernalillo County Water Utility Authority
600 2nd St. NW
Albuquerque, NM 87103s used under thes uesd under
Office: (505) 289-3040

From: Wolfenbarger, Jeanne [mailto:jwolfenbarger@cabq.gov]
Sent: Wednesday, September 27, 2017 2:38 PM
To: 'George Nemeth' <georgen@smithengineering.pro>
Cc: Jercinovic, Devon <djercinovic@eaest.com>; Cynova, Tim F. <tcynova@abcwua.org>
Subject: RE: KAFB 106239 Conveyance Line (COA Proj. No. 586082)

I will let Tim Cynova weigh in on this. Thanks.

Jeanne Wolfenbarger, P.E.
Manager for Design Review & Construction
City of Albuquerque
(505)924-3993

From: George Nemeth [mailto:georgen@smithengineering.pro]
Sent: Wednesday, September 27, 2017 2:22 PM
To: Wolfenbarger, Jeanne
Cc: Jercinovic, Devon; Cynova Tim
Subject: RE: KAFB 106239 Conveyance Line (COA Proj. No. 586082)

Jeanne – Thanks for the feedback. RMCI had contacted Reuben Ortega with ABCWUA and Reuben contacted me.

The proposed installation would only have a couple of inches between the top of the existing SAS and the bottom of encasement. That would put us at absolute minimum cover.

Right now, regarding the sewer line crossing at about Sta 5+35, the contractor is weighing the pros and cons of three installation options.

1. installing per plan and going under the existing SAS and supporting the SAS across the trench,
2. realigning vertically to go over the SAS,
3. or performing a short directional drill to go under the SAS and avoid an open trench where the SAS would need to be supported.

I'll keep you posted on a final decision.

Thanks again.

George Nemeth, P.E.
Vice President / Project Manager
georgen@smithengineering.pro
Smith Engineering Company
Solutions for Today... Vision for Tomorrow
www.smithengineering.pro
Office: 505.884.0700 Direct: 505.314.5593
2201 San Pedro Drive NE, Bldg 4 Suite 200, Albuquerque, NM 87110

From: Wolfenbarger, Jeanne [mailto:jwolfenbarger@cabq.gov]
Sent: Wednesday, September 27, 2017 1:44 PM
To: 'George Nemeth' <georgen@smithengineering.pro>
Cc: 'Jercinovic, Devon' <djercinovic@eaest.com>; Cynova Tim <TCynova@abcwua.org>
Subject: FW: KAFB 106239 Conveyance Line (COA Proj. No. 586082)

George

Mostly, I have no issue with the changes, and they can be handled by as-built. I am ccing Tim Cynova of the ABCWUA to review the alignment changes based on discussion below.

Who at the ABCWUA asked for the full encasement on the SAS? (We don't typically place a line directly on top of an encasement so some type of clearance might be requested. Are you right at minimum cover?)

Jeanne Wolfenbarger, P.E.
Manager for Design Review & Construction
City of Albuquerque
(505)924-3993

From: George Nemeth [mailto:georgen@smithengineering.pro]
Sent: Tuesday, September 26, 2017 1:27 PM
To: Wolfenbarger, Jeanne
Cc: Jercinovic, Devon; Curley, Tyler; McKeage, Kevin
Subject: KAFB 106239 Conveyance Line (COA Proj. No. 586082)

Jeanne – Per our phone conversation earlier today, I am sending you the attached documents.

The first 4 sheets (C-201, C-202, C-205, C-206) show the changes in vertical and horizontal alignment of the pipeline as well as additional lengths of direction drill installation instead of open trench installation.

Also, as shown on sheet C-202, ABCWUA has required a full encasement of the existing SAS line for 10 feet to each side of the crossing point. The encasement detail is included as the 5th sheet in the attachment.

Please let me know if we need to make a formal submittal to DRC and obtain formal DRC approval of these changes or if we can just as-built the changes.

Thanks.

George Nemeth, P.E.
Vice President / Project Manager
georgen@smithengineering.pro
Smith Engineering Company
Solutions for Today... Vision for Tomorrow
www.smithengineering.pro
Office: 505.884.0700 Direct: 505.314.5593
2201 San Pedro Drive NE, Bldg 4 Suite 200, Albuquerque, NM 87110

Curley, Tyler

From: Curley, Tyler
Sent: Friday, September 29, 2017 12:09 PM
To: 'Phillip Johnson'
Cc: Ed Hyde; Jerry Patton; Jercinovic, Devon; McKeage, Kevin
Subject: RE: KAFB Conveyance Line; Vertical Alignment Change

Phillip,

EA acknowledges that the trench depth will be adjusted in field to maintain slope while preventing asphalt damage as well as low spots in the line resulting from HDD under the road.

Thank you,
Tyler

From: Phillip Johnson [mailto:pjohnson@rmciinc.com]
Sent: Thursday, September 28, 2017 3:49 PM
To: Curley, Tyler <tcurley@eaest.com>
Cc: Ed Hyde <ehyde@rmciinc.com>; Jerry Patton <jpatton@rmciinc.com>
Subject: KAFB Conveyance Line; Vertical Alignment Change

Tyler,

This email is to document that vertical alignment changes are going to occur in the field to reduce the impact on the asphalt replacement on City Right-of-Way. RMCI and EA Engineering will work together in the field to determine the best vertical alignment to suit the needs of the project. These vertical alignment changes are to prevent large amounts of asphalt replacement in the City of Albuquerque Right-of-Way and to prevent having deeper excavations near the roadway. By making these field changes, RMCI and EA will prevent excessive asphalt replacement, larger amounts of import materials and prevent any additional safety concerns with large excavations so close to the roadway. Please note by making these field changes, that there will be the potential for low spots (although these will be tried to be mitigated) along the pipeline and for the directional drilling locations. RMCI and EA will make field determinations to mitigate these low points as much as possible. RMCI will as-built these changes at the end of the project for project record. RMCI and EA will also coordinate to make sure the minimum bury requirements are met as well.

Please respond to this email documenting that this is correct. After receipt of the response, RMCI will document this through a formal RFI.

Thanks,

Phillip Johnson
Project Manager
RMCI, Inc.
505-345-0008 (office)
505-345-0111 (fax)

505-235-1850 (cell)

Curley, Tyler

From: SANCHEZ, AMY ELIZABETH CIV USARMY CESPA (US) <Amy.E.Sanchez@usace.army.mil>
Sent: Wednesday, October 18, 2017 10:09 AM
To: McKeage, Kevin
Cc: Jercinovic, Devon; Curley, Tyler; Simpler, Trent W CIV USARMY CESPA (US); Salazar, Carlos F CIV USARMY CESPA (US); Dreeland, Linda E CIV USARMY CESPA (US); Phaneuf, Mark J CIV USARMY CESPA (US)
Subject: RE: Kirtland BFF - Field Change: KAFB-106228 Conduit Reroute

Kevin,

Wilson Electric's attached plan to reroute the conduit is approved.

Thanks,

Amy Sanchez, COR
USACE Albuquerque District
505-342-3234

-----Original Message-----
From: McKeage, Kevin [mailto:kmckeage@eaest.com]
Sent: Wednesday, October 18, 2017 8:57 AM
To: Simpler, Trent W CIV USARMY CESPA (US) <Trent.Simpler@usace.army.mil>; SANCHEZ, AMY ELIZABETH CIV USARMY CESPA (US) <Amy.E.Sanchez@usace.army.mil>; Salazar, Carlos F CIV USARMY CESPA (US) <Carlos.F.Salazar@usace.army.mil>; Dreeland, Linda E CIV USARMY CESPA (US) <Linda.E.Dreeland@usace.army.mil>; Phaneuf, Mark J CIV USARMY CESPA (US) <Mark.J.Phaneuf@usace.army.mil>
Cc: Jercinovic, Devon <djercinovic@eaest.com>; Curley, Tyler <tcurley@eaest.com>
Subject: [EXTERNAL] Kirtland BFF - Field Change: KAFB-106228 Conduit Reroute

USACE Team,

During potholing EA discovered that the electric and controls conduit for KAFB-106228 is located on top of the existing dual wall conveyance line. As a result EA's KAFB-106239 conveyance line installation subcontractors will not be able to maneuver equipment in and around the existing line to tie into the existing conveyance line without rerouting the conduit. EA has reviewed Wilson Electric's plan to reroute the conduit (attached) and would like to obtain USACE approval prior to conducting this field change. Please let us know if you have any questions.

Thank you,

Kevin McKeage, E.I.

Engineer

Cell: (316) 765-1486

Office: (505) 933-6417

kmckeage@eaest.com

EA Engineering, Science, and Technology, Inc., PBC

320 Gold Ave, Suite. 1300

Albuquerque, NM 87102

Blockedwww.eaest.com

BULK FUELS FACILITY
GROUNDWATER TREATMENT SYSTEM 5460 SAND FILTER DESIGN*

KIRTLAND AIR FORCE BASE
ALBUQUERQUE, NEW MEXICO
CONTRACT No. W912DR-12-D-0006
DELIVERY ORDER DM01

FINAL ASBUILTS 6-MAR-2018

ALL CONSTRUCTION IS PER PLAN UNLESS OTHERWISE NOTED

DRAWING INDEX:

CIVIL

DRAWING NO.	DRAWING TITLE
C-001	COVER SHEET AND DRAWING INDEX

PIPING

DRAWING NO.	DRAWING TITLE
P-001	EQUIPMENT NOTES AND SCHEDULES
P-101	EQUIPMENT PLAN
P-201	EQUIPMENT SECTIONS

ELECTRICAL

DRAWING NO.	DRAWING TITLE
E001	SAND FILTER ELECTRICAL SERVICE
E101	CP-100 CONTROL PANEL COMMUNICATION DIAGRAM

***NOTE**

THE ORIGINAL DESIGN DRAWINGS AND SPECIFICATIONS FOR THE KIRTLAND BULK FUELS FACILITY (BFF) GROUND WATER TREATMENT SYSTEM (GWTS) WERE PREPARED BY CHICAGO BRIDGE & IRON COMPANY (CB&I). THE ORIGINAL DRAWINGS ARE TITLED "PHASE IV MID-PLUME PUMP & TREAT SYSTEM", CONTRACT NO. W912DY-10-D-0014 DATED 01/09/15. DRAWINGS FOR GWTS SAND FILTER DESIGN THAT SHOW EQUIPMENT TO BE INSTALLED HAVE BEEN CARRIED FORWARD AND ARE PROVIDED HERE FOR CONSTRUCTION. FOR TECHNICAL SPECIFICATIONS, SEE CB&I KIRTLAND AIR FORCE BASE PHASE IV (TREATMENT PLANT) MID PLUME PUMP AND TREAT SYSTEM TECHNICAL SPECIFICATIONS DATED 03/13/15.

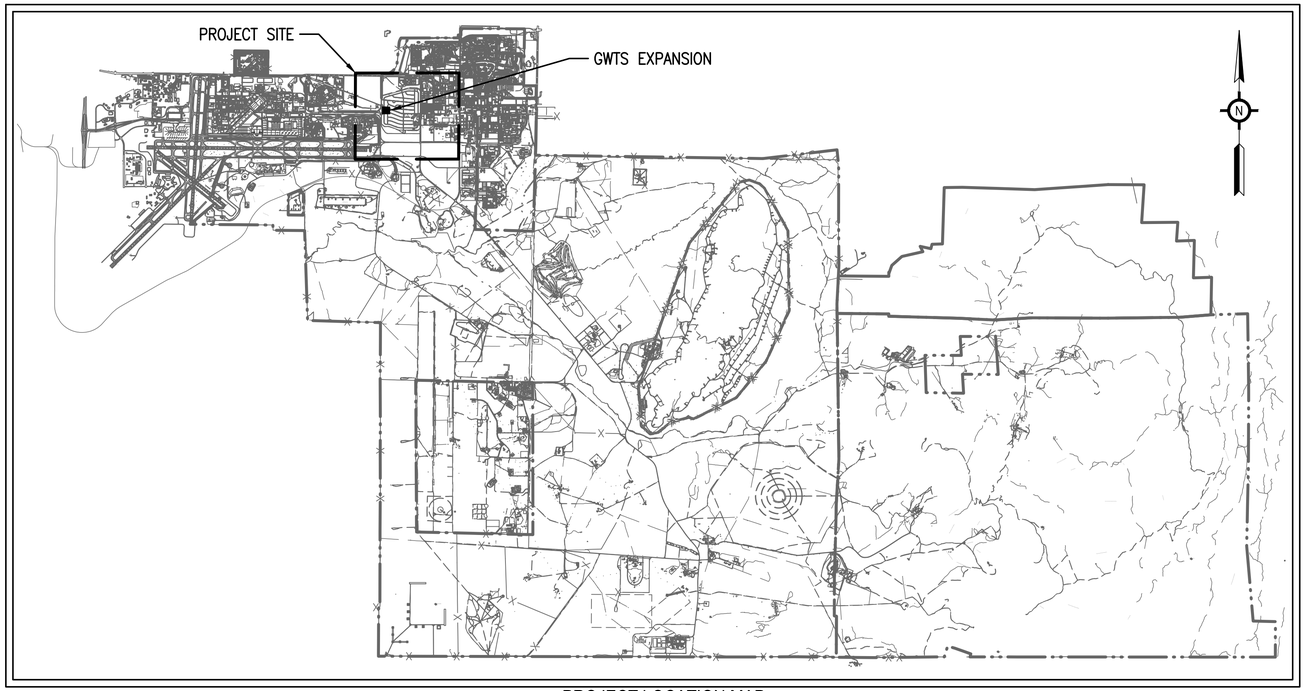

PROJECT LOCATION MAP

REVISIONS

NO.	DATE	BY	DESCRIPTION

DESIGN INFORMATION

DESIGNED BY:	DRAWN BY:	CHECKED BY:	PROJECT MANAGER:
HLB	ML	LLR	DEJ

SEAL

PROFESSIONAL CERTIFICATION. I HEREBY CERTIFY THAT THESE DOCUMENTS WERE PREPARED OR APPROVED BY ME, AND THAT I AM A DULY LICENSED PROFESSIONAL ENGINEER UNDER THE LAWS OF THE STATE OF NEW MEXICO, LICENSE NO. LICENSE_NUMBER EXPIRATION DATE: EXPIRATION_DATE

HERBERT L. BECKER — NEW MEXICO — 21117 — PROFESSIONAL ENGINEER

BULK FUELS FACILITY
GROUNDWATER TREATMENT SYSTEM 5460 SAND FILTER DESIGN
BERNALILLO COUNTY, NEW MEXICO

COVER SHEET AND DRAWING INDEX

EA Engineering, Science, and Technology, Inc., PBC.
221 Sun Valley Boulevard; Suite D
Lincoln, NE 68528
(402) 476-3766

DATE: DECEMBER 2016

PROJECT NUMBER: 62599DM01

C-001

SHEET: 1 OF 6

FILE PATH: F:\FEDERAL\DOD\AFCEC\PROJECTS\62599DM01 - KIRTLAND BFF\CADD\FIGURES\5460\62599DM01-C-001 COVER-SAND FILTER.DWG [LAYOUT] 10/6/16 mlueh

MECHANICAL GENERAL NOTES

SPECIFICATIONS:

PART 1 GENERAL

1.1 SCOPE OF WORK

A. FURNISH ALL LABOR, INSTALL ALL MATERIALS AND EQUIPMENT SERVICES AND INCIDENTIALS TO THE PROPER INSTALLATION OF WORK DETAILS.
B. GUARANTEE WORK TO BE FREE OF DEFECTS OF MATERIAL AND WORKMANSHIP FOR A PERIOD OF ONE YEAR AFTER DATE OF FINAL ACCEPTANCE OR AS REQUIRED BY SPECIFICATION AS APPLICABLE.
C. OBTAIN AND PAY FOR ALL REQUIRED PERMITS, FEES, AND INSPECTIONS, COORDINATE WITH ALL OTHER TRADES, APPLICABLE SPECIFICATIONS, DRAWINGS AND OWNER'S DIRECTIONS.

1.2 GENERAL CONDITIONS

A. SURVEY THE JOB SITE TO OBTAIN A FULL UNDERSTANDING OF THE WORK INVOLVED. ADDITIONAL FEES WILL NOT BE PAID FOR MISSED OR OVERLOOKED CONDITIONS REQUIRING ADDITIONAL WORK IF DETERMINED BY THE ENGINEER THAT SAID CONDITIONS COULD HAVE BEEN REASONABLY DETECTED DURING THE JOB SURVEY.
B. THE MECHANICAL DRAWINGS SHOW THE RELATIONSHIP BETWEEN EQUIPMENT AND SITE CONDITIONS. DO NOT SCALE THE DRAWINGS FOR EXACT SIZE OR LOCATIONS. FABRICATION AND/OR INSTALLATION DETAILS ARE MORE SPECIFIC AND SHOULD BE CLOSELY FOLLOWED.
C. THE MECHANICAL COMPONENTS SHALL BE INSTALLED IN ACCORDANCE WITH MANUFACTURER'S RECOMMENDATIONS, THE LOCAL / STATE BUILDING AND RELATED CONSTRUCTION CODES.

1.3 SYSTEM DESCRIPTION

A. EQUIPMENT SELECTIONS AS REPRESENTED ON DRAWINGS ARE FOR DESIGN PURPOSES ONLY. EQUIPMENT TYPE, PHYSICAL SIZE, WEIGHT, CAPACITIES AND PERFORMANCE CHARACTERISTICS SHALL BE GOVERNING FACTORS IN SUBMITTING "OR EQUALS" FOR REVIEW AND APPROVAL.
B. SUPPORT SYSTEMS HAVE BEEN DESIGNED FOR THE COMPONENTS AND PIPING SYSTEMS WITH SPECIFIED SPANS AND COMPONENT SUPPLIER RECOMMENDATIONS FOR SUPPORT / ANCHORING. THE ABSENCE OF SUPPORT DETAILS ON THE CONTRACT DRAWINGS DOES NOT RELIEVE THE CONTRACTOR OF THE RESPONSIBILITY FOR PROVIDING SUPPORTS / ANCHORS.

1.4 SUBMITTALS AND ACCEPTANCE

A. CONTRACTOR SHALL REPAIR, REPLACE, OR REPAINT TO MATCH ANY SURFACES OR COMPONENTS DAMAGED BY THE CONTRACTOR DURING THE INSTALLATION OF EQUIPMENT AND SYSTEMS.
B. CONTRACTOR SHALL REMOVE FROM THE JOB SITE ANY MATERIALS THAT ARE NOT USED OR NOT ECONOMICALLY RECOVERABLE.
C. EQUIPMENT SHOP DRAWINGS AND SUPPORT SYSTEM DETAIL DRAWINGS WILL SHOW PIPING SYSTEMS AND APPURTENANCES, SUCH AS MECHANICAL JOINTS, VALVES, LOCAL INSTRUMENTATION AND PIPE SUPPORTS. AS-BUILT DRAWINGS WILL SHOW PIPE SUPPORTS, AND LAYOUT OF PIPING SYSTEMS RELATIVE TO OTHER PARTS OF THE WORK INCLUDING CLEARANCES FOR MAINTENANCE AND OPERATION.
D. THE NAMES OF ALL QUALIFIED WELDERS, THEIR IDENTIFYING SYMBOLS, AND THE QUALIFYING PROCEDURES FOR EACH WELDER INCLUDING SUPPORT DATA SUCH AS TEST PROCEDURES USED, STANDARDS TESTED TO, ETC.
E. THE METHOD PROPOSED FOR DISPOSAL OF WASTE WATER FROM HYDROSTATIC TESTS AND ALL REQUIRED PERMITS, PRIOR TO PERFORMING HYDROSTATIC TESTS.
F. A SIGNED STATEMENT CERTIFYING THAT THE INSTALLATION IS SATISFACTORY AND IN ACCORDANCE WITH THE CONTRACT DRAWINGS, SPECIFICATIONS, AND THE MANUFACTURER'S PRESCRIBED PROCEDURES AND TECHNIQUES, UPON COMPLETION OF THE PROJECT AND BEFORE FINAL ACCEPTANCE.
G. THE MANUFACTURER'S INSTALLATION RECOMMENDATIONS OR INSTRUCTIONS FOR EACH MATERIAL OR PROCEDURE TO BE UTILIZED, INCLUDING MATERIALS PREPARATION.
H. A LIST OF ANY SPECIAL TOOLS NECESSARY FOR EACH PIPING SYSTEM AND APPURTENANCES FURNISHED FOR ADJUSTMENT, OPERATION, MAINTENANCE AND DISASSEMBLY OF THE SYSTEM.
I. HYDROSTATIC TEST REPORT.

1.5 DESIGN REQUIREMENTS

A. SUPPORT SYSTEMS SHALL BE SELECTED AND DESIGNED IN ACCORDANCE WITH MSS SP-58 AND MSS SP-69 WITHIN THE SPECIFIED SPANS AND COMPONENT REQUIREMENTS. THE ABSENCE OF PIPE SUPPORTS AND DETAILS ON THE CONTRACT DRAWINGS DOES NOT RELIEVE THE CONTRACTOR OF RESPONSIBILITY FOR SIZING AND PROVIDING SUPPORTS THROUGHOUT FACILITY.
B. ABOVE GRADE PIPING SYSTEMS SHALL BE SUITABLE FOR DESIGN CONDITIONS, CONSIDERING THE PIPING BOTH WITH AND WITHOUT INTERNAL PRESSURE, AND INSTALLATION FACTORS SUCH AS INSULATION, SUPPORT SPANS, AND AMBIENT TEMPERATURES. CONSIDERATION SHALL BE GIVEN TO ALL OPERATING AND SERVICE CONDITIONS BOTH INTERNAL AND EXTERNAL TO THE PIPING SYSTEMS. WALL PENETRATIONS SHALL BE VERIFIED AND THE SIZE AND LOCATION COORDINATED WITH THE OWNER PRIOR TO CONSTRUCTION.

1.6 REFERENCES

A. AMERICAN NATIONAL STANDARDS INSTITUTE (ANSI)
B. AMERICAN SOCIETY OF MECHANICAL ENGINEERS (ASME)
C. AMERICAN SOCIETY FOR TESTING AND MATERIALS (ASTM)
D. CODE OF FEDERAL REGULATIONS (CFR)
E. MANUFACTURER'S STANDARDIZATION SOCIETY (MSS)
F. SPECIFICATION: CB&I PHASE IV MID-PLUME PUMP & TREAT SYSTEM EXPANSION DRAWINGS – MISCELLANEOUS METAL FABRICATIONS (PIPE SUPPORTS)
G. SPECIFICATION: CB&I PHASE IV MID-PLUME PUMP & TREAT SYSTEM EXPANSION DRAWINGS – PIPELINES, LIQUID PROCESS PIPING
H. SPECIFICATION: CB&I PHASE IV MID-PLUME PUMP & TREAT SYSTEM EXPANSION DRAWINGS – WELDING PROCESS PIPING
I. SPECIFICATION: CB&I PHASE IV MID-PLUME PUMP & TREAT SYSTEM EXPANSION DRAWINGS – PAINTS AND COATINGS (EQUIPMENT, PROCESS PIPING, AND METALS)

1.7 DELIVERY, STORAGE, AND HANDLING

A. MATERIALS DELIVERED AND PLACED IN STORAGE SHALL BE STORED WITH PROTECTION FROM THE WEATHER, EXCESSIVE HUMIDITY VARIATION, EXCESSIVE TEMPERATURE VARIATION, DIRT, DUST AND/OR OTHER CONTAMINANTS. PROPER PROTECTION AND CARE OF MATERIAL BEFORE, DURING AND AFTER INSTALLATION IS THE CONTRACTOR'S RESPONSIBILITY. ANY MATERIAL FOUND TO BE DAMAGED SHALL BE REPLACED AT THE CONTRACTOR'S EXPENSE. DURING INSTALLATION, PIPING SHALL BE CAPPED TO KEEP OUT DIRT AND OTHER FOREIGN MATTER.

PART 2 PRODUCTS

2.1 MATERIALS, EQUIPMENT AND STANDARD PRODUCTS

A. PROVIDE PIPING MATERIALS AND APPURTENANCES AS SPECIFIED AND AS SHOWN ON THE DRAWINGS, AND SUITABLE FOR THE SERVICE INTENDED. PIPING MATERIALS, APPURTENANCES, AND EQUIPMENT SUPPLIED AS PART OF THIS CONTRACT SHALL BE OF EQUAL MATERIAL AND RATINGS AS THE CONNECTING PIPE, NEW AND UNUSED EXCEPT FOR TESTING EQUIPMENT. COMPONENTS THAT SERVE THE SAME FUNCTION AND ARE THE SAME SIZE SHALL BE IDENTICAL PRODUCTS OF THE SAME MANUFACTURER. THE GENERAL MATERIALS TO BE USED FOR THE PIPING SYSTEMS SHALL BE IN ACCORDANCE WITH THE PROCESS AND INSTRUMENTATION DIAGRAMS (P&ID'S) (SEE CB&I PHASE IV MID-PLUME PUMP & TREAT SYSTEM EXPANSION DRAWINGS) AND MECHANICAL PIPING DRAWINGS. PIPE FITTINGS SHALL BE COMPATIBLE WITH THE APPLICABLE PIPE MATERIALS.
B. PROVIDE MATERIAL AND EQUIPMENT WHICH ARE THE STANDARD PRODUCTS OF A MANUFACTURER REGULARLY ENGAGED IN THE MANUFACTURING OF THE PRODUCTS AND THAT ESSENTIALLY DUPLICATE ITEMS THAT HAVE BEEN IN SATISFACTORY USE FOR AT LEAST 2 YEARS PRIOR TO BID OPENING. NOMINAL SIZES FOR STANDARDIZED PRODUCTS SHALL BE USED. PIPE, VALVES, FITTINGS AND APPURTENANCES SHALL BE SUPPORTED BY A SERVICE ORGANIZATION THAT IS, IN THE OPINION OF THE CONTRACTING OFFICER, REASONABLY CONVENIENT TO THE SITE.

2.2 CARBON STEEL PIPING SYSTEM

A. ALL PIPING AND FITTINGS SHALL CONFORM TO THE FOLLOWING, UNLESS OTHERWISE INDICATED ON MECHANICAL PIPING DRAWINGS. CARBON STEEL PIPE SHALL MEET THE REQUIREMENTS OF ASTM A 53/A 53M SEAMLESS, GRADE B, SCHEDULE 40.
B. CARBON STEEL PIPING SHALL BE JOINED BY WELDING. DIELECTRIC FITTINGS OR ISOLATION JOINTS SHALL BE PROVIDED BETWEEN ALL DISSIMILAR METALS.
C. FITTINGS SHALL BE CARBON STEEL.
D. WELDING FITTINGS SHALL BE BUTT-WELDING. WELDING FITTINGS SHALL BE FORGED STEEL, CLASS 150 LOW-CARBON STEEL, ASTM A 234/ A 234 M SEAMLESS CONFORMING TO ASME B16.9.
E. THE INTERNAL DIAMETER BORES OF FLANGES AND FLANGED FITTINGS SHALL BE THE SAME AS THAT OF THE ASSOCIATED PIPE. THE FLANGES SHALL BE SLIP-ON TYPE. FLANGES AND FLANGED FITTINGS SHALL BE FORGED STEEL, ASTM A 105/A 105M OR WROUGHT CARBON STEEL, ASTM A 234/A234M, FACED AND DRILLED TO ASME B16.5 CLASS 150 WITH A 0.0625 INCH RAISED FACE. CAST STEEL BACKING FLANGES, ASTM A 216/A 216M GRADE WCA BOLTING SHALL BE ALLOY-STEEL ASTM A 193/A 193M GRADE B5 HEX HEAD BOLTS AND ASTM A 194/A 194M GRADE 8 HEX HEAD NUTS. WHEN MATING FLANGE ON VALVES OR EQUIPMENT IS CAST IRON, ASTM A 193/A 193M GRADE B8 CLASS 1BOLTS AND ASTM A 194/A 194M GRADE 8 HEAVY HEX HEAD NUTS SHALL BE USED. BOLTS SHALL BE PROVIDED WITH WASHERS OF THE SAME MATERIAL AS THE BOLTS. GASKETS SHALL MEET THE REQUIREMENTS OF ASME B16.5. NONMETALLIC GASKETS SHALL CONFORM TO ASME B16.21 AND BE A 0.125 INCH THICK CHLOROPRENE RUBBER, DUROMETER HARDNESS NO.80; 1,500 PSI MINIMUM TENSILE STRENGTH; 125 PERCENT MINIMUM ELONGATIONS AND FLAT RING TYPE FOR USE WITH RAISED FACE FLANGES.
F. IN CASES WHERE THE MATING FLANGES FOR EQUIPMENT, VALVES, AND SPECIALTY ITEMS ARE FLAT-FACED FLANGES, A SUBSTITUTE SLIP-ON TYPE FLAT-FACED FLANGE ON THE PIPING END SHOULD BE USED. FILLER FLANGES ARE ACCEPTABLE WITH PROPER GASKETS AND PRIOR APPROVAL FROM ENGINEERING.

2.3 VALVES

A. ALL VALVES SHALL CONFORM TO THE FOLLOWING UNLESS OTHERWISE SPECIFIED ON THE MECHANICAL PIPING DRAWINGS.
B. VALVES SHALL INCLUDE OPERATOR, ACTUATOR, HAND WHEEL, CHAIN WHEEL, EXTENSION STEM, FLOOR STAND, WORM AND GEAR OPERATOR, OPERATING NUT, CHAIN, WRENCH, AND ALL OTHER ACCESSORIES REQUIRED FOR A COMPLETE OPERATION. THE VALVES SHALL BE SUITABLE FOR THE INTENDED SERVICE. VALVES SHALL BE THE SAME SIZE AS ADJOINING PIPE UNLESS OTHERWISE INDICATED ON DRAWINGS. VALVE ENDS SHALL BE COMPATIBLE WITH ADJACENT PIPING SYSTEM. VALVES SHALL HAVE THE ABILITY TO EXCEPT LOCKS FOR LOCKOUT TAG, OUT REQUIREMENTS.
C. BALL VALVES, 2-INCH AND SMALLER, SHALL BE END ENTRY TYPE WITH BRONZE BODIES AND THREADED ENDS. VALVES SHALL HAVE POLYTETRAFLUOROETHYLENE (PTFE) PACKING AND SEATS, A STAINLESS STEEL BALL, REGULAR PORTS, AND HAND LEVER OPERATORS. VALVES SHALL BE RATED FOR 150 PSIG SERVICE AT 150 DEGREES F.
D. BUTTERFLY VALVES, 2- INCH AND LARGER, SHALL HAVE DUCTILE IRON BODIES; LUGGED STYLE. VALVES SHALL CONFORM TO AWWA C504 CLASS 125. DISCS SHALL BE CONTOURED AND NYLON COATED. THE VALVE SHAFTS SHALL BE STAINLESS STEEL WITH SELF-LUBRICATING, CORROSION-RESISTANT SLEEVE TYPE BEARINGS. VALVE SEATS SHALL BE ATTACHED TO EITHER THE VALVE BODY OR THE DISC AND SHALL BE CONSTRUCTED OF EPDM. VALVES 4-INCHES AND SMALLER SHALL HAVE MANUAL, LOCKING HAND LEVER OPERATORS. VALVES LARGER THAN 4-INCHES SHALL HAVE HAND WHEEL WITH GEAR OPERATORS.
E. GLOBE VALVES 3 INCH AND SMALLER, SHALL HAVE CARBON STEEL BODIES AND BONNETS, WITH STAINLESS STEEL TRIM. VALVES SHALL CONFORM TO ASME B16.34 CLASS 150, THREADED END CONNECTIONS. VALVES SHALL INCLUDE BONNETS, INSIDE SCREWS, RISING STEMS, CONVENTIONAL DISCS AND RINGS. VALVES SHALL BE RATED FOR 150 PSIG SERVICE AT 150 DEGREES F.

2.4 PIPING COMPONENTS

A. ALL PIPELINE LOW POINTS SHALL BE DRAINED. DRAIN VALVES SHALL BE LOCATED AS SHOWN ON MECHANICAL DRAWINGS.
B. PROCESS INTERCONNECTING PIPE SHALL BE CAPABLE OF BEING SAMPLED. SAMPLE VALVE SHALL BE LOCATED AS SHOWN ON MECHANICAL DRAWINGS.
C. COMBINATION AIR RELEASE VALVES SHALL BE INSTALLED AS NEEDED IN THE PIPELINE TO PREVENT UNCONTROLLED TRANSFER OF WATER BETWEEN VESSELS AND / OR THE BUILDING INFLUENT OR EFFLUENT CONNECTIONS. COMBINATION AIR RELEASE VALVES SHALL BE INSTALLED AS SHOWN ON MECHANICAL DRAWINGS.
D. BACKFLOW PREVENTERS SHALL BE INSTALLED AS SHOWN ON MECHANICAL DRAWINGS.

2.5 PIPE SUPPORTS AND PENETRATIONS

A. PROVIDE AUXILIARY STEEL WHERE THE SUPPORT OF PIPING SYSTEMS AND EQUIPMENT IS REQUIRED BETWEEN BUILDING STRUCTURAL ELEMENTS. REFER TO STRUCTURAL DRAWINGS (SEE CB&I PHASE IV MID-PLUME PUMP & TREAT SYSTEM EXPANSION DRAWINGS) FOR SPECIFIC DETAILS AND SUPPORT CONFIGURATIONS.
B. PIPE SUPPORTS SHALL CONFORM TO THE REQUIREMENTS OF MSS SP-69, AND MSS SP-58. WHERE PIPE SUPPORTS CONTACT BARE PIPING OR IN-LINE DEVICES, PROVIDE SUPPORTS OF COMPATIBLE MATERIAL SO THAT NEITHER SHALL HAVE A DETERIORATING ACTION ON THE OTHER.
C. REFER TO EQUIPMENT SECTIONS DRAWING FOR LOCATION OF WALL PENETRATION.

PART 3 EXECUTION

3.1 EXAMINATION AND PREPARATION

A. AFTER BECOMING FAMILIAR WITH ALL DETAILS OF THE WORK, VERIFY ALL DIMENSIONS IN THE FIELD, AND ADVISE THE CONTRACTING OFFICER OF ANY DISCREPANCY BEFORE PERFORMING THE WORK.
B. PIPE AND EQUIPMENT OPENINGS SHALL BE CLOSED WITH CAPS OR PLUGS DURING INSTALLATION. EQUIPMENT SHALL BE PROTECTED FROM DIRT, WATER, AND CHEMICAL OR MECHANICAL DAMAGE.
C. NOTIFY THE CONTRACTING OFFICER AT LEAST 2 WEEKS PRIOR TO THE FIELD FABRICATION OF PIPE OR FITTINGS AND AT LEAST 3 DAYS PRIOR TO THE START OF ANY SURFACE PREPARATION OR COATING APPLICATION WORK. WELDING ELECTRODES SHALL BE PROVIDED IN ACCORDANCE WITH THE APPLICABLE BASE METALS AND WELDING PROCESS. FABRICATION OF FITTINGS SHALL BE PERFORMED IN ACCORDANCE WITH THE MANUFACTURER'S INSTRUCTIONS.

3.2 EXPOSED PIPING INSTALLATION

A. EXPOSED PIPING SHALL BE RUN AS STRAIGHT AS PRACTICAL ALONG THE ALIGNMENT SHOWN ON THE CONTRACT DRAWINGS AND WITH A MINIMUM OF JOINTS. PIPING AND APPURTENANCES SHALL BE INSTALLED IN CONFORMANCE WITH REVIEWED SHOP DRAWINGS, MANUFACTURER'S INSTRUCTIONS AND ASME B31.3. PIPING SHALL BE INSTALLED WITHOUT SPRINGING OR FORCING THE PIPE.
B. PIPES SHALL BE THOROUGHLY CLEANED OF OIL, SCALE, RUST, AND DIRT IN ORDER TO PROVIDE A CLEAN SEAT FOR GASKETS. GASKETS SHALL BE WIPED CLEAN PRIOR TO INSTALLATION. FLEXIBLE COUPLINGS AND FLANGED COUPLING ADAPTER GASKETS SHALL BE LUBRICATED WITH THE MANUFACTURER'S STANDARD LUBRICANT BEFORE INSTALLATION ON THE PIPE ENDS. COUPLINGS, SERVICE SADDLES, AND ANCHOR STUDS SHALL BE INSTALLED IN ACCORDANCE WITH MANUFACTURER'S INSTRUCTIONS. BOLTS SHALL BE TIGHTENED PROGRESSIVELY, DRAWING UP BOLTS ON OPPOSITE SIDES A LITTLE AT A TIME UNTIL ALL BOLTS HAVE A UNIFORM TIGHTNESS. TORQUE-LIMITING WRENCHES SHALL BE USED TO TIGHTEN BOLTS.
C. PIPE FLANGES SHALL BE SET LEVEL, PLUMB, AND ALIGNED. FLANGED FITTINGS SHALL BE INSTALLED TRUE AND PERPENDICULAR TO THE AXIS OF THE PIPE. THE BOLT HOLES SHALL BE CONCENTRIC TO THE CENTERLINE OF THE PIPE.
D. VALVES SHALL BE LOCATED IN ACCORDANCE WITH THE CONTRACT DRAWINGS WHERE ACTUATORS ARE SHOWN. WHERE ACTUATORS ARE NOT SHOWN, VALVES SHALL BE LOCATED AND ORIENTED TO PERMIT EASY ACCESS TO THE VALVE OPERATOR, AND TO AVOID INTERFERENCES.

3.3 VALVE INSTALLATION

A. FLANGED VALVE BOLT HOLES SHALL BE INSTALLED SO AS TO STRADDLE THE VERTICAL CENTERLINE OF PIPE. FLANGED FACES SHALL BE CLEANED PRIOR TO INSERTING THE GASKET AND BOLTS, AND THEN THE NUTS SHALL BE TIGHTENED PROGRESSIVELY AND UNIFORMLY. THREADED ENDS SHALL HAVE THE THREADS CLEANED BY WIRE BRUSHING OR SWABBING PRIOR TO INSTALLATION.
B. THE OPERATING STEM OF A MANUAL VALVE SHALL BE INSTALLED IN A VERTICAL POSITION WHEN THE VALVE IS INSTALLED IN HORIZONTAL RUNS OF PIPE HAVING CENTERLINE ELEVATIONS 4.5 FEET OR LESS ABOVE FINISHED FLOOR, UNLESS OTHERWISE SHOWN ON MECHANICAL PIPING DRAWINGS. THE OPERATING STEM OF A MANUAL VALVE SHALL BE INSTALLED IN A HORIZONTAL POSITION IN HORIZONTAL RUNS OF PIPE HAVING CENTERLINE ELEVATIONS BETWEEN 4.5 FEET AND 6.75 FEET ABOVE FINISH FLOOR, UNLESS OTHERWISE SHOWN ON MECHANICAL PIPING DRAWINGS. AUTOMATIC VALVES SHALL BE INSTALLED IN ACCORDANCE WITH THE MANUFACTURER'S INSTRUCTIONS.

3.4 PIPING SUPPORT SYSTEMS INSTALLATION

A. THE ABSENCE OF PIPE SUPPORTS AND DETAILS ON THE MECHANICAL PIPING DRAWINGS SHALL NOT RELIEVE THE CONTRACTOR OF RESPONSIBILITY FOR SIZING AND PROVIDING SUPPORTS THROUGHOUT PLANT.
B. PIPE SUPPORT SYSTEMS SHALL MEET THE REQUIREMENTS OF MSS SP-58. CONTRACTOR-DESIGNED AND SELECTED SUPPORT SYSTEMS SHALL BE INSTALLED IN ACCORDANCE WITH MSS SP-69, AND AS SPECIFIED HEREIN. PIPING CONNECTIONS TO EQUIPMENT SHALL BE SUPPORTED BY PIPE SUPPORTS AND NOT OFF THE EQUIPMENT. LARGE OR HEAVY VALVES, FITTINGS, AND/OR EQUIPMENT SHALL BE SUPPORTED INDEPENDENTLY OF ASSOCIATED PIPING. PIPES SHALL NOT BE SUPPORTED OFF OTHER PIPES. SUPPORTS SHALL BE PROVIDED AT PIPING CHANGES IN DIRECTION OR IN ELEVATION, ADJACENT TO FLEXIBLE JOINTS AND COUPLINGS, AND WHERE OTHERWISE SHOWN ON THE CONTRACT DRAWINGS. PIPE SUPPORTS AND HANGERS SHALL NOT BE INSTALLED IN EQUIPMENT ACCESS AREAS OR BRIDGE CRANE RUNS. HANGING PIPES SHALL BE BRACED AGAINST HORIZONTAL MOVEMENT BY BOTH LONGITUDINAL AND LATERAL SWAY BRACING. AT EACH CHANNEL TYPE SUPPORT, EVERY PIPE SHALL BE PROVIDED WITH AN INTERMEDIATE PIPE GUIDE, EXCEPT WHERE PIPE ANCHORS ARE REQUIRED. EXISTING SUPPORT SYSTEMS MAY BE USED TO SUPPORT ADDITIONAL NEW PIPING ONLY IF THE CONTRACTOR CAN DEMONSTRATE THAT THE EXISTING SUPPORT SYSTEMS ARE ADEQUATE FOR THE ADDITIONAL LOADS, OR IF THE EXISTING SYSTEMS ARE STRENGTHENED TO SUPPORT THE ADDITIONAL LOADS. PEDESTAL TYPE PIPE SUPPORTS SHALL BE PROVIDED UNDER BASE FLANGES ADJACENT TO ROTATING EQUIPMENT AND WHERE REQUIRED TO ISOLATE VIBRATION. PIPING 2.5 INCH IN DIAMETER AND LARGER SHALL BE BRACED FOR SEISMIC FORCES. LATERAL SUPPORTS FOR SEISMIC LOADS SHALL BE INSTALLED AT ALL CHANGES IN DIRECTION.

3.5 PIPE PAINTING, COLOR CODING AND IDENTIFICATION

A. PAINT AND COLOR CODING REQUIREMENTS FOR EXPOSED PIPING SHALL BE IN ACCORDANCE WITH SECTION 099000 – PAINTS AND COATINGS (CB&I PHASE IV MID-PLUME PUMP & TREAT SYSTEM EXPANSION SPECIFICATIONS).

3.6 FIELD QUALITY CONTROL

A. HYDROSTATIC TESTING SHALL BE CONDUCTED IN ACCORDANCE WITH ASME B31.3. PIPING SYSTEMS SHALL BE TESTED UNDER NORMAL SERVICE CONDITIONS (AS INDICATED IN THE PIPE SCHEDULE IN THE CONTRACT DRAWINGS) TO DEMONSTRATE COMPLIANCE. THE TEST PRESSURE SHALL NOT BE LESS THAN 1.5 TIMES THE DESIGN PRESSURE. WATER SHALL BE USED AS THE HYDROSTATIC TEST FLUID. PROVIDE CLEAN TEST WATER OF SUCH QUALITY TO PREVENT CORROSION OF THE PIPING SYSTEM MATERIALS. AIR RELEASE VENTS SHALL BE OPENED AT ALL HIGH POINTS OF THE PIPING SYSTEM IN ORDER TO PURGE AIR POCKETS WHILE THE PIPING SYSTEM IS FILLING.
B. FOR RIGID PIPING HYDROSTATIC TESTING, THE MAXIMUM TEST PRESSURE SHALL BE CALCULATED ACCORDING TO ASME B31.3, BUT SHALL NOT EXCEED THE YIELD STRENGTH OF THE PIPING SYSTEM. THE MAXIMUM VELOCITY DURING FILLING SHALL BE IN ACCORDANCE WITH THE MANUFACTURER'S INSTRUCTIONS. VENTING DURING FILLING MAY ALSO BE PROVIDED BY LOOSENING FLANGES WITH A MINIMUM OF FOUR BOLTS OR BY THE USE OF EQUIPMENT VENTS. TEST ALL PARTS OF THE PIPING SYSTEM. THE HYDROSTATIC TEST PRESSURE SHALL BE MAINTAINED CONTINUOUSLY FOR 30 MINUTES MINIMUM AND FOR SUCH ADDITIONAL TIME AS NECESSARY TO CONDUCT EXAMINATIONS FOR LEAKAGE. ALL JOINTS AND CONNECTIONS SHALL BE EXAMINED FOR LEAKAGE. THE PIPING SYSTEM, EXCLUSIVE OF POSSIBLE LOCALIZED INSTANCES AT PUMP OR VALVE PACKING, SHALL SHOW NO VISUAL EVIDENCE OF LEAKING. CORRECT VISIBLE LEAKAGE AND RETEST. UNLESS OTHERWISE DIRECTED BY THE CONTRACTING OFFICER, THE PIPING SYSTEM SHALL BE LEFT FULL OF WATER AFTER LEAKS ARE REPAIRED.
C. FOR NON-RIGID, NON-METALLIC PIPING HYDROSTATIC TESTING, THE MAXIMUM TEST PRESSURE SHALL BE CALCULATED ACCORDING TO ASME B31.3, BUT SHALL NOT EXCEED 1.5 TIMES THE MAXIMUM PRESSURE RATING OF THE LOWEST RATED COMPONENT IN THE PIPING SYSTEM. THE MAXIMUM VELOCITY DURING FILLING SHALL BE IN ACCORDANCE WITH THE MANUFACTURER'S INSTRUCTIONS. THE SYSTEM SHALL BE INITIALLY PRESSURIZED TO 50 PERCENT OF THE NORMAL SERVICE CONDITIONS AND INSPECTED. ANY LEAKS SHALL BE REPAIRED BY THE CONTRACTOR. THE SYSTEM SHALL THEN BE PRESSURIZED TO THE TEST PRESSURE. SMALL AMOUNTS OF WATER SHALL BE ADDED AS REQUIRED ON A HOURLY BASIS FOR A MAXIMUM OF 3 HOURS IN ORDER TO MAINTAIN THE TEST PRESSURE. AFTER 4 HOURS, THE TEST PRESSURE SHALL BE LOWERED BY 10.0 PSI. IF THE HYDROSTATIC PRESSURE REMAINS STEADY FOR 1 HOUR, THEN NO LEAKAGE IS INDICATED. INSPECT FOR LEAKS, REPAIR AND RETEST IF NECESSARY. THE PIPING SYSTEM SHALL BE ALLOWED TO RELAX FOR 8 HOURS BEFORE RETESTING.
D. TESTS FOR ABOVE GROUND PRESSURE PIPING SHALL BE CONDUCTED AFTER THE PIPING HAS BEEN COMPLETELY INSTALLED, INCLUDING ALL SUPPORTS, HANGERS, AND ANCHORS, AND INSPECTED FOR PROPER INSTALLATION BUT PRIOR TO INSTALLATION OF INSULATION.
E. VALVES MAY EITHER BE TESTED WHILE TESTING PIPELINES, OR AS A SEPARATE STEP. IT SHALL BE DEMONSTRATED THAT VALVES OPEN AND CLOSE SMOOTHLY WITH OPERATING PRESSURE ON ONE SIDE AND ATMOSPHERIC PRESSURE ON THE OTHER, AND IN BOTH DIRECTIONS FOR TWO-WAY VALVE APPLICATIONS. COUNT AND RECORD THE NUMBER OF TURNS REQUIRED TO OPEN AND CLOSE EACH VALVE, AND ACCOUNT FOR ANY DISCREPANCIES WITH MANUFACTURER'S DATA. AIR AND VACUUM RELIEF VALVES SHALL BE EXAMINED AS THE ASSOCIATED PIPE IS BEING FILLED TO VERIFY VENTING AND SEATING IS FULLY FUNCTIONAL. SET, VERIFY, AND RECORD SET PRESSURES FOR ALL RELIEF AND REGULATING VALVES. SELF-CONTAINED AUTOMATIC VALVES SHALL BE TESTED AT BOTH MAXIMUM AND MINIMUM OPERATING RANGES, AND RESET UPON COMPLETION OF TEST TO THE DESIGN VALUE. [AUTOMATIC VALVES THAT ARE NOT SELF-CONTAINED SHALL BE TESTED IN CONJUNCTION WITH CONTROL SYSTEM TESTING.]

3.7 INTERIM / FINAL CLEANING

A. PREVENT THE ACCUMULATION OF WELD ROD, WELD SPATTER, PIPE CUTTINGS AND FILINGS, GRAVEL, CLEANING RAGS, AND OTHER FOREIGN MATERIAL WITHIN PIPING SECTIONS DURING FABRICATION. THE PIPING SHALL BE EXAMINED TO ASSURE REMOVAL OF THESE AND OTHER FOREIGN OBJECTS PRIOR TO ASSEMBLY AND INSTALLATION.

PROCESS EQUIPMENT SCHEDULE - TREATMENT PLANT EXPANSION

IDENT.	EQUIPMENT TYPE	DESCRIPTION	SUPPLIED BY	INSTALLED BY	REMARKS
SF-101	SAND FILTER	SAND FILTER UNIT MODEL MM 5460-2A (160-477 GPM) AS PRETREATMENT FOR BIOLOGIC FOULING AND IRON AND MANGANESE REMOVAL OF TREATMENT TRAIN #1	YARDNEY	CONTRACTOR	1, 2, 3
SF-102	SAND FILTER	SAND FILTER UNIT MODEL MM 5460-2A (160-477 GPM) AS PRETREATMENT FOR BIOLOGIC FOULING AND IRON AND MANGANESE REMOVAL OF TREATMENT TRAIN #2	YARDNEY	CONTRACTOR	1, 2, 3
CI-101	CHLORINE INJECTOR	SODIUM HYPOCHLORITE INJECTION SYSTEM, GRUNDFOS DOSING TANK STATION (DTS) WITH DDC 7-9 SMART DIGITAL PUMP	GRUNDFOS	CONTRACTOR	2
CI-102	CHLORINE INJECTOR	SODIUM HYPOCHLORITE INJECTION SYSTEM, GRUNDFOS DOSING TANK STATION (DTS) WITH DDC 7-9 SMART DIGITAL PUMP	GRUNDFOS	CONTRACTOR	2
TK-301	SETTLING/CLARIFIER TANK	ROLL-OFF SETTLING-CLARIFIER TANK, 8,000 GAL CAPACITY	GWTT, INC.	CONTRACTOR	4
P-112A/B	Pump	REPLACE EXISITNG 5.375 INCH IMPELLER WITH 6.062 INCH IMPELLER	ITT GOULDS	CONTRACTOR	5
P-212A/B	Pump	REPLACE EXISITNG 5.375 INCH IMPELLER WITH 6.062 INCH IMPELLER	ITT GOULDS	CONTRACTOR	5

REMARKS:
1. SAND FILTERS WILL BE SHIPPED ON INTEGRAL SKID. CONTRACTOR SHALL INSTALL SKIDS PER DRAWINGS. ANY SHIP-LOOSE ITEMS SHALL BE INSTALLED BE
2. EQUIPMENT SHALL BE INSTALLED PER MANUFACTURER'S RECOMMENDATIONS AND/OR AS SHOWN ON DRAWINGS.
3. LIFTING AND RIGGING OF EQUIPMENT SHALL BE IN ACCORDANCE WITH SPECIFIED PROCEDURES.
4. ROLL-OFF TO ACCOMMODATE PICKUP WITH HEIL LOWLIFT™ EQUIPPED TRUCK.
5. ITT GOULDS PUMP MODEL 3196STI 2X3-6

INFLUENT DISTRIBUTION VALVE OPERATION

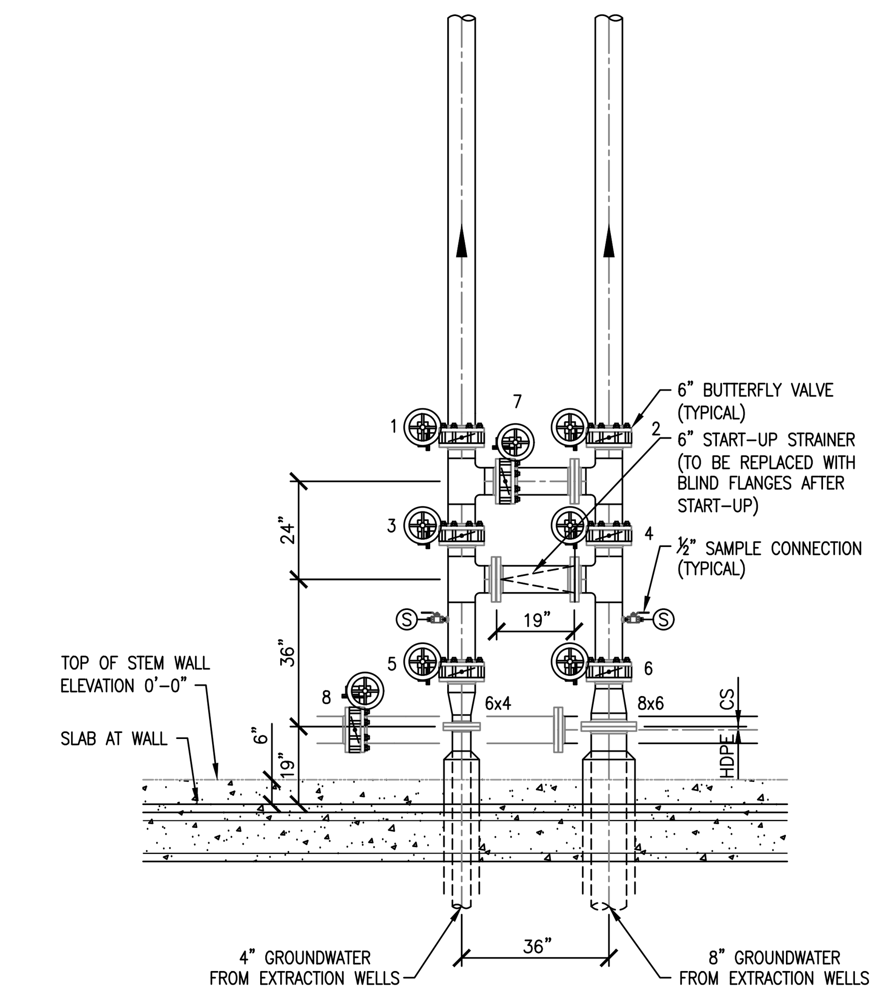

FIGURE 1

INFLUENT FROM THE EXTRACTION WELLS ENTERS THE TREATMENT PLANT VIA EITHER A 4 INCH OR 8 INCH GROUNDWATER INFLUENT LINE CONNECTED TO THE DISTRIBUTION MANIFOLD. THIS MANIFOLD PRESENTLY HAS 6 BUTTERFLY VALVES NUMBERED 1-6 AND ONE STRAINER AS SHOWN IN FIGURE 1. THE 4 INCH LINE, HAVING BUTTERFLY VALVES 1, 3, AND 5 IS CONNECTED TO THE EXPANSION TREATMENT TRAIN (TANK, FEED PUMPS, BAG FILTERS, GAC, AND TREATED WATER TANK). THE 8 INCH LINE, HAVING BUTTERFLY VALVES 2, 4, AND 6, IS CONNECTED TO THE INITIAL TREATMENT TRAIN (TANK, FEED PUMPS, BAG FILTERS, GAC, AND TREATED WATER TANK). WATER FROM THE MANIFOLD FLOWS UNDER PRESSURE FROM THE EXTRACTION WELLS THROUGH THE DISTRIBUTION MANIFOLD TO THE FEED TANKS. UPON ENTERING THE FEED TANKS INTERNAL PRESSURE GOES TO ATMOSPHERIC. THE SUCTION LINE FROM THE INITIAL FEED TANK CONNECTS TO THE INITIAL SKID FEED PUMPS. THE SUCTION LINE FROM THE EXPANSION FEED TANK CONNECTS TO THE EXPANSION SKID FEED PUMPS. IN ADDITION THESE TWO SUCTION LINES ARE CONNECTED UNDER SYSTEM EXPANSION.

THE ADDITION OF ONE BUTTERFLY VALVE SHOWN AS VALVE 7 IN FIGURE 1, REMOVAL OF THE STRAINER WITH PLACEMENT OF BLIND FLANGES, AND THE ADDITION OF ONE BUTTERFLY VALVE SHOWN AS VALVE 8 IN THE SUCTION LINE CONNECTING BOTH FEED TANKS WAS INCLUDED TO PROVIDE ADDITIONAL SYSTEM OPERATION FLEXIBILITY FOR MIXING OR SEPARATING FLOW TO THE INDIVIDUAL TREATMENT TRAINS. DESCRIPTIONS OF THE POSSIBLE FLOW FEED OPTIONS TO THE TREATMENT TRAINS THAT CAN BE ACHIEVED BY OPENING/CLOSING THE VARIOUS VALVES ARE DESCRIBED AS FOLLOWS:

CONDITION 1 – INFLUENT COMBINED AND DIRECTED TO BOTH TREATMENT TRAINS

1. WITH ALL VALVES (1-8) OPEN:
   a. FLOW WILL BE DIRECTED TO BOTH FEED TANKS AND WILL EQUALIZE WATER LEVELS IN BOTH TANKS AT SAME ELEVATION INDEPENDENT OF INFLUENT PUMPING OR FEED PUMPING RATES.
   b. CONTROL OF WATER LEVELS IN THE TWO FEED TANKS WILL BE MAINTAINED THROUGH ADJUSTMENT OF THE INFLUENT AND FEED PUMP PUMPING RATES.
   c. FEED PUMP RATES TO EITHER TREATMENT TRAIN CAN BE THE SAME (E.G., COMBINED PUMPING UP TO 400 GPM EACH SKID UNIT) OR DIFFERENT (E.G. 125 GPM ONE SKID UNIT AND UP TO 400 GPM THE SECOND UNIT).

CONDITION 2 – INFLUENT SEPARATED AND DIRECTED TO SEPARATE TREATMENT TRAINS

1. WITH VALVES 1, 3, AND 5 ON THE 4 INCH LINE OPEN, VALVES 2, 4, AND 6 OPEN ON THE 8 INCH LINE VALVE 7 ON THE HORIZONTAL CROSS TIE OF THE MANIFOLD CLOSED, AND VALVE 8 ON SUCTION LINE BETWEEN THE TWO FEED TANKS CLOSED:
   a. FLOW FROM THE 4 INCH LINE WILL BE DIRECTED TO THE EXPANSION TREATMENT TRAIN (TANK, FEED PUMPS, BAG FILTERS, GAC, AND TREATED WATER TANK).
   b. FLOW FROM THE 8 INCH LINE WILL BE DIRECTED TO THE INITIAL TREATMENT TRAIN (TANK, FEED PUMPS, BAG FILTERS, GAC, AND TREATED WATER TANK).
   c. CONTROL OF WATER LEVELS IN THE EXPANSION FEED TANK WILL BE MAINTAINED THROUGH ADJUSTMENT OF THE INFLUENT AND FEED PUMP PUMPING RATES.
   d. CONTROL OF WATER LEVELS IN THE INITIAL FEED TANK WILL BE MAINTAINED THROUGH ADJUSTMENT OF THE INFLUENT AND FEED PUMP PUMPING RATES.
   e. FEED PUMP RATES TO EITHER TREATMENT TRAIN CAN BE THE SAME (E.G., COMBINED PUMPING UP TO 400 GPM EACH SKID UNIT) OR DIFFERENT (E.G. 125 GPM ONE SKID UNIT AND UP TO 400 GPM THE SECOND UNIT).

CONDITION 3 – INFLUENT COMBINED AND TREATMENT TRAIN BYPASS FOR GAC CHANGE OUT

1. FLOW FROM THE 4 INCH AND 8 INCH INFLUENT LINES CAN BE DIRECTED TO THE INITIAL TREATMENT TRAIN BY:
   a. VALVE 1 CLOSED AND VALVES 3 AND 5 OPEN ON THE 4 INCH SIDE OF THE MANIFOLD
   b. VALVES 2, 4, AND 6 OPEN ON THE 8 INCH SIDE OF THE MANIFOLD
   c. VALVE 7 OPEN ON THE HORIZONTAL CROSS TIE OF THE MANIFOLD
   d. VALVE 8 CLOSED ON THE SUCTION LINE BETWEEN TWO FEED TANKS
   e. COMBINED INFLUENT LIMITED TO 400 GPM MAXIMUM.
   f. CONTROL OF WATER LEVELS IN THE INITIAL FEED TANK WILL BE MAINTAINED THROUGH ADJUSTMENT OF THE INFLUENT AND FEED PUMP PUMPING RATES.
2. FLOW FROM THE 4 INCH AND 8 INCH INFLUENT LINES CAN BE DIRECTED TO THE EXPANSION TREATMENT TRAIN BY:
   a. THE VALVE 2 CLOSED AND VALVES 4 AND 6 OPEN ON THE 8 INCH SIDE OF THE MANIFOLD
   b. VALVES 3, 5, AND VALVE 1 OPEN ON THE 4 INCH SIDE OF THE MANIFOLD
   c. VALVE 7 OPEN ON THE HORIZONTAL CROSS TIE OF THE MANIFOLD
   d. VALVE 8 CLOSED ON THE SUCTION LINE BETWEEN TWO FEED TANKS
   e. COMBINED INFLUENT LIMITED TO 400 GPM MAXIMUM.
   f. CONTROL OF WATER LEVELS IN THE EXPANSION FEED TANK WILL BE MAINTAINED THROUGH ADJUSTMENT OF THE INFLUENT AND FEED PUMP PUMPING RATES.

CONDITION 4 – INFLUENT SEPARATED AND TREATMENT TRAIN BYPASS FOR GAC CHANGE OUT

1. FLOW FROM THE 4 INCH INFLUENT LINE CAN BE DIRECTED TO THE INITIAL TREATMENT TRAIN BY:
   a. VALVE 1 CLOSED AND VALVES 3 AND 5 OPEN ON THE 4 INCH SIDE OF THE MANIFOLD
   b. VALVE 2 OPEN AND VALVES 4 AND 6 CLOSED ON THE 8 INCH SIDE OF THE MANIFOLD
   c. VALVE 7 OPEN ON THE HORIZONTAL CROSS TIE OF THE MANIFOLD
   d. VALVE 8 CLOSED ON THE SUCTION LINE BETWEEN TWO FEED TANKS
   e. CONTROL OF WATER LEVELS IN THE INITIAL FEED TANK WILL BE MAINTAINED THROUGH ADJUSTMENT OF THE INFLUENT AND FEED PUMP PUMPING RATES.
2. FLOW FROM THE 8 INCH INFLUENT LINE CAN BE DIRECTED TO THE EXPANSION TREATMENT TRAIN BY:
   a. THE VALVE 2 CLOSED AND VALVES 4 AND 6 OPEN ON THE 8 INCH SIDE OF THE MANIFOLD
   b. VALVES 3 AND 5 CLOSED AND VALVE 1 OPEN ON THE 4 INCH SIDE OF THE MANIFOLD
   c. VALVE 7 OPEN ON THE HORIZONTAL CROSS TIE OF THE MANIFOLD
   d. VALVE 8 CLOSED ON THE SUCTION LINE BETWEEN TWO FEED TANKS CONTROL OF WATER LEVELS IN THE EXPANSION FEED TANK WILL BE MAINTAINED THROUGH ADJUSTMENT OF THE INFLUENT AND FEED PUMP PUMPING RATES.

REVISIONS: NO. | DATE | BY | DESCRIPTION

DESIGN INFORMATION: DESIGNED BY: HLB | DRAWN BY: ML | CHECKED BY: LLR | PROJECT MANAGER: DEJ

PROFESSIONAL CERTIFICATION. I HEREBY CERTIFY THAT THESE DOCUMENTS WERE PREPARED OR APPROVED BY ME, AND THAT I AM A DULY LICENSED PROFESSIONAL ENGINEER UNDER THE LAWS OF THE STATE OF NEW MEXICO, LICENSE NO. LICENSE_NUMBER EXPIRATION DATE: EXPIRATION_DATE

SEAL: HERBERT L. BECKER, NEW MEXICO, 21117, PROFESSIONAL ENGINEER

BULK FUELS FACILITY
GROUNDWATER TREATMENT SYSTEM 5460 SAND FILTER DESIGN
BERNALILLO COUNTY, NEW MEXICO

EQUIPMENT NOTES AND SCHEDULES

EA Engineering, Science, and Technology, Inc., PBC.
221 Sun Valley Boulevard; Suite D
Lincoln, NE 68528
(402) 476-3766

DATE: DECEMBER 2016

PROJECT NUMBER: 62599DM01

P-001

NOTES:

1. EXISTING EQUIPMENT IS SHOWN HATCHED:
2. EXISTING PIPING IS SHOWN DASHED:
3. ALL EQUIPMENT SHALL BE INSTALLED AND ANCHORED PER CB&I PHASE IV MID-PLUME PUMP AND TREAT SYSTEM STRUCTURAL DRAWINGS AND MANUFACTURER'S RECOMMENDATIONS.
4. LOCATE BACKWASH LINE AT MIDPOINT BETWEEN BAR JOISTS. FIELD VERIFY.

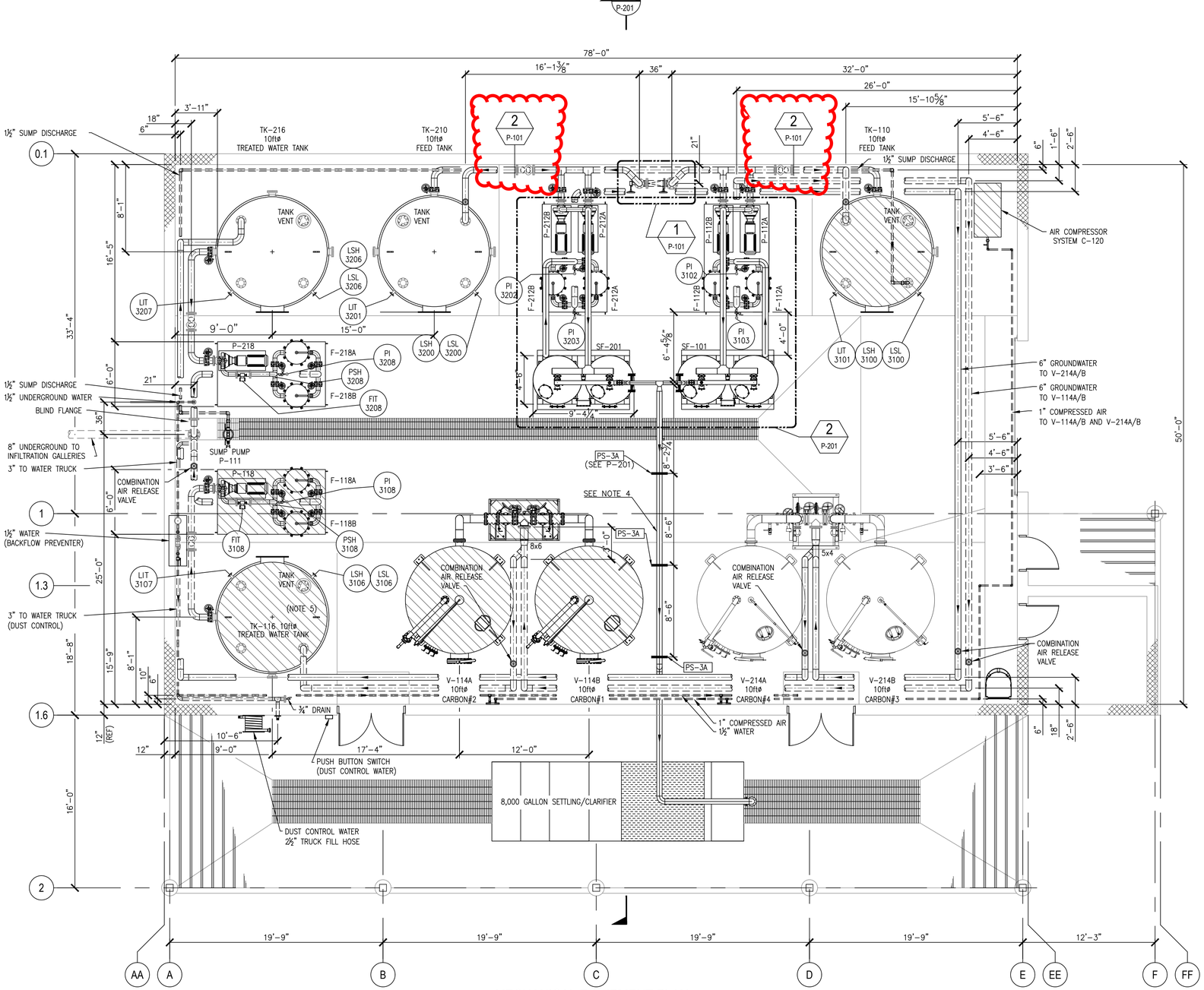

MECHANICAL EQUIPMENT PLAN

SCALE: 3/16" = 1'-0"

1 0 2 4 6 8 10 12ft

ORIGINAL SCALE 3/16"=1'-0"

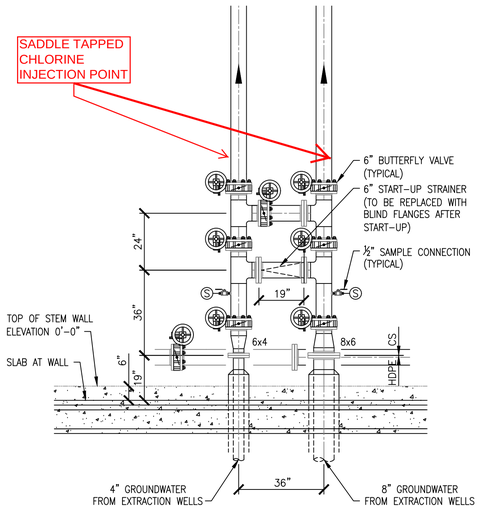

DETAIL 1 / P-101

.5 0 1 2 3 4 5 6ft

ORIGINAL SCALE 3/8"=1'-0"

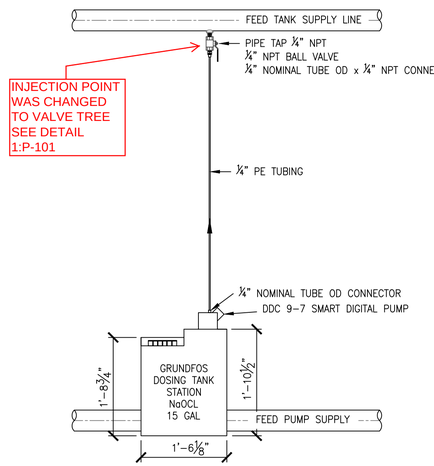

CHLORINE INJECTOR DETAIL CI-101/CI-102 2 / P-101

.5 0 1 2 3ft

ORIGINAL SCALE 3/4"=1'-0"

REVISIONS

NO.	DATE	BY	DESCRIPTION

DESIGN INFORMATION: DESIGNED BY: HLB | DRAWN BY: ML | CHECKED BY: LLR | PROJECT MANAGER: DEJ

PROFESSIONAL CERTIFICATION. I HEREBY CERTIFY THAT THESE DOCUMENTS WERE PREPARED OR APPROVED BY ME, AND THAT I AM A DULY LICENSED PROFESSIONAL ENGINEER UNDER THE LAWS OF THE STATE OF NEW MEXICO, LICENSE NO. LICENSE_NUMBER EXPIRATION DATE: EXPIRATION_DATE

SEAL: HERBERT L. BECKER — NEW MEXICO — 21117 — PROFESSIONAL ENGINEER

BULK FUELS FACILITY
GROUNDWATER TREATMENT SYSTEM 5460 SAND FILTER DESIGN
KIRTLAND AFB, NEW MEXICO

EQUIPMENT PLAN

EA Engineering, Science, and Technology, Inc., PBC.
221 Sun Valley Boulevard; Suite D
Lincoln, NE 68528
(402) 476-3766

DATE: DECEMBER 2016

PROJECT NUMBER: 62599DM01

P-101

SHEET: 3 OF 6

FILE PATH: F:\FEDERAL\OOD\AFCEC\PROJECTS\62599DM01 - KIRTLAND BFT\CADD\FIGURES\5460\62599DM01-P-101 EQUIPMENT PLAN-SAND FILTER3-2.DWG [LAYOUT] 10/6/16 mlash

NOTES:

1. WELD L4 x 4 x 3/8 x 2'-0" BETWEEN 2 PS-3A PIPE SUPPORTS.

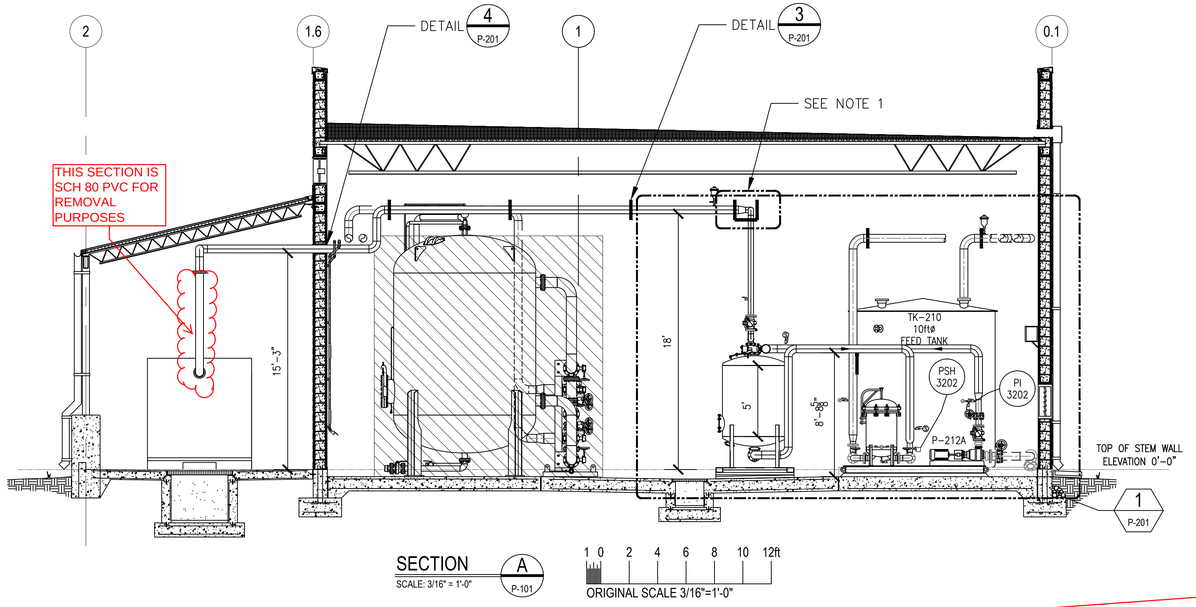

SECTION A P-101
SCALE: 3/16" = 1'-0"

1 0 2 4 6 8 10 12ft
ORIGINAL SCALE 3/16"=1'-0"

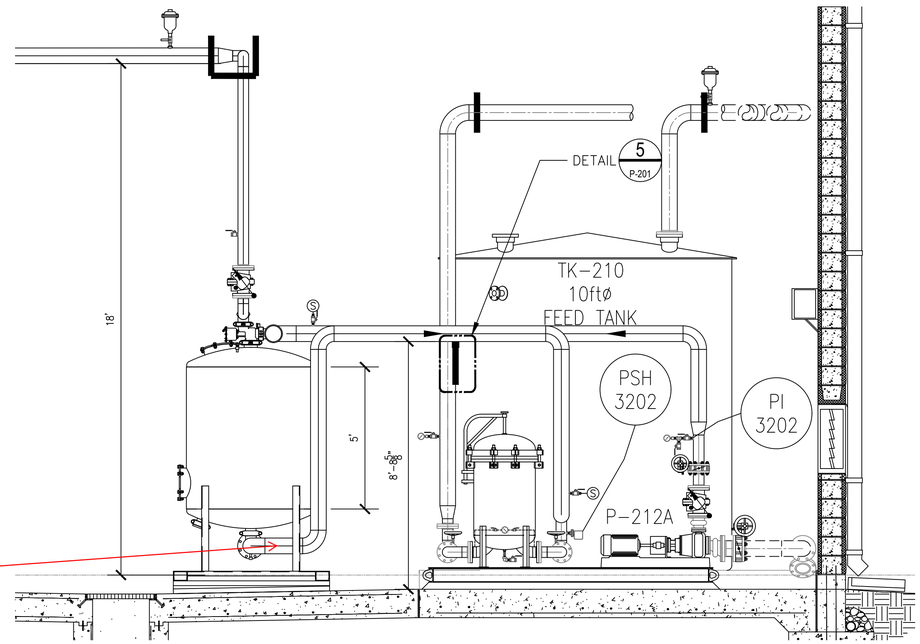

SAND FILTER PROFILE DETAIL 1 P-201

.5 0 1 2 3 4 5 6ft
ORIGINAL SCALE 3/8"=1'-0"

ADDED NELSON IRRGATION 800 SERIES CONTROL VALVE TYP

P212 PUMP CONNECTION IS OFFSET SLIGHTLY DUE TO EXISTING EQUIPMENT CONFIGURATION

PIPING FROM PUMPS TO SANDFILTERS AND FROM SANDFILTERS TO SOCKFILTERS IS 4"TYP

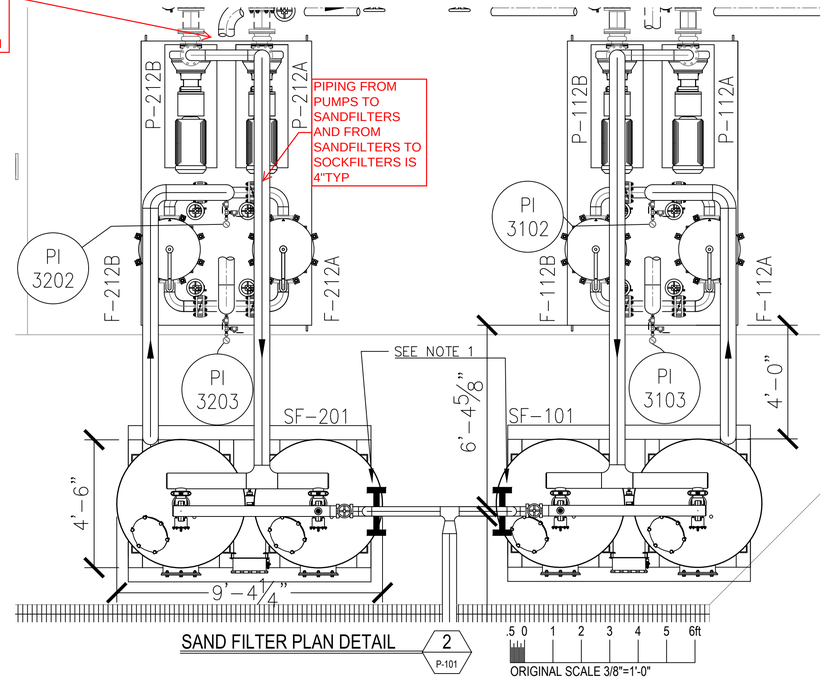

SAND FILTER PLAN DETAIL 2 P-101

.5 0 1 2 3 4 5 6ft
ORIGINAL SCALE 3/8"=1'-0"

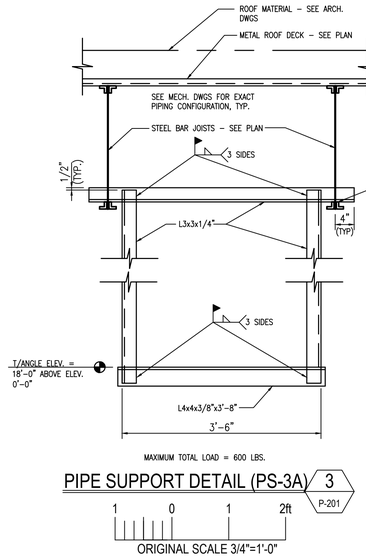

PIPE SUPPORT DETAIL (PS-3A) 3 P-201

1 0 1 2ft
ORIGINAL SCALE 3/4"=1'-0"

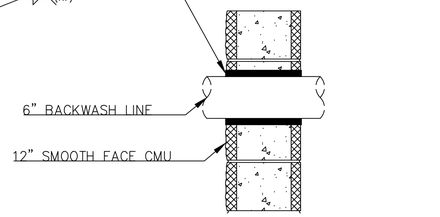

WALL PENETRATION DETAIL 4 P-201

1ft 0 1 2ft
ORIGINAL SCALE 1"=1'-0"

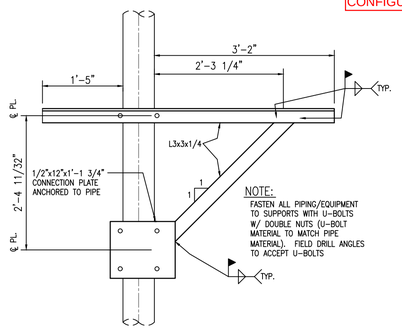

PIPE SUPPORT DETAIL (PS-2B) 5 P-201

1 0 1 2ft
ORIGINAL SCALE 3/4"=1'-0"

REVISIONS			
NO.	DATE	BY	DESCRIPTION

DESIGN INFORMATION
DESIGNED BY: HLB
DRAWN BY: ML
CHECKED BY: LLR
PROJECT MANAGER: DEJ

PROFESSIONAL CERTIFICATION. I HEREBY CERTIFY THAT THESE DOCUMENTS WERE PREPARED OR APPROVED BY ME, AND THAT I AM A DULY LICENSED PROFESSIONAL ENGINEER UNDER THE LAWS OF THE STATE OF NEW MEXICO, LICENSE NO. LICENSE_NUMBER EXPIRATION DATE: EXPIRATION_DATE

SEAL

HERBERT L. BECKER NEW MEXICO 21117 PROFESSIONAL ENGINEER

BULK FUELS FACILITY
GROUNDWATER TREATMENT SYSTEM 5460 SAND FILTER DESIGN
BERNALILLO COUNTY, NEW MEXICO

EQUIPMENT SECTIONS SHEET

EA Engineering, Science, and Technology, Inc., PBC.
221 Sun Valley Boulevard; Suite D
Lincoln, NE 68528
(402) 476-3766

DATE: DECEMBER 2016

PROJECT NUMBER: 62599DM01

P-201

SHEET: 4 OF 6

FILE PATH: F:\FEDERAL\DOD\AFCEC\PROJECTS\62599DM01 - KIRTLAND BFF\CADD\FIGURES\5460\62599DM01-P-403 SUPPORTS SECTIONS 3-SAND FILTER ALT PIPE-2.DWG [LAYOUT] 10/9/16 mlush

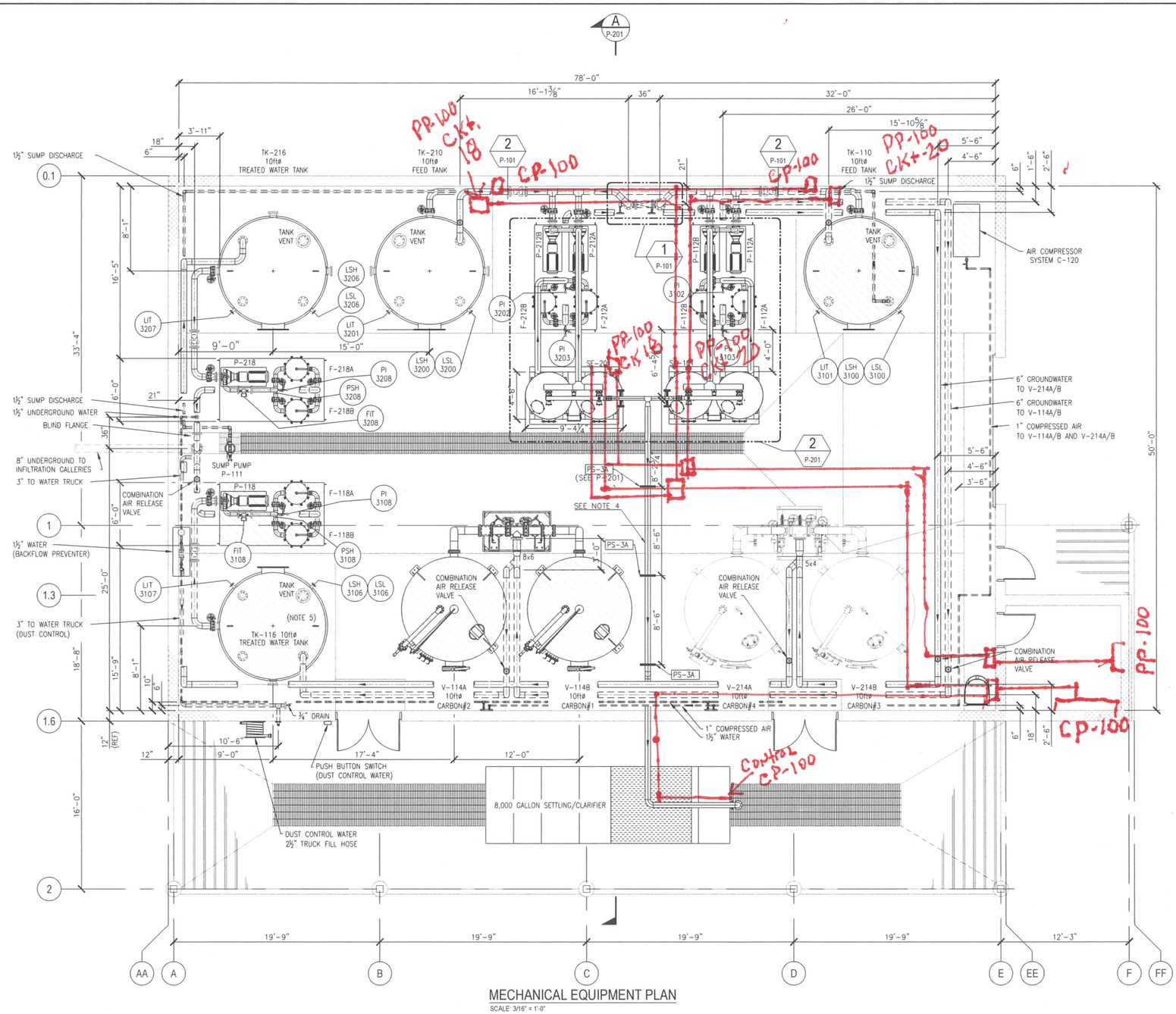

MECHANICAL EQUIPMENT PLAN

SCALE: 3/16" = 1'-0"

1 0 2 4 6 8 10 12ft

ORIGINAL SCALE 3/16"=1'-0"

NOTES:

1. EXISTING EQUIPMENT IS SHOWN HATCHED:
2. EXISTING PIPING IS SHOWN DASHED:
3. ALL EQUIPMENT SHALL BE INSTALLED AND ANCHORED PER CB&I PHASE IV MID-PLUME PUMP AND TREAT SYSTEM STRUCTURAL DRAWINGS AND MANUFACTURER'S RECOMMENDATIONS.
4. LOCATE BACKWASH LINE AT MIDPOINT BETWEEN BAR JOISTS. FIELD VERIFY.

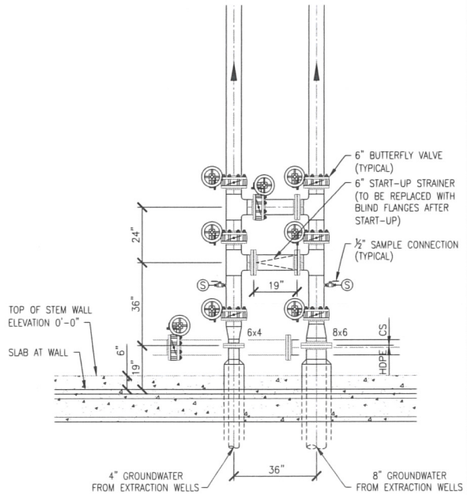

DETAIL 1 / P-101

.5 0 1 2 3 4 5 6ft

ORIGINAL SCALE 3/8"=1'-0"

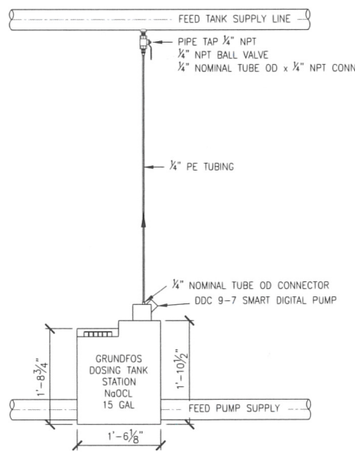

CHLORINE INJECTOR DETAIL CI-101/CI-102 2 / P-101

.5 0 1 2 3ft

ORIGINAL SCALE 3/4"=1'-0"

NO.	DATE	BY	DESCRIPTION
			REVISIONS

DESIGN INFORMATION
DESIGNED BY: HLB
DRAWN BY: ML
CHECKED BY: LLR
PROJECT MANAGER: DEJ

PROFESSIONAL CERTIFICATION. I HEREBY CERTIFY THAT THESE DOCUMENTS WERE PREPARED OR APPROVED BY ME, AND THAT I AM A DULY LICENSED PROFESSIONAL ENGINEER UNDER THE LAWS OF THE STATE OF NEW MEXICO, LICENSE NO. LICENSE_NUMBER EXPIRATION DATE: EXPIRATION_DATE

SEAL: HERBERT L. BECKER NEW MEXICO 21117 PROFESSIONAL ENGINEER — December 6, 2016

BULK FUELS FACILITY
GROUNDWATER TREATMENT SYSTEM 5460 SAND FILTER DESIGN
KIRTLAND AFB, NEW MEXICO

EQUIPMENT PLAN

EA Engineering, Science, and Technology, Inc., PBC
221 Sun Valley Boulevard; Suite D
Lincoln, NE 68528
(402) 476-3766

DATE: DECEMBER 2016

PROJECT NUMBER: 62599DM01

P-101

SHEET: 3 OF 6

FILE PATH: F:\FEDERAL\DOD\AFCEC\PROJECTS\62599DM01 - KIRTLAND BFT\CADD\FIGURES\5460\625998M01-P-101 EQUIPMENT PLAN-SAND FILTER3-2.DWG [LAYOUT] 10/6/16 mlush

ELECTRICAL NOTES

GENERAL ELECTRICAL NOTES

1. ALL WORK SHALL BE PERFORMED IN ACCORDANCE WITH THE FOLLOWING REQUIREMENTS AND THE DETAILS WHETHER OR NOT THEY ARE REFERENCED ON THE DRAWINGS.
2. CONDUIT AND WIRING DIAGRAMS, QUANTITIES, AND SIZE OF WIRES AND CONDUITS REPRESENT A SUGGESTED ARRANGEMENT BASED UPON SELECTED STANDARD COMPONENTS OF ELECTRICAL EQUIPMENT. MODIFICATIONS ACCEPTABLE TO THE ENGINEER MAY BE MADE BY THE CONTRACTOR TO ACCOMMODATE EQUIPMENT PURCHASED OR FOR A MORE APPROPRIATE INSTALLATION AS DETERMINED IN THE FIELD. THE SEQUENCE AND METHOD OF CONTROL MUST BE MAINTAINED AS INDICATED ON THE DRAWINGS AND SPECIFICATIONS.
3. THE ELECTRICAL CONTRACTOR SHALL VISIT THE SITE PRIOR TO BIDDING THE PROJECT TO VERIFY THE SCOPE OF WORK WITH FIELD CONDITIONS.
4. USE MANUFACTURER-APPROVED CABLE PULLING COMPOUND OR LUBRICANT WHERE NECESSARY; COMPOUND USED MUST NOT DETERIORATE CONDUCTOR OR INSULATION. DO NOT EXCEED MANUFACTURER' S RECOMMENDED MAXIMUM PULLING TENSIONS AND SIDEWALL PRESSURE VALUES. USE PULLING MEANS, INCLUDING FISH TAPE, CABLE, ROPE, AND BASKET-WEAVE WIRE/CABLE GRIPS THAT WILL NOT DAMAGE CABLES OR RACEWAY.
5. DO NOT INSTALL BRUISED, KINKED, SCORED, DEFORMED, OR ABRADED CABLE. DO NOT SPLICE CABLE BETWEEN TERMINATION, TAP, OR JUNCTION POINTS. REMOVE AND DISCARD CABLE IF DAMAGED DURING INSTALLATION AND REPLACE IT WITH NEW CABLE.
6. COLD-WEATHER INSTALLATION: BRING CABLE TO ROOM TEMPERATURE BEFORE DE-REELING. DO NOT USE HEAT LAMPS FOR HEATING.
7. FASTEN CABLES IN PLACE WITH HARDWARE SPECIFICALLY DESIGNED FOR THAT PURPOSE WITHOUT DAMAGING CABLES.
8. REMOVE ABANDONED CONDUCTORS AND CABLES. ABANDONED CONDUCTORS AND CABLES ARE THOSE INSTALLED THAT ARE NOT TERMINATED AT EQUIPMENT AND ARE NOT IDENTIFIED FOR FUTURE USE WITH A TAG.
9. WHEREVER CONTACT WITH CONCRETE OR DISSIMILAR METALS CAN PRODUCE GALVANIC CORROSION OF EQUIPMENT, SUITABLE INSULATING MEANS SHALL BE PROVIDED TO PREVENT SUCH CORROSION.
10. CONDUCTORS, EQUIPMENT, AND ACCESSORIES THAT ARE SIMILAR IN APPLICATION (E.G. LOW-VOLTAGE CABLES, CIRCUIT BREAKERS, OR MOUNTING EQUIPMENT) SHALL BE OBTAINED THROUGH ONE SOURCE FROM A SINGLE MANUFACTURER.

CONDUIT

1. CONDUITS, TUBING, AND FITTINGS SHALL BE LISTED AND LABELED AS DEFINED IN NFPA 70, BY A QUALIFIED TESTING AGENCY, AND MARKED FOR INTENDED LOCATION AND APPLICATION.
2. UNLESS NOTED OTHERWISE ON DRAWINGS OR DETAILS, EXPOSED CONDUIT ABOVEGROUND SHALL BE RIGID GALVANIZED STEEL EXCEPT FOR CONNECTIONS BETWEEN RIGID CONDUIT AND MOTOR TERMINAL BOXES OR SIMILAR EQUIPMENT SUBJECT TO VIBRATION, WHICH SHALL BE FLEXIBLE LIQUID-TIGHT CONDUIT. EXPOSED CONDUIT UNDERGROUND SHALL BE PVC.
3. CONDUIT SHALL BE TERMINATED SO AS TO PERMIT NEAT CONNECTION TO MOTORS AND OTHER EQUIPMENT.

LOW VOLTAGE CONDUCTORS AND CABLES

1. CONDUCTORS ARE TO COMPLY WITH NEMA WC 70/ICEA S-95-658.
2. CONDUCTORS SHALL BE COPPER AND RATED FOR 600 VAC. ALUMINUM CONDUCTORS ARE NOT PERMITTED UNLESS INDICATED OTHERWISE ON PROJECT DRAWINGS.
3. INSULATION SHALL BEAR THE UL LABEL, MANUFACTURER'S TRADEMARK, INSULATION TYPE, VOLTAGE, AND CONDUCTOR SIZE.
4. WHERE POSSIBLE, CONCEAL CABLES IN FINISHED WALLS, CEILINGS, AND FLOORS UNLESS OTHERWISE INDICATED.
5. CONDUCTORS SHALL BE RUN CONTINUOUSLY FROM POINT-TO-POINT WITHOUT SPLICES.
6. CONDUCTORS SHALL NOT BE PULLED INTO RACEWAY UNTIL IT HAS BEEN CLEARED OF MOISTURE AND DEBRIS.
7. FEEDER CIRCUITS SHALL BE COPPER, STRANDED AND A MINIMUM #12 AWG. FEEDERS INDOORS IN DRY ENVIRONMENT SHALL BE TYPE THWN/THHN, SINGLE CONDUCTORS IN RACEWAY. FEEDERS OUTDOORS OR IN WET ENVIRONMENT SHALL BE TYPE THWN-2 OR XHHW-2, SINGLE CONDUCTORS IN RACEWAY. FEEDERS CONCEALED IN CONCRETE, BELOW SLABS-ON-GRADE, AND UNDERGROUND SHALL BE TYPE XHHW-2, SINGLE CONDUCTORS IN RACEWAY.
8. CLASS 1 REMOTE CONTROL AND SIGNAL CIRCUITS SHALL BE STRANDED COPPER, TYPE THHN/THWN, MINIMUM CONDUCTOR SIZE OF #14 AWG, IN RACEWAY, COMPLYING WITH UL 83.
9. CLASS 2 LOW ENERGY, REMOTE CONTROL AND SIGNAL CIRCUITS SHALL BE STRANDED COPPER, TYPE THHN/THWN, MINIMUM CONDUCTOR SIZE OF #16 AWG, IN RACEWAY, COMPLYING WITH UL 83.
10. CLASS 3 LOW ENERGY, REMOTE CONTROL, ALARM AND SIGNAL CIRCUITS SHALL BE STRANDED COPPER, TYPE THHN/THWN, TW, OR TF. MINIMUM CONDUCTOR SIZE OF #12 AWG, IN RACEWAY, COMPLYING WITH UL 83.
11. TERMINATE ALL LOW VOLTAGE CONTROL CONDUCTORS; NO CABLE SHALL CONTAIN UN-TERMINATED ELEMENTS. MAKE TERMINATIONS ONLY AT INDICATED OUTLETS, TERMINALS, AND CROSS-CONNECT AND PATCH PANELS. UTILIZE SPARE TERMINALS AS NECESSARY FOR TERMINATION OF SPARE CONDUCTORS.
12. SHIELDED INSTRUMENTATION CABLES SHALL BE GROUNDED ONLY ON THE CONTROL PANEL OR PLC SIDE OF A 4-20 MA CIRCUIT.
13. SECURE AND SUPPORT CABLES AT INTERVALS NOT EXCEEDING 30 INCHES AND NOT MORE THAN 6 INCHES FROM CABINETS, BOXES, FITTINGS, OUTLETS, RACKS, FRAMES, AND TERMINALS.
14. BUNDLE, LACE, AND TRAIN CONDUCTORS TO TERMINAL POINTS WITHOUT EXCEEDING MANUFACTURER'S LIMITATIONS ON BENDING RADII.

PANEL SCHEDULE PP-100

FEED SOURCE: MDP-100
FEED SIZE: 2C, #4 AWG, #6G
LOCATION: GWTP CONTROL ROOM
REF. DRAWING: 140705-001-EL-20-400001

VOLTAGE: 480V INPUT 120/240V OUTPUT
NUMBER OF CIRCUITS: 42 (1P) OR 21 (2P) BOLT ON BREAKERS

25KVA TRANSFORMER
100A AMP PRIMARY CIRCUIT BREAKER
125A SECONDARY CIRCUIT BREAKER
18KAIC INTERRUPTING RATING

2-5% FULL CAPACITY BELOW NORMAL TAPS
ENCLOSURE: NEMA 3R, SURFACE MOUNTED

[X] 100% NEUTRAL
[X] EQUIPMENT GROUND BAR

OTHER:
* ISOLATED GROUND CIRCUIT
** GROUND FAULT CIRCUIT INTERRUPTER
(L) PROVIDE LOCKING TAB

BREAKER CKT	BREAKER AMP	BREAKER POLE	IDENTIFICATION	LOAD VA	LOAD AMPS	CABLE NO. OR WIRE SIZE
1	20	1	SIC-3108	180	1.5	2/C, #12, #12G
3	20**	1	RECEPTACLES (CONTROL ROOM)	540	4.5	2/C, #12, #12G
5	20	1	EXHAUST FAN/LOUVER (EF-2) (NOTE 2)	1661	13.84	2/C, #12, #12G
7	25	1	GWTP AREA LIGHTING ZONE 1	2094	17.45	2/C, #10, #12G
9	20	1	GWTP AREA LIGHTING ZONE 2	1794	14.95	2/C, #12, #12G
11	25	1	FIRE ALARM PANEL FP-100	2400	20	2/C, #10, #12G
13	20**	1	RECEPTACLES (GWTP AREA)	1620	13.5	2/C, #12, #12G
15	20	1	EXHAUST FAN/LOUVER (EF-1) (NOTE 2)	1661	13.84	2/C, #12, #12G
17A 17B	20	2	OUTDOOR LIGHTING SOUTH ROLL UP DOOR OUTDOOR LIGHTING EAST	1920	8	2/C, #12, #12G
21			SPACE			
23	25	1	COMPRESSOR SF-101	101	0.84	2/C, #12, #12G
25	25	1	COMPRESSOR SF-102	101	0.84	2/C, #12, #12G
27	10	1	CHLORINE INJECTOR/ANALYZER CI-101	120	1.00	2/C, #12, #12G
29	10	1	CHLORINE INJECTOR/ANALYZER CI-102	120	1.00	2/C, #12, #12G
31			SPACE			
33			SPACE			
35			SPACE			
37			SPACE			
39			SPACE			
41			SPACE			

PHASE A: 87.61A

CABLE NO. OR WIRE SIZE	LOAD VA	LOAD AMPS	IDENTIFICATION	BREAKER AMP	BREAKER POLE	BREAKER CKT
2/C, #12, #12G	1620	6.75	CONTROL ROOM HVAC-1	20	2	2
2/C, #10, #12G	2400	20	CONTROL PANEL CP-100	25	1	6
2/C, #12, #12G	1661	13.84	EXHAUST FAN/LOUVER (EF-3) (NOTE 2)	20	1	8
2/C, #12, #12G	224	1.87	CONTROL ROOM LIGHTS, EXIT SIGNS, EMERGENCY LIGHTS	20	1	10
2/C, #10, #12G	864	7.2	GWTP SUMP PUMP P-111 RECEPTACLE	20	1	12
2/C, #12, #12G	180	1.5	SIC-3102A	20	1	14
2/C, #12, #12G	180	1.5	SIC-3102B	30	1	16
2/C, #12, #12G	244	2.03	SF-101 & CI-101	20	1	18
2/C, #12, #12G	244	2.03	SF-102 & CI-102	20	1	20
			SPACE			22
2/C, #12, #12G	120	1.00	CONTROLLER SF-101	20	1	24
2/C, #12, #12G	120	1.00	CONTROLLER SF-102	20	1	26
			SPACE			28
			SPACE			30
			SPACE			32
			SPACE			34
			SPACE			36
			SPACE			38
			SPACE			40
			SPACE			42

PHASE B: 97.11A

GROUNDWATER TREATMENT PLANT POWER PANEL PP-100

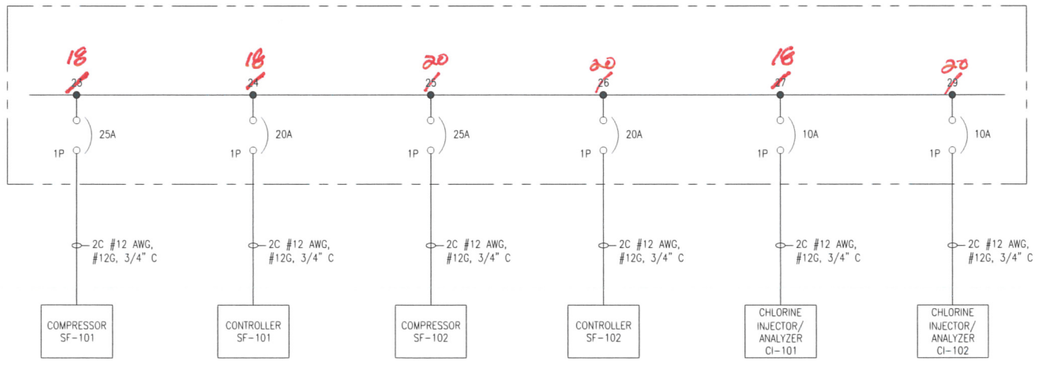

REVISIONS

NO.	DATE	BY	DESCRIPTION

DESIGN INFORMATION
DESIGNED BY: HLB
DRAWN BY: ML
CHECKED BY: LLR
PROJECT MANAGER: DEJ

SEAL

PROFESSIONAL CERTIFICATION. I HEREBY CERTIFY THAT THESE DOCUMENTS WERE PREPARED OR APPROVED BY ME, AND THAT I AM A DULY LICENSED PROFESSIONAL ENGINEER UNDER THE LAWS OF THE STATE OF NEW MEXICO, LICENSE NO. LICENSE_NUMBER EXPIRATION DATE: EXPIRATION_DATE

HERBERT L. BECKER — NEW MEXICO — 21117 — PROFESSIONAL ENGINEER
December 8, 2016

BULK FUELS FACILITY
GROUNDWATER TREATMENT SYSTEM 5460 SAND FILTER DESIGN
BERNALILLO COUNTY, NEW MEXICO

SAND FILTER ELECTRICAL SERVICE

EA Engineering, Science, and Technology, Inc., PBC.
221 Sun Valley Boulevard; Suite D
Lincoln, NE 68528
(402) 476-3766

DATE: DECEMBER 2016
PROJECT NUMBER: 62599DM01

E-001
SHEET: 5 OF 6

FILE PATH: F:\FEDERAL\DOD\AFCEC\PROJECTS\62599DM01 - KIRTLAND BFF\CADD\FIGURES\5460\62599DM01-E-001 ELECTRICAL SERVICE -SAND FILTER.DWG [LAYOUT] 11/10/16 mtush

LEGEND

- CONTROL PANEL CP-100 TERMINATION
- EXTERNAL WIRING
- INTERNAL WIRING
- EXISTING EQUIPMENT

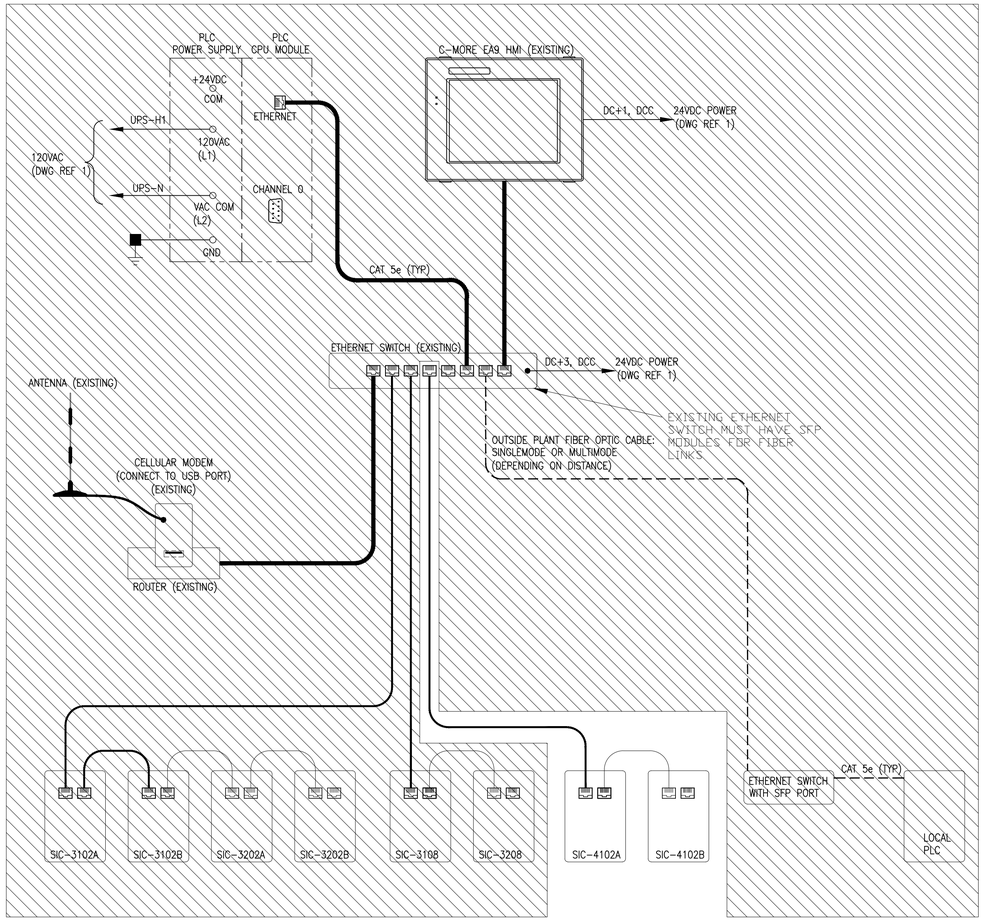

REVISIONS			
NO.	DATE	BY	DESCRIPTION

DESIGN INFORMATION				
DESIGNED BY: HLB	DRAWN BY: ML	CHECKED BY: LLR	PROJECT MANAGER: DEJ	

SEAL

PROFESSIONAL CERTIFICATION. I HEREBY CERTIFY THAT THESE DOCUMENTS WERE PREPARED OR APPROVED BY ME, AND THAT I AM A DULY LICENSED PROFESSIONAL ENGINEER UNDER THE LAWS OF THE STATE OF NEW MEXICO, LICENSE NO. LICENSE_NUMBER EXPIRATION DATE: EXPIRATION_DATE

HERBERT L. BECKER
NEW MEXICO
21117
PROFESSIONAL ENGINEER

DESIGN

BULK FUELS FACILITY
GROUNDWATER TREATMENT SYSTEM 5460 SAND FILTER DESIGN
BERNALILLO COUNTY, NEW MEXICO

CP-100 CONTROL PANEL COMMUNICATION DIAGRAM

EA Engineering, Science, and Technology, Inc., PBC.
221 Sun Valley Boulevard; Suite D
Lincoln, NE 68528
(402) 476-3766

DATE: DECEMBER 2016

PROJECT NUMBER: 62599DM01

E-101

SHEET: 6 OF 6

FILE PATH: F:\FEDERAL\DOD\AFCEC\PROJECTS\62599DM01 - KIRTLAND BFT\CADD\FIGURES\5460\62599DM01-E-101 CONTROL COMMUNICATION-SAND FILTER.DWG [D3] 11/9/16 mlueh

Data Base Version: SDSFIE 3.1

WATER

- Excavation Limits
- Fire Hydrant
- Anode
- Anode Test Point
- Bond Junction
- Rectifier
- NA, TBD, Other
- Well
- Pump
- Pump Station
- Backflow Preventer
- Gate
- Post Indicator
- Blow Off
- Regulating
- Check
- Angle
- Ball
- Drain
- Flow Control
- TBD
- Storage Tank
- Influent/Effluent Lines
- Distribution Main
- Transmission Main
- NA, Other, TBD
- Abandoned in Place
- Domestic
- Fire Protection
- Irrigation
- NA, Other, TBD
- Abandoned in Place

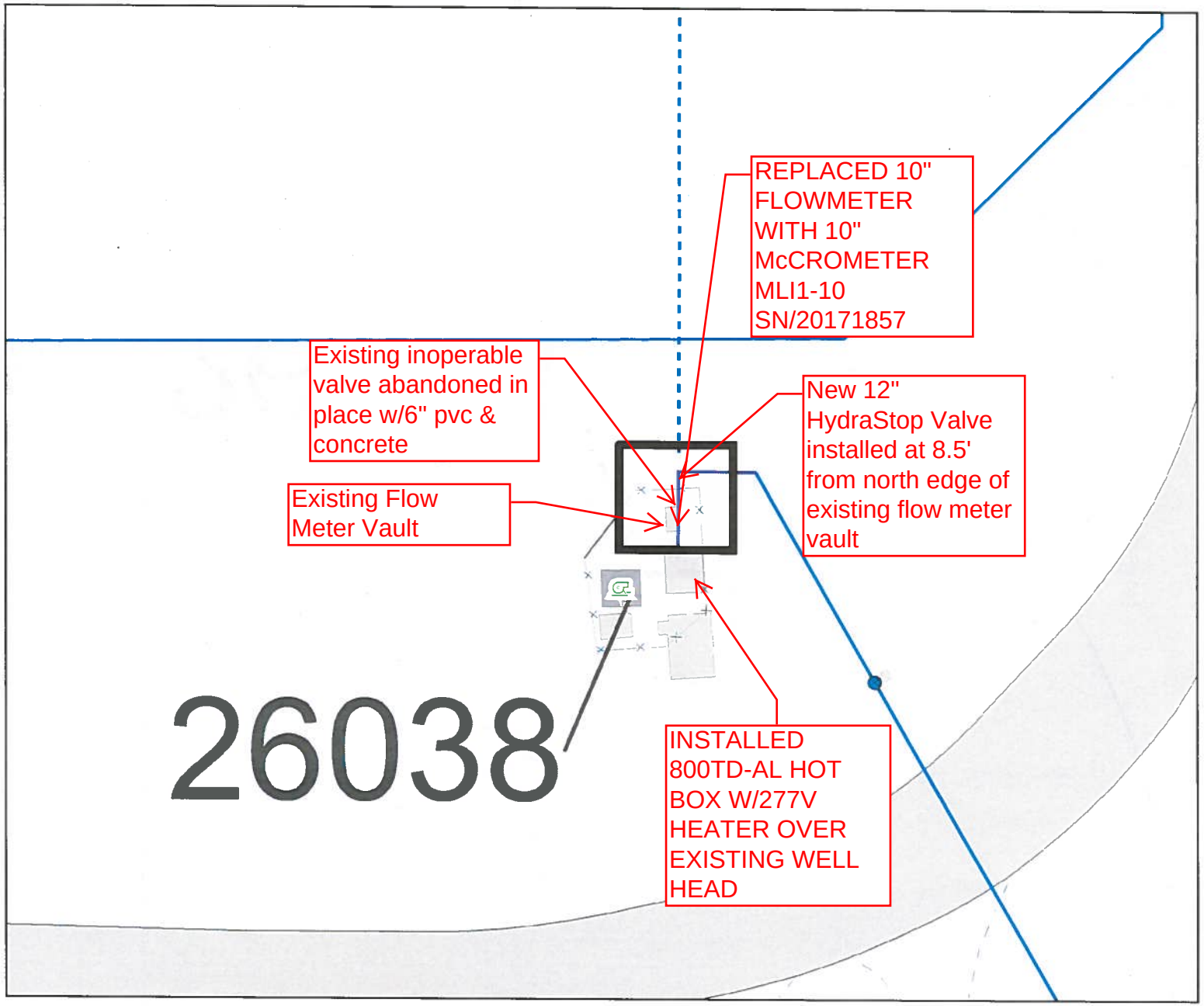

CE KIRTLAND AFB, NM

Permit #1802-010E

Date: 2/13/2018

DEPARTMENT of the AIR FORCE
Digging Permit Attachment
AIR FORCE GLOBAL STRIKE COMMAD
KIRTLAND AIR FORCE BASE
ALBUQUERQUE NEW MEXICO

Document Path: T:\GIS-Mapping Files - kafbap05ce\Dig Permits\1802-010E.mxd

Sand Filter
Design Calculations

Kirtland Air Force Base Bulk Fuel Facility
Groundwater Treatment System

U.S. Army Corps of Engineers
Albuquerque District
Contract No. W912DR-12-D-0006

Prepared by

EA Engineering, Science, and Technology, Inc., PBC
320 Gold Ave. SW, Suite 1210
Albuquerque, NM 87102
505-224-9013

Revision: 2

CONTENTS

Section **Page**

1.0 INTRODUCTION 1
1.1 Background 1
1.2 Objectives 1
2.0 INPUTS AND ASSUMPTIONS 2
2.1 Calculation Methodology 2
2.2 Inputs 2
2.3 Assumptions 3
3.0 RESULTS AND CONCLUSIONS 4
3.1 Results 4
3.2 Conclusions 6
4.0 REFERENCES 7

ATTACHMENT 1 DESIGN CALCULATIONS FOR SAND FILTER SELECTION
ATTACHMENT 2 YARDNEY INDUSTRIAL SAND FILTER SPECIFICATIONS
ATTACHMENT 3 DESIGN CALCULATIONS FOR CHLORINE INJECTION
ATTACHMENT 4 CLARIFIER EQUIPMENT SPECIFICATION
ATTACHMENT 5 HYDRAULIC ANALYSIS
ATTACHMENT 6 PUMP SELECTION

1.0 INTRODUCTION

1.1 Background

The mid-plume pump and treat system is part of an interim remedial measure for the Bulk Fuels Facility (BFF) groundwater plume at Kirtland AFB. The mid-plume groundwater is currently contaminated with ethylene dibromide (EDB) at concentrations above the maximum contaminant level (MCL) of 0.05 µg/L. The mid-plume pump and treat system will eventually consist of several extraction wells that are expected to produce up to 800 gpm of groundwater. Currently three groundwater extraction wells and one groundwater treatment (GWT) system designed for 400 gpm of groundwater are in operations. A second GWT system also designed for 400 gallons per minute (gpm) of groundwater is currently under construction.

Groundwater from the extraction wells is pumped from the wells through buried pipelines into the GWT system feed tanks, one for each GWT system. Groundwater is then pumped from the feed tank through bag-filters for pretreatment, and activated carbon adsorbers which remove the EDB. The treated water from the carbon adsorbers is collected in a discharge tank and then pumped to either the golf course irrigation pond or an injection well for disposal.

Shortly after startup of the first GWT system downhole a corrosion and biofouling issue in the extraction network was identified. Subsequently the biofouling issue made its way to the bag-filters and lead GAC of the first treatment system. An additional pre-treatment system consisting of sand filters installed prior to the existing bag-filters has been proposed to address the biofouling issue.

In addition to addressing biofouling, removal of dissolved iron and manganese may be necessary in the future. Monitoring well results indicate that elevated concentrations of dissolved iron and manganese in the influent water delivered to the GWT system may be expected as additional extraction wells are brought on line.

The sand filters will be pre-fabricated skid mounted units installed with each GWT system. Each unit having flow capacity of 400 gpm will consist of two or more sand filters and include provisions for backwashing of the individual sand filter. Backwash water will be pumped to a Baker-type clarifier tank located outside of the GWT system building. Piping and valves for connection of the additional pre-treatment system to existing pumps and bag filters will be included in the design modifications. Piping and valves necessary to facilitate conveyance of backwash between the outside tanks and both GAC and sand filter units will also be included in the design modifications.

1.2 Objectives

The objectives for these calculations are to determine the appropriate sand filter, pipe sizing and to determine alterations of the existing feed pumps necessary to provide a maximum flow rate from the feed tank, pre-treatment (both sand filters and bag-filters) and GAC to the treated water tank of 400 gpm for each GWT system.

2.0 INPUTS AND ASSUMPTIONS

2.1 Calculation Methodology

Sand filters sizing is based on a loading rate expressed as gpm applied per square foot (ft^2) of filter surface area, i.e., gpm/ft^2. For high pressure rapid sand filters loading rates range from approximately 3 gpm/ ft^2 to 13 gpm/ft^2. The diameter of the sand filter bed has to be large enough so that the pressure drop through the bed is reasonable but not so large that the groundwater flow is too low. As a general practice lower loading rates are used to remove inorganic suspended solids. For the removal of organic material such as biofouling products higher loading rates are acceptable.

The feed pumps for the pre-filters and carbon beds of each GWT system are two identical centrifugal pumps sized for 200 gpm each. The flow from the pumps is controlled by a variable frequency drive (VFD) controlling the speed of the pumps. The system process piping for each GWT was designed by CB&I Federal Services LLC (CB&I) based on a flow rate of 400 gpm. Design Flow Solutions (DFS), a pipeline modeling software program (Reference 1), was used to calculate the frictional head loss within the process piping. The frictional head loss from the piping and components, equipment head loss, and elevation changes are summed to a resultant head loss for process system. This information was in turn used to size the pumps. This software program can be used to calculate the additional frictional head loss within the process piping with the addition of planned sand filter units. The resultant head loss can be used to determine modifications to the existing pumps to maintain the required flow rate for each GWT system.

2.2 Inputs

Inputs include:

- The groundwater design (maximum) feed rate is 400 gpm to each GWT system. Existing feed pumps consist of two pumps for each GWT system, 200 gpm each pump and operating at total head of 104 ft.
- Groundwater inlet temperature from the extraction wells will be between 55 and 60°F.
- Concentrations of dissolved metals, iron and manganese, are expected to increase.
- Monitor pressure and flow through sand filter units.
- Bed expansion of at least 20 percent at 239 gpm during backwash with duration of four minutes minimum for single media system.
- One sand filter at a time will be backwashed while continuing to process water until the entire unit is clean.
- Backwash water to be directed to Baker-type roll-off container located outside the GWT system building. Effluent from tank returned to sump in building and pumped to Feed Tank 110.

2.3 Assumptions

- Removal of organic biofouling products of primary importance. Removal of inorganic suspended solids of lessor importance with bag-filters following sand filter units. Based on manufacture's recommendation the sand filter units will be designed at maximum loading rate of 13 gpm/ft^2.
- Operation including backwash of each sand filter unit independent from the other.
- Controller PLC for the sand filters to be based on Allen Bradley logic and have Ethernet capability.
- Backwash can be initiated manually, via timer, or when observed pressure is ≤10 psi differential pressure from that of clean filter operation.
- Air activated valves switch operation filter to backwash mode. Air provided by small compressor mounted with each sand filter unit.
- Backwash will be initiated when observed pressure is 10 psi greater than from clean filter operation.
- Backwash rate based on manufacture's recommendations.
- Flow rate of feed pumps will be reduced to match backwash rate when backwash of sand filter units is required.
- Flow to GAC units suspended during backwash cycle.
- Provide oxidation and filtration for removal of dissolved iron and manganese

3.0 RESULTS AND CONCLUSIONS

3.1 Results

At the design flow rate of 400 gpm of groundwater and a design loading rate of 13 gpm/ft^2 filter surface area of 30.8 ft^2 is required (Attachment 1). Two 54-inch diameter filter vessels equal 31.8 ft^2 (Attachment 2). A 60-inch vertical side shell depth multi-media filter is recommended for removal of biofouling products as well as dissolved iron and manganese (Attachment 2).

High levels of dissolved iron and manganese greater than 10 mg/l can be treated by chemical oxidation, using an oxidizing chemical such as chlorine, followed by a sand trap filter to remove the precipitated material. DMI-65, a specialty media manufactured in Australia acts as an oxidation catalyst with immediate oxidation and filtration of the precipitates that has been certified to the US Standard of NSF/ANSI 61 for Drinking Water System Components. DMI-65 is an extremely powerful silica sand based catalytic action water filtration media that is designed for the removal of iron and manganese without the use of potassium permanganate through an Advanced Oxidation Process. The DMI-65 media has been shown to efficiently remove dissolved iron to the almost undetectable levels as low as 0.001 ppm and manganese to 0.001 ppm. Qualitative information about how this media works, its capabilities and limitations are included in Attachment 2. Yardney's IMA-65 Specialty Media is the United States equivalent of the DMI-65 media.

Continuous injection of sodium hypochlorite (liquid bleach) to maintain a 0.1 to 0.3 parts per million (ppm) residual level of chlorine (Attachment 2) promotes the oxidation process. Calculations supporting the design for the injection of sodium hypochlorite solution are included in Attachment 3. Based on these calculations injection of 3 gallons per day of household bleach would be required to maintain chlorine residual of 0.3 ppm.

Frequency of backwash is dependent on the production of biofouling products. At the backwash rate of 239 gpm for Yardney Model IL 5424-2A (Attachment 2) each backwash cycle will expand the filter bed 22 percent (Attachment1) and produce nearly 1,000 gallons of water during four minute backwash cycle. The same backwash rate applies to the Yardney Model IL 5460-2A (Attachment 2). One sand filter at a time will be backwashed while continuing to process water until the entire unit is clean (Attachment 3). Backwash effluent from each sand filter unit is conveyed by 4-inch diameter pipe and join with 6-inch diameter pipe to exit the building and discharge to Baker-style settling/clarifier (Attachment 4).

The 120V Allen Bradley Micrologix 1400 PLC Controller (Ethernet compatible) integrated with either Yardney model sand filter requires 120V/<1 A service. The Yardney IL 5424-2A and IL 5460-2A Filter Units each include a 1HP 3 gallon oil lube air compressor to control backwash valve operation and require 120V/15A service.

The groundwater treatment feed pump units for each GWT system will be required to pump 200 gpm each (400 gpm total). Based on modeling the hydraulic performance of the process piping system with dirty sand filters, dirty bag filters, and allowing for fouling/blinding across carbon vessels, a worst case condition, the required head is 120.59 ft wg. With a 20% design margin, per UFC 3-280-01A (Reference 2), the required head is 144.71 ft wg (Attachment 5). Currently each feed pump unit has two Gould model 3196 2x3-6 pumps with impeller diameter of 5.375 inches. The existing pumps will not achieve 200 gpm pumping at head of 144.71 ft wg.

Changing impeller diameter of this pump to 6.062 inches can achieve 200 gpm at total head of 148.9 ft wg. (Attachment 6).

3.2 Conclusions

Two 54 inch diameter sand filter units having 24 inch vertical sides meets the design criteria for removing biofouling products. Two 54 inch diameter multi-media sand filter units having 60 inch vertical sides with crushed gravel, garnet, and IMA-65 media meets the design criteria for removing biofouling products and dissolved iron and manganese. Small chorine injection units as used for residential purposes will provide the required sodium hypochlorite injection rates. Units selected should provide solution storage of at least 15 gallons (5 day capacity). Example systems are included in Attachment 3.

A 40 cubic yard roll-off settling/clarifier has capacity of 8,000 gallons, i.e., eight backwash cycles (Attachment 4).

Changing the impellers of the existing pumps to 6.062 inch diameter will exceed the 20% design margin criteria per UFC 3-280-01A.

4.0 REFERENCES

1. DF DesigNet® Version 4. Design Flow Solutions Software, ABZ, Incorporated
2. UFC 3-280-01A, Unified Facilities Criteria, Guidance for Ground Water/Fuel Extraction and Ground Water Injection Systems

Attachment 1

Design Calculations for Sand Filter Selection

Project KIRTLAND AFB BULK FUELS FACILITY Project No. 0912DK-12-D0006
Subject SAND FILTER DESIGN Sheet No. 1 of 2
Drawing No. 1033
Computed by H. Lee Beeka Date 10/24/2012 Checked by _____ Date _____

- LOADING RATE HIGH PRESSURE SAND FILTER 2.9-13 gpm/ft²
- SAND FILTERS FOLLOWED BY BAG FILTER → PARTICULATE REMOVAL NOT SIGNIFICANT REQUIREMENT AS THROUGH PUT
  USE UPPER LIMIT OF RECOMMENDED RANGE → 13 gpm/ft²
- FILTER AREA REQUIRED = $\frac{400 \text{ gpm}}{13 \text{ gpm/ft}^2} = 30.8 \text{ ft}^2$
- SPACE LIMITATIONS - 2 FILTER/UNIT

- YARDNEY SAND MEDIA FILTERS SPECIFICATION MODEL IL-5424-2A
  FILTRATION SURFACE AREA = 31.8 ft² > REQUIRED. OK

Engineering (Hydraulic) Data

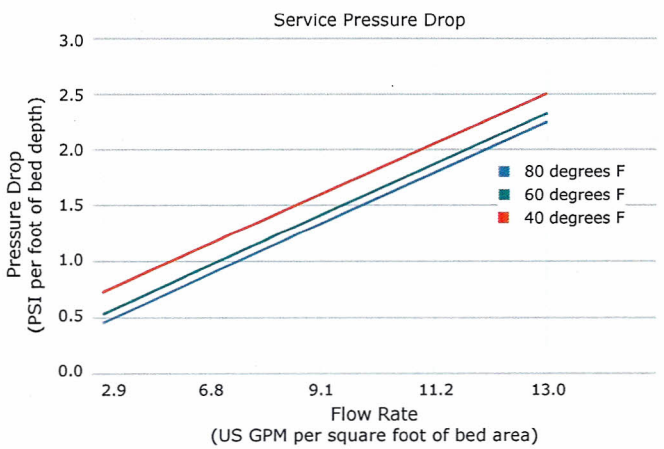

MODEL IL-5424-2A BED DEPTH ⇒ 2.0 ft

SELECT PRESSURE DROP/ft @ $\frac{400 \text{ gpm}}{31.8 \text{ gpm/ft}^2} = 2.25 \text{ psi/ft}$

PRESSURE DROP = 2.25 psi/ft (2 ft) = 4.5 psi

Project KIRTLAND AFB BULK FUELS FACILITY Project No. W912DK-12-D-0006 1033
Subject SAND FILTER DESIGN Sheet No. 2 of 2
Drawing No.
Computed by H. Lee Berka Date 10/24/2016 Checked by Date

MODEL IL 5460-2A BED DEPTH ⇒ 5.0 ft

SERVICE PRESSURE DROP/ft @ $\frac{400 \text{ gpm}}{31.8 \text{ gpm/ft}} = 2.25 \text{ psi/ft}$

PRESSURE DROP = 2.25 psi/ft (5.0 ft) = 11.25 psi

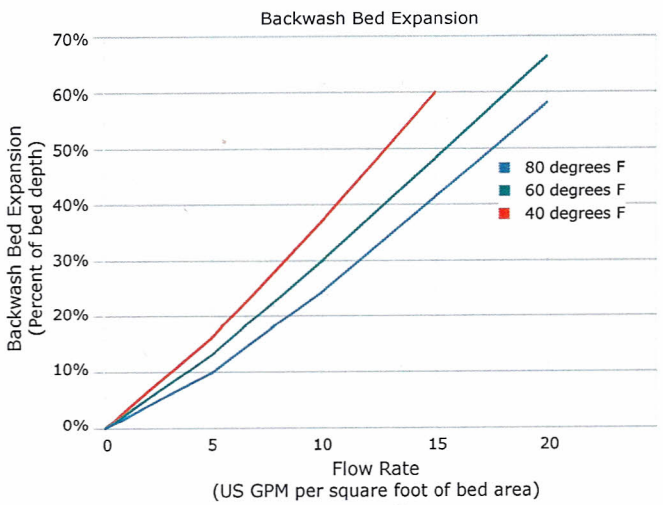

BACKWASH BED EXPANSION

YARDNEY SAND FILTER SPECIFICATION BACKWASH RATE

MODEL IL 5424-2A ⇒ 239 gpm

$\text{gpm/ft}^2 = \frac{239}{31.8} = 7.5 \text{ gpm/ft}^2$

FROM GRAPH ABOVE @ 7.5 gpm/ft² BED EXPANSION % Bed Dp = 22%

MODEL IL 5460-2A BACKWASH RATE = 239 gpm

$\text{gpm/ft}^2 = \frac{239}{31.8} = 7.5 \text{ gpm/ft}^2$

FLOW GRAPH ABOVE @ gpm/ft² BED EXPANSION % Bed Dpt = 22%

Attachment 2

Yardney Industrial Sand Filter Specifications

yardney
WATER FILTRATION SYSTEMS

Sand Media Filters

Removal of Solids Down to 20 Microns

Yardney Sand Media filters are designed for the most challenging dirty water conditions with a high performance solution for water filtration down to 20 microns. These durable carbon steel filters utilize a 24" vertical side shell depth for removal of organic and inorganic suspended solids for filtering large volumes of water with very little pressure drop and a long-term value. All Yardney industrial media filters utilize our simple backwash system for ease of operation and consistent water quality. The Yardney automatically controlled filter systems operate for extended periods of time prior to a short backwash cycle.

Applications

- Removal of organic and/or inorganic suspended solids down to 20 microns
- Storm water runoff, industrial process water, incoming plant water, waste water clean-up, industrial water for plant reuse
- Pre-filtration in applications such as granular activated carbon, reverse osmosis, cartridge or bag filtration and deionized water
- 80 psi standard operating pressure (high pressure systems available)
- Flow ranges from 10 gpm and up

Advantages

- State of the art fabrication provides added strength under pressure and long system life
- ASME code shaped head construction for durability and safety
- Stainless steel wedgewire underdrain
  - ➤ Ensures structural integrity in the harshest conditions
  - ➤ Hydraulically balanced to increase effectiveness of backwash while reducing flush frequency and waste of water
  - ➤ High strength stainless steel wedgewire will withstand a collapse pressure in excess of 600 psi
- Standard carbon steel products - 3/16" thick material
- Backwash automatically initiated by elapsed time or pressure differential
- Yardney easy-entry lid closure with weld tabs for operator safety
- Available in welded carbon steel
- 3M Scotchkote® 134 fusion bonded epoxy coating on interior surfaces
- Made in USA

Sand Media Filters

Specifications

SPECIFICATIONS | INDUSTRIAL | SAND MEDIA FILTERS													
Model	Number of Tanks in System	Standard Flow Range				Filtration Surface Area (total sq ft)	Backwash Flow Rate (per tank)		Media Requirements (cubic feet)		Maximum Pressure	Inlet/ Outlet Pipe Size	Backwash Line Pipe Size
		Minimum		Maximum									
		gpm	m^3/hr	gpm	m^3/hr		gpm	m^3/hr	Gravel 1/2" - 3/4"	Media			
IL-1824-1A	1	18	4	26	6	1.75	26	6	1	3	100 psi	2"	2"
IL-2424-1A	1	32	7	47	11	3.15	47	11	2	5	100 psi	2"	2"
IL-1824-2A	2	35	8	53	12	3.50	26	6	2	5	100 psi	3"	2"
IL-3024-1A	1	49	11	74	17	4.91	74	17	3	7	100 psi	3"	3"
IL-1824-3A	3	53	12	79	18	5.25	26	6	3	8	100 psi	3"	2"
IL-2424-2A	2	63	14	95	22	6.30	47	11	3	9	100 psi	3"	2"
IL-3624-1A	1	71	16	107	24	7.10	107	24	4	10	100 psi	3"	3"
IL-2424-3A	3	95	22	142	32	9.45	47	11	5	14	100 psi	3"	2"
IL-3024-2A	2	98	22	147	33	9.82	74	17	5	14	100 psi	4"	2"
IL-4824-1A	1	126	29	189	43	12.60	189	43	7	21	80 psi	4"	4"
IL-3624-2A	2	142	32	213	48	14.20	107	24	8	20	100 psi	4"	4"
IL-3024-3A	3	147	33	221	50	14.73	74	17	8	21	100 psi	4"	2"
IL-5424-1A	1	159	36	238	54	15.90	239	54	10	23	80 psi	4"	4"
IL-3624-3A	3	213	48	320	73	21.30	107	24	12	30	100 psi	4"	4"
IL-4824-2A	2	252	57	378	86	25.20	189	43	14	42	80 psi	6"	4"
IL-5424-2A	2	318	72	476	108	31.80	239	54	19	46	80 psi	6"	4"
IL-4824-3A	3	378	86	567	129	37.80	189	43	21	63	80 psi	6"	4"
IL-5424-3A	3	477	108	714	162	47.70	239	54	29	69	80 psi	6"	4"
IL-4824-4A	4	504	115	756	172	50.40	189	43	28	84	80 psi	8"	4"
IL-4824-5A	5	630	143	945	215	63.00	189	43	35	105	80 psi	10"	4"
IL-4824-6A	6	756	172	1134	258	75.60	189	43	42	126	80 psi	10"	4"
IL-5424-4A	4	636	145	952	216	63.60	239	54	38	92	80 psi	8"	4"
IL-5424-5A	5	795	181	1190	270	79.50	239	54	48	115	80 psi	10"	4"
IL-5424-6A	6	954	217	1428	325	95.40	239	54	57	138	80 psi	10"	4"

Standard product includes:

- Completely assembled for easy installation
- Skid mounted tanks
- Yardney easy-entry lid closure with side manway
- Valves
- Inlet/outlet and backwash manifolds
- Controller, solenoids, electrical wire, tubing
- Removable underdrain
- 3M Scotchkote® 134 fusion bonded epoxy coating on interior surfaces

Available options:

- ASME code
- High pressure
- Solar package
- PLC controller
- Custom filter station layout piping
- Air scour

Made in USA

Phone: 951.656.6716
Toll-Free: 800.854.4788
Fax: 951.656.3867
info@yardneyfilters.com

yardney WATER FILTRATION SYSTEMS

www.yardneyfilters.com

© 2013 Yardney Water Management Systems, Inc. | 6666 Box Springs Blvd. | Riverside, CA 92507

MULTIPLE TANK FILTRATION PROCESS | SAND MEDIA

Media filtration is the most effective method for removal of suspended organic and inorganic solids from water down to 20 microns. Yardney media filters operate on the same basic principle as nature's own ground water filtering process. Contaminated, unfiltered water enters the system through the inlet in the top of the filter and flows, with gravity and under pressure, through the media bed where solid particulates are entrapped. This occurs until the filtration system initiates an automatic backwash to expel all contaminates entrapped within the media bed. Yardney media filters are known for their capacity to extract and hold large amounts of water-borne particulate while continuing to deliver the rated flow of clean water.

FILTRATION PROCESS

- The contaminated water enters the tank through the inlet manifold, transitioning to the Yardney 3-way valve and into the top inlet of each tank
- The Yardney two-stage deflector creates a uniform distribution for laminar flow across the media bed while avoiding channeling of the media bed
- Particulate is trapped and retained within the media bed resulting in clean process water flowing out through the stainless steel wedgewire underdrain, to the outlet of each filter tank and to the outlet manifold for end use

In addition to the Yardney filter's ability to filter large volumes of water with very little pressure drop, one of the outstanding features is the simple backwash operation. This backwashing process is possible due to the highly efficient and hydraulically balanced underdrain systems utilized in Yardney media filters.

BACKWASH PROCESS

- Backwash sequence is initiated by either elapsed time of the Yardney controller or pressure differential between the inlet and outlet manifolds
- Water or air pressure opens the Yardney 3-way valve causing the reverse flow of a portion of filtered water up through the stainless steel underdrain to hydraulically and uniformly lift the media bed
- The use of a hydraulically balanced underdrain in conjunction with a gravel pack creates a proper and uniform lift of the media bed while avoiding a turbulent backwash
- Entrapped particulates are released during the backwash event, exhausted through the backwash manifold and routed to a convenient location
- One tank at a time is backwashed while continuing to process water for use until the entire system is clean
- Once completed with the backwash, filtration continues until the next backwash event is called for

© 2013 Yardney Water Management Systems, Inc. | 6666 Box Springs Blvd. | Riverside, CA 92507

IL 5424-2A

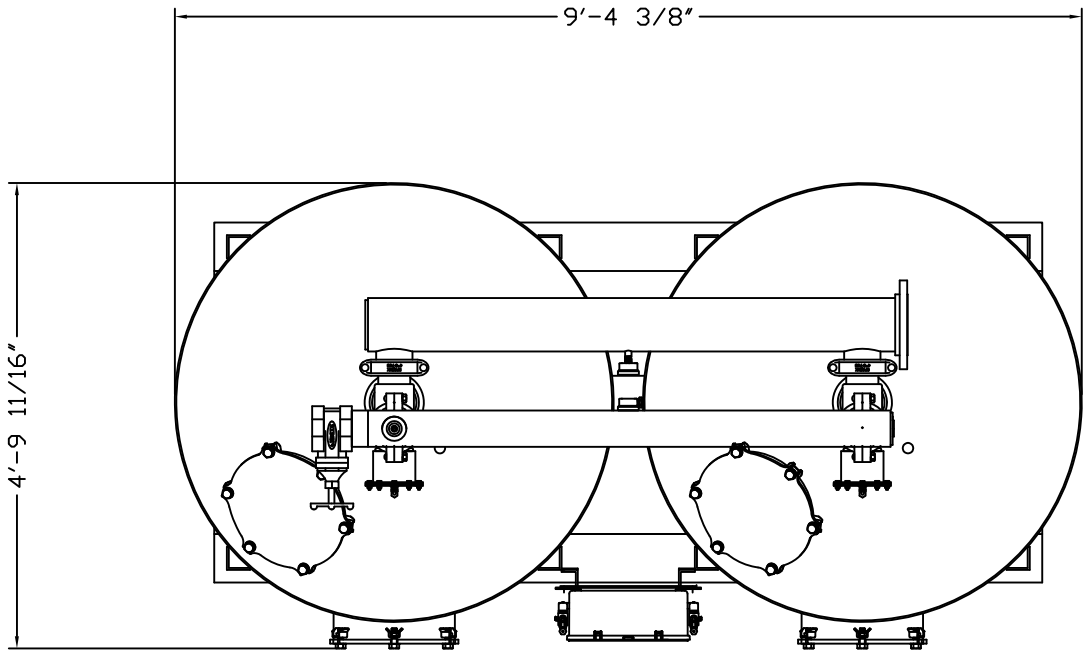

NOTES:

1. DESIGN FLOW RATE: 318-477 GPM.
   BACKWASH RATE: 15 GPM/FT^2.
2. MAXIMUM OPERATING PRESSURE: 80 PSI.
3. ELECTRICAL REQUIREMENTS:
   CONTROLLER 120V;
   SOLENOIDS 24VAC; FACTORY WIRED
4. AIR SUPPLY REQUIRED: 2 CFM @ 70 PSIG (MIN.).
5. MEDIA REQUIREMENT PER TANK:
   A. 1/2"x3/4" CRUSHED ROCK: 9.5 CU. FT. .
   B. 0.47mm CRUSHED SILICA SAND: 23.0 CU. FT. .
6. WEIGHT: (APPROX.)
   A. SHIPPING: 3,630 LBS (WITH MEDIA)
   B. OPERATING: 9,560 LBS
7. EXTERIOR PAINT COLOR: STANDARD BLUE, RAL 5010.

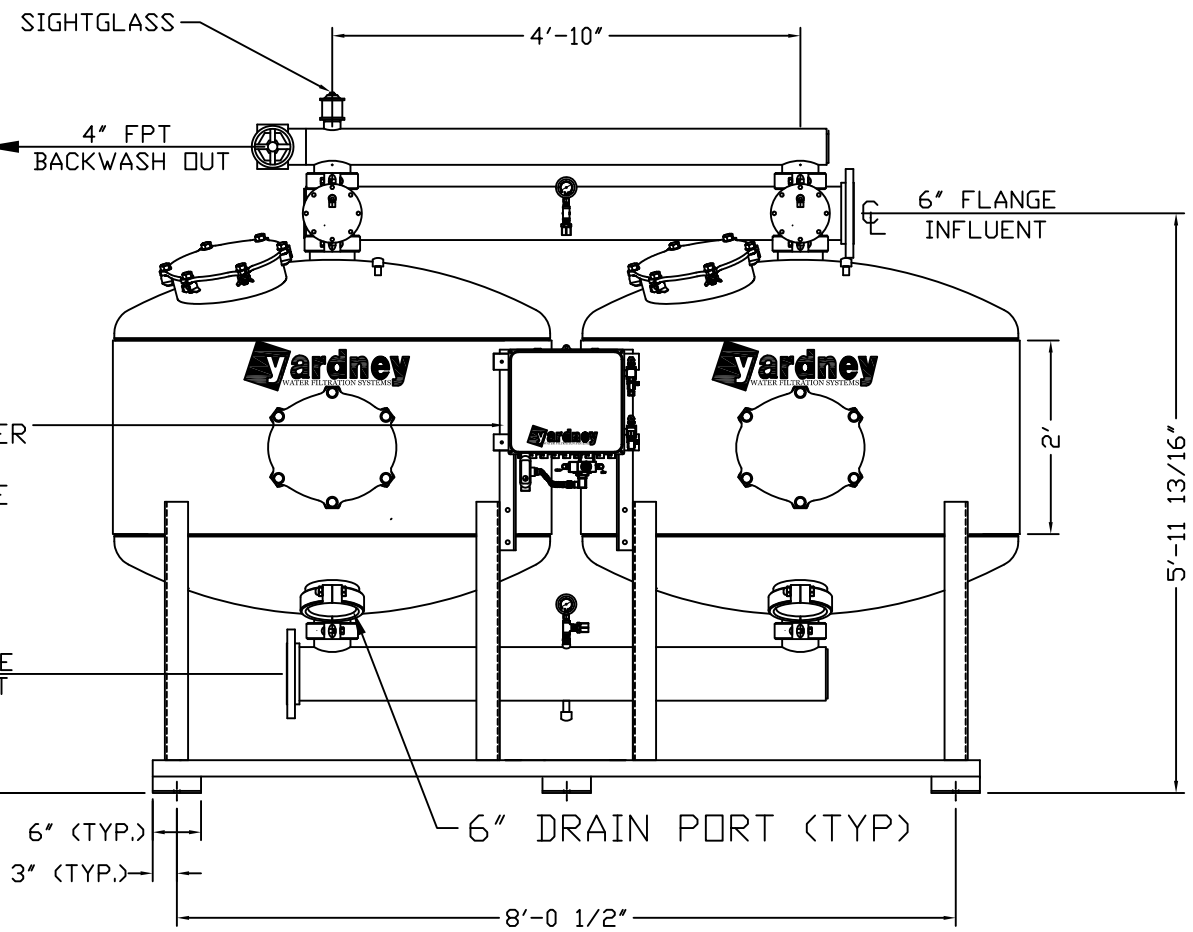

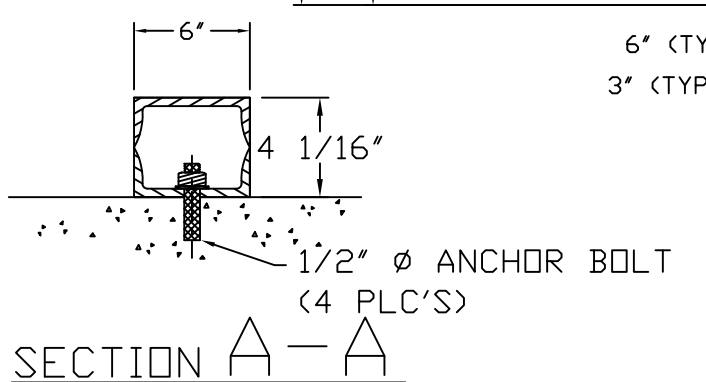

SECTION A—A

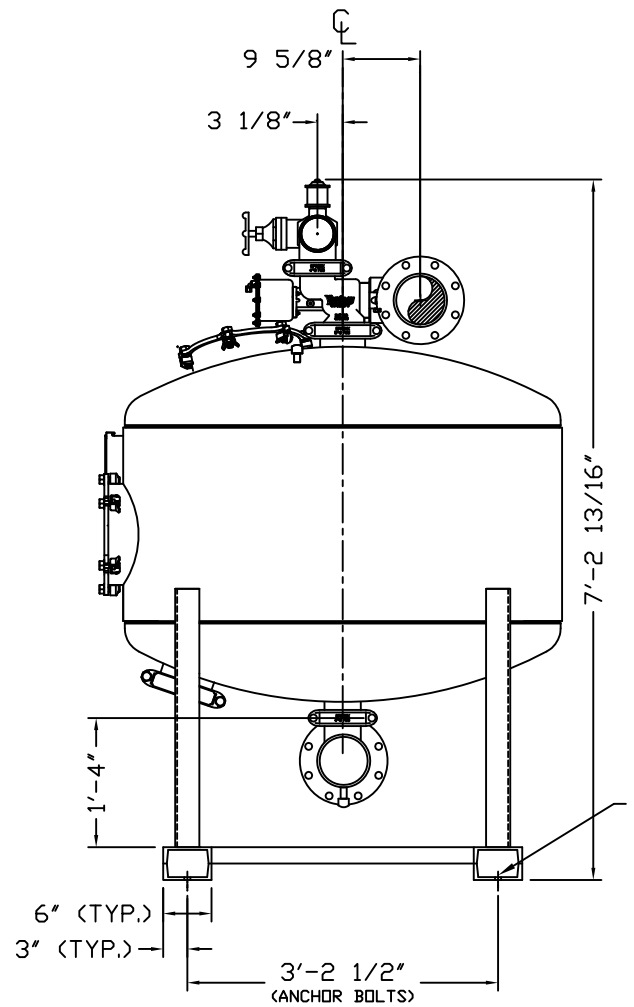

3/4" DIA. HOLE CENTERED ON BOTTOM PAD, 4 PLCS. (FOR 1/2" ANCHOR BOLTS)

THIS DRAWING, INCLUDING THE INFORMATION IT CONTAINS, IS CONFIDENTIAL, PROPRIETARY, AND IS THE PROPERTY OF YARDNEY WATER MANAGEMENT, INC. IT IS SUBMITTED ONLY IN CONNECTION WITH THE TRANSACTION TO WHICH IT PERTAINS AND MUST NOT BE USED IN ANY OTHER MANNER DETRIMENTAL TO THE INTERESTS OF YARDNEY WATER MANAGEMENT. THE DRAWING IS NOT TO BE COPIED AND MUST BE RETURNED UPON REQUEST. COPYRIGHT YARDNEY WATER MANAGEMENT SYSTEMS, 1993.

SYM	REVISIONS	BY	DATE	APP
F	REPLACE HEAD 104018954 w/104018955	DTC	8-16	APP
E	4" DRAIN PORT CHANGED TO 6"	DTC	5-15	APP
D	UPDATED YARDNEY LOGO	DTC	1-13	APP
C	WELD TABS ON MANWAY RINGS	DTC	11-12	APP
B	ADDED 4" DRAIN PORT	DTC	11-09	APP
A	DESIGNED WITH NEMA 4 ENCLOSURE	DTC	9-06	APP

yardney WATER FILTRATION SYSTEMS
RIVERSIDE, CALIFORNIA

APPROVALS	DATE
DRAWN BY: DTC	1/22/06
CHECKED BY:	
APPROVED BY:	
ARCHITECTURAL SCALE:	
USED ON:	

IL 5424-2A
FILTER SYSTEM

SIZE	DRAWING NO:	REV:
D	9500542402	F

SCALE: | ACAD #: SYSTEMS\IL | SHEET 1 OF 1

yardney
WATER FILTRATION SYSTEMS

Multi-Media Filters

Removal of Solids Down to 5 Microns

Yardney Multi-Media filters are designed for enhanced water quality filtration for the removal of organic and inorganic suspended solids down to 5 microns. Multi-Media filters may be used as a stand-alone system or in conjunction with or as a pretreatment for other filtration technologies. The Multi-Media Filtration Systems utilize a vertical side shell depth of 60" with accompanied reverse stacked medias for progressive filtration through the filtration system. All Yardney industrial media filters utilize our simple backwash system for ease of operation and consistent water quality.

Applications

- Removal of organic and/or inorganic suspended solids down to 5 microns with enhanced solids capacity vs. single media sand filtration
- Storm water runoff, industrial process water, incoming plant water, waste water clean-up, industrial water for plant reuse
- Pre-filtration in applications such as granular activated carbon, reverse osmosis, cartridge or bag filtration and deionized water
- 80 psi standard operating pressure (high pressure systems available)
- Flow ranges from 10 gpm

Advantages

- State of the art fabrication provides added strength under pressure and long system life
- ASME code shaped head construction for durability and safety
- Stainless steel wedgewire underdrain
  - ➤ Ensures structural integrity in the harshest conditions
  - ➤ Hydraulically balanced to increase effectiveness of backwash while reducing flush frequency and waste of water
  - ➤ High strength stainless steel wedgewire will withstand a collapse pressure in excess of 600 psi
- Standard carbon steel products, 3/16" thick material
- Backwash automatically initiated by elapsed time or pressure differential
- Yardney easy-entry lid closure with weld tabs for operator safety
- Available in welded carbon steel or stainless steel
- 3M Scotchkote® 134 fusion bonded epoxy coating on interior surfaces
- Made in USA

Multi-Media Filters

Specifications

SPECIFICATIONS | INDUSTRIAL | MULTI-MEDIA FILTERS															
Model	Number of Tanks in System	Standard Flow Range				Filtration Surface Area (total sq ft)	Backwash Flow Rate (per tank)		Media Requirements (cubic feet per tank)				Maximum Pressure	Inlet/ Outlet Pipe Size	Backwash Line Pipe Size
		Minimum		Maximum											
		gpm	m^3/hr	gpm	m^3/hr		gpm	m^3/hr	Gravel 1/2" - 3/4"	Garnet 1.45 mm	Garnet 0.35 mm	Anthracite 0.75 mm			
MM-1860-1A	1	9	2	26	6	1.77	27	6	1	1	2.5	2.5	100 psi	2"	2"
MM-2460-1A	1	16	4	47	11	3.15	47	11	2	2	5	5	100 psi	2"	2"
MM-1860-2A	2	18	4	53	12	3.54	27	6	1	1	2.5	2.5	100 psi	2"	2"
MM-3060-1A	1	25	6	74	17	4.91	74	17	3	3	8	8	100 psi	3"	3"
MM-1860-3A	3	27	6	79	18	5.31	27	6	1	1	2.5	2.5	100 psi	3"	2"
MM-2460-2A	2	32	7	95	22	6.30	47	11	2	2	5	5	100 psi	3"	2"
MM-3660-1A	1	35	8	107	24	7.10	107	24	4	4	11	11	100 psi	3"	3"
MM-2460-3A	3	48	11	142	32	9.45	47	11	2	2	5	5	100 psi	3"	2"
MM-3060-2A	2	50	11	147	33	9.82	74	17	3	3	8	8	100 psi	4"	2"
MM-4860-1A	1	63	14	189	43	12.60	189	43	7	7	19	19	80 psi	4"	4"
MM-3660-2A	2	70	16	213	48	14.20	107	24	4	4	11	11	100 psi	4"	4"
MM-3060-3A	3	75	17	221	50	14.73	74	17	3	3	8	8	100 psi	4"	2"
MM-5460-1A	1	80	18	239	54	15.91	239	54	10	8	24	24	80 psi	4"	4"
MM-3660-3A	3	105	24	320	73	21.30	107	24	4	4	11	11	100 psi	4"	4"
MM-4860-2A	2	126	29	378	86	25.20	189	43	7	7	19	19	80 psi	6"	4"
MM-5460-2A	2	160	36	477	108	31.82	239	54	10	8	24	24	80 psi	6"	4"
MM-4860-3A	3	189	43	567	129	37.80	189	43	7	7	19	19	80 psi	6"	4"
MM-5460-3A	3	240	55	716	163	47.73	239	54	10	8	24	24	80 psi	6"	4"
MM-4860-4A	4	252	57	756	172	50.40	189	43	7	7	19	19	80 psi	8"	4"
MM-4860-5A	5	315	72	945	215	63.00	189	43	7	7	19	19	80 psi	10"	4"
MM-5460-4A	4	320	73	955	217	63.64	239	54	10	8	24	24	80 psi	8"	4"
MM-4860-6A	6	378	86	1134	258	75.60	189	43	7	7	19	19	80 psi	10"	4"
MM-5460-5A	5	400	91	1193	271	79.55	239	54	10	8	24	24	80 psi	10"	4"
MM-5460-6A	6	480	109	1432	325	95.46	239	54	10	8	24	24	80 psi	10"	4"

Standard product includes:

- Completely assembled for easy installation
- Skid mounted tanks
- Yardney easy-entry lid closure with side manway
- Valves
- Inlet/outlet and backwash manifolds
- Controller, solenoids, electrical wire, tubing
- Removable underdrain
- 3M Scotchkote® 134 fusion bonded epoxy coating on interior surfaces

Available options:

- ASME code
- High pressure
- Solar package
- PLC controller
- Custom filter station layout piping
- Air scour
- Continuous flow
- Rinse to waste

Made in USA

Phone: 951.656.6716
Toll-Free: 800.854.4788
Fax: 951.656.3867
info@yardneyfilters.com

yardney WATER FILTRATION SYSTEMS

www.yardneyfilters.com

© 2015 Yardney Water Management Systems, Inc. | 6666 Box Springs Blvd. | Riverside, CA 92507

MULTIPLE TANK FILTRATION PROCESS | MULTI-MEDIA

Multi-media filtration is a more effective method for removal of suspended organic and inorganic solids from water down to 5 microns. Yardney Multi-Media filters operate on a similar principle to the sand media but utilize multiple levels of coarse to fine media to achieve progressive filtration through the entire filter media bed. The coarse media within the top section of the tank filters the largest particulates while the finer media beds filter the fine particulates. This occurs until the filtration system initiates an automatic backwash to expel all contaminants entrapped within the media bed. Yardney Multi-Media filters are known for their capacity to extract and hold large amounts of water-borne particulate while continuing to deliver the rated flow of clean water.

FILTRATION PROCESS

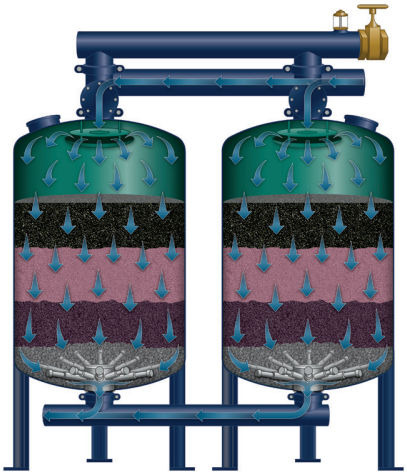

- The contaminated water enters the tank through the inlet manifold, transitioning to the Yardney 3-way valve and into the top inlet of each tank
- The Yardney two-stage deflector creates a uniform distribution for laminar flow across the media bed while avoiding channeling of the media bed
- Particulate is trapped and retained within the media bed resulting in clean process water flowing out through the stainless steel wedgewire underdrain, to the outlet of each filter tank and to the outlet manifold for end use

In addition to the Yardney filter's ability to filter large volumes of water with very little pressure drop, one of the outstanding features is the simple backwash operation. This backwashing process is possible due to the highly efficient and hydraulically balanced underdrain systems utilized in Yardney Multi-Media filters. Yardney Multi-Media filters are hydraulically designed not to commingle the multiple levels of media during a backwash cycle due to the specific gravity of each media.

BACKWASH PROCESS

- Backwash sequence is initiated by either elapsed time of the Yardney controller or pressure differential between the inlet and outlet manifolds
- Water or air pressure opens the Yardney 3-way valve causing the reverse flow of a portion of filtered water up through the stainless steel underdrain to hydraulically and uniformly lift the media bed
- The use of a hydraulically balanced underdrain in conjunction with a gravel pack creates a proper and uniform lift of the media bed while avoiding a turbulent backwash
- Entrapped particulates are released during the backwash event, exhausted through the backwash manifold and routed to a convenient location
- One tank at a time is backwashed while continuing to process water for use until the entire system is clean
- Once completed with the backwash, filtration continues until the next backwash event is called for

© 2013 Yardney Water Management Systems, Inc.

+61 1300 303 281
info@dmi65.com

HOW DMI-65 WORKS

Introduction

The purpose of this paper is to provide users of DMI-65 catalytic water filtration media with qualitative information about how the material works, its capabilities and limitations and enable them to apply the material to water treatment processes in the appropriate manner and with confidence. The paper avoids the detailed complexity of solid surface electrochemical layers and colloidal science, quantitative physical and chemical processes and reactions. For readers having already significant knowledge in this area the paper brings more understanding of what DMI-65 is and its intended use. Newcomers to this area are provided with the bases, and perhaps motivation, for directing their more in depth studies as they might wish.

History

In the early days of water treating, naturally occurring zeolites (such as glauconite greensand) were used to soften and remove the iron and manganese from boiler make-up and process waters. As the demand for higher quality water increased (due in part to higher pressure class boilers) the water treating industry largely moved away from these products for softening to the newly developed synthetic ion exchange resins.

However, in the case of iron and manganese removal this move was much slower and the result was that the use of glauconite greensand (greensand) filtration media continues until the present time. Greensand was and is often used as a pretreatment step prior to ion exchange processes since the iron in a feed water can and does foul the cation resin. Other processes include aeration and oxidation-filtration with standard media filters or proprietary types of media and/or filters

While there have been other iron/manganese removal products and processes developed since greensand was introduced the use of greensand continued even though there were several issues that made it a less than ideal media. It required periodic regeneration with potassium permanganate, could not be used in lower pH waters (<6.2), had a relatively low operating temperature (80°F), and tended to soften through time resulting in pressure drop issues at higher flow rates. Additionally, the supply could occasionally become restricted due to environmental concerns with the processing facilities along the Eastern coast of the United States.

Because of these issues in the 1970s water treating companies and end-users began to express an interest in “something else” to replace the greensand. In response to their requests, scientists and researchers in Japan began to look for ways to infuse oxidizing agents to different matrix materials. It was felt that a commercially produced product could be made more powerful, have better physical properties and be more subject to improvements and/or modifications than any naturally occurring media.

Decades of further research and development of the Japanese Infusion Technology have resulted in the uniquely Australian made product, DMI-65 a granular catalytic media used to boost the advanced reduction/oxidation (redox) processes in water. The media is part of a broad category of products deriving their physical and chemical action from the interaction of their metal oxide surface with the water molecules and ions in solution. This product is revolutionary due to proprietary infusion technology that penetrates the micro pours substrate of the matrix material, allowing for a greater catalytic surface area and of a tight particle size distribution. DMI-65 has low level of fines, a tolerance to wider pH range and chemically infused catalytic surface that won’t be consumed or diminished under normal operating conditions. Last 5 – 10 years of continuous use.

Background information

DMI-65 is an extremely powerful catalytic water filtration media that is designed for the removal of iron and manganese in aqueous solutions (water) without the need for potassium permanganate or chemical regeneration. The unique microporous structure of DMI-65 efficiently removes dissolve iron to the almost undetectable levels as low as 0.001 ppm and manganese to 0.001 ppm. DMI-65 acts as an oxidation catalyst with immediate oxidation and filtration of the insoluble precipitates derived from this oxidation reaction. DMI-65 can also remove Arsenic, Aluminium and other heavy metals and Hydrogen Sulfide under certain conditions.

The material is part of the broad category of products deriving their physical and chemical action from the interaction of their metal oxide surface with the water molecules and ions in solution.

Solid surface interaction with water distinguishes between adsorption as the weak van der Waal forces that hold a hydrophobic molecule in a rigid core media such as activated carbon and absorption as the weak van der Waal forces that hold a hydrophobic molecule in a swellable matrix (such as benzene) in a polymer of T-butyl styrene or absorption by liquid-liquid extraction. Ion exchange resins utilize absorption processes while interaction of DMI-65 with water molecules and ions in solution is initiated through adsorption.

Non catalytic type adsorbent materials retain target ions from water until either sites available for adsorption reach a maximum density and saturation or concentration of target ions in the treated water attain maximum acceptable concentration. At this point, the adsorbent material has to be regenerated to remove or replace the contaminant ions, or the used material is replaced with new material that is loaded in the treatment container. When the process works by swapping one type of ion for target ions from water the process is called ion exchange. This category of adsorbent and some partly absorbent materials remove the target ions from water. The larger the surface per volume of material the larger the amount of contaminant target ions which could be retained from the water.

Purely catalytic materials adsorb the reactant ions from solution bringing them in the proximity of chemical bonding. Then the reaction product moves away from the surface of catalyst. Strictly speaking catalysts facilitate chemical reactions; they do not implicitly remove anything. If the reaction product is a solid precipitate, often the product is retained in the catalytic bed, hence removed by filtration.

Many materials act in a mixed mode; with both ion exchange and catalytic action taking place. For those materials used primarily for their catalytic action, ion exchange resulting in dissolution of the catalytic layer leads to the need for periodic regeneration or reactivation to correct the matrix of ions at their active surface.

DMI-65 – Advanced Oxidation Catalytic Media

DMI-65 is a granular material of dark brown to black colour. This colour is produced by the manganese oxide in the outer layers of the granules. DMI-65 is a catalytic media in the true meaning of the word and facilitates oxidation – precipitation - filtration and does not get consumed in the reactions. Strictly speaking, the media facilitates chemical reactions and does not explicitly remove anything. Once oxidized, the depth filtration aspect of the media removes the solids that are then periodically backwashed out of the filter vessels.

The media does not need regeneration or reactivation and does not display a decaying capacity to do its catalytic work. Over 5 to 10 years period, through many backwashing operations of the bed to remove retained solids, the media is degraded by contact between particles and mechanical abrasion. Then the material has to be replaced.

BASIC OPERATION:

The processes that take place in a bed of DMI-65 involve reduction/oxidation (redox). Redox reactions involve a transfer of electrons between species. Reduction is the gain of electrons or a decrease in the oxidation state of a molecule, atom or ion. Oxidation is the loss of electrons or an increase in the oxidation state of a molecule, atom or ion. Redox reactions occur simultaneously whereby there cannot be a reduction reaction without an oxidation reaction. The media "helps" chemical reactions to occur by interacting with the reaction without being permanently altered. An in depth discussion about redox chemistry is outside the scope of this paper, it will only deal with how the redox process applies in the removal of iron and manganese using DMI-65. The individual redox equations will be covered in the following iron and manganese removal sections.

In order to begin the process of oxidation of the ions in solution and to ensure that the oxidative layer is not compromised the media is designed to operate in the presence of chlorine or other oxidant. In this process the oxidant removes electrons and is consumed in the process. The operator needs to ensure that there is a 0.1 – 0.3 ppm free chlorine residual in the effluent water.

Chlorine, fed as sodium hypochlorite (NaOCl) or bleach (12.5% NaOCl), is the preferred oxidant since it is relatively inexpensive, readily available around the world and it is effective. Other oxidants such as hydrogen peroxide (H_2O_2), chlorine oxide (ClO_2) or ozone can also be used so long as a residual can be measured and maintained.

Another function of the chlorine is that it keeps the media free from bacterial or slime growth. The manganese oxide catalytic surface has to remain clean so that the ions in the water can come in contact with it. At the same time, the chlorine is a source of oxygen more reactive than molecular oxygen. The following chart indicates safe levels for other water constituents that could interfere with the surface interaction.

Unlike ion exchange resins where higher regenerant dosages will increase the ion exchange capacity, chlorine residuals or concentrations higher than required to oxidize the Fe and Mn do not increase the oxidative properties of the media. Additionally, since the media is often used to pretreat waters prior to an Reverse Osmosis (RO) system a higher free chlorine residual would require more extensive post treatment to reduce the residual to protect the membranes from chlorine attack.

The DMI-65 must be activated prior to being placed into service for the first time. This activation requires a higher dosage of chlorine than used during normal operation but only has to be performed once during the initial start up. The dosage rate is 10 fluid ounces of 12.5% chlorine per cubic foot (ft^3) of the media. The activation only requires a soak of several hours but an overnight soak is preferred.

Once activated, the vessel(s) must be backwashed to remove the excess NaOCl and any fines. Since manganese oxide is one of the constituents used in the manufacture of the media an extended rinse is required at start up to remove any trace free manganese oxide residual left over from the

manufacturing process. Once the Mn level in the backwash water reaches values of 0.05 to 0.15 ppm and the free chlorine residual is set the filter is ready to be placed into service.

Media replacement due to the decreased physical filtration properties of the Media due to physical abrasion will occur before complete degradation of the catalytic layer takes place. Under normal operating conditions media life is estimated at 5 – 10 years.

Iron (Fe) precipitation and removal using DMI 65

Iron (Fe) is the fourth most common element found in the earth's crust and exists in a wide range of oxidation states from -2 to +6 although the most common states are ferrous (+2) and ferric (+3).

Ferrous salts are readily soluble. Before the ferrous iron, a dissolved solid commonly found as ferrous bicarbonate, can be removed by filtration it must be oxidized, become ferric hydroxide and in neutral pH waters precipitate out in the media bed. The catalytic surface of DMI-65 contains manganese oxide or exposes manganese and oxygen sites for adsorption of [Fe] ions that are in the water. The reaction of ferrous bicarbonate and NaOCl is almost instantaneous and the ferrous bicarbonate oxidizes (gives up an OH^-) to become the insoluble ferric hydroxide which is then removed through filtration in the catalytic surface of the media. The following redox reaction equation explains the process.

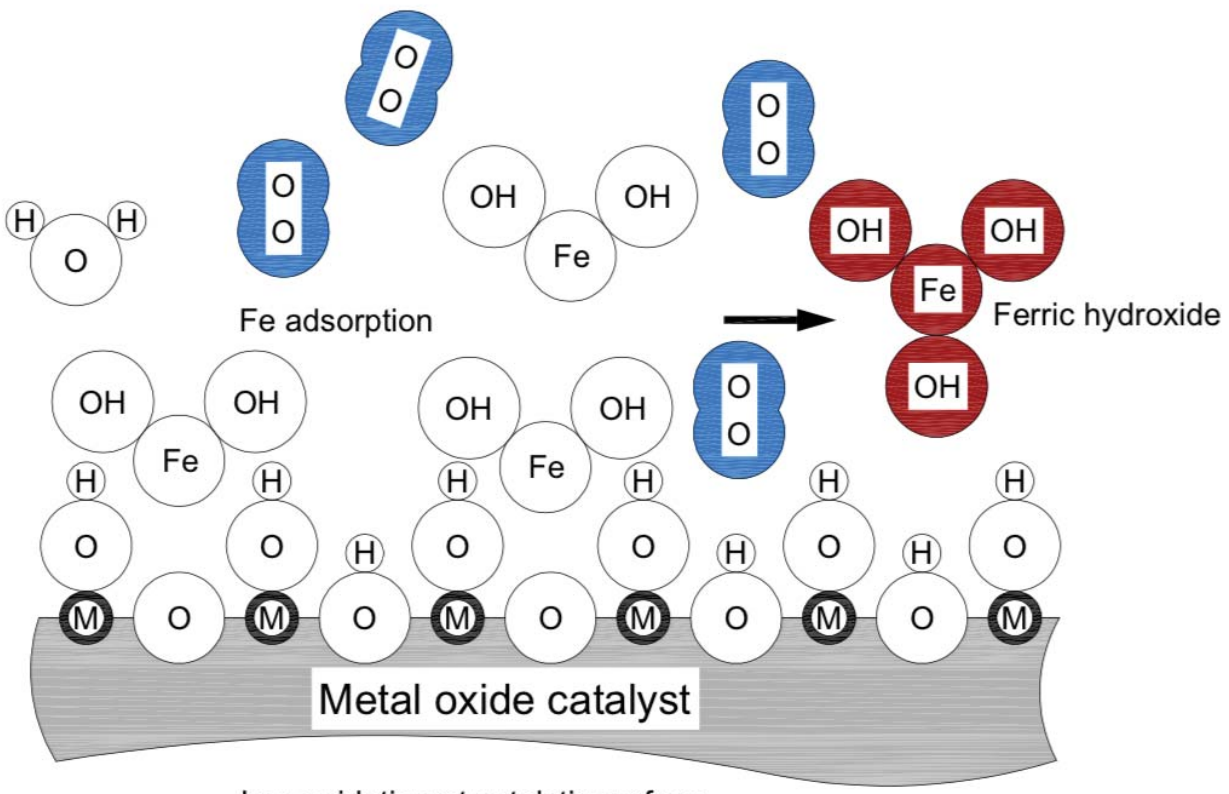

Iron oxidation at catalytic surface.

$$2Fe(HCO_3)_2 + NaOCl + H_2O \rightarrow 2Fe(OH)_2 + 2CO_2 + NaCl$$

In the above figure the catalytic surface is presented in a simplified smooth form. Letter "M" was used to represent a generic metal ion in the lattice of this surface. Letter "O", in the centre of circles, represents an oxygen atom. Various ion size and oxygen molecule (blue) are represented at true relative scale. Except the oxygen molecule, bonded irons are shown as tangent circles. The interpretation for letters and ions in the figure "Ion oxidation at catalytic surface" is:

M: generic metal ion in the catalytic surface lattice (Mn+); n = 1, 2…

O: oxygen atom or ion (O-)

Fe: iron atom or ion (Fe2+, Fe3+)

H: hydrogen atom or ion (H+)

OH: hydroxide, or hydroxyl anion (OH-)

H2O, water molecule shown as tangent circles

Fe (OH)2, ferrous hydroxide is shown as tangent circles

Fe (OH)3, ferric hydroxide, shown as tangent circles, brown colour

O2, oxygen molecule, atoms shown at covalent bonding distance, blue colour

Dissolved ferrous bicarbonate is attracted with the Fe end towards the lattice oxygen of the catalytic material. This brings the Fe in the proximity of covalent bonding with the hydroxide ion of a neighbouring site and the ferrous bicarbonate changes into insoluble ferric hydroxide which precipitates in crystalline form aggregates of size from 3 nanometre and larger. The aggregates coagulate in larger flocks and are retained in the catalytic bed.

As the ferrous bicarbonate is converted into ferric hydroxide, its concentration at the catalytic surface decreases. In the bulk of the water, away from the catalytic surface, the concentration of ferrous bicarbonate is higher resulting in it diffusing towards the lower concentration according to diffusion law. Diffusion flux is linearly dependent with concentration gradient over distance.

Dissolved oxygen contributes to production of hydroxide ions through direct oxidation of hydrogen in combination with Fe splitting the water molecule and by reacting with the hydrogen at the catalytic surface

It is important to note that although a source of oxygen is needed oxidation and precipitation of Fe is driven by the hydroxide ion. Even under relatively acidic conditions hydroxide ions (a very strong anion) are easier available for binding to Fe than oxygen. Thus, Fe is not very difficult to oxidise and precipitate around neutral pH condition. In addition, concentration of hydroxyl ions increases with pH value exponentially and so does the rate of oxidation and precipitation of Fe.

Chlorine (usually in the form of NaOCl) is a source of oxygen more reactive than molecular oxygen. The ideal residual to be maintained downstream of the catalytic filter is 0.2 mg/l (0.1 to 0.3) free chlorine. A higher residual of free chlorine and therefore higher sodium hypochlorite level in the catalytic filter does not always help. It could have an adverse effect due to venting of chlorine and an increase of competing sodium ions, Na+. The catalytic surface has to be clean so that ions in water could come in contact with it so the chlorine injected also prevents bacteria growth and blinding of the catalytic surface with slime.

+61 1300 303 281
info@dmi65.com

Manganese, Mn precipitation and removal using DMI 65

DMI-65 is a catalytic material specifically tailored to the oxidation and removal of manganese. The catalytic surface contains manganese oxide for brining into proximity of covalent bonding manganese and oxygen atoms from water. However, oxidation and removal of manganese (Mn) is vastly different from that of Fe. A major difference is caused by the solubility of manganese oxyhydroxide, $MnO(OH)_2$.

$$Mn(HCO_3)_2 + NaOCl \rightarrow MnO(OH)_2 + NaCl + 2CO_2$$

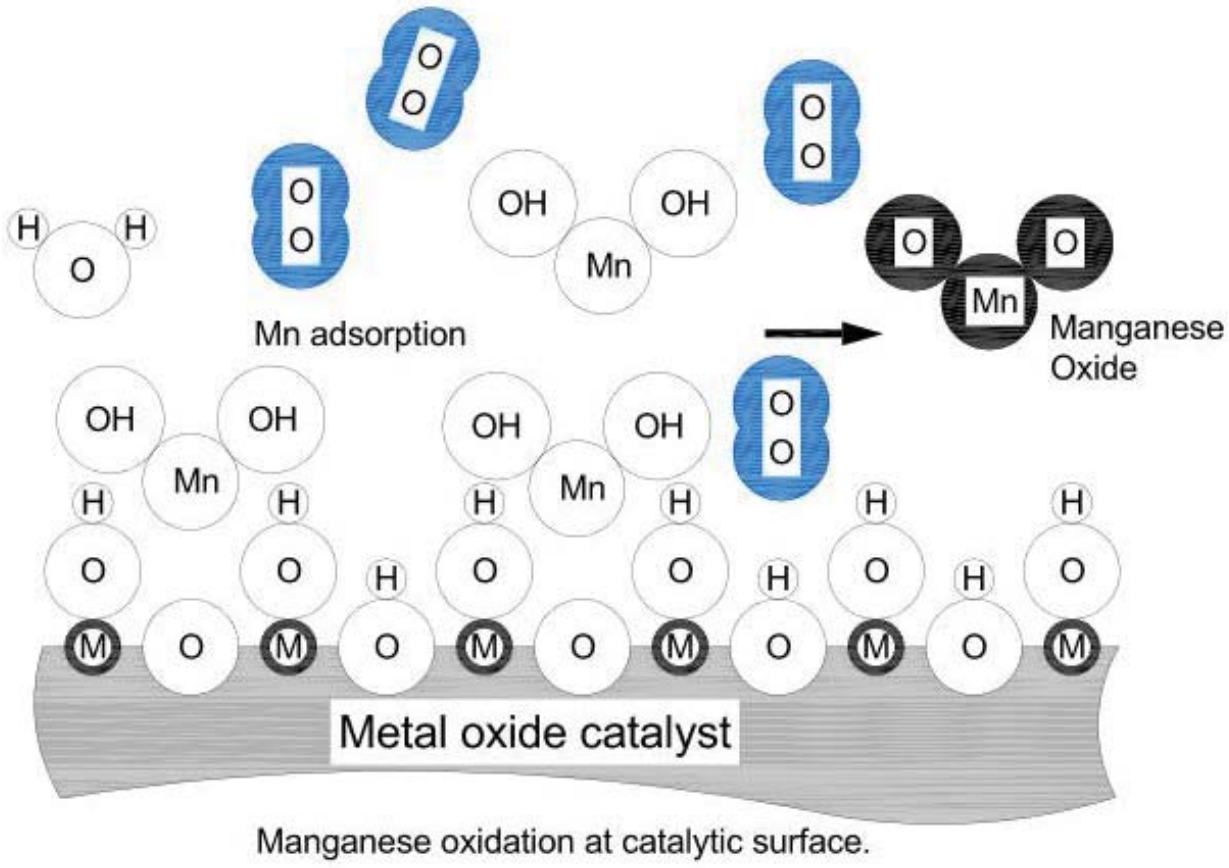

Manganese oxidation at catalytic surface.

Manganese does not precipitate as oxyhydroxide but as oxide, MnO_2 and higher valency oxides. Presence and concentration of hydroxide anions does not help much in the precipitation and removal of manganese. Manganese hydroxide will be attracted with the manganese end to the oxygen in catalytic lattice surface. An Oxygen molecule has to be available in the proximity for facilitating oxidation through the oxygen from lattice and swapping to the lattice with molecular oxygen. Conditions for this to happen are statistically less probable and reaction is of much slower rate than the oxidation of Fe via hydroxide.

While increases in pH to alkaline levels facilitates oxidation and removal of manganese, under these conditions the oxidised manganese could also dissolve back into the water. Consequently, regardless of the target contaminant to be removed, anoxic conditions have always to be avoided to protect the catalytic layer against leaching into water. When oxidising manganese the recommended pH is close to 8.

Manganese oxide has good autocatalytic effect. When backwashing it is better to stop the process before the water becomes very clear. Manganese oxide residue in the filter bed will enhance manganese oxidation.

+61 1300 303 281
info@dmi65.com

Key DMI-65 operating conditions

Treatment processes have to be conducted in such manner so that the catalytic surface of the material is kept clean and available to ion from water to contact.

Water with a large amount of suspended solids has to be clarified before passing it through the catalytic filter with DMI-65. Acceptable levels of suspended solids depends on their nature. A larger amount of mineral suspended solids than organic suspended solids could be handled.

Bacteria could grow and deposit slime on DMI-65. Thus disinfectant and oxidation conditions have to be maintained.

Water containing clays and large organic molecules may result in deposition of such material on the surface of DMI 65 and blinding of the catalytic surface. Treatment for removal of such contaminant before the catalytic filter is needed.

Polymer flocculent could also stick to the DMI-65 and blind catalytic surface.

Hard, unstable groundwater could cause scale deposition in the catalytic filter and blind the material in a solid mono bloc. In such case the DMI-65 material in the bed is lost and would have to be replaced. Treatment for stabilizing the water to prevent scale formation in the catalytic filter has to be carried out.

Both low acidic pH and anoxic conditions could cause dissolution of manganese from catalytic layer of DMI-65 and loss of its capacity. Excessively high pH means excessive concentration of hydroxyl ions (corrosive to metals) and could also cause dissolution of manganese from the catalytic layer.

Do not use demineralized water, distilled water or water known to be strongly corrosive to metals for initial soaking and activation of DMI-65.

yardney
WATER FILTRATION SYSTEMS

IMA-65 Specialty Media

Iron and Manganese Removal

IMA-65 Specialty Media is a revolutionary silica sand based filtration media designed for the removal of iron and manganese without the use of potassium permanganate. The unique micro porous structure of IMA-65 efficiently removes dissolved iron to as low as 0.005 ppm and manganese to 0.001 ppm. After initial activation, the IMA-65 acts as an oxidation catalyst with immediate oxidation and filtration of the insoluble precipitates. The media has been used extensively in a wide variety of applications in Japan for over 30 years. IMA-65 has been tested and certified by the Water Quality Association in accordance with NSF/ANSI 61.

Advantages

- **Eliminates Potassium Permanganate.** Operates with continuous injection of sodium hypochlorite at low residual levels (0.1 to 0.3 ppm).
- **Wide pH range.** Stable and satisfactory performance at pH 5.8 to 8.6.
- **High Flow Rates.** IMA-65 can operate at linear filtration velocities up to twice that of conventional media with a corresponding reduction in capital equipment costs.
- **Higher Operating Temperatures.** Maximum operating temperature of 113 °F (45 °C).
- **Long Life.** IMA-65 is not consumed in the process, providing considerable advantages over other processes or media.
- **Regeneration Not Required.** After initial activation, only sodium hypochlorite feed is required.
- **System Compatibility.** Physical properties are similar to that of competitive media, allowing conversion to IMA-65 without major hardware modifications.
- **Arsenic Removal.** IMA-65 has been shown to be effective in the removal of arsenic associated with iron-containing influent. If necessary, ferric chloride can be introduced to treat waters with low influent iron levels or to enhance removal when treating waters with high levels of arsenic.

SPECIFICATIONS | IMA-65 SPECIALTY MEDIA			
Physical Properties		Operating Conditions	
Color	Brown to black	pH range	5.8 – 8.6
Bulk density	92.0 lbs./cu. ft.	Maximum water temp	113 °F (45 °C)
Specific gravity	2.7	Minimum bed depth	24 inches (600 mm)
Effective size	0.48	Freeboard	40% minimum
Uniformity coefficient	<1.8	Service flow rate	2 – 12 gpm per sq. ft.
Mesh size	20 – 45	Backwash flow rate	10 – 20 gpm per sq. ft.
Annual attrition	1-5%	Backwash expansion	15 – 50%

Engineering (Hydraulic) Data

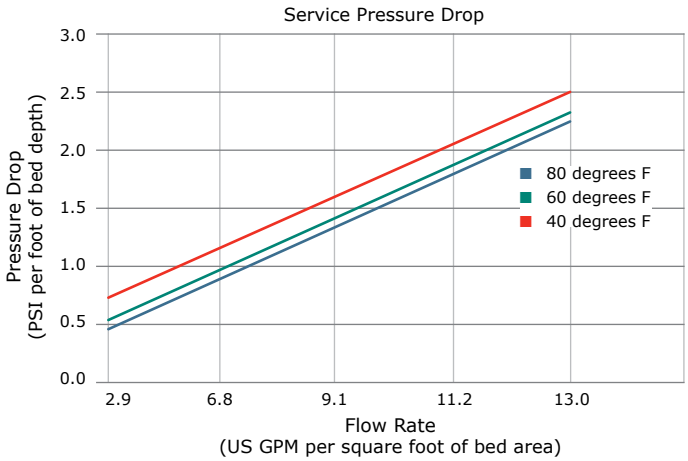

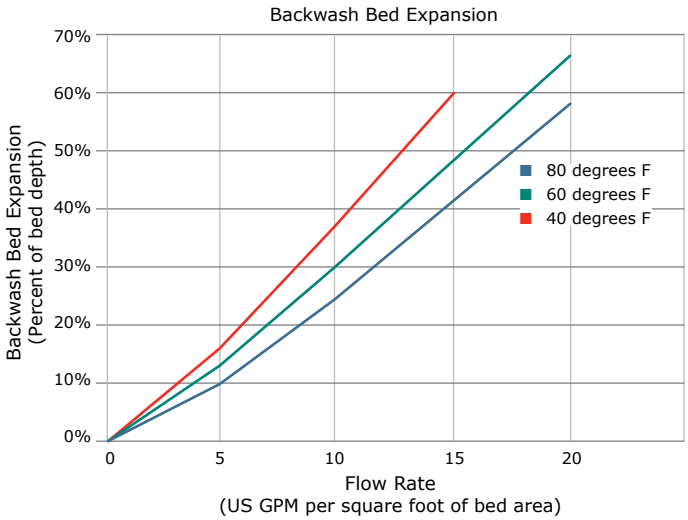

Phone: 951.656.6716
Toll-Free: 800.854.4788
Fax: 951.656.3867
info@yardneyfilters.com

www.yardneyfilters.com

© 2016 Yardney Water Management Systems, Inc. | 6666 Box Springs Blvd. | Riverside, CA 92507

MODEL MM 5460-2A

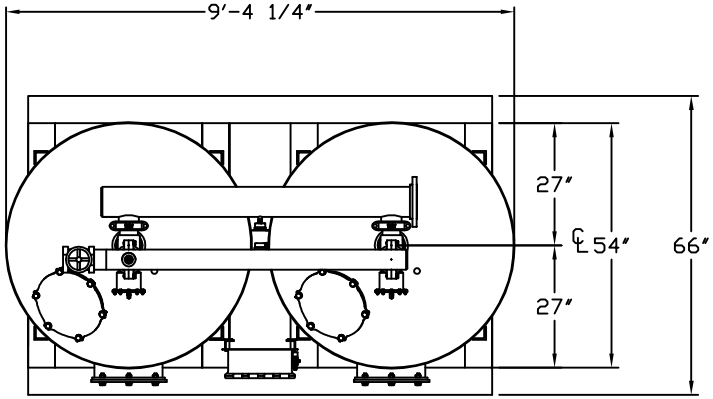

NOTES:

1. FLOW RATE DESIGN: 160-477 GPM; MAX TO 636 GPM
2. MAXIMUM WORKING PRESSURE: 80 PSI.
3. ELECTRICAL REQUIREMENTS:
   CONTROLLER 120V;
   SOLENOIDS 24VAC; FACTORY WIRED
4. AIR SUPPLY REQUIRED: 2 CFM @ 70 PSIG (MIN.).
5. MEDIA REQUIREMENT PER TANK:
   A. 1/2"x3/4" CRUSHED ROCK: 9.5 CU. FT. ,
   B. 1.45mm GARNET: 8.0 CU. FT. ,
   C. 0.35mm GARNET: 24.0 CU. FT. ,
   D. 0.75mm ANTHRACITE: 24.0 CU. FT. ,
6. WEIGHTS: (APPROX.)
   EQUIPMENT: 2,710 LBS (LESS MEDIA)
   MEDIA: 12,746 LBS
   OPERATION: 22,850 LBS

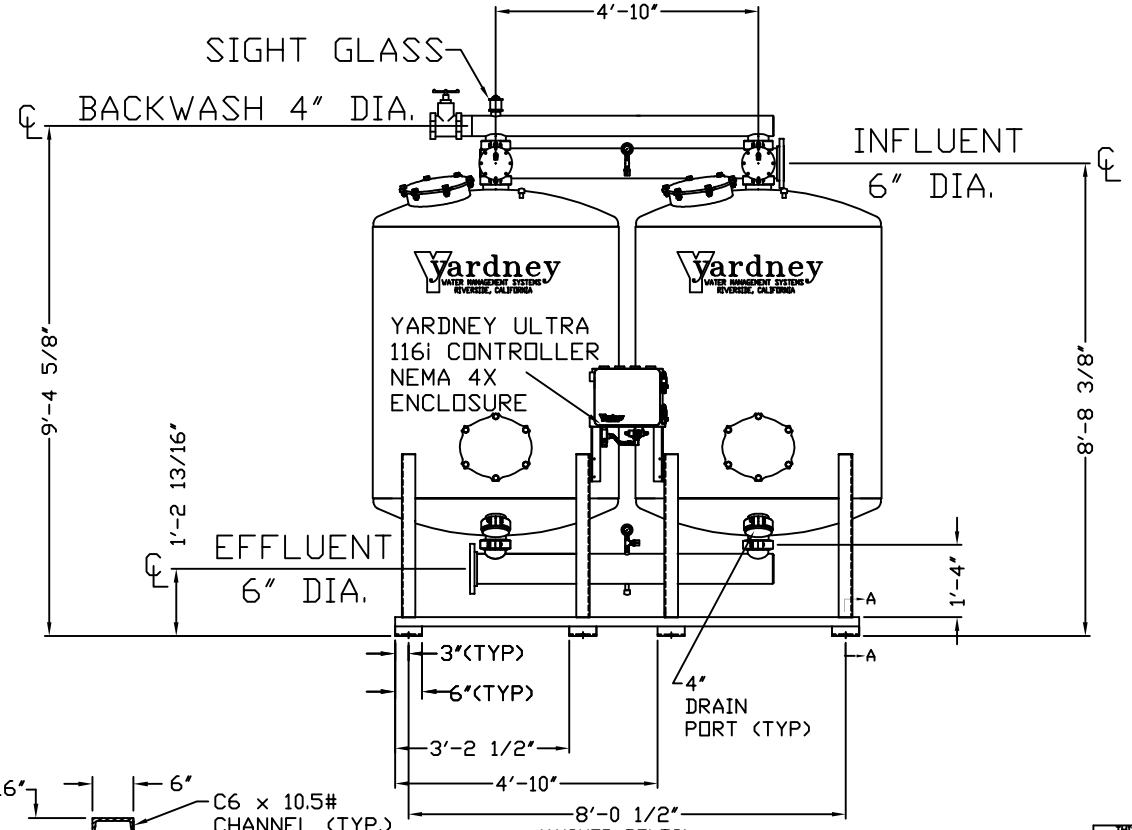

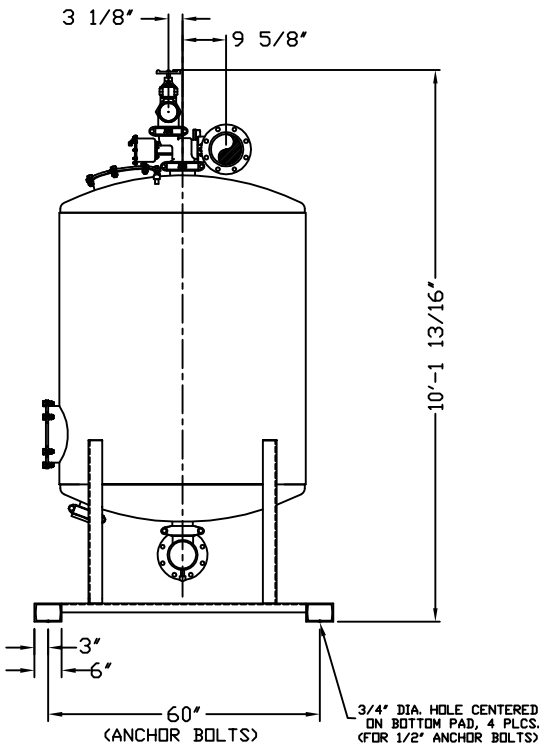

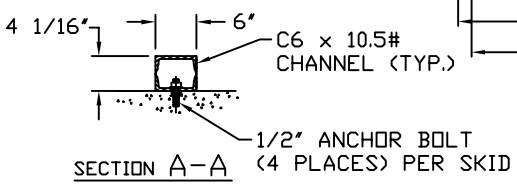

SECTION A-A

THIS DRAWING, INCLUDING THE INFORMATION IT CONTAINS, IS CONFIDENTIAL, PROPRIETARY AND IS THE PROPERTY OF YARDNEY WATER MANAGEMENT, INC. IT IS SUBMITTED ONLY IN CONNECTION WITH THE TRANSACTION TO WHICH IT PERTAINS AND MUST NOT BE USED IN ANY OTHER MANNER DETRIMENTAL TO THE INTERESTS OF YARDNEY WATER MANAGEMENT. THE DRAWING IS NOT TO BE COPIED AND MUST BE RETURNED UPON REQUEST. COPYRIGHT YARDNEY WATER MANAGEMENT SYSTEMS, 1994

DO NOT SCALE DWG

Yardney WATER MANAGEMENT SYSTEMS RIVERSIDE, CALIFORNIA

SYM	REVISIONS	BY	DATE	APP
E	ADDED 4" DRAIN PORT	DTC	11-09	APP
D	ADDED SIGHTGLASS	DTC	8-07	APP
C	REVISED SKID TO STANDARD	DTC	11-06	APP
B	CORRECTED GPM FLOW RATES	DTC	10-05	APP
A	STANDARDIZED NOTES	DTC	9-05	APP

APPROVALS DATE
DRAWN BY K.A.T. 6/17/94
CHECKED BY
APPROVED BY
ARCHITECTURAL SCALE:
USED ON

MODEL MM 5460-2A

SIZE D | DRAWING NO: 9500546002 | REV: E

SCALE: | DWG SIZE SYSTEM\MM | SHEET 1 OF 1

Attachment 3

Design Calculations for Chlorine Injection

Configurable Dosing Tank Station

Storing and dosing liquid chemicals

General

Dosing is precision work and one of the main tasks in chemical and process engineering as well as water treatment. Thus dosing requires precise adjustment of the pump and its accessories to the process parameters of the respective application. DIGITAL DOSING™ pumps are delivering an optimal performance in these application fields.

As they are easy to install, DTS dosing tank stations are the first choice in the matter of economic efficiency when adding liquids such as coagulants, disinfectants or neutralising agents to a process in a precise and controlled way.

DTS dosing tank stations are intended for storing and dosing liquids. Many different configurations can be selected flexibly to fulfil various dosing tasks. Due to the use of high-quality materials, DTS dosing tank stations can be employed for diverse dosing liquids. The selection of materials can be adapted via the configuration.

Components and features

- Chemically resistant tank made of UV-stabilised, semitransparent or black polyethylene, in 6 sizes from 60 to 1000 litres, with embossed litre scale and PE screw cover
- PE collecting tray
- Handheld mixer or electric stirrer (230 V, 50 Hz) with level switch for dry-running protection
- Rigid suction lance or foot valve made of PE, with 2-step level switch for dry-running protection, suction line to the dosing pump
- PVC or PP injection unit with G 1/2 process connection
- PE or PVC discharge line (10 m)
- Drain valve
- Filling armature with ball valve (for all tank sizes) or dissolving hopper (from 200 l)
- Multi-function valve
- Prepared for the installation of a dosing pump DDA, DDC, DDE, DMX 221 or DDI 60-10 including necessary assembly material (connectors, click-plate and screws depending on pump type)

Note:
Dosing pumps are not comprised in a standard delivery. They have to be ordered separately.

Applications

- Dosing of biocides and inhibitors into cooling water
- Dosing of lyes and acids for pH regulation
- Dosing of coagulants, such as ferric(II)chloride or ferric(III) chloride, for waste water treatment
- Dosing of hypochlorite
- Dosing of cleaning agents and disinfectants (CIP, cleaning machines)

Type key

Example	DTS	100	T	1	0	3	4	RE	E	4	A	1	H

Product type
DTS Dosing Tank Station

Tank size
60 60 litres
100 100 litres
200 200 litres
300 300 litres
500 500 litres
1000 1000 litres

Tank colour
T Transparent
B Black

Collecting tray
0 Without
1 Collecting tray

Screw cover
0 Black screw cover without lock

Mixer or stirrer
0 Without
1 Handheld mixer, PE
2 Electric stirrer, stainless steel
3 Electric stirrer, PP, with sealing flange

Preparation for dosing pump
0 Without
1 Preparation for DMX 221 up to 50 l/h
3 Preparation for DDI 60-10
4 Preparation for SMART Digital DDA, DDC, DDE

Suction line
WO Without
RV Rigid suction lance PE/V
RE Rigid suction lance PE/E
RT Rigid suction lance PE/T
FV Foot valve with flexible suction line PE/V
FE Foot valve with flexible suction line PE/E
FT Foot valve with flexible suction line PE/T

Discharge line
A Without
B 10 m of PE hose 4/6 mm (up to 7.5 l/h)
C 10 m of braided PVC hose 6/12 mm (up to 30 l/h)
D 10 m of PE hose 9/12 mm (up to 60 l/h)
E 10 m of PE hose 6/9 mm (up to 30 l/h)

Injection unit (G 1/2 process connection)
0 Without
1 Injection unit PVC/V/C
2 Injection unit PP/V/C
3 Injection unit PVC/E/C
4 Injection unit PP/E/C
5 Injection unit PVC/T/C

Drain valve (not with collecting tray)
A Without
B Drain valve PVC/E

Filling device
0 Without
1 Filling armature PVC/E with ball valve
2 Dissolving hopper

Multi-function valve
A Without
G Multi-function valve PV/V
H Multi-function valve PV/E
I Multi-function valve PV/T

Components overview

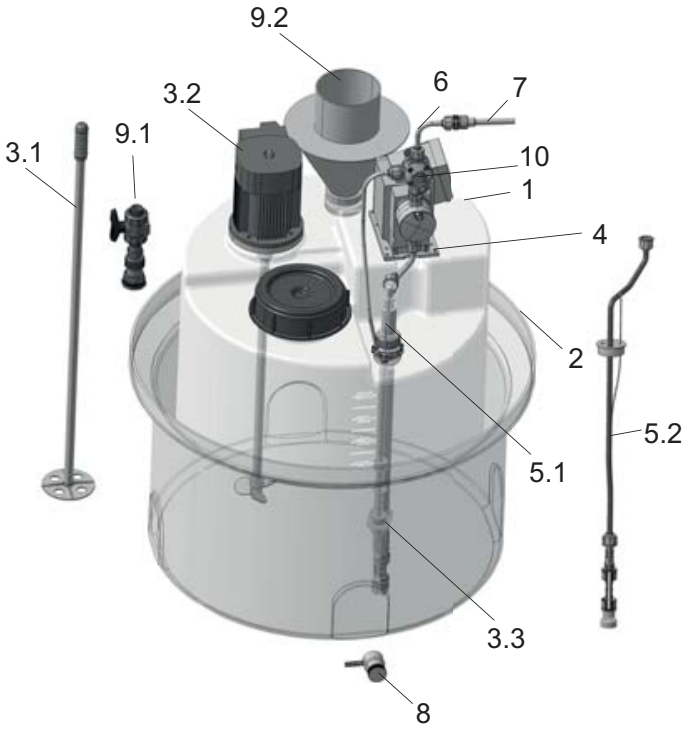

1 Tank
2 Collecting tray
3.1 Handheld mixer
3.2 Electric stirrer
3.3 Level switch for electric stirrer
4 Installation material
5.1 Rigid suction lance with connection to the pump
5.2 Foot valve with flexible suction line
6 Discharge line
7 Injection unit
8 Drain valve
9.1 Filling armature with ball valve
9.2 Dissolving hopper
10 Multi-function valve

95715959 0914 ECM: 1139925

The name Grundfos, the Grundfos logo, and be think innovate are registered trademarks owned by Grundfos Holding A/S or Grundfos A/S, Denmark. All rights reserved worldwide.

GRUNDFOS Holding A/S
Poul Due Jensens Vej 7
DK-8850 Bjerringbro
Tel: +45 87 50 14 00
www.grundfos.com

GRUNDFOS

FROM THE INVENTOR OF DIGITAL DOSING™

SMART Digital
DDA – DDC – DDE
Modular. Simple. Intelligent.

be
think
innovate

GRUNDFOS

SMART Digital

Now it’s time to break the barriers of conventional dosing

A new era of dosing technology

Chemistry in water treatment, water and wastewater recycling and disinfection has experienced a huge development during the last years, and this poses a challenge for today’s dosing technology. More and more complex applications require intelligent dosing pumps with new drives or new control and adjustment mechanisms to simplify the operators’ job.

SMART Digital dosing pumps meet these challenges. They offer state-of-the-art drive technology, new dimensions of user-comfort and intelligent flow control. These features ensure extremely reliable, cost-effective and high-precision processes at an optimum price-performance ratio.

Reliable processes ✓
Unique user-friendliness ✓
Simple Plug’n’Play ✓

Designed to save costs and to protect the environment

In general, the investment for a dosing pump installation is low compared to its life cycle costs. Low operation costs and longer maintenance intervals combined with an extremely high dosing accuracy make SMART Digital the perfect partner for:

- Saving chemicals with high dosing accuracy and FlowControll
- Saving energy with latest drive technology and improved electronics
- Saving maintenance costs thanks to the universal chemical resistance of the full-PTFE diaphragm and Digital DosingTM
- Saving natural resources with new composite materials and sustainable production processes

Optimal cost control ✓
Environment-friendly ✓

Processes

SMART Digital can be used in a wide range of processes...

- Disinfection
- pH-adjustment
- Chemical dosing
- Cleaning-in-place
- Biocides
- Coagulation
- Precipitation/Flocculation
- Filtration
- Reverse osmosis

Application areas

... within a vast field of application areas:

- Ground water
- Surface water
- Drinking water
- Process water
- Recreational water
- Recycle & reuse

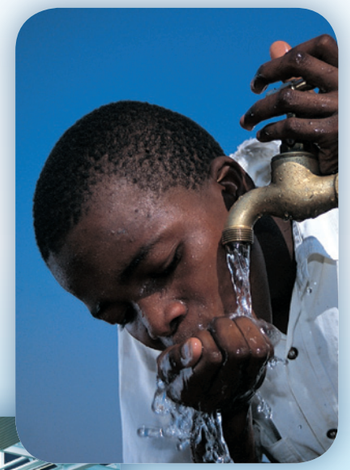

SMART Digital
The perfect system

Simplicity

Precise and easy setup. Intuitive user interface. Simple handling and perfect overview and control even from the distance – it's always easy to handle our SMART Digital!

- Intuitive and self-explanatory menu
- Click wheel (turn-and-push knob)
- Big graphical LCD with four colour "traffic light" concept
- More than 25 languages

Intelligent and intuitive handling saves time and cost – ensuring a seamless integration in all workflows ✓

Modularity

Requirements change, demands grow, and capacities vary – **SMART Digital fits into every environment and situation!**

- Turn-down ratio up to 1:3000 with a dosing spectrum of 0.0025 – 30 l per hour
- Click-stop mounting plate for quick and variable installation
- Control cube can be positioned in three ways (left, right, front)
- Using switch-mode power supply, the SMART Digital model DDA is independent from regional voltages

Highest performance in all operating conditions and a flexible concept you can always rely on ✓

MODULARITY
SIMPLICITY
FLOW INTELLIGENCE

SMART Digital
High performance is our standard

Flow Intelligence

Full control under all conditions. Highest process reliability – at any time with SMART Digital!

- FlowControl with selective fault diagnosis
- Pressure monitoring
- Flow measurement
- AutoFlowAdapt

Groundbreaking flow intelligence guarantees highest process reliability ✓

Digital Dosing™

The SMART Digital generation DDA, DDC and DDE with powerful variable-speed stepper motors brings state-of-the-art technology to perfection.

Combined expert knowledge and the new patented solutions set future standards. Traditional technologies such as stroke length/stroke frequency adjustment with synchronous motor or solenoid drive become a thing of the past.

- Powerful variable-speed stepper motor
- Internal stroke speed control
- Turn-down ratio up to 1:3000
- Always full stroke length – even at small flow rates
- Smooth, continuous dosing
- Optimal for degassing liquids
- SlowMode function for high-viscosity liquids

New patented solutions set future standards ✓

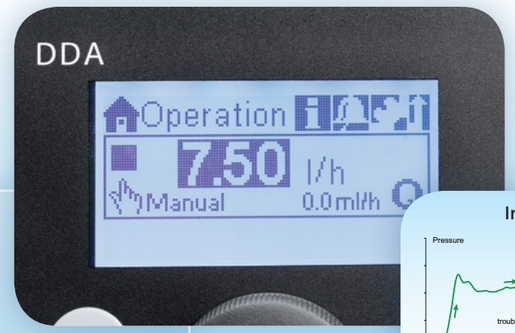

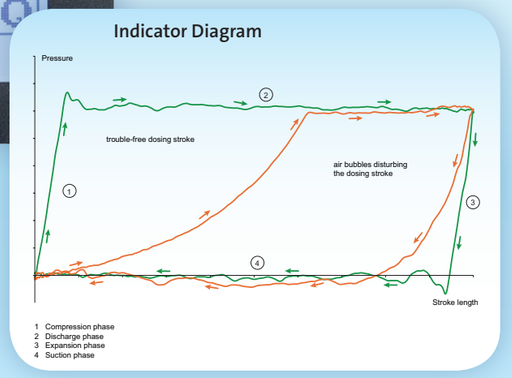

MODULARITY
SIMPLICITY
FLOW INTELLIGENCE

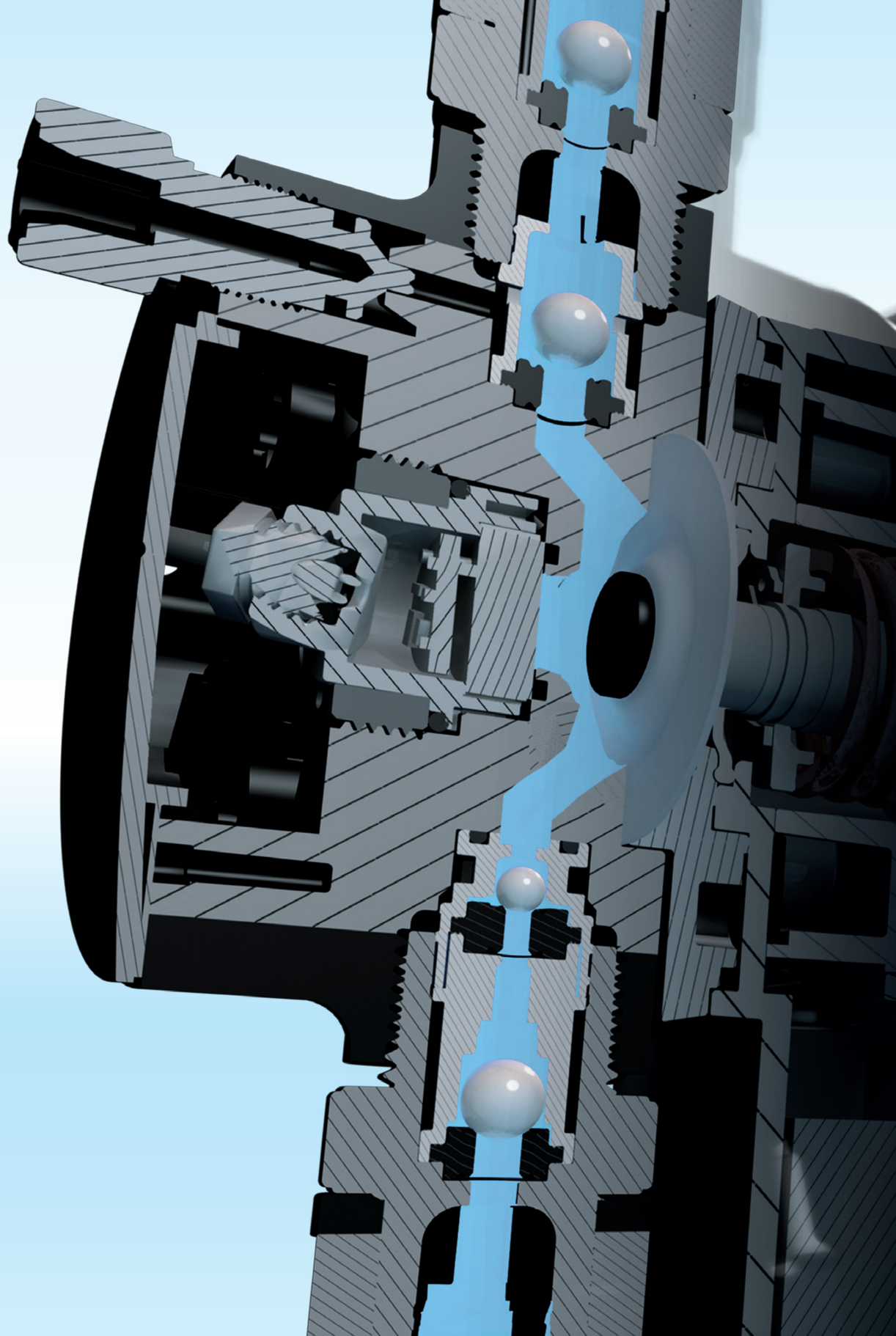

SMART Digital DDA, DDC, DDE

Perfect solutions for vast market segments

DDA

This high-end DDA pump range is designed for complex and demanding applications. Whether degassing liquids, flow rates down to 2.5 ml/h or advanced process control are required, this pump offers the perfect solution:

- Max. 30 l/h and 16 bar
- Turn-down ratio 1:3000 (7.5-16) or 1:1000
- FlowControl with selective fault diagnosis
- Integrated flow measurement
- AutoFlowAdapt
- Auto deaeration also during pump standby
- Batch modes (timer- or pulse-based)
- Optional E-box for Profibus DP integration

Please see next page for further details.

DDC

The DDC pump range is the optimum solution for common applications. The easy-to-use interface with the click wheel makes the setup and operation as easy as your car radio system:

- Max. 15 l/h and 10 bar
- Turn-down ratio 1:1000
- Graphical LC display backlit in different colours
- More than 25 languages
- Standard operation modes, e.g. pulse and analog
- SlowMode for high viscosity liquids
- 2 integrated relay outputs

Please see next page for further details.

DDE

The DDE offers Digital Dosing with basic functions even for a low budget for easier applications. Now just 2 pump models cover a range where 12 or more were needed in the past:

- Max. 15 l/h and 10 bar
- Turn-down ratio 1:1000
- Smooth continuous dosing
- Always 100 % suction stroke
- Capacity setting 0.1-100 %
- Simple pulse operation mode
- External stop and empty tank alarm

Please see next page for further details.

Performance range

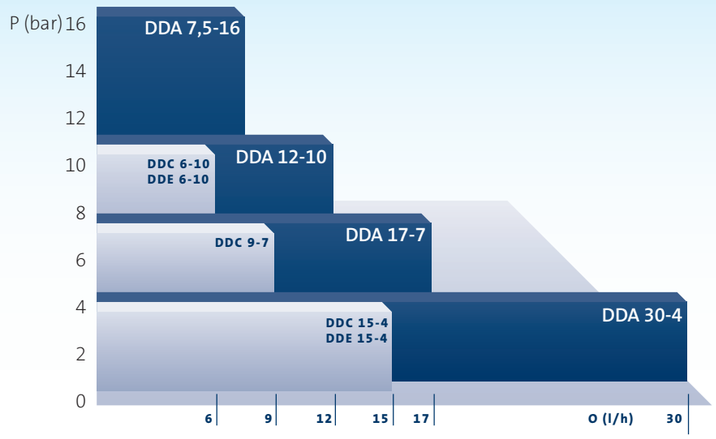

Overview of functions

Control variant:	DDA FCM	DDA FC	DDA AR	DDC AR	DDC A	DDE PR	DDE P	DDE B
General								
Digital Dosing: Internal stroke speed and frequency control	●	●	●	●	●	●	●	●
Mounting plate (basic / wall mounting)	●	●	●	●	●	●	●	●
Supply voltage 100-240 V, 50-60 Hz	●	●	●	●	●	●	●	●
Enclosure class IP 65, Nema 4X	●	●	●	●	●	●	●	●
Control panel								
Control cube mountable in three positions: front, left, right	●	●	●	●	●			
Control panel position: front-fitted						●	●	●
Transparent protective cover for control elements	●	●	●	●	●			
Capacity setting in millilitres, litres or US-gallons	●	●	●	●	●			
Graphical display with background light in four colours for status indication: white, green, yellow, red	●	●	●	●	●			
Plain-text menu in different languages	●	●	●	●	●			
Turn-and-push knob (click wheel) for easy navigation	●	●	●	●	●			
Capacity adjustment knob (0.1 - 100 %)						●	●	●
Start / Stop key	●	●	●	●	●			
100 % key (deaeration)	●	●	●	●	●	●	●	
Operation mode switch (manual / pulse)						●	●	
Operation modes								
Manual speed control	●	●	●	●	●	●	●	●
Pulse control in ml/pulse	●	●	●	●	●			
Pulse control (1:n)						●	●	
Analog control 0/4-20 mA	●	●	●	●				
Batch control (pulse-based)	●	●	●					
Dosing timer cycle	●	●	●					
Dosing timer week	●	●	●					
Fieldbus control	●	●	●					
Functions								
Auto deaeration also during pump standby	●	●	●					
FlowControl system with selective fault diagnosis	●	●						
Pressure monitoring (min / max)	●	●						
Flow measurement	●							
AutoFlowAdapt	●							
SlowMode (anti-cavitation)	●	●	●	●	●			
Calibration mode	●	●	●	●	●			
Scaling of analog input	●	●	●					
Service information display	●	●	●	●	●			
Relay setting: alarm, warning, stroke signal, pump dosing	●	●	●	●		●		
Relay setting (additionally): timer cycle, timer week	●	●	●					
Inputs/outputs								
Input for external stop	●	●	●	●	●	●	●	
Input for pulse control	●	●	●	●	●	●	●	
Input for analog 0/4-20 mA control	●	●	●	●				
Input for low-level signal	●	●	●	●	●	●	●	
Input for empty tank signal	●	●	●	●	●	●	●	
Output relay (2 relays)	●	●	●	●		●		
Output analog 0/4-20 mA	●	●	●					
Input / Output for GeniBus	●	●	●					
Input / Output for E-box (Profibus DP or additional alarm relays)	●	●	●					

SMART Digital
Accessories and Service

E-Box Profibus DP

With the additional E-Box module, the pump can be easily integrated in a Profibus DP network. This enables remote monitoring and setting via the fieldbus system. Just click the E-box in between the DDA pump and the mounting plate. With the plug and play solution, DDA pumps can also be easily retrofitted.

General pump accessories

A wide range of accessories is available for the SMART DIGITAL pump range, among others:

- Installation kit including foot valve, injection unit and hose
- Multi-function valve (PVDF)
- Rigid suction lance (PE, PVDF) with low level and empty tank signal
- Foot valve for flexible suction line (PE, PVDF, stainless steel)
- Injection unit (PP, PVC, PVDF, stainless steel) in different designs
- Hose in PVC, PE, ETFE in different sizes
- Signal cables for all inputs and outputs
- Dosing tanks in different sizes

All components have been especially designed for and adjusted to the new SMART Digital pumps.

Only original SMART accessories can guarantee optimum dosing results.

Service

The following service kits are obtainable (for PP, PVC, PVDF and stainless steel):

- Complete dosing head kit
- Valves and diaphragm kit
- Valve kit
- Diaphragm kit

Please see service catalogue for further service kits and details.

SMART Digital pumps have outstandingly long maintenance intervals.

Wear and tear parts which have been in contact with the media only have to be replaced after 8000 operating hours (or after two years at the latest).

Shorter intervals might be necessary for highly-abrasive media.

ALL THE INFORMATION YOU NEED IS ONLINE

Grundfos WebCAPS is an online product selection tool, but it offers much more than that. The site compiles all the product-related information you could ever need.

What you can find in WebCAPS

Catalogue – includes all products available in your region, complete with technical information, drawings, descriptions, performance curves, etc.

Literature – find everything from data booklets through installation & operating instructions to product brochures.

Service – the place to find service instructions (including video tutorials), service parts lists, assembly drawings, etc.

Sizing – enter your system requirements for instant recommendations. Includes Life Cycle Cost calculations.

Replacement – enter the make and model of your old pump for an instant replacement recommendation.

CAD drawings – download DXF and DWG files as required.

For offline use, WinCAPS is a CD-ROM version of WebCAPS. Contact Grundfos to order.

GRUNDFOS **WEBCAPS** GRUNDFOS **WINCAPS**

Our new SMART Digital pump family can be flexibly installed in various positions due to its modular construction. With its user-friendly display and menu-structure, the pump is easy to operate. The integrated flow intelligence assures safe and continuous processes, making it an absolutely reliable pump.

On top of that, you save TIME and MONEY when opting for SMART Digital.

You save TIME:

- Easy commissioning and service due to the click-stop mounting plate
- Self-explanatory user-interface, comparable to a car-radio system
- Plain-text display for failure indication: no need
- for time-consuming fault analysis
- Quick commissioning without reading the I/O
- Easy process control thanks to the intelligent flow management functions

You save MONEY:

- No additional installation parts needed due to the click-stop mounting plate
- High accuracy saves chemicals
- The required target flow is always achieved due to the AutoFlowAdapt, FlowControl and flow measurement functions; additional monitoring and control devices are made redundant
- Intelligent flow management prevents expensive process breakdowns

95726831/0812

The name Grundfos, the Grundfos logo, and be think innovate are registered trademarks owned by Grundfos Holding A/S or Grundfos A/S, Denmark. All rights reserved worldwide.

GRUNDFOS Holding A/S
Poul Due Jensens Vej 7
DK-8850 Bjerringbro
Tel: +45 87 50 14 00
www.grundfos.com

GRUNDFOS WATER TREATMENT GMBH
Reetzstr. 85
D-76327 Pfinztal
Tel: +49 7240 61 0
wt.grundfos.com

The name Grundfos, the Grundfos logo, and the payoff Be–Think–Innovate are registrated trademarks owned by Grundfos Management A/S or Grundfos A/S, Denmark. All rights reserved worldwide.

GRUNDFOS

Attachment 4

Clarifier Equipment Specification

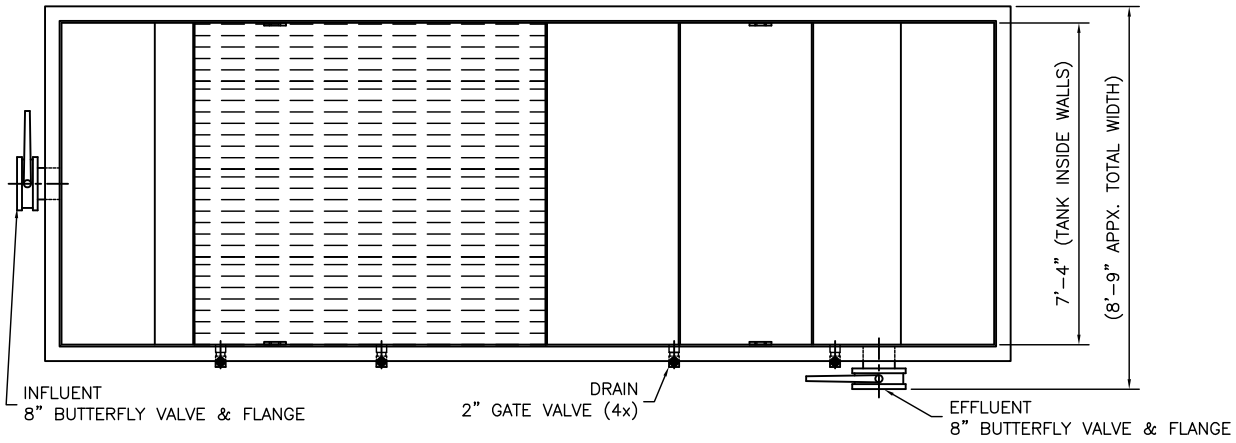

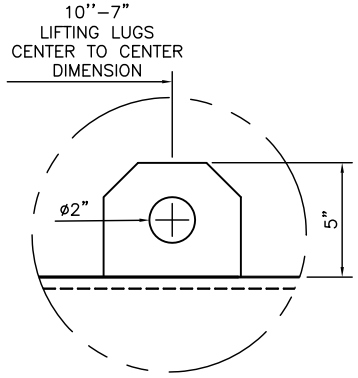

LIFTING LUG
DETAIL (TYP.)

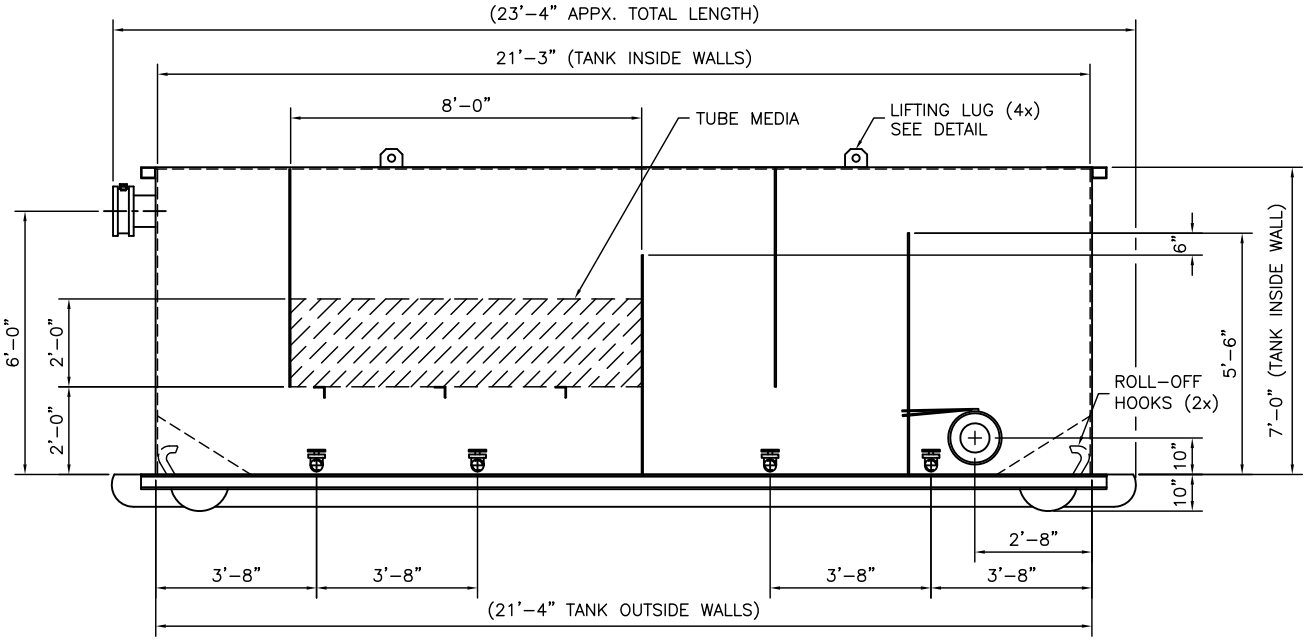

40 YARD ROLL-OFF SETTLING TANK SPECIFICATIONS

– NOMINAL VOLUME:	8,000 GALLONS
– OPERATING VOLUME:	6,250 GALLONS
– DESIGN FLOW RATE:	300 GPM
– TANK CONSTRUCTION:	A-36 CARBON STEEL
– INLET CONNECTION:	8" FLANGE
– OUTLET CONNECTION:	8" FLANGE
– DRAINS (4x):	2" GATE VALVES
– APPX. TANK WEIGHT (EMPTY):	20,000 Lbs.
– APPX. TANK WEIGHT (OPERATING):	75,000 Lbs.
– TUBE SETTLERS:	ACCU-PAC IFR-6024

NO.	REVISIONS	DATE
A	TYPICAL	02/24/09

40 YARD ROLL-OFF SETTLING/CLARIFIER STANDARD EQUIPMENT SPECIFICATION

SCALE: NTS	APPROVED BY: JB	DRAWN BY: AAV	
DATE: 02/24/09			

GROUND/WATER TREATMENT & TECHNOLOGY
P.O. BOX 1174
DENVILLE, NJ 07834

THIS DRAWING IS THE PROPERTY OF
GROUND/WATER TREATMENT & TECHNOLOGY, INC

DWG SIZE: A	SHEET: 1 OF 1	DRAWING NUMBER: ST-0067-SPC	A

T:\Cad Files\Rentals - STANDARD DRAWINGS\EQUIPMENT SPECIFICATION\TANKS\ST-0067-SPC Rev-A 40 Yard Roll-off Settling-Clarifier Tank.dwg

Attachment 5

Hydraulic Analysis

Sand Filter Addition – Differential Pressure Model Outputs

The following is a presentation of a differential pressure model of the groundwater treatment system (GWTS) located at Kirtland Air Force Base, New Mexico. The model assumes a flow rate on 400 gallons per minute (gpm) on each individual treatment train. Each individual treatment train are modelled individually and are assumed to be of the same piping make up (lengths of pipe, number of valves, etc.). Table 1 shows the model outputs for an individual treatment train's head loss due to piping and equipment. Equipment refers to the flow meter, sand filter(s), bag filter(s), and granular activated carbon (GAC) vessels. The following is a list of important assumptions:

1. The model assumes that 200 gpm will pass through the parallel sand filters and bag filters uniformly.
2. All piping is assumed to be carrying 400 gpm and the separated sections of 200 gpm pipe are modeled as containing 400 gpm flow (yielding a more conservative estimate) except for the piping in the pump skid branch. The pump skid branch (branch 2) was modeled assuming a flowrate of 200 gpm as this branch does not contain large sections of 400 gpm piping but does contain reducers and enlargers that are largely influenced by flowrate. See Table 1 for the corresponding difference between the 400 and 200 gpm models.

Table 1. Head Loss Totals

	Piping Head Loss at 400 gpm from Influent to Effluent Tanks and 200 gpm from Influent to Clarifier[a] (psi)	Influent Skid Head Loss at 200 gpm from Influent to Effluent Tanks and 100 gpm from Influent to Clarifier[b] (psi)	Equipment Head Loss[c] (psi)	Total Head Loss[d] (psi)	Total Head Loss (ft)
Influent Tank to Effluent Tank	13.5	1.78	37	62.74	144.71
Influent Tank to Clarifier	4.7	0.45	20	30.18	69.61

[a] Piping head loss differs from the model calculations in that the model includes a 3" to 2" nominal reducer (accounting for 10.495 psid at 400 gpm) in branch 2 which is actually incorporated in the pump. Thus the reducer is included in the pump efficiency and has been removed from the piping head loss pressure shown above.
[b] Along the influent skid there is a section where the flow diverges into two separate flows of 200 gpm when the train is operating at a 400 gpm total and 100gpm at a 200 gpm total. The difference in headloss between the 400/200 and 200/100 gpm models are provided above and used to calculate total head loss.
[c] Assumes differential pressure at 400 gpm for the Sand Filter is 10 psi, Bag filter is 15 psi, flow meter is 2 psi, and GAC vessels are 10 psi (totaled for both vessels). When operating in sand filter backwash at 200 gpm, the sand filters account for a total of 20 psi (10 psi each).
[d] Total head loss includes additional 20% safety factor. " = inch(es)
% = percent ft = foot/feet
gpm = gallons per minute
psi = pounds per square inch

Attachment 6

Pump Selection

Model: 3196	Size: 2X3-6	Group: 3196STI	60Hz	RPM: 3500	Stages: 1

Job/Inq.No. :
Purchaser : Kirtland AFB BFF
End User:
Issued by :
Item/Equip.No. : ITEM 001
Quotation No. : FEED PUMPS W/SAND FILTER
Date : 10/29/2016
Service :
Order No. :
Rev. : 0

Operating Conditions

Liquid:	Water	Published Efficiency:	64.5 %	Suction Specific Speed:	8,473 gpm(US) ft
Temp.:	70.0 deg F	Rated Pump Efficiency:	64.5 %	Min. Hydraulic Flow:	40.0 gpm
S.G./Visc.:	1.000/1.000 cp	Rated Total Power:	11.7 hp	Min. Thermal Flow:	N/A
Flow:	200.0 gpm	Non-Overloading Power:	17.0 hp		
TDH:	135.0 ft	Imp. Dia. First 1 Stg(s):	6.0620 in		
NPSHa:		NPSHr:	9.5 ft		
Solid size:		Shut off Head:	158.3 ft		
% Susp. Solids (by wtg):		Vapor Press:		Max. Solids Size:	0.3750 in

Pump Performance

Notes: 1.The Mechanical seal increased drag effect on power and efficiency is not included, unless the correction is shown in the appropriate field above. 2. Magnetic drive eddy current and viscous effect on power and efficiency is not included. 3. Elevated temperature effects on performance are not included. 4. Non Overloading power does not reflect v-belt/gear losses.

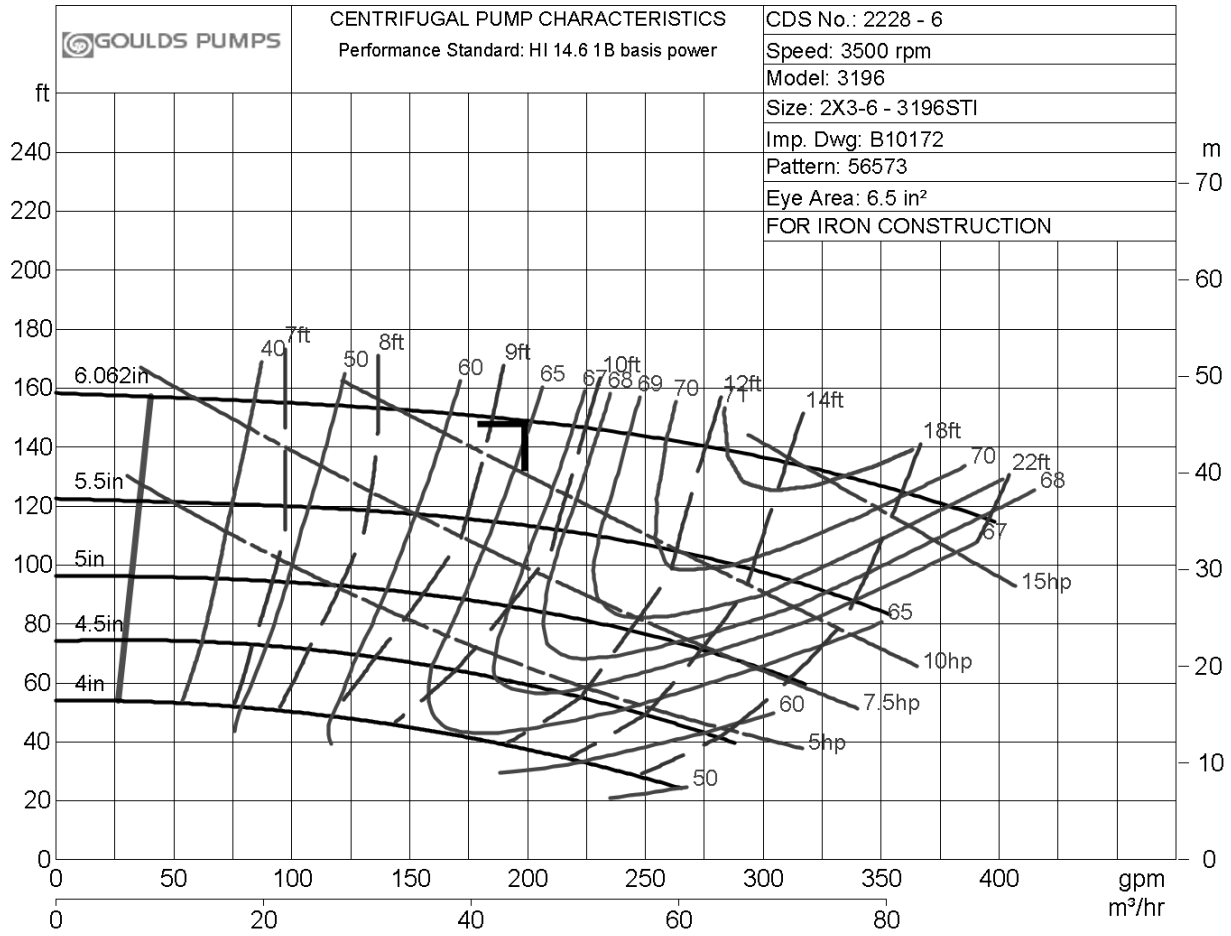

ITT

Model: 3196	Size: 2X3-6	Group: 3196STI	60Hz	RPM: 3500	Stages: 1

Job/Inq.No. :
Purchaser : Kirtland AFB BFF
End User : Issued by : Rev. : 0
Item/Equip.No. : ITEM 001 Quotation No. : FEED PUMPS W/SAND FILTER Date : 10/29/2016
Service :
Order No. :

Operating Conditions

Liquid:	Water	Published Efficiency:	64.5 %	Suction Specific Speed:	8,473 gpm(US) ft
Temp.:	70.0 deg F	Rated Pump Efficiency:	64.5 %	Min. Hydraulic Flow:	40.0 gpm
S.G./Visc.:	1.000/1.000 cp	Rated Total Power:	11.7 hp	Min. Thermal Flow:	N/A
Flow:	200.0 gpm	Non-Overloading Power:	17.0 hp		
TDH:	135.0 ft	Imp. Dia. First 1 Stg(s):	6.0620 in		
NPSHa:		NPSHr:	9.5 ft	Shut off Head:	158.3 ft
Solid size:		Max. Solids Size:	0.3750 in	% Susp. Solids (by wtg):	

Pump Performance

Vapor Press:

Notes: 1. The Mechanical seal increased drag effect on power and efficiency is not included, unless the correction is shown in the appropriate field above. 2. Magnetic drive eddy current on power and efficiency is not included. 3. Elevated temperature effects on performance are not included. 4. Non Overloading power does not reflect v-belt/gear losses.

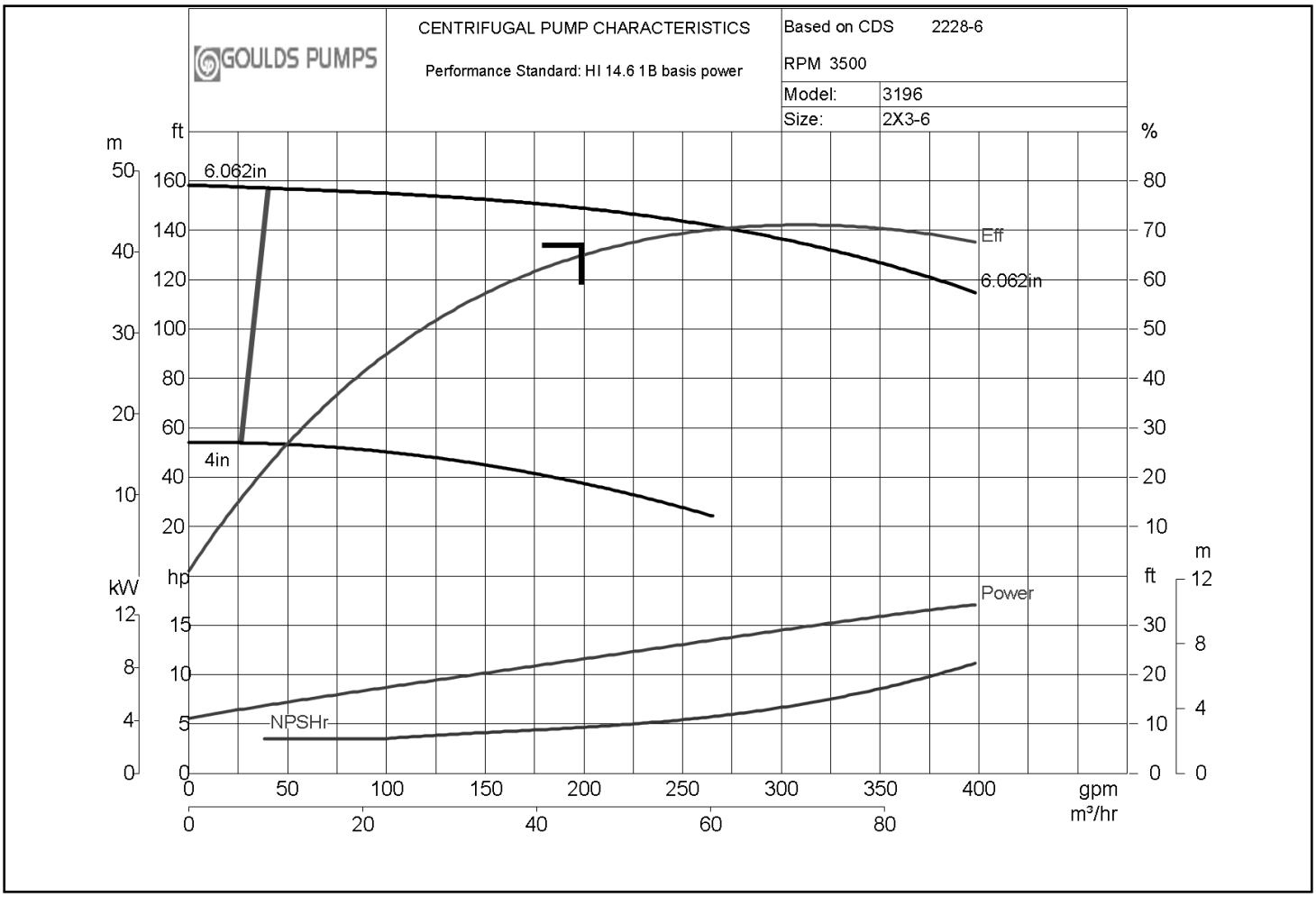

Viscosity corrections have been performed in accordance with HI 9.6.7-2015

Model: 3196	Size: 2X3-6	Group: 3196STI	60Hz	RPM Variable	Stages: 1

Job/Inq.No. :
Purchaser : Kirtland AFB BFF
End User :
Item/Equip.No. : ITEM 001
Service :
Order No. :

Issued by :
Quotation No. : FEED PUMPS W/SAND FILTER
Date : 10/29/2016
Rev. : 0

Operating Conditions

Liquid:	Water
Temp.:	70.0 deg F
S.G./Visc.:	1.000/1.000 cp
Flow:	200.0 gpm
TDH:	135.0 ft
NPSHa:	
Solid size:	
% Susp. Solids (by wtg):	
Max. Solids Size:	0.3750 in

Pump Performance @ 3500 RPM

Published Efficiency:	64.5 %	Suction Specific Speed:	8,473 gpm(US) ft
Rated Pump Efficiency:	64.5 %	Min. Hydraulic Flow:	40.0 gpm
Rated Total Power:	11.7 hp	Min. Thermal Flow:	N/A
Non-Overloading Power:	17.0 hp		
Imp. Dia. First 1 Stg(s):	6.0620 in		
NPSHr:	9.5 ft		
Shut off Head:	158.3 ft		
Vapor Press:			

Notes: 1. The Mechanical seal increased drag effect on power and efficiency is not included, unless the correction is shown in the appropriate field above. 2. Magnetic drive eddy current on power and efficiency is not included. 3. Elevated temperature effects on performance are not included. 4. Non Overloading power does not reflect v-belt/gear losses.

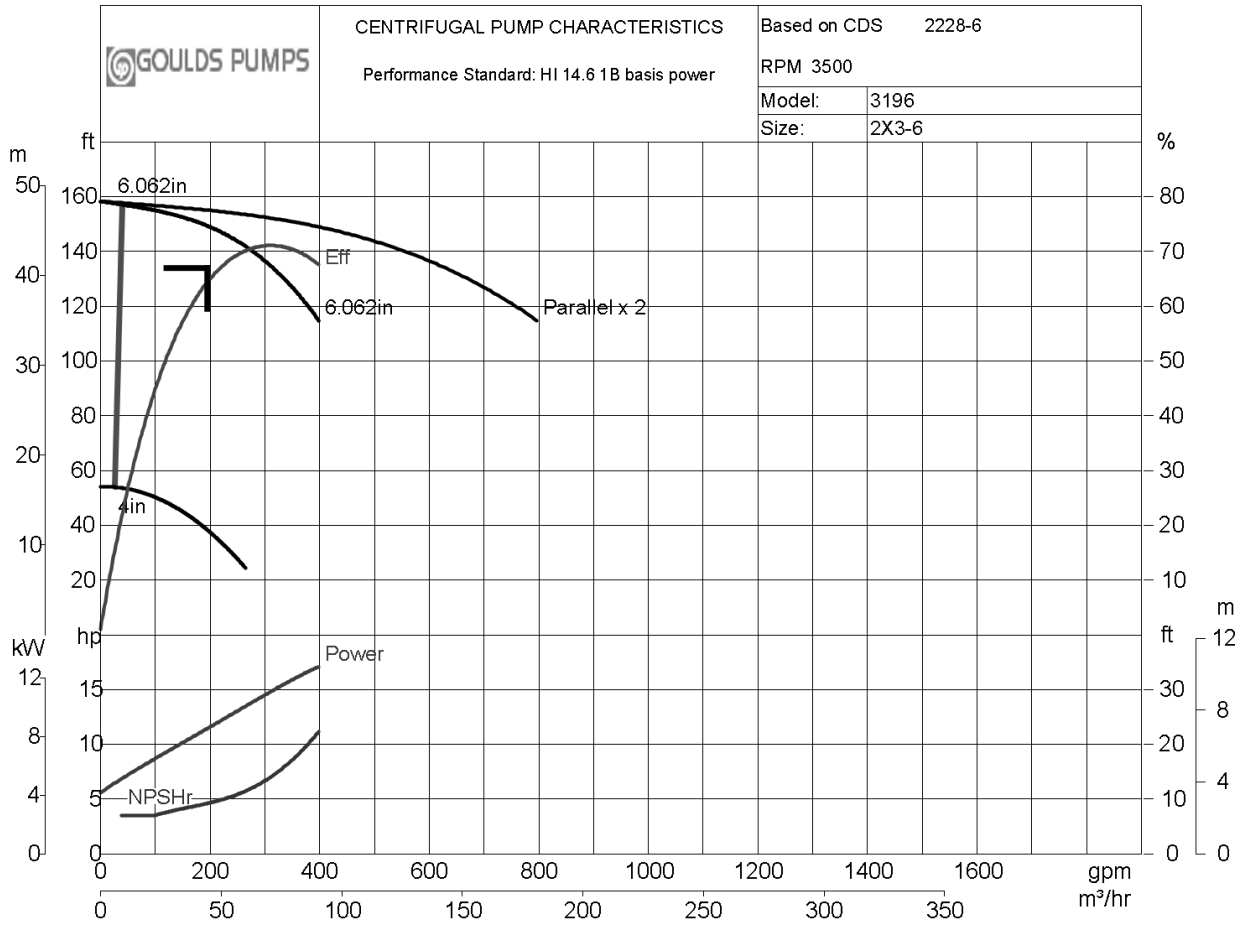

ITT

Model: 3196	Size: 2X3-6	Group: 3196STI	60Hz	RPM Variable	Stages: 1

Job/Inq.No. :
Purchaser : Kirtland AFB BFF
End User :
Item/Equip.No. : ITEM 001
Service :
Order No. :

Issued by :
Quotation No. : FEED PUMPS W/SAND FILTER
Date : 10/29/2016
Rev. : 0

Operating Conditions

Liquid:	Water
Temp.:	70.0 deg F
S.G./Visc.:	1.000/1.000 cp
Flow:	200.0 gpm
TDH:	135.0 ft
NPSHa:	
Solid size:	
% Susp. Solids (by wtg):	
Max. Solids Size:	0.3750 in

Pump Performance @ 3500 RPM

Published Efficiency:	64.5 %	Suction Specific Speed:	8,473 gpm(US) ft
Rated Pump Efficiency:	64.5 %	Min. Hydraulic Flow:	40.0 gpm
Rated Total Power:	11.7 hp	Min. Thermal Flow:	N/A
Non-Overloading Power:	17.0 hp		
Imp. Dia. First 1 Stg(s):	6.0620 in		
NPSHr:	9.5 ft		
Shut off Head:	158.3 ft		
Vapor Press:			

Notes: 1. The Mechanical seal increased drag effect on power and efficiency is not included, unless the correction is shown in the appropriate field above. 2. Magnetic drive eddy current and viscous effect on power and efficiency is not included. 3. Elevated temperature effects on performance are not included. 4. Non Overloading power does not reflect v-belt/gear losses.

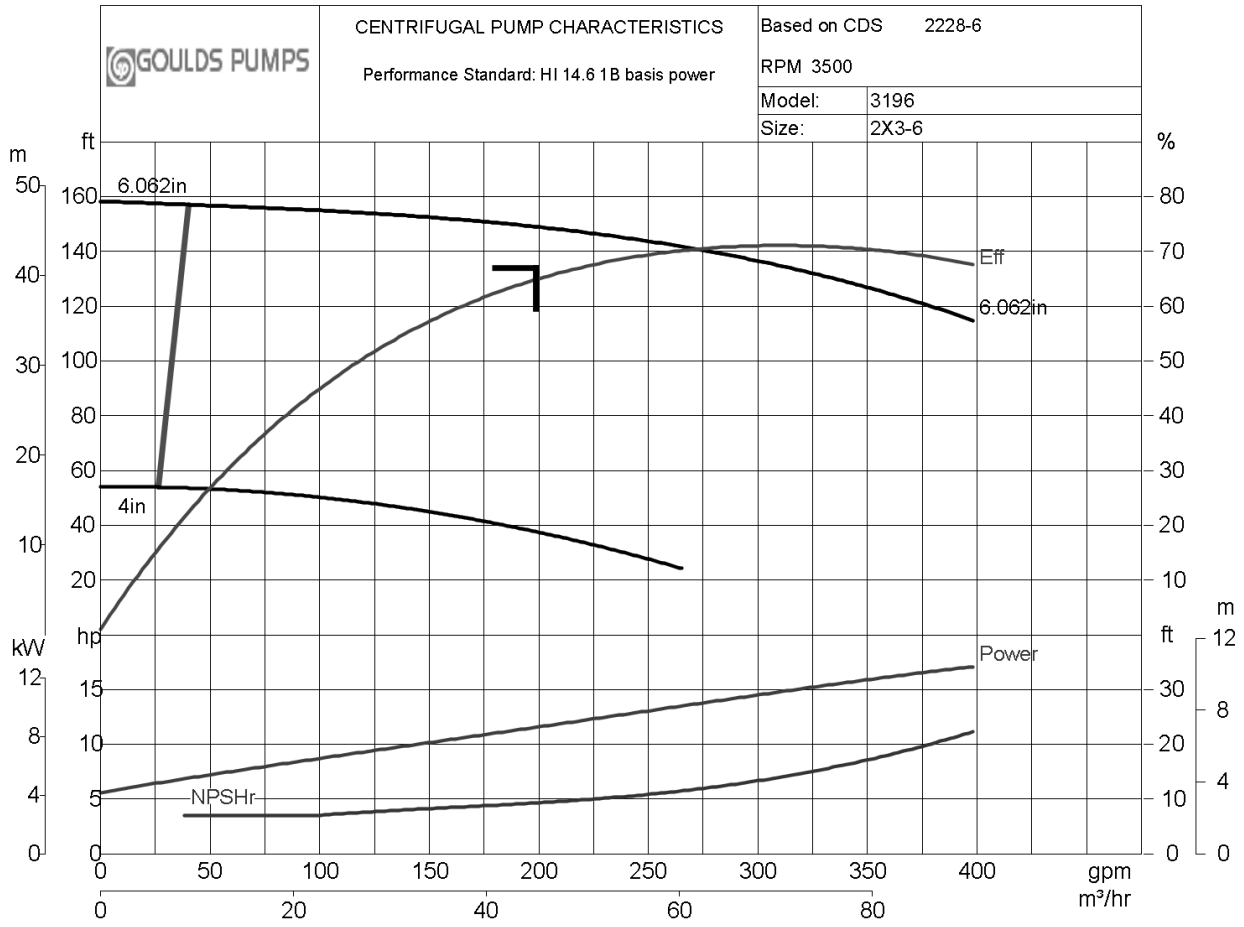

ITT

APPENDIX K

Contingency Plan

CONTINGENCY PLAN

This Contingency Plan has been developed for the Kirtland Air Force Base (AFB) Bulk Fuels Facility (BFF) Groundwater Treatment System (GWTS) located at Kirtland AFB, New Mexico to ensure that an accidental or unplanned discharge from the GWTS does not result in adverse impacts to the human health or the environment and that plant operators can respond to emergency situations. The DP-1839 Contingency Plan (Appendix A of the Operations and Maintenance Plan) is a supplemental contingency plan to ensure compliance with terms of the permit and describes required responses to the regulatory agencies.

K.1 Groundwater Treatment System Preventative Measures

The GWTS is treating nonhazardous, low levels of ethylene dibromide (EDB) from a historical leak of aviation gasoline and jet fuel in groundwater, which is conveyed to the GWTS from the extraction well network off-Base. Equipment and components of the GWTS were designed and constructed to include leak-prevention, secondary containment, remote system access, and automatic shutdowns to reduce the likelihood of unauthorized discharges. Operation and maintenance of these components are briefly described below. System disruption will be recorded; if the system disrupted longer than 24 hours, reporting will be via email to both New Mexico Environment Department (NMED) Hazardous Waste Bureau (HWB) and Groundwater Quality Bureau (GWQB). Depending on alarm condition and if a release occurred, Notification Procedures (Section K.6) will be followed that are in accordance Section 1.27 of the Hazardous Waste Treatment Facility Operating Permit (HWTF Permit No. NM9570024423; referred to as the Resource Conservation and Recovery Act [RCRA] Permit; NMED, 2010) and Discharge Permit (DP-1839; NMED, 2017b). This Contingency Plan will be available onsite during system operation and will include equipment maintenance and shutdown procedures.

K.1.1 Influent Pipeline and Leak Monitoring

To ensure that contaminated groundwater is not discharged on route to the GWTS, leak detection that monitors water intercepted by the secondary containment pipe is installed in the well vaults of each of the extraction wells and at junction valve vaults where the influent pipelines enter Kirtland AFB. These vaults are low points in the double-walled influent pipe system and an inner line leak anywhere between the vaults will gravity drain inside the outer pipe to one of the two locations, setting off the alarm. The pipelines were leak tested prior to initiating service and will be retested following any repairs (planned or unplanned).

If there is a leak in the primary influent pipeline, the secondary pipe will contain the untreated water and the interstitial alarms in the vaults will automatically shut down the extraction pumps. The Operator is notified via the control system of the alarms and the extraction pump shuts down. Following notification, the faulty components will be identified, isolated, and repaired, as needed.

Breaches of the conveyance lines by third parties are administratively controlled via the NM811 participation off-Base and the excavation permit review process on-Base. All well and conveyance line locations are registered in the NM811 geographic information system, and tickets are generated for line locates for any excavation near these structures. The U.S. Air Force has a subcontractor that responds to all off-base tickets generated by the NM811 system. On-Base, the excavation permit review process requires all excavation be approved by Civil Engineering and permits will not be issued if the excavation will impact the subsurface conveyance lines and/or vaults on-Base. Influent line monuments have been installed to provide surface identification of the influent line both off-Base and on-Base as an added security.

Any breach of either the primary and secondary conveyance lines that releases water into the vaults also triggers an alarm and notifies the Operator. Untreated groundwater will be removed from the vaults by vacuum truck and will be batched and filtered into the pre-treatment tank(s), and subsequently treated through the GWTS. Emergency response subcontracts are maintained by the U.S. Air Force for repairs and remediation should the administrative controls fail and untreated water is released to the environment.

K.1.2 Groundwater Treatment System Secondary Containment

The GWTS building has a collection sump in the center of the building with a sloping floor and curbs such that the floor provides additional secondary containment. The secondary containment volume is over 7,300 gallons within the GWTS and is sufficient to contain a single failure of the largest volume tanks (6,000-gallon pre-treatment and treated water tanks). The secondary containment areas and volume calculations are provided in this appendix. A sump pump located in the sump in the center of the building pumps the collected water back into the pre-treatment tank(s) whether or not the release water is treated or untreated.

K.1.3 Level Switches for Tanks

The pre-treatment tank(s) and the post-treatment tank(s) are fitted with back-up, high level switches that shut down the system, if necessary. The high level alarms are set at 10 feet above the tank bottom (height of tank is 11 feet). The Operator is notified via the control system if a high level in the tank causes the system to shut down. Response times will vary depending on the alarm conditions. During the normal working hours, response times can be within an hour to prevent unauthorized discharges. After hours, the alarms are evaluated to see if the system can be re-started remotely. In an emergency or if unauthorized discharge is suspected, Operators will be dispatched to the plant.

K.1.4 Telemetry System and Control Panel

The GWTS is designed and instrumented to efficiently operate 24 hours per day with minimal Operator attention. A control system and operator interface panel is installed to allow remote control of the GWTS and the extraction well network. The control system includes telemetry and web access to alert operators of off-hour alarm conditions. Subcontractor staff are scheduled for on-call responses on weekends and after hours for any emergency response if alarm conditions warrant. Once staff have responded to the alarm condition and depending on the nature of the release, the appropriate individuals will be notified such as the Emergency Coordinator (EC), U.S. Air Force management, and/or NMED HWB and GWQB within the appropriate time period (see Section K.5 for description).

K.1.5 Granular Activated Carbon Vessels

The granular activated carbon (GAC) vessels are arranged in series to provide the contact time required for EDB removal as described in Section 4 of Appendix D in the Operations and Maintenance Plan. Monthly groundwater samples will be collected in order to monitor for contaminant breakthrough (defined as contaminant removal of equal to 90 percent of the discharge limits). If contaminant breakthrough occurs in the lead GAC vessel, the vessels are switched in the lead-lag position and GAC change-out is scheduled. Sampling frequency is increased for any GWTS change (i.e., new wells added to system) as described in Section 4.3 of the Operations and Maintenance Plan and Appendix L.

K.1.6 Effluent Monitoring Procedures

The treated effluent must comply with the water quality standards established in the discharge permit. The treated and untreated groundwater will be sampled routinely for all of these compounds as described in the Sampling and Analysis Plan provided in Appendix L of the Operations and Maintenance Plan. If the GWTS operations cannot achieve the approved permit effluent concentration requirements, it will be shut down until system modifications can be approved and implemented.

K.1.7 Injection Well Monitoring

Any injection well(s) is equipped with pressure and water level monitors that provide continuous data that are recorded by the GWTS programmable logic controller, which, in turn, will issue any alarms if alarm conditions are present. In the event that an alarm indicates a threat to an injection well(s) and is confirmed, at a minimum, the affected well(s) will be taken off-line. Once confirmed, discharge to the well(s) will not be resumed until the problem is identified and corrected. In the event that information indicates that an injection well(s) is not constructed in a manner consistent with its intended use or is not completed in a manner that is protective of groundwater quality, the operating contractor will notify the permittee of DP-1839 and the appropriate steps as listed in DP-1839 will be followed.

K.2 Notification Procedures

As soon as Kirtland AFB has knowledge that effluent water quality exceeds the discharge criteria for one or more of the contaminants listed in approved permits, the NMED HWB and GWQB must be notified in writing within 24 hours of discovery in accordance with Section 1.27 of the RCRA Permit. Any actions that can be taken to correct the problem and achieve the required effluent concentrations will be performed immediately. Following plant operational adjustments, the effluent groundwater will be re-tested, and the monitoring frequency will be increased as required in the discharge permit. After 4 consecutive weeks of analytical results below the standards in 20.6.2.3103 New Mexico Administrative Code, monitoring will return to a monthly frequency. If the required actions are considered to be outside the scope of work for plant operations, then the system will be shut down pending submittal of a corrective action plan to the NMED.

K.2.1 Major Incidents or Emergencies

In the case of major incidents or emergencies (e.g., fire, uncontrolled release, etc.), the EC shall notify:

- Kirtland AFB Fire Department at (505)-853-9111
- Kirtland AFB Command Post (KCP) at (505) 846-6432.

A complete list of emergency contacts can be found in Table K-1. The KCP shall assume primary responsibility for response coordination in the case of such major incidents or emergencies or delegate that responsibility to the Kirtland AFB Fire Chief. Once the KCP or Kirtland AFB Fire Chief completes its response, the EC shall assume responsibility to ensure compliance with all the provisions of this Contingency Plan, including post-emergency inspections and reporting.

K.3 Emergency Coordinator

The EC for the GWTS is the Chief Environmental Restoration (Table K-1) and the EC shall be onsite during emergency response measures. The EC shall be thoroughly familiar with this Contingency Plan and the operations and activities conducted at the GWTS. If the Base Civil Engineer becomes the EC (because the primary EC is not available), the Base Civil Engineer shall be present at the GWTS for the entire

duration of the emergency response. The EC shall ensure that personnel assigned to the GWTS are trained in the location and use of eyewash stations, fire extinguishers, and emergency protective clothing; emergency procedures; and evacuation procedures before starting any emergency response.

The EC has the following three primary responsibilities:

1. ***Assess the situation***—By observing the scene, interviewing personnel, and/or reviewing records, the EC shall gather information relevant to the response, such as the type of event (e.g. fire, uncontrolled release, etc.), quantity and type of released material, and actual or potential hazards to human health or the environment.

2. ***Protect personnel***—The EC shall take reasonable measures to ensure the safety of personnel, such as accounting for GWTS personnel, attending to injuries, or coordinating the evacuation of GWTS personnel, if necessary. If evacuation is indicated for personnel, the KCP shall be informed.

3. ***Contain or mitigate the hazards***—The EC shall take reasonable measures to ensure that fires, explosions, or releases do not occur, recur, or spread.

Table K-1 GWTS Emergency Contact List

Affiliation	Contact Name	Phone
EC Environmental Restoration	Scott Clark	(505) 846-9017
Base Civil Engineering – Alternate EC	Gregory Capra	(505) 853-2043
Kirtland AFB Fire Department	Fire Department Chief	(505) 853-9111
Environmental Management (EM) Section, Chief Compliance Coordinator	Melissa Clark	(505) 235-5641
EA Engineering, Science, and Technology, Inc., PBC (EA)	Kevin McKeage	(316) 765-1486
EA	Devon Jercinovic	(505) 401-1181

K.4 Distribution of Contingency Plan

To assure proper implementation, this Contingency Plan shall be reviewed and understood by all personnel involved in the management of the GWTS and by all personnel required to respond to emergency situations at the GWTS. Onsite training of subcontractor personnel will be documented by the subcontractor and provided to U.S. Air Force personnel, if requested. A copy of this Contingency Plan and any subsequent revisions to the plan shall be maintained at the EM Branch Office and a current copy shall be maintained at the KCP, and in the GWTS control room. Copies and subsequent revisions shall be distributed to the Kirtland AFB Fire Department, the Albuquerque Fire Department, and NMED in the event that they are called upon to assist with or provide emergency services. The NM811 system includes 24/7 calls to identified subcontractors to initiate a leak response.

K.5 Response Procedures

When the EC is notified of an incident or emergency, he shall first determine the scale of the incident or emergency and decide if the incident or emergency is minor or major. In the case of minor incidents or emergencies, the EC shall coordinate the response. In the case of major incidents, the EC shall relinquish control to the KCP that may, in turn, relinquish control to the Kirtland AFB Fire Chief when he arrives to handle the emergency; however, the EC shall remain available to provide technical guidance and information.

If necessary to protect human health, personnel shall evacuate the GWTS during an emergency as described in Section K.9 below. In the event that the EC determines an incident to be minor, a person shall be assigned to stand by at a safe distance with a two-way radio. At the first indication of an escalation in the degree of the incident, the standby person shall be instructed to notify the KCP. The EC or EM Branch Chief of Compliance shall notify the National Response Center (1-800-424-8802 or current phone number) and the Department with the details of the incident or emergency as soon as possible after being notified of the incident or emergency.

After any incident or emergency, the EC shall ensure that emergency equipment is cleaned, waste is properly managed and disposed of, and the GWTS is safe to resume operation. Before operations are resumed, the EC shall contact the EM Branch Chief of Compliance, who shall inform the appropriate agencies. The EC shall also ensure that any required emergency recovery inspections and activities are conducted. The EC shall also be responsible for preparing any required post-emergency or post-incident reports.

K.6 Spills and Notification Procedures

The first priority in dealing with any spill is protection of personnel. If any treated or untreated groundwater is spilled during GWTS operation, the GWTS will be immediately shut down if the source of the spill is from GWTS process operations, or if the source of the spill cannot be readily identified. The GWTS Operator shall notify the EC if appropriate personal protective equipment (PPE) in accordance with hazardous waste operations and emergency response shall be donned based on the nature of the release (treated versus untreated groundwater). The spilled groundwater shall be contained, removed, and managed appropriately. The incident, including details of the spill and cleanup, shall be reported to the EC.

If a release, leak, or other discharge occurs during the operation of the GWTS that is not authorized under an approved permit or part of normal plant operations (discharge to sumps, maintenance operations), corrective measures will be taken to mitigate damage from the unauthorized discharge. The GWTS will be immediately shut down, and the source and amount of release will be determined. If the release or leak is confined within the secondary containment area and a pre-treatment tank(s) is available, spill response equipment will be used to pump the water back through the GWTS. If the release or leak results in a release to the environment (outside the secondary containment area), the system will be immediately shut down, and NMED will be notified. Notification procedures and corrective actions in accordance with Section 1.27 of the RCRA Permit are summarized below.

In the event that a release or unauthorized discharge occurs, the Kirtland AFB Compliance Coordinator will complete the following notifications:

NMED

1. NMED will be verbally notified as soon as possible after learning of a release or unauthorized discharge but no more than 24 hours thereafter. During business hours, the Permittee should contact an employee of either the HWB or GWQB, depending on the nature of the emergency. After hours or weekend notifications should be made via the Environmental Emergencies hot line (505-827-9329):

    a. Information concerning release of constituents relevant to the appropriate standards referenced in HWTF Permit Section 6.2.3.1 (NMED, 2010) as well as those contaminants listed in Table A-1 of the NMED Soil Screening Levels (NMED, 2017a) and the toxic

pollutants defined in Subsection WW of 20.6.2.7 New Mexico Administrative Code that may cause an endangerment to public drinking water supplies

b. Any information about a release or discharge of hazardous waste or hazardous constituent or of a fire or explosion that could threaten the environment or human health including:

- A description of the noncompliance and its cause
- Name, address, and telephone number of the owner, operator, and name of responsible official
- Name, address, and telephone number of the facility
- The period of the occurrence including exact date and time and, if the noncompliance has not been corrected, the anticipated time it is expected to continue
- Name and quantity of materials involved
- Extent of injuries, if any
- An assessment of actual or potential hazards to the environment and human health at and outside the facility, where this is applicable
- Estimated quantity and disposition of recovered material that resulted from the incident
- Steps taken or planned to reduce, eliminate, and prevent recurrence of the noncompliance.

2. Within 5 calendar days of the unauthorized discharge, a written report will be submitted to NMED containing the information provided in Item 1 above.

Additionally, both NMED HWB and GWQB will be notified by email if the GWTS shuts down for 24 hours or more due to either planned or unplanned shutdowns.

Property Owners

For the purposes of giving notice, the points of contact for property owners are provided below.

1. City of Albuquerque – Mr. Robert J. Perry, Chief Administrative Officer, City-County Government Center, #1 Civic Plaza, P.O. Box 1293, Albuquerque, NM 87103, (505) 768-3000, galvarez@cabq.gov

2. Christ United Methodist Church – Ms. Vicki Chronister, 6200 Gibson Blvd., SE, Albuquerque, NM 87108, (505) 255-1669, v_chronister@q.com

3. New Mexico Veterans Administration Health Care System – Mr. Andrew Welch, MHA, FACHE, Director, 1501 San Pedro SE, Albuquerque, NM 87108, (505) 265-1711 (ext. 2220),

4. Gibson Medical Center – Ms. Nadine Martinez, MBA, Property Manager, 2009 Eubank NE, Albuquerque, NM 87112, , nadineatgibson@live.com

K.7 Personnel Exposure

In the unlikely event of personnel exposure to hazardous constituents in the future (there currently are no hazardous materials stored onsite for pre-treatment), including, but not limited to, irritation of the eyes, breathing passages, or skin; difficulty in breathing; and/or nausea, light-headedness, vertigo, or blurred vision, personnel shall immediately take the following measures.

1. Clear the area immediately (if possible) and move to muster area; call 505-853-9111.

2. Notify the EC immediately.

3. The EC shall attempt to ascertain what, if any, chemical exposure occurred and what corrective measures are appropriate.

4. Transport the affected person to a medical facility for evaluation.

5. Evacuate and barricade the area to prevent unauthorized entry.

K.8 Explosion and/or Fire

The GWTS has an automated fire suppression system and a fire panel monitored by the Kirtland AFB Fire Department.

K.9 Natural Disasters

After any natural disaster in the vicinity of the GWTS (e.g., earthquake, floods, lightning strike), the EC shall inspect the GWTS for any signs of damage, leakage, and land movement and initiate any necessary corrective measures to rectify potential or actual problems. Inspection findings and corrective measures shall be recorded in the Operating Record.

K.10 Evacuation

Personnel shall evacuate the GWTS upon voice command or by notification over two-way radio or other communication device.

K.10.1 Evacuation Procedure

The following procedure shall be implemented for evacuation:

1. When an evacuation is announced, stop work.

2. Assist injured personnel to evacuate, if possible.

3. Report to the designated muster area outside the GWTS for roll call to be taken by the EC or his designee.

4. Be continually cognizant of wind directions (stay upwind, if possible) and emergency

equipment.

5. Do not reenter the affected area until the EC or Kirtland AFB Fire Chief authorizes reentry.

K.10.2 Evacuation Route

The EC shall be responsible for ensuring that all GWTS personnel and site visitors are familiar with evacuation procedures and routes. A map showing the evacuation route is provided as Figure K-1. The map shall be posted at the GWTS.

K.11 Emergency Equipment

Emergency equipment shall be available for use at the GWTS. The emergency equipment listed in Table K-2 shall be repaired, replaced, and/or upgraded with functionally equivalent components and equipment, as necessary.

Table K-2 Type and Location of Emergency Equipment Available for Use at the GWTS

Emergency Item or Equipment	Description	Location	Contact
Emergency Transportation	Ambulances	Kirtland AFB Fire Department	911 (off-Base) or (505) 846-8069 (on-Base)
	Fire Trucks: Firefighting vehicles outfitted with equipment for fighting fires and with self-contained breathing apparatuses.	Kirtland AFB Fire Department	911 (off-Base) or (505) 846-8069 (on-Base)
Medical Supplies	First Aid Kit	GWTS	EC or EA personnel
	Stretchers/Stokes Litter: Equipment for movement of injured personnel.	Kirtland AFB Fire Department	(505) 846-8069
	Blankets: Normal blankets.		
	Medical Kits: Emergency first-aid supplies.		
	Oxygen: Medical grade oxygen in compressed cylinders equipped for personnel use.		
Safety Supplies	Fire Extinguisher (ABC)	GWTS	EC or EA personnel
	Eye Wash Kit		
	Monitoring Instruments		
General Supplies	Hand Tools	GWTS	EC or EA personnel
	Broom(s)		

K.11 Post Spill Procedures

The recovery procedures that shall be followed after a minor or major incident or emergency at the GWTS are described below.

K.11.1 Post-Emergency Inspections and Activities

The following post-emergency incident inspections and activities shall be conducted:

1. The EC will assure that the time, date, and details of any incident or emergency are noted in the Operating Record in accordance with Section 1.27 of the RCRA Permit.

2. The EC shall inspect the premises for leaks or ruptures of equipment, and shall ensure that all recovered material and waste are managed properly. The results of the inspection shall be recorded in the Operating Record. Only containers made of or lined with materials that will not react with and are otherwise compatible with the waste resulting from cleanup procedures shall be used.

3. Emergency response equipment at the GWTS shall be carefully inspected and the equipment decontaminated, replaced, or refurbished, if needed. Fire extinguishers shall be checked for adequate charge. PPE shall be checked for contamination. Remedial equipment shall be inspected for contamination and proper operation. The supply of eyewash solution and other expendable items used for first aid or cleanup shall be checked and replaced, as necessary, by the GWTS Operator. Any equipment replacements will be noted in the weekly inspection logs.

4. Within 24 hours of an emergency or incident, fire extinguishers shall be replaced or recharged and PPE decontaminated, repaired, or replaced as necessary.

5. Within 3 days of an emergency or incident, other equipment and structures shall be decontaminated. Decontamination wastes shall be collected and managed appropriately. Appropriate PPE shall be worn during decontamination procedures.

6. Within 30 days of an emergency or incident, other equipment shall be repaired or replaced as necessary.

K.11.2 Post-Emergency or Incident Reports

The following post-emergency or incident reports shall be made:

1. A verbal report of any incident or emergency shall be reported promptly to the EM Branch Chief of Compliance if he was not informed during its occurrence.

2. A written report as described in Section K.6.

3. Before operations are resumed at the GWTS, NMED shall be notified that the GWTS is in compliance with the RCRA Permit and the requirements of this Contingency Plan. The notification shall include that cleanup procedures are completed and that all emergency equipment is cleaned and fit for its intended use.

K.11.3 Emergency/Incident Response Evaluation

The GWTS operations shall be included in the annual evaluations of the Kirtland AFB facility emergency response plans and for evaluation of the response to any incident or emergency. If these evaluations reveal that changes to the emergency response plans are necessary, they shall be amended by the EC and distributed to the appropriate organizations.

This Contingency Plan shall be reviewed and, if necessary, amended by Kirtland AFB whenever:

1. Applicable regulations are revised.

2. The plan fails in an incident or emergency.

3. The design, construction, operation, and/or maintenance of the GWTS or other circumstances change in a way that materially increases the potential for fires, explosions, or releases of hazardous waste or hazardous constituents, or changes the response necessary in an incident or emergency.

4. The list of emergency equipment changes.

5. Whenever any of the EC contact information in Table K-1 changes, a revised table shall be distributed to all Contingency Plan holders. A copy of the revised table shall also be maintained at the GWTS control room. A revision of Table K-1 constitutes an amendment to this Contingency Plan.

REFERENCES

New Mexico Environment Department (NMED). 2017a. Risk Assessment Guidance for Site Investigations and Remediation, New Mexico Environment Department, Hazardous Waste Bureau. March

NMED. 2017b. Discharge Permit Issuance, DP-1839, Kirtland Air Force Base. Ground Water Quality Bureau. April.

NMED. 2010. Hazardous Waste Treatment Facility Operating Permit, EPA ID Number NM9570024423, Issued to U.S. Air Force for the Open Detonation Unit Located at Kirtland Air Force Base, Bernalillo County, New Mexico, by the New Mexico Environment Department Hazardous Waste Bureau. July.

Evacuation Routes and Mustering Area

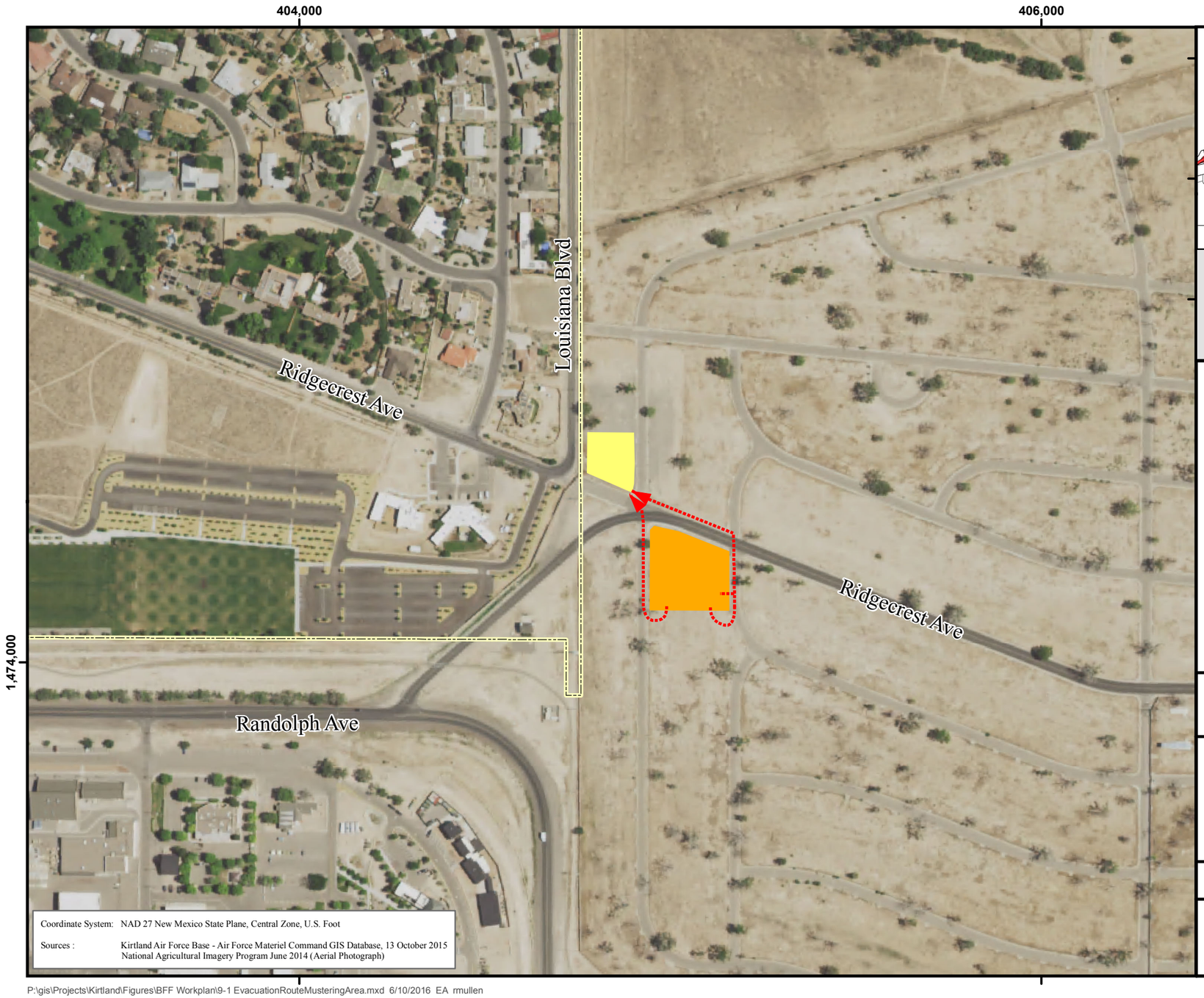

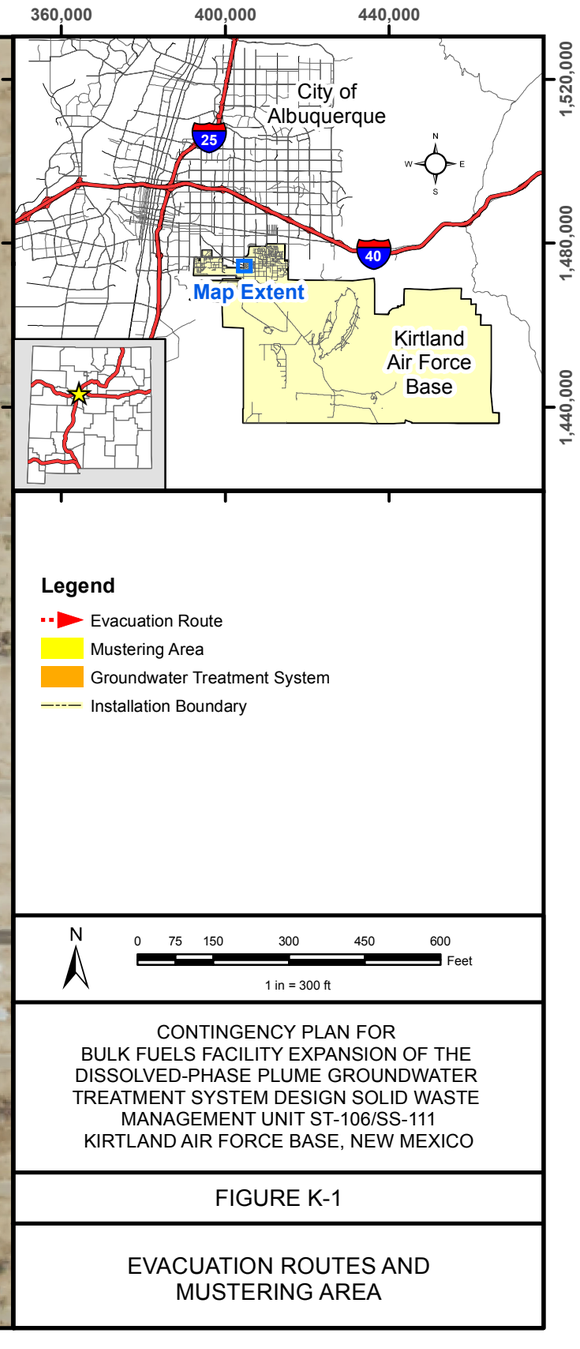

Legend

- Evacuation Route
- Mustering Area
- Groundwater Treatment System
- Installation Boundary

N

0 75 150 300 450 600 Feet

1 in = 300 ft

CONTINGENCY PLAN FOR
BULK FUELS FACILITY EXPANSION OF THE
DISSOLVED-PHASE PLUME GROUNDWATER
TREATMENT SYSTEM DESIGN SOLID WASTE
MANAGEMENT UNIT ST-106/SS-111
KIRTLAND AIR FORCE BASE, NEW MEXICO

FIGURE K-1

EVACUATION ROUTES AND
MUSTERING AREA

P:\gis\Projects\Kirtland\Figures\BFF Workplan\9-1 EvacuationRouteMusteringArea.mxd 6/10/2016 EA rmullen

GWTS SECONDARY CONTAINMENT CALCULATIONS

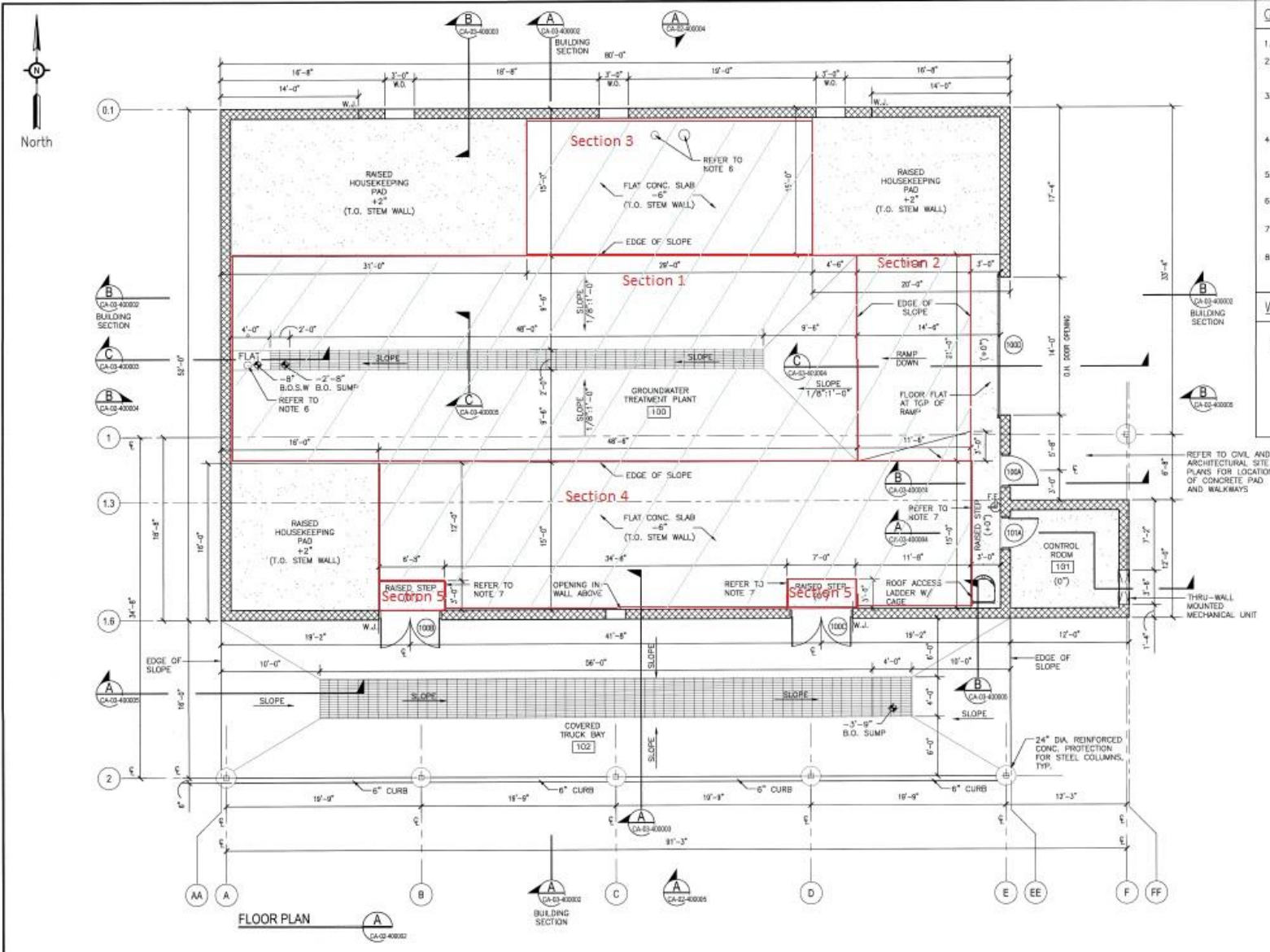

GENERAL NOTES:

1. WORK TO COMPLY WITH ALL GOVERNING AUTHORITIES HAVING JURISDICTION.
2. DO NOT SCALE DRAWINGS, WRITTEN DIMENSIONS PREVAIL. IF DIMENSIONS ARE IN QUESTION, THE CONTRACTOR SHALL BE RESPONSIBLE FOR OBTAINING CLARIFICATION FROM THE ARCHITECT BEFORE CONTINUING WITH CONSTRUCTION.
3. CONTRACTOR SHALL VERIFY ALL DIMENSIONS AND CONDITIONS AT THE JOB SITE PRIOR TO THE START OF ANY WORK. THE CONTRACTOR SHALL BE RESPONSIBLE FOR VERIFYING THE EXISTING CONDITIONS PRIOR TO BIDDING AND SHALL BE FAMILIAR WITH ALL ASPECTS OF THE JOB, INCLUDING SITE UTILITIES.
4. ALL DIMENSIONS ARE TO FACE OF MASONRY OR CONCRETE,EDGE OF WALK OR FACE OF CURB UNLESS NOTED OTHERWISE. FOR FURTHER DIMENSIONING, SEE LARGE SCALE PLANS, SECTIONS, EXTERIOR ELEVATIONS, INTERIOR ELEVATIONS AND DETAILS.
5. CAULK AT JUNCTURE OF INTERIOR FACES OF DOOR FRAMES, VIEW WINDOW FRAMES, EXTERIOR WINDOW FRAMES, ETC. WITH ADJACENT MATERIAL EVEN THOUGH JOINT MAY NOT BE VISIBLE.
6. COORDINATE WITH MECHANICAL AND PROCESS DESIGN, FOR EXACT LOCATION AND SIZE OF PIPE FLOOR PENETRATIONS. REFER TO DETAIL K/140705-001-CA-03-400006.
7. PROVIDE 4" PAINTED (YELLOW) "WARNING STRIPE" AT ALL RAISED STEPS (ON VERTICAL AND HORIZONTAL SURFACES), LEADING TO EGRESS DOORS.
8. PROVIDE A CRUSHED STONE/ CONCRETE SPILLWAY (MATCH SURROUNDING LANDSCAPE STONE) AT LOCATION OF DAYLIGHT FOR FOUNDATION DRAIN. FOUNDATION DRAIN TO HAVE FILTER SOCK AND BIRD/ INSECT SCREEN INSTALLED AT DAYLIGHT LOCATION.

WALL LEGEND:

TYPICAL EXTERIOR WALL
12" CMU REINFORCED WALL. REFER TO STRUCTURAL DRAWINGS.

F.E. FIRE EXTINGUISHER
PROVIDE FIRE EXTINGUISHER WITH WALL MOUNTING BRACKET IN LOCATION SHOWN ON DWGS.

W.J. WALL JOINT
CONSTRUCTION WALL JOINT - FILL JOINT W/ EXPANSION JOINT MATERIAL, REFER TO DETAIL L/140705-001-CA-03-400006.

ORIGINAL SCALE 3/16"=1'-0"

STATE OF NEW MEXICO
CHRISTOPHER M. WEISBERG
No. 9325
REGISTERED ARCHITECT
MARCH 30, 2015
PROFESSIONAL SEAL

U.S. ARMY CORPS OF ENGINEERS
ALBUQUERQUE DISTRICT
ALBUQUERQUE, NEW MEXICO

CB&I FEDERAL SERVICES LLC
312 DIRECTORS DRIVE
KNOXVILLE, TENNESSEE 37923
865-690-3211

CLIENT DWG NO.

NOTES

REFERENCE DRAWINGS

NO.	REVISION	DRAWN	CK'D	APP'D	DATE
0	ISSUED FOR CONSTRUCTION	PCA	CMW	CMW	03/30/15

THIS DOCUMENT IS THE PROPERTY OF CHICAGO BRIDGE & IRON COMPANY ("CB&I"). IT MAY CONTAIN INFORMATION DESCRIBING TECHNOLOGY OWNED BY CB&I AND DEEMED TO BE COMMERCIALLY SENSITIVE. IT IS TO BE USED ONLY IN CONNECTION WITH WORK BEING PERFORMED BY CB&I. REPRODUCTION IN WHOLE OR IN PART FOR ANY PURPOSE OTHER THAN WORK PERFORMED BY CB&I IS FORBIDDEN EXCEPT BY EXPRESS WRITTEN PERMISSION OF CB&I. IT IS TO BE SAFEGUARDED AGAINST BOTH DELIBERATE AND INADVERTENT DISCLOSURE TO ANY THIRD PARTY.

DRAWN: PCA | CK'D: CMW | APP'D: CMW | DATE: 03/30/15 | SCALE: AS SHOWN

ARCHITECTURAL FLOOR PLAN

PHASE IV MID-PLUME PUMP & TREAT SYSTEM

FOR: BULK FUELS FACILITY, KIRTLAND AFB, NM

PROJECT NO: 140705 | DWG NO: 140705-001-CA-02-400002 | REV: 0

		GAC Tanks (operational)	GAC Tanks (Appendix)	Feed Tank/ TW Tank
Q (gpm)		400	550	
τ (min)		12	10	
V (gal)		4800	5500	6000
GAC (MAX)	A (ft)		78.5	
(this is according to OD)	H (ft)		10	
	V (ft^3)		785	
	V (gal)		5872	

	Inside sump	Truck Sump	
L (ft)	50	60	
W (ft)	2	4	
H (ft)	2	3.67	
V (ft^3)	200	881	
V (gal)	1496	6589	
t (min)	30	30	
Q (cfs)	0.11	0.49	
Q (gpm)	50	220	
$W = Q\gamma h/\eta$			
W (ft*lbf/s)	13.8	111.3	(Assumes 100% pump efficiency)
W_{min} (hp)	0.03	0.20	
Current Pumps			
Q (gpm)	20	35	gpm
W (hp)	0.33	0.5	hp
$t_{6000gal}$	300	171	min
$t_{6000gal}$	5	3	hr
		(to be purchased)	

Sloped Volume	Method 1	Method 2	
h	1.3125	0.65625	in
b	252	252	in
L	780	780	in
A	165.375	165.375	in^2
V	128992.5	128992.5	in^3
V	**558**	**558**	gal

	Section 1	Section 2	Section 3	Section 4	Section 5 (-)	
L	See above	21	15	15	-3	ft
W		11.5	29	60	14	ft
H		0.25	0.5	0.5	0.5	ft
V		60.375	217.5	450	-21	ft^3

Vsum	706.875	ft^3
Vsumgal	**5287.425**	gal

V (gal)	**1496.2**	(sump inside GWTS)

Total Volume	**7342**

The GWTS sump and containment area *will* hold the largest tank leak.

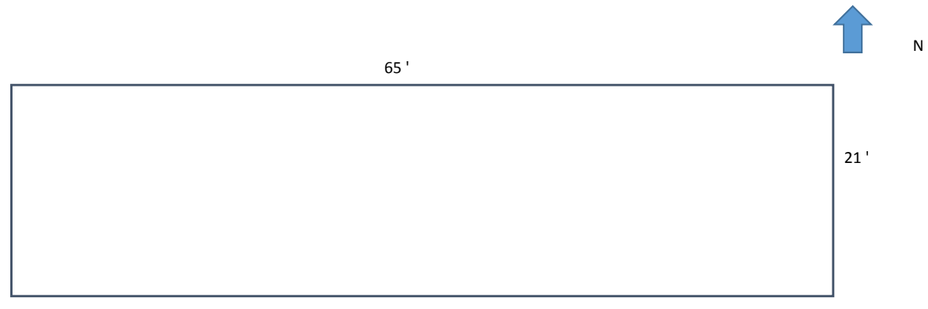

m	
	0.0104
rise	
	0.109375 ft
	1.3125 in

APPENDIX L

Sampling and Analysis Plan

Sampling and Analysis Plan

This Sampling and Analysis Plan describes sampling activities intended for monitoring the groundwater treatment system (GWTS) located at Kirtland Air Force Base (AFB), New Mexico. These activities are to occur whether the GWTS is discharging to irrigation, injection well(s), and/or other approved discharge locations.

L.1 Discharge Requirements

Treated groundwater discharged from the GWTS must comply with Section 6.2.3.1 (*Cleanup Levels for Contaminated Groundwater [other than Perchlorate]*) of the Kirtland AFB Hazardous Waste Treatment Facility Permit Number NM9570024423 (New Mexico Environment Department [NMED], 2010). These cleanup levels are equivalent to the New Mexico Water Quality Control Commission water quality standards (20.6.2.3103 and 20.6.2.4103 New Mexico Administrative Code) and the drinking water maximum contaminant levels adopted by U.S. Environmental Protection Agency (EPA) under the Federal Safe Drinking Water Act (42 U.S. Code §§ 300f to 300j-26). If both a New Mexico Water Quality Control Commission standard and maximum contaminant levels have been established for a contaminant, then the more stringent of the two cleanup levels shall be defined as the discharge limit for GWTS effluent.

Effluent discharged from the GWTS must not exceed the following criteria as currently stipulated in the DP-1839 discharge permit (NMED, 2017) from which the aforementioned regulations are cited:

- Ethylene dibromide (EDB) – 0.05 micrograms per liter (µg/L)
- Benzene – 5 µg/L
- Ethylbenzene – 700 µg/L
- Toluene – 750 µg/L
- Total xylenes – 620 µg/L
- Iron (dissolved) – 1 milligram per liter (mg/L)
- Manganese (dissolved) – 0.2 mg/L.

L.2 Sample Locations and Sampling Interval

L.2.1 Extraction Wells

All four of the extraction wells are capable of being sampled individually. The sample will be collected from the sample valve in the wellhead vault and/or collected at the sample valves located in the well control house just downstream of the flowmeter for each well. When groundwater from a new extraction well is first introduced to the GWTS, monitoring of the GWTS treated effluent shall occur daily for the first week of treatment, weekly for the first month of treatment, and monthly thereafter for EDB; benzene, toluene, ethylbenzene, and total xylenes (BTEX); dissolved iron; and manganese (Section L.2.2). Prior to initial discharge of treated effluent from a newly installed well to KAFB-7 or other injection well, appropriate documentation will be submitted to NMED demonstrating that the treated effluent is at or below the effluent standards.

All extraction wells are sampled annually in the first quarter of the calendar year at a minimum. Sampling of individual extraction wells is also required when the combined influent concentrations increase more than 35 percent, the same range as a field duplicate, from the previous month's results for any of the monitored contaminants. This applies unless the samples are collected during an operational change condition that impacts influent concentrations, such as during partial operation of the extraction

well network, or if analyte concentrations are below the effluent discharge criteria concentrations provided in DP-1839 (NMED, 2017). In the event that the combined influent samples are collected during an operational change condition, sampling of individual extraction wells is required when the combined influent concentrations increase more than 35 percent from the maximum results for any of the monitored contaminants from either the combined influent or individual wells over the previous four quarters and exceed the effluent discharge criteria concentrations provided in DP-1839 (NMED, 2017).

L.2.2 Treatment System

Samples will be collected at a minimum of monthly at three locations from each treatment train in the GWTS to monitor the performance of the carbon treatment system (Table L-1). These monthly samples will be collected at the outlet of the influent pumps, prior to the pretreatment bag filters, at the outlet of the first or lead carbon vessel, and at the outlet of the effluent pumps prior to the post-treatment bag filters.

In addition to the monthly sampling, samples will be collected annually and once every 5 years for the analytes listed on Table L-1. The annual and 5-year samples are collected from both influent and effluent skids (4 sample locations) of the GWTS but not between the granular activated carbon (GAC) vessels. Any analytes detected in the samples collected as part of the 5-year sampling event will be added to the annual sampling list.

In the event that equipment modifications are made to the GWTS, such as the beginning of operation of a new extraction well, treatment train, or changing out GAC, samples will be collected from the three locations from each treatment train daily for the first 7 days, then weekly until the end of the first month, and monthly thereafter. The same effluent sampling schedule will be implemented in the event that conditions at the GWTS are believed to be potentially impacting GWTS effluent water quality.

Prior to discharging treated water from a new extraction well to any permitted injection well, NMED will be supplied with adequate documentation showing that the treated effluent produced from this new extraction well meets the effluent discharge criteria provided in Section L.1.

L.2.3 Non-Extraction Well Influent Monitoring

Non-extraction well water (e.g., investigation-derived waste water from drilling and sampling at Kirtland Bulk Fuels Facility, GAC backwash water, etc.) from the groundwater monitoring network can be introduced as influent to the GWTS for treatment and discharged to an approved location. Appendix M of the Operations and Maintenance Plan contains operational models of the GWTS that determine, under specific flow conditions, acceptance criteria of non-extraction well water for treatment by the GWTS. In order to meet the acceptance criteria for treatment, the water must be characterized for EDB, BTEX, dissolved iron, and manganese. Water that has not been characterized or does not meet the requirements provided in Appendix M of the Operations and Maintenance Plan is not acceptable for treatment and disposal through the GWTS (as described in Section 6 of the Operations and Maintenance Plan).

L.3 Sampling Procedure

Samples will be collected from their respective sampling ports by opening the port and discharging process water into the sampling containers. The port will be opened in such a way that it does not readily cause entraining of air and subsequent off-gassing of the samples and will not cause loss of sample preservatives from sample containers. Waste containers will be placed under sampling ports prior to

sampling to ensure capture of all process water. Excess water collected in the waste containers will be emptied into the GWTS building sump for treatment.

Field filtering for dissolved metals will be performed by affixing a clean piece of poly tubing onto the sampling port. The inline 0.45-micron field filter will be attached to the open end of the poly tubing. The port will then be opened so as to condition the poly tubing and filter with process water for approximately 30 seconds. Samples will then be collected from the process water flowing through the filter. All process water not collected in the sample container will be collected into an appropriate waste container and then discharged to the GWTS building sump for treatment.

L.4 Field Measurements

Field parameters including temperature, turbidity, specific conductance, and pH will be collected in the field using water quality and turbidity meters. See Table L-2 for field meter calibration requirements and associated corrective actions.

L.5 Field Quality Control Samples

Field quality control (QC) samples will be collected in association with the GWTS sampling to ensure field sample collection and analytical precision and representativeness. Field duplicate samples will be collected each month, year, and 5-year sampling event from an effluent sample and shipped to the laboratory for the same analyses as the associated parent sample. In addition, trip blank samples for EDB, BTEX, and volatile organic compounds will accompany each shipment of GWTS samples to the laboratory to monitor for volatile organics contamination during sampling, sample shipping, and storage of samples at the laboratory. Matrix spike/matrix spike duplicate will also be collected in conjunction with each sampling event. Field blank samples for volatile organic compound will be collected as deemed necessary based on site conditions at the time of sample collection.

L.6 Sample Bottles, Preservation, and Shipping

Water samples collected from the GWTS will be collected and analyzed in accordance with EPA guidelines for analytical methods and parameters, sample containers, sample preservation, and sample preparation and analysis holding times presented on Table L-3.

Sample packaging and shipping requirements are designed to maintain sample integrity from the time a sample is collected until it is received at the analytical laboratory. All chain-of-custody forms, sample labels, custody seals, and other sample documents will be completed. Specific procedures for packaging and shipping of environmental samples are presented below:

- A sample label, completed with indelible ink, will be attached to the sample bottle.
- A cooler will be used as a shipping container.
- In preparation for shipping samples, the drain plug will be taped shut so that no fluids, such as melted ice, will drain out of the cooler during shipment. A large plastic bag may be used as a liner for the cooler. Ice will be placed at the bottom of the cooler.
- The containers will be placed in the lined cooler. Cardboard separators or bubble wrap may be placed between the containers at the discretion of the shipper.

- All samples for chemical analysis must be shipped cooled to ≤6 degrees Celsius with ice. All samples will require icing before shipment. A temperature blank will be included in each shipment of samples.

- The liner will be taped closed, if used, and sufficient packing material will be used to prevent sample containers from making contact or rolling around during shipment.

- A copy of the chain-of-custody form will be placed inside the cooler.

- The cooler will be closed and taped shut with clear packing tape.

- Custody seals will be placed on the cooler. Clear tape will be placed over the custody seals to help prevent them from being accidentally torn or ripped off.

- The cooler of samples will be shipped via an overnight carrier. A copy of the shipping bill will be retained for the field records and sent electronically to the project chemist.

L.7 Laboratory Analyses and Methods

Information regarding analytical methods, reporting limits, and project screening levels are listed in Table L-4.

L.8 Data Validation

All samples collected for permit compliance will be reviewed using established data validation procedures to perform EPA Stage 3 data review on 100 percent of data. The data review will be performed using the (QC) criteria specified in the following analytical method and data validation guidelines, or the most recent updates to these documents:

- Project-specific Quality Assurance Project Plan

- Department of Defense Quality Systems Manual for Environmental Laboratories, Version 5.0 (2013)

- EPA Test Methods for Evaluating Solids Waste, Physical/Chemical Methods (SW 846, Third Edition and updates) (EPA, 2006)

- EPA Methods for Chemical Analysis of Water and Wastes (EPA, 1983 and Update)

- Standard Methods for Examination of Water and Wastewater, 22nd Edition (American Public Health Organization, 2005)

- EPA Contract Laboratory Program, National Functional Guidelines for Superfund Organic Methods Data Review (EPA, 2014a)

- EPA Contract Laboratory Program, National Functional Guidelines for Inorganic Superfund Data Review (EPA 2014b).

The following QC elements will be included in the EPA Stage 3 data review:

- Sample extraction and analysis holding times
- Laboratory method blanks
- Surrogate spike recoveries
- Laboratory control sample/laboratory control sample duplicate recoveries
- Matrix spike/matrix spike duplicate recoveries
- Relative percent difference
- Initial calibrations
- Continuing calibrations
- Trip blank results
- Field duplicate sample precision.

Data will be validated and flagged with the data qualifiers found in Table L-5 as applicable:

As a result of the data validation process, EPA qualifiers will be generated and applied to the affected sample results that exceeded the established QC criteria. EPA Stage 3 data review findings will be summarized and documented with each quarterly monitoring report.

L.9 Data Analysis and Reporting Triggers

When BTEX and EDB analytical results from water samples collected between the GAC vessels reach 90 percent of any of the project screening levels (Section L.1), the flow will be switched between the lead and lag GAC vessels and the GAC in the former lead GAC will be scheduled for change-out. If dissolved iron and manganese concentrations reach 90 percent of the project screening levels (Section L.1) downstream of the sand filters, then the sand filter catalytic media will need to be replaced.

L.10 Reporting

L.10.1 Compliance

Compliance reporting will occur quarterly in the respective Quarterly Reports. The Quarterly Report is submitted 90 days after the conclusion of the quarter in which the quarterly groundwater sampling event occurred. These quarterly reports include quarterly and cumulative operational run-time, cumulative EDB removal, quarterly and cumulative treated investigation-derived waste purge water to irrigation, injection well(s), or other discharge location, groundwater treated, analytical sampling results of the GWTS (e.g., influent, between the GAC tanks, and treated effluent), major maintenance activities (e.g., GAC changes, pump changes, etc.), mechanical integrity test results of effluent conveyance line and injection wells, significant system alarms or shut downs for more than 48 hours, and groundwater potentiometric elevation map(s).

L.10.2 Exceedance

As soon as Kirtland AFB has knowledge that effluent water quality exceeds the discharge criteria for one or more of the contaminants listed in approved permits, the NMED Hazardous Waste Bureau and Ground Water Quality Bureau must be notified in accordance with Notification Procedures in Appendix K – Contingency Plan. Any actions that can be taken to correct the problem and achieve the required effluent concentrations will be performed immediately. Following plant operational adjustments, the effluent groundwater will be re-tested, and the monitoring frequency will be increased to weekly. After 4 consecutive weeks where the analytical results are below the standards for the discharge permit analytes listed in Section L.1, monitoring will return to a monthly frequency.

If the required actions are considered to be outside the scope of work for plant operations, then the system will be shut down pending submittal of a corrective action plan to the NMED.

REFERENCES

American Public Health Organization. 2005. *Standard Methods for the Examination of Water and Wastewater, 22nd Edition.*

Department of Defense (DoD). 2013. *Department of Defense Quality Systems Manual for Environmental Laboratories, Version 5.0.* July.

(U.S.) Environmental Protection Agency (EPA). 1983. *Methods for Chemical Analysis of Water and Wastes, EPA-600/4-79-020.*

EPA. 2006. *Solid Waste SW-846 Test Methods for Evaluating Solid Wastes, Physical/Chemical Methods, Third Edition and Updates.*

EPA. 2014a. *EPA National Functional Guidelines for Superfund Organic Methods Data Review EPA-540-R-014-002.* Office of Superfund Remediation and Technology Innovation. August.

EPA. 2014b. *EPA National Functional Guidelines for Inorganic Superfund Data Review, EPA-540-R-013-001.* Office of Superfund Remediation and Technology Innovation. August.

New Mexico Environment Department (NMED). 2010. Hazardous Waste Treatment Facility Operating Permit, EPA ID Number NM9570024423, Issued to U.S. Air Force for the Open Detonation Unit Located at Kirtland Air Force Base, Bernalillo County, New Mexico, by the New Mexico Environment Department Hazardous Waste Bureau. July.

NMED. 2017. *Discharge Permit Issuance, DP-1839, Kirtland Air Force Base*. Ground Water Quality Bureau. April.

TABLES

Table L-1
Groundwater Treatment System Monitoring Requirements

Analysis	Analytes	Frequency[a]	Sample Location
EPA Method SW8011	EDB	Monthly	Influent, between tanks, and effluent
EPA Method SW8260C	Benzene, ethylbenzene, toluene, and xylenes	Monthly	
EPA Method SW6010C	Dissolved iron and dissolved manganese	Monthly	
EPA Method E300.0A	Chloride and sulfate	Annually[b]	Trains 1 and 2 – influent and effluent
	Chloride, sulfate, fluoride	5-year[c]	
EPA Method E353.2	Nitrogen (nitrate-nitrite)	Annually[b]	Trains 1 and 2 – influent and effluent
EPA Method SW8260C[(b)]		Annually[b]	Trains 1 and 2 – influent and effluent
EDB – Method SW8011		Annually[b]	Trains 1 and 2 – influent and effluent
SVOCs – Method SW8270D[(b)]		Annually[b]	Trains 1 and 2 – influent and effluent
Total phenol – E420.4		Annually[b]	Trains 1 and 2 – influent and effluent
Cyanide (free) – OIA-1677-09		Annually[b]	Trains 1 and 2 – influent and effluent
Total mercury – SW7470A		5-year[c]	Trains 1 and 2 – influent and effluent
Total and dissolved metals – SW6010C/SW6020A[(c)]		5-year[c]	Trains 1 and 2 – influent and effluent
Total and dissolved metals – SW6010C/SW6020A[(d)]		Geochemical modeling[d]	Trains 1 and 2 – influent and effluent
Total and dissolved silica – SM4500-SiO2 C-1997		Geochemical modeling[d]	Trains 1 and 2 – influent and effluent
Carbonate alkalinity – SM2320B		Geochemical modeling[d]	Trains 1 and 2 – influent and effluent
Dissolved organic carbon – SM5310 C-2000		Geochemical modeling[d]	Trains 1 and 2 – influent and effluent

a. Sampling frequency will be increased (daily, weekly, etc.) during shakedown testing of new components.
b. List of analytes per the Kirtland Air Force Base Discharge Permit DP-1839, Table 3, Annual Monitoring Constituent List.
c. List of analytes per the Kirtland Air Force Base Discharge Permit DP-1839, Table 4, Five-year Monitoring Constituent List.
d. List of analytes per the Kirtland Air Force Base Discharge Permit DP-1839, Table 5, Geochemical Modeling Analyte List.

E = EPA Methods for Chemical Analysis of Water and Wastes, 1983 and Updates.
EDB = Ethylene dibromide.
EPA = U.S. Environmental Protection Agency.
OIA = EPA Office of International Affairs Method OIA-1677-09, 2010.
SM = American Public Health Organization Standard Methods for the Examination of Water and Wastewater, 22nd Edition.
SVOC = Semivolatile organic compound.
SW = EPA SW-846-Test Methods for Evaluating Solid Waste, 3rd Edition, 1986 and Updates.
VOC = Volatile organic compound.

Table L-2
Field Instrument Quality Control

Field Equipment	Calibration Verification Activity	Frequency	Acceptance Criteria	Corrective Action	Responsible Person	Standard Operating Procedure Reference
YSI (or equivalent) water quality meter with flow cell	Check calibration against two of the following three traceable standards with nominal pH of 4.0, 7.0, and 10.0 Check calibration of outside of range -10–60 ºC (14–140 ºF)	Calibrate probe once per week and then verify once per day before first use	± 0.2 pH units	Recalibrate	Field personnel	Manufacturer's Operation Manual
	Check calibration against specific conductance standard Check calibration of outside of range -10–60 ºC (14–140 ºF)	Calibrate probe once per week and then verify once per day before first use	± 0.5 percent of standard value or 0.0001 millisiemens per centimeter, whichever is greater	Recalibrate	Field personnel	Manufacturer's Operation Manual
Turbidity Meter	Calibrate with primary standard of 10 nephelometric turbidity units	Calibrate every 3 months; verify once a week reading is within acceptable value	±10 percent	Recalibrate	Field personnel	Manufacturer's Operation Manual

°C = Degree Celsius.
°F= Degree Fahrenheit.

Table L-3
Analytical Parameter, Method, Sample Container, Preservation, and Holding Time Requirements

Parameter	Preparation/ Analysis Method	Bottle Type	Preservative	Preparation Holding Time	Analytical Holding Time
Volatile Organic Compounds and BTEX	SW5030B/8260C	3 x 40-ml glass VOA vials	HCl to pH <2; Cool ≤6°C	NA	14 days
Ethylene dibromide	SW8011	2 x 40-ml glass VOA vials	HCl to pH <2; Cool ≤6°C	NA	14 days
Semivolatile Organic Compounds	SW3510C/8270D	2 x 250-ml amber	Cool ≤6°C	7 days	40 days
Total and dissolved metals	SW3005A/6010C; SW3020A/6020A	1 x 250-ml HDPE	HNO3 to pH <2; Cool ≤6°C	NA	180 days
Total mercury	SW7470A	1 x 250-ml HDPE	HNO3 to pH <2; Cool ≤6°C	NA	28 days
Total and dissolved silica	SM4500-SiO2 C-1997	1 x 250-ml HDPE	Cool ≤6°C	NA	28 days
Anions (chloride, sulfate, fluoride	E300.0A	2 x 40-ml VOA vials	Cool ≤6°C	NA	28 days
Nitrate-nitrite nitrogen	E353.2	1 x 250-ml HDPE	H_2SO4 to pH<2; Cool to 6ºC	NA	28 days
Total phenol	E420.4	1 x 250-ml glass	H2SO4 to pH<2; Cool to 6ºC	NA	28 days
Cyanide (free)	OIA-1677-09	1 x 250-ml glass	NaOH to pH>12; Cool to 6ºC	NA	14 days
Carbonate alkalinity	SM2320B	1 x 250-ml HDPE	Cool to 6ºC	NA	14 days
Dissolved organic carbon	SM5310 C-2000	2 x 40-ml VOA vials	Cool to 6ºC	NA	28 days

°C = Degree Celsius.
BTEX = Benzene, toluene, ethylbenzene, and xylenes.
E = EPA Methods for Chemical Analysis of Water and Wastes, 1983 and Updates.
H2SO4 = Sulfuric acid.
HCl = Hydrochloric acid.
HDPE = High density polyethylene.
HNO3 = Nitric acid.
ml = Milliliter.
NA = Not applicable.
NaOH = Sodium hydroxide.
OIA = EPA Office of International Affairs Method OIA-1677-09, 2010.
SM = American Public Health Organization Standard Methods for the Examination of Water and Wastewater, 22nd Edition.
SW = U.S. Environmental Protection Agency SW846 – Test Methods for Evaluating Solid Waste, Third Edition and Updates.
VOA = Volatile organics analysis.

TABLE L-4
Analytical Parameter, Analyte Reporting Limits, and Screening Criteria for Water

Analyte	Analytical Method	CASRN	Units	NMWQCC[1]	EPA MCL[2]	Project Screening Level[3]	Achievable Laboratory Limits[4]		
							LOQ	LOD	DL
Volatile Organic Compounds									
1,1,2,2-Tetrachloroethane	SW8260C	79-34-5	µg/L	10	NS	10	1.0	1.0	0.5
1,1,2-Trichloroethane	SW8260C	79-00-5	µg/L	10	5.0	5.0	1.0	1.0	0.5
1,1-Dichloroethane	SW8260C	75-34-3	µg/L	25	NS	25	1.0	1.0	0.5
1,2-Dibromoethane (EDB)	SW8011	106-93-4	µg/L	0.1	0.05	0.05	0.03	0.02	0.01
1,2-Dichloroethane	SW8260C	107-06-2	µg/L	10	5.0	5.0	1.0	1.0	0.5
Benzene	SW8260C	71-43-2	µg/L	10	5.0	5.0	1.0	1.0	0.5
Chloroform	SW8260C	67-66-3	µg/L	100	80	80	1.0	1.0	0.5
cis-1,2-Dichloroethene	SW8260C	156-59-2	µg/L	NS	70	70	1.0	1.0	0.5
Dibromochloromethane	SW8260C	124-48-1	µg/L	NS	80	80	1.0	1.0	0.5
Ethylbenzene	SW8260C	100-41-4	µg/L	750	700	700	1.0	1.0	0.5
Methyl tert-Butyl Ether (MTBE)	SW8260C	1634-04-4	µg/L	NS	NS	NS	1.0	1.0	0.5
Methylene Chloride	SW8260C	75-09-2	µg/L	100	5.0	5.0	4.0	4.0	2.0
Naphthalene[5]	SW8260C	91-20-3	µg/L	30	NS	30	5.0	2.0	1.0
Tetrachloroethene (PCE)	SW8260C	127-18-4	µg/L	20	5.0	5.0	1.0	1.0	0.5
Toluene	SW8260C	108-88-3	µg/L	750	1000	750	1.0	1.0	0.5
Trichloroethene (TCE)	SW8260C	79-01-6	µg/L	100	5.0	5.0	1.0	1.0	0.5
m,p-Xylene	SW8260C	179601-23-1	µg/L	NS	10,000	10,000	1.0	1.0	0.5
o-Xylene	SW8260C	95-47-6	µg/L	NS	10,000	10,000	1.0	1.0	0.5
Xylene (Total)	SW8260C	1330-20-7	µg/L	620	10,000	620	1.0	1.0	0.5
Semivolatile Organic Compounds									
bis(2-Ethylhexyl)phthalate	SW8270D	117-81-7	µg/L	NS	6	6	5	4	2
1-Methylnaphthalene[5]	SW8270D	90-12-0	µg/L	30	NS	30	0.5	0.2	0.1
2-Methylnaphthalene[5]	SW8270D	95-95-4	µg/L	30	NS	30	0.5	0.2	0.1
Naphthalene[5]	SW8270D	91-20-3	µg/L	30	NS	30	0.5	0.4	0.1
Pyrene	SW8270D	129-00-0	µg/L	NS	NS	120	0.5	0.4	0.1

TABLE L-4
Analytical Parameter, Analyte Reporting Limits, and Screening Criteria for Water

Analyte	Analytical Method	CASRN	Units	NMWQCC[1]	EPA MCL[2]	Project Screening Level[3]	Achievable Laboratory Limits[4]		
							LOQ	LOD	DL
Metals - Total and dissolved									
Aluminum	SW6010C	7429-90-5	mg/L	5.0	NS	5.0	0.400	0.400	0.0870
Antimony	SW6020A	7440-36-0	mg/L	NS	0.006	0.006	0.002	0.001	0.00033
Arsenic	SW6020A	7440-38-2	mg/L	0.1	0.01	0.01	0.004	0.002	0.00054
Barium	SW6010C	7440-49-3	mg/L	1.0	2.0	1.0	0.010	0.0063	0.0003
Beryllium	SW6020A	7440-41-7	mg/L	NS	0.004	0.004	0.001	0.00013	0.00007
Cadmium	SW6020A	7440-43-9	mg/L	0.01	0.005	0.005	0.001	0.005	0.00023
Calcium	SW6010C	7440-70-2	mg/L	NS	NS	NS	0.004	0.050	0.033
Chromium	SW6020A	7440-47-3	mg/L	0.05	0.1	0.05	0.004	0.002	0.0007
Copper	SW6010C	7440-50-8	mg/L	1.0	1.3	1.0	0.02	0.005	0.0025
Iron	SW6010C	7439-89-6	mg/L	1.0	NS	1.0	0.4	0.05	0.033
Lead	SW6020A	7439-92-1	mg/L	0.05	0.015	0.015	0.002	0.00025	0.00013
Magnesium	SW6010C	7439-95-4	mg/L	NS	NS	NS	0.2	0.05	0.017
Manganese	SW6010C	7439-96-5	mg/L	0.2	NS	0.2	0.01	0.0013	0.0008
Mercury (total)	SW7470A	7439-97-6	mg/L	0.002	0.002	0.002	0.0002	0.0001	0.00005
Potassium	SW6010C	7440-09-7	mg/L	NS	NS	NS	1.0	5.0	0.192
Selenium	SW6020A	7782-49-2	mg/L	0.05	0.05	0.05	0.004	0.001	0.0005
Silver	SW6020A	7440-22-4	mg/L	0.05	NS	0.05	0.001	0.00025	0.00011
Sodium	SW6010C	7440-23-5	mg/L	NS	NS	NS	2.0	0.5	0.167
Strontiuim	SW6020A	7440-24-6	mg/L	NS	NS	NS	0.002	0.002	0.000436
Thallium	SW6020A	7440-28-0	mg/L	NS	0.002	0.002	0.001	0.00025	0.00015
Uranium	SW6020A	NS	mg/L	0.03	0.03	0.03	0.0005	0.0002	0.0000618
Zinc	SW6010C	7440-66-6	mg/L	10	NS	10	0.04	0.01	0.0039
Miscellaneous									
Alkalinity, carbonate	SM2320B	NS	mg/L	NS	NS	NS	2	2	0.7
Chloride	E300.0A	16887-00-6	mg/L	250	NS	250	2.0	2.0	1.0
Cyanide (free)	OIA-1677-09	57-12-5	mg/L	0.2	0.2	0.2	0.006	0.006	0.002
Dissolved organic carbon	SM5310 C-2000	NS	mg/L	NS	NS	NS	1.0	1.0	0.5
Fluoride	E300.0A	16984-48-8	mg/L	1.6	NS	1.6	0.5	0.5	0.25
Nitrate-nitrite nitrogen[6]	E353.2	84145-82-4	mg/L	10	10	10	1.0	0.1	0.04
Silica	SM4500-SiO2 C-1997	7631-86-9	mg/L	NS	NS	NS	0.4	0.4	0.1
Sulfate	E300.0A	18785-72-3	mg/L	600	250	250	5.0	5.0	1.5
Total phenols	E420.4	108-95-2	mg/L	0.005	NS	0.04	0.04	0.04	0.015

TABLE L-4
Analytical Parameter, Analyte Reporting Limits, and Screening Criteria for Water

[1] NMWQCC standards per the New Mexico Administrative Code Title 20.6.2.3101A, Standards for Ground Water of 10,000 mg/L Total Dissolved Solids Concentration or Less (NMAC 2004). For metals, the NMWQCC standard applies to dissolved metals and total mercury.

[2] EPA National Primary Drinking Water Regulations, Maximum Contaminant Levels and Secondary Maximum Contaminant Levels, Title 40 Code of Federal Regulations Part 141, 143 (May 2009).

[3] The project screening level was selected to satisfy the requirements of the Kirtland Air Force Base Hazardous Waste Permit Number NM9570024423 as the lowest of (1) NMWQCC standard or (2) EPA MCL. If no MCL or NMWQCC standard exists for any analyte, then the project screening level will be the EPA Tapwater Regional Screening Level. Project screening levels below the LOD are highlighted and the screening level is set at the LOQ.

[4] Achievable laboratory limits are for Eurofins Lancaster Laboratories Environmental, LLC, Lancaster Pennsylvania.

[5] NMWQCC specifies a standard for the sum of naphthalene and mononaphthalenes (1-methylnaphthalene and 2-methylnaphthalene). Conservatively, this standard is shown for each of the three compounds.

[6] The MCL for nitrate is 10 mg/L.

µg/L = Microgram(s) per liter.

CASRN = Chemical Abstracts Service Registry Number.

DL = Detection limit.

E = EPA Methods for Chemical Analysis of Water and Wastes, 1983 and Updates.

EPA = U.S. Environmental Protection Agency.

LOD = Limit of detection.

LOQ = Limit of quantitation.

MCL = Maximum Contaminant Level.

mg/L = Milligram(s) per liter.

NMWQCC = New Mexico Water Quality Control Commission.

NS = Not specified.

SW = EPA SW846 - Test Methods for Evaluating Solid Waste, Third Edition and Updates.

Table L-5
Data Qualification Flags and Reason Codes

Qualifier	Definition
	No Qualifier indicates that the data are acceptable both qualitatively and quantitatively.
U	The analyte was analyzed for but was not detected above the reported limit of quantitation.
J	The analyte was analyzed for and was positively identified, but the reported numerical value may not be consistent with the amount actually present in the environmental sample. Results are estimated, although the data are considered usable and may be used as appropriate to meet project objectives. Results are qualitatively acceptable and quantitatively uncertain.
J-	The analyte was positively identified; the associated numerical value is its approximate concentration with a low bias in the sample.
J+	The analyte was positively identified; the associated numerical value is its approximate concentration with a high bias in the sample.
UJ	The analyte was analyzed for but was not detected. The reported quantitation limit is approximate and may be inaccurate or imprecise.
R	The analyte was analyzed for, but the presence or absence of the analyte has not been verified. Re-sampling and re-analysis may be necessary to confirm or deny the presence of the analyte. Results are rejected, and data are unusable for any purposes.

APPENDIX M

Waste Characterization Documentation

BAG FILTER DISPOSAL APPROVAL

From:	Simpler, Trent SPA
To:	Jercinovic, Devon; Phaneuf, Mark J SPA; Dreeland, Linda SPA; Sanchez, Amy E. SPA; Adria Bodour; BITNER, LUDIE W GS-13 USAF AFCEC/CZO; Vic Branson; Amdurer, Mike; Tarbert, Jason A
Subject:	Bag filters
Date:	Thursday, June 09, 2016 7:50:47 AM

Devon and Mike,

We spoke with Katrina and she is good with us throwing the bag filters away. There is no official reply.

Consider this your approval to put used bag filters in the dumpster.

Trent

Trent Simpler, P.E.
Project Manager BFF
Chair Wind Energy CX
Red Team LGL
US Army Corps of Engineers
Trent.Simpler@usace.army.mil
505-342-4823 (office)
505-301-6996 (Blackberry)

HAZARDOUS WASTE PROCESS DESCRIPTION

ORGANIZATION CODE & UEC NAME:

WASTE COLLECTION SITE ID (IAP#):

SHOP CODE:

BUILDING NUMBER/LOCATION: Building 19150 Bulk Fuels Facility Groundwater Treatment System (GWTS)

DATE: 4/27/16

D**ESCRIPTION OF PROCESS:**
Bag filters are located at both the inlet and outlet of the granular-activated carbon beds at the GWTS to remove suspended solids resulting from groundwater extraction, and fines released from the activated carbon beds. During normal operation of the GWTS, bag filters are replaced on an as-needed basis, or semiannually as required in the *Operation and Maintenance Manua*l, *Mid-Plume Pump and Treat System* (USACE, 2016).

WASTE DESCRIPTION:
Non-hazardous solid waste. See Attachment 1 for a description of how the waste was characterized, and Attachment 2 for the analytical data.

LIST MATERIALS AND NSNs SPECIFIC TO THIS PROCESS:
Used bag filters (10 micron size #2, 7-inch by 32-inch) stored in DOT-approved 55-gallon drums

IS THIS A NEW PROCESS? YES____X____ NO_____
DESCRIBE ANY CHANGES MADE TO PROCESS SINCE LAST EVALUATION
(If no change, a negative response is required)
N/A

PREPARER'S NAME, JOB TITLE, PHONE NUMBER, & SIGNATURE
(This person must be actively involved in the process)

I certify that to the best of my knowledge and belief, all of the process description information contained herein is accurate and complete. 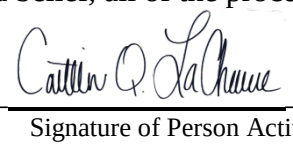

Signature of Person Actively Involved in the Process
Caitlin LaChance, Scientist
505-262-8942

PLEASE include, if applicable:

- Any T. O. or other references related to the process;

- A diagram of the process; and
- Any comments relevant to process description not otherwise included.

****FOR HAZARDOUS WASTE PERSONNEL USE ONLY****

ASSIGNED WASTE PROFILE:_____

COMMENTS: _____

Attachment 1: Bag Filter Waste Characterization and Request for Disposal

Background

Kirtland Air Force Base (KAFB) is investigating and remediating a historical release of aviation gasoline and jet fuel from the Bulk Fuels Facility (BFF) pursuant to the Resource Conservation and Recovery Act (RCRA) corrective action provisions in Part 6 of KAFB's Hazardous Waste Treatment Facility Operating Permit (HWTF Permit No. NM9570024423). The HWTF Permit is enforced by the New Mexico Environment Department (NMED) Hazardous Waste Bureau (HWB).

KAFB is currently implementing an ethylene dibromide (EDB) groundwater treatment interim measure (IM) in accordance with Part 6.2.2.2.12 of the HWTF Permit. The EDB plume IM consists of extraction wells and treatment with granulated activated carbon (GAC) at the Groundwater Treatment System (GWTS) facility. The groundwater treated at the GWTS is non-hazardous. The treated effluent from the system is non-detect for all fuel-related constituents.

Bag filters are located at both the inlet and outlet of the GAC beds at the GWTS to remove suspended solids resulting from groundwater extraction, and fines released from the GAC beds. During normal operation of the GWTS, bag filters are replaced on an as-needed basis, or semiannually as required in the *Operation and Maintenance Manua*l, *Mid-Plume Pump and Treat System* (USACE, 2016). The waste was accumulated from January 1, 2016 through April 12, 2016. Currently, the waste is being stored on-site in a 55-gallon drum and requires disposal.

Waste Characterization

A generator may use testing, acceptable knowledge (i.e.: process knowledge), or a combination of the two to satisfy its RCRA waste characterization responsibilities (40 CFR 262.11). Waste characterization requirements are detailed in Part 2.6 of the HWTF Permit. Part 2.6.2 states that "Acceptable knowledge may be used as the sole method to characterize waste only when the waste is from a process that is consistent and well-documented".

The influent and effluent from the GWTS meets this permit requirement for the use of acceptable knowledge as the sole method to characterize the inlet and outlet bag filters. As stated above, the influent to the treatment system that goes through the inlet bag filters is nonhazardous and contains no constituents other than EDB above applicable groundwater standards. The treated groundwater that goes through the outlet bag filters has no detectable fuel constituents and meets drinking water quality standards.

Analytical results from two extraction wells (KAFB-106233 and KAFB-106234) and GWTS influent and effluent samples were evaluated as part of the acceptable knowledge review for the inlet filters. The extraction well groundwater and GWTS samples were analyzed for EDB, benzene, toluene, ethylbenzene, total xylenes, dissolved manganese, and dissolved iron. Benzene is the only analyte in this analytical suite that has an established toxicity characteristic standard (500 micrograms per liter; Title 40 Code of Federal Regulations Part 264.24, Table 1). As shown in Attachment 2, benzene concentrations were non-detect for all samples taken for the treatment system, and therefore below the established toxicity characteristic standard.

Conclusion

The totality of the acceptable knowledge demonstrates that the inlet and outlet bag filters are not hazardous waste; therefore, the waste is considered to be non-hazardous. The used bag filters are also not considered to be special waste, as defined in 20.9.7.S(13) NMAC. If the concentrations of contaminants in the system increase to a level at or above the regulatory limits, this process will be reevaluated and revised to comply with disposal requirements.

Attachment 2
Groundwater Extraction Well and Groundwater Treatment System Analtyical Data

				LOCATION CODE	GWTS-INF		GWTS-GAC1		GWTS-EFF		GWTS-INF		GWTS-GAC1	
				SAMPLE NO	GWTS-INF-0001		GWTS-GAC1-0001		GWTS-EFF-0001		GWTS-INF-0002		GWTS-GAC1-0002	
				SAMPLE DATE	12/16/2015		12/16/2015		12/16/2015		12/18/2015		12/18/2015	
				SAMPLE TIME	16:00		16:00		16:00		14:15		14:25	
				SAMPLE DAY	Wednesday		Wednesday		Wednesday		Friday		Friday	
				DAY NUMBER	1		1		1		2		2	
				SAMPLE PURPOSE	REG		REG		REG		REG		REG	
				LABORATORY	Empirical		Empirical		Empirical		Empirical		Empirical	
				LAB DATA DUE	12/18/2015		12/18/2015		12/18/2015		12/20/2015		12/20/2015	
Chemical Class & Analytical Method	Parameter	Toxicity Characteristics (40 CFR 264.24)	NMED Ground Water Protection Standards (Sec. 20.6.2.3103)	EPA MCLs[a]	Result	LOQ	Result	LOQ	Result	LOQ	Result	LOQ	Result	LOQ
Draft Analytical Data														
EDB (ug/L)SW8011	1,2-DIBROMOETHANE	NE	0.1	0.05	0.194	0.03	ND	0.03	ND	0.03	0.18	0.0281	ND	0.0288
VOC (ug/L)/ SW8260B	BENZENE	500	10	5	ND	1	ND	1	ND	1	ND	1	ND	1
	ETHYLBENZENE	NE	750	700	ND	1	ND	1	ND	1	0.316J	1	ND	1
	TOLUENE	NE	750	1000	ND	1	ND	1	ND	1	ND	1	ND	1
	XYLENES	NE	620	10000	0.918J	3	ND	3	ND	3	2.89J	3	ND	3
Metals (ug/L)/SW6010C	IRON, DISSOLVED	NE	1,000	NE	36.8J	100	ND	100	ND	100	239	100	ND	100
	MANGANESE, DISSOLVED	NE	200	NE	ND	15	5.02J	15	3.55J	15	15.5	15	5.46J	15
TDS (mg/L)/SM2540C	TDS	NA	1,000	NE	-	-	-	-	-	-	-	-	-	-
TSS (mg/L)/SM2540D	TSS	NA	NE	NE	-	-	-	-	-	-	-	-	-	-
Field Data														
	Temperature (Deg.C)	---	---	---	17.48		17.33		13.78		17		16.4	
	Spec. Conductivity (us/cm)	---	---	---	354.2		373.5		609		393		388	
	pH	---	---	---	8.1		9.1		8.5		7.82		8.86	
	ORP (mV)	---	---	---	214		225		231		79.9		117.4	
	DO (mg/L)	---	---	---	6.91		0.57		7.53		7.64		1.48	

Attachment 2
Groundwater Extraction Well and Groundwater Treatment System Analtyical Data

				LOCATION CODE	GWTS-EFF		GWTS-INF		GWTS-GAC1		GWTS-EFF		GWTS-INF	
				SAMPLE NO	GWTS-EFF-0002		GWTS-INF-0003		GWTS-GAC1-0003		GWTS-EFF-0003		GWTS-INF-0004	
				SAMPLE DATE	12/18/2015		21-Dec-15		21-Dec-15		21-Dec-15		22-Dec-15	
				SAMPLE TIME	14:35		12:15		12:30		12:40		15:20	
				SAMPLE DAY	Friday		Monday		Monday		Monday		Tuesday	
				DAY NUMBER	2		3		3		3		4	
				SAMPLE PURPOSE	REG		REG		REG		REG		REG	
				LABORATORY	Empirical		Empirical		Empirical		Empirical		Empirical	
				LAB DATA DUE	12/20/2015		12/23/2015		12/23/2015		12/23/2015		12/24/2015	
Chemical Class & Analytical Method	Parameter	Toxicity Characteristics (40 CFR 264.24)	NMED Ground Water Protection Standards (Sec. 20.6.2.3103)	EPA MCLs[a]	Result	LOQ	Result	LOQ	Result	LOQ	Result	LOQ	Result	LOQ
Draft Analytical Data														
EDB (ug/L)SW8011	1,2-DIBROMOETHANE	NE	0.1	0.05	ND	0.0284	0.195	0.0281	ND	0.0282	ND	0.028	0.182	0.0283
VOC (ug/L)/ SW8260B	BENZENE	500	10	5	ND	1	ND	1	ND	1	ND	1	ND	1
	ETHYLBENZENE	NE	750	700	ND	1	ND	1	ND	1	ND	1	ND	1
	TOLUENE	NE	750	1000	ND	1	ND	1	ND	1	ND	1	ND	1
	XYLENES	NE	620	10000	1.08J	3	ND	3	ND	3	ND	3	ND	3
Metals (ug/L)/SW6010C	IRON, DISSOLVED	NE	1,000	NE	81.2J	100	37.3J	100	ND	100	30.4J	100	ND	100
	MANGANESE, DISSOLVED	NE	200	NE	4.3J	15	ND	15	5.56J	15	5.87J	15	ND	15
TDS (mg/L)/SM2540C	TDS	NA	1,000	NE	-	-	-	-	-	-	-	-	-	-
TSS (mg/L)/SM2540D	TSS	NA	NE	NE	-	-	-	-	-	-	-	-	-	-
Field Data														
	Temperature (Deg.C)	---	---	---	14.7		18.3		17.3		16.3		19.3	
	Spec. Conductivity (us/cm)	---	---	---	542		387		388		434		397	
	pH	---	---	---	8.02		7.64		8.7		8.17		8.2	
	ORP (mV)	---	---	---	175.5		181.3		177		154.1		265.5	
	DO (mg/L)	---	---	---	6.54		7.95		3.16		6.62		7.42	

Attachment 2
Groundwater Extraction Well and Groundwater Treatment System Analtyical Data

				LOCATION CODE	GWTS-GAC1		GWTS-EFF		GWTS-INF		GWTS-GAC1		GWTS-EFF	
				SAMPLE NO	GWTS-GAC1-0004		GWTS-EFF-0004		GWTS-INF-0005		GWTS-GAC1-0005		GWTS-EFF-0005	
				SAMPLE DATE	22-Dec-15		22-Dec-15		29-Dec-05		29-Dec-05		29-Dec-05	
				SAMPLE TIME	15:10		15:00		13:55		13:47		13:38	
				SAMPLE DAY	Tuesday		Tuesday		Tuesday		Tuesday		Tuesday	
				DAY NUMBER	4		4		5		5		5	
				SAMPLE PURPOSE	REG		REG		REG		REG		REG	
				LABORATORY	Empirical		Empirical		Empirical		Empirical		Empirical	
				LAB DATA DUE	12/24/2015		12/24/2015		12/31/2015		12/31/2015		12/31/2015	
Chemical Class & Analytical Method	Parameter	Toxicity Characteristics (40 CFR 264.24)	NMED Ground Water Protection Standards (Sec. 20.6.2.3103)	EPA MCLs[a]	Result	LOQ	Result	LOQ	Result	LOQ	Result	LOQ	Result	LOQ
Draft Analytical Data														
EDB (ug/L)SW8011	1,2-DIBROMOETHANE	NE	0.1	0.05	ND	0.0278	ND	0.0283	0.181	0.0289	ND	0.0288	ND	0.0287
VOC (ug/L)/ SW8260B	BENZENE	500	10	5	ND	1	ND	1	ND	1	ND	1	ND	1
	ETHYLBENZENE	NE	750	700	ND	1	ND	1	ND	1	ND	1	ND	1
	TOLUENE	NE	750	1000	ND	1	ND	1	ND	1	ND	1	ND	1
	XYLENES	NE	620	10000	ND	3	ND	3	ND	3	ND	3	ND	3
Metals (ug/L)/SW6010C	IRON, DISSOLVED	NE	1,000	NE	ND	100	39.4J	100	ND	100	ND	100	63J	100
	MANGANESE, DISSOLVED	NE	200	NE	5.3J	15	18.5	15	ND	15	6.65J	15	9.47J	15
TDS (mg/L)/SM2540C	TDS	NA	1,000	NE	-	-	-	-	-	-	-	-	-	-
TSS (mg/L)/SM2540D	TSS	NA	NE	NE	-	-	-	-	-	-	-	-	-	-
Field Data														
	Temperature (Deg.C)	---	---	---	19		18.2		18.2		16.1		17.7	
	Spec. Conductivity (us/cm)	---	---	---	363		391		405		393		419	
	pH	---	---	---	8.91		8.36		8.05		8.81		7.38	
	ORP (mV)	---	---	---	266.1		268.2		114.5		115.3		113.8	
	DO (mg/L)	---	---	---	2.13		6.5		7.66		2.46		6.47	

Attachment 2

Groundwater Extraction Well and Groundwater Treatment System Analtyical Data

				LOCATION CODE	GWTS-INF		GWTS-GAC1		GWTS-EFF		GWTS-INF		GWTS-GAC1	
				SAMPLE NO	GWTS-INF-0006		GWTS-GAC1-0006		GWTS-EFF-0006		GWTS-INF-0007		GWTS-GAC1-0007	
				SAMPLE DATE	30-Dec-05		30-Dec-05		30-Dec-15		31-Dec-15		31-Dec-15	
				SAMPLE TIME	13:05		13:00		13:10		9:47		9:43	
				SAMPLE DAY	Wednesday		Wednesday		Wednesday		Thursday		Thursday	
				DAY NUMBER	6		6		6		7		7	
				SAMPLE PURPOSE	REG		REG		REG		REG		REG	
				LABORATORY	Empirical		Empirical		Empirical		Empirical		Empirical	
				LAB DATA DUE	1/4/2016		1/4/2016		1/4/2016		1/5/2016		1/5/2016	
Chemical Class & Analytical Method	Parameter	Toxicity Characteristics (40 CFR 264.24)	NMED Ground Water Protection Standards (Sec. 20.6.2.3103)	EPA MCLs[a]	Result	LOQ	Result	LOQ	Result	LOQ	Result	LOQ	Result	LOQ
Draft Analytical Data														
EDB (ug/L)SW8011	1,2-DIBROMOETHANE	NE	0.1	0.05	0.194	0.0284	ND	0.0284	ND	0.0282	0.183	0.0287	ND	0.0286
VOC (ug/L)/ SW8260B	BENZENE	500	10	5	ND	1	ND	1	ND	1	ND	1	ND	1
	ETHYLBENZENE	NE	750	700	ND	1	ND	1	ND	1	ND	1	ND	1
	TOLUENE	NE	750	1000	ND	1	ND	1	ND	1	ND	1	ND	1
	XYLENES	NE	620	10000	ND	3	ND	3	ND	3	ND	3	ND	3
Metals (ug/L)/SW6010C	IRON, DISSOLVED	NE	1,000	NE	ND	100	ND	100	ND	100	38.3J	100	ND	100
	MANGANESE, DISSOLVED	NE	200	NE	ND	15	6.9J	15	6.21J	15	ND	15	8.22J	15
TDS (mg/L)/SM2540C	TDS	NA	1,000	NE	-	-	-	-	-	-	-	-	-	-
TSS (mg/L)/SM2540D	TSS	NA	NE	NE	-	-	-	-	-	-	-	-	-	-
Field Data														
	Temperature (Deg.C)	---	---	---	17		18.8		17.1		17.2		18.4	
	Spec. Conductivity (us/cm)	---	---	---	421		407		425		424		401	
	pH	---	---	---	8.1		8.75		8.02		8.05		8.54	
	ORP (mV)	---	---	---	172.3		171.2		142.5		186.8		182.4	
	DO (mg/L)	---	---	---	7.7		3.33		6.46		7.47		2.95	

Attachment 2
Groundwater Extraction Well and Groundwater Treatment System Analtyical Data

				LOCATION CODE	GWTS-EFF		GWTS-INF		GWTS-GAC1		GWTS-EFF		KAFB-106233	
				SAMPLE NO	GWTS-EFF-0007		GWTS-INF-0008		GWTS-GAC1-0008		GWTS-EFF-0008		GW2601	
				SAMPLE DATE	31-Dec-15		7-Jan-16		7-Jan-16		7-Jan-16		13-Jan-16	
				SAMPLE TIME	8:30		9:00		9:10		9:20		14:36	
				SAMPLE DAY	Thursday		Thursday		Thursday		Thursday		Wednesday	
				DAY NUMBER	7		Week 1		Week 1		Week 1		Initial Sample	
				SAMPLE PURPOSE	REG		REG		REG		REG		REG	
				LABORATORY	Empirical		Empirical		Empirical		Empirical		Empirical	
				LAB DATA DUE	1/5/2016		1/15/2016		1/15/2016		1/15/2016		1/21/2016	
Chemical Class & Analytical Method	Parameter	Toxicity Characteristics (40 CFR 264.24)	NMED Ground Water Protection Standards (Sec. 20.6.2.3103)	EPA MCLs[a]	Result	LOQ	Result	LOQ	Result	LOQ	Result	LOQ	Result	LOQ
Draft Analytical Data														
EDB (ug/L)SW8011	1,2-DIBROMOETHANE	NE	0.1	0.05	ND	0.0287	0.176	0.0283	ND	0.0286	ND	0.0284	0.00982J	0.0284
VOC (ug/L)/ SW8260B	BENZENE	500	10	5	ND	1	ND	1	ND	1	ND	1	ND	1
	ETHYLBENZENE	NE	750	700	ND	1	ND	1	ND	1	ND	1	0.26J	1
	TOLUENE	NE	750	1000	ND	1	ND	1	ND	1	ND	1	1.17	1
	XYLENES	NE	620	10000	ND	3	ND	3	ND	3	ND	3	1.54J	3
Metals (ug/L)/SW6010C	IRON, DISSOLVED	NE	1,000	NE	54.9J	100	ND	100	ND	100	ND	100	ND	25
	MANGANESE, DISSOLVED	NE	200	NE	7.8J	15	ND	15	7.05J	15	8.37J	15	69.3	3.75
TDS (mg/L)/SM2540C	TDS	NA	1,000	NE	-	-	-	-	-	-	-	-	195	20
TSS (mg/L)/SM2540D	TSS	NA	NE	NE	-	-	-	-	-	-	-	-	ND	4
Field Data														
	Temperature (Deg.C)	---	---	---	17.9		18.4		17.1		16.4		18.8	
	Spec. Conductivity (us/cm)	---	---	---	416		424		418		430		387	
	pH	---	---	---	8.42		7.94		8.3		7.87		6.42	
	ORP (mV)	---	---	---	194.9		151		164.7		158.16		200.1	
	DO (mg/L)	---	---	---	6.28		7.76		2.8		6.68		8.16	

Attachment 2
Groundwater Extraction Well and Groundwater Treatment System Analtyical Data

				LOCATION CODE	KAFB-106234		GWTS-INF		GWTS-GAC1		GWTS-EFF		GWTS-INF	
				SAMPLE NO	GW2602		GWTS-INF-0009		GWTS-GAC1-0009		GWTS-EFF-0009		GWTS-INF-0010	
				SAMPLE DATE	13-Jan-16		14-Jan-16		14-Jan-16		14-Jan-16		21-Jan-16	
				SAMPLE TIME	14:52		9:28		9:40		9:53		16:08	
				SAMPLE DAY	Wednesday		Thursday		Thursday		Thursday		Thursday	
				DAY NUMBER	Initial Sample		Week 2		Week 2		Week 2		Week 3 & Day 1	
				SAMPLE PURPOSE	REG		REG		REG		REG		REG	
				LABORATORY	Empirical		Empirical		Empirical		Empirical		Empirical	
				LAB DATA DUE	1/21/2016		1/22/2016		1/22/2016		1/22/2016		1/26/2016	
Chemical Class & Analytical Method	Parameter	Toxicity Characteristics (40 CFR 264.24)	NMED Ground Water Protection Standards (Sec. 20.6.2.3103)	EPA MCLs[a]	Result	LOQ	Result	LOQ	Result	LOQ	Result	LOQ	Result	LOQ
Draft Analytical Data														
EDB (ug/L)SW8011	1,2-DIBROMOETHANE	NE	0.1	0.05	0.112	0.0284	0.15	0.286	ND	0.0287	ND	0.0284	0.146	0.0284
VOC (ug/L)/ SW8260B	BENZENE	500	10	5	ND	1	ND	1	ND	1	ND	1	ND	1
	ETHYLBENZENE	NE	750	700	ND	1	ND	1	ND	1	ND	1	ND	1
	TOLUENE	NE	750	1000	0.278J	1	ND	1	ND	1	ND	1	0.661J	1
	XYLENES	NE	620	10000	0.921J	3	ND	3	ND	3	ND	3	ND	3
Metals (ug/L)/SW6010C	IRON, DISSOLVED	NE	1,000	NE	ND	25	ND	100	ND	100	37.3J	100	ND	100
	MANGANESE, DISSOLVED	NE	200	NE	8.23	3.75	ND	15	ND	15	3.69J	15	5.55J	15
TDS (mg/L)/SM2540C	TDS	NA	1,000	NE	360	20	-	-	-	-	-	-	-	-
TSS (mg/L)/SM2540D	TSS	NA	NE	NE	ND	4	-	-	-	-	-	-	-	-
Field Data														
	Temperature (Deg.C)	---	---	---	16.4		18.8		18.9		18.8		14.3	
	Spec. Conductivity (us/cm)	---	---	---	701		425		431		444		490	
	pH	---	---	---	7.86		7.62		7.83		7.47		7.35	
	ORP (mV)	---	---	---	219.9		202.8		221.9		188.3		188.9	
	DO (mg/L)	---	---	---	3.22		7.2		1.7		6.54		7.99	

Attachment 2
Groundwater Extraction Well and Groundwater Treatment System Analtyical Data

				LOCATION CODE	GWTS-GAC1		GWTS-EFF		GWTS-INF		GWTS-GAC1		GWTS-EFF	
				SAMPLE NO	GWTS-GAC1-0010		GWTS-EFF-0010		GWTS-INF-0020		GWTS-GAC1-0020		GWTS-EFF-0020	
				SAMPLE DATE	21-Jan-16		21-Jan-16		23-Feb-16		23-Feb-16		23-Feb-16	
				SAMPLE TIME	15:58		15:40		13:25		13:45		14:05	
				SAMPLE DAY	Thursday		Thursday		Tuesday		Tuesday		Tuesday	
				DAY NUMBER	Week 3 & Day 1		Week 3 & Day 1		Monthly		Monthly		Monthly	
				SAMPLE PURPOSE	REG		REG		REG		REG		REG	
				LABORATORY	Empirical		Empirical		Empirical		Empirical		Empirical	
				LAB DATA DUE	1/26/2016		1/26/2016		3/2/2016		3/2/2016		3/2/2016	
Chemical Class & Analytical Method	Parameter	Toxicity Characteristics (40 CFR 264.24)	NMED Ground Water Protection Standards (Sec. 20.6.2.3103)	EPA MCLs[a]	Result	LOQ	Result	LOQ	Result	LOQ	Result	LOQ	Result	LOQ
Draft Analytical Data														
EDB (ug/L)SW8011	1,2-DIBROMOETHANE	NE	0.1	0.05	ND	0.0286	ND	0.0281	0.0842	0.0284	ND	0.0282	ND	0.0281
VOC (ug/L)/ SW8260B	BENZENE	500	10	5	ND	1	ND	1	ND	1	ND	1	ND	1
	ETHYLBENZENE	NE	750	700	ND	1	ND	1	ND	1	ND	1	ND	1
	TOLUENE	NE	750	1000	ND	1	ND	1	ND	1	ND	1	ND	1
	XYLENES	NE	620	10000	ND	3	ND	3	ND	3	ND	3	ND	3
Metals (ug/L)/SW6010C	IRON, DISSOLVED	NE	1,000	NE	ND	100	ND	100	ND	100	ND	100	ND	100
	MANGANESE, DISSOLVED	NE	200	NE	25.6	15	11.5J	15	ND	15	ND	15	ND	15
TDS (mg/L)/SM2540C	TDS	NA	1,000	NE	-	-	-	-	-	-	-	-	-	-
TSS (mg/L)/SM2540D	TSS	NA	NE	NE	-	-	-	-	-	-	-	-	-	-
Field Data														
	Temperature (Deg.C)	---	---	---	10.8		17.2		19.4		19.4		19.5	
	Spec. Conductivity (us/cm)	---	---	---	463		570		505		471		496	
	pH	---	---	---	7.42		7.34		7.38		7.49		7.41	
	ORP (mV)	---	---	---	191.6		195.4		153		179.2		192.6	
	DO (mg/L)	---	---	---	3		6.96		7.21		4.2		6.87	

Attachment 2

Groundwater Extraction Well and Groundwater Treatment System Analtyical Data

				LOCATION CODE	GWTS-INF		GWTS-GAC1		GWTS-EFF	
				SAMPLE NO	GWTS-INF-0012		GWTS-GAC1-0012		GWTS-EFF-0012	
				SAMPLE DATE	22-Mar-16		22-Mar-16		22-Mar-16	
				SAMPLE TIME	13;40		13:20		13:00	
				SAMPLE DAY	Tuesday		Tuesday		Tuesday	
				DAY NUMBER	Monthly		Monthly		Monthly	
				SAMPLE PURPOSE	REG		REG		REG	
				LABORATORY	Empirical		Empirical		Empirical	
				LAB DATA DUE	3/30/2016		3/30/2016		3/30/2016	
Chemical Class & Analytical Method	Parameter	Toxicity Characteristics (40 CFR 264.24)	NMED Ground Water Protection Standards (Sec. 20.6.2.3103)	EPA MCLs[a]	Result	LOQ	Result	LOQ	Result	LOQ
Draft Analytical Data										
EDB (ug/L)SW8011	1,2-DIBROMOETHANE	NE	0.1	0.05	0.0756	0.0283	ND	0.0286	ND	0.0282
VOC (ug/L)/ SW8260B	BENZENE	500	10	5	ND	1	ND	1	ND	1
	ETHYLBENZENE	NE	750	700	ND	1	ND	1	ND	1
	TOLUENE	NE	750	1000	ND	1	ND	1	ND	1
	XYLENES	NE	620	10000	ND	3	ND	3	ND	3
Metals (ug/L)/SW6010C	IRON, DISSOLVED	NE	1,000	NE	ND	100	ND	100	ND	100
	MANGANESE, DISSOLVED	NE	200	NE	ND	15	ND	15	ND	15
TDS (mg/L)/SM2540C	TDS	NA	1,000	NE	-	-	-	-	-	-
TSS (mg/L)/SM2540D	TSS	NA	NE	NE	-	-	-	-	-	-
Field Data										
	Temperature (Deg.C)	---	---	---	19.9		19.5		19.5	
	Spec. Conductivity (us/cm)	---	---	---	460		472		473	
	pH	---	---	---	7.57		7.46		7.42	
	ORP (mV)	---	---	---	92.6		74.7		59.2	
	DO (mg/L)	---	---	---	6.29		5.85		6.15	

Attachment 2
Groundwater Extraction Well and Groundwater Treatment System Analtyical Data

Notes:

Laboratory results greater than EPA MCLs or NMED Groundwater Protection Standards are highlighted in yellow.

a = EPA MCLs are from the EPA RSL Table, dated Nov. 2015.

ND = not detected

NE = not established

- = not required

LOQ = Limit of Quantitation

J = analyte was detected at a trace level below the LOQ

ug/L = micrograms per liter

mg/L = milligrams per liter

The concentrations of iron and manganese for day 7 samples (12/31/15 sample date) are reported as total, not dissolved. Samples were not filtered in the field and were collected nitric acid containers.

12/16/15 thru 1/14/16: influent samples were collected from KAFB-106228

Starting 1/21/16: influent samples were collected from KAFB-106228, 106233 and 106234

APPENDIX N

User Operational Adjustments Documentation

KAFB-7 OPERATING PRESSUE INCREASE

McKeage, Kevin

From: Simpler, Trent W CIV USARMY CESPA (US) <Trent.Simpler@usace.army.mil>
Sent: Thursday, June 01, 2017 12:26 PM
To: McKeage, Kevin; SANCHEZ, AMY ELIZABETH CIV USARMY CESPA (US); Salazar, Carlos F CIV USARMY CESPA (US); Phaneuf, Mark J CIV USARMY CESPA (US); Dreeland, Linda E CIV USARMY CESPA (US); Jaramillo, Eugene A CIV (US)
Cc: Jercinovic, Devon; Ferrari, Peter; Curley, Tyler
Subject: RE: Kirtland BFF - KAFB-7 Leaking ARV and V-Smart Valve Adjustment

I concur with trying higher PSI next time we send water to well 7.

Thanks
Trent

Trent Simpler, P.E.
Project Manager BFF
Chair Wind Energy CX
Red Team LGL
US Army Corps of Engineers
Trent.Simpler@usace.army.mil
505-342-4823 (office)
505-301-6996 (mobile)

-----Original Message-----
From: McKeage, Kevin [mailto:kmckeage@eaest.com]
Sent: Friday, May 26, 2017 2:22 PM
To: Simpler, Trent W CIV USARMY CESPA (US) <Trent.Simpler@usace.army.mil>; SANCHEZ, AMY ELIZABETH CIV USARMY CESPA (US) <Amy.E.Sanchez@usace.army.mil>; Salazar, Carlos F CIV USARMY CESPA (US) <Carlos.F.Salazar@usace.army.mil>; Phaneuf, Mark J CIV USARMY CESPA (US) <Mark.J.Phaneuf@usace.army.mil>; Dreeland, Linda E CIV USARMY CESPA (US) <Linda.E.Dreeland@usace.army.mil>; Jaramillo, Eugene A CIV (US) <Eugene.A.Jaramillo@usace.army.mil>
Cc: Jercinovic, Devon <djercinovic@eaest.com>; Ferrari, Peter <pferrari@eaest.com>; Curley, Tyler <tcurley@eaest.com>
Subject: [Non-DoD Source] Kirtland BFF - KAFB-7 Leaking ARV and V-Smart Valve Adjustment

USACE Team,

Last month Gene Jaramillo indicated that the USACE would like for EA to resolve the continuous leaking of the ARV at KAFB-7 (not seating properly). He proposed closing the gate valve beneath the ARV to keep it from leaking. When EA personnel performed this change the pressure transmitter at the wellhead indicated a vacuum was created in the line and the V-smart valve temporarily stopped functioning as intended (PLC is unable to actuate the valve when the pressure transmitter reports negative values). Since that time, EA personnel have attempted to retain ARV function while limiting ARV leaking by adjusting the gate valve beneath the ARV and raising the programmed wellhead pressure set point from 3 to 5 psi.

Originally, CB&I had set the wellhead pressure set point to operate between 8-12 psi. During the GWTS expansion and programming updates by I&C Systems, they recommended the wellhead pressure set point be lowered to 3 psi. Neither of these troubleshooting techniques resolved the issue, so EA contacted the valve's manufacturer on Wednesday 24MAY17 when we could not locate a basis of design for the valve. Upon review of the manufacturer's design specifications (attached), EA has confirmed that the valve operation was designed for a wellhead pressure of 25 psi. EA now proposes increasing the wellhead pressure set point to 25 psi per the manufacturer's design. EA has confirmed that this proposed operating pressure does not exceed the maximum working pressures for either the effluent conveyance line

transferring water to KAFB-7 or the downhole injection drop pipe terminating in the V-smart valve. Once this change has be made EA personnel will observe if any of the following have occurred:

1.) Seating of the ARVs at the wellhead and along the conveyance line (soft seat replacement has yet to be ordered as basis of design was previously unknown).

2.) Maintenance of a constant pressure in the injection line

3.) Full pipe-flow conditions in the injection drop pipe (no vacuum created)

Increasing the wellhead pressure will cause several settings to need to be adjusted including the following items:

- Injection wellhead pressure PID set point = 25 psi (previously 5 psi)
- Distribution high pressure alarm set point = approx. 40 psi (previously 20 psi)
- Distribution pressure PID set point (upstream pressure) = approx. 35 psi (previously 20 psi)

First the distribution pressure PID set point (upstream pressure) will be adjusted to ensure that there is no induced cavitation on the effluent pumps, then the distribution high pressure alarm set point will be adjusted, and finally the injection wellhead pressure PID set point will be adjusted (with an EA observer at KAFB-7 in contact with EA personnel at the GWTS).

Please let me know if you have any questions or concerns with this plan.

Thank you,

Kevin McKeage, E.I.

Engineer

Cell: (316) 765-1486

Office: (505) 933-6417

kmckeage@eaest.com

EA Engineering, Science, and Technology, Inc., PBC

320 Gold Ave, Suite. 1300

Albuquerque, NM 87102

Blockedwww.eaest.com

From: Robert Tribble [mailto:rob@cactuscontrols.com]
Sent: Wednesday, May 24, 2017 3:37 PM

To: McKeage, Kevin <kmckeage@eaest.com>; Jercinovic, Devon <djercinovic@eaest.com>
Subject: Valve Sizing information, construction materials

Hi Kevin/Devon:

You have a 4", 4-port, V-Smart valve with 304SS construction and 4" NPT thread connections for what my data shows to be 4" galvanized drop pipe. The photos previously sent appear to confirm this. Galvanized pipe is problematic and you may have some serious rust issues and iron related bacteria conditions developing. As this was expected to be a 6 month temporary well, I'm sure this dictated the drop pipe material at the time. Design conditions showed 25 psi at the wellhead with a minimum depth to water of 400'. Valve set depth was supposed to be 520'. The injection rate was expected to be 400 gpm with conditions allowing for a possible future increase to 800 gpm. Shown below is the sizing data provided to CB&I and a drawing of the V-Smart valve. The valve is capable of much higher injection flows since it was built with extra injection capacity above what was required for 400 gpm. Your valve is capped at the bottom coupling since no backflush pump was installed. You can remove the bottom cap and add a submersible pump below the V-Smart valve if you want to consider redevelopment capabilities for the well.

Please let me know if you have any questions or require any additional information that may be of help.

Thank you,

Rob Tribble

Cactus Controls, Inc.
7345 S Durango Dr., STE B107-176
Las Vegas, NV 89113
(702) 525-0250
rob@cactuscontrols.com <mailto:rob@cactuscontrols.com>

Rob Tribble

Cactus Controls, Inc.
7345 S Durango Dr., STE B107-176
Las Vegas, NV 89113
(702) 525-0250
rob@cactuscontrols.com <mailto:rob@cactuscontrols.com>

REPLACEMENT KUNKLE LIQUID RELIEF VALVE IN KAFB-106233

McKeage, Kevin

From: SANCHEZ, AMY ELIZABETH CIV USARMY CESPA (US) <Amy.E.Sanchez@usace.army.mil>
Sent: Tuesday, May 16, 2017 10:31 AM
To: Salazar, Carlos F CIV USARMY CESPA (US); Simpler, Trent W CIV USARMY CESPA (US); McKeage, Kevin; Phaneuf, Mark J CIV USARMY CESPA (US); Dreeland, Linda E CIV USARMY CESPA (US)
Cc: Jercinovic, Devon; Curley, Tyler; Becker, Lee
Subject: RE: Kirtland BFF - Operational Vault Changes

I also concur with proposed recommendations.

Thanks,
Amy

-----Original Message-----
From: Salazar, Carlos F CIV USARMY CESPA (US)
Sent: Tuesday, May 16, 2017 10:23 AM
To: Simpler, Trent W CIV USARMY CESPA (US) <Trent.Simpler@usace.army.mil>; McKeage, Kevin <kmckeage@eaest.com>; SANCHEZ, AMY ELIZABETH CIV USARMY CESPA (US) <Amy.E.Sanchez@usace.army.mil>; Phaneuf, Mark J CIV USARMY CESPA (US) <Mark.J.Phaneuf@usace.army.mil>; Dreeland, Linda E CIV USARMY CESPA (US) <Linda.E.Dreeland@usace.army.mil>
Cc: Jercinovic, Devon <djercinovic@eaest.com>; Curley, Tyler <tcurley@eaest.com>; Becker, Lee <lbecker@eaest.com>
Subject: RE: Kirtland BFF - Operational Vault Changes

I also concur.

Carlos

-----Original Message-----
From: Simpler, Trent W CIV USARMY CESPA (US)
Sent: Tuesday, May 16, 2017 10:20 AM
To: McKeage, Kevin <kmckeage@eaest.com>; SANCHEZ, AMY ELIZABETH CIV USARMY CESPA (US) <Amy.E.Sanchez@usace.army.mil>; Salazar, Carlos F CIV USARMY CESPA (US) <Carlos.F.Salazar@usace.army.mil>; Phaneuf, Mark J CIV USARMY CESPA (US) <Mark.J.Phaneuf@usace.army.mil>; Dreeland, Linda E CIV USARMY CESPA (US) <Linda.E.Dreeland@usace.army.mil>
Cc: Jercinovic, Devon <djercinovic@eaest.com>; Curley, Tyler <tcurley@eaest.com>; Becker, Lee <lbecker@eaest.com>
Subject: RE: Kirtland BFF - Operational Vault Changes

I concur with these recommendations. Amy? Carlos?

Thanks
Trent

Trent Simpler, P.E.
Project Manager BFF
Chair Wind Energy CX
Red Team LGL
US Army Corps of Engineers
Trent.Simpler@usace.army.mil
505-342-4823 (office)
505-301-6996 (mobile)

-----Original Message-----

From: McKeage, Kevin [mailto:kmckeage@eaest.com]
Sent: Tuesday, May 16, 2017 9:16 AM
To: Simpler, Trent W CIV USARMY CESPA (US) <Trent.Simpler@usace.army.mil>; SANCHEZ, AMY ELIZABETH CIV USARMY CESPA (US) <Amy.E.Sanchez@usace.army.mil>; Salazar, Carlos F CIV USARMY CESPA (US) <Carlos.F.Salazar@usace.army.mil>; Phaneuf, Mark J CIV USARMY CESPA (US) <Mark.J.Phaneuf@usace.army.mil>; Dreeland, Linda E CIV USARMY CESPA (US) <Linda.E.Dreeland@usace.army.mil>
Cc: Jercinovic, Devon <djercinovic@eaest.com>; Curley, Tyler <tcurley@eaest.com>; Becker, Lee <lbecker@eaest.com>
Subject: [Non-DoD Source] Kirtland BFF - Operational Vault Changes

USACE Team,

KAFB-106233 Liquid Relief Valve:

Currently, KAFB-106233 is equipped with a Kunkle Model 20-H01 liquid relief valve with a pressure set point of 200 psi which began leaking during pumping operations 12MAY17. EA recommends decreasing the pressure set point to provide a margin of safety between the liquid relief valve set point pressure and the maximum pressure rating of the HDPE dual wall conveyance line (200 psi rated). EA is proposing to replace the leaking liquid relief valve with the same model valve (20-H01) but with a lower set point of 150 psi.

Vault Leak Detection Elevation Increase:

Currently the wellhead vaults for KAFB-106233 and KAFB-106234 can contain a total volume of approximately 628 gallons (7'x3'x4', assuming negligible volume loss due to the presence of installed lines and equipment) and the leak detection sensors are placed approximately 4 inches off of the vault floor which is the equivalent of approximately 50 gallons of water in the vault (8% of the vault volume). With the current position of the leak detection sensors, rain events typically cause the vaults to collect enough surface water run-off to activate the sensors and result in erroneous well and/or system shutdowns. EA is proposing that the leak sensors be moved to approximately 12 inches above the vault floor which is approximately 157 gallons (25% of the vault volume). This height is equivalent to the top of the 3-inch steel pipe in the vault.

In the event that the line between the pitless adaptor and the check valve were to fail while the pump was not currently in operation, approximately 2.5 gallons of water would be leaked into the vault resulting in a depth of less than a quarter of an inch in the vault (not enough to be detected by the current leak detection sensor position). Additionally if the line failed during pumping, the current sensor position (4 inches) would alarm and shutdown the system within 17 seconds. If the leak detection sensors are adjusted to approximately 12 inches from the vault bottom, a line failure during pumping would be detected within 1 minute of the failure. Since the system currently responds to vault leak alarms nearly instantaneously, there is very little increase in risk imposed by this short delay in system shutdown. Additionally this would decrease the amount of unnecessary downtime for wells and/or the entire system during and after rain events.

Please let us know how you would like these field changes documented and if you have any questions or concerns.

Thank you,

Kevin McKeage, E.I.

Engineer

Cell: (316) 765-1486

Office: (505) 933-6417

kmckeage@eaest.com <mailto:kmckeage@eaest.com>

EA Engineering, Science, and Technology, Inc., PBC

320 Gold Ave, Suite. 1300

Albuquerque, NM 87102

Blockedwww.eaest.com <Blockedhttp://www.eaest.com>

-----Original Message-----

From: Simpler, Trent W CIV USARMY CESPA (US) [mailto:Trent.Simpler@usace.army.mil <mailto:Trent.Simpler@usace.army.mil>]

Sent: Monday, May 15, 2017 2:03 PM

To: Jercinovic, Devon <djercinovic@eaest.com <mailto:djercinovic@eaest.com> >; McKeage, Kevin <kmckeage@eaest.com <mailto:kmckeage@eaest.com> >

Cc: SANCHEZ, AMY ELIZABETH CIV USARMY CESPA (US) <Amy.E.Sanchez@usace.army.mil <mailto:Amy.E.Sanchez@usace.army.mil> >; Salazar, Carlos F CIV USARMY CESPA (US) <Carlos.F.Salazar@usace.army.mil <mailto:Carlos.F.Salazar@usace.army.mil> >; Dreeland, Linda E CIV USARMY CESPA (US) <Linda.E.Dreeland@usace.army.mil <mailto:Linda.E.Dreeland@usace.army.mil> >; Phaneuf, Mark J CIV USARMY CESPA (US) <Mark.J.Phaneuf@usace.army.mil <mailto:Mark.J.Phaneuf@usace.army.mil> >

Subject: Vault changes

Devon,

Your proposed changes to the pressure valve and moving the flood sensor (and other standard maintenance items) are considered user maintenance or safety changes and you only need to send us an email explaining what you want to change and why (short email) and we will approve.

Thanks

Trent

Trent Simpler, P.E.

Project Manager BFF

Chair Wind Energy CX

Red Team LGL

US Army Corps of Engineers

Trent.Simpler@usace.army.mil <mailto:Trent.Simpler@usace.army.mil>

505-342-4823 (office)

505-301-6996 (mobile)

KUNKLE

Non-code Bronze Liquid Relief Valves

Features

- Both inlet and outlet connections are cast integral with body to permit easy inspection and servicing without disconnecting piping.
- Beveled seats lapped for optimum performance.
- Stainless Steel (SS) spring for optimum corrosion resistance.
- Each Kunkle valve is tested and inspected for pressure setting and leakage.

Model Descriptions

Model 19: All bronze, equipped with handwheel for easy adjustment within spring ranges.

Model 19M: Same as model 19 except SS trim (seat and disc). Available 2 1/2" and 3" only. For higher pressure settings or severe applications.

Model 20: All bronze, with pressure-tight cap. Suitable for maximum back pressure of 50 psig.[1]

Model 20M: Same as model 20 except SS trim. Available in 2 1/2" and 3" only (seat and disc). For higher pressure settings or severe applications. Maximum back pressure of 50 psig.[1]

Model 20P: Same as model 20 except with packed lift lever. Suitable for maximum back pressure of 50 psig.[1]

Model 20MP: Same as model 20M except with packed lift lever. Maximum back pressure of 50 psig.[1]

Model 200A: Special non-chattering design. Recommended for light oils and continuous by-pass or pressure regulation. UL842 listed for light oil service. Available 3/4" to 1 1/2" sizes. Female NPT connections only.

Model 200H: Same as model 20. UL842 listed for use with fuel oils. Available 3/4" to 2" sizes.

Applications

- Non-code liquid relief.
- Overpressure relief and protection of pumps, tanks, lines and hydraulic systems.

Model 20

- Pressure regulation.
- Continuous by-pass relief.

Options

- Available with optional female NPT inlet or flanged inlet and outlet connections.
- **Model 19**
  Variation 10: 1 to 150 psig adjustable spring range
  Variation 11: 151 to 300 psig adjustable spring range
- **Model 20-D**
  Variation 05: 50 to 150 psig spring range
  Variation 06: 100 to 300 psig

Pressure and Temperature Limits

Models 19, 20, 20P:
1 to 300 psig
-60° to 406°F

Models 19M, 20M, 20MP:
1 to 500 psig
-60° to 406°F

Models 200A, 200H:
1 to 200 psig
-60° to 406°F

Note

1. Back pressure increases set pressure on a one to one basis, and reduces capacity. Back pressure in excess of 10% of set pressure is not recommended.

Parts and Materials

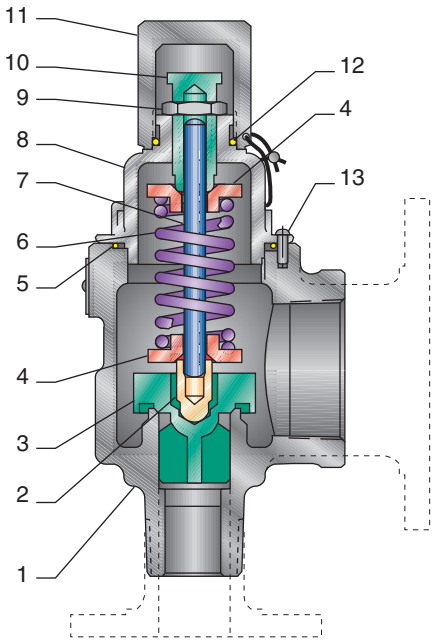

Models 20, 200H with Pressure Tight Cap

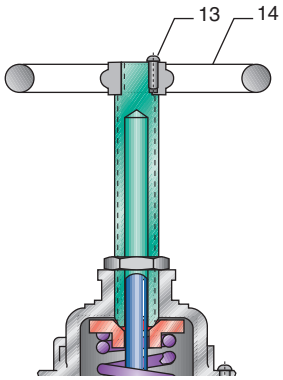

Model 19, 19M

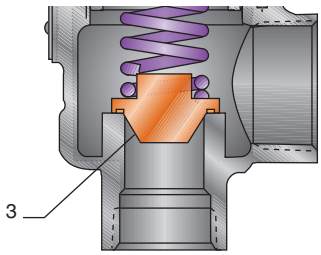

Model 200A

Parts and Materials

No.	Part Name	19, 19M	20, 20M, 20P, 20MP, 200A, 200H
1	Body[1]	Bronze B62	Bronze B62
2	Stem Retainer	Brass B16	Brass B16
3	Disc	Bronze B584 Alloy 84400[2,3]	Bronze B584 Alloy 84400[2,3]
4	Spring Step	Brass B16	Brass B16
5	O-ring	Teflon®	Teflon®
6	Spring	SS 316 or 17-7	SS 316 or 17-7
7	Stem	Brass B16	Brass B16
8	Bonnet	Bronze B584 Alloy 84400	Bronze B584 Alloy 84400
9	Jam Nut	Steel A108 Zinc Plated	Brass B16
10	Compression Screw	Brass B16	Brass B16
11	Cap	N/A	Brass B16
12	O-ring	N/A	BUNA-N
13	Drive Screw[6]	SS Commercial	SS Commercial
14	Handwheel	Iron A126 Zinc Plated[5]	N/A

Notes

1. Flanged connections optional.
2. Models 19, 20, 20P, 200H are brass, B283, Alloy 485, for 1/2", 3/4", and 1".
3. Models 19M, 20M, and 20MP are SS A743-CF8.
4. Model 200A is brass B16.
5. Bronze B584 Alloy 84400 for 1/2", 3/4", 1 1/4".
6. Not used on bonnet for 2 1/2" and 3".

Parts and Materials

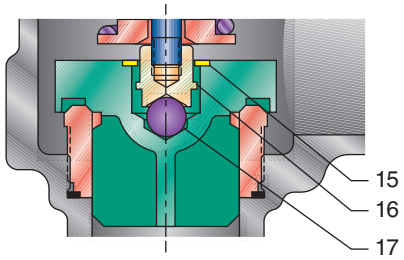

Models 19M, 20M and 20MP
2½" Seat Configuration

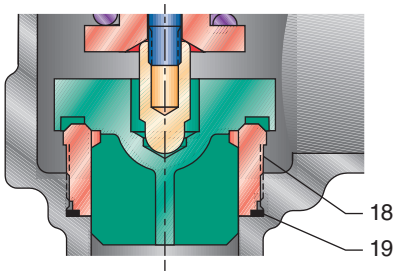

Models 19M, 20M and 20MP
3" Seat Configuration

Parts and Materials

No.	Part Name	Material
15	Retainer Washer	SS PH15-7MO
16	Stem End	SS A582-303
17	Ball	SS A756-440
18	Insert	SS A743 GR CF8
19	O-ring	Teflon®

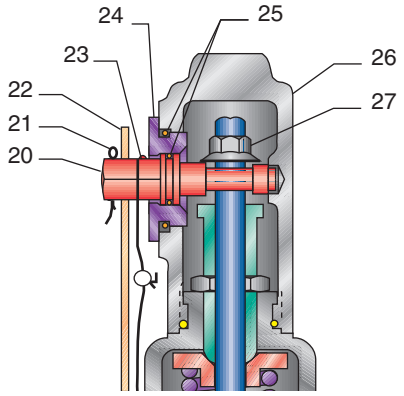

Models 20MP and 20P With Lever

Parts and Materials

No.	Part Name	20P, 20MP
20	Lift Cam	SS A743-316
21	Cotter Pin	Steel
22	Lever	Steel A108 Zinc Plated
23	Drive Screw	SS Commercial
24	Retainer Cam	Brass B16
25	O-ring	BUNA-N
26	Cap	Bronze B584 Alloy 84400
27	Lift Nut	Steel A108

Liquid Relief Valves

Specifications

Size Inlet/Outlet NPT, (in)	Min/Max Set Pressure, (psig[1]) 19, 20, 20P	200A, 200H	19M, 20M, 20MP	Min/Max Temp. (°F)	Approximate Wt., (lb)
1/2[2]	1/300	—	—	-60/406	2 1/4
3/4	1/300	1/200	—	-60/406	2 1/4
1	1/300	1/200	—	-60/406	3 1/2
1 1/4	1/300	1/200	—	-60/406	5
1 1/2	1/300	1/200	—	-60/406	6 1/4
2	1/300	1/200	—	-60/406	11
2 1/2	1/300	—	1/500	-60/406	16
3	1/300	—	1/500	-60/406	25

Dimensions

Valve Model	Threaded A	B	C	150/300 Flange D	E	F
1/2" Size						
19	2	1 5/8	6 1/8	3 5/16	3 5/16	7 3/8
20	2	1 5/8	5 7/8	3 5/16	3 5/16	7 1/4
20P	2	1 5/8	7 3/8	—	—	—
3/4" Size						
19	2	1 5/8	6 1/8	3 5/16	3 5/16	7 3/8
20	2	1 5/8	5 7/8	3 5/16	3 5/16	7 1/4
20P	2	1 5/8	7 3/8	3 5/16	3 5/16	8 3/4
200A	2	1 5/8	5 7/8	—	—	—
200H	1 15/16	1 5/8	5 7/8	3 5/16	3 5/16	7 3/8
1" Size						
19	2 1/4	1 7/8	7 1/8	3 7/16	3 7/16	8 1/4
20	2 1/4	1 7/8	6 3/4	3 7/16	3 7/16	7 7/8
20P	2 1/4	1 7/8	8 3/4	3 7/16	3 7/16	9 1/2
200A	2 1/4	1 7/8	6 3/4	—	—	—
200H	2 1/4	1 7/8	6 11/16	3 7/16	3 7/16	8

Dimensions are for reference only.

Notes

1. All flanges rated per ANSI B16.24.
2. Standard with 3/4" outlet - 1/2" outlet optional.

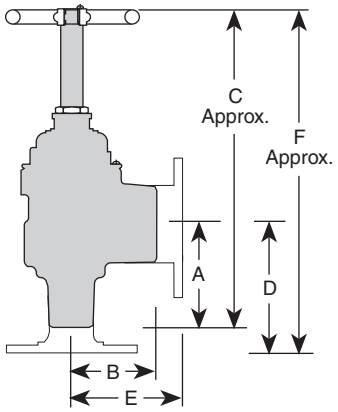

Models 19, 19M

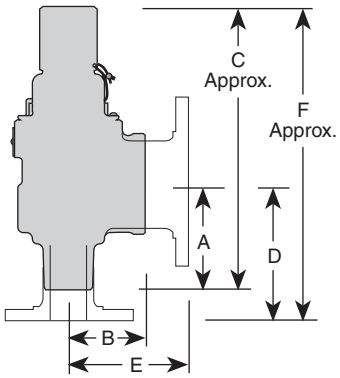

Models 20, 20M, 200A, 200H

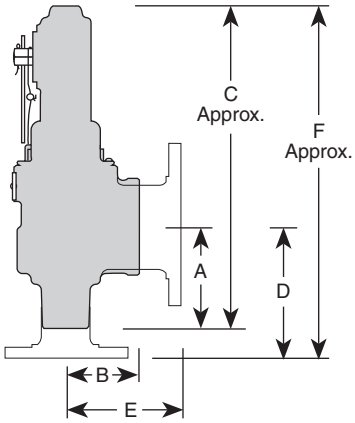

Models 20P, 20MP

Liquid Relief Valves

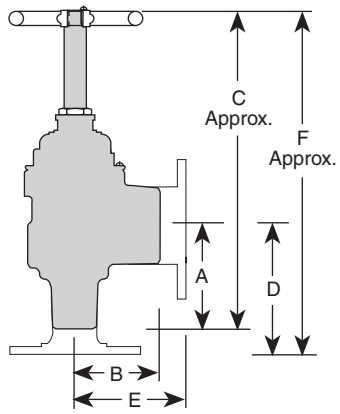

Models 19, 19M

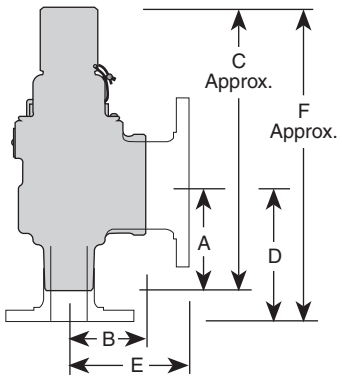

Models 20, 20M, 200A, 200H

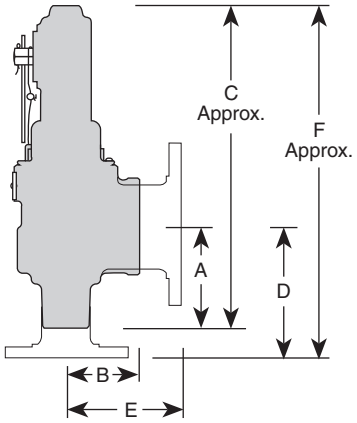

Models 20P, 20MP

Dimensions, inches

Valve Model	Threaded			150/300 Flange		
	A	B	C	D	E	F
1¼" Size						
19	2 5/8	2 1/16	8 1/8	3 11/16	3 11/16	9 1/8
20	2 5/8	2 1/16	8 1/8	3 11/16	3 11/16	8 3/8
20P	2 5/8	2 1/16	9	3 11/16	3 11/16	10
200A	2 5/8	2 1/16	7 3/8	—	—	—
200H	2 5/8	2 1/16	7 3/8	3 11/16	3 11/16	8 5/8
1½" Size						
19	2 11/16	2 1/8	8 5/8	4 1/8	4 1/8	10 1/8
20	2 11/16	2 1/8	8 5/8	4 1/8	4 1/8	9 1/4
20P	2 11/16	2 1/8	9 1/4	4 1/8	4 1/8	10 3/4
200A	2 11/16	2 1/8	7 7/8	—	—	—
200H	2 11/16	2 1/8	7 7/8	4 1/8	4 1/8	9 1/2
2" Size						
19	3 1/2	2 11/16	10 5/8	4 1/4	4 1/4	11 1/4
20	3 1/2	2 11/16	10 5/8	4 1/4	4 1/4	10 5/8
20P	3 1/2	2 11/16	12 1/2	4 1/4	4 1/4	13 1/8
200H	3 1/2	2 11/16	9 15/16	4 1/2	4 1/4	10 15/16
2½" Size						
19	3 7/8	3	11 1/8	4 3/4	4 3/4	12
19M	3 7/8	3	11 1/8	4 3/4	4 3/4	12 1/4
20	3 7/8	3	10	4 3/4	4 3/4	13 5/16
20M	3 7/8	3	10	4 3/4	4 3/4	13 9/16
20P	3 7/8	3	12 1/2	4 3/4	4 3/4	15 3/4
20MP	3 7/8	3	12 1/2	54 3/4	4 3/4	16 1/16
3" Size						
19	4 5/8	3 7/8	12 1/4	5	5	12 5/8
19M	4 5/8	3 7/8	12 1/4	5	5	13 1/8
20	4 5/8	3 7/8	12 1/4	5	5	14 3/4
20M	4 5/8	3 7/8	12 1/4	5	5	15 1/8
20P	4 5/8	3 7/8	14 3/8	5	5	16 7/8
20MP	4 5/8	3 7/8	14 3/8	5	5	17 1/4

Dimensions are for reference only.

Models 19, 19M, 20, 20M, 20MP, 20P and 200H Capacities Liquid Relief Valves

Non-code Liquid Capacity - 25% Accumulation (GPM)

Set Pressure (psig)	Valve Inlet and Outlet Size							
	1/2"	3/4"	1"	1 1/4"	1 1/2"	2"	2 1/2"	3"
1	1	2	4	6	10	19	31	45
5	2	5	8	14	22	42	68	100
10	3	7	11	20	31	59	97	141
20	4	9	16	28	43	84	137	200
30	5	11	20	34	53	102	168	244
40	6	13	23	39	61	118	193	282
50	7	15	25	44	68	132	216	315
60	7	16	28	48	75	145	237	346
70	8	17	30	52	81	156	256	373
80	8	19	32	55	87	167	274	399
90	9	20	34	59	92	177	290	423
100	9	21	36	62	97	187	306	446
110	10	22	37	65	102	196	321	468
120	10	23	39	68	106	205	335	489
130	11	24	41	71	110	213	349	509
140	11	25	42	73	115	221	362	528
150	11	25	44	76	119	229	375	546
160	12	26	45	78	123	236	387	564
170	12	27	47	81	126	244	399	582
180	13	28	48	83	130	251	410	599
190	13	29	49	86	134	258	422	615
200	13	29	50	88	137	264	433	631
210	14	30	52	90	140	271	443	646
220	14	31	53	92	144	277	454	662
230	14	32	54	94	147	284	464	677
240	14	32	55	96	150	290	474	691

Note

1. Liquid Overpressure Factors

   To determine capacities at other than 25% overpressure/accumulation, multiply capacity shown by:

   10% Acc. = 0.6
   15% Acc. = 0.8
   20% Acc. = 0.9

Models 19, 19M, 20, 20M, 20MP, 20P and 200H Capacities Liquid Relief Valves

Non-code Liquid Capacity - 25% Accumulation (GPM)

Set Pressure (psig)	Valve Inlet and Outlet Size							
	1/2"	3/4"	1"	1 1/4"	1 1/2"	2"	2 1/2"	3"
250	15	33	56	98	153	296	484	705
260	15	34	58	100	156	301	493	719
270	15	34	59	102	159	307	503	733
280	16	35	60	104	162	313	512	746
290	16	35	61	106	165	318	521	760
300	16	36	62	107	168	323	530	773
310	—	—	—	—	—	—	539	785
320	—	—	—	—	—	—	547	798
330	—	—	—	—	—	—	556	810
340	—	—	—	—	—	—	564	823
350	—	—	—	—	—	—	572	835
360	—	—	—	—	—	—	580	846
370	—	—	—	—	—	—	588	858
380	—	—	—	—	—	—	596	870
390	—	—	—	—	—	—	604	881
400	—	—	—	—	—	—	612	892
410	—	—	—	—	—	—	619	903
420	—	—	—	—	—	—	627	914
430	—	—	—	—	—	—	634	925
440	—	—	—	—	—	—	642	936
450	—	—	—	—	—	—	649	946
460	—	—	—	—	—	—	656	957
470	—	—	—	—	—	—	663	967
480	—	—	—	—	—	—	670	977
490	—	—	—	—	—	—	677	987
500	—	—	—	—	—	—	684	998

Note

1. Liquid Overpressure Factors

   To determine capacities at other than 25% overpressure/accumulation, multiply capacity shown by:

   10% Acc. = 0.6
   15% Acc. = 0.8
   20% Acc. = 0.9

200A Capacities at 25%, 50%, 75% and 100% Accumulation (GPM)

Model 200A "D" - 3/4"

	Overpressure			
psi	25%	50%	75%	100%
5	1.2	1.9	2.7	3.7
10	1.2	2.0	2.8	4.4
15	1.3	2.0	2.9	4.7
20	1.5	2.2	3.0	5.2
25	1.5	2.2	3.0	6.0
30	1.5	2.2	3.1	6.5
35	1.5	2.5	3.3	7.4
40	1.7	2.6	3.5	8.5
45	1.9	2.8	3.6	9.6
50	2.0	3.0	3.8	11.0
55	2.2	3.2	4.0	12.2
60	2.3	3.4	4.2	13.5
65	2.4	3.5	4.4	14.8
70	2.5	3.7	4.5	16.0
75	2.6	4.0	4.7	17.1
80	2.8	4.2	5.0	18.2
85	2.9	4.4	5.1	19.3
90	3.0	4.6	5.4	20.2
95	3.1	4.7	5.5	21.0
100	3.1	4.8	5.7	21.4
105	3.3	5.0	6.0	21.5
110	3.4	5.1	6.1	21.4
115	3.4	5.3	6.2	21.0
120	3.5	5.5	6.4	20.5
125	3.5	5.6	6.5	20.2
130	3.5	5.8	6.7	19.8
135	3.7	6.0	6.9	20.0
140	3.7	6.1	7.0	20.2
145	3.8	6.2	7.0	20.8
150	3.8	6.3	7.2	21.5
155	4.0	6.5	7.4	22.0
160	4.0	6.5	7.5	22.9
165	4.0	6.5	7.6	23.7
170	4.0	6.6	7.8	24.6
175	4.1	6.8	8.2	25.5
180	4.2	6.9	8.5	26.8
185	4.3	6.9	9.0	28.5
190	4.4	7.0	10.0	30.5
195	4.4	7.0	11.5	33.5
200	4.5	7.0	12.9	36.2

Model 200A "E" - 1"

	Overpressure			
psi	25%	50%	75%	100%
5	0.7	1.0	1.3	2.5
10	1.1	1.5	2.0	4.2
15	1.5	2.0	2.7	5.9
20	1.7	2.5	3.5	7.5
25	2.0	2.9	4.1	9.5
30	2.2	3.2	4.6	11.0
35	2.5	3.6	5.0	12.9
40	2.6	4.0	5.5	14.5
45	2.8	4.2	5.8	16.5
50	2.9	4.5	6.0	18.4
55	3.0	4.8	6.4	20.1
60	3.2	5.0	6.6	22.0
65	3.4	5.2	6.8	24.0
70	3.5	5.5	7.1	26.0
75	3.5	5.7	7.3	27.8
80	3.6	6.1	7.5	29.5
85	3.8	6.4	7.7	31.0
90	3.9	6.7	8.1	32.7
95	4.0	6.9	8.2	34.2
100	4.1	7.0	8.5	35.5
105	4.3	7.2	8.7	37.0
110	4.4	7.4	9.0	38.0
115	4.5	7.5	9.1	39.0
120	4.5	7.6	9.2	39.8
125	4.7	7.7	9.5	40.2
130	4.8	7.8	9.6	40.5
135	4.8	8.0	9.7	40.5
140	4.9	8.0	9.8	40.1
145	5.0	8.4	10.0	39.5
150	5.0	8.5	10.0	38.3
155	5.0	8.5	10.2	37.2
160	5.1	8.7	10.4	36.0
165	5.2	9.0	10.5	34.8
170	5.4	9.2	10.8	33.7
175	5.5	9.4	10.9	33.0
180	5.5	9.5	11.0	33.0
185	5.5	9.5	11.2	34.2
190	5.4	9.5	11.3	37.5
195	5.2	9.5	11.5	43.5
200	5.0	9.5	11.6	48.8

200A Capacities at 25%, 50%, 75% and 100% Accumulation (GPM)

Model 200A "F" - 1 1/4"

	Overpressure			
psi	25%	50%	75%	100%
5	1.0	4.0	5.0	7.0
10	2.5	7.0	7.0	13.5
15	4.0	10.0	12.5	20.0
20	5.0	14.0	16.5	27.5
25	7.5	18.0	21.5	35.0
30	8.0	20.2	25.0	41.5
35	9.5	25.5	29.5	48.5
40	10.0	27.0	33.5	54.5
45	11.0	28.2	38.0	60.0
50	11.8	30.0	42.5	66.5
55	12.5	31.5	47.5	73.0
60	13.0	33.0	52.0	79.0
65	14.0	34.5	56.5	85.5
70	14.8	36.0	61.0	92.0
75	15.5	37.7	65.5	97.5
80	16.2	39.0	69.5	102.7
85	17.0	40.0	73.0	108.0
90	18.0	41.0	76.0	112.0
95	18.5	42.0	78.0	115.5
100	17.5	42.0	78.5	116.7
105	16.5	41.0	77.5	115.7
110	15.5	39.5	74.5	113.0
115	14.5	37.5	70.5	108.5
120	13.5	35.0	66.0	103.5
125	12.5	33.7	62.7	99.8
130	11.5	33.0	60.0	98.0
135	10.5	33.5	60.5	99.0
140	11.8	35.0	63.0	103.0
145	13.0	37.5	66.5	109.0
150	14.5	40.0	71.0	116.0
155	16.0	43.5	76.0	123.7
160	17.2	47.0	81.5	132.0
165	18.8	50.5	87.0	140.0
170	20.0	54.0	92.5	148.0
175	21.5	57.8	97.5	155.5
180	23.0	61.0	102.0	160.5
185	24.0	63.5	105.0	163.0
190	25.0	65.5	106.0	160.0
195	26.2	67.5	106.5	153.5
200	27.5	69.0	106.8	147.5

Model 200A "G" - 1 1/2"

	Overpressure			
psi	25%	50%	75%	100%
5	1.5	2.2	4.5	8.5
10	2.0	3.2	8.7	18.0
15	2.8	4.3	13.0	27.9
20	3.4	5.3	17.0	37.0
25	3.8	6.2	20.8	44.5
30	4.0	6.8	24.0	51.8
35	4.5	7.5	27.0	57.7
40	5.0	8.0	30.0	62.5
45	5.0	8.3	32.5	67.5
50	5.5	8.5	35.0	72.0
55	5.7	8.9	37.7	76.5
60	6.0	9.5	40.0	80.5
65	6.5	9.5	42.5	84.5
70	6.5	9.7	45.0	88.3
75	6.7	9.8	47.0	91.7
80	6.7	10.0	49.0	94.7
85	6.8	10.0	51.0	97.5
90	7.0	10.3	53.0	99.5
95	7.2	10.5	54.0	100.6
100	7.2	11.0	55.0	100.3
105	7.5	11.0	54.0	97.5
110	7.5	11.3	53.0	93.0
115	7.5	11.7	51.0	87.0
120	7.5	11.8	49.0	80.5
125	7.7	12.0	47.5	75.5
130	7.9	12.0	46.8	73.0
135	8.0	12.2	47.2	73.5
140	8.0	12.2	48.7	77.0
145	8.0	12.4	50.7	83.0
150	8.0	12.4	53.0	90.0
155	8.0	12.4	56.0	98.0
160	8.0	12.4	59.0	106.5
165	8.0	12.5	62.3	115.7
170	8.0	12.7	65.5	124.5
175	8.0	13.0	69.0	133.5
180	8.5	14.0	73.0	140.5
185	9.0	15.8	77.0	146.0
190	10.0	19.0	82.5	150.0
195	11.8	23.5	89.0	152.2
200	13.5	27.7	95.5	154.7

Model Number/Order Guide

Model Number Position	1	2	3	4	5	6	7	8	9	10	11	12	13	14	15
Example	0	0	1	9	—	F	0	1	—	M	G	0	0	7	5

Model

0019	019M
0020	020M
020P	20MP
200A	200H

Inlet Size

C - 1/2"	G - 1 1/2"
D - 3/4"	H - 2"
E - 1"	J - 2 1/2"
F - 1 1/4"	K - 3"

Variation

See chart page 11

Design Revision

Indicates non-interchangeable revision. Dash (-) if original design.

Spring Material

G - 316 SS
H - 304 SS (only for Model 19M-K 300 psig or greater)

Set Pressure

0005 - 5 psig
0025 - 25 psig
0400 - 400 psig

		Variation														
		1/2" Male x 3/4" Female	1/2" Male x 1/2" Female	1/2" Female x 3/4" Female	Male x Female with Gag	1/2" Female x 1/2" Female	1/2" 150 Flg x 1/2" 150 Flg	1/2" 300 Flg x 1/2" 150 Flg	Male x Female	Female x Female (200A)	Female x Female	150 Flg x 150 Flg	300 Flg x 150 Flg (200H)	300 Flg x 150 Flg	150 Flg x 150 Flg (200H)	3/4" 300 Flg x 3/4" 150 Flg (020P-D)
Model - Inlet Size	**Inlet x Outlet**	**01**	**02**	**03**	**03**	**04**	**05**	**06[1]**	**01**	**01**	**02**	**03**	**03**	**04**	**04**	**05**
19-C, 20-C, 20P-C	1/2" x 1/2" (3/4")	X	X	X		X	X	X								
19-D, 20-D	3/4" x 3/4"								X		X	X		X		
200A-D	3/4" x 3/4"									X						
200H-D	3/4" x 3/4"								X		X		X		X	
19-E, 20-E, 20P-E[2]	1" x 1"								X		X	X		X		
200A-E	1" x 1"									X	X					
200H-E	1" x 1"								X		X		X		X	
19-F, 20-F, 20P-F[2]	1 1/4" x 1 1/4"								X		X	X		X		
200A-F	1 1/4" x 1 1/4"									X						
200H-F	1 1/4" x 1 1/4"								X		X		X		X	
19-G, 20-G, 20P-G[2]	1 1/2" x 1 1/2"								X		X	X		X		
200A-G	1 1/2" x 1 1/2"									X						
200H-G	1 1/2" x 1 1/2"								X		X		X		X	
19-H, 20-H, 20P-H[2]	2" x 2"								X		X	X		X		
200H-H	2" x 2"								X		X		X		X	
19-J, 19M-J, 20J, 20P-J, 20M-J, 20MP-J	2 1/2" x 2 1/2"								X		X	X		X		
19-K, 19M-K, 20-K, 20P-K, 20M-K, 20MP-K	3" x 3"								X		X	X		X		
20P-D	3/4" x 3/4"				X				X		X				X	X

Notes

1. Not available for 20P-C
2. Variation 04 not available for 20P-E, 20P-F, 20P-G, and 20P-H

SUMP PUMP REPLACEMENT MODEL

Liberty Pumps®

280-Series

Available with Vertical Float

Cast Iron Submersible Effluent/Sump Pumps

1/2 hp
1-1/2" Discharge
3/4" Solids Handling

Features:

- Liberty's unique, one-piece "Uni-Body" casting
- Quick-disconnect 10' standard power cord allows replacement of cord in seconds without breaking seals to motor (other lengths available)
- Permanently lubricated upper and lower bearings
- Oil-filled, hermetically sealed motors with thermal overload protection
- Stainless steel, removable bottom screen
- Stainless steel rotor shaft
- Stainless steel fasteners

115 V. Models:

280 Manual

281 Wide-Angle Float with Quick Disconnect

283 Wide-Angle Float, Series Plug

287 VMF, vertical magnetic float for heavy-duty sump pump applications

208-230 V. Models:

280HV Manual

281HV Wide-Angle Float with Quick Disconnect

283HV Wide-Angle Float, Series Plug

287HV Vertical Magnetic Float (VMF) Switch

Wide-Angle Floats are mercury-free, mechanically activated.

innovate. evolve.

280-SERIES
1/2 hp Submersible Effluent/Sump Pumps

The Liberty 280-Series provides a cost effective "mid-range" pump for on-site waste water systems, liquid waste transfer and commercial heavy-duty sump pump applications that require higher head or more flow. Designed around Liberty's unique "Uni-Body" casting, the 280-Series will provide years of reliable performance.

All Models Feature:

- Vortex style impeller permitting passage of solids up to ¾"
- 416 stainless steel rotor shaft
- Permanently lubricated upper and lower ball bearing
- Epoxy powder coat finish
- All fasteners – corrosion-resistant stainless steel
- 1½" Discharge
- Stainless steel bottom screen – easily removable
- Maximum fluid temperature: 140˚ F.
- **280-Series Cord Lengths**

Model	10'	25'(-2)	35'(-3)	50'(-5)
280	Standard	Optional	Optional	Optional
281	Standard	Optional	Optional	Optional
283	Standard	Optional	Optional	N/A
287	Standard	Optional	N/A	N/A

10' cord length standard on all models. For optional lengths, add "-2, -3 or -5" suffix to model number.
Example: for model 280 with 35' cord, order 280-3

Motor Specifications

½ hp 60 Hz 3450 RPM
Oil filled, thermally protected

8.0 amps (115V)
4.0 amps (208/230V)

Performance Curve: 280-Series

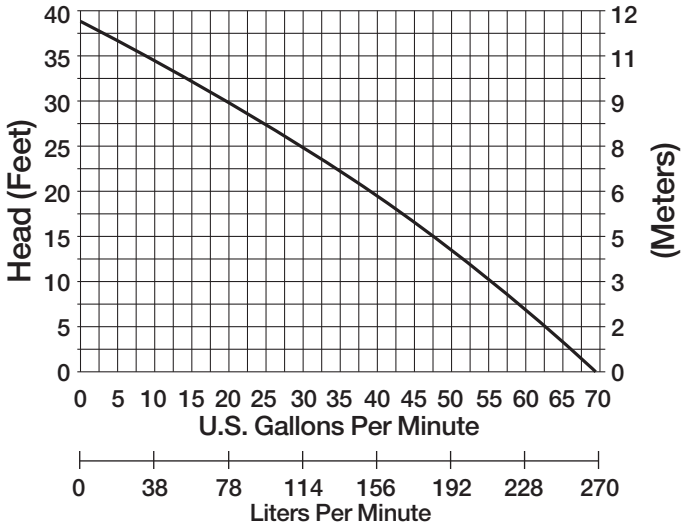

Dimensional Data:

Weight: 29 lbs.
Height: 13"
Major Width: 10" (model 287)

Minimum Sump Diameters:

Model 281, 283…14"
Model 287 VMF…10"

Factory switch settings	Model 281, 283	Model 287 VMF
Turn on level	13"	9.5"
Turn off level	7"	4.0"

The Model 283 features a fully adjustable wide-angle float. Differential adjustments can be made easily by tethering the float to the discharge pipe or other mounting point. Vertical float model 287 is not adjustable.

Model 280
Manual, no switch

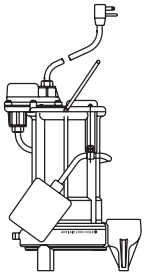

Model 281
Wide angle float switch with quick-disconnect

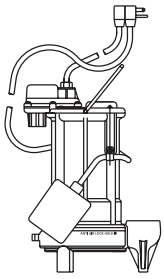

Model 283
Wide angle float switch with series (piggy-back) plug

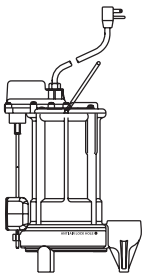

Model 287 VMF-Series
Vertical magnetic float for smaller pits – will operate in a 10" diameter sump

SSPMA CERTIFIED

c CSA us Certified

Specifications are subject to change without notice.

Liberty Pumps • 7000 Apple Tree Avenue • Bergen, New York 14416 • Phone 800-543-2550 Fax (585) 494-1839
www.libertypumps.com

Copyright © Liberty Pumps, Inc. 2016
All rights reserved. LLIT 2000 R06/16

Liberty Pumps®

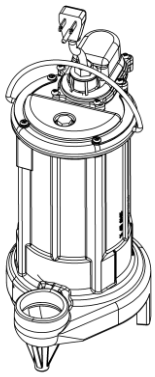

Pump Specifications

280 Series 1/2 hp Submersible Effluent Pump

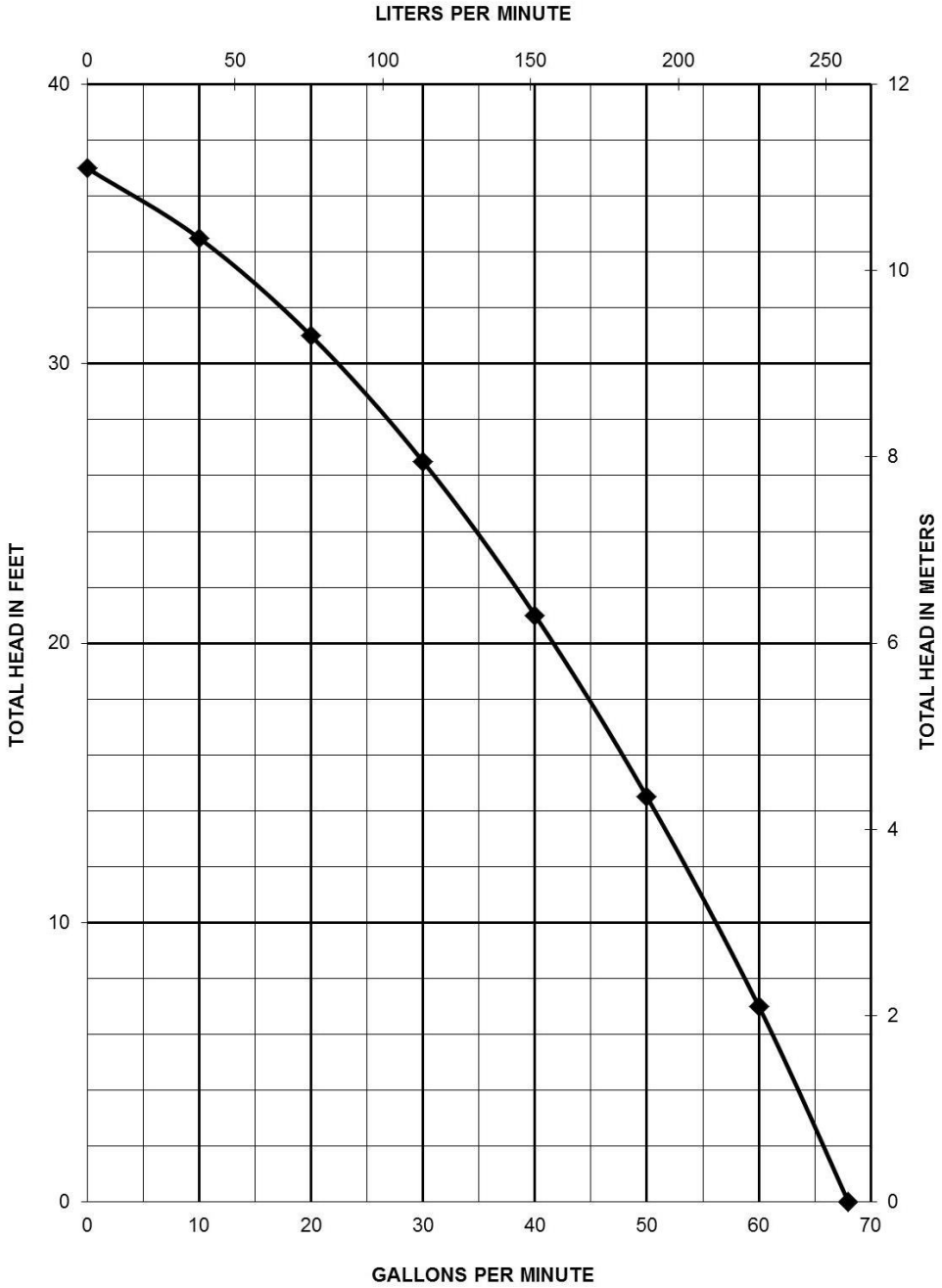

©Copyright 2015 Liberty Pumps Inc. All rights reserved. Specifications subject to change without notice.

Liberty Pumps®

280-Series Dimensional Data

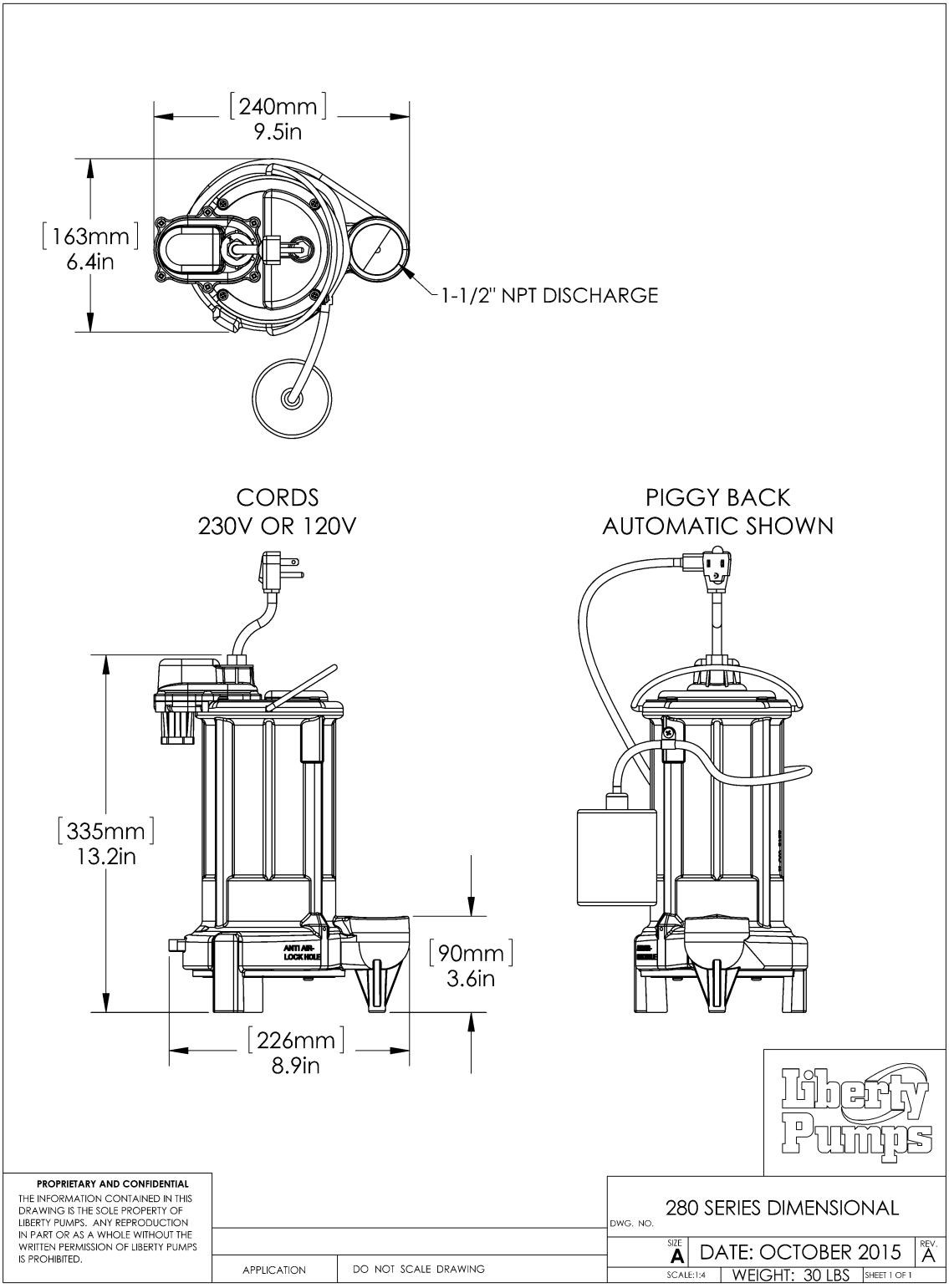

©Copyright 2015 Liberty Pumps Inc. All rights reserved. Specifications subject to change without notice.

280-Series Electrical Data

MODEL	HP	VOLTAGE	PHASE	FULL LOAD AMPS	LOCKED ROTOR AMPS	THERMAL OVERLOAD TEMP	STATOR WINDING CLASS	CORD LENGTH FT	DISCHARGE	AUTOMATIC
280	1/2	115	1	8.0	23	105˚C / 221°F	B	10	1 1/2	NO MANUAL
281	1/2	115	1	8.0	23	105˚C / 221°F	B	10	1 1/2	YES INTEGRAL FLOAT
283	1/2	115	1	8.0	23	105˚C / 221°F	B	10	1 1/2	YES PIGGY BACK FLOAT
287	1/2	115	1	8.0	23	105˚C / 221°F	B	10	1 1/2	YES INTEGRAL VERTICLE FLOAT
280HV	1/2	208-230	1	4.0	12.5	105˚C / 221°F	B	10	1 1/2	NO MANUAL
281HV	1/2	208-230	1	4.0	12.5	105˚C / 221°F	B	10	1 1/2	YES INTEGRAL FLOAT
283HV	1/2	208-230	1	4.0	12.5	105˚C / 221°F	B	10	1 1/2	YES PIGGY BACK FLOAT
287HV	1/2	208-230	1	4.0	12.5	105˚C / 221°F	B	10	1 1/2	YES INTEGRAL VERTICLE FLOAT

280-Series Cord Length Options*

Model	10'	25'(-2)	35'(-3)	50'(-5)
280	Standard	Optional	Optional	Optional
281	Standard	Optional	Optional	Optional
283	Standard	Optional	Optional	N/A
287	Standard	Optional	N/A	N/A

10' cord length standard on all models. For optional lengths, add “-2, -3 or -5” suffix to model number.
Example: for model 280 with 35' cord. Order 280-3

©Copyright 2015 Liberty Pumps Inc. All rights reserved. Specifications subject to change without notice.

**WARNING: ***Always use a replacement power cord assembly of the same length and type as originally installed on the Liberty product. Using a cord of improper gauge or length may lead to exceeding the electrical rating of the cord and could result in death, injury, fire or other significant failure.

280-Series Technical Data

IMPELLER	VORTEX ENGINEERED POLYMER
SOLIDS HANDLING SIZE	¾"
PAINT	POWDER COAT
MAX LIQUID TEMP	60˚C/ 140˚F
MAX STATOR TEMP	CLASS B 130˚C/ 266˚F
THERMAL OVERLOAD	105˚C / 221°F
POWER CORD TYPE	SJTW (10ft & 25ft models) SJTOOW (35ft & 50ft models)
MOTOR HOUSING/ VOLUTE	CLASS 25 CAST IRON
SHAFT	STAINLESS
HARDWARE	STAINLESS
ORINGS	BUNA N
MECHANICAL SEAL	UNITIZED CERAMIC CARBON
WEIGHT	30 LBS

280-Series Specifications

1.01 GENERAL:

The contractor shall provide labor, material, equipment, and incidentals required to provide_____(QTY) centrifugal pumps as specified herein. The pump models covered in this specification are Series 280 single phase pumps. The pump furnished for this application shall be model _____as manufactured by Liberty pumps.

2.01 OPERATING CONDITIONS:

Each submersible pump shall be rated at 1/2 hp_____volts, single phase, 60 Hz.,. 3450 RPM. The unit shall produce_____G.P.M. at _____ feet of total dynamic head.

The submersible pump shall be capable of handling effluent with 3/4" solid handling capability. The submersible pump shall have a shut-off head of 37 feet and a maximum flow of 62 GPM @ 5 feet of total dynamic head.

The pump shall be controlled with:

_____A piggy back style on/off float switch.

_____An integrally wired on/off float switch.

_____A Vertical Mechanical Float (VMF) type on/off switch.

_____A NEMA 4X outdoor simplex control panel with three float switches and a high water alarm.

_____A NEMA 1 indoor simplex control panel with three float switches and a high water alarm.

_____A NEMA 4X outdoor simplex control panel with four float switches and a high water alarm.

_____A NEMA 1 indoor simplex control panel with four float switches and a high water alarm.

_____A NEMA 4X outdoor duplex control panel with three float switches and a high water alarm.

©Copyright 2015 Liberty Pumps Inc. All rights reserved. Specifications subject to change without notice.

_____A NEMA 1 indoor duplex control panel with three float switches and a high water alarm.
_____A NEMA 4X outdoor duplex control panel with four float switches and a high water alarm.
_____A NEMA 1 indoor duplex control panel with four float switches and a high water alarm.

3.01 CONSTRUCTION:

Each submersible pump shall be equal to the C US certified Series 280 SERIES pumps as manufactured by Liberty Pumps, Bergen NY. The castings shall be constructed of class 25 cast iron. The motor housing shall be oil filled to dissipate heat. Air filled motors shall not be considered equal since they do not properly dissipate heat from the motor. All mating parts shall be machined and sealed with a Buna-N o-ring. All fasteners exposed to the liquid shall be stainless steel. The motor shall be protected on the top side with sealed cord entry plate with molded pins to conduct electricity eliminating the ability of water to enter internally through the cord. The motor shall be protected on the lower side with a unitized ceramic/carbon seal with stainless steel housings and spring. The pump shall be furnished with stainless steel handle.

4.01 ELECTRICAL POWER CORD

The submersible pump shall be supplied with 10, 25, 35, or 50 feet of multiconductor power cord. It shall be cord type SJTW, or SJTOOW capable of continued exposure to the pumped liquid. The power cord shall be sized for the rated full load amps of the pump in accordance with the National Electric Code. The power cable shall not enter the motor housing directly but will conduct electricity to the motor by means of a water tight compression fitting cord plate assembly, with molded pins to conduct electricity. This will eliminate the ability of water to enter internally through the cord, by means of a damaged or wicking cord.

5.01 MOTORS

Single phase motors shall be oil filled, permanent split capacitor, class B insulated NEMA B design, rated for continuous duty. At maximum load the winding temperature shall not exceed 130 degrees C unsubmerged. Since air filled motors are not capable of dissipating heat they shall not be considered equal. The pump motor shall have an integral thermal overload switch in the windings for protecting the motor. The capacitor circuit shall be mounted internally in the pump.

6.01 BEARINGS AND SHAFT

An upper and lower ball bearing shall be required. The ball bearing shall be a single ball / race type bearing. Both bearings shall be permanently lubricated by the oil, which fills the motor housing. The motor shaft shall be made of 300 or 400 series stainless steel and have a minimum diameter of .311”

7.01 SEALS

The pump shall have a unitized carbon / ceramic seal with stainless steel housings and spring equal to Crane Type 6A. The motor plate / housing interface shall be sealed with a Buna-N o-ring.

8.01 IMPELLER

The impeller shall be vortex style made of an engineered polymer, with pump out vanes on the back shroud to keep debris away from the seal area. It shall be threaded to the motor shaft.

9.01 CONTROLS

All pumps can be supplied with a CSA and UL approved VMF type switch, an integrally wired wide angle tilt float switch, or piggy back type wide angle tilt float switches. The piggy back style switches are equipped with a plug that allows the pump to be operated manually without the removal of the pump in the event that a switch becomes inoperable. Manual pumps are operable by means of a pump control panel.

©Copyright 2015 Liberty Pumps Inc. All rights reserved. Specifications subject to change without notice.

10.01 PAINT

The exterior of the casting shall be protected with powder coat paint.

11.01 SUPPORT

The pump shall have cast iron support legs, enabling it to be a free standing unit. The legs will be high enough to allow 3/4” solids to enter the volute.

12.01 SERVICEABILTY

Components required for the repair of the pump shall be shipped within a period of 24 hours.

13.01 FACTORY ASSEMBLED TANK SYSTEMS WITH GUIDE RAIL AND QUICK DISCONNECT DISCHARGE

_____Guide factory mounted rail system with pump suspended by means of bolt on quick disconnect which is sealed by means of nitrile grommets or o-rings. The Discharge piping shall be schedule 80 PVC and furnished with a PVC check valve and shut-off ball valve. The Tank shall be wound fiberglass or roto-molded plastic. An inlet hub shall be provided with the fiberglass systems.

_____Stainless steel Guide Rail
_____Zinc plated steel Guide Rail
_____"diameter of basin size
_____"height of basin size
_____"distance from top of tank to discharge pipe outlet
_____Fiberglass cover
_____Structural foam polymer cover
_____Steel cover
_____Simplex System with Outdoor panel and alarm
_____Duplex System with Outdoor panel and alarm
_____Separate Outdoor Alarm
_____Remote Outdoor Alarm

14.01 TESTING

The pump shall have a ground continuity check and the motor chamber shall be Hi-potted to test for electrical integrity, moisture content and insulation defects. The motor and volute housing shall be pressurized, and an air leak decay test is performed to ensure integrity of the motor housing. The pump shall be run, voltage and current monitored, and the tester checks for noise or other malfunction.

15.01 QUALITY CONTROL

The pump shall be manufactured in an ISO 9001 certified Facility.

16.01 WARRANTY

Standard limited warranty shall be 3 years.

©Copyright 2015 Liberty Pumps Inc. All rights reserved. Specifications subject to change without notice.

APPENDIX O

Well Construction Diagrams and Borehole Logs

EXTRACTION WELL CONSTRUCTION DIAGRAMS

Extraction Well Construction Diagram KAFB-106228

Installation Start Date/Time: 5/18/2015
Installation End Date/Time: 6/2/2015
Magnesium Anodes and Sounding Tubes added: 7/6/2016

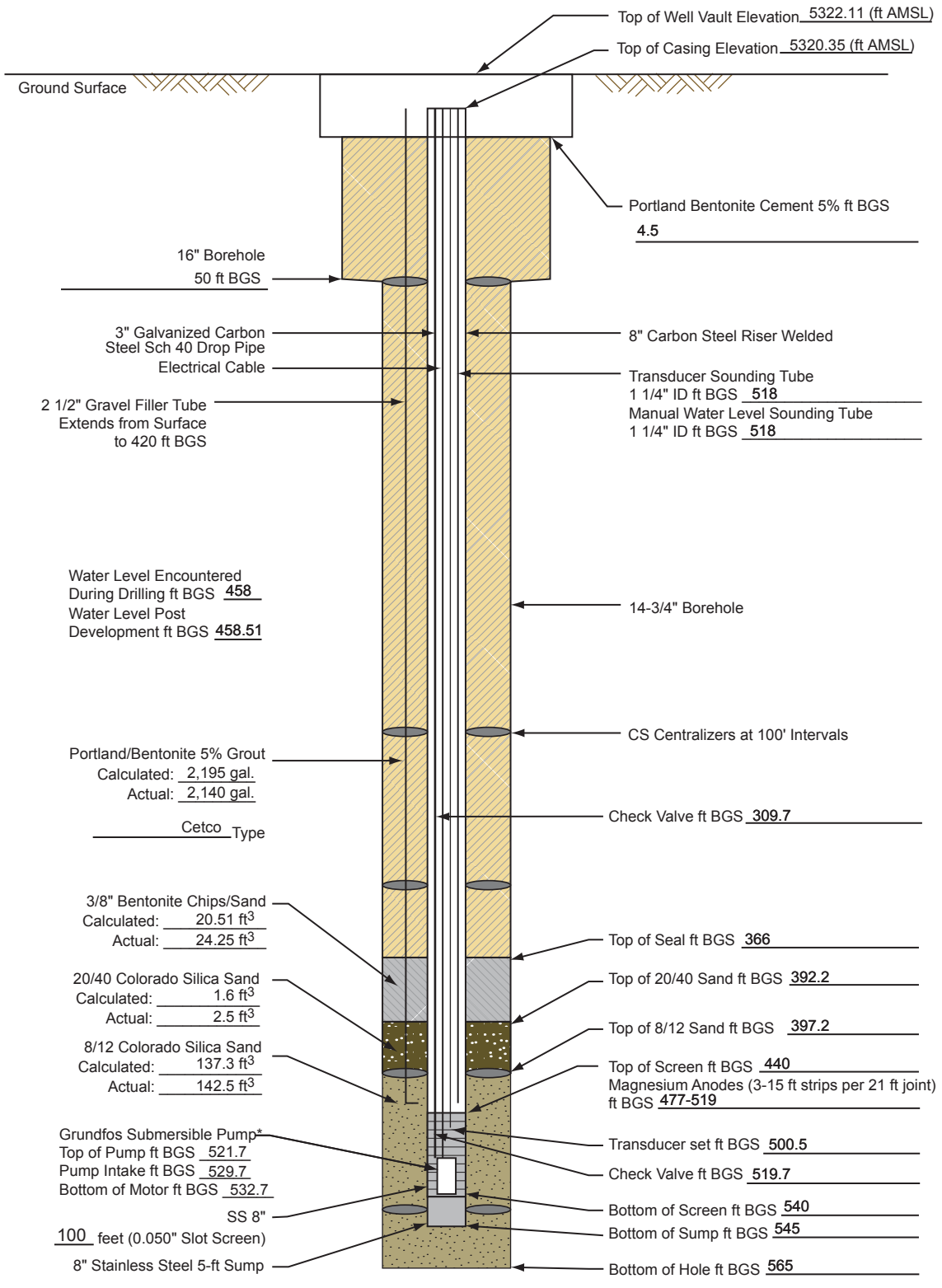

Elevations are NAVD 88 Datum values based on NGS Control Station "Hanger", Elevation = 5,343.43 ft. GPS/RTK methods and GEO1D99 model were used to determine elevations of all surveyed points.

Not to Scale
BGS = Below Ground Surface
AMSL = Above Mean Sea Level
**Pump Serial Number: 7656-13P21328*
**Motor Serial Number: 7656-13P21328*

140705.CB020403.A19

Extraction Well Construction Diagram KAFB-106233

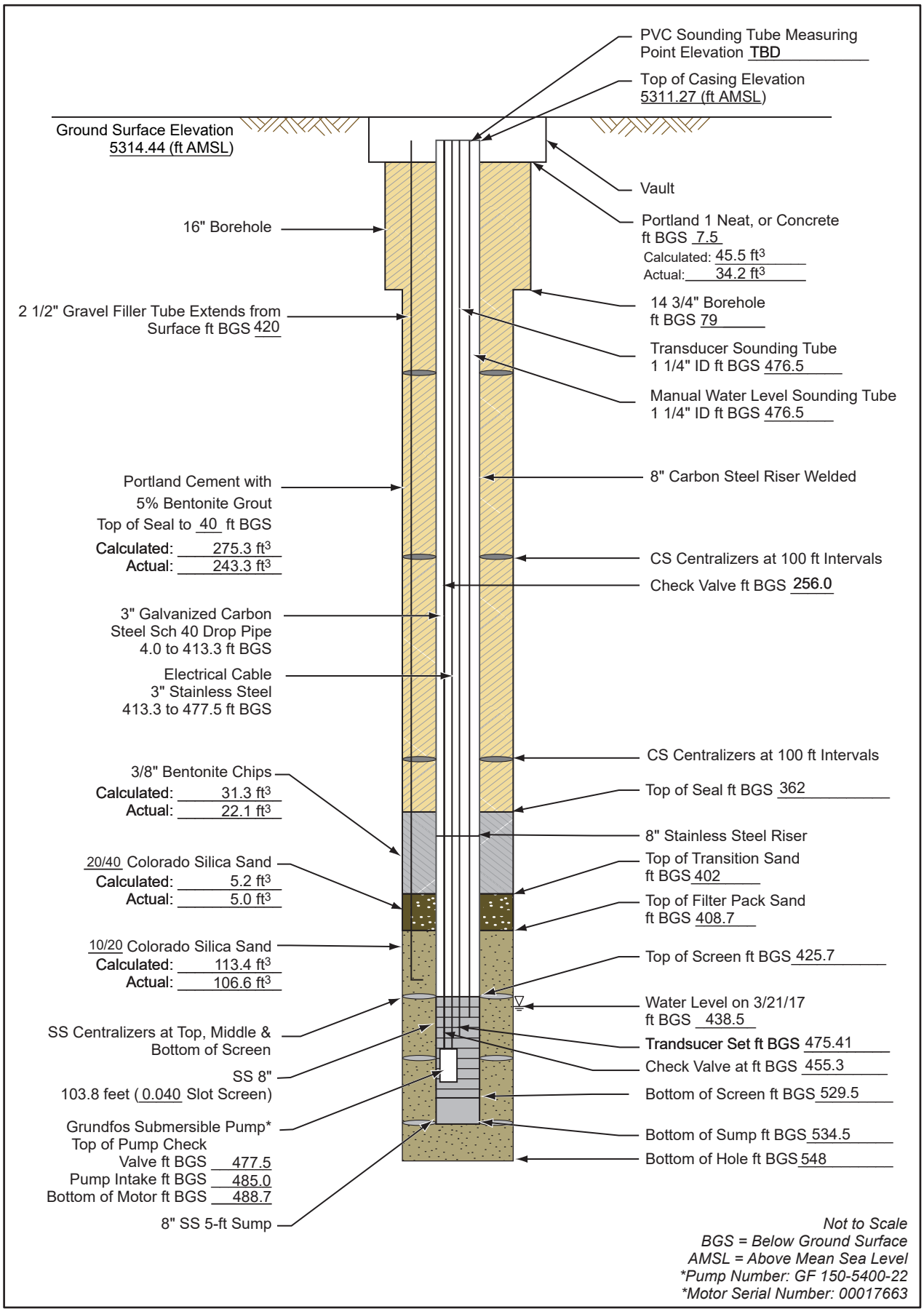

500433.04010300.A4

Extraction Well Construction Diagram KAFB-106234

Installation Start Date/Time: 10/2/2015
Installation End Date/Time: 10/9/2015

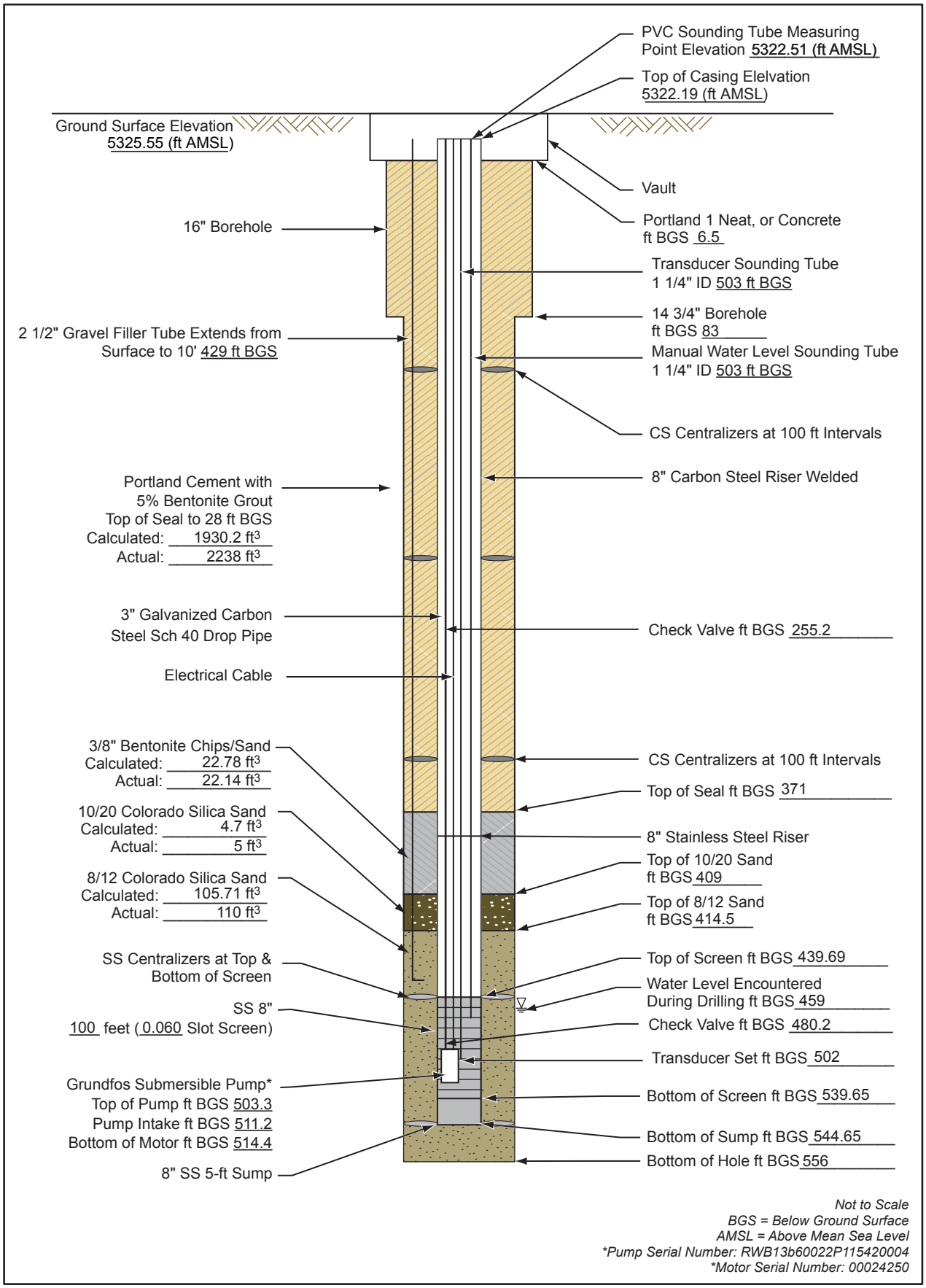

Not to Scale
BGS = Below Ground Surface
AMSL = Above Mean Sea Level
**Pump Serial Number: RWB13b60022P115420004*
**Motor Serial Number: 00024250*

500433.04010300.A5

Extraction Well Construction - KAFB-106239

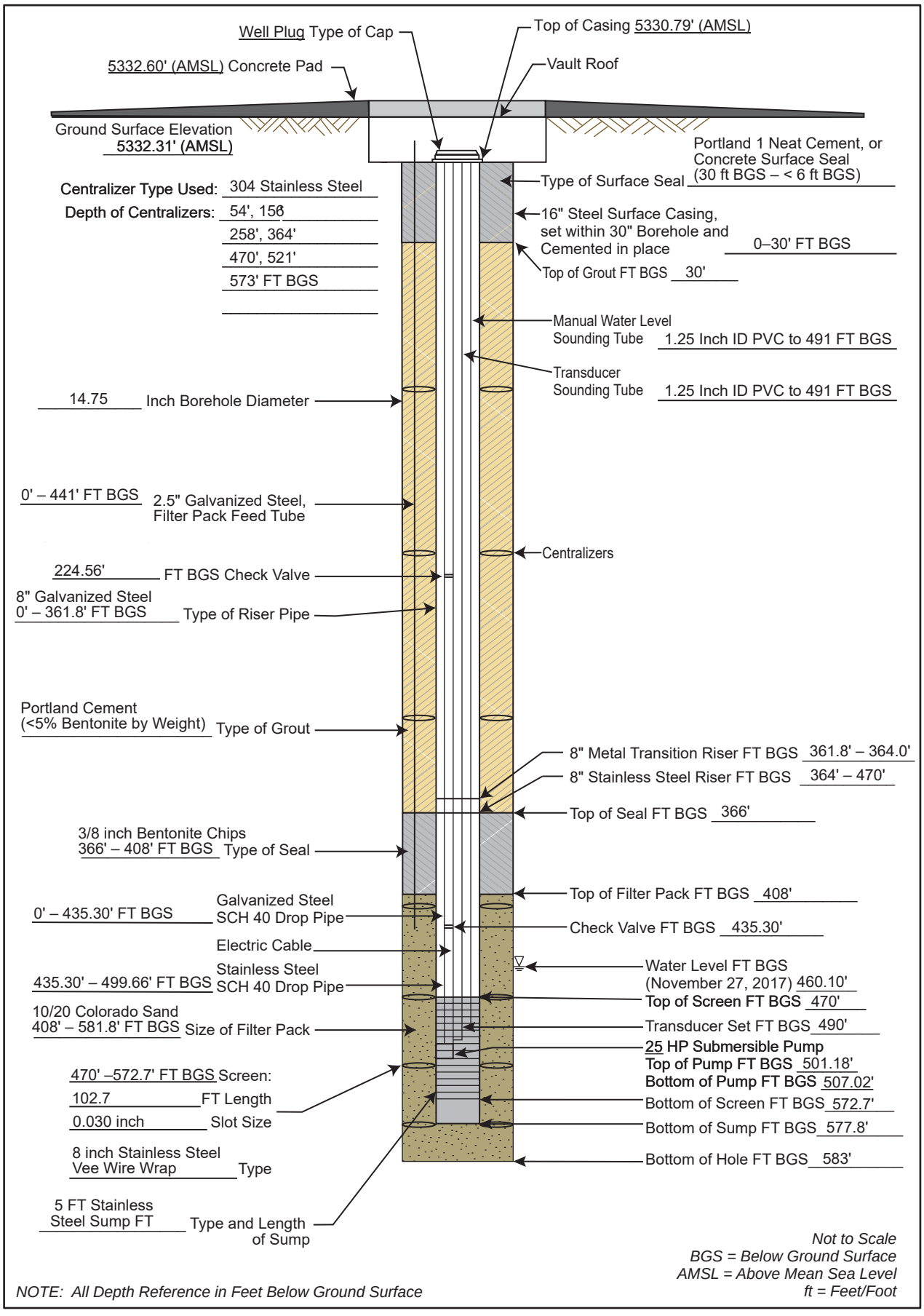

62599DM01

INJECTION WELL SCHEMATIC

KAFB-7 Injection Schematic

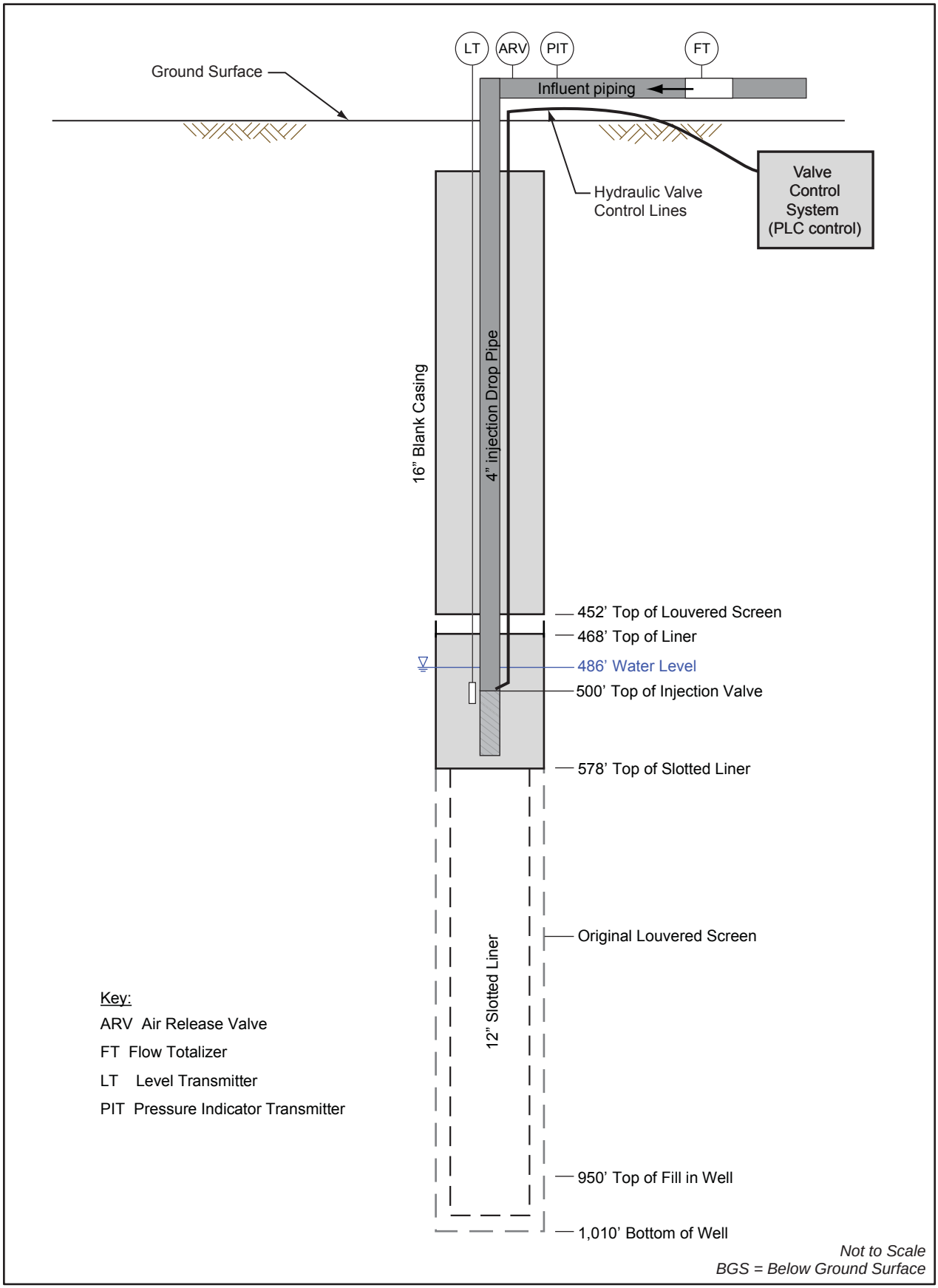

500433.04010300.A6

EXTRACTION WELL BOREHOLE LOGS

Borehole ID: KAFB-106228

Client: US Army Corps of Engineers
Project Location: KAFB, Albuquerque, NM
Project Name: KAFB BFF SWMU ST-106 and SS-111
Project Number: 140705

Date Started: 5/18/2015
Date TD Reached: 5/29/15
Date Completed: 6/2/2015

Ground Elevation AMSL (ft): Not Recorded
Y Coordinate:
X Coordinate:

Hole Diameter Upper (in.): 16
Hole Diameter Lower (in.): 14-3/4
Surface Completion Type: Flush

Groundwater Levels BGS (ft):
▽ At Time of Drilling: 458.00
▼ At End of Drilling: Not Recorded
▽ After Drilling: 458.51

Drillling Contractor: National Drilling
Drilling Method: Mud Rotary
Logged By: M. Giles

LICENSED PROFESSIONAL GEOLOGIST
VIRGINIA BRACHT
8881903-2250
STATE OF UTAH

7/13/15

Depth (ft)	Sample Type	Number	Headspace PID	Lithologic Log	Material Description	U.S.C.S.	Well Diagram	Remarks
0					ASPHALT			
					Water jetted to 9', lithology disturbed.			Begin advancing 16" casing @ 1507 on 5/18/15.
5							- Top of Casing/ Top of Bentonite Cement	
10					Well-graded GRAVEL with Sand (GW); strong brown (7.5YR 5/6); 60% fine to coarse gravel to 2"; angular to subangular; gravel is mafics and quartzite; 35% fine to coarse sand; angular to subrounded; sand is quartz and quartzite; 5% silt.	GW		
15					Same as above (9 ft).		- Portland Bentonite Cement	Kelly down @ 1517, resume drilling @ 1700.
20					Poorly graded SAND with Silt (SP-SM); yellowish brown (10YR 5/8); 90% medium sand; trace fine and coarse sand; subangular to subrounded; sand is quartz; 10% silt.	SP-SM		
25					Silty GRAVEL with Sand (GM); yellowish brown (10YR 5/8); 55% fine to coarse gravel to 1 1/2"; subangular; gravel is mafics; 25% fine to coarse sand; subangular to subrounded; sand is quartz; 20% silt.	GM		
30								

KAFB_BOREHOLE_LOG - SHAW_DRILLING.GDT - 7/13/15 13:12 - Z:\KAFB BFF\GINT\KAFB_PROJECT\KAFB_BFF.GPJ

Borehole ID: KAFB-106228

Client: US Army Corps of Engineers
Project Location: KAFB, Albuquerque, NM
Project Name: KAFB BFF SWMU ST-106 and SS-111
Project Number: 140705

Date Started: 5/18/2015
Date TD Reached: 5/29/15
Date Completed: 6/2/2015

Ground Elevation AMSL (ft): Not Recorded
Y Coordinate:
X Coordinate:

Hole Diameter Upper (in.): 16
Hole Diameter Lower (in.): 14-3/4
Surface Completion Type: Flush

Groundwater Levels BGS (ft):
▽ At Time of Drilling: 458.00
▼ At End of Drilling: Not Recorded
▼ After Drilling: 458.51

Drillling Contractor: National Drilling
Drilling Method: Mud Rotary
Logged By: M. Giles

Depth (ft)	Sample Type	Number	Headspace PID	Lithologic Log	Material Description	U.S.C.S.	Well Diagram	Remarks
30								
35					Silty GRAVEL with Sand (GM); yellowish brown (10YR 5/8); 55% fine to coarse gravel to 1 1/2"; subangular; gravel is mafics; 25% fine to coarse sand; subangular to subrounded; sand is quartz; 20% silt.	GM		Cuttings moist after driller added water.
40					Silty SAND (SM); yellowish brown (10YR 5/8); 85% fine to coarse sand; subangular to subrounded; sand is quartz and mafics; 15% silt.	SM		Kelly down @ 1800, resume drilling @ 1810.
45					Same as above (35 ft); 75% fine to medium sand; trace coarse sand; 25% silt.		- Portland Bentonite Cement	End day @ 47' @ 1820. on 5/18/15.
50					Same as above (35 ft); 75% fine to medium sand; trace coarse sand; 25% silt.			Push 16" casing to 50' @ 0935 on 5/19/15. @ 1648 begin mud rotary. Begin drilling with 2 collars and 7' of lot/sub/pound.
55					Lean CLAY with Sand (CL); reddish yellow (7.5YR 6/6); 75% clay; 25% coarse sand; trace medium and fine sand; angular to subangular; trace silt.	CL		
60					Same as above (50 ft).			

KAFB_BOREHOLE_LOG - SHAW_DRILLING.GDT - 7/13/15 13:12 - Z:\KAFB BFF\GINT\KAFB_PROJECT\KAFB_BFF.GPJ

Borehole ID: KAFB-106228

Client: US Army Corps of Engineers
Project Location: KAFB, Albuquerque, NM
Project Name: KAFB BFF SWMU ST-106 and SS-111
Project Number: 140705

Date Started: 5/18/2015
Date TD Reached: 5/29/15
Date Completed: 6/2/2015

Ground Elevation AMSL (ft): Not Recorded
Y Coordinate:
X Coordinate:

Hole Diameter Upper (in.): 16
Hole Diameter Lower (in.): 14-3/4
Surface Completion Type: Flush

Groundwater Levels BGS (ft):
At Time of Drilling: 458.00
At End of Drilling: Not Recorded
After Drilling: 458.51

Drillling Contractor: National Drilling
Drilling Method: Mud Rotary
Logged By: M. Giles

Depth (ft)	Sample Type	Number	Headspace PID	Lithologic Log	Material Description	U.S.C.S.	Well Diagram	Remarks
60					Lean CLAY with Sand (CL); reddish yellow (7.5YR 6/6); 75% clay; 25% coarse sand; trace medium and fine sand; coarse sand is quartz and granite; angular to subangular; trace silt.			Add 3rd collar @ 60' @ 1800.
65					Same as above (60 ft).			
70					Lean CLAY (CL); reddish yellow (7.5YR 6/8); medium plasticity; 90% clay; 10% medium to coarse sand; sand is quartz and granite; trace silt.			
75					Same as above (70 ft).	CL	Portland Bentonite Cement	Stop drilling @ 75' on 5/19/15. Resume drilling @ 0840 on 5/21/15.
80					Same as above (70 ft).			Add 4th collar @ 80' @ 0857. Total of 77' of collar.
85					Same as above (70 ft).			
90								

KAFB_BOREHOLE_LOG - SHAW_DRILLING.GDT - 7/13/15 13:12 - Z:\KAFB BFF\GINT\KAFB_PROJECT\KAFB_BFF.GPJ

Borehole ID: KAFB-106228

Client: US Army Corps of Engineers
Project Location: KAFB, Albuquerque, NM
Project Name: KAFB BFF SWMU ST-106 and SS-111
Project Number: 140705

Date Started: 5/18/2015
Date TD Reached: 5/29/15
Date Completed: 6/2/2015

Ground Elevation AMSL (ft): Not Recorded
Y Coordinate:
X Coordinate:

Hole Diameter Upper (in.): 16
Hole Diameter Lower (in.): 14-3/4
Surface Completion Type: Flush

Groundwater Levels BGS (ft):
▽ At Time of Drilling: 458.00
▼ At End of Drilling: Not Recorded
▼ After Drilling: 458.51

Drillling Contractor: National Drilling
Drilling Method: Mud Rotary
Logged By: M. Giles

Depth (ft)	Sample Type	Number	Headspace PID	Lithologic Log	Material Description	U.S.C.S.	Well Diagram	Remarks
90					Sandy lean CLAY (CL); strong brown (7.5YR 5/8); medium plasticity; 60% clay; 40% coarse sand; subangular; sand is quartz, mafics, and quartzite.			
95					Lean CLAY (CL); yellowish red (5YR 5/8); medium plasticity; 90% clay; 10% medium to coarse sand; subangualr; sand is granite, mafics, and quartzite.			
100					Same as above (95 ft).			
105					Same as above (95 ft).	CL	Portland Bentonite Cement	Kelly down @ 0940, resume drilling @ 1240.
110					Same as above (95 ft); 95% clay; 5% medium to coarse sand; trace fine gravel.			
115					Same as above (95 ft); 95% clay; 5% medium to coarse sand; trace fine gravel.			
120								

KAFB_BOREHOLE_LOG - SHAW_DRILLING.GDT - 7/13/15 13:12 - Z:\KAFB BFF\GINT\KAFB_PROJECT\KAFB_BFF.GPJ

Borehole ID: KAFB-106228

Client: US Army Corps of Engineers
Project Location: KAFB, Albuquerque, NM
Project Name: KAFB BFF SWMU ST-106 and SS-111
Project Number: 140705

Date Started: 5/18/2015
Date TD Reached: 5/29/15
Date Completed: 6/2/2015

Ground Elevation AMSL (ft): Not Recorded
Y Coordinate:
X Coordinate:

Hole Diameter Upper (in.): 16
Hole Diameter Lower (in.): 14-3/4
Surface Completion Type: Flush

Groundwater Levels BGS (ft):
At Time of Drilling: 458.00
At End of Drilling: Not Recorded
After Drilling: 458.51

Drillling Contractor: National Drilling
Drilling Method: Mud Rotary
Logged By: M. Giles

Depth (ft)	Sample Type	Number	Headspace PID	Lithologic Log	Material Description	U.S.C.S.	Well Diagram	Remarks
120					Sandy lean CLAY (CL); strong brown (7.5YR 5/8); low plasticity; 60% clay; 40% fine sand.	CL		
125					Same as above (120 ft).			Kelly down @ 1313, resume drilling @ 1330.
130					Same as above (120 ft).			
135					Clayey SAND (SC); strong brown (7.5YR 5/8); 60% fine to medium sand; subangular; sand is quartz; 40% clay.	SC	Portland Bentonite Cement	
140					Same as above (135 ft); clay is firmer.			
145					Clayey SAND with Gravel (SC); strong brown (7.5YR 5/6); 40% fine to medium sand; subangular; 20% fine gravel to 3/4"; subangular; 40% clay; medium plasticity; sand is quartz; gravel is mafics.			Kelly down @ 1352, resume drilling.
150								

KAFB_BOREHOLE_LOG - SHAW_DRILLING.GDT - 7/13/15 13:12 - Z:\KAFB BFF\GINT\KAFB_PROJECT\KAFB_BFF.GPJ

Borehole ID: KAFB-106228

Client: US Army Corps of Engineers
Project Location: KAFB, Albuquerque, NM
Project Name: KAFB BFF SWMU ST-106 and SS-111
Project Number: 140705

Date Started: 5/18/2015
Date TD Reached: 5/29/15
Date Completed: 6/2/2015

Ground Elevation AMSL (ft): Not Recorded
Y Coordinate:
X Coordinate:

Hole Diameter Upper (in.): 16
Hole Diameter Lower (in.): 14-3/4
Surface Completion Type: Flush

Groundwater Levels BGS (ft):
At Time of Drilling: 458.00
At End of Drilling: Not Recorded
After Drilling: 458.51

Drillling Contractor: National Drilling
Drilling Method: Mud Rotary
Logged By: M. Giles

Depth (ft)	Sample Type	Number	Headspace PID	Lithologic Log	Material Description	U.S.C.S.	Well Diagram	Remarks
150								
155					Gravelly lean CLAY (CL); strong brown (7.5YR 5/6); medium plasticity; 70% clay; 30% fine gravel to 1/2"; angular; gravel is black.	CL		
160					Clayey SAND with Gravel (SC); strong brown (7.5YR 5/6); 50% fine to coarse sand; subangular; 30% fine gravel to 3/4"; angular to subangular; 20% clay; sand is quartz; gravel is mafics. Same as above (155 ft).	SC		
165								
170					Gravelly lean CLAY (CL); strong brown (7.5YR 5/6); medium plasticity; 60% clay; 30% fine gravel to 1/2"; angular to subangular; 10% medium to coarse sand; subangular; gravel is mafics.	CL	- Portland Bentonite Cement	Kelly down @ 1438, resume drilling @ 1503.
175					Clayey GRAVEL (GC); strong brown (7.5YR 5/6); 80% fine gravel to 1/2"; angular to subangular; 20% clay; gravel is mafics.	GC		
180					Poorly graded GRAVEL with Silt and Sand (GP-GM); strong brown (7.5YR 5/6); 60% fine gravel to 1/2"; angular to subangular; 30% fine sand; trace medium and coarse sand; subangular; 10% silt; gravel is mafics and granite; sand is quartz, mafics, and granite.	GP-GM		

KAFB_BOREHOLE_LOG - SHAW_DRILLING.GDT - 7/13/15 13:12 - Z:\KAFB BFF\GINT\KAFB_PROJECT\KAFB_BFF.GPJ

Borehole ID: KAFB-106228

Client: US Army Corps of Engineers
Project Location: KAFB, Albuquerque, NM
Project Name: KAFB BFF SWMU ST-106 and SS-111
Project Number: 140705

Date Started: 5/18/2015
Date TD Reached: 5/29/15
Date Completed: 6/2/2015

Ground Elevation AMSL (ft): Not Recorded
Y Coordinate:
X Coordinate:

Hole Diameter Upper (in.): 16
Hole Diameter Lower (in.): 14-3/4
Surface Completion Type: Flush

Groundwater Levels BGS (ft):
▽ At Time of Drilling: 458.00
▼ At End of Drilling: Not Recorded
▼ After Drilling: 458.51

Drillling Contractor: National Drilling
Drilling Method: Mud Rotary
Logged By: M. Giles

Depth (ft)	Sample Type	Number	Headspace PID	Lithologic Log	Material Description	U.S.C.S.	Well Diagram	Remarks
180					Poorly graded GRAVEL with Silt and Sand (GP-GM); strong brown (7.5YR 5/6); 60% fine gravel to 1/2"; angular to subangular; 30% fine sand; trace medium and coarse sand; subangular; 10% silt; gravel is mafics and granite; sand is quartz, mafics, and granite.	GP-GM		
185					Silty GRAVEL with Sand (GM); reddish yellow (7.5YR 6/6); 70% fine gravel; subangular; 15% fine to coarse sand; subangular; 15% silt; gravel is mafics, granite, and quartzite; sand is mafics.			End day on 5-21-15 @ 183'. Kelly down @ 1542. 1500 gallons mud used on 5/21/15. Resume drilling on 5/22/15 @ 0830.
190					Same as above (185 ft).			
195					Same as above (185 ft).		- Portland Bentonite Cement	
200					Silty GRAVEL (GM); reddish yellow (7.5YR 6/6); 70% fine gravel; subangular; 10% fine to coarse sand; subangular to subrounded; 20% silt; gravel is mafics and granite; sand is quartz.	GM		Kelly down @ 0905, resume drilling @ 0940.
205					Same as above (200 ft); 60% fine gravel; 10% coarse sand; subrounded; 30% silt.			
210								

KAFB_BOREHOLE_LOG - SHAW_DRILLING.GDT - 7/13/15 13:12 - Z:\KAFB BFF\GINT\KAFB_PROJECT\KAFB_BFF.GPJ

Borehole ID: KAFB-106228

Client: US Army Corps of Engineers
Project Location: KAFB, Albuquerque, NM
Project Name: KAFB BFF SWMU ST-106 and SS-111
Project Number: 140705

Date Started: 5/18/2015
Date TD Reached: 5/29/15
Date Completed: 6/2/2015

Ground Elevation AMSL (ft): Not Recorded
Y Coordinate:
X Coordinate:

Hole Diameter Upper (in.): 16
Hole Diameter Lower (in.): 14-3/4
Surface Completion Type: Flush

Groundwater Levels BGS (ft):
▽ At Time of Drilling: 458.00
▼ At End of Drilling: Not Recorded
▼ After Drilling: 458.51

Drillling Contractor: National Drilling
Drilling Method: Mud Rotary
Logged By: M. Giles

Depth (ft)	Sample Type	Number	Headspace PID	Lithologic Log	Material Description	U.S.C.S.	Well Diagram	Remarks
210					Poorly graded GRAVEL with Silt and Sand (GP-GM); reddish yellow (7.5YR 6/8); 70% fine gravel to 3/8"; subangular to subrounded; 20% fine to coarse sand; 10% silt; gravel is mafics and quartz; sand is quartz and mafics.	GP-GM		
215					Poorly graded SAND (SP); reddish yellow (7.5YR 6/8); 90% coarse sand; trace fine and medium sand; subrounded; 5% fine gravel to 3/8"; 5% silt; sand is mafics, quartzite, and granite; gravel is mafics.	SP		
220					Same as above (215 ft).			
225					Silty GRAVEL with Sand (GM); reddish yellow (7.5YR 6/8); 70% coarse gravel; trace fine gravel; subangular to subrounded; 15% fine sand; 15% silt; gravel is mafics and granite; sand is mafics.	GM	Portland Bentonite Cement	Kelly down @ 1002, resume drilling @ 1023.
230					Same as above (225 ft).			Hard drilling @ 227', possibly cemented formation.
235					Same as above (225 ft).			
240								

KAFB_BOREHOLE_LOG - SHAW_DRILLING.GDT - 7/13/15 13:12 - Z:\KAFB BFF\GINT\KAFB_PROJECT\KAFB_BFF.GPJ

Borehole ID: KAFB-106228

Client: US Army Corps of Engineers
Project Location: KAFB, Albuquerque, NM
Project Name: KAFB BFF SWMU ST-106 and SS-111
Project Number: 140705

Date Started: 5/18/2015
Date TD Reached: 5/29/15
Date Completed: 6/2/2015

Ground Elevation AMSL (ft): Not Recorded
Y Coordinate:
X Coordinate:

Hole Diameter Upper (in.): 16
Hole Diameter Lower (in.): 14-3/4
Surface Completion Type: Flush

Groundwater Levels BGS (ft):
▽ At Time of Drilling: 458.00
▼ At End of Drilling: Not Recorded
▼ After Drilling: 458.51

Drillling Contractor: National Drilling
Drilling Method: Mud Rotary
Logged By: M. Giles

Depth (ft)	Sample Type	Number	Headspace PID	Lithologic Log	Material Description	U.S.C.S.	Well Diagram	Remarks
240					Silty SAND (SM); reddish yellow (7.5YR 6/6); 70% fine to coarse sand; subangular to subrounded; 10% fine gravel to 3/8"; 20% silt; sand is mafics and granite; gravel is feldspar.	SM		Kelly down @ 1150, resume drilling @ 1258.
245					Same as above (240 ft).			
250					Well-graded SAND with Silt and Gravel (SW-SM); reddish yellow (7.5YR 6/6); 60% fine to coarse sand; subangular to subrounded; 30% fine gravel to 3/8"; angular to subrounded; 10% silt; sand is mafics and granite; gravel is mafics, granite, and quartz.	SW-SM	Portland Bentonite Cement	Gravel clasts are generally flat.
255					Same as above (250 ft).			
260					Silty SAND (SM); yellowish brown (10YR 5/6); 80% coarse sand; trace fine and medium sand; angular to subrounded; 20% silt; sand is mafics and granite.	SM		Kelly down @ 1410, resume drilling @ 1420.
265					Same as above (260 ft); 70% coarse sand; trace fine and medium sand; 30% silt.			
270								

KAFB_BOREHOLE_LOG - SHAW_DRILLING.GDT - 7/13/15 13:12 - Z:\KAFB BFF\GINT\KAFB_PROJECT\KAFB_BFF.GPJ

Borehole ID: KAFB-106228

Client: US Army Corps of Engineers
Project Location: KAFB, Albuquerque, NM
Project Name: KAFB BFF SWMU ST-106 and SS-111
Project Number: 140705

Date Started: 5/18/2015
Date TD Reached: 5/29/15
Date Completed: 6/2/2015

Ground Elevation AMSL (ft): Not Recorded
Y Coordinate:
X Coordinate:

Hole Diameter Upper (in.): 16
Hole Diameter Lower (in.): 14-3/4
Surface Completion Type: Flush

Groundwater Levels BGS (ft):
At Time of Drilling: 458.00
At End of Drilling: Not Recorded
After Drilling: 458.51

Drillling Contractor: National Drilling
Drilling Method: Mud Rotary
Logged By: M. Giles

Depth (ft)	Sample Type	Number	Headspace PID	Lithologic Log	Material Description	U.S.C.S.	Well Diagram	Remarks
270					Silty SAND (SM); yellowish brown (10YR 5/6); 70% coarse sand; trace fine and medium sand; angular to subrounded; 30% silt; sand is mafics and granite.			Some color change due to mud added.
275					Same as above (270 ft).	SM		
280					Same as above (270 ft).			
285								Kelly down @ 1455, resume drilling @ 1515.
290					Silty GRAVEL with Sand (GM); light yellowish brown (10YR 6/4); 60% fine gravel; angular to subangular; 15% fine sand; trace medium and coarse sand; 25% silt; gravel is granite and quartzite; sand is quartz. Same as above (285 ft)	GM	Portland Bentonite Cement	
295					Silty GRAVEL (GM); light brown (7.5YR 6/4); 80% fine gravel; angular to subangular; 20% silt; gravel is mafics and granite.			Coarse mafic gravel observed @ 294' likely causing pipe to bounce.
300								

KAFB_BOREHOLE_LOG - SHAW_DRILLING.GDT - 7/13/15 13:12 - Z:\KAFB BFF\GINT\KAFB_PROJECT\KAFB_BFF.GPJ

Borehole ID: KAFB-106228

Client: US Army Corps of Engineers
Project Location: KAFB, Albuquerque, NM
Project Name: KAFB BFF SWMU ST-106 and SS-111
Project Number: 140705

Date Started: 5/18/2015
Date TD Reached: 5/29/15
Date Completed: 6/2/2015

Ground Elevation AMSL (ft): Not Recorded
Y Coordinate:
X Coordinate:

Hole Diameter Upper (in.): 16
Hole Diameter Lower (in.): 14-3/4
Surface Completion Type: Flush

Groundwater Levels BGS (ft):
At Time of Drilling: 458.00
At End of Drilling: Not Recorded
After Drilling: 458.51

Drillling Contractor: National Drilling
Drilling Method: Mud Rotary
Logged By: M. Giles

Depth (ft)	Sample Type	Number	Headspace PID	Lithologic Log	Material Description	U.S.C.S.	Well Diagram	Remarks
300					Poorly graded GRAVEL (GP); light brown (7.5YR 6/4); 90% fine gravel to 3/8"; angular to subangular; 5% coarse sand; subangular; 5% silt; gravel is mafics, granite, and quartzite; sand is mafics.			Kelly down @ 1550. Lost circulation @ 1600. Resume drilling @ 1605 with circulation.
305					Same as above (300 ft).			Drilling bit binding up at 305 to 310' likely due to coarse gravel.
310					Poorly graded GRAVEL with Sand (GP); light brown (7.5YR 6/4); 80% fine gravel to 3/8"; angular to subangular; 15% medium to coarse sand; subangular; 5% silt; gravel is mafics, granite, and quartzite; sand is quartz and mafics.			Stop drilling @ 310' @ 1620 on 5/22/15. 1500 gallons mud used on 5/22/15. Resume drilling @ 0842 on 5/26/15, redrill 3' due to fill in bottom of hole.
315					Same as above (310 ft).	GP	Portland Bentonite Cement	
320					Poorly graded GRAVEL (GP); light brown (7.5YR 6/4); 85% fine gravel to 3/8"; angular to subangular; 10% fine sand; subangular; 5% silt; gravel is mafics and quartzite; sand is quartz.			
325					Poorly graded GRAVEL with Sand (GP); light brown (7.5YR 6/4); 80% fine gravel to 3/8"; angular to subangular; 15% fine sand; subangular; 5% silt; gravel is granite and quartz; sand is quartz.			Drill bit bouncing likely due to coarse gravel. Kelly down @ 0902, resume drilling @ 0936.
330								

KAFB_BOREHOLE_LOG - SHAW_DRILLING.GDT - 7/13/15 13:12 - Z:\KAFB BFF\GINT\KAFB_PROJECT\KAFB_BFF.GPJ

Borehole ID: KAFB-106228

Client: US Army Corps of Engineers
Project Location: KAFB, Albuquerque, NM
Project Name: KAFB BFF SWMU ST-106 and SS-111
Project Number: 140705

Date Started: 5/18/2015
Date TD Reached: 5/29/15
Date Completed: 6/2/2015

Ground Elevation AMSL (ft): Not Recorded
Y Coordinate:
X Coordinate:

Hole Diameter Upper (in.): 16
Hole Diameter Lower (in.): 14-3/4
Surface Completion Type: Flush

Groundwater Levels BGS (ft):
At Time of Drilling: 458.00
At End of Drilling: Not Recorded
After Drilling: 458.51

Drillling Contractor: National Drilling
Drilling Method: Mud Rotary
Logged By: M. Giles

Depth (ft)	Sample Type	Number	Headspace PID	Lithologic Log	Material Description	U.S.C.S.	Well Diagram	Remarks
330					Poorly graded GRAVEL with Sand (GP); light brown (7.5YR 6/4); 80% fine gravel to 3/8"; angular to subangular; 15% fine sand; subangular; 5% silt; gravel is granite and quartz; sand is quartz.	GP		
335					Silty GRAVEL with Sand (GM); light brown (7.5YR 6/4); 70% fine gravel to 3/8"; angular to subangular; 15% fine sand; subangular; 15% silt; gravel is mafics and granite; sand is quartz.	GM		
340					Same as above (335 ft).			
345					Silty SAND (SM); brown (7.5YR 5/4); 80% fine sand; trace medium sand; subangular to subrounded; 20% silt; sand is quartz.	SM	Portland Bentonite Cement	Kelly down @ 1103, resume drilling @ 1125.
350					Same as above (345 ft).			
355					Poorly graded GRAVEL with Sand (GP); brown (7.5YR 5/4) 75% fine gravel to 3/8"; angular to subangular; 20% fine to coarse sand; 5% silt; gravel is mafics, granite, and quartzite; sand is quartz and mafics.	GP		Rig bouncing slightly.
360								

KAFB_BOREHOLE_LOG - SHAW_DRILLING.GDT - 7/13/15 13:12 - Z:\KAFB BFF\GINT\KAFB_PROJECT\KAFB_BFF.GPJ

Borehole ID: KAFB-106228

Client: US Army Corps of Engineers
Project Location: KAFB, Albuquerque, NM
Project Name: KAFB BFF SWMU ST-106 and SS-111
Project Number: 140705

Date Started: 5/18/2015
Date TD Reached: 5/29/15
Date Completed: 6/2/2015

Ground Elevation AMSL (ft): Not Recorded
Y Coordinate:
X Coordinate:

Hole Diameter Upper (in.): 16
Hole Diameter Lower (in.): 14-3/4
Surface Completion Type: Flush

Groundwater Levels BGS (ft):
At Time of Drilling: 458.00
At End of Drilling: Not Recorded
After Drilling: 458.51

Drillling Contractor: National Drilling
Drilling Method: Mud Rotary
Logged By: M. Giles

Depth (ft)	Sample Type	Number	Headspace PID	Lithologic Log	Material Description	U.S.C.S.	Well Diagram	Remarks
360								
					Silty SAND (SM); brown (7.5YR 5/4); 80% fine to coarse sand; angular to subangular; 20% silt; trace crushed coarse gravel; sand is quartz, mica, and quartzite.	SM		Slow drilling, bit bouncing at 358 to 363 ft. Kelly down @ 1436, resume drilling @ 1438.
365							Portland Bentonite Cement	
					Well-graded SAND with Gravel (SW); brown (7.5YR 5/4); 60% fine to coarse sand; angular to subangular; 35% fine gravel to 3/8"; angular to subangular; 5% silt; sand is mafics and quartz; gravel is mafics and granite.	SW	Top of Bentonite Seal	
370					Same as above (365 ft).			Drill bit bouncing.
375					Same as above (365 ft).			
380							Bentonite Seal	
					Well-graded SAND with Silt (SW-SM); brown (7.5YR 5/4); 80% fine to coarse sand; angular to subangular; 10% fine gravel to 3/8"; 10% silt; sand is quartz and mafics; gravel is mafics and quartz.	SW-SM		Kelly down @ 1710, resume drilling @ 1715. Used 1500 gallons mud on 5/26/15.
385								
					Silty SAND (SM); brown (7.5YR 5/3); 80% fine to coarse sand; angular to subangular; 20% silt; sand is quartz and mafics.	SM		Bit bouncing @ 1804.
390								

KAFB_BOREHOLE_LOG - SHAW_DRILLING.GDT - 7/13/15 13:12 - Z:\KAFB BFF\GINT\KAFB_PROJECT\KAFB_BFF.GPJ

Borehole ID: KAFB-106228

Client: US Army Corps of Engineers
Project Location: KAFB, Albuquerque, NM
Project Name: KAFB BFF SWMU ST-106 and SS-111
Project Number: 140705

Date Started: 5/18/2015
Date TD Reached: 5/29/15
Date Completed: 6/2/2015

Ground Elevation AMSL (ft): Not Recorded
Y Coordinate:
X Coordinate:

Hole Diameter Upper (in.): 16
Hole Diameter Lower (in.): 14-3/4
Surface Completion Type: Flush

Groundwater Levels BGS (ft):
▽ At Time of Drilling: 458.00
▼ At End of Drilling: Not Recorded
▼ After Drilling: 458.51

Drillling Contractor: National Drilling
Drilling Method: Mud Rotary
Logged By: M. Giles

Depth (ft)	Sample Type	Number	Headspace PID	Lithologic Log	Material Description	U.S.C.S.	Well Diagram	Remarks
390					Silty SAND (SM); brown (7.5YR 5/3); 80% fine to coarse sand; angular to subangular; 20% silt; sand is quartz and mafics.	SM	- Top of 20/40 Sand	Stop drilling @ 392.5' @ 1843 on 5/26/15. Used 1600 gallons mud on 5/26/15. Resume drilling @ 0805 on 5/27/15.
395					Well-graded SAND with Silt (SW-SM); gray (7.5YR 6/1); 80% fine to coarse sand; subangular to subrounded; 10% fine gravel to 3/8"; subangular to subrounded; 10% silt; sand and gravel are quartz and mafics.	SW-SM	- Top of 10/20 Sand	
400					Fat CLAY with Sand (CH); strong brown (7.5YR 5/6); medium plasticity; 80% clay; 20% fine sand; trace medium and coarse sand.	CH		
405					Same as above (399 ft).			
410					Same as above (399 ft); sand is more coarse.			Stop drilling @ 1145. Trip out and replace drill bit, dump mud in shaker, and repair sand pump. Resume drilling @ 1738.
415					Clayey SAND (SC); strong brown (7.5YR 5/6); 70% fine to coarse sand; subangular to subrounded; 30% clay; sand is mafics, quartz, and granite.	SC		
420								

KAFB_BOREHOLE_LOG - SHAW_DRILLING.GDT - 7/13/15 13:12 - Z:\KAFB BFF\GINT\KAFB_PROJECT\KAFB_BFF.GPJ

Borehole ID: KAFB-106228

Client: US Army Corps of Engineers
Project Location: KAFB, Albuquerque, NM
Project Name: KAFB BFF SWMU ST-106 and SS-111
Project Number: 140705

Date Started: 5/18/2015
Date TD Reached: 5/29/15
Date Completed: 6/2/2015

Ground Elevation AMSL (ft): Not Recorded
Y Coordinate:
X Coordinate:

Hole Diameter Upper (in.): 16
Hole Diameter Lower (in.): 14-3/4
Surface Completion Type: Flush

Groundwater Levels BGS (ft):
At Time of Drilling: 458.00
At End of Drilling: Not Recorded
After Drilling: 458.51

Drillling Contractor: National Drilling
Drilling Method: Mud Rotary
Logged By: M. Giles

Depth (ft)	Sample Type	Number	Headspace PID	Lithologic Log	Material Description	U.S.C.S.	Well Diagram	Remarks
420					Poorly graded SAND with Silt (SP-SM); pinkish gray (7.5YR 6/2); 90% coarse sand; trace fine and medium sand; subangular to subrounded; 10% silt; sand is mafics, granite, quartz, and quartzite.	SP-SM		
425					Same as above (420 ft).			Pipe bouncing.
430					Same as above (420 ft).			Pipe bouncing.
435					Same as above (420 ft).			
440					Same as above (420 ft).		- Top of 8" Stainless Steel 0.050 Slot Screen	Stop drilling @ 443' @ 1846 on 5/27/15. Used 1600 gallons mud on 5/27/15. Resume drilling @ 0816 on 5/28/15.
445					Poorly graded SAND (SP); brown (7.5YR 5/4); 95% coarse sand; trace fine and medium sand; subangular to subrounded; 5% silt; sand is mafics, quartz, quartzite, and granite.	SP		Fine sand coming off the shaker.
450								

KAFB_BOREHOLE_LOG - SHAW_DRILLING.GDT - 7/13/15 13:12 - Z:\KAFB BFF\GINT\KAFB_PROJECT\KAFB_BFF.GPJ

Borehole ID: KAFB-106228

Client: US Army Corps of Engineers
Project Location: KAFB, Albuquerque, NM
Project Name: KAFB BFF SWMU ST-106 and SS-111
Project Number: 140705

Date Started: 5/18/2015
Date TD Reached: 5/29/15
Date Completed: 6/2/2015

Ground Elevation AMSL (ft): Not Recorded
Y Coordinate:
X Coordinate:

Hole Diameter Upper (in.): 16
Hole Diameter Lower (in.): 14-3/4
Surface Completion Type: Flush

Groundwater Levels BGS (ft):
At Time of Drilling: 458.00
At End of Drilling: Not Recorded
After Drilling: 458.51

Drillling Contractor: National Drilling
Drilling Method: Mud Rotary
Logged By: M. Giles

Depth (ft)	Sample Type	Number	Headspace PID	Lithologic Log	Material Description	U.S.C.S.	Well Diagram	Remarks
450					Poorly graded SAND (SP); brown (7.5YR 5/4); 95% coarse sand; trace fine and medium sand; subangular to subrounded; 5% silt; sand is mafics, quartz, quartzite, and granite.	SP		Fine sand coming off the shaker.
455					Poorly graded SAND with Silt (SP-SM); brown (7.5YR 5/4); 90% coarse sand; trace fine and medium sand; angular to subrounded; 10% silt; sand is quartz, mafics, and granite.			
460					Same as above (455 ft); 90% fine sand; trace medium and coarse sand; subangular; sand is quartz.			
465					Same as above (455 ft); 90% fine sand; trace medium and coarse sand; subangular; sand is quartz.	SP-SM	8" Stainless Steel 0.050 Slot Screen	
470					Same as above (455 ft); 90% fine sand; trace medium and coarse sand; subangular; sand is quartz.			
475					Well-graded SAND with Silt (SW-SM); brown (7.5YR 5/4); 90% fine to coarse sand; subangular to subrounded; 10% silt; fine sand is quartz and mafics; coarse sand is quartz, granite, and mafics.	SW-SM		Bit bouncing @ 478'.
480								

KAFB_BOREHOLE_LOG - SHAW_DRILLING.GDT - 7/13/15 13:12 - Z:\KAFB BFF\GINT\KAFB_PROJECT\KAFB_BFF.GPJ

Borehole ID: KAFB-106228

Client: US Army Corps of Engineers
Project Location: KAFB, Albuquerque, NM
Project Name: KAFB BFF SWMU ST-106 and SS-111
Project Number: 140705

Date Started: 5/18/2015
Date TD Reached: 5/29/15
Date Completed: 6/2/2015

Ground Elevation AMSL (ft): Not Recorded
Y Coordinate:
X Coordinate:

Hole Diameter Upper (in.): 16
Hole Diameter Lower (in.): 14-3/4
Surface Completion Type: Flush

Groundwater Levels BGS (ft):
▽ At Time of Drilling: 458.00
▼ At End of Drilling: Not Recorded
▼ After Drilling: 458.51

Drillling Contractor: National Drilling
Drilling Method: Mud Rotary
Logged By: M. Giles

Depth (ft)	Sample Type	Number	Headspace PID	Lithologic Log	Material Description	U.S.C.S.	Well Diagram	Remarks
480					Well-graded SAND with Silt (SW-SM); brown (7.5YR 5/4); 90% fine to coarse sand; subangular to subrounded; 10% silt; fine sand is quartz and mafics; coarse sand is quartz, granite, and mafics.	SW-SM		
485					Same as above (480 ft); fine sand is quartz; medium and coarse sand is quartz, mafics, and quartzite.			
490					Same as above (480 ft); fine sand is quartz; medium and coarse sand is quartz, mafics, and quartzite.			
495					Silty SAND (SM); brown (7.5YR 5/4); 85% fine to coarse sand; subangular to subrounded; 15% silt; fine sand is quartz; medium and coarse sand is granite, quartzite, and mafics.		8" Stainless Steel 0.050 Slot Screen	A little bouncing.
500					Same as above (495 ft).	SM		A little bouncing.
505					Well-graded SAND (SW); brown (7.5YR 5/4); 95% fine to coarse sand; angular to subrounded; 5% silt; sand is quartz, mafics, and granite.	SW		
510								

KAFB_BOREHOLE_LOG - SHAW_DRILLING.GDT - 7/13/15 13:12 - Z:\KAFB BFF\GINT\KAFB_PROJECT\KAFB_BFF.GPJ

Borehole ID: KAFB-106228

Client: US Army Corps of Engineers
Project Location: KAFB, Albuquerque, NM
Project Name: KAFB BFF SWMU ST-106 and SS-111
Project Number: 140705

Date Started: 5/18/2015
Date TD Reached: 5/29/15
Date Completed: 6/2/2015

Ground Elevation AMSL (ft): Not Recorded
Y Coordinate:
X Coordinate:

Hole Diameter Upper (in.): 16
Hole Diameter Lower (in.): 14-3/4
Surface Completion Type: Flush

Groundwater Levels BGS (ft):
At Time of Drilling: 458.00
At End of Drilling: Not Recorded
After Drilling: 458.51

Drillling Contractor: National Drilling
Drilling Method: Mud Rotary
Logged By: M. Giles

Depth (ft)	Sample Type	Number	Headspace PID	Lithologic Log	Material Description	U.S.C.S.	Well Diagram	Remarks
510								
515					Well-graded SAND (SW); brown (7.5YR 5/4); 95% fine to coarse sand; angular to subrounded; 5% silt; sand is quartz, mafics, and granite.	SW		
520					Poorly graded SAND (SP); brown (7.5YR 5/4); 95% coarse sand; trace fine sand; subangular to subrounded; 5% silt; sand is quartz, mica, and granite.	SP		Bit bouncing.
525					Same as above (515 ft).		8" Stainless Steel 0.050 Slot Screen	Bit bouncing.
530					Same as above (515 ft).			Bit bouncing.
535					Same as above (515 ft).			Bit bouncing.
540					Well-graded SAND (SW); brown (7.5YR 5/4); 95% fine to coarse sand; subangular to subrounded; 5% silt; sand is quartz, granite, and mica.	SW		

KAFB_BOREHOLE_LOG - SHAW_DRILLING.GDT - 7/13/15 13:12 - Z:\KAFB BFF\GINT\KAFB_PROJECT\KAFB_BFF.GPJ

Borehole ID: KAFB-106228

Client: US Army Corps of Engineers
Project Location: KAFB, Albuquerque, NM
Project Name: KAFB BFF SWMU ST-106 and SS-111
Project Number: 140705

Date Started: 5/18/2015
Date TD Reached: 5/29/15
Date Completed: 6/2/2015

Ground Elevation AMSL (ft): Not Recorded
Y Coordinate:
X Coordinate:

Hole Diameter Upper (in.): 16
Hole Diameter Lower (in.): 14-3/4
Surface Completion Type: Flush

Groundwater Levels BGS (ft):
At Time of Drilling: 458.00
At End of Drilling: Not Recorded
After Drilling: 458.51

Drillling Contractor: National Drilling
Drilling Method: Mud Rotary
Logged By: M. Giles

Depth (ft)	Sample Type	Number	Headspace PID	Lithologic Log	Material Description	U.S.C.S.	Well Diagram	Remarks
540					Well-graded SAND (SW); brown (7.5YR 5/4); 95% fine to coarse sand; subangular to subrounded; 5% silt; sand is quartz, granite, and mica.		Botton of Screen	Bit bouncing.
							Sump	
545					Same as above (540 ft).	SW	Bottom of Sump	
550					Poorly graded SAND (SP); brown (7.5YR 5/4); 95% coarse sand; trace fine and medium sand; angular to subrounded; 5% silt; sand is quartz, mica, and granite.			Stop drilling @ 1845 on 5/28/15. Used 2,300 gallons of mud on 5/28/15. Resume drilling @ 0803 on 5/29/15.
555					Same as above (550 ft).			
560					Same as above (550 ft).	SP		
565							Bottom of Filter Pack	Total depth = 565 ft. Reached total depth @ 0847 on 5/29/15. Used 600 gallons of mud on 5/29/15. Used a total of 9,100 gallons mud on the entire boring.
570								

KAFB_BOREHOLE_LOG - SHAW_DRILLING.GDT - 7/13/15 13:12 - Z:\KAFB BFF\GINT\KAFB_PROJECT\KAFB_BFF.GPJ

Extraction Well Completion Diagram KAFB-106228

Installation Start Date/Time: 5/18/2015
Installation End Date/Time: 6/2/2015

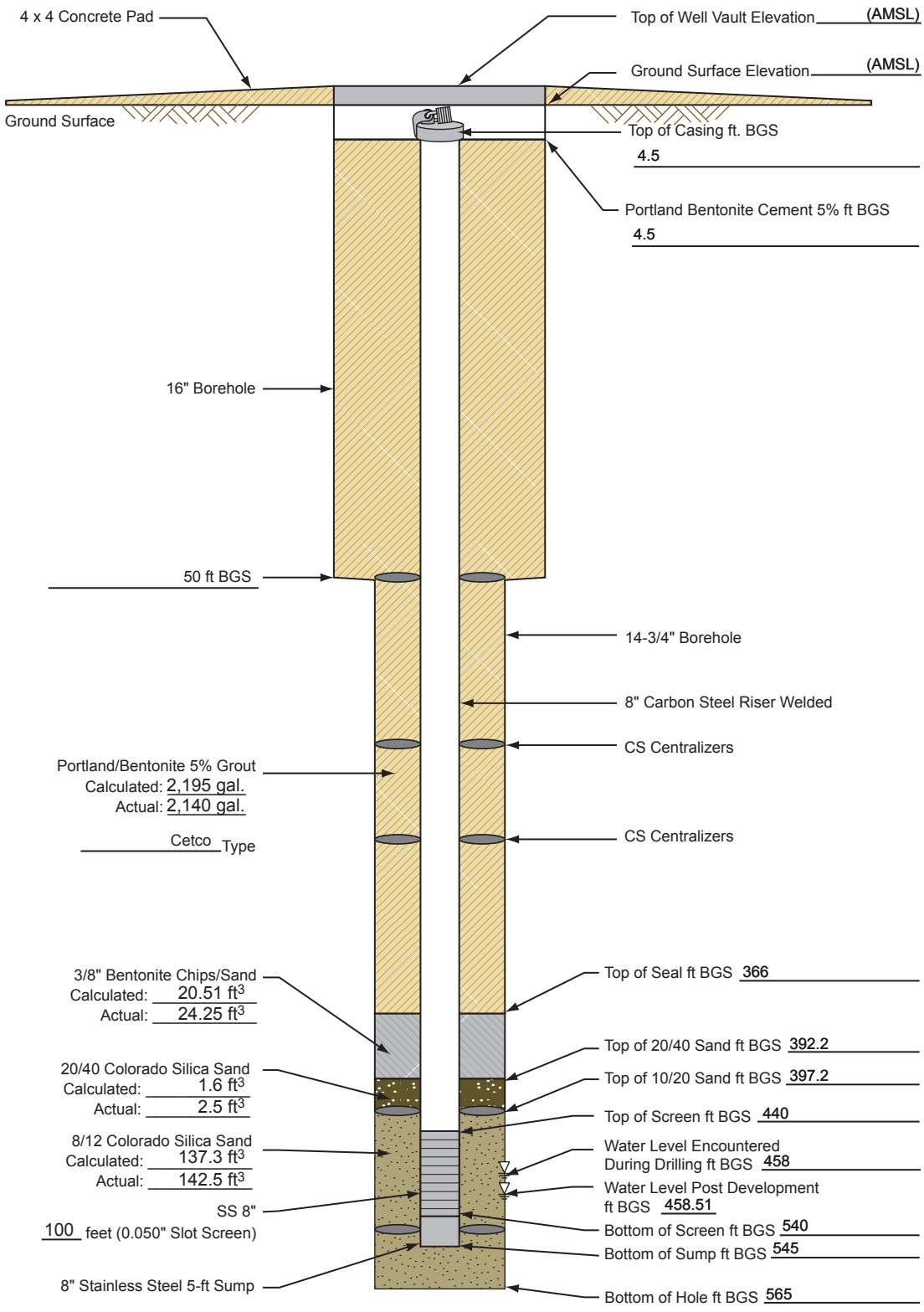

(4,816.90) = *Elevations are NAVD 88 Datum values based on NGS Control Station "Hanger", Elevation = 5,343.43 ft. GPS/RTK methods and GEO1D99 model were used to determine elevations of all surveyed points.*

Not to Scale
BGS = Below Ground Surface

140705.CB020403.A19

Groundwater Extraction Well Development

Project Name: KAFB BFF
Location: Gibson
Personnel: VB, RW, EP
Start Date: 6/4/2015
End Date: 6/16/2015

Well No.: KAFB-106228
Date Installed: 6/2/2015
Casing Diameter (I.D.): 8-inch
Total Depth (ft. BGS): 545

Method of Development:

[X] Surging [X] Bailing [X] Pumping [X] Jetting

[X] Original Development [ ] Redevelopment [ ] Other

Depth to Water Before Developing Well (ft. BGS): NR
Screened Interval (ft. BGS): 440 - 540
Weather: Varied

Equipment Numbers: **pH:** NR **Conductivity:** NR
Turbidity: NR

Equipment Decontaminated Prior to Development? [X] Yes [ ] No
Describe:

Collected Sample of Water Added to Well? [ ] Yes [X] No
Describe:

Comments:

Summary of development procedure, including key decision-points, calculations, and observations (described in detail in the following pages):

Well development consisted of bailing, surging, pumping, and jetting. The first step of development removed mud and cuttings from the well casing and filter pack, which were generated during the drilling process, by surging and bailing. The second step entailed physical well development using surging, bailing, and pumping to assess development progress. These actions included taking measurements of sediment content in the water using the Imhoff cone technique, and applying 30 minutes of sustained pumping, measuring, and plotting drawdown to estimate development effectiveness. The third step used jetting with simultaneous pumping.

Groundwater Extraction Well Development

Bailing				
Date	Time	Total Volume Bailed (gallons)	Imhoff Cone Measurement (mL sediment per L water)	Comments
6/4/2015	1157	15	25	Bailer was full of dark mud.
6/4/2015	1215	120	5	Wait until 993 gallons to begin purging well.
6/4/2015	1530	1,000	30	Water/mud is dark brown.
6/5/2015	1243	1,015	25	Continue bailing. Water/mud is dark brown.
6/5/2015	1323	1,300	10	Water/mud is dark brown.
6/5/2015	1356	1,375	10	Water/mud is dark brown.
6/5/2015	1428	1,600	15	Lighter brown in color.
6/6/2015	1018	1,765	10	Lighter brown in color.
6/6/2015	1032	1,840	3	Lighter brown in color. Sand to 1 mm.
6/8/2015	1157	2,935	0.7	Water is light brown.
6/8/2015	1207	2,980	3.0	Water is light brown.
6/8/2015	1220	2,995	0.5	Water is light brown.
6/8/2015	1226	3,040	0.9	Water is light brown.

L = liter

mL = milliliter

Groundwater Extraction Well Development

Surging				
Interval (feet below ground surface)	Date	Start Time	End Time	Comments
540-535	6/5/2015	1746	1750	Begin purging.
535-530	6/5/2015	1752	1756	
530-525	6/5/2015	1757	1801	
525-520	6/5/2015	1802	1806	
520-515	6/5/2015	1807	1811	
515-510	6/5/2015	1812	1816	
510-505	6/5/2015	1816	1820	
505-500	6/5/2015	1821	1825	
500-495	6/5/2015	1826	1830	
495-490	6/5/2015	1834	1838	
490-485	6/5/2015	1838	1642	Stop purging for 6/5/2015.
485-480	6/6/2015	0844	0848	
480-475	6/6/2015	0850	0854	
475-470	6/6/2015	0855	0859	
470-465	6/6/2015	0900	0904	
465-460	6/6/2015	0905	0909	
460-455	6/6/2015	0910	0914	
455-450	6/6/2015	0915	0919	
450-445	6/6/2015	0921	0925	
445-440	6/6/2015	0926	0930	
540-440	6/6/2015	0940	0950	Four strokes.
540-535	6/8/2015	0910	0914	
535-530	6/8/2015	0916	0920	
530-525	6/8/2015	0921	0925	
525-520	6/8/2015	0926	0930	
520-515	6/8/2015	0932	0936	
515-510	6/8/2015	0937	0941	
510-505	6/8/2015	0943	0947	
505-500	6/8/2015	0951	0955	
500-495	6/8/2015	0957	1001	
495-490	6/8/2015	1002	1006	
490-485	6/8/2015	1008	1012	
485-480	6/8/2015	1014	1018	
480-475	6/8/2015	1022	1026	
475-470	6/8/2015	1029	1034	
470-465	6/8/2015	1035	1039	
465-460	6/8/2015	1040	1045	
460-455	6/8/2015	1046	1050	Out of saturated screen
540-455	6/8/2015	1056	1130	Six strokes.

Groundwater Extraction Well Development

Pumping

Date	Time	Rate (gpm)	Depth to Water (ft BGS)	Volume Removed (gallons)	Temp (°C)	pH (S.U)	EC (mS/cm)	Turbidity (NTU)	Specific Capacity (gpm/ft)	Comments
6/6/2015	1325	4.55	NR	1,930	23.02	8.38	1.270	>1,000	NR	Water level meter malfunction prior to pumping
6/6/2015	1345	4.5	NR	2,020	25.24	8.71	1.104	>1,000	NR	
6/6/2015	1400	4.5	NR	2,100	23.48	8.78	1.090	>1,000	NR	Imoff = 1.5 mL
6/6/2015	1415	4.5	NR	2,170	23.66	8.79	0.986	>1,000	NR	Imoff =0.25 mL
6/6/2015	1430	4.5	NR	2,240	23.29	8.61	0.835	>1,000	NR	Imoff = 0.5 mL
6/6/2015	1445	4.5	NR	2,310	23.70	8.53	0.699	>1,000	NR	Imoff = 0.25 mL
6/6/2015	1500	4.0	NR	2,380	23.97	8.31	0.622	>1,000	NR	Imoff = 0.25 mL
6/6/2015	1515	4.0	NR	2,440	22.91	7.83	0.562	>1,000	NR	Imoff = 0.4 mL
6/6/2015	1530	4.0	NR	2,500	22.66	7.89	0.548	>1,000	NR	Imoff = 0.3 mL
6/6/2015	1545	4.0	NR	2,560	23.11	7.87	0.540	>1,000	NR	Imoff = 0.2 mL
6/6/2015	1600	4.0	NR	2,620	22.85	7.88	0.533	>1,000	NR	Imoff = 0.2 mL
6/6/2015	1615	4.0	479.00	2,680	22.49	7.78	0.534	>1,000	NR	Imoff = 0.4 mL
6/6/2015	1630	4.0	479.80	2,740	22.70	7.81	0.529	>1,000	NR	Imoff = 0.3 mL
6/6/2015	1645	4.0	NR	2,800	22.50	7.91	0.535	>1,000	NR	Imoff = 0.1 mL
6/6/2015	1700	4.0	NR	2,860	22.27	7.69	0.544	>1,000	NR	Imoff = 0.3 mL
6/6/2015	1715	4.0	NR	2,920	22.44	7.72	0.522	>1,000	NR	Imoff = 0.2 mL
6/9/2015	0720	11.0	467.15	3,722	21.19	8.42	0.529	>1,000	NR	Imoff = 0.1 mL; Pump at 532 feet bgs
6/9/2015	0740	11.0	467.80	3,940	21.16	8.32	0.508	781	NR	Imoff = < 0.1 mL
6/9/2015	0750	11.0	470.65	4,050	21.16	8.22	0.499	313	NR	Imoff = < 0.1 mL
6/9/2015	0800	11.0	471.10	4,160	21.16	8.21	0.503	278	NR	Imoff = < 0.1 mL
6/9/2015	0810	11.0	471.50	4,270	21.16	8.21	0.497	207	0.6	Imoff = < 0.1 mL
6/9/2015	0820	18.0	478.1	4,380	21.10	8.21	0.488	165	NR	Imoff = < 0.1 mL
6/9/2015	0830	19.0	482.80	4,560	20.85	8.21	0.522	196	NR	Imoff = < 0.1 mL
6/9/2015	0840	18.0	486.20	4,750	20.87	8.25	0.514	429	NR	Imoff = < 0.1 mL
6/9/2015	0850	18.5	487.00	4,930	20.88	8.26	0.507	452	NR	Imoff = < 0.1 mL
6/9/2015	0900	19	486.00	5,125	20.80	8.20	0.491	351	NR	Imoff = 0.1 mL
6/9/2015	0910	18	485.20	5,315	20.75	8.17	0.496	262	NR	Imoff = < 0.1 mL
6/9/2015	0920	18	485.10	5,495	20.75	8.16	0.493	230	NR	Imoff = < 0.1 mL
6/9/2015	0930	18	484.50	5,670	20.77	8.16	0.487	184	NR	Imoff = 0.1 mL
6/9/2015	0940	18	484.00	6,850	20.63	8.14	0.491	176	0.64	Imoff = 0.1 mL
6/9/2015	1025	21	471.20	6,930	21.41	8.19	0.910	146	NR	Imoff = 0.1 mL; Pump at 511 feet bgs

Groundwater Extraction Well Development

Pumping

Date	Time	Rate (gpm)	Depth to Water (ft BGS)	Volume Removed (gallons)	Temp (°C)	pH (S.U.)	EC (mS/cm)	Turbidity (NTU)	Specific Capacity (gpm/ft)	Comments
6/9/2015	1035	20	476.95	7,130	20.86	7.99	0.503	75.4	NR	Imoff = 0.1 mL
6/9/2015	1045	20	480.50	7,330	20.85	8.11	0.487	11.5	NR	Imoff = < 0.1 mL
6/9/2015	1055	20	481.75	7,530	20.94	8.15	0.478	143	NR	Imoff = < 0.1 mL
6/9/2015	1055	20	482.35	7,730	20.87	8.15	0.480	147	0.79	Imoff = < 0.1 mL
6/9/2015	1135	21	468.00	7,830	22.84	8.24	0.478	136	NR	Imoff = < 0.1 mL Pump at 490 feet bgs
6/9/2015	1145	22	480.00	8,050	20.66	7.96	0.490	96.4	NR	Imoff = < 0.1 mL
6/9/2015	1155	20	479.00	8,270	20.71	8.05	0.456	88.2	NR	Imoff = < 0.1 mL
6/9/2015	1205	20	479.50	8,470	20.72	8.08	0.454	96.5	NR	Imoff = < 0.1 mL
6/9/2015	1215	20	479.50	8,670	20.66	8.08	0.468	89.0	NR	Imoff = < 0.1 mL
6/9/2015	1225	20	479.50	8,870	20.64	8.08	0.461	76.6	NR	Imoff = < 0.1 mL
6/9/2015	1235	20	479.50	9,070	20.63	8.08	0.460	73.5	0.89	Imoff = < 0.1 mL
6/9/2015	1245	20	479.50	9,270	20.66	8.09	0.450	73.7	0.89	Imoff = < 0.1 mL
6/9/2015	1255	20	479.50	9,470	20.71	8.10	0.458	72.1	0.89	Imoff = < 0.1 mL
6/9/2015	1305	20	479.50	9,670	20.73	8.10	0.455	79.8	0.89	Imoff = < 0.1 mL
6/9/2015	1320	20	479.00	9,970	20.71	8.08	0.452	68.8	0.90	Imoff = < 0.1 mL
6/9/2015	1415	20	465.00	10,010	21.02	8.24	0.458	125	2.5	Imoff = < 0.1 mL; Pump at 506 feet bgs
6/9/2015	1425	21	474.00	10,220	20.61	7.85	0.444	50.2	2.4	Imoff = < 0.1 mL
6/9/2015	1435	21	477.15	10,420	20.66	7.99	0.452	82.4	1.05	Imoff = < 0.1 mL
6/9/2015	1445	21	477.00	10,630	20.68	8.00	0.494	80.0	1.05	Imoff = < 0.1 mL
6/9/2015	1455	21	477.00	10,840	20.65	8.01	0.452	73.7	1.05	Imoff = < 0.1 mL; Pump at 501 feet bgs
6/9/2015	1505	21	476.50	11,050	20.74	8.02	0.458	72.4	1.08	Imoff = < 0.1 mL; Pump at 496 feet bgs
6/9/2015	1515	21	476.50	11,260	20.64	8.03	0.449	68.8	1.08	Imoff = < 0.1 mL
6/9/2015	1540	22	467.30	11,360	20.68	7.47	0.406	155	2.14	Imoff = < 0.1 mL; Pump at 527 feet bgs
6/9/2015	1550	22	477.50	11,580	20.59	7.89	0.432	45.2	1.07	Imoff = < 0.1 mL; Pump at 527 feet bgs
6/9/2015	1600	22	477.90	11,800	20.65	7.95	0.442	74.1	1.05	Imoff = < 0.1 mL
6/9/2015	1610	22	477.69	12,020	20.60	7.99	0.446	67.0	1.06	Imoff = < 0.1 mL; Pump at 522 feet bgs

Groundwater Extraction Well Development

Pumping

Date	Time	Rate (gpm)	Depth to Water (ft BGS)	Volume Removed (gallons)	Temp (°C)	pH (S.U.)	EC (mS/cm)	Turbidity (NTU)	Specific Capacity (gpm/ft)	Comments
6/9/2015	1620	22	477.40	12,240	20.62	8.02	0.441	59.9	1.08	Imoff = < 0.1 mL
6/9/2015	1630	21	477.50	12,450	20.69	8.00	0.500	49.3	1.02	Imoff = < 0.1 mL; Pump at 502 feet bgs
6/9/2015	1640	21	477.39	12,660	20.69	8.03	0.446	48.7	1.03	Imoff = < 0.1 mL
6/9/2015	1650	45	496.30	13,110	20.51	8.00	0.474	87.0	1.15	Imoff = < 0.1 mL; Pump at 532 feet bgs
6/9/2015	1700	43	507.90	13,540	20.31	8.04	0.476	92.0	0.84	Imoff = 1.0 mL
6/10/2015	1700	45	471.90	15,810	22.82	8.69	0.448	143	3.02	Imoff = < 0.1 mL; Pump at 513 feet bgs
6/10/2015	1710	45	474.00	16,260	21.25	7.97	0.443	70.9	2.65	Imoff = < 0.1 mL
6/10/2015	1720	45	474.90	16,710	21.02	7.96	0.429	59.9	2.15	Imoff = < 0.1 mL
6/11/2015	0810	46	466.00	17,537	21.59	7.20	0.459	17.6	5.11	Imoff = 0 mL; Pump at 481.5 feet bgs
6/11/2015	0820	45.5	470.60	17,442	20.33	7.19	0.458	49.7	3.31	Imoff = 0 mL
6/11/2015	0830	45.5	471.70	18,447	20.46	7.31	0.444	62.3	3.10	Imoff = 0 mL
6/11/2015	0840	45.5	472.30	18,902	19.91	7.37	0.440	45.9	2.97	Imoff = 0 mL
6/12/2015	1435	45	460.50	20,098	26.45	6.79	0.527	15.2	12.16	Imoff = 0 mL; Pump at 533 feet bgs
6/12/2015	1445	45	461.31	20,548	25.42	7.31	0.526	5.79	9.20	Imoff = 0 mL
6/12/2015	1455	45	461.64	20,998	22.71	7.57	0.443	2.55	9.20	Imoff = 0 mL
6/12/2015	1505	45	461.89	20,448	21.57	7.64	0.428	1.90	8.84	Imoff = 0 mL
6/12/2015	1515	45	462.02	20,898	20.98	7.61	0.426	1.72	8.65	Imoff = 0 mL
6/13/2015	2031	45	460.00	38,341	25.52	8.63	0.511	13.7	15	Imoff = < 0.1 mL; Pump at 533 feet bgs
6/13/2015	2041	45	460.66	38,791	20.98	8.19	0.364	8.58	12.30	Imoff = 0 mL
6/13/2015	2051	45	460.77	39,241	20.76	8.12	0.380	9.79	11.94	Imoff = 0 mL
6/13/2015	2101	45.5	460.91	39,691	20.65	8.10	0.380	6.95	11.64	Imoff = 0 mL
6/13/2015	2111	45	460.99	40,141	20.56	8.10	0.379	4.96	11.28	Imoff = 0 mL
6/13/2015	2121	45	461.05	40,591	20.51	8.10	0.378	4.64	11.11	Imoff = 0 mL
6/13/2015	2131	45	461.10	41,041	20.48	8.11	0.378	4.32	10.98	Imoff = 0 mL
6/13/2015	2141	45	461.10	41,491	20.49	8.12	0.377	5.48	10.98	Imoff = 0 mL
6/15/2015	2120	45	452.05	53,048	27.21	7.87	0.500	14.3	NR	Imoff = < 0.1 mL
6/15/2015	2130	45	460.62	53,498	25.03	7.88	0.481	31.0	12.61	Imoff = < 0.1 mL
6/15/2015	2140	45	460.77	53,948	23.53	7.91	0.429	16.3	12.01	Imoff = < 0.1 mL
6/15/2015	2150	45	460.82	54,398	22.80	7.93	0.399	8.86	11.94	Imoff = < 0.1 mL

Groundwater Extraction Well Development

Pumping

Date	Time	Rate (gpm)	Depth to Water (ft BGS)	Volume Removed (gallons)	Temp (°C)	pH (S.U.)	EC (mS/cm)	Turbidity (NTU)	Specific Capacity (gpm/ft)	Comments
6/15/2015	2200	45	460.90	54,848	22.28	7.96	0.391	5.14	11.69	Imoff = < 0.1 mL
6/15/2015	2208	NR	NR	55,208	--	--	--	--	--	Shut off pump.
6/16/2015	1900	56	462.75	56,273	21.79	8.31	0.423	109	12.97	Imoff = < 0.1 mL
6/16/2015	1910	55	462.76	56,823	21.05	8.27	0.401	58.6	12.97	Imoff = < 0.1 mL
6/16/2015	1920	55	462.84	57,373	20.88	8.30	0.396	27.7	12.70	Imoff = < 0.1 mL
6/16/2015	1930	55	462.87	57,923	20.76	8.30	0.396	21.3	12.61	Imoff = < 0.1 mL
6/16/2015	1940	55	462.91	58,473	20.68	8.30	0.392	17.1	12.5	Imoff = < 0.1 mL
6/16/2015	1950	55	462.94	59,023	20.63	8.31	0.391	12.6	12.42	Imoff = < 0.1 mL
6/16/2015	2000	55	462.97	59,573	20.57	8.31	0.391	12.6	12.33	Imoff = < 0.1 mL
6/16/2015	2020	55	463.01	60,673	20.50	8.32	0.390	7.90	12.22	Imoff = < 0.1 mL
6/16/2015	2040	55	461.66	61,773	20.43	8.33	0.389	7.64	12.14	Imoff = < 0.1 mL
6/16/2015	2130	55	461.75	63,523	20.37	8.32	0.388	4.46	11.90	Imoff = < 0.1 mL

°C = degrees Celsius
EC = Electric Conductivity
ft bgs = feet below ground surface
gpm = gallons per minute
gpm/ft = gallons per minute per foot
mL = milliliter
mS/cm = millisiemen per centimeter
NR = not recorded
NTU = Nephelometric Turbidity Unit
S.U. = Standard Unit

Groundwater Extraction Well Development

Jetting

Date	Time	Depth (ft bgs)	Jetting Rate (gpm)	Pumping Rate (gpm)	Imhoff Cone Measurement (mL sediment per L water)	Comments
6/9/2015	1715	484.5	29	45.5	0.2	Jet = 130 psi
6/9/2015	1721	481.5	29	45.5	0.7	Jet = 130 psi
6/9/2015	1724	478.5	29.5	45	0.5	Jet = 129 psi
6/9/2015	1736	475.5	29	--	--	Shut pump off @ 1734
6/9/2015	1740	472.5	29	--	--	Jet = 130 psi
6/9/2015	1744	469.5	29.5	--	--	Jet = 130 psi
6/9/2015	1748	466.5	29	--	--	Jet = 129 psi
6/9/2015	1751	463.5	29	--	--	Jet = 129 psi
6/9/2015	1755	460.5	29.5	--	--	Jet = 129 psi
6/10/2015	1450	531.5	22	44	< 0.1	Jet = 72 psi
6/10/2015	1505	536.5	24	45	0.3	Jet = 118 psi
6/10/2015	1514	533.5	24	45	0.1	Jet = 118 psi
6/10/2015	1518	530.5	24	45	0.2	Jet = 118 psi
6/10/2015	1524	527.5	24	46	0.5	Jet = 118 psi
6/10/2015	1529	524.5	24	46	0.1	Jet = 118 psi
6/10/2015	1534	521.5	24	45.5	0.1	Jet = 118 psi; Pumped 2,300 gallons
6/10/2015	1632	517.5	25	46	< 0.1	Jet = 117 psi
6/10/2015	1636	514.5	25	45	0.3	Jet = 117 psi
6/10/2015	1640	511.5	25	45.5	2.0	Jet = 117 psi
6/10/2015	1644	508.5	25	45.5	0.5	Jet = 117 psi
6/10/2015	1802	505.5	28	46	0.1	Jet = 117 psi
6/10/2015	1806	502.5	28	46	0.1	Jet = 116 psi
6/10/2015	1812	499.5	28.5	45.5	0.1	Jet = 116 psi
6/10/2015	1816	496.5	29	45	0.1	Jet = 117 psi
6/10/2015	1819	493.5	28	45	0.1	Jet = 117 psi
6/10/2015	1824	490.5	28	44	0.2	Jet = 117 psi
6/10/2015	1830	487.5	28	44.5	0.1	Jet = 117 psi; Stop jetting.
Jetted a total of 2,585 gallons and pumped out 6,490 gallons on 6/10/2015						
6/12/2015	0756	536.5	27	46	< 0.1	Jet = 129 psi
6/12/2015	0802	533.5	27	46	0.4	Jet = 129 psi
6/12/2015	0808	530.5	27	46	0.3	Jet = 128 psi
6/12/2015	0814	527.5	26	46	0.5	Jet = 128 psi
6/12/2015	0820	524.5	29	46	0.3	Jet = 129 psi
6/12/2015	0826	521.5	30	46	< 0.1	Jet = 128 psi
6/12/2015	0832	518.5	30	46	< 0.1	Jet = 128 psi
6/12/2015	0838	--	--	--	--	Breaking Connection.
6/12/2015	0934	515.5	26	45.5	< 0.1	Jet = 130 psi
6/12/2015	0940	512.5	26	46	0.1	Jet = 129 psi

Groundwater Extraction Well Development

Jetting

Date	Time	Depth (ft bgs)	Jetting Rate (gpm)	Pumping Rate (gpm)	Imhoff Cone Measurement (mL sediment per L water)	Comments
6/12/2015	0946	509.5	26.5	46	< 0.1	Jet = 130 psi
6/12/2015	0952	--	--	--	--	Breaking Connection.
6/12/2015	1032	506.5	27.5	45	< 0.1	Jet = 132 psi
6/12/2015	1038	503.5	28	45	< 0.1	Jet = 131 psi
6/12/2015	1044	500.5	28	45	< 0.1	Jet = 131 psi
6/12/2015	1050	497.5	28	45	< 0.1	Jet = 132 psi
6/12/2015	1056	494.5	28	45	< 0.1	Jet = 131 psi
6/12/2015	1102	491.5	28	46	< 0.1	Jet = 131 psi
6/12/2015	1108	--	--	--	--	Breaking Connection.
6/12/2015	1234	488.5	16	44	< 0.1	Jet = 130 psi
6/12/2015	1248	485.5	16	45	< 0.1	Jet = 132 psi
6/12/2015	1254	482.5	16	45	< 0.1	Jet = 132 psi; Stop pumping
6/12/2015	1300	479.5	16	--	--	Jet = 132 psi
6/12/2015	1306	476.5	16	--	--	Jet = 132 psi
6/12/2015	1312	473.5	16	--	--	Jet = 132 psi
6/12/2015	1318	470.5	16	--	--	Jet = 132 psi
6/12/2015	1324	467.5	16	--	--	Jet = 132 psi
6/12/2015	1330	464.5	15.5	--	--	Jet = 132 psi
6/12/2015	1336	--	--	--	--	Stop Jetting; Drop pump to bottom.
6/12/2015	1544	536.5	12	45	< 0.1	Jet = 132 psi; DTW = 460.20
6/12/2015	1551	533.5	11	45	< 0.1	Jet = 132 psi; DTW = 460.50
6/12/2015	1557	530.5	11	45	0.1	Jet = 132 psi
6/12/2015	1605	527.5	11	45	< 0.1	Jet = 132 psi
6/12/2015	1612	524.5	10	45	< 0.1	Jet = 132 psi
6/12/2015	1618	521.5	11	45	< 0.1	Jet = 132 psi; DTW = 461.50
6/12/2015	1620	--	--	--	--	Stop Jetting for repairs.
6/13/2015	1340	536.5	42	45	< 0.1	Jet = 120 psi
6/13/2015	1348	533.5	42	45	0.2	Jet = 120 psi
6/13/2015	1356	530.5	42	45	0.1	Jet = 120 psi
6/13/2015	1402	527.5	42	45	0.1	Jet = 120 psi
6/13/2015	1409	524.5	42	45	0.3	Jet = 120 psi
6/13/2015	1415	521.5	41	45.5	< 0.1	Jet = 120 psi
6/13/2015	1639	518.5	42	45	0.1	Jet = 122 psi
6/13/2015	1646	515.5	42	45.5	0.2	Jet = 121 psi
6/13/2015	1652	512.5	42	45.5	0.1	Jet = 121 psi
6/13/2015	1659	509.5	42	45	0.1	Jet = 121 psi
6/13/2015	1730	506.5	42	45	< 0.1	Jet = 122 psi

Groundwater Extraction Well Development

Jetting

Date	Time	Depth (ft bgs)	Jetting Rate (gpm)	Pumping Rate (gpm)	Imhoff Cone Measurement (mL sediment per L water)	Comments
6/13/2015	1736	503.5	42	45	0.1	Jet = 122 psi
6/13/2015	1811	500.5	42	45	< 0.1	Jet = 122 psi
6/13/2015	1818	497.5	42	45	< 0.1	Jet = 122 psi
6/13/2015	1825	494.5	42	45	< 0.1	Jet = 122 psi
6/13/2015	1831	491.5	42	45	0.1	Jet = 122 psi
6/13/2015	1837	488.5	42	45	0.2	Jet = 122 psi
6/13/2015	1924	485.5	42	45	0.1	Jet = 121 psi
6/13/2015	1931	482.5	42	45.5	0.1	Jet = 121 psi
6/13/2015	1937	479.5	42	45.5	< 0.1	Jet = 121 psi
6/13/2015	1941	--	--	--	--	Stop Jetting; Out of water
6/15/2015	0723	536.5	42	45.5	0.7	Jet = 124 psi
6/15/2015	0729	533.5	42	45.5	0.1	Jet = 124 psi
6/15/2015	0735	530.5	42	45.5	< 0.1	Jet = 124 psi
6/15/2015	0741	527.5	42	45	< 0.1	Jet = 124 psi
6/15/2015	0746	524.5	42	45.5	< 0.1	Jet = 123 psi
6/15/2015	0752	521.5	42	46	< 0.1	Jet = 123 psi
6/15/2015	0758	518.5	--	46	--	Stop Jetting; Out of water
6/15/2015	0906	518.5	18	45	< 0.1	Jet = 50 psi
6/15/2015	0912	515.5	42	45	< 0.1	Jet = 120 psi
6/15/2015	0918	512.5	42	45	< 0.1	Jet = 122 psi
6/15/2015	0924	509.5	42	45.5	< 0.1	Jet = 122 psi
6/15/2015	0930	--	--	--	--	Remove stick
6/15/2015	1013	506.5	41	45	< 0.1	Jet = 119 psi
6/15/2015	1019	503.5	42	45	< 0.1	Jet = 120 psi; Out of water
6/15/2015	1100	500.5	42	46	< 0.1	Jet = 120 psi
6/15/2015	1106	497.5	41	46	< 0.1	Jet = 120 psi
6/15/2015	1112	494.5	41	46	< 0.1	Jet = 120 psi
6/15/2015	1118	491.5	40.5	46	< 0.1	Jet = 120 psi
6/15/2015	1124	488.5	40.5	46	< 0.1	Jet = 120 psi
6/15/2015	1201	485.5	41	45	0.1	Jet = 120 psi
6/15/2015	1207	482.5	41	45	< 0.1	Jet = 120 psi; Out of water
6/15/2015	1303	479.5	41	45	< 0.1	Jet = 117 psi; DTW = 457.7
6/15/2015	1309	476.5	41	45	< 0.1	Jet = 117 psi
6/15/2015	1315	473.5	41	46	< 0.1	Jet = 117 psi
6/15/2015	1321	470.5	41	46	< 0.1	Jet = 117 psi
6/15/2015	1327	467.5	41	--	--	Jet = 117 psi; Pump off
6/15/2015	1333	464.5	41	--	--	Jet = 117 psi
6/15/2015	1339	461.5	41	--	--	Jet = 117 psi
6/15/2015	1447	461.5	41	--	--	Jet = 117 psi

Groundwater Extraction Well Development

Jetting

Date	Time	Depth (ft bgs)	Jetting Rate (gpm)	Pumping Rate (gpm)	Imhoff Cone Measurement (mL sediment per L water)	Comments
6/15/2015	1451	--	--	--	--	Stop jetting due to lightning
6/15/2015	1602	461.5	41	--	--	Jet = 122 psi; Finish section
6/15/2015	1604	464.5	41	--	--	Jet = 122 psi
6/15/2015	1610	467.5	41	--	--	Jet = 122 psi
6/15/2015	1616	470.5	41	45	< 0.1	Jet = 121 psi; Start pumping
6/15/2015	1622	473.5	41	46	< 0.1	Jet = 121 psi
6/15/2015	1628	476.5	41	46	< 0.1	Jet = 121 psi
6/15/2015	1634	479.5	41	45	< 0.1	Jet = 121 psi
6/15/2015	1640	482.5	41	45	< 0.1	Jet = 121 psi
6/15/2015	1646	--	--	--	--	Out of water; Add 20 feet of pipe
6/15/2015	1741	485.5	41	44	0.1	Jet = 121 psi
6/15/2015	1747	488.5	41	45	0.1	Jet = 121 psi
6/15/2015	1753	491.5	41	45	< 0.1	Jet = 121 psi
6/15/2015	1759	494.5	41	45	< 0.1	Jet = 121 psi
6/15/2015	1805	497.5	41	45	< 0.1	Jet = 121 psi
6/15/2015	1811	500.5	41	45	< 0.1	Jet = 121 psi
6/15/2015	1817	--	--	--	--	Add pipe
6/15/2015	1841	503.5	41	45	< 0.1	Jet = 121.5 psi
6/15/2015	1847	506.5	41	45	< 0.1	Jet = 121 psi
6/15/2015	1853	--	--	--	--	Out of water
6/15/2015	1931	509.5	42	45	< 0.1	Jet = 121 psi
6/15/2015	1937	512.5	41	46	< 0.1	Jet = 121 psi
6/15/2015	1945	515.5	41	45	< 0.1	Jet = 121 psi
6/15/2015	1950	518.5	42	45.5	< 0.1	Jet = 121 psi
6/15/2015	1956	521.5	42	45	< 0.1	Jet = 121 psi
6/15/2015	2002	521.5	--	--	--	Add pipe
6/15/2015	2030	524.5	42	46	< 0.1	Jet = 121 psi
6/15/2015	2036	527.5	42	46	< 0.1	Jet = 121 psi
6/15/2015	2042	530.5	42	46	< 0.1	Jet = 121 psi
6/15/2015	2048	533.5	42	46	< 0.1	Jet = 121 psi
6/15/2015	2054	--	--	--	--	Turn off jet pump

ft bgs = feet below ground surface

gpm = gallons per minute

L = liter

mL = millliliter

psi = pounds per square inch

Borehole ID: KAFB-106233

Client: US Army Corps of Engineers
Project Location: KAFB, Albuquerque, NM
Project Name: KAFB RAPID SWMU ST-106 and SS-111
Project Number: 500433

Date Started: 9/8/2015
Date TD Reached: 9/18/2015
Date Completed:

Ground Elevation AMSL (ft): Not Recorded
Y Coordinate:
X Coordinate:

Hole Diameter Upper (in.): 16
Hole Diameter Lower (in.): 14-3/4
Surface Completion Type: Flush

Groundwater Levels BGS (ft):
▽ At Time of Drilling: 450.00
▼ At End of Drilling: Not Recorded
▼ After Drilling: 459.60

Drillling Contractor: National Drilling
Drilling Method: Mud Rotary
Logged By: M. Giles

LICENSED PROFESSIONAL GEOLOGIST
VIRGINIA BRACHT
8881903-2250
STATE OF UTAH

12/9/15

Depth (ft)	Sample Type	Number	Headspace PID	Lithologic Log	Material Description	U.S.C.S.	Well Diagram	Remarks
0					No lithologic description.		- Top of Casing/Top of Portland Bentonite Cement - Portland Bentonite Cement	Borehole was potholed from 0 - 12'.
15					Sandy SILT (ML); pinkish white (7.5YR 8/2); dry; soft; 60% silt; 40% fine to coarse sand; angular to subangular. Note: sand is quartz and mafics.	ML		Begin advancing 16" casing @ 1140 on 9/8/15.
20					Poorly graded GRAVEL with Silt and Sand (GP-GM); reddish yellow (7.5YR 7/6); 60% fine gravel to 3/4"; angualr to subangular; 30% fine to coarse sand; subangular to subrounded; 10% silt. Note: gravel is mafics and granite. Sand is mafics, quartzite, and quartz.	GP-GM		Kelly down @ 1201, new 10' connection. Resume drilling @ 1400.
25					Poorly graded SAND with Silt and Gravel (SP-SM); brown (7.5YR 5/3); 70% coarse sand; trace fine and medium sand; subangular to subrounded; 20% fine gravel to 1/2"; subangular; 10% silt. Note: sand is quartz, mafics, and quartzite. Gravel is mafics.	SP-SM		Kelly down @ 1506, new connection. Resume drilling @ 1528.
30								

KAFB_BOREHOLE_LOG - SHAW_DRILLING.GDT - 12/9/15 13:33 - Z:\KAFB RAPID\GINT\KAFB_RAPID.GPJ

Borehole ID: KAFB-106233

Client: US Army Corps of Engineers
Project Location: KAFB, Albuquerque, NM
Project Name: KAFB RAPID SWMU ST-106 and SS-111
Project Number: 500433

Date Started: 9/8/2015
Date TD Reached: 9/18/2015
Date Completed:

Ground Elevation AMSL (ft): Not Recorded
Y Coordinate:
X Coordinate:

Hole Diameter Upper (in.): 16
Hole Diameter Lower (in.): 14-3/4
Surface Completion Type: Flush

Groundwater Levels BGS (ft):
At Time of Drilling: 450.00
At End of Drilling: Not Recorded
After Drilling: 459.60

Drillling Contractor: National Drilling
Drilling Method: Mud Rotary
Logged By: M. Giles

Depth (ft)	Sample Type	Number	Headspace PID	Lithologic Log	Material Description	U.S.C.S.	Well Diagram	Remarks
30								
					Poorly graded SAND with Silt and Gravel (SP-SM); brown (7.5YR 5/3); 70% coarse sand; trace fine and medium sand; subangular to subrounded; 20% fine gravel to 1/2"; subangular; 10% silt. Note: sand is quartz, mafics, and quartzite. Gravel is mafics.	SP-SM		
35								
					Gravelly SILT with Sand (ML); light brown (7.5YR 6/4); low plasticity; 60% silt; 25% fine gravel to 1/2"; angular to subangular; 15% medium to coarse sand.			Cuttings come out of cyclone as mush.
40								
					Sandy SILT (ML); light brown (7.5YR 6/4); low plasticity; 50% silt; 40% coarse sand; angular to subangular; 10% fine gravel to 1/2"; angular to subangular. Note: gravel is mafics.			Kelly down @ 1615, new connection. Resume drilling @ 1735.
45						ML		
					Same as above (40 ft).		Portland Bentonite Cement	
					Same as above (40 ft); trace clay.			Kelly down @ 1820. End of 9/8/15. Resume drilling with 16" casing @ 0812 on 9/9/15. Used approximately 500 gallons of water.
50								
					Same as above (40 ft).			
55								
					Silty SAND (SM); brown (7.5YR 4/4); 85% very fine to fine sand; trace gravel; 15% silt.			
					Same as above (53 ft); 80% fine to coarse sand; 20% silt. Note: sand is quartz and mafics.	SM		Kelly down @ 0902, new 10' connection. Resume drilling @ 1011.
60					Same as above (53 ft); 80% fine to coarse sand; 20% silt; trace clay. Note: sand is quartz and mafics.			

KAFB_BOREHOLE_LOG - SHAW_DRILLING.GDT - 12/9/15 13:33 - Z:\KAFB RAPID\GINT\KAFB_RAPID.GPJ

Borehole ID: KAFB-106233

Client: US Army Corps of Engineers
Project Location: KAFB, Albuquerque, NM
Project Name: KAFB RAPID SWMU ST-106 and SS-111
Project Number: 500433

Date Started: 9/8/2015
Date TD Reached: 9/18/2015
Date Completed:

Ground Elevation AMSL (ft): Not Recorded
Y Coordinate:
X Coordinate:

Hole Diameter Upper (in.): 16
Hole Diameter Lower (in.): 14-3/4
Surface Completion Type: Flush

Groundwater Levels BGS (ft):
▽ At Time of Drilling: 450.00
▼ At End of Drilling: Not Recorded
▼ After Drilling: 459.60

Drillling Contractor: National Drilling
Drilling Method: Mud Rotary
Logged By: M. Giles

Depth (ft)	Sample Type	Number	Headspace PID	Lithologic Log	Material Description	U.S.C.S.	Well Diagram	Remarks
60					Sandy SILT (ML); strong brown (7.5YR 4/6); low plasticity; 50% silt; 40% fine sand; trace medium sand; 10% fine gravel to 3/8".			PID = 0.0 ppm @ mud pit.
65					SILT (ML); yellowish red (5YR 5/6); 90% silt; 10% coarse sand; angular.			PID = 0.0 ppm @ mud pit. Driller added water to clean out hose and cyclone. Kelly down @ 1107, new 10' connection. Resume drilling @ 1123.
70					Same as above (65 ft); yellowish red (5YR 5/8); trace clay.	ML		
75					Same as above (65 ft); yellowish red (5YR 5/8); trace clay.		Portland Bentonite Cement	PID = 0.0 ppm @ mud pit. Kelly down @ 1212 @ 77'.
80					Lean CLAY with Sand (CL); light greenish gray (Gley1 8/1); soft; low plasticity; 80% clay; 20% fine sand; trace coarse sand.	CL		Reach total depth with 16" casing @ 1246. End of 9/9/15. Resume drilling with mud rotary @ 1010 on 9/10/15. Used a total of 1,100 gallons of water to date.
85					SILT with Sand (ML); brown (7.5YR 5/4); low plasticity; 75% silt; 25% very fine to fine sand.	ML		PID = 0.0 ppm @ mud pit.
90								

KAFB_BOREHOLE_LOG - SHAW_DRILLING.GDT - 12/9/15 13:33 - Z:\KAFB RAPID\GINT\KAFB_RAPID.GPJ

Borehole ID: KAFB-106233

Client: US Army Corps of Engineers
Project Location: KAFB, Albuquerque, NM
Project Name: KAFB RAPID SWMU ST-106 and SS-111
Project Number: 500433

Date Started: 9/8/2015
Date TD Reached: 9/18/2015
Date Completed:

Ground Elevation AMSL (ft): Not Recorded
Y Coordinate:
X Coordinate:

Hole Diameter Upper (in.): 16
Hole Diameter Lower (in.): 14-3/4
Surface Completion Type: Flush

Groundwater Levels BGS (ft):
At Time of Drilling: 450.00
At End of Drilling: Not Recorded
After Drilling: 459.60

Drillling Contractor: National Drilling
Drilling Method: Mud Rotary
Logged By: M. Giles

Depth (ft)	Sample Type	Number	Headspace PID	Lithologic Log	Material Description	U.S.C.S.	Well Diagram	Remarks
90					SILT with Sand (ML); brown (7.5YR 5/4); low plasticity; 75% silt; 25% very fine to fine sand.	ML		PID = 0.0 ppm @ mud pit.
95					Lean CLAY with Sand (CL); yellowish red (5YR 5/8); soft; low plasticity; 70% clay; 10% silt; 20% fine to medium sand.			
100					Same as above (95 ft); 20% coarse sand; angular.			Kelly down @ 1152, new 20' connection. Resume drilling @ 1247.
105					Same as above (95 ft); 30% fine to coarse sand; no silt.	CL	Portland Bentonite Cement	
110					Lean CLAY (CL); yellowish red (5YR 5/8); soft; low plasticity; 90% clay; 10% meduim to coarse sand.			PID = 0.0 ppm @ mud pit.
115					Same as above (110 ft).			
120								PID = 0.0 ppm @ mud pit.

KAFB_BOREHOLE_LOG - SHAW_DRILLING.GDT - 12/9/15 13:33 - Z:\KAFB RAPID\GINT\KAFB_RAPID.GPJ

Borehole ID: KAFB-106233

Client: US Army Corps of Engineers
Project Location: KAFB, Albuquerque, NM
Project Name: KAFB RAPID SWMU ST-106 and SS-111
Project Number: 500433

Date Started: 9/8/2015
Date TD Reached: 9/18/2015
Date Completed:

Ground Elevation AMSL (ft): Not Recorded
Y Coordinate:
X Coordinate:

Hole Diameter Upper (in.): 16
Hole Diameter Lower (in.): 14-3/4
Surface Completion Type: Flush

Groundwater Levels BGS (ft):
At Time of Drilling: 450.00
At End of Drilling: Not Recorded
After Drilling: 459.60

Drillling Contractor: National Drilling
Drilling Method: Mud Rotary
Logged By: M. Giles

Depth (ft)	Sample Type	Number	Headspace PID	Lithologic Log	Material Description	U.S.C.S.	Well Diagram	Remarks
120								
125					Sandy SILT (ML); brown (7.5YR 5/4); low plasticity; 70% silt; 30% fine sand.	ML		Kelly down @ 1305, new 20' connection. Resume drilling @ 1315.
130					Silty SAND (SM); light brown (7.5YR 6/4); loose; 75% very fine sand; 25% silt.	SM		PID = 0.0 ppm @ mud pit.
135					Sandy SILT (ML); strong brown (7.5YR 5/6); 60% silt; 40% fine to coarse sand. Note: sand is mafics.	ML		
140					Poorly graded SAND with Silt (SP-SM); strong brown (7.5YR 5/6); 90% coarse sand; angular to subangular; 10% silt. Note: sand is quartz, granite, and mafics.	SP-SM	Portland Bentonite Cement	PID = 0.0 ppm @ mud pit.
145					Silty SAND (SM); strong brown (7.5YR 5/6); 70% fine to coarse sand; angular to subangular; 30% silt. Note: sand is mafics.	SM		Kelly down @ 1330, new 20' connection. Resume drilling @ 1352.
150					Well-graded SAND with Silt (SW-SM); strong brown (7.5YR 5/6); 90% fine to coarse sand; angular to subrounded; 10% silt. Note: sand is mafics, quartz, and granite.	SW-SM		

KAFB_BOREHOLE_LOG - SHAW_DRILLING.GDT - 12/9/15 13:33 - Z:\KAFB RAPID\GINT\KAFB_RAPID.GPJ

Borehole ID: KAFB-106233

Client: US Army Corps of Engineers
Project Location: KAFB, Albuquerque, NM
Project Name: KAFB RAPID SWMU ST-106 and SS-111
Project Number: 500433

Date Started: 9/8/2015
Date TD Reached: 9/18/2015
Date Completed:

Ground Elevation AMSL (ft): Not Recorded
Y Coordinate:
X Coordinate:

Hole Diameter Upper (in.): 16
Hole Diameter Lower (in.): 14-3/4
Surface Completion Type: Flush

Groundwater Levels BGS (ft):
▽ At Time of Drilling: 450.00
▼ At End of Drilling: Not Recorded
▼ After Drilling: 459.60

Drillling Contractor: National Drilling
Drilling Method: Mud Rotary
Logged By: M. Giles

Depth (ft)	Sample Type	Number	Headspace PID	Lithologic Log	Material Description	U.S.C.S.	Well Diagram	Remarks
150								
155					Well-graded SAND with Silt (SW-SM); strong brown (7.5YR 5/6); 90% fine to coarse sand; angular to subrounded; 10% silt. Note: sand is mafics, quartz, and granite.	SW-SM		PID = 0.0 ppm @ mud pit.
160					Silty SAND (SM); brown (7.5YR 5/4); 75% fine to coarse sand; angular to subrounded; 25% silt. Note: sand is quartz and mafics.	SM		
165					Poorly graded SAND with Silt (SP-SM); strong brown (7.5YR 5/6); 90% coarse sand; trace fine and medium sand; angular to subangular; 10% silt. Note: sand is mafics and quartz.	SP-SM	- Portland Bentonite Cement	Kelly down @ 1410, new 20' connection. Resume drilling @ 1428.
170					Same as above (160 ft).			PID = 0.0 ppm @ mud pit.
175					Poorly graded SAND (SP); strong brown (7.5YR 5/6); 95% coarse sand; trace fine and medium sand; angular to subangular; 5% silt. Note: sand is mafics, quartz, and quartzite.	SP		
180					Same as above (170 ft).			PID = 0.0 ppm @ mud pit.

KAFB_BOREHOLE_LOG - SHAW_DRILLING.GDT - 12/9/15 13:33 - Z:\KAFB RAPID\GINT\KAFB_RAPID.GPJ

Borehole ID: KAFB-106233

Client: US Army Corps of Engineers
Project Location: KAFB, Albuquerque, NM
Project Name: KAFB RAPID SWMU ST-106 and SS-111
Project Number: 500433

Date Started: 9/8/2015
Date TD Reached: 9/18/2015
Date Completed:

Ground Elevation AMSL (ft): Not Recorded
Y Coordinate:
X Coordinate:

Hole Diameter Upper (in.): 16
Hole Diameter Lower (in.): 14-3/4
Surface Completion Type: Flush

Groundwater Levels BGS (ft):
At Time of Drilling: 450.00
At End of Drilling: Not Recorded
After Drilling: 459.60

Drillling Contractor: National Drilling
Drilling Method: Mud Rotary
Logged By: M. Giles

Depth (ft)	Sample Type	Number	Headspace PID	Lithologic Log	Material Description	U.S.C.S.	Well Diagram	Remarks
180					Well-graded SAND (SW); strong brown (7.5YR 5/6); 95% fine to coarse sand; angular to subrounded; 5% silt. Note: sand is quartz and mafics.			Kelly down @ 1445, new 20' connection. Resume drilling @ 1500.
185					Same as above (180 ft).			PID = 0.0 ppm @ mud pit.
190					Same as above (180 ft).	SW		
195					Same as above (180 ft).		Portland Bentonite Cement	
200					Silty SAND (SM); brown (10YR 5/3); 85% fine to coarse sand; angular to subangular; 15% silt. Note: sand is quartz with mafics and quartzite.			Kelly down @ 1527, new 20' connection. Resume drilling @ 1547.
205					Same as above (200 ft); 80% fine to coarse sand; 20% silt.	SM		PID = 0.0 ppm @ mud pit.
210								

KAFB_BOREHOLE_LOG - SHAW_DRILLING.GDT - 12/9/15 13:33 - Z:\KAFB RAPID\GINT\KAFB_RAPID.GPJ

Borehole ID: KAFB-106233

Client: US Army Corps of Engineers
Project Location: KAFB, Albuquerque, NM
Project Name: KAFB RAPID SWMU ST-106 and SS-111
Project Number: 500433

Date Started: 9/8/2015
Date TD Reached: 9/18/2015
Date Completed:

Ground Elevation AMSL (ft): Not Recorded
Y Coordinate:
X Coordinate:

Hole Diameter Upper (in.): 16
Hole Diameter Lower (in.): 14-3/4
Surface Completion Type: Flush

Groundwater Levels BGS (ft):
At Time of Drilling: 450.00
At End of Drilling: Not Recorded
After Drilling: 459.60

Drillling Contractor: National Drilling
Drilling Method: Mud Rotary
Logged By: M. Giles

Depth (ft)	Sample Type	Number	Headspace PID	Lithologic Log	Material Description	U.S.C.S.	Well Diagram	Remarks
210					Silty SAND (SM); brown (10YR 5/3); 80% fine to coarse sand; angular to subangular; 20% silt. Note: sand is quartz with mafics and quartzite.	SM		
215					Poorly graded SAND (SP); strong brown (7.5YR 5/6); 95% coarse sand; trace medium sand; angular to subangular; 5% silt. Note: sand is quartz with mafics and quartzite.	SP		PID = 0.0 ppm @ mud pit.
220					Well-graded SAND (SW); strong brown (7.5YR 5/6); 95% fine to coarse sand; angular to subangular; 5% silt. Note: sand is quartz, mafics, and quartzite.	SW		Kelly down @ 1612, new 20' connection. Resume drilling @ 1636.
225					Same as above (220 ft); 95% medium to coarse sand.		Portland Bentonite Cement	
230					Same as above (220 ft); 95% medium to coarse sand.			
235					Silty SAND (SM); brown (7.5YR 4/2); 60% fine sand; trace medium sand; subangular to subrounded; 40% silt. Note: sand is quartz with mafics.	SM		PID = 0.0 ppm @ mud pit.
240								

KAFB_BOREHOLE_LOG - SHAW_DRILLING.GDT - 12/9/15 13:33 - Z:\KAFB RAPID\GINT\KAFB_RAPID.GPJ

Borehole ID: KAFB-106233

Client: US Army Corps of Engineers
Project Location: KAFB, Albuquerque, NM
Project Name: KAFB RAPID SWMU ST-106 and SS-111
Project Number: 500433

Date Started: 9/8/2015
Date TD Reached: 9/18/2015
Date Completed:

Ground Elevation AMSL (ft): Not Recorded
Y Coordinate:
X Coordinate:

Hole Diameter Upper (in.): 16
Hole Diameter Lower (in.): 14-3/4
Surface Completion Type: Flush

Groundwater Levels BGS (ft):
▽ At Time of Drilling: 450.00
▼ At End of Drilling: Not Recorded
▼ After Drilling: 459.60

Drillling Contractor: National Drilling
Drilling Method: Mud Rotary
Logged By: M. Giles

Depth (ft)	Sample Type	Number	Headspace PID	Lithologic Log	Material Description	U.S.C.S.	Well Diagram	Remarks
240					Silty SAND (SM); brown (7.5YR 4/2); 70% fine sand; trace medium sand; subangular to subrounded; 30% silt. Note: sand is quartz with mafics.			Kelly down @ 1705, new 20' connection. Resume drilling @ 1713.
245					Same as above (240 ft); 60% fine sand; 40% silt.			
250					Same as above (240 ft); 80% fine sand; 20% silt.	SM		
255					Same as above (240 ft); 80% fine sand; 20% silt.		- Portland Bentonite Cement	PID = 0.0 ppm @ mud pit.
260					Same as above (240 ft); brown (7.5YR 5/3); 75% very fine to fine sand; trace medium and coarse sand; 25% silt.			Kelly down @ 1728, new 20' connection. Resume drilling @ 1745.
265					Poorly graded SAND with Silt (SP-SM); brown (7.5YR 5/3); 90% fine to medium sand; trace coarse sand; angular to subrounded; 10% silt. Note: sand is quartz, mafics, and quartzite.	SP-SM		
270								

KAFB_BOREHOLE_LOG - SHAW_DRILLING.GDT - 12/9/15 13:33 - Z:\KAFB RAPID\GINT\KAFB_RAPID.GPJ

Borehole ID: KAFB-106233

Client: US Army Corps of Engineers
Project Location: KAFB, Albuquerque, NM
Project Name: KAFB RAPID SWMU ST-106 and SS-111
Project Number: 500433

Date Started: 9/8/2015
Date TD Reached: 9/18/2015
Date Completed:

Ground Elevation AMSL (ft): Not Recorded
Y Coordinate:
X Coordinate:

Hole Diameter Upper (in.): 16
Hole Diameter Lower (in.): 14-3/4
Surface Completion Type: Flush

Groundwater Levels BGS (ft):
▽ At Time of Drilling: 450.00
▼ At End of Drilling: Not Recorded
▼ After Drilling: 459.60

Drillling Contractor: National Drilling
Drilling Method: Mud Rotary
Logged By: M. Giles

Depth (ft)	Sample Type	Number	Headspace PID	Lithologic Log	Material Description	U.S.C.S.	Well Diagram	Remarks
270								
275					Poorly graded SAND with Silt (SP-SM); brown (7.5YR 5/3); 90% fine to medium sand; trace coarse sand; angular to subrounded; 10% silt. Note: sand is quartz, mafics, and quartzite.	SP-SM		Rig chatter @ 273'. PID = 0.0 ppm @ mud pit.
280					Well-graded SAND with Silt (SW-SM); brown (7.5YR 5/3); 90% fine to coarse sand; angular to subangular; 10% silt. Note: sand is quartz, mafics, and quartzite.	SW-SM		
285					Poorly graded GRAVEL (GP); brown (7.5YR 5/3); 85% fine gravel to 3/8"; angular to subrounded; 10% coarse sand; 5% silt. Note: gravel and sand are mafics, quartz, and felspar.	GP	- Portland Bentonite Cement	Kelly down @ 1800. End of 9/10/15. Resume drilling @ 1003 on 9/11/15. Used 2,400 gallons of water on 9/10/15.
290					Same as above (280 ft).			
295					Poorly graded GRAVEL with Silt and Sand (GP-GM); brown (7.5YR 5/3); 50% fine gravel to 3/8"; angular to subrounded; 40% fine sand; 10% silt. Note: gravel is mafics, quartz, and feldspar. Sand is quartz.	GP-GM		
300					Same as above (290 ft); 70% fine gravel to 3/8"; 20% fine sand.			

KAFB_BOREHOLE_LOG - SHAW_DRILLING.GDT - 12/9/15 13:33 - Z:\KAFB RAPID\GINT\KAFB_RAPID.GPJ

Borehole ID: KAFB-106233

Client: US Army Corps of Engineers
Project Location: KAFB, Albuquerque, NM
Project Name: KAFB RAPID SWMU ST-106 and SS-111
Project Number: 500433

Date Started: 9/8/2015
Date TD Reached: 9/18/2015
Date Completed:

Ground Elevation AMSL (ft): Not Recorded
Y Coordinate:
X Coordinate:

Hole Diameter Upper (in.): 16
Hole Diameter Lower (in.): 14-3/4
Surface Completion Type: Flush

Groundwater Levels BGS (ft):
At Time of Drilling: 450.00
At End of Drilling: Not Recorded
After Drilling: 459.60

Drillling Contractor: National Drilling
Drilling Method: Mud Rotary
Logged By: M. Giles

Depth (ft)	Sample Type	Number	Headspace PID	Lithologic Log	Material Description	U.S.C.S.	Well Diagram	Remarks
300					Silty GRAVEL with Sand (GM); light brown (7.5YR 6/4); 55% fine gravel to 3/8"; angular to subangular; 30% fine sand; 15% silt. Note: gravel is mafics and feldspar. Sand is quartz.	GM		Kelly down @ 1020, new 20' connection. Resume drilling @ 1028.
305					Same as above (300 ft); 70% fine gravel to 3/8"; 15% fine sand; subangular to subrounded. Note: gravel is mafics and quartz.			PID = 0.0 ppm @ mud pit.
310					Silty SAND with Gravel (SM); light brown (7.5YR 6/4); 70% fine to coarse sand; angular to subrounded; 15% fine gravel to 3/8"; 15% silt. Note: sand and gravel are mafics, granite, quartzite, and quartz.	SM		
315					Poorly graded GRAVEL with Sand (GP); light brown (7.5YR 6/4); 60% fine gravel to 3/8"; angular to subrounded; 35% fine to coarse sand; 5% silt. Note: gravel is mafics, feldspar, and quartz. Sand is quartz.	GP	Portland Bentonite Cement	PID = 0.0 ppm @ mud pit.
320					Well-graded SAND with Silt and Gravel (SW-SM); light brown (7.5YR 6/4); 65% fine to coarse sand; angular to subrounded; 25% fine gravel to 3/8"; 10% silt. Note: sand and gravel are mafics, quartzite, felspar, and quartz.	SW-SM		Kelly down @ 1058, new 20' connection. Resume drilling @ 1112.
325					Same as above (320 ft). Note: greater fine sand fraction.			
330								

KAFB_BOREHOLE_LOG - SHAW_DRILLING.GDT - 12/9/15 13:33 - Z:\KAFB RAPID\GINT\KAFB_RAPID.GPJ

Borehole ID: KAFB-106233

Client: US Army Corps of Engineers
Project Location: KAFB, Albuquerque, NM
Project Name: KAFB RAPID SWMU ST-106 and SS-111
Project Number: 500433

Date Started: 9/8/2015
Date TD Reached: 9/18/2015
Date Completed:

Ground Elevation AMSL (ft): Not Recorded
Y Coordinate:
X Coordinate:

Hole Diameter Upper (in.): 16
Hole Diameter Lower (in.): 14-3/4
Surface Completion Type: Flush

Groundwater Levels BGS (ft):
▽ At Time of Drilling: 450.00
▼ At End of Drilling: Not Recorded
▼ After Drilling: 459.60

Drillling Contractor: National Drilling
Drilling Method: Mud Rotary
Logged By: M. Giles

Depth (ft)	Sample Type	Number	Headspace PID	Lithologic Log	Material Description	U.S.C.S.	Well Diagram	Remarks
330					Silty SAND (SM); light brown (7.5YR 6/4); 80% fine to coarse sand; angular to subrounded; 5% fine gravel to 3/8"; 15% silt. Note: sand and gravel are mafics, quartz, and feldspar.			
335					Same as above (330 ft).	SM		
340					Poorly graded SAND with Silt (SP-SM); light brown (7.5YR 6/4); 90% coarse sand; trace fine and medium sand; angular to subangular; 10% silt. Note: sand is quartz, mafics, and granite.			Kelly down @ 1127, new 20' connection. Resume drilling @ 1140.
345					Same as above (340 ft).	SP-SM	Portland Bentonite Cement	
350					Silty SAND with Gravel (SM); light brown (7.5YR 6/4); 65% fine to coarse sand; angular to subangular; 20% fine gravel to 3/8"; 15% silt. Note: sand and gravel are quartz, mafics, quartzite, and granite.			
355					Same as above (350 ft).	SM		
360								

KAFB_BOREHOLE_LOG - SHAW_DRILLING.GDT - 12/9/15 13:33 - Z:\KAFB RAPID\GINT\KAFB_RAPID.GPJ

Borehole ID: KAFB-106233

Client: US Army Corps of Engineers
Project Location: KAFB, Albuquerque, NM
Project Name: KAFB RAPID SWMU ST-106 and SS-111
Project Number: 500433

Date Started: 9/8/2015
Date TD Reached: 9/18/2015
Date Completed:

Ground Elevation AMSL (ft): Not Recorded
Y Coordinate:
X Coordinate:

Hole Diameter Upper (in.): 16
Hole Diameter Lower (in.): 14-3/4
Surface Completion Type: Flush

Groundwater Levels BGS (ft):
▽ At Time of Drilling: 450.00
▼ At End of Drilling: Not Recorded
▼ After Drilling: 459.60

Drillling Contractor: National Drilling
Drilling Method: Mud Rotary
Logged By: M. Giles

Depth (ft)	Sample Type	Number	Headspace PID	Lithologic Log	Material Description	U.S.C.S.	Well Diagram	Remarks
360								
365					Silty SAND (SM); light brown (7.5YR 6/3); 80% very fine to fine sand; trace medium and coarse sand; subangular to subrounded; 20% silt. Note: sand is quartz with some mafics.	SM	- Top of 3/8" Bentonite Chip Seal	Kelly down @ 1155, new 20' connection. Resume drilling.
370					Poorly graded SAND with Silt (SP-SM); light brown (7.5YR 6/3); 90% coarse sand; trace fine and medium sand; subangular to subrounded; 10% silt. Note: sand is mafics, quartz, feldspar, and granite.	SP-SM		
375					Silty SAND with Gravel (SM); light brown (7.5YR 6/3); 50% fine to coarse sand; angular to subrounded; 40% fine gravel to 3/8"; 15% silt. Note: sand and gravel are mafics, quartz, feldspar, and granite.	SM		
380					Poorly graded GRAVEL (GP); light brown (7.5YR 6/3); 85% fine gravel to 1/2"; angular to subrounded; 10% fine sand; 5% silt. Note: gravel and sand are mafics, feldspar, quartz, and granite.	GP	- 3/8" Bentonite Chip Seal	PID = 0.0 ppm @ mud pit.
385					Poorly graded GRAVEL with Silt and Sand (GP-GM); light brown (7.5YR 6/3); 75% fine gravel to 1/2"; subangular to subrounded; 15% fine sand; 10% silt. Note: gravel and sand are mafics, feldspar, quartz, and granite. Same as above (380 ft).	GP-GM		Kelly down @ 1324, new 20' connection. Resume drilling @ 1335.
390								

KAFB_BOREHOLE_LOG - SHAW_DRILLING.GDT - 12/9/15 13:33 - Z:\KAFB RAPID\GINT\KAFB_RAPID.GPJ

Borehole ID: KAFB-106233

Client: US Army Corps of Engineers
Project Location: KAFB, Albuquerque, NM
Project Name: KAFB RAPID SWMU ST-106 and SS-111
Project Number: 500433

Date Started: 9/8/2015
Date TD Reached: 9/18/2015
Date Completed:

Ground Elevation AMSL (ft): Not Recorded
Y Coordinate:
X Coordinate:

Hole Diameter Upper (in.): 16
Hole Diameter Lower (in.): 14-3/4
Surface Completion Type: Flush

Groundwater Levels BGS (ft):
At Time of Drilling: 450.00
At End of Drilling: Not Recorded
After Drilling: 459.60

Drillling Contractor: National Drilling
Drilling Method: Mud Rotary
Logged By: M. Giles

Depth (ft)	Sample Type	Number	Headspace PID	Lithologic Log	Material Description	U.S.C.S.	Well Diagram	Remarks
390					Silty GRAVEL with Sand (GM); light brown (7.5YR 6/3); 70% fine gravel to 1/2"; angular to subangular; 15% fine sand; 15% silt. Note: gravel and sand are mafics, quartz, feldspar, and granite.			
395					Silty GRAVEL (GM); light brown (7.5YR 6/3); 70% fine gravel to 1/2"; angular to subrounded; 10% fine sand; 20% silt. Note: gravel and sand are mafics, quartz, feldspar, and granite.	GM	- 3/8" Bentonite Chip Seal	
400					Silty SAND with Gravel (SM); light brown (7.5YR 6/3); 50% fine to coarse sand; subangular to subrounded; 20% fine gravel to 3/8"; 30% silt. Note: sand and gravel are mafics, quartz, and granite.	SM	- Top of 20/40 Sand	Kelly down @ 1459, new 20' connection. Resume drilling @ 1508.
405					Clayey SAND with Gravel (SC); reddish brown (5YR 5/4); low plasticity; 50% fine to coarse sand; subangular to subrounded; 25% fine gravel to 3/8"; 25% clay. Note: sand and gravel are quartz, mafics, feldspar, and granite.	SC	- Top of 10/20 Sand	
410					Silty SAND with Gravel (SM); light brown (7.5YR 6/3); 50% fine to coarse sand; subangular to subrounded; 25% fine gravel to 3/8"; 25% silt. Note: sand and gravel are quartz, mafics, and granite.			PID = 0.0 ppm @ mud pit.
415					Same as above (410 ft); 55% fine to coarse sand; 30% fine gravel to 3/8"; 15% silt. Note: sand and gravel are quartz, mafics, granite, and feldspar.	SM		
420								

KAFB_BOREHOLE_LOG - SHAW_DRILLING.GDT - 12/9/15 13:33 - Z:\KAFB RAPID\GINT\KAFB_RAPID.GPJ

Borehole ID: KAFB-106233

Client: US Army Corps of Engineers
Project Location: KAFB, Albuquerque, NM
Project Name: KAFB RAPID SWMU ST-106 and SS-111
Project Number: 500433

Date Started: 9/8/2015
Date TD Reached: 9/18/2015
Date Completed:

Ground Elevation AMSL (ft): Not Recorded
Y Coordinate:
X Coordinate:

Hole Diameter Upper (in.): 16
Hole Diameter Lower (in.): 14-3/4
Surface Completion Type: Flush

Groundwater Levels BGS (ft):
▽ At Time of Drilling: 450.00
▼ At End of Drilling: Not Recorded
▼ After Drilling: 459.60

Drillling Contractor: National Drilling
Drilling Method: Mud Rotary
Logged By: M. Giles

Depth (ft)	Sample Type	Number	Headspace PID	Lithologic Log	Material Description	U.S.C.S.	Well Diagram	Remarks
420								
425					Silty SAND with Gravel (SM); light brown (7.5YR 6/3); 55% fine to coarse sand; subangular to subrounded; 30% fine gravel to 3/8"; 15% silt. Note: sand and gravel are quartz, mafics, granite, and feldspar.	SM		Kelly down @ 1437. End of mud rotary drilling @ 425' @ 1450 on 9/11/15.
430								
435								
440								
445								
450					▽			

KAFB_BOREHOLE_LOG - SHAW_DRILLING.GDT - 12/9/15 13:33 - Z:\KAFB RAPID\GINT\KAFB_RAPID.GPJ

Borehole ID: KAFB-106233-Sonic

Client: US Army Corps of Engineers
Project Location: KAFB, Albuquerque, NM
Project Name: KAFB RAPID SWMU ST-106 and SS-111
Project Number: 500433

Date Started: 9/14/2015
Date TD Reached: 9/24/2015
Date Completed:

Ground Elevation AMSL (ft): Not Recorded
Y Coordinate:
X Coordinate:

Hole Diameter Upper (in.): 16
Hole Diameter Lower (in.): 14-3/4
Surface Completion Type: Flush

Groundwater Levels BGS (ft):
▽ At Time of Drilling: 450.00
▼ At End of Drilling: Not Recorded
▼ After Drilling: 459.60

Drillling Contractor: National Drilling
Drilling Method: Sonic Coring
Logged By: M. Giles

Depth (ft)	Sample Type	Number	Headspace PID	Lithologic Log	Material Description	U.S.C.S.	Well Diagram	Remarks
420								
					Silty SAND with Gravel (SM); light brown (7.5YR 6/3); 55% fine to coarse sand; subangular to subrounded; 30% fine gravel to 3/8"; 15% silt. Note: sand and gravel are quartz, mafics, granite, and feldspar.	SM		Drill with mud rotary to 425'.
425								
					Poor recovery.			Begin sonic coring @ 1650 on 9/14/15 for test run. @ 425 - 430 ft, geologist noted loose, coarse gravel with trace fine gravel; subangular to subrounded.
430								
					@ 430 ft. Fat CLAY (CH); red (10R 5/8); hard; high plasticity; 100% clay.		- Top of 8" Stainless Steel 0.050 Slot Screen	@ 430 ft occasional black specs, streaks, and gray material interfilling cracks of the clay. End of 9/14/15. Resumed drilling on 9/15/15.
					@ 432.1 ft. Fat CLAY with Sand (CH); greenish gray (Gley 1 6/1); hard; high plasticity; 80% clay; 20% fine sand.	CH		@ 431.7 - 435 ft sand is quartz with occasional biotite.
435								

KAFB_BOREHOLE_LOG - SHAW_DRILLING.GDT - 12/9/15 13:24 - Z:\KAFB RAPID\GINT\KAFB_RAPID.GPJ

Borehole ID: KAFB-106233-Sonic

Client: US Army Corps of Engineers
Project Location: KAFB, Albuquerque, NM
Project Name: KAFB RAPID SWMU ST-106 and SS-111
Project Number: 500433

Date Started: 9/14/2015
Date TD Reached: 9/24/2015
Date Completed:

Ground Elevation AMSL (ft): Not Recorded
Y Coordinate:
X Coordinate:

Hole Diameter Upper (in.): 16
Hole Diameter Lower (in.): 14-3/4
Surface Completion Type: Flush

Groundwater Levels BGS (ft):
▽ At Time of Drilling: 450.00
▼ At End of Drilling: Not Recorded
▼ After Drilling: 459.60

Drillling Contractor: National Drilling
Drilling Method: Sonic Coring
Logged By: M. Giles

Depth (ft)	Sample Type	Number	Headspace PID	Lithologic Log	Material Description	U.S.C.S.	Well Diagram	Remarks
435					@ 434.8 ft. Poorly graded SAND with Silt (SP-SM); light brown (7.5YR 6/4); 90% fine sand; subangular; 10% silt.	SP-SM		@ 435 - 435.7 ft drilled instead of cored due to possible obstruction.
					@435 ft. No recovery.			
					@ 435.7 ft. Poorly graded SAND with Silt (SP-SM); light brown (7.5YR 6/4); 90% fine sand; trace medium sand; subangular to subrounded; 10% silt.			@ 435 - 445.9 ft sand is quartz with biotite and occasional microcline.
440					Same as above (435.7 ft).	SP-SM	8" Stainless Steel 0.050 Slot Screen	@ 440 ft occasional layers of slightly higher silt.
445					@ 443.7 ft. Same as above (435.7 ft); light brown (7.5YR 6/3); 90% fine to medium sand; trace coarse sand.			
					@ 445.9 ft. No recovery.			Driller reported that it felt like coring through a gravel interval.
450					▽			

KAFB_BOREHOLE_LOG - SHAW_DRILLING.GDT - 12/9/15 13:24 - Z:\KAFB RAPID\GINT\KAFB_RAPID.GPJ

Borehole ID: KAFB-106233-Sonic

Client: US Army Corps of Engineers
Project Location: KAFB, Albuquerque, NM
Project Name: KAFB RAPID SWMU ST-106 and SS-111
Project Number: 500433

Date Started: 9/14/2015
Date TD Reached: 9/24/2015
Date Completed:

Ground Elevation AMSL (ft): Not Recorded
Y Coordinate:
X Coordinate:

Hole Diameter Upper (in.): 16
Hole Diameter Lower (in.): 14-3/4
Surface Completion Type: Flush

Groundwater Levels BGS (ft):
At Time of Drilling: 450.00
At End of Drilling: Not Recorded
After Drilling: 459.60

Drillling Contractor: National Drilling
Drilling Method: Sonic Coring
Logged By: M. Giles

Depth (ft)	Sample Type	Number	Headspace PID	Lithologic Log	Material Description	U.S.C.S.	Well Diagram	Remarks
450					@ 450 ft. Well-graded SAND (SW); light brown (7.5YR 6/3); 95% fine to coarse sand; subangular to subrounded; 5% silt.	SW		@ 450 - 454 ft sand is quartz and biotite with occasional microcline. Gravel is mafics and occasional quartzite. @ 450.8 - 451.1 ft trace fine gravel to 3/8".
					@ 451.8 ft. Poorly graded SAND with Silt and Gravel (SP-SM); light brown (7.5YR 6/3); 75% fine sand; trace medium sand; subangular to subrounded; 15% coarse gravel to 2-1/2"; 10% silt.	SP-SM		
					@ 452.8 ft. No lithologic description. Core removed for testing.	SP-SM		
					@ 453.6 ft. Poorly graded SAND with Silt (SP-SM); light brown (7.5YR 6/3); 90% fine to medium sand; subangular to subrounded; 10% silt.	CL		
455					@ 453.8 ft. Lean CLAY with Gravel (CL); strong brown (7.5YR 5/6); low plasticity; 75% clay; 25% fine gravel to 1/2"; subrounded.	SM		@ 455 - 457.1 ft sand is quartz with occasional biotite. Gravel is mafics, quartz, and quartzite. @ 455.6 - 455.7 ft cored rock.
					@ 454 ft. No recovery.	GW-GM		
					@ 455 ft. Silty SAND (SM); brown (10YR 5/3); 70% very fine sand; 30% silt.	SP-SM	8" Stainless Steel 0.050 Slot Screen	
					@ 455.7 ft. Well-graded GRAVEL with Silt and Sand (GW-GM); strong brown (7.5YR 5/6); 50% fine to coarse gravel to 2"; subrounded; 40% fine to coarse sand; subangular to subrounded; 10% silt.			
460					@ 456.3 ft. Poorly graded SAND with Silt (SP-SM); strong brown (7.5YR 5/6); 90% fine sand; subangular to subrounded; 10% silt.	SP-SM		@ 460 - 462.8 ft sand is quartz with biotite and occasional microcline. Gravel is mafics with occasional sandstone and quartzite.
					@ 457.1 ft. No recovery.	GW-GM		
					@ 460 ft. Poorly graded SAND with Silt and Gravel (SP-SM); brown (7.5YR 5/4); 70% fine to medium sand; subangular to subrounded; 20% fine gravel to 1/2"; subangular to subrounded; 10% silt.	SM		@ 462.7 ft, silt is very hard, possibly cemented.
					@ 460.8 ft. Well-graded GRAVEL with Silt and Sand (GW-GM); brown (7.5YR 5/4); 60% fine to coarse gravel to 1"; subrounded; 30% fine to coarse sand; subangular to subrounded; 10% silt.			
465								

KAFB_BOREHOLE_LOG - SHAW_DRILLING.GDT - 12/9/15 13:24 - Z:\KAFB RAPID\GINT\KAFB_RAPID.GPJ

Borehole ID: KAFB-106233-Sonic

Client: US Army Corps of Engineers
Project Location: KAFB, Albuquerque, NM
Project Name: KAFB RAPID SWMU ST-106 and SS-111
Project Number: 500433

Date Started: 9/14/2015
Date TD Reached: 9/24/2015
Date Completed:

Ground Elevation AMSL (ft): Not Recorded
Y Coordinate:
X Coordinate:

Hole Diameter Upper (in.): 16
Hole Diameter Lower (in.): 14-3/4
Surface Completion Type: Flush

Groundwater Levels BGS (ft):
At Time of Drilling: 450.00
At End of Drilling: Not Recorded
After Drilling: 459.60

Drillling Contractor: National Drilling
Drilling Method: Sonic Coring
Logged By: M. Giles

Depth (ft)	Material Description	U.S.C.S.	Well Diagram	Remarks
465	@ 462.7 ft. Silty SAND (SM); light brownish gray (10YR 6/2); 75% fine to coarse sand; subangular to subrounded; 25% silt.	SP-SM		@ 465 - 466.6 ft sand is quartz and biotite with occasional microcline. Gravel is mafics.
	@ 462.8 ft. No recovery.	GW-GC		
	@ 465 ft. Poorly graded SAND with Silt (SP-SM); light brownish gray (10YR 6/2); 90% fine to medium sand; subangular to subrounded; 10% silt.	SP		@ 467.5 ft 2-1/2" clay lense; light red (2.5YR 6/8). @ 467.5 - 468.4 ft sand is quartz.
	@ 466 ft. Well-graded GRAVEL with Clay and Sand (GW-GC); brown (7.5YR 5/3); 60% fine to coarse gravel to 2"; subangular; 30% fine to coarse sand; subangular to subrounded; 10% clay.			@ 468.3 ft coarse gravel to 1"; subrounded, mafics.
470	@ 466.6 ft. No recovery.			
	@ 467.5 ft. Poorly graded SAND (SP); brown (7.5YR 5/3); 95% fine sand; trace medium sand; subangular to subrounded; 5% silt.	GW-GM		@ 470 - 471.4 ft sand is quartz with biotite and quartzite. Gravel is mafics, feldspar, and quartzite.
	@ 468.4 ft. No recovery.			
	@ 470 ft. Well-graded GRAVEL with Silt and Sand (GW-GM); strong brown (7.5YR 4/6); 60% fine to coarse gravel to 2"; angular to subangular; 30% fine to coarse sand; 10% silt.		8" Stainless Steel 0.050 Slot Screen	@ 471.4 ft. 2" piece of gravel in shoe of core barrel with multiple rock fragments.
	@ 471.4 ft. No recovery.			End of 9/15/15 @ 472.5 ft. Used approximately 500 gallons of water to date. Resume coring on 9/16/15 @ 0750.
475	@ 475 ft. No lithologic description. Core removed for testing.			
	@ 476 ft. Poorly graded SAND (SP); strong brown (7.5YR 4/6); 95% fine sand; subangular to subrounded; 5% silt.	SP		@ 475 - 476.3 ft sand is quartz with biotite.
	@ 476.3 ft. No recovery.			
	@ 477.5 ft. Poorly graded SAND with Silt (SP-SM); strong brown (7.5YR 4/6); 90% fine sand; trace medium sand; subangular to subrounded; 10% silt.	SP-SM		@ 477.5 - 478.2 ft sand is quartz with some biotite.
	@ 478.2 ft. No recovery.			
480				

KAFB_BOREHOLE_LOG - SHAW_DRILLING.GDT - 12/9/15 13:24 - Z:\KAFB RAPID\GINT\KAFB_RAPID.GPJ

Borehole ID: KAFB-106233-Sonic

Client: US Army Corps of Engineers
Project Location: KAFB, Albuquerque, NM
Project Name: KAFB RAPID SWMU ST-106 and SS-111
Project Number: 500433

Date Started: 9/14/2015
Date TD Reached: 9/24/2015
Date Completed:

Ground Elevation AMSL (ft): Not Recorded
Y Coordinate:
X Coordinate:

Hole Diameter Upper (in.): 16
Hole Diameter Lower (in.): 14-3/4
Surface Completion Type: Flush

Groundwater Levels BGS (ft):
At Time of Drilling: 450.00
At End of Drilling: Not Recorded
After Drilling: 459.60

Drillling Contractor: National Drilling
Drilling Method: Sonic Coring
Logged By: M. Giles

Depth (ft)	Sample Type	Number	Headspace PID	Lithologic Log	Material Description	U.S.C.S.	Well Diagram	Remarks
480					@ 480 ft. Poorly graded SAND (SP); light brown (7.5YR 6/4); 95% fine sand; trace coarse sand; subangular to subrounded; 5% silt.	SP		@ 480 - 481.2 ft sand is quartz with some biotite.
					@ 481.2 ft. No recovery.			
					@ 482.5 ft. Poorly graded SAND (SP); light brown (7.5YR 6/4); 95% fine sand; trace medium sand; subangular to subrounded; 5% silt.	SP		@ 482.5 - 483.4 ft sand is quartz with some biotite. @ 483.1 ft conglomerate rock fragment jamming shoe in core barrel.
					@ 483.4 ft. No recovery.			
485								@ 485 - 486 ft drilled without coring due to rock fragments in shoe of the core barrel.
					@ 487.5 ft. Poorly graded SAND (SP); light brown (7.5YR 6/3); 95% fine to medium sand; trace coarse sand; subangular to subrounded; trace fine gravel to 1/2"; subrounded; 5% silt.	SP	8" Stainless Steel 0.050 Slot Screen	@ 487.5 - 490.5 ft sand is quartz with biotite and occasional microcline. Gravel is mafics.
					@ 488.6 ft. Silty SAND (SM); light brown (7.5YR 6/3); 80% fine to coarse sand; subangular to subrounded; 20% silt.	SM		
490					@ 490 ft. Well-graded SAND with Silt (SW-SM); light brown (7.5YR 6/3); 90% fine to coarse sand; subangular to subrounded; 10% silt.	SW-SM		@ 490.4 ft cemented sandstone, fine to coarse grained.
					@ 490.5 ft. No recovery.			
					@ 492.5 ft. Well-graded SAND with Gravel (SW); light brown (7.5YR 6/3); 75% fine to coarse sand; subangular to subrounded; 20% fine to coarse gravel to 1-1/2"; subrounded; 5% silt.	SW		@ 492.5 ft coarse gravel is cemented sandstone. @ 492.5 - 495 ft sand is quartz, biotite, and microcline. Gravel is mafics.
495								

KAFB_BOREHOLE_LOG - SHAW_DRILLING.GDT - 12/9/15 13:24 - Z:\KAFB RAPID\GINT\KAFB_RAPID.GPJ

Borehole ID: KAFB-106233-Sonic

Client: US Army Corps of Engineers
Project Location: KAFB, Albuquerque, NM
Project Name: KAFB RAPID SWMU ST-106 and SS-111
Project Number: 500433

Date Started: 9/14/2015
Date TD Reached: 9/24/2015
Date Completed:

Ground Elevation AMSL (ft): Not Recorded
Y Coordinate:
X Coordinate:

Hole Diameter Upper (in.): 16
Hole Diameter Lower (in.): 14-3/4
Surface Completion Type: Flush

Groundwater Levels BGS (ft):
At Time of Drilling: 450.00
At End of Drilling: Not Recorded
After Drilling: 459.60

Drillling Contractor: National Drilling
Drilling Method: Sonic Coring
Logged By: M. Giles

Depth (ft)	Sample Type	Number	Headspace PID	Lithologic Log	Material Description	U.S.C.S.	Well Diagram	Remarks
495					@ 495 ft. Well-graded SAND (SW); brown (7.5YR 5/3); 95% fine to coarse sand; subangular to subrounded; 5% silt.	SW		@ 495 - 497.2 ft, sand is quartz, biotite, microcline, and occasional quartz.
					@ 495.8 ft. Poorly graded SAND (SP); brown (7.5YR 5/3); 95% fine to medium sand; subangular to subrounded; 5% silt.	SP		
					@ 497.2 ft. No recovery.			
					@ 497.5 ft. Poorly graded SAND (SP); brown (7.5YR 5/3); 90% fine to medium sand; subangular to subrounded; 5% fine gravel to 3/4"; subrounded; trace coarse gravel; 5% silt.	SP		@ 497.5 - 499 ft sand is quartz with biotite. Gravel is mafics. Occasional coarse gravel in shoe.
					@ 499 ft. No recovery.			
500					@ 500 ft. Poorly graded SAND (SP); brown (10YR 4/3); 90% fine to medium sand; trace coarse sand; subangular to subrounded; 5% fine gravel to 3/4"; subrounded; 5% silt.	SP		@ 500 - 501.1 ft sand is quartz, biotite, and microcline. Gravel is mafics.
					@ 501.1 ft. No recovery.			
					@ 502.5 ft. Well-graded SAND (SW); brown (10YR 4/3); 90% fine to coarse sand; angular to subrounded; 5% fine gravel to 1/2"; subrounded; 5% silt.	SW	8" Stainless Steel 0.050 Slot Screen	@ 502.5 - 504.5 ft sand is quartz, biotite, and microcline. Gravel is mafics.
					@ 504.5 ft. No recovery.			
505					@ 505 ft. Poorly graded GRAVEL (GP); yellowish red (5YR 5/8); 85% coarse gravel to 2"; trace fine gravel to 1/2"; subangular; 10% fine to medium sand; 5% clay.	GP		@ 505 - 505.4 ft sand is quartz. Gravel is mafics.
					@ 505.4 ft. No recovery.			
					@ 507.5 ft. Well-graded SAND (SW); brown (10YR 4/3); 95% fine to coarse sand; subangular to subrounded; 5% silt.	SW		@ 507.5 - 509.5 ft sand is quartz with occasional biotite and microcline. Gravel is mafics.
					@ 508.3 ft. Poorly graded SAND (SP); brown (10YR 4/3); 95% fine to medium sand; 5% silt.	SP SM		
510					@ 509 ft. Silty SAND with Gravel (SM);	SW		

KAFB_BOREHOLE_LOG - SHAW_DRILLING.GDT - 12/9/15 13:24 - Z:\KAFB RAPID\GINT\KAFB_RAPID.GPJ

Borehole ID: KAFB-106233-Sonic

Client: US Army Corps of Engineers
Project Location: KAFB, Albuquerque, NM
Project Name: KAFB RAPID SWMU ST-106 and SS-111
Project Number: 500433

Date Started: 9/14/2015
Date TD Reached: 9/24/2015
Date Completed:

Ground Elevation AMSL (ft): Not Recorded
Y Coordinate:
X Coordinate:

Hole Diameter Upper (in.): 16
Hole Diameter Lower (in.): 14-3/4
Surface Completion Type: Flush

Groundwater Levels BGS (ft):
At Time of Drilling: 450.00
At End of Drilling: Not Recorded
After Drilling: 459.60

Drillling Contractor: National Drilling
Drilling Method: Sonic Coring
Logged By: M. Giles

Depth (ft)	Material Description	U.S.C.S.	Well Diagram	Remarks
510	brown (10YR 4/3); 50% fine sand; 35% coarse gravel to 1-1/4"; subrounded; 15% silt.	SW-SM		@ 510 - 510.8 ft sand is quartz with biotite, microcline, and quartzite. Gravel is mafics.
	@ 509.3 ft. Well-graded SAND (SW); brown (10YR 4/3); 95% fine to coarse sand; subangular to subrounded; 5% silt.			
	@ 509.5 ft. No recovery.			
	@ 510 ft. Well-graded SAND with Silt (SW-SM); brown (10YR 4/3); 80% fine to coarse sand; subangular to subrounded; 10% fine gravel to 1/2"; subrounded; 10% silt.	SW		@ 512.5 - 514.5 ft sand is quartz with biotite and occasional microline. Gravel is mafics.
	@ 510.8 ft. No recovery.	SP		
515	@ 512.5 ft. Well-graded SAND (SW); brown (10YR 4/3); 85% fine to coarse sand; subangular to subrounded; 10% fine to coarse gravel; 5% silt.			Interval 515 - 515.5 ft was not opened to obtain a minimally disturbed sample.
	@ 514 ft. Poorly graded SAND (SP); brown (10YR 4/3); 95% fine to medium sand; subangular to subrounded; 5% silt.	SW / SP-SM		@ 515.5 - 516.2 ft sand is quartz with biotite and occasional microcline. Gravel is mafics.
	@ 514.5 ft. No recovery.			
	@ 515 ft. No lithologic description. Core removed for testing.	GW	8" Stainless Steel 0.050 Slot Screen	@ 517.5 - 518.9 ft sand is quartz and microcline, with occasional mafics, biotite, and quartzite. Gravel is mafics and quartzite.
	@ 515.5 ft. Well-graded SAND (SW); light brown (7.5YR 6/4); 90% fine to coarse sand; subangular to subrounded; 5% fine gravel to 1/2"; subrounded; 5% silt.	SP		
520	@ 516 ft. Poorly graded SAND with Silt (SP-SM); light brown (7.5YR 6/4); 90% fine sand; 10% silt.			@ 520 - 521.8 ft sand is quartz, biotite, and microcline.
	@ 516.2 ft. No recovery.			
	@ 517.5 ft. Well-graded GRAVEL with Sand (GW); light brown (7.5YR 6/4); 60% fine to coarse gravel to 1-1/4"; angular to subrounded; 35% fine to coarse sand; subangular to subrounded; 5% silt.	SP		
	@ 517.9 ft. Poorly graded SAND (SP); light brown (7.5YR 6/4); 95% fine to medium sand; subangular to subrounded; 5% silt.	SP-SM		End of 9/16/15 @ 522.5 ft. Used approximately 300 gallons of water. Resume coring on 9/17/15. @ 522.5 - 523.1 ft sand is quartz with trace biotite.
	@ 518.9 ft. No recovery.			
525	@ 520 ft. Poorly graded SAND (SP);			

KAFB_BOREHOLE_LOG - SHAW_DRILLING.GDT - 12/9/15 13:24 - Z:\KAFB RAPID\GINT\KAFB_RAPID.GPJ

Borehole ID: KAFB-106233-Sonic

Client: US Army Corps of Engineers
Project Location: KAFB, Albuquerque, NM
Project Name: KAFB RAPID SWMU ST-106 and SS-111
Project Number: 500433

Date Started: 9/14/2015
Date TD Reached: 9/24/2015
Date Completed:

Ground Elevation AMSL (ft): Not Recorded
Y Coordinate:
X Coordinate:

Hole Diameter Upper (in.): 16
Hole Diameter Lower (in.): 14-3/4
Surface Completion Type: Flush

Groundwater Levels BGS (ft):
At Time of Drilling: 450.00
At End of Drilling: Not Recorded
After Drilling: 459.60

Drillling Contractor: National Drilling
Drilling Method: Sonic Coring
Logged By: M. Giles

Depth (ft)	Material Description	U.S.C.S.	Well Diagram	Remarks
525	brown (7.5YR 4/4); 95% fine to medium sand; subangular to subrounded; 5% silt.	SP		@ 525 - 527.2 ft sand is quartz with occasional biotite.
	@ 521.8 ft. No recovery.	ML		
	@ 522.5 ft. Poorly graded SAND with Silt (SP-SM); brown (7.5YR 5/4); 90% fine to medium sand; trace coarse sand; subangular to subrounded; 10% silt.	SP		
	@ 523.1 ft. No recovery.	GC		@ 526.8 ft clay is firm with high plasticity.
	@ 525 ft. Poorly graded SAND (SP); brown (7.5YR 5/4); 95% fine to medium sand; subangular to subrounded; 5% silt.	CH		@ 527.9 - 529 ft sand is quartz with biotite.
	@ 525.3 ft. SILT with Sand (ML); brown (7.5YR 5/4); firm; low plasticity; 85% silt; 15% fine sand.	SP	8" Stainless Steel 0.050 Slot Screen	
530	@ 525.6 ft. Poorly graded SAND (SP); brown (7.5YR 5/4); 95% fine to medium sand; subangular to subrounded; trace fine gravel; rounded; 5% silt.			End of continuous coring @ 530 ft on 9/17/15. Resumed drilling on 9/18/15 with mud rotary.
	@ 526.8 ft. Clayey GRAVEL (GC); reddish yellow (7.5YR 6/6); 80% coarse gravel to 2-1/2"; subangular; 20% clay.			
	@ 527.2 ft. No recovery.		Bottom of Screen	
	@ 527.5 ft. Fat CLAY (CH); light reddish brown (5YR 6/4); dry; hard; high plasticity; 100% clay.			
	@ 527.9 ft. Poorly graded SAND (SP); brown (7.5YR 5/4); 95% fine to medium sand; subangular to subrounded; 5% silt.			
	@ 529.7 ft. No recovery.			
535	@ 530 ft. Poorly graded GRAVEL with Silt and Sand (GP-GM); light brown (7.5YR 6/3); 50% fine gravel to 3/8"; subangular to subrounded; 40% fine to coarse sand; subangular to subrounded; 10% silt. Note: Gravel is mafics, quartz, and granite. Sand is quartz, mafics, and microcline.	GP-GM		
			Bottom of Sump	
540				

KAFB_BOREHOLE_LOG - SHAW_DRILLING.GDT - 12/9/15 13:24 - Z:\KAFB RAPID\GINT\KAFB_RAPID.GPJ

Borehole ID: KAFB-106233-Sonic

Client: US Army Corps of Engineers
Project Location: KAFB, Albuquerque, NM
Project Name: KAFB RAPID SWMU ST-106 and SS-111
Project Number: 500433

Date Started: 9/14/2015
Date TD Reached: 9/24/2015
Date Completed:

Ground Elevation AMSL (ft): Not Recorded
Y Coordinate:
X Coordinate:

Hole Diameter Upper (in.): 16
Hole Diameter Lower (in.): 14-3/4
Surface Completion Type: Flush

Groundwater Levels BGS (ft):
▽ At Time of Drilling: 450.00
▼ At End of Drilling: Not Recorded
▼ After Drilling: 459.60

Drillling Contractor: National Drilling
Drilling Method: Sonic Coring
Logged By: M. Giles

Depth (ft)	Sample Type	Number	Headspace PID	Lithologic Log	Material Description	U.S.C.S.	Well Diagram	Remarks
540					@ 540 ft. Poorly graded GRAVEL with Silt and Sand (GP-GM); light brown (7.5YR 6/3); 50% fine gravel to 3/8"; subangular to subrounded; 40% fine to coarse sand; subangular to subrounded; 10% silt. Note: Gravel is mafics, quartz, and granite. Sand is quartz, mafics, and microcline.			12" reaming stopped @ 543 ft on 9/18/15 @ 1155. Resume drilling @ 1020 on 9/24/15.
545					Same as above (540 ft); 60% fine gravel to 3/8"; angular to subrounded; 30% medium to coarse sand; subangular to subrounded. Note: gravel is mafics and quartz. Sand is quartz with some mafics and granite.	GP-GM		
550					Same as above (540 ft); 60% fine gravel to 3/8"; angular to subrounded; 30% medium to coarse sand; subangular to subrounded. Note: gravel is mafics and quartz. Sand is quartz with some mafics and granite.		Bottom of Filter Pack/Bottom of Hole Native Backfill Bottom of Rat Hole	Total depth = 552 ft bgs. Reached total depth on 9/24/15 @ 1055.
555								

KAFB_BOREHOLE_LOG - SHAW_DRILLING.GDT - 12/9/15 13:24 - Z:\KAFB RAPID\GINT\KAFB_RAPID.GPJ

Extraction Well Construction Diagram KAFB-106233

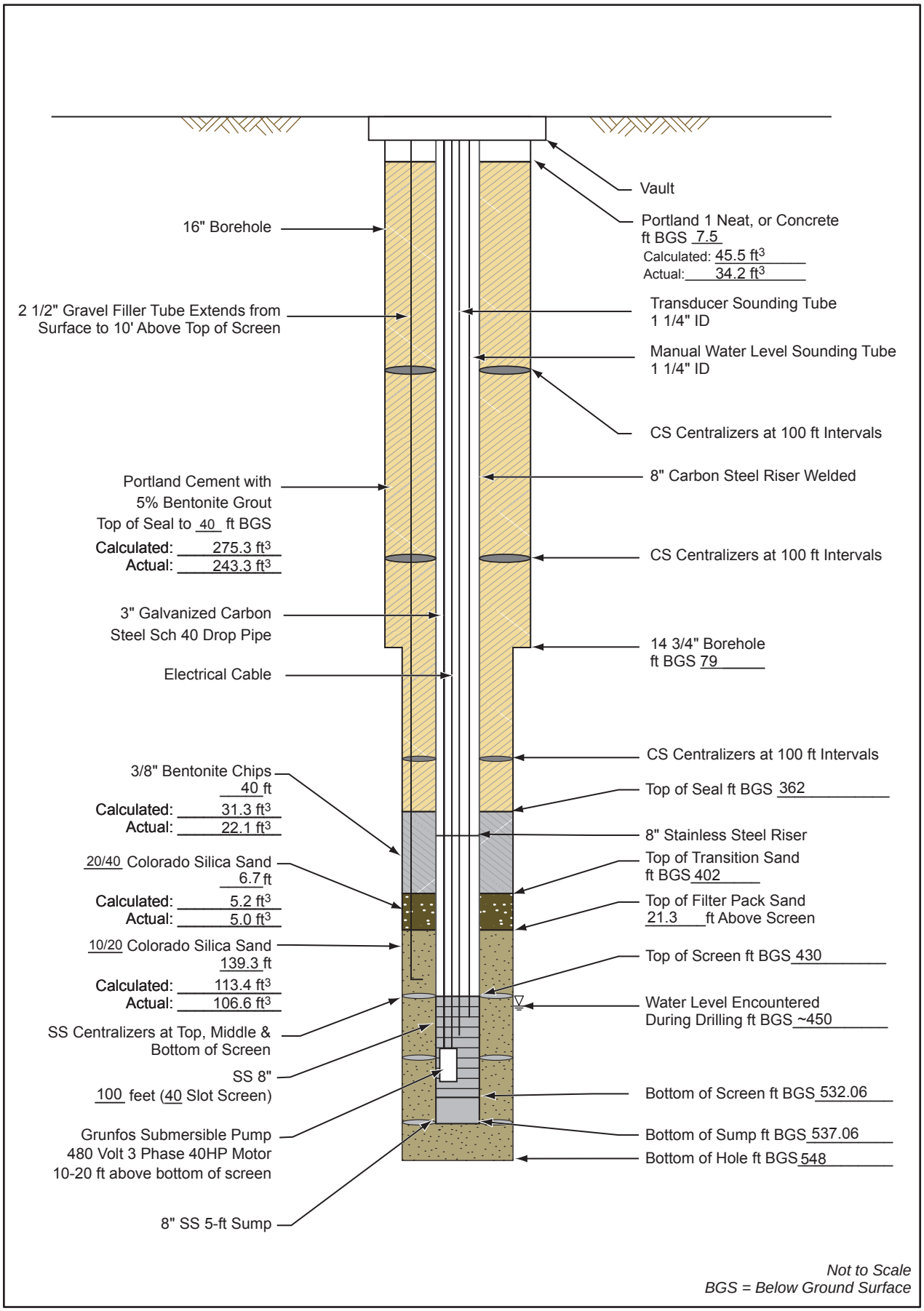

500433.04010300.A4

Groundwater Extraction Well Development

Project Name: KAFB BFF
Location: Gibson and California
Personnel:
Start Date: 10/1/2015
End Date: /2015

Well No.: KAFB-106233
Date Installed: 9/30/2015
Casing Diameter (I.D.): 8-inch
Total Depth (ft. BGS): 537.06

Method of Development:

[X] Surging [X] Bailing [X] Pumping [X] Jetting

[X] Original Development [ ] Redevelopment [ ] Other

Depth to Water Before Developing Well (ft. BGS): NR
Screened Interval (ft. BGS): 430 – 532.06
Weather: Varied

Equipment Numbers: **pH:** NR **Conductivity:** NR
Turbidity: NR

Equipment Decontaminated Prior to Development? [X] Yes [ ] No
Describe:

Collected Sample of Water Added to Well? [ ] Yes [X] No
Describe:

Comments:

Summary of development procedure, including key decision-points, calculations, and observations (described in detail in the following pages):

Well development consisted of bailing, surging, pumping, and jetting. The first step of development removed mud and cuttings from the well casing and filter pack, which were generated during the drilling process, by surging and bailing. The second step entailed physical well development using surging, bailing, and pumping to assess development progress. These actions included taking measurements of sediment content in the water using the Imhoff cone technique, and applying 30 minutes of sustained pumping, measuring, and plotting drawdown to estimate development effectiveness. The third step used jetting with simultaneous pumping.

Groundwater Extraction Well Development

Bailing				
Date	Time	Total Volume Bailed (gallons)	Imhoff Cone Measurement (mL sediment per L water)	Comments
10/1/2015	1638	0	--	Begin bailing
10/1/2015	1815	480	--	Stop bailing
10/2/2015	1038	480	--	Resume bailing on 10/2/15
10/2/2015	1044	495	0.2	First reading; thick mud; solids still suspended after 5 minutes
10/2/2015	1103	540	8.0	Diluted 250 mL mud with 750 mL of clean water; readings multiplied by 4.
10/2/2015	1113	600	10.0	Same as above
10/2/2015	1125	705	11.3	Same as above
10/2/2015	1147	825	6.0	Same as above
10/2/2015	1205	930	6.0	Same as above
10/2/2015	1330	1005	4.0	Same as above
10/2/2015	1348	1080	6.5	Same as above
10/2/2015	1407	1155	4.0	Same as above
10/2/2015	1418	1230	4.0	Same as above
10/2/2015	1423	1305	3.0	Same as above
10/2/2015	1517	1395	2.6	Same as above
10/2/2015	1530	1420	10.0	Same as above
10/2/2015	1609	1620	3.0	Same as above
10/2/2015	1617	1680	3.0	Same as above
10/3/2015	0900	1785	0.3	Getting 1,000 mL of well water
10/3/2015	0910	1840	1.0	Getting 1,000 mL of well water
10/3/2015	0923	1915	1.0	Getting 1,000 mL of well water
10/3/2015	0938	1990	1.0	Getting 1,000 mL of well water
10/6/2015	1408	4046	1.5	Begin bailing
10/6/2015	1425	4121	1.5	
10/6/2015	1436	4196	1.5	
10/6/2015	1446	4271	0.6	
10/6/2015	1458	4346	1.0	
10/6/2015	1508	4421	0.5	
10/6/2015	1519	4481	0.4	
10/7/2015	1036	4496	1.3	Begin bailing
10/7/2015	1051	4571	2.0	
10/7/2015	1105	4646	1.5	
10/7/2015	1130	4721	1.1	
10/7/2015	1142	4796	1.0	

Groundwater Extraction Well Development

Bailing				
Date	Time	Total Volume Bailed (gallons)	Imhoff Cone Measurement (mL sediment per L water)	Comments
10/7/2015	1205	4931	0.7	
10/7/2015	1249	4946	0.1	
10/7/2015	1256	4991	0.5	
10/18/2015	1103	68922	--	Bailer full of sand; use suction to get sand off of bottom
10/18/2015	1630	69147	--	Still sandy with some water; 225 gallons bailed, 45 gallons of which was sand.

L = liter

mL = milliliter

Groundwater Extraction Well Development

Surging				
Interval (feet below ground surface)	Date	Start Time	End Time	Comments
532-527	10/6/2015	0905	0915	
527-522	10/6/2015	0915	0926	
522-517	10/6/2015	0927	0937	
517-512	10/6/2015	0938	0948	
512-507	10/6/2015	0948	0958	
507-502	10/6/2015	1009	1019	
502-497	10/6/2015	1020	1030	
497-492	10/6/2015	1030	1040	
492-487	10/6/2015	1040	1050	
487-482	10/6/2015	1050	1100	
482-477	10/6/2015	1116	1126	
477-472	10/6/2015	1127	1137	
472-467	10/6/2015	1137	1147	
467-462	10/6/2015	1147	1157	
462-457	10/6/2015	1157	1207	
457-452	10/6/2015	1255	1305	
452-447	10/6/2015	1302	1315	
532-448	10/6/2015	1315	1326	
532-527	10/6/2015	1629	1640	
527-522	10/6/2015	1641	1651	
522-517	10/6/2015	1651	1701	
517-512	10/6/2015	1701	1702	
512-507	10/6/2015	1720	1730	
507-502	10/6/2015	1730	1740	
402-497	10/6/2015	1740	1750	
497-492	10/6/2015	1750	1800	
492-487	10/7/2015	0808	0819	
487-482	10/7/2015	0827	0837	
482-477	10/7/2015	0837	0847	
477-472	10/7/2015	0847	0857	
472-467	10/7/2015	0857	0907	
467-462	10/7/2015	0907	0917	
462-457	10/7/2015	0923	0933	
457-452	10/7/2015	0934	0944	
452-447	10/7/2015	0944	0954	
532-449	10/7/2015	0954	1009	

Groundwater Extraction Well Development

Pumping

Date	Time	Rate (gpm)	Depth to Water (ft BGS)	Volume Removed (gallons)	Temp (°C)	pH (S.U)	EC (mS/cm)	Turbidity (NTU)	Specific Capacity (gpm/ft)	Imhoff Cone (mL sediment per L water)	Depth of pump (Feet)
10/3/2015	1707	8	474.00	1995	20.7	8.23	0.689	>1,000	0.31	0.3	491.3
10/3/2015	1715	5	474.00	1075	21.3	8.17	0.745	>1,000	0.31	0.1	491.3
10/3/2015	1725	6.5	471.00	2125	21.5	8.11	0.813	>1,000	0.22	0.2	491.3
10/3/2015	1735	6.5	473.65	2190	21.8	7.96	0.808	>1,000	0.25	0.1	491.3
10/3/2015	1745	6	476.80	2255	21.5	7.95	0.721	>1,000	0.21	0.1	491.3
10/3/2015	1755	6	475.50	2310	21.5	7.91	0.707	>1,000	0.22	0.1	491.3
10/3/2015	1805	6	475.80	2370	21.4	7.89	0.665	>1,000	0.21	<0.1	491.3
10/3/2015	1815	6	476.00	2430	21.3	7.89	0.645	>1,000	0.21	<0.1	491.3
10/3/2015	1825	6	476.30	2490	21.3	7.89	0.633	>1,000	0.21	<0.1	491.3
10/3/2015	1835	6	476.55	2550	21.3	7.90	0.626	>1,000	0.21	<0.1	491.3
10/5/2015	0908	--	448.9	2557	--	--	--	--	--	--	491.3
10/5/2015	0910	8.5	452.1	2557	14.7	6.89	0.608	185	2.66	<0.1	491.3
10/5/2015	0920	8.5	463.2	2642	20.7	7.34	0.614	>1,000	0.59	<0.1	491.3
10/5/2015	0930	8.0	470.45	2727	20.2	7.30	0.599	125	0.37	<0.1	491.3
10/5/2015	0940	8.0	474.05	2807	20.7	7.83	0.592	123	0.32	<0.1	491.3
10/5/2015	0950	7.5	477.35	2887	20.8	7.90	0.604	217	0.28	<0.1	491.3
10/5/2015	1000	7.5	479.00	2962	20.8	7.87	0.585	334	0.25	<0.1	491.3
10/5/2015	1010	7.5	479.75	3037	20.8	7.63	0.611	>1,000	0.24	<0.1	491.3
10/5/2015	1108	--	449.41	3037	--	--	--	--	--	--	530.7
10/5/2015	1110	8	451.20	3037	21.6	7.85	0.607	>1,000	3.5	<0.1	530.7
10/5/2015	1120	8	459.53	3117	21.1	7.84	0.586	810	0.75	<0.1	530.7
10/5/2015	1130	7.5	463.95	3197	20.5	7.96	0.631	>1,000	0.53	<0.1	530.7-525.7
10/5/2015	1140	7.5	467.20	3172	20.8	7.92	0.606	666	0.41	<0.1	530.7-525.7
10/5/2015	1150	7.5	469.40	3247	20.7	7.80	0.535	238	0.37	<0.1	525.7-520.7
10/5/2015	1200	7.5	471.45	3322	20.7	7.78	0.514	264	0.33	<0.1	525.7-520.7
10/5/2015	1240	7.5	452.80	3322	22.0	7.74	0.516	302	1.92	<0.1	520.7-515.7
10/5/2015	1250	7.5	461.65	3397	21.0	7.76	0.514	149	0.59	<0.1	520.7-515.7
10/5/2015	1300	7.5	467.98	3472	20.9	7.74	0.525	109	0.38	<0.1	515.7-510.7
10/5/2015	1322	8	452.40	3472	21.9	7.74	0.512	79.1	2.28	<0.1	510.7-505.7

Groundwater Extraction Well Development

Pumping

Date	Time	Rate (gpm)	Depth to Water (ft BGS)	Volume Removed (gallons)	Temp (°C)	pH (S.U)	EC (mS/cm)	Turbidity (NTU)	Specific Capacity (gpm/ft)	Imhoff Cone (mL sediment per L water)	Depth of pump (Feet)
10/5/2015	1342	7.5	471.50	3632	20.8	7.77	0.498	165	0.33	<0.1	505.7-500.7
10/5/2015	1352	7.5	476.23	3707	21.0	7.77	0.509	326	0.27	<0.1	500.7-495.7
10/5/2015	1402	8	474.90	3782	21.1	7.77	0.526	455	0.31	<0.1	495.7-490.7
10/5/2015	1427	8	453.90	3782	23.3	7.74	0.528	414	1.6	<0.1	490.7-485.7
10/5/2015	1437	8	464.20	3862	21.1	7.75	0.514	373	0.52	<0.1	490.7-485.7
10/5/2015	1448	7.5	471.35	3942	20.7	7.75	0.487	183	0.33	<0.1	480.7-485.7
10/7/2015	1518	--	448.35	4991	--	--	--	--	--	--	512.3
10/7/2015	1525	9	450.4	4991	24.7	7.00	0.561	>1,000	6.42	0.2	512.3
10/7/2015	1535	9	450.35	5081	20.2	7.84	0.570	>1,000	6.67	<0.1	512.3
10/7/2015	1545	9	450.35	5171	20.5	7.87	0.547	>1,000	6.67	<0.1	512.3
10/7/2015	1552	30	453.90	5171	19.4	7.77	0.509	555	6.12	<0.1	512.3
10/7/2015	1602	29	453.80	5471	19.0	7.74	0.511	572	6.04	<0.1	512.3
10/7/2015	1612	29.5	453.95	5771	18.9	7.71	0.496	392	5.96	<0.1	512.3
10/7/2015	1622	29	454.15	6071	18.8	7.68	0.479	222	5.63	<0.1	512.3
10/7/2015	1632	29	454.30	6371	18.8	7.67	0.472	138	5.47	<0.1	512.3
10/7/2015	1648	28.5	453.65	6371	19.6	7.75	0.465	139	6.13	<0.1	530.4-525.4
10/7/2015	1658	28	454.18	6656	18.8	7.69	0.463	137	5.40	<0.1	530.4-525.4
10/7/2015	1708	28	454.45	6936	18.8	7.68	0.461	95.2	5.14	<0.1	530.4-525.4
10/7/2015	1718	28	454.49	7216	18.7	7.68	0.442	110	5.10	<0.1	525.4-520.4
10/7/2015	1728	28	454.52	7496	18.7	7.67	0.447	43.2	5.07	<0.1	520.4-515.4
10/7/2015	1738	28	454.60	7776	18.7	7.68	0.441	111	5.00	<0.1	515.4-510.4
10/7/2015	1815	30	453.80	7776	18.0	7.80	0.466	81.7	6.25	<0.1	510.4-505.4
10/7/2015	1825	30	454.80	8076	18.5	7.70	0.445	101	5.17	<0.1	510.4-505.4
10/8/2015	0824	30	453.37	8568	11.7	7.17	0.458	38	7.48	<0.1	505.4-500.4

Groundwater Extraction Well Development

Pumping

Date	Time	Rate (gpm)	Depth to Water (ft BGS)	Volume Removed (gallons)	Temp (°C)	pH (S.U)	EC (mS/cm)	Turbidity (NTU)	Specific Capacity (gpm/ft)	Imhoff Cone (mL sediment per L water)	Depth of pump (Feet)
10/8/2015	0834	30	454.70	8868	12.2	7.32	0.458	40.9	5.62	<0.1	505.4-500.4
10/8/2015	0844	30	454.70	9168	12.9	7.44	0.460	13.6	5.62	<0.1	500.4-495.4
10/8/2015	0854	30	454.70	9468	14.0	7.56	0.460	8.1	5.62	<0.1	500.4-495.4
10/8/2015	0904	30	455.20	9768	14.1	7.57	0.459	5.83	5.17	<0.1	495.4-490.4
10/8/2015	0931	30	453.30	9768	19.1	7.64	0.466	15.9	7.61	<0.1	490.4-485.4
10/8/2015	0941	31	454.90	10068	18.6	7.71	0.462	10.8	5.60	<0.1	490.4-485.4
10/8/2015	0951	31	455.22	10378	18.6	7.71	0.444	24.2	5.29	<0.1	480.4-475.4
10/8/2015	1001	31	455.41	10688	18.6	7.70	0.447	20.0	5.12	<0.1	480.4-475.4
10/8/2015	1011	31	455.37	10998	18.6	7.70	0.453	13.5	5.16	<0.1	475.4-470.4
10/8/2015	1054	31	453.25	10998	19.3	7.68	0.450	9.98	7.97	<0.1	470.4-465.4
10/8/2015	1104	31	453.90	11308	18.6	7.71	0.435	4.22	6.82	<0.1	470.4-465.4
10/8/2015	1114	31	455.25	11618	18.6	7.69	0.435	9.63	5.26	<0.1	470.4
10/8/2015	1124	31	455.25	11928	18.6	7.69	0.443	6.41	5.26	<0.1	470.4
10/8/2015	1134	31	455.44	12238	18.6	7.69	0.442	5.21	5.09	<0.1	470.4
10/8/2015	1144	31	455.55	12548	18.6	7.68	0.443	3.5	5.00	<0.1	470.4
10/8/2015	1154	31	455.30	12858	18.6	7.68	0.445	59.4	5.21	<0.1	470.4
10/8/2015	1204	31	455.60	13168	18.6	7.69	0.445	76.0	4.96	<0.1	470.4
10/8/2015	1347	31	455.08	13168	18.9	7.68	0.492	34.5	5.42	<0.1	470.4
10/8/2015	1358	31	453.80	13478	18.7	7.73	0.444	9.0	6.98	<0.1	470.4
10/8/2015	1408	31	455.50	13788	18.6	7.71	0.444	8.29	5.04	<0.1	470.4
10/8/2015	1418	31	--	--	--	--	--	--	--	--	--
10/15/2015	1400	40	450.36	--	22.5	7.62	0.508	142	36.04	<0.1	529
10/15/2015	1412	39.5	451.20	--	19.8	7.72	0.461	97.8	20.26	<0.1	529
10/15/2015	1422	39.5	451.26	--	19.2	7.69	0.465	24.8	19.65	<0.1	529
10/16/2015	0932	42.5	451.25	42809	18.9	7.29	0.484	545	24.29	0.2	488
10/16/2015	0942	42	451.34	43123	18.8	7.61	0.458	51.1	22.8	0.15	488
10/16/2015	0952	42	451.39	43165	18.6	7.72	0.463	15.3	23.22	<0.1	488

Groundwater Extraction Well Development

Pumping

Date	Time	Rate (gpm)	Depth to Water (ft BGS)	Volume Removed (gallons)	Temp (°C)	pH (S.U)	EC (mS/cm)	Turbidity (NTU)	Specific Capacity (gpm/ft)	Imhoff Cone (mL sediment per L water)	Depth of pump (Feet)
10/16/2015	1002	42	451.42	43207	18.5	7.73	0.464	10.0	21.88	<0.1	488
10/16/2015	1022	42	451.44	43209	18.4	7.72	0.465	5.76	21.65	<0.1	488
10/16/2015	1042	42	451.47	43375	18.3	7.72	0.463	4.08	21.32	<0.1	488
10/16/2015	1102	42	451.49	43459	18.3	7.72	0.464	4.14	21.11	<0.1	488
10/16/2015	1122	42	451.49	43543	18.3	7.71	0.462	2.11	21.11	<0.1	488
10/16/2015	1142	42	451.49	43627	18.2	7.71	0.460	2.23	21.11	<0.1	488
10/16/2015	1202	42	449.65	43711	20.0	7.86	0.515	198	--	<0.1	488
10/16/2015	1222	42	451.40	43795	18.4	7.74	0.462	4.58	22.11	<0.1	488
10/16/2015	1312	42	451.30	44005	19.8	7.80	0.466	96.8	23.33	<0.1	488
10/16/2015	1318	42	451.37	44306	18.5	7.74	0.455	30.2	22.46	<0.1	488
10/16/2015	1625	42	451.15	--	19.8	7.76	0.507	>1,000	25.45	6.0	468
10/16/2015	1635	43.5	451.66	--	20.6	7.82	0.523	748	20.14	0.2	468
10/16/2015	1645	44	451.70	--	19.6	7.79	0.498	227	20.00	0.2	468
10/16/2015	1655	44	451.74	--	18.9	7.77	0.473	114	--	--	468
10/20/2015	1528	63.78	452.07	--	18.1	7.65	0.463	78.7	22.34	<0.1	509.4
10/20/2015	1538	63.90	452.11	--	18.0	7.64	0.488	10.4	21.59	<0.1	509.4
10/20/2015	1548	63.08	452.15	--	18.0	7.63	0.486	3.88	21.46	<0.1	509.4
10/20/2015	1621	63.08	452.43	--	--	--	--	--	19.59	--	--

°C = degrees Celsius
EC = Electric Conductivity
ft bgs = feet below ground surface
gpm = gallons per minute
gpm/ft = gallons per minute per foot
mL = milliliter
mS/cm = millisiemen per centimeter
NR = not recorded
NTU = Nephelometric Turbidity Unit
S.U. = Standard Unit

Groundwater Extraction Well Development

Jetting

Date	Time	Depth (ft bgs)	Jetting Rate (gpm)	Pumping Rate (gpm)	Imhoff Cone Measurement (mL sediment per L water)	Depth to Water (feet bgs)	Comments
10/12/2015	1820	520.0	--	--	--	--	Pump on
10/12/2015	1823	520.0	--	46.5	<0.1	458.0	
10/12/2015	1828	520.0	37.44	46.5	0.2	454.2	
10/12/2015	1834	525-520	36.12	46.0	0.2	452.0	
10/13/2015	0914	520-515	--	47.0	0.2	451.0	Pump on
10/13/2015	0928	520-515	26.0	47.0	2.0	454.2	Turn on jet
10/13/2015	0958	520-515	26.0	44.0	1.5	454.0	
10/13/2015	1011	520-515	--	44.0	0.3	454.1	
10/13/2015	1123	515-510	43.9	46.0	0.3	453.1	
10/13/2015	1137	510-505	30.0	44.0	0.7	452.3	
10/13/2015	1144	520-515	30.0	43.0	1.0	453.0	
10/13/2015	1149	525-505	30.0	43.0	0.5	453.0	Turn off jet/pump
10/13/2015	1240	505-500	32.0	47.0	0.9	453.9	Turn on jet/pump
10/13/2015	1247	500-495	30.0	46.0	0.5	451.6	
10/13/2015	1257	495-490	32.0	45.0	0.6	452.5	Turn off jet/pump
10/13/2015	1408	495-490	30.0	44.0	1.5	451.1	Turn on jet/pump
10/13/2015	1418	490-485	30.0	44.0	2.0	451.3	Turn off jet/pump
10/13/2015	1513	485-480	32.0	46.0	0.3	451.5	Turn on jet/pump
10/13/2015	1520	480-475	32.0	45.0	2.5	451.2	Turn off jet/pump
10/13/2015	1630	475-470	24.0	45.0	0.4	451.1	Turn on jet/pump
10/13/2015	1635	470-465	22.0	45.0	0.7	451.8	Turn off jet/pump
10/13/2015	1726	465-460	35.0	46.0	1.5	451.5	Turn on jet/pump
10/13/2015	1732	460-455	24.0	45.0	2.5	451.8	
10/13/2015	1739	455-450	23.0	43.0	3.0	451.0	Turn off jet/pump
10/14/2015	0830	465-460	26	46.5	2.5	451.3	Turn on jet/pump
10/14/2015	0835	460-455	25	44	7.5	451.5	
10/14/2015	0840	455-450	24	44	10.0	451.5	
10/15/2015	0906	465-460	39	46	7.0	450.0	
10/15/2015	0913	460-455	37	44	4.0	450.0	
10/15/2015	0920	455-450	36	43	7.0	449.9	
10/15/2015	1028	470-465	36	44	18.0	451.1	
10/15/2015	1034	475-470	36	43	10.0	449.7	
10/15/2015	1041	480-475	39	42	6.0	449.7	
10/15/2015	1045	485-480	38	40	5.0	449.7	
10/15/2015	1150	490-485	37	44	6.5	449.6	
10/15/2015	1155	495-490	37	40	4.5	449.7	
10/15/2015	1202	450-495	37	41	1.5	449.6	
10/15/2015	1208	505-500	38	40	3.0	449.6	

Groundwater Extraction Well Development

Jetting

Date	Time	Depth (ft bgs)	Jetting Rate (gpm)	Pumping Rate (gpm)	Imhoff Cone Measurement (mL sediment per L water)	Depth to Water (feet bgs)	Comments
10/15/2015	1339	510-505	36	42	1.1	449.6	
10/15/2015	1345	515-510	36	40	1.5	449.5	
10/15/2015	1350	520-515	36	40	2.5	449.5	
10/15/2015	1356	525-520	36	40	0.8	449.5	
10/15/2015	1432	525-520	35	39	0.6	449.2	
10/15/2015	1438	520-515	36	38	2.5	449.5	
10/15/2015	1444	515-510	36	37	1.9	449.4	
10/15/2015	1450	510-505	35	38	5.0	449.6	
10/15/2015	1530	505-500	34	41	1.6	449.8	
10/15/2015	1535	500-495	36	40	3.5	449.6	
10/15/2015	1548	495-490	32	38	2.5	449.8	
10/15/2015	1554	490-485	35	38	4.0	499.6	
10/15/2015	1654	485-480	35	42	4.5	449.4	
10/15/2015	1659	480-475	35	39.5	7.5	449.6	
10/15/2015	1705	475-470	34	39	8.0	449.8	
10/15/2015	1710	470-465	34	39	7.0	450.0	
10/16/2015	0637	465-460	35	44	10.0	450.2	
10/16/2015	1458	430-445	34	--	--	--	In unsaturated zone
10/16/2015	1618	445-440	34	--	--	--	In unsaturated zone
10/16/2015	1706	465-460	27	44	2.3	450.8	
10/16/2015	1711	460-455	24	43	9.8	450.6	
10/16/2015	1718	455-450	24	43	7.0	450.5	
10/16/2015	1738	465-460	35	40	3.5	450.6	
10/16/2015	1743	460-455	35	40	8.0	450.5	
10/16/2015	1749	455-450	24	40	5.0	450.3	
10/17/2015	0826	465-460	24	13	5.5	449.5	
10/17/2015	0831	460-455	24	42	7.5	450.3	
10/17/2015	0837	455-450	24	41	5.5	450.3	
10/17/2015	0842	455-450	25	40	7.5	450.4	
10/17/2015	0847	460-455	24	39	8.0	450.4	
10/17/2015	0852	465-460	24	38	6.0	450.3	
10/17/2015	0857	465-460	25	38	4.5	450.3	
10/17/2015	0902	460-455	24	38	5.5	450.4	
10/17/2015	0908	455-450	25	38	3.5	450.3	
10/17/2015	1010	480-475	35	39	1.2	450.0	
10/17/2015	1016	475-470	33	39	3.0	449.8	
10/17/2015	1026	470-465	24	38	4.75	450.4	

Groundwater Extraction Well Development

Jetting

Date	Time	Depth (ft bgs)	Jetting Rate (gpm)	Pumping Rate (gpm)	Imhoff Cone Measurement (mL sediment per L water)	Depth to Water (feet bgs)	Comments
10/17/2015	1031	470-465	23	38	4.0	450.4	
10/17/2015	1036	475-470	23	38	4.5	450.2	
10/17/2015	1041	480-475	27	38	3.75	450.0	
10/17/2015	1047	480-475	27	38	3.0	450.0	
10/17/2015	1053	475-470	27	38	2.0	450.3	
10/17/2015	1058	470-465	25	38	2.0	450.2	
10/17/2015	1249	465-460	23	40	4.0	449.9	
10/17/2015	1254	460-455	22	39	3.5	450.0	
10/17/2015	1259	455-450	22	38	11.0	450.2	
10/17/2015	1304	455-450	21	38	3.0	450.0	
10/17/2015	1310	460-455	22	38	6.5	450.4	
10/17/2015	1315	465-460	23	38	4.0	450.4	
10/17/2015	1321	465-460	24	38	2.5	450.3	
10/17/2015	1326	460-455	24	38	7.0	450.3	
10/17/2015	1331	455-450	23	38	6.5	450.1	
10/17/2015	1336	455-450	23	38	6.0	450.2	
10/17/2015	1341	460-455	24	38	7.0	450.1	
10/17/2015	1347	455-450	23	38	9.0	450.5	
10/17/2015	1354	460-455	23	34	10.0	450.3	
10/17/2015	1413	460	--	33	1.5	451.1	
10/17/2015	1418	455	--	33	0.7	451.1	
10/17/2015	1423	455	--	33	0.3	451.1	
10/17/2015	1427	465	--	33	0.3	451.1	
10/17/2015	1435	465	--	33	0.1	451.1	
10/17/2015	1445	465	--	34	0.1	451.3	
10/17/2015	1500	465	--	35	0.1	451.4	

ft bgs = feet below ground surface

gpm = gallons per minute

L = liter

mL = millliliter

psi = pounds per square inch

Borehole ID: KAFB-106234

Client: US Army Corps of Engineers
Project Location: KAFB, Albuquerque, NM
Project Name: KAFB RAPID SWMU ST-106 and SS-111
Project Number: 500433

Date Started: 9/2/2015
Date TD Reached: 10/1/2015
Date Completed:

Ground Elevation AMSL (ft): Not Recorded
Y Coordinate:
X Coordinate:

Hole Diameter Upper (in.): 16
Hole Diameter Lower (in.): 14-3/4
Surface Completion Type: Flush

Groundwater Levels BGS (ft):
- At Time of Drilling: 459.00
- At End of Drilling: Not Recorded
- After Drilling: 458.90

Drillling Contractor: National Drilling
Drilling Method: Mud Rotary
Logged By: David Kessler

LICENSED PROFESSIONAL GEOLOGIST
VIRGINIA BRACHT
8881903-2250
STATE OF UTAH
12/3/15

Depth (ft)	Sample Type	Number	Headspace PID	Lithologic Log	Material Description	U.S.C.S.	Well Diagram	Remarks
0					ASPHALT			
					No lithologic description.			Borehole was air knifed from 0.5 - 8.7 ft for utility clearance on 8/31/15. Sand, silt, and gravel observed.
5							- Top of Casing/Cement Seal	
10					SILT (ML); brown (10YR 4/3); hard; 100% silt. SILT with Sand (ML); reddish brown (5YR 5/4); 80% silt; 20% fine sand.	ML		Begin ARCH drilling with 3/4" O.D. bit @ 1715 on 9/2/15. PID = 0.0 ppm @ breathing zone. Resume drilling @ 0835 on 9/3/15 @ 12 ft. PID = 0.0 ppm @ cyclone and breathing zone.
15					Same as above (10 ft).		- Cement Seal	
					Silty SAND (SM); dark reddish brown (5YR 3/3); 70% fine to medium sand; subangular to subrounded; 30% silt. Note: sand is biotite.	SM		Injected water to control dust.
20					@ 17 ft. Same as above (16 ft); trace gravel.			Depth of stabilization. Begin drilling with mud @ 1705.
					Well-graded SAND with Gravel (SW); reddish brown (5YR 4/3); dry; 75% fine to coarse sand; subangular to rounded; 20% gravel; angular to rounded; 5% silt. Note: sand is quartz, feldspars, and mafics.	SW		PID = 0.0 ppm @ breathing zone.
25					Same as above (18 ft); sand is subrounded to rounded.			Rig bouncing and chattering.
								Color cannot be determined.
30							Top of Portland Bentonite Cement	

KAFB_BOREHOLE_LOG - SHAW_DRILLING.GDT - 12/2/15 15:49 - Z:\KAFB RAPID\GINT\KAFB_RAPID.GPJ

Borehole ID: KAFB-106234

Client: US Army Corps of Engineers
Project Location: KAFB, Albuquerque, NM
Project Name: KAFB RAPID SWMU ST-106 and SS-111
Project Number: 500433

Date Started: 9/2/2015
Date TD Reached: 10/1/2015
Date Completed:

Ground Elevation AMSL (ft): Not Recorded
Y Coordinate:
X Coordinate:

Hole Diameter Upper (in.): 16
Hole Diameter Lower (in.): 14-3/4
Surface Completion Type: Flush

Groundwater Levels BGS (ft):
At Time of Drilling: 459.00
At End of Drilling: Not Recorded
After Drilling: 458.90

Drillling Contractor: National Drilling
Drilling Method: Mud Rotary
Logged By: David Kessler

Depth (ft)	Sample Type	Number	Headspace PID	Lithologic Log	Material Description	U.S.C.S.	Well Diagram	Remarks
30					Well-graded SAND with Gravel (SW); 75% fine to coarse sand; subrounded to rounded; 20% gravel; 5% silt. Note: sand is quartz, feldspar, and mafics.			Occasional chatter from drill stem. End of 9/3/15 @ 34 ft. Resume drilling @ 0905 on 9/4/15. PID = 0.0 ppm @ breathing zone. Gravel layer observed from 35 - 37 ft.
35					Same as above (30 ft).			
40					Same as above (30 ft); dark reddish brown (5YR 3/3); 55% fine to very coarse sand; 40% coarse gravel; angular.			Significant drill chatter.
45					Same as above (30 ft); dark reddish brown (5YR 3/3); 55% fine to very coarse sand; 40% coarse gravel; angular.	SW	Portland Bentonite Cement	Hard drilling. Add 150 gallons of water.
50					Same as above (30 ft); dark reddish brown (5YR 3/3); 55% fine to very coarse sand; 40% coarse gravel; angular.			PID = 0.0 ppm @ breathing zone. Added stabilizing collar @ 1140. Hole sloughted approximately 8 ft @ 1230.
55					Same as above (30 ft); dark reddish brown (5YR 3/3); dense; 55% fine to very coarse sand; 40% coarse gravel; angular; 5% silt.			Continuous chatter from 55 - 58 ft.
60								

KAFB_BOREHOLE_LOG - SHAW_DRILLING.GDT - 12/2/15 15:49 - Z:\KAFB RAPID\GINT\KAFB_RAPID.GPJ

Borehole ID: KAFB-106234

Client: US Army Corps of Engineers
Project Location: KAFB, Albuquerque, NM
Project Name: KAFB RAPID SWMU ST-106 and SS-111
Project Number: 500433

Date Started: 9/2/2015
Date TD Reached: 10/1/2015
Date Completed:

Ground Elevation AMSL (ft): Not Recorded
Y Coordinate:
X Coordinate:

Hole Diameter Upper (in.): 16
Hole Diameter Lower (in.): 14-3/4
Surface Completion Type: Flush

Groundwater Levels BGS (ft):
At Time of Drilling: 459.00
At End of Drilling: Not Recorded
After Drilling: 458.90

Drillling Contractor: National Drilling
Drilling Method: Mud Rotary
Logged By: David Kessler

Depth (ft)	Sample Type	Number	Headspace PID	Lithologic Log	Material Description	U.S.C.S.	Well Diagram	Remarks
60					Poorly graded SAND with Gravel (SP); dark reddish brown (5YR 3/3); 60% fine to medium sand; subrounded to rounded; 35% fine gravel; subangular to rounded; 5% silt. Note: sand is quartz and mafics. Gravel is quartz, feldspar, and mafics.			Collection of very coarse gravel in sieve from mud tub.
65					Same as above (60 ft).			
70					Same as above (60 ft); Note: percentage of mafics in gravel increases.	SP		Stopped drilling due to low circulation.
75					Same as above (60 ft).		- Portland Bentonite Cement	Borehole collapsed due to inability to remove fine gravel. Backfill borehole with 8/12-grade sand from 61.7 - 18.1 ft. Added third 20' collar @ 75 ft. Resume drilling with ARCH @ 1430 on 9/12/15. Very hard drilling from 76 - 84.6 ft. Drill stem bouncing and chattering. PID = 0.0 ppm @ breathing zone. Continue advancing casing using ARCH to 83 ft on 9/14/15. Could not advance any further.
80					Same as above (60 ft); gravel to 1"; angular.			
85								
90					Well-graded SAND with Gravel (SW); dark reddish brown (5YR 3/3); 60% very fine to coarse sand; subrounded to rounded; 35% fine gravel; subangular to rounded; 5% silt. Note: sand is quartz and mafics. Gravel is quartz, feldspar, and mafics.	SW		

KAFB_BOREHOLE_LOG - SHAW_DRILLING.GDT - 12/2/15 15:49 - Z:\KAFB RAPID\GINT\KAFB_RAPID.GPJ

Borehole ID: KAFB-106234

Client: US Army Corps of Engineers
Project Location: KAFB, Albuquerque, NM
Project Name: KAFB RAPID SWMU ST-106 and SS-111
Project Number: 500433

Date Started: 9/2/2015
Date TD Reached: 10/1/2015
Date Completed:

Ground Elevation AMSL (ft): Not Recorded
Y Coordinate:
X Coordinate:

Hole Diameter Upper (in.): 16
Hole Diameter Lower (in.): 14-3/4
Surface Completion Type: Flush

Groundwater Levels BGS (ft):
At Time of Drilling: 459.00
At End of Drilling: Not Recorded
After Drilling: 458.90

Drillling Contractor: National Drilling
Drilling Method: Mud Rotary
Logged By: David Kessler

Depth (ft)	Sample Type	Number	Headspace PID	Lithologic Log	Material Description	U.S.C.S.	Well Diagram	Remarks
90					Well-graded SAND with Gravel (SW); dark reddish brown (5YR 3/3); 60% very fine to coarse sand; subrounded to rounded; 35% fine gravel; subangular to rounded; 5% silt. Note: sand is quartz and mafics. Gravel is quartz, feldspar, and mafics.	SW		Begin drilling using mud @ 0835 on 9/15/15.
95					Same as above (90 ft); 50% very fine to coarse sand; 45% coarse gravel to 3 cm; angular. Note: sand is quartz, mafics, and feldspar.			PID = 0.0 ppm @ breathing zone.
100					Well-graded GRAVEL with Sand (GW); dark reddish brown (5YR 3/3); 60% fine to coarse gravel; angular to rounded; 35% very fine to medium sand; subrounded to rounded; 5% silt. Note: gravel is quartz and feldspar. Sand is quartz.	GW		
105					Same as above (97 ft).		Portland Bentonite Cement	
110					Clayey GRAVEL with Sand (GC); dark reddish brown (5YR 3/4); 50% fine to coarse gravel; angular to rounded; 30% very fine sand; rounded; 20% clay. Note: gravel is quartz and feldspar.	GC		
115					Same as above (107 ft); 50% very fine to coarse gravel; 20% very fine sand; 30% clay.			
120					Clayey GRAVEL (GC); strong brown (7.5YR 5/6); 50% gravel; angular to rounded; 10% very fine sand; rounded;			

KAFB_BOREHOLE_LOG - SHAW_DRILLING.GDT - 12/2/15 15:49 - Z:\KAFB RAPID\GINT\KAFB_RAPID.GPJ

Borehole ID: KAFB-106234

Client: US Army Corps of Engineers
Project Location: KAFB, Albuquerque, NM
Project Name: KAFB RAPID SWMU ST-106 and SS-111
Project Number: 500433

Date Started: 9/2/2015
Date TD Reached: 10/1/2015
Date Completed:

Ground Elevation AMSL (ft): Not Recorded
Y Coordinate:
X Coordinate:

Hole Diameter Upper (in.): 16
Hole Diameter Lower (in.): 14-3/4
Surface Completion Type: Flush

Groundwater Levels BGS (ft):
At Time of Drilling: 459.00
At End of Drilling: Not Recorded
After Drilling: 458.90

Drillling Contractor: National Drilling
Drilling Method: Mud Rotary
Logged By: David Kessler

Depth (ft)	Sample Type	Number	Headspace PID	Lithologic Log	Material Description	U.S.C.S.	Well Diagram	Remarks
120					40% clay. Note: gravel is quartz and feldspar.	GC		
					Clayey GRAVEL (GC); strong brown (7.5YR 5/6); 50% gravel; angular to rounded; 10% very fine sand; rounded; 40% clay. Note: gravel is quartz and feldspar.			PID = 0.0 ppm @ breathing zone.
125					Gravelly fat CLAY with Sand (CH); strong brown (7.5YR 5/6); 50% clay; 30% fine to coarse gravel; subrounded; 20% very fine sand.	CH		
130					Fat CLAY with Gravel (CH); brown (7.5YR 4/3); 70% clay; 20% fine to coarse gravel; angular to subrounded; 10% very fine sand. Note: sand is quartz.			
135					Fat CLAY (CH); brown (7.5YR 4/3); 90% clay; 10% very fine sand; subrounded to rounded.		- Portland Bentonite Cement	
140					Clayey SAND (SC); brown (7.5YR 5/4); 60% very fine sand; subrounded; 40% clay.	SC		
					Same as above (135 ft).			Kelly down, new 20' connection.
145					Sandy fat CLAY (CH); brown (7.5YR 5/3); 60% clay; 40% very fine sand.	CH		PID = 0.0 ppm @ breathing zone.
150								

KAFB_BOREHOLE_LOG - SHAW_DRILLING.GDT - 12/2/15 15:49 - Z:\KAFB RAPID\GINT\KAFB_RAPID.GPJ

Borehole ID: KAFB-106234

Client: US Army Corps of Engineers
Project Location: KAFB, Albuquerque, NM
Project Name: KAFB RAPID SWMU ST-106 and SS-111
Project Number: 500433

Date Started: 9/2/2015
Date TD Reached: 10/1/2015
Date Completed:

Ground Elevation AMSL (ft): Not Recorded
Y Coordinate:
X Coordinate:

Hole Diameter Upper (in.): 16
Hole Diameter Lower (in.): 14-3/4
Surface Completion Type: Flush

Groundwater Levels BGS (ft):
▽ At Time of Drilling: 459.00
▼ At End of Drilling: Not Recorded
▼ After Drilling: 458.90

Drillling Contractor: National Drilling
Drilling Method: Mud Rotary
Logged By: David Kessler

Depth (ft)	Sample Type	Number	Headspace PID	Lithologic Log	Material Description	U.S.C.S.	Well Diagram	Remarks
150					Sandy fat CLAY (CH); brown (7.5YR 5/3); 60% clay; 40% very fine sand.			
155					Same as above (150 ft).	CH		
160					Same as above (150 ft).			Kelly down @ 1345, new 20' connection. Difficult drilling and chatter.
165					Well-graded SAND with Gravel (SW); brown (7.5YR 4/3); 60% very fine to coarse sand; 35% fine to coarse gravel; subrounded to rounded; 5% silt. Note: gravel is quartz, feldspar, and mafics.			
170					Same as above (161 ft).		Portland Bentonite Cement	
175					Same as above (161 ft).	SW		PID = 0.0 ppm @ breathing zone.
180					Same as above (161 ft); 35% coarse gravel.			Kelly down @ 1447, new

KAFB_BOREHOLE_LOG - SHAW_DRILLING.GDT - 12/2/15 15:49 - Z:\KAFB RAPID\GINT\KAFB_RAPID.GPJ

Borehole ID: KAFB-106234

Client: US Army Corps of Engineers
Project Location: KAFB, Albuquerque, NM
Project Name: KAFB RAPID SWMU ST-106 and SS-111
Project Number: 500433

Date Started: 9/2/2015
Date TD Reached: 10/1/2015
Date Completed:

Ground Elevation AMSL (ft): Not Recorded
Y Coordinate:
X Coordinate:

Hole Diameter Upper (in.): 16
Hole Diameter Lower (in.): 14-3/4
Surface Completion Type: Flush

Groundwater Levels BGS (ft):
At Time of Drilling: 459.00
At End of Drilling: Not Recorded
After Drilling: 458.90

Drillling Contractor: National Drilling
Drilling Method: Mud Rotary
Logged By: David Kessler

Depth (ft)	Sample Type	Number	Headspace PID	Lithologic Log	Material Description	U.S.C.S.	Well Diagram	Remarks
180					Well-graded SAND with Gravel (SW); brown (7.5YR 4/3); 60% very fine to coarse sand; 35% coarse gravel; angular to rounded; 5% silt. Note: gravel is feldspar and mafics.	SW		20' connection. Bit chatter.
185					Poorly graded SAND with Gravel (SP); brown (7.5YR 4/3); 55% very fine sand; 40% fine gravel; subrounded to rounded; 5% silt. Note: gravel is quartz, feldspar, and mafics.	SP		PID = 0.0 ppm @ breathing zone.
190					Same as above (184 ft); 65% very fine sand; 30% fine gravel.			
195					Poorly graded GRAVEL with Sand (GP); brown (7.5YR 4/3); 60% fine gravel; subrounded to rounded; 35% very fine sand; rounded; 5% silt. Note: gravel is quartz, fedspar, and mafics.	GP	Portland Bentonite Cement	
200					Same as above (192 ft); 60% coarse gravel.			Kelly down @ 1540, new 20' connection.
205					Well-graded SAND with Gravel (SW); brown (7.5YR 4/4); 60% very fine to coarse sand; 35% medium gravel; subrounded to rounded; 5% clay. Note: sand is quartz. Gravel is quartz and feldspar.	SW		
210								

KAFB_BOREHOLE_LOG - SHAW_DRILLING.GDT - 12/2/15 15:49 - Z:\KAFB RAPID\GINT\KAFB_RAPID.GPJ

Borehole ID: KAFB-106234

Client: US Army Corps of Engineers
Project Location: KAFB, Albuquerque, NM
Project Name: KAFB RAPID SWMU ST-106 and SS-111
Project Number: 500433

Date Started: 9/2/2015
Date TD Reached: 10/1/2015
Date Completed:

Ground Elevation AMSL (ft): Not Recorded
Y Coordinate:
X Coordinate:

Hole Diameter Upper (in.): 16
Hole Diameter Lower (in.): 14-3/4
Surface Completion Type: Flush

Groundwater Levels BGS (ft):
▽ At Time of Drilling: 459.00
▼ At End of Drilling: Not Recorded
▼ After Drilling: 458.90

Drillling Contractor: National Drilling
Drilling Method: Mud Rotary
Logged By: David Kessler

Depth (ft)	Sample Type	Number	Headspace PID	Lithologic Log	Material Description	U.S.C.S.	Well Diagram	Remarks
210					Well-graded SAND with Gravel (SW); brown (7.5YR 4/4); 60% very fine to coarse sand; 35% medium gravel; subrounded to rounded; 5% clay. Note: sand is quartz. Gravel is quartz and feldspar.			
215					Same as above (210 ft); 70% very fine to coarse sand; 25% fine to medium gravel. Note: gravel is quartz, feldspar, and mafics.			
220					Same as above (215 ft).			Kelly down @ 1620, new 20' connection.
225					Same as above (215 ft).	SW	Portland Bentonite Cement	
230					Same as above (215 ft).			Hammer chatter.
235					Same as above (215 ft).			
240								Kelly down @ 1719, new

KAFB_BOREHOLE_LOG - SHAW_DRILLING.GDT - 12/2/15 15:49 - Z:\KAFB RAPID\GINT\KAFB_RAPID.GPJ

Borehole ID: KAFB-106234

Client: US Army Corps of Engineers
Project Location: KAFB, Albuquerque, NM
Project Name: KAFB RAPID SWMU ST-106 and SS-111
Project Number: 500433

Date Started: 9/2/2015
Date TD Reached: 10/1/2015
Date Completed:

Ground Elevation AMSL (ft): Not Recorded
Y Coordinate:
X Coordinate:

Hole Diameter Upper (in.): 16
Hole Diameter Lower (in.): 14-3/4
Surface Completion Type: Flush

Groundwater Levels BGS (ft):
▽ At Time of Drilling: 459.00
▼ At End of Drilling: Not Recorded
▼ After Drilling: 458.90

Drillling Contractor: National Drilling
Drilling Method: Mud Rotary
Logged By: David Kessler

Depth (ft)	Sample Type	Number	Headspace PID	Lithologic Log	Material Description	U.S.C.S.	Well Diagram	Remarks
240					Well-graded SAND with Gravel (SW); brown (7.5YR 4/4); 60% very fine to coarse sand; subrounded to rounded; 35% fine to coarse gravel; subrounded to rounded; 5% clay. Note: gravel is quartz, feldspar, and mafics.			20' connection.
245					Same as above (240 ft).			
250					Same as above (240 ft); 35% fine gravel.			
255					Same as above (240 ft); 35% fine gravel.	SW	Portland Bentonite Cement	Drill stem chattering.
260					Same as above (240 ft); 35% coarse gravel.			Kelly down, new 20' connection. End of 9/15/15 @ 1817. Resume drilling @ 0820 on 9/16/15.
265					Same as above (240 ft); 35% fine gravel.			PID = 0.0 ppm @ breathing zone.
270								

KAFB_BOREHOLE_LOG - SHAW_DRILLING.GDT - 12/2/15 15:49 - Z:\KAFB RAPID\GINT\KAFB_RAPID.GPJ

Borehole ID: KAFB-106234

Client: US Army Corps of Engineers
Project Location: KAFB, Albuquerque, NM
Project Name: KAFB RAPID SWMU ST-106 and SS-111
Project Number: 500433

Date Started: 9/2/2015
Date TD Reached: 10/1/2015
Date Completed:

Ground Elevation AMSL (ft): Not Recorded
Y Coordinate:
X Coordinate:

Hole Diameter Upper (in.): 16
Hole Diameter Lower (in.): 14-3/4
Surface Completion Type: Flush

Groundwater Levels BGS (ft):
At Time of Drilling: 459.00
At End of Drilling: Not Recorded
After Drilling: 458.90

Drillling Contractor: National Drilling
Drilling Method: Mud Rotary
Logged By: David Kessler

Depth (ft)	Sample Type	Number	Headspace PID	Lithologic Log	Material Description	U.S.C.S.	Well Diagram	Remarks
270								
275					Well-graded SAND with Gravel (SW); brown (7.5YR 4/3); 55% very fine to coarse sand; subrounded to rounded; 40% fine to coarse gravel; rounded; 5% silt. Note: gravel is quartz, feldspar, and mafics. Same as above (270 ft).	SW		PID = 0.0 ppm @ breathing zone.
280					Silty SAND with Gravel (SM); brown (7.5YR 4/2); 50% very fine to coarse sand; subrounded to rounded; 20% fine to coarse gravel; angular to subrounded; 30% silt. Note: gravel is quartz, feldspar, and mafics.	SM		Kelly down @ 281 ft, new 20' connection.
285					Same as above (279 ft).		Portland Bentonite Cement	
290					Well-graded SAND with Gravel (SW); brown (7.5YR 4/3); 60% very fine to coarse sand; subrounded to rounded; 35% fine to medium gravel; subrounded to rounded; 5% silt. Note: gravel is quartz, feldspar, and mafics.	SW		
295					Same as above (287 ft).			Rig chatter.
300								

KAFB_BOREHOLE_LOG - SHAW_DRILLING.GDT - 12/2/15 15:49 - Z:\KAFB RAPID\GINT\KAFB_RAPID.GPJ

Borehole ID: KAFB-106234

Client: US Army Corps of Engineers
Project Location: KAFB, Albuquerque, NM
Project Name: KAFB RAPID SWMU ST-106 and SS-111
Project Number: 500433

Date Started: 9/2/2015
Date TD Reached: 10/1/2015
Date Completed:

Ground Elevation AMSL (ft): Not Recorded
Y Coordinate:
X Coordinate:

Hole Diameter Upper (in.): 16
Hole Diameter Lower (in.): 14-3/4
Surface Completion Type: Flush

Groundwater Levels BGS (ft):
▽ At Time of Drilling: 459.00
▼ At End of Drilling: Not Recorded
▼ After Drilling: 458.90

Drillling Contractor: National Drilling
Drilling Method: Mud Rotary
Logged By: David Kessler

Depth (ft)	Sample Type	Number	Headspace PID	Lithologic Log	Material Description	U.S.C.S.	Well Diagram	Remarks
300					Well-graded SAND with Gravel (SW); brown (7.5YR 4/3); 60% very fine to coarse sand; subrounded to rounded; 35% fine to coarse gravel; subrounded to rounded; 5% silt. Note: sand is quartz and mafics. Gravel is quartz, feldspar, and mafics.	SW		Kelly down @ 301 ft, new 20' connection.
305					Poorly graded GRAVEL with Sand (GP); brown (7.5YR 4/3); 60% coarse gravel; subrounded to rounded; 35% very fine to coarse sand; subrounded to rounded; 5% silt. Note: gravel is quartz, feldspar, and mafics.	GP		Constant rig chatter.
310					Well-graded SAND with Gravel (SW); dark brown (7.5YR 3/3); 60% very fine to coarse sand; subrounded to rounded; 35% fine to coarse gravel; subrounded to rounded; 5% silt. Note: sand is quartz. Gravel is quartz, feldspar, and mafics.			PID = 0.0 ppm @ breathing zone.
315					Same as above (309 ft).		Portland Bentonite Cement	
320					Same as above (309 ft).	SW		Bit chatter.
325					Same as above (309 ft); 55% very fine to coarse sand; 40% fine gravel.			Kelly down @ 1045, new 20' connection.
330								

KAFB_BOREHOLE_LOG - SHAW_DRILLING.GDT - 12/2/15 15:49 - Z:\KAFB RAPID\GINT\KAFB_RAPID.GPJ

Borehole ID: KAFB-106234

Client: US Army Corps of Engineers
Project Location: KAFB, Albuquerque, NM
Project Name: KAFB RAPID SWMU ST-106 and SS-111
Project Number: 500433

Date Started: 9/2/2015
Date TD Reached: 10/1/2015
Date Completed:

Ground Elevation AMSL (ft): Not Recorded
Y Coordinate:
X Coordinate:

Hole Diameter Upper (in.): 16
Hole Diameter Lower (in.): 14-3/4
Surface Completion Type: Flush

Groundwater Levels BGS (ft):
At Time of Drilling: 459.00
At End of Drilling: Not Recorded
After Drilling: 458.90

Drillling Contractor: National Drilling
Drilling Method: Mud Rotary
Logged By: David Kessler

Depth (ft)	Sample Type	Number	Headspace PID	Lithologic Log	Material Description	U.S.C.S.	Well Diagram	Remarks
330					Well-graded SAND with Gravel (SW); dark brown (7.5YR 3/4); 60% very fine to coarse sand; subrounded to rounded; 35% fine to coarse gravel; angular to rounded; 5% silt. Note: sand and gravel are quartz, feldspar, and mafics.	SW	Portland Bentonite Cement	PID = 0.0 ppm @ breathing zone.
335					Same as above (330 ft); 35% coarse gravel.			Rig chatter.
340					Same as above (330 ft); 35% coarse gravel.			Kelly down @ 1334, new 20' connection.
345					Same as above (330 ft); 35% coarse gravel.			Rig chatter.
350					Same as above (330 ft); 35% coarse gravel.			Rig chatter; hard cuttings.
355					Same as above (330 ft); 35% coarse gravel.			
360								

KAFB_BOREHOLE_LOG - SHAW_DRILLING.GDT - 12/2/15 15:49 - Z:\KAFB RAPID\GINT\KAFB_RAPID.GPJ

Borehole ID: KAFB-106234

Client: US Army Corps of Engineers
Project Location: KAFB, Albuquerque, NM
Project Name: KAFB RAPID SWMU ST-106 and SS-111
Project Number: 500433

Date Started: 9/2/2015
Date TD Reached: 10/1/2015
Date Completed:

Ground Elevation AMSL (ft): Not Recorded
Y Coordinate:
X Coordinate:

Hole Diameter Upper (in.): 16
Hole Diameter Lower (in.): 14-3/4
Surface Completion Type: Flush

Groundwater Levels BGS (ft):
At Time of Drilling: 459.00
At End of Drilling: Not Recorded
After Drilling: 458.90

Drillling Contractor: National Drilling
Drilling Method: Mud Rotary
Logged By: David Kessler

Depth (ft)	Sample Type	Number	Headspace PID	Lithologic Log	Material Description	U.S.C.S.	Well Diagram	Remarks
360					Well-graded SAND with Gravel (SW); dark brown (7.5YR 3/4); 60% very fine to coarse sand; subrounded to rounded; 35% fine to coarse gravel; angular to rounded; 5% silt. Note: sand is quartz and mafics. Gravel is quartz, feldspar, and mafics.	SW		Kelly down @ 1459, new 20' connection.
365					Same as above (360 ft); 35% coarse gravel.		Portland Bentonite Cement	
370					Poorly graded SAND with Gravel (SP); brown (7.5YR 4/2); 60% fine sand; trace coarse sand; subrounded to rounded; 35% fine to coarse gravel; angular to rounded; 5% silt. Note: sand is quartz and mafics. Gravel is quartz, mafics, and feldspar.		Top of 3/8" Bentonite Chip Seal	
375					Same as above (368 ft); trace medium to coarse sand.			
380					Poorly graded SAND (SP); brown (7.5YR 4/2); 85% very fine to fine sand; subrounded to rounded; 10% fine gravel; angular to rounded; 5% silt. Note: gravel is quartz, feldspar, and mafics.	SP	3/8" Bentonite Chip Seal	End of 9/16/15 @ 379 ft. Begin drilling with 12 1/4" bit mud rotary on 9/17/15 @ 0901. Kelly down @ 381 ft, new 20' connection.
385					Same as above (380 ft).			PID = 0.0 ppm @ breathing zone.
390								

KAFB_BOREHOLE_LOG - SHAW_DRILLING.GDT - 12/2/15 15:49 - Z:\KAFB RAPID\GINT\KAFB_RAPID.GPJ

Borehole ID: KAFB-106234

Client: US Army Corps of Engineers
Project Location: KAFB, Albuquerque, NM
Project Name: KAFB RAPID SWMU ST-106 and SS-111
Project Number: 500433

Date Started: 9/2/2015
Date TD Reached: 10/1/2015
Date Completed:

Ground Elevation AMSL (ft): Not Recorded
Y Coordinate:
X Coordinate:

Hole Diameter Upper (in.): 16
Hole Diameter Lower (in.): 14-3/4
Surface Completion Type: Flush

Groundwater Levels BGS (ft):
▽ At Time of Drilling: 459.00
▼ At End of Drilling: Not Recorded
▼ After Drilling: 458.90

Drillling Contractor: National Drilling
Drilling Method: Mud Rotary
Logged By: David Kessler

Depth (ft)	Sample Type	Number	Headspace PID	Lithologic Log	Material Description	U.S.C.S.	Well Diagram	Remarks
390					Poorly graded SAND (SP); brown (7.5YR 4/2); 85% very fine to fine sand; subrounded to rounded; 10% fine gravel; angular to rounded; 5% silt. Note: gravel is quartz, feldspar, and mafics.			Rig chatter.
395					@ 391 ft. Poorly graded SAND with Gravel (SP); brown (7.5YR 5/3); 70% fine sand; subrounded to rounded; 25% fine to coarse gravel; angular to subangular; 5% silt. Note: sand is quartz and mafics. Gravel is quartz, feldspar, and mafics.		- 3/8" Bentonite Chip Seal	
400					Same as above (391 ft); 60% fine sand; 35% fine to coarse gravel.			Rig chatter; slowed drilling rate. PID = 0.0 ppm @ breathing zone. Kelly down @ 1002, new 20' connection.
405					Same as above (391 ft); brown (7.5YR 4/3); 60% fine sand; 35% fine to coarse gravel.	SP		
410					Same as above (391 ft); brown (7.5YR 4/3); 60% fine sand; trace medium to coarse sand; 35% fine to coarse gravel.		- Top of 10/20 Sand	
415					Same as above (391 ft); brown (7.5YR 4/3); 60% fine sand; trace medium to coarse sand; 35% fine to coarse gravel.		- Top of 8/12 Sand	
420								

KAFB_BOREHOLE_LOG - SHAW_DRILLING.GDT - 12/2/15 15:49 - Z:\KAFB RAPID\GINT\KAFB_RAPID.GPJ

Borehole ID: KAFB-106234

Client: US Army Corps of Engineers
Project Location: KAFB, Albuquerque, NM
Project Name: KAFB RAPID SWMU ST-106 and SS-111
Project Number: 500433

Date Started: 9/2/2015
Date TD Reached: 10/1/2015
Date Completed:

Ground Elevation AMSL (ft): Not Recorded
Y Coordinate:
X Coordinate:

Hole Diameter Upper (in.): 16
Hole Diameter Lower (in.): 14-3/4
Surface Completion Type: Flush

Groundwater Levels BGS (ft):
At Time of Drilling: 459.00
At End of Drilling: Not Recorded
After Drilling: 458.90

Drillling Contractor: National Drilling
Drilling Method: Mud Rotary
Logged By: David Kessler

Depth (ft)	Sample Type	Number	Headspace PID	Lithologic Log	Material Description	U.S.C.S.	Well Diagram	Remarks
420					Poorly graded SAND with Gravel (SP); brown (7.5YR 4/2); 75% fine sand; subrounded to rounded; 20% fine gravel; subrounded to rounded; 5% silt. Note: sand is quartz and mafics. Gravel is quartz, mafics, and feldspar.	SP		
425					Well-graded SAND with Gravel (SW); brown (7.5YR 4/2); 65% fine to coarse sand; subrounded to rounded; 30% fine to coarse gravel; angular to rounded; 5% silt. Note: sand is quartz and mafics.	SW	8/12 Sand	PID = 0.0 ppm @ breathing zone.
430					Silty SAND (SM); 60% fine sand; subrounded to rounded; 10% fine gravel; angular to subrounded; 30% silt. Note: sand is quartz and mafics. Gravel is quartz, feldspar, and mafics.	SM		
435								End of mud rotary drilling @ 435 ft on 9/17/15.
440								
445								
450								

KAFB_BOREHOLE_LOG - SHAW_DRILLING.GDT - 12/2/15 15:49 - Z:\KAFB RAPID\GINT\KAFB_RAPID.GPJ

Borehole ID: KAFB-106234-Sonic

Client: US Army Corps of Engineers
Project Location: KAFB, Albuquerque, NM
Project Name: KAFB RAPID SWMU ST-106 and SS-111
Project Number: 500433

Date Started: 9/18/2015
Date TD Reached: 10/1/2015
Date Completed:

Ground Elevation AMSL (ft): Not Recorded
Y Coordinate:
X Coordinate:

Hole Diameter Upper (in.): 16
Hole Diameter Lower (in.): 14-3/4
Surface Completion Type: Flush

Groundwater Levels BGS (ft):
At Time of Drilling: 459.00
At End of Drilling: Not Recorded
After Drilling: 458.90

Drillling Contractor: National Drilling
Drilling Method: Sonic Coring
Logged By: David Kessler

Depth (ft)	Sample Type	Number	Headspace PID	Lithologic Log	Material Description	U.S.C.S.	Well Diagram	Remarks
435					@ 435 ft. Poorly graded SAND (SP); brown (7.5YR 5/3); 95% fine sand; subrounded to rounded; trace fine gravel; 5% silt.	SP		Begin sonic coring with mud on 9/18/15 with 6" O.D. bit. @ 435 - 449 ft sand is quartz with occasional mafics. @ 436.6 - 437 ft gravel is quartz, mafics, and feldspar.
					@ 435.5 ft. Fat CLAY (CH); reddish brown (5YR 5/4); high plasticity; 100% clay.	CH		
					@ 436.2 ft. Poorly graded SAND with Silt (SP-SM); brown (7.5YR 5/3); 90% very fine to fine sand; subrounded to rounded; 10% silt.	SP-SM		
					@ 436.6 ft. Well-graded SAND with Gravel (SW); brown (7.5YR 5/3); 60% fine to coarse sand; subrounded to rounded; 35% fine to coarse gravel; subrounded to rounded; 5% silt.	SW		
440					@ 437 ft. No recovery.		- Top of 8" Stainless Steel 0.050 Slot Screen	
					@ 440 ft. Poorly graded SAND (SP); brown (7.5YR 4/4); 95% fine sand; subrounded to rounded; 5% silt.	SP		@ 440 - 442.8 ft sediments are fining upwards and laminated. @ 440.52 ft cobble to 1-5/8"; subangular; sandstone.
					@ 442.8 ft. Well-graded GRAVEL with Silt and Sand (GW-GM); brown (7.5YR 4/4); 50% fine to coarse gravel; subrounded; 40% fine to coarse sand; angular to rounded; 10% silt.	GW-GM		@ 442.8 - 449 ft gravel is quartz, mafics, and feldspars with occasional granite and quartzite.
445					@ 443.1 ft. No recovery.			
					@ 445 ft. Silty GRAVEL (GM); brown (7.5YR 5/3); 60% fine to coarse gravel; subrounded; 10% fine to coarse sand; subrounded to rounded; 30% silt.	GM		@ 445 - 446.7 ft the percentage of silt decreases with depth.
					@ 446.7 ft. No recovery.			
					@ 447.5 ft. Poorly graded SAND with Gravel (SP); brown (7.5YR 5/3); 80% fine to medium sand; trace coarse sand; subrounded to rounded; 15% fine to coarse gravel; subrounded to rounded; 5% silt.	SP		
450					@ 449 ft. No recovery.			

KAFB_BOREHOLE_LOG - SHAW_DRILLING.GDT - 12/2/15 15:54 - Z:\KAFB RAPID\GINT\KAFB_RAPID.GPJ

Borehole ID: KAFB-106234-Sonic

Client: US Army Corps of Engineers
Project Location: KAFB, Albuquerque, NM
Project Name: KAFB RAPID SWMU ST-106 and SS-111
Project Number: 500433

Date Started: 9/18/2015
Date TD Reached: 10/1/2015
Date Completed:

Ground Elevation AMSL (ft): Not Recorded
Y Coordinate:
X Coordinate:

Hole Diameter Upper (in.): 16
Hole Diameter Lower (in.): 14-3/4
Surface Completion Type: Flush

Groundwater Levels BGS (ft):
At Time of Drilling: 459.00
At End of Drilling: Not Recorded
After Drilling: 458.90

Drillling Contractor: National Drilling
Drilling Method: Sonic Coring
Logged By: David Kessler

Depth (ft)	Sample Type	Number	Headspace PID	Lithologic Log	Material Description	U.S.C.S.	Well Diagram	Remarks
450					@ 450 ft. Well-graded SAND with Silt and Gravel (SW-SM); brown (7.5YR 5/3); 70% fine to coarse sand; 20% coarse gravel; 10% silt.	SW-SM		End of 9/18/15 @ 450 ft. Resume coring @ 1030 on 9/23/15. @ 450 - 464.2 ft sand is quartz with occasional granite, mafics, and feldspar. Gravel is quartz with occasional mafics.
					@ 450.7 ft. Silty SAND with Gravel (SM); brown (7.5YR 5/4); 50% fine to coarse sand; subrounded to rounded; 20% gravel; 30% silt; trace clay. @ 451.7 ft. Same as above (450.7 ft); 20% very coarse gravel to 40 mm; subrounded to rounded. @ 452 ft. Same as above (450.7 ft); brown (7.5YR 4/4); 60% fine to coarse sand; 15% coarse gravel to 40 mm; 25% silt.	SM		
455					@ 453.9 ft. No recovery.			
					@ 455 ft. Silty SAND with Gravel (SM); brown (7.5YR 4/4); 70% fine to coarse sand; subrounded to rounded; 15% coarse gravel to 40 mm; 15% silt.	SM		
					@ 455.8 ft. Poorly graded SAND with Silt (SP-SM); brown (7.5YR 5/3); 90% fine sand; subrounded to rounded; trace fine gravel; 10% silt. @ 456.5 ft. No recovery.	SP-SM	8" Stainless Steel 0.050 Slot Screen	@ 456.5 ft driller states that coring feels like gravel. Gravel was likely pushed aside instead of recovered, causing loss of core sample.
460					@ 461.4 ft. Poorly graded SAND (SP); brown (7.5YR 5/3); 95% fine sand; trace medium sand; subrounded to rounded; 5% silt.	SP		
						GM		
					@ 461.9 ft. Silty GRAVEL with Sand (GM); brown (7.5YR 5/4); 50% fine to coarse gravel; subrounded to rounded; 35% fine to coarse sand; subrounded to rounded; 15% silt.	SP		
465					@ 462.5 ft. Poorly graded SAND (SP); dark brown (7.5YR 3/3); 95% fine sand;			

KAFB_BOREHOLE_LOG - SHAW_DRILLING.GDT - 12/2/15 15:54 - Z:\KAFB RAPID\GINT\KAFB_RAPID.GPJ

Borehole ID: KAFB-106234-Sonic

Client: US Army Corps of Engineers
Project Location: KAFB, Albuquerque, NM
Project Name: KAFB RAPID SWMU ST-106 and SS-111
Project Number: 500433

Date Started: 9/18/2015
Date TD Reached: 10/1/2015
Date Completed:

Ground Elevation AMSL (ft): Not Recorded
Y Coordinate:
X Coordinate:

Hole Diameter Upper (in.): 16
Hole Diameter Lower (in.): 14-3/4
Surface Completion Type: Flush

Groundwater Levels BGS (ft):
At Time of Drilling: 459.00
At End of Drilling: Not Recorded
After Drilling: 458.90

Drillling Contractor: National Drilling
Drilling Method: Sonic Coring
Logged By: David Kessler

Depth (ft)	Sample Type	Number	Headspace PID	Lithologic Log	Material Description	U.S.C.S.	Well Diagram	Remarks
465					subrounded to rounded; trace gravel; rounded; 5% silt.	SP		@ 465 - 479.4 ft sand is quartz with occasional mafics. Gravel is quartz with occasional mafics.
					@ 464.2 ft. No recovery.			
					@ 465 ft. Poorly graded SAND (SP); brown (7.5YR 4/3); 95% medium sand; trace coarse sand; trace fine gravel; subrounded to rounded; 5% silt.	GW-GM		
					@ 466.2 ft. Well-graded GRAVEL with Silt and Sand (GW-GM); brown (7.5YR 4/3); 60% fine to coarse gravel; subrounded to rounded; 30% fine to coarse sand; 10% silt.	SW		
						GW-GM		
					@ 466.5 ft. No recovery.			@ 468.4 ft driller reported drilling in gravel, which likely caused loss of core.
470					@ 467.5 ft. Well-graded SAND with Gravel (SW); brown (7.5YR 4/3); 80% fine to coarse sand; 15% fine to coarse gravel; 5% silt.			
					@ 468 ft. Well-graded GRAVEL with Silt and Sand (GW-GM); brown (7.5YR 4/3); 70% fine to coarse gravel to 40 mm; subrounded to rounded; 20% coarse sand; trace fine and medium sand; 10% silt.		8" Stainless Steel 0.050 Slot Screen	
					@ 468.4 ft. No recovery.			
					@ 472.5 ft. Poorly graded SAND with Silt (SP-SM); brown (7.5YR 4/3); 90% fine sand; subrounded; trace gravel; 10% silt.	SP-SM		
475					@ 474.7 ft. No recovery.			@ 474.6 - 474.7 ft clay lense.
					@ 475 ft. Silty SAND (SM); brown (7.5YR 4/3); 80% fine sand; subrounded to rounded; trace coarse gravel; 20% silt.	SM		End of 9/23/15 @ 475 ft. Resume drilling on 9/24/15.
					@ 476.6 ft. No recovery.			@ 476.1 ft silt lense, 7 mm thick.
					@ 477.5 ft. Silty SAND (SM); brown (7.5YR 4/3); 85% fine sand; subrounded to rounded; 15% silt.	SM		@ 476.5 ft silt lense, 5 mm thick. Two 5 mm clay nodules.
					@ 478.4 ft. Fat CLAY (CH); yellowish brown (10YR 5/4); hard; medium plasticity; 100% clay.	CH		
						CL		
						SM		
480					@ 478.7 ft. Lean CLAY (CL); reddish			

KAFB_BOREHOLE_LOG - SHAW_DRILLING.GDT - 12/2/15 15:54 - Z:\KAFB RAPID\GINT\KAFB_RAPID.GPJ

Borehole ID: KAFB-106234-Sonic

Client: US Army Corps of Engineers
Project Location: KAFB, Albuquerque, NM
Project Name: KAFB RAPID SWMU ST-106 and SS-111
Project Number: 500433

Date Started: 9/18/2015
Date TD Reached: 10/1/2015
Date Completed:

Ground Elevation AMSL (ft): Not Recorded
Y Coordinate:
X Coordinate:

Hole Diameter Upper (in.): 16
Hole Diameter Lower (in.): 14-3/4
Surface Completion Type: Flush

Groundwater Levels BGS (ft):
At Time of Drilling: 459.00
At End of Drilling: Not Recorded
After Drilling: 458.90

Drillling Contractor: National Drilling
Drilling Method: Sonic Coring
Logged By: David Kessler

Depth (ft)	Sample Type	Number	Headspace PID	Lithologic Log	Material Description	U.S.C.S.	Well Diagram	Remarks
480					brown (2.5YR 4/3); low plasticity; 95% clay; 5% gravel.	SM		@ 480 - 494.8 ft sand is quartz with occasional mafics.
					@ 479 ft. Silty SAND (SM); brown (7.5YR 4/3); 80% fine sand; subrounded to rounded; 20% silt.	CL		
					@ 479.4 ft. No recovery.			
					@ 480 ft. Silty SAND (SM); brown (7.5YR 5/3); 80% fine to coarse sand; subrounded to rounded; 20% silt.			@ 483.5 - 484 ft sediment is laminated.
					@ 480.7 ft. Lean CLAY with Sand (CL); reddish brown (5YR 5/4); low plasticity; 80% clay; 20% very fine sand; rounded.	SP		
					@ 480.8 ft. No recovery.			
485					@ 482.5 ft. Poorly graded SAND (SP); brown (7.5YR 5/3); 95% fine sand; subrounded to rounded; 5% silt.			
					@ 484.3 ft. No recovery.	SP		
					@ 485 ft. Poorly graded SAND (SP); brown (7.5YR 5/3); 95% fine sand; subrounded to rounded; 5% silt.			@ 485.65 - 485.7 ft laminations observed.
					@ 486.1 ft. No recovery.			@ 486 ft drilling through gravels; weathered sandstone; white (10YR 8/1).
					@ 487.6 ft. Poorly graded SAND with Silt (SP-SM); brown (7.5YR 5/3); 90% fine sand; subrounded to rounded; 10% silt.	SP-SM	8" Stainless Steel 0.050 Slot Screen	@ 488 ft texture is blocky.
					@ 488 ft. Lean CLAY with Sand (CL); reddish brown (2.5YR 4/4); low plasticity; 80% clay; 20% fine sand; trace gravel to 30 mm.	CL		
490						SP-SM		
					@ 489.3 ft. Poorly graded SAND with Silt (SP-SM); brown (7.5YR 5/3); 90% fine sand; subrounded to rounded; 10% silt.	SM		@ 490 - 494.8 ft sediment is fining upward.
					@ 489.9 ft. No recovery.			
					@ 490 ft. Silty SAND with Gravel (SM); dark brown (7.5YR 3/3); 65% fine to coarse sand; subrounded to rounded; 15% fine to coarse gravel; rounded; 20% silt.			
					@ 491.8 ft. No recovery.			@ 492.6 ft cobble.
					@ 492.5 ft. Poorly graded SAND with Silt (SP-SM); brown (7.5YR 4/3); 90% fine to medium sand; trace coarse sand; subrounded to rounded; trace gravel to 45 mm; 10% silt.	SP-SM		
495								

KAFB_BOREHOLE_LOG - SHAW_DRILLING.GDT - 12/2/15 15:54 - Z:\KAFB RAPID\GINT\KAFB_RAPID.GPJ

Borehole ID: KAFB-106234-Sonic

Client: US Army Corps of Engineers
Project Location: KAFB, Albuquerque, NM
Project Name: KAFB RAPID SWMU ST-106 and SS-111
Project Number: 500433

Date Started: 9/18/2015
Date TD Reached: 10/1/2015
Date Completed:

Ground Elevation AMSL (ft): Not Recorded
Y Coordinate:
X Coordinate:

Hole Diameter Upper (in.): 16
Hole Diameter Lower (in.): 14-3/4
Surface Completion Type: Flush

Groundwater Levels BGS (ft):
At Time of Drilling: 459.00
At End of Drilling: Not Recorded
After Drilling: 458.90

Drillling Contractor: National Drilling
Drilling Method: Sonic Coring
Logged By: David Kessler

Depth (ft)	Sample Type	Number	Headspace PID	Lithologic Log	Material Description	U.S.C.S.	Well Diagram	Remarks
495					@ 494.8 ft. No recovery.			
					@ 495 ft. Well-graded SAND with Silt (SW-SM); brown (7.5YR 4/2); 90% fine to coarse sand; subrounded to rounded; trace gravel; 10% silt.	SW-SM		@ 495 - 507.8 ft sand is quartz with occasional mafics.
					@ 496.2 ft. Poorly graded SAND with Silt (SP-SM); brown (7.5YR 4/2); 90% fine sand; subrounded to rounded; trace gravel; 10% silt.	SP-SM		@ 496.3 ft lost what appeared to be saturated sands.
					@ 496.3 ft. No recovery.	GW		@ 497.5 ft sand and silt likely washed out from core sample.
					@ 497.5 ft. Well-graded GRAVEL (GW); 100% fine to coarse gravel to 24 mm.			@ 497.7 ft drilling through gravels. All core lost during core rod and drill stem removal.
					@ 497.7 ft. No recovery.			
500								
					@ 502.5 ft. Well-graded GRAVEL (GW); 100% gravel; rounded.	GW	8" Stainless Steel 0.050 Slot Screen	End of 9/24/15 @ 502.5 ft. Resume drilling on 9/25/15. Silt and sand fraction washed away.
					@ 502.7 ft. SILT (ML); light reddish brown (2.5YR 6/3); hard; low plasticity; 85% silt; trace clay; 10% fine sand; rounded; 5% fine gravel; rounded.	ML		
					@ 503.1 ft. Well-graded SAND with Silt (SW-SM); 90% sand; trace gravel; 10% silt.	SW-SM		@ 504.1 ft gravel encountered.
505					@ 503.5 ft. Poorly graded SAND (SP); 95% sand; 5% silt.	SP		
					@ 504.1 ft. No recovery.	GP		
					@ 505 ft. Poorly graded GRAVEL with Sand (GP); brown (7.5YR 4/3); 60% fine gravel to 25 mm; subrounded; 35% fine to coarse sand; 5% silt.			@ 505.6 ft gravel encountered.
					@ 505.6 ft. No recovery.	GP		
					@ 507.5 ft. Poorly graded GRAVEL with Sand (GP); brown (7.5YR 4/3); 60% fine gravel to 25 mm; subrounded; 35% fine to coarse sand; 5% silt.			@ 507.8 ft gravel encountered.
510					@ 507.8 ft. No recovery.			

KAFB_BOREHOLE_LOG - SHAW_DRILLING.GDT - 12/2/15 15:54 - Z:\KAFB RAPID\GINT\KAFB_RAPID.GPJ

Borehole ID: KAFB-106234-Sonic

Client: US Army Corps of Engineers
Project Location: KAFB, Albuquerque, NM
Project Name: KAFB RAPID SWMU ST-106 and SS-111
Project Number: 500433

Date Started: 9/18/2015
Date TD Reached: 10/1/2015
Date Completed:

Ground Elevation AMSL (ft): Not Recorded
Y Coordinate:
X Coordinate:

Hole Diameter Upper (in.): 16
Hole Diameter Lower (in.): 14-3/4
Surface Completion Type: Flush

Groundwater Levels BGS (ft):
At Time of Drilling: 459.00
At End of Drilling: Not Recorded
After Drilling: 458.90

Drillling Contractor: National Drilling
Drilling Method: Sonic Coring
Logged By: David Kessler

Depth (ft)	Sample Type	Number	Headspace PID	Lithologic Log	Material Description	U.S.C.S.	Well Diagram	Remarks
510					@ 510 ft. Poorly graded GRAVEL with Sand (GP); brown (7.5YR 4/3); 60% fine gravel; subrounded; 35% fine to coarse sand; 5% silt.	GP		@ 510.2 ft gravel encountered.
					@ 510.2 ft. No recovery.			
					@ 512.5 ft. Poorly graded GRAVEL with Sand (GP); brown (7.5YR 4/3); 60% fine gravel; subrounded; 35% fine to coarse sand; 5% silt.	GP		@ 512.8 ft very coarse pebble in shoe of core barrel.
					@ 512.8 ft. No recovery.			
515					@ 517.5 ft. Poorly graded GRAVEL (GP); brown (7.5YR 4/2); 95% fine gravel to 4 mm; subangular to subrounded; 5% silt.	GP	8" Stainless Steel 0.050 Slot Screen	End of 9/25/15 @ 517.5 ft. Resume coring on 9/26/15.
					@ 518.1 ft. Poorly graded SAND with Silt and Gravel (SP-SM); brown (7.5YR 4/2); 60% fine sand; rounded; 30% coarse gravel; 10% silt.	SP-SM		@ 518.1 - 520.6 ft sand is quartz.
520					@ 518.3 ft. No recovery.	ML		@ 520 ft gravel encountered.
					@ 520.1 ft. SILT (ML); brown (7.5YR 4/2); nonplastic; 90% silt; 10% very fine to fine sand.	SW		@ 520.6 ft loose, wet sand and gravel encountered.
					@ 520.2 ft. Well-graded SAND with Gravel (SW); brown (7.5YR 5/4); 65% fine to coarse sand; subrounded to rounded; 30% fine to coarse gravel; subangular to subrounded; 5% silt.			@ 522.5 ft gravel within coring interval caused core barrel thread sheering.
					@ 520.6 ft. No recovery.			
525								

KAFB_BOREHOLE_LOG - SHAW_DRILLING.GDT - 12/2/15 15:54 - Z:\KAFB RAPID\GINT\KAFB_RAPID.GPJ

Borehole ID: KAFB-106234-Sonic

Client: US Army Corps of Engineers
Project Location: KAFB, Albuquerque, NM
Project Name: KAFB RAPID SWMU ST-106 and SS-111
Project Number: 500433

Date Started: 9/18/2015
Date TD Reached: 10/1/2015
Date Completed:

Ground Elevation AMSL (ft): Not Recorded
Y Coordinate:
X Coordinate:

Hole Diameter Upper (in.): 16
Hole Diameter Lower (in.): 14-3/4
Surface Completion Type: Flush

Groundwater Levels BGS (ft):
At Time of Drilling: 459.00
At End of Drilling: Not Recorded
After Drilling: 458.90

Drillling Contractor: National Drilling
Drilling Method: Sonic Coring
Logged By: David Kessler

Depth (ft)	Sample Type	Number	Headspace PID	Lithologic Log	Material Description	U.S.C.S.	Well Diagram	Remarks
525					@ 525 ft. Poorly graded GRAVEL with Silt and Sand (GP-GM); brown (7.5YR 4/2); 60% fine gravel to 8 mm; subangular to subrounded; 30% fine to coarse sand; 10% silt.	GP-GM		@ 525 - 537.2 ft gravel is quartz, mafics, and occasional granite.
					@ 525.6 ft. Poorly graded SAND with Silt (SP-SM); brown (7.5YR 4/2); dense; 90% fine sand; subangular to subrounded; 10% silt.	SP-SM		@ 525.6 - 537.2 ft sand is quartz and mafics.
					@ 525.9 ft. No recovery.			@ 525.9 ft gravel encountered.
					@ 527.5 ft. Poorly graded GRAVEL with Sand (GP); brown (7.5YR 4/2); loose; 70% fine gravel to 4 mm; subrounded to rounded; 25% fine to coarse sand; subrounded to rounded; 5% silt.	GP		@ 528.5 ft gravel encountered.
530					@ 528.5 ft. No recovery.	SW		@ 530 ft top section of sample shows little sand. Inferred that the sand washed out.
					@ 530 ft. Well-graded SAND with Gravel (SW); dark brown (7.5YR 3/3); 65% very fine to coarse sand; subrounded to rounded; 30% fine to coarse gravel to 35 mm; subrounded; 5% silt.			@ 530.4 ft gravel encountered.
					@ 530.4 ft. No recovery.			
					@ 532.5 ft. Well-graded GRAVEL with Sand (GW); gray (7.5YR 6/1); 50% fine to coarse gravel; subrounded to rounded; 45% fine to coarse sand; subrounded to rounded; 5% silt.	GW	- 8" Stainless Steel 0.050 Slot Screen	End of 9/26/15 @ 532.5 ft. Resume drilling on 9/28/15. @ 532.5 ft portions of the gravel are cemented with calcium carbonate.
					@ 533.7 ft. No recovery.			@ 533.7 ft sand was washed away and gravel not recovered.
535					@ 535 ft. Well-graded GRAVEL with Sand (GW); gray (7.5YR 6/1); 50% fine to coarse gravel; subrounded to rounded; 45% fine to coarse sand; subrounded to rounded; 5% silt.	GW		@ 535 ft hard to very hard conglomerate rock; calcite-cemented.
					@ 535.2 ft. No recovery.	SW-SM		@ 536.5 - 536.55 ft silt lense; gray (7.5YR 5/1).
					@ 536.5 ft. Well-graded SAND with Silt and Gravel (SW-SM); dark brown (7.5YR 3/2); 60% very fine to coarse sand; subrounded to rounded; 30% fine to coarse gravel to 35 mm; subrounded; 10% silt.			@ 537.2 ft gravel obstructed sample collection.
					@ 537.2 ft. No recovery.			
540							- Bottom of	

KAFB_BOREHOLE_LOG - SHAW_DRILLING.GDT - 12/2/15 15:54 - Z:\KAFB RAPID\GINT\KAFB_RAPID.GPJ

Borehole ID: KAFB-106234-Sonic

Client: US Army Corps of Engineers
Project Location: KAFB, Albuquerque, NM
Project Name: KAFB RAPID SWMU ST-106 and SS-111
Project Number: 500433

Date Started: 9/18/2015
Date TD Reached: 10/1/2015
Date Completed:

Ground Elevation AMSL (ft): Not Recorded
Y Coordinate:
X Coordinate:

Hole Diameter Upper (in.): 16
Hole Diameter Lower (in.): 14-3/4
Surface Completion Type: Flush

Groundwater Levels BGS (ft):
▽ At Time of Drilling: 459.00
▼ At End of Drilling: Not Recorded
▼ After Drilling: 458.90

Drillling Contractor: National Drilling
Drilling Method: Sonic Coring
Logged By: David Kessler

Depth (ft)	Sample Type	Number	Headspace PID	Lithologic Log	Material Description	U.S.C.S.	Well Diagram	Remarks
540					@ 540 ft. Poorly graded GRAVEL with Sand (GP); dark brown (7.5YR 3/2); 55% fine gravel; angular to subrounded; 40% very fine to coarse sand; angular to subrounded; 5% silt.	GP	Screen	End of continuous coring @ 540 ft on 9/28/15. @ 540 - 556 ft sand is quartz and mafics. Gravel is quartz, mafics, and granite.
545					@ 545 ft. Same as above (540 ft); 55% fine gravel to 6 mm; angular.		Bottom of Sump	Very hard drilling from 547 - 556 ft.
550					@ 550 ft. Same as above (540 ft) 80% fine gravel; angular; 20% very fine to coarse sand.			Reamed borehole using 12-1/4" bit from 435 - 550 ft on 9/26/15 through 9/28/15.
555								

KAFB_BOREHOLE_LOG - SHAW_DRILLING.GDT - 12/2/15 15:54 - Z:\KAFB RAPID\GINT\KAFB_RAPID.GPJ

Borehole ID: KAFB-106234-Sonic

Client: US Army Corps of Engineers
Project Location: KAFB, Albuquerque, NM
Project Name: KAFB RAPID SWMU ST-106 and SS-111
Project Number: 500433

Date Started: 9/18/2015
Date TD Reached: 10/1/2015
Date Completed:

Ground Elevation AMSL (ft): Not Recorded
Y Coordinate:
X Coordinate:

Hole Diameter Upper (in.): 16
Hole Diameter Lower (in.): 14-3/4
Surface Completion Type: Flush

Groundwater Levels BGS (ft):
▽ At Time of Drilling: 459.00
▼ At End of Drilling: Not Recorded
▼ After Drilling: 458.90

Drillling Contractor: National Drilling
Drilling Method: Sonic Coring
Logged By: David Kessler

Depth (ft)	Sample Type	Number	Headspace PID	Lithologic Log	Material Description	U.S.C.S.	Well Diagram	Remarks
555					@ 555 ft. Poorly graded GRAVEL with Sand (GP); dark brown (7.5YR 3/2); 80% fine gravel; angular; 20% very fine to coarse sand; angular to subrounded.	GP	- Bottom of Filter Pack/Bottom of Hole	Total depth = 556 ft bgs. Reached total depth on 10/1/15. Reamed borehole using 14-3/4" bit from 83 - 556 ft on 9/30/15 through 10/1/15.
560								
565								
570								

KAFB_BOREHOLE_LOG - SHAW_DRILLING.GDT - 12/2/15 15:54 - Z:\KAFB RAPID\GINT\KAFB_RAPID.GPJ

Extraction Well Construction Diagram KAFB-106234

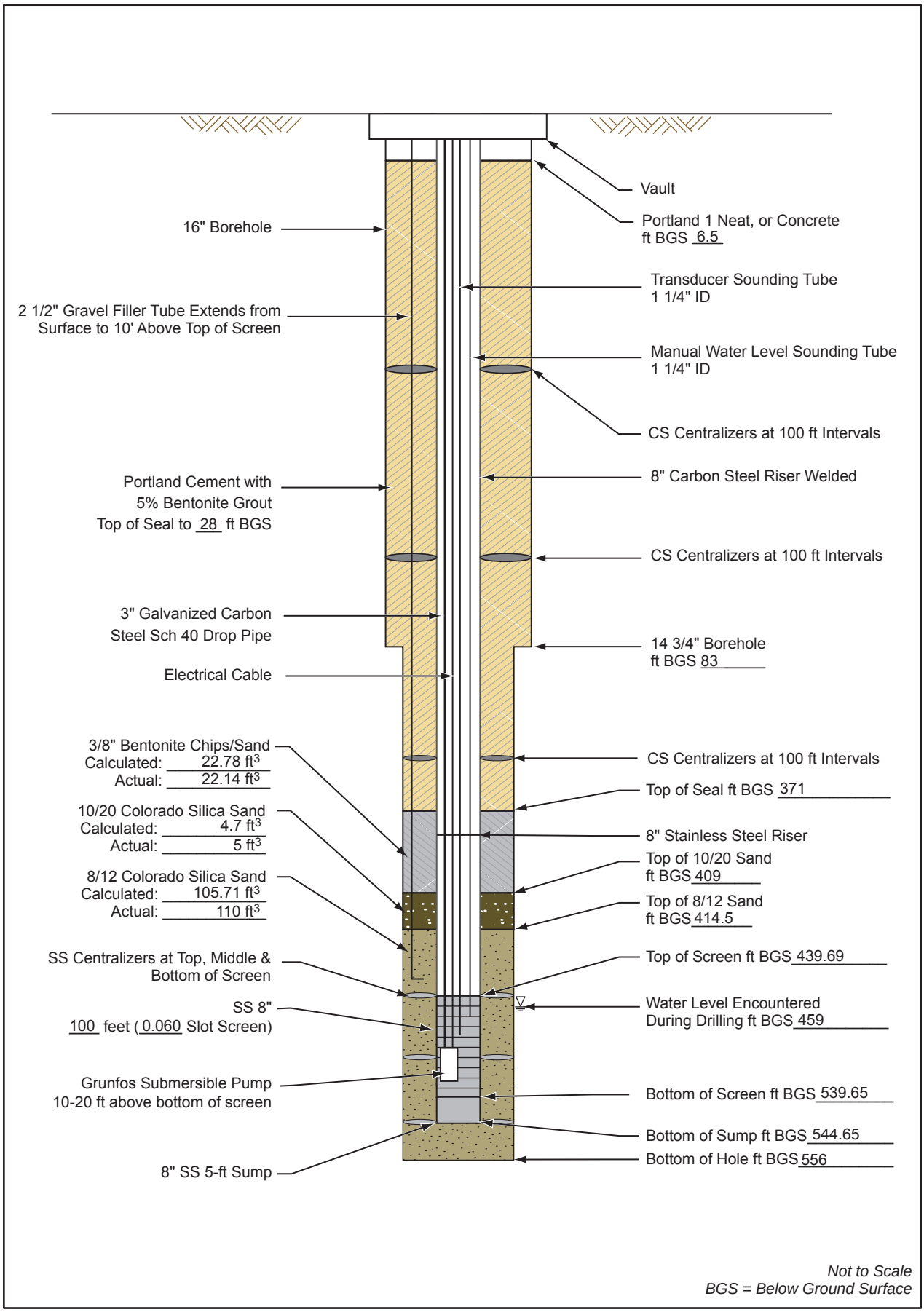

Not to Scale
BGS = Below Ground Surface

500433.04010300.A5

Groundwater Extraction Well Development

Project Name:	KAFB BFF	**Well No.:**	KAFB-106234
Location:	Anderson and Georgia	**Date Installed:**	10/9/2015
Personnel:	MG	**Casing Diameter (I.D.):**	8-inch
Start Date:	10/1/2015	**Total Depth (ft. BGS):**	544.65
End Date:	11/3/2015		

Method of Development:

[X] Surging [X] Bailing [X] Pumping [X] Jetting

[X] Original Development [ ] Redevelopment [ ] Other

Depth to Water Before Developing Well (ft. BGS): NR

Screened Interval (ft. BGS): 439.69-539.65

Weather: Varied

Equipment Numbers: **pH:** NR **Conductivity:** NR

Turbidity: NR

Equipment Decontaminated Prior to Development? [X] Yes [ ] No

Describe:

Collected Sample of Water Added to Well? [ ] Yes [X] No

Describe:

Comments:

Summary of development procedure, including key decision-points, calculations, and observations (described in detail in the following pages):

Well development consisted of bailing, surging, pumping, and jetting. The first step of development removed mud and cuttings from the well casing and filter pack, which were generated during the drilling process, by surging and bailing. The second step entailed physical well development using surging, bailing, and pumping to assess development progress. These actions included taking measurements of sediment content in the water using the Imhoff cone technique, and applying 30 minutes of sustained pumping, measuring, and plotting drawdown to estimate development effectiveness. The third step used jetting with simultaneous pumping.

Groundwater Extraction Well Development

Bailing				
Date	Time	Total Volume Bailed (gallons)	Imhoff Cone Measurement (mL sediment per L water)	Comments
10/12/2015	1800	135	--	Very muddy, 4 mL of coarse sand and more suspended at 100 gallons
10/13/2015	0910	150	117	Mostly coarse sand
10/13/2015	1005	300	20	Mostly coarse sand
10/13/2015	1055	450	200	Mostly coarse sand
10/13/2015	1100	465	750	All coarse sand
10/13/2015	1305	600	10	Collected from the middle of screen
10/13/2015	1340	750	12	Collected from the middle of screen
10/13/2015	1415	900	10	Collected from the middle of screen
10/13/2015	1440	1050	4	1 mL fine grained, 3 mL very fine grained
10/13/2015	1513	1200	0.8	0.5 mL fine grained, 0.3 mL very fine grained
10/13/2015	1536	1350	0.8	0.5 mL fine grained, 0.3 mL very fine grained
10/13/2015	1605	1500	--	Stop bailing, tag bottom at 544.1 bgs
10/16/2015	1033	--	0.7	Collected after 4 bailing runs, sediment is very fine to fine sand
10/16/2015	1056	--	0.5	Collected after 6 bailing runs, sediment is very fine to fine sand
10/16/2015	1355	--	0.5	Collected after 4 bailing runs, sediment is very fine to fine sand
10/16/2015	1408	--	0.5	Collected after 6 bailing runs, sediment is very fine to fine sand

L = liter

mL = milliliter

Groundwater Extraction Well Development

Surging				
Interval (feet below ground surface)	Date	Start Time	End Time	Comments
540-535	10/15/2015	1640	1645	
535-530	10/15/2015	1645	1650	
530-525	10/15/2015	1650	1655	
525-520	10/15/2015	1655	1700	
520-515	10/15/2015	1700	1705	
515-510	10/15/2015	1705	1710	
510-505	10/15/2015	1710	1715	
505-500	10/15/2015	1715	1720	
500-495	10/15/2015	1720	1725	
495-490	10/15/2015	1725	1730	
490-485	10/15/2015	1730	1735	
485-480	10/15/2015	1735	1740	
480-475	10/15/2015	1740	1745	
475-470	10/15/2015	1745	1750	
470-465	10/15/2015	1750	1755	
465-462.9	10/15/2015	1755	1800	
540-530	10/16/2015	0845	0850	
530-525	10/16/2015	0850	0855	
525-520	10/16/2015	0900	0905	
520-515	10/16/2015	0905	0910	
515-510	10/16/2015	0910	0915	
510-505	10/16/2015	0915	0920	
505-500	10/16/2015	0920	0925	
500-495	10/16/2015	0925	0930	
495-490	10/16/2015	0930	0935	
490-485	10/16/2015	0935	0940	
485-480	10/16/2015	0940	0945	
480-475	10/16/2015	0945	0950	
475-470	10/16/2015	0950	0955	
470-465	10/16/2015	0955	1000	
540-530	10/16/2015	1130	1135	
535-530	10/16/2015	1135	1140	
530-525	10/16/2015	1140	1145	
525-520	10/16/2015	1145	1150	
520-515	10/16/2015	1150	1155	
515-510	10/16/2015	1155	1200	
510-505	10/16/2015	1200	1205	
505-500	10/16/2015	1205	1210	

Groundwater Extraction Well Development

Surging				
Interval (feet below ground surface)	Date	Start Time	End Time	Comments
500-495	10/16/2015	1210	1215	
495-490	10/16/2015	1215	1220	
490-485	10/16/2015	1220	1225	
485-480	10/16/2015	1225	1230	
480-475	10/16/2015	1320	1325	
475-470	10/16/2015	1330	1335	

Groundwater Extraction Well Development

Pumping

Date	Time	Rate (gpm)	Depth to Water (ft BGS)	Volume Removed (gallons)	Temp (°C)	pH (S.U)	EC (mS/cm)	Turbidity (NTU)	Specific Capacity (gpm/ft)	Imhoff Cone (mL sediment per L water)	Pump Intake (Feet bgs)
10/14/2015	1114	0	462.7	--	--	--	--	--	--	--	490.5
10/14/2015	1312	0	464.5	--	--	--	--	--	--	--	511.5
10/14/2015	1340	16.5	502	259	21.78	5.99	1.029	1502	--	--	511.5
10/14/2015	1359	16.5	500	481.6	21.55	7.23	0.971	506	--	--	511.5
10/14/2015	1423	16.5	500	748.5	21.46	7.64	0.900	208	--	0.5	511.5
10/14/2015	1455	16.5	495	923	21.24	7.69	0.878	117.5	--	0.0	521.5
10/14/2015	1515	16.5	505	1238	21.32	7.91	08.35	214.3	--	Trace	521.5
10/14/2015	1530	25	514	1862	20.94	7.86	0.766	988.1	--	0.2	521.5
10/14/2015	1633	40	522	2675	20.77	8.19	0.788	620.1	--	0.5	532.5
10/14/2015	1647	37	525	3187	20.93	7.92	0.793	375.5	--	0.3	532.5
10/14/2015	1745	24.5	475	3812	--	--	--	--	1.84	--	532.5
10/15/2015	1005	20.6	--	4722	20.21	8.67	0.720	13.3	2.98	0.0	527.5
10/15/2015	1016	21.04	--	5149	20.45	8.26	0.398	10.6	--	0.0	527.5
10/15/2015	1026	20.72	--	5157	20.63	8.19	0.632	9.3	--	0.0	517.5
10/15/2015	1036	20.88	--	5359	20.77	8.18	0.757	9.6	--	0.0	512.5
10/15/2015	1103	20.88	--	5586	21.13	8.15	0.757	9.9	--	0.0	506.5
10/15/2015	1113	15.21	--	5745	21.21	8.11	0.755	9.3	--	0.0	501.5
10/15/2015	1123	15.38	--	5886	21.20	8.08	0.752	10.1	--	0.0	496.5
10/15/2015	1133	15.21	--	6037	21.31	8.08	0.750	10.5	--	0.0	491.5
10/15/2015	1305	14.25	--	6212	21.47	8.07	0.754	14.7	--	0.0	485.5
10/15/2015	1315	14.24	--	6338	21.52	8.07	0.759	11.0	--	0.0	480.5
10/15/2015	1325	14.24	--	6504	21.53	8.08	0.754	11.9	--	0.0	475.5
10/16/2015	1720	36.14	428.25	7365	19.92	8.47	0.705	259	6.4	<0.1	521.5
10/16/2015	1735	36.30	428.25	8630	19.82	8.13	0.692	140.8	--	--	521.5
10/17/2015	0820	--	--	9116.18	19.46	8.61	0.692	31.4	--	Trace	521.5
10/17/2015	0832	42.98	--	9781.18	20.25	8.35	0.695	72.0	--	Trace	521.5
10/17/2015	0855	4298	--	10831.18	19.70	8.06	0.692	30.7	--	Trace	521.5
10/17/2015	1100	40.3	467.4	13972.18	20.19	8.21	0.695	41.0	--	Trace	521.5

Groundwater Extraction Well Development

Pumping

Date	Time	Rate (gpm)	Depth to Water (ft BGS)	Volume Removed (gallons)	Temp (°C)	pH (S.U.)	EC (mS/cm)	Turbidity (NTU)	Specific Capacity (gpm/ft)	Imhoff Cone (mL sediment per L water)	Depth of pump (Feet bgs)
10/30/2015	1250	66.76	465.92	15013.18	17.7	7.66	0.811	10.4	25.98	<0.1	513.6
10/30/2015	1254	66.76	465.92	16424.18	17.7	7.59	0.817	6.30	25.98	<0.1	513.6
10/30/2015	1317	66.64	465.85	18302.18	18.0	7.57	0.806	44.7	26.65	<0.1	513.6
10/30/2015	1325	66.40	465.88	20642.18	17.7	7.59	0.805	12.7	26.25	<0.1	513.6
10/30/2015	1347	66.04	465.82	23453.18	17.8	7.58	0.807	21.4	26.74	<0.1	513.6
10/30/2015	1355	65.80	465.82	26667.18	17.7	7.60	0.808	7.15	26.64	<0.1	513.6
10/30/2015	1406	66.76	465.81	30240.18	17.9	7.65	0.807	17.1	27.13	<0.1	513.6
10/30/2015	1411	66.52	465.84	34162.18	17.8	7.60	0.807	5.21	26.71	<0.1	513.6
10/30/2015	1424	66.28	465.82	38502.18	17.6	7.65	0.807	13.4	26.83	<0.1	513.6
10/30/2015	1428	66.16	465.84	43312.18	17.6	7.59	0.808	4.41	26.57	<0.1	513.6
10/30/2015	1441	66.16	465.78	48447.18	17.4	7.60	0.805	11.0	27.23	<0.1	513.6
10/30/2015	1447	65.80	465.83	53972.18	17.6	7.59	0.806	3.93	26.56	<0.1	513.6
10/30/2015	1458	66.16	465.79	59863.18	17.5	7.65	0.806	8.59	27.11	<0.1	513.6
10/30/2015	1504	65.92	465.84	66147.18	17.6	7.59	0.807	2.84	26.47	<0.1	513.6
10/30/2015	1522	65.80	465.81	72957.18	17.9	7.56	0.810	4.32	26.75	<0.1	513.6
10/30/2015	1526	65.8	465.72	80041.18	17.6	7.54	0.786	O.R	--	1	513.6
10/30/2015	1545	65.8	465.73	88350.18	17.6	7.54	0.804	144	--	0.4	513.6
10/30/2015	1604	65.68	465.87	97725.18	17.9	7.55	0.808	35.5	--	<0.1	513.6
10/30/2015	1615	65.68	--	107823.18	17.7	7.57	0.790	557	--	0.5	513.6
10/30/2015	1622	65.68	--	118380.18	--	--	--	54.2	--	0.1	513.6
10/30/2015	1635	65.68	465.87	129331.18	18.1	7.55	0.802	51.1	26.59	0.1	513.6
10/30/2015	1648	65.44	465.81	140282.18	18.1	7.56	0.812	35.3	26.60	<0.1	513.6
10/30/2015	1712	66.04	465.74	152415.18	18.0	7.58	0.909	10.5	27.07	<0.1	513.6
10/30/2015	1729	65.80	4685.77	165009.18	17.8	7.59	0.806	7.11	27.19	<0.1	513.6

Groundwater Extraction Well Development

Pumping

Date	Time	Rate (gpm)	Depth to Water (ft BGS)	Volume Removed (gallons)	Temp (°C)	pH (S.U.)	EC (mS/cm)	Turbidity (NTU)	Specific Capacity (gpm/ft)	Imhoff Cone (mL sediment per L water)	Depth of pump (Feet bgs)
11/02/2015	1330	208.5	471.6	168389.18	17.7	7.52	0.791	6.86	25.18	0.1	512.5
11/02/2015	1340	205.68	471.82	173279.18	17.6	7.49	0.784	1.91	24.19	<0.1	512.5
11/02/2015	1350	205.32	471.91	179959.18	17.7	7.50	0.784	2.21	23.90	<0.1	512.5
11/02/2015	1400	205.32	471.95	188499.18	17.7	7.51	0.783	1.17	23.79	<0.1	512.5
11/02/2015	1405	205.32	471.97	198499.18	--	--	--	--	23.74	--	512.5
11/02/2015	1420	150	469.02	208999.18	17.9	7.59	0.782	21.7	26.74	<0.1	512.5
11/02/2015	1430	152.41	469.45	220074.18	17.8	7.56	0.787	3.04	25.36	<0.1	512.5
11/02/2015	1503	153.46	469.20	231849.18	18.0	7.63	0.781	31.2	--	<0.1	512.5
11/02/2015	1510	152.64	469.35	244409.18	17.7	7.59	0.788	2.24	--	<0.1	512.5
11/02/2015	1530	154.20	469.25	257529.18	17.7	7.62	0.780	22.3	--	<0.1	512.5
11/02/2015	1538	152.64	--	271535.18	--	--	--	3.13	--	<0.1	512.5
11/03/2015	0940	150.04	469.32	273535.18	17.8	7.08	0.854	1.67	24.88	<0.1	512
11/03/2015	0950	150.16	469.36	276635.18	17.9	7.41	0.854	1.90	24.74	<0.1	512
11/03/2015	1000	150.16	469.43	281235.18	17.9	7.51	0.855	0.50	24.45	<0.1	512
11/03/2015	1010	150.40	469.46	287335.18	17.9	7.53	0.854	0.80	24.38	<0.1	512
11/03/2015	1020	150.28	469.51	294935.18	17.9	7.54	0.854	1.81	24.16	<0.1	512
11/03/2015	1030	150.4	469.52	304035.18	17.9	7.54	0.838	2.03	24.14	<0.1	512
11/03/2015	1050	150.04	464.53	316135.18	17.9	7.55	0.837	1.42	24.04	<0.1	512
11/03/2015	1110	150.16	469.55	331235.18	18.1	7.55	0.839	1.28	23.99	<0.1	512
11/03/2015	1130	150.16	469.57	349335.18	19.2	7.55	0.838	3.37	23.90	<0.1	512
11/03/2015	1150	150.16	469.58	370435.18	18.0	7.55	0.837	0.38	23.87	<0.1	512
11/03/2015	1210	150.16	469.59	394535.18	18.2	7.55	0.837	0.86	23.83	<0.1	512

°C = degrees Celsius
EC = Electric Conductivity
ft bgs = feet below ground surface
gpm = gallons per minute
gpm/ft = gallons per minute per foot
mL = milliliter
mS/cm = millisiemen per centimeter
NR = not recorded
NTU = Nephelometric Turbidity Unit
S.U. = Standard Unit

Groundwater Extraction Well Development

Jetting

Date	Time	Depth (ft bgs)	Jetting Rate (gpm)	Pumping Rate (gpm)	Imhoff Cone Measurement (mL sediment per L water)	Depth to Water (feet bgs)	Comments
10/24/2015	1255	532-537	37.44	55	9/9/9.8/4.5	--	
10/24/2015	1305	527-532	37.2	80 /45	4/1.2/1.3	--	Had to change flow meter
10/24/2015	1317	522-527	36.4	45	9/7.5/5/9	--	
10/24/2015	1327	517-522	35.9	--	3.5/4/4.5	--	
10/24/2015	1340	--	--	--	--	--	Moved jetting tool back to the bottom of the screen
10/24/2015	1343	537	0	85	3/0.35/0.4/0.75/0.1	--	
10/24/2015	1507	511-516	36.35	55	1.9/4/5/2.5/2.9	--	
10/24/2015	1524	506-511	36.23	62	3/5/3.5/2/4.5	--	
10/24/2015	1538	501-506	36.11	68/65/55	2.5/4/5/2.5	--	
10/24/2015	1634	496-501	37	--	--	--	
10/24/2015	1644	496-501	--	--	--	--	At 1644, determine flow meter is not functioning correctly. Calculate flow rate using bucket and stopwatch for remainder of 10/24
10/24/2015	1705	491-496	37	42	9.5/1.3/1.5/6/11	--	
10/24/2015	1720	--	--	--	--	--	Stop jetting at 1720
10/24/2015	1730	501	0	42	9.5	--	Jett off, pumping only
10/24/2015	1735	501	0	42	0.1	--	
10/24/2015	1740	501	0	42	--	--	Trace of fines
10/26/2015	0951	485-490	36	45 / 39.5	4.5/3.7	464.1	Stop jetting at 0955
10/26/2015	1007	485-490	--	44 / 40.5	--	466.4	Resume jetting at 1005
10/26/2015	1014	485-490	25	40.5 / 37	6.0/12/23	464.4	
10/26/2015	1021	480-485	24.91	40	12.7/13/10/2.5	464.3	
10/26/2015	1026	475-480	24.30	40	1.5/8/11	463.7/464.3	
10/26/2015	1037	470-475	23.86	40	30/11	464.0	

Groundwater Extraction Well Development

Jetting

Date	Time	Depth (ft bgs)	Jetting Rate (gpm)	Pumping Rate (gpm)	Imhoff Cone Measurement (mL sediment per L water)	Depth to Water (feet bgs)	Comments
10/26/2015	1045	485	0	40	7/2.5/0.6		Jett off, pumping only
10/26/2015	1210	479	0	40	0.1/trace	466.2	
10/26/2015	1327	485	0	43.7	2.5/0.2/<0.1	466.27	
10/26/2015	1348	470-475	31.69	46.0	16/7/5	463/464.2	
10/26/2015	1354	465-470	31.69	44	10/5.5/1.78	464/464.7	
10/26/2015	1420	--	--	--	--	--	Set jet at 524 ft bgs
10/26/2015	1534	519-524	0	48.23	4/0.2/0.1	465.19/ 465.3	Jett off pumping only
10/26/2015	1554	519-524	33.72	47.34	10/12.5/5	463.37	
10/26/2015	1600	524-519	32.66	46.15	8/3.0/3.25	463.4/ 463.6	
10/26/2015	1606	519-514	32.54	44.1	4.5/4/5	463.8	
10/26/2015	1611	514-509	32.54	44.1	7.5/6.5/1.5	463.5	
10/26/2015	1653	509-504	0	50	0.3	464.4	Jet off pumping only
10/26/2015	1704	509-504	31.57	47.85	3.0/2.75/2.75	463.6	
10/26/2015	1710	504-499	31.69	46.30	8.0/13/5.25	463.64	
10/26/2015	1717	499-494	31.45	48.23	15.5/7.5/10.0	463.75	
10/26/2015	1722	494-489	31.22	46.15	19/24	464.1	Jet turned off in middle of the time interval
10/26/2015	1736	494-489	32.66	46.00	25/49	463.9	
10/27/2015	0919	489-484	0	50	0.1	464.95	Jett off, pumping only
10/27/2015	0926	489-484	34.80	45.39	12/10/3.5	463.6	
10/27/2015	0934	484-479	33.84	45	24/18/32	463.75	
10/27/2015	0939	479-474	33.60	45	3.5/6/17/5	463.62	
10/27/2015	0945	474-469	33.60	45	7/8.5/10/5	464.10	
10/27/2015	1003	469-464	33.60	47.03	4/10/33/8	463.40	
10/27/2015	1115	519-524	0	48.91	--	463.08	Jett off, pumping only
10/27/2015	1118	519-524	0	48.91	--	465.95	
10/27/2015	1126	519-524	33.02	48.91	6/20/7.5/2.0	463.52	
10/27/2015	1133	514-519	29.42	47.18	7/4.5/3/3.5	463.7	
10/27/2015	1141	509-514	29.3-31.45	43.21	5/4.5/4/4.5	463.5	
10/27/2015	1152	524	0	42	< 1	463.6	Jet off, pumping only

Groundwater Extraction Well Development

Jetting							
Date	Time	Depth (ft bgs)	Jetting Rate (gpm)	Pumping Rate (gpm)	Imhoff Cone Measurement (mL sediment per L water)	Depth to Water (feet bgs)	Comments
10/27/2015	1302	504-509	0	49.71	--	462.98	
10/27/2015	1306	504-509	29.9-31.45	49.71	5/11/2.5/2.8	463.63	
10/27/2015	1313	499-504	32.78	47.12	18/16/18/15	463.20	
10/27/2015	1320	494-499	30.26	46.97	19/25/20/19	463.5	
10/27/2015	1329	489-494	30.14	44	27/25/45	463.82	
10/27/2015	1336	509	--	44	--	--	Jett off, pumping only. Stop pump at 1343
10/27/2015	1428	484-489	0	48.9	--	462.95	Jett off, pumping only
10/27/2015	1432	484-489	0	48.9	--	464.9	
10/27/2015	1434	484-489	31.6	48.9	11/41/29/26	463.58	
10/27/2015	1442	479-484	32.66	47.1	26/30/41/25	463.30	
10/27/2015	1448	474-479	32.52	43.74	29/75/20	464.15	
10/27/2015	1455	469-474	32.42	43.69	49/44/22/21	464.05	
10/27/2015	1503	464-469	32.42	42.1	21/26/23	464.25	
10/27/2015	1512	489	0	421	--	463.95	Jet off, pumping only. Sop pump at 1518

ft bgs = feet below ground surface

gpm = gallons per minute

L = liter

mL = millliliter

psi = pounds per square inch

EA Engineering, Science, and Technology, Inc., PBC

Project: **62599DM01.1028**
Location: **Kirtland AFB, New Mexico**
Start Date: **11/3/2016**
Completion Date: **12/9/2016**

WELL LOG

Well ID: **KAFB-106239**

Drilling Company: **Yellow Jacket Drilling**
Drilling Method: **Direct Mud Rotary**
Drill Bit: **Tricone**
Driller: **Quentin Stevens**

Geologist: **Bob Marley**
Boring Depth (ft): **583**
Boring Diameter (in): **14.75**
Well Diameter: **8**

DTW During Drilling (ft): **Unknown**
Top of Casing Elev. (ft): **5332.32**
Northing: **1475415.85**
Easting: **1542702.31**

Depth (ft)	PID (ppmv)	USCS	Lithology	Sample Description	Completion Details
0–5		SP		Poorly graded sand: 5 YR 6/4, light reddish brown, very loose, dry, fine grained sand, subrounded grains, >70% quartz	Portland Cement 0-30 ft bgs 8" Galvanized Carbon Steel Riser 0.5-364 ft bgs
5–30		SP		Poorly graded sand: 5 YR 5/4, reddish brown, very loose, dry, fine grained sand, subrounded grains, >70% quartz	
30–35		SM		Silty sand: 5 YR 6/4, light reddish brown, >15% fines, fine to coarse grained sand (65% fine; 20% coarse [2-4 millimeters in diameter]), subangular to subrounded grains, sand composed of quartz, feldspar, and dark minerals	Bentonite Grout 30-366 ft bgs
35–50		SW		Well graded sand: 5 YR 6/4, light reddish brown, 10% fines, fine to coarse grained sand (30% fine to medium; 60% coarse), subangular to subrounded grains, sand composed of 95% quartz/feldspar, 5% dark minerals. Driller notes increased fines starting at 45 feet below ground surface.	

Notes: Survey performed 1/16/2017.

▽ = Depth to water measured 12/17/2016.

EA Engineering, Science, and Technology, Inc., PBC

Project: **62599DM01.1028**
Location: **Kirtland AFB, New Mexico**
Start Date: **11/3/2016**
Completion Date: **12/9/2016**

WELL LOG

Well ID: **KAFB-106239**

Drilling Company: **Yellow Jacket Drilling**
Drilling Method: **Direct Mud Rotary**
Drill Bit: **Tricone**
Driller: **Quentin Stevens**

Geologist: **Bob Marley**
Boring Depth (ft): **583**
Boring Diameter (in): **14.75**
Well Diameter: **8**

DTW During Drilling (ft): **Unknown**
Top of Casing Elev. (ft): **5332.32**
Northing: **1475415.85**
Easting: **1542702.31**

Depth (ft)	PID (ppmv)	USCS	Lithology	Sample Description	Completion Details
50–55		SM		Silty sand: 5 YR 6/3, light reddish brown, >20% fines, fine to coarse grained sand (40% fine; 40% medium to coarse), subangular to subrounded grains, coarse grained sand composed of 95% quartz/feldspar, 5% dark minerals	
55–60		SW		Well graded sand: 5 YR 6/2, pinkish grey, <10% fines, fine to coarse grained sand (30% fine to medium; 60% coarse [1-4 millimeters in diameter]), subangular to subrounded grains, coarse grained sand composed of 95% quartz/feldspar, 5% dark minerals	
60–70		SM		Silty sand: 5 YR 6/4, light reddish brown, >25% fines, fine to coarse grained sand (60% fine; 15% coarse [1-4 millimeters in diameter]), subangular to subrounded grains, coarse grained sand composed of 95% light quartz/feldspar, 5% dark minerals	
70–80		SM		Silty sand: 5 YR 6/3, light reddish brown, >30% fines, 55% fine to coarse grained sand (>40% fine to medium; 15% coarse), 3% fine gravel (up to 8 millimeters in diameter), subangular to subrounded sand and gravel, sand and gravel composed of primarily feldspar, minor chert and limestone, 3-5% dark minerals, lithics (angular)	
80–100		SM		Silty sand: 5 YR 6/4, light reddish brown, 30% silt, fine to coarse grained sand (60% fine; 10% coarse), 1-2% lithic fragments (up to 8 millimeters in diameter), subangular to subrounded coarse sand grains, 95% quartz/feldspar, 5% lithics/basalt	

Notes: Survey performed 1/16/2017.

▽ = Depth to water measured 12/17/2016.

EA Engineering, Science, and Technology, Inc., PBC

Project: **62599DM01.1028**
Location: **Kirtland AFB, New Mexico**
Start Date: **11/3/2016**
Completion Date: **12/9/2016**

WELL LOG

Well ID: **KAFB-106239**

Drilling Company: **Yellow Jacket Drilling**
Drilling Method: **Direct Mud Rotary**
Drill Bit: **Tricone**
Driller: **Quentin Stevens**

Geologist: **Bob Marley**
Boring Depth (ft): **583**
Boring Diameter (in): **14.75**
Well Diameter: **8**

DTW During Drilling (ft): **Unknown**
Top of Casing Elev. (ft): **5332.32**
Northing: **1475415.85**
Easting: **1542702.31**

Depth (ft)	PID (ppmv)	USCS	Lithology	Sample Description	Completion Details
100		SM		Silty sand: 5 YR 6/4, light reddish brown, >15% fines, fine to coarse grained sand (50% fine; 25% coarse), 1-2% lithic fragments (up to 10 millimeters in diameter), subangular to subrounded sand and gravel, sand composed of 30% quartz, 60% feldspar, 5% basalt	
105					
110		ML		Silt: 5 YR 6/4, light reddish brown, nonplastic to slightly plastic, >60% fines, 30% very fine grained sand, 2% lithic fragments (up to 3 millimeters in diameter)	
115					
120		ML		Silt with sand: 5 YR 6/3, light reddish brown, slightly plastic, 75% silt, 25% very fine to fine grained sand	
125					
130		SW		Well graded sand: 5 YR 5/3, reddish brown, <5% fines, fine to coarse grained sand (>20% fine to medium; 60% coarse), 15% gravel, lithic fragments (up to 12 millimeters in diameter), subangular gravel, 30% quartz (subrounded), 30% feldspar, 40% dark minerals/basalt (subangular)	
135					
140		ML		Sandy silt: 5 YR 6/4, light reddish brown, slightly plastic, 70% silt, >30% very fine grained sand	
145					
150					

Notes: Survey performed 1/16/2017.

▽ = Depth to water measured 12/17/2016.

EA Engineering, Science, and Technology, Inc., PBC

Project: **62599DM01.1028**
Location: **Kirtland AFB, New Mexico**
Start Date: **11/3/2016**
Completion Date: **12/9/2016**

WELL LOG

Well ID: **KAFB-106239**

Drilling Company: **Yellow Jacket Drilling**
Drilling Method: **Direct Mud Rotary**
Drill Bit: **Tricone**
Driller: **Quentin Stevens**

Geologist: **Bob Marley**
Boring Depth (ft): **583**
Boring Diameter (in): **14.75**
Well Diameter: **8**

DTW During Drilling (ft): **Unknown**
Top of Casing Elev. (ft): **5332.32**
Northing: **1475415.85**
Easting: **1542702.31**

Depth (ft)	PID (ppmv)	USCS	Lithology	Sample Description	Completion Details
150		SM		Silty sand: 5 YR 6/4, light reddish brown, nonplastic, 30% fines, fine to coarse grained sand (50% fine; 10% coarse), 10% fine gravel (up to 10 millimeters in diameter), subangular gravel, 25% quartz, 25% feldspar, 50% dark minerals	
160		SM		Silty sand: 5 YR 6/4, light reddish brown, 30% fines, very fine to fine grained sand, 10% fine gravel, 10% coarse gravel, angular to subangular gravel (up to 19 millimeters in diameter), 20% feldspar, 50% basalt, 10% tuff	
170		ML		Sandy silt: 5 YR 6/4, light reddish brown, 40% very fine to fine grained sand, <10% coarse grained sand to fine gravel (up to 6 millimeters in diameter), angular to subangular gravel, gravel composed of >50% basalt	
180		SW		Well graded sand with gravel: 5 YR 5/3, reddish brown, <5% fines, coarse grained sand, 25% fine gravel (up to 10 millimeters in diameter), subangular gravel, sand composed of quartz and feldspar, gravel composed of basalt and tuff	
190		SP		Poorly graded sand with gravel: 5 YR 4/2, dark reddish brown, <5% fines, coarse grained sand, 20% fine gravel (up to 6 millimeters in diameter), subangular to subrounded gravel, sand composed of 30% quartz, 30% feldspar, 30% basalt, gravel composed of basalt	
200					

Notes: Survey performed 1/16/2017.

▽ = Depth to water measured 12/17/2016.

EA Engineering, Science, and Technology, Inc., PBC

Project: **62599DM01.1028**
Location: **Kirtland AFB, New Mexico**
Start Date: **11/3/2016**
Completion Date: **12/9/2016**

WELL LOG

Well ID: **KAFB-106239**

Drilling Company: **Yellow Jacket Drilling**
Drilling Method: **Direct Mud Rotary**
Drill Bit: **Tricone**
Driller: **Quentin Stevens**

Geologist: **Bob Marley**
Boring Depth (ft): **583**
Boring Diameter (in): **14.75**
Well Diameter: **8**

DTW During Drilling (ft): **Unknown**
Top of Casing Elev. (ft): **5332.32**
Northing: **1475415.85**
Easting: **1542702.31**

Depth (ft)	PID (ppmv)	USCS	Lithology	Sample Description	Completion Details
200		ML		Silt with sand: 5 YR 6/3, light reddish brown, nonplastic, 15-29% very fine grained sand	
205					
210		SP		Poorly graded sand with gravel: 5 YR 5/3, reddish brown, <5% fines, coarse grained sand, 15% fine gravel (up to 6 millimeters in diameter), subangular gravel, sand and gravel composed of 30% quartz, 30% feldspar, 30% basalt	
215					
220		GP		Poorly graded gravel with sand: 5 YR 4/3, reddish brown, <5% fines, 20% coarse grained sand, fine gravel (up to 6 millimeters in diameter), gravel subangular to subrounded, sand and gravel composed of 30% quartz, 30% feldspar, 30% basalt	
225					
230		SM		Silty sand: 5 YR 4/3, reddish brown, >15% fines, very fine to coarse grained sand (30% very fine; >15% fine; 30% coarse), 5% fine gravel (up to 9 millimeters in diameter), subangular gravel, sand and gravel composed of 25% quartz, 25% feldspar, 40% basalt	
235					
240		SM		Silty sand with gravel: 5 YR 5/3, reddish brown, >15% silt, very fine to coarse grained sand (30% very fine; 30% coarse), 15% fine gravel (up to 8 millimeters in diameter), subangular to subrounded gravel, sand and gravel composed of 25% quartz, 25% feldspar, 50% basalt	
245					
250					

Notes: Survey performed 1/16/2017.

▽ = Depth to water measured 12/17/2016.

EA Engineering, Science, and Technology, Inc., PBC

Project: **62599DM01.1028**
Location: **Kirtland AFB, New Mexico**
Start Date: **11/3/2016**
Completion Date: **12/9/2016**

WELL LOG

Well ID: **KAFB-106239**

Drilling Company: **Yellow Jacket Drilling**
Drilling Method: **Direct Mud Rotary**
Drill Bit: **Tricone**
Driller: **Quentin Stevens**

Geologist: **Bob Marley**
Boring Depth (ft): **583**
Boring Diameter (in): **14.75**
Well Diameter: **8**

DTW During Drilling (ft): **Unknown**
Top of Casing Elev. (ft): **5332.32**
Northing: **1475415.85**
Easting: **1542702.31**

Depth (ft)	PID (ppmv)	USCS	Lithology	Sample Description	Completion Details
250		SM		Silty sand with gravel: 5 YR 5/3, reddish brown, >15% silt, very fine to coarse grained sand (30% very fine; 30% coarse), 15% fine gravel (up to 8 millimeters in diameter), subangular to subrounded gravel, sand and gravel composed of 25% quartz, 35% feldspar, 50% basalt	
255					
260		ML		Sandy and clayey silt with gravel: 5 YR 7/4, pink, 75% fines, very fine to coarse grained sand (80% very fine; 10% coarse), gravel (up to 8 millimeters in diameter), subangular to subrounded gravel, sand composed of 20% quartz, 50% feldspar, 30% basalt, gravel composed of 20% quartz, 30% feldspar, 50% basalt	
265					
270		ML		Sandy and clayey silt with gravel: 5 YR 7/4, pink, 75% fines, very fine to coarse grained sand (80% very fine; 10% coarse), gravel (up to 8 millimeters in diameter), angular shards, subangular to subrounded gravel, sand and gravel composed of 20% quartz, 20% feldspar, 60% basalt	
275					
280		SM		Silty sand with gravel: 5 YR 7/3, pink, >15% fines, fine to coarse grained sand (30% fine; 30% coarse), 20% fine gravel (up to 6 millimeters in diameter), angular to subrounded gravel, sand and gravel composed of 25% quartz, 25% feldspar, 50% basalt	
285					
290					
295					
300					

Notes: Survey performed 1/16/2017.

▽ = Depth to water measured 12/17/2016.

EA Engineering, Science, and Technology, Inc., PBC

Project: **62599DM01.1028**
Location: **Kirtland AFB, New Mexico**
Start Date: **11/3/2016**
Completion Date: **12/9/2016**

WELL LOG

Well ID: **KAFB-106239**

Drilling Company: **Yellow Jacket Drilling**
Drilling Method: **Direct Mud Rotary**
Drill Bit: **Tricone**
Driller: **Quentin Stevens**

Geologist: **Bob Marley**
Boring Depth (ft): **583**
Boring Diameter (in): **14.75**
Well Diameter: **8**

DTW During Drilling (ft): **Unknown**
Top of Casing Elev. (ft): **5332.32**
Northing: **1475415.85**
Easting: **1542702.31**

Depth (ft)	PID (ppmv)	USCS	Lithology	Sample Description	Completion Details
300					
305		SW		Well graded gravelly sand: 5 YR 5/2, reddish gray, <15% fines, fine to coarse grained sand (30% fine; 30% coarse), gravel (up to 12 millimeters in diameter), angular to subrounded gravel, sand and gravel composed of 35% quartz, 30% feldspar, 35% basalt	
310					
315		SW		Well graded gravelly sand: 5 YR 5/2, reddish gray, <15% fines, fine to coarse grained sand (40% fine; 30% coarse), gravel (up to 8 millimeters in diameter), angular to subrounded gravel, sand and gravel composed of 30% quartz, 40% feldspar, 30% basalt	
320					
325		SW		Well graded sand: 5 YR 4/2, dark reddish gray, <5% fines, fine to coarse grained sand (20% fine to medium; 50% coarse), <15% fine gravel (up to 8 millimeters in diameter), subangular to subrounded gravel, sand composed of 30% quartz, 30% feldspar, 30% basalt	
330					
335		SP		Poorly graded sand: 5 YR 5/3, reddish brown, <5% fines, fine to coarse grained sand (20% fine to medium; 60% coarse), 10% fine gravel (up to 6 millimeters in diameter), subangular gravel, sand and gravel composed of 30% quartz, 30% feldspar, 30% basalt	
340					
345		SM		Silty sand with gravel: 5 YR 5/3, reddish brown, 20% fines, fine to coarse grained sand (20% fine to medium; 40% coarse), 15% fine gravel (up to 8 millimeters in diameter), subangular to subrounded gravel, sand and gravel composed of 30% quartz, 30% feldspar, 30% basalt	
350					

Notes: Survey performed 1/16/2017.

▽ = Depth to water measured 12/17/2016.

EA Engineering, Science, and Technology, Inc., PBC

Project: **62599DM01.1028**
Location: **Kirtland AFB, New Mexico**
Start Date: **11/3/2016**
Completion Date: **12/9/2016**

WELL LOG

Well ID: **KAFB-106239**

Drilling Company: **Yellow Jacket Drilling**
Drilling Method: **Direct Mud Rotary**
Drill Bit: **Tricone**
Driller: **Quentin Stevens**

Geologist: **Bob Marley**
Boring Depth (ft): **583**
Boring Diameter (in): **14.75**
Well Diameter: **8**

DTW During Drilling (ft): **Unknown**
Top of Casing Elev. (ft): **5332.32**
Northing: **1475415.85**
Easting: **1542702.31**

Depth (ft)	PID (ppmv)	USCS	Lithology	Sample Description	Completion Details
350					
355		SM		Silty sand with gravel: 5 YR 5/3, reddish brown, 30% fines, fine to coarse grained sand (10% fine to medium; 40% coarse), 15% fine gravel (up to 8 millimeters in diameter), subangular to subrounded gravel, sand and gravel composed of 30% quartz, 30% feldspar, 30% basalt	
360					
365		SM		Silty sand: 5 YR 5/3, reddish brown, 30% fines, fine to coarse grained sand (20% fine to medium; 40% coarse), <5% fine gravel (up to 8 millimeters in diameter), subangular to subrounded gravel, sand and gravel composed of 30% quartz, 30% feldspar, 30% basalt	8" Stainless Steel Riser 364-470 ft bgs
370					3/8" Bentonite Chip Seal 366-408 ft bgs
375		SW		Well graded sand: 5 YR 5/3, reddish brown, <5% fines, fine to coarse grained sand (40% fine to medium; 50% coarse), <5% fine gravel (up to 8 millimeters in diameter), subangular to subrounded gravel, sand and gravel composed of 30% quartz, 30% feldspar, 30% basalt	
380					
385		SW		Well graded sand with gravel: 5 YR 5/2, reddish gray, <5% fines, fine to coarse grained sand (25% fine to medium; 50% coarse), 20% fine gravel (up to 8 millimeters in diameter), angular shards, subangular to subrounded gravel, sand and gravel composed of 30% quartz, 30% feldspar, 30% basalt	
390					
395		SW		Well graded sand: 5 YR 5/2, reddish gray, <5% fines, fine to coarse grained sand (25% fine to medium; 60% coarse), <15% fine gravel (up to 6 millimeters in diameter), subangular to subrounded gravel, sand and gravel composed of 30% quartz, 30% feldspar, 30% basalt	
400					

Notes: Survey performed 1/16/2017.

▽ = Depth to water measured 12/17/2016.

EA Engineering, Science, and Technology, Inc., PBC

Project: **62599DM01.1028**
Location: **Kirtland AFB, New Mexico**
Start Date: **11/3/2016**
Completion Date: **12/9/2016**

WELL LOG

Well ID: **KAFB-106239**

Drilling Company: **Yellow Jacket Drilling**
Drilling Method: **Direct Mud Rotary**
Drill Bit: **Tricone**
Driller: **Quentin Stevens**

Geologist: **Bob Marley**
Boring Depth (ft): **583**
Boring Diameter (in): **14.75**
Well Diameter: **8**

DTW During Drilling (ft): **Unknown**
Top of Casing Elev. (ft): **5332.32**
Northing: **1475415.85**
Easting: **1542702.31**

Depth (ft)	PID (ppmv)	USCS	Lithology	Sample Description
400				
405		SW		Well graded sand: 5 YR 5/2, reddish gray, <5% fines, fine to coarse grained sand (25% fine to medium; 60% coarse), <15% fine gravel (up to 6 millimeters in diameter), subangular gravel, sand and gravel composed of 30% quartz, 30% feldspar, 30% basalt
410	0.9	SM		Silty sand: 5 YR 5/2, reddish gray, 25% fines, fine to coarse grained sand (25% fine to medium; 40% coarse), <10% fine gravel (up to 6 millimeters in diameter), subangular to subrounded gravel, sand and gravel composed of 30% quartz, 30% feldspar, 30% basalt, 5% chert
415				
420		SM		Silty sand: 5 YR 6/2, pinkish gray, 30% fines, fine to coarse grained sand (20% fine to medium; 40% coarse), <10% fine gravel (up to 10 millimeters in diameter), fractured shards, subangular to subrounded gravel, sand composed of 30% quartz, 30% feldspar, 30% basalt, 5% chert, gravel composed of 30% quartz, 30% feldspar, 30% basalt
425				
430	0.8	SM		Silty sand: 5 YR 6/2, pinkish gray, 30% fines, fine to coarse grained sand (40% fine; 20% medium to coarse), trace fine gravel (up to 6 millimeters in diameter), shards (primarily basalt), subangular to subrounded gravel, sand composed of 35% quartz, 20% feldspar, 30% basalt, 5% chert, gravel composed of 30% quartz, 30% feldspar, 30% basalt
435				
440	0.8	SM		Silty sand: 5 YR 6/2, pinkish gray, 30% fines, fine to coarse grained sand (35% fine; 30% medium to coarse), shards (primarily basalt), subrounded grains (minor subangular), sand composed of 35% quartz, 20% feldspar, 30% basalt, 5% chert
445				
450				

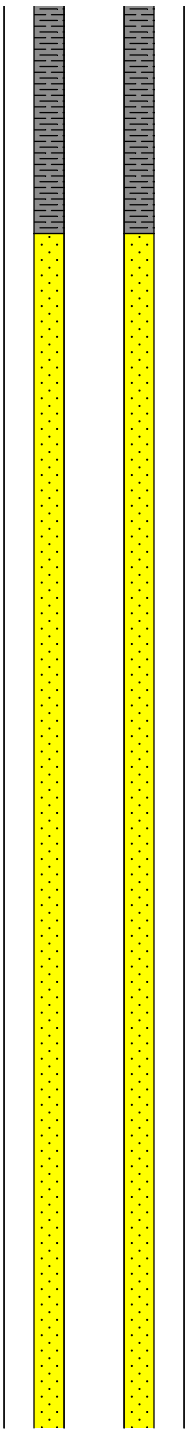

10/20 Silica Sand
408-581.8 ft bgs

Notes: Survey performed 1/16/2017.

▽ = Depth to water measured 12/17/2016.

EA Engineering, Science, and Technology, Inc., PBC

Project: **62599DM01.1028**
Location: **Kirtland AFB, New Mexico**
Start Date: **11/3/2016**
Completion Date: **12/9/2016**

WELL LOG

Well ID: **KAFB-106239**
Page: **10 of 12**

Drilling Company: **Yellow Jacket Drilling**
Drilling Method: **Direct Mud Rotary**
Drill Bit: **Tricone**
Driller: **Quentin Stevens**

Geologist: **Bob Marley**
Boring Depth (ft): **583**
Boring Diameter (in): **14.75**
Well Diameter: **8**

DTW During Drilling (ft): **Unknown**
Top of Casing Elev. (ft): **5332.32**
Northing: **1475415.85**
Easting: **1542702.31**

Depth (ft)	PID (ppmv)	USCS	Lithology	Sample Description
450	10.0	SM		Silty sand: 5 YR 6/2, pinkish gray, 20% fines, fine to coarse grained sand (35% fine; 35% medium to coarse), subangular to subrounded grains, sand composed of 30% quartz, 20% feldspar, 35% basalt, 10% chert
455				
460	0.5	SM		Silty sand: 5 YR 6/2, pinkish gray, 20% fines, fine to coarse grained sand (50% fine; 20% medium to coarse), trace fine gravel (up to 6 millimeters in diameter), subangular to subrounded grains and gravel, sand composed of 35% quartz, 35% feldspar, 20% basalt, 5% chert
465				
470	1.0	SM		Silty sand: 5 YR 6/2, pinkish gray, 20% fines, fine to coarse grained sand (50% fine; 20% medium to coarse), subrounded grains, sand composed of 35% quartz, 35% feldspar, 20% basalt, 5% chert
475				
480	0.5	SW-SM		Well graded sand with silt: 5 YR 6/2, pinkish gray, <15% fines, fine to coarse grained sand (50% fine; 30% medium to coarse), <5% fine gravel (up to 6 millimeters in diameter), subangular to subrounded grains and gravel, subangular fragments of volcanic origin (basalt), sand composed of 30% quartz, 30% feldspar, 30% basalt, 5% chert
485				
490	1.1	SW-SM		Well graded sand with silt: 5 YR 6/2, pinkish gray, <10% fines, fine to coarse grained sand (50% fine; 40% medium to coarse), trace fine gravel, subrounded grains and gravel, sand composed of 30% quartz, 30% feldspar, 30% basalt, 5% chert
495				
500				

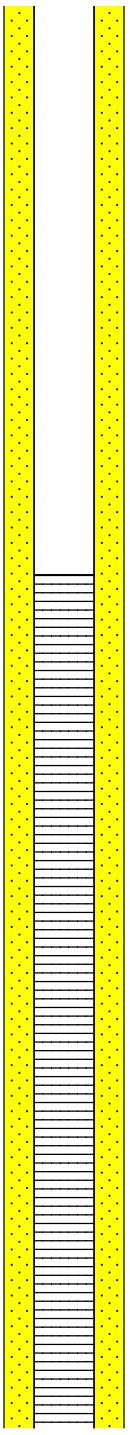

Completion Details
8" Stainless Steel Vee Wire Wrap Screen 0.030" Slot 470-572.7 ft bgs

Notes: Survey performed 1/16/2017.

▽ = Depth to water measured 12/17/2016.

EA Engineering, Science, and Technology, Inc., PBC

Project: **62599DM01.1028**
Location: **Kirtland AFB, New Mexico**
Start Date: **11/3/2016**
Completion Date: **12/9/2016**

WELL LOG

Well ID: **KAFB-106239**

Drilling Company: **Yellow Jacket Drilling**
Drilling Method: **Direct Mud Rotary**
Drill Bit: **Tricone**
Driller: **Quentin Stevens**

Geologist: **Bob Marley**
Boring Depth (ft): **583**
Boring Diameter (in): **14.75**
Well Diameter: **8**

DTW During Drilling (ft): **Unknown**
Top of Casing Elev. (ft): **5332.32**
Northing: **1475415.85**
Easting: **1542702.31**

Depth (ft)	PID (ppmv)	USCS	Lithology	Sample Description	Completion Details
500	1.2	SW-SM		Well graded sand with silt: 5 YR 6/2, pinkish gray, <10% fines, fine to coarse grained sand (50% fine; 40% medium to coarse), trace fine gravel, subangular to subrounded grains and gravel (quartz subrounded; feldspar/basalt subangular), sand composed of 30% quartz, 30% feldspar, 30% basalt, 5% chert	
505					
510	1.0	SW-SM		Well graded sand with silt: 5 YR 6/2, pinkish gray, <10% fines, fine to coarse grained sand (50% fine; 40% medium to coarse), subangular to subrounded grains (quartz subrounded; feldspar/basalt subangular), sand composed of 30% quartz, 30% feldspar, 30% basalt, 5% chert	
515					
520	1.0	SM		Silty sand: 5 YR 6/2, pinkish gray, 20% fines, fine to coarse grained sand (60% fine; 20% medium to coarse), subrounded grains, sand composed of 30% quartz, 30% feldspar, 30% basalt, 5% chert	
525					
530	0.5	SM		Silty sand: 5 YR 6/2, pinkish gray, 20% fines, fine to coarse grained sand (40% fine; 40% medium to coarse), subrounded grains, sand composed of 30% quartz, 30% feldspar, 30% basalt, 5% chert	
535					
540	0.3	SM		Silty sand: 5 YR 6/2, pinkish gray, 20% fines, fine to coarse grained sand (50% fine; 25% medium to coarse), subrounded grains, sand composed of 30% quartz, 30% feldspar, 30% basalt, 5% chert	
545					
550					

Notes: Survey performed 1/16/2017.

▽ = Depth to water measured 12/17/2016.

EA Engineering, Science, and Technology, Inc., PBC

Project: **62599DM01.1028**
Location: **Kirtland AFB, New Mexico**
Start Date: **11/3/2016**
Completion Date: **12/9/2016**

WELL LOG

Well ID: **KAFB-106239**
Page: **12 of 12**

Drilling Company: **Yellow Jacket Drilling**
Drilling Method: **Direct Mud Rotary**
Drill Bit: **Tricone**
Driller: **Quentin Stevens**

Geologist: **Bob Marley**
Boring Depth (ft): **583**
Boring Diameter (in): **14.75**
Well Diameter: **8**

DTW During Drilling (ft): **Unknown**
Top of Casing Elev. (ft): **5332.32**
Northing: **1475415.85**
Easting: **1542702.31**

Depth (ft)	PID (ppmv)	USCS	Lithology	Sample Description	Completion Details
550	0.1	SM		Silty sand: 5 YR 6/2, pinkish gray, 20% fines, fine to coarse grained sand (50% fine; 25% medium to coarse), subrounded grains, sand composed of 30% quartz, 30% feldspar, 30% basalt, 5% chert	8" Stainless Steel Sump 572.7-577.8 ft bgs
555					
560	1.2				TD (well) = -577.8'
565					
570	1.5				
575					
580	1.1				

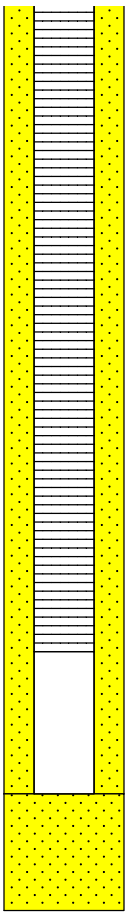

Notes: Survey performed 1/16/2017.

▽ = Depth to water measured 12/17/2016.

KAFB-7

DATA WELL NO. 7 KIRTLAND EAST

ELEVATION (FT)	LOCATION	DATE CONSTR ENDED
5349.0	NW¼-NW¼-NW¼=SEC 6-T10N-R4E	February 1955

WELL

TYPE: Rotary Drilled, Gravel Packed, 3/4" Gravel

DEPTH	DIAMETER	PUMPSETTING DEPTH
1010'	28" Hole 16" Casing	475'
ORIGINAL STATIC LEVEL	**DRAWDOWN**	**RECOVERY TIME**
395'	22'	

TEST DATA		AIR LINE AND GAGES					SPECIFIC CAPACITY (GAL) PER (FT)
WELL CAPACITY	PUMPING LEVEL	YES	X	NO		LENGTH	$\frac{\text{GPM}}{\text{DRAWDOWN}}$ = 64 GPM/FT
1400GPM	417'					475'	

WELL PUMPING EQUIPMENT

PUMP

TYPE AND MAKE: Submersible, Byron-Jackson — CAPACITY: 1150 GPM

SUCTION (FT)	SIZE AND LENGTH	COLUMN
N/A'	N/A	10" w/check valve at water level

HEAD			NUMBER BOWLS	SIZE AND TYPE	NO. STAGES
ABOVE GRD	BELOW GRD	TOTAL			
161'	425'	586'		12" 3CK	7

MOTOR

SERIAL NO.	TYPE	MAKE	HP	RPM	FRAME	PHASE	CYCLES	VOLTAGE
	14" H Submersible	B&J	200	1750		3	60	440

STAND BY POWER	MAKE	SIZE
440 volt	Cummins Installed 1970	300KW

HP	RPM	DESCRIPTION
	1800	Diesel powered generator

CASING AND WELL SCREENING MATERIAL USED	SETTING DEPTH	LENGTH EACH
16" O.D. Blank Casing	448	448
16" O.D. ¼" Shutter Screen casing	856	408
16" O.D. Blank Casing	880	24
16" O.D. ¼" Shutter screen casing	976	96
16" O.D Blank Casing	1,010	34

AF FORM 996

KAFB-7

FORMATIONS ENCOUNTERED DURING DRILLING #7(KE)	DEPTH (FT)	STRATUM
Top soil, sand and gravel	35	35
Sand, gravel and clay	95	60
Course sand and gravel	125	30
Sandy clay and gravel	190	65
Sand and gravel	240	50
Coarse sand and gravel	275	35
Sand, gravel and streaks of clay	315	40
Sand, gravel and boulders	465	250
Sand, gravel and streaks of clay	525	60
Sand, gravel and boulders	740	215
Coarse sand and boulders	855	115
Sandy clay	945	90
Coarse sandy clay and boulders	1,000	55

CHANGES MADE FROM ORIGINAL DATA

1961: Motor failed,equipment removed. Well bailed and surged and added 40 CY of gravel (3/4") and removed 30 CY of 1/4" gravel. Installed new pump and motor identical to original. Static level 418 feet.

1967: Pump failed to operate, equipment removed. Well bailed, surged and caged. 80 CY of 1/4 inch gravel removed and 100 CY of 3/4 inch gravel added. Installed new identical equipment. Static level 420 feet.

1970: Equipment failed, removed. Installed Johnson pump and 250 HP GE submersible motor, 1400 GPM @ 615' head. Static level 425 feet.

1973: Equipment failed, removed. Installed 7 stage Fairbanks-Morse lineshaft pump w/250 HP Westinghouse hollowshaft motor, 1400 GPM @ 560' head. Static level 425 feet.

1975: Motor burned out, replaced w/250 HP GE hollowshaft. (Jan-Apr) $6,171.03
Sand sampler installed.

1976: July, replaced water meter and installed drawdown recorder. $4,500.00
September, replaced seal and bearings in motor. $1,800.00

1977: March, Motor Overhauled (Shops). $1,500.00

DRILLING COMPANY	LOCATION
ROSCOE MOSS CO	LOS ANGELES, CALIFORNIA

APPENDIX P

Example Reports

Example Reports

- **Weekly Update Report**
- **GWTS Monthly Summary Report**
- **NMOSE Monthly Reporting for GWTS**
- **Report Recipients (Update Recipients Upon Request)**

WEEKLY UPDATE REPORT

Kirtland BFF Project - Site Monitoring Status

- Soil Vapor Monitoring – Q2 2018 Sampling began on 23APR18; 30% complete.
- Drinking Water Supply Wells – Next sampling event scheduled for 01MAY18.
- Groundwater Monitoring – Q2 2018 Sampling began on 02APR18; 93% complete.

GWTS Operation		Groundwater Treatment Totals (including Temporary Treatment System)
System Operational Dates	-	**6/4/15 - present**
Weekly Groundwater Treated (Gallons)[1]	23-Apr-18 to 30-Apr-18	3,848,800
Train 1 Weekly Groundwater Treated (Gallons)[1]	23-Apr-18 to 30-Apr-18	1,978,000
Train 2 Weekly Groundwater Treated (Gallons)	23-Apr-18 to 30-Apr-18	1,870,800
Cumulative Groundwater Treated (Gallons)	04-Jun-15 to present	384,635,800
Train 1 Cumulative Groundwater Treated (Gallons)	04-Jun-15 to present	258,224,900
Train 2 Cumulative Groundwater Treated (Gallons)	30-Jan-17 to present	126,410,900
Weekly Discharge Volume to GCMP (Gallons)[1]	23-Apr-18 to 30-Apr-18	3,848,800
Cumulative Discharge Volume to GCMP (Gallons)	01-Jan-16 to present	262,591,965
Weekly Discharge Volume to Injection Well KAFB-7 (Gallons)[1]	23-Apr-18 to 30-Apr-18	0
Cumulative Discharge Volume to Injection Well KAFB-7 (Gallons)	01-Jan-16 to present	122,043,835
Influent EDB Concentration (µg/L)[2]	22-Mar-18	0.022
Weekly Operational Run-time %[3]	23-Apr-18 to 30-Apr-18	99%
Cumulative EDB Removal (Grams)[4]	04-Jun-15 to present	92.22
Weekly Average Flow Rate (gpm)[5]	23-Apr-18 to 30-Apr-18	382
Weekly IDW Purge Water to GWTS-Golf Course (Gallons)	23-Apr-18 to 30-Apr-18	0
Cumulative IDW Purge Water to GWTS-Golf Course (Gallons)	24-Apr-16 to present	251,638
Weekly IDW Purge Water to GWTS-KAFB-7 (Gallons)	28-Apr-17 to present	0
Cumulative IDW Purge Water to GWTS-KAFB-7 (Gallons)	28-Apr-17 to present	0

(1) Volume totals for GCMP and KAFB-7 were calculated using the GWTS effluent totalizers.

(2) The 22MAR18 influent sample concentration for Train 1 and 2 both were used to calculate EDB removal.

(3) All treated water since 14MAR18 has been discharged to the Golf Course Main Pond, pending repairs to KAFB-7. Since 14MAR18 extraction wells have been operated based on pond capacity with priority on running KAFB-106234. KAFB-106234 has been operating continuously since 24MAR18, KAFB-106228 continuously since 18APR18, and KAFB-106239 continuously since 26APR18. KAFB-106233 has been operated for approximately 12 hours per day as capacity at the Golf Course Main Pond allows since 26APR18. The system was shutdown for 39 minutes on 27APR18 for influent Y-Strainer cleaning.

(4) EDB mass removal is adjusted retroactively for the month based upon influent concentration from 22MAR18.

(5) Average flow is total gallons treated divided by total treatment minutes available.

Current GWTS Discharge Destination GCMP

CURRENT GWTS EFFLUENT ANALYSES			Train 1		Train 2	
			Sample Date:	3/22/18	Sample Date:	3/22/18
Analytical Method	Parameter	Project Screening Levels[a]	Result	LOD	Result	LOD
Draft Analytical Data						
EDB (µg/L) SW8011	ETHYLENE DIBROMIDE	0.05	ND	0.019	ND	0.019
VOC (µg/L) SW8260B	BENZENE	5	ND	1	ND	1
	ETHYLBENZENE	700	ND	1	ND	1
	TOLUENE	750	ND	1	ND	1
	XYLENES	620	ND	1	ND	1
Metals (µg/L) SW6010C	IRON, DISSOLVED	1,000	168 J	200	ND	200
	MANGANESE, DISSOLVED	200	ND	5	ND	5

Notes
Laboratory results greater than EPA MCLs or NMED Groundwater Protection Standards are highlighted in yellow.
[a] Project Screening Levels are the lowest of either the EPA MCL (from the EPA RSL Table, dated June 2017) or the NMED Groundwater Protection Standards (NMAC 20.6.2.3103).

J = estimated value.
LOD = Limit of Detection.
ND = not detected.
µg/L = micrograms per liter.

Well 106228
Operational Flow Rate: 141 gpm

Well 106233
Operational Flow Rate: 161 gpm

Well 106234
Operational Flow Rate: 163 gpm

Well 106239
Operational Flow Rate: 75 gpm

Well Control House (106233 and 106234)
No issues.

KAFB-7
On 14MAR18 at 0206, the KAFB-7 V-Smart valve hydraulic assembly failed downhole. KAFB-7 repairs are pending.

GWTS MONTHLY WATER SUMMARY REPORT

GWTS Operation	Total Groundwater Extracted (gallons)[a]	Treated Groundwater Injected to Injection Well KAFB-7 (gallons)	Treated Groundwater Discharged to the Golf Course Main Pond (gallons)[b]	Treated Groundwater Discharged for Dust Suppression (gallons)
Dec-15	17,664,900	0	17,664,900	0
2015 Total	17,664,900	0	17,664,900	0
Jan-16	1,777,200	0	1,777,200	0
Feb-16	881,000	181,300	699,700	0
Mar-16	22,168,080	1,231,350	20,936,730	0
Apr-16	12,649,920	582,570	12,067,350	0
May-16	12,090,000	0	12,090,000	0
Jun-16	8,850,000	0	8,850,000	0
Jul-16	9,940,000	0	9,940,000	0
Aug-16	9,400,000	0	9,400,000	0
Sep-16	12,980,000	0	12,980,000	0
Oct-16	8,300,000	0	8,300,000	0
Nov-16	7,200,000	2,970,000	4,230,000	0
Dec-16	14,570,100	14,501,190	68,910	0
2016 Total	120,806,300	19,466,410	101,339,890	0
Jan-17	6,177,000	5,877,600	299,400	0
Feb-17	3,994,500	2,216,600	1,777,900	0
Mar-17	11,256,600	5,172,800	6,083,800	0
Apr-17[c]	13,981,700	2,248,062	11,733,638	0
May-17	18,688,600	4,722,563	13,966,037	0
Jun-17	18,761,200	1,592,700	17,168,500	0
Jul-17	24,136,000	3,023,500	21,112,500	0
Aug-17	18,460,700	4,847,500	13,613,200	0
Sep-17	18,962,100	6,752,400	12,209,700	0
Oct-17	21,626,600	14,775,800	6,850,800	0
Nov-17	12,513,400	3,734,900	8,778,500	0
Dec-17	13,304,300	10,724,700	2,579,600	0
2017 Total	181,862,700	65,689,125	116,173,575	0
Jan-18	15,362,700	13,887,700	1,475,000	0
Feb-18	17,571,400	13,765,300	3,806,100	0
Mar-18	18,098,900	9,235,300	8,863,600	0
Apr-18	13,268,900	0	13,268,900	0
2018 Total	64,301,900	36,888,300	27,413,600	0
Total	384,635,800	122,043,835	262,591,965	0

[a]Corrected volumes to include temporary treatment system in 2015.

[b]Corrected volumes from HMI datasets.

[c]Corrected volumes as the monthly volumes for the last week in April were listed as May on the previously monthly report.

NMOSE MONTHLY REPORTING FOR GWTS

Injection and Extraction Well Volume Summary Table
January-August 2016

			Well ID	KAFB-106228	KAFB-106233	KAFB-106234	KAFB-106239	KAFB-7[b]
			Well Type	Extraction Well	Extraction Well	Extraction Well	Extraction Well	Injection Well
			RG #	RG-1579	RG-1579	RG-1579	RG-1579	RG-1587
Month	Date Range[a]	Effluent Totalizer Reading (gallons)[c]	POD	POD 292	POD 309	POD 310	POD 319	-
Jun-15	6/4/2015	0	Average Monthly Flow Rate (gpm)	3.82	0	0		
	6/30/2015	143,200	Percentage of Monthly Extraction Volume	100%	0%	0%		
	Monthly Total (gallons)	143,200		143,200	0	0		0
Jul-15	6/30/2015	143,200	Average Monthly Flow Rate (gpm)	28.26	0	0		
	7/31/2015	1,404,800	Percentage of Monthly Extraction Volume	100%	0%	0%		
	Monthly Total (gallons)	1,261,600		1,261,600	0	0		0
Aug-15	7/31/2015	1,404,800	Average Monthly Flow Rate (gpm)	93.21	0	0		
	8/31/2015	5,565,900	Percentage of Monthly Extraction Volume	100%	0%	0%		
	Monthly Total (gallons)	4,161,100		4,161,100	0	0		0
Sep-15	8/31/2015	5,565,900	Average Monthly Flow Rate (gpm)	97.54	0	0		
	9/30/2015	9,779,800	Percentage of Monthly Extraction Volume	100%	0%	0%		
	Monthly Total (gallons)	4,213,900		4,213,900	0	0		0
Oct-15	9/30/2015	9,779,800	Average Monthly Flow Rate (gpm)	118.02	0	0		
	10/30/2015	14,878,100	Percentage of Monthly Extraction Volume	100%	0%	0%		
	Monthly Total (gallons)	5,098,300		5,098,300	0	0		0
Nov-15	10/30/2015	14,878,100	Average Monthly Flow Rate (gpm)	31.76	0	0		
	11/30/2015	16,295,700	Percentage of Monthly Extraction Volume	100%	0%	0%		
	Monthly Total (gallons)	1,417,600		1,417,600	0	0		0
Dec-15	11/30/2015	16,295,700	Average Monthly Flow Rate (gpm)	27.82	0	0		
	12/31/2015	17,373,622	Percentage of Monthly Extraction Volume	100%	0%	0%		
	Monthly Total (gallons)[c]	1,241,722		1,241,722	0	0		0
Jan-16	12/31/2015	163,800	Average Monthly Flow Rate (gpm)	23.84	2.70	2.47		
	1/27/2016	1,941,000	Percentage of Monthly Extraction Volume	82.18%	9.31%	8.51%		
	Monthly Total (gallons)[c]	1,904,678		1,565,299	177,381	161,998		0
Feb-16	1/27/2016	1,941,000	Average Monthly Flow Rate (gpm)	55.44	57.89	37.75		
	3/1/2016	6,358,500	Percentage of Monthly Extraction Volume	36.70%	38.32%	24.99%		
	Monthly Total (gallons)	4,417,500		1,621,066	1,692,566	1,103,868		-181,300
Mar-16	3/1/2016	6,358,500	Average Monthly Flow Rate (gpm)	85.00	143.35	142.58		
	3/31/2016	24,990,080	Percentage of Monthly Extraction Volume	22.91%	38.65%	38.44%		
	Monthly Total (gallons)	18,631,580		4,269,361	7,200,347	7,161,872		-1,231,350
Apr-16	3/31/2016	24,990,080	Average Monthly Flow Rate (gpm)	52.25	155.50	152.49		
	5/2/2016	40,710,000	Percentage of Monthly Extraction Volume	14.50%	43.17%	42.33%		
	Monthly Total (gallons)	15,719,920		2,279,918	6,785,746	6,654,256		-582,570
May-16	5/2/2016	40,710,000	Average Monthly Flow Rate (gpm)	0.00	107.14	124.88		
	5/31/2016	49,730,000	Percentage of Monthly Extraction Volume	0.00%	46.18%	53.82%		
	Monthly Total (gallons)	15,719,920		0	7,259,100	8,460,820		0
Jun-16	5/31/2016	49,730,000	Average Monthly Flow Rate (gpm)	0.00	57.86	167.08		
	6/27/2016	58,580,000	Percentage of Monthly Extraction Volume	0.00%	25.72%	74.28%		
	Monthly Total (gallons)	8,850,000		0	2,276,436	6,573,564		0
Jul-16	6/27/2016	58,580,000	Average Monthly Flow Rate (gpm)	79.63	0.00	126.51		
	8/1/2016	68,520,000	Percentage of Monthly Extraction Volume	38.63%	0.00%	61.37%		
	Monthly Total (gallons)	9,940,000		3,839,825	0	6,100,175		0
Aug-16	8/1/2016	68,520,000	Average Monthly Flow Rate (gpm)	116.93	0.00	114.67		
	8/29/2016	77,920,000	Percentage of Monthly Extraction Volume	50.49%	0.00%	49.51%		
	Monthly Total (gallons)	9,400,000		4,745,722	0	4,654,278		0
Sep-16	8/29/2016	77,920,000	Average Monthly Flow Rate (gpm)	146.17	0.00	134.37		
	10/3/2016	90,900,000	Percentage of Monthly Extraction Volume	52.10%	0.00%	47.90%		
	Monthly Total (gallons)	12,980,000		6,762,886	0	6,217,114	NA	0
Oct-16	10/3/2016	90,900,000	Average Monthly Flow Rate (gpm)	99.28	0.00	104.84		
	10/31/2016	99,200,000	Percentage of Monthly Extraction Volume	48.64%	0.00%	51.36%		
	Monthly Total (gallons)	8,300,000		4,037,000	0	4,263,000		0
Nov-16	10/31/2016	99,200,000	Average Monthly Flow Rate (gpm)	90.31	0.00	95.87		
	11/28/2016	106,400,000	Percentage of Monthly Extraction Volume	48.51%	0.00%	51.49%		
	Monthly Total (gallons)	7,200,000		3,492,528	0	3,707,472		-2,970,000
Dec-16	11/28/2016	106,400,000	Average Monthly Flow Rate (gpm)	144.78	0.00	155.00		
	1/3/2017	120,970,100	Percentage of Monthly Extraction Volume	48.30%	0.00%	51.70%		
	Monthly Total (gallons)	14,570,100		7,036,722	0	7,533,378		-14,501,190
Jan-17[d]	1/3/2017	120,970,100	Average Monthly Flow Rate (gpm)	144.92	0.00	154.75		
	1/30/2017	127,059,800	Percentage of Monthly Extraction Volume	48.36%	0.00%	51.64%		
	Monthly Total (gallons)	6,089,700		2,944,976	0	3,144,724		-5,877,600
Feb-17[d]	1/30/2017	127,059,800	Average Monthly Flow Rate (gpm)	145.14	0.00	155.25		
	2/27/2017	131,141,600	Percentage of Monthly Extraction Volume	48.32%	0.00%	51.68%		
	Monthly Total (gallons)	4,081,800		1,972,238	0	2,109,562		-2,216,600
Mar-17[d]	2/27/2017	131,141,600	Average Monthly Flow Rate (gpm)	145.32	0.00	157.07		
	3/27/2017	142,398,200	Percentage of Monthly Extraction Volume	48.06%	0.00%	51.94%		
	Monthly Total (gallons)	11,256,600		5,409,542	0	5,847,058		-5,172,800
Apr-17[d]	3/27/2017	142,398,200	Average Monthly Flow Rate (gpm)	145.23	0.00	130.93		
	4/24/2017	152,005,300	Percentage of Monthly Extraction Volume	52.59%	0.00%	47.41%		
	Monthly Total (gallons)	9,607,100		5,052,356	0	4,554,744		-2,248,062
May-17[d]	4/24/2017	152,005,300	Average Monthly Flow Rate (gpm)	145.08	177.18	171.73		
	5/30/2017	175,068,500	Percentage of Monthly Extraction Volume	29.37%	35.87%	34.76%		
	Monthly Total (gallons)	23,063,200		6,773,382	8,272,246	8,017,572		-4,722,563
Jun-17[d]	5/30/2017	175,068,500	Average Monthly Flow Rate (gpm)	144.34	175.86	164.39		
	6/26/2017	193,829,700	Percentage of Monthly Extraction Volume	29.79%	36.29%	33.92%		
	Monthly Total (gallons)	18,761,200		5,588,212	6,808,528	6,364,460		-1,592,700
Jul-17[d]	6/26/2017	193,829,700	Average Monthly Flow Rate (gpm)	143.73	171.77	160.63		
	7/31/2017	217,965,700	Percentage of Monthly Extraction Volume	30.19%	36.08%	33.74%		
		24,136,000		7,286,046	8,707,321	8,142,633		-3,023,500
Aug-17[d]	7/31/2017	217,965,700	Average Monthly Flow Rate (gpm)	136.63	165.44	151.92		
	8/28/2017	236,426,400	Percentage of Monthly Extraction Volume	30.10%	36.44%	33.46%		
		18,460,700		5,555,799	6,727,324	6,177,577		-4,847,500
Sept-17[e]	8/28/2017	236,426,400	Average Monthly Flow Rate (gpm)	142.99	164.45	162.43		
	9/25/2017	255,388,500	Percentage of Monthly Extraction Volume	30.43%	35.00%	34.57%		
		18,962,100		5,769,400	6,636,200	6,555,000		-6,752,400
Oct-17[e]	9/25/2017	255,388,500	Average Monthly Flow Rate (gpm)	143.70	167.22	163.98		
	10/30/2017	277,015,100	Percentage of Monthly Extraction Volume	32.83%	29.38%	37.79%		
		21,626,600		7,084,200	6,340,100	8,155,300		-14,775,800
Nov-17[e]	10/30/2017	277,015,100	Average Monthly Flow Rate (gpm)	144.68	166.80	164.97		
	11/27/2017	289,528,500	Percentage of Monthly Extraction Volume	23.45%	24.98%	51.57%		
		12,513,400		2,934,200	3,126,300	6,452,900		-3,734,900
Dec-17[e]	11/27/2017	289,528,500	Average Monthly Flow Rate (gpm)	0.00	163.90	162.75		
	12/26/2017	302,832,800	Percentage of Monthly Extraction Volume	0.00%	50.18%	49.82%		
		13,304,300		0	6,685,500	6,638,400		-10,724,700
Jan-18[e]	12/26/2017	302,832,800	Average Monthly Flow Rate (gpm)	0.00	161.42	164.09		
	1/29/2018	318,195,500	Percentage of Monthly Extraction Volume	0.00%	49.59%	50.41%		
		15,362,700		0	7,609,000	7,734,900		-13,887,700
Feb-18[e]	1/29/2018	318,195,500	Average Monthly Flow Rate (gpm)	143.31	159.42	162.84	74.80	
	2/26/2018	335,766,900	Percentage of Monthly Extraction Volume	23.96%	34.61%	36.48%	4.95%	
		17,571,400		4,187,100	6,048,200	6,375,700	864,700	-13,765,300
Mar-18[e]	2/26/2018	335,766,900	Average Monthly Flow Rate (gpm)	143.61	159.08	164.64	75.75	
	4/2/2018	353,865,800	Percentage of Monthly Extraction Volume	26.18%	24.93%	35.99%	12.90%	
		18,098,900		4,733,100	4,507,500	6,507,200	2,332,500	-9,235,300
Apr-18[e]	4/2/2018	353,865,800	Average Monthly Flow Rate (gpm)	144.91	159.78	164.66	76.30	
	4/30/2018	367,134,700	Percentage of Monthly Extraction Volume	31.60%	7.01%	49.94%	11.45%	
		13,268,900		4,168,900	924,800	6,587,800	1,510,800	0

[a] Flow rate data for wells is not available prior to 15JAN2016. The average flowrate is based on available data.

[b] Negative volumes presented indicate water injected.

[c] Flow meter information presented is from both temporary and permanent ground water treatment systems. Both systems were used during December 2015 and January 2016 and values reflect the sum of each for these months. During December 2015 163,800 gallons were treated by the GWTS. During January 2016 127,478 gallons were treated by the temporary treatment system.

[d] Average Monthly Flow Rate is calculated only during times of pump operation.

[e] Beginning in September 2017 extraction well volumes utilize individual wellhead totalizer readings following the installation of more accurate flowmeters, and KAFB-7 continues to utilize the effluent totalizer data from the groundwater treatment system even following the wellhead totalizer replacement on February 27, 2018. Average Monthly Flow Rate calculated is only during times of pump operation. An additional 156,900 gallons of water was injected into the aquifer during September 2017 which was not previously accounted for as the weekly report and changeover between distribution point occurred on the same day.

REPORT RECIPIENTS

Weekly Report Recipients:

To: Jercinovic, Devon <djercinovic@eaest.com>

Cc: McKeage, Kevin kmckeage@eaest.com; ssultana@eaest.com

Bcc: 'CORDOVA, AMY ELIZABETH CIV USARMY CESPA (US)' Amy.E.Cordova@usace.army.mil; 'Bart Faris' <bfaris@cabq.gov>; 'Carl Grusnick' <carl.grusnick.1@us.af.mil>; 'Carlos.F.Salazar@usace.army.mil'; 'dennis.mcquillan@state.nm.us'; 'Eugene.A.Jaramillo@usace.army.mil'; 'Michael.T.Goodrich@usace.army.mil'; 'Jaime Agudelo' <jaime.agudelo@us.af.mil>; Snyder, Jay <jsnyder@eaest.com>; 'John Kieling' <john.kieling@state.nm.us>; 'Julie McNeill' <jmcneill@portageinc.com>; 'Justin Reale' <Justin.K.Reale@usace.army.mil>; 'kathryn.lynnes@us.af.mil'; 'Ken Ziegler' <krziegler@cabq.gov>; 'Linda Dreeland' <Linda.Dreeland@usace.army.mil>; 'Lisa Mathai' <lmathai@neptuneinc.org>; 'Mark Kinkade' <mark.kinkade.1@us.af.mil>; 'Mark.J.Phaneuf@usace.army.mil'; 'Matthew.B.Ellender@usace.army.mil'; 'Michelle Hunter' <michelle.hunter@state.nm.us>; 'Rachel Hobbs' <rhobbs@sundance-inc.net>; 'Richard Trevino' <richard.trevino@us.af.mil>; 'Rick Shean' <flshean@abcwua.org>; 'scott.clark@us.af.mil'; 'Steve Pullen' <steve.pullen@state.nm.us>; 'Trent.Simpler@usace.army.mil'; Morse, Earl <emorse@eaest.com>; 'Ryan Wortman' <rwortman@sundance-inc.net>; 'Colleen Rust' <crust@sundance-inc.net>; 'Othana Zuch' <othana.zuch@us.af.mil>; 'James Fisher' <james.fisher.48@us.af.mil>; 'Megan Duley' <mduley@nf-gov.com>; 'Jessica Zencey' <jessica.zencey.2@us.af.mil>; 'Bruce Yurdin' <Bruce.Yurdin@state.nm.us>; 'jesse.kahler@us.af.mil'; 'eva.blaylock@us.af.mil'; 'suzanne.devergie@us.af.mil'; SEGURA, CHRISTOPHER G GS-13 USAF AFCEC/CZO <christopher.segura.2@us.af.mil>; holly.ogrady@us.af.mil; david.koch.3@us.af.mil; brian.renaghan@us.af.mil; shannon.carabajal.1@us.af.mil; 'Mendoza, Kathryn' kmendoza@abcwua.org; <katy.breyer@us.af.mil>; tblack@neptuneinc.org; brian.salem@state.nm.us; chelsea.s.reale@usace.army.mil; Andrew.Romero@state.nm.us; bbockisch@eaest.com

Subject : Kirtland BFF Weekly Update-W/E M/D/18

Daily/Weekly Report Recipients:

To: Simpler, Trent W CIV USARMY CESPA (US <Trent.Simpler@usace.army.mil>; Amy.E.Cordova@usace.army.mil; Salazar, Carlos F CIV USARMY CESPA (US) <Carlos.F.Salazar@usace.army.mil>; Phaneuf, Mark J SPA (Mark.J.Phaneuf@usace.army.mil); Dreeland, Linda E CIV USARMY CESPA (US) <Linda.E.Dreeland@usace.army.mil>; chelsea.s.reale@usace.army.mil; brian.renaghan@us.af.mil; CLARK, SCOTT C GS-12 USAF AFCEC/CZO <scott.clark@us.af.mil>; holly.ogrady@us.af.mil; christopher.segura.2@us.af.mil

Cc: Jercinovic, Devon <djercinovic@eaest.com>; Curley, Tyler <tcurley@eaest.com>; Ferrari, Peter <pferrari@eaest.com>; Sultana, Sharmin <ssultana@eaest.com>; McKeage, Kevin <kmckeage@eaest.com>; Meyer, Brent bmeyer@eaest.com

Bcc: bbockisch@eaest.com

Subject : Kirtland BFF - GWTS Operational Status DDMON18

NMOSE Monthly Recipients:

To: leon.baros@us.af.mil; mark.dalzell@us.af.mil; jayson.varela.1@us.af.mil

Cc: CLARK, SCOTT C GS-12 USAF AFCEC/CZO <scott.clark@us.af.mil>; 'LYNNES, KATHRYN D HQE USAF AFGSC 377 MSG/SAF/IEE' <kathryn.lynnes@us.af.mil>; 'Simpler, Trent SPA' <Trent.Simpler@usace.army.mil>; 'CORDOVA, AMY ELIZABETH CIV USARMY CESPA (US)' Amy.E.Cordova@usace.army.mil; Salazar, Carlos F SPA <Carlos.F.Salazar@usace.army.mil>; McKeage, Kevin <kmckeage@eaest.com>; Jercinovic, Devon <djercinovic@eaest.com>; ssultana@eaest.com; suzanne.devergie@us.af.mil; holly.ogrady@us.af.mil; Mark.J.Phaneuf@usace.army.mil; Linda.Dreeland@usace.army.mil; chelsea.s.reale@usace.army.mil

Kirtland CE Monthly Recipients:

To: 'susan.gregory.1.ctr@us.af.mil'; 'leon.baros@us.af.mil'; 'patrick.ostrye@aecom.com'; nicole.rinaldi.ctr@us.af.mil; manuel.gabaldon@us.af.mil

Cc: Jercinovic, Devon <djercinovic@eaest.com>; Simpler, Trent SPA' <Trent.Simpler@usace.army.mil>; 'Phaneuf, Mark J SPA' <Mark.J.Phaneuf@usace.army.mil>; 'CORDOVA, AMY ELIZABETH CIV USARMY CESPA (US)' <Amy.E.Cordova@usace.army.mil>; 'Salazar, Carlos F SPA' <Carlos.F.Salazar@usace.army.mil>; 'CLARK, SCOTT C GS-12 USAF AFCEC/CZO' <scott.clark@us.af.mil>; McKeage, Kevin <kmckeage@eaest.com>; ssultana@eaest.com; 'Linda Dreeland' <Linda.Dreeland@usace.army.mil>; chelsea.s.reale@usace.army.mil

USGS Monthly KAFB-7 Injection Report Recipients:

To: 'Stuart Norton' <sbnorton@usgs.gov>; Kennedy, Jeffrey <jkennedy@usgs.gov>; Meghan Bell <mtbell@usgs.gov>

Cc: Jercinovic, Devon <djercinovic@eaest.com>; 'Simpler, Trent SPA' <Trent.Simpler@usace.army.mil>; 'Sanchez, Amy E. SPA' <Amy.E.Sanchez@usace.army.mil>; 'Salazar, Carlos F SPA' <Carlos.F.Salazar@usace.army.mil>; 'Mark.J.Phaneuf@usace.army.mil'; 'Linda.Dreeland@usace.army.mil'; chelsea.s.reale@usace.army.mil

APPENDIX Q

Technical Memorandum

IDW DISPOSAL TECHNICAL MEMORANDUM

TECHNICAL MEMORANDUM

ESTABLISHING BASIS OF DESIGN MAXIMUM CONCENTRATION LIMITS FOR THE KIRTLAND BULK FUELS FACILITY GROUNDWATER TREATMENT SYSTEM

The groundwater treatment system (GWTS) has been designed to treat water from extraction wells as part of the Resource Conservation and Recovery Act groundwater interim measure at Solid Waste Management Unit ST-106/SS-111, the Bulk Fuels Facility (BFF) site, at Kirtland Air Force Base, New Mexico. This Technical Memorandum establishes maximum concentration limits for the sand filters and the lead granular activated carbon (GAC) vessel for inorganic and organic constituents at the GWTS to ensure treated effluent meets all applicable discharge limits. Influent to the GWTS consists of extracted contaminated groundwater and any non-hazardous investigation-derived waste (IDW) associated with Kirtland BFF remedial activities that include IDW water generated during well installation, well development and testing, well maintenance, and groundwater monitoring. Under no circumstances will hazardous IDW be accepted for treatment by the GWTS.

Tigg modeling was used to determine the organic criteria loading on the lead GAC based on operations and maintenance (O&M) not to exceed six month change out of the lead GAC. The six month lead GAC change out is a cost effective O&M approach for the GWTS based on a maximum process flow rate of 400 gallon per minute (gpm). To determine the organic concentration loading rates, the Tigg model used the worst case concentrations, which is the most conservative and not expected. It is important to note that the Tigg modeled continuous loading of these organic concentrations at the maximum process flow rate of 400 gpm to the lead GAC. This loading model results in breakthrough of the lead GAC in approximately 175 days (approximately 6 months) and subsequent GAC change out in the lead GAC vessel.

GROUNDWATER TREATMENT SYSTEM PROCESS

The treatment capabilities of the GWTS includes 1) removal of organic compounds by adsorption to GAC and 2) removal of dissolved metals and biologic materials in the sand filters containing catalytic media that are being installed as a pretreatment process. The GWTS process flow is shown in Figure 1 for one treatment train. Contaminated groundwater is extracted from the extraction wells and conveyed to the GWTS building. Once inside the building, the contaminated water is diverted into two influent tanks where hydraulic mixing achieves equalization. Following equalization, the contaminated water is pumped at 400 gpm per treatment train (i.e., Treatment Train #1 or Treatment Train #2) which consist of the following process units:

- Influent tank
- Influent pumps
- Sand filters with special media for biologic and metals pretreatment (installation pending)
    - Influent sampling port
- Bag filters
- Lead GAC vessel; 20,000 pounds of carbon
    - Post-lead GAC sampling port
- Lag GAC vessel; 20,000 pounds of carbon; redundant vessel for process safety factor
- Effluent tank
- Effluent pump
    - Effluent sampling port
- Bag filters

Following treatment, treated water is diverted into two effluent tanks for equalization, the treated water is pumped from treatment trains into a single conveyance line to either the Tijeras Arroyo Golf Course main pond or the gravity-fed underground injection control (UIC) well KAFB-7. Additional discharge options are under evaluation and may be available in the future. Discharge to the Tijeras Arroyo Golf Course main pond does not require a discharge permit under New Mexico Administrative Code 20.6.2.3104 (2004) as long as the treated effluent meets the numerical standards of New Mexico Administrative Code 20.6.2.3103. Discharge to UIC well KAFB-7 is performed under DP-1839, a Class V UIC permit issued on April 28, 2017 pursuant to New Mexico Administrative Code 20.6.2.3106.

SAND FILTER TREATMENT PROCESS AND MAXIMUM CONCENTRATION LIMITS

Sand filters are scheduled for installation in the GWTS as a pretreatment for the GAC vessels to assist in removal of biologic material and to treat dissolved iron (Fe) and manganese (Mn), which are not removed by the GAC treatment process. The sand filters, which contain a catalytic media, are designed to precipitate out the dissolved Fe and Mn by advanced oxidation processes and filter out suspended solids including biological materials. Once precipitated as iron and manganese oxides, the oxides and suspended solids are captured by the sand filter media and removed during backwashing to a storage tank for disposal. System backwashing is automatic and based on an increase in back pressure (typically set at 10-15 percent above the normal operating pressure). In order for the sand filter media to oxidize the Fe and Mn, an oxidant (sodium hypochlorite) is added to the water entering the treatment trains. Additionally, sodium hypochlorite acts as a disinfectant to mitigate biofilm formation on the sand filter media.

The Basis of Design for the GWTS sand filters (Attachment 1) provides a description of the advanced oxidation processes that catalyze the dissolved metals to metal oxides. The sand filters are designed to catalyze and remove up to 10 milligrams per liter (mg/L) of dissolved iron or manganese down to approximately 1 microgram per liter (µg/L) with a sodium hypochlorite concentration of 0.1-0.3 mg/L. The sand filters should minimize the amount of suspended solids and microorganisms that reach the lead GAC vessels, mitigating plugging and increased pressure drop along the lead GAC vessels.

For this Technical Memorandum, maximum sand filter concentration limits for Fe and Mn are established by manufacturer design. These maximum inorganic concentration limits are substantially higher than dissolved Fe and Mn concentrations at the BFF site. For example, the actual maximum dissolved Fe and Mn concentrations measured in Q4 2016 were 6,600 µg/L and 6,930 µg/L, respectively in KAFB-106006. KAFB-106006 is designated a hazardous IDW well due to benzene concentrations and would not be accepted to the GWTS; however, even these maximum concentrations of dissolved Fe and Mn are 60 percent below the maximum concentrations that the sand filters can treat.

MAXIMUM LEAD GAC CONCENTRATION LIMITS

Figure 1 shows the maximum organic concentration limits reaching the lead GAC vessel modeled by the GAC manufacturer (Attachment 2). The Tigg modeling assumed worst case concentrations as follows:

- Maximum EDB detected of all wells between Q1 2016 and Q3 2016 was 17 µg/L. **EDB was conservatively set at the modeled influent level to 20 µg/L**; however, the highest concentration within the GWTS capture zone is 0.7 µg/L as of Q4 2016.
- **Benzene worst case was set at 450 µg/L** which is 10% safety factor below the regulatory standard for D018 hazardous waste of 500 µg/L. The highest concentrations within the GWTS capture zone is 3 ug/L as of Q4 2016 results.

- Worst case concentrations of ethylbenzene, toluene, and total xylenes were extrapolated using linear regression between benzene and each ethylbenzene, toluene, and total xylenes for all wells containing detectable benzene concentrations between Q1 and Q3 2016. The interpolated concentrations for ethylbenzene, toluene, and total xylenes were calculated at a benzene concentration of 450 µg/L and then multiplied by safety factor of 2 (double the interpolated concentration). **Ethylbenzene, toluene, and total xylenes were set at 102 µg/L, 212 µg/L, and 110 µg/L, respectively**. As of Q4 2016, there are no concentrations of ethylbenzene, toluene, and total xylenes above the NMWQCC standards or EPA maximum contaminant levels within the GWTS capture zone.

At no time are the GWTS effluent limits exceeded because both Treatment Train #1 and Treatment Train #2 have a second, redundant 20,000 pound lag GAC vessel in series behind the lead GAC vessel. Treated groundwater samples are collected monthly between the two GAC vessels to monitor for breakthrough. Breakthrough is defined as a detectable concentration of a contaminant of concern (COC) and therefore, breakthrough concentrations will be much lower than the NMWQCC standards or EPA maximum contaminant levels for a COC. When breakthrough occurs in the lead GAC vessel, process flow is switched from the lead GAC vessel to the lag GAC vessel, and the former lead GAC vessel is scheduled for carbon change out.

REFERENCES

New Mexico Administrative Code. 2004. State of New Mexico, Title 20.6.2 Ground and Surface Water Protection.

Figures

1 GWTS Process Flow Diagram

Attachments

1 Basis of Design Groundwater Treatment System Sand Filters
2 TIGG Maximum Loading Concentrations at 400 Gallons per Minute

This page intentionally left blank

FIGURES

Sand Filter Concentration Limits

Organic	µg/L	Inorganic	µg/L
EDB	20	Dissolved Fe	10,000
Benzene	450	Dissolved Mn	10,000
Toluene	212		
Ethylbenzene	102		
Total Xylenes	110		

Lead GAC Concentration Limits

Organic	µg/L	Inorganic	µg/L
EDB	20	Dissolved Fe	<1,000
Benzene	450	Dissolved Mn	<200
Toluene	212		
Ethylbenzene	102		
Total Xylenes	110		

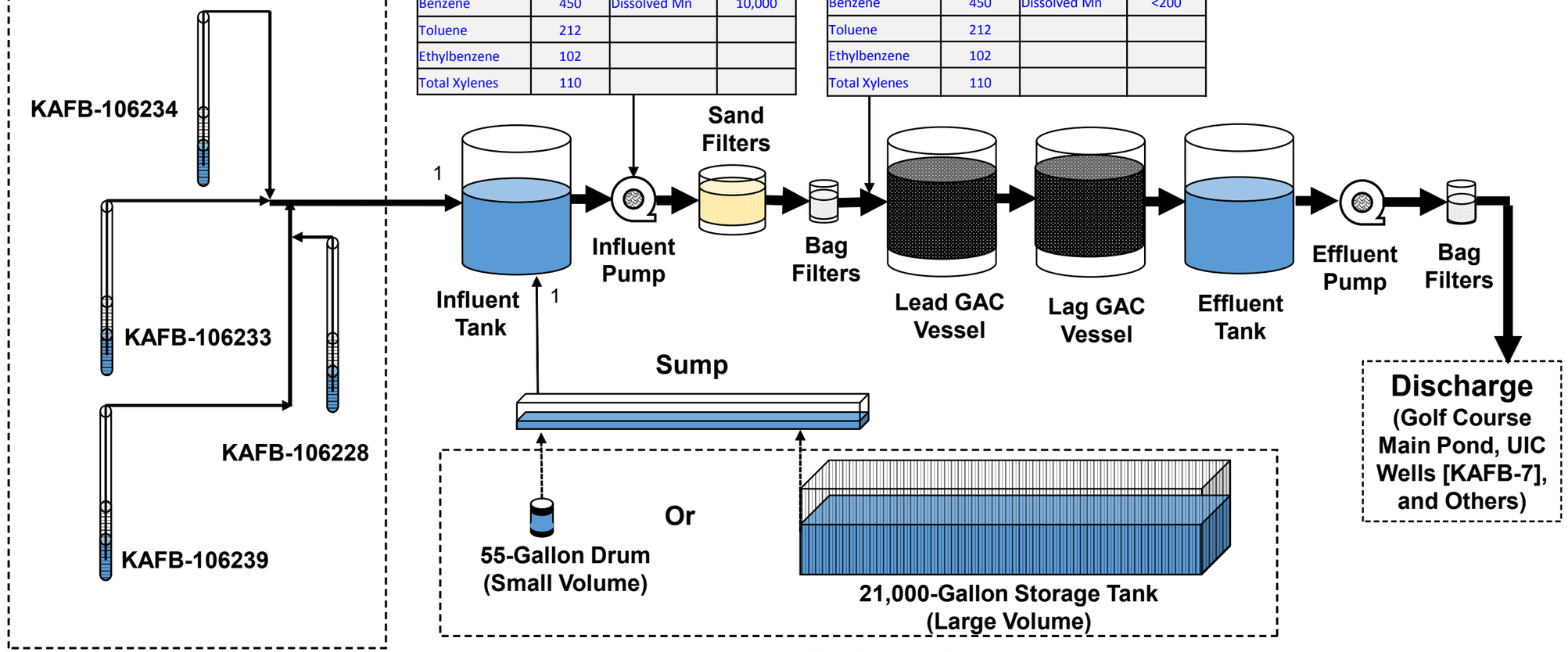

Note 1: Total process flow for each treatment train is 400 gpm.

Notes:
µg/L = Microgram(s) per liter
EDB - Ethylene dibromide
Fe = Iron
GAC = Granular activated carbon
gpm = Gallons per minute
Mn = Manganese
UIC = Underground injection control

TECHNICIAL MEMORANDUM ESTABLISHING
MAXIMUM INFLUENT LIMITS TO THE
GROUNDWATER TREATMENT SYSTEM
BULK FUELS FACILITY
SOLID WASTE MANAGEMENT UNIT ST-106/SS-111
KIRTLAND AIR FORCE BASE, NEW MEXICO

FIGURE 1

GWTS PROCESS FLOW DIAGRAM

P:\gis\Projects\Kirtland\Figures\Internal\4.12.17 Tech Memo\Figure 1 TechMemo.mxd 5/2/2017 EA rmullen

ATTACHMENT 1

BASIS OF DESIGN
GROUNDWATER TREATMENT SYSTEM SAND FILTERS

ATTACHMENT 2

TIGG MAXIMUM LOADING CONCENTRATIONS
AT 400 GALLONS PER MINUTE

From: John Mickler
To: Jim Kearns; Jercinovic, Devon
Cc: Nicholas Kelly
Subject: RE: Kirtland BFF - GAC Lifetime Analysis w/ Update Concentrations
Date: Friday, April 14, 2017 6:06:26 AM

Devon, EA is granted permission to provide this information to NMED in support of the TIGG equipment and carbons for this application.

Let us know if you need any other help.

John M. Mickler P.E., PMP
Vice President and General Manager

TIGG, LLC
1 Willow Avenue
Oakdale, PA 15071
Office: 724-703-3020 x106
Mobile: 412-370-5833
jmickler@tigg.com

1 Willow Avenue
Oakdale, PA 15071
p. 724-703-3020
f. 724-703-3026

Title: Kirtland AFB 4/13/17

Report Basis

Flow Rate	400 GPM
Water pH	7
Water Temperature	65 °F

Component	Inlet Concentration
ethylene dibromide	20.000 ppb
benzene	450.000 ppb
ethyl benzene	102.000 ppb
toluene	212.000 ppb
xylene	110.000 ppb

Report: 114.31 lbs. activated carbon per day saturated at conditions

Average Loading at Saturation 4.024 lbs./100 lbs. Carbon

Note: Contact TIGG Corporation if comments are needed on preferential adsorption of contaminants above.

PROPRIETARY AND CONFIDENTIAL

THIS INFORMATION IS THE EXCLUSIVE PROPERTY OF TIGG LLC, AND SHALL NOT BE COPIED OR DISSEMINATED WITHOUT PRIOR CONSENT. THIS COMPUTER PROJECTION IS FOR SATURATION OF TIGG 5D LIQUID PHASE ACTIVATED CARBONS. IT IS FOR GENERAL GUIDANCE ONLY AND IS NOT A PERFORMANCE GUARANTEE OF ANY SORT. IT ASSUMES CONSISTENT CONDITIONS AND PURITY LEVELS AS LISTED, BUT DOES NOT ALLOW FOR POSSIBLE COMPETITIVE ORGANICS NOT LISTED.

1 Willow Avenue
Oakdale, PA 15071
p. 724-703-3020
f. 724-703-3026

Title: Kirtland AFB 4/13/17

Report Basis

Flow Rate	400 GPM
Water pH	7
Water Temperature	65 °F

Component	Inlet Concentration
ethylene dibromide	10.000 ppb
benzene	225.000 ppb
ethyl benzene	51.000 ppb
toluene	106.000 ppb
xylene	55.000 ppb

Report: 43.64 lbs. activated carbon per day saturated at conditions

Average Loading at Saturation 3.245 lbs./100 lbs. Carbon

Note: Contact TIGG Corporation if comments are needed on preferential adsorption of contaminants above.

PROPRIETARY AND CONFIDENTIAL

THIS INFORMATION IS THE EXCLUSIVE PROPERTY OF TIGG LLC, AND SHALL NOT BE COPIED OR DISSEMINATED WITHOUT PRIOR CONSENT. THIS COMPUTER PROJECTION IS FOR SATURATION OF TIGG 5D LIQUID PHASE ACTIVATED CARBONS. IT IS FOR GENERAL GUIDANCE ONLY AND IS NOT A PERFORMANCE GUARANTEE OF ANY SORT. IT ASSUMES CONSISTENT CONDITIONS AND PURITY LEVELS AS LISTED, BUT DOES NOT ALLOW FOR POSSIBLE COMPETITIVE ORGANICS NOT LISTED.

IDW DISPOSAL MODEL

AQUASIM MODELING FOR IDW PROCESSING

This document describes the modeling performed to establish maximum IDW concentrations for processing by the GWTS. This modeling establishes concentration limits for discharges of either small volumes (55-gallon drum) or large volumes (21,000 gallon storage tank) of IDW water under minimum operating flow (120 gpm) and maximum operating flow (400 gpm) conditions. The GWTS is designed to treat non-hazardous IDW and to ensure that no hazardous IDW will be treated by the GWTS, the maximum concentration of benzene for IDW acceptable by the plant has been fixed at 450 µg/L.

DETERMINATION OF ACCEPTABLE IDW WATER PROCESSING CONCENTRATIONS

AQUASIM Version 2.1g (Reichert, 1994) was utilized as the software package to determine the concentration limits on IDW water to ensure that the influent limits on the lead GAC vessel would not be exceeded under normal operating conditions. AQUASIM is a free process flow modeling program available at the following URL: http://www.eawag.ch/en/department/siam/software/. This software is supplied with the basic formulas used to describe simple reactor configurations and process flows for simple systems. The model was used to evaluate disposal of non-hazardous IDW through the GWTS containing elevated concentrations of ethylene dibromide; benzene, toluene, ethylbenzene, and total xylenes (BTEX); dissolved iron; and dissolved manganese.

Within AQUASIM, the model was constructed by modeling the Treatment Train #1 influent tank as a continuously stirred tank reactor with continuous in and out flow and the in-floor sump as a plug flow reactor without diffusion with in and out flow. The two compartments were linked together with the sump flowing into the influent tank without diffusion through the link. The sand filter was incorporated into the model by modifying concentrations of dissolved iron and manganese between the influent tank and lead GAC vessel. Further description of how the sand filters remove dissolved iron and manganese is provided in Attachment 1. No additional processes were added to the model other than those above.

INPUT PARAMETERS AND REFERENCES

The water within the influent tank, flowing from the extraction wells and used to move the IDW water through the sump, was modeled as the average of concentrations measured from the influent samples collected on February 23, 2017 from both trains. The following is a list of the average concentrations of analytes collected on that date:

- Ethylene dibromide – 0.075 µg/L
- BTEX – 0 µg/L (all)
- Iron – 0 µg/L
- Magnesium – 0 µg/L.

The model was run using four different flow profiles of extraction well water and IDW water being discharged to the sump. Maximum IDW water concentrations discharged to the in-floor sump were iteratively calculated by the model to ensure concentrations reaching the lead GAC vessel did not exceed the limits. Limits for organic compounds were set to the manufacturer's modeled concentrations to ensure complete treatment of the influent water reaching the lead GAC vessel. Limits for dissolved iron and manganese were set to 10 mg/L with sand filters installed and to the lower of the New Mexico Water Quality Control Commission water quality standards and the drinking water maximum contaminant levels adopted by EPA under the Federal Safe Drinking Water Act. The GAC vessels can only be operated between a flow of 120 and 400 gpm to ensure complete treatment of the influent water.

IDW water discharged to the in-floor sump can be viewed as either a small and large volume input depending on the site activity that produced the IDW. Small volume IDW production occurs during activities such as groundwater monitoring and results in the creation of approximately a single 55-gallon drum (or less) of IDW water from each well. Large volume operations such as well installation can typically result in the creation of multiple 21,000-gallon containers of IDW.

In order to evaluate possible flow regimes in the GWTS and the types of IDW discharge, four modeling scenarios were performed:

- Model Run #1 utilized the minimum flow conditions (120 gpm) from extraction wells and discharge of 55 gallons of IDW to the in-floor sump.

- Model Run #2 utilized the maximum flow conditions (400 gpm) from extraction wells and discharge of 55 gallons of IDW to the in-floor sump.

- Model Run #3 utilized the minimum flow conditions (120 gpm) from extraction wells and discharge of 21,000 gallons of IDW to the in-floor sump.

- Model Run #4 utilized the maximum flow conditions (400 gpm) from extraction wells and discharge of 21,000 gallons of IDW to the in-floor sump.

ASSUMPTIONS

Assumptions were made to simplify the system being modeled:

- The tank was modeled as a constant volume (3,000 gallons) continuously stirred tank reactor.

- The sump was assumed to act as a diffusion-less plug flow reactor with a capacity of either 55 or 21,000 gallons and a flow through rate of 35 gpm. The flow rate of 35 gpm is a conservative estimate of the existing sump pump's maximum flowrate. As AQUASIM is a modeling tool designed for continuous systems, the sump could not be modeled without undergoing continuous flow. As such, after all of the IDW is advected from the plug flow reactor, water continues to flow through the plug flow reactor with the same composition as that of the extraction wells. This adds only a minor amount of dilution to the concentrations modeled in the influent tank after the peak concentrations have been achieved.

- Each model run calculates the influent limits with and without the sand filter installation. The sand filters were assumed to catalyze all dissolved iron and manganese at 10,000 µg/L down to 1 µg/L. This assumption stems from the information provided by the manufacturer; additional information, including the manufacturer's removal statement, is provided in Attachment 2.

RESULTS

Tables 3A and 3B summarize maximum IDW water concentrations that can be discharged to the GWTS under various system flow regimes and IDW volumes with sand filters installed. Table 3C summarizes the maximum IDW water concentrations that can be discharged to the GWTS under the various system flow regimes and IDW volumes without sand filters installed. Figures 3A through 3D provide the model diagrams for the four different model run conditions. Graphical model outputs, raw data outputs, and source model for all four runs can be found in Attachment 3. The model diagrams show the results of the run and a comparison with the maximum influent concentrations reaching the lead GAC vessel to meet

effluent limits. All concentrations produced by the model runs were below the maximum influent concentration limits. Maximum IDW concentrations for 400 gpm operating conditions are established from Figure 3B (with and without sand filters).

CONCLUSION

Maximum organic and inorganic concentrations of non-hazardous IDW water have been established for both small and large volumes of IDW under both minimum and maximum flow rates through the GWTS. Based on modeling results, IDW water should not pose a significant impact on the influent concentrations reaching the lead GAC vessel. IDW water concentrations must be documented and compared to the input values modeled for acceptance to the GWTS. If outside the input parameters modeled, the model should be run for that IDW specific concentrations and GWTS flow regimes that will ensure the lead GAC influent limit will not be exceeded.

At no time are the GWTS effluent limits exceeded because both Treatment Train #1 and Treatment Train #2 have a second 20,000 pound lag GAC unit in series behind the lead GAC. When breakthrough occurs in the lead GAC vessel, process flow is switched from the lead GAC vessel to the lag GAC vessel, and the former lead GAC vessel is scheduled for carbon change out.

REFERENCES

Reichert, P. 1994. A*QUASIM - A tool for simulation and data analysis of aquatic systems.* Water Science and Technology. 30(2) Vol. 21-30 p.

Figures

3A Small Volume Investigation-Derived Waste Water Processing at Minimum Flow Conditions, Model Run #1

3B Small Volume Investigation-Derived Waste Water Processing at Maximum Flow Conditions, Model Run #2

3C Large Volume Investigation-Derived Waste Water Processing at Minimum Flow Conditions, Model Run #3

3D Large Volume Investigation-Derived Waste Water Processing at Maximum Flow Conditions, Model Run #4

Tables

3A Small Volume Investigation-Derived Waste Water Production – Maximum Investigation-Derived Waste Water Concentrations Discharged to Sump with Sand Filters Installed

3B Large Volume Investigation-Derived Waste Water Production – Maximum Investigation-Derived Waste Water Concentrations Discharged to Sump with Sand Filters Installed

3C Small and Large Volume Investigation-Derived Waste Water Production – Maximum Investigation-Derived Waste Water Concentrations Discharged to Sump without Sand Filters

Attachments

3A Graphical Model Outputs

3B Raw Model Outputs

3C Source Model Code and AQUASIM Manual

3D Simple Mixing Model Output Table

FIGURES

Extraction Well Water and Influent Tank Initial Composition
EDB – 0.075 µg/L
BTEX – 0 µg/L (all)
Fe – 0 µg/L
Mn – 0 µg/L

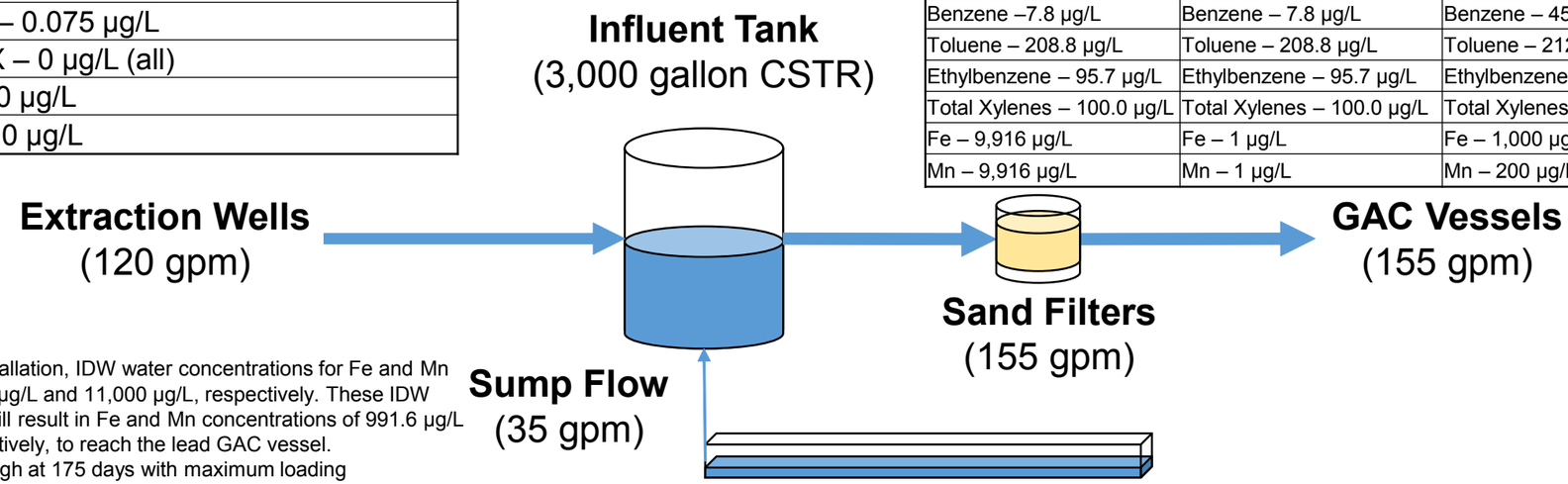

Comparison of Model Run #1 to TIGG Maximum Lead GAC Loading Concentrations		
Influent Modeled Concentrations to the Sand Filters[1]	**Influent Modeled Concentrations Reaching the Lead GAC Vessel**	**Maximum Influent Concentrations Reaching the Lead GAC Vessel to Meet Effluent Limits[2]**
EDB – 19.2 µg/L	EDB – 19.2 µg/L	EDB – 20 µg/L
Benzene –7.8 µg/L	Benzene – 7.8 µg/L	Benzene – 450 µg/L
Toluene – 208.8 µg/L	Toluene – 208.8 µg/L	Toluene – 212 µg/L
Ethylbenzene – 95.7 µg/L	Ethylbenzene – 95.7 µg/L	Ethylbenzene – 102 µg/L
Total Xylenes – 100.0 µg/L	Total Xylenes – 100.0 µg/L	Total Xylenes – 110 µg/L
Fe – 9,916 µg/L	Fe – 1 µg/L	Fe – 1,000 µg/L
Mn – 9,916 µg/L	Mn – 1 µg/L	Mn – 200 µg/L

Maximum IDW Water Concentrations Discharged to Sump	
EDB – 1,100 µg/L	Benzene – 450 µg/L
Toluene – 12,000 µg/L	Ethylbenzene – 5,500 µg/L
Total Xylenes – 5,750 µg/L	Fe – 570,000 µg/L
Mn – 570,000 µg/L	

Notes:

[1] Prior to sand filter installation, IDW water concentrations for Fe and Mn will not exceed 57,000 µg/L and 11,000 µg/L, respectively. These IDW water concentrations will result in Fe and Mn concentrations of 991.6 µg/L and 191.4 µg/L, respectively, to reach the lead GAC vessel.

[2] Lead GAC breakthrough at 175 days with maximum loading concentrations at a continuous flow rate of 400 gpm.

µg/L = microgram(s) per liter
BTEX = benzene, toluene, ethylbenzene, and total xylenes
CSTR = continuously stirred tank reactor
EDB = ethylene dibromide (1,2-dibromoethane)
Fe = dissolved iron
GAC = granular activated carbon
gpm = gallons per minute
IDW = investigation derived waste
Mn = dissolved manganese
PFR = plug flow reactor
Q = quarter

TECHNICIAL MEMORANDUM ESTABLISHING
MAXIMUM INFLUENT LIMITS TO THE
GROUNDWATER TREATMENT SYSTEM
BULK FUELS FACILITY
SOLID WASTE MANAGEMENT UNIT ST-106/SS-111
KIRTLAND AIR FORCE BASE, NEW MEXICO

FIGURE 3A

SMALL VOLUME IDW WATER PROCESSING
AT MINIMUM FLOW CONDITIONS
MODEL RUN #1

P:\gis\Projects\Kirtland\Figures\Internal\4.12.17 Tech Memo\Figure 3A TechMemo.mxd 8/21/2017 EA sbusby

Extraction Well Water and Influent Tank Initial Composition
EDB – 0.075 µg/L
BTEX – 0 µg/L (all)
Fe – 0 µg/L
Mn – 0 µg/L

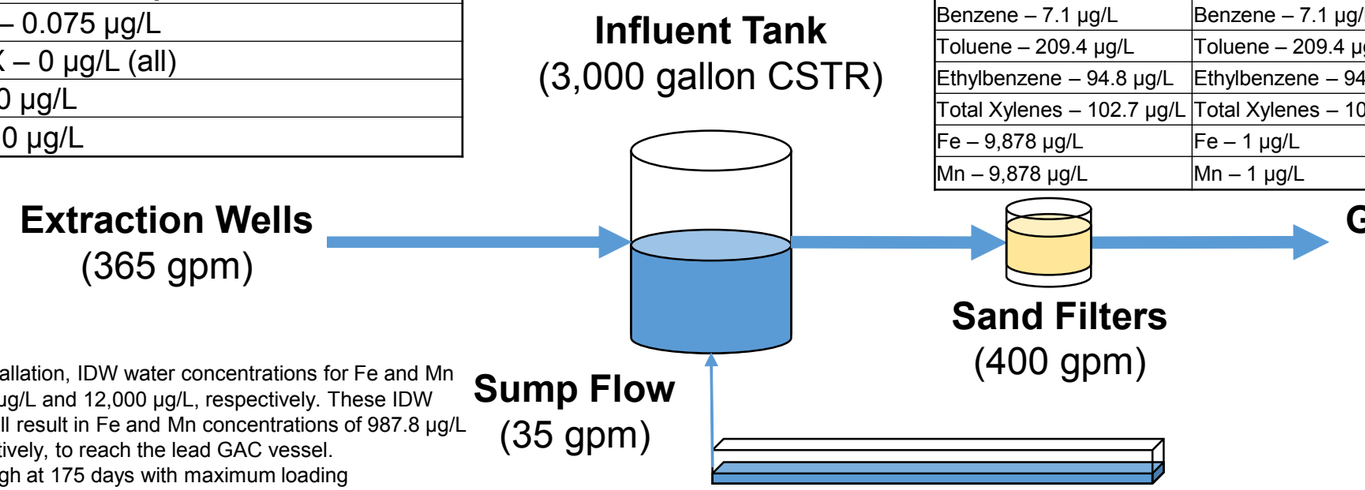

Comparison of Model Run #2 to TIGG Maximum Lead GAC Loading Concentrations		
Influent Modeled Concentrations to the Sand Filters[1]	**Influent Modeled Concentrations Reaching the Lead GAC Vessel**	**Maximum Influent Concentrations Reaching the Lead GAC Vessel to Meet Effluent Limits[2]**
EDB – 19.8 µg/L	EDB – 19.8 µg/L	EDB – 20 µg/L
Benzene – 7.1 µg/L	Benzene – 7.1 µg/L	Benzene – 450 µg/L
Toluene – 209.4 µg/L	Toluene – 209.4 µg/L	Toluene – 212 µg/L
Ethylbenzene – 94.8 µg/L	Ethylbenzene – 94.8 µg/L	Ethylbenzene – 102 µg/L
Total Xylenes – 102.7 µg/L	Total Xylenes – 102.7 µg/L	Total Xylenes – 110 µg/L
Fe – 9,878 µg/L	Fe – 1 µg/L	Fe – 1,000 µg/L
Mn – 9,878 µg/L	Mn – 1 µg/L	Mn – 200 µg/L

Maximum IDW Water Concentrations Discharged to Sump	
EDB – 1,250 µg/L	Benzene – 450 µg/L
Toluene – 13,250 µg/L	Ethylbenzene – 6,000 µg/L
Total Xylenes – 6,500 µg/L	Fe – 625,000 µg/L
Mn – 625,000 µg/L	

Notes:

[1] Prior to sand filter installation, IDW water concentrations for Fe and Mn will not exceed 62,500 µg/L and 12,000 µg/L, respectively. These IDW water concentrations will result in Fe and Mn concentrations of 987.8 µg/L and 189.7 µg/L, respectively, to reach the lead GAC vessel.

[2] Lead GAC breakthrough at 175 days with maximum loading concentrations at a continuous flow rate of 400 gpm.

µg/L = microgram(s) per liter
BTEX = benzene, toluene, ethylbenzene, and total xylenes
CSTR = continuously stirred tank reactor
EDB = ethylene dibromide (1,2-dibromoethane)
Fe = dissolved iron
GAC = granular activated carbon
gpm = gallons per minute
IDW = investigation derived waste
Mn = dissolved manganese
PFR = plug flow reactor
Q = quarter

TECHNICIAL MEMORANDUM ESTABLISHING
MAXIMUM INFLUENT LIMITS TO THE
GROUNDWATER TREATMENT SYSTEM
BULK FUELS FACILITY
SOLID WASTE MANAGEMENT UNIT ST-106/SS-111
KIRTLAND AIR FORCE BASE, NEW MEXICO

FIGURE 3B

SMALL VOLUME IDW WATER PROCESSING
AT MAXIMUM FLOW CONDITIONS
MODEL RUN #2

P:\gis\Projects\Kirtland\Figures\Internal\4.12.17 Tech Memo\Figure 3B TechMemo.mxd 8/21/2017 EA sbusby

Extraction Well Water and Influent Tank Initial Composition
EDB – 0.075 µg/L
BTEX – 0 µg/L (all)
Fe – 0 µg/L
Mn – 0 µg/L

Comparison of Model Run #3 to TIGG Maximum Lead GAC Loading Concentrations		
Influent Modeled Concentrations to the Sand Filters[1]	**Influent Modeled Concentrations Reaching the Lead GAC Vessel**	**Maximum Influent Concentrations Reaching the Lead GAC Vessel to Meet Effluent Limits[2]**
EDB – 19.9 µg/L	EDB – 19.9 µg/L	EDB – 20 µg/L
Benzene – 101.6 µg/L	Benzene – 101.6 µg/L	Benzene – 450 µg/L
Toluene – 211.1 µg/L	Toluene – 211.1 µg/L	Toluene – 212 µg/L
Ethylbenzene – 101.6 µg/L	Ethylbenzene – 101.6 µg/L	Ethylbenzene – 102 µg/L
Total Xylenes – 109.5 µg/L	Total Xylenes – 109.5 µg/L	Total Xylenes – 110 µg/L
Fe – 9,992 µg/L	Fe – 1 µg/L	Fe – 1,000 µg/L
Mn – 9,992 µg/L	Mn – 1 µg/L	Mn – 200 µg/L

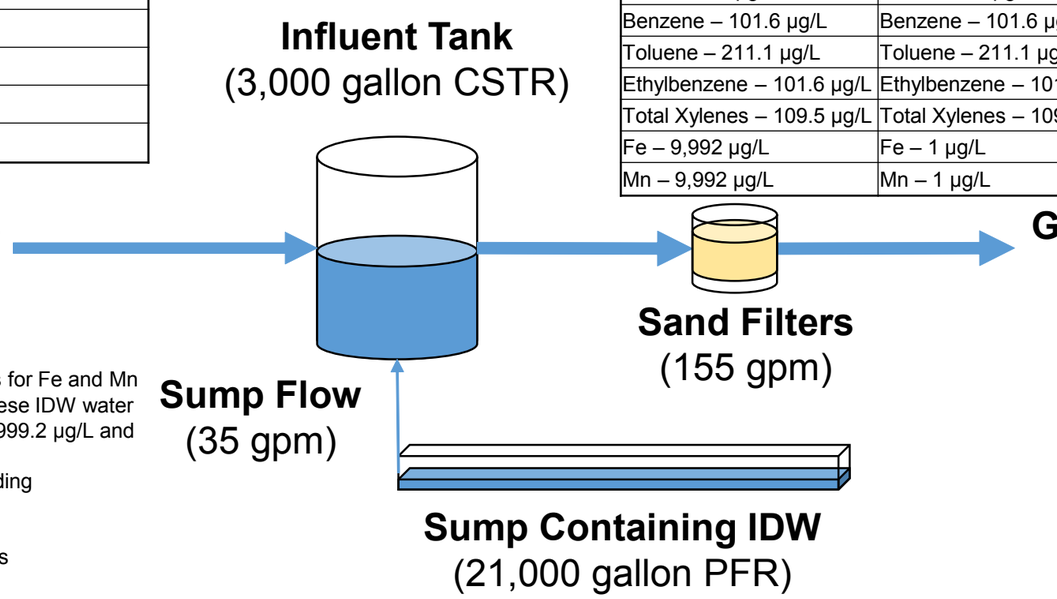

Maximum IDW Water Concentrations Discharged to Sump	
EDB – 88 µg/L	Benzene – 450 µg/L
Toluene – 935 µg/L	Ethylbenzene – 450 µg/L
Total Xylenes – 485 µg/L	Fe – 44,250 µg/L
Mn – 44,250 µg/L	

Notes:

[1] Prior to sand filter installation, IDW water concentrations for Fe and Mn will not exceed 4,425 µg/L and 880 µg/L, respectively. These IDW water concentrations will result in Fe and Mn concentrations of 999.2 µg/L and 198.7 µg/L, respectively, to reach the lead GAC vessel.

[2] Lead GAC breakthrough at 175 days with maximum loading concentrations at a continuous flow rate of 400 gpm.

µg/L = microgram(s) per liter
BTEX = benzene, toluene, ethylbenzene, and total xylenes
CSTR = continuously stirred tank reactor
EDB = ethylene dibromide (1,2-dibromoethane)
Fe = dissolved iron
GAC = granular activated carbon
gpm = gallons per minute
IDW = investigation derived waste
Mn = dissolved manganese
PFR = plug flow reactor
Q = quarter

TECHNICIAL MEMORANDUM ESTABLISHING
MAXIMUM INFLUENT LIMITS TO THE
GROUNDWATER TREATMENT SYSTEM
BULK FUELS FACILITY
SOLID WASTE MANAGEMENT UNIT ST-106/SS-111
KIRTLAND AIR FORCE BASE, NEW MEXICO

FIGURE 3C

LARGE VOLUME IDW WATER PROCESSING
AT MINIMUM FLOW CONDITIONS
MODEL RUN #3

P:\gis\Projects\Kirtland\Figures\Internal\4.12.17 Tech Memo\Figure 3C TechMemo.mxd 8/21/2017 EA sbusby

Extraction Well Water and Influent Tank Initial Composition
EDB – 0.075 µg/L
BTEX – 0 µg/L (all)
Fe – 0 µg/L
Mn – 0 µg/L

Comparison of Model Run #4 to TIGG Maximum Lead GAC Loading Concentrations		
Influent Modeled Concentrations to the Sand Filters[1]	**Influent Modeled Concentrations Reaching the Lead GAC Vessel**	**Maximum Influent Concentrations Reaching the Lead GAC Vessel to Meet Effluent Limits[2]**
EDB – 19.8 µg/L	EDB – 19.8 µg/L	EDB – 20 µg/L
Benzene – 39.4 µg/L	Benzene – 39.4 µg/L	Benzene – 450 µg/L
Toluene – 210.0 µg/L	Toluene – 210.0 µg/L	Toluene – 212 µg/L
Ethylbenzene – 100.6 µg/L	Ethylbenzene – 100.6 µg/L	Ethylbenzene – 102 µg/L
Total Xylenes – 107.2 µg/L	Total Xylenes – 107.2 µg/L	Total Xylenes – 110 µg/L
Fe – 9,844 µg/L	Fe – 1 µg/L	Fe – 1,000 µg/L
Mn – 9,844 µg/L	Mn – 1 µg/L	Mn – 200 µg/L

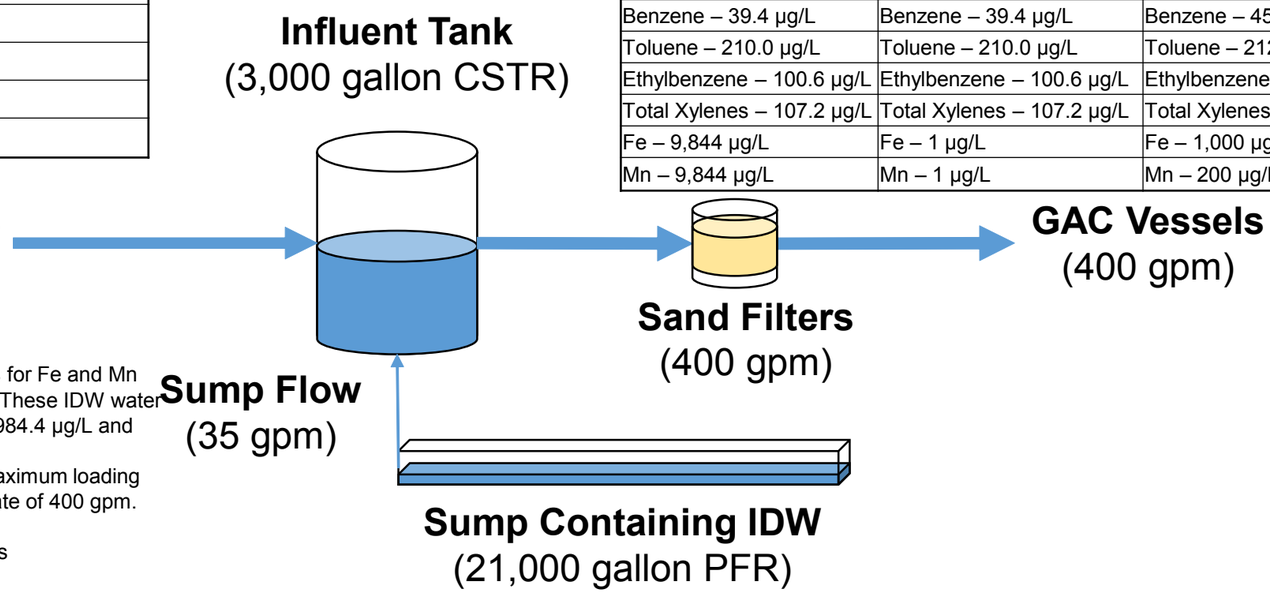

Maximum IDW Water Concentrations Discharged to Sump	
EDB – 225 µg/L	Benzene – 450 µg/L
Toluene – 2,400 µg/L	Ethylbenzene – 1,150 µg/L
Total Xylenes – 1,225 µg/L	Fe – 112,500 µg/L
Mn – 112,500 µg/L	

Notes:

[1] Prior to sand filter installation, IDW water concentrations for Fe and Mn will not exceed 11,250 µg/L and 2,250 µg/L, respectively. These IDW water concentrations will result in Fe and Mn concentrations of 984.4 µg/L and 196.9 µg/L, respectively, to reach the lead GAC vessel.

[2] Lead GAC breakthrough of organics at 175 days with maximum loading concentrations calculated by TIGG at a continuous flow rate of 400 gpm.

µg/L = microgram(s) per liter
BTEX = benzene, toluene, ethylbenzene, and total xylenes
CSTR = continuously stirred tank reactor
EDB = ethylene dibromide (1,2-dibromoethane)
Fe = dissolved iron
GAC = granular activated carbon
gpm = gallons per minute
IDW = investigation derived waste
Mn = dissolved manganese
PFR = plug flow reactor
Q = quarter

TECHNICIAL MEMORANDUM ESTABLISHING
MAXIMUM INFLUENT LIMITS TO THE
GROUNDWATER TREATMENT SYSTEM
BULK FUELS FACILITY
SOLID WASTE MANAGEMENT UNIT ST-106/SS-111
KIRTLAND AIR FORCE BASE, NEW MEXICO

FIGURE 3D

LARGE VOLUME IDW WATER PROCESSING
AT MAXIMUM FLOW CONDITIONS
MODEL RUN #4

TABLES

Table 3A
Small Volume IDW Water Production - Maximum IDW Water Concentrations Discharged to Sump with Sand Filters Installed

Minimum Flow Conditions - Model Run #1			
Analyte	**Influent Modeled Concentrations to the Sand Filters (µg/L)**	**Influent Modeled Concentrations Reaching the Lead GAC Vessel (µg/L)**	**Maximum Influent Concentrations Reaching the Lead GAC Vessel to Meet Effluent Limits[1] (µg/L)**
EDB	19.2	19.2	20
Benzene	7.8	7.8	450
Toluene	208.8	208.8	212
Ethylbenzene	95.7	95.7	102
Total Xylenes	100.0	100.0	110
Dissolved Iron	9,916	1.0	1,000
Dissolved Manganese	9,916	1.0	200
Maximum Flow Conditions - Model Run #2			
Analyte	**Influent Modeled Concentrations to the Sand Filters (µg/L)**	**Influent Modeled Concentrations Reaching the Lead GAC Vessel (µg/L)**	**Maximum Influent Concentrations Reaching the Lead GAC Vessel to Meet Effluent Limits[1] (µg/L)**
EDB	19.8	19.8	20
Benzene	7.1	7.1	450
Toluene	209.4	209.4	212
Ethylbenzene	94.8	94.8	102
Total Xylenes	10.7	10.7	110
Dissolved Iron	9,878	1.0	1,000
Dissolved Manganese	9,878	1.0	200

[1] Concentrations result in modeled breakthrough of the lead GAC after 175 days at conservative flow rate of 400 gpm.
µg/L = microgram(s) per liter
EDB = ethylene dibromide
GAC = granular activated carbon

Table 3B
Large Volume IDW Water Production - Maximum IDW Water Concentrations Discharged to Sump with Sand Filters Installed

Minimum Flow Conditions - Model Run #3			
Analyte	**Influent Modeled Concentrations to the Sand Filters (µg/L)**	**Influent Modeled Concentrations Reaching the Lead GAC Vessel (µg/L)**	**Maximum Influent Concentrations Reaching the Lead GAC Vessel to Meet Effluent Limits[1] (µg/L)**
EDB	19.9	19.9	20
Benzene	101.6	101.6	450
Toluene	211.1	211.1	212
Ethylbenzene	101.6	101.6	102
Total Xylenes	109.5	109.5	110
Dissolved Iron	9,992	1.0	1,000
Dissolved Manganese	9,992	1.0	200
Maximum Flow Conditions - Model Run #4			
Analyte	**Influent Modeled Concentrations to the Sand Filters (µg/L)**	**Influent Modeled Concentrations Reaching the Lead GAC Vessel (µg/L)**	**Maximum Influent Concentrations Reaching the Lead GAC Vessel to Meet Effluent Limits[1] (µg/L)**
EDB	19.8	19.8	20
Benzene	39.4	39.4	450
Toluene	210.0	210.0	212
Ethylbenzene	100.6	100.6	102
Total Xylenes	107.2	107.2	110
Dissolved Iron	9,844	1.0	1,000
Dissolved Manganese	9,844	1.0	200

[1] Concentrations result in modeled breakthrough of the lead GAC after 175 days at conservative flow rate of 400 gpm.
µg/L = microgram(s) per liter
EDB = ethylene dibromide
GAC = granular activated carbon

Table 3C
Small and Large Volume IDW Water Production -
Maximum IDW Water Concentrations Discharged to Sump Without Sand Filters Installed

Minimum Flow Conditions - Model Run #1		
Analyte	**Influent Modeled Concentrations Reaching the Lead GAC Vessel without Sand Filters (µg/L)**	**Maximum Influent Concentrations Reaching the Lead GAC Vessel to Meet Effluent Limits[1] (µg/L)**
EDB	19.2	20
Benzene	7.8	450
Toluene	208.8	212
Ethylbenzene	95.7	102
Total Xylenes	100.0	110
Dissolved Iron	57,000	1,000
Dissolved Manganese	11,000	200
Maximum Flow Conditions - Model Run #2		
Analyte	**Influent Modeled Concentrations Reaching the Lead GAC Vessel without Sand Filters (µg/L)**	**Maximum Influent Concentrations Reaching the Lead GAC Vessel to Meet Effluent Limits[1] (µg/L)**
EDB	19.8	20
Benzene	7.1	450
Toluene	209.4	212
Ethylbenzene	94.8	102
Total Xylenes	10.7	110
Dissolved Iron	62,500	1,000
Dissolved Manganese	12,000	200
Minimum Flow Conditions - Model Run #3		
Analyte	**Influent Modeled Concentrations Reaching the Lead GAC Vessel without Sand Filters (µg/L)**	**Maximum Influent Concentrations Reaching the Lead GAC Vessel to Meet Effluent Limits[1] (µg/L)**
EDB	19.9	20
Benzene	101.6	450
Toluene	211.1	212
Ethylbenzene	101.6	102
Total Xylenes	109.5	110
Dissolved Iron	4,425	1,000
Dissolved Manganese	880	200
Maximum Flow Conditions - Model Run #4		
Analyte	**Influent Modeled Concentrations Reaching the Lead GAC Vessel without Sand Filters (µg/L)**	**Maximum Influent Concentrations Reaching the Lead GAC Vessel to Meet Effluent Limits[1] (µg/L)**
EDB	19.8	20
Benzene	39.4	450
Toluene	210	212
Ethylbenzene	100.6	102
Total Xylenes	107.2	110
Dissolved Iron	11,250	1,000
Dissolved Manganese	2,250	200

[1] Concentrations result in modeled breakthrough of the lead GAC after 175 days at conservative flow rate of 400 gpm.
µg/L = microgram(s) per liter
EDB = ethylene dibromide
GAC = granular activated carbon

ATTACHMENT 3A

GRAPHICAL MODEL OUTPUTS

Small Volume IDW Water Processing at Minimum Flow Conditions Model Run #1

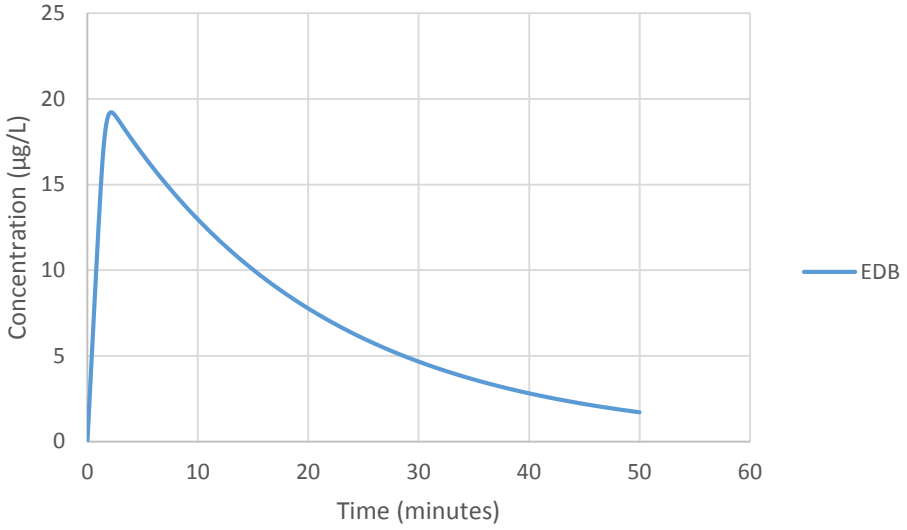

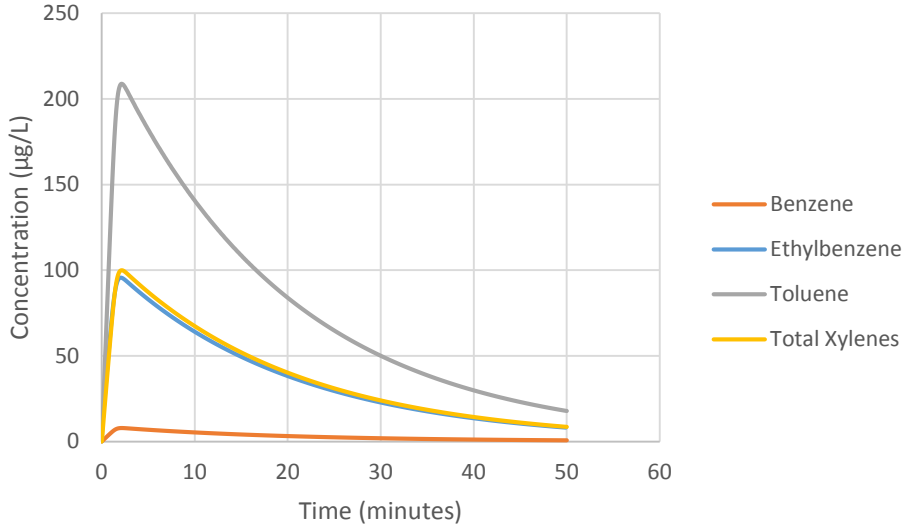

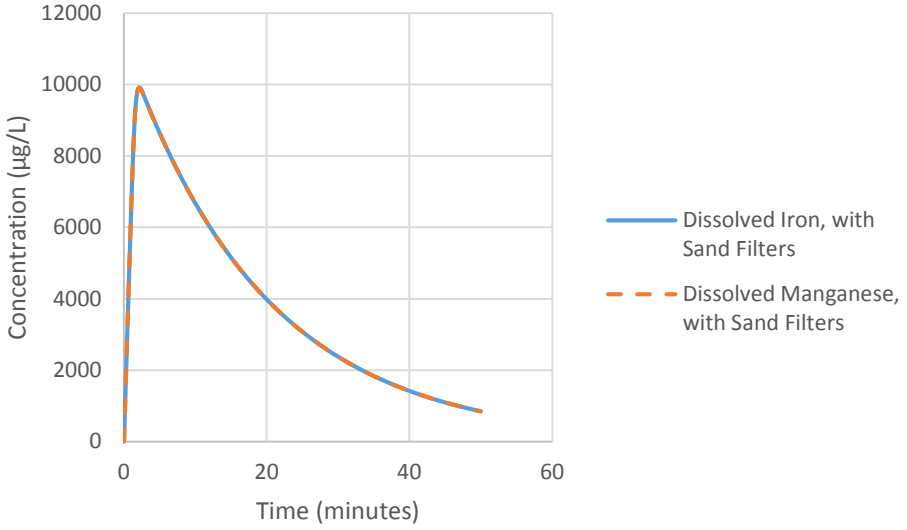

Dissolved Metals Concentrations With Sand Filters

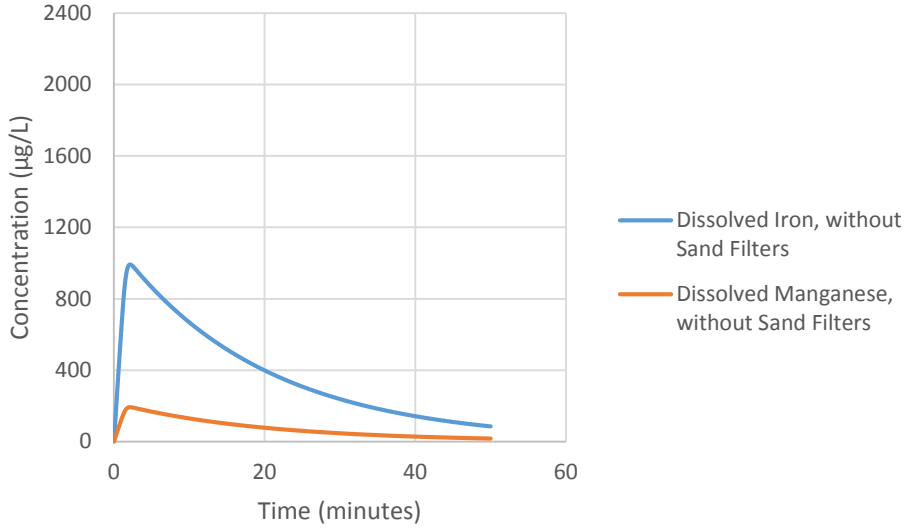

Dissolved Metals Concentrations Without Sand Filters

Small Volume IDW Water Processing at Maximum Flow Conditions Model Run #2

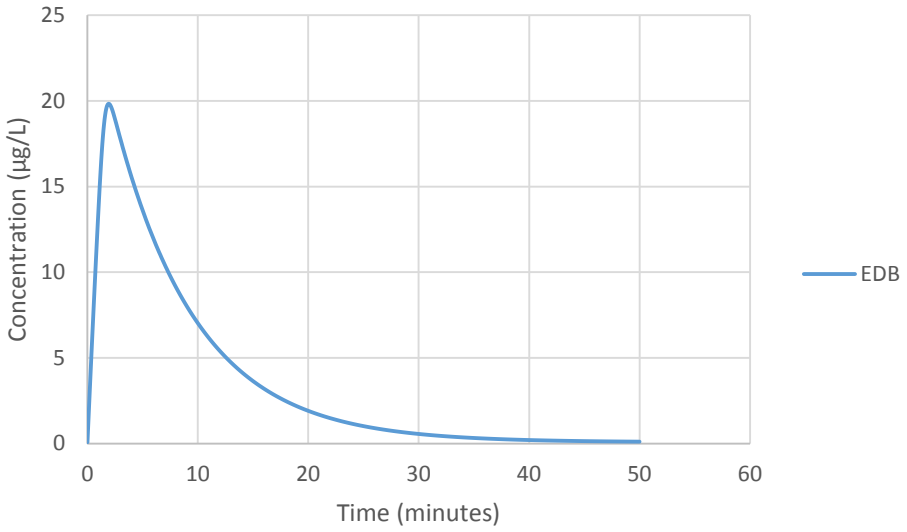

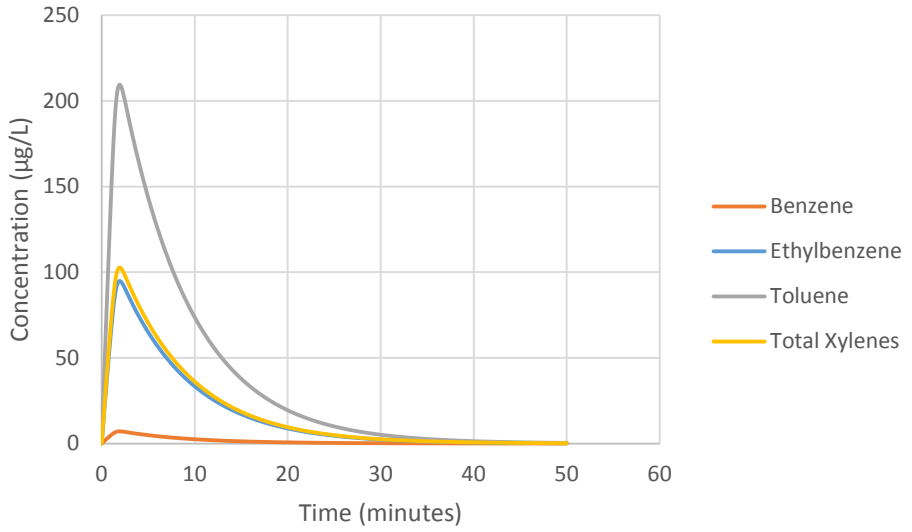

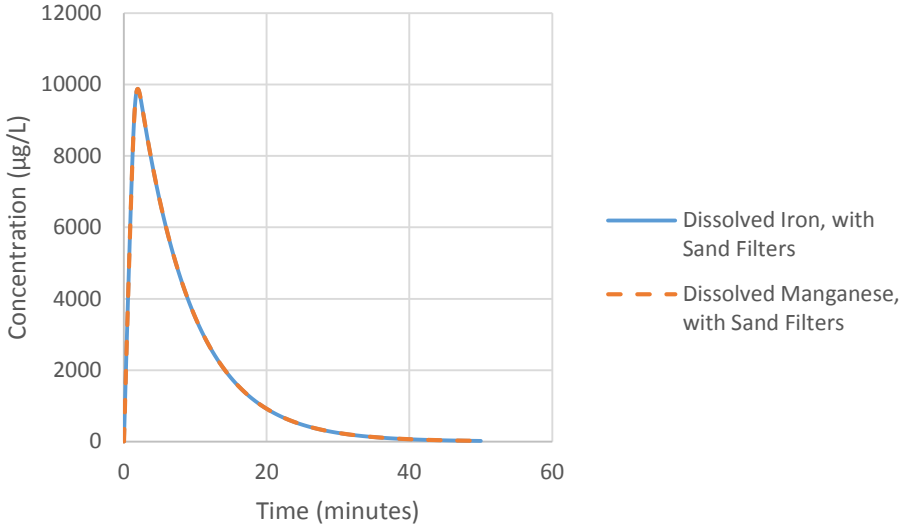

Dissolved Metals Concentrations With Sand Filters

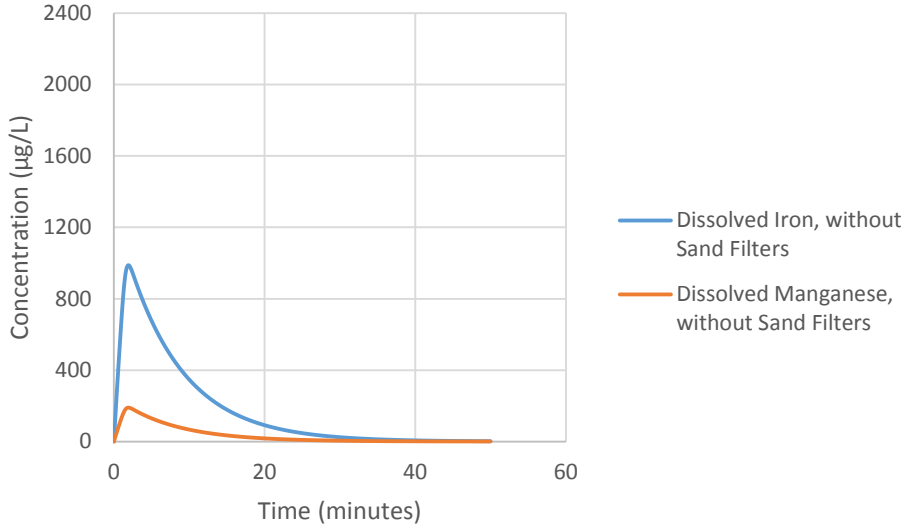

Dissolved Metals Concentrations Without Sand Filters

Large Volume IDW Water Processing at Minimum Flow Conditions Model Run #3

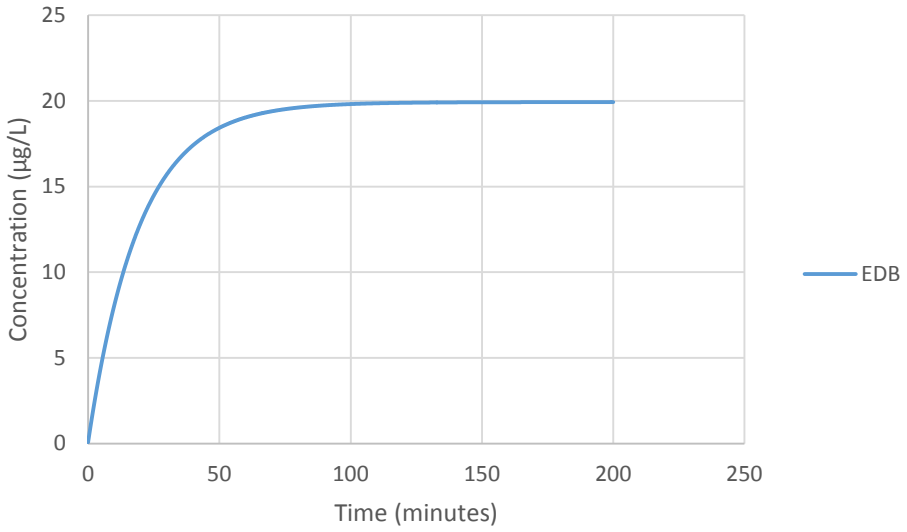

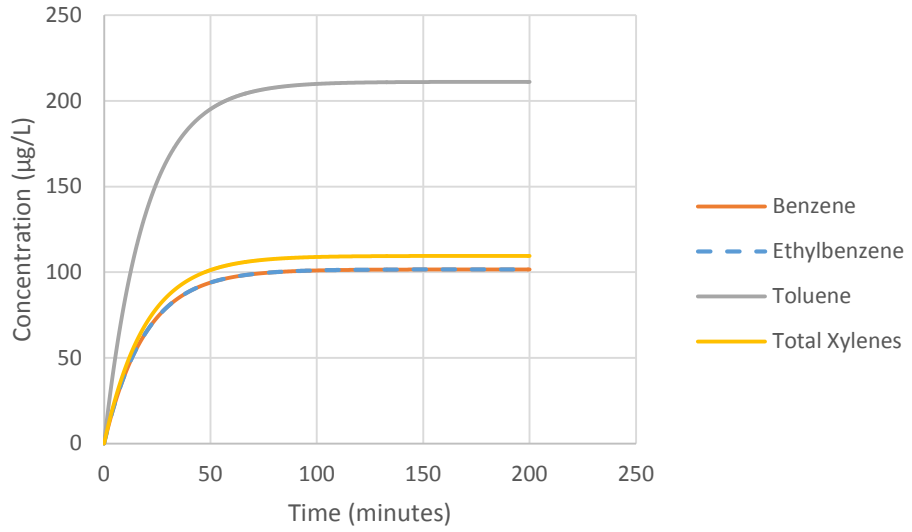

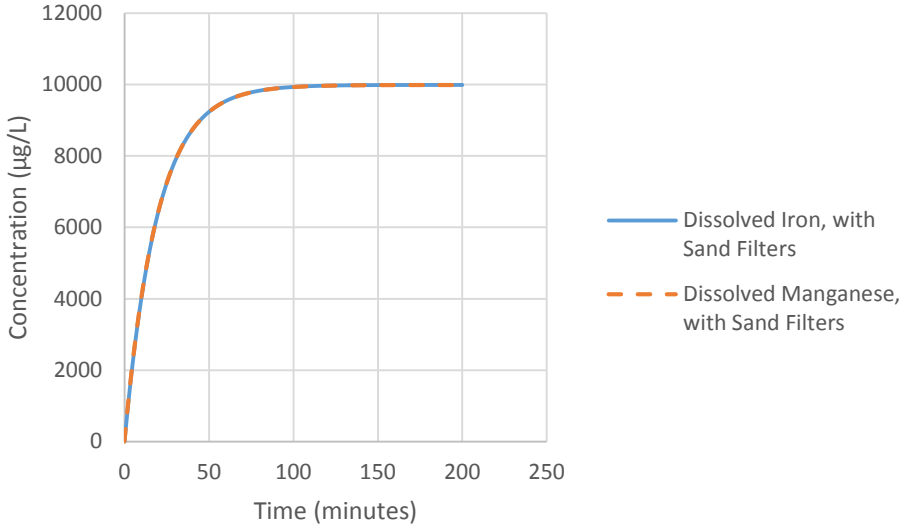

Dissolved Metals Concentrations With Sand Filters

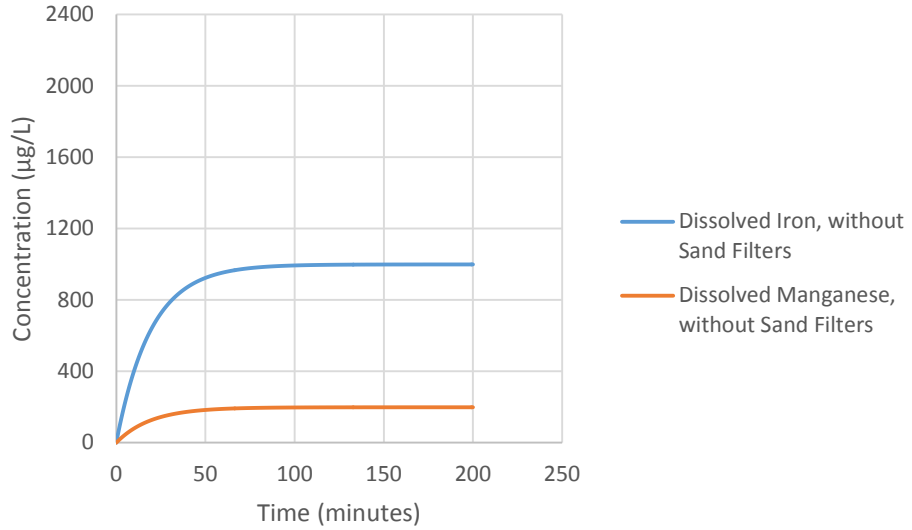

Dissolved Metals Concentrations Without Sand Filters

Large Volume IDW Water Processing at Maximum Flow Conditions Model Run #4

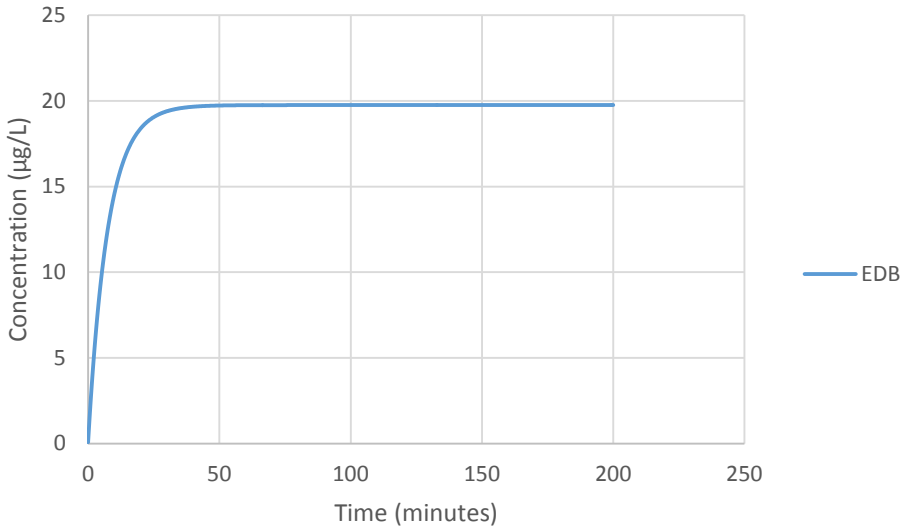

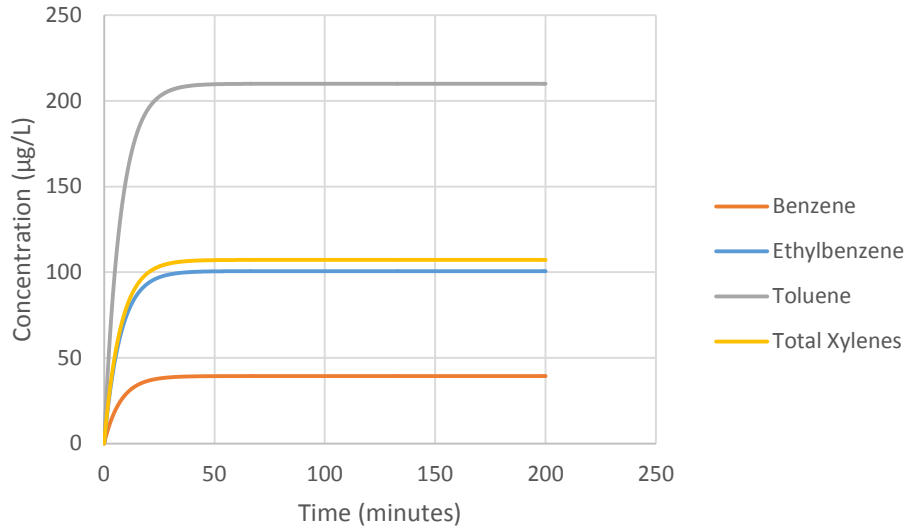

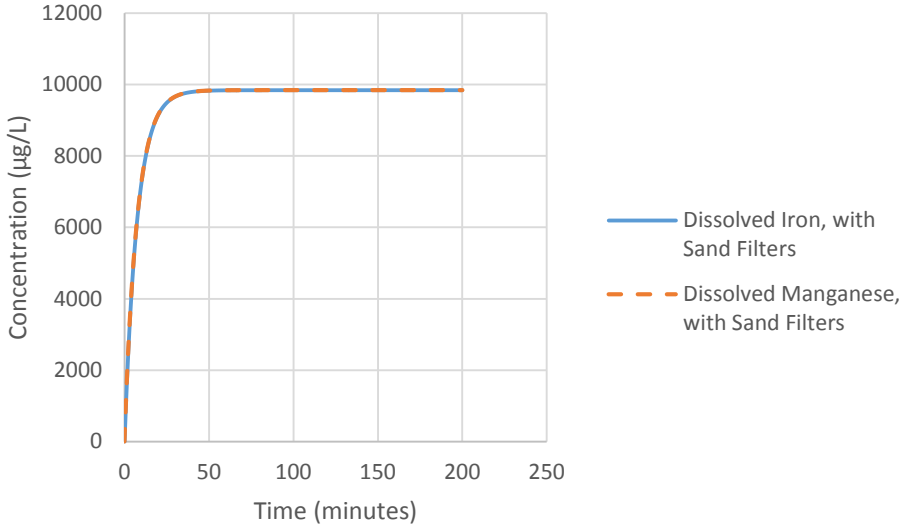

Dissolved Metals Concentrations With Sand Filters

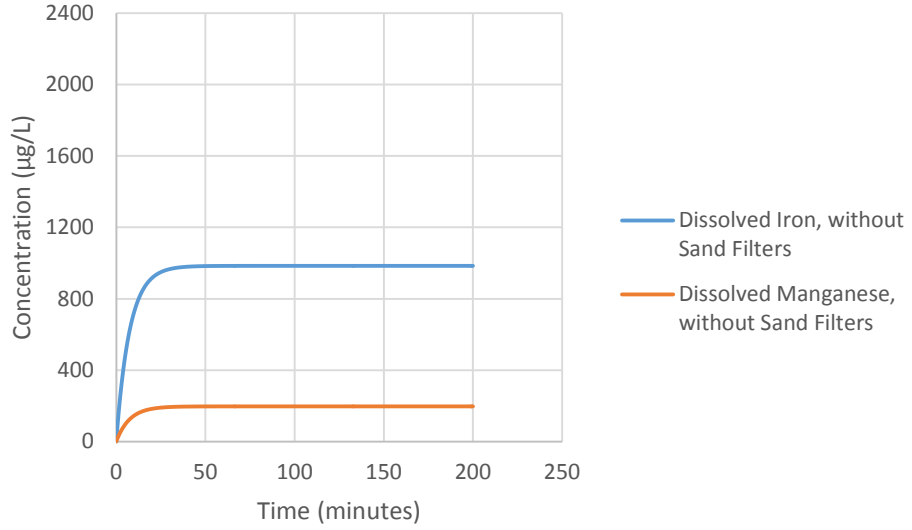

Dissolved Metals Concentrations Without Sand Filters

ATTACHMENT 3B

RAW MODEL OUTPUTS

(Provided on Compact Disc)

ATTACHMENT 3C

SOURCE MODEL CODE AND AQUASIM MANUAL

(Provided on Compact Disc)

ATTACHMENT 3D

SIMPLE MIXING MODEL OUTPUT TABLE

Table 3D
Maximum Influent Concentrations to Meet Effluent Limits

Analyte	Maximum Influent Concentrations Reaching the Lead GAC Vessel[1] (µg/L)	Maximum Concentrations of IDW Water to be Processed by the GWTS with Sand Filters[2] (µg/L)	Maximum Concentrations of Water Produced from a Single Extraction Well with Sand Filters[3] (µg/L)
EDB	20	1,250	41
Benzene	450	450	405
Toluene	212	13,250	436
Ethylbenzene	102	6,000	210
Total Xylenes	110	6,500	226
Dissolved Iron	1,000	625,000	20,571
Dissolved Manganese	200	625,000	20,571

Footnotes:

[1] Influent concentrations measured at the influent sample location. Influent concentrations result in modeled breakthrough of the lead GAC after 175 days at conservative flow rate of 400 gpm.

[2] Maxiumum IDW concentrations presented were generated from the AQUASIM Model. The following two simple batch mixing calculations for EDB and dissolved manganese provide a check to ensure that the model is operating properly:

$$[(Ci) \times (Vi) + (Ce) \times (Vi+Ve)] / (Vt) = Ct$$
$$[(1{,}250\ \mu g/L) \times (55\ gal) + (0.075\ \mu g/L) \times (3{,}000\ gal + 730\ gal)] / (3785\ gal) = 18.2\ \mu g/L$$

Ci = the concentration of EDB in the IDW in µg/L

Vi = the volume of IDW processed by the GWTS in gallons

Ce = the average concentration of EDB from the extraction wells in µg/L

Vi = the initial volume of the influent tank in gallons

Ve = the volume of water provided from the extraction wells over the course of two minutes in gallons

Vt = the total volume of the IDW, tank, and from the extraction wells in gallons

Ct = the concentration of EDB in the total volume of water prior to sand filters

Assumes all IDW is transfered to the influent tank over two minutes, complete mixing in the influent tank, and no outflow of water.

$$[(Ci) \times (Vi) + (Ce) \times (Vi+Ve)] / (Vt) = Ct$$
$$[(625{,}000\ \mu g/L) \times (55\ gal) + (0\ \mu g/L) \times (3{,}000\ gal + 730\ gal)] / (3785\ gal) = 9082\ \mu g/L \times 0.0001(SFR) = 0.9082\ \mu g/L$$

Ci = the concentration of dissolved manganese in the IDW in µg/L

Vi = the volume of IDW processed by the GWTS in gallons

Ce = the average concentration of dissolved manganese from the extraction wells in µg/L

Vi = the initial volume of the influent tank in gallons

Ve = the volume of water provided from the extraction wells over the course of two minutes in gallons

Vt = the total volume of the IDW, tank, and from the extraction wells in gallons

Ct = the concentration of dissolved manganese in the total volume of water prior to sand filters

SFR = Sand Filter Reduction is 10,000 µg/L of dissolved manganese to below 1 µg/L

Assumes all IDW is transfered to the influent tank over two minutes, complete mixing in the influent tank, no outflow of water (batch process)

Table 3D
Maximum Influent Concentrations to Meet Effluent Limits

[3] Maximum concentrations of water produced from a single well were calculated assuming a maximum well flowrate of 175 gpm and a maximum system flowrate of 400 gpm. The following simple continuous mixing calculation was used to calculate the values listed above:

$$[(Ce) \times (Qe) + (Ch) \times (Qh)] / (Qt) = Ct$$
$$[(0.075\ \mu g/L) \times (225\ gal) + (41\ \mu g/L) \times (175\ gal)] / (400\ gal) = 18\ \mu g/L$$

Ce = the average concentration of EDB from the extraction wells in µg/L

Qe = the flow of water provided from the extraction wells in gpm

Ch = the concentration of EDB in the high concentration well in µg/L

Qh = the flow of water provided from the high concentration extraction well in gpm

Qt = the total flow of water extracted from all extraction wells in gpm

Ct = the concentration of EDB in the influent water in µg/L

Assumes complete mixing of the extraction well water, calculated concentrations cannot exceed 90% of Maximum influnet concentrations reaching the Lead GAC Vessel, and the sand filters can treat up to 10,000 µg/L of dissolved manganese to below 1 µg/L.

Acronyms and Abbreviations:

EDB = ethylene dibromide

GAC = granular activated carbon

gal = gallons

GCMP = golf course main pond

gpm = gallons per minute

IDW = investigation-derived waste

MCL = Maximum Contaminant Level

APPENDIX R

Approved Standard Operating Procedures

DEPARTMENT OF THE AIR FORCE
377TH AIR BASE WING (AFGSC)

Colonel Dawn A. Nickell
377th Air Base Wing
2000 Wyoming Blvd SE
Kirtland AFB NM 87117

MAR 05 2018

Mr. John Kieling, Bureau Chief
Hazardous Waste Bureau (HWB)
New Mexico Environment Department (NMED)
2905 Rodeo Park Drive East, Building 1
Santa Fe NM 87505-6303

Dear Mr. Kieling

Attached please find the *Standard Operating Procedure for Effluent Conveyance Line Integrity Testing of the Groundwater Treatment System.* This procedure has been prepared to summarize the testing approach proposed to ensure compliance with Condition 15 of the Discharge Permit DP-1839 associated with the discharge of treated water from the groundwater treatment system at ST-106/SS-111.

If you have any questions or concerns, please contact Mr. Scott Clark at (505) 846-9017 or at scott.clark@us.af.mil or Holly O'Grady at (505) 853-3484 or at holly.ogrady@us.af.mil.

Sincerely

DAWN A. NICKELL, Colonel, USAF
Vice Commander

Attachment:
Standard Operating Procedure for Effluent Conveyance Line Integrity Testing of the Groundwater Treatment System; 2 Hard Copies/2 CDs

cc:
NMED (Borrego) letter
NMED GWQB (McQuillan, Hunter), letter and CD
EPA Region 6 (King, Ellinger), letter and CD
COA (Faris), letter and CD
ABCWUA (Shean), letter and CD
SAF-IEE (Lynnes), electronic only
AFCEC/CZ (Renaghan, Clark, O'Grady), electronic only
USACE-ABQ District Office (Simpler, Phaneuf, Dreeland, Sanchez, Salazar), electronic only
Public Info Repository, Administrative Record/Information Repository (AR/IR) and File

Standard Operating Procedure for Effluent Conveyance Line Integrity Testing of the Groundwater Treatment System

Revision 0
March 2018

This page intentionally left blank

CONTENTS

Section **Page**

DOCUMENT REVISION HISTORY ii

1. SCOPE AND APPLICATION 1

2. MATERIALS 1

3. PROCEDURE 2

4. MAINTENANCE 3

5. PRECAUTIONS 3

6. REFERENCES 4

FIGURES

1 Effluent Conveyance Line Test Section and Isolation Valves

ATTACHMENTS

1 Hydrostatic Pressure Testing Form

DOCUMENT REVISION HISTORY

ORIGINAL (MASTER) DOCUMENT REVISION HISTORY				
Revision Number	**Revision Date**	**Revision Summary**	**Revised By**	**Reviewed By**
0	2/8/2018	Created Standard Operating Procedure	K. McKeage	T. Curley

1. SCOPE AND APPLICATION

The purpose of this Standard Operating Procedure is to delineate protocols for performing effluent conveyance line integrity testing at the Kirtland Air Force Base groundwater treatment system (GWTS) in accordance with Discharge Permit (DP)-1839 (New Mexico Environment Department, 2017; Condition Number [No.] 15). Condition No. 15 of DP-1839 states the following:

> *The Permittee shall ensure the treated effluent conveyance system, i.e., piping, between the GWTS and the UIC well(s) does not leak and shall report any such leakage to the NMED GWQB in accordance with 20.6.2.1203(A) NMAC and copy the NMED HWB. Within 1 year of the effective date of this Discharge Permit, the Permittee shall demonstrate the structural integrity of the treated effluent conveyance system between the GWTS and KAFB-7. Prior to testing, the Permittee shall propose for NMED approval the test method to be used. The results of the mechanical integrity testing shall be submitted to NMED within 60 days of test completion. The Permittee shall integrity test the treated effluent conveyance system between GWTS and the UIC well(s) prior to submitting a permit renewal application.*

The line must be tested within year one of DP-1839 approval (by April 28, 2018) and in year five of the approval before a renewal application is submitted (2022).

Hydrostatic specified test pressure (STP) is recommended at 150 percent (%) of operating pressure per American Society of Mechanical Engineers (ASME) B31.3 Part 345 and will be measured at gauge PI-3208 on the effluent skid No. 2. The current operating pressure in the effluent conveyance line is approximately 12 pounds per square inch (psi) with a high pressure alarm at 45 psi; thus, an STP of 50 psi has been specified for this test (10% higher than the high pressure alarm set point). The final pressure will be compared to the STP at the end of the test period. ASTM International F2164 – 13 defines a hydrostatic pressure test as acceptable if the final pressure does not deviate by more than 30% from the STP reading (± 15 psi for this test). The results of the hydrostatic test will be included in the test report. Although the ASTM International F2164 – 13 method requires an air volume and rebound assessment for the installation of new, uniform piping, these assessments will not be performed due to the varying pipe thicknesses, types, and age of the pipes that comprise the effluent conveyance line.

2. EQUIPMENT AND MATERIALS

The following equipment and materials may be required:

- Valve stem for actuating flush-mounted valves along KAFB-7 effluent conveyance line.
- 50-foot garden hose
- Field logbook

- Indelible ink pen
- Manhole cover hook to open effluent conveyance line vaults
- Camera.

3. PROCEDURE

Effluent conveyance line integrity testing is performed by hydrostatic leak testing the line. To perform the test, the GWTS needs to be shut down prior to performing these tests. Refer to the GWTS Operations and Maintenance Plan (U.S. Army Corps of Engineers, 2016) or most current approved version to successfully shut down the system. Ensure the effluent skid pumps are placed into manual mode on their variable frequency drives (VFDs) to prevent accidental remote startup.

Hydrostatic testing is performed following the steps outlined below:

1. The sampling port on train 2 is adapted to accept a male 5/8-inch garden hose fitting.

2. The effluent conveyance line should be filled with water by closing all air relief valves (ARVs) and manually operating the effluent pumps to discharge water to the golf course pond with both changeover valves open. The effluent pump is then shut down and the changeover valve leading to the golf course and isolation valve at KAFB-7 (Figure 1) are then immediately closed. The vacuum within the effluent conveyance line should siphon water from the effluent tank to fill the line.

3. The effluent conveyance line may now be isolated to perform testing. To isolate the line, the effluent skid butterfly valves on both treatment trains are closed. Ensure the changeover valve to the golf course is closed, the changeover valve to KAFB-7 is opened, and the isolation valve immediately upstream of the KAFB-7 flowmeter is closed (Figure 1). Verify all effluent conveyance line ARVs have been closed. The effluent flow control valve located on the GWTS effluent pipe tree is then manually opened to 100% open. The effluent conveyance line has now been isolated and testing can proceed.

4. A garden hose is connected to the 100-psi Base supply water line located on the south wall of the GWTS. Evacuate all air from the hose prior to connecting it to the adapted sampling port.

5. During the initial pressurization, the ARV located on the effluent conveyance line within the GWTS shall be opened to vent any remaining air from the effluent conveyance line. If air venting is observed from the ARV then additional water shall be pumped into the line by manually operating one of the effluent skid pumps, at a low VFD frequency. This process shall continue until no air venting is observed out of the ARV. If pressurization still cannot be obtained then it is likely that excess air is entrained at a high point within

the line; in which case each ARV along the effluent line (starting at KAFB Well 7 and working upstream towards the GWTS) will have to be opened to bleed air. Any time air is bled from the line additional water shall have to added using the effluent skid pump or base supply line depending on the volume needed. All ARVs and butterfly valves shall be closed prior to reattempting the initial pressurization. Once all of the air has been flushed from the line, fresh water from the 100-psi line is then introduced into the effluent conveyance line to a set pressure of 50 psi. The line pressure is monitored on an existing gauge provided on the train 2 skid. The addition of water is controlled using an existing ball valve located between the adapted sampling port and the effluent conveyance line.

6. The effluent conveyance line is then given 30 minutes to allow expansion of the high density polyethylene in response to the set pressure. Successive additions of water can be performed during this time to ensure that the set pressure is maintained at 50 psi.

7. The pressure is then monitored for 1 hour, during which GWTS personnel will visually inspect the effluent conveyance line (where exposed) to ensure that the line is not leaking. All visual observations will be included in the test report.

8. Following the 1 hour of monitoring, the final pressure will be compared to the set pressure. Test results and observations will be recorded on the testing form (Attachment 1) and provided in the test report submitted to the U.S. Air Force for final evaluation.

9. The effluent conveyance line is then reinstated into operation by opening the effluent skid butterfly valves on both treatment trains, the isolation valve upstream of the KAFB-7 flowmeter, all effluent conveyance line ARVs, and selecting an appropriate discharge location with the changeover valves. The effluent pumps are then returned to automatic control and the GWTS is restarted per the GWTS Operations and Maintenance Plan (U.S. Army Corps of Engineers, 2016) or most current approved version.

4. MAINTENANCE

Not applicable.

5. PRECAUTIONS

Ensure the GWTS has been fully shut down prior to pressure testing and confirm that the effluent skid pump VFDs are in manual mode prior to isolating the effluent conveyance line. Review the appropriate sections of any relevant safety documentation (i.e., an Accident Prevention Plan).

6. REFERENCES

American Society of Mechanical Engineers (ASME) B31.3 Part 345. *Process Piping, Inspection, Examination, and Testing*. ASME. New York, NY. 2016

ASTM International F2164 – 13. *Standard Practice for Field Leak Testing of Polyethylene (PE) and Crosslinked Polyethylene (PEX) Pressure Piping Systems Using Hydrostatic Pressure*. ASTM International. West Conshohocken, PA. 2013.

New Mexico Environment Department. 2017. Correspondence from Michelle Hunter, Chief, Ground Water Quality Bureau to Colonel Eric. H. Froehlich, Base Commander, Kirtland AFB, New Mexico, Regarding Discharge Permit Issuance, DP-1839, Kirtland Air Force Base. April 28.

U.S. Army Corps of Engineers. 2016. *Operations and Maintenance Plan, Groundwater Treatment System – Annual Update, Bulk Fuels Facility, SWMU ST-106/SS-111, Kirtland Air Force Base, New Mexico.* Prepared by EA Engineering, Science, and Technology, Inc., PBC for the USACE–Albuquerque District under USACE Contract No. W912DR-12-D-0006. August.

FIGURES

This page intentionally left blank

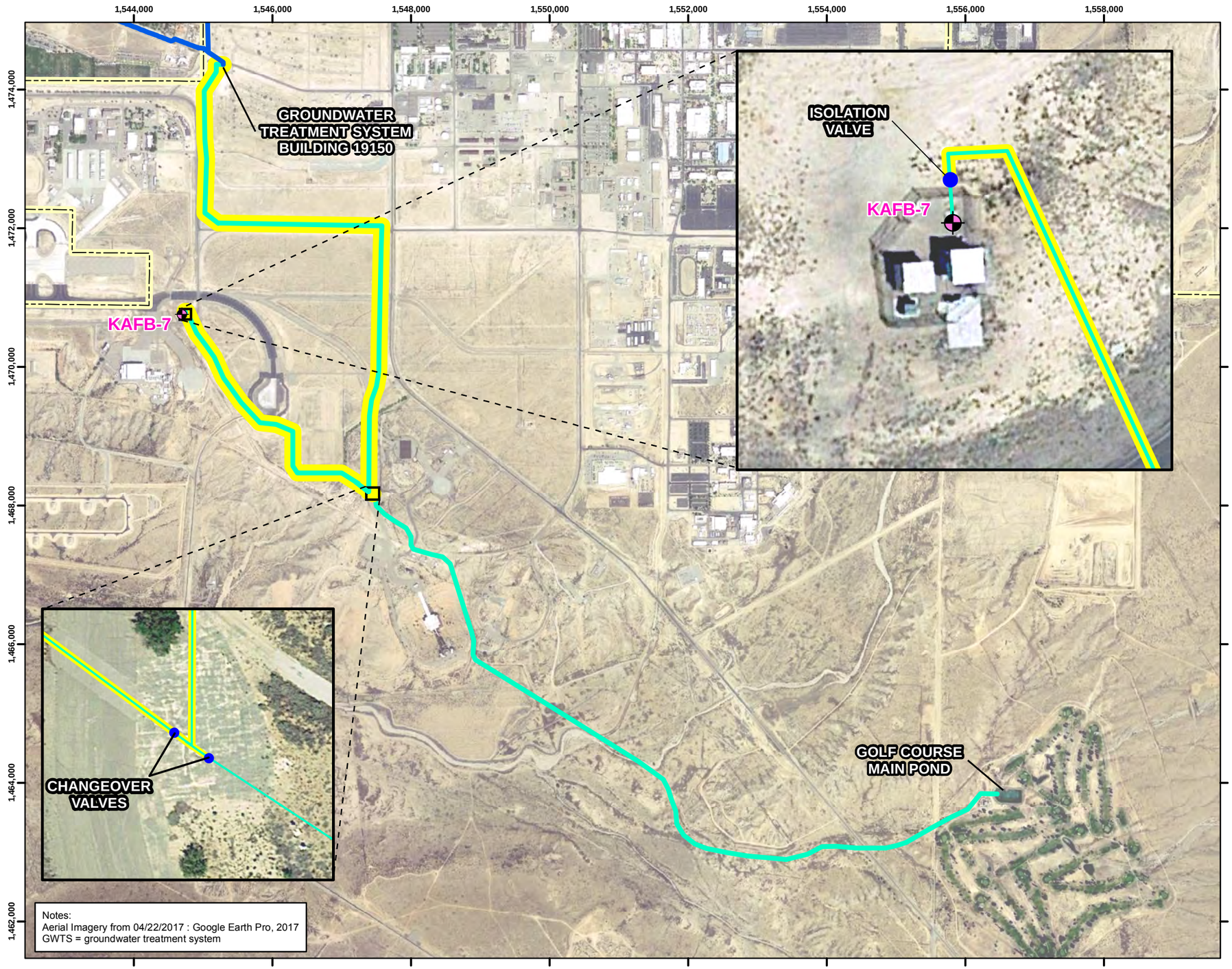

Legend

- Injection Well
- GWTS Effluent Piping to be Tested
- GWTS Effluent Piping
- GWTS Influent Piping
- Installation Boundary

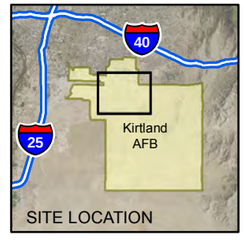

N

0 750 1,500 3,000

Feet

1 inch = 1,500 feet

Projection: NAD83 State Plane New Mexico Central FIPS3002 Feet

STANDARD OPERATING PROCEDURE FOR
EFFLUENT LINE INTEGRITY TESTING OF THE
GROUNDWATER TREATMENT SYSTEM
BULK FUELS FACILITY
SOLID WASTE MANAGEMENT UNIT ST-106/SS-111
KIRTLAND AIR FORCE BASE, NEW MEXICO

FIGURE 1

EFFLUENT CONVEYANCE LINE TEST SECTION AND ISOLATION VALVES

P:\gis\Projects\Kirtland\Figures\GWTS Effluent Line Integrity Testing SOP.mxd 2/12/2018 EA sbusby

This page intentionally left blank

ATTACHMENTS

This page intentionally left blank

HYDROSTATIC PRESSURE TESTING FORM

Project: GWTS Effluent Conveyance Line
EA Project No: 62599DM01 Date: _____
Air Temperature: _____ Time: _____
Length of Pipe Tested: _____ Type of Pipe Tested: _____
Location of Pipe Tested: _____

Hydrostatic specified test pressure (STP) is recommended at 150 percent (%) of operating pressure per American Society of Mechanical Engineers B31.3 Part 345 and will be measured at gauge PI-3208 on the effluent skid No. 2. The current operating pressure in the effluent conveyance line is approximately 12 pounds per square inch (psi) with a high pressure alarm at 45 psi; thus, an STP of 50 psi has been specified for this test (10% higher than the high pressure alarm set point). The final pressure will be compared to the STP at the end of the test period. ASTM International F2164 – 13 defines a hydrostatic pressure test as acceptable if the final pressure does not deviate by more than 30% from the STP reading (± 15 psi for this test). The results of the hydrostatic test will be included in the test report. Although the ASTM International F2164 – 13 method requires an air volume and rebound assessment for the installation of new, uniform piping, these assessments will not be performed due to the varying pipe thicknesses, types, and age of the pipes that comprise the effluent conveyance line.

Testing Procedure

Piping shall be vented and then brought to the STP and held at the STP by providing successive injections of makeup water. Piping shall then be subjected for 1 hour to a hydrostatic test pressure of 50 psi. No additional makeup water will be added during this period. Exposed pipe, joints, fittings, and valves shall be carefully examined for leaks. Record testing results below and compare the final pressure to the STP.

Testing Results

Initial pressure reading after 30-minute makeup period: _____

Pressure reading after 1 hour: _____

Difference in pressure: _____

Final Pressure within 30% of STP? _____

Are there any leaks present? _____

_____

Additional testing comments: _____

_____

_____

Signature:

_____ _____
Testing Operator Date

This page intentionally left blank

DEPARTMENT OF THE AIR FORCE
377TH AIR BASE WING (AFGSC)

MAR 2 9 2018

Colonel Dawn A. Nickell
377th Air Base Wing
2000 Wyoming Blvd SE
Kirtland AFB NM 87117

Mr. John Kieling, Bureau Chief
Hazardous Waste Bureau (HWB)
New Mexico Environment Department (NMED)
2905 Rodeo Park Drive East, Building 1
Santa Fe NM 87505-6303

Dear Mr. Kieling

Attached please find the *Standard Operating Procedure for Disinfection of the Groundwater Treatment System Remediation Wells and Groundwater Monitoring Wells.* This procedure has been prepared to summarize the proposed approach to disinfect remediation and groundwater monitoring wells in compliance with American Water Works Association C654-13 Standards for Disinfection of Wells.

If you have any questions or concerns, please contact Mr. Scott Clark at (505) 846-9017 or at scott.clark@us.af.mil or Mrs. Holly O'Grady at (505) 853-3484 or at holly.ogrady@us.af.mil.

Sincerely

DAWN A. NICKELL, Colonel, USAF
Vice Commander

Attachment:
Standard Operating Procedure for Disinfection of the Groundwater Treatment System Remediation Wells and Groundwater Monitoring Wells; 2 Hard Copies/2 CDs

cc:
NMED (Borrego) letter
NMED-OOTS (McQuillan), letter and CD
NMED GWQB (Hunter), letter and CD
EPA Region 6 (King, Ellinger), letter and CD
COA (Faris), letter and CD
ABCWUA (Shean), letter and CD
SAF-IEE (Lynnes), electronic only
AFCEC/CZ (Renaghan, Segura, Clark, O'Grady), electronic only
USACE-ABQ District Office (Simpler, Phaneuf, Dreeland, Sanchez, Salazar), electronic only
Public Info Repository, Administrative Record/Information Repository (AR/IR) and File

Standard Operating Procedure for Disinfection of the Groundwater Treatment System Remediation Wells and Groundwater Monitoring Wells

Revision 0
April 2018

This page intentionally left blank

CONTENTS

Section **Page**

DOCUMENT REVISION HISTORY ii

1. SCOPE AND APPLICATION 1

2. EQUIPMENT AND MATERIALS 1

3. PROCEDURE 2

4. MAINTENANCE 7

5. PRECAUTIONS 7

6. REFERENCES 7

FIGURES

1 Groundwater Extraction and Treatment System Location

2 Groundwater Monitoring Network and Extraction Well Locations

ATTACHMENTS

1 Sodium Hypochlorite Safety Data Sheet

2 Remediation Well Construction Diagrams

3 Monitoring Well Construction Information

DOCUMENT REVISION HISTORY

ORIGINAL (MASTER) DOCUMENT REVISION HISTORY				
Revision Number	**Revision Date**	**Revision Summary**	**Revised By**	**Reviewed By**
0	3/13/2018	Created Standard Operating Procedure	K. McKeage	T. Curley, PE

1. SCOPE AND APPLICATION

The purpose of this Standard Operating Procedure is to delineate protocols for performing well disinfection at the Kirtland Air Force Base (AFB) groundwater treatment system (GWTS) (Figure 1) and associated monitoring wells without dedicated pump systems (Figure 2). Currently, the GWTS has four extraction wells (KAFB-106228, KAFB-106233, KAFB-106234, and KAFB-106239), one injection well (KAFB-7; Figure 1) and 143 monitoring wells (Figure 2). Over time, the pumping efficiency of a well and/or the flow through the filter pack may decline due to bacterial growth and biofouling. Routine disinfection (every few months) will assist in maintaining well efficiency.

A remediation well (extraction or injection) with permanent equipment installed shall be disinfected by providing the casing, screen, and surrounding filter pack around the well with a free chlorine residual of at least 50 milligrams per liter (mg/L), adequate mixing, and then removal from the well (American Water Works Association [AWWA], 2013). For injection wells, downhole equipment will require removal prior to disinfection in order to pump the well and remove the residual chlorine. The same standard describes the chlorination of existing gravel pack in wells not installed with equipment (monitoring wells) at a concentration not less than 100 mg/L free chlorine residual (AWWA, 2013). The following procedure has been prepared in accordance with the guidelines provided in the AWWA C654-13 Standards for Disinfection of Wells (AWWA, 2013) except where otherwise noted.

2. EQUIPMENT AND MATERIALS

The following equipment and materials may be required:

- 250-gallon polyethylene tote equipped with a ball valve and adapter to fit 0.5-inch polyethylene tubing
- City backflow preventer and permission to withdraw potable water from a nearby fire hydrant
- 3,000+-gallon potable water truck equipped with adaptor to reach and fit the wellhead 1-inch polyvinyl chloride sounding drop pipe
- 600-foot length of 0.5-inch polyethylene tubing
- 5-gallon high-density polyethylene carboy with spigot adapted to fit a 0.5-inch polyethylene tube
- Field vehicle with the ability to elevate the 250-gallon tote at least 3 feet above the top of the well

- Germicidal bleach (8.25 percent sodium hypochlorite solution) (Safety Data Sheet for appropriate material is provided in Attachment 1)
- Potable water (from municipal/Base source)
- Field logbook
- Indelible ink pen
- Vault keys
- Camera
- Chlorine colorimeter and reagents.
- Well bailing or pumping equipment
- 21,000 gallon tank (injection well only)

3. PROCEDURE

The locations of GWTS remediation wells are provided in Figure 1 and monitoring wells in Figure 2. Prior to performing disinfection on any GWTS remediation well, the well shall be removed from service. Refer to the GWTS Operations and Maintenance Plan (U.S. Army Corps of Engineers [USACE], 2016) or most current approved version for remediation well shutdown. Other remediation wells will continue to be in operation during the disinfection process.

Remediation well disinfection is performed following the steps outlined below:

1. Prepare the 0.5-inch polyethylene tubing by measuring and marking the length to be deployed to have the bottom end of the tubing reach the bottom of the sounding drop pipe (Attachment 2). Place the 250-gallon polyethylene tote into the bed of the field vehicle.

2. Gauge the remediation well intended for disinfection as well as the nearby observation well. Wells designated as observation wells for each remediation well are provided in the table below:

Remediation Well	Observation Well
KAFB-106228	KAFB-106212
KAFB-106233	KAFB-106229
KAFB-106234	KAFB-106225
KAFB-106239	KAFB-106082
KAFB-7	KAFB-0508

3. Determine the static water volume by calculating the volume of static water in the well casing and filter pack (assuming that the filter pack occupies no volume) using the well construction information (Attachment 2) and water level obtained from the observation well in Step 2. One static water volume will be between approximately 800 and 1,400 gallons. Exact static water volume can be calculated using the following equation:

   If the well screen is not submerged:

$$V = 7.48\frac{gal}{ft^3}\left[\pi\left(\frac{d_b}{2}\right)^2 (B - H)\right]$$
$$V = static\ water\ volume\ (gal)$$
$$d_b = borehole\ diameter\ (ft)$$
$$H = water\ level\ (ft\ bgs)$$
$$B = total\ depth\ (ft\ bgs)$$

   If the well screen is submerged:

$$V = 7.48\frac{gal}{ft^3}\left[\pi\left(\frac{d_b}{2}\right)^2 (B - T)\right] + 7.48\frac{gal}{ft^3}\left[\pi\left(\frac{d_c}{2}\right)^2 (T - H)\right]$$
$$V = static\ water\ volume\ (gal)$$
$$d_b = borehole\ diameter\ (ft)$$
$$d_c = casing\ diameter\ (ft)$$
$$H = water\ level\ (ft\ bgs)$$
$$B = total\ depth\ (ft\ bgs)$$
$$T = top\ of\ screen\ (ft\ bgs)$$

4. Prepare and have ready three static water volumes worth of potable chase water in a 3,000+-gallon water truck to surge the well. Potable water should be obtained from a nearby fire hydrant using an approved Albuquerque Bernalillo County Water Utility Authority (ABCWUA) backflow preventer and meter (ensure that the appropriate permits have been provided by ABCWUA to utilize fire hydrant water) or brought from Kirtland AFB.

5. Using the 250-gallon polyethylene tote, prepare 50 gallons of sodium hypochlorite stock solution that will yield a concentration of 50 mg/L free chlorine in four static water volumes worth of water using the following equation:

$$82{,}500\frac{mg}{L} \times V_1 = (C_2 \times 50gal) = 50\frac{mg}{L} \times 4 \times V_3$$
$$V_1 = volume\ of\ bleach\ to\ add\ to\ the\ stock\ solution\ (gal)$$
$$C_2 = free\ chlorine\ concentration\ of\ stock\ solution\ \left(\frac{mg}{L}\right)$$
$$V_3 = static\ water\ volume\ (gal, Step\ 3)$$

6. For extraction wells, remove the air relief valve (ARV) overflow tubing connection from the sounding drop pipe, partially extract the well transducer so that it is suspended at least 50 feet above the water level, and lower the bottom end of the 0.5-inch tubing down the well sounding drop pipe so that it deploys immediately below the drop tube. The 0.5-inch tubing is not fully deployed to the bottom of the well screen as described in AWWA C654-13 due to concerns with tubing becoming caught on downhole equipment. If the well intended for disinfection is an injection well, ensure all downhole equipment has been removed, then lower the bottom end of the tubing down the well casing so that it deploys to the top of the well sump. Affix the surface end of the 0.5-inch tube to the 250-gallon tote containing the sodium hypochlorite solution. Open the ball valve attached to the tote and begin adding the sodium hypochlorite solution. The tote should empty in approximately 3-4 minutes. During application into an injection well, the deployed end of the 0.5-inch polyethylene tubing shall be raised slowly throughout the water column to ensure even application throughout the submerged well screen. The 0.5-inch tubing is then removed from the sounding drop pipe or well casing.

7. After the addition of the sodium hypochlorite solution down the tubing, water in the well must be agitated to ensure even distribution of free chlorine throughout the entire water column and surrounding filter pack. Connect the water truck tank to the well sounding drop pipe (or well casing for injection wells) and open the valve on the truck to discharge the three static water volumes worth of potable water to surge the well. The water truck tank pump may be used as long as pressure on the sounding drop pipe or well casing does not exceed 50 pounds per square inch. Then disconnect the water truck tank from the sounding drop pipe or well casing and reattach the well ARV overflow tubing (if applicable). Ensure all wellhead openings have been adequately sealed before proceeding to the next step.

8. The disinfectant is then left in the well without any agitation overnight (approximately 12 hours).

9. After approximately 12 hours of retention time have elapsed.

   For extraction wells:

   The extraction well will be restarted. Isolate the influent trains on the influent pipe tree and between the influent tanks. Refer to the GWTS Operations and Maintenance Plan (USACE, 2016) or most current approved version for extraction well startup. Monitor the influent of the isolated train treating water from the disinfected well. The influent will be monitored for free chlorine concentrations on the influent skid at the pump discharge and at the sampling point immediately downstream of the sand filters on the isolated train. Initially, these locations will be sampled every 10 minutes for the first 60 minutes of extraction well operation. If elevated concentrations of free chlorine (>1 mg/L) persist at the influent skid pump discharge past this 60-minute time period, monitoring of both locations will continue at 20-minute intervals until the free chlorine concentration drops below 1 mg/L. Due to the catalytic nature of the sand filter media,

minimal free chlorine is expected to pass through the sand filters and reach the granular activated carbon vessels; however, if concentrations exceeding 2 mg/L are detected at the sampling point immediately downstream of the sand filters, the extraction well will be shut down and water extracted from the well will be monitored and diverted to a holding tank upstream of the sand filters to preserve granular activated carbon life. Once the extraction well water free chlorine concentration has decreased below 2 mg/L entering the holding tank, the extraction well water discharge will be directed to the GWTS and the 60-minute monitoring as mentioned above will be restarted. Bacteriological testing will not be performed as these wells are not intended for distribution as a drinking water supply. All well disinfection information will be recorded and reported in the appropriate quarterly monitoring report.

For injection wells:

The injection well will be bailed or pumped until free chlorine residual concentration in water removed from the well decreases to less than 0.4 mg/L, which is 10 percent of the National Primary Drinking Water Regulations 40 Code of Federal Regulations 141.54 Maximum residual disinfectant level goals for disinfectants (U.S. Environmental Protection Agency, 1998). All bailed or pumped water will be collected and held pending approval to discharge to the GWTS or for offsite disposal. Bacteriological testing will not be performed as these wells are not intended for distribution as a drinking water supply. All well disinfection information will be recorded and reported in the appropriate quarterly monitoring report.

Monitoring well disinfection is performed following the steps outlined below:

1. Prepare the 0.5-inch tubing by measuring and marking the length to be deployed to have the bottom end of the tubing reach the top of the sump and, when removed, the top of the screen using the well construction information (Attachment 3) and the most current annual total depth measurements for the well. Place the 250-gallon polyethylene tote into the bed of the field vehicle.

2. Gauge the well that is intended for disinfection.

3. Determine the static water volume by calculating the volume of water in the submerged well casing and filter pack (assuming that the filter pack occupies no volume) using the well construction information (Attachment 3) and water level obtained in Step 2. One static water volume will be between approximately 90 and 170 gallons for reference elevation interval (REI) 4857, between 105 and 140 gallons for REI 4838, and between 135 and 225 gallons for REI 4814. Exact static water volume can be calculated using the following equation:

If the well screen is not submerged:

$$V = 7.48\frac{gal}{ft^3}\left[\pi\left(\frac{d_b}{2}\right)^2 (B - H)\right]$$

$V = static\ water\ volume\ (gal)$
$d_b = borehole\ diameter\ (ft)$
$H = water\ level\ (ft\ bgs)$
$B = total\ depth\ (ft\ bgs)$

If the well screen is submerged:

$$V = 7.48\frac{gal}{ft^3}\left[\pi\left(\frac{d_b}{2}\right)^2 (B - T)\right] + 7.48\frac{gal}{ft^3}\left[\pi\left(\frac{d_c}{2}\right)^2 (T - H)\right]$$

$V = static\ water\ volume\ (gal)$
$d_b = borehole\ diameter\ (ft)$
$d_c = casing\ diameter\ (ft)$
$H = water\ level\ (ft\ bgs)$
$B = total\ depth\ (ft\ bgs)$
$T = top\ of\ screen\ (ft\ bgs)$

4. Prepare and have ready three static water volumes worth of potable chase water in the 3,000+-gallon water truck or in polyethylene totes in additional field vehicles to surge the well. Potable water should be obtained from a nearby fire hydrant using an approved ABCWUA backflow preventer and meter (ensure that the appropriate permits have been provided by ABCWUA to utilize fire hydrant water) or brought from Kirtland AFB.

5. Using an empty 250-gallon polyethylene tote, prepare 50 gallons of sodium hypochlorite stock solution that will yield a concentration of 100 mg/L free chlorine in four static water volumes worth of water using the following equation:

$$82{,}500\frac{mg}{L} \times V_1 = (C_2 \times 50gal) = 100\frac{mg}{L} \times 4 \times V_3$$

$V_1 = volume\ of\ bleach\ to\ add\ to\ the\ stock\ solution\ (gal)$
$C_2 = free\ chlorine\ concentration\ of\ stock\ solution\ (\frac{mg}{L})$
$V_3 = well\ volume\ (gal, Step\ 3)$

6. Lower the bottom end of the tubing down the well casing so that it deploys to the top of the well sump. Affix the surface end of the 0.5-inch polyethylene tubing to the 250-gallon tote containing the sodium hypochlorite solution. Open the ball valve attached to the tote and begin adding the sodium hypochlorite solution. During application, the deployed end of the 0.5-inch polyethylene tubing shall be raised slowly throughout the water column to ensure even application throughout the submerged well screen. The tote should empty in approximately 3-4 minutes. The 0.5-inch polyethylene tubing is then removed from the monitoring well.

7. After the addition of the sodium hypochlorite solution down the tubing, water in the well must be agitated to ensure even distribution of free chlorine throughout the entire water column and surrounding filter pack. Connect the water truck tank or additional polyethylene totes to the wellhead and open the valve on the truck to discharge the three static water volumes worth of potable water and surge the well.. Then disconnect the water truck tank or polyethylene totes from the monitoring well. Ensure all wellhead openings have been adequately sealed before proceeding to the next step.

8. The disinfectant is then left in the well without any agitation overnight (approximately 12 hours).

9. After approximately 12 hours of retention time have elapsed, the well will be bailed until free chlorine residual concentration in water bailed from the well decreases to less than 0.4 mg/L, which is 10 percent of the National Primary Drinking Water Regulations 40 Code of Federal Regulations 141.54 *Maximum residual disinfectant level goals for disinfectants* (U.S. Environmental Protection Agency, 1998). All bailed water will be collected and held pending approval to discharge to the GWTS or for offsite disposal. Bacteriological testing will not be performed as these wells are not intended for distribution as a drinking water supply. All well disinfection information will be recorded and reported in the appropriate quarterly monitoring report.

4. MAINTENANCE

Not applicable.

5. PRECAUTIONS

Ensure the remediation well to be disinfected has been fully shut down prior to initiating the disinfection process. Concentrated sodium hypochlorite solutions should be handled carefully utilizing the appropriate personal protective equipment. Review the appropriate sections of any relevant safety documentation (i.e., an Accident Prevention Plan) and any safety data sheets prior to initiating disinfection.

6. REFERENCES

American Water Works Association (AWWA). 2013. C654-13. *Standards for Disinfection of Wells.*

U.S. Army Corps of Engineers (USACE). 2016. Operations and Maintenance Plan, Groundwater Treatment System – Annual Update, Bulk Fuels Facility, SWMU ST-106/SS-111, Kirtland Air Force Base, New Mexico. Prepared by EA Engineering, Science, and Technology, Inc., PBC for the USACE–Albuquerque District under USACE Contract No. W912DR-12-D-0006. August.

U.S. Environmental Protection Agency (EPA). 1998. 40 CFR 141.54. *Maximum residual disinfectant level goals for disinfectants.*

FIGURES

This page intentionally left blank

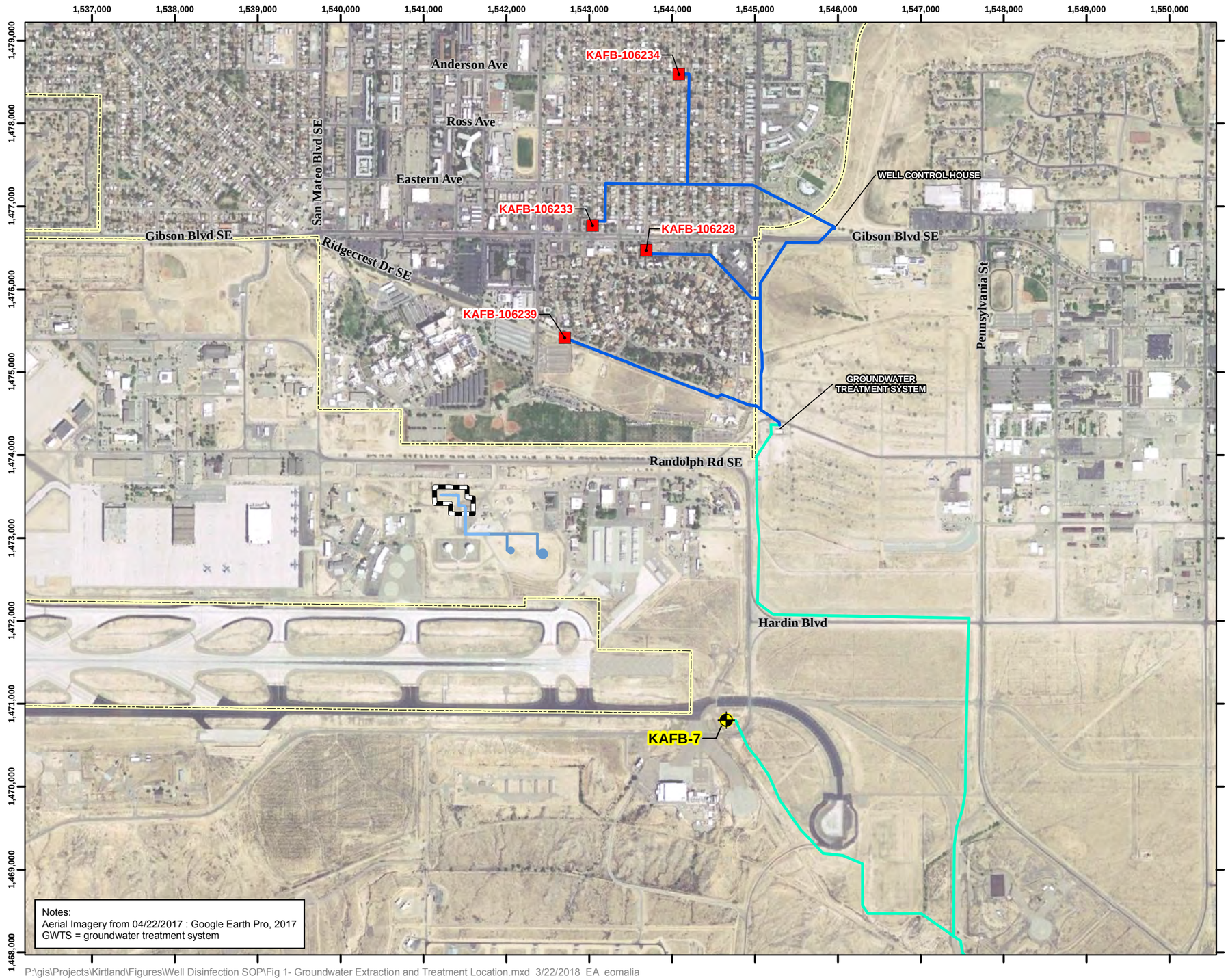

P:\gis\Projects\Kirtland\Figures\Well Disinfection SOP\Fig 1- Groundwater Extraction and Treatment Location.mxd 3/22/2018 EA eomalia

Legend

- Extraction Well
- Injection Well KAFB-7
- Former Aboveground Storage Tank
- Former Buried Fuel Transfer Line
- Former Aboveground Fuel Transfer Line
- GWTS Influent Piping
- GWTS Effluent Piping
- Installation Boundary
- Source Area

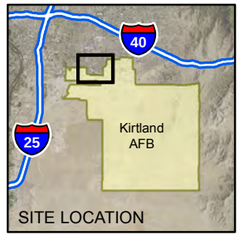

N

0 625 1,250 2,500

Feet

1 inch = 1,250 feet

Projection: NAD83 State Plane New Mexico Central FIPS3002 Feet

STANDARD OPERATING PROCEDURE FOR
DISINFECTION OF THE GWTS EXTRACTION WELLS
AND GROUNDWATER MONITORING WELLS
BULK FUELS FACILITY
SOLID WASTE MANAGEMENT UNIT ST-106/SS-111
KIRTLAND AIR FORCE BASE, NEW MEXICO

FIGURE 1

GROUNDWATER EXTRACTION
AND TREATMENT SYSTEM LOCATION

This page intentionally left blank

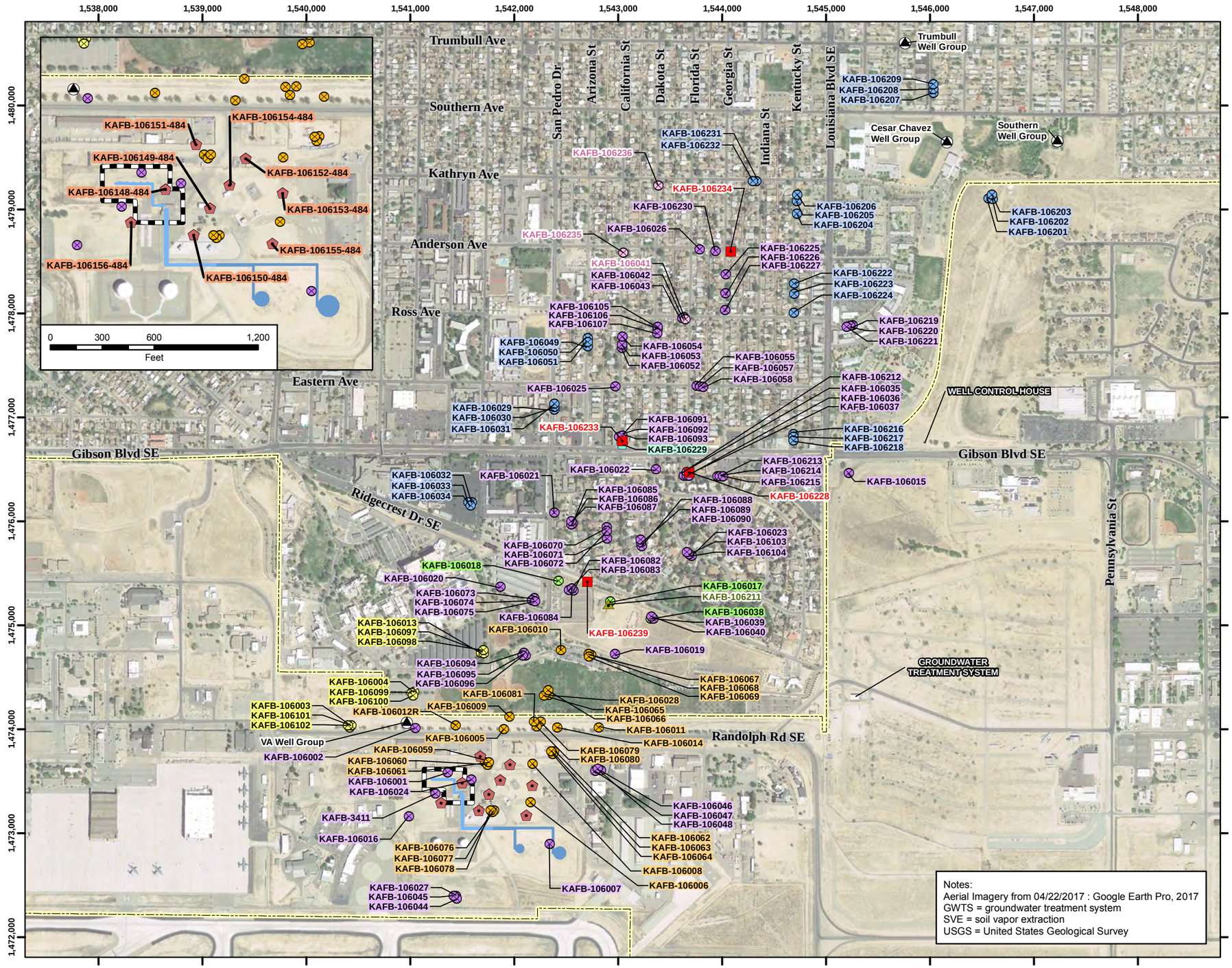

Legend

- Newly Added Monitoring Well
- Groundwater Monitoring Well
- Signal Monitoring Well
- Source Area Monitoring Well
- VA Proximal Monitoring Well
- Downgradient Proximal Monitoring Well
- Extraction Well
- Pneulog Observation Well
- Observation Well
- Former SVE Well
- USGS Sentinel Well Group
- Installation Boundary
- Former Buried Fuel Transfer Line
- Former Aboveground Fuel Transfer Line
- Former Aboveground Storage Tank
- Bulk Fuels Facility (SWMU ST-106/SS-111)

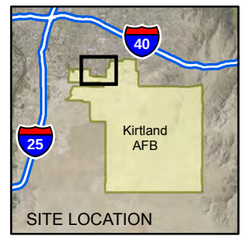

N

0 500 1,000 2,000

Feet

1 inch = 1,000 feet

Projection: NAD83 State Plane New Mexico Central FIPS3002 Feet

STANDARD OPERATING PROCEDURE FOR
DISINFECTION OF THE GWTS EXTRACTION WELLS
AND GROUNDWATER MONITORING WELLS
BULK FUELS FACILITY
SOLID WASTE MANAGEMENT UNIT ST-106/SS-111
KIRTLAND AIR FORCE BASE, NEW MEXICO

FIGURE 2

GROUNDWATER MONITORING NETWORK AND EXTRACTION WELL LOCATIONS

P:\gis\Projects\Kirtland\Figures\Well Disinfection SOP\Fig 2 - GWM Network and Extraction Wells.mxd 3/12/2018 EA eomalia

This page intentionally left blank

ATTACHMENTS

This page intentionally left blank

ATTACHMENT 1
SODIUM HYPOCHLORITE SAFETY DATA SHEET

This page intentionally left blank

KIK CUSTOM PRODUCTS

Material Safety Data Sheet

8.25% Bleach Regular

SECTION 1: PRODUCT AND COMPANY IDENTIFICATION

Product Name	8.25% Bleach Regular
Reference Number	40000753 (H12-023)
Company	KIK Custom Products 33 MacIntosh Blvd. Concord, Ontario L4K 4L5 T: 905-660-0444
24 Hour Emergency Contact	1-800-255-3924
Prepared By	Product Development KIK Classic Division
Revised Date	May 9, 2012 Revision: New

SECTION 2: HAZARD IDENTIFICATION

General Advice: DANGER! CORROSIVE.
May cause severe burns or damage to eyes.
May cause severe skin burns or irritation.
Harmful if swallowed.
Vapor or mist may irritate.
If irritation occurs see a doctor immediately. Keep out of reach of children and pets.

Routes of Exposure: Eyes, Skin, Inhalation, Ingestion
Potential Health Effects:
Eyes: Vapor or mist can be irritation, causing redness. Concentrated vapor, mist or splashed liquid can cause severe irritation, burns or even permanent blindness.
Skin: Contact may produce severe irritation or corrosive skin damage, depending upon length of contact. Under normal consumer use conditions the likelihood of any adverse health effects are low.
Inhalation: Vapor or mist can cause irritation to nose, throat and upper respiratory tract. Symptoms include: coughing, choking. Severe exposure can result in pulmonary edema and corrosion of tissues in the nose and throat.
Ingestion: Causes severe burns of the mouth, esophagus, and stomach, with consequent pain, nausea, vomiting, diarrhea, circulatory collapse.
Target organs: Eyes. Skin.
Chronic effects: Not known.

8.25% Bleach Regular

SECTION 3: COMPOSITION/INFORMATION ON INGREDIENTS

Chemical Name	*Concentration %*	*CAS No.*	*Worker Exposure Limit*
Sodium Hypochlorite	6% - 9%	7681-52-9	5800 mg/kg / >10500
Sodium Hydroxide	<1.00%	7647-01-0	Not Established

SECTION 4: FIRST AID MEASURES

Eyes: Flush eyes immediately with lukewarm water for at least 20 minutes. Remove contact lenses after first 5 minutes. Forcibly hold eyelids apart to ensure complete irrigation of eye tissue. See doctor immediately.

Skin: Remove contaminated clothing. Immediately wash the skin with copious amount of lukewarm water for at least 20 - 30 minutes. See doctor immediately.

Inhalation: Move to fresh air immediately and restore breathing. If breathing has stopped, give artificial respiration. If breathing is difficult, give oxygen. See doctor immediately.

Ingestion: DO NOT INDUCE VOMITING UNLESS DIRECTED TO DO SO BY MEDICAL PERSONNEL! Rinse mouth out with water. Drink 1 or 2 glasses of water, if swallowing is possible. Do not give anything by mouth to a convulsing or unconscious person. See a doctor immediately.

SECTION 5: FIRE FIGHTING MEASURES

This product is neither flammable nor explosive.

Suitable extinguishing media : Treat for surrounding material.

Protective equipment for fire-fighters : As in any fire, wear self-contained breathing apparatus pressure-demand and full protective gear.

8.25% Bleach Regular

SECTION 6: ACCIDENTAL RELEASE MEASURES

Always contained all type of spills. Be sure to wear protective equipment (see Section 8)

Leak and Spill Procedure: Rinse with water, mop up, dispose of in accordance with local, state/provincial and federal regulations.

Large Spills: Large spills should be contained, and if not recoverable, then diluted with water. Use a water rinse for final clean-up.

SECTION 7: HANDLING AND STORAGE

Handling: Use only as directed. Avoid any contact with eyes, skin and clothing. When using, do not eat or drink.

Storage: Store in a cool, dry and well-ventilated area. Always keep the container closed when not in use. KEEP OUT OF REACH OF CHILDREN AND PETS.

SECTION 8: EXPOSURE CONTROLS/PERSONAL PROTECTION

Household Setting

Eyes Protection – No special requirements under normal use conditions.

Hand Protection – Use gloves for prolonged exposure.

Footwear – No special requirements under normal use conditions.

Respiratory protection – Not normally required.

Industrial Setting

Eyes Protection – Wear splash-resistant, full-face shield chemical goggles.

Hand Protection – Use suitable gloves.

Footwear – Impervious boots of chemically resistant material should be worn at all times.

Respiratory protection – If ventilation is not sufficient to prevent vapor build up, use appropriate NIOSH/MSHA respiratory protection.

8.25% Bleach Regular

SECTION 9: PHYSICAL AND CHEMICAL PROPERTIES

Form	: Liquid
Appearance	: Colorless or slightly yellow liquid
Color	: Colorless or slightly yellow
Odor	: Bleach/Chlorine
pH	: 11.5 – 12.5
Specific Gravity	: 1.09 minimum (water = 1)
Viscosity	: Water thin
Water Solubility	: Complete
Boiling Point	: 212°F (100°C)
Melting Point	: no data available
Freezing point	: no date available

SECTION 10: STABILITY AND REACTIVITY

Chemical Stability: Stable under normal use and storage conditions.
Conditions to avoid: Temperature above 40°C, sunlight and metals.
Materials to avoid: Acids, ammonia, urea, metals and oxidizers.
Reactivity: Releases Chlorine gas if mixed with ammonia.

SECTION 11: TOXICOLOGICAL INFORMATION

Acute Oral Toxicity: Will cause membrane irritation, pain and inflammation to digestive tract.

Acute dermal toxicity: Will cause moderate irritation to skin and severe irritation and pain to eyes.

Chronic toxicity	: None known.
Carcinogenic Effects	: Not considered to be carcinogenic by IARC, NTP and ACGIH
Mutagenic Effects	: None Known
Reproductive Toxicity	: None Known

8.25% Bleach Regular

SECTION 12: ECOLOGICAL INFORMATION

Ecotoxicity effects : Not Available

SECTION 13: DISPOSAL CONSIDERATIONS

Reclaim or dispose in accordance with federal, provincial and local regulations.

SECTION 14: TRANSPORTATION INFORMATION

U.S. DOT and Canadian TDG land Transportation

Class 8: Corrosive material
UN Number: 1791
Proper Shipping name: Sodium Hypochlorite Solution
Packaging group: III
Marine pollutant: No

IMDG Sea Transport

Class 8: Corrosive material
UN Number: 1791
Proper Shipping name: Sodium Hypochlorite Solution
Packaging group: III
Marine pollutant: No

SECTION 15: REGULATORY INFORMATION

TSCA/DSL Status: All components in this product are on the U.S. TSCA and Canadian DSL.

WHMIS (Canada): Class C: Oxidizing Material
Class D, Div. 2, Toxic Liquid, Skin Sensitizer

8.25% Bleach Regular

SECTION 16: OTHER INFORMATION

HMIS Ratings

Health	: 2
Flammability	: 0
Reactivity	: 2

NFPA Ratings

Health	: 2
Flammability	: 0
Reactivity	: 2

Created By: Mitul Bhandari	Date: 9/May/2012
Approved By: Eden Mercado	Date: 9/May/2012

As the handling and use of this product are beyond our control, no warranty, expressed or implied is made concerning this product. The information contained here is offered only as a guide and is not intended to be all-inclusive in the manner and conditions of use and handling. The user assumes all risks of use or handling whether or not in accordance with any directions or suggestions of the manufacturer. Manufacturer shall not be liable to purchaser or any other person for loss or damages directly or indirectly arising from the use of our product.

ATTACHMENT 2
REMEDIATION WELL CONSTRUCTION DIAGRAMS

This page intentionally left blank

Extraction Well Construction Diagram KAFB-106228

Installation Start Date/Time: 5/18/2015
Installation End Date/Time: 6/2/2015
Magnesium Anodes and Sounding Tubes added: 7/6/2016

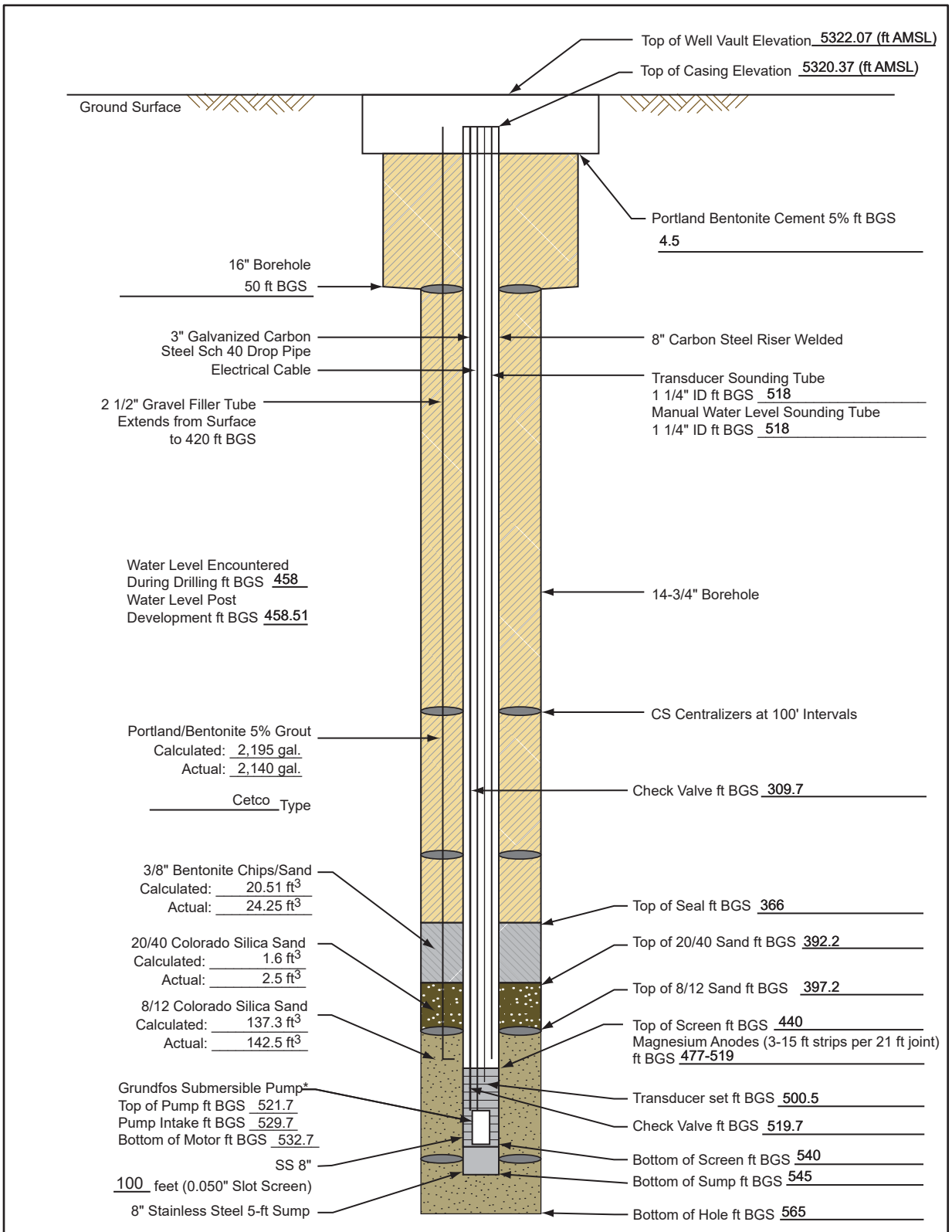

Elevations are NAVD 88 Datum values based on NGS Control Station "Hanger", Elevation = 5,343.43 ft. GPS/RTK methods and GEO1D99 model were used to determine elevations of all surveyed points.

Not to Scale
BGS = Below Ground Surface
AMSL = Above Mean Sea Level
**Pump Serial Number: 7656-13P21328*
**Motor Serial Number: 7656-13P21328*

140705.CB020403.A19

Revision Date: 20SEP2017

Extraction Well Construction Diagram KAFB-106233

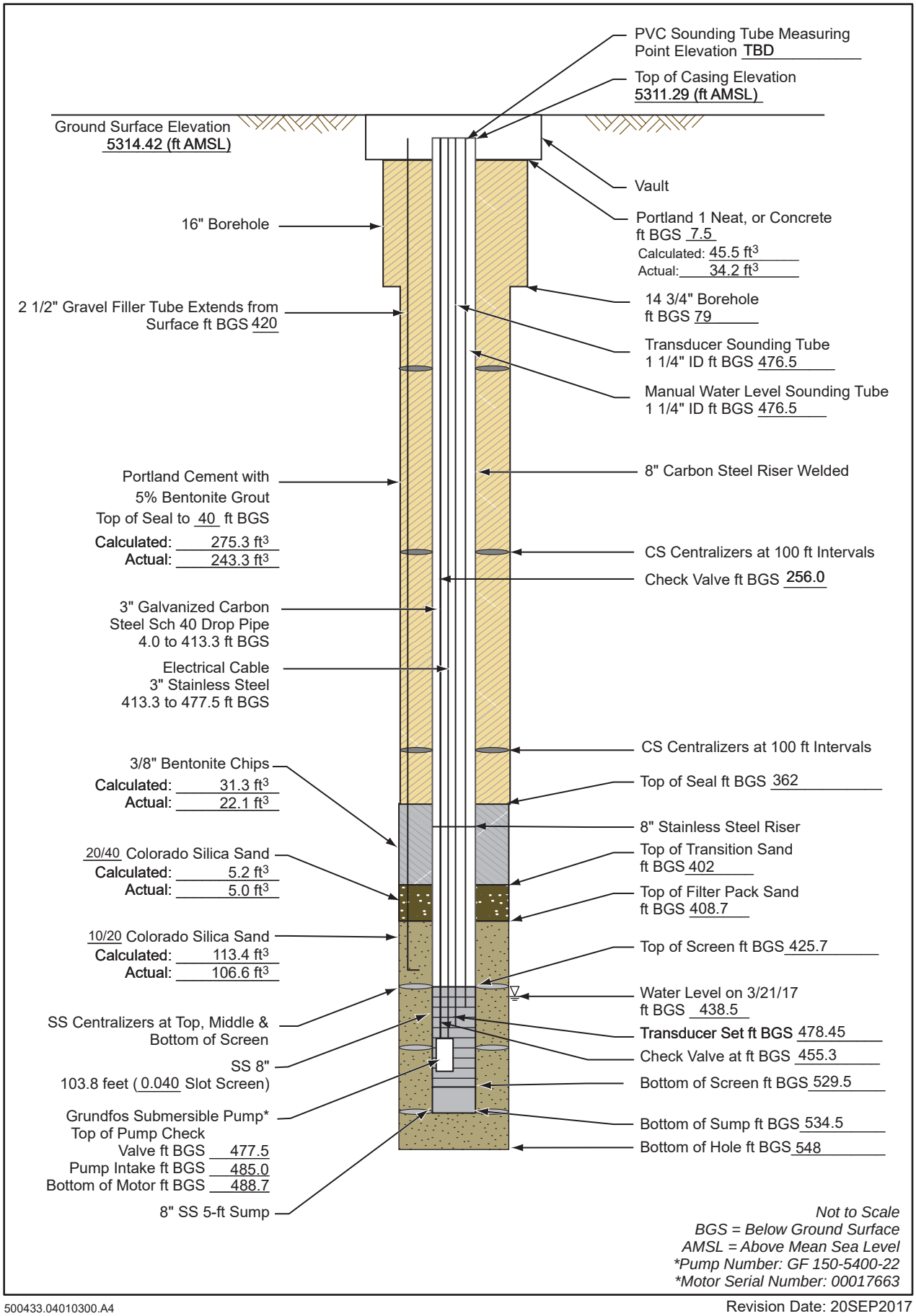

Not to Scale
BGS = Below Ground Surface
AMSL = Above Mean Sea Level
**Pump Number: GF 150-5400-22*
**Motor Serial Number: 00017663*

500433.04010300.A4

Revision Date: 20SEP2017

Extraction Well Construction Diagram KAFB-106234

Installation Start Date/Time: 10/2/2015
Installation End Date/Time: 10/9/2015

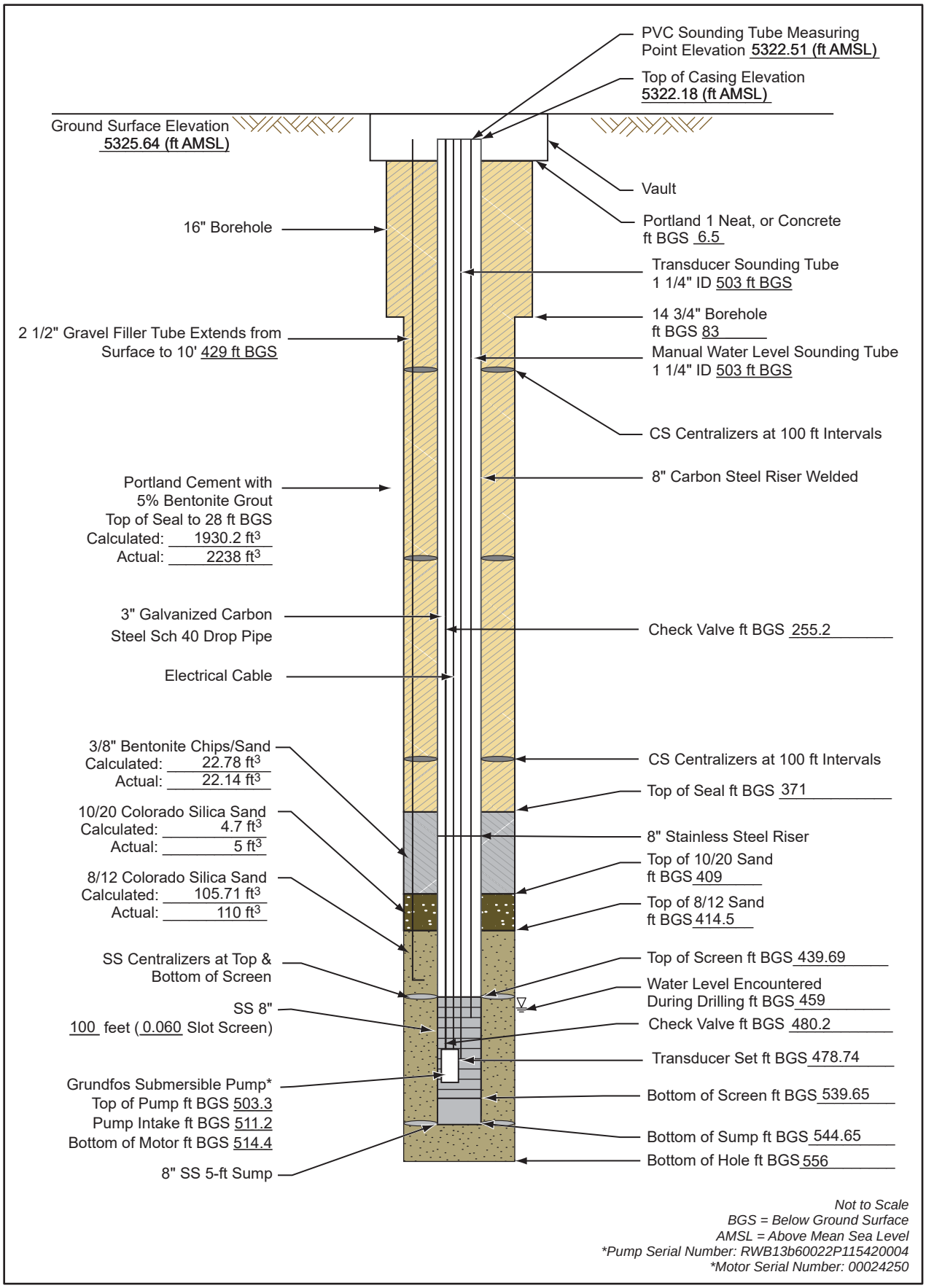

Not to Scale
BGS = Below Ground Surface
AMSL = Above Mean Sea Level
**Pump Serial Number: RWB13b60022P115420004*
**Motor Serial Number: 00024250*

500433.04010300.A5

Revision Date: 20SEP2017

EXTRACTION WELL CONSTRUCTION - KAFB-106239
FIGURE 2

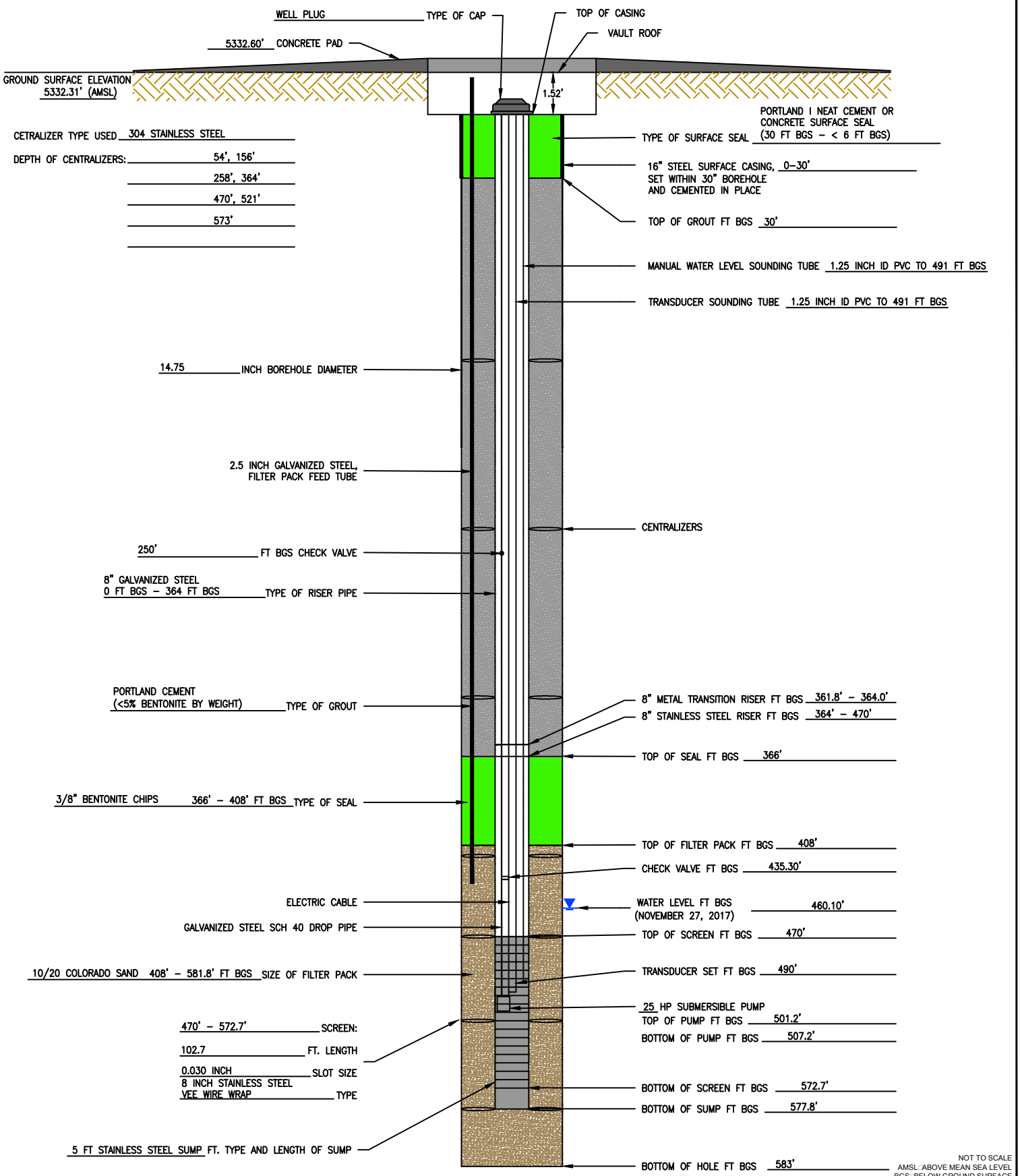

NOT TO SCALE
AMSL: ABOVE MEAN SEA LEVEL
BGS: BELOW GROUND SURFACE
FT-FEET

NOTE: ALL DEPTHS REFERENCE IN FEET BELOW GROUND SURFACE

EA ENGINEERING, SCIENCE, AND TECHNOLOGY, INC., PBC
320 Gold Avenue, SW Suite 1300
Albuquerque, NM 87102
Phone: (505) 224-9013

KIRTLAND AIR FORCE BASE		INSTALLATION START DATE/TIME: NOV 3, 16	INSTALLATION END DATE/TIME: DEC 9, 16
PROJECT NO.: 62599DM01	WELL ID: KAFB-106239 (EXTRACTION)	GEOLOGIST: R. MARLEY	DRILLER: YELLOW JACKET

FILE PATH: Y:\ACTIVE PROJECTS\62599DM01 KIRTLAND BFF_USACE\9.1 GWTS EXTRACTION WELLS\KAFB-106239 AUTOCAD\EXTRACTION WELL COMPLETION DIAGRAM-KAFB-106239.DWG [EXTRACTION WELL COMBINED FIGURE] MCKEAGE, KEVIN 3/5/2018 3:33 PM

KAFB-7 Injection Schematic

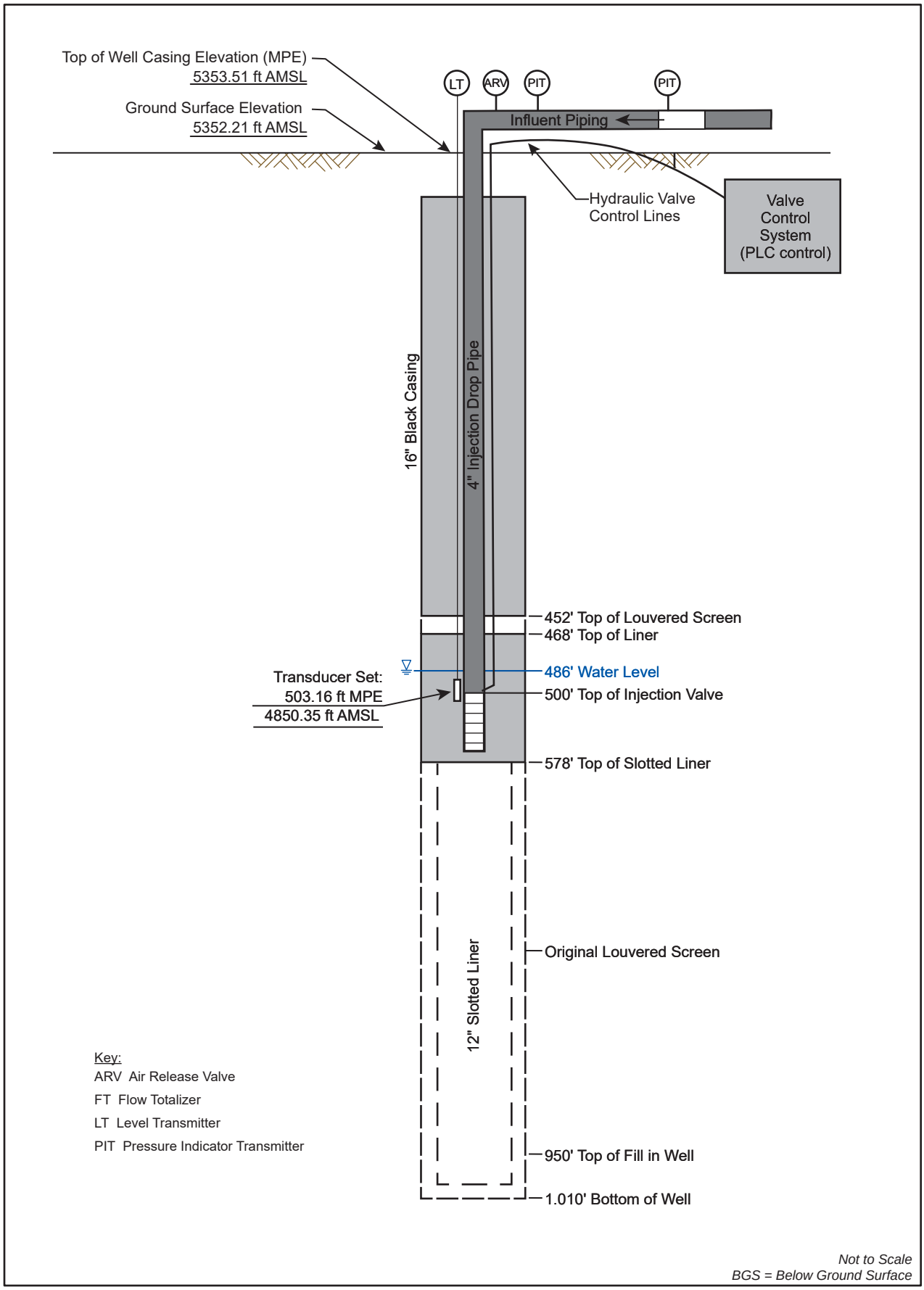

Not to Scale
BGS = Below Ground Surface

500433.04010300.A6

Revision Date: 20SEP2017

This page intentionally left blank

ATTACHMENT 3
MONITORING WELL CONSTRUCTION INFORMATION

This page intentionally left blank

Monitoring Well Construction Information

Well_ID	Dedicated System?	REI	Top of Screen (bgs)	Bottom of Screen (bgs)	Total Well Depth (bgs)	Borehole Diameter (in)	Borehole Diameter Screen Interval (in)	Casing Diameter (in)	Water Level (bgs)	Water Level (MRP)	WL Date	MPE-GE	G_Elevation_USGS	MPE_USGS	Well Volume (Q1 2018 Gauging)
KAFB-106001		4857 & 4838	483	508	508.5	12	10	4	468.36	471.64	01-Feb-18	3.28	5341.615	5344.897	114
KAFB-106002	Y	4857	479	504	505	12	10	4	466.25	468.64	01-Feb-18	2.39	5339.854	5342.244	114
KAFB-106003		4857	476	501	503	12	10	4	463.76	466.76	01-Feb-18	3.00	5337.275	5340.276	118
KAFB-106004		4857	484	509	510	12	10	4	469.37	472.11	01-Feb-18	2.74	5343.068	5345.806	116
KAFB-106005		4857	479	504	507	12	10	4	470.67	473.54	01-Feb-18	2.87	5344.041	5346.909	120
KAFB-106006		4857	483.5	508.5	511	12	12	4	475.02	478.2	01-Feb-18	3.18	5348.303	5351.479	167
KAFB-106007	Y	4857	484	509	511	12	12	4	471.88	476.54	01-Feb-18	4.66	5344.944	5349.601	167
KAFB-106008		4857	486	511	513.5	12	10	4	475.49	478.41	01-Feb-18	2.92	5348.848	5351.765	119
KAFB-106009		4857	480	505	507.5	12	10	4	471.53	475.22	01-Feb-18	3.69	5344.853	5348.545	118
KAFB-106010		4857	483	508	510.5	12	10	4	469.98	469.98	01-Feb-18	0.00	5343.255	5343.255	121
KAFB-106011	Y	4857	486	511	516	12	10	4	476.98	480.03	01-Feb-18	3.05	5350.097	5353.15	128
KAFB-106012R		4857	465.58	494.83	500	10	10	5	468.88	471.79	01-Feb-18	2.91	5342.092	5344.998	127
KAFB-106013		4857	486.5	511.5	516.5	12	10	4	473.96	477.11	31-Jan-18	3.15	5347.469	5350.619	131
KAFB-106014		4857	486	511	516	12	10	4	473.84	477.03	01-Feb-18	3.19	5347.032	5350.219	130
KAFB-106015		4857 & 4838	485	510	515	12	10	4	466.69	469.21	01-Feb-18	2.52	5339.92	5342.437	134
KAFB-106016	Y	4857	475	500	505	12	10	4	465.78	469.07	01-Feb-18	3.29	5339.131	5342.425	128
KAFB-106017	Y	4857 & 4838	482	507	512	12	10	4	465.85	469.46	01-Feb-18	3.61	5338.905	5342.516	133
KAFB-106018	Y	4857 & 4838	476	501	506	12	10	4	460.11	463.07	01-Feb-18	2.96	5333.345	5336.3098	133
KAFB-106019		4857 & 4838	493	518	523	12	10	4	478.85	481.76	30-Jan-18	2.91	5351.705	5354.615	132
KAFB-106020		4857	482	507	512	12	10	4	467.57	467.57	01-Feb-18	0.00	5341.045	5341.045	132
KAFB-106021		4857 & 4838	458	483	488	12	10	4	441.00	441	31-Jan-18	0.00	5314.327	5314.327	133
KAFB-106022		4857 & 4838	462	487	492	12	10	4	445.04	445.03	30-Jan-18	-0.01	5318.071	5318.063	133
KAFB-106023		4857	473	498	503	12	10	4	455.53	455.56	01-Feb-18	0.03	5328.723	5328.758	134
KAFB-106024	Y	4857	481	506	511	12	10	4	470.30	470.3	01-Feb-18	0.00	5343.547	5343.547	129
KAFB-106025		4857 & 4838	465	490	495	12	10	4	444.12	444.12	30-Jan-18	0.00	5317.284	5317.284	136
KAFB-106027	Y	4857	481	501	506	12	10	4	472.57	475.73	29-Jan-18	3.16	5345.453	5348.617	107
KAFB-106028	Y	4857	486	510	515	12	10	4	475.65	475.65	01-Feb-18	0.00	5348.894	5348.894	125
KAFB-106029		4857	450.8	470.8	475.8	12	10	5	437.60	437.6	30-Jan-18	0.00	5310.936	5310.936	115
KAFB-106030		4838	469.5	484.5	489.9	12	10	5	437.69	437.69	30-Jan-18	0.00	5311.026	5311.026	116
KAFB-106031		4814	495.8	509.5	514.9	12	10	5	437.74	437.74	30-Jan-18	0.00	5311.06	5311.06	137
KAFB-106032		4857	456	476	480.5	12	10	5	444.20	444.2	30-Jan-18	0.00	5317.603	5317.603	112
KAFB-106033		4838	477	492	496.6	12	10	5	444.36	444.36	30-Jan-18	0.00	5317.757	5317.757	113
KAFB-106034		4814	502	517	522	12	10	5	445.20	445.2	30-Jan-18	0.00	5318.627	5318.627	140
KAFB-106035		4857	452	482	487	12	10	5	448.50	448.63	30-Jan-18	0.13	5321.451	5321.577	146
KAFB-106036		4838	481.8	496.8	501.8	12	10	5	448.84	448.92	30-Jan-18	0.08	5321.763	5321.847	115
KAFB-106037		4814	507	522	527	12	10	5	449.12	449.17	30-Jan-18	0.05	5322.057	5322.103	141
KAFB-106038		4857	478	508	513	12	10	5	475.38	478.63	30-Jan-18	3.26	5348.355	5351.61	145
KAFB-106039		4838	508.3	523.3	528.3	12	10	5	475.27	478.4	30-Jan-18	3.13	5348.196	5351.324	115
KAFB-106040		4814	530.6	545.6	550.6	12	10	5	474.29	477.3	30-Jan-18	3.01	5347.25	5350.263	139
KAFB-106041		4857	449	469	473.8	12	10	5	451.05	451.05	30-Jan-18	0.00	5324.354	5324.354	93
KAFB-106042		4857	469	483.5	488.5	12	10	5	450.76	450.76	30-Jan-18	0.00	5324.069	5324.069	98
KAFB-106043		4814	543	557.5	562.5	12	10	5	451.01	451.01	30-Jan-18	0.00	5324.295	5324.295	173
KAFB-106044	Y	4838	504.2	519.2	523.9	12	10	5	472.72	475.86	29-Jan-18	3.14	5345.652	5348.793	112
KAFB-106045		4814	528.3	543.3	548	6	10	5	473.12	476.54	29-Jan-18	3.42	5345.094	5348.517	137
KAFB-106046	Y	4857	490	510	515	12	10	5	479.74	479.74	01-Feb-18	0.00	5352.839	5352.839	112
KAFB-106047	Y	4838	512	527	532	12	10	5	479.83	479.83	01-Feb-18	0.00	5352.809	5352.809	114
KAFB-106048		4814	535.5	550.5	555.5	12	10	5	479.54	479.54	01-Feb-18	0.00	5352.575	5352.575	139
KAFB-106049		4857	456.8	476.8	480.7	12	10	5	442.64	442.64	30-Jan-18	0.00	5316.101	5316.101	112
KAFB-106050		4838	474.4	489.4	494.8	12	10	5	442.03	442.03	30-Jan-18	0.00	5315.51	5315.51	116
KAFB-106051		4814	500.8	515.8	521.2	12	10	5	442.34	442.34	30-Jan-18	0.00	5315.775	5315.775	143
KAFB-106052		4857	449.6	479.6	484.8	12	10	5	445.61	445.61	30-Jan-18	0.00	5318.857	5318.857	148
KAFB-106053		4838	478.4	493.4	498.4	12	10	5	445.52	445.52	30-Jan-18	0.00	5318.673	5318.673	115
KAFB-106054		4814	504	519	524	12	10	5	445.10	445.1	30-Jan-18	0.00	5318.383	5318.383	142
KAFB-106055		4857	465.8	485.8	490.3	12	10	5	451.66	451.66	31-Jan-18	0.00	5325.089	5325.089	114
KAFB-106057		4838	484.9	499.9	505.3	12	10	5	452.13	452.13	31-Jan-18	0.00	5325.46	5325.46	117
KAFB-106058		4814	511.8	526.8	530.3	12	10	5	452.55	452.55	31-Jan-18	0.00	5326.047	5326.047	136
KAFB-106059		4857	483.4	503.4	508.4	12	10	5	471.45	474.51	01-Feb-18	3.06	5344.813	5347.873	114
KAFB-106060	Y	4838	503	518	523	12	10	5	472.17	472.17	01-Feb-18	0.00	5345.316	5345.316	113
KAFB-106061	Y	4814	573.2	588.2	593.2	12	10	5	472.14	472.14	01-Feb-18	0.00	5345.434	5345.434	185
KAFB-106062	Y	4814	575.3	590.3	595	12	10	5	475.09	478.06	02-Feb-18	2.97	5348.232	5351.199	183
KAFB-106065	Y	4838	508	523	528	12	10	5	475.56	475.56	31-Jan-18	0.00	5348.757	5348.757	115
KAFB-106066	Y	4814	575.6	590.6	595.8	12	10	5	475.74	475.74	31-Jan-18	0.00	5349.088	5349.088	184
KAFB-106067	Y	4857	485	505	510	12	10	5	474.46	474.46	31-Jan-18	0.00	5347.497	5347.497	113
KAFB-106068	Y	4814	580	595	600	12	10	5	474.22	474.22	31-Jan-18	0.00	5347.229	5347.229	189
KAFB-106069		4838	506	521	526	12	10	5	474.07	474.07	31-Jan-18	0.00	5347.249	5347.249	114

Monitoring Well Construction Information

Well_ID	Dedicated System?	REI	Top of Screen (bgs)	Bottom of Screen (bgs)	Total Well Depth (bgs)	Borehole Diameter (in)	Borehole Diameter Screen Interval (in)	Casing Diameter (in)	Water Level (bgs)	Water Level (MRP)	WL Date	MPE-GE	G_Elevation_USGS	MPE_USGS	Well Volume (Q1 2018 Gauging)
KAFB-106070		4857	460	480	485	12	10	5	445.37	445.37	31-Jan-18	0.00	5318.538	5318.538	117
KAFB-106071		4814	548	563	568	12	10	5	447.57	447.57	31-Jan-18	0.00	5320.898	5320.898	184
KAFB-106072		4838	475	495	500	12	10	5	445.87	445.87	31-Jan-18	0.00	5319.293	5319.293	132
KAFB-106073		4838	499.5	514.5	519.5	12	10	5	466.41	466.41	01-Feb-18	0.00	5339.871	5339.871	115
KAFB-106074		4814	569.5	584.5	589.5	12	10	5	467.14	467.14	01-Feb-18	0.00	5340.587	5340.587	186
KAFB-106075	Y	4857	480	500	505	12	10	5	467.10	467.1	01-Feb-18	0.00	5340.499	5340.499	115
KAFB-106076		4857	480	500	505	12	10	5	471.98	471.98	01-Feb-18	0.00	5344.923	5344.923	110
KAFB-106077		4838	504	519	524	12	10	5	472.09	472.09	01-Feb-18	0.00	5344.721	5344.721	114
KAFB-106078	Y	4814	573.5	588.5	593.5	12	10	5	472.22	472.22	01-Feb-18	0.00	5344.599	5344.599	185
KAFB-106079		4857	483.9	503.9	509.5	12	10	5	473.56	476.49	01-Feb-18	2.93	5346.737	5349.668	115
KAFB-106080	Y	4838	503.1	518.1	523.3	12	10	5	472.41	475.22	01-Feb-18	2.81	5345.677	5348.483	114
KAFB-106081	Y	4814	574.8	589.3	594.8	12	10	5	473.28	476.35	01-Feb-18	3.07	5346.405	5349.479	185
KAFB-106082		4857	472	492	497.3	12	10	5	462.08	462.08	01-Feb-18	0.00	5335.263	5335.263	113
KAFB-106083		4838	495.5	510.5	515.7	12	10	5	461.68	461.68	01-Feb-18	0.00	5335.037	5335.037	117
KAFB-106084		4814	566	581	585.8	12	10	5	460.97	464.59	01-Feb-18	3.62	5334.319	5337.936	188
KAFB-106085		4857	446.5	476.5	481.5	12	10	5	443.81	443.81	31-Jan-18	0.00	5317.233	5317.233	146
KAFB-106086		4838	476	491	496	12	10	5	444.19	444.19	31-Jan-18	0.00	5317.646	5317.646	114
KAFB-106087		4814	546	561	565.5	12	10	5	443.40	443.4	31-Jan-18	0.00	5316.872	5316.872	184
KAFB-106088		4857	460	480	485	12	10	5	451.11	451.11	31-Jan-18	0.00	5324.274	5324.274	111
KAFB-106089		4838	481.5	496.5	501.5	12	10	5	450.76	450.82	31-Jan-18	0.06	5323.477	5323.537	113
KAFB-106090		4814	555	570	575	12	10	5	449.56	449.64	31-Jan-18	0.08	5322.768	5322.846	189
KAFB-106091		4857	454	474	479	12	10	5	442.28	442.28	29-Jan-18	0.00	5314.33	5314.33	114
KAFB-106092		4838	474	489	493.7	12	10	5	442.61	442.61	29-Jan-18	0.00	5314.509	5314.509	112
KAFB-106093		4814	544	559	563.2	12	10	5	442.02	442.02	29-Jan-18	0.00	5314.624	5314.624	182
KAFB-106094	Y	4857	484.2	504.2	509.2	12	10	5	471.74	471.74	31-Jan-18	0.00	5345.069	5345.069	115
KAFB-106095	Y	4838	503.75	518.75	523.75	12	10	5	471.21	471.31	31-Jan-18	0.10	5344.559	5344.657	115
KAFB-106096	Y	4814	576.3	591.3	596.3	12	10	5	471.75	471.9	31-Jan-18	0.15	5345.157	5345.306	188
KAFB-106097		4838	506	521	526	12	10	5	474.01	474.05	31-Jan-18	0.04	5347.701	5347.741	114
KAFB-106098		4814	531	546	551.1	12	10	5	474.12	474.14	31-Jan-18	0.02	5347.803	5347.825	140
KAFB-106099		4838	501	516	521	12	10	5	469.09	469.09	01-Feb-18	0.00	5342.854	5342.854	114
KAFB-106100		4814	526	541	546	12	10	5	469.11	469.11	01-Feb-18	0.00	5342.852	5342.852	140
KAFB-106101		4838	495.9	511.2	515.1	12	10	5	463.97	466.88	01-Feb-18	2.91	5337.411	5340.32	111
KAFB-106102		4814	521.1	534.8	540.2	12	10	5	464.14	467.01	01-Feb-18	2.88	5337.448	5340.323	136
KAFB-106103		4838	485	500	505.2	12	10	5	455.74	455.8	01-Feb-18	0.06	5328.387	5328.443	112
KAFB-106104		4814	510	525	530	12	10	5	455.19	455.24	01-Feb-18	0.05	5328.028	5328.075	137
KAFB-106105		4838	484	499	504	12	10	5	448.96	448.96	29-Jan-18	0.00	5321.961	5321.961	117
KAFB-106106		4857	453.6	483.6	488.6	12	10	5	448.85	448.85	29-Jan-18	0.00	5321.799	5321.799	148
KAFB-106107		4814	510.2	525.2	530.2	12	10	5	449.06	449.06	29-Jan-18	0.00	5322.117	5322.117	144
KAFB-106201		4857	487	517	522	12	10	5	480.61	483.26	01-Feb-18	2.65	5354.349	5356.997	149
KAFB-106202		4838	517	532	537	12	10	5	481.06	483.95	01-Feb-18	2.89	5354.901	5357.796	118
KAFB-106203		4814	620	635	640	12	10	5	480.93	484.01	01-Feb-18	3.08	5354.443	5357.518	223
KAFB-106204		4857	462.5	492.5	497.5	12	10	5	459.29	459.29	29-Jan-18	0.00	5332.857	5332.857	146
KAFB-106205		4838	492.5	507.5	512.5	12	10	5	459.69	459.69	29-Jan-18	0.00	5333.291	5333.291	115
KAFB-106206		4814	593.5	608.2	613.2	12	10	5	459.82	459.82	29-Jan-18	0.00	5333.462	5333.462	217
KAFB-106207		4857	473	503	508	12	10	5	470.24	470.18	29-Jan-18	-0.06	5344.253	5344.195	146
KAFB-106208		4838	503	518	523	12	10	5	469.92	469.9	29-Jan-18	-0.02	5343.871	5343.851	115
KAFB-106209		4814	603	617	622	12	10	5	469.38	469.34	29-Jan-18	-0.04	5343.415	5343.376	214
KAFB-106212		4814	543.2	558.2	563.4	12	10	5	448.84	448.83	30-Jan-18	-0.01	5321.814	5321.799	179
KAFB-106213		4857	448	478	483.4	12	10	5	452.47	452.38	30-Jan-18	-0.09	5325.281	5325.191	126
KAFB-106214		4838	478.23	492.73	498.13	12	10	5	452.47	452.49	30-Jan-18	0.02	5325.43	5325.451	107
KAFB-106215		4814	547	562	567	12	10	5	452.74	452.73	30-Jan-18	-0.01	5325.781	5325.771	178
KAFB-106216		4857	455.5	485.5	490.5	12	10	5	461.06	461.06	29-Jan-18	0.00	5333.911	5333.911	120
KAFB-106217		4838	485	500	505	12	10	5	460.98	460.98	29-Jan-18	0.00	5333.845	5333.845	106
KAFB-106218		4814	552	567	572.45	12	10	5	461.11	461.11	29-Jan-18	0.00	5333.637	5333.637	176
KAFB-106219		4857	462.7	492.7	497.9	12	10	5	466.71	466.71	31-Jan-18	0.00	5340.41	5340.41	127
KAFB-106220		4838	493	508	513	12	10	5	466.64	466.64	31-Jan-18	0.00	5340.342	5340.342	108
KAFB-106221		4814	561	576	581	12	10	5	466.39	466.39	31-Jan-18	0.00	5340.097	5340.097	178
KAFB-106222		4857	457.8	487.8	493.2	12	10	5	460.08	460.08	29-Jan-18	0.00	5333.24	5333.24	135
KAFB-106223		4838	487.8	502.8	508	12	10	5	460.79	460.79	29-Jan-18	0.00	5333.957	5333.957	110
KAFB-106224		4814	555	570	575.5	12	10	5	461.94	461.94	29-Jan-18	0.00	5335.076	5335.076	179
KAFB-106225		4857	450	480	485.2	12	10	5	453.61	453.61	29-Jan-18	0.00	5326.357	5326.357	129
KAFB-106226		4838	480	495	500	12	10	5	454.27	454.27	29-Jan-18	0.00	5327.309	5327.309	108
KAFB-106227		4814	548	563	568.5	12	10	5	454.04	454.04	29-Jan-18	0.00	5328.087	5328.087	179
KAFB-106231		4857	440	475	480	12	10	5	453.76	453.76	30-Jan-18	0.00	5327.563	5327.563	107
KAFB-106232		4838	503	518	523	12	10	5	453.29	453.29	30-Jan-18	0.00	5327.197	5327.197	132

Monitoring Well Construction Information

Well_ID	Dedicated System?	REI	Top of Screen (bgs)	Bottom of Screen (bgs)	Total Well Depth (bgs)	Borehole Diameter (in)	Borehole Diameter Screen Interval (in)	Casing Diameter (in)	Water Level (bgs)	Water Level (MRP)	WL Date	MPE-GE	G_Elevation_USGS	MPE_USGS	Well Volume (Q1 2018 Gauging)
KAFB-106235-463		4857	438	463	465	12	12	3	442.92	442.88	29-Jan-18	-0.04	5315.55	5315.51	130
KAFB-106235-492		4838	472	492	494	12	12	3	442.87	442.83	29-Jan-18	-0.04	5315.55	5315.51	140
KAFB-106235-521		4814	501	521	523	12	12	3	442.94	442.9	29-Jan-18	-0.04	5315.55	5315.51	151
KAFB-106236-461		4857	436	461	463	12	12	3	442.56	442.5	29-Jan-18	-0.06	5315.76	5315.7	120
KAFB-106236-490		4838	470	490	492	12	12	3	442.58	442.52	29-Jan-18	-0.06	5315.76	5315.7	139
KAFB-106236-519		4814	499	519	521	12	12	3	442.62	442.56	29-Jan-18	-0.06	5315.76	5315.7	150
KAFB-3411		4857	477	502	503	9	9	4	467.16	470.22	01-Feb-18	3.06	5340.424	5343.485	92

This page intentionally left blank

KIRTLAND AIR FORCE BASE
ALBUQUERQUE, NEW MEXICO

OPERATIONS AND MAINTENANCE PLAN
GROUNDWATER TREATMENT SYSTEM
BULK FUELS FACILITY
SOLID WASTE MANAGEMENT UNIT ST-106/SS-111
Revision R2

June 2018

377 MSG/CEI
2050 Wyoming Boulevard Southeast
Kirtland Air Force Base, New Mexico 87117-5270

KIRTLAND AIR FORCE BASE
ALBUQUERQUE, NEW MEXICO

OPERATIONS AND MAINTENANCE PLAN
GROUNDWATER TREATMENT SYSTEM
BULK FUELS FACILITY
SOLID WASTE MANAGEMENT UNIT ST-106/SS-111

June 2018

Revision R2

Prepared for
U.S. Army Corps of Engineers
Albuquerque District
4101 Jefferson Plaza NE
Albuquerque, New Mexico 87109

NOTICE

This report was prepared for the U.S. Army Corps of Engineers by EA Engineering, Science, and Technology, Inc., PBC for the purpose of documenting the operational and maintenance requirements for the Groundwater Treatment System used in an Interim Action being implemented by the U.S. Air Force Environmental Restoration Program at Kirtland Air Force Base.

Government agencies and their contractors registered with the Defense Technical Information Center should direct requests for copies of this report to: Defense Technical Information Center, Cameron Station, Alexandria, Virginia 22304-6145.

Non-government agencies may purchase copies of this document from: National Technical Information Service, 5285 Port Royal Road, Springfield, Virginia 22161.

DEPARTMENT OF THE AIR FORCE
377TH AIR BASE WING (AFGSC)

RECEIVED
JUN 20 2018
NMED
Hazardous Waste
Bureau

JUN 14 2018

Colonel Richard W. Gibbs, USAF
Commander
377th Air Base Wing
2000 Wyoming Blvd SE
Kirtland AFB NM 87117

Mr. John Kieling, Bureau Chief
Hazardous Waste Bureau (HWB)
New Mexico Environment Department (NMED)
2905 Rodeo Park Drive East, Building 1
Santa Fe NM 87505-6303

Dear Mr. Kieling

Attached please find the *Operations and Maintenance Plan Groundwater Treatment System, Revision R2, dated June 2018* Solid Waste Management Unit ST-106/SS-111, Kirtland Air Force Base, New Mexico. This plan outlines the groundwater treatment system operations, maintenance, monitoring, waste management, and reporting requirements related to the remediation of contaminated groundwater at the BFF spill site. This updated plan includes documentation for groundwater treatment system upgrades including the installation of sand filter pre-treatment units on each treatment train and installation of a fourth groundwater extraction well associated with ST-106 and SS-111, which are a part of the Bulk Fuels remediation effort.

If you have any questions or concerns, please contact Mr. Scott Clark at (505) 846-9017 or at scott.clark@us.af.mil; or Mrs. Holly O'Grady at (505) 853-3484 or at holly.ogrady@us.af.mil.

Sincerely

Richard W. Gibbs

RICHARD W. GIBBS, Colonel, USAF
Commander

Attachment:
Operations and Maintenance Plan, Groundwater Treatment System, Revision R2, June 2018; 2 Hard Copies/2 CDs

cc:
NMED (Borrego) letter
NMED-OOTS (McQuillan), letter and CD
NMED GWQB (Hunter), letter and CD
EPA Region 6 (King, Ellinger), letter and CD
COA (Faris), letter and CD
ABCWUA (Shean), letter and CD
SAF-IEE (Lynnes), electronic only
AFCEC/CZ (Renaghan, Clark, O'Grady, Segura), electronic only
USACE-ABQ District Office (Simpler, Phaneuf, Dreeland, Sanchez, Salazar), electronic only
Public Info Repository, Administrative Record/Information Repository (AR/IR) and File

DEPARTMENT OF THE AIR FORCE
377TH AIR BASE WING (AFGSC)

GROUND WATER
JUN 20 2018
BUREAU

JUN 14 2018

Colonel Richard W. Gibbs, USAF
Commander
377th Air Base Wing
2000 Wyoming Blvd SE
Kirtland AFB NM 87117

Mr. John Kieling, Bureau Chief
Hazardous Waste Bureau (HWB)
New Mexico Environment Department (NMED)
2905 Rodeo Park Drive East, Building 1
Santa Fe NM 87505-6303

Dear Mr. Kieling

Attached please find the *Operations and Maintenance Plan Groundwater Treatment System, Revision R2, dated June 2018* Solid Waste Management Unit ST-106/SS-111, Kirtland Air Force Base, New Mexico. This plan outlines the groundwater treatment system operations, maintenance, monitoring, waste management, and reporting requirements related to the remediation of contaminated groundwater at the BFF spill site. This updated plan includes documentation for groundwater treatment system upgrades including the installation of sand filter pre-treatment units on each treatment train and installation of a fourth groundwater extraction well associated with ST-106 and SS-111, which are a part of the Bulk Fuels remediation effort.

If you have any questions or concerns, please contact Mr. Scott Clark at (505) 846-9017 or at scott.clark@us.af.mil; or Mrs. Holly O'Grady at (505) 853-3484 or at holly.ogrady@us.af.mil.

Sincerely

Richard W. Gibbs

RICHARD W. GIBBS, Colonel, USAF
Commander

Attachment:
Operations and Maintenance Plan, Groundwater Treatment System, Revision R2, June 2018; 2 Hard Copies/2 CDs

cc:
NMED (Borrego) letter
NMED-OOTS (McQuillan), letter and CD
NMED GWQB (Hunter), letter and CD
EPA Region 6 (King, Ellinger), letter and CD
COA (Faris), letter and CD
ABCWUA (Shean), letter and CD
SAF-IEE (Lynnes), electronic only
AFCEC/CZ (Renaghan, Clark, O'Grady, Segura), electronic only
USACE-ABQ District Office (Simpler, Phaneuf, Dreeland, Sanchez, Salazar), electronic only
Public Info Repository, Administrative Record/Information Repository (AR/IR) and File

REPORT DOCUMENTATION PAGE	*Form Approved OMB No. 0704-0188*

Public reporting burden for this collection of information is estimated to average 1 hour per response, including the time for reviewing instructions, searching existing data sources, gathering and maintaining the data needed, and completing and reviewing this collection of information. Send comments regarding this burden estimate or any other aspect of this collection of information, including suggestions for reducing this burden to Department of Defense, Washington Headquarters Services, Directorate for Information Operations and Reports (0704-0188), 1215 Jefferson Davis Highway, Suite 1204, Arlington, VA 22202-4302. Respondents should be aware that notwithstanding any other provision of law, no person shall be subject to any penalty for failing to comply with a collection of information if it does not display a currently valid OMB control number. **PLEASE DO NOT RETURN YOUR FORM TO THE ABOVE ADDRESS.**

1. REPORT DATE ***(DD-MM-YYYY)***	**2. REPORT TYPE**	**3. DATES COVERED** ***(From - To)***
14-06-2018	Annual Update	15-09-2017 – 14-06-2018

4. TITLE AND SUBTITLE	**5a. CONTRACT NUMBER**
Operations and Maintenance Plan Groundwater Treatment System Revision 2 Bulk Fuels Facility Solid Waste Management Unit ST-106/SS-111 Kirtland Air Force Base, New Mexico	W912DR-12-D-0006-DM01 **5b. GRANT NUMBER** **5c. PROGRAM ELEMENT NUMBER**
6. AUTHOR(S) EA Engineering, Science, and Technology, Inc., PBC	**5d. PROJECT NUMBER** 62599DM01 **5e. TASK NUMBER** 1010 **5f. WORK UNIT NUMBER** Not applicable
7. PERFORMING ORGANIZATION NAME(S) AND ADDRESS(ES) AND ADDRESS(ES) EA Engineering, Science, and Technology, Inc., PBC 320 Gold Avenue Southwest, Suite 1300 Albuquerque, New Mexico 87102	**8. PERFORMING ORGANIZATION REPORT NUMBER** Not assigned
9. SPONSORING/MONITORING AGENCY NAME(S) AND ADDRESS(ES) U.S. Army Corps of Engineers–Albuquerque District 4101 Jefferson Plaza Northeast Albuquerque, New Mexico 87109-3435	**10.SPONSOR/MONITOR'S ACRONYM(S)** **11. SPONSOR/MONITOR'S REPORT NUMBER(S)**
12. DISTRIBUTION/AVAILABILITY STATEMENT	
13. SUPPLEMENTARY NOTES	

14. ABSTRACT

This Operations and Maintenance (O&M) Plan for the groundwater treatment system (GWTS) was prepared for the Kirtland Air Force Base Bulk Fuels Facility (BFF), Solid Waste Management Unit ST-106/SS-111 located in Albuquerque, New Mexico. This Plan was prepared in accordance with all applicable federal, state, and local laws and regulations, including the New Mexico Hazardous Waste Act (and regulations) and the New Mexico Water Quality Act (and regulations). The GWTS has been installed as an interim measure to collapse and contain the ethylene dibromide groundwater plume from the BFF site, in order to protect Albuquerque, Kirtland Air Force Base, and the U.S. Department of Veterans Affairs Medical Center drinking water supply wells. The GWTS currently includes groundwater extraction wells and groundwater treatment using carbon adsorption. Treated groundwater is utilized for irrigation or injected into the aquifer under an approved underground injection control discharge permit. This O&M Plan is intended to assist personnel in successfully operating the GWTS and serves as a resource for equipment information, operational procedures, inspections and maintenance, repairs, recordkeeping, and waste management.

15. SUBJECT TERMS

Bulk Fuels Facility, Solid Waste Management Unit ST-106/SS-111, Interim Measures, RCRA, groundwater sampling, groundwater treatment system operation, granular activated carbon, ethylene dibromide, underground injection control

16. SECURITY CLASSIFICATION OF:			**17. LIMITATION OF ABSTRACT**	**18. NUMBER OF PAGES**	**19a. NAME OF RESPONSIBLE PERSON**
a. REPORT	**b. ABSTRACT**	**c. THIS PAGE**			Devon Jercinovic
UNCLASSIFIED	UNCLASSIFIED	UNCLASSIFIED	ABSTRACT	4,676	**19b. TELEPHONE NUMBER** ***(include area code)*** 505-715-4248

Standard Form 298
(Rev. 8-98) **Prescribed by ANSI Std. Z39.18**

This page intentionally left blank

40 CFR 270.11
DOCUMENT CERTIFICATION

I certify under penalty of law that this document and all attachments were prepared under my direction or supervision according to a system designed to assure that qualified personnel properly gather and evaluate the information submitted. Based on my inquiry of the person or persons who manage the system, or those persons directly responsible for gathering the information, the information submitted is, to the best of my knowledge and belief, true, accurate, and complete. I am aware that there are significant penalties for submitting false information, including the possibility of fines and imprisonment for knowing violations.

Richard W. Gibbs — 14 JUN 18

RICHARD W. GIBBS, Colonel, U.S. Air Force
Commander, 377th Air Base Wing

Date

This document has been approved for public release.

Athana Zuch — 6/12/18

KIRTLAND AIR FORCE BASE
377th Air Base Wing Public Affairs

Date

This page intentionally left blank

PREFACE

This Operations and Maintenance Plan for the groundwater treatment system (GWTS) was prepared for the U.S. Army Corps of Engineers. It pertains to the Kirtland Air Force Base Bulk Fuels Facility, Solid Waste Management Unit ST-106/SS-111 located in Albuquerque, New Mexico. This Plan was prepared in accordance with all applicable federal, state, and local laws and regulations, including the New Mexico Hazardous Waste Act and the New Mexico Water Quality Act (New Mexico Statutes Annotated 1978), the New Mexico Hazardous Waste Management Regulations, and the Water Quality Control Commission Regulations.

This Operations and Maintenance Plan for the GWTS contains the necessary information to conduct operations at the GWTS. Mr. Trent Simpler, PE, is the U.S. Army Corps of Engineers–Albuquerque District Project Manager. The Environmental Restoration Section Chief for this program is Mr. Scott Clark of Kirtland Air Force Base. Ms. Devon Jercinovic is the EA Project Manager.

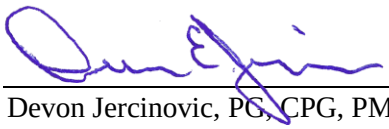

Devon Jercinovic, PG, CPG, PMP
Project Manager
EA Engineering, Science, and Technology, Inc., PBC

This page intentionally left blank

REVISION TRACKING

Date	Revision	Section Changed	Description of Changes
8/2016	0	Baseline document	None
9/2017	1	Front Matter	Added notice and revised preface
		Executive Summary	Revised permit and agreement citations
		Section 1 – Introduction	Revised all subsections to include KAFB-106239, operational changes, and permit requirements (DP-1839)
		Section 2 – Operation of the Groundwater Treatment System	Revised all subsections to reflect changes in system programming; added pending installation items and system utilities information
		Section 3 – Inspection and Preventative Maintenance	Added subsections for additional maintenance activities including pending installation items
		Section 4 – System Troubleshooting	Added this section to document nonstandard operational procedures
		Section 5 – Process Monitoring	Revised all subsections to provide more accurate description of process monitoring activities
		Section 6 – Recordkeeping	Revised all subsections to provide compliance with DP-1839
		Section 7 – Waste Management	Revised text and added subsections for additional waste streams identified and created with pending installation items
		References	Revised references
		Figures	Removed Figure 1-1 extent of ethylene dibromide plume as updated plume maps are provided in quarter monitoring reports, Figure 1-2 Site Map was revised to include new proposed conveyance line
		Tables	Added the following tables: 1-1 Applicable Permits 1-2 Permit Terms and Conditions, Operations and Maintenance Plan Cross References 2-2 Permitted Extraction Well Flow Rates 2-3 Standard Operational Set Points 3-1 Groundwater Treatment System Routine Maintenance Schedule 3-2 Specific Consumable Product Codes, Suppliers, and Recommended On-Hand Inventory 3-3 Consumable Supply Inventory 3-4 Large Item Inventory 5-1 Influent Criteria 6-1 Reports and Recipients

REVISION TRACKING

Date	Revision	Section Changed	Description of Changes
9/2017	1	Appendix A – Permits and Agreements	Revised to contain copies of regulatory approvals and permits as well as access agreements instead of a description of those items
		Appendix B – Health and Safety	Added the following to the list of hazards: Hearing damage hazards Pinch points (lift gates, vault lids) Hand tool use Respiratory hazards (granular activated carbon fines)
		Appendix C – Organization and Responsibilities	Updated organization structure
		Appendix D – Description of Groundwater Treatment System Equipment and Facilities	Revised to reflect equipment adjustments, added pending installation equipment descriptions, and references
		Appendix E – Description of Groundwater Treatment System Equipment/Instrument Location Pictures	Revised to reflect equipment adjustments
		Appendix F – Process-Control Description	Revised to reflect equipment adjustments, programming changes, and added pending installation equipment control descriptions
		Appendix G – Human Machine Interface Screens	Revised to reflect programming changes
		Appendix H – Design Calculations for Carbon Vessel Media Beds	Added manufacturer modeled granular activated carbon usage rates at two theoretical higher influent concentrations
		Appendix I – Groundwater Treatment System Operations Log Sheets and Record Forms	Revised to reflect Train 2 expansion and new equipment
		Appendix J – Manufacturers' Literature	Revised by adding in the Train 2 expansion equipment literature
		Appendix K – Contingency Plan	Revised to maintain compliance with DP-1839, access agreements, update emergency response table, and added references
		Appendix L – Sampling and Analysis Plan	Revised for compliance with DP-1839 and provide more detailed description of driving factors as well as monitoring locations and added references
		Appendix N – User Operational Adjustments Documentation	Added to provide documentation of changes made to the system that deviate from as-built drawings or operational set points
		Appendix O – Well Construction Diagrams and Borehole Logs	Added to provide extraction and injection well information readily to operators
9/2017	1	Appendix P – Example Reports	Added to provide examples of report structures and ensure compliance with relevant permits
		Appendix Q – Technical Memorandum	Added to provide approved technical memoranda that are applicable to the groundwater treatment system.
5/2018	2	Front Matter	Added revision tracking table
		Section 1 – Introduction	Revised to include newly installed equipment

REVISION TRACKING

Date	Revision	Section Changed	Description of Changes
		Section 2 – Operation of the Groundwater Treatment System	Revised to include newly installed Treatment Train 2 equipment and equipment pending installation
		Section 3 – Inspection and Preventative Maintenance	Revised to include newly installed equipment maintenance and maintenance for equipment pending installation; added flowmeter verification testing Subsection 3.17
		Section 4 – System Troubleshooting	Added Subsections 4.3 KAFB-7 Hydraulic Pump Overload Reset and 4.4 KAFB-106233 and KAFB-106234 Start Order
		Section 5 – Process Monitoring	Minor text revisions
		Section 6 – Recordkeeping	Minor text revisions
		Section 7 – Waste Management	Added Kirtland Air Force Base Hazardous Materials Group management information
		Figures	Revised Figure 1-1 to show KAFB-106239 conveyance line as installed
		Tables	Revised the following tables: Added clarification to Table 2-2 Revised Table 2-3 to reflect required operational and programing changes Added skimming to Table 3-1 Added sand filter consumables to Table 3-2 Added tools to Table 3-3
		Appendix A – Permits and Agreements	No revisions
		Appendix B – Health and Safety	Added the following hazards: Exposure to oxidants (sodium hypochlorite) Respiratory hazards (sand filter media [DMI-65])
		Appendix D – Description of Groundwater Treatment System Equipment and Facilities	Revised text to properly refer to newly installed equipment as installed rather than pending installation.
5/2018	2	Appendix E – Description of Groundwater Treatment System Equipment/Instrument Location Pictures	Added photographs of newly installed equipment including sand filters, clarifier, KAFB-196239 wellhead and control panel
		Appendix F – Process-Control Description	Revised the control description to reflect programming changes
		Appendix G – Human Machine Interface Screens	Revised the screens to reflect programming changes
		Appendix I – Groundwater Treatment System Operations Log Sheets and Record Forms	Revised forms to reflect equipment additions
		Appendix J – Manufacturers' Literature	Added construction as-builts, basis of design (includes manufacturers' literature) for sand filters, and manufacturers' literature for equipment associated with KAFB-106239
		Appendix L – Sampling and Analysis Plan	Clarified requirements that result in extraction well sampling; revised to ensure compliance with DP-1839
		Appendix O – Well Construction Diagrams and Borehole Logs	Updated KAFB-106239 construction diagram

REVISION TRACKING

Date	Revision	Section Changed	Description of Changes
		Appendix P – Example Reports	Revised to most recent report examples
		Appendix R – Approved Standard Operating Procedures	New appendix added to provide approved standard operating procedures that are applicable to the groundwater treatment system

CONTENTS

Section **Page**

EXECUTIVE SUMMARY ES-1

1. INTRODUCTION 1-1

1.1 Site Description 1-1
1.2 Overall System Description 1-1
1.3 Discharge Requirements 1-2
1.4 Health and Safety 1-3
1.5 Organization and Responsibilities 1-3

2. OPERATION OF THE GROUNDWATER TREATMENT SYSTEM 2-1

2.1 Groundwater Treatment System Operational Approach 2-1
2.2 Groundwater Well Pumps and Flow Control 2-1
2.3 Influent Tank, Pumps, and Pretreatment Sand Filters 2-2
2.4 Carbon Vessels 2-3
2.5 Treated Water Tank and Pump 2-4
2.6 Discharge Locations 2-5
2.7 Groundwater Treatment System Building Containment Sumps 2-5
2.8 Startup Sequence 2-6
2.9 Normal Shut Down Procedure 2-7
2.10 Emergency Shutdown Procedure 2-8
2.11 System Utilities 2-8

3. INSPECTION AND PREVENTATIVE MAINTENANCE 3-1

3.1 Scheduled Inspection and Routine Maintenance Activities 3-1
3.2 Influent and Effluent Pump Monitors 3-1
3.3 Bag Filter Change-Out 3-1
3.4 Y-Strainer Cleaning 3-2
3.5 Discharge Changeover 3-2
3.6 Granular Activated Carbon Backwashing, Skimming, and Change-Out 3-2
3.7 Dosing Pump, Chlorine Analyzer, and Sodium Hypochlorite Generator Maintenance 3-3
3.8 Sand Filter Maintenance 3-4
3.9 Clarifier Maintenance 3-4
3.10 Effluent Line Integrity Testing 3-5
3.11 Well Pump Pulling 3-5
3.12 Well and Conveyance Line Disinfection 3-6

3.12.1 Well Disinfection 3-6
3.12.2 Conveyance Line Disinfection 3-6

3.13 Well Shocking 3-6
3.14 Well Cleaning and Redevelopment 3-7

3.14.1 Physical Cleaning 3-7
3.14.2 Chemical Cleaning 3-8

3.15 Well Step-Testing 3-8
3.16 Alarm Testing 3-9
3.17 Flowmeter Verification Testing 3-10
3.18 Maintenance Logs 3-10
3.19 Groundwater Treatment System Consumables and Small Parts Information 3-11

4. SYSTEM TROUBLESHOOTING 4-1

4.1 Influent Valve Set Points 4-1
4.2 Influent Tank Equalization 4-1
4.3 KAFB-7 Hydraulic Pump Overload Reset 4-1
4.4 KAFB-106233 and KAFB-106234 Start Order 4-1

5. PROCESS MONITORING 5-1

5.1 Extraction Wells 5-1
5.2 Treatment System 5-1
5.3 Influent and Effluent Monitoring 5-2

6. RECORDKEEPING 6-1

6.1 Reporting 6-1
6.2 Equipment Warranties 6-2

7. WASTE MANAGEMENT 7-1

7.1 Bag Filters 7-1
7.2 Monitoring Well and Maintenance Activity Water 7-1

7.2.1 Non-Hazardous Water 7-2
7.2.2 Hazardous/Potentially Hazardous Water 7-2
7.2.3 Water of Unknown Quality 7-2

7.3 Pre-Treatment pH Adjustment and Disinfection 7-2

7.3.1 Sand Filter Pre-Treatment 7-3
7.3.2 Investigation-Derived Waste Purge Water 7-3

7.4 Backwash Water 7-3
7.5 Depleted Granular Activated Carbon 7-3
7.6 Used Pump Oil 7-3

8. REFERENCES 8-1

APPENDICES

A Permits and Agreements

A-1 Regulatory Permits
A-2 Access Agreements

B Health and Safety

C Organization and Responsibilities

D Description of Groundwater Treatment System Equipment and Facilities

E Process Drawings and Groundwater Treatment System Equipment/Instrument Location Pictures

F Process-Control Description

G Human Machine Interface Screens

H Design Calculations for Carbon Vessel Media Beds

I Groundwater Treatment System Operations Log Sheets and Record Forms

J Manufacturers' Literature

K Contingency Plan

L Sampling and Analysis Plan

M Waste Characterization Documentation

N User Operational Adjustments Documentation

O Well Construction Diagrams and Borehole Logs

P Example Reports

Q Technical Memorandum

R Approved Standard Operating Procedures

FIGURES

1-1 Site Map

TABLES

1-1 Applicable Permits

1-2 Permit Terms and Conditions, Operations and Maintenance Plan Cross References

2-1 Alarm Conditions, Interlocks, and System Responses

2-2 Permitted Extraction Well Flow Rates

2-3 Standard Operational Set Points

3-1 Groundwater Treatment System Routine Maintenance Schedule

3-2 Specific Consumable Product Codes, Suppliers, and Recommended On-Hand Inventory

3-3 Consumable Supply Inventory

3-4 Large Item Inventory

5-1 Influent Criteria

6-1 Reports and Recipients

ACRONYMS AND ABBREVIATIONS

µg/L	microgram(s) per liter
AFB	Air Force Base
AWWA	American Water Works Association
BFF	Bulk Fuels Facility
CFR	Code of Federal Regulations
EDB	ethylene dibromide
GAC	granular activated carbon
GCMP	golf course main pond
gpm	gallon(s) per minute
GWTS	groundwater treatment system
HDPE	high density polyethylene
HMI	human machine interface
mg/L	milligram(s) per liter
NMED	New Mexico Environment Department
No.	Number
O&M	operations and maintenance
PLC	programmable logic controller
psi	pound(s) per square inch
psig	pound(s) per square inch gauge
RCRA	Resource Conservation and Recovery Act
SE	Southeast
SWMU	Solid Waste Management Unit
UIC	underground injection control
VFD	variable frequency drive
WCH	well control house

This page intentionally left blank

EXECUTIVE SUMMARY

This Operations and Maintenance (O&M) Plan for the groundwater treatment system (GWTS) was prepared for the Bulk Fuels Facility (BFF), Solid Waste Management Unit (SWMU) ST-106/SS-111 located at Kirtland Air Force Base (AFB), New Mexico. The GWTS was installed as part of the ongoing interim measures for groundwater remediation at SWMU ST-106/SS-111 pursuant to the Resource Conservation and Recovery Act Hazardous Waste Treatment Facility Operating Permit Number NM9570024423 (New Mexico Environment Department, 2010). This Plan was prepared in accordance with all applicable federal, state, and local laws and regulations.

The GWTS has been installed as an interim measure to collapse and contain the ethylene dibromide groundwater plume from the BFF site, in order to protect Albuquerque Bernalillo County Water Utility Authority, Kirtland AFB, and the Raymond G. Murphy Veterans Affairs Medical Center drinking water supply well. The GWTS currently includes groundwater extraction wells and groundwater treatment using carbon adsorption. Treated groundwater is utilized for irrigation or injected into the aquifer. This O&M Plan is intended to assist personnel in successfully operating the GWTS and serves as a resource for equipment information, operational procedures, inspection and maintenance, repairs, recordkeeping, and waste management.

This page intentionally left blank

1. INTRODUCTION

This Operations and Maintenance (O&M) Plan is intended to assist personnel in successfully operating the groundwater treatment system (GWTS) to treat and collapse the ethylene dibromide (EDB) groundwater plume from the Kirtland Air Force Base (AFB) Bulk Fuels Facility (BFF) site. This Plan serves as a resource for the following:

- Equipment information (one-stop for manufacturer-supplied catalog cuts and O&M manuals)
- Operational procedures
- Inspections and maintenance
- Troubleshooting
- Repairs
- Recordkeeping
- Waste management.

This O&M Plan contains the following appendices to support the above items:

- Appendix A – Permits and Agreements
- Appendix B – Health and Safety
- Appendix C – Organization and Responsibilities
- Appendix D – Description of GWTS Equipment and Facilities
- Appendix E – Process Drawings and GWTS Equipment/Instrument Location Pictures
- Appendix F – Process-Control Description
- Appendix G – Human Machine Interface Screens
- Appendix H – Design Calculations for Carbon Vessel Media Beds
- Appendix I – GWTS Operations Log Sheets and Record Forms
- Appendix J – Manufacturers' Literature
- Appendix K – Contingency Plan
- Appendix L – Sampling and Analysis Plan
- Appendix M – Waste Characterization Documentation
- Appendix N – User Operational Adjustments Documentation
- Appendix O – Well Construction Diagrams and Borehole Logs
- Appendix P – Example Reports
- Appendix Q – Technical Memorandum
- Appendix R – Approved Standard Operating Procedures.

A copy of the most recent version of this Plan is kept onsite at the GWTS at all times.

1.1 Site Description

Kirtland AFB is located in Bernalillo County in central New Mexico, southeast of the City of Albuquerque and adjacent to the Albuquerque International Sunport. The BFF is located in the northwestern portion of Kirtland AFB and is the source for the Solid Waste Management Unit (SWMU) ST-106/SS-111. The overall layout of the extraction wells, conveyance lines, GWTS, the Tijeras Arroyo golf course main pond (GCMP), and injection well KAFB-7 are shown on Figure 1-1.

1.2 Overall System Description

The system currently includes four extraction wells located north of Kirtland AFB (Figure 1-1). Contaminated groundwater from the extraction wells is pumped to the GWTS through double-walled,

high density polyethylene (HDPE) pipe equipped with leak detection. Off-Base, the influent piping is installed below ground along right-of-ways and alleys and on-Base in existing utility corridors. The conveyance line from extraction well KAFB-106239 is connected below grade with a Y-junction to the conveyance line for extraction well KAFB-106228 that runs directly to the GWTS. The conveyance lines from wells KAFB-106233 and KAFB-106234 run to a well control house (WCH) located on-Base. The combined flow from KAFB-106233 and KAFB-106234 is conveyed from the WCH through a single conveyance line to the GWTS. Construction diagrams and borehole logs for extraction wells are provided in Appendix O.

The GWTS is located off Ridgecrest Drive, Southeast (SE) on Kirtland AFB in the former Zia Park housing neighborhood. The building has three entrances, which are all locked to prevent unauthorized access. The system is designed to treat up to 800 gallons per minute (gpm) of non-hazardous, contaminated groundwater; each of two treatment trains can treat up to 400 gpm. Each treatment train is comprised of the following:

- Pre-treatment influent equalization tank (6,000-gallon capacity)
- Pre-treatment free chlorine analyzer and dosing station (15-gallon capacity)
- Two pre-treatment influent pumps (400 gpm combined flow capacity)
- Two pre-treatment sand filters (477 gpm combined flow capacity)
- Two pre-treatment bag filter units (six bag filters per unit)
- Two carbon vessels (20,000 pounds of carbon per vessel)
- One treated water storage tank (6,000-gallon capacity)
- One treated effluent pump (400 gpm flow capacity)
- Two post-treatment bag filter units for treated water (six bag filters per unit).

The GWTS was expanded with a second treatment train in 2017. In 2018, pretreatment sand filters were installed to sequester any excess dissolved iron or manganese and suspended solids, including biological material entering the system. Extraction well KAFB-106239 was connected the GWTS in 2018 via double-walled HDPE, well extraction equipment, and wellhead instrumentation for flow control and communication. In addition, significant upgrades were made to monitoring devices and transmitters (flow, pressure, etc.) as well as the programmable logic controller (PLC) and the human machine interface (HMI).

The treated groundwater is transported via a single-walled HDPE pipe to a junction with an existing pipeline that connects well KAFB-7 to the GCMP. During the summer months, the treated water is predominantly used to irrigate the golf course. During the winter months, when the demand for irrigation water is reduced, the excess treated water is injected into the aquifer through KAFB-7 in accordance with an Underground Injection Control (UIC) Permit DP-1839 (New Mexico Environment Department [NMED], 2017). A schematic of the injection equipment in KAFB-7 is provided in Appendix O.

1.3 Discharge Requirements

The GWTS supports a groundwater treatment interim measure that is being implemented pursuant to the Resource Conservation and Recovery Act (RCRA) corrective action provisions in Part 6 of Kirtland AFB's Hazardous Waste Treatment Facility Operating Permit (Permit Number [No.] NM9570024423 – "RCRA Permit"). Applicable state permits pertaining to GWTS effluent discharge are provided in Appendix A. Treated groundwater is either injected into the aquifer in accordance with DP-1839 or discharged to the GCMP in accordance with the April 4, 2016 letter from the NMED Hazardous Waste Bureau (NMED, 2016; Table 1-1). All requirements from the associated applicable permits are strictly adhered to, such as discharge time limits or flow rates to any specific location. Table 1-2 provides each relevant permit term and condition and where each of the applicable items is addressed in this O&M Plan.

The GWTS has been designed to treat groundwater to meet the New Mexico Water Quality Control Commission water quality standards (20.6.2.3103 and 20.6.2.4103 New Mexico Administrative Code) and the drinking water maximum contaminant levels adopted by the U.S. Environmental Protection Agency under the Federal Safe Drinking Water Act (42 U.S. Code §§ 300f to 300j-26). GWTS effluent must comply with any applicable permit or regulatory requirements. The Sampling and Analysis Plan (Appendix L) contains the necessary reporting requirements, while Appendix K – Contingency Plan and the DP-1839 Contingency Plan (Appendix A) provides corrective actions to be enacted in the event of an exceedance of the discharge criteria.

1.4 Health and Safety

The foremost priority in operating the GWTS is to ensure the health and safety of the GWTS control operators (Operators), visitors, and nearby residents. Activities follow health and safety guidelines of a U.S. Air Force or U.S. Army Corps of Engineers-approved safety plan or other approved safety document. Safety information pertinent to GWTS O&M is provided in Appendix B. Emergency contact information placards are placed on all doors of the GWTS and WCH. A placard can also be found within the GWTS near the control room door.

1.5 Organization and Responsibilities

The organization chart and roles and responsibilities for the operation of the GWTS are provided in Appendix C.

This page intentionally left blank

2. OPERATION OF THE GROUNDWATER TREATMENT SYSTEM

Descriptions of the GWTS equipment and facilities are provided in Appendix D. A flow diagram and piping and instrumentation diagrams for the GWTS are provided in Appendix E. The GWTS is highly automated and designed for unattended operation. The GWTS control system is programmed to automatically perform normal plant operations and to safely shut down the system under fault conditions. The PLC notifies the Operators of fault conditions and shutdowns via email. A summary of main alarms is provided in Table 2-1.

This section is intended to provide only an overview of system operation. Appendix F provides a more detailed account of the function of all instruments and control elements in the system and the actions of all interlocks and shutdowns. Screen capture printouts of the HMI screens are provided in Appendix G. The PLC and HMI are installed in the treatment plant's main control panel (CP-100).

2.1 Groundwater Treatment System Operational Approach

Groundwater pumped from the extraction wells is collected into the GWTS influent tanks (TK-110 and TK-210). The GWTS influent pumps (P-112 A/B and P-212 A/B) transfer the water from the influent tank through the pre-treatment sand filters (pending installation), bag filters (F-112 A/B and F-212 A/B), carbon beds (V-114 A/B and V-214 A/B), and into the treated water tanks (TK-116 and TK-216). The treated effluent pumps (P-118 and P-218) transfer the water through the post-treatment bag filters (F-118 A/B and F-218 A/B) and the effluent conveyance line to either the GCMP or KAFB-7.

As the aquifer responds to extraction well operation, adjustments to the extraction well operation are made to ensure plume containment. Plume containment is evaluated in the Kirtland AFB BFF Quarterly Reports and recommendations for changes in extraction well operation are provided therein to comply with DP-1839 (Table 1-2; Condition No, 22.e). NMED is notified of any planned long-term adjustments via the weekly status report prior to such changes being implemented. Temporary adjustments associated with an emergency, GWTS O&M, or system testing may occur, and NMED is notified of these changes during the following weekly status update.

The control mode for the feed rate to the carbon vessels depends on the amount of groundwater produced by the extraction wells. The minimum recommended groundwater flow rate into the carbon vessels is 120 gpm, which provides uniform flow distribution through the carbon bed. The feed rate to the carbon beds is controlled by a preset influent flow rate set by the Operator. The combined flow rate through the influent skids of both treatment trains is set to exceed the incoming flow rate produced by the extraction wells to ensure that the extraction wells remain online constantly during operation. The PLC controls the level in the tanks by cycling the pumps immediately downstream of the tank off or on when a preset tank level is reached. If only one extraction well is online, groundwater flow to the GWTS may be below 120 gpm. In this case, one treatment train can be placed in operation at an operator specified flow rate and the PLC cycles the influent pumps on and off to maintain adequate flow through the carbon bed. The effluent flow rate is set by the Operator to exceed the influent pumping rate to ensure that the effluent tank does not overfill. The effluent train discharge pressure is controlled by an electronically actuated valve that provides backpressure on the effluent pumps to limit cavitation.

2.2 Groundwater Well Pumps and Flow Control

Under normal conditions, well pumps are typically started by activating either train control switch with the well pumps placed in sequence mode on the HMI. Well pumps cannot start and, if running, shut down under the following conditions:

- Switched on the HMI to the Off position
- Low water level in the well
- Low current draw by the pump (for P-101 only, indicating run-dry condition)
- Leak detection in any vault or conveyance line associated with that well
- High-high water level in the GWTS influent tank or clarifier
- High-high water level in either GWTS building sumps
- Loss of power at the GWTS or wellhead
- Leak detection in the WCH (for KAFB-106233 and KAFB-106234).

Manual on/off switches for the well pumps are available in the HMI and in the electrical shed at well KAFB-106228, the control panel at KAFB-106239, and at the WCH for KAFB-106233 and KAFB-106234. These local switches may be used for maintenance and troubleshooting pump problems but shall not be used during unmanned operation as they override PLC interlocks. Each extraction well has a maximum flow rate that can be extracted from the well, as permitted by the New Mexico Office of the State Engineer (Table 2-2). Extraction wells are equipped with totalizing, magnetic flowmeters and have been constructed to maximize water conservation to the maximum extent practical. Extraction wells cannot be operated in the event that a malfunction is detected with the totalizing flowmeter until the flowmeter is repaired or replaced.

2.3 Influent Tank, Pumps, and Pretreatment Sand Filters

The GWTS influent pumps, level in the GWTS influent tanks, and differential pressure across the pre-treatment bag filters are controlled and monitored by the PLC. The only Operator actions required during normal operations are to set the influent pump flow rates for the influent pump skids, put the control of the influent pumps into sequence using the HMI, and change bag filters when the differential pressure across the pretreatment bag filters exceeds the differential pressure threshold (10-15 pounds per square inch [psi]). Pump sequence number determines which pump (A or B) is active during times when only a single influent pump is required to provide the preset system flow rate (<200 gpm per train). If the pump first in the sequence fails, the pump second in the sequence activates and continues processing water. In the event that one influent pump cannot satisfy the preset system flow rate (>200 gpm per train), the second pump is placed into the same sequence number as the operating pump; this activates the second pump and balances the flow load between the two pumps. Manual on/off switches for the GWTS influent pumps are provided in the HMI and on the variable frequency drive (VFD) panels to the pumps to aid with maintenance and troubleshooting but cannot be used during unmanned operation as they override PLC interlocks. The GWTS influent pumps are interlocked to shut down under the following conditions:

- Switched to the Off position on the HMI
- Switched both pumps on the HMI to the zero sequence
- High-high water level in treated water storage tank or clarifier
- High-high water level in GWTS building sumps
- Low-low water level in GWTS influent tank
- High pump-outlet pressure
- High inlet pressure to the carbon vessels.

Pre-treatment sand filters are installed on each train between the influent pumps and the pre-treatment bag filters to remove excess dissolved iron and manganese as well as capture any suspended solids, including biological material, entering the system. The sand filters remove excess dissolved metals by advanced oxidation processes that occur on the surface of catalytic media that causes the precipitation of metal oxides. Further description of these advanced oxidation processes is provided in Appendix J. The metal

oxides are then captured by the filter and removed from the system via backwashing. Backwashing is manually activated by the Operator or occurs when differential pressure across a sand filter unit exceeds 10 psi from the clean operating differential pressure. Once activated, the sand filter controller actuates the appropriate valves to backwash the system for 4 minutes per sand filter vessel (two vessels per train). The system issues an alarm through the HMI that backwash is occurring and backwash water is transferred and stored in a clarifier located on top of the truck sump outside of the GWTS. The clarifier is equipped with a high-water level switch that alerts Operators that the clarifier is nearing capacity and results in a system-wide shutdown. Water is manually transferred from the clarifier to the internal sump by the Operator. Hoses for transferring water from the clarifier to the GWTS sump are stored in the GWTS building.

Dosing pumps are installed upstream of the influent tanks, on the influent pipe tree, and dose the influent water with sodium hypochlorite, an oxidant and disinfectant solution. The dosing pumps can be manually calibrated by the Operator to yield an influent concentration of free chlorine between 0.1 and 0.3 milligrams per liter (mg/L) or utilize a 4- to 20-milliamp signal from free chlorine analyzers (pending installation) installed immediately downstream of the influent equalization tanks to reach the same range. The sodium hypochlorite maintains the function of the sand filters and disinfects the sand filter media and water, which minimizes the need to skim or backwash the granular activated carbon (GAC) vessels due to the formation of biofouling. The dosing pumps are controlled by the primary system PLC and are only in operation during times that the extraction wells are in operation; this means that the dosing pumps respond to shutdowns incurred by the fault conditions that halt the extraction wells. The dosing pumps are designed to deliver between 9 milliliters and 9 liters of sodium hypochlorite solution per hour and must can be adjusted manually depending upon extraction well operation or utilizing a 4- to 20-milliamp signal from the free chlorine analyzers. The dosing pump reservoirs are designed to hold 15 gallons of solution and require manual refilling by the operator when the building sodium hypochlorite generator is not online. Manual filling of the dosing stations will cease when the sodium hypochlorite generator is installed.

A sodium hypochlorite generator (pending installation) supplies the dosing pumps with a stock solution of sodium hypochlorite solution. The sodium hypochlorite generator will be comprised of a brine tank, water softener, electrode panel, and oxidant tank. The brine tank holds food grade salt and water supplied from the softened Base water supply. The brine is then pumped into the electrode panel where it is converted into dilute sodium hypochlorite solution. That solution is then stored in the oxidant tank until it is fed into the dosing pump tanks. A vent has been installed on the oxidant tank to relieve excess pressure and gas byproducts produced during sodium hypochlorite generation.

The pre-treatment bag filters on the GWTS influent pump skid are equipped with differential pressure transmitters. If pressure drop across the filters increases to 10-15 psi, the filters need to be changed. If the differential pressure exceeds 4 psi, the system sends an alarm to the Operator indicating that the bag filters need to be changed soon. If plugging occurs in the bag filters or a valve in the outlet piping is inadvertently shut, a deadhead situation could occur at the pump. To prevent a no-flow (deadhead) condition, a high-pressure switch is installed immediately downstream of the pump discharge. The switch shuts down the pump and alerts the Operator of the fault. High pressure set points are detailed in Appendix F.

2.4 Carbon Vessels

The only automatic control for each set of GAC vessels is a high-pressure switch on the inlet to the system. High inlet pressure to the GAC vessels causes a shutdown of the associated GWTS influent pumps. In order to prevent air from building up in the inlet piping and to prevent siphoning of water from the GAC vessels, there are air/vacuum relief valves on the inlet and outlet piping into the vessel valve

manifold. A pressure relief valve and manual air vent valve are installed on the top of each GAC vessel. During initial start-up and once each week, the Operator partially opens the manual vent valve to remove any air that may have accumulated in the GAC vessel (Train 2 only). In order to monitor pressure drop across the two carbon beds, each GAC vessel is fitted with a local pressure gauge on its outlet nozzle and on the inlet branch of the valve manifold. At a feed rate of 400 gpm, the pressure drop through each carbon bed should be less than 2 pounds per square inch gauge (psig), and the total system pressure drop should be less than 5 psig. The carbon beds are inspected to determine if skimming or backwashing is required when the pressure drop increases to 10 psig above ambient operating differential pressure.

Each of the carbon vessels is sized to provide 12 minutes of empty bed contact time at 400 gpm. With this extended contact time, the lead carbon bed can lower an EDB concentration in 400 gpm of groundwater from 2 micrograms per liter (µg/L) to below the discharge limit.

Higher concentrations of EDB or the presence of additional volatile organic compounds at a contact time of 12 minutes or longer will still result in full sequestration of those compounds onto the carbon. That is, the additional volatile organic compounds are treated to applicable standards as long as the concentration(s) and loading are consistent with the Technical Memorandum Establishing the Basis of Design Maximum Concentration Limits for the Kirtland BFF GWTS (Appendix Q). The treatment of higher concentrations does, however, decrease bed life.

The lag GAC vessel provides a backup in the event of breakthrough of the lead vessel. When water leaving the lead GAC vessel contains EDB concentrations of 90 percent of the effluent limit, that GAC vessel undergoes GAC change-out and the lag carbon vessel is placed into the lead position. Valve alignment figures for the carbon beds are provided in Appendix E. These figures show valve alignment for operation of the carbon beds in lead-lag, backwash, and carbon change-out configurations.

2.5 Treated Water Tank and Pump

The effluent pumps and level in the treated water tanks are controlled and monitored by the PLC. The only Operator actions required during normal operations are to set the effluent pumps to their appropriate flow rate, put the controls of the effluent pumps into sequence using the HMI, and change bag filters when the differential pressure across the post-treatment bag filters exceeds the differential pressure threshold (10-15 psi). Manual on/off switches for the treated water pumps in the HMI and on the motor starter panel are provided for maintenance and troubleshooting but cannot be used during unmanned operation as they override PLC interlocks. The treated effluent pumps are interlocked to shut down under the following conditions:

- Switched to the Off position on the HMI
- High-high level in the GCMP or the injection well
- High-high level in GWTS building sumps or clarifier
- Low-low level in treated water storage tank
- High pump-outlet pressure
- High pressure at the injection well or in the discharge line.

The post-treatment bag filters on the treated effluent pump skids do not have automatic controls but are equipped with local differential pressure gauges. If pressure drop across the filters increases to 10-15 psi (differential pressure), the filters need to be changed.

On the treated effluent line, between the post-treatment bag filters and the underground effluent pipeline leaving the building, there are two actuated valves that are used to deliver water to the truck bay to wet

newly delivered GAC as part of the GAC change-out process and to provide backpressure on the effluent pumps. The valves are controlled by the PLC and can operated by utilizing an access code and keypad located on the exterior of the building in the truck bay. A timer on this switch returns the valves to their normal position after 30 minutes of being activated. The valves can also be set to their normal position by inputting the access code prior to the 30-minute cutoff. The main line valve's normal position is variable and is adjusted by the PLC in response to the pressure reading from the pressure transmitter located just upstream of the valve. The PLC is currently set to maintain 20 psi of back pressure on the effluent pumps to mitigate cavitation at the pump impellers.

2.6 Discharge Locations

Currently, the GCMP and KAFB-7 are the only two approved discharge locations for treated effluent. The GCMP consists of a lined pond that stores water for irrigation of the golf course. The liner extends up the sides of the pond and the water level in the pond cannot not exceed the high-level set point of 5.5 feet with respect to the GCMP pump house transducer. The 5.5-foot-level set point provides an adequate safety factor to ensure that the pond is not overfilled. The pond also has a stadia rod in place near the intake of the GCMP pump house and the stadia rod level of 3.5 feet corresponds to a transducer reading of 5.5 feet. Currently, if the pond level exceeds 5.5 feet with respect to the transducer while the GCMP is selected as the discharge location, the system sends an alarm email and shuts down the effluent pumps at the GWTS. If this condition occurs, the effluent flow is redirected to KAFB-7. At this time, the redirection of flow requires a manual valve switch by the Operator.

KAFB-7 is a gravity fed permitted UIC well that is equipped with a dedicated flowmeter, water level transducer, and smart control valve to ensure that the well shall not be overfilled (Table 1-2; DP-1839 Condition No. 14). The flowmeter is inspected and calibrated as scheduled per the manufacturer's recommendations. While treated effluent is being discharged to this location, the control valve automatically adjusts to maintain a line pressure of 15 psi. The PLC monitors the water level, effluent line pressure at the control valve in KAFB-7, and effluent line pressure just downstream of the control valve at the GWTS. The system is set to alarm if the water level exceeds that associated with the top of the louvered screen of the well or if the pressure downstream of the GWTS control valve exceeds 45 psi. Any of these conditions cause a shutdown of the GWTS effluent pumps and send an alarm to Operators indicating that KAFB-7 has experienced a fault condition. Operators then manually divert flow to the GCMP, if there is adequate capacity, and inspect KAFB-7 for malfunctions. Discharge to KAFB-7 is not to exceed 1,440,000 gallons per day (1,000 gpm continuous flow) and records are maintained of all volumes injected into this well for reporting to the New Mexico Office of the State Engineer (Table 1-2; DP-1839 Condition No. 9).

2.7 Groundwater Treatment System Building Containment Sumps

A sump is installed in the GWTS building floor slab as part of the building's secondary containment system. This sump collects any spilled, leaked, or washdown water produced within the GWTS building, which is then pumped by a submersible centrifugal sump pump (P-111) into the Train 1 GWTS influent tank (TK-110) ensuring all water collected undergoes treatment. This pump is controlled by a float switch. The float switch can be overridden to pump water out of the sump, if entry to the sump is required. A high-high level switch shuts down the GWTS if the water level in the sump becomes too high. A truck sump is located outside of the building in the truck bay; this sump is also equipped with a high-high level switch that shuts down the GWTS if the water level in this sump becomes too high. In order to pump water out of the truck sump, the grating of the sump must be removed to allow temporary installation of a sump pump into the sump. The water pumped by the temporary sump pump is then discharged to the GWTS building sump.

2.8 Startup Sequence

Prior to start-up, ensure that all set points are set to appropriate values. Table 2-3 provides a list of standard operational set points. Prerequisites for normal start-up of the GWTS include the following:

- Perform the valve lineup for normal operation as shown on the piping and instrumentation diagrams for the GWTS (Appendix E).
- Confirm that no maintenance activities are occurring at the extraction wells, the golf course, or KAFB-7.
- Confirm there is communication (telemetry) between the WCH, GCMP, KAFB-7, and the GWTS.
- Place local disconnects for pumps in the closed position.
- Place local switches for the well pumps, the GWTS influent pumps, and the treated water pump in the SEQ or AUTO position.
- Confirm that manual valves on the KAFB-7 pipeline and HMI distribution switch are set to send the treated water to the desired destination (GCMP or KAFB-7).
- If treated water is to be pumped to KAFB-7, confirm that the hydraulic pump control panel for the V-smart valve is powered and in the AUTO setting.

The HMI has color codes for quick reference to let the Operator know the status of system equipment. The color codes are as follows:

- Blue = Standby and ready
- Green = In operation using automated sequence
- Yellow = Uncommanded and running, manual control assumed
- Red = Fault or alarm condition exists.

At the HMI, perform the following checks and setup steps:

- Verify there are no pumps or treatment trains in alarm on the Overview screen (any item in red may require to be reset) and on the train control screen.
- Verify that all required pumps and wells are indicating that they are in REMOTE AUTO mode on the HMI screen.
- Verify on the alarm page that there are no active alarms (active alarms are highlighted in red). Clear or acknowledge any alarms or correct any faults alarm conditions.
- Verify that all of the proportional-integral-derivative blocks for the active Wells/Pump Skids are in AUTO (this can be verified by viewing the proportional-integral-derivative block is green).
- Verify on the train control screen that the pumps for the system are in SEQ mode and that they have a sequence number (O = Off, 1 = Lead, 2 = Lag).

- Verify where the water is to be discharged to on the distribution screen. When the golf course or KAFB-7 is selected, a pop up appears reminding the Operator to verify that the correct valves are opened in the field.

- Verify all tank level transmitters are operational and that the water levels are acceptable to run the system. If the tank levels are not at acceptable levels to be in automated control, run the pumps manually to adjust water within the system to allow for automated control.

- Verify that all of the tank level floats (LSH/LSL) devices are green on the overview and tank screens. If any of these devices are red, correct the alarm condition before proceeding.

- Set flow rates for the groundwater extraction wells to the values specified by the GWTS Project Manager. This may require that the system be in operation and for staff to be at the wellhead for wells that require manual valve closing to control flow rate. The flow rate from extraction wells equipped with VFDs can be manipulated using the HMI.

To initiate system start, complete the following steps:

- On the train control screen, set each treatment train's influent flow set point to a flow rate exceeding 360 gpm but less than 400 gpm. Running the influent pumps above 360 gpm ensures that enough flow is supplied to maintain the minimum 120 gpm of flow to the GAC vessels as well as 239 gpm in the event that the sand filters require backwashing. This O&M Plan recommends exceeding the extraction flow rate entering the train's influent tank by at least 5 gpm to ensure that the system properly compensates for slight variations in flowmeter readings. Then set the effluent flow set point(s) to at least 5 gpm greater than the influent skid flow rates for the same reason as the previously mentioned offset. This O&M Plan also recommends that the influent tanks remain isolated during normal operations to minimize the risk of preferential draining of either influent tank.

- Select the "ON" button for the trains intended for operation. The system starts the extraction wells in the sequence previously selected. After the system has verified that the extraction wells are operating, the influent train and effluent train skid pumps start-up and run at the set point selected in previous setup (tanks first have to reach their high set point before starting).

- At any time during water processing, a train can be turned on or off and taken out of the AUTO sequence. It is the responsibility of the Operator to change the required flow set point on the trains to offset the incoming flow.

- Confirm proper operation of all equipment.

2.9 Normal Shut Down Procedure

When it is necessary to shut the entire system down, perform the following:

- On the train control screen, select the off button for both trains. If the extraction well pumps are expected to be shut down for more than 24 hours, put the manual switches in the WCH, the electrical rack at KAFB-106239, and the electrical shed at KAFB-106228 into the Off position. Open the electrical disconnects at those locations and lock them open.

- Confirm that the PLC shuts down the GWTS influent pump and treated effluent pump.

- If the system is going to be down for more than 24 hours, put the local switches on the motor starter panel for the GWTS influent pumps and the treated water pump into the Off position.

2.10 Emergency Shutdown Procedure

In case of fire, leak, or other emergency condition, any person can activate one of the local emergency shutdown buttons (one located inside the building on the east wall between the eastern entry and overhead door, and one located on the exterior of the building next to the keypad west of the southwestern most entry), or on the train control screen select the off button for both trains, and notify the GWTS Project Manager, who notifies the appropriate Kirtland AFB contacts and regulatory agencies as described in the GWTS-specific Contingency Plan (Appendix K) as well as the DP-1839 Contingency Plan (Appendix A), immediately.

In the event of a spill, leak, or unplanned release to the environment associated with the treated effluent from the GWTS or the treated effluent conveyance system, Kirtland AFB shall follow the release reporting requirements in 20.6.2.1203(A) New Mexico Administrative Code. These requirements are fundamentally equivalent to the *Twenty-Four Hour and Subsequent Reporting* requirements in Part 1.27 of the RCRA Permit. The NMED Hazardous Waste Bureau shall be copied on all notifications and any subsequent reports.

If a power outage occurs, the system shuts down. The Operator is notified of the shutdown condition. Upon power returning, the system automatically restarts in standby and ready mode. Once in this mode, the system can be restarted as described in Section 2.7. Further information about the control of the system is explained in Appendix F.

2.11 System Utilities

Only extraction well KAFB-106228 operates using off-Base power. It is the GWTS operating contractor's (Contractor) responsibility to set up or take ownership of the Public Service Company of New Mexico account associated with powering extraction well KAFB-106228. The extraction wells KAFB-106233, KAFB-106234, and KAFB-106239; WCH; GWTS; KAFB-7; and GCMP are all powered using on-Base utilities.

All PLCs, HMI, and control panel power receptacles (telemetry and modem) are equipped with uninterruptable power supplies that keep the attached items online for a short period following a loss of power at the GWTS. This ensures that all equipment responds properly in the event of a loss of power anywhere in the system.

The GWTS is supplied with non-potable water from the on-Base community water system. This non-potable water is supplied at a pressure of 100 psi and can be used for various O&M activities.

Remote communications to the GWTS are transmitted using a cellular modem. It is the Contractor's responsibility to set up or take ownership of the cellular data account associated with the GWTS. Currently, the GWTS utilizes a 5-gigabyte per month cellular data plan provided by AT&T Inc. Additionally, the Contractor needs to support alarm email distribution from the GWTS PLC. Email distribution may require the use of a third-party email hosting service if hosting cannot be supplied by the Contractor's own email hosting service.

To ensure that off-Base conveyance lines are secure, the conveyance lines are registered under Kirtland AFB as a line-owner with New Mexico 811. Kirtland AFB is responsible for off- and on-Base line locates. Off-Base line locates may be the Contractor's responsibility depending on the terms of the

contract. On-Base conveyance lines are secured as Kirtland AFB issues permits after performing line locates on-Base for all excavation projects. Additionally, the influent lines are marked with monuments at a maximum of 400-foot intervals. In the event of a conveyance line breach, the Contractor is required to perform emergency response to minimize the release of any contaminated water. This O&M Plan recommends that the Contractor have a subcontractor or an internal department ready to perform emergency response in the event of a conveyance line breach. Off-Base owners of property containing an influent line are notified in accordance with executed access agreements provided in Appendix A-2 and summarized in Appendix K (Contingency Plan) Section K.6 in the event of a breach.

This page intentionally left blank

3. INSPECTION AND PREVENTATIVE MAINTENANCE

This section presents instructions for routine inspection and normal equipment servicing and lubrication. The purpose of preventative maintenance is to ensure steady operation and to extend the life of equipment. The following text summarizes inspection and preventative maintenance frequencies and actions. Pertinent vendor or manufacturer information and manuals are provided in Appendix J. Appendix C provides an organization chart and roles and responsibilities for system operation.

In the event that an Operator-initiated system shutdown is needed for routine maintenance, non-routine maintenance, or any other nonemergency reason, the GWTS Project Manager must be contacted, and they notify the designated Kirtland AFB points of contact. The NMED point(s) of contact is notified for any shutdowns of longer than 24 hours by U.S. Air Force personnel.

For all maintenance activities, the Operator always reviews the appropriate U.S. Air Force, U.S. Army Corps of Engineers, or other approved health and safety documents that are available onsite, and follows the requirements for additional personal protective equipment, equipment lock-out/tag-out, confined space entry, fall protection equipment, etc. Additional safety documentation for maintenance operations can be developed on an as-needed basis and be on file in the GWTS building. These requirements are always considered prior to initiating the task. The Operators perform maintenance tasks that do not require factory-authorized service on a routine basis. If factory-authorized service is required, it is pre-scheduled to ensure minimal disruption of the plant operating schedule.

3.1 Scheduled Inspection and Routine Maintenance Activities

Table 3-1 provides a comprehensive list of routine maintenance activities. Inspection and preventative maintenance forms are provided in Appendix I. In general, the overall system does not have extensive preventative maintenance requirements. Most equipment requires inspection with periodic cleaning and repair as needed. The only recurring routine preventative maintenance operations are to change the oil in the influent and effluent pumps, grease pump bearings, and change the air filter on the air conditioner for the control room every 3 months. Requirements for calibration and inspection of flowmeters that measure groundwater feed and discharge flow rates are covered later in this section and inspection forms are provided in Appendix I.

3.2 Influent and Effluent Pump Monitors

All influent and effluent pumps in the GWTS are equipped with i-ALERT® Condition Monitors. These devices record pump operational metrics (i.e., vibration, temperature, and run-time) and can provide early detection of pump failures and metric trending. Treatment Train 2 and the effluent pump for Train 1 are equipped with i-ALERT® devices that can be connected to using a Bluetooth-enabled device with the i-ALERT® application. The Train 1 influent pumps are outfitted with i-ALERT® devices currently incapable of Bluetooth communication and only utilize light indictors to alert Operators to possible pump concerns. All i-ALERT® light indicators are inspected weekly.

3.3 Bag Filter Change-Out

Bag filters require replacement as needed to correct a pressure drop across the pre- and post-treatment bag filters. Two bag filter housings are located on each skid with six 10-micron bag filters in each housing; this allows for continuous operation of the plant during bag filter change-out. Once the Operator has deemed that a change-out is required, the system remains on and the Operator isolates the filter housing needing change-out. The filters are replaced and the offline filter housing is reinstated into the treatment

train. In the event that both bag filter housings on one skid require change-out, flow can be diverted to the other train (if less than 400 gpm) in order to avoid a system shutdown. If the flow is greater than 400 gpm on a single train, the entire system is shut down to avoid unnecessary strain on the system.

To change the filters, all flow is directed to the filter vessel not requiring maintenance (close valves leading to the vessel requiring change-out). The air vent and drain valves are opened to drain water from the top half of the filter housing. After the head bolts are loosened and disengaged, the davit jack is used to raise the filter lid and swing it out of the way. The filter bags can then be replaced. The O-ring on the top of the filter vessel is then inspected to see if it requires replacement and is aligned properly. The lid is then swung back into place and the head bolts are tightened. Head bolts on opposite sides of the lid shall be alternately tightened. Do not overtighten the bolts, and inspect the filter for leaks upon restart. The flow is then reinstated to the filter vessel with new bags and the procedure can be repeated for the second filter vessel if necessary. After replacement, the old filter bags are disposed of as described in Section 6 and characterization information is provided in Appendix M.

3.4 Y-Strainer Cleaning

Y-strainers are present between both influent and effluent tanks and their respective pump skids. The strainers require cleaning and maintenance on an as needed basis. If the influent tanks are not effectively equalizing, the most likely culprit is that one or both of the Y-strainers between the two tanks has become clogged with fine sediment pumped from the extraction wells. Another indication that the Y-strainer may need to be cleaned is when cavitation is heard at the pump impeller housing. In order to clean the strainer, lock-out the appropriate pump skid so that the pumps cannot be remotely started while the butterfly valves are closed. The line is then isolated by closing all incoming butterfly valves, then drained and the Y-strainer blind flange is removed. The Y-strainer screen can then be removed, brushed, and rinsed to remove any collected debris. Once cleaned, the screen is reinserted, blind flange replaced, drain valves closed, butterfly valves reopened, and pump skid reinstated into operation. When cleaning has been completed, bleed the affected bag filter housings and GAC vessels to ensure no air has been retained in the system. This O&M Plan suggests that the influent Y-strainers are inspected and cleaned weekly and the effluent Y-strainers are inspected and cleaned biannually.

3.5 Discharge Changeover

Currently, the treated effluent can be discharged to either the GCMP or KAFB-7. The entire system is shut down (Section 2.9) prior to performing a discharge change-over. Once the system is offline, change the discharge location as indicated on the HMI on the Distribution screen. This causes the HMI to display a reminder window regarding valve positioning. Commute to the effluent changeover location shown on Figure 1-1, and close the valve where the system was previously discharging and open the valve leading to the new discharge location. It takes approximately **38.5 turns** of each post indicator to completely close or open the resilient wedge gate valve. After the valves have been switched, proceed to KAFB-7 and record the totalizer reading at the well head. Return to the GWTS building, record both treatment train effluent totalizers, shutdown time, and reinstate the system into operation (Section 2.8).

3.6 Granular Activated Carbon Backwashing, Skimming, and Change-Out

Before initial start-up and following each carbon change-out (prior to re-start), the carbon beds must be backwashed. In order to perform the backwashing process, refer to the manufacturer O&M Manuals located in Appendix J and valve alignment figures in Appendix E. Backwashing the TIGG carbon beds requires at least 700 gpm of clean water, which can be provided from the fire hydrant near the GWTS building. Backwashing the Calgon Carbon beds requires at least 150 gpm of clean water, which can be

provided from the TIGG treatment train, if the TIGG treatment train is processing water. Note that backwashing either train requires a temporary 21,000-gallon tank be available directly to the south of the GWTS building to store any produced backwash water. This tank doubles as a clarifier for settling out fines produced during the backwash process. Sand filters pretreat the water for dissolved iron and manganese and suspended solids, including biological solids, which should mitigate scaling, biofouling, and plugging of the carbon beds. In the unlikely event that scale and fouling cause the pressure differential across the GAC vessels to exceed 10 psi before a change-out is required, either backwashing or, if the pressure loss is associated with the upper most layer of the GAC within the vessel, skimming the upper few inches of GAC removes limited scaling and fouling.

If a pressure drop of 10 psi or greater is primarily associated with the lead GAC vessel, vacuum skimming the top several inches of the lead carbon bed is a viable remedy instead of backwashing. Before skimming operations commence, lift equipment (e.g., scaffolding, scissor lift) is set up to access the top of the tank needing skimming of the GAC surface. Skimming requires that the system be shut down (Section 2.9) and the lead GAC vessel be drained so that the water level is below the bed surface. The vessel is then opened and the top several inches of the GAC are visually inspected. A sample can be collected by affixing a clear bailer, with its bottom removed, to a pole and pressing the open end of the bailer into the top several inches of the GAC. The sample is then removed to determine the depth of the fouling and extent of the skimming required. The top layer of the GAC is then vacuumed until only non-fouled GAC is visible from the vessel entrance. GAC skimmed from the lead GAC vessel must be containerized and removed as solid waste. Skimming is often much more cost effective than performing a full GAC change-out and produces minimal investigation-derived waste compared to backwashing.

GAC needs to be changed out once breakthrough by the contaminants (defined in Section 2.4) occurs in the lead GAC vessel. In order to perform the GAC change-out process, refer to the manufacturer O&M Manuals provided in Appendix J. In addition, the Operator performs a visual inspection of the vessel's interior when the vessel is empty to determine if there is any plugging or damage of the inlets, distribution manifold, or feed and drain lines. Clean water from the plant hose connections can be pushed into the vessel to aid with visual inspections of all internal components. Only preconditioned GAC media are used to refill the GAC vessels during a change-out as this eliminates the need to store and dispose of conditioning reagents.

3.7 Dosing Pump, Chlorine Analyzer, and Sodium Hypochlorite Generator Maintenance

The pre-treatment dosing pumps that supply sodium hypochlorite solution to the influent water hold approximately 15 gallons of solution. The usage of solution is dependent upon influent flow rates as well as sodium hypochlorite concentration in the dosing solution. HDX Germicidal bleach, or equivalent, with a concentration of 8.25 percent sodium hypochlorite and with influent flow rates of approximately 325 and 216 gpm for Trains 1 and 2, respectively, consume approximately 1-2 gallons of solution per train per day. Dosing rates must be adjusted to result in a concentration of sodium hypochlorite concentration upstream of the sand filters of 0.1-0.3 mg/L free chlorine. The free chlorine concentrations upstream and downstream of the sand filters should be measured and recorded at least once a month to ensure that the dosing pumps are supplying adequate volumes of oxidant and the sand filters are catalyzing oxidant to precipitate dissolved metals. Under the current influent flow regime, sodium hypochlorite solution addition occurs approximately once a week when no additional influent water is added to the system (investigation-derived waste disposal, etc.).

The pipe conveying water from the influent tanks to the influent skids is equipped with two free chlorine analyzers (pending installation). The analyzers require weekly inspection and monthly replenishment of reagents in order to function properly.

The pre-treatment dosing pumps are supplied with a constant stream of freshly produced sodium hypochlorite solution created by the sodium hypochlorite generator (pending installation). The generator requires weekly inspection and addition of food grade salt to provide a constant stream of sodium hypochlorite solution.

The Operator refers to the manufacturer's recommendations in order to perform any additional maintenance on any of the dosing pumps, chlorine analyzers, or sodium hypochlorite generator.

3.8 Sand Filter Maintenance

The pre-treatment sand filters require occasional backwashing and infrequent replacement of filter media. Backwashing is required when differential pressure across a sand filter unit exceeds 10 psi from the clean operating differential pressure. The Operator first adjusts the backwash throttling valve (red handled valve located above the sand filter vessels on the backwash line) to provide 239 gpm throughput in the backwash line during a backwash cycle. The throttling valve must be manually adjusted at each different flow condition; thus, this O&M Plan recommends that flow conditions do not be frequently modified by the Operator. Once the flow requirement is met, the system can be set to automatically initialize the sand filter into backwash mode once a certain differential pressure is reached across the sand filters. The PLC is programmed to lock in the influent pump VFD frequency when a backwash cycle (alarm) is received from the sand filter control unit. The VFD maintains the locked frequency until one of following three conditions occurs:

- The backwash cycle is completed (the VFD frequency remains locked for approximately 30 seconds following completion of the cycle).
- The low level set point in the influent tank is reached (deactivating the influent pumps).
- Any alarm condition resulting in influent pump shutdown is received.

This O&M Plan recommends that the automatic backwashing differential pressure be set to no more than 10 psi above the clean operating differential pressure as differential pressures exceeding 10 psi, above background, results in significantly higher flow rates through the first sand filter vessel backwashed during backwash of the second vessel. Additionally, these conditions can result in flow rates that exceed design flow rates of the GAC vessels. Backwashing each vessel takes approximately 4 minutes to perform (8 minutes per skid). Backwash can only be performed on one sand filter housing per skid at a time as the second filter vessel supplies pretreated water to perform the backwashing of the first unit. Backwash water is transferred to the backwash clarifier located above the external truck sump.

Each sand filter vessel is loaded with the manufacturer's recommended amount of crushed gravel, garnet, and IMA-65 (or DMI-65) media. In the event that the removal efficiency of the sand filter begins to diminish, then media change-out may be required. The media manufacturer recommends that media be changed out regardless of a loss in removal efficiency following between 5 and 10 years of operation due to media degradation by particle contact and mechanical abrasion. Emptying and reloading of sand filter vessels is performed by following the manufacturer's instructions provided in Appendix J.

3.9 Clarifier Maintenance

The sand filter clarifier is designed to hold 8,000 gallons of backwash water (approximately 8 backwash cycles) and is manually discharged in order to provide space for additional backwashing. The Operator

first ensures that the clarifier has been allowed adequate time to settle out any fines backwashed from the sand filters. Once settling has occurred, the Operator sets up appropriate pumps and hoses to transfer clarified water to the GWTS internal sump for re-treatment through the system. Inline filtration of the clarified water is recommended in the event that some backwash fines may not have settled out. The clarified water is then discharged and, following this discharge, the clarifier is returned to its normal operating state and all equipment used is stored in the GWTS building.

3.10 Effluent Line Integrity Testing

The effluent line running between the GWTS and KAFB-7 requires integrity testing in accordance with DP-1839 (Table 1-2; Condition No. 15). The line must be tested in year one of DP-1839 approval (by April 28, 2018) and in year five of the approval before a renewal application is submitted (2022). Effluent line integrity testing is performed by hydrostatic and leak testing the line. A standard operating procedure has been developed for effluent line integrity testing that was submitted under separate cover to NMED for approval. The approved standard operating procedure is provided in Appendix R.

3.11 Well Pump Pulling

The extraction well pumps are designed for little to no maintenance when properly installed and monitored. Removal of the extraction well pumps for inspection or cleaning on a regular basis is not cost effective and should only be considered in the event of a catastrophic failure or decrease in pump performance. Extraction well pumps are pulled for inspection and maintenance only after a minimum of 10 years in the absence of documented performance issues.

Prior to pulling any pump, ensure that the appropriate permits (barricade, etc.) have been obtained. Access to the well is made through the vault doors or manhole directly above the well head. Disconnection of electrical and control wiring must be performed by a licensed electrician. After disconnection at the wellhead from piping/equipment in the vault, the well casing, gauge lines, and pump columns are disinfected with a solution of potable water and WEL-CHLOR (calcium hypochlorite) or equivalent. The solution is mixed at the surface and introduced through the top of the casing, gauge lines, and pump discharge piping. An example mix of solution could consist of 1 pound of 65 percent dry granular, calcium hypochlorite and 500 gallons of clear water mixed until the chlorine is completely dissolved. After completely dissolving, this solution is poured into the casing, gauge lines, and pump column. This example is sufficient to initially produce a chlorine concentration of approximately 50 mg/L throughout the entire water column. A field chlorine test kit (Hach DR 900 Handheld Colorimeter, or equivalent) is utilized to monitor free chlorine concentrations. All field meters are calibrated in accordance with manufacturer's recommended procedures.

Following disinfection, all existing downhole piping (approximately 520 feet of 3-inch galvanized steel drop pipe), the submersible pump, and all associated wiring are removed. The pump is inspected for damage and replaced with a new pump, if required. Both 1.25-inch sounding tubes (for transducer and manual water level) are also removed. All pipes are stacked on a pipe trailer prior to storage, in order of retrieval, for subsequent inspection for corrosion and/or damage. All damaged materials are replaced prior to redeployment. Trailers with well equipment are stored and covered at the appropriate yard until needed for reinstallation. All pipe and wiring removed can be reinstalled at the completion of any work being performed, so care is taken during handling and storage. Photographs are taken of all corrosion or damage on pipe, pumps, or other downhole materials for documentation purposes and identification of any replacement requirements.

An optional well inspection can be performed with a downhole video camera after the pump and piping equipment are removed and suspended solids have settled back into the well, if required. MUD-NOX

(mud deflocculant/detergent) or equivalent may be added to the well to decrease solids suspension prior to the camera survey. Residual chlorine is measured downhole prior to deployment of the camera to ensure camera integrity. This camera survey can be used to evaluate the nature and extent of screen fouling, screen integrity, or other down well characteristic.

Prior to the reinstallation of pumps and downhole equipment into a well (disinfection, redevelopment, etc.), cathodic protection is also added to the pump, if not already installed, prior to redeployment. Cathodic protection can potentially consist of adding three 18-foot lengths of magnesium strips strapped to the stainless steel drop pipe above the submersible pump. These example strips are 3/8-inch thick by 0.75-inch wide and can be covered with a poly mesh sleeve and secured via stainless steel straps. Other cathodic protection options may be considered.

Prior to reinstallation of the downhole equipment, the original or new drop pipe, submersible pump, transducer, drop tubes, and wiring are disinfected aboveground following standard practices (i.e., American Water Works Association [AWWA] Standard for Disinfection of Wells (AWWA, 2003). After the pump is installed, the gauge lines and pump column are disinfected as previously described. The wellhead is then reconnected to the conveyance line within the vault, restoring the system to the original configuration. The system is then tested for operational readiness to ensure proper pump operation, valve and meter operation, and verification and that there are no leaks or physical or electrical problems with the system.

3.12 Well and Conveyance Line Disinfection

Well and conveyance line disinfection is described in the following sections.

3.12.1 Well Disinfection

Extraction and monitoring wells may occasionally require disinfection to improve pumping and monitoring performance. Well disinfection is performed by adding disinfectant directly to the well at the wellhead. A standard operating procedure has been developed for well disinfection and is provided in Appendix R.

3.12.2 Conveyance Line Disinfection

In order to perform conveyance line disinfection, the conveyance lines need to receive a dose of chlorine fed at a constant rate. An example target concentration of free chlorine throughout the conveyance line is 25 mg/L. To ensure that the appropriate concentration of free chlorine is provided, the chlorine concentration is measured at regular intervals in accordance with standard practices (i.e., AWWA Manual M12 procedures [AWWA, 1975]). Chlorine application is typically supplied through a temporary connection to the conveyance line and does not cease until the entire conveyance line is filled with chlorinated water. The chlorinated water is retained in the line to provide the appropriate amount of contact time (e.g., 24 hours). After, the chlorinated water is pumped from the line to a storage container(s) or the GWTS depending on water characterization.

3.13 Well Shocking

If iron-related and sulphate-reducing bacteria are suspected culprits of well biofouling or calcareous materials are observed on the well screen, well shocking may be used in addition to the above disinfection treatment. Shocking can be performed with a hydroxyacetic acid blend product Cotey Chemical Corporation BIOCLEAN or equivalent. Shocking can only be performed once all residual treatment

chemicals have been removed from the well. The disinfectant solution is mechanically agitated into the well and gravel pack using a jetting or swabbing tool. An example treatment schedule is to perform agitation every 2-4 hours (during daylight hours) for a 24- to 36-hour period. The solution is worked across the entire length of the water column to ensure proper mixing and distribution through the well and gravel pack.

The well screen interval is then jetted or swabbed a final time before pumping fluids out of the well. Shock treatment fluids pumped from the well can be stored in temporary storage containers provided onsite. Pumping continues until all shock treatment fluids have been removed or a preset volume has been reached. All stored shock treatment liquids are sampled for waste characterization and held pending analytical results and final waste disposition.

3.14 Well Cleaning and Redevelopment

Once the well pump has been removed, physical or chemical cleaning/redevelopment processes, or a combination of these two processes, can be used to address well performance problems. General descriptions of these processes are provided below.

3.14.1 Physical Cleaning

Mechanical cleaning may be performed to remove any physical buildup such as iron or calcium deposits on the well screens. In addition, biologic films present on well casing and screen surfaces are physically removed during the initial mechanical cleaning. The mechanical cleaning process consists of a combination of swabbing, bailing, surging, pumping, and jetting. All water generated from this cleaning needs to be temporarily containerized until it is sampled and analyzed for appropriate waste disposition. Note that the process presented below is for general guidance and may be modified based on actual field observations.

- The redevelopment work may include the use of a mud deflocculant/detergent such as Cotey Chemical Corporation MUD-NOX or equivalent. Mud deflocculant/detergent is mixed with water at the surface and subsequently injected into the well in an attempt to disperse any remaining drilling mud that may remain in the gravel pack since well installation. The solution is mechanically worked into the gravel pack using a surge block in order to maximize effective distribution in the annular space.

- A bailer with a toggle valve or equivalent is lowered into the well and used to gently surge the screen interval to remove any accumulated sand, silt, and debris accumulated in the well bore. When the bailer is brought to the surface, an Imhoff cone or equivalent is used to collect water from the bailer to evaluate the amount of silt and sediment in the water. This process is repeated after each cycle of surging and jetting.

- Following bailing, a surge block is used to surge the screened interval. The screen is surged at set intervals with strokes repeated for a set time period per interval (e.g., 5-foot intervals for 5 minutes per interval). Following the surging cycle, the well bore is bailed again to remove any accumulated sand and silt. Bailing is repeated until the discharged water has reached a set sediment volume per volume of water (e.g., less than 2 milliliters of sediment per 1 liter of water) measured using an Imhoff cone or equivalent.

- Following the surging cycle, a temporary pump is installed in the well and used to remove silt loosened during surging and settle the filter pack. Pumping follows a predetermined schedule.

An example pumping schedule is lowering the pump across the saturated screen in 10-foot sections (10 positions in 100-foot screen), pumping each area for approximately 5 minutes at 100 gpm. While pumping, temperature, pH, specific conductivity, and turbidity are monitored.

- Following pumping, a jet is installed in the well screen interval to jet increments of the screened interval. The jetting device is capable of injecting water at a predetermined flow rate applicable for the well screen and filter pack. A pump attached to the jet is used to pump at a rate slightly higher rate than the injection rate used for jetting. Each increment shall be jetted for a set amount of time (e.g., 5-foot increment jetted for 5 minutes). Water used in jetting is clean potable water, or may be recirculated water from the well if allowed to settle before being reinjected to remove fines and keep from reintroducing solids to the screen. The proposed potable water source is identified during the readiness review meeting.

All water generated during the mechanical well development process is containerized onsite in temporary storage until characterized and determination of final disposition.

3.14.2 Chemical Cleaning

Acid treatments may be used to remove and weaken existing biologic colonies, and remove biologically-induced iron deposits and chemical crusts. Well acidification is performed using commercially available acid with inhibitors to minimize corrosive effects on metal components of the well (e.g., sulfamic acid, Dry Acid Special®). Ensure that, if using chemical cleaning with any other chemical disinfection or other treatment, there are no adverse reactions between chemical additions or mitigate the possibility that an adverse reaction could occur.

Introduction of the acid solution into the well water column is performed using a tremie pipe or jetting tool. The solution remains in the well for a preset contact time with preset agitation intervals (e.g., 24-36 hours of contact time, agitated every 2-4 hours) with a bailer or surge block during daylight hours. Chemical additives are to be used per manufacturer recommendations for mixing, installation, retention time, pH monitoring, removal, and safety.

After the acid treatment is completed, a preset volume is mechanically bailed or pumped from the well and placed into a lined roll-off or equivalent. Acidic water is recovered after completion of each acid treatment; therefore, initial and periodic pH readings of the purged water are measured during removal to determine if purging has been adequately completed. For any acid treatment, pH values after purging are targeted to be similar to the pre-treatment pH (e.g., within 1.0 pH units). Acidifying chemicals are selected that result in the production of minimal hazardous waste. If characteristic hazardous waste is produced, the waste is managed as described in the Contractor's Work Plan. All acid treatment waste solutions may be stored in lined 20-yard roll-off bins pending sampling, waste characterization, and disposal.

3.15 Well Step-Testing

A step-test may be performed to evaluate well yield or the effectiveness of the well rehabilitation on the well screens and filter pack to improve well yield. Following pump removal and any other optional activities, a rest period is allowed for aquifer recovery to steady state conditions (e.g., 12 hours).

An initial static water level measurement is taken prior to pump removal to reference as the baseline static water level. Prior to the start of a step-test, the water level is measured and compared to the baseline level to see that static water level conditions have been obtained within a reasonable amount of error (e.g.,

± 0.5 feet). Since a step-test is a single well test to record drawdown levels at various steady-state pumping rates, the initial static level in the well is not critical for hydraulic analyses. Other extraction wells do not need to be shut down during the testing, as the impact from other extraction wells is relatively insignificant compared to the drawdown measured during the step-test and the sensitivity of the step-test analysis.

A temporary submersible pump/piping is installed into the well capable of producing the highest step flow rate under an expected total dynamic head. An inline flowmeter is necessary to monitor pumping rate. A pipe connection from the pump drop pipe to the existing conveyance line pipe in the vault may need to be fabricated for the step-test. Appropriate connector flanges, piping, and gaskets are to be provided to connect the temporary pump to the existing conveyance line. Disassembly and removal of vault instrumentation, equipment, and associated piping may be necessary to access the desired conveyance line hook-up point.

Once all physical and electrical connections are made and initial pump operational tests are complete, a water level probe(s) is installed within the sounding tube to record water level readings throughout the test. The step-test follows a pumping schedule without interruption based on field observations and equipment constraints. Below is an example pumping schedule:

- 100 gpm for 60 minutes
- 150 gpm for 60 minutes
- 200 gpm for 60 minutes
- 250 gpm for 60 minutes.

Records of the time, pump flow rate, water levels in the well, and time for each step are recorded. Water level readings are to be taken at set intervals. An example of reading intervals is 1 reading per minute for the first 5 minutes and every 5-minute intervals thereafter for each step. The test water is pumped directly to the GWTS for treatment. At the completion of the test, all temporary piping, pump, and associated equipment are removed from the well and the original equipment can be installed provided there are no additional work requirements for the well.

3.16 Alarm Testing

Operators perform alarm testing at least annually to ensure that: (1) alarm equipment has not failed; and (2) during an alarm condition, the system responds properly to the alarm. Alarm testing occurs on equipment affected by programming changes that may affect alarm equipment or response. Alarm testing typically consists of manually faulting or simulating fault conditions in order to have the system exhibit a fault alarm and response. Manual faulting is recommended on alarm equipment that is accessible and can be easily faulted (leak detectors). Leak detectors are tested by completing their circuit either using water, voltage meter, or conductors. Certain equipment can be manually tested to see if they alarm; however, manual testing cannot be performed during normal operations (high pressure switches and tank level sensors). High pressure switches can be tested by isolating the location of the pressure switch and pressuring the line with potable water. The Operator ensures there is a gauge on the isolated line to test the switch pressure set point at the same time. Tank level sensors can be tested by manually operating the extraction well, influent, and effluent pumps to bring the tank levels above or below the level needed to cause the alarm condition.

Items that are inaccessible, difficult to fault under normal operating conditions (tank level sensors, high pressure switches), or could pose risk to equipment or personnel (skid power loss, extraction well alarms) can be tested for system response by simulating an alarm condition either through the software or by

tripping breakers in the PLC panel. While simulation does not test the alarm equipment for function, conditions that typically cause these types of alarms result in shutdown of the affected system regardless of PLC shutdown commands, except for the tank level sensors and high pressure switches (which can be tested manually for equipment function as described in the previous paragraph).

3.17 Flowmeter Verification Testing

Operators perform flowmeter verification testing at least annually to ensure that extraction well, influent, and effluent flowmeters are providing accurate flow information and totalized volumes. Flowmeter verification testing is typically performed by the following steps:

- Isolate the influent tanks.
- Shut down a treatment train and its respective extraction wells (KAFB-106233 and KAFB-106234 for Train 1; KAFB-106228 and KAFB-106239 for Train 2).
- Operate well pumps individually for the shutdown train using the "ON" mode on the HMI for approximately 5-10 minutes each (as tank capacity allows), noting the following three items once flow has reach its maximum: (1) the start and end times of operation, (2) average flow rate of the flowmeter (taken from the flowmeter directly), and (3) initial and final tank levels on the flowmeter verification form (Appendix I).
- The average flow rate from the flowmeter is then compared to the tank volume change (calculated from the tank level change) divided by the change in time. If the flowmeter average flow varies by more than 5 percent from the tank calculated flow rate, the tested flowmeter requires recalibration. Recalibration is performed in accordance with manufacturer's specifications provided in Appendix J. Any recalibrated flowmeter is retested following recalibration. In the event that the recalibrated flowmeter fails to produce less than 5 percent error using the method described above, the flowmeter is replaced and the replacement flowmeter tested.
- This process is then repeated for each flowmeter throughout the train. Note that effluent pumps use the loss of water from the effluent tanks in order to calculate the change in level and influent flowmeters can be tested using either change in influent or effluent tank level. Once all testing on a train has been completed, the other train then undergoes the same testing procedure until all of the flowmeters of the GWTS have been tested and verified.

3.18 Maintenance Logs

The Operators maintain logs that document and record all routine and non-routine maintenance activities. Forms used for recording general inspection, calibration of instruments, maintenance, and repair of equipment are provided in Appendix I. An example log sheet for lock-out/tag-out activities that may be required for equipment maintenance and repair activities is provided in Appendix I. Additionally, any records for repair of equipment (service invoices, spare parts orders and invoices, and service reports) are retained in an equipment file for individual pieces of equipment. Separate forms for maintenance and calibration of flowmeters are provided in Appendix I. The Contractor maintains hard copies of these records onsite in the GWTS building control room or the contractor's office. If hard copies of records are kept offsite, electronic copies of the maintenance records are available to the Operator at the GWTS.

3.19 Groundwater Treatment System Consumables and Small Parts Information

The GWTS contains materials and supplies needed for occasional O&M activities. A recommended inventory of on-hand specific consumable supplies, recommended supplier, and part numbers are provided in Table 3-2. A list of tools and small parts that are present in the GWTS to perform various O&M activities is provided in Table 3-3. Table 3-4 provides a list of large items, such as replacement pumps. Several items that are required for GWTS operations need to be provided by the Contractor. Tables 3-2 through 3-4 denote items that are transferable between Contractors and non-transferable items that are the responsibility of the Contractor to purchase.

This page intentionally left blank

4. SYSTEM TROUBLESHOOTING

Occasionally, during day-to-day GWTS operations, certain system-specific issues may occur. This troubleshooting section exists to remedy such issues. User operational adjustments are provided in Appendix N.

4.1 Influent Valve Set Points

During times when wells are offline, the valves on the influent tree may require adjustment to keep from preferentially filling one influent tank over the other, especially when the influent tanks are not open to equalization or equalization is hampered (as described below). This can cause operational issues and downtime as the tanks may activate a high or low level switch. For instance, when operating wells KAFB-106228, KAFB-106233, and KAFB-106234, the valve on the influent tree associated with KAFB-106228 is closed to approximately 60 percent to obtain similar flow rates to the influent tanks. Set points have been marked on the influent valve indicators; however, it is important that the Operator be aware of the need to adjust these valves in order to maintain consistent flow. Fine tuning of the valves may be required when the system is operating under a different influent flow condition.

4.2 Influent Tank Equalization

The influent tanks are connected by a 6-inch pipe that contains two Y-strainers and feeds to both influent skids. Over time, the levels in the influent tanks may begin to deviate as there is a loss of equalization, preferentially pulling water from one tank with both skids. This can cause operational issues and downtime as the tanks may activate a high or low level switch. In this instance, the Y-strainers are cleaned and inspected. Each train can be isolated to allow continuous operation while performing cleaning.

4.3 KAFB-7 Hydraulic Pump Overload Reset

Due to power fluctuations associated with on-Base utilities at KAFB-7, the smart valve located at KAFB-7 may become to be unresponsive to HMI/PLC controls. In the event that the smart valve becomes unresponsive, power loss to the hydraulic pump that actuates the valve has likely been interrupted. The first troubleshooting step to determine a loss of power to the hydraulic pump is to ensure that a power outage is not occurring at KAFB-7. This is accomplished by opening the control panel and seeing if the uninterruptable power supply lights are illuminated. If none of the uninterruptable power supply lights are illuminated, then an outage has likely occurred. Base utilities need to be contacted to resolve the outage. If the uninterruptable power supply lights indicate that power is being supplied to the KAFB-7 equipment but the hydraulic pump lights are not illuminated, the hydraulic pump needs to have its overload protector reset. The overload protector is reset by first opening the hydraulic pump cabinet. Next the Operator disconnects power to the cabinet. The Operator then removes the cover over the overload switch and presses the reset button. Once reset the cover is returned and the unit is reenergized.

4.4 KAFB-106233 and KAFB-106234 Start Order

Occasionally, when KAFB-106233 is offline and KAFB-106234 is started, KAFB-106233 initializes and then fails. The easiest way to correct this is by setting KAFB-106233 before KAFB-106234 in the startup sequence. If KAFB-106233 is not intended to operate at the same time as KAFB-106234, then KAFB-106233 should be deenergized prior to startup of KAFB-106234. In the event that KAFB-106233 needs to be initialized following KAFB-106234, then the system should undergo a standard startup and, following failure of KAFB-106233, the alarm condition can be reset by manually opening the remotely

actuated valve, resetting the alarm on the HMI, running KAFB-106233 locally, and then returning KAFB-106233 to the auto mode on the motor starter. KAFB-106233 must now be restarted using the "on" button on the HMI. Once in operation, press the "auto" button to return the well into PLC controlled operation.

5. PROCESS MONITORING

This section provides an overview of the monitored operating parameters and sampling used to determine the performance of the carbon treatment system and quality of treated water discharged to the GCMP or KAFB-7. The full requirements for sampling and analysis are covered in the Sampling and Analysis Plan (Appendix L). The results of the process monitoring sampling are used to evaluate performance of the carbon beds and determine if the online beds require carbon change-out. The analytical results are reviewed to confirm that the contaminant concentrations meet the discharge criteria provided in Appendix L.

Analytical results shall be reported in routine monitoring reports (e.g., Quarterly Monitoring Report) to NMED as required in any approved permit. Each reporting event consists of a Data Quality Summary Report and laboratory data packages. For details on sampling and analysis procedures, refer to the Sampling and Analysis Plan (Appendix L). The Sampling and Analysis Plan includes laboratory testing requirements and the achievable laboratory limits.

Operational parameters for the treatment system are monitored by the HMI. The HMI records the output of automated flow and level instruments communicating with the PLC. The HMI also records alarms and operating time totals for the influent pumps. These data are downloaded monthly and stored electronically by the Contractor for use in generating any system-related reports. System shutdowns are recorded on the shutdown logs provided in Appendix I.

5.1 Extraction Wells

The water level in the well casing, pump status, wellhead pressure, and groundwater flow rate at the extraction wells is monitored and recorded by the HMI as part of normal process monitoring. Filter pack level at all extraction wells is monitored and recorded, at a minimum, annually. Laboratory analysis samples is collected in accordance with the Sampling and Analysis Plan (Appendix L). In addition to the information collected by the HMI, the Operators record the readings of the local instruments in the well vaults for KAFB-106228 and KAFB-106239 as well as in the WCH for wells KAFB-106233 and KAFB-106234. These include any manual gauges located at the wellheads, WCH, and conveyance line vaults. These readings are recorded at least once per month using the forms provided in Appendix I.

Transducers have been placed in wells KAFB-106233, KAFB-106234, and KAFB-106239 that monitor water level in the well. If the transducer is equipped with independent data logging capabilities, the transducer data are downloaded, at a minimum, annually and checked to ensure the transducer is still logging data once data have been downloaded.

5.2 Treatment System

As noted above, GWTS operational parameters are recorded by the HMI. These parameters include the following:

- Extraction well flow rates
- Extraction well head pressures
- Extraction well water levels
- Influent skid flow rates
- Effluent skid flow rates
- Total system flow rate
- Upstream distribution pressure

- KAFB-7 flow rate
- KAFB-7 wellhead pressure
- KAFB-7 water level
- GCMP level.

In addition to the HMI data, the Operators record the readings of the differential pressure gauges on all four of the influent bag filter housings (PDI-112 A/B and PDI-116 A/B) and record the inlet and outlet pressure gauge readings on all carbon beds and pump skids (PI-3104 A/B and PI-3105). The Operator also records the totalizer readings from all flowmeters. These readings are recorded on the forms provided in Appendix I. All data from the GWTS, including run data gathered from the wells, WCH, vaults, and treatment plant operation logs, maintenance, and regular inspections, are reviewed quarterly by project engineering personnel and provided in the quarterly reports. This review identifies trending details of the performance of wells, pumps, and treatment equipment.

The Operators must specifically collect the following information relevant to KAFB-7 and any additional UIC wells installed in the future in accordance with DP-1839 Condition 21 (Table 1-2):

- Monthly average, maximum, and minimum values for flow rate and volume of treated effluent transferred to each UIC well

- The totalized monthly volume of treated effluent transferred to all UIC wells

- Monthly average, maximum, and minimum head values of injection water for each UIC well.

A transducer has been installed in KAFB-7 to monitor water level and ensure that the well is not overfilled during injection. The PLC is programmed to shutdown the well if the water level in the well exceeds the high level set point. If the transducer is capable of independent data logging, the transducer data are downloaded, at a minimum, annually and checked to ensure it is still logging data once downloaded.

5.3 Influent and Effluent Monitoring

Influent water to be processed by the GWTS must meet certain standards prior to processing to mitigate the potential release of partially treated water to select discharge locations. Influent water concentrations have been established for water that reaches the lead GAC vessel; these concentrations are presented in Table 5-1 and are based upon manufacturer models provided in Appendix H.

GWTS effluent must comply with any approved federal, state, or local permits. Effluent discharged from the GWTS must not exceed the discharge criteria identified in Appendix L. Extraction well, influent, post-lead GAC vessel, and effluent sampling locations are described below.

Extraction Wells—Samples are collected from a sample port located at the wellhead and/or the Well Control House just downstream of the flowmeter. All of the extraction wells are capable of being sampled individually.

Samples are obtained at six locations throughout the plant. Each train can be sampled at each location individually.

Influent—Samples are collected at the combined outlet of the influent pumps, but prior to the pre-treatment bag filters on the influent pump skids.

Post Lead GAC Vessel—Samples are collected at the outlet of the lead carbon vessels. Each train can be sampled individually.

Effluent—Samples are collected at the outlet of the effluent pump, but prior to the post-treatment bag filters on the effluent pump skids.

Extraction well and GWTS sampling schedules and analytes are described in Appendix L.

This page intentionally left blank

6. RECORDKEEPING

Records of the GWTS O&M and monitoring are maintained for use by operating personnel, management, and appropriate regulatory agencies. The proper collection and archiving of information are essential as the GWTS is intended for multiple years of operation. These records are used to establish a baseline and performance history of the GWTS. Records may be used for the following reasons:

- Evaluate plant performance
- Assist in troubleshooting operational problems at the GWTS
- Ensure the preventative maintenance schedule is performed
- Provide information for reports to regulatory agencies
- Comply with relevant permits and regulations.

Records are maintained by the Contractor onsite in the GWTS building control room or in the Contractor's office. Operators have access to electronic copies of the records if the hard copies are maintained in the Contractor's office. Records include hard copies of the O&M log sheets included in Appendix I and computerized operating records. Copies of reports are available to Operators electronically and at the Contractor's office. Waste characterization, generation, and waste records are maintained by the Contractor in accordance with the RCRA Permit.

6.1 Reporting

The Contractor submits weekly performance updates, monthly New Mexico Office of the State Engineer extraction/injection volumes, monthly Kirtland AFB Civil Engineering updates, and quarterly and annual performance reports, as required. Table 6-1 provides a list of reports, report contents, regulatory permits and/or documents requiring the reporting, and entities to which these reports need to be submitted. Examples of weekly and monthly reports are provided in Appendix P. All quarterly and annual reports are submitted to Kirtland AFB for review, approval, and submittal to NMED and can be found on the most recent project website (hosted and updated by Kirtland AFB or contractor support). The quarterly and annual reports must include the items listed in Table 5-1 as well as the following:

- Monthly average, minimum, and maximum flow rate values collected throughout the system
- Total monthly/quarterly/annual treatment volumes
- Monthly volumes distributed to each discharge location
- Total monthly volumes extracted from extraction well(s)
- Monthly average, minimum, and maximum head values from extraction well(s)
- Percent system runtime per quarter/annum
- Average operational groundwater extraction rates for individual wells per quarter/annum
- Average specific capacities for individual extraction wells per quarter/annum
- Analytical metrics including system sampling forms, analytical results, with laboratory and data quality reports, and estimated EDB removal per quarter/annum

- Summary of routine and non-routine equipment maintenance activities, repairs, and modifications if performed, including but not limited to the following:

  — Bag filter change-outs
  — GAC change-outs
  — Mechanical integrity evaluations
  — Well rehabilitation
  — Malfunction, repair, or replacement of a flowmeter
  — Operational changes with the potential to affect discharge quality

- Status of off-Base conveyance line security and administrative controls per quarter/annum

- Summary of shutdown and alarm events, including O&M issues that contributed to significant downtime for the GWTS.

The quarterly and annual performance reports of the GWTS are incorporated into the Quarterly Reports, which are submitted at the following frequency:

- Report inclusive of January 1 through March 31 is due June 30 of the same year
- Report inclusive of April 1 through June 30 is due September 30 of the same year
- Report inclusive of July 1 through September 30 is due December 31 of the same year
- Report inclusive of October 1 through December 31 is due March 31 of the next year.

The Operator makes any required notifications to the GWTS Project Manager, who then notifies Kirtland AFB, who must then make any required regulatory notifications to NMED. Specific to the discharge requirements, the Contractor provides validated monitoring data in the Quarterly Reports to NMED.

Entire system performance is evaluated by a qualified engineer and/or hydrologist, at a minimum, annually. Well performance parameters (flow rates, drawdown, changes in water chemistry, as well as performance of the carbon beds and mechanical/electrical systems) are evaluated quarterly. Trending data are incorporated from sampling, run logs, maintenance activities, and Operator feedback. The evaluations are included in the appropriate report and provide direction for further maintenance or optimization of the system and its components.

6.2 Equipment Warranties

Manufacturer's warranties for GWTS equipment are included with the manufacturers' information in Appendix J. The Contractor monitors system performance and identifies the need for additional spare parts based on assessing the likelihood of component failures and consequences. Spare parts and consumables are addressed in Section 3.15. Subcontractors for construction and installation of GWTS components provide guarantees that all work and services performed are in accordance with accepted standards and practices. These subcontractors also guarantee that all equipment and materials are furnished against defects in construction and/or workmanship for a period of 1 year following completion of its work and acceptance.

7. WASTE MANAGEMENT

Onsite waste management is performed by the Operator or other designated waste management person. Bag filters, water from monitoring wells, backwash water, depleted GAC, and pH adjustment solutions are the primary waste items requiring management at the GWTS facility. All waste requiring specialized disposal is disposed of in accordance with applicable permits.

7.1 Bag Filters

Spent bag filters are produced after any bag filter change-out occurs. The bag filters are dried prior to disposal and disposed of as non-hazardous solid waste; supporting documentation for this disposal decision is provided in Appendix M.

7.2 Monitoring Well and Maintenance Activity Water

All groundwater generated during well installation, development, or routine groundwater monitoring events and all well maintenance activities are 100 percent captured and contained during generation. The following categories of water are discussed in the paragraphs below:

- **Non-hazardous water** generated from:
  - — Water from wells for which the sampling data for two consecutive preceding sampling events document no contaminants present at concentrations that met the definition of characteristic hazardous waste (40 Code of Federal Regulations [CFR] Part 261).
- **Hazardous/potentially hazardous water** generated from:
  - — Water from wells for which any data from two consecutive preceding sampling events document contamination are present at concentrations that exceed the characteristic hazardous waste toxicity criteria (40 CFR Part 261.24) that have not been characterized.
  - — Water from wells for which historical data show water quality fluctuating between non-hazardous and hazardous classification over the past four quarters that have not been characterized.
  - — Water that had concentrations relatively close to the regulatory standard in 40 CFR part 261.24 (e.g., water that exhibited benzene above 0.4 mg/L in at least one of the previous two events that has not been characterized).
  - — Decontamination water from equipment cleaning across all hazardous or potentially hazardous well activities that have not been characterized.
- **Water of unknown quality** generated from installation, development, decontamination, sampling, maintenance, or other activities for which data are not available for two sampling events and that have not been characterized.

7.2.1 Non-Hazardous Water

Based on the previous sampling data as described above, non-hazardous water generated from well sampling activities do not require segregation either at the point of generation or while in storage. Water generated at these wells is discharged to the GWTS in-floor sump if they meet the investigation-derived waste requirements provided in Appendix Q and summarized in Table 6-1. Water that does not meet the requirements outlined in Appendix Q is disposed of at an offsite location. Water discharged to the GWTS in-floor sump is pumped from the sump to the Train 1 influent tank for treatment through the system. The quantity of water generated from each well and the total quantity of water transferred to the GWTS in-floor sump is recorded. A minimal amount of fines is anticipated to be present in this water and pre-filtering before batching into the GWTS is not anticipated. At the discretion of the Operator, the unfiltered water may be run through a 50-, 10-, or 1-micron bag filter as a pretreatment step.

If, for any reason, the GWTS cannot accept water as it is generated (e.g., shut down for maintenance, improper flow condition, etc.), the water is temporarily stored in the investigation-derived waste area on pallets and properly labeled until it can be discharged to the GWTS in-floor sump.

7.2.2 Hazardous/Potentially Hazardous Water

Based on the previous quarterly sampling event as described above, characteristically hazardous water generated from well sampling activities is kept segregated by point of origin both during transport and in storage. Upon generation, the water is placed in dedicated drums and transported to the less than 90-day accumulation area where the drums are labeled and stored pending receipt of laboratory analytical results. This water is profiled for disposal based on the analytical data from the sample collected from the generating well. If the water is determined to be non-hazardous following characterization and meets the criteria identified in Appendix Q, then that water is processed as described in the above section. Water generated from uncharacterized sources is treated the same way as the hazardous water until proven that the water is non-hazardous. The quantity of water generated from each well or activity is recorded.

7.2.3 Water of Unknown Quality

Water of unknown quality associated with installation, development, maintenance, or other activities is initially placed in portable tanks located at the wellhead where it is produced. Any fines are allowed to settle before the water is transported, on a daily basis, using vacuum trucks from the wellhead to a centralized storage area where it is pumped into storage tanks. The quantity of water generated and the total quantity of water transferred into any storage tanks is recorded. Upon conclusion of an activity, or when a storage tank reaches capacity, one water sample is collected from the tank; proper disposal takes place upon receipt of the analytical results. Upon receipt of the analytical results confirming that the water is non-hazardous and conforms to the requirements identified in Appendix Q, the water is processed as described in Section 6.2. If the water is hazardous based on toxicity characteristics or does not conform to the requirements identified in Appendix M, the water is disposed of offsite in accordance with appropriate regulations.

7.3 Pre-Treatment pH Adjustment and Disinfection

Sodium hypochlorite solution (8.25 percent) is used for two pre-treatment processes: (1) injection as an oxidant, disinfectant upstream of the pre-treatment sand filters; and (2) to adjust the pH, disinfect investigation-derived waste monitoring network purge water prior to disposal. The sodium hypochlorite solution is stored in the GWTS building on secondary containment pallets. The GWTS is registered with the Kirtland AFB Hazardous Materials Group as Shop Number 1706A. Any hazardous materials, such as

sodium hypochlorite solution or calibration gas for instruments, must be tracked and tagged with a Hazardous Waste Group label, use recorded, and storage capacities must not exceed the prescribed limits outlined in Kirtland AFB Hazardous Materials Group's Shop Number 1706A database. Monthly reports are provided to the Kirtland AFB Hazardous Materials Group documenting chemical usage and restocking orders that occurred during the month.

7.3.1 Sand Filter Pre-Treatment

Following installation of the pre-treatment sand filters, dosing pumps were installed to inject commercially available sodium hypochlorite solution into the influent water. The sodium hypochlorite solution containers are emptied directly into the dosing pump hopper. No sodium hypochlorite waste is expected from this process.

7.3.2 Investigation-Derived Waste Purge Water

Some monitoring network purge water may contain below neutral pH that requires adjustment or biological materials that need to be removed. pH adjustment can be performed on water less than neutral to neutral conditions by adding commercially available sodium hypochlorite solution to the water. Additionally, sodium hypochlorite can be used as a disinfectant on waters with the potential to introduce high quantities of unwanted organisms into the system. When performing a pH adjustment or disinfection with sodium hypochlorite solution, ensure that the pH of the water being adjusted is continuously monitored. Once adjusted, the water can be disposed of per the investigation-derived waste processing requirements provided in Section 7.2. No sodium hypochlorite waste is expected from this process.

7.4 Backwash Water

Backwash water from GWTS components (GAC vessels, tanks, etc.,) is created when the components require backwashing or during change-out of the GAC. Backwash water is characterized prior to disposal through the GWTS. Backwash water likely requires settling of fines and pre-filtration before being discharged to the GWTS. In the event that the backwash water cannot be filtered effectively, the backwash water is disposed of offsite in accordance with appropriate regulations. Backwash water sampling requirements are described in the Sampling and Analysis Plan (Appendix L).

7.5 Depleted Granular Activated Carbon

Eventual depletion of the ability of the GAC to remove contaminants of concern will require removal of the depleted GAC from their associated vessels. Depleted GAC is removed from the GAC vessels and regenerated offsite by a third party for reuse in accordance with appropriate permits and regulations.

7.6 Used Pump Oil

Used pump oil and oil-contaminated materials including gloves, paper towels, or plastic bags are stored in labeled, lined 5-gallon buckets placed on polyethylene pallets with secondary containment in the GWTS building's southwest corner. Once the containers are near to being full, the oil and materials are recycled or disposed of, in accordance with approved Base requirements.

This page intentionally left blank

8. REFERENCES

American Water Works Association (AWWA). 1975. Simplified Procedures for Water Examination, AWWA Manual M12 Including Supplement on Instrumentation Methods.

AWWA. 2003. C654-03: AWWA Standard for Disinfection of Wells.

New Mexico Environment Department (NMED). 2010. Hazardous Waste Treatment Facility Operating Permit, EPA ID Number NM9570024423, Issued to U.S. Air Force for the Open Detonation Unit Located at Kirtland Air Force Base, Bernalillo County, New Mexico, by the New Mexico Environment Department Hazardous Waste Bureau. July.

NMED. 2016. Correspondence from Trais Kliphuis, Director, Water Protection Division to Mr. Wayne L. Bitner, Chief, Environmental Restoration, Kirtland Air Force Base, New Mexico, regarding DP-1770 Modification Application and Termination. April 4.

NMED. 2017. Discharge Permit Issuance DP-1839, Kirtland Air Force Base, Bernalillo County, New Mexico, by the New Mexico Environment Department Groundwater Quality Bureau. April.

This page intentionally left blank

FIGURE

This page intentionally left blank

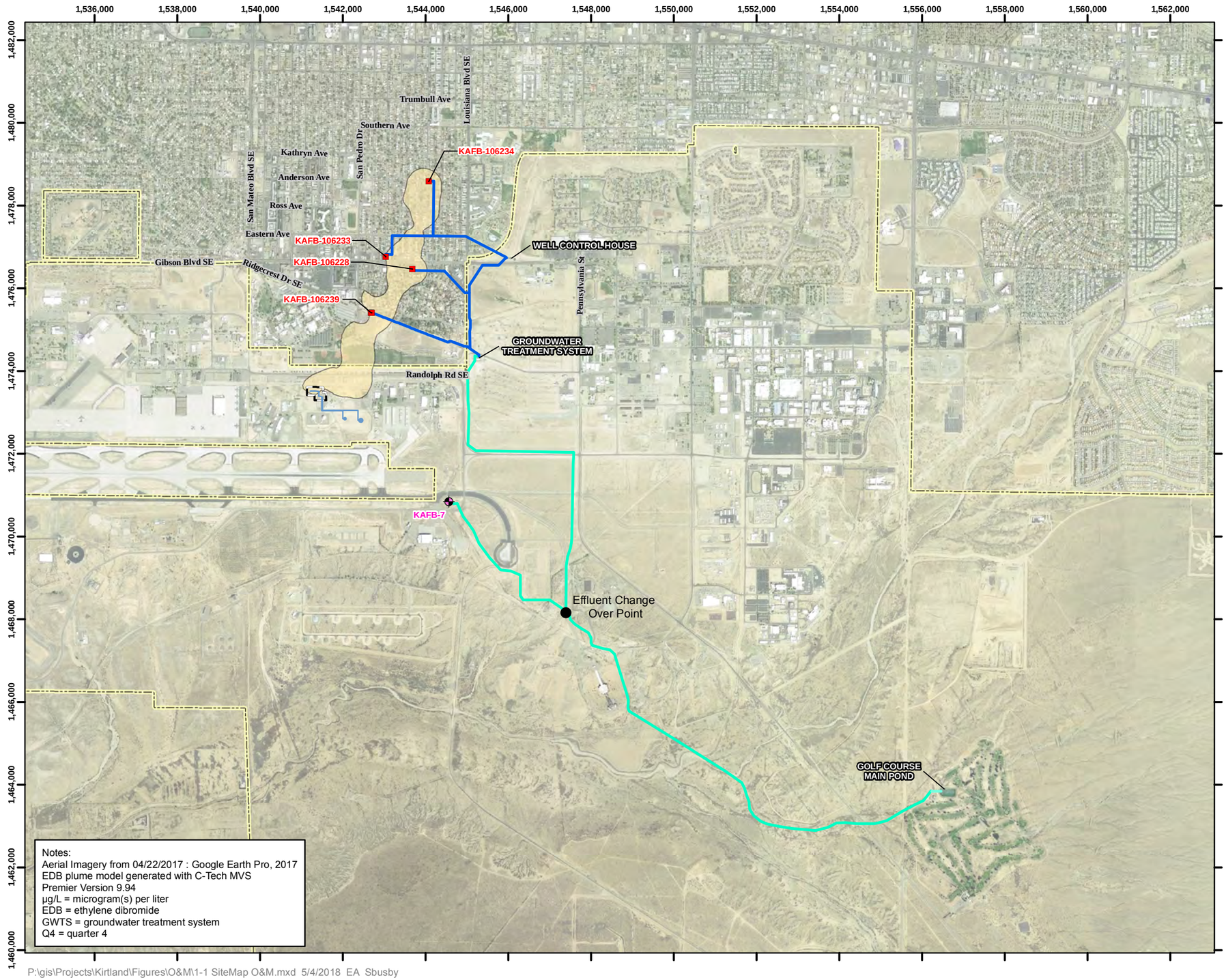

Notes:
Aerial Imagery from 04/22/2017 : Google Earth Pro, 2017
EDB plume model generated with C-Tech MVS Premier Version 9.94
µg/L = microgram(s) per liter
EDB = ethylene dibromide
GWTS = groundwater treatment system
Q4 = quarter 4

P:\gis\Projects\Kirtland\Figures\O&M\1-1 SiteMap O&M.mxd 5/4/2018 EA Sbusby

Legend

- Extraction Well
- Injection Well
- Former Aboveground Storage Tank
- Former Fuel Transfer Line
- GWTS Influent Piping
- GWTS Effluent Piping
- Installation Boundary
- EDB Plume Q4 2017 (> 0.05 µg/L)
- Source Area

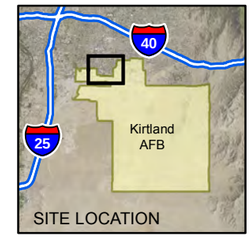

N

0 1,250 2,500 5,000

Feet

1 inch = 2,500 feet

Projection: NAD83 State Plane New Mexico Central FIPS3002 Feet

OPERATIONS AND MAINTENANCE PLAN
GROUNDWATER TREATMENT SYSTEM
SOLID WASTE MANAGEMENT UNIT ST-106/SS-111
KIRTLAND AIR FORCE BASE, NEW MEXICO

FIGURE 1-1

SITE MAP

This page intentionally left blank

TABLES

This page intentionally left blank

Table 1-1
Applicable Permits

Permit	Issuing Agency	Date Issued	Date Expires	Permitted Activities
New Mexico Environment Department Permits				
Discharge Permit, DP-1839	Ground Water Quality Bureau New Mexico Environment Department 1190 South St. Francis Drive Santa Fe, NM 87502-5469	28 April 2017	28 April 2022	Discharge Permit for treated effluent maximum discharge of 1,000 gallons per minute to maximum of five underground injection control wells
Hazardous Waste Treatment Facility Operating Permit U.S. Environmental Protection Agency Identification Number NM9570024423	Hazardous Waste Bureau New Mexico Environment Department 2905 Rodeo Park Drive E, Building 1, Santa Fe, NM 87505	July 2010	Permit is administratively extended	The Bulk Fuels Facility corrective action, including the design and operation of the groundwater treatment system, is being implemented pursuant to the Resource Conservation and Recovery Act corrective action provisions in Part 6 of the Resource Conservation and Recovery Act Permit
State of New Mexico Office of the State Engineer Permits				
RG-1587	State of New Mexico Office of the State Engineer District I 5550 San Antonio NE Albuquerque, NM 87109	10 December 2015	1 December 2025	Allows for the injection of 1239 gpm (2,000 acre-feet per annum) into injection well KAFB-7
RG-1579 POD 292	State of New Mexico Office of the State Engineer District I 5550 San Antonio NE Albuquerque, NM 87109	17 June 2015	15 June 2025	Allows for the extraction of 250 gpm (403 acre-feet per annum) from extraction well KAFB-106228
RG-1579 POD 309	State of New Mexico Office of the State Engineer District I 5550 San Antonio NE Albuquerque, NM 87109	29 October 2015	1 November 2025	Allows for the extraction of 200 gpm (323 acre-feet per annum) from extraction well KAFB-106233
RG-1579 POD 310	State of New Mexico Office of the State Engineer District I 5550 San Antonio NE Albuquerque, NM 87109	29 October 2015	1 November 2025	Allows for the extraction of 200 gpm (323 acre-feet per annum) from extraction well KAFB-106234
RG-1579 POD 319	State of New Mexico Office of the State Engineer District I 5550 San Antonio NE Albuquerque, NM 87109	7 December 2016	1 December 2025	Allows for the extraction of 200 gpm (323 acre-feet per annum) from extraction well KAFB-106239

Table 1-1
Applicable Permits

Permit	Issuing Agency	Date Issued	Date Expires	Permitted Activities
Right of Entry Agreements				
Christ United Methodist Church License to Kirtland Air Force Base	Christ United Methodist Church 6200 Gibson Boulevard SE, Albuquerque, NM 87108	9 January 2015	8 January 2020	Allows for the entry and performance of tasks in an around extraction well KAFB-106228
License Agreement Between the City of Albuquerque and Kirtland Air Force Base	Chief Administrative Officer, City of Albuquerque City-County Government Center, #1 Civic Plaza P.O. Box 1293 Albuquerque, NM 87103	21 September 2016	20 September 2026	Allows for the entry and performance of tasks in an around extraction wells KAFB-106233, KAFB-106234, and KAFB-106239 as well as off-Base conveyance lines and various monitoring wells
New Mexico Veterans Administration Health Care System Permit	New Mexico VA Health Care System 1501 San Pedro SE Albuquerque, NM 87108	28 January 2016	27 January 2021	Allows for the entry and performance of tasks in an around extraction well KAFB-106239 and various monitoring wells
Gibson Medical Center License to Kirtland Air Force Base	Gibson Medical Center 5400 Gibson Boulevard SE Albuquerque, NM 87108	15 July 2016	14 July 2021	Allows for the entry and performance of tasks in an around monitoring wells

gpm = gallon(s) per minute.
KAFB = Kirtland Air Force Base.
Copies of all permits are provided in Appendix A.

Table 1-2
Permit Terms and Conditions, Operations and Maintenance Plan Cross References

Condition No.	Terms and Conditions	Reference Location in O&M Plan
	Discharge Permit, DP-1839	
	A. Operational Plan	
1	The Permittee shall implement the following operational plan to ensure compliance with Title 20, Chapter 6, Parts 2 and 4 NMAC. [20.6.2.3109.C NMAC]	NA
2	The Permittee shall operate in a manner such that standards and requirements of Sections 20.6.2.3101 and 20.6.2.3103 NMAC are not violated. [20.6.2.3101 NMAC,20.6.2.3103 NMAC, 20.6.2.3109(C) NMAC]	NA
3	The Permittee shall ensure that the most recent versions of all Work Plans associated with the GWTS, the effluent conveyance pipeline, and the UIC well(s) are consistent with the requirements of this Discharge Permit. [20.6.2.3101 NMAC,20.6.2.3103 NMAC, 20.6.2.3109(C) NMAC]	NA
4	The Permittee shall ensure all discharges associated with this Discharge Permit are located within the Designated UIC Area within Section 01 of T9N R3E; Sections 05, 06, 07, 08, and 09 of T9N R4E; and Section 31 of T10N R4E (see Appendix B). [20.6.2.3101 NMAC, 20.6.2.3103 NMAC, 20.6.2.3109(C) NMAC]	Appendix D - System Description
5	The Permittee shall ensure that proposed UIC well locations (see Appendix B) and associated discharges are consistent with the most recent approved Stage 2 Abatement Plan for SWMU ST-105. [20.6.2.3101 NMAC, 20.6.2.3103 NMAC, 20.6.2.3109(C) NMAC]	NA
6	The Permittee shall ensure that discharged groundwater effluent is less than or equal to the effluent standards for all constituents referenced in 20.6.2.3103 NMAC. The term "effluent standard" is used in this Discharge Permit to refer to the New Mexico Water Quality Control Commission (WQCC) groundwater standard or the federal U.S. Environmental Protection Agency (EPA) maximum contaminant level (MCL); whichever is more stringent. [20.6.2.3109(C) NMAC, 20.7.10.100 NMAC]	Appendix L - Sampling and Analysis Plan
7	The Permittee shall ensure that GWTS influent chemistry is consistent with the design basis of the GWTS. [20.6.2.3109(C) NMAC, 20.7.10.100 NMAC]	Section 5.3 - Influent and Effluent Monitoring
8	The Permittee is authorized to install and operate not more than five UIC wells. Authorized UIC wells are listed in Table 1. [20.6.2.3109(C) NMAC, 20.7.10.100 NMAC]	NA
9	The Permittee shall ensure that the total discharge from the facility via UIC wells does not exceed 1,440,000 gpd. [20.6.2.3109(C) NMAC, 20.7.10.100 NMAC]	Section 2.6 - Discharge Locations
10	Prior to the installation of a new UIC well, the Permittee shall submit a Work Plan for NMED approval that satisfies the requirements of this Discharge Permit and the corrective action provisions at Part 6 of the RCRA Permit. This Work Plan shall, at a minimum, include the following information unless the Permittee can demonstrate to NMED that an item is not applicable or appropriate under the proposed activity or if an item has been provided separately under another submission: a. A statement of purpose and need for the additional UIC well(s); b. A list of groundwater monitoring wells which may be added to the monitoring program to effectively monitor performance of the new UIC well(s); c. A map showing the location of the proposed UIC well(s) and the location of all associated monitoring well(s); d. The geographic coordinates of the location of the UIC well(s) including township/range and section; e. A map showing the location of the nearest production well; f. A proposal of how the structural integrity of the treated effluent conveyance system between the GWTS and the new well will be demonstrated; g. Existing data showing the depth to water and general groundwater quality at the proposed new UIC well discharge location; h. A detailed description of groundwater flow modeling (numeric or analytical) predicting the effect of injection on the groundwater flow direction at the discharge location; i. A detailed description of geochemical modeling (numeric or analytical) evaluating the interaction between the treated effluent and receiving groundwater. Prior to any such geochemical modeling the treated effluent and receiving groundwater shall be tested for the analytes listed in Table 5 unless the Permittee can demonstrate that testing for a particular analyte is unnecessary; j. A detailed description of the impact that the proposed injection will have on any known groundwater contaminant plumes, e.g., the nitrate plume(s) addressed in the Site ST-105 Stage 2 Abatement Plan for Nitrate Contaminated Water; k. Maximum estimated monthly discharge volume to the UIC well(s); l. Project schedule, including the date the discharge is to commence and the anticipated duration; and m. Necessary changes to this Discharge Permit's language should the proposal be approved, e.g., the listing of authorized injection wells and associated monitoring wells in Table 1. These Work Plans shall be submitted for NMED approval at least 90 days prior to the scheduled installation of any UIC well. Proposed changes to this Discharge Permit constituting a "permit modification" as defined at 20.6.2.7.P NMAC shall not be submitted as a Work Plan, but shall instead be submitted as a discharge permit modification request as specified at 20.6.2.3109.G NMAC. A proposal to locate a discharge at a location outside the areas specified in Permit Condition #4 shall be considered a permit modification. A proposal to locate a UIC well at a location within the Designated UIC Area shall not be considered a permit modification unless the discharge quality or quantity is modified from that permitted herein. The Permittee shall post the approved Work Plan to the appropriate web site, i.e., KAFB/Environment/Kirtland AFB Fuel Plume Project Documents. [20.6.2.7(P) NMAC, 20.6.2.3107(A) NMAC, 20.6.2.3109(G) NMAC, 20.6.2.5003 NMAC]	NA
11	Prior to discharging to a newly installed UIC well, the Permittee shall submit written notification to NMED stating the date that the discharge is to commence. [20.6.2.3107(A) NMAC]	NA

Table 1-2
Permit Terms and Conditions, Operations and Maintenance Plan Cross References

Condition No.	Terms and Conditions	Reference Location in O&M Plan
12	The Permittee shall ensure that the GWTS is secured to control access by the general public. [20.6.2.3109(B) and (C) NMAC, NMSA 1978, §74-6-5(D)]	Section 1.2 - Overall System Description
13	The Permittee shall maintain signs in English and Spanish (unless otherwise prohibited by KAFB policy) at appropriate locations indicating that the GWTS effluent is non-potable. Signs shall be posted at the UIC wellheads, at the GWTS, and any associated UIC well related infrastructure. [20.6.2.3109(B) and (C) NMAC, NMSA 1978, § 74-6-S(D)]	NA
14	The Permittee shall ensure that the UIC well(s) include monitoring devices, i.e., water level and pressure head transducers, to prevent overfilling of the well. The Permittee shall measure the volume of treated effluent discharged to each UIC well and maintain a record of these volumes. [20.6.2.3107 and 20.6.2.3109(C)(3)(c)(i) NMAC]	Section 2.6 - Discharge Locations
15	The Permittee shall ensure the treated effluent conveyance system, i.e., piping, between the GWTS and the UIC well(s) does not leak and shall report any such leakage to the NMED GWQB in accordance with 20.6.2.1203(A) NMAC and copy the NMED HWB. Within one year of the effective date of this Discharge Permit, the Permittee shall demonstrate the structural integrity of the treated effluent conveyance system between the GWTS and KAFB-7. Prior to testing, the Permittee shall propose for NMED approval the test method to be used. The results of the mechanical integrity testing shall be submitted to NMED within 60 days of test completion. The Permittee shall integrity test the treated effluent conveyance system between GWTS and the UIC well(s) prior to submitting a permit renewal application. [20.6.2.3106(C) NMAC, 20.6.2.3107(A) NMAC]	Section 3.10 Effluent Line Integrity Testing
16	Prior to an initial discharge from the GWTS of treated effluent associated with a new extraction well, the Permittee shall submit documentation to NMED demonstrating that the treated effluent is at or below the effluent standards specified for the contaminants of concern listed in Table 2. [20.6.2.1202(A) and (C) NMAC, 20.6.2.3109(C) NMAC, NMSA 1978, §§ 61-23-1 through 61-23-32]	Appendix L - Sampling and Analysis Plan
	B. Monitoring, Reporting, and Other Requirements	
17	The Permittee shall conduct the monitoring, operations, and reporting listed below. Unless otherwise specified, all periodic monitoring results or general information obtained shall be reported in the forthcoming quarterly report. [20.6.2.3107 NMAC]	Section 6.1 - Reporting
18	Unless otherwise approved by NMED, the Permittee shall conduct sampling in accordance with standard industry practice. Sampling in accordance with the most current version of the GWTS Sampling and Analysis Plan (Appendix L of the O&M Plan), which includes sampling locations, procedures, field measurements, quality control samples, handling and custody, analytical methods, quality control, analytical validation, and reporting requirements, satisfies this Condition. [20.6.2.3107(B) NMAC]	Appendix L - Sampling and Analysis Plan
19	The Permittee shall submit quarterly and annual reports to NMED pursuant to the most recent NMED HWB approved Work Plans. The Permittee shall identify the portions of these reports pertaining to this Discharge Permit with a table in the reports that identifies those portions. Quarterly reports shall be submitted as specified below unless otherwise authorized by NMED: • January 1st through March 31st - due by June 30th • April 1st through June 30th_ due by September 30th • July 1st through September 30th_ due by December 31st • October 1st through December 31st - due by March 31st Annual reporting requirements for the previous year, i.e., January 1st through December 31st, shall be reported in the March 31st quarterly report. [20.6.2.3107(A) NMAC]	Section 6.1 - Reporting
20	The Permittee shall monitor the concentration of all contaminants of concern listed on Table 2 in GWTS treated effluent. Associated sampling and analysis shall be performed monthly at a minimum. When groundwater from a new extraction well is first introduced to the GWTS, contaminant of concern monitoring of the GWTS treated effluent shall occur daily for the first week of treatment, weekly for the first month of treatment, and monthly thereafter. If alterations to, or conditions at, the GWTS result in a potential impact to effluent quality, the Permittee will repeat this sampling sequence as directed by NMED. A representative sample of GWTS influent and effluent shall be analyzed annually for the constituents identified in Table 3. A representative sample of GWTS influent and effluent shall be analyzed every five years for the constituents identified in Table 4. The first analysis of the five-year constituent list shall occur in July 2017. Any newly identified constituents detected during the five-years sampling events will be added to the annual sampling constituent list in Table 3. All analysis of GWTS influent and effluent shall utilize analytical methods with detection limits that are sufficiently low to allow comparison to the standards included in the above referenced state and federal regulations. All sampling, analysis, and reporting shall comply with the most recent approved Work Plans. [20.6.2.3107(A) NMAC and 20.6.2.3107(B) NMAC]	Appendix L - Sampling and Analysis Plan

Table 1-2
Permit Terms and Conditions, Operations and Maintenance Plan Cross References

Condition No.	Terms and Conditions	Reference Location in O&M Plan
21	The Permittee shall report the volume of treated GWTS effluent discharged to each UIC well each quarter. This report shall include the following: a. Monthly average, maximum, and minimum values for flow rate and volume of treated effluent transferred to each UIC well; b. The totalized monthly volume of treated effluent transferred to all UIC wells; and c. Monthly average, maximum, and minimum head values of injection water for each UIC well. The Permittee shall monitor the GWTS effluent volume utilizing an effluent flow meter installed on the effluent pump skid after the GAC units. Each UIC well shall have a dedicated flow meter. Flow meters shall be inspected and calibrated in accordance with the associated manufacturer's recommendations. [20.6.2.3107 NMAC]	Section 2.6 Discharge Locations, Section 6.1 - Reporting
22	The Permittee shall include the following results and general information in quarterly reports to NMED: a. Any mechanical integrity conducted on either the GWTS or a UIC well; b. Any replacement of GAC media and the associated data that initiated the decision to replace the media; c. Any UIC well rehabilitation conducted; d. Any malfunction, repair, or replacement of a flow meter; and e. Any additional operational changes with the potential to affect the discharge. [20.6.2.3107 NMAC]	Section 6.1 - Reporting
23	The Permittee shall monitor the groundwater wells in the vicinity of KAFB-7 and in the vicinity of any newly installed UIC well(s) to determine any change to aquifer chemistry that may be the result of injection. This monitoring shall be performed annually, shall conform to the procedures of the most current approved Work Plan, and shall measure the contaminants of concern listed in Table 2. This chemistry will be reported in the Annual Report for BFF. ST-105 Annual Report includes elevation contour mapping and analytical parameters identified in the Stage 2 Abatement Plan. The Permittee shall develop a groundwater elevation contour map depicting the groundwater flow direction in the vicinity of each UIC well and report it in the ST-105 Annual Report. If the chemical quality of the treated groundwater being injected changes over time, NMED may require the Permittee to repeat geochemical modeling (numeric or analytical) to predict the interaction between the treated effluent and receiving groundwater. [20.6.2.3107 NMAC]	NA
24	The Permittee shall post all reports required by this Discharge Permit on KAFB's most current web site (e.g., https://kirtlandafb.tlisolutions.com/main.aspx.) [20.6.2.3107(A) NMAC]	Section 6.1 - Reporting
	C. Contingency Plan	
25	If the automated monitoring system records a system alarm indicating a threat condition to a UIC well, and that threat condition is confirmed, at a minimum the affected UIC well will be taken off-line. If the alarm condition is confirmed during the response investigation, the UIC well(s) will be taken off-line and the discharge to the UIC well(s) will not be resumed until the problem is identified and corrected. [20.6.2.3107(A) NMAC]	Appendix D - System Description, Appendix K - Contingency Plan
26	In accordance with this Discharge Permit, if the discharge to a UIC well exceeds effluent standards, the Permittee shall enact the Contingency Plan (Appendix C). The Permittee may be required to remediate water pollution in accordance with the corrective action provisions in Part 6 of the RCRA Permit except as provided in 20.6.2.4105(B) NMAC. [20.6.2.3107(A) NMAC, 20.6.2.3109(E) NMAC, 20.6.2.4105(A)(2) and (3) NMAC]	Appendix K - Contingency Plan
27	In the event that a release or a spill occurs that is not authorized under this Discharge Permit, the Permittee shall notify the NMED GWQB in accordance with 20.6.2.1203(A) NMAC, shall include any additional reporting requirements specified at RCRA Permit Section 1.27, and shall copy the NMED HWB. The Permittee shall also take measures to mitigate damage from the unauthorized discharge and initiate corrective actions specified in the Contingency Plan (Appendix C). The Permittee may be required to remediate water pollution in accordance with the corrective action provisions in Part 6 of the RCRA Permit except as provided in 20.6.2.4105(B) NMAC. Nothing in this condition shall be construed as relieving the Permittee of the obligation to comply with all requirements of Section 20.6.2.1203 NMAC. [20.6.2.1203 NMAC, 20.6.2.4105(A)(2) and (3) NMAC]	Appendix K - Contingency Plan
28	In the event that information indicates that a UIC well referenced at Table 1 is not constructed in a manner consistent with its intended use or is not completed in a manner that is protective of groundwater quality, the Permittee shall submit a Work Plan to the NMED with a proposal for well rehabilitation, abandonment only, or abandonment and replacement. This Work Plan shall include a project schedule and shall be submitted for NMED approval within 120 days following confirmation of the above referenced problems. The Permittee may propose an alternate use for the well. The UIC well requiring replacement shall be properly plugged and abandoned in accordance with Part 6.5.17.10.9 of the RCRA permit. [20.6.2.3107(A) NMAC, 20.6.2.5005 NMAC]	Appendix K - Contingency Plan
29	In the event that NMED or the Permittee identifies any failures of the Application or this Discharge Permit not specifically noted herein, NMED may require the Permittee to submit a corrective action plan and a schedule for completion of corrective actions to address the failures. Additionally, NMED may require a modification to this Discharge Permit to achieve compliance with 20.6.2 NMAC. [20.6.2.3107(A) NMAC, 20.6.2.3109(E) NMAC]	NA

Table 1-2
Permit Terms and Conditions, Operations and Maintenance Plan Cross References

Condition No.	Terms and Conditions	Reference Location in O&M Plan
	D. Closure Plan	
30	Upon permanent cessation of discharge to a UIC well(s), the Permittee shall perform the following closure measures upon NMED approval, unless UIC well(s) and/or conveyance pipelines are needed for another use: a) Cap, plug, or remove all conveyance pipelines to prevent the discharge of GWTS treated effluent to all UIC well(s); b) Abandon UIC well(s) in accordance with Part 6.5.17.10.9 of the RCRA permit, which reference OSE regulation 19.27.4.30 and 31 NMAC and associated well abandonment guidance; and c) Appropriately dispose of any wastes associated with UIC well plugging and abandonment. The Permittee may, instead of abandoning a UIC well, propose an alternate use for the well. Upon cessation of the closure measures, the Permittee shall perform the following post-closure measures: a) Continue monitoring contaminants of concern in groundwater for at least 2 years, or as appropriate and in concurrence with NMED; and b) Enact the release notification requirements of the Contingency Plan if groundwater standards are exceeded. The Permittee may be required to remediate water pollution in accordance with the corrective action provisions in Part 6 of the RCRA Permit except as provided in 20.6.2.4105(B) NMAC. When all post-closure requirements have been met, the Permittee may request to terminate the Discharge Permit. [20.6.2.3107 (A) 11 NMAC]	NA
	E. General Terms and Conditions	
31	The Permittee shall maintain a written record of the following information: a) Information and data used to complete the Application for this Discharge Permit; b) Records of any releases or spills not authorized under this Discharge Permit and reports submitted pursuant to 20.6.2.1203 NMAC; c) Records of the operation, maintenance, and repair of all facilities/equipment used to treat, store, or inject the treated groundwater; d) Facility record drawings (plans and specifications) showing the actual construction of the facility and that the construction complies with all applicable statutes, regulations, and codes including applicable Department of Defense Engineering Standards; e) Copies of quarterly reports completed and/or submitted to NMED pursuant to this Discharge Permit; t) The volume of treated water discharged pursuant to this Discharge Permit; g) Groundwater quality and injected water quality data collected pursuant to this Discharge Permit; h) Copies of construction records and well logs for all groundwater monitoring wells required to be sampled pursuant to this Discharge Permit; i) Records of the maintenance, repair, replacement, or calibration of any monitoring equipment or flow measurement devices required by this Discharge Permit; and j) Data and information related to field measurements, sampling, and analysis conducted pursuant to this Discharge Permit. The following information shall be recorded and made available to NMED upon request: i) The dates, location, and times of sampling or field measurements; ii) The sample analysis date of each sample; iii) The name and address of the laboratory, and the name of the signatory authority for the laboratory analysis; iv) The analytical technique or method used to analyze each sample or collect each field measurement; v) The results of each analysis or field measurement; vi) The results of any split, spiked, duplicate or repeat sample; and vii) A copy of the laboratory analysis chain-of-custody as well as a description of the quality assurance and quality control procedures used. The written record shall be maintained by the Permittee so that it is accessible within a reasonable time period during or following a facility inspection by NMED through the post-closure period and shall be made available to NMED upon request. [20.6.2.3107(A) and (C) NMAC]	Section 6 - Recordkeeping
32	The Permittee shall allow NMED representatives to inspect the facility and its operations which are subject to this Discharge Permit and the WQCC regulations. NMED representatives may, upon presentation of proper credentials, enter at reasonable times upon or through any premises in which a water contaminant source is located or in which any records are located regarding this discharge permit or related discharges required to be maintained by regulations of the federal government or the WQCC. The Permittee shall allow NMED representatives to have access to any copy of the records, and to perform assessments, sampling, or monitoring during an inspection for the purpose of evaluating compliance with this Discharge Permit and the WQCC regulations. Nothing in this Discharge Permit shall be construed as limiting in any way the inspection and entry authority of NMED under the WQA, the WQCC Regulations, or any other local, state, or federal regulations. [20.6.2.3107(D) NMAC, NMSA 1978, §§ 74-6-9(B) and 74-6-9(E)]	NA
33	The Permittee shall, upon NMED's request, allow for NMED's duplication of records required by this Discharge Permit and/or furnish to NMED electronic copies of such records. [20.6.2.3107(D) NMAC]	NA

Table 1-2
Permit Terms and Conditions, Operations and Maintenance Plan Cross References

Condition No.	Terms and Conditions	Reference Location in O&M Plan
34	In the event the Permittee proposes a change to the facility or the facility's discharge that would result in a change in the volume discharged; the location of the discharge; or in the amount or character of water contaminants received, treated, or discharged by the facility that differs from the terms and conditions in this Discharge Permit, the Permittee shall notify NMED prior to implementing such changes. The Permittee shall obtain approval (which may require modification of this Discharge Permit) by NMED prior to implementing such changes. [20.6.2.7(P) NMAC, 20.6.2.3107(C) NMAC, 20.6.2.3109(E) and (G) NMAC]	Table 6-1 - Reports and Recipients
35	In the event the Permittee proposes to construct or change an existing system such that the quantity or quality of the discharge will change substantially from that authorized by this Discharge Permit, the Permittee shall submit construction plans and specifications to NMED for the proposed system or process unit prior to the commencement of construction. In the event the Permittee implements changes to an existing system authorized by this Discharge Permit which will result in only a minor effect on the quality of the discharge, the Permittee shall report such changes (including the submission of record drawings, where applicable) in the next quarterly report to NMED. [20.6.2.1202(A) and (C) NMAC, NMSA 1978, §§ 61-23-1 through 61-23-32]	NA
36	Any violation of the requirements and conditions of this Discharge Permit, including any failure to allow properly credentialed NMED staff to enter and inspect records or facilities, or any refusal or failure to provide NMED with records or information required to be maintained by this Discharge Permit or related regulation may subject the Permittee to a civil enforcement action. Pursuant to WQA 74-6-1 O(A) and (B), such action may include a compliance order requiring compliance immediately or in a specified time, assessing a civil penalty, modifying or terminating the Discharge Permit, or any combination of the foregoing; or an action in district court seeking injunctive relief, civil penalties, or both. Pursuant to WQA 74-6-IO(C) and 74-6-10.1, civil penalties of up to $15,000 per day of noncompliance may be assessed for each violation of the WQA 74-6-5, the WQCC Regulations, or this Discharge Permit, and civil penalties of up to $10,000 per day of noncompliance may be assessed for each violation of any other provision of the WQA, or any regulation, standard, or order adopted pursuant to such other provision. In any action to enforce this Discharge Permit, the Permittee waives any objection to the admissibility as evidence of any data generated pursuant to this Discharge Permit. [20.6.2.1220 NMAC, NMSA 1978, §§ 74-6-10 and 74-6-10.1]	NA
37	No person shall: 1) make any false material statement, representation, certification, or omission of material fact in an application, record, report, plan, or other document filed, submitted, or required to be maintained under the WQA; 2) falsify, tamper with, or render inaccurate any monitoring device, method, or record required to be maintained under the WQA; or 3) fail to monitor, sample, or report as required by a permit issued pursuant to a state or federal law or regulation. Any person who knowingly violates or knowingly causes or allows another person to violate the requirements of this condition is guilty of a fourth degree felony and shall be sentenced in accordance with the provisions of NMSA 1978, § 31-18-15. Any person who is convicted of a second or subsequent violation of the requirements of this condition is guilty of a third degree felony and shall be sentenced in accordance with the provisions of NMSA 1978, § 31-18-15. Any person who knowingly violates the requirements of this condition or knowingly causes another person to violate the requirements of this condition and thereby causes a substantial adverse environmental impact is guilty of a third degree felony and shall be sentenced in accordance with the provisions of NMSA 1978, § 31-18-15. Any person who knowingly violates the requirements of this condition and knows at the time of the violation that he is creating a substantial danger of death or serious bodily injury to any other person is guilty of a second degree felony and shall be sentenced in accordance with the provisions of NMSA 1978, § 31-18-15. [20.6.2.1220 NMAC, NMSA 1978, §§ 74-6-10.2(A) through 74-6-10.2.F]	NA
38	Nothing in this Discharge Permit shall be construed in any way as relieving the Permittee of the obligation to comply with all applicable federal, state, and local laws, regulations, permits, or orders. [NMSA 1978, § 74-6-5.L]	NA
39	The Permittee may file a petition for review before the WQCC on this Discharge Permit. Such petition shall be in writing to the WQCC within thirty days of the receipt of postal notice of this Discharge Permit and shall include a statement of the issues to be raised and the relief sought. Unless a timely petition for review is made, the decision of NMED shall be final and not subject to judicial review. [20.6.2.3112 NMAC, NMSA 1978, § 74-6-5.O]	NA
40	Prior to the transfer of any ownership, control, or possession of this facility or any portion thereof, the Permittee shall: 1) notify the proposed transferee in writing of the existence of this Discharge Permit; 2) include a copy of this Discharge Permit with the notice; and 3) Deliver or send by certified mail to NMED a copy of the notification and proof that such notification has been received by the proposed transferee. Until both ownership and possession of the facility have been transferred to the transferee, the Permittee shall continue to be responsible for any discharge from the facility. [20.6.2.3111 NMAC]	NA

Table 1-2
Permit Terms and Conditions, Operations and Maintenance Plan Cross References

Condition No.	Terms and Conditions	Reference Location in O&M Plan
41	Payment of permit fees is due at the time of Discharge Permit approval. Permit fees shall be paid in a single payment or shall be paid in equal installments on a yearly basis over the term of the Discharge Permit. Single payments shall be remitted to NMED no later than 30 days after the Discharge Permit effective date. Initial installment payments shall be remitted to NMED no later than 30 days after the Discharge Permit effective date; subsequent installment payments shall be remitted to NMED no later than the anniversary of the Discharge Permit effective date. Permit fees are associated with issuance of this Discharge Permit. Nothing in this Discharge Permit shall be construed as relieving the Permittee of the obligation to pay all permit fees assessed by NMED. A Permittee that ceases discharging or does not commence discharging from the facility during the term of the Discharge Permit shall pay all permit fees assessed by NMED. An approved discharge permit shall be suspended or terminated if the facility fails to remit an installment payment by its due date. [20.6.2.3114(F) NMAC, NMSA 1978, § 74-6-5(K)]	NA
RG-1587 (KAFB-7)		
1	This application is approved as follows: Permittee: Kirtland Air Force Base Permit No: RG-1587 Application File Date: September 17, 2015 Notice for Publication Issued: October 13, 2015 Affidavit of Publication Filed: November 4, 2015, The Albuquerque Journal published on October 16, 23, and 30, 2015 Priority: March 1, 1949 Source: Groundwater Point of Diversion: RG-1587: Located at a point where X=1,544,731.13 feet and Y=1,470,756.22 feet, NMSPCS, Central Zone, NAD83, on land owned by the Kirtland Air Force Base, Bernalillo County, New Mexico. Purpose of Use: Extraction/Production, Injection, and Irrigation Place of Use: NE1/4 NE1/4, Section 1, Township 10 North, Range 3 East, NMPM, Bernalillo County, New Mexico, and under permits RG-1579 through RG-1589 the applicant will discharge treated groundwater into the Tijeras Arroyo Golf Course main pond, infiltration galleries located adjacent to the golf course, and injection wells on land owned by the Kirtland Air Force Base.	NA
2	The total diversion of water from well RG-1587 under this permit shall not exceed 4,500 acre-feet per annum.	Table 2-2
3	The total injection of water from well RG-1587 under this permit shall not exceed 2,000 acre-feet per annum.	Table 2-2
4	Well RG-1587 shall be equipped with a totalizing meter of a type, at location(s) approved by, and installed in a manner acceptable to the State Engineer. Records of the amount of water pumped and injected shall be submitted, in writing, to the District 1 Office of the State Engineer on or before the 10th day of January, April, July and October of each year. No water shall be diverted from any well unless equipped with a functional totalizing meter. The Permittee shall provide in writing the make, model, serial number, date of installation, initial reading, units, and dates of recalibration of each meter and any replacement meter.	Section 2.2, Section 6.1
5	The Permittee shall utilize the highest and best technology to ensure conservation of water to the maximum extent practical.	Section 2.2
6	This Permit will expire on December 1, 2025.	Table 1-1
RG-1579 POD 292 (KAFB-106228)		
1	This application is approved as follows: Permittee: Kirtland Air Force Base Permit Number: RG-1579 POD 292 Application File Date: November 13, 2014 Notice for Publication: February 10, 2015 Affidavit of Publication: May 1, 2015 from the Albuquerque Journal Priority: March 1, 1949 Source: Groundwater Points of Diversion: RG-1581 POD 292, located at a point where X=1,543,677 feet and Y=1,476,476 feet, NMSPCS, Central Zone, NAD 83, within the NE 1/4 NE 1/4 of Section 36, Township 10 North, Range 3 East, NMPM, Bernalillo County New Mexico. Purpose of Use: Pollution control and recovery, specifically extraction of groundwater for remediation Place of Use: Land within Kirtland Air Force Base, and land within Section 36, Township 10 North, Range 3 East, NMPM, Bernalillo County, New Mexico. Amount of Water: 403 acre-feet per annum	NA
2	The total diversion of groundwater from well RG-1579 POD 292 shall be limited to 403 acre-feet per annum, measured at the well, a portion of the 6,398 acre-feet per annum, which includes the water right of 4,500 acre-feet per annum from well Numbers RG-1581 through RG-1589 (Kirtland East), and 1,898 acre-feet per annum from Numbers RG-1579, RG-1580 and RG-1579 and RG-1580 Combined-S (Kirtland West).	Table 2-2
3	The total amount of water pumped from well RG-1579 POD 292 shall be measured by a totalizing meter of a type, at a location, and installed in a manner acceptable to the State Engineer. The Permittee shall provide the make, model, serial number, initial reading, units, multiplier, data of installation, and dates of recalibration to the State Engineer prior to any diversion of water under this permit.	Section 2.2, Section 6.1
4	Records of the quantity of water diverted from well RG-1579 POD 292 shall be submitted to the District 1 Office via mail, e-mail, or facsimile on or before the 10th day of the months of January, April, July, and October for the preceding 3 calendar months, i.e., quarterly.	Table 6.1

Table 1-2
Permit Terms and Conditions, Operations and Maintenance Plan Cross References

Condition No.	Terms and Conditions	Reference Location in O&M Plan
5	None	NA
6	The Permittee shall utilize the highest and best technology available to assure conservation of water to the maximum extent practical.	Section 2.2
7	This permit shall automatically expire on June 15, 2025 or upon completion of the intended purpose of use. If the intended purpose of use is completed prior to June 15, 2025, the permittee shall notify the State Engineer by certified letter.	Table 1-1
8	Proof of Completion of Well shall be filed on or before June 15, 2017.	NA
	RG-1579 POD 309 (KAFB-106233) and POD 310 (KAFB-106234)	
1	This application is approved as follows: Permittee: Kirtland Air Force Base Permit No: RG-1579 POD 309 and POD 310 Application File Date: July 10, 2015 Notice for Publication Issued: August 25, 2015 Affidavit of Publication Filed: September 14, 2015, The Albuquerque Journal published on August 28, September 5, and September 11, 2015 Priority: March 1 , 1949 Source: Groundwater Point of Diversion: RG-1579 POD 309: Located at a point where X=1,543,061 feet and Y=1,476,824 feet, NMSPCS, Central Zone, NAD 83, on land owned by the City of Albuquerque, Bernalillo County, New Mexico. RG-1579 POD 310: Located at a point where X=1,544,083 feet and Y=1,478,577 feet, NMSPCS, Central Zone, NAO 83, on land owned by the City of Albuquerque, Bernalillo County, New Mexico. Purpose of Use: Pollution Control and Recovery, and Irrigation Place of Use: SE 1/4 SE 1/4, Section 25, Township 10 North, Range 3 East, NMPM, Bernalillo County, New Mexico, and under permits RG-1579 through RG-1589 the applicant will discharge treated groundwater into the Tijeras Arroyo Golf Course main pond, infiltration galleries located adjacent to the golf course, and injection wells on land owned by the Kirtland Air Force Base.	NA
2	The total diversion of water from wells RG-1579 POD309 and RG-1579 POD310 under this permit shall not exceed 636 acre-feet per annum.	Table 2-2
3	Wells RG-1579 POD309 and RG-1579 POD310 shall be equipped with a totalizing meter of a type, at location(s) approved by, and installed in a manner acceptable to the State Engineer. Records of the amount of water pumped shall be submitted, in writing, to the District 1 Office of the State Engineer on or before the 10th day of January, April, July and October of each year. No water shall be diverted from any well unless equipped with a functional totalizing meter. The Permittee shall provide in writing the make, model, serial number, date of installation, initial reading, units, and dates of recalibration of each meter and any replacement meter.	Section 2.2, Section 6.1
4	The Permittee shall utilize the highest and best technology to ensure conservation of water to the maximum extent practical.	Section 2.2
5	This Permit will expire on November 1, 2025.	Table 1-1
	RG-1579 POD 319 (KAFB-106239)	
1	This application is approved as follows: Permittee: Kirtland Air Force Base Permit No: RG-1579 POD319 Application File Date: August 25, 2016 Notice for Publication Issued: September 14, 2016 Affidavit of Publication Filed: October 6, 2016, The Albuquerque Journal published on September 18, 25, and October 2, 2016 Priority: March 1, 1949 through March 6, 1956 Source: Groundwater Point of Diversion: RG-1579 POD319: (KAFB-106239) Located at a point where X=1,542,707.9 feet and Y=1,475,412 feet, NAD 83, SPCS, Central Zone, on land owned by the City of Albuquerque, Bernalillo County, New Mexico. Purpose of Use: Pollution Control and Recovery Place of Use: SE 1/4 SE 1/4,, Section 25, Township 10 North, Range 3 East, NMPM, Bernalillo County, New Mexico, and under permits RG-1579 through RG-1589 the applicant will discharge treated groundwater into the Tijeras Arroyo Golf Course main pond, infiltration galleries located adjacent to the golf course, and injection well, RG-1587, on land owned by Kirtland Air Force Base.	NA
2	The total diversion of water from well RG-1579 POD319 under this permit shall not exceed 323 acre-feet per annum consumptive use.	Table 2-2
3	The new well shall be drilled by a well driller licensed in the State of New Mexico, and a well record for new well RG-1579 POD319 shall be filed with the Office of the State Engineer within twenty (20) days of drilling the well.	NA
4	Well RG-1579 POD319 shall be equipped with a totalizing meter of a type, at location(s) approved by, and installed in a manner acceptable to the State Engineer. Records of the amount of water pumped shall be submitted, in writing, to the District 1 Office of the State Engineer on or before the 10th day of each month. No water shall be diverted from any well unless equipped with a functional totalizing meter. The permittee shall provide in writing the make, model, serial number, date of installation, initial reading, units, and dates of recalibration of each meter and any replacement meter.	Section 2.2, Table 6.1
5	The Permittee shall utilize the highest and best technology to ensure conservation of water to the maximum extent practical.	Section 2.2
6	This permit will expire on December 1, 2025.	Table 1-1
7	The State Engineer retains jurisdiction over this permit.	NA

Table 1-2
Permit Terms and Conditions, Operations and Maintenance Plan Cross References

Condition No.	Terms and Conditions	Reference Location in O&M Plan
8	Pursuant to Section 72-8-1 NMSA, the permittee shall allow the state engineer and his representative's entry upon private property for the performance of their respective duties, including access to the wells for meter readings and water level measurements.	NA
	Christ United Methodist Church License to Kirtland Air Force Base	
1	The LICENSOR hereby grants unto the LICENSEE a no-rent license to enter upon the LICENSOR's real property located at 6200 Gibson Boulevard, S.E., Albuquerque, Bernalillo County, New Mexico, which real property is also known as: Tract C, as shown on the Replat of Tracts B, C, D and E, Siesta Hills No. 2, recorded November 25, 1980 in Book B18, Page 84, records of Bernalillo County, New Mexico, as more specifically identified on the general location map, attached hereto and incorporated herein as Attachment A, for the express purpose of: 1) constructing, drilling, installing, operating, maintaining and removing one (1) bulk fuels facility (BFF) interim fuel remediation extraction well, extraction well pipeline and associated electrical power lines, pole, transformer and junction boxes; 2) depending upon the depth of the ethylene-di-bromide plume, constructing, drilling, installing, operating, maintaining and removing no more than two (2) BFF regional deep monitoring wells; and 3) parking well drilling and construction equipment, to include a fork lift, water truck, other miscellaneous work pickups, hopper, lined waste roll-off bin and daily construction supplies, to include well casing; and 4) collecting ground water monitoring samples from the regional deep monitoring well and extracting and pumping ethylene-dibromide contaminated groundwater through the extraction well pipeline to Kirtland AFB for treatment during the term of the Kirtland AFB BFF fuel release remediation; in that area of the LICENSOR's west parking lot located immediately adjacent to the city alley right-of-way at the south boundary of the parking lot, as shown on the aerial photograph attached hereto and incorporated herein as Attachment B.	NA
2	The term of this license is five (5) years, beginning on January 9, 2015 and ending January 8, 2020.	Table 1-1
3	The LICENSEE, its officers, employees, agents, representatives, contractors, and assigns, shall use the area described above, and as shown in Attachments A and B, for the purposes described above and not for any other purpose without first obtaining the written consent of the LICENSOR. The LICENSEE, its officers, employees, agents, representatives, contractors, and assigns shall comply with the following additional LICENSOR use restrictions: 3.1. LICENSEE shall conduct no activities on LICENSOR's property on any Saturday or Sunday during the term of this License; 3.2. LICENSEE shall remove the basketball board standard from the west parking lot and reinstall it at a location on the parcel to be specified by the LICENSOR; 3.3. LICENSEE shall provide for city waste disposal truck access to the LICENSOR's trash dumpster located at the SE corner of the west parking lot to facilitate waste collection and disposal; 3.4 LICENSEE shall provide access to the west door of the Church through the west parking lot for Food Band truck deliveries on the first Tuesday of each month; 3.5. LICENSEE shall provide access to the west door of the Church through the west parking lot to LICENSOR's contractor(s) for the construction and installation of an ADA compliant wheelchair ramp; and 3.6. LICENSEE shall provide day and night access to the west door through the west parking lot for groups, including church members, using church facilities.	NA
4	All tools, equipment, and other property (the "Personal Property") taken upon or placed upon the LICENSOR's land by the LICENSEE shall remain the property of the LICENSEE and shall be removed within seven (7) days after the installation of the extraction and/or ground water monitoring wells or the expiration or revocation of this License. In the event that the LICENSEE fails to timely remove the Personal Property the LICENSOR may, at the LICENSOR's election, remove and have stored the Personal Property at the LICENSEE's expense or may elect to retain the Personal Property as LICENSOR's property.	NA

Table 1-2
Permit Terms and Conditions, Operations and Maintenance Plan Cross References

Condition No.	Terms and Conditions	Reference Location in O&M Plan
5	Liability and Insurance. 5.1 Liability 5.1.1 As between the PARTIES, the LICENSEE, its agents, representatives, contractors and/or sub-contractors assume all risk of loss or damage to property and injury or death to persons, whether to its officers, employees, contractors of any tier, agents, invitees or others, by reason of or incident to LICENSEE's use of the licensed area, and its activities conducted under this LICENSE. The LICENSEE agrees to hold harmless the LICENSOR, and its officials, agents and employees from any claims, actions, suits or other proceedings arising from or out of the acts or omissions of the LICENSEE, its agents, representatives, contractors or sub-contractors or arising from the failure of the LICENSEE, its agents, representatives, contractors or sub-contractors to perform any act or duty required of the LICENSEE herein. To the extent provided by law, the LICENSEE's liability under this clause is subject to the availability of funds, as set forth in 31 USC § 1341 (Anti-Deficiency Act) and nothing contained in this License may be considered as implying Congress will at a later date appropriate funds sufficient to meet deficiencies. 5.1.2. The LICENSEE hereby undertakes a contractual obligation to repair all actual damages to LICENSOR's property and improvements caused by LICENSEE's operation(s). Upon completion of the repairs, LICENSEE shall repave the west parking lot ensuring said paving is on-grade with the LICENSEE installed well casings and/or vaults. In lieu of performing such repair, LICENSEE may, at its discretion, pay for said repairs and parking lot repaving. To the extent provided by law, the Licensee's liability under this clause is subject to the availability of funds, as set forth in 31 USC § 1341 (Anti-Deficiency Act) and nothing contained in this License may be considered as implying Congress will at a later date appropriate funds sufficient to meet deficiencies. The provisions of this clause are without prejudice to any rights the LICENSOR may have to make a claim for damages under applicable laws. 5.1.3. Claims for damages, personal injury or death arising from negligent or wrongful act of LICENSEE, its officers, employees, contractors of any tier, agents or invitees (but specifically excluding contractual claims arising under paragraph 6.1 .2 above) shall be subject to the provisions of the Federal Tort Claims Act (28 USC §§ 2671 et seq.). 5.2 Insurance Requirement. LICENSEE shall require its agents, representatives, contractors or sub-contractors to obtain insurance coverage for the specific protection and benefit of the LICENSOR, including but not necessarily limited to, the following coverage: 5 .2.1. Comprehensive General Liability Insurance. Comprehensive general liability insurance with liability limits in an initial amount not less than $1 ,000,000 aggregate limit of liability for bodily injury, including death, and property damage in any one occurrence. 5.2.2. Automobile Liability Insurance. An automobile liability policy with liability limits in amounts not less than $1 ,000,000 combined single limit of liability for bodily injury, including death, and property damage in any one occurrence. Said policy of insurance must include coverage for the use of all owned, non-owned, hired automobiles, vehicles and other equipment both on and off work and is in addition to the Comprehensive General Liability Coverage. 5.2.3. Proof of Insurance: During the term of this Agreement, not less than once each year, on or before 9 January 2015 and 9 January of each succeeding year, LICENSEE shall cause its primary contractor to provide to the LICENSOR without demand, or more frequently upon demand, proof of all required insurance coverage. Prior to expiration or exchange of any policy, LICENSEE shall cause its primary contractor to furnish the LICENSOR evidence satisfactory to the LICENSOR that the policy has been renewed or replaced or is no longer required by this Agreement. All policies required hereunder shall provide that the LICENSOR shall be given thirty (30) days prior written notice of cancellation, non-renewal or material alteration of coverage. Provisions that the insurance company shall "endeavor to give the LICENSOR notice" shall not be allowed.	NA
6	The LICENSEE shall be solely responsible for maintaining the premises upon which LICENSEE's equipment is being stored in a safe condition during the term of this License.	NA
7	The LICENSEE will use all reasonable means available to protect the environment and natural resources from damage arising from this License or activities incident to it, to include the removal and disposal of all municipal and hazardous waste generated at all well and infrastructure construction and operation sites in accordance with City of Albuquerque, State and Federal law. Where damage occurs, the Licensee shall be liable and shall restore the damaged resources to the condition existing prior to the implementation of the remediation and monitoring, as documented in the Request for Environmental Impact Analysis (AF Form 813), which is attached hereto and incorporated herein as Attachment C, and an Environmental Baseline Survey (EBS), which is attached hereto and incorporated herein as Attachment D. Upon revocation or termination of this License, with the exception of pre-existing conditions identified in Attachments C and D, the LICENSOR's land will be returned in the same environmental condition as received, but without the contamination conditions for which the LICENSEE is performing the remediation, which shall be documented in a final closeout EBS, a copy of which shall be provided to the LICENSOR.	NA
8	In connection with its use of or any other activity on the property, the LICENSEE, its officers, employees, agents, representatives, contractors, and assigns will at all times and in all respects comply with all federal, state and local laws, ordinances and regulations, relating to the protection of the environment, including but not limited to protection of surface water and groundwater; industrial hygiene; the use, handling and disposal of any hazardous or toxic substances; the Clean Air Act, 42 U.S.C. 7401 et seq. applicable state and air quality local laws, and policies and procedures of the City's Environmental Health Air Quality Division.	NA
9	The LICENSEE, its officers, employees, agents, representatives, contractors, and assigns shall comply with all other applicable federal, state and local laws, statutes, ordinances and regulations and will not discriminate illegally against any person.	NA
10	For purposes of giving formal written notice, the points of contact are as follows: LICENSOR: CHRIST UNITED METHODIST CHURCH Attn: Ms. Vicki Chronister 6200 Gibson Blvd., SE Albuquerque, NM 87108 LICENSEE: Installation Commander 2000 Wyoming Blvd, SE Kirtland AFB, NM 87117	NA

Table 1-2
Permit Terms and Conditions, Operations and Maintenance Plan Cross References

Condition No.	Terms and Conditions	Reference Location in O&M Plan
11	Claims. 11.1 Point of Contact. The Permittee point of contact for all damages, whether to real or personal property, will be submitted to: AFNWC/JA 2000 Wyoming Blvd., SE Building 20604, Room B-36 Kirtland AFB, NM 87117 (505) 846-4217 11.2 Claims Process: To file a claim for damage and/or injury due to LICENSEE"s operations, the claimant, or his/her authorized agent, must file a properly signed SF-95, Claim for Damage, Injury or Death, setting forth a sum certain for damage to or loss of property, personal injury or death, to the POC identified in 11.1 above, within two (2) years of the incident causing the damage or injury. The claim form is available at the website www.claims.jag.af.mil.	NA
12	This License contains the entire agreement of the parties. Changes to this License are not binding unless made in writing and signed by both parties.	NA
13	This License is governed by and construed and enforced in accordance with federal law and the laws of New Mexico.	NA
14	If any part of this License is held to be invalid or unenforceable, the remainder of this License will remain valid and enforceable if the remainder of the License is reasonably capable of completion.	NA
15	Index of Attachments Attachment A - Description of Licensed Premises Attachment B - Map Attachment C - AF-813 Attachment D - EBS	NA
	License Agreement Between The City of Albuquerque and Kirtland Air Force Base	
1	Subject to the terms and conditions of this License, and as set forth in the Vadose Zone Investigation Work Plan Bulk Fuels Facility Spill, Solid Waste Management Units ST-106 and SS-111 - March 2011 and Groundwater Investigation Work Plan, Bulk Fuels Facility Spill, Solid Waste Management Units ST-106 and SS-111 - March 2011, which are attached hereto and incorporated herein as Attachments A and B, respectively, the final revised plans will be attached and incorporated herein upon approval and signature by New Mexico Environment Department (NMED), the LICENSOR grants to LICENSEE this License to: a. Construct, install, operate, maintain, modify, repair, replace, remove, and plug and abandon soil vapor and ground water monitoring wells for the collection of groundwater samples and conducting aquifer tests. Wells are identified as shallow (groundwater surface), intermediate (45-60 feet below groundwater surface) and deep (85-100 feet below groundwater surface). Existing and currently proposed monitoring wells subject to the terms of this permit are: b. Construct, install, operate, maintain, modify, repair, replace, remove, and plug and abandon groundwater extraction wells, and their associated pipeline and infrastructure, to include underground power lines, for the extraction and transport of influent (LNAPL, and/or its various constituents, to include ethylene-di-bromide (EDB)), to the Kirtland AFB groundwater treatment facility for treatment. Existing and currently proposed extraction wells and extraction well pipelines subject to the terms of this permit are: c. Respond to and conduct emergency response activities at all current and future monitoring and extraction well locations and extraction well pipeline locations identified herein. d. Construct, install, operate, maintain, modify, repair, replace, remove, and plug and abandon additional groundwater extraction wells, and their associated pipeline and infrastructure, to include underground power lines additional groundwater monitoring wells, influent extraction wells, and/or influent extraction pipelines required by NMED/HWB to complete the Bulk Fuels Facility fuel plume remediation. All such activity shall occur within the area of investigation described in Condition 1 herein and as more fully depicted in Attachment D herein, such construction and installation being subject to the terms and conditions herein, or as otherwise agreed to by the PARTIES by written agreement and submission of well permits and other drawings, plans and schematics as determined necessary by the City and the City manuals. e. Coordinate all LICENSOR well location deviation requests with the NMED/HWB. f. Construct, install, operate, maintain, modify, repair, replace, remove, plug and abandon a core drilling borehole, as more fully depicted in Attachment G herein, for the collection of a continuous core sample extending from a borehole depth of 350 feet to 500 feet below ground level. The final core depth will depend upon observed LNAPL concentrations. A second alternate core drilling borehole may be necessary, if the first borehole LNAPL is observed in the first core sample. Specific borehole latitude/longitude location coordinates will be provided upon determination of the final borehole location and engineering specifications will be submitted prior to drilling. If the location of boreholes is within the confines of Bullhead park, the borehole location, core drilling time of year and other logistic considerations must be discussed with Park personnel well in advance of any activity planned for the Park and written approval by the Parks and Recreation Director must be obtained. g. Conduct all remediation activities set forth in Clauses 1 (a) through 1 (f) herein on City property, including rights of ways, within the following general area within the municipal boundaries of the City of Albuquerque and City-owned property in the County of Bernalillo, excluding all City-owned parks except Bullhead Park, Phil Chacon Park and the Veterans Memorial: and as more fully identified in Attachments D and E attached hereto and incorporated herein. Final locations of each well described and shown in the attachments, any changes in location and any future wells determined to be necessary to the investigation and remediation of the fuel plume shall be approved by the LICENSOR, as follows: new or additional sampling wells determined to be necessary during the term of this license that are located within the license agreement area in city rights-of-way need prior approval of the City Environmental Health Department, Environmental Services Division. All wells and construction need to be addressed by amending this License and approval by the City of Albuquerque Chief Administrative Officer. Additionally, all wells must be processed through the Well Permit approval process prior to LICENSEE commencing construction. Final locations of all pipelines described and shown in the attachments, any changes in location and any future wells, extraction pipelines or other infrastructure determined to be necessary to the investigation and remediation of the fuel plume shall be approved by the LICENSOR prior to LICENSEE commencing construction.	NA

Table 1-2
Permit Terms and Conditions, Operations and Maintenance Plan Cross References

Condition No.	Terms and Conditions	Reference Location in O&M Plan
2	The LICENSEE shall use the area described in Clause 1 (g) herein and as shown in Attachments D and E for the purposes described in Clause 1 herein and not for any other purpose without first obtaining the written consent of the LICENSOR and shall adhere to the following use conditions: a. As to the underground extraction pipeline, LICENSEE shall: i. Obtain written preconstruction approval of the location of the pipeline, which written approval will be documented on the underground influent pipeline map attached hereto and incorporated herein as Attachment F; a. Future Underground Influent Extraction Pipeline Locations: Reserved. ii. Conduct all construction, installation, maintenance, operation modification, repair, replacement, removal and abandonment activities to minimize impacts to the LICENSOR's property and minimize construction related noise and dust; iii. Backfill the pipeline trench immediately and in such a manner as to retard soil subsidence; iv. Inspect and repair any subsequent subsidence occurring along the length of the pipeline; v. Coordinate with the City Engineering Department when initiating horizontal drilling under city streets, particularly Louisiana Avenue, for pipeline installation to minimize traffic flow interruptions and damage to the surface of any city street; vi. Repair immediately all damage to city streets and/or alleys along the entire length of the pipeline; vii. Provide an as-built schematic to the LICENSOR to eliminate potential damage to the influent extraction pipeline system during any LICENSOR maintenance and/or construction activities, or any other LICENSOR subsurface activities, which schematic shall be attached hereto and incorporated herein as part of Attachment K when construction is completed; b. Future As Builts Schematic and Cross Sections of Wells and Extraction Pipeline Reserved viii. Coordinate all extraction pipeline deviations with the LICENSOR; ix. Register the influent extraction pipeline with New Mexico One Call to eliminate inadvertent line ruptures or breaks during LICENSOR and/or third party digging or excavation activities; and x. Remove said influent extraction pipeline upon New Mexico Environment Department's approved closure of the LICENSEE's bulk fuel release remediation. c. As to the monitoring and extraction well locations, LICENSEE shall: i. Obtain a City of Albuquerque Well Permit for each well by making application to the Development and Building Services Division. One permit may be used for multiple wells, grouped by type of well, by installation priority, by cluster or by location; a. Future Well Permits: Reserved. ii. Ensure that the LICENSEE's Contractor complies with the terms of all issued well permits and coordinates field activities with the Development and Building Services Division; iii. Ensure that the LICENSEE's Contractor complies with permitting and traffic/safety control requirements of the City's Department of Municipal Development (DMD), including but not limited to obtaining an excavation and barricade permit at each cluster; iv. Ensure that the LICENSEE's Contractor complies with permitting and environmental Health protections requirements of the City of Albuquerque Environmental Health Department, including but not limited to air quality and noise remediation; v. Restore all well heads to pre-existing grades in compliance with City ordinances, codes and guidelines and according to the approved work plans; vi. Coordinate all well installations within City Parks with the City's Department of Parks and Recreation (Parks) to implement adequate safety control measures prior to and during well drilling and construction activities and to minimize disruption to activities and uses scheduled by Parks;	NA
	vii. Revegetate the soil surface immediately consistent with the landscaping specifications contained in the City's Standard Specifications for Public Works Construction, Section 1000 - Landscaping and coordinate all surface restoration with Parks to allow on-site pre-construction field inspections by Parks with the KAFB contractor and a post construction field inspection by Parks following the restoration activities; and viii. Ensure LICENSEE's Contractor contacts the Bullhead Park Superintendent and/or park personnel to coordinate all sampling at wells 106028, 106065 and 106066 within Bullhead Park prior to traversing the park with vehicles to conduct the sampling. ix. Coordinate all monitoring and sampling activity affecting the Cesar Chavez Community Center facility with the facility's site manager to implement adequate safety control measures prior to and during well monitoring and sampling activities to minimize disruption to activities and uses scheduled by Family and Community Services. x. Restore any surface disturbance created by monitoring and sampling activities at the Cesar Chavez Community Center to its pre-disturbance condition. xi. Repair or replace any curbing or other vehicular access facility infrastructure affected by monitoring and sampling activities at the Cesar Chavez Community Center to restore it to its pre-disturbance condition. d. Miscellaneous locations: all ingress, egress and miscellaneous sites disturbed by the LICENSEE during the construction, installation, maintenance, operation, repair and/or removal of wells and underground pipeline shall be returned to pre-construction condition or as mutually agreed by the Parties. e. Before commencing or resuming any construction and repairs in USS Bullhead Park and/or the Veterans Memorial, LICENSEE shall coordinate with the Director of Parks and Recreation Department to schedule LICENSEE's activities so as to not interfere with activities and uses scheduled by Parks. The decision of the Director of Parks and Recreation as to when LICENSEE's construction and repairs may occur shall be final. f. In addition to the foregoing, LICENSEE shall, during and after the installation of its remediation infrastructure, ensure that the City property continues to be usable for its intended uses reasonably to the same extent as before the installation of the remediation infrastructure.	NA
3	This License shall remain in effect for a period of ten (10) years beginning on the date of execution by the LICENSEE, with multiple options to renew in five-year increments thereafter, corresponding with, but not to exceed, the New Mexico Environment Department Hazardous Waste Bureau remediation timetable, as set forth in Attachments A through D incorporated above in Clause 1, unless revoked as provided herein, or extended by the mutual written consent of both parties.	Table 1-1

Table 1-2
Permit Terms and Conditions, Operations and Maintenance Plan Cross References

Condition No.	Terms and Conditions	Reference Location in O&M Plan
4	Either Party may revoke this License upon providing written notice to the other party thirty (30) days prior to such revocation.	NA
5	All tools, equipment, and other property (the "Personal Property") taken upon or placed upon the City's land by the LICENSEE shall remain the property of the LICENSEE and shall be removed within thirty (30) days after the expiration or revocation of this License. In the event that the LICENSEE fails to timely remove the Personal Property the LICENSOR may, at the LICENSOR's election, remove and have stored the Personal Property at the LICENSEE's expense or may elect to retain the Personal Property as LICENSOR's property.	NA
6	Damages. a. If any action of the LICENSEE's officers, employees, or authorized representatives including contractors and subcontractors) in the exercise of this license results in damage to the Property, or any other property of the LICENSOR or LCENSOR's tenants, including but not limited to water lines, sanitary and storm sewers, and other utilities and services, caused by LICENSEE's Operation(s), to include but not limited to damage caused by vibration during well and pipeline drilling and installation, the LICENSEE will either repair such damage or make an appropriate settlement with the LICENSOR. Upon completion, expiration or termination of this license, LICENSEE shall make all reasonable efforts to restore the Property to its original condition in accordance with section 9. The LICENSEE's liability under this clause may not exceed appropriations available for such payment and nothing contained in this license may be considered as implying that Congress will at a later date appropriate funds sufficient to meet deficiencies. The provisions of this paragraph are without prejudice to any rights the LICENSOR may have to make a claim under applicable laws for any other damages than provided herein. b. The LICENSEE shall respond to claims repair or pay for all actual damages done to City Property and improvements, or to the improvements of the City's tenants. All claims for damage to adjacent properties caused by LICENSEE's Operations, to include damage caused by vibration during well and pipeline drilling and installation, brought by third parties shall be subject to the claims process set forth in Condition 13 herein and as limited by the provisions of the Federal Tort Claims Act (28 USC §§ 2671 et seq.). To the extent provided by law, the LICENSEE's liability under this clause is subject to the availability of funds, as set forth in 31 USC § 1341 (Anti-Deficiency Act) and nothing contained in this License may be considered as implying Congress will at a later date appropriate funds sufficient to meet deficiencies. The provisions of this clause are without prejudice to any rights the LICENSOR or any third party may have to make a claim for damages under applicable laws.	NA
7	The LICENSEE shall be solely responsible for maintaining in a safe condition the premises upon which the LICENSEE's remediation operations, to include but not limited to construction of improvements, subsequent well monitoring events effluent pipeline transport from well sites to the LICENSEE groundwater treatment facility, are being conducted and the property of the LICENSOR or LICENSOR's tenants within the premises, including but not limited to water lines, sanitary and storm sewer and other utilities and services. To the extent provided by law, the LICENSEE's liability under this clause is subject to the availability of funds, as set forth in 31 USC § 1341 (Anti-Deficiency Act) and nothing contained in this License may be considered as implying Congress will at a later date appropriate funds sufficient to meet deficiencies. Nothing herein is intended to impair any right or immunity under the laws of the State of New Mexico.	NA

Table 1-2
Permit Terms and Conditions, Operations and Maintenance Plan Cross References

Condition No.	Terms and Conditions	Reference Location in O&M Plan
8	The hold harmless provisions contained herein shall not apply to any liability, claims, damages, losses or expenses, including reasonable attorney's fees, arising out of bodily injury to persons or damage to property caused by or resulting from, in whole or in part, the negligent act or omission of the City, or the agents or employees of the City. Furthermore, LICENSEE shall require its agents, representatives, contractors or sub-contractors to obtain insurance for the specific protection and benefit of the City, including but not necessarily limited to, the following coverage: a. Comprehensive General Liability Insurance. Comprehensive general liability insurance with liability limits in an initial amount not less than $1,000,000 aggregate limit of liability for bodily injury, including death, and property damage in any one occurrence. b. Automobile Liability Insurance. An automobile liability policy with liability limits in amounts not less than $1,000,000 combined single limit of liability for bodily injury, including death, and property damage in any one occurrence. Said policy of insurance must include coverage for the use of all owned, non-owned, hired automobiles, vehicles and other equipment both on and off work and is in addition to the Comprehensive General Liability Coverage. c. Workers' Compensation Insurance. Workers' Compensation Insurance for its employees in accordance with the provisions of the Workers' Compensation Act of the State of New Mexico. d. Owner's Protective Public Liability Insurance. During any period of construction or major renovation, an owner's protective public liability insurance policy with liability limits in an amount not less than $1,000,000 combined single limit of liability for bodily injury, including death and property damage in any one occurrence. e. Builder's Risk and Property insurance. During any period of construction or major renovation, until completion of the construction, builder's risk, vandalism and malicious mischief insurance for the value of the property. Alternatively, Contractor shall procure and maintain insurance against loss or damage to the Project by fire, lightning, vandalism, and malicious mischief with the uniform extended coverage endorsement limited only as may be provided in the standard form or extended coverage endorsement at the time in use by the State of New Mexico to provide for not less than 90% recovery of the market value of the buildings and other improvements. f. Increased Limits. The City may require the LICENSEE's Contractor to reasonably increase the maximum limits of any insurance required herein and LICENSEE's Contractor shall promptly comply. g. No Subrogation. LICENSEE's Contractor and its surety shall and hereby do waive any right of subrogation they may acquire against the City, its officers, agents and employees by reason of any ·payment made on account of injury, including death, sustained by any employee of the insured arising out of performance of this Agreement. Neither the LICENSEE's Contractor nor its employees are considered to be employees of the City of Albuquerque for any purpose whatsoever. h. The LICENSEE's Contractor shall be and is an independent contractor at all times in the performance of this Agreement. Neither the LICENSEE's Contractor nor its employees are entitled to any benefits from the City under the provisions of the Worker's Compensation Act of the State of New Mexico, nor to any of the benefits granted to employees of the City under the provisions of the Merit System Ordinance or any other law or provision, as now enacted or hereafter amended. i. Proof of Insurance: During the term of this Agreement, not less than once each year, on or before May 31, LICENSEE's Contractor shall provide to the City without demand, or more frequently upon demand, proof of all required insurance coverage. Prior to expiration or exchange of any policy, LICENSEE's Contractor shall furnish the City evidence satisfactory to the City that the policy has been renewed or replaced or is no longer required by this Agreement. All policies required hereunder shall provide that the City shall be given thirty (30) days prior written notice of cancellation, non-renewal or material alteration of coverage. Provisions that the insurance company shall "endeavor to give the City notice" shall not be allowed. j. Application of Net Proceeds of Insurance. The Net Proceeds of builder's risk insurance and of fire and other hazard and casualty insurance, carried pursuant to the provisions of this Agreement hereof, shall be applied first to the payment of the interests of the City as it may be from time to time, and only after such payment, to the interests of Contractor and others, and otherwise as provided in this Agreement and the Net Proceeds of liability insurance carried pursuant to the provisions of this Agreement hereof shall be applied toward extinguishment or satisfaction of the liability with respect to which such insurance proceeds have been paid. k. Additional Provisions Respecting Insurance. All insurance required of Contractor pursuant to this Agreement shall be obtained by Contractor from and maintained in generally recognized responsible insurance authorized to do business in the State of New Mexico. All applicable policies evidencing such insurance shall name both the City and Contractor as named insured and the City shall be named as loss payee as to the City's Mortgage under the builder's risk and property insurance required by this Agreement.	NA

Table 1-2
Permit Terms and Conditions, Operations and Maintenance Plan Cross References

Condition No.	Terms and Conditions	Reference Location in O&M Plan
9	The LICENSEE will use all reasonable means available to protect the environment and natural resources from damage arising from this License or activities incident to it, to include the removal and disposal of all municipal and hazardous waste generated at all well and infrastructure construction and operation sites in accordance with City of Albuquerque, State and Federal law. Where damage occurs, the Licensee shall be liable and shall restore the damaged resources to the condition existing prior to the implementation of the remediation and monitoring, as documented in the Request for Environmental Impact Analysis (AF Form 813), which is attached hereto and made a part of this License as Attachment H, and two Environmental Baseline Survey (EBS), which are to be attached hereto and made a part of this License as Attachments I and J when completed. Upon revocation or termination of this License, with the exception of pre-existing conditions identified in Attachments H, I and J herein, the LICENSOR's land will be returned in the same environmental condition as received but without the contamination conditions for which the LICENSEE is performing the remediation. a. Final EBS Reserved	NA
10	In connection with its use of or any other activity at the Location, the LICENSEE, its officers, employees, agents, representatives, contractors, and assigns will at all times and in all respects comply with all federal, state and local laws, ordinances and regulations, relating to the protection of the environment, including but not limited to protection of surface water and groundwater; industrial hygiene; the use, handling and disposal of any hazardous or toxic substances; the Clean Air Act, 42 U.S.C. 7401 et seq. applicable state and air quality local laws, and policies and procedures of the City's Environmental Health Air Quality Division.	NA
11	The LICENSEE and its agents, representatives, contractors or sub-contractors shall comply with all other applicable federal, state and local laws, statutes, ordinances and regulations and will not discriminate illegally against any person.	NA
12	For purposes of giving formal written notice, the points of contact are as follows: For the City: Chief Administrative Officer, City of Albuquerque City-County Government Center, #1 Civic Plaza P.O. Box 1293 Albuquerque, NM 87103 For Kirtland: Installation Commander 2000 Wyoming Blvd, SE Kirtland AFB, NM 87117	NA
13	Claims. a. Point of Contact. The LICENSEE's point of contact for all damages, whether to real or personal property, will be submitted to: 377 ABW/JA Attention: Claims Division 2000 Wyoming Blvd., SE Building 20604, Room B-36 Kirtland AFB, NM 87117-5000 (505) 846-4217 http://www.claims.jag.af.mil b. Claims Process. As set forth in License #LIC/I-KI-11-0001 Condition 6, Damages, a claim for damage and/or injury due to LICENSEE's operations, a claimant, or his/her authorized agent, must file a properly signed SF-95, Claim for Damage, Injury, or Death, setting forth a sum certain for damage to or loss of property, personal injury or death, to the point of contact identified in Condition 7(a) above. The claim form is available at the website provided herein in Condition 7(a) above. To the extent provided by law, the LICENSEE's liability under this Condition 13 is subject to the availability of funds, as set forth in 31 USC§ 1341 (Anti-Deficiency Act) and nothing contained in this License may be considered as implying Congress will at a later date appropriate funds sufficient to meet deficiencies. The provisions of this Condition 13 are without prejudice to any rights the LICENSOR or any third party may have to make a claim for damages under applicable laws.	NA
14	Index of Attachments referred to in License, copies of which are on file with LICENSOR Attachment A - Vadose Zone Investigation Work Plan - Bulk Fuels Facility Spill, Solid Waste Management Units ST-106 and SS-111 - March 2011 Attachment B - Groundwater Investigation Work Plan, Bulk Fuels Facility Spill, Solid Waste Management Units ST-106 and SS-111 - March 2011 Attachment C - Well Permits for wells identified under clauses 1 (a) and 1 (b) on file with LICENSOR'S City Engineer Attachment D - General Location Map of License Area Attachment E - Off Installation Well Location Map 2015 Attachment F - City of Albuquerque Well Locations with LNAPL Containment System Attachment G - Coring Borehole location map Attachment H - Requests for Environmental Impact Analysis (AF Form 813) dated 2/17/09 and 3/18/10 (Attachments H-1 and H-2, respectively) Attachment I - Initial Environmental Baseline Survey (EBS) dated 2/22/11, 3/2/10, 3/3/10, and 2/4/09 (Attachments 1-1, 1-2, 1-3, and 1-4, respectively) Attachment J - Final Environmental Baseline Survey February 2012 Attachment K - As built schematics and cross sections of wells and extraction pipeline (to be attached and incorporated herein when completed)	NA
15	This License contains the entire agreement of the parties. Changes to this License are not binding unless made in writing and signed by both parties.	NA
16	This License is governed by and construed and enforced in accordance with federal law and the laws of New Mexico.	NA
17	If any part of this License is held to be invalid or unenforceable, the remainder of this License will remain valid and enforceable if the remainder of the License is reasonably capable of completion.	NA

Table 1-2
Permit Terms and Conditions, Operations and Maintenance Plan Cross References

Condition No.	Terms and Conditions	Reference Location in O&M Plan
	New Mexico Veterans Administration Health Care System Permit	
1	PURPOSE: This Permit outlines the grant of right of entry and agreement between the New Mexico VA Health Care System (NMVAHCS) and Kirtland Air Force Base (KAFB) for disclosure of results of environmental services on NMVAHCS property . NMVAHCS has granted permission for KAFB to use a con tractor to conduct environmental services and remediation on NMVAHCS property. The contractor selected by KAFB to conduct environmental services and remediation is CH2MHill . KAFB agrees to allow NMVAHCS direct access to any information and outcomes regarding environmental services and remediation performed on NMVAHCS property by CH2MHill .	NA
2	BACKGROUND: In 2001, KAFB completed delineation of contaminated soil and groundwater discovered in 1999 as part of the Stage 1 Abatement Plan. In February 2007, KAFB discovered fuel product on the groundwater at another location near the Bulk Fuels Facility, which is being investigated as part of a Modification to the Stage 2 Abatement Plan. KAFB has delineated the contaminated areas on its property in the first and second stages of their abatement plan . The proposed next step in the Stage 2 Abatement Plan Modification is to investigate the land both within and outside of the KAFB boundaries, to determine if, and to what extent the fuel product has migrated outside of KAFB boundaries. Subsequent to the investigation, KAFB may be required to install remediation systems to remove the fuel product. As part of these efforts, KAFB has retained the services of an environmental contractor, CH2MHill, to perform environmental services on land both inside and outside of the KAFB boundary. The land proposed to be tested includes an 11 .5 acre plot of land on VA property or other areas identified and agreed upon that are owned by NMVAHCS. KAFB is required by the New Mexico Environment Department to define the extent of the fuel product on and off of KAFB. KAFB may therefore be required to install groundwater monitor wells on other VA property, specifically within the parking lots south and east of the VA Hospital to complete the investigation. This has been presented to the VA Engineering Staff in previous meetings. These 11 .5 acres of VA owned land are currently vacant, but the NMVAHCS has future plans to develop this land under the Federal Enhanced Use Lease (EUL) authority. The NMVAHCS needs assurance that any environmental contamination on its 11 .5 acre property has been addressed, and will be remediated before proceeding further with its EUL project plans. Thus, the NMVAHCS has granted permission to KAFB to conduct environmental services on the property proposed for use in the EUL or other areas identified and agreed upon that are owned by NMVAHCS. This testing is projected to include the drilling and testing of monitoring wells, in order to explore the quality of the groundwater beneath the 11 .5 acre parcel, to determine whether the leaked fuel product has migrated to affect the 11 .5 acre parcel or other VA property. The NMVAHCS needs to have unrestricted access to any and all results of the testing, conducted by CH2MHill, on its 11 .5 acre parcel of land and on all other VA property.	NA
3	RESPONSIBILITIES: a. Kirtland Air Force Base: 1) Allows NMVAHCS full, unrestricted access to any and all results of environmental services performed on NMVAHCS (VA) property. 2) Coordinates communication between NMVAHCS and KAFB to ensure that NMVAHCS is provided full access to all environmental services results derived from activities on NMVAHCS property. 3) Agrees to provide a written copy of any final environmental assessment reports produced by CH2MHill, once all testing on NMVAHCS property is complete. 4) Agrees to maintain open communication with the Engineering Staff of the NMVAHCS regarding environmental services performed on NMVAHCS property, and promptly informs them of any proposed changes to the initial testing protocols and schedules. b. New Mexico VA Health Care System: 1) Grants KAFB or its contractor/subcontractor permission to conduct environmental services on NMVAHCS property, to include drilling monitoring wells on NMVAHCS property to determine the quality of the groundwater at the well sites located on NMVAHCS property. 2) Grants KAFB or its contractor/subcontractor permission to temporarily install and use remediation equipment such as soil vapor extraction systems currently installed on KAFB, to remove any leaked fuel product. When remediation equipment is used by KAFB or its subcontractor, KAFB agrees to adhere to the following: a. Remediation equipment will be secured using a secured chain-link fencing system. b. Remediation equipment located in residential areas will be soundproofed. c. KAFB will be responsible for and will address issues of physical equipment security, public safety and public perception at the time the remediation equipment is deployed. d. KAFB will be responsible for meeting any and all applicable air emission standards for the remediation equipment. e. KAFB agrees to comply with any and all applicable city, state or federal laws and regulations regarding EPA permitting. f. All tools, equipment, and other property taken upon, placed upon, or installed on VA property by KAFB, or its contractor/subcontractor, excluding the installed monitoring wells, shall remain the property of KAFB, or its contractor/subcontractor, and may be removed by KAFB, or its contractor/subcontractor, at any time within a reasonable period after the expiration of this right-of-entry. g. Monitoring wells drilled and installed on VA property will remain in place until groundwater remediation activities are completed consistent with the terms of Paragraph 6, Terms of Agreement, contained herein, at which time NMVAHCS will determine which monitoring wells will be removed and/or abandoned in place. All monitoring well removal and/or abandonment activities will comply with the provisions of Title 19, Chapter 27 and Title 20, Chapter 6 of the New Mexico Administrative Code (NMAC).	NA

Table 1-2
Permit Terms and Conditions, Operations and Maintenance Plan Cross References

Condition No.	Terms and Conditions	Reference Location in O&M Plan
3	3) Grants KAFB permission to erect a temporary equipment staging area on VA property in an area within the 11 .5 acre plot of land, not to exceed 50 feet by 100 feet for the purpose of housing supplies needed for the environmental services effort. When a temporary equipment staging area has been established by KAFB, KAFB agrees to adhere to the following: a. The temporary storage area located on VA property within the 11 .5 acre plot of land will be secured using a secured chain-link fencing system. b. KAFB will be responsible for and will address issues of physical equipment security, public safety and public perception at the time the remediation equipment is deployed. c. KAFB agrees to maintain oversight of and responsibility for all items placed in the designated temporary storage area. d. KAFB will be responsible for and will address issues of physical equipment security, public safety and public perception at the time the temporary storage area is deployed. e. All tools, equipment, and other property taken upon the land and housed or placed on VA property within the temporary equipment staging area by KAFB, or its contractor/subcontractor, shall remain the property of KAFB, or its contractor/subcontractor, and may be removed by KAFB, or its contractor/subcontractor, at any time within a reasonable period after the expiration of this right-of-entry. 4) Receives copies of all environmental services performed by CH2MHill, reviews them, and promptly provides comment back to KAFB regarding any concerns, questions, or issues involving the environmental services so that if changes need to be made to the environmental services schedule and/or protocols, this information can be communicated to KAFB and CH2MHill. 5) Maintains open communication with the KAFB Natural Resource Management Restoration Section concerning the environmental services on NMVAHCS property. 6) Informs KAFB of any access and/or scheduling issues with the environmental services performed by CH2MHill. 7) Grants KAFB, via VA Form 10-6215, "Permit for Use of Real Property by Federal Agency," a five (5) year "Right of Entry" for the installation of and collection of data from groundwater monitoring wells designed to both delineate and remediate any leaked groundwater fuel product.	NA
4	PROCEDURES: Standard procedures and timelines for receiving regular updates on the progress of environmental services, as well as periodic written reports and the final written report produced by CH2MHill will be developed and adhered to.	NA
5	PAYMENT I REIMBURSEMENT: No payment or reimbursement will be made or exchanged between NMVAHCS and KAFB for environmental services conducted, or copies of testing results shared between the two organizations in accordance with this Permit.	NA
6	TERMS OF AGREEMENT: This five (5) year agreement may be modified or revised by written amendment, provided such revision or modification is mutually agreed upon and signed by the authorized representative of Kirtland Air Force Base and the New Mexico VA Health Care System. This agreement will remain in effect during the period stated unless terminated at the request of either party after thirty (30) days notice in writing. The parties involved shall review this agreement annually. No later than twelve (12) months prior to the expiration of this Permit, NMVAHCS and KAFB officials will review the status of groundwater monitoring and remediation efforts and determine whether the Permit and Right of Entry shall both expire or be renewed for an additional term not to exceed five (5) years.	NA
7	PROTECTION OF RESOURCES a. GRANTEE will use all reasonable means available to protect the environment and natural resources from damage arising from this Right of Entry or activities incident to it. Where damage nonetheless occurs, GRANTEE shall be liable to restore the damaged resources. Upon termination of this Right of Entry, the land shall be returned to GRANTOR in the same environmental condition as received, as documented in the Request for Environmental Impact Analysis (AF Form 813) and Environmental Baseline Survey (EBS) Waiver for Right of Entry attached hereto and made a part hereof as Exhibit Band C respectively. · b. To the extent provided by law and subject to the availability of funds, KAFB agrees to use its appropriations and resources, as required, to repair damages to said parcel and pay any awards, claims, settlements or judgments rising out of its use of said parcel, or routes of ingress or egress therefrom, including reimbursement of the Judgment Fund, 31 USC§ 1304; provided however, that NMVAHCS or another agency of the Government may, as a matter of its internal policy, assume responsibility for certain claims of that agency's personnel while assigned or detailed to the KAFB, or otherwise present on the said parcel.	NA
8	EFFECTIVE DATE: This agreement is effective for the period 09/12/2008 through 08/31 /2013.	NA
New Mexico Veterans Administration Health Care System Permit Amendment No. 2		
1	The Permit shall be amended to extend the permit term for a five (5) year term beginning on 28 January 2016 and ending on 27 January 2021.	Table 1-1
2	All Permit references to "PERMITTEE's contractor" shall refer to any of the PERMITTEE's contractors/subcontractors conducting environmental services for the KAFB bulk fuels release investigation and remediation.	NA
3	Permit§ 8(8), Effective Date, shall be amended to read as follows: "This Agreement is effective for the period 28 January 2016 through 27 January 2021."	NA
4	All other terms and conditions of the NMVAHCS Permit shall be and remain the same.	NA

Table 1-2
Permit Terms and Conditions, Operations and Maintenance Plan Cross References

Condition No.	Terms and Conditions	Reference Location in O&M Plan
	Gibson Medical Center License to Kirtland Air Force Base	
1	The LICENSOR hereby grants unto the LICENSEE a license to enter upon the LICENSOR's real property located at 5400 Gibson Blvd SE, Albuquerque, Bernalillo County, New Mexico, which real property is also known as: SWIFT ADDITION, LOT 1,BERNALILLO COUNTY & LOVELACE HOSPITAL, LOT A 1 A, BERNALILLO COUNTY and more specifically identified on the attached general location map, which is attached hereto and incorporated herein as Attachment A, for the express purpose of: constructing, installing, operating, maintaining, modifying, repairing, replacing and/or removing soil vapor and ground water monitoring wells for the collection of soil and groundwater samples; and collecting quarterly well samples as more fully identified in Attachments Band C, attached hereto and incorporated herein.	NA
2	The LICENSEE shall use the area described above and as shown in Attachments A and B, for the purposes described above and not for any other purpose without first obtaining the written consent of the LICENSOR and shall adhere to the following use conditions: a. LICENSEE shall obtain a City of Albuquerque Well Permit for each well by making application to the Development and Building Services Division. One permit may be used for multiple wells grouped by type of well, by installation priority, by cluster or by location. b. Ensure that the LICENSEE's Contractor complies with the terms of the well permit Division. c. Ensure that the LICENSEE's Contractor complies with permitting and environmental health protections requirements of the city of Albuquerque Environmental Health Department, including but not limited to air quality and noise remediation; d. Restore all well heads to pre-existing grades and restore any surface disturbance created by the well installation process; e. At each successive License renewal, or upon request. provide the LICENSOR a well status update as set forth in the annual monitoring reports submitted to the New Mexico Environment Department Hazardous Waste Bureau f. Provide the LICENSOR a 48 hour notice, as set forth in Condition 11 herein before the Contractor enters the property to conduct sampling.	NA
3	This License shall remain in effect for a period of five (5) years beginning on the date of execution by the PARTIES, with multiple options to renew thereafter, corresponding with, but not to exceed, the New Mexico Environment Department Hazardous Waste Bureau (NMED-HWB) remediation timetable, which timetable will be attached and incorporated herein as Attachment D when approved by the NMED-HWB, unless revoked as provided herein, or extended by the mutual written consent of both parties.	Table 1-1
4	Either Party may revoke this License upon providing written notice to the other party thirty (30) days prior to such revocation.	NA
5	All tools, equipment, and other property (the "Personal Property") taken upon or placed upon the LICENSOR's land by the LICENSEE shall remain the property of the LICENSEE and shall be removed within thirty (30) days after the expiration or revocation of this License. In the event that the LICENSEE fails to timely remove the Personal Property the LICENSOR may, at the LICENSOR's election, remove and have stored the Personal Property at the LICENSEE's expense or may elect to retain the Personal Property as LICENSOR's property.	NA
6	Damages and Indemnity. The LICENSEE shall repair or pay for all actual damages done to LICENSOR's property and improvements caused by LICENSEE's operation(s), to include damage caused by vibration during well drilling and installation. All claims for damage to LICENSOR's property and improvements shall be subject to the provisions of the Federal Tort Claims Act (28 USC§§ 2671 et seq.). To the extent provided by law, the Licensee's liability under this clause is subject to the availability of funds, as set forth in 31 USC§ 1341 (Anti-Deficiency Act) and nothing contained in this License may be considered as implying Congress will at a later date appropriate funds sufficient to meet deficiencies. The provisions of this clause are without prejudice to any rights the LICENSOR may have to make a claim for damages under applicable laws.	NA
7	The LICENSEE shall be solely responsible for maintaining the premises upon which the Improvements are being constructed in a safe condition during construction and subsequent well monitoring events.	NA
8	The Licensee will use all reasonable means available to protect the environment and natural resources from damage arising from this License or activities incident to it, to include the removal and disposal of all municipal and hazardous waste generated at all well and infrastructure construction and operation sites in accordance with City of Albuquerque, State and Federal law. Where damage occurs, the Licensee shall be liable and shall restore the damaged resources to the condition existing prior to the implementation of the remediation and monitoring, as documented in the Request for Environmental Impact Analysis (AF Form 813), which is attached hereto and incorporated herein as Attachment E, and two Environmental Baseline Surveys (EBS), which are attached hereto and incorporated herein as Attachments F and G. Upon revocation or termination of this License, with the exception of pre-existing conditions identified in Attachments E, F and G, the LICENSOR's land will be returned in the same environmental condition as received but without the contamination conditions for which the LICENSEE is performing the remediation.	NA
9	In connection with its use of or any other activity on the property, the LICENSEE, its officers, employees, agents, representatives, contractors, and assigns will at all times and in all respects comply with all federal, state and local laws, ordinances and regulations, relating to the protection of the environment, including but not limited to protection of surface water and groundwater; industrial hygiene; the use, handling and disposal of any hazardous or toxic substances; the Clean Air Act, 42 U.S.C. 7401 et seq. applicable state and air quality local laws, and policies and procedures of the City's Environmental Health Air Quality Division.	NA
10	The LICENSEE and its contractors shall comply with all other applicable federal, state and local laws, statutes, ordinances and regulations and will not discriminate illegally against any person.	NA
11	For purposes of giving formal written notice, the points of contact are as follows: LICENSOR: GIBSON MEDICAL CENTER 2009 EUBANK NE Albuquerque, NM 87112 LICENSEE: Installation Commander 2000 Wyoming Blvd, SE Kirtland AFB, NM 8711 7	NA

Table 1-2
Permit Terms and Conditions, Operations and Maintenance Plan Cross References

Condition No.	Terms and Conditions	Reference Location in O&M Plan
12	Claims. a. Point of Contact. The Permittee point of contact for all damages, whether to real or personal property, will be submitted to: 377 ABW/JA Attention: Claims Division 2000 Wyoming Blvd., SE Kirtland AFB, NM 87117-5000 (505) 846-4217 http://www.kirtland.af.mil/Organizations/StaffJudge/index.htm b. Claims Process: To file a claim for damage and/or injury due to Permittee's operations, the claimant, or his/her authorized agent, must file a properly signed SF-9S, Claim for Damage, Injury or Death, setting forth a sum certain for damage to or loss of property, personal injury or death, to the POC identified in Condition 13(a) above, within two (2) years of the incident causing the damage or injury. The claim form is available at the website provided herein in paragraph a.	NA
13	This License contains the entire agreement of the parties. Changes to this License are not binding unless made in writing and signed by both parties.	NA
14	This License is governed by and construed and enforced in accordance with federal law and the laws of New Mexico.	NA
15	If any part of this License is held to be invalid or unenforceable, the remainder of this License will remain valid and enforceable if the remainder of the License is reasonably capable of completion.	NA
16	Index of Attachments Attachment A- General Location Map Attachment B-Well Permits as Developed Attachment C -Sampling Schedule Attachment D -NMED-HWB Remediation Plan and Timetable Attachment E-Request for Environmental Impact Analysis (AF Form 813) Attachment F -Initial Environmental Baseline Survey (EBS) Attachment G-Final EBS	NA

Table 1-2
Permit Terms and Conditions, Operations and Maintenance Plan Cross References

$ = dollar(s)
AF = Air Force
AFB = Air Force Base
BFF = Bulk Fuels Facility
EBS = environmental baseline survey
EDB = ethylene dibromide
EPA = U.S. Environmental Protection Agency
EUL = enhanced use lease
GAC = granular activated carbon
gpd = gallon per day
GWQB = Groundwater Quality Bureau
GWTS = groundwater treatment system
HWB = Hazardous Waste Bureau
KAFB = Kirtland Air Force Base
LNAPL = light non aqueous phase liquid
MCL = maximum contaminant level
NA = not applicable
NM = New Mexico
NMAC = New Mexico Administrative Code
NMED = New Mexico Environment Department
NMPM = New Mexico Principal Meridian
NMSA = New Mexico Statutes Annotated
NMSPCS = New Mexico State Plane Coordinate System
NMVAHCS = New Mexico Veterans Administration Health Care System
O&M = operations and maintenance
OSE = Office of the State Engineer
POC =point of contact
POD = point of diversion
RCRA = Resource Conservation and Recover Act
SWMU = solid waste management unit
UIC = underground injection control
USC = United States Code
VA = Veterans Administration
WQA = Water Quality Act
WQCC = Water Quality Control Commission

This page intentionally left blank

Table 2-1
Alarm Conditions, Interlocks, and System Responses

Alarm Condition	Interlock	System Response
Leak detected in an extraction well vault or well control house	Disables extraction pumps associated with the affected vault	Email and shutdown of the affected equipment
Leak detected in a double walled pipe	Disables all extraction pumps	Email and shutdown of the affected equipment
High water level in groundwater treatment system building sump or truck bay sump	Disables all extraction pumps and all skid pumps	Email and immediate Full system shutdown
Water level too high in influent tank	Disables all extraction pumps	Email and eventual Full system shutdown
Water level too low in influent tank or too high in effluent tank	Disables influent skid pumps	Email and eventual Full system shutdown
Water level too low in effluent tank	Disables effluent skid pump	Email and eventual Full system shutdown
Influent skid or granular activated carbon pressure exceeds set point	Disables influent skid pumps	Email and eventual Full system shutdown
Effluent skid pressure exceeds set point	Disables effluent skid pump	Email and eventual Full system shutdown
Intrusion alert, power loss, low temperature detected, or high influent bag filter differential pressure	None	Email
Smoke detected in groundwater treatment system	None	Email and notifies Kirtland Air Force Base Fire Department
High water level or high pressure in well KAFB-7	Disables effluent skid pump	Email and eventual Full system shutdown
High water level in Golf Course Main Pond	Disables effluent skid pump	Email and eventual Full system shutdown
Activation of emergency stop	Disables all extraction pumps and all skid pumps	Email and immediate Full system
High water level in sand filter clarifier	Entire system shutdown	Email and immediate Full system

This page intentionally left blank

Table 2-2
Permitted Extraction Well Flow Rates

Well ID	Permit No.	Extraction Flow Rate Not to Exceed (gpm, continuous for 24 hours)
KAFB-106228	RG-1579 POD 292	250
KAFB-106233	RG-1579 POD 309	197
KAFB-106234	RG-1579 POD 310	197
KAFB-106239	RG-1579 POD 319	200
KAFB-7	RG-1587	2,790 (1,239[a])

[a] Injection flow rate for KAFB-7.
ID = identification
gpm = gallon per minute
No. = number

This page intentionally left blank

Table 2-3
Standard Operational Set Points

PID Set Points			
Item		**Set Point**	**Units**
Groundwater Influent Pump 112	Flow Rate	Varies	gpm
	KP	1.5	--
	KI	0.05	--
	KD	0	--
Groundwater Influent Pump 212	Flow Rate	Varies	gpm
	KP	1.5	--
	KI	0.05	--
	KD	0	--
Treated water Effluent Pump 118	Flow Rate	Varies	gpm
	KP	1.25	--
	KI	0.09	--
	KD	0	--
Treated water Effluent Pump 218	Flow Rate	Varies	gpm
	KP	1.25	--
	KI	0.09	--
	KD	0	--
System Distribution Pressure Control	Pressure	20	psi
	KP	2	--
	KI	0.02	--
	KD	0	--
KAFB-7 Injection Pressure	Pressure	15	psi
	KP	1.5	--
	KI	0.2	--
	KD	0.02	--

Train Control Set Points		
Item	**Set Point**	**Units**
Extraction Well Drawdown	5	ft
Influent Bag Filter High Differential Pressure	4	psid
Downstream Distribution High Pressure	45	psid
KAFB-7 High Level	200	ft
Golf Course High Level	5.3	ft
Groundwater Influent Pumps - Level Stop	3.5	ft
Groundwater Influent Pumps - Level Start	7.5	ft
Treated water Effluent Pumps - Level Stop	3.5	ft
Treated water Effluent Pumps - Level Start	7.5	ft

Manual Alarm Set Points		
Item	**Set Point**	**Units**
Influent Skid High Pressure Switches	40	psi
Carbon Absorber High Pressure Switches	40	psi
Effluent Skid High Pressure Switches	50	psi
Tank High Level Switches	11	ft
Tank Low Level Switches	2	ft

gpm = gallon per minute
ft = foot/feet
PID = proportional–integral–derivative
psi = pound per square inch
psid = pound per square inch differential

This page intentionally left blank

Table 3-1
Groundwater Treatment System Routine Maintenance Schedule

	Frequency			
Maintenance Activity	**Daily**	**Weekly**	**Monthly**	**As Needed**
Recording and inspecting influent, GAC vessel, and effluent skid pressure, flow rate, and totalizer readings from their respective gauges and the HMI	X			
Recording extraction well pressure, flow rate, and totalizer readings from the HMI	X			
Recording extraction well pressure, flow rate, and totalizer readings from the gauges at their well vaults.		X		
Inspecting well control house and recording well control house pressure, flow rate, and totalizer		X		
Recording totalizer reading, and inspecting/testing of hydraulic systems at injection well KAFB-7		X		
Running and inspecting the GWTS air compressor		X		
Maintaining the V-smart valve hydraulic pump (manually actuate open and close)		X		
Inspecting extraction well, conveyance line, and ARV vaults			X	
Inspecting wellhead and associated equipment of injection well KAFB-7			X	
Inspecting and performing maintenance of flowmeters throughout the system			X	
Inspecting and performing maintenance on actuating valves throughout the system			X	
Performing confined space entries			X	
Gauging extraction well filter pack			X	
Logging lock-out/tag-out entries				X
Logging system shutdowns				X
Emptying stormwater runoff flooded vaults				X
Performing air compressor maintenance				X
Cleaning GWTS sumps				X
Draining ARV containment vessels				X
Grounds keeping including vegetation control				X
Inspecting and cleaning the GWTS Y-strainer				X
Performing flowmeter calibration				X[a]
Greasing pump bearings				X[b]
Changing process pump oil				X[b]
Changing air filter on control room air conditioner				X[b]
Changing bag filters				X[c]
Changing out GAC				X[c]
Maintaining of the V-smart valve hydraulic pump (oil filter and fluid change)				X[d]
Testing of alarms and interlocks				X[d]
Cleaning coils and replacing air filter for the well control house air conditioner				X[e]
GAC Skimming of the lead GAC vessel				X[f]

Table 3-1
Groundwater Treatment System Routine Maintenance Schedule

[a] Flowmeters are calibrated at a minimum of once per year, but may be calibrated more often as needed.

[b] Changing of process pump oil, greasing pump bearings, and replacing the air filter in the air conditioning unit are required every 3 months, but may be changed more often as needed.

[c] Bag filters are scheduled for change out when the pressure differential across a bag filter vessel exceeds 15

[d] V-smart valve maintenance and testing of alarms and interlocks occur annually or more often as needed.

[e] Cleaning of the coil and replacing of the air filter are scheduled as quarterly activities, but frequency may be adjusted as necessary.

[f] GAC skimming is performed when the differential pressure in the lead GAC vessel has increased from the operational differential pressure by at least 7 psi.

ARV = air release valve
GAC = granular activated carbon
GWTS = groundwater treatment system
HMI = human machine interface
KAFB = Kirtland Air Force Base
psi = pound per square inch

Table 3-2
Specific Consumable Product Codes, Suppliers, and Recommended On-Hand Inventory

Consumable Item	Product Ordering Code	Supplier[a]	Recommended On-hand Inventory
10-micrometer bag filters	PES10P2S-H	Baker Corp 2400 South Cedar ST Borger, TX 79007 Phone: (806) 273-3747	48+
Bag Filter Housing O-Rings	CB26LB O Ring, Buna, LR6/C26	Pentair Residential Filtration, LLC. 5730 North Glen Park Road Milwaukee, WI 53209	8
Culinox 999 Food Grade Salt	Culinox 999 Food Grade Salt	Univar USA Inc. P.O. Box 34325 Seattle, WA 98124	500 pounds
GAC Vessel Manway O-Rings	14- X 18-inch Elliptical Manway Gasket (TIGG) 14- X 18-inch Elliptical Manway Gasket, G46, EPDM, Off-White (Calgon Carbon)	TIGG LLC (for Train 1) 1 Willow Avenue Oakdale, PA 15071 Calgon Carbon Corporation (for Train 2) 3000 GSK Drive Moon Township, PA 15108	2 per train
KAFB-7 Hydraulic Oil filter	Filter P551551	Grainger 3901 Osuna Rd. NE Albuquerque, NM 87109	1
Pump grease	Mobile PolyRex EM	Grainger 3901 Osuna Rd. NE Albuquerque, NM 87109	3 tubes
Pump oil	DTE 26 Mobile hydraulic oil	Grainger 3901 Osuna Rd. NE Albuquerque, NM 87109	5 gallons
Sand Filter Media	GRAVEL #3 CRUSHED 5/8 inches	Yardney Water Filtration Systems, Inc. 6666 Box Springs Blvd. Riverside, CA 92507	None
	8/12 GARNET		None
	SILICA BASE QUANTUM DMI 65		None
VFD Fuses	FLSR 100, 100 A, 600 VAC	Littelfuse, Inc. 8755 West Higgins Road Suite 500 Chicago, IL 60631	4

[a] Supplier listed or equivalent.
GAC = granular activated carbon
VFD = variable frequency drive

This page intentionally left blank

Table 3-3
Consumables Supply Inventory

Item	Item Description/ Intended Use	Quantity Needed Onsite	Owner
Laptop	Laptop for various calculations and data collection	1	Contractor
In-Situ TROLLCOM	Communication device used to communicate with downhole transducers	1	Contractor
Emergency contact signage	A sign of current emergency contacts	4	Contractor
Well control house key	Well control house door key	2	Government
Master lock keys	Key for locks on well vaults	2	Government
Vault keys	Keys to open well vaults	1	Government
Locks	For well vaults, electric panels, and other items	6	Government
5-gallon bucket	Water collection under air release valves both in plant and in vaults	16	Contractor
Sump pump	7-gallon per minute/quick water transfer	3	Contractor
Extension cord	Various applications and lengths	3	Contractor
Surge protector	Various applications	3	Contractor
Flex hose	For quick draining of bag filter housings	2	Government
Garden hoses	Various applications and lengths	3	Government
Hose nozzle attachment	Controlled water usage with hose	1	Government
Diffusers for carbon vessels	Replacement for inside vessels	2	Government
Pipe drop sump pump configuration	Liberty B39676506X /for truck sump drainage with associated piping to camlock fitting	1	Government
Cam fitted hose	2-inch identification cam fitted hose for moving water, 25-foot sections	4	Government
Cam fitted hose	1.5-inch identification cam fitted hose for moving water, various length	2	Government
Cam fitted hose	6-inch cam fitted hose for moving water, 10-foot sections	3	Government
Shop vac	Various applications	1	Contractor
Shop vac wet filter	Vacuuming water	2	Contractor
Shop vac dry filter	Vacuuming particulate	2	Contractor
Truck sump grate lift	Chain and rigid wood configuration used in conjunction with lift gates on a tru	1	Contractor
Teflon thread tape roll	Protective thread tape needed to ensure fittings seal	2	Contractor
Air hose	1-inch hose for air compressor with Chicago fittings, 50-foot sections	2	Government
Air nozzle	Nozzle for controlled air from compressor	1	Government
Heat gun	Various applications	1	Contractor
Lockout/tagout tags and locks	Electrical panel safety	1 package	Contractor
Zip ties	Various applications and lengths	2 packages	Contractor
Contractor bags	Various uses	1 package	Contractor
Ladder	4-foot and 8-foot, various uses	2	Contractor
Pens	Various uses	1 package	Contractor
Permanent markers	Various uses	1 package	Contractor
Brooms	GWTS maintenance	2	Contractor
First aid kits	GWTS safety	2	Contractor
Trash cans	Store trash prior to disposal	3	Contractor

Table 3-3
Consumables Supply Inventory

Item	Item Description/ Intended Use	Quantity Needed Onsite	Owner
Traffic cones	Various uses, for barricading vaults and denoting exclusion zones	10	Contractor
Caution tape	Taping off exclusion zones	3 rolls	Contractor
Fire extinguisher	GWTS safety	3	Government
Eyewash	GWTS safety	2	Government
Secondary containment pallets	GWTS safety	3	Government
2-inch valve key	Effluent line integrity testing	1	Contractor

GWTS = Groundwater treatment system

Table 3-4
Large Item Inventory

Item	Item Description	Quantity in Inventory	Owner
Replacement Transducer and Cable	In-Situ Level TROLL 700, 30 pounds per square inch gauge with 500+ foot rugged, vented, TEFZEL cable	1	Government
Replacement Pump and Motor for Extraction Well	Grundfos 13B63622 150S400-22 60 Hertz	1	Government
Replacement Skid Pump and Motor	Goulds Pumps Model 3196 Sti Size 2 x 3-6 i-FRAME with 15-horsepower, 3,600 revolutions per minute motor	0	Government
Replacement Variable Frequency Drive for Pump Skids	Allen-Bradley PowerFlex 700 Adjustable Frequency AC Drive	0	Government
Replacement Magnetic Flowmeter	Siemens SITRANS F M MAG 5100 W	0	Government
Replacement Dosing Pump	Pumps and tanks for injection and storage of oxidants	2	Government
Replacement Production Pump for KAFB-7	HydrofloPumps Model 11ML-9, SN: CA21506	1	Government

This page intentionally left blank

Table 5-1
Influent Criteria

Parameter	Analytical Method	Analyte	Maximum Influent Concentrations Reaching the Lead Granular Activated Carbon Vessel	Maximum Single Extraction Well Concentrations[1]	Small Volume IDW Concentrations at Minimum Flow Conditions[2]	Small Volume IDW Concentrations at Maximum Flow Conditions[3]	Large Volume IDW Concentrations at Minimum Flow Conditions[4]	Large Volume IDW Concentrations at Maximum Flow Conditions[5]
Ethylene Dibromide	Method SW8011 (µg/L)	1,2-Dibromoethane	20	41	1,100	1,250	88	225
Volatile Organic Compounds	Method SW8260C (µg/L)	Benzene	450	405	499	499	499	499
		Ethylbenzene	102	210	5,500	6,000	450	1,150
		Toluene	212	436	12,000	13,250	935	2,400
		Xylenes, Total	110	226	5,750	6,500	485	1,225
Dissolved Metals	Method SW6010C (µg/L)	Iron	1,000	20,571 (2,057)	570,000 (57,000)	625,000 (62,500)	44,250 (4,425)	112,500 (11,250)
		Manganese	200	20,571 (411)	570,000 (11,000)	625,000 (12,000)	44,250 (880)	112,500 (2,250)
Field Parameters		Temperature (°C)	NS	NS	NS	NS	NS	NS
		Spec Cond (µS/cm)	NS	NS	NS	NS	NS	NS
		pH (S.U.)	NS	NS	NS	NS	NS	NS
		ORP (mV)	NS	NS	NS	NS	NS	NS
		DO (mg/L)	NS	NS	NS	NS	NS	NS

Simple continuous mixing calculations and AQUASIM model descriptions are further described in Appendix M of this Operations and Maintenance Plan.

Values in parentheses indicate values calculated assuming the sand filters are not installed or otherwise offline.

[1] Maximum concentrations of water produced from a single well were calculated assuming a maximum well flow rate of 175 gpm, maximum system flow rate of 400 gpm, installation of the sand filters, and using a simple continuous mixing calculation.

[2] Maximum concentrations of 55 gallons of IDW water that can be discharged to the GWTS sump, which were calculated assuming a minimum system flow rate of 120 gpm, installation of the sand filters, and using the AQUASIM model.

[3] Maximum concentrations of 55 gallons of IDW water that can be discharged to the GWTS sump, which were calculated assuming a maximum system flow rate of 365 gpm, installation of the sand filters, and using the AQUASIM model.

[4] Maximum concentrations of 21,000 gallons of IDW water that can be discharged to the GWTS sump, which were calculated assuming a minimum system flow rate of 120 gpm, installation of the sand filters, and using the AQUASIM model.

[5] Maximum concentrations of 21,000 gallons of IDW water that can be discharged to the GWTS sump, which were calculated assuming a maximum system flow rate of 365 gpm, installation of the sand filters, and using the AQUASIM model.

°C = degree Celsius
µg/L = microgram(s) per liter
µS/cm = microsiemen(s) per centimeter
gpm = gallon per minute
GWTS = groundwater treatment system
IDW = investigation-derived waste
mg/L = milligram per liter
mV = millivolt
NS = not specified
ORP = oxidation reduction potential
Spec Cond = specific conductivity
S.U. = standard unit

This page intentionally left blank

Table 6-1
Reports and Recipients

Report Title	Regulatory Permit/Document Requiring	Report Contents	Responsible Party	Recipients	Transmission Method
Greater than 24-Hour Shutdown Notification	Operations and Maintenance Plan	- Notification of greater than 24-hour shutdown	Operator	AFCEC and USACE	Email
			AFCEC	NMED HWB	Email
Notification of Change resulting in change in volume of discharge, location of discharge, or amount or character of contaminants received, treated, or discharged outside	DP-1839 issued by NMED GWQB, Condition 22.e	- Notification of change in volume of discharge, location of discharge, or amount or character of contaminants received, treated, or discharged outside of DP-1839 scope	Operator	AFCEC and USACE	Email
			AFCEC	NMED GWQB	Email
Kirtland BFF - Weekly Update-W/E mm/dd/yy	USACE Contract Requirement	- Site Monitoring Status - Weekly GWTS Operational Values - Current Discharge Location - Recent Effluent Analytical Results - Weekly Maintenance Information	Operator	**List of Individual emails provided in Appendix P** Kirtland Air Force Base Civil Engineering Group AFCEC/USACE City of Albuquerque NMED Albuquerque Bernalillo County Water Utility Authority	Email
Kirtland BFF - GWTS Monthly Water Summary - month year	Kirtland Air Force Base Water Use/conservation Internal Reporting	- Table containing monthly total extracted and discharged by Discharge Location	Operator	**List of Individual emails provided in Appendix P** Kirtland Air Force Base Civil Engineering Group AFCEC/USACE	Email
Kirtland BFF - NMOSE Monthly Reporting for GWTS - month year	Kirtland Air Force Base NMOSE Quarterly Reporting for all NMOSE Permits	- Table containing monthly extraction totals per well and injection volume	Operator	**List of Individual emails provided in Appendix P** Kirtland Air Force Base Civil Engineering Group AFCEC/USACE	Email
			Kirtland Air Force Base Civil Engineering Group	NMOSE	Email
Kirtland BFF Quarterly/Annual Report	DP-1839 issued by NMED GWQB	- Summarize ongoing site monitoring and interim measure activities (Condition 17) - Any mechanical integrity testing conducted on either the GWTS or a UIC well (Condition 22.a)	Operator	AFCEC/USACE	Electronic Deliverable
			AFCEC	NMED GWQB	Hardcopy and Electronic Deliverable (provided by Operator)
	HWTF Interim Measure Resource Conservation and Recovery Act Permit Section	- A description of the work completed and an estimate of the percentage of total planned work completed - Summaries of all findings, including summaries of laboratory data	Operator	AFCEC/USACE	Electronic Deliverable
			AFCEC	NMED HWB	Hardcopy and Electronic Deliverable (provided by Operator)

AFCEC = Air Force Civil Engineer Center
BFF = Bulk Fuels Facility
DP = discharge permit
GWQB = Ground Water Quality Bureau
GWTS = groundwater treatment system
HWB = Hazardous Waste Bureau
HWTF = Hazardous Waste Treatment Facility
NMED = New Mexico Environment Department
NMOSE = New Mexico Office of the State Engineer
UIC = underground injection control
USACE = U.S. Army Corps of Engineers

This page intentionally left blank

APPENDICES

(Appendices Provided in Electronic Format via CD)

APPENDICES

A Permits and Agreements

A-1 Regulatory Permits
A-2 Access Agreements

B Health and Safety

C Organization and Responsibilities

D Description of Groundwater Treatment System Equipment and Facilities

E Process Drawings and Groundwater Treatment System Equipment/Instrument Location Pictures

F Process-Control Description

G Human Machine Interface Screens

H Design Calculations for Carbon Vessel Media Beds

I Groundwater Treatment System Operations Log Sheets and Record Forms

J Manufacturers' Literature

K Contingency Plan

L Sampling and Analysis Plan

M Waste Characterization Documentation

N User Operational Adjustments Documentation

O Well Construction Diagrams and Borehole Logs

P Example Reports

Q Technical Memorandum

R Approved Standard Operating Procedures

APPENDIX C

STANDARD OPERATING PROCEDURE FOR EFFLUENT CONVEYANCE LINE INTEGRITY TESTING OF THE GROUNDWATER TREATMENT SYSTEM

Standard Operating Procedure for Effluent Conveyance Line Integrity Testing of the Groundwater Treatment System

Revision 0
March 2018

This page intentionally left blank

CONTENTS

Section **Page**

DOCUMENT REVISION HISTORY ii

1. SCOPE AND APPLICATION 1

2. MATERIALS 1

3. PROCEDURE 2

4. MAINTENANCE 3

5. PRECAUTIONS 3

6. REFERENCES 4

FIGURES

1 Effluent Conveyance Line Test Section and Isolation Valves

ATTACHMENTS

1 Hydrostatic Pressure Testing Form

DOCUMENT REVISION HISTORY

ORIGINAL (MASTER) DOCUMENT REVISION HISTORY				
Revision Number	**Revision Date**	**Revision Summary**	**Revised By**	**Reviewed By**
0	2/8/2018	Created Standard Operating Procedure	K. McKeage	T. Curley

1. SCOPE AND APPLICATION

The purpose of this Standard Operating Procedure is to delineate protocols for performing effluent conveyance line integrity testing at the Kirtland Air Force Base groundwater treatment system (GWTS) in accordance with Discharge Permit (DP)-1839 (New Mexico Environment Department, 2017; Condition Number [No.] 15). Condition No. 15 of DP-1839 states the following:

> *The Permittee shall ensure the treated effluent conveyance system, i.e., piping, between the GWTS and the UIC well(s) does not leak and shall report any such leakage to the NMED GWQB in accordance with 20.6.2.1203(A) NMAC and copy the NMED HWB. Within 1 year of the effective date of this Discharge Permit, the Permittee shall demonstrate the structural integrity of the treated effluent conveyance system between the GWTS and KAFB-7. Prior to testing, the Permittee shall propose for NMED approval the test method to be used. The results of the mechanical integrity testing shall be submitted to NMED within 60 days of test completion. The Permittee shall integrity test the treated effluent conveyance system between GWTS and the UIC well(s) prior to submitting a permit renewal application.*

The line must be tested within year one of DP-1839 approval (by April 28, 2018) and in year five of the approval before a renewal application is submitted (2022).

Hydrostatic specified test pressure (STP) is recommended at 150 percent (%) of operating pressure per American Society of Mechanical Engineers (ASME) B31.3 Part 345 and will be measured at gauge PI-3208 on the effluent skid No. 2. The current operating pressure in the effluent conveyance line is approximately 12 pounds per square inch (psi) with a high pressure alarm at 45 psi; thus, an STP of 50 psi has been specified for this test (10% higher than the high pressure alarm set point). The final pressure will be compared to the STP at the end of the test period. ASTM International F2164 – 13 defines a hydrostatic pressure test as acceptable if the final pressure does not deviate by more than 30% from the STP reading (± 15 psi for this test). The results of the hydrostatic test will be included in the test report. Although the ASTM International F2164 – 13 method requires an air volume and rebound assessment for the installation of new, uniform piping, these assessments will not be performed due to the varying pipe thicknesses, types, and age of the pipes that comprise the effluent conveyance line.

2. EQUIPMENT AND MATERIALS

The following equipment and materials may be required:

- Valve stem for actuating flush-mounted valves along KAFB-7 effluent conveyance line.
- 50-foot garden hose
- Field logbook

- Indelible ink pen
- Manhole cover hook to open effluent conveyance line vaults
- Camera.

3. PROCEDURE

Effluent conveyance line integrity testing is performed by hydrostatic leak testing the line. To perform the test, the GWTS needs to be shut down prior to performing these tests. Refer to the GWTS Operations and Maintenance Plan (U.S. Army Corps of Engineers, 2016) or most current approved version to successfully shut down the system. Ensure the effluent skid pumps are placed into manual mode on their variable frequency drives (VFDs) to prevent accidental remote startup.

Hydrostatic testing is performed following the steps outlined below:

1. The sampling port on train 2 is adapted to accept a male 5/8-inch garden hose fitting.

2. The effluent conveyance line should be filled with water by closing all air relief valves (ARVs) and manually operating the effluent pumps to discharge water to the golf course pond with both changeover valves open. The effluent pump is then shut down and the changeover valve leading to the golf course and isolation valve at KAFB-7 (Figure 1) are then immediately closed. The vacuum within the effluent conveyance line should siphon water from the effluent tank to fill the line.

3. The effluent conveyance line may now be isolated to perform testing. To isolate the line, the effluent skid butterfly valves on both treatment trains are closed. Ensure the changeover valve to the golf course is closed, the changeover valve to KAFB-7 is opened, and the isolation valve immediately upstream of the KAFB-7 flowmeter is closed (Figure 1). Verify all effluent conveyance line ARVs have been closed. The effluent flow control valve located on the GWTS effluent pipe tree is then manually opened to 100% open. The effluent conveyance line has now been isolated and testing can proceed.

4. A garden hose is connected to the 100-psi Base supply water line located on the south wall of the GWTS. Evacuate all air from the hose prior to connecting it to the adapted sampling port.

5. During the initial pressurization, the ARV located on the effluent conveyance line within the GWTS shall be opened to vent any remaining air from the effluent conveyance line. If air venting is observed from the ARV then additional water shall be pumped into the line by manually operating one of the effluent skid pumps, at a low VFD frequency. This process shall continue until no air venting is observed out of the ARV. If pressurization still cannot be obtained then it is likely that excess air is entrained at a high point within

the line; in which case each ARV along the effluent line (starting at KAFB Well 7 and working upstream towards the GWTS) will have to be opened to bleed air. Any time air is bled from the line additional water shall have to added using the effluent skid pump or base supply line depending on the volume needed. All ARVs and butterfly valves shall be closed prior to reattempting the initial pressurization. Once all of the air has been flushed from the line, fresh water from the 100-psi line is then introduced into the effluent conveyance line to a set pressure of 50 psi. The line pressure is monitored on an existing gauge provided on the train 2 skid. The addition of water is controlled using an existing ball valve located between the adapted sampling port and the effluent conveyance line.

6. The effluent conveyance line is then given 30 minutes to allow expansion of the high density polyethylene in response to the set pressure. Successive additions of water can be performed during this time to ensure that the set pressure is maintained at 50 psi.

7. The pressure is then monitored for 1 hour, during which GWTS personnel will visually inspect the effluent conveyance line (where exposed) to ensure that the line is not leaking. All visual observations will be included in the test report.

8. Following the 1 hour of monitoring, the final pressure will be compared to the set pressure. Test results and observations will be recorded on the testing form (Attachment 1) and provided in the test report submitted to the U.S. Air Force for final evaluation.

9. The effluent conveyance line is then reinstated into operation by opening the effluent skid butterfly valves on both treatment trains, the isolation valve upstream of the KAFB-7 flowmeter, all effluent conveyance line ARVs, and selecting an appropriate discharge location with the changeover valves. The effluent pumps are then returned to automatic control and the GWTS is restarted per the GWTS Operations and Maintenance Plan (U.S. Army Corps of Engineers, 2016) or most current approved version.

4. MAINTENANCE

Not applicable.

5. PRECAUTIONS

Ensure the GWTS has been fully shut down prior to pressure testing and confirm that the effluent skid pump VFDs are in manual mode prior to isolating the effluent conveyance line. Review the appropriate sections of any relevant safety documentation (i.e., an Accident Prevention Plan).

6. REFERENCES

American Society of Mechanical Engineers (ASME) B31.3 Part 345. *Process Piping, Inspection, Examination, and Testing*. ASME. New York, NY. 2016

ASTM International F2164 – 13. *Standard Practice for Field Leak Testing of Polyethylene (PE) and Crosslinked Polyethylene (PEX) Pressure Piping Systems Using Hydrostatic Pressure*. ASTM International. West Conshohocken, PA. 2013.

New Mexico Environment Department. 2017. Correspondence from Michelle Hunter, Chief, Ground Water Quality Bureau to Colonel Eric. H. Froehlich, Base Commander, Kirtland AFB, New Mexico, Regarding Discharge Permit Issuance, DP-1839, Kirtland Air Force Base. April 28.

U.S. Army Corps of Engineers. 2016. *Operations and Maintenance Plan, Groundwater Treatment System – Annual Update, Bulk Fuels Facility, SWMU ST-106/SS-111, Kirtland Air Force Base, New Mexico.* Prepared by EA Engineering, Science, and Technology, Inc., PBC for the USACE–Albuquerque District under USACE Contract No. W912DR-12-D-0006. August.

FIGURES

This page intentionally left blank

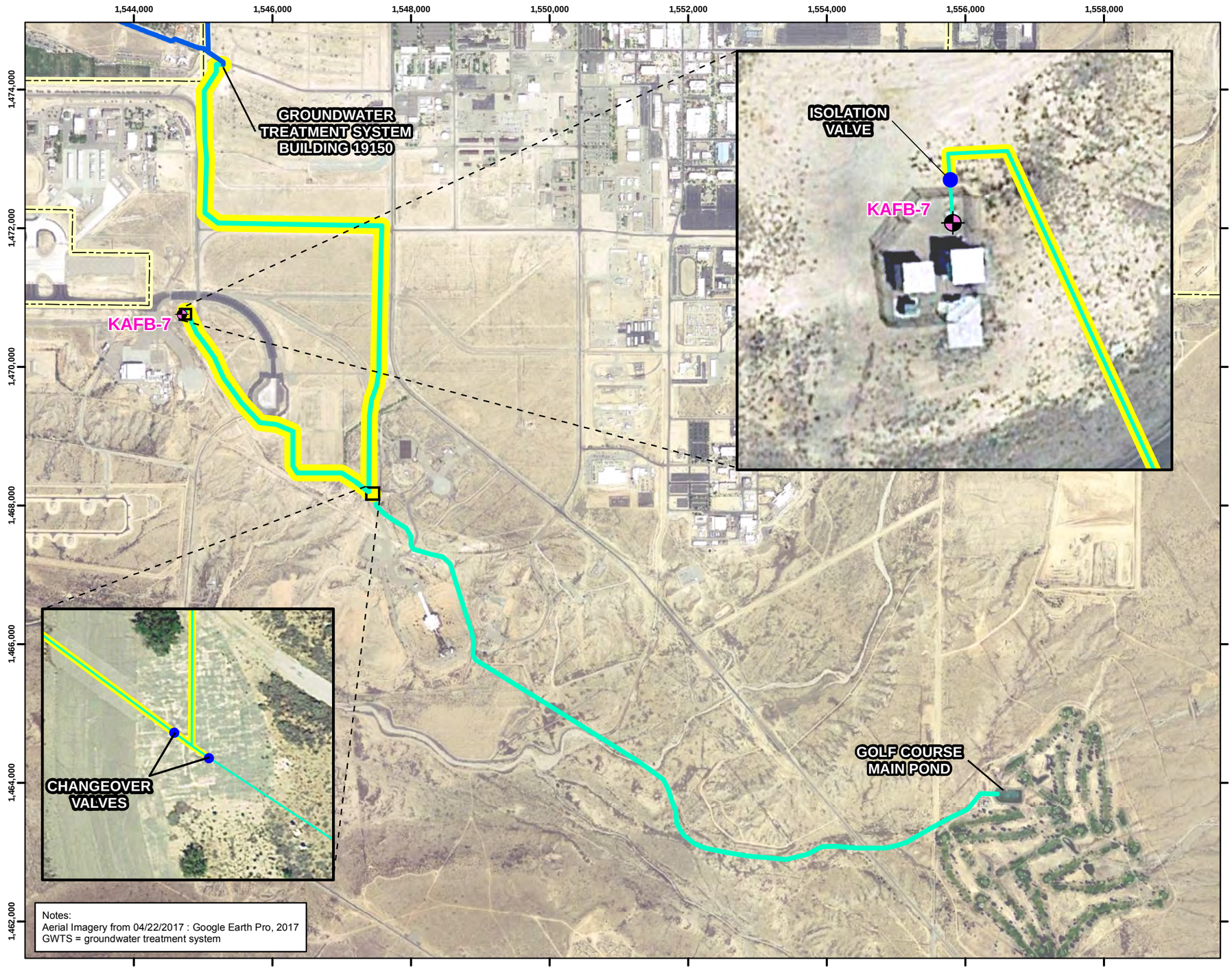

Legend

- Injection Well
- GWTS Effluent Piping to be Tested
- GWTS Effluent Piping
- GWTS Influent Piping
- Installation Boundary

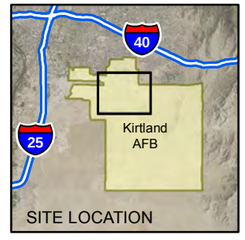

N

0 750 1,500 3,000

Feet

1 inch = 1,500 feet

Projection: NAD83 State Plane New Mexico Central FIPS3002 Feet

STANDARD OPERATING PROCEDURE FOR
EFFLUENT LINE INTEGRITY TESTING OF THE
GROUNDWATER TREATMENT SYSTEM
BULK FUELS FACILITY
SOLID WASTE MANAGEMENT UNIT ST-106/SS-111
KIRTLAND AIR FORCE BASE, NEW MEXICO

FIGURE 1

EFFLUENT CONVEYANCE LINE TEST SECTION AND ISOLATION VALVES

P:\gis\Projects\Kirtland\Figures\GWTS Effluent Line Integrity Testing SOP.mxd 2/12/2018 EA sbusby

This page intentionally left blank

ATTACHMENTS

This page intentionally left blank

HYDROSTATIC PRESSURE TESTING FORM

Project: GWTS Effluent Conveyance Line
EA Project No: 62599DM01 Date: _____
Air Temperature: _____ Time: _____
Length of Pipe Tested: _____ Type of Pipe Tested: _____
Location of Pipe Tested: _____

Hydrostatic specified test pressure (STP) is recommended at 150 percent (%) of operating pressure per American Society of Mechanical Engineers B31.3 Part 345 and will be measured at gauge PI-3208 on the effluent skid No. 2. The current operating pressure in the effluent conveyance line is approximately 12 pounds per square inch (psi) with a high pressure alarm at 45 psi; thus, an STP of 50 psi has been specified for this test (10% higher than the high pressure alarm set point). The final pressure will be compared to the STP at the end of the test period. ASTM International F2164 – 13 defines a hydrostatic pressure test as acceptable if the final pressure does not deviate by more than 30% from the STP reading (± 15 psi for this test). The results of the hydrostatic test will be included in the test report. Although the ASTM International F2164 – 13 method requires an air volume and rebound assessment for the installation of new, uniform piping, these assessments will not be performed due to the varying pipe thicknesses, types, and age of the pipes that comprise the effluent conveyance line.

Testing Procedure

Piping shall be vented and then brought to the STP and held at the STP by providing successive injections of makeup water. Piping shall then be subjected for 1 hour to a hydrostatic test pressure of 50 psi. No additional makeup water will be added during this period. Exposed pipe, joints, fittings, and valves shall be carefully examined for leaks. Record testing results below and compare the final pressure to the STP.

Testing Results

Initial pressure reading after 30-minute makeup period: _____

Pressure reading after 1 hour: _____

Difference in pressure: _____

Final Pressure within 30% of STP? _____

Are there any leaks present? _____

_____

Additional testing comments: _____

_____

_____

Signature:

_____ _____
Testing Operator Date

This page intentionally left blank

APPENDIX D

PROJECT SCHEDULE

Project Schedule

Kirtland AFB Injection Well KAFB-106IN2

This is a generalized task/duration schedule and estimated calendar timeframes for onsite activities associated with the construction of UIC Well KAFB-106IN2. This schedule does not take into account any potential security delays, either locally or base-wide, that could impact the project. A detailed project schedule with specific dates will be generated upon approval of this Work Plan by NMED. Work will not be scheduled until project permits and this Work Plan have been received and approved.

Mobilization/Site Set Up	Spring 2020 (2 weeks)
Borehole Drilling	Spring 2020 (2 weeks)
Well Construction	Spring 2020 (2 weeks)
Well Development/Pump Testing	Spring 2020 (2 weeks)
Wellhead Construction and Connection to Conveyance Line	Summer 2020 (3 weeks)
Site Restoration	Summer 2020 (2 weeks)
Electrical Connection	Summer 2020 (1 week)
Testing and Certification	Summer 2020 (1 week)

APPENDIX E

FIELD FORMS

BORING/WELL CONSTRUCTION LOG

Project: **Kirtland BFF**	Project Number: **62599DM01.1017.04**
Drilling Company:	Start Time/Date:
Lead Driller:	Completion Time/Date:
Drilling Method:	Final Depth:
Casing Diameter OD:	Bit Type and Outer Diameter
Boring/Well ID:	Logged By: Page ___ of ____

USCS Soil Type	PID Reading (ppm)	SAND: Grain Size %(fine, medium, coarse)	SAND: Mineralogy %(Quartz, Feldspar, Lithic)	GRAVEL: Angularity, Roundness (R,SR,SA,A)	GRAVEL: Mineralogy %(Quartz, Feldspar, Lithic)	Depth, ft bgs	Soil Description (sample interval, soil type, color, plasticity, moisture, other)	Well Details

Additional Comments:

R=Rounded, SR=Subrounded, SA=Subangular, A=Angular

FIELD RECORD OF WELL DEVELOPMENT

Project Name:	Project No:	Date/Time:
EA Personnel:	Development Method:	
Equipment Used:		Equipment Calibrated: Y N
Weather/Temperature/Barometric Pressure:		Date/Time:

Well No.:	Well Condition:
Well Diameter:	Measurement Reference:
Well Volume Calculations	
A. Depth To Water (ft):	D. Well Volume/ft:
B. Total Well Depth (ft):	E. Total Well Volume (gal)[C*D]:
C. Water Column Height (ft):	F. Five Well Volumes (gal):

Parameter	Beginning	1 Volume	2 Volumes	3 Volumes	4 Volumes	5 Volumes
Time (min)						
Depth to Water (ft)						
Purge Rate (gpm)						
Volume Purged (gal)						
pH (Δ<0.2)						
Temperature (°F) (Δ<10%)						
Conductivity (µmhos/cm) (Δ<10%)						
Turbidity (NTU) (<10 NTU*)						

Parameter	6 Volumes	7 Volumes	8 Volumes	9 Volumes	10 Volumes	End
Time (min)						
Depth to Water (ft)						
Purge Rate (gpm)						
Volume Purged (gal)						
pH (Δ<0.2)						
Temperature (°F) (Δ<10%)						
Conductivity (µmhos/cm) (Δ<10%)						
Turbidity (NTU) (<10 NTU*)						

NOTE: NTU = Nephelometric turbidity unit.
ORP = Oxidation-reduction potential.
* = If <10 NTU is not able to be achieved, <100 NTU is acceptable

Parameter stabilization requires four consecutive readings [four consecutive differences (Δ)] to meet parameter stabilization requirements listed.

COMMENTS AND OBSERVATIONS: _____

Well Gauging Form Team 1

2016

Project: Kirtland AFB BFF ST-106/SS-111

Quarter : 3rd

Well ID	Previous DTW 2016 Q2 (ft MRP)		Date	Depth to NAPL (ft MRP)	DTW (ft MRP)	Initials	Barricades	Reference Point
	Depth to NAPL	DTW (ft MRP)						
KAFB-106231*	-	459.50					Barricades by SWSS	TWV
KAFB-106232*	-	458.94					Barricades by SWSS	TWV
KAFB-106029*	-	442.80					Barricades by SWSS	TWV
KAFB-106030*	-	442.95					Barricades by SWSS	TWV
KAFB-106031*	-	443.01					Barricades by SWSS	TWV
KAFB-106021*	-	446.31					Barricades by SWSS	TWV

*** Gauge while sampling**

***SWSS (George Thompson 505-873-0044)**

YSI Professional Plus Log

Serial # **15K101396** **(WH0001)**

Year: 2016

Project: Kirtland AFB BFF ST-106/SS-111

Quarter : 3rd

Date	Cal or Bump	pH 4.00	pH 7.00	pH 10.00	ORP (220 mV)	Conductivity (1413 µS/cm)	Measured DO (% Sat)	Barometer (mm Hg)	100% DO Sat Adjusted for Barometric Pressure	Initials
Calibration Tolerances:		+/- 0.2 pH Units			+/- 20 mV Standard	+/- 0.5% of Standard	+/- 2% of the Adjusted DO Value	N/A	N/A	N/A

* Calibrate all parameters weekly. Bump check all parameters daily and re-calibrate if values are out of tolerance.

* 100% DO Sat =100 x (Barometric Pressure in mmHg/760)

Rae Systems MiniRAE 3000 PID Log

Serial # 592-915790 (WH0004)

Year: 2016

Project: Kirtland AFB BFF ST-106/SS-111

Quarter : 3rd

Date	Cal or Bump	0 ppm	100 ppm	Initials
Calibration Tolerances:		+/- 3% of standard value		N/A

* Calibrate all parameters weekly. Bump check all parameters daily and re-calibrate if values are out of tolerance.

Hach 2100Q Portable Turbidimeter Log

Serial # **15100C045025** **(WH0007)**

Year: 2016

Project: Kirtland AFB BFF ST-106/SS-111

Quarter : 3rd

Date	Bump or Cal	20 NTU	100 NTU	800 NTU	10 NTU	Initials
Calibration Tolerance:		+/- 10% of Standard Value				N/A

*Calibrate Instrument every three months, bump check weekly and re-calibrate if values are out of tolerance.

QRAE II Multi-Gas Detector Log

Serial # **181-217279** **(WH0027)**

Year: 2016

Project: Kirtland AFB BFF ST-106/SS-111

Quarter : 3rd

Date	Test	O_2 (18%)	CH_4 (2.5% [50% LEL])	H_2S (10 ppm)	CO (50 ppm)	Initials

Test: Mark if calibration or bump test was performed.

Refridgerator Temperature Log

Year: 2016

Project: Kirtland AFB BFF ST-106/SS-111

Quarter : 3rd

Date/Time	Temperature 1 (Internal 1)	Temperature 2 (Internal 2)	Date/Time	Temperature 1 (Internal 1)	Temperature 2 (Internal 2)

Test: Mark if calibration or bump test was performed.

Groundwater Purge and Sampling Log

Year:

Quarter:

Project: Kirtland AFB BFF ST-106/SS-111

Well ID:

Project No: 62599DM01

Samplers:

Date:

Crew Signature:

Well Information

Prior Well Status: Non-Hazardous Hazardous

Well Depth: _____ ft MRP

Prior Screen Status: Submerged Not Submerged

Top of Screen: _____ ft MRP

Barricade/Notification: ☐

Bottom of Screen: _____ ft MRP

Measurement Reference Point (MRP):

Water Bearing Zone: _____

IDW will be taken to:

IDW Label:

Protective Casing/Vault: Intact Damaged

Well Locked/Security Bolt Present: Yes No

Well ID Marked: Yes No

Photoionization Measurements at Wellhead: _____ ppm

LNAPL Present (circle one)? Yes No

LNAPL Thickness: _____ ft

Previous Depth to water: _____ ft MRP

Depth to Water (DTW): _____ ft MRP

Pump Information

Bennett Pump Serial No.: _____

Non-Dedicated Pump Depth: _____ ft MRP

* - if screen is submerged, place pump 2 ft below top of screen; if not submerged, place pump 2 ft above bottom of screen.

Field Instrumentation

pH, Conductivity, ORP, DO, Temperature: YSI Professional Plus Serial No: _____

PID: MiniRAE 3000 Serial No: _____

Water Level Meter: Solinst 500 ft Serial No: _____

Turbidity Meter: Hach 2100Q Serial No: _____

Sample Information

Sample ID: _____

Sampling Method: Low-flow

Duplicate ID: (if applicable) _____

Sampling Medium: Water

COC#: _____

Reviewed by: _____ Initials: _____ Review Date: _____

225 Schiling Circle Suite
400 Hunt Valley MD
Tel No: (410) 584-7000
Fax No. (410) 771-1625

CHAIN-OF-CUSTODY RECORD

COC NUMBER

PROJECT NAME:	PROJECT NUMBER:	LABORATORY NAME AND CONTACT:	FAX AND MAIL REPORTS/EDD TO: Tara Lamond: tlamond@eaest.com EA Amanda Smith: asmith@eaest.com EA	YEAR:
Kirtland AFB Bulk Fuels Facility	**62599DM01**	**Eurofins Lancaster Laboratories** **2425 New Holland Pike Lancaster PA 17601**	FAX AND MAIL REPORTS/EDD TO: Pam Moss: pmoss@eaest.com EA	QUARTER:
PROJECT SITE AND PHASE: ST106/SS110	LAB PO NUMBER: 14800	LAB CONTACT: Kay Hower KayHower@eurofinsUS.com Eurofins 1 (717) 556-7258		

				ANALYSIS REQUIRED (Specify number of bottles)										
ITEM	SAMPLE IDENTIFIER	DATE COLLECTED	TIME COLLECTED	Total Number of Bottles	(8260C) VOCs	(8260C) BTEX	(8260C) BTEXN	(8011) EDB	(6020A/6010C) Total As,Pb,Ca,K,Na,Mg	(6010C) Dissolved Fe, Mn	(300.0) Chloride, bromide, sulfate	(353.2) Nitrate-Nitrite	(SM2320B) Alkalinity	COMMENTS
1										*				
2														
3														
4														
5														
6														

COMMENTS: *Dissolved Fe, Mn aliquot was field filtered.

SAMPLER(S):	COURIER AND SHIPPING NUMBER:

RELINQUISHED BY:	DATE	TIME	RECEIVED BY:	DATE	TIME
Printed Name and Signature:			Printed Name and Signature:		
Printed Name and Signature:			Printed Name and Signature:		
Printed Name and Signature:			Printed Name and Signature:		
Printed Name and Signature:			Printed Name and Signature:		

SAMPLE COOLER

SHIPPING CHECKLIST

Site Name: Kirtland BFF (62599DM01) **Date: _____**

Fedex Tracking Number: _____

Matrix: Groundwater **Lab:** Eurofins (Lancaster, PA)

Cooler Sealed: _____ (Time) **Delivered to FedEx:_____(Time)**

Sampler 1 (Initials)		Sampler 2 (Initials)
☐	Two (2) Plastic Bag Liners Included	☐
☐	Temperature Blank Included at Bottom of Cooler Surrounded by Ice	☐
☐	Trip Blank Included (2 for EDB, 2 for BTEX if present)	☐
☐	Samples Checked Against Chain of Custody	☐
☐	Chain of Custody Originals Included	☐
☐	All Void Space in Cooler filled with Ice	☐
☐	Custody Seals On Plastic Bag Liner And Outside Of Cooler	☐

(Print)Name:_____ **(Print)Name:_____**

Signature:_____ **Signature:_____**

Date/Time:_____ **Date/Time:_____**

COC's in Cooler:

_____

_____

_____

_____

Field Activity Log

Job Number:	Task Description:	Date:

Weather:	Important notes:	Sundance Employes on site	Visitors

Name:	Signature:	Date:

Field Activity Log (Continuation)

Page_____of_____

Job Number:	Task Description:	Date:

Well ID: KAFB106IN2

Test Type: Personnel:

Measuring Point Height (ft above ground surface):

Static ater level at test start, ft below measuring point (ft bmp):

Date	Clock Time	Elapsed Time (Minutes)	Depth To Water (ft bmp)	Comments
		0		Start Test